SIEMENS

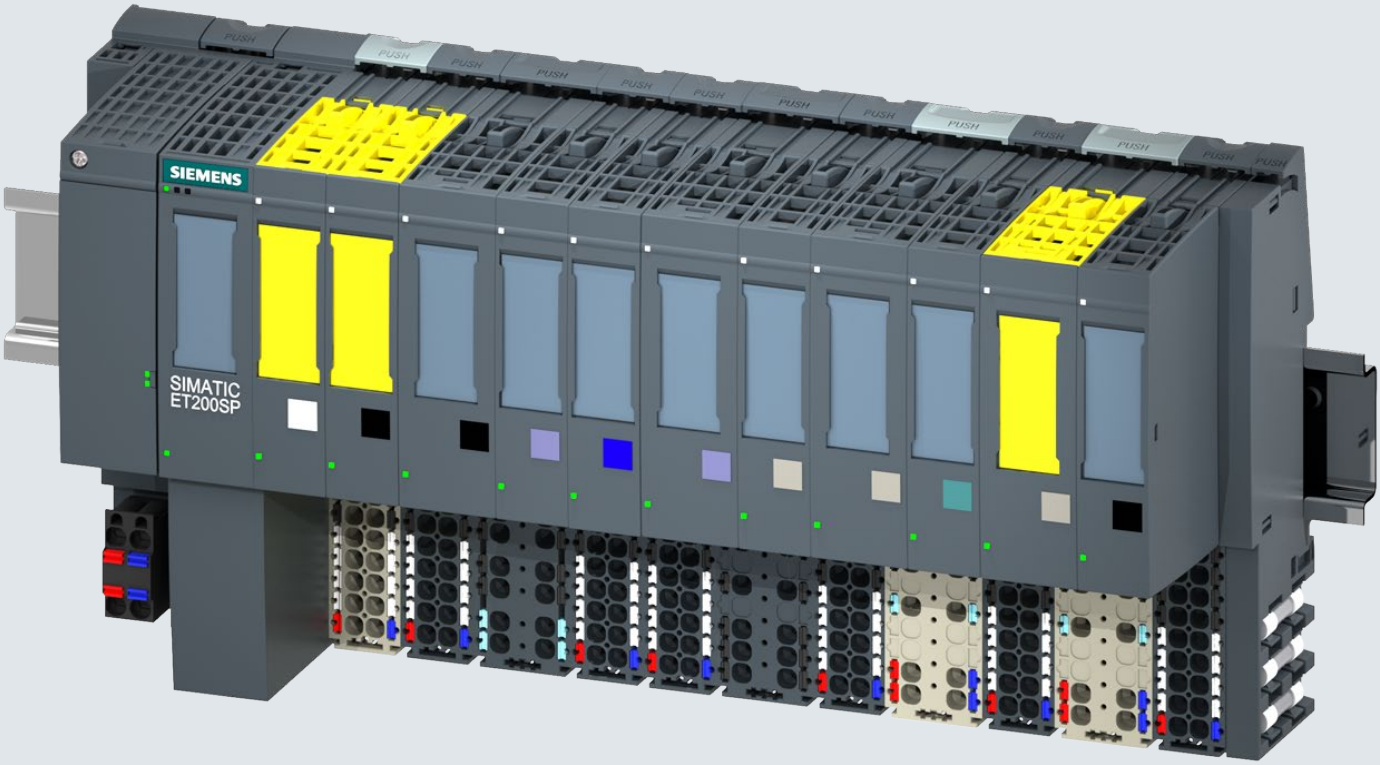

Manual Collection

SIMATIC

ET 200SP

ET 200SP distributed I/O system

This document contains a compilation of all manuals for the ET 200SP system family. Use the bookmarks on the left edge of the screen to navigate.

Edition 01/2019

support.industry.siemens.com

SIEMENS

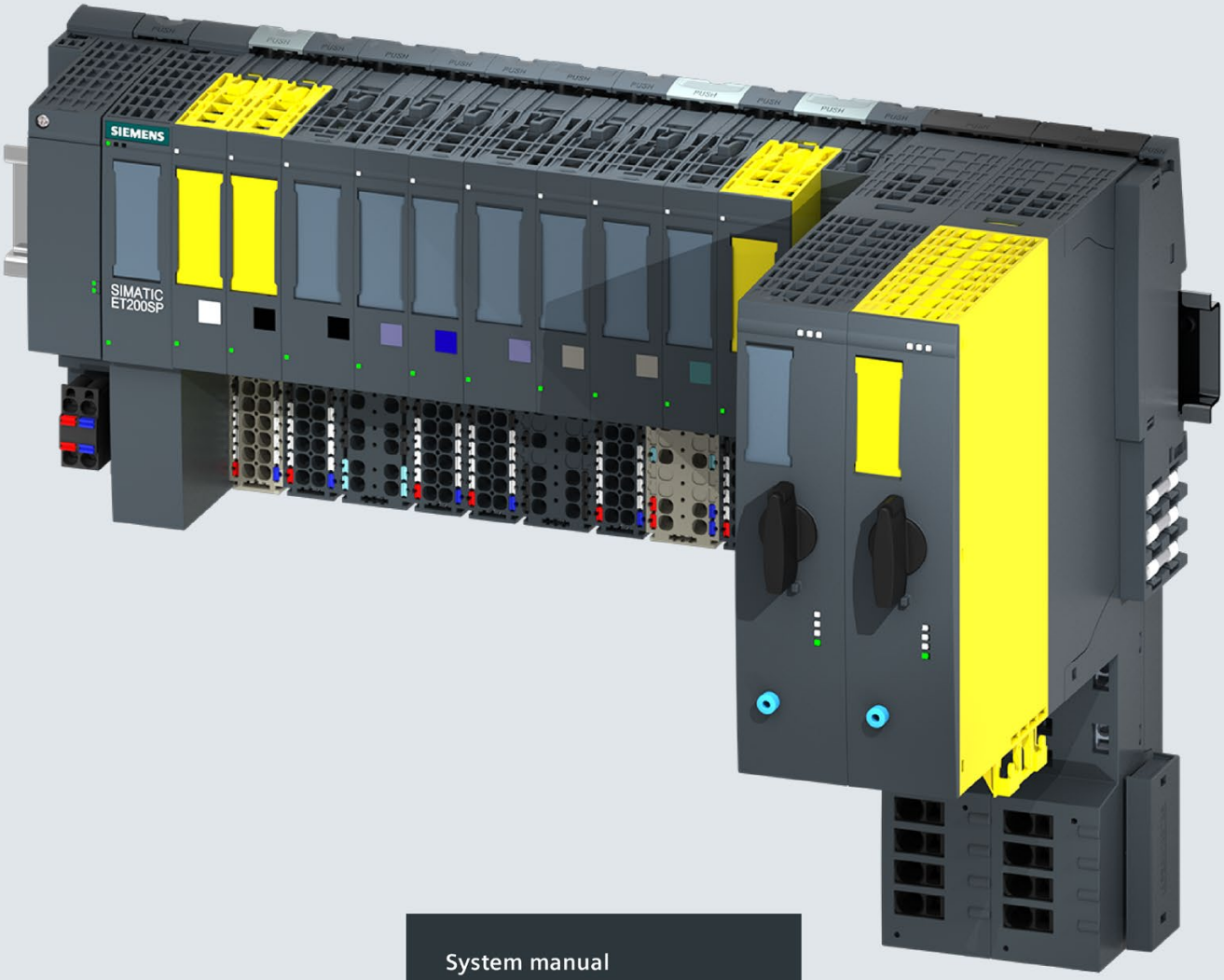

System manual

SIMATIC

ET 200SP

ET 200SP distributed I/O system

Edition 02/2018

support.industry.siemens.com

SIEMENS

SIMATIC

ET 200SP
Distributed I/O system

System Manual

Preface

Guide to documentation 1

New properties/functions 2

System overview 3

Application planning 4

Installation 5

Wiring 6

Configuring 7

Basics of program execution 8

Protection 9

Configuration control (option handling) 10

Commissioning 11

SIMATIC memory card 12

Maintenance 13

Test functions and eliminating problems 14

Technical specifications 15

Dimension drawings A

Accessories/spare parts B

Calculating the leakage resistance C

Safety-relevant symbols D

02/2018

A5E03576849-AH

Legal information

Warning notice system

This manual contains notices you have to observe in order to ensure your personal safety, as well as to prevent damage to property. The notices referring to your personal safety are highlighted in the manual by a safety alert symbol, notices referring only to property damage have no safety alert symbol. These notices shown below are graded according to the degree of danger.

⚠ DANGER

indicates that death or severe personal injury **will** result if proper precautions are not taken.

⚠ WARNING

indicates that death or severe personal injury **may** result if proper precautions are not taken.

⚠ CAUTION

indicates that minor personal injury can result if proper precautions are not taken.

NOTICE

indicates that property damage can result if proper precautions are not taken.

If more than one degree of danger is present, the warning notice representing the highest degree of danger will be used. A notice warning of injury to persons with a safety alert symbol may also include a warning relating to property damage.

Qualified Personnel

The product/system described in this documentation may be operated only by **personnel qualified** for the specific task in accordance with the relevant documentation, in particular its warning notices and safety instructions. Qualified personnel are those who, based on their training and experience, are capable of identifying risks and avoiding potential hazards when working with these products/systems.

Proper use of Siemens products

Note the following:

⚠ WARNING

Siemens products may only be used for the applications described in the catalog and in the relevant technical documentation. If products and components from other manufacturers are used, these must be recommended or approved by Siemens. Proper transport, storage, installation, assembly, commissioning, operation and maintenance are required to ensure that the products operate safely and without any problems. The permissible ambient conditions must be complied with. The information in the relevant documentation must be observed.

Trademarks

All names identified by ® are registered trademarks of Siemens AG. The remaining trademarks in this publication may be trademarks whose use by third parties for their own purposes could violate the rights of the owner.

Disclaimer of Liability

We have reviewed the contents of this publication to ensure consistency with the hardware and software described. Since variance cannot be precluded entirely, we cannot guarantee full consistency. However, the information in this publication is reviewed regularly and any necessary corrections are included in subsequent editions.

Siemens AG
Division Digital Factory
Postfach 48 48
90026 NÜRNBERG
GERMANY

A5E03576849-AH
℗ 02/2018 Subject to change

Copyright © Siemens AG 2012 - 2018.
All rights reserved

Preface

Preface

Purpose of the documentation

This documentation provides important information on configuring, installing, wiring and commissioning the ET 200SP distributed I/O system.

Basic knowledge required

A basic knowledge of automation technology is required to understand the documentation.

Validity of the documentation

This documentation applies to the distributed I/O system, ET 200SP.

Definition

In this document, " motor starter" always refers to all variants of the ET 200SP motor starters.

Conventions

Please pay particular attention to notes highlighted as follows:

Note

Notes contain important information on the product, handling the product or on part of the documentation to which you should pay particular attention.

Standards

You can find a dated reference to the relevant standards or EU declaration of conformity on the Internet (https://support.industry.siemens.com).

Special information

WARNING

Hazardous Voltage
Can Cause Death, Serious Injury, or Property Damage.

Proper use of hardware products

This equipment is only allowed to be used for the applications described in the catalog and in the technical description, and only in conjunction with non-Siemens equipment and components recommended by Siemens.

Correct transport, storage, installation and assembly, as well as careful operation and maintenance, are required to ensure that the product operates safely and without faults.

EU note: Start-up/commissioning is absolutely prohibited until it has been ensured that the machine in which the component described here is to be installed fulfills the regulations/specifications of Directive 2006/42/EC.

Note

Important note for maintaining operational safety of your plant

Plants with safety-related features are subject to special operational safety requirements on the part of the operator. Even suppliers are required to observe special measures during product monitoring. For this reason, we inform you in the form of personal notifications about product developments and features that are (or could be) relevant to operation of systems from a safety perspective.

By subscribing to the appropriate notifications, you will ensure that you are always up-to-date and able to make changes to your system, when necessary.

Log onto Industry Online Support. Go to the following links and, on the side, right click on "email on update":

- SIMATIC S7-300/S7-300F (https://support.industry.siemens.com/cs/ww/en/ps/13751)
- SIMATIC S7-400/S7-400H/S7-400F/FH (https://support.industry.siemens.com/cs/ww/en/ps/13828)
- SIMATIC WinAC RTX (F) (https://support.industry.siemens.com/cs/ww/en/ps/13915)
- SIMATIC S7-1500/SIMATIC S7-1500F (https://support.industry.siemens.com/cs/ww/en/ps/13716)
- SIMATIC S7-1200/SIMATIC S7-1200F (https://support.industry.siemens.com/cs/ww/en/ps/13683)
- Distributed I/O (https://support.industry.siemens.com/cs/ww/en/ps/14029)
- STEP 7 (TIA Portal) (https://support.industry.siemens.com/cs/ww/en/ps/14667)

Note

When using F-CPUs in safety mode and fail-safe modules, observe the description of the SIMATIC Industrial Software SIMATIC Safety - Configuring and Programming (http://support.automation.siemens.com/WW/view/en/54110126) fail-safe system.

Recycling and disposal

For ecologically sustainable recycling and disposal of your old device, contact a certified disposal service for electronic scrap and dispose of the device in accordance with the regulations in your country.

Security information

Siemens provides products and solutions with industrial security functions that support the secure operation of plants, systems, machines and networks.

In order to protect plants, systems, machines and networks against cyber threats, it is necessary to implement – and continuously maintain – a holistic, state-of-the-art industrial security concept. Siemens' products and solutions constitute one element of such a concept.

Customers are responsible for preventing unauthorized access to their plants, systems, machines and networks. Such systems, machines and components should only be connected to an enterprise network or the internet if and to the extent such a connection is necessary and only when appropriate security measures (e.g. firewalls and/or network segmentation) are in place.

For additional information on industrial security measures that may be implemented, please visit (https://www.siemens.com/industrialsecurity).

Siemens' products and solutions undergo continuous development to make them more secure. Siemens strongly recommends that product updates are applied as soon as they are available and that the latest product versions are used. Use of product versions that are no longer supported, and failure to apply the latest updates may increase customers' exposure to cyber threats.

To stay informed about product updates, subscribe to the Siemens Industrial Security RSS Feed under (https://www.siemens.com/industrialsecurity).

Siemens Industry Online Support

You can find current information on the following topics quickly and easily here:

- **Product support**

  All the information and extensive know-how on your product, technical specifications, FAQs, certificates, downloads, and manuals.

- **Application examples**

  Tools and examples to solve your automation tasks – as well as function blocks, performance information and videos.

- **Services**

  Information about Industry Services, Field Services, Technical Support, spare parts and training offers.

- **Forums**

  For answers and solutions concerning automation technology.

- **mySupport**

  Your personal working area in Industry Online Support for messages, support queries, and configurable documents.

This information is provided by the Siemens Industry Online Support in the Internet (http://www.siemens.com/automation/service&support).

Industry Mall

The Industry Mall is the catalog and order system of Siemens AG for automation and drive solutions on the basis of Totally Integrated Automation (TIA) and Totally Integrated Power (TIP).

You can find catalogs for all automation and drive products on the Internet.

See also

Industry Mall (https://mall.industry.siemens.com)

Table of contents

Preface 3

1 Guide to documentation 12

2 New properties/functions 17

3 System overview 19

3.1 What is the SIMATIC ET 200SP distributed I/O system? 19

3.2 What are fail-safe automation systems and fail-safe modules? 22

3.3 How are SIMATIC Safety F-systems structured with ET 200SP? 23

3.4 Components 27

4 Application planning 36

4.1 Selecting the BaseUnit for I/O modules 40
4.1.1 Digital, fail-safe, communication, technology or analog modules without temperature measurement 40
4.1.2 Analog modules with temperature measurement 41

4.2 Selecting motor starters with a suitable BaseUnit 42
4.2.1 Selecting a BaseUnit for motor starters 42
4.2.2 Selecting the motor starter 43
4.2.3 Selecting accessories for motor starters 44

4.3 Selecting potential distributor modules 45
4.3.1 Selecting a PotDis-BaseUnit 45
4.3.2 Selecting a PotDis-TerminalBlock 46

4.4 Hardware configuration 48

4.5 Forming potential groups 50
4.5.1 Basics 50
4.5.2 Forming potential groups with BaseUnit type B1 55
4.5.3 Forming potential groups with fail-safe modules 56
4.5.4 Forming potential groups with motor starters 58

4.6 Configuration examples for potential groups 60
4.6.1 Configuration examples with BaseUnits 60
4.6.2 Configuration examples with potential distributor modules 61

5 Installation 64

5.1 Basics 64

5.2 Installation conditions for motor starters 68

5.3 Mounting the CPU/interface module 70

5.4 Installing the CM DP communication module 72

5.5 Mounting BaseUnits for I/O modules 74

5.6 Mounting and dismantling BaseUnits for motor starters 77

5.7 Installing potential distributor modules ... 79
5.8 Installing the server module ... 80
5.9 Mounting further accessories for motor starters ... 81
5.9.1 Mounting the cover for the 500 V AC infeed bus ... 81
5.9.2 Mounting the mechanical bracket for the BaseUnit ... 83
5.9.3 Mounting the BU cover ... 86
6 Wiring ... 87
6.1 Rules and regulations for operation ... 87
6.2 Additional rules and regulations for the operation of the ET 200SP with fail-safe modules ... 90
6.2.1 Safety extra-low voltage (SELV, PELV) for failsafe modules and failsafe motor starters ... 90
6.2.2 Requirements for sensors and actuators for fail-safe modules and fail-safe motor starters ... 91
6.2.3 Crosstalk of digital input/output signals ... 93
6.3 Additional rules and instructions for operation with motor starters ... 93
6.3.1 Protection against short circuit ... 93
6.4 Operating the ET 200SP on grounded incoming supply ... 94
6.5 Electrical configuration of the ET 200SP ... 97
6.6 Wiring rules ... 99
6.7 Wiring BaseUnits for I/O modules ... 102
6.8 Connecting cable shields for I/O modules ... 105
6.9 Wiring BaseUnits for motor starters ... 107
6.10 Connecting the 3DI/LC module for the motor starter ... 111
6.11 Connecting the supply voltage to the CPU/interface module ... 113
6.12 Connecting interfaces for communication ... 115
6.12.1 Connecting PROFINET IO (port P3) to the CPU ... 115
6.12.2 Connecting the PROFIBUS DP interface to the interface module/communications module CM DP ... 117
6.13 Inserting I/O modules / motor starters and BU covers ... 118
6.14 Mounting/disassembly of motor starters ... 120
6.14.1 Mounting the fan ... 120
6.14.2 Mounting/disassembly of motor starters ... 121
6.14.3 3DI/LC module ... 123
6.15 Labeling ET 200SP ... 127
6.15.1 Factory markings ... 127
6.15.2 Optional markings ... 128
6.15.3 Applying color identification labels ... 130
6.15.4 Applying labeling strips ... 132
6.15.5 Applying reference identification labels ... 133
7 Configuring ... 134
7.1 Configuring ET 200SP ... 134

7.2 Configuring the CPU 137
7.2.1 Reading out the configuration 137
7.2.2 Addressing 139
7.2.3 Process images and process image partitions 142
7.2.3.1 Process image - overview 142
7.2.3.2 Automatically updating process image partitions 142
7.2.3.3 Update process image partitions in the user program 143
7.3 Configuring the interface module 145
8 Basics of program execution 146
8.1 Events and OBs 146
8.2 CPU overload behavior 149
8.3 Asynchronous instructions 151
9 Protection 161
9.1 Overview of the protective functions of the CPU 161
9.2 Configuring access protection for the CPU 162
9.3 Using the user program to set additional access protection 165
9.4 Know-how protection 166
9.5 Copy protection 170
10 Configuration control (option handling) 172
10.1 Configuring 175
10.2 Creating the control data record 177
10.2.1 Introduction 177
10.2.2 Control data record for an ET 200SP CPU 179
10.2.3 Control data record for an interface module 181
10.2.4 Feedback data record for interface modules 185
10.2.5 Data records and functions 187
10.3 Transferring control data record in the startup program of the CPU 188
10.4 Behavior during operation 193
10.5 Examples of configuration control 194
11 Commissioning 199
11.1 Overview 199
11.2 Commissioning the ET 200SP for PROFINET IO 200
11.2.1 ET 200SP CPU as an IO controller 201
11.2.2 ET 200SP CPU as an I-device 203
11.2.3 ET 200SP as an IO device 205
11.3 Commissioning the ET 200SP on PROFIBUS DP 207
11.3.1 ET 200SP as a DP master 207
11.3.2 ET 200SP as I-slave 209
11.3.3 ET 200SP as a DP slave 211
11.4 Startup of the ET 200SP with empty slots 212
11.5 Removing/inserting a SIMATIC memory card on the CPU 213

11.6 Operating modes of the CPU ... 214
11.6.1 STARTUP mode ... 214
11.6.2 STOP mode ... 217
11.6.3 RUN mode ... 217
11.6.4 Operating mode transitions ... 218

11.7 CPU memory reset ... 221
11.7.1 Automatic memory reset ... 222
11.7.2 Manual memory reset ... 222

11.8 Reassigning parameters during operation ... 224

11.9 Identification and maintenance data ... 225
11.9.1 Reading out and entering I&M data ... 225
11.9.2 Data record structure for I&M data ... 227
11.9.3 Example: Read out firmware version of the CPU with Get_IM_Data ... 229

11.10 Shared commissioning of projects ... 231

11.11 Backing up and restoring the CPU configuration ... 231
11.11.1 Overview ... 231

11.12 Time synchronization ... 234
11.12.1 Example: Configuring and changing NTP server ... 236

12 SIMATIC memory card ... 240

12.1 SIMATIC memory card - overview ... 240

12.2 Setting the card type ... 245

12.3 Data transfer with SIMATIC memory cards ... 246

13 Maintenance ... 247

13.1 Removing and inserting I/O modules/motor starters (hot swapping) ... 247

13.2 Changing the type of an I/O module ... 251

13.3 Replacing an I/O module ... 253

13.4 Replacing a motor starter ... 254

13.5 Replacing the terminal box on the BaseUnit ... 255

13.6 Firmware update ... 257

13.7 Resetting CPU/interface module (PROFINET) to factory settings ... 264
13.7.1 Resetting the CPU to factory settings ... 264
13.7.2 Resetting interface module (PROFINET IO) to factory settings ... 267
13.7.3 Resetting the interface module (PROFINET IO) to factory settings with a RESET button ... 268

13.8 Reaction to faults in fail-safe modules and fail-safe motor starters ... 270

13.9 Maintenance and repair ... 272

13.10 Warranty ... 272

14 Test functions and eliminating problems ... 273

14.1 Test functions ... 273

14.2 Reading out/saving service data ... 280

15 Technical specifications 282
15.1 Standards, approvals and safety notes 282
15.2 Electromagnetic compatibility 289
15.3 Electromagnetic compatibility of fail-safe modules 292
15.4 Shipping and storage conditions 295
15.5 Mechanical and climatic environmental conditions 296
15.6 Insulation, protection class, degree of protection and rated voltage 298
15.7 Use of the ET 200SP in zone 2 potentially explosive atmospheres 299
A Dimension drawings 300
A.1 Shield connector 300
A.2 Labeling strip 300
A.3 Reference identification labels 301
B Accessories/spare parts 302
B.1 Lightning protection and overvoltage protection for fail-safe modules 306
C Calculating the leakage resistance 307
D Safety-relevant symbols 309
D.1 Safety-related symbols for devices without Ex protection 309
D.2 Safety-related symbols for devices with Ex protection 310
Glossary 312
Index 328

Guide to documentation

1

The documentation for the SIMATIC ET 200SP distributed I/O system is arranged into three areas.
This arrangement enables you to access the specific content you require.

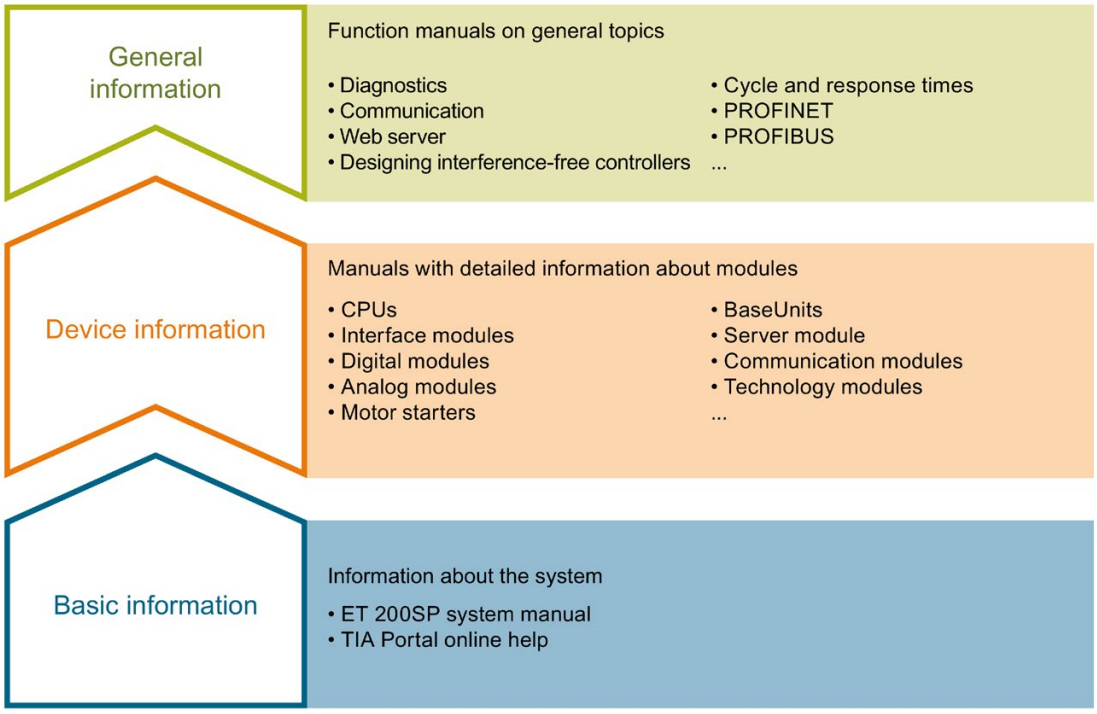

Basic information

The system manual describes in detail the configuration, installation, wiring and commissioning of the SIMATIC ET 200SP. distributed I/O system. The STEP 7 online help supports you in the configuration and programming.

Device information

Product manuals contain a compact description of the module-specific information, such as properties, wiring diagrams, characteristics and technical specifications.

General information

The function manuals contain detailed descriptions on general topics regarding the SIMATIC ET 200SP distributed I/O system, e.g. diagnostics, communication, Web server, motion control and OPC UA.

You can download the documentation free of charge from the Internet (https://support.industry.siemens.com/cs/ww/en/view/109742709).

Changes and supplements to the manuals are documented in a Product Information.

You can download the product information free of charge from the Internet (https://support.industry.siemens.com/cs/us/en/view/73021864).

Manual Collection ET 200SP

The Manual Collection contains the complete documentation on the SIMATIC ET 200SP distributed I/O system gathered together in one file.

You can find the Manual Collection on the Internet (http://support.automation.siemens.com/WW/view/en/84133942).

"mySupport"

With "mySupport", your personal workspace, you make the most of your Industry Online Support.

In "mySupport" you can store filters, favorites and tags, request CAx data and put together your personal library in the Documentation area. Furthermore, your data is automatically filled into support requests and you always have an overview of your current requests.

You need to register once to use the full functionality of "mySupport".

You can find "mySupport" in the Internet (https://support.industry.siemens.com/My/ww/en).

"mySupport" - Documentation

In the Documentation area of "mySupport", you have the possibility to combine complete manuals or parts of them to make your own manual.
You can export the manual in PDF format or in an editable format.

You can find "mySupport" - Documentation in the Internet (http://support.industry.siemens.com/My/ww/en/documentation).

"mySupport" - CAx Data

In the CAx Data area of "mySupport", you can have access the latest product data for your CAx or CAe system.

You configure your own download package with a few clicks.

In doing so you can select:

- Product images, 2D dimension drawings, 3D models, internal circuit diagrams, EPLAN macro files
- Manuals, characteristics, operating manuals, certificates
- Product master data

You can find "mySupport" - CAx Data in the Internet (http://support.industry.siemens.com/my/ww/en/CAxOnline).

Application examples

The application examples support you with various tools and examples for solving your automation tasks. Solutions are shown in interplay with multiple components in the system - separated from the focus in individual products.

You can find the application examples on the Internet (https://support.industry.siemens.com/sc/ww/en/sc/2054).

TIA Selection Tool

With the TIA Selection Tool, you can select, configure and order devices for Totally Integrated Automation (TIA).
This tool is the successor of the SIMATIC Selection Tool and combines the known configurators for automation technology into one tool.
With the TIA Selection Tool, you can generate a complete order list from your product selection or product configuration.

You can find the TIA Selection Tool on the Internet (http://w3.siemens.com/mcms/topics/en/simatic/tia-selection-tool).

SIMATIC Automation Tool

You can use the SIMATIC Automation Tool to run commissioning and maintenance activities simultaneously on various SIMATIC S7 stations as a bulk operation independently of the TIA Portal.

The SIMATIC Automation Tool provides a multitude of functions:

- Scanning of a PROFINET/Ethernet network and identification of all connected CPUs
- Address assignment (IP, subnet, gateway) and station name (PROFINET device) to a CPU
- Transfer of the data and the programming device/PC time converted to UTC time to the module
- Program download to CPU
- Operating mode switchover RUN/STOP
- Localization of the CPU by means of LED flashing
- Reading out CPU error information
- Reading the CPU diagnostic buffer
- Reset to factory settings
- Updating the firmware of the CPU and connected modules

You can find the SIMATIC Automation Tool on the Internet (https://support.industry.siemens.com/cs/ww/en/view/98161300).

PRONETA

With SIEMENS PRONETA (PROFINET network analysis), you analyze the plant network during commissioning. PRONETA features two core functions:

- The topology overview independently scans PROFINET and all connected components.
- The IO check is a fast test of the wiring and the module configuration of a system.

You can find SIEMENS PRONETA on the Internet (https://support.industry.siemens.com/cs/ww/en/view/67460624).

SINETPLAN

SINETPLAN, the Siemens Network Planner, supports you in planning automation systems and networks based on PROFINET. The tool facilitates professional and predictive dimensioning of your PROFINET installation as early as in the planning stage. In addition, SINETPLAN supports you during network optimization and helps you to exploit network resources optimally and to plan reserves. This helps to prevent problems in commissioning or failures during productive operation even in advance of a planned operation. This increases the availability of the production plant and helps improve operational safety.

The advantages at a glance

- Network optimization thanks to port-specific calculation of the network load
- Increased production availability thanks to online scan and verification of existing systems
- Transparency before commissioning through importing and simulation of existing STEP 7 projects
- Efficiency through securing existing investments in the long term and optimal exploitation of resources

You can find SINETPLAN on the Internet (https://www.siemens.com/sinetplan).

New properties/functions

2

What's new in the system manual ET 200SP, edition 02/2018 compared to edition 12/2016

What's new?		What are the customer benefits?	Where can I find information?
New contents	Potential distributor modules	Potential distributor modules are a space-saving replacement for standard potential distributors or potential distributor terminals. You can set up potential groups much faster, in a more compact design and with fewer components than with standard potential distributor systems. One application is, for example, the design of digital input modules with 16 channels and 3-wire connection. By using the potential distributor modules, you are reserving the unused signal lines of antivalent sensors. Another application is the supply of potentials for external components.	Starting from section System overview (Page 19)
	Password provider	As an alternative to manual password input you can connect a password provider to STEP 7. A password provider offers the following advantages: • Convenient handling of passwords. STEP 7 reads the password automatically for the blocks. This saves you time. • Optimal block protection because the operators do not know the actual password.	Section Know-how protection (Page 166)
	GetSMCinfo instruction	With the help of the GetSMCinfo instruction you can respond to information provided by the memory card in the user program and if required, replace the memory card as a precautionary measure. This makes sense in particular if you write to the card often in your application, for example if you use data logs.	Section SIMATIC memory card - overview (Page 240)

What's new?		What are the customer benefits?	Where can I find information?
	Testing with breakpoints	When testing with breakpoints, you execute a program from one breakpoint to another. Testing with breakpoints provides you with the following advantages: • Testing SCL and STL program code with the help of breakpoints • Localization of logic errors step by step • Simple and quick analysis of complex programs prior to actual commissioning • Recording of current values within individual executed loops • Use of breakpoints for program validation also possible in SCL/STL networks within LAD/FBD blocks	Section Test functions (Page 273)
Changed contents	Reading out the identification and maintenance data using the Get_IM_Data instruction	With the Get_IM_Data instruction you can read out the identification and maintenance data of the modules without much programming work. With the Get_IM_Data instruction, you can access the identification and maintenance data (I&M) of a module in the user program. I&M data is information saved in a module. This allows you to • check the system configurations • react to hardware changes • react to hardware faults in the user program. Finding and elimination of hardware errors is made easier.	Section Reading out and entering I&M data (Page 225)
	Time synchronization	For all applications that need the exact time, you update the CPU time using the NTP process. This also automatically sets the CPU time beyond subnet limits.	Section Time synchronization (Page 234)
	Firmware update via accessible devices	You are given information on fast firmware updates via accessible devices in the network.	Section Firmware update (Page 257)

System overview

3

3.1 What is the SIMATIC ET 200SP distributed I/O system?

SIMATIC ET 200SP

SIMATIC ET 200SP is a scalable and highly flexible distributed I/O system for connecting process signals to a higher-level controller via a fieldbus.

Customer benefits of the system

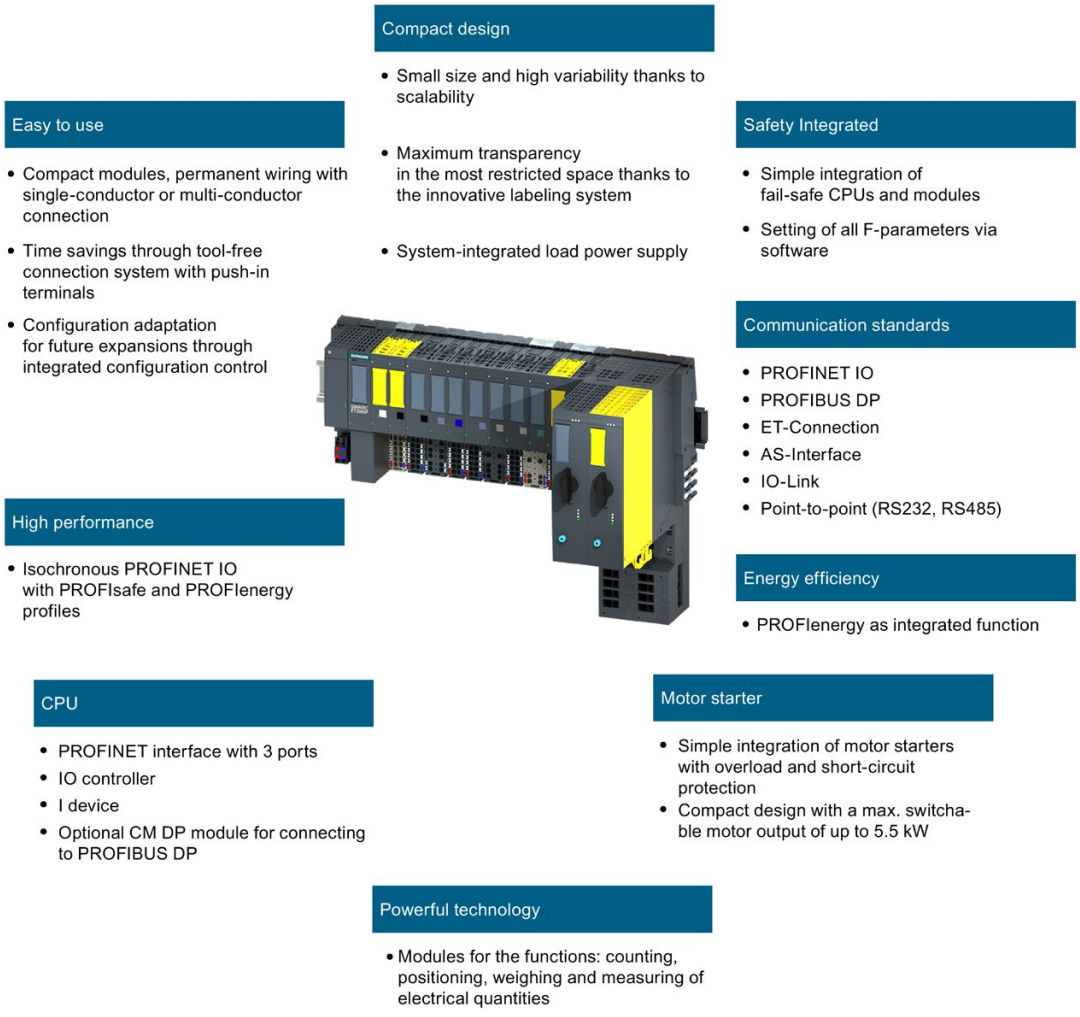

Figure 3-1 SIMATIC ET 200SP distributed I/O system - Customer benefits

Area of application

Thanks to its multifunctionality, the SIMATIC ET 200SP distributed I/O system is suitable for a wide range of applications. Its scalable design allows you to tailor your configuration to local requirements. Different CPUs/interface modules are available for connection to PROFINET IO or PROFIBUS DP.

SIMATIC ET 200SP with CPU allows intelligent pre-processing to relieve the higher-level controller. The CPU can also be used as standalone device.

By using fail-safe CPUs, you can implement applications for safety engineering. Configuration and programming of your safety program takes place the same way as for standard CPUs.

A wide range of I/O modules rounds off the product range.

SIMATIC ET 200SP is designed with degree of protection IP20 and is intended for installation in a control cabinet.

Configuration

The SIMATIC ET 200SP distributed I/O system is installed on a mounting rail. It consists of:

- CPU/interface module
- Up to 64 I/O modules, which can be plugged into BaseUnits in any combination
- Up to 31 motor starters
- A server module that completes the configuration of the ET 200SP.

Configuration example

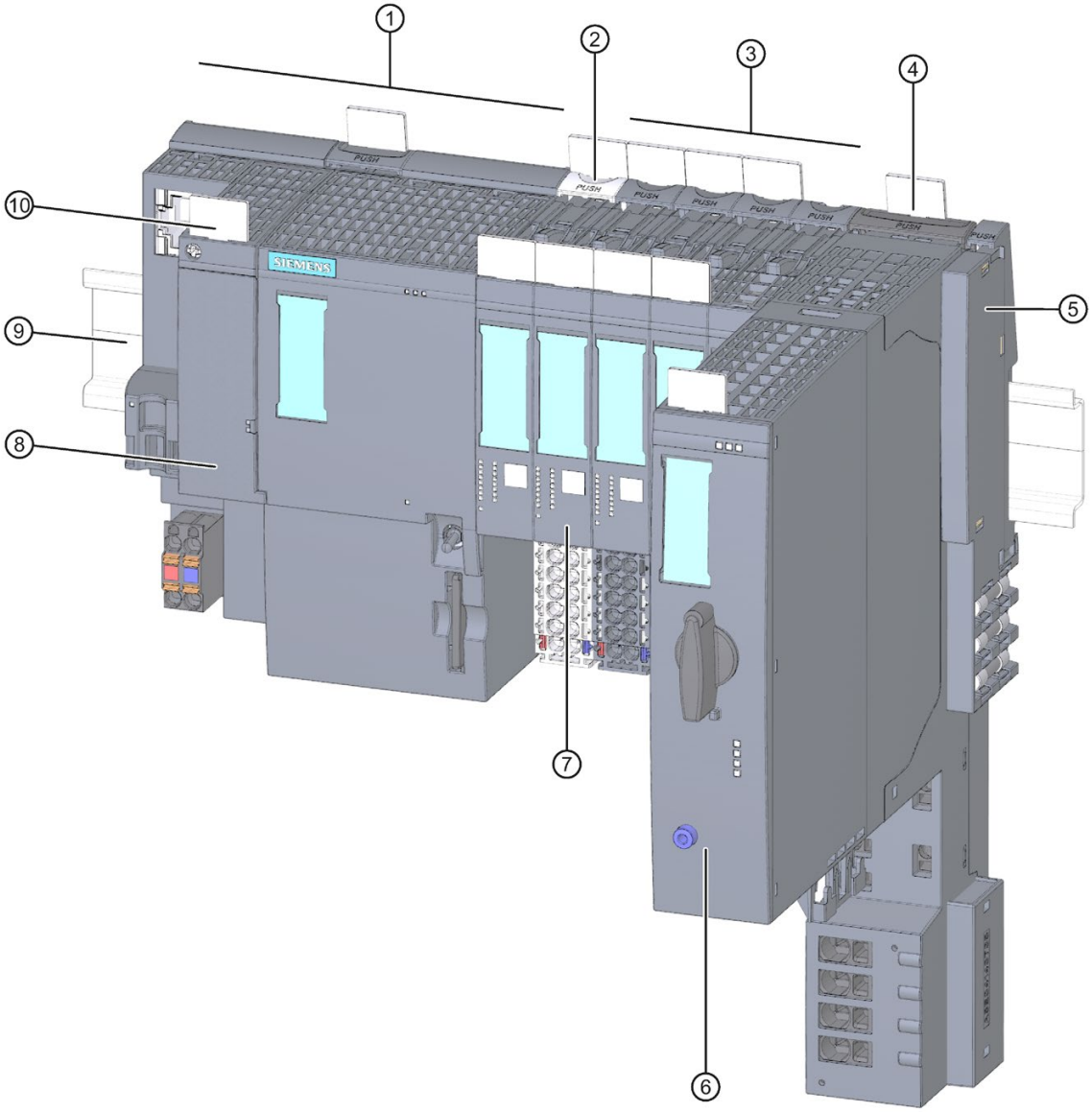

① CPU/interface module
② Light-colored BaseUnit BU..D with infeed of supply voltage
③ Dark-colored BaseUnits BU..B for extending the potential group
④ BaseUnit for motor starter
⑤ Server module (included in the scope of delivery of the CPU/interface module)
⑥ ET 200SP motor starter
⑦ I/O module
⑧ BusAdapter
⑨ Mounting rail
⑩ Reference identification label

Figure 3-2 Configuration example of the ET 200SP

3.2 What are fail-safe automation systems and fail-safe modules?

Fail-safe automation systems

Fail-safe automation systems (F-systems) are used in systems with higher safety requirements. F-systems control processes and ensure that they are in a safe state immediately after shutdown. In other words, F-systems control processes in which an immediate shutdown does not endanger persons or the environment.

Safety Integrated

Safety Integrated is the integrated safety concept for automation and drive technology from Siemens.

Proven technologies and systems from automation technology are used for safety systems. Safety Integrated includes the complete safety sequence, ranging from sensor, actuator and fail-safe modules right through to the controller, including safety-related communication via standard fieldbuses. Drives and controllers handle safety tasks in addition to their actual functions.

Fail-safe modules

The key difference between fail-safe modules (F-modules) and standard modules is that they have an internal two-channel design. This means the two integrated processors monitor each other, automatically test the input and output circuits, and switch the fail-safe module to a safe state in the event of a fault.

The F-CPU communicates with a fail-safe module via the safety-related PROFIsafe bus profile.

Fail-safe motor starters

Fail-safe motor starters enable safety-related tripping of motor loads. Fail-safe motor starters are not PROFIsafe nodes. Motor starters operate together with the fail-safe modules of the ET 200SP system.

Area of application of ET 200SP with fail-safe I/O modules

By using the ET 200SP distributed I/O system with fail-safe I/O modules, you are replacing conventional safety engineering configurations. This includes the replacement of switching devices for emergency STOP, protective door monitors, two-hand operation, etc.

3.3 How are SIMATIC Safety F-systems structured with ET 200SP?

SIMATIC Safety F-system with ET 200SP

The figure below shows an example of a configuration for a SIMATIC Safety F-system with ET 200SP distributed I/O system and PROFINET IO. The PROFINET IO lines can be set up with copper cable, fiber-optic cable or WLAN.

Fail-safe I/O modules and non-fail-safe I/O modules can be combined in an ET 200SP configuration.

The fail-safe IO controller (F-CPU) exchanges safety-related and non-safety-related data with fail-safe and non-fail-safe ET 200SP modules.

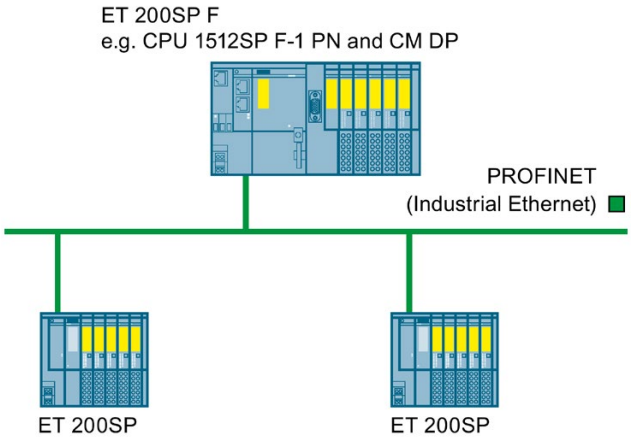

Figure 3-3 Fail-safe SIMATIC Safety automation system (sample configuration)

Fail-safe ET 200SP I/O modules

The following fail-safe I/O modules are available for the ET 200SP distributed I/O system:

- Fail-safe power modules are used to supply the potential group load voltage and for the safety-related tripping of the load voltage for non-fail-safe output modules.
- Fail-safe digital input modules detect the signal states of safety-related sensors and send the relevant safety frames to the F-CPU.
- Fail-safe digital output modules are suitable for safety-related shutdown procedures with short circuit and cross-circuit protection up to the actuator.

ET 200SP fail-safe motor starters

Fail-safe motor starters are suitable for safety-related tripping of motor loads.

Example of a configuration with fail-safe I/O modules

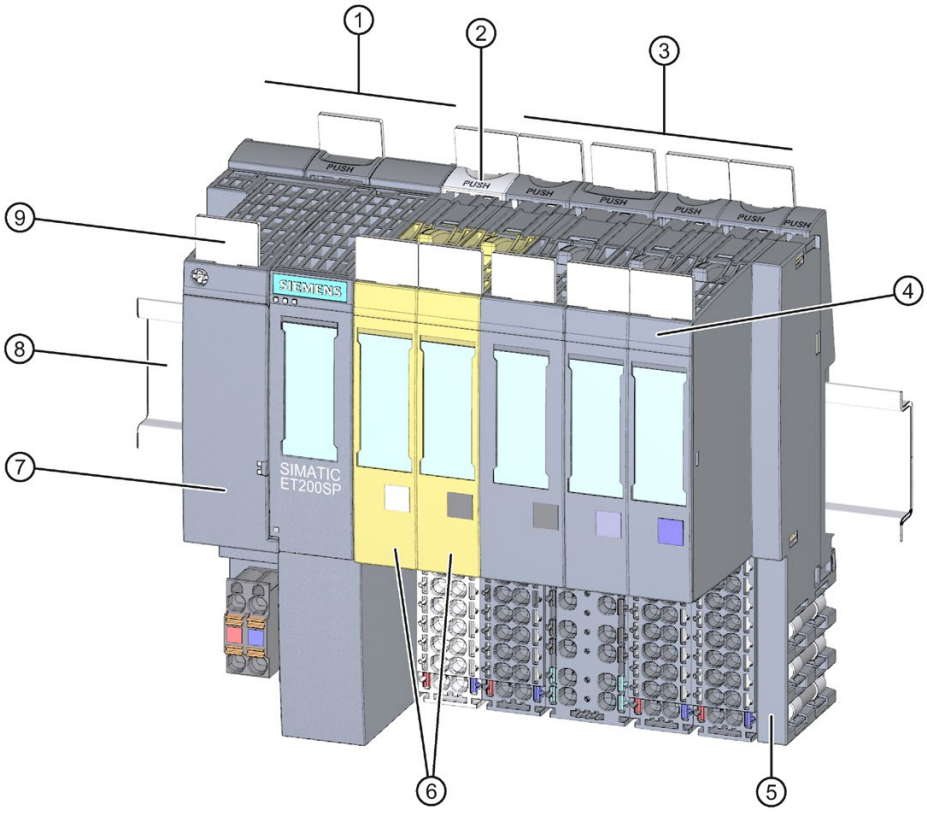

① Interface module
② Light-colored BaseUnit BU..D with infeed of supply voltage
③ Dark-colored BaseUnits BU..B for conducting the potential group further
④ I/O module
⑤ Server module (ships with the interface module)
⑥ Fail-safe I/O modules
⑦ BusAdapter
⑧ Mounting rail
⑨ Reference identification label

Figure 3-4 Example of a configuration of the ET 200SP with fail-safe I/O modules

Hardware and software requirements

Fail-safe modules ET 200SP are supported by IM155-6PN ST interface modules as of firmware V1.1.1, IM155-6PN HF as of firmware V2.0, IM155-6PN HS as of firmware V4.0 and IM155-6DP HF as of firmware V1.0.

You require the STEP 7 Safety Advanced option package, V12 or higher including HSP 54, for configuration and programming of the ET 200SP fail-safe modules with the SIMATIC Safety fail-safe system.

You require the F-Configuration Pack V5.5 SP10 or later for configuring and programming the ET 200SP failsafe modules with the Distributed Safety failsafe system.

You require the F-Configuration Pack V5.5 SP12 or later for configuring and programming the ET 200SP failsafe modules with the F/FH Systems failsafe system.

ET 200SP fail-safe motor starters are supported by interface modules IM155-6PN BA, firmware V3.2 or higher, IM155-6PN ST, firmware V3.1 or higher, IM155-6PN HF, firmware V3.1 or higher and IM155-6DP HF firmware V3.0 or higher.

You require SIMATIC Step 7 V14 or higher for configuration and programming of ET 200SP fail-safe motor starters. The F-Configuration Pack is not needed for configuration and programming of the ET 200SP fail-safe motor starter.

Note

Configuration of ET 200SP motor starters, SIMATIC Step 7 V13 or higher, is possible with a GSD file (GSDML).

Use in safety mode only

Safety mode is the F-I/O operating mode that allows safety-related communication using safety frames.

Safety mode of motor starters is characterized by the fail-safe digital input (F-DI) and availability of the 24 V power supply.

You can only use the ET 200SP fail-safe I/O modules in safety mode. They cannot be used in non-fail-safe mode.

Achievable safety classes

The fail-safe modules are equipped with integrated safety functions for safety mode.

You can achieve the safety classes of the table below:

- With the appropriate parameter assignment of the safety functions in STEP 7
- With a specific combination of fail-safe and non-fail-safe I/O modules
- With a special arrangement and wiring of the sensors and actuators

Table 3- 1 Safety classes that can be achieved with ET 200SP in safety mode

Safety class in safety mode		
According to IEC 61508	In accordance with ISO 13849-1	
SIL2	Category 3	(PL) Performance Level d
SIL3	Category 3	(PL) Performance Level e
SIL3	Category 4	(PL) Performance Level e

Additional information

You will find the use cases and wiring for the relevant safety class in the manuals of the fail-safe I/Os and the fail-safe motor starters.

3.4 Components

Basic components of the ET 200SP distributed I/O system

Table 3- 2 Basic components of the ET 200SP

Basic component	Function	Figure
Mounting rail in accordance with EN 60715	The mounting rail is the rack of the ET 200SP. The ET 200SP is installed on the mounting rail. The mounting rail is 35 mm high.	
CPU/Fail-safe CPU	The (F) CPU: • Runs the user program. The F-CPU also runs the safety program. • Can be used as an IO controller or I-Device on PROFINET IO or as a standalone CPU • Links the ET 200SP to the IO devices or the IO controller • Exchanges data with the I/O modules via the backplane bus. Additional CPU functions: • Communication via PROFIBUS DP (the CPU can be used as a DP master or DP slave in combination with the CM DP communication module) • Integrated Web server • Integrated technology • Integrated trace functionality • Integrated system diagnostics • Integrated safety • Safety mode (when using fail-safe CPUs)	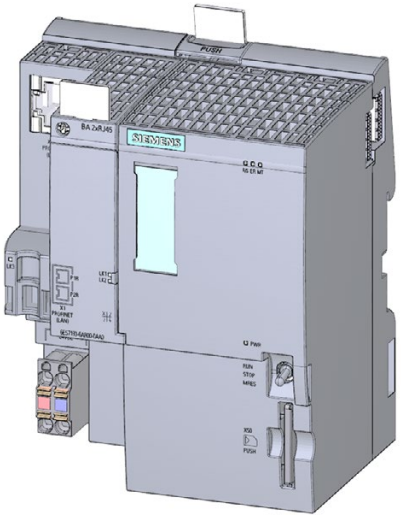

Basic component	Function	Figure
Communication module CM DP	The communication module CM DP • Connects the CPU with PROFIBUS DP • The bus connection is an RS485 interface	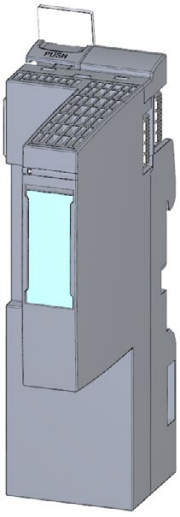
Interface module for PROFINET IO	The interface module: • Can be used as IO device on PROFINET IO • Links the ET 200SP with the IO controller • Exchanges data with the I/O modules via the backplane bus.	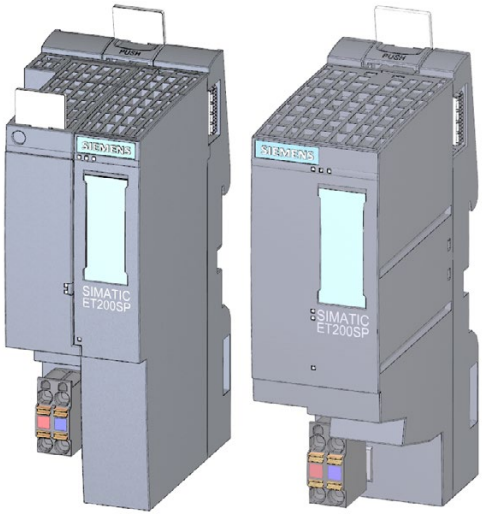
Interface module for PROFIBUS DP	The interface module: • Can be used as DP slave on PROFIBUS DP • Links the ET 200SP with the DP master • Exchanges data with the I/O modules via the backplane bus.	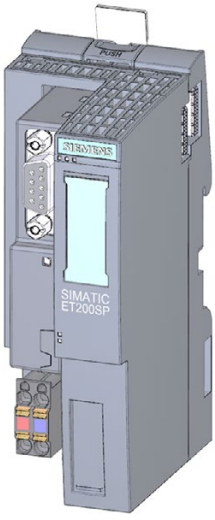

Basic component	Function	Figure
BusAdapter	The BusAdapters allow free selection of the connection technology for PROFINET IO. The following versions are available for PROFINET CPU/interface modules: • For standard RJ45 connector (BA 2×RJ45) ① • For direct connection of the bus cable (BA 2×FC) ② • For POF/PCF fiber-optic cable (BA 2xSCRJ) ③ • As media converter for POF/PCF fiber-optic cable ⇔ standard RJ45 plug (BA SCRJ/RJ45) ④ • As media converter for POF/PCF fiber-optic cable ⇔ direct connection of the bus cable (BA SCRJ/FC) ⑤ • For glass fiber-optic cable (BA 2xLC) ⑥ • As media converter for glass fiber-optic cable ⇔ standard RJ45 plug (BA LC/RJ45) ⑦ • As media converter for glass fiber-optic cable ⇔ direct connection of the bus cable (BA LC/FC) ⑧	① ② 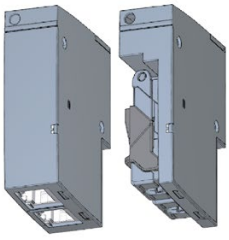 ③ ④ ⑤ 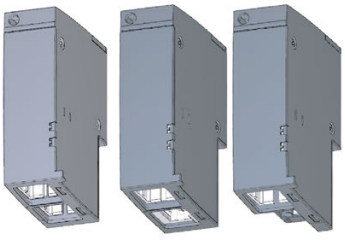 ⑥ ⑦ ⑧ 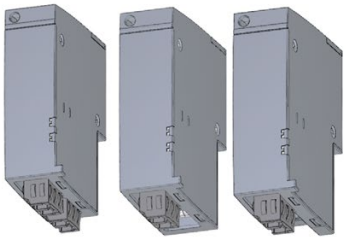
	For mixed ET 200SP/ET 200AL configuration, you require the BusAdapter BA-Send 1xFC ① (plugged into the BaseUnit BU-Send). Connect the bus cable for ET-Connection to the BusAdapter BA-Send 1xFC.	① 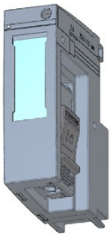

Basic component	Function	Figure
BaseUnit	The BaseUnits provide the electrical and mechanical connection of the ET 200SP modules. Place the I/O modules or the motor starter onto the BaseUnits. Suitable BaseUnits are available in each case for the different requirements. You can find additional information in section Selecting the BaseUnit for I/O modules (Page 40).	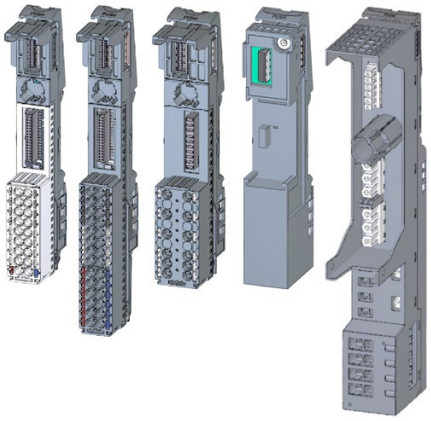
PotDis-BaseUnit potential distributor module	You use the potential distributor module to distribute a variety of potentials (P1, P2). This allows you to implement a multi-cable connection without external terminals with 16-channel digital modules. The assembly has two parts: • If you need additional potential terminals, plug a PotDis-TerminalBlock in the PotDis-BaseUnit. • Alternatively, plug a BU cover (15 mm) on the PotDis-BaseUnit. With potential distributor modules, you may only connect to the PotDis-TB versions BR-W and n.c.-G potential, which exceed the voltage level of SELV/PELV. Other SELV/PELV potential groups should be separated with light-colored PotDis BUs. Suitable PotDis-BaseUnits are available in each case for the different requirements. You can find additional information in section Selecting a PotDis-BaseUnit (Page 45).	
PotDis-TerminalBlock	If you need additional potential terminals for a PotDis-BaseUnit, plug a PotDis-TerminalBlock in the PotDis-BaseUnit. Voltages greater than SELV/PELV are only permitted for the PO PotDis-TBs BR (bridged) and NC (not connected). The same applies to PE. Voltages at the terminals of the PotDis modules connected to the P1/P2 rails must not be greater than SELV/PELV. Suitable PotDis-TerminalBlocks are available in each case for the different requirements. You can find additional information in section Selecting a PotDis-TerminalBlock (Page 46).	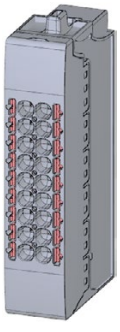

Basic component	Function	Figure
Fail-safe power module	The fail-safe power module allows the safety-related shutdown of digital output modules / fail-safe digital output modules.	
I/O module / fail-safe I/O module	The I/O module determines the function at the terminals. The controller detects the current process state via the connected sensors and actuators, and triggers the corresponding reactions. I/O modules are divided into the following module types: • Digital input (DI, F-DI) • Digital output (DQ, F-DQ PM, F-DQ PP, F-RQ) • Analog input (AI) • Analog output (AQ) • Technology module (TM) • Communication module (CM)	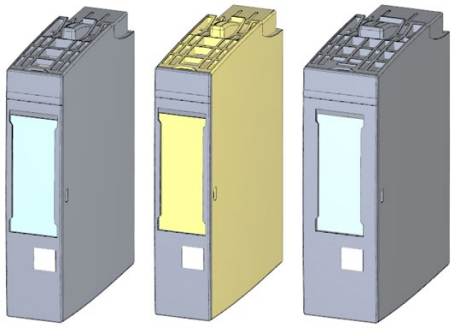
Motor starter/fail-safe motor starter	The motor starter is a switching and protection device for 1-phase and 3-phase loads. The motor starter is available as a direct-on-line and reversing starter.	

Basic component	Function	Figure
Vale terminal AirLINE SP type 8647 (Bürkert GmbH & Co. KG) [1] [2]	Basic component: Valve terminal AirLINE SP type 8647 (Bürkert). For more information on the AirLINE SP, type 8647 (e.g. data sheet and operating instructions), please contact Bürkert (https://www.burkert.co.uk/en/type/8647) directly. Function: Valve terminals are common in industrial automation and are used as pilot valves for controlling pneumatic actuators, for example in areas of the food, pharmaceutical and water treatment industries. The ET 200SP in combination with the AirLINE SP, type 8647 from Bürkert provides a universal interface between process and plant control that enables the flexible, modular configuration of pilot valves and I/O modules. The valve terminal can also be fitted to the base of the control cabinet with the help of the AirLINE Quick Adapter. This further reduces the space required in the control cabinet and considerably simplifies installation of the pneumatic system. [1] [2]	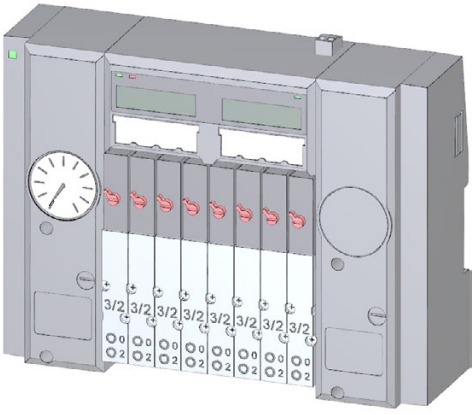
BU cover	Insert the BU cover on the BaseUnits: • Whose slots are not equipped with I/O modules/ motor starters// PotDis-TerminalBlocks. • Whose slots have been reserved for future expansion (as empty slots). You can keep a reference identification label for the planned I/O module inside the BU cover. There are three versions: • For BaseUnits with a width of 15 mm ① • For BaseUnits with a width of 20 mm ② • For BaseUnits of motor starters with a width of 30 mm ③	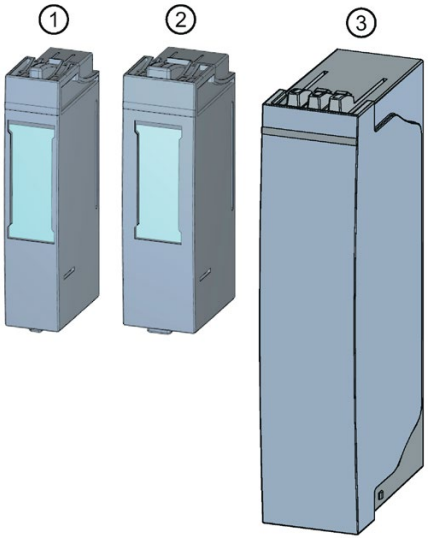

Basic component	Function	Figure
Server module	The server module completes the configuration of the ET 200SP. The server module includes holders for 3 spare fuses (5 × 20 mm). The server module ships with the CPU/interface module.	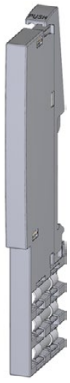
Coding element	The coding element codes the I/O module with the BaseUnit. There are two versions: • Mechanical coding element ①: Ensures the coding • Electronic coding element ②: This version also has an electronic, rewritable memory for module-specific configuration data (such as the F-destination address for fail-safe modules, parameter data for the IO link master).	① ②

[1] Note: The description contains non-binding information on supplementary products that are manufactured and marketed not by Siemens but by third-parties outside the Siemens group ("third-party firms"). These third parties organize the manufacture, sale and delivery of their products independently and their terms and conditions apply.
Responsibility for these supplementary products and for the information relating to them that is provided here thus lies solely with the third parties in question. Unless bound to do so by statutory requirements, Siemens shall not accept any liability or provide any guarantee for the supplementary products of third-party firms. Please also note the information "Disclaimer/Use of hyperlinks".

[2] Disclaimer/Use of hyperlinks: Siemens has put together this description with great care. However, Siemens is unable to check whether the data provided by third-party firms is complete, accurate and up to date. Certain items of information may therefore potentially be incorrect, incomplete or no longer up to date. Siemens shall not accept any liability should this be the case, nor shall it accept liability for the usability of the data or of the product for the user unless it has a statutory obligation to do so.
This entry contains the addresses of third-party websites. Siemens is not responsible for and shall not be liable for these websites or their content, as Siemens has not checked the information contained therein and is not responsible for the content or information they provide. The use of such websites is at the user's own risk.

Accessories of the ET 200SP distributed I/O system

Table 3- 3 Accessories of the ET 200SP

Accessories	Function	Figure
24 V DC connector	Applying the 24 V DC supply at the connector and connection with the CPU/interface module, for example.	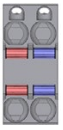
Shield connection	The shield connection allows the low-impedance contacting of cable shields with minimum installation times.	
Labeling strips	Attach the labeling strips to the modules for system-specific labeling of the ET 200SP. The labeling strips can be printed. The labeling strips can be ordered as accessories (Page 302) on a roll for thermal transfer printers or as DIN A4 format sheets for laser printers.	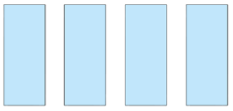
Reference identification labels	The labels enable the reference identification labeling of the ET 200SP components. The labels can be ordered on a mat for thermal transfer and inkjet printers as accessories (Page 302).	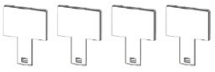
Color identification labels	The color identification labels are module-specific and can be ordered for the process terminals, AUX terminals and additional terminals as accessories (Page 302).	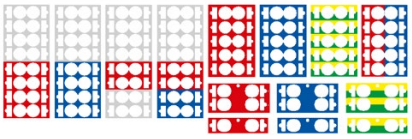

Accessories of the SIMATIC ET 200SP motor starters

Table 3- 4 SIMATIC ET 200SP motor starter accessories

Accessories	Function	Figure
3DI/LC module	The optional 3DI/LC module has three digital inputs and one LC input. For reasons of operational safety, input LC is permanently set to manual local mode. By parameterizing the inputs DI1 - DI3 with motor CLOCKWISE or motor COUNTER-CLOCKWISE, you can control the motor in manual local mode. The functions of the 3DI/LC module are not relevant to functional safety. Detailed information on the functions when using a 3DI/LC module can be found in the Manual (https://support.industry.siemens.com/cs/ww/en/view/109479973).	
Mechanical bracket for BaseUnit	Use the mechanical bracket for additional fixing of the motor starter. You can use the mechanical bracket on 7.5 mm and 15 mm mounting rails.	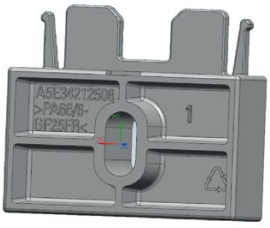
Infeed bus cover	For finger-safe termination of the infeed bus, use the cover.	
Fan	You can use the motor starter at higher ambient temperatures if a fan is installed.	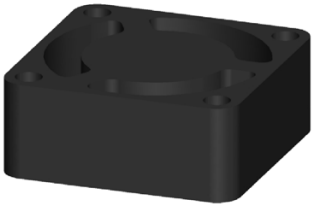

Application planning

4

Overview

The BaseUnits (BU) are classified according to different types. Every BaseUnit type is distinguished by characteristics that match certain I/O modules and motor starters (see the following table and graphics).

You recognize the BU type for an I/O module by the last two digits of an I/O module's article number.

The BU type onto which you can plug the respective I/O module is printed on the I/O modules. You can therefore read which BU type you need straight from the I/O module (see Factory labels (Page 127) (page 122)).
Example: On the output module DQ 16x24VDC/0.5A ST with article number 6ES7132-6BH01-0B**A0** the information "BU: A0" is printed. This means you can plug this I/O module to a BaseUnit of the BU type "A0", which means on any BaseUnit whose article number ends in "A0". I/O modules that are suitable for two BU types are labeled accordingly, for example "BU: A0, A1".

Note

You will find a complete overview of the possibilities of combining BaseUnits and I/O modules /motor starters in the Product information for documentation of the ET 200SP I/O system (http://support.automation.siemens.com/WW/view/en/73021864).

Table 4- 1 Selecting a suitable BaseUnit for I/O modules

Selecting a BaseUnit	I/O module (example)	Examples of suitable I/O modules for BU types	
		I/O module (example)	BaseUnit
BU type **A0** See Digital, fail-safe, communication, technology or analog modules without temperature measurement (Page 40)	Digital, fail-safe, technology or communication module • 6ES7...**A0** • 24 V DC • 15 mm wide	DI 16×24VDC ST (6ES7131-6BH00-0B**A0**)	BU15-P16+A0+2D (6ES7193-6BP00-0D**A0**)
	Analog module **without** temperature measurement** • 6ES7...**A1** • 24 V DC • 15 mm wide	AI 4xU/I 2-wire ST (6ES7134-6HD00-0B**A1**)	
BU type **A1** See Analog modules with temperature measurement (Page 41)	Analog module **with** temperature measurement* • 6ES7...**A1** • 24 V DC • 15 mm wide	AI 4×RTD/TC 2-/3-/4-wire HF (6ES7134-6JD00-0C**A1**)	BU15-P16+A0+2D/T(6ES7193-6BP00-0D**A1**)
BU type **B0** (BU..B, dark-colored BaseUnit)	Digital output module with relay • 6ES7...**B0** • Up to 230 V AC • 20 mm wide	RQ 4×120VDC-230VAC/5A NO ST (6ES7132-6HD00-0B**B0**)	BU20-P12+A4+0B (6ES7193-6BP20-0B**B0**)
BU type **B1** (BU..B, dark-colored BaseUnit)	Digital modules • 6ES7...**B1** • up to 230 V AC • 20 mm wide	DI 4×120..230VAC ST (6ES7131-6FD00-0B**B1**)	BU20-P12+A0+4B (6ES7193-6BP20-0B**B1**)
BU type **C0** (BU..D, light-colored BaseUnit)	Fail-safe power module • 6ES7...**C0** • 24 V DC • 20 mm wide CM AS-i Master ST/F-CM AS-i Safety ST • 6ES7...**C1** • Up to 30 V DC • 20 mm wide	CM AS-i Master ST (3RK7137-6SA00-0B**C1**)	BU20-P6+A2+4D (6ES7193-6BP20-0D**C0**)

Selecting a BaseUnit	I/O module (example)	Examples of suitable I/O modules for BU types	
		I/O module (example)	BaseUnit
BU type **C1** (BU..B, dark-colored BaseUnit)	F-CM AS-i Safety ST • 6ES7...**C1** • Up to 30 V DC • 20 mm wide	F-CM AS-i Safety ST (3RK7136-6SC00-0B**C1**)	BU20-P6+A2+4B (6ES7193-6BP20-0B**C1**)
BU type **D0**	AI Energy Meter • 6ES7...**D0** • Up to 400 V AC/ 480 V AC • 20 mm wide	AI Energy Meter 480VAC ST (6ES7134-6PA20-0B**D0**)	BU20-P12+A0+0B (6ES7193-6BP00-0B**D0**)
BU type **F0**	F-RQ 1×24VDC/24..230 VAC/5A • 6ES7...**F0** • Up to 230 V AC • 20 mm wide	F-RQ 1×24VDC/24..230VAC/5A (6ES7136-6RA00-0B**F0**)	BU20-P8+A4+0B (6E7193-6BP20-0B**F0**)
BU type **U0**	DQ 4×24...230VAC/2 A HF • 6ES7...**U0** • Up to 230 V AC • 20 mm wide	DQ 4×24...230VAC/2A HF (6ES7132-6FD00-0C**U0**)	BU20-P16+A0+2D (6E7193-6BP00-0B**U0**)

* For compensation of the reference junction temperature for thermocouples. The BU type A1 is required if measuring the reference junction temperature with an internal temperature sensor or if you need the 2×5 additional terminals.

** Analog modules with temperature measurement can be plugged on BU type A0.

Table 4- 2 BaseUnit for motor starters

		Selecting the BaseUnit					
		BU-30-MS1	BU-30-MS2	BU-30-MS3	BU-30-MS4	BU-30-MS5	BU-30-MS6
24 V infeed		**x**		**x**			
500 V infeed		**x**	**x**			**x**	
F-DI terminals						**x**	**x**
Motor starters							
DS 0.3 - 1A HF	3RK1308-0AB00-0CP0	x	x	x	x	x*	x*
DS 0.9 - 3A HF	3RK1308-0AC00-0CP0	x	x	x	x	x*	x*
DS 2.8 - 9A HF	3RK1308-0AD00-0CP0	x	x	x	x	x*	x*
DS 4.0 - 12A HF	3RK1308-0AE00-0CP0	x	x	x	x	x*	x*
RS 0.3 - 1A HF	3RK1308-0BB00-0CP0	x	x	x	x	x*	x*
RS 0.9 - 3A HF	3RK1308-0BC00-0CP0	x	x	x	x	x*	x*
RS 2.8 - 9A HF	3RK1308-0BD00-0CP0	x	x	x	x	x*	x*
RS 4.0 - 12A HF	3RK1308-0BE00-0CP0	x	x	x	x	x*	x*
F-DS 0.3 - 1A HF	3RK1308-0CB00-0CP0	x	x	x	x	x	x
F-DS 0.9 - 3A HF	3RK1308-0CC00-0CP0	x	x	x	x	x	x
F-DS 2.8 - 9A HF	3RK1308-0CD00-0CP0	x	x	x	x	x	x
F-DS 4.0 - 12A HF	3RK1308-0CE00-0CP0	x	x	x	x	x	x
F-RS 0.3 - 1A HF	3RK1308-0DB00-0CP0	x	x	x	x	x	x
F-RS 0.9 - 3A HF	3RK1308-0DC00-0CP0	x	x	x	x	x	x
F-RS 2.8 - 9A HF	3RK1308-0DD00-0CP0	x	x	x	x	x	x
F-RS 4.0 - 12A HF	3RK1308-0DE00-0CP0	x	x	x	x	x	x

* The F-DI terminals have no function with this combination.

Additional information

Additional information on the functional assignment of the terminals and on the associated BaseUnits can be found in one of the following manuals:

- Manual for the relevant I/O module (http://support.automation.siemens.com/WW/view/en/55679691/133300)
- Manual BaseUnits (http://support.automation.siemens.com/WW/view/en/59753521)
- Motor starter (https://support.industry.siemens.com/cs/ww/en/view/109479973) manual

4.1 Selecting the BaseUnit for I/O modules

4.1.1 Digital, fail-safe, communication, technology or analog modules without temperature measurement

Selection of a suitable BaseUnit

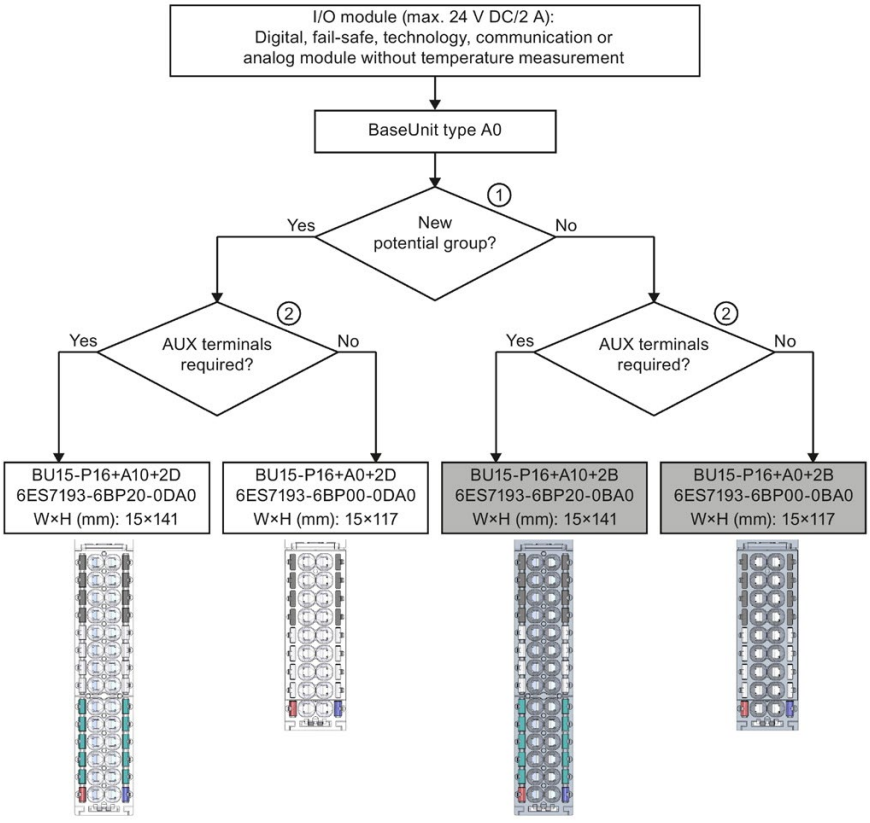

① Light-colored BaseUnit: Configuration of a new potential group, electrical isolation from adjacent module on the left. The first BaseUnit of the ET 200SP is usually a light-colored BaseUnit for feeding the supply voltage L+.
Exception: If you insert an AC I/O module or an AI Energy Meter as the first I/O module, the first BaseUnit in the ET 200SP configuration can be a dark-colored BaseUnit. The requirement is that you use a CPU or IM 155-6 (as of V3.0).

Dark-colored BaseUnit: Conduction of the internal power and AUX buses from the adjacent module on the left.

② AUX terminal: 10 internally bridged terminals for individual use up to 24 V DC/10 A or as protective conductors.

Example: Multiple cable connection for DI 8×24VDC ST

Figure 4-1 Digital, fail-safe, communication, technology or analog modules without temperature measurement

4.1.2 Analog modules with temperature measurement

Selection of a suitable BaseUnit

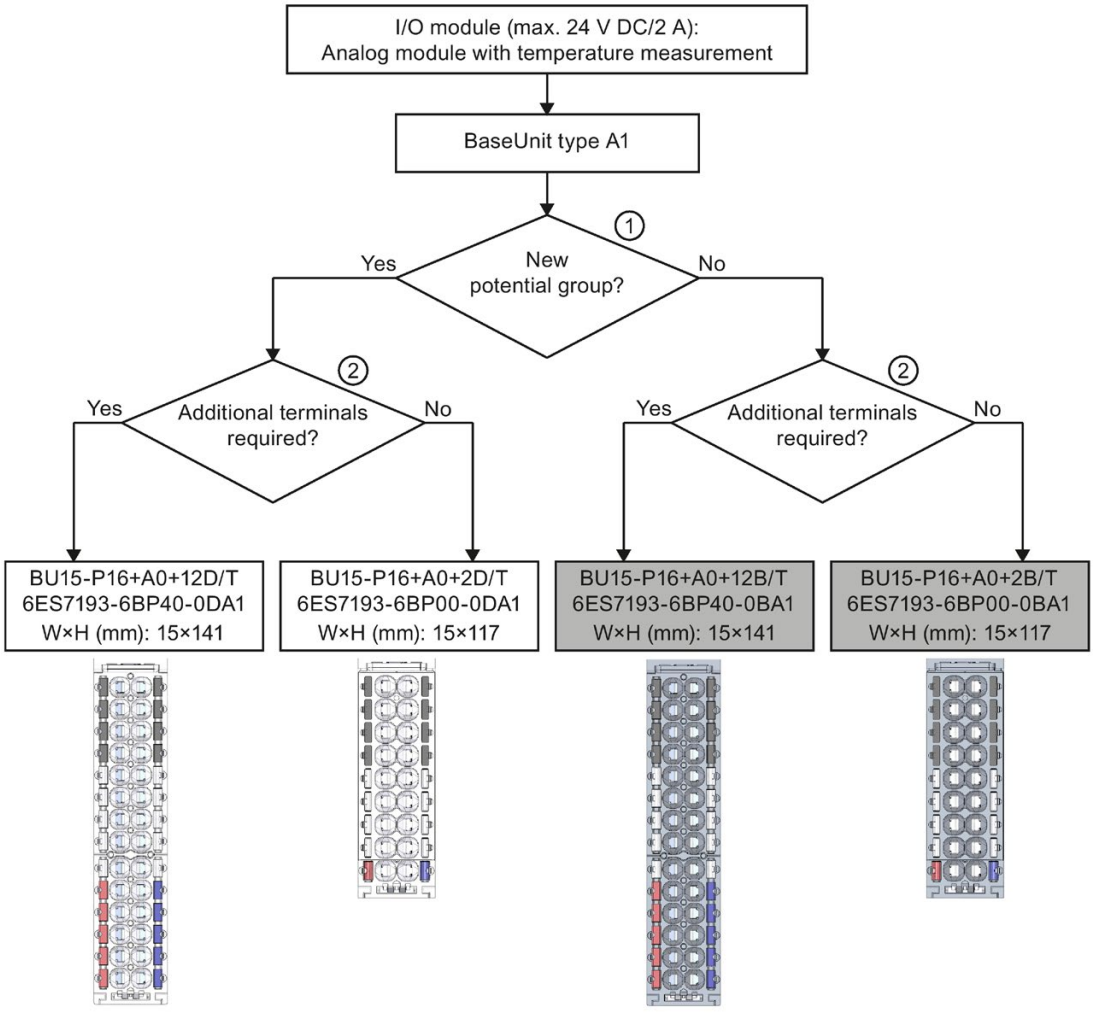

① Light-colored BaseUnit: Configuration of a new potential group, electrical isolation from adjacent module on the left. The first BaseUnit of the ET 200SP is usually a light -colored BaseUnit for feeding the supply voltage L+.
Dark-coloredBaseUnit: Continuation of the internal power and AUX buses from the adjacent module on the left.

② Additional terminals: 2×5 internally bridged terminals for individual use up to 24 V DC/2 A
Example: Sensor supply for AI 4×U/I 2-wire ST

Figure 4-2 Analog modules with temperature measurement

4.2 Selecting motor starters with a suitable BaseUnit

4.2.1 Selecting a BaseUnit for motor starters

The motor starter BaseUnits "BU30-MS1", "BU30-MS2", "BU30-MS3" and "BU30-MS4" are compatible with all non-fail-safe motor starters. The motor starter BaseUnits "BU30-MS1", "BU30-MS2", "BU30-MS3", "BU30-MS4", "BU30-MS5" and "BU30-MS6" are compatible with all fail-safe motor starters. You will find an overview of available BaseUnits for motor starters here (Page 36). With the different BaseUnits, you can form different potential groups for the 24 V DC electronics supply (L+/M) and for the AC infeed.

Voltage range

The voltage range of the AC infeed is between 48 V AC and 500 V AC.

Selection criteria for the BaseUnit

The figure below shows the criteria you use to select the appropriate BaseUnit:

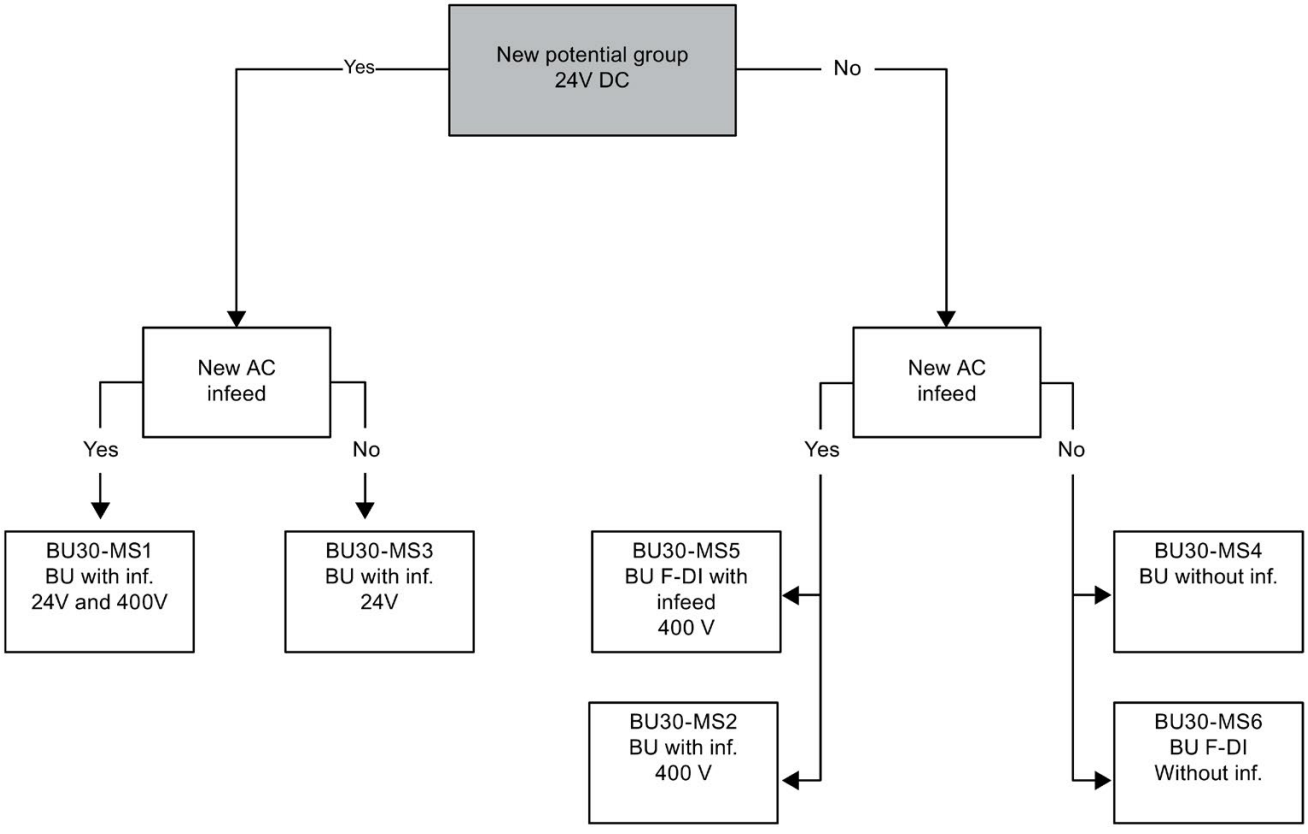

Form separate potential groups on the infeed bus for single-phase (L, N, PE) and three-phase (L1, L2, L3, PE) operation.

4.2.2 Selecting the motor starter

You select the suitable motor starter using the load type according to the following scheme:

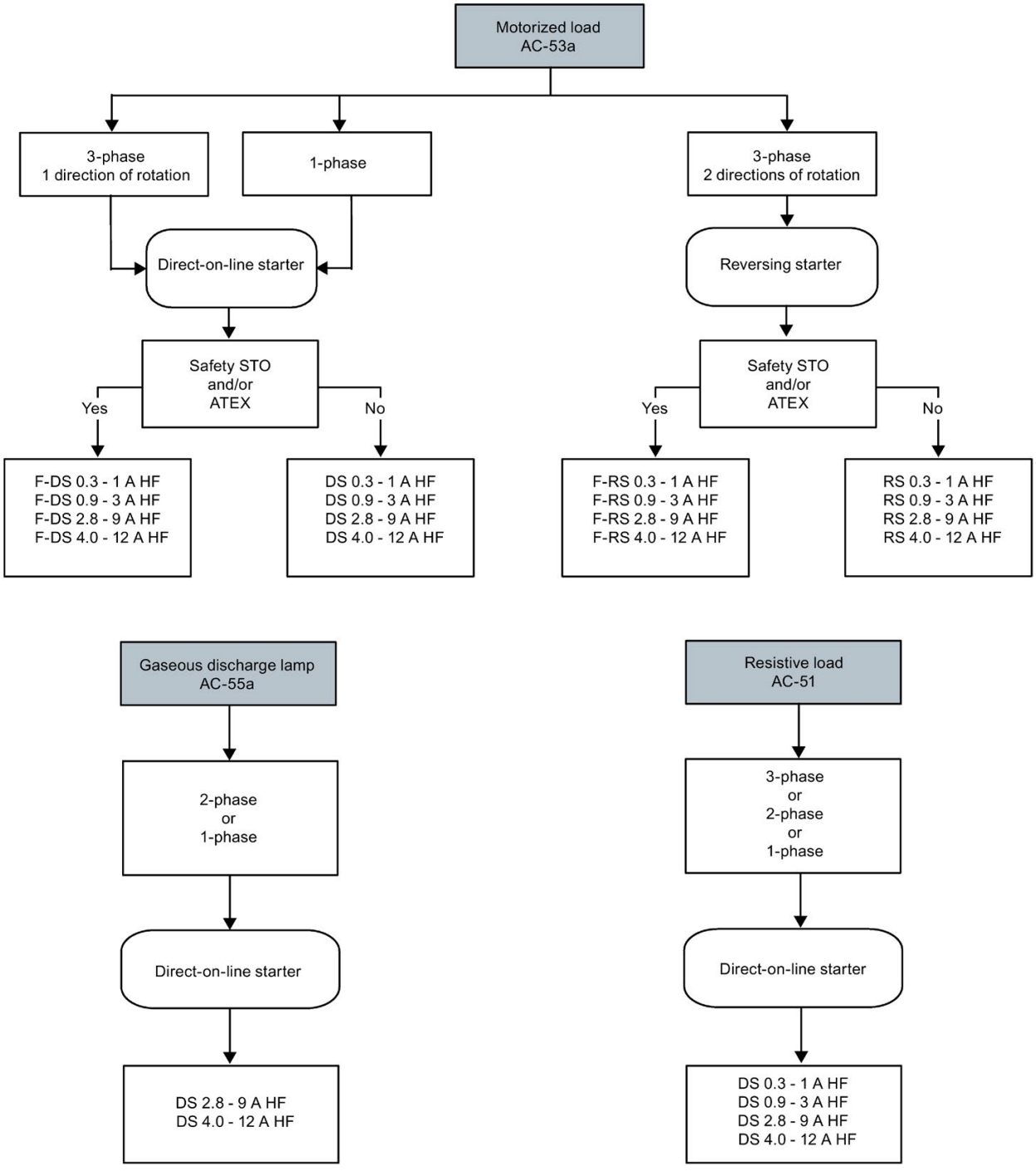

4.2.3 Selecting accessories for motor starters

Observe the installation conditions of the station with ET 200SP motor starters. The figure below shows the criteria the station must meet:

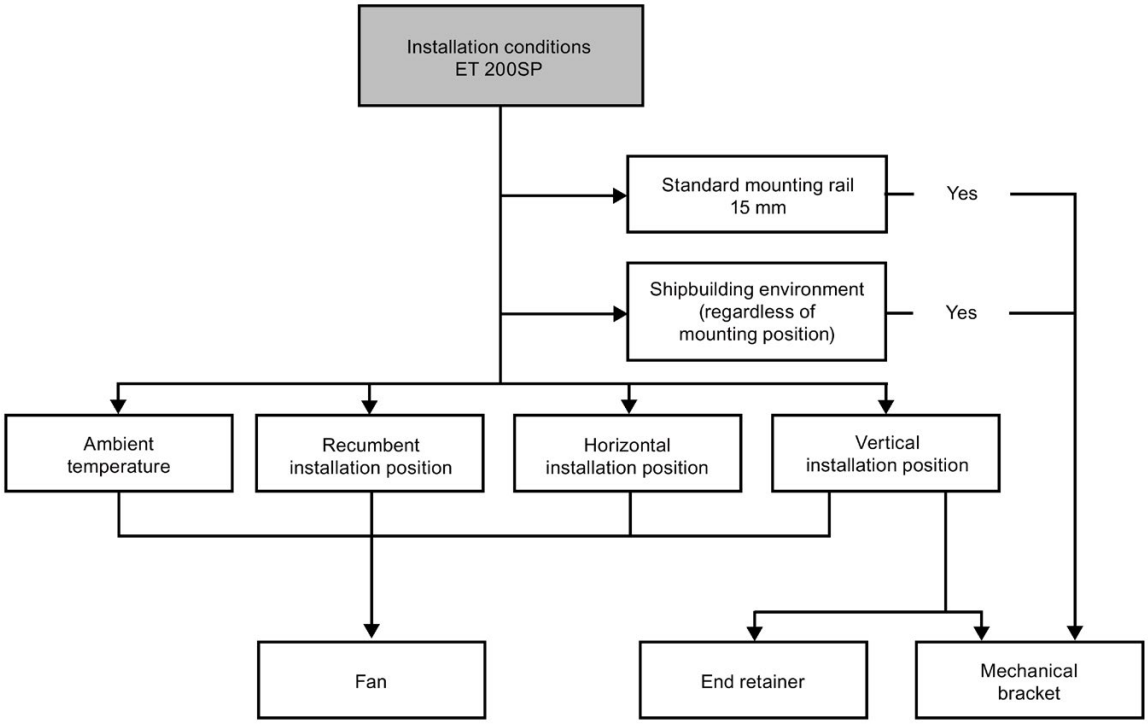

4.3 Selecting potential distributor modules

4.3.1 Selecting a PotDis-BaseUnit

Selection of a suitable PotDis-BaseUnit potential distributor module

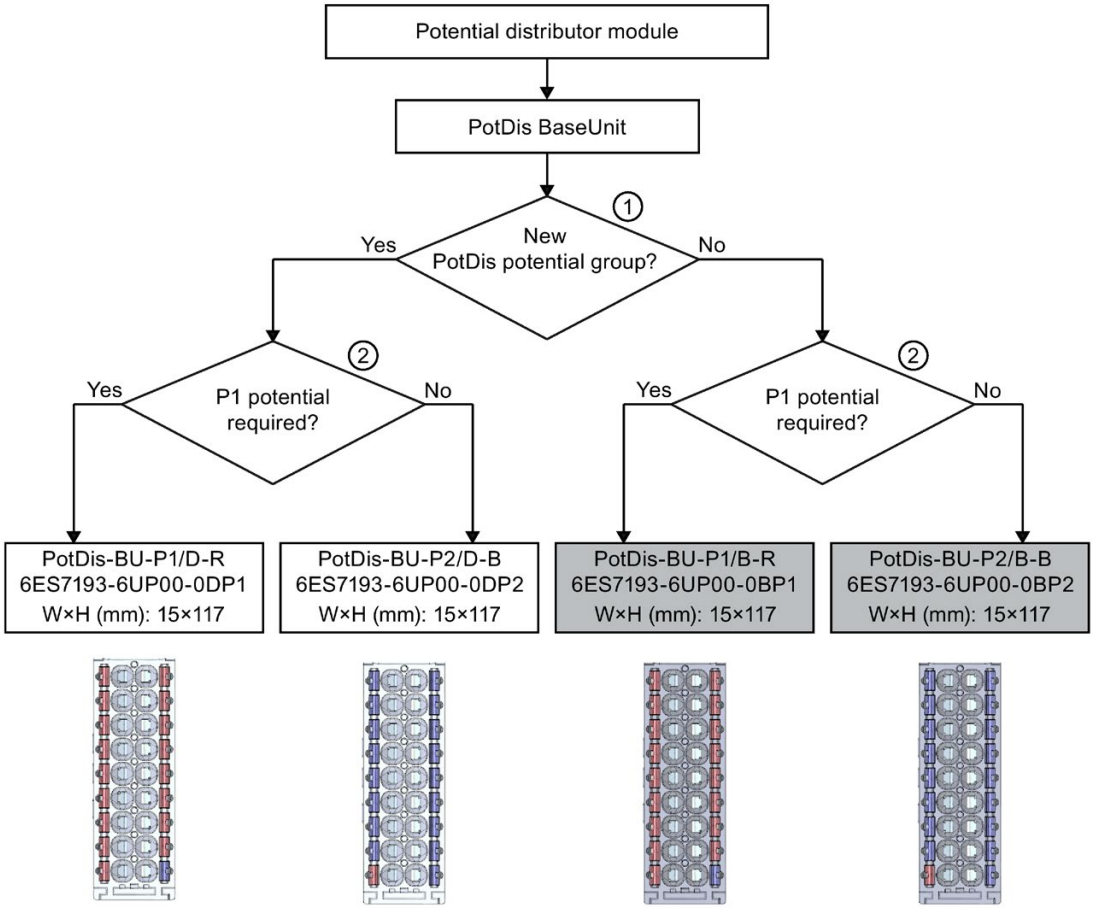

① Light-colored PotDis-BaseUnit: Configuration of a new potential group, electrical isolation from adjacent module on the left. The first BaseUnit of the ET 200SP is usually a light-colored BaseUnit for the incoming supply voltage.

② P1 terminal: 16 internally bridged terminals for individual use up to 48 V DC/10 A
Example: Multiple cable connection for DI 16×24VDC ST

Figure 4-3 PotDis-BaseUnits

Please note:

- The potential groups opened with a light-colored PotDis-BU must not contain any I/O modules. You can integrate any dark-colored PotDis-BUs into I/O module potential groups provided they are based on an SELV/PELV supply.
- If you do not need the additional terminals of the PotDis-TB in a potential distributor module, replace the PotDis-TB with a BU cover. You may only connect one potential group within a combination of PotDis-BU and PotDis-TB.
- Only SELV/PELV potentials are permitted on PotDis-BUs. Separate different SELV/PELV potential groups using light-colored PotDis-BUs.
- With potential distributor modules, you may only connect to the PotDis-TB versions BR-W and n.c.-G potential, which exceed the voltage level of SELV/PELV.
- PotDis terminals are not directly configurable as PotDis via GSD/GSDML. When configuring with GSD, always use an dummy module; with GSDML, integrate a free space.

Additional information

Additional information on the potential distributor modules (PotDis-BaseUnits and PotDis-TerminalBlocks) is available in the BaseUnits (http://support.automation.siemens.com/WW/view/en/59753521) manual.

4.3.2 Selecting a PotDis-TerminalBlock

Selection of a suitable PotDis-TerminalBlock

With a PotDis-TerminalBlock you are expanding a PotDis-BaseUnit potential distributor module by an additional 18 potential terminals.

You can freely combine PotDis-TerminalBlocks and PotDis-BaseUnits.

The following PotDis-TerminalBlocks are available:

Table 4- 3 Selection of TerminalBlock PotDis-TB

PotDis-TerminalBlocks		
TerminalBlock	**Explanation**	**Application**
PotDis-TB-P1-R	Terminal block with 18 terminals with red spring releases with connection to the supply voltage P1 of the PotDis-BaseUnit with SELV/PELV.	Provision of 18 x P1 potential, e.g. for P1 sensor supply with 3-wire connection for 16-channel digital input modules
PotDis-TB-P2-B	Terminal block with 18 terminals with blue spring releases with connection to ground (P2) of the PotDis-BaseUnit	Provision of 18 x P2 potential, e.g. for ground of the sensor supply with 2-wire connection for 16-channel digital output modules

PotDis-TerminalBlocks		
PotDis-TB-n.c.-G	Terminal block with 18 terminals with gray spring releases without connection to each other or to a voltage bus of the PotDis-BaseUnit	Provision of 18 x n.c. (not connected), for reserving ("parking") unused signals/lines, e.g. for antivalent sensors in the same potential group
PotDis-TB-BR-W	Terminal block with 18 terminals connected to each other with white spring releases without connection to a voltage bus of the PotDis-BaseUnit	Provision of 17 terminals with shared potential (the 18th terminal is used for infeed) for supply of external consumers

Additional information

Additional information on the potential distributor modules (PotDis-BaseUnits and PotDis-TerminalBlocks) is available in the BaseUnits (http://support.automation.siemens.com/WW/view/en/59753521) manual.

4.4 Hardware configuration

Maximum mechanical configuration

As soon as **one** of the following rules applies, the maximum configuration of the ET 200SP has been reached:

Table 4- 4 Maximum mechanical configuration

Properties	Rule
Number of modules	Maximum of 12/30/32/64 I/O modules (depending on the CPU used/the interface module used; see CPU (http://support.automation.siemens.com/WW/view/en/90466439/133300) and interface module (http://support.automation.siemens.com/WW/view/en/55683316/133300) manuals)
	For every 6 F-modules F-RQ 1x24VDC/24..230VAC/5A (6ES7136-6RA00-0BF0), the maximum configuration is reduced by 1 module.
Number of motor starters	Maximum of 31 motor starters
Backplane bus length of the ET 200SP	maximum 1 m mounting width (without CPU/interface module, including server module)

Electrical maximum configuration for I/O modules

The number of operable I/O modules of a potential group is limited by the following factors:

- Power consumption of the I/O modules
- Power consumption of the components supplied via these I/O modules

The maximum current carrying capacity of the terminals on the BaseUnit L+/M is 10 A. Current carrying capacity refers to the current load via the power bus and the infeed bus of the ET 200SP station. Consider the current carrying capacity when using a motor starter.

Maximum electrical configuration for motor starter power bus (24 V DC)

To determine the current requirement of an individual motor starter via the power bus, take account of the following parameters:

- Current consumption via DC infeed in the ON state
- Current consumption via DC infeed when switching on (40 ms peak load)
- Increased power consumption through fan operation
- Current requirement via encoder supply of the connected DI module

The maximum current carrying capacity of the 24 V potential group is 7 A across the entire permissible temperature range.

Maximum electrical configuration for motor starter infeed bus (500 V AC)

To determine the current requirement of an individual motor starter via the infeed bus, proceed as follows:

Calculate the current requirement via the main current paths of the individual motor starter. In doing so, take into account the parameter I_e (set rated operational current of the motor starter). The permissible overload characteristics of the motor feeder for motors are determined with the thermal motor model. You calculate the current value ($I_{infeed\ bus}$) for the infeed bus of the ET 200SP system according to the following formula:

$I_{infeed\ bus} = \sum_n(I_e * 1.125)$
n = number of motor starters of a potential group on the infeed bus

Refer to the Manual (https://support.industry.siemens.com/cs/ww/en/view/109479973) for details of how to assign the basic rated operational current I_e parameter.

The following values apply for the potential group of the AC infeed:

- The maximum current carrying capacity is 32 A at an ambient temperature of up to 50 °C.
- The maximum current carrying capacity is 27 A at an ambient temperature of up to 60 °C.
- The maximum current carrying capacity for applications according to UL requirements is 24 A at an ambient temperature of up to 60 °C.

Address space

The address space depends on the CPU/interface module (see CPU (http://support.automation.siemens.com/WW/view/en/90466439/133300) Manual) and the interface module used (see Interface module (http://support.automation.siemens.com/WW/view/en/55683316/133300) Manual):

- For PROFINET IO: Dependent on the IO controller/IO device used
- For PROFIBUS DP: Dependent on the DP master used

4.5 Forming potential groups

4.5.1 Basics

Introduction

Potential groups for the ET 200SP distributed I/O system are formed by systematically arranging the BaseUnits.

Requirements

For formation of potential groups, the ET 200SP distinguishes between the following BaseUnits:

- BaseUnits BU...D (recognizable by the light-colored terminal box and the light-colored mounting rail release button):
  - Opening of a new potential group (power busbar and AUX bus are interrupted to the left)
  - Infeed of the supply voltage L+ up to an infeed current of 10 A
- BaseUnits BU...B (recognizable by the dark-colored terminal box and the dark-colored mounting rail release button):
  - Conduction of the potential group (power busbar and AUX bus continued)
  - Pick up of the supply voltage L+ for external components or loop-through with a maximum total current of 10 A
- BaseUnits BU30-MSx (BaseUnit for the motor starter only)

  Depending on the version, the BaseUnits in the "BU30-MSx" model series possess the following properties:
  - Opening a new potential group or continuing an existing one
  - Feeding in the supply voltage L+ up to an infeed current of 7 A DC
  - Opening a new load group or continuing an existing one by means of 500 V AC infeed bus
  - Feeding in the line voltage up to an infeed current of 32 A AC

Placement and grouping of I/O modules

Each BaseUnit BU...D that you install in the ET 200SP configuration opens a new potential group and supplies all subsequent I/O modules (on BaseUnits BU...B) with the necessary supply voltage. The first 24 V DC I/O module to the right of the CPU/interface module must be installed on a light-colored BaseUnit BU...D. Exception: If you insert an AC I/O module or an AI Energy Meter as the first I/O module, the first BaseUnit in the ET 200SP configuration can be a dark-colored BaseUnit. The requirement is that you use a CPU or IM 155-6 (as of V3.0).

If you want to place another BaseUnit BU...B after a BaseUnit BU...D, disconnect the power and AUX buses and open a new potential group at the same time. This allows individual grouping of the supply voltages.

Note

All BaseUnits placed in a load group must match the infeed potential of the corresponding light-colored BaseUnits.

Do not connect any BaseUnit of the "BU...B" type on the right of a motor starter's BaseUnit (BU30-MSxx).

Placing and connecting potential distributor modules

Potential distributor modules provide potential distributors integrated into the system that you can use to configure a rapid, space-saving customized replacement for standard potential distribution systems.

You can place potential distributor modules at any location within the ET 200SP distributed I/O system. To do so, you must observe the same design rules as for placing and connecting I/O modules. Potential distributor modules are only suitable for SELV/PELV.

A potential distributor module consists of a potential distributor BaseUnit (PotDis-BU) and (if necessary) a potential distributor TerminalBlock (PotDis-TB) plugged onto it. If you do not need the additional terminals of the PotDis-TB, install a BU cover (15 mm) on the PotDis-BaseUnit.

You must not place a BaseUnit for I/O modules in a PotDis potential group formed with a light-colored PotDis-BaseUnit.

Note

Identical voltages with potential distributor modules

You can only connect identical (supplied) voltages with to the terminals of a potential distributor module or PotDis potential group. Example: You only connect 24 V DC.

Placement and grouping of I/O modules and motor starters

For the potential group (L+/M), the following slot rules apply within the motor starter modules and other I/O modules of the ET 200SP:

- An unassembled BaseUnit (BaseUnit with BU cover) must be inserted between the CPU, an interface module or an I/O module and the motor starter. This is not necessary between the motor starters.
- The empty slot can take on the potential (24 V DC) of the potential group on the left of it (L+, M), i.e. I/O modules and motor starters can be operated in the same potential group.
- If you would like to insert an I/O module on the right of a motor starter, then use only one BaseUnit of the BU...D Typ A0 type (light terminal box).
- The BaseUnits BU30-MS2, BU30-MS4, BU30-MS5 and BU30-MS6 can take on the potential groups of other BaseUnit types.
  However, pay attention to the following exceptions:
  – Only a BaseUnit of type BU30-MS1 or BU30-MS3 may follow an AS-i module (AS-i potential group).
  – Only BaseUnits with fail-safe motor starters can be connected together in the same potential group of an F-PM-E.

WARNING

Hazardous Voltage
Can Cause Death, Serious Injury, or Property Damage.

Hazardous electrical voltage can cause electric shock, burns and property damage.

Disconnect your system and devices from the power supply before starting any assembly tasks.

AUX bus (AUX(iliary) bus)

BaseUnits with additional AUX terminals (e.g. BU15-P16+**A10**+2D) enable the additional connection of a potential (up to the maximum supply voltage of the module), which is applied via the AUX bus.

In the case of light-colored BaseUnits, the AUX bus is interrupted to the left. In the case of BaseUnits of motor starters, the AUX bus is interrupted to the left.

The AUX bus can be used individually:

- You can plug a maximum of 8 I/O modules into the corresponding potential group as a PE bar.
- For additionally required voltage

NOTICE
AUX bus as PE bar If you use an AUX bus as a protective conductor bar, attach the yellow-green color identification labels to the AUX terminals, and establish a functional connection to the central protective conductor connection. If you stop using the AUX bus as a protective conductor bar, make sure you remove the yellow-green color identification labels and remove the connection to the central protective conductor connection again.

The AUX bus is designed as follows:

- Maximum current carrying capacity (at 60 °C ambient air temperature): 10 A
- Permissible voltage: Depending on the BaseUnit type (see BaseUnit manual (http://support.automation.siemens.com/WW/view/en/59753521))

Self-assembling voltage buses

You must feed in the supply voltage L+ via the BaseUnit BU...D, BU30-MS1 or BU30-MS3 .

Each BaseUnit BU...B allows access to the supply voltage L+ via terminals (red/blue). The motor starter BaseUnits "BU30-MS1", "BU30-MS2", "BU30-MS3", "BU30-MS4", "BU30-MS5" and "BU30-MS6" do not have this access.

Operating principle

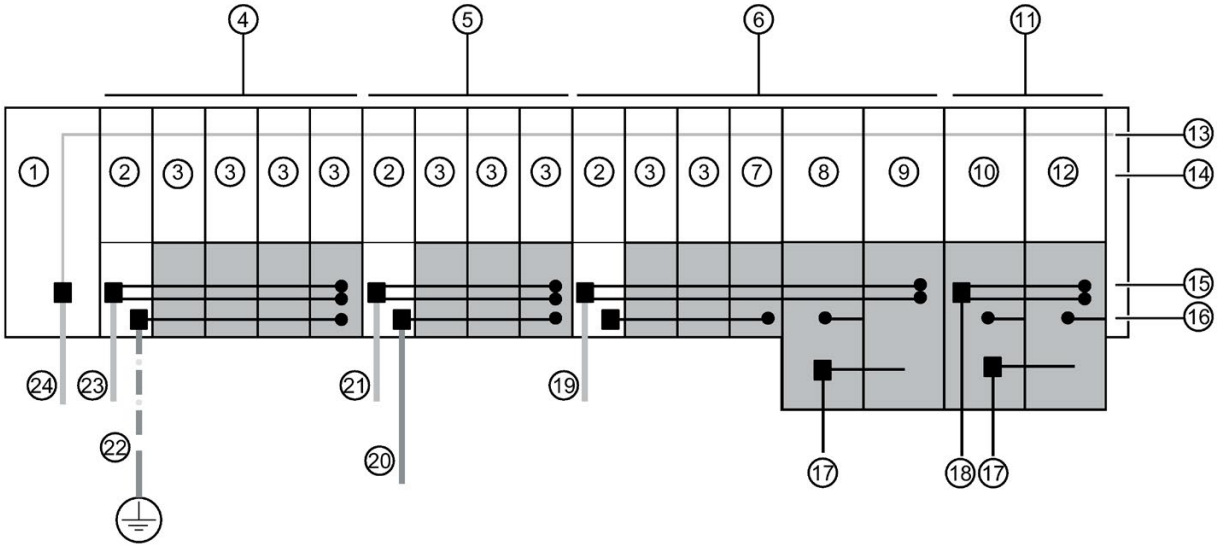

1	CPU/interface module	14	Server module
2	BaseUnit BU...D	15	Self-assembling voltage buses P1/P2
3	BaseUnit BU...B	16	AUX bus
4	Potential group 1	17	Infeed bus 500 V AC (L1, L2(N), L3, PE)
5	Potential group 2	18	Supply voltage L+
6	Potential group 3	19	Supply voltage L+ (3)
7	BaseUnit BU...B with dummy module	20	Additionally required voltage
8	BaseUnit BU30-MS2	21	Supply voltage L+ (2)
9	BaseUnit BU30-MS4	22	Protective conductor (green/yellow)
10	BaseUnit BU30-MS1	23	Supply voltage L+ (1)
11	Potential group 4	24	Supply voltage 1L+
12	BaseUnit BU30-MS4		
13	Backplane bus		

Figure 4-4 Placing the BaseUnits

Connecting different potentials to the power or AUX bus

Note

If you apply different potentials to the power or AUX bus within an ET 200SP station, you need to separate the potential groups with a BaseUnit BU...D.

4.5.2 Forming potential groups with BaseUnit type B1

Introduction

The AC I/O modules of the ET 200SP are required to connect sensors/actuators with alternating voltage 24 to 230 V AC.

Requirements

BaseUnits BU20-P12+A0+4B (BU type B1) and

- DI 4x120..230VAC ST digital input module
- DQ 4x24..230VAC/2A ST digital output module

Operating principle

Connect the required alternating voltage for the AC I/O modules directly at the BaseUnits BU20-P12+A0+4B (terminals 1L, 2L/1N, 2N). Insert the AC I/O modules on the BaseUnits.

Note

Placing the BaseUnits for AC I/O modules

If you insert an AC I/O module as the first I/O module, a BaseUnit BU20-P12+A0+4B can be the first BaseUnit to the right of the CPU/interface module in the ET 200SP configuration.

The requirement is that you use a CPU as of V3.0 or IM 155-6 (as of V3.0).

- The BaseUnits BU20-P12+A0+4B do not monitor the connected alternating voltage. Please note the information on limiting the overvoltage and power rating in the AC I/O module manuals.
- Remember to take the BaseUnit type into account during configuration.

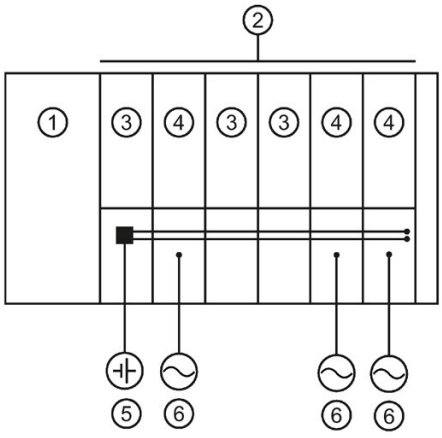

① CPU/interface module
② 24 V DC potential group
③ BaseUnits with DC I/O modules
④ BaseUnits BU 20-P12+A0+4B with AC I/O modules
⑤ Direct voltage
⑥ Alternating voltage

Figure 4-5 Placing the BaseUnits for the AC I/O modules

4.5.3 Forming potential groups with fail-safe modules

Introduction

ET 200SP distributed I/O systems can be configured using fail-safe and non-fail-safe modules. This chapter provides an example of a mixed configuration comprising fail-safe and non-fail-safe modules.

Example of an ET 200SP configuration with fail-safe and non-fail-safe modules

In principle, it is not necessary to operate fail-safe and non-fail-safe modules in separate potential groups. You can divide the modules into fail-safe and non-fail-safe potential groups and install them.

The figure below shows an example of a configuration with fail-safe and non-fail-safe modules within a single ET 200SP distributed I/O system.

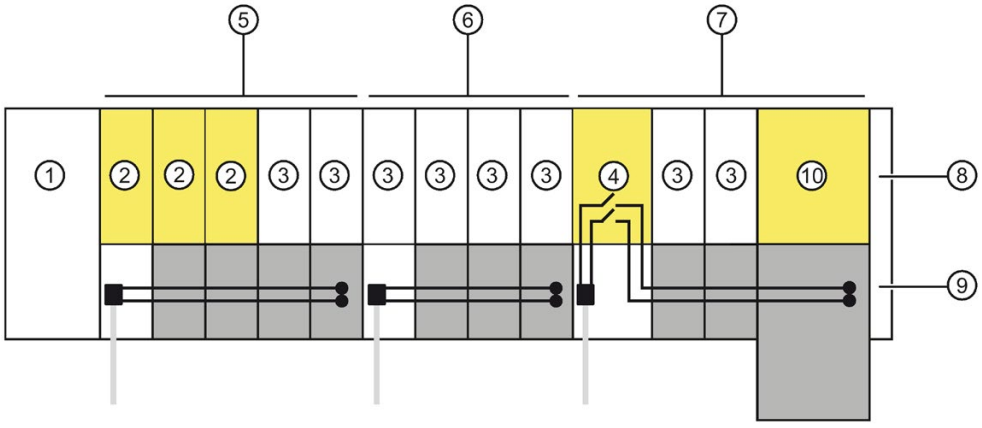

① IM 155-6 PN HF interface module
② F-module
③ Non-fail-safe module
④ Power module F-PM-E 24VDC/8A PPM ST
⑤ Mixed fail-safe and non-fail-safe potential group with BaseUnits BU15..D and BU15..B.
You achieve SIL3/Cat. 4/PLe for the fail-safe modules. No safety category can be achieved with the non-fail-safe motor starter.
⑥ Non-fail-safe potential group with BaseUnits BU15..D and BU15..B
⑦ Fail-safe potential group with BaseUnits BU20..D, BU15..B and BU30-MSx.
Up to SIL2/Cat. 3/PLd is possible if you disconnect the self-assembling voltage bus and thus the non-failsafe modules.
⑧ Server module
⑨ Self-assembling voltage buses P1/P2
⑩ Fail-safe motor starter F-DS HF

Figure 4-6 ET 200SP - example of a configuration with fail-safe modules

4.5.4 Forming potential groups with motor starters

Properties of the 500 V AC infeed bus

The infeed bus has the following properties:

- The infeed bus is assembled by lining up the motor starter BaseUnits "BU30-MSx".
- The infeed bus distributes the energy to the SIMATIC ET 200SP motor starter within one load group.
- You can open load groups by inserting a 500 V infeed BaseUnit (BU30-MS1, BU30-MS2 or BU30-MS5). With the BaseUnits BU30-MS3, BU30-MS4 or BU30-MS6, you can take over the infeed bus from the left-hand BaseUnit.
- Via the infeed bus, you have the option of supplying three-phase load groups via L1, L2 and L3 or with single-phase load groups via L and N.
- The permissible voltage range is between 48 and 500 V AC.
- The maximum current carrying capacity is up 32 A (3-phase) at 50 °C and 500 V. Pay attention to the derating values depending on the configuration.

Properties of the self-assembling voltage bus (L+)

Self-assembling voltage buses have the following properties:

- Maximum current: 7 A
- Rated voltage: 24 V

Pay attention to the derating values depending on the configuration.

The AUX1 bus is not supported in the BaseUnits of the SIMATIC ET 200SP motor starters.

WARNING

Electric shock when operating the infeed bus without touch protection cover

There is a risk of electric shock when touching the infeed bus if you have not fitted a touch protection cover on the infeed bus on the right.

Always fit a touch protection cover on the infeed bus on the right (article number: 3RK1908-1DA00-2BP0).

WARNING

Electric shock when operating a BaseUnit without an inserted motor starter

If you fit a BaseUnit for motor starters without cover (e.g. option handling), there is a risk of an electric shock when touching the BaseUnit.

Always fit a cover on the BaseUnit (article number: 3RK1908-1CA00-0BP0).

Requirements

Use the following devices to form potential groups with motor starters:

- BaseUnits BU30-MSx
- 3RK1308-0xx00-0CP0 motor starters

Operating principle

Feed in the supply voltage L+ via the BaseUnit BU30-MS1 and BU30-MS3 at the 24V DC and M terminals.

You can operate the motor starter on a single-phase (L1, N, PE) or a three-phase (L1, L2, L3, PE) AC voltage system. You connect the required AC voltage directly to the BaseUnits BU30-MSx (terminals L1, L2(N), L3, PE). You plug the motor starter onto the BaseUnits.

Note

The motor starters' AC power supply is not connected to the AC power supply for the AC I/O modules (see Chapter "Forming potential groups with BaseUnit type B1 (Page 55)").

4.6 Configuration examples for potential groups

4.6.1 Configuration examples with BaseUnits

Table 4- 5 Configuration examples with BaseUnits

BaseUnits	Configuration
BU15-P16+A0+2D BU15-P16+A0+2B	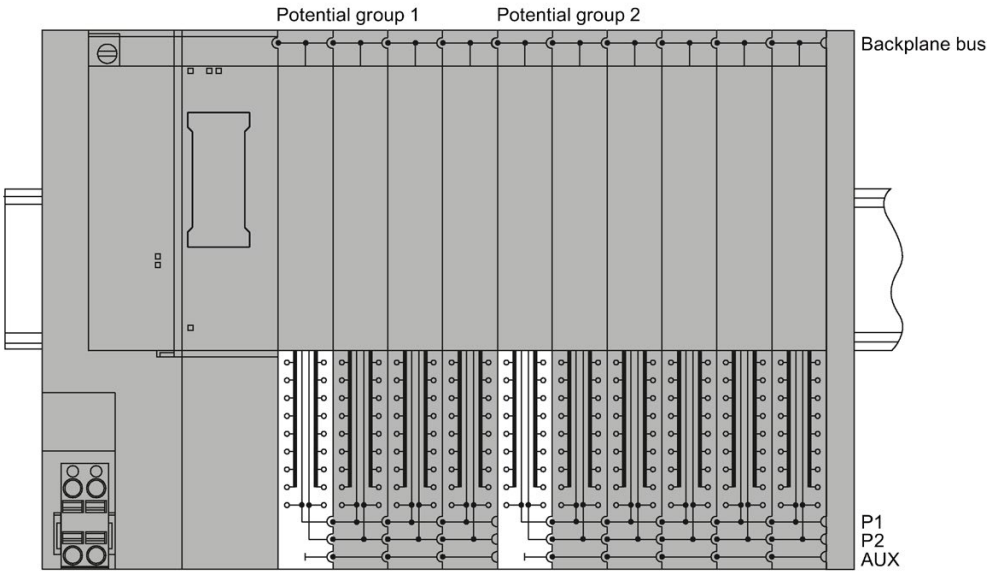
BU15-P16+A0+2D BU15-P16+A0+2B BU20-P12+A0+0B	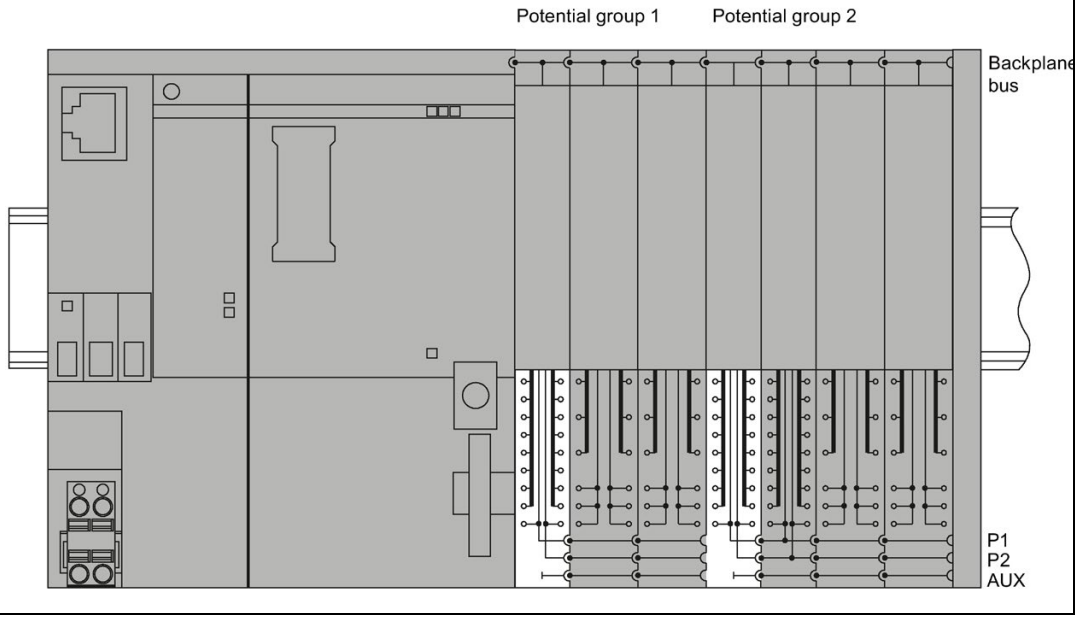

BaseUnits	Configuration
BU15-P16+A10+2D BU15-P16+A10+2B	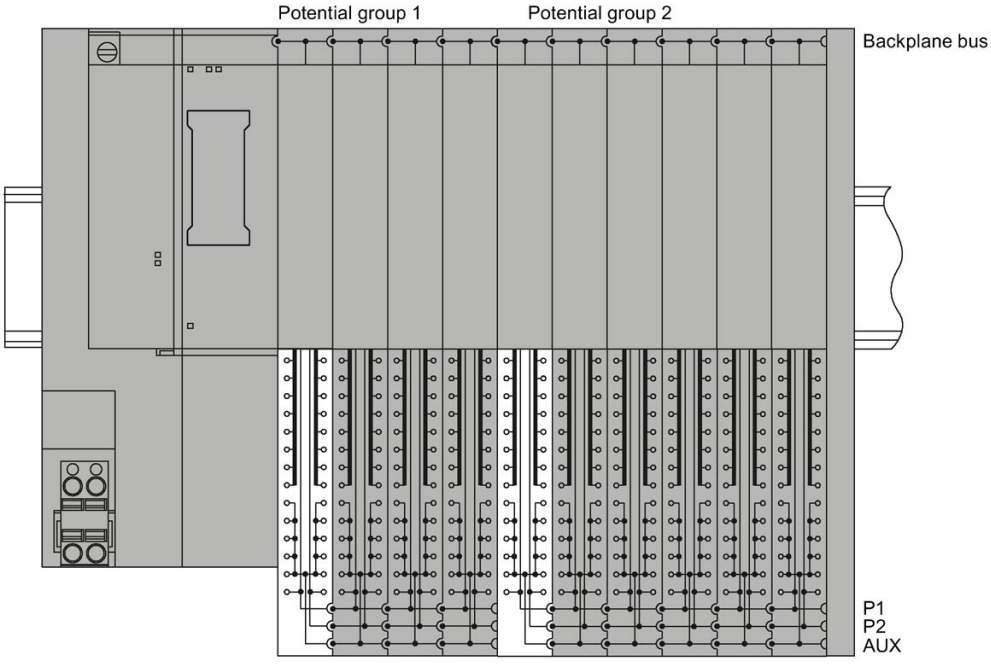

4.6.2 Configuration examples with potential distributor modules

3-wire connection

The potential distributor modules allow for a space-saving design. For a 3-wire connection, you can, for example, replace two digital input modules with 8 channels on a 141 mm long BaseUnit with a digital input module with 16 channels and a potential distributor module, each of which is only 117 mm long.

Note

You must not place a BaseUnit for I/O modules in a PotDis potential group formed with a light-colored PotDis-BaseUnit.

The figure below shows a configuration example with a DI 16×24VDC ST digital input module on a BU15-P16+A0+2B BaseUnit and a PotDis-TerminalBlock PotDis-TB-P1-R on a PotDis-BaseUnit PotDis-BU-P2/B-B.

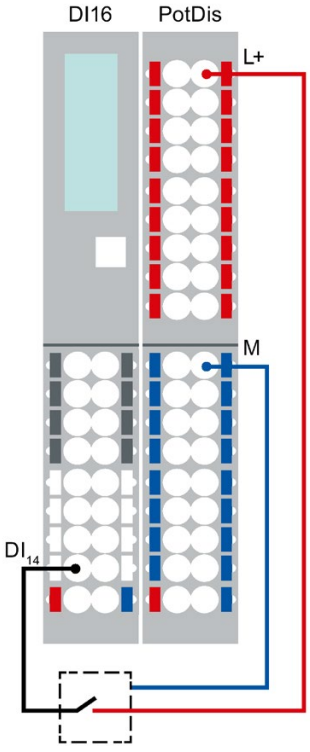

Figure 4-7 **Example: 3-wire connection**

Supply of external components

Another application of the potential distributor modules is the supply of potentials for external components. Potential distributor modules enable simple, compact, integrated and clear design.

Observe the current carrying capacity of each terminal: max. 10 A.

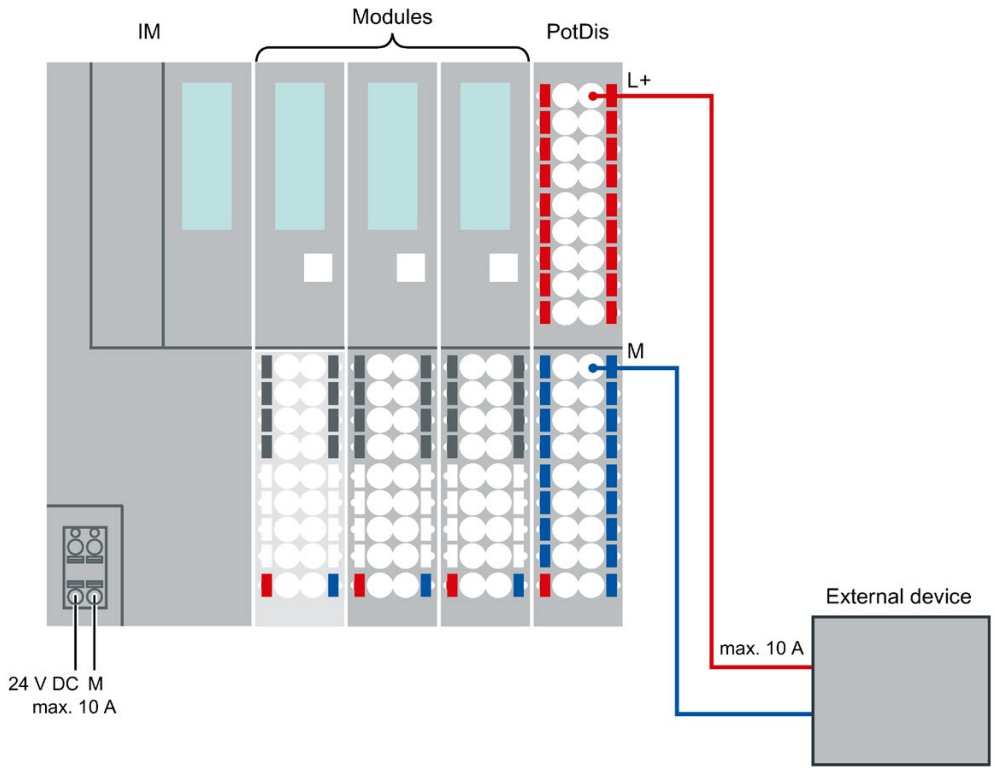

Figure 4-8 **Example: Supply of external components**

Installation 5

5.1 Basics

Introduction

All modules of the ET 200SP distributed I/O system are open equipment. This means you may only set up the distributed I/O system ET 200SP in enclosures, cabinets or electrical equipment rooms and in a dry environment (IP20 degree of protection). The housings, cabinets and electrical operating rooms must guarantee protection against electric shock and spread of fire. The requirements regarding mechanical strength must also be observed. The housings, cabinets, and electrical operating rooms must not be accessible without a key or tool. Access must only be possible for personnel instructed or authorized to work with such equipment.

Installation location

Install the ET 200SP distributed I/O system into a suitable housing/control cabinet with sufficient mechanical strength, fire protection and at least IP54 degree of protection according to EN 60529, and take into consideration the ambient conditions for operating the devices.

Installation position

You can mount the ET 200SP distributed I/O system in any position. The preferred mounting position is horizontal mounting on a vertical wall.

The ambient temperature may be restricted in certain installation positions. You will find more information in the section Mechanical and climatic environmental conditions (Page 296).

Pay attention to chapter "Installation conditions for motor starters (Page 68)" when using motor starters.

Mounting rail

Mount the ET 200SP distributed I/O system on a mounting rail in accordance with EN 60715 (35 × 7.5 mm or 35 × 15 mm).

You need to ground the mounting rail separately in the control cabinet. Exception: If you install the rail on grounded, zinc-plated mounting plates, there is no need to ground the rail separately.

Note

If the ET 200SP distributed I/O system is exposed to vibration and shock loads, both ends of the ET 200SP system assembly must be mechanically fixed to the mounting rail (e.g using 8WA1010-1PH01 ground terminals). This measure prevents the ET 200SP distributed I/O system from shifting to the side.

Note

If the ET 200SP distributed IO system is exposed to increased vibrations and shock, we recommend that you screw the mounting rail to the mounting surface at intervals of approx. 200 mm.

The following are suitable surfaces for the mounting rails:

- Steel strip in accordance with Appendix A of EN 60715 or
- Tinned steel strip. We recommend these in conjunction with the mounting rails in the section Accessories/spare parts (Page 302).

  Note

  If you use mounting rails from other manufacturers, make sure that they have the required properties for your ambient climatic conditions.

Minimum clearances

The figure below shows the minimum clearances you must observe when installing or dismantling the ET 200SP distributed I/O system.

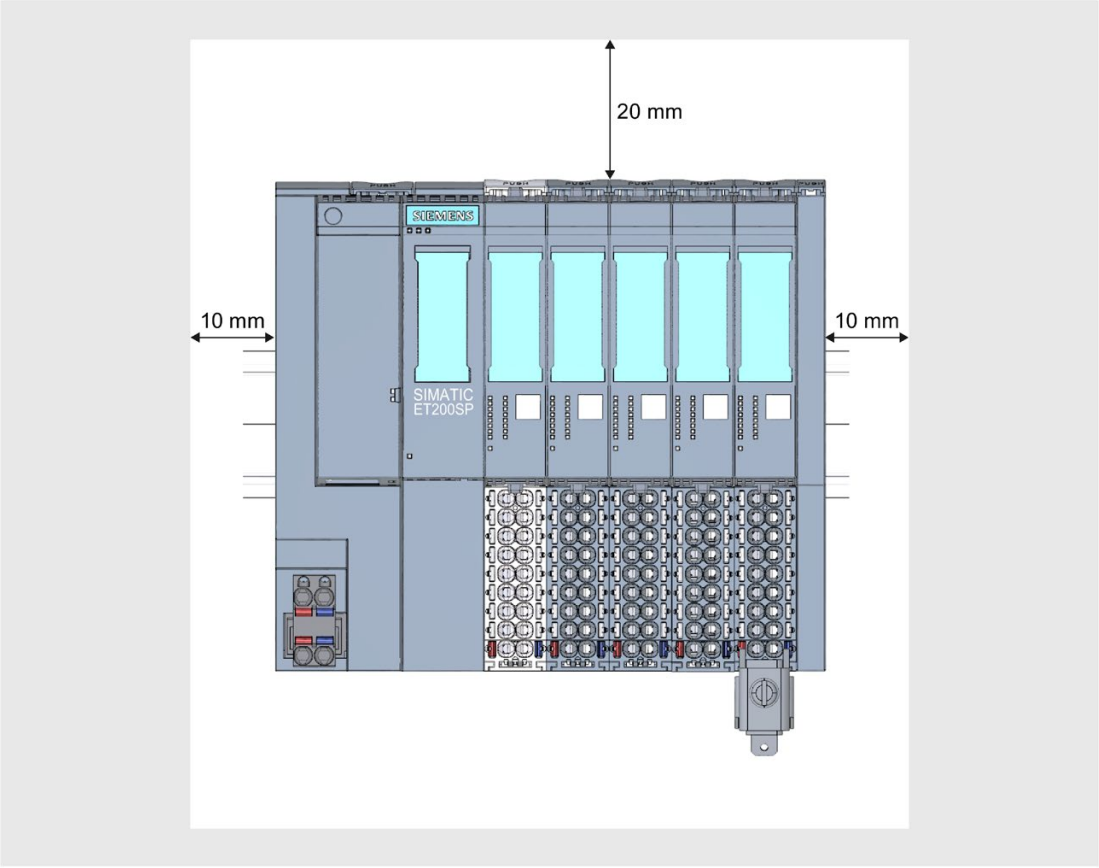

Figure 5-1 Minimum clearances

General rules for installation

WARNING

Hazardous Voltage
Can Cause Death, Serious Injury, or Property Damage.

Hazardous electrical voltage can cause electric shock, burns and property damage.

Disconnect your system and devices from the power supply before starting any assembly tasks.

Observe the following rules:

- Installation starts on the left-hand side with the CPU/interface module.
- A light-colored BaseUnit BU..D0, BU30-MS1 or BU30-MS3 with infeed of the supply voltage L+ follows the CPU/the interface module or is placed at the start of each potential group.
  If you fit an AC I/O module or an AI Energy Meter as the first I/O module, then the first BaseUnit in the structure of the distributed I/O system ET 200SP may be a dark-colored BaseUnit. The requirement is that you use a CPU or IM 155-6 (as of V3.0).
- This is followed by BaseUnits BU..B, BU30-MS2 or BU30-MS4 (with a dark-colored terminal box).
- The matching I/O modules / motor starters can be plugged onto the BaseUnits. You will find matching combinations of BaseUnits and I/O modules / motor starters in Application planning (Page 36).
- The server module completes the configuration of the ET 200SP distributed I/O system.

Note

Mount the ET 200SP distributed I/O system only with disconnected supply voltage.

WARNING

Protection from conductive contamination

Taking into account the environmental conditions, the devices must be protected from conductive contamination.
This can be achieved, for example, by installing the devices in a control cabinet with the appropriate degree of protection.

5.2 Installation conditions for motor starters

Observe the following installation conditions when using an ET 200SP motor starter:

- Installation position

  You can fit the motor starter vertically or horizontally. The mounting position refers to the alignment of the mounting rail The maximum permissible ambient temperature range depends on the mounting position:

  – Up to 60° C: Horizontal mounting position

  – Up to 50° C: Vertical installation position

  You also need to consider the current carrying capacity of the ET 200SP components.

  In the case of a vertical mounting position, use end retainers "8WA1808" at both ends of the ET 200SP station:

- Mounting rail

  Use one of the following mounting rails:

  – 35x15 mm DIN rail in accordance with DIN EN 60715

  – 35x7.5 mm DIN rail in accordance with DIN EN 60715

  – SIMATIC S7 mounting rail

- Current carrying capacity of the ET 200SP station
  Current carrying capacity refers to the current load via the power bus and the infeed bus of the ET 200SP station.

Depending on the ambient conditions and mounting position, you have to take account of the fan unit or additional mechanical fixings.

Mechanical brackets

Use the mechanical brackets in the following situations:

- When using a 15 mm mounting rail
- With a vertical mounting position
- For applications according to shipbuilding standards in all mounting positions with 7.5 mm and 15 mm mounting rails

Designing interference-free motor starters

For interference-free operation of the ET 200SP station in accordance with standard IEC 60947-4-2, use a dummy module before the first motor starter. No dummy module is required to the right of the motor starter.

Note the following mounting rules:

Use the following dummy module on the standard mounting rail between the previous module and the SIMATIC ET 200SP motor starter:

BU cover 15 mm: 6ES7133-6CV15-1AM0 with BaseUnit 6ES7193-6BP00-0BA0

For operation of the ET 200SP station with an unused BaseUnit, a cover must be provided for the open BaseUnit plug contacts (power connector, power bus connector, and backplane bus connector).

The cover protects the plug contacts against dirt. The BU cover can be ordered as an accessory.

Mount the dummy module

The figure below provides a schematic representation of how to implement measures for improving interference immunity.

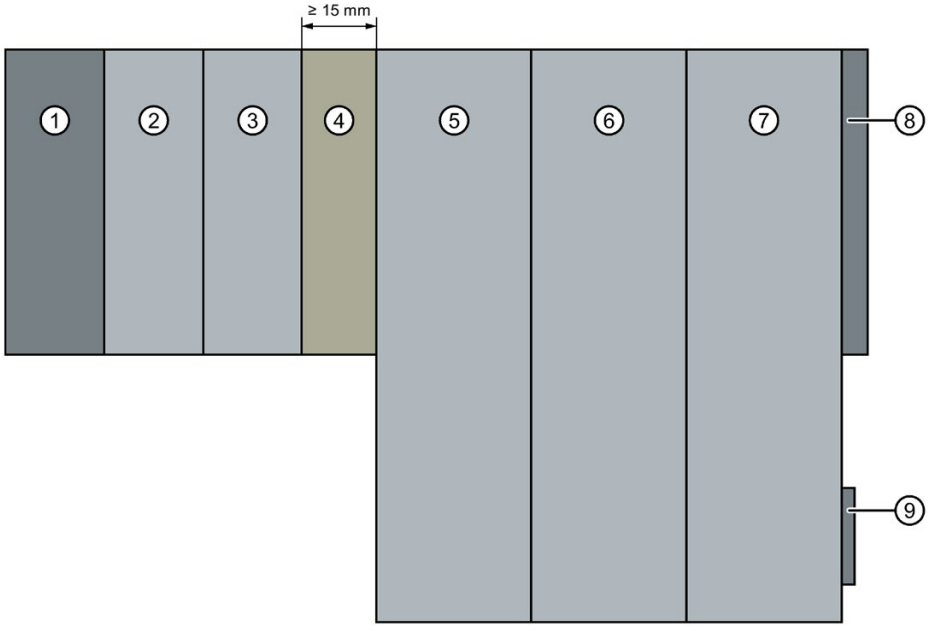

① Interface module
② Digital input module
③ Digital output module
④ Dummy module
⑤ Motor starter
⑥ Motor starter
⑦ Motor starter
⑧ Server module
⑨ Infeed bus cover

NOTICE
Ensure interference immunity You must not plug any other module into the BaseUnit of the dummy module, otherwise interference immunity is no longer ensured.

5.3 Mounting the CPU/interface module

Introduction

The CPU/the interface module connects the ET 200SP distributed I/O system to the fieldbus and exchanges the data between the higher-level control system and the I/O modules / motor starters.

Requirement

The mounting rail is fitted.

Required tools

3 to 3.5 mm screwdriver (only for mounting and removing the BusAdapter)

Mounting the CPU/interface module

Watch the video sequence (http://support.automation.siemens.com/WW/view/en/95886218)

To install a CPU/interface module, follow these steps:

1. Install the CPU/interface module on the mounting rail.
2. Swivel the CPU/interface module towards the back until you hear the mounting rail release button click into place.

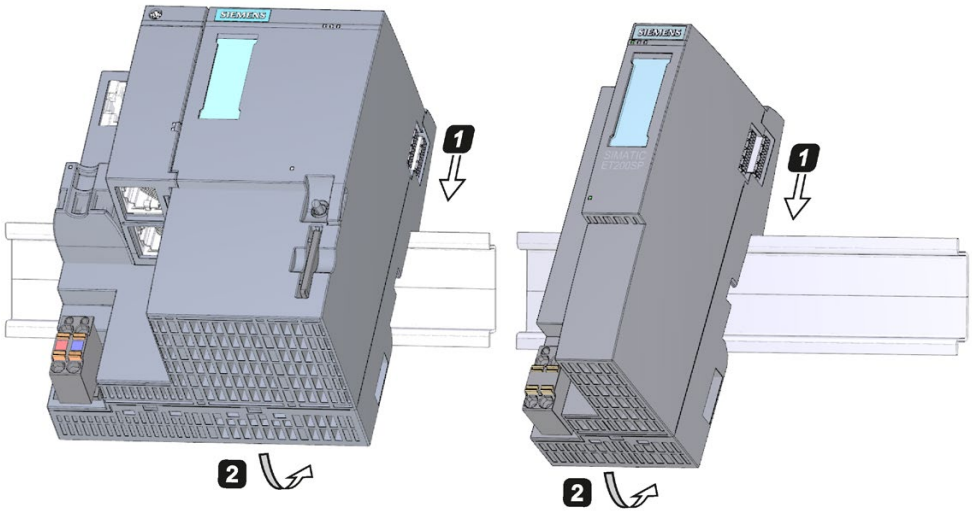

Figure 5-2 Mounting the CPU/interface module

Dismantling the CPU/interface module

The CPU/interface module is wired and BaseUnits are located to its right.

To remove the CPU/interface module, follow these steps:

1. Switch off the supply voltage on the CPU/interface module. Remove the 24 V DC connector from the CPU/interface module.
2. Press the mounting rail release button on the first BaseUnit. At the same time, shift the CPU/interface module parallel to the left until it detaches from the rest of the module group.

   Note: The mounting rail release button is located above the CPU/interface module or BaseUnit.
3. While pressing the mounting rail release button on the CPU/interface module, swivel the CPU/interface module off of the mounting rail.

Note

It is not necessary to remove the BusAdapter from the CPU/interface module.

5.4 Installing the CM DP communication module

Introduction

You need the CM DP communication module to use the CPU with a DP master or DP slave.

Requirements

- The mounting rail is fitted.
- The CPU is installed.

Installing CM DP

To install the CM DP communication module, follow these steps:

1. Install the CM DP to the right of the CPU.
2. Swivel the CM DP towards the back until you hear the mounting rail release button click into place.
3. Slide the CM DP to the left until you hear it click into the CPU.

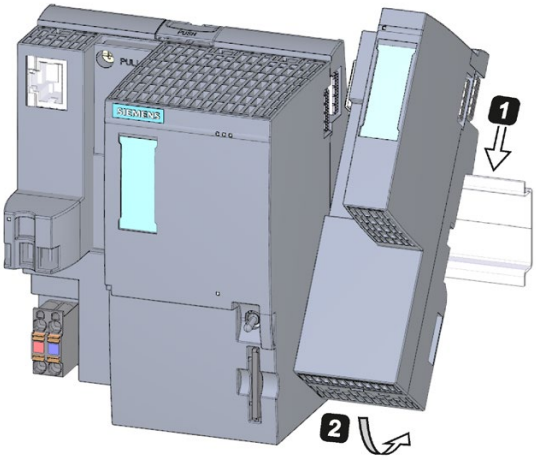

Figure 5-3 Installing CM DP

Removing a CM DP

The CPU and the CM DP are wired and BaseUnits are located to its right.

To remove the CM DP communication module, follow these steps:

1. Switch off the supply voltage on the CPU.
2. Press the mounting rail release button on the first BaseUnit and, at the same time, move the CPU and the CM DP parallel to the left until they detach from the rest of the module group (clearance about 16 mm).
3. Press the mounting rail release button on the CM DP and move it to the right until it detaches from the CPU (clearance about 8 mm).
4. While pressing the mounting rail release button on the CM DP, swivel the CM DP off of the mounting rail.

Note

It is not necessary to remove the bus connector from the CM DP unless you have to replace the CM DP.

5.5 Mounting BaseUnits for I/O modules

Introduction

The BaseUnits are used for electromechanical connection between the individual ET 200SP components. They also provide terminals for connecting external sensors, actuators and other devices.

Requirements

The mounting rail is fitted.

Required tools

3 to 3.5 mm screwdriver (only for dismantling the terminal box and the encoding element)

Installing a BaseUnit

Watch "Install configuration" video sequence (http://support.automation.siemens.com/WW/view/en/95886218)

To install a BaseUnit, follow these steps:

1. Install the BaseUnit on the mounting rail.
2. Swivel the BaseUnit backwards until you hear it click into the mounting rail.
3. Slide the BaseUnit parallel to the left until you hear it click into the preceding CPU/interface module or BaseUnit.

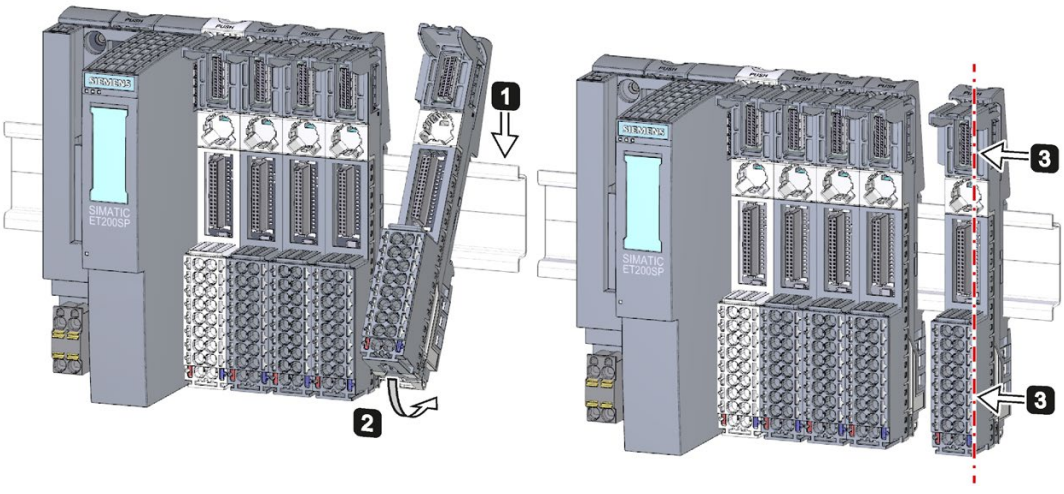

Figure 5-4 Installing a BaseUnit

Removing a BaseUnit

WARNING

Hazardous Voltage

Hazardous electrical voltage can cause electric shock, burns and property damage.

Disconnect your system and devices from the power supply before starting any assembly tasks.

To remove a BaseUnit, follow these steps:

The BaseUnit is wired and there are other BaseUnits to its right and left.

To remove a specific BaseUnit, move the neighboring modules. As soon as you have created a clearance of about 8 mm from the neighboring BaseUnits, you can remove the BaseUnit.

Note

The terminal box can be replaced without removing the BaseUnit. Refer to section Replacing the terminal box on the BaseUnit (Page 255).

To remove a BaseUnit, follow these steps:

1. If present, turn off the supply voltage on the BaseUnit.
2. Loosen the wiring on the BaseUnit (with a 3 to 3.5 mm screwdriver).
3. **Removing (from the right):**

   Press the mounting rail release button on the corresponding BaseUnit. Move the BaseUnit parallel to the right and swivel the BaseUnit off of the mounting rail while pressing the mounting rail release button.

   Removing (from the left):

   Press the mounting rail release button on the corresponding BaseUnit and on the BaseUnit to the right of this. Move the BaseUnit parallel to the left and swivel it out of the mounting rail while pressing the mounting rail release button.

   Note: The mounting rail release button is located above the BaseUnit.

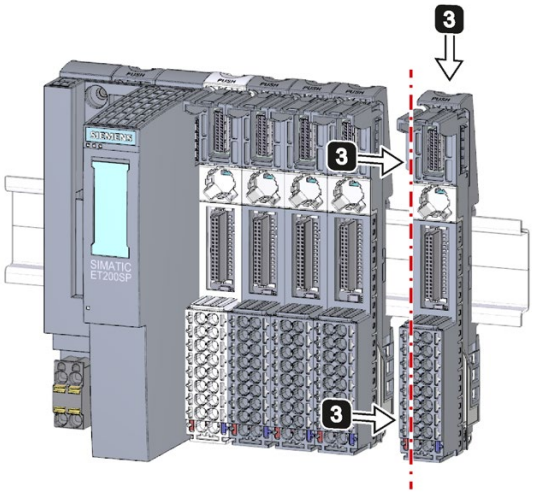

Figure 5-5 Removing the BaseUnit (removing from the right)

5.6 Mounting and dismantling BaseUnits for motor starters

Requirements

- The mounting rail is fitted.
- When using a 15 mm mounting rail, the mechanical bracket (3RK1908-1EA00-1BP0) must be mounted.

Note

Mechanical bracket for BaseUnit

You will find out how to mount the mechanical bracket for the BaseUnit in chapter "Mounting the mechanical bracket for the BaseUnit (Page 83)".

CAUTION

Protection against electrostatic charge

When handling and installing the SIMATIC ET 200SP motor starter, ensure protection against electrostatic charging of the components. Changes to the system configuration and wiring are only permissible after disconnection from the power supply.

Mounting a BaseUnit

Proceed as follows to mount a BaseUnit for motor starters:

1. Hook the BaseUnit into the DIN rail from above.
2. Swing the BaseUnit to the rear until the BaseUnit audibly engages.

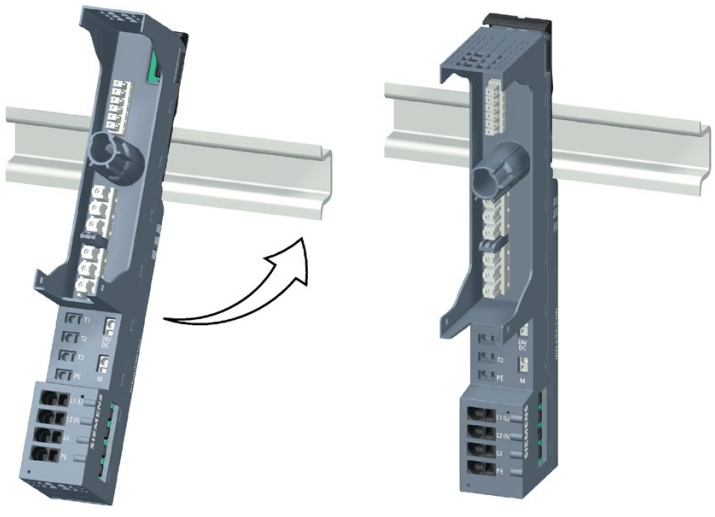

3. Slide the individual BaseUnits to the left to the previous BaseUnit until they audibly engage.

   Assemble the BaseUnits only on the DIN rail.

Note

The BaseUnits for motor starters can be plugged together with the BaseUnits for I/O modules.

Disassembling the BaseUnit

WARNING

Hazardous Voltage

Hazardous electrical voltage can cause electric shock, burns and property damage.

Disconnect your system and devices from the power supply before starting any assembly tasks.

To disassemble the BaseUnit, proceed as follows:

1. Disconnect the main power supply and the control current supply of the SIMATIC ET 200SP motor starter.
2. Actuate the DIN rail release on the BaseUnit of the motor starter.
3. Move the BaseUnit to the left. As soon as there is a clearance of approximately 8 mm to the neighboring BaseUnits, you can disassemble the BaseUnit of the motor starter.
4. Swing the BaseUnit away from the DIN rail while pressing the DIN rail release.

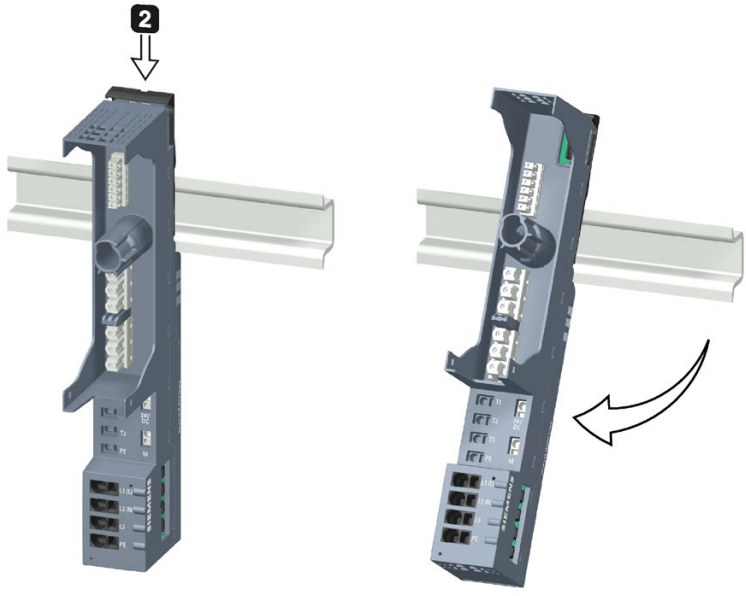

5.7 Installing potential distributor modules

Introduction

You use the potential distributor module to distribute a variety of potentials (P1, P2).

Requirements

The mounting rail is installed.

Installing and uninstalling PotDis-BaseUnit

You install/uninstall PotDis-BaseUnits as you would the BaseUnits for I/O modules. You can find additional information in section Mounting BaseUnits for I/O modules (Page 74).

Installing and uninstalling PotDis-TerminalBlock

Installing

Plug the PotDis-TerminalBlock in die PotDis-BaseUnit. Proceed exactly as described in Section Inserting I/O modules / motor starters and BU covers (Page 118).

Uninstalling

To remove a PotDis-TerminalBlock, follow these steps:

1. Switch off the supply voltage at the PotDis-BaseUnit.
2. Simultaneously press the top and bottom release buttons of the PotDis-TerminalBlock.
3. Remove the PotDis-TerminalBlock from the front of the PotDis-BaseUnit.

5.8 Installing the server module

Introduction

The server module on the far right of the assembly/line completes the ET 200SP distributed I/O system.

Requirement

The last BaseUnit is mounted.

Installing the server module

Watch "Install configuration" video sequence (http://support.automation.siemens.com/WW/view/en/95886218)

Proceed as follows to install a server module:

1. Install the server module on the mounting rail on the right next to the last BaseUnit.
2. Swivel the server module backwards on the mounting rail.
3. Move the server module parallel to the left until you hear it click into the last preceding BaseUnit.

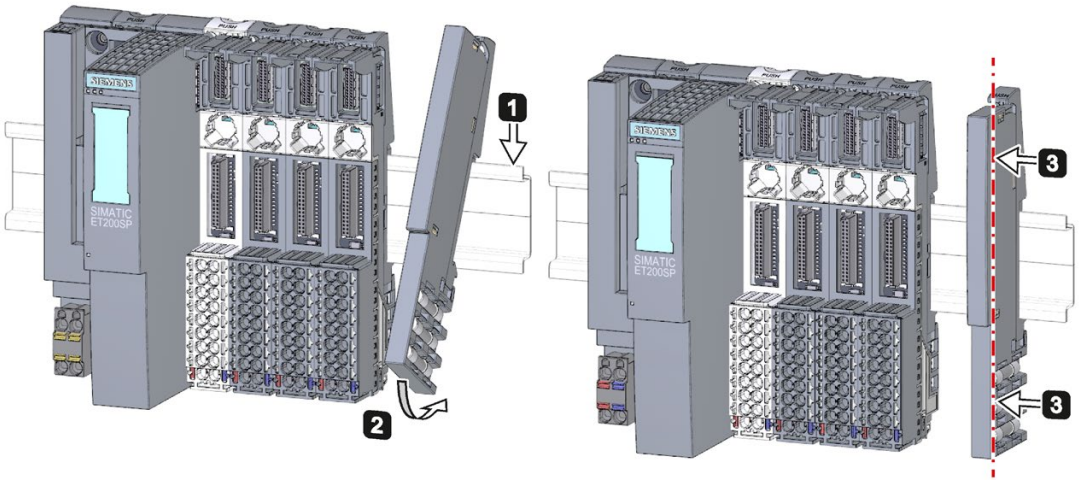

Figure 5-6 Installing the server module

Removing the server module

Proceed as follows to remove a server module:

1. Press the mounting rail release button on the server module.
2. Move the server module parallel to the right.
3. While pressing the mounting rail release button, swivel the server module off the mounting rail.

5.9 Mounting further accessories for motor starters

5.9.1 Mounting the cover for the 500 V AC infeed bus

Introduction

The 500 V infeed bus connects all SIMATIC ET 200SP motor starters. For finger-safe termination of the infeed bus, you must use the cover.

DANGER

Hazardous Voltage
Can Cause Death, Serious Injury, or Property Damage.

Hazardous electrical voltage causes electric shock, burns and property damage.

Disconnect your system and devices from the power supply before starting any assembly tasks.

DANGER

Infeed bus - electric shock

You must provide the infeed bus with a touch protection cover on the right (Article No.: 3RK1308-1DA00-2BP0).

Failure to do so will result in the danger of electric shock.

WARNING

Personal injury may occur

On the last plugged-in BaseUnit of a motor starter, place a cover on the opening of the contacts of the infeed bus.

Procedure

Proceed as follows to mount the infeed bus cover on a SIMATIC ET 200SP motor starter:

1. Press the cover onto the opening of the BaseUnit on the right until it audibly engages.

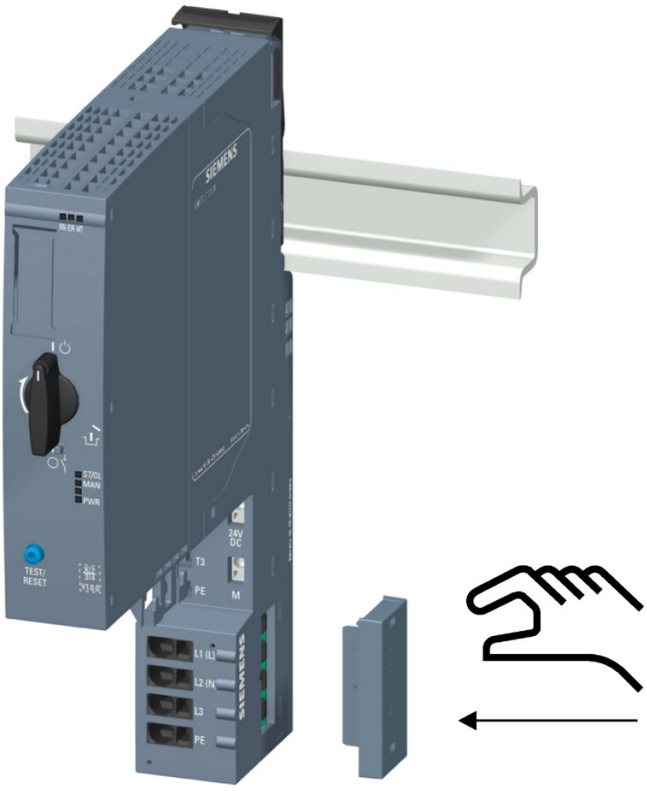

The cover can be removed again using 2 fingers and without tools.

5.9.2 Mounting the mechanical bracket for the BaseUnit

Introduction

To achieve higher stability, you can use a mechanical bracket on 7.5 mm and 15 mm mounting rails.

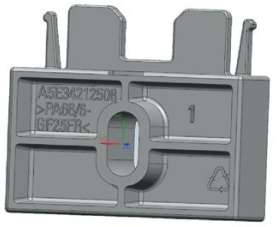

You must use the mechanical bracket in the following situations:

- When using a 15 mm mounting rail
- With a vertical mounting position
- For applications according to shipbuilding standards in all mounting positions with 7.5 mm and 15 mm mounting rails

You can find further information on the mechanical bracket in chapter "Installation conditions for motor starters (Page 68)".

Procedure

To mount the mechanical bracket, proceed as follows:

1. Insert the mechanical bracket into the opening at the bottom of the BaseUnit.

   You use the same mechanical bracket for both mounting rails, rotated through 180° respectively.

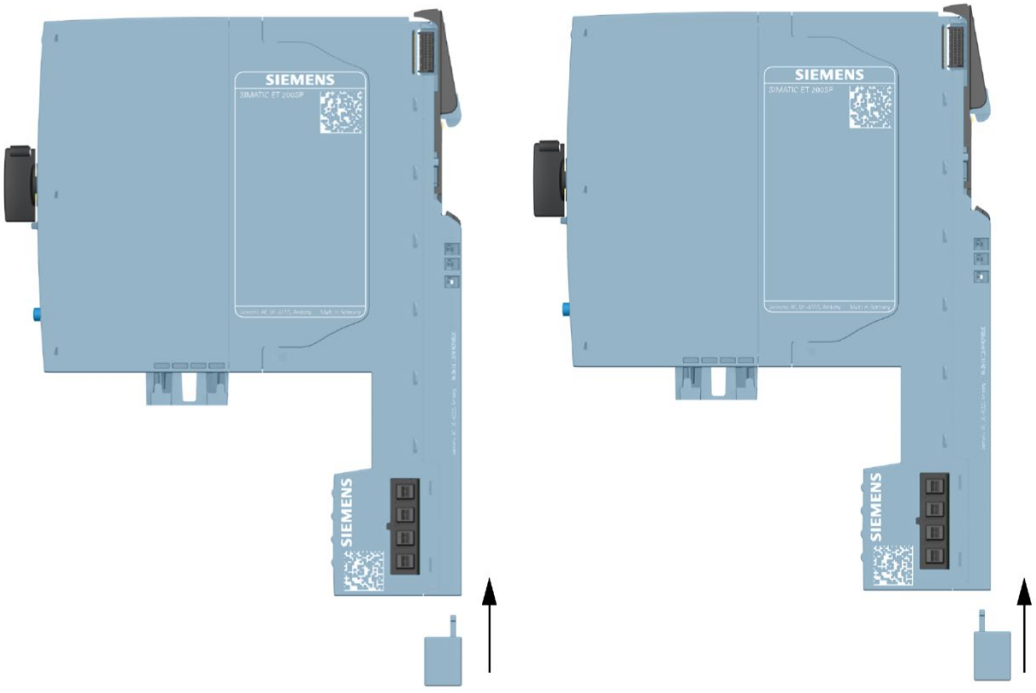

2. Hook the BaseUnit into the mounting rail.
3. Insert the mechanical bracket into the BaseUnit.
4. Screw the mechanical bracket securely onto the mounting panel. Use an M4 screw and a suitable washer.

The figures below show the mechanical bracket after installation on a 7.5 mm or 15 mm mounting rail.

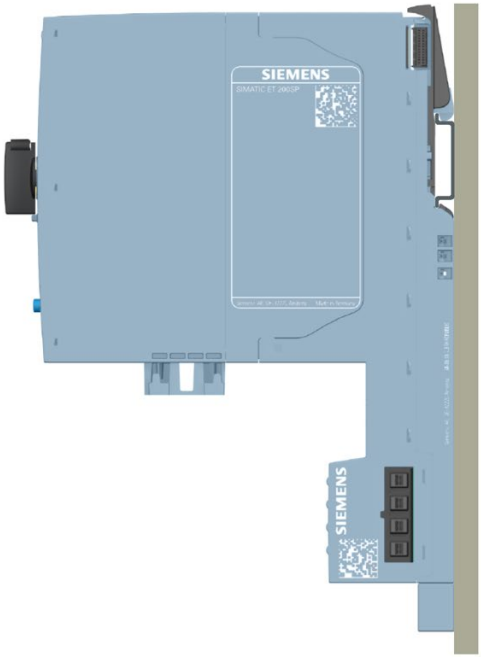

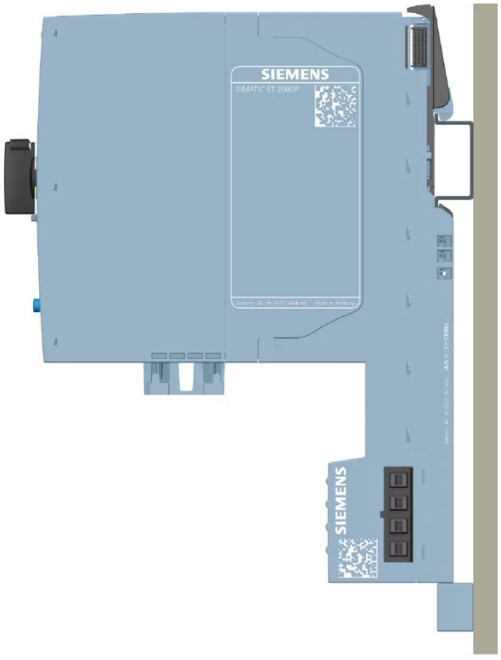

5.9.3 Mounting the BU cover

Introduction

BU covers are plugged onto BaseUnits whose slots have been reserved for future expansion (as empty slots). The BU covers for motor starters serve as touch protection covers for unoccupied slots.

DANGER

Hazardous Voltage
Can Cause Death, Serious Injury, or Property Damage.

Hazardous electrical voltage causes electric shock, burns and property damage.

Disconnect your system and devices from the power supply before starting any assembly tasks.

DANGER

BaseUnit without motor starter - electric shock

If you install a BaseUnit without motor starter in the ET 200SP system (e.g. options handling), you must provide the BaseUnit with a BU cover (Article No: 3RK1908-1CA00-0BP0).

Failure to do so will result in the danger of electric shock.

Procedure

To mount the BU cover onto a SIMATIC ET 200SP motor starter, insert the BU cover in the BaseUnit in parallel until both interlocks audibly engage.

Wiring 6

6.1 Rules and regulations for operation

Introduction

When installing the ET 200SP distributed I/O system as part of a plant or system, special rules and regulations need to be adhered to depending on the area of application.

This section provides an overview of the most important rules that must be observed for the integration of the ET 200SP distributed I/O system in a plant or system.

Specific application

Adhere to the safety and accident prevention regulations applying to specific applications, for example machine protection guidelines.

EMERGENCY STOP devices

EMERGENCY STOP devices in accordance with IEC 60204 (corresponds to DIN VDE 0113) must remain effective in all operating modes of the plant or system.

Excluding hazardous plant states

Hazardous operating states must not occur when

- the plant restarts after a voltage dip or power failure.
- Bus communication is reestablished following a fault.

If necessary, EMERGENCY STOP must be forced!

An uncontrolled or undefined startup must not occur after the EMERGENCY STOP is unlocked.

Line voltage

Below, everything you need to consider in terms of line voltage is described (refer to section Insulation, protection class, degree of protection and rated voltage (Page 298)):

- For fixed plants or systems without an all-pole mains disconnection switch, a mains disconnection device (all-pole) must be available in the building installation.
- For load power supplies, the configured rated voltage range must correspond to the local line voltage.
- For all power circuits of the ET 200SP distributed I/O system, the fluctuation/deviation of the line voltage from the rated value must be within the permitted tolerance.

24 V DC supply

Below you will find a description of what you need to pay attention to with 24 V DC supply:

- For buildings: In the event of danger through overload, you must provide lightning protection measures for external lightning protection (e.g. lightning protection elements).
- For 24 V DC supply lines and signal lines: If there is a risk of overvoltages, you need to take precautions to ensure internal lightning protection (e.g. lightning protection elements, refer to section Accessories/spare parts (Page 302)).
- For 24 V DC supply: Make sure there is safe (electrical) isolation and separate cable routing or increased insulation of the low voltage (SELV/PELV) to electric circuits with dangerous potentials in accordance with IEC61131-2 / IEC 61010-2-201.

Requirements for power supplies in the event of voltage interruption

Note

To ensure adherence to IEC 61131-2 and NAMUR Recommendation NE 21, only use power packs/power supply units (230 V AC → 24 V DC) with a mains buffering time of at least 20 ms. Observe the relevant requirement in your product standards (e.g. 30 ms for "burners" pursuant to EN 298) as regards possible voltage interruptions. The latest information on PS components is available on the Internet (https://mall.industry.siemens.com).

These requirements, of course, also apply to power packs/power supply units not constructed using ET 200SP or S7-300-/400-/1500 technology.

Protection against outside electrical influences

Below is a description of what you must pay attention to in terms of protection against electrical impacts and/or faults:

- Make sure that the system for discharging electromagnetic interference is connected to a functional earth or to protective conductor with a sufficient cross-section for all plants with an ET 200SP distributed I/O system.
- For supply, signal and bus lines, you must ensure that the laying of the lines and the installation is correct.
- For signal and bus lines, you must ensure that a wire/cable break or a cross-circuit does not lead to undefined states of the plant or system.

Reference

You can find more information in the Designing interference-free controllers (http://support.automation.siemens.com/WW/view/en/59193566) function manual.

6.2 Additional rules and regulations for the operation of the ET 200SP with fail-safe modules

6.2.1 Safety extra-low voltage (SELV, PELV) for failsafe modules and failsafe motor starters

WARNING

The failsafe modules must be operated with safety extra-low voltage (SELV, PELV).

You can find more information on safety extra-low voltage (SELV, PELV) in the data sheets of the applicable power supplies, for example.

The fail-safe modules operate with the 24 V DC rated voltage. The tolerance range is 19.2 V DC to 28.8 V DC.

The fail-safe motor starters operate with the 24 V DC rated voltage. The tolerance range is 20.4 V DC to 28.8 V DC.

Within the overvoltage range from 32 V DC to 36 V DC, the F-modules react in a fail-safe manner and the inputs and outputs are passivated. For overvoltages greater than 36 V DC, the F-modules are permanently de-energized.

Use a power supply unit that does not exceed U_m = 36 V DC even in the event of a fault. For more on this, refer to the information in the data sheet on overvoltage protection in the case of an internal error. Or implement appropriate measures to limit the voltage, e.g. use of an overvoltage protector.

All system components that can supply electrical energy in any form whatsoever must fulfill this condition.

Each additional circuit (24 V DC) used in the system must have a safety extra-low voltage (SELV, PELV). Refer to the relevant data sheets or contact the manufacturer.

Sensors and actuators with an external power supply can also be connected to F-modules. Make sure that power is supplied to these components from safety extra-low voltage (SELV, PELV) as well. The process signal of a 24 V DC digital module may not exceed a fault voltage U_m in the event of a fault.

WARNING

Even when a fault occurs, the permissible potential difference between the supply of the interface module (bus voltage) and the load voltage must not be exceeded.

An external direct electrical connection is one way to meet this requirement. This also prevents potential differences from causing voltage additions at the individual voltage sources, which would cause the fault voltage U_m to be exceeded.

6.2.2 Requirements for sensors and actuators for fail-safe modules and fail-safe motor starters

General requirements for sensors and actuators

Note the following important warning regarding safety-related use of sensors and actuators:

WARNING

Note that instrumentation with sensors and actuators bears a considerable **safety responsibility**. Also bear in mind that sensors and actuators generally do not have proof-test intervals of 20 years as defined in IEC 61508:2010 without considerable loss of safety.

The probability of hazardous faults and the rate of hazardous faults of safety functions must comply with an SIL-defined high limit. A listing of values achieved by F-modules in the technical specifications of the F-modules is available under "Fail-safe performance characteristics".

To achieve the required safety class, suitably qualified sensors and actuators are necessary.

Additional sensor requirements

General rule: To achieve SIL3/Cat. 3/PLe, a single-channel sensor is adequate. However, to achieve SIL3/Cat. 3/PLe with a single-channel sensor, the sensor itself must be SIL3/Cat. 3/PLe-capable; otherwise the sensor must be connected by two channels to achieve this safety level.

To achieve SIL3/Cat. 4/PLe, sensors must be connected by two channels.

WARNING

In the case of fail-safe input modules, the value "0" is output to the F-CPU after detection of faults. You therefore need to make sure that the sensors are implemented in such a way as to ensure the reliable reaction of the safety program when the sensor is in the "0" state.

Example: In its safety program, an EMERGENCY-STOP sensor must achieve the shutdown of the relevant actuator when it is in the "0" state (EMERGENCY-STOP button pressed).

Additional requirements for sensors for fail-safe motor starters

Only single-channel sensors that fulfill the required safety category themselves may be connected to the fail-safe motor starter's F-DI. Fail-safe laying must be observed in accordance with the required safety category.

Duration requirements for sensor signals

WARNING

Observe the following requirements for sensor signals:

- To ensure the correct detection of the sensor signals via fail-safe modules with inputs, you need to make sure that the sensor signals are output for a minimum duration.
- For pulses to be detected with certainty, the time between two signal changes (pulse duration) must be greater than the PROFIsafe monitoring time.

Reliable detection by F-modules with inputs

The minimum duration of sensor signals for F-modules with inputs depends on the configured input delay, the parameters of the short circuit test of the sensor supplies, and the configured discrepancy behavior for 1oo2 evaluation. The signal must be greater than the maximum response time of the configured application. Information on calculating the maximum response time can be found in the section "Response times" of the relevant F-module.

The maximum permitted switching frequency of the sensor signals results from the minimum duration.

Additional requirements for actuators

The fail-safe output modules test the outputs at regular intervals. The F-module briefly switches off the activated outputs and, if necessary, switches on the deactivated outputs. You can assign the maximum duration of the test pulses (dark and light period) with parameters.

Fast reacting actuators may briefly drop out or be activated during the test. If your process does not tolerate this, set the pulse duration of the light or dark test correspondingly or use actuators that have sufficient lag.

WARNING

If the actuators switch voltages higher than 24 V DC (e.g. 230 V DC), safe galvanic isolation must be ensured between the outputs of a fail-safe output module and the parts carrying a higher voltage (in compliance with the IEC 60664-1 standard).

This is generally the case for relays and contactors. Particular attention must be paid to this with semiconductor switching devices.

Technical specifications of sensors and actuators

Refer to the manuals of the fail-safe modules for technical specifications to assist you in selecting sensors and actuators.

6.2.3 Crosstalk of digital input/output signals

When fail-safe digital output and input signals are in a single cable, F-DQ modules and F-PM-E modules may experience readback errors.

Cause: capacitive crosstalk

During the bit pattern test of the outputs or the sensor supply of the inputs, the steep switching edge of the output drivers caused by the coupling capacitance of the line may result in crosstalk to other non-activated output or input channels. This may then lead to a response of the readback circuit in these channels. A cross circuit/short-circuit is detected, which leads to safety-related tripping.

Remedy:

- Separate cables for F-DI modules, F-DQ modules, and F-PM-E modules or non-fail-safe DQ modules
- Separate cables for F-DQ channel and F-DI channels for the F-PM-E module
- Coupling relay or diodes in the outputs
- Disable the sensor supply test if safety class requirements allow it.

Cause: magnetic crosstalk

Note that an inductive load connected to the F-DQ channels can induce coupling of a strong magnetic field.

Remedy:

- Separate the inductive loads spatially or shield against the magnetic field.
- Configure the readback time to 50 ms or higher.

6.3 Additional rules and instructions for operation with motor starters

6.3.1 Protection against short circuit

The motor starter complies with type of coordination 1. Secure the feeder cable for the infeed bus according to current, country-specific rules for conductor protection.

WARNING

Hazardous Voltage at the Motor
Can Cause Death, Serious Injury, or Property Damage.

Following a short-circuit, the SIMATIC ET 200SP motor starter is defective. Replace the motor starter following a short-circuit.

6.4 Operating the ET 200SP on grounded incoming supply

Introduction

Below you will find information on the overall configuration of an ET 200SP distributed I/O system on a grounded incoming supply (e.g. TN-S network). The specific subjects discussed are:

- Disconnecting devices and short-circuit and overload protection according to IEC 60364 (corresponds to DIN VDE 0100) and IEC 60204 (corresponds to DIN VDE 0113)
- Load power supplies and load circuits.

Grounded incoming supply

In the case of grounded incoming supplies (TN-S system) the neutral conductor (N) and the protective conductor (PE) are each grounded. Both conductors form a part of the overvoltage concept. When a plant is in operation, the current flows across the neutral conductor. When a fault occurs, for example, a single ground fault between a live conductor and ground, the current flows through the protective conductor.

Safe electrical isolation (SELV/PELV in accordance with IEC 61131-2 or 61010-2-201)

Load current / power supply modules with safe electrical isolation are required for the operation of the ET 200SP distributed I/O system. In accordance with IEC 61131-2 / 61010-2-201, this protection is referred to as SELV (Safety Extra Low Voltage)/PELV (Protective Extra Low Voltage).

The wiring of SELV/PELV circuits must either be isolated from the wiring of other circuits that are not SELV/PELV or the insulation of all conductors must be dimensioned for the higher voltage.

Configuration of ET 200SP with ungrounded reference potential

To conduct interference currents, the reference potential of the CPU/interface module and the BaseUnits BU15...D is connected internally via an RC combination (IM/CPU: R = 10 MΩ / C = 100 nF, BU15...D: R = 10 MΩ / C = 4 nF) with the mounting rail (functional grounding).

- This configuration conducts high-frequency interference currents and prevents static charges.
- It is always possible to configure an ungrounded setup of the ET 200SP distributed I/O system as the ET 200SP distributed I/O system has no fixed ground connection. The power pack/power supply module for 24 V DC must also be ungrounded and electrically isolated.

If you want to configure the ET 200SP distributed I/O system with grounded reference potential, connect the 1M connection of the CPU/interface module electrically with the protective conductor.

Short-circuit / overload protection

Various measures as protection against short-circuits and overloads are required for setting up a full installation. The type of components and the binding protective measures depend on which IEC (DIN VDE) regulation applies to your system configuration. The table refers to the figure below and compares the IEC (DIN VDE) regulations.

Table 6- 1 Components and protective measures

	Refer to figure	IEC 60364 (DIN VDE 0100)	IEC 60204 (DIN VDE 0113)
Disconnecting device for controller, sensors, and actuators	①	Main switch	Disconnector
Short-circuit / overload protection: In groups for sensors and actuators	② ③	Single-pole protection of circuits	With grounded secondary circuit: **single-pole** protection otherwise: **all-pole** protection
Load current supply for AC load circuits with more than five items of electromagnetic equipment	②	Galvanic isolation by transformer **recommended**	Galvanic isolation by transformer **recommended**

Cable temperature measurement threshold

Note

Cable temperature measurement threshold

When choosing a cable, remember that the cable temperature in operation can be up to 30 °C higher than the ambient temperature of the ET200SP system (example: at an ambient temperature of 60 °C, a connection conductor must be dimensioned for a temperature range of at least 90 °C).

You should specify other connection types and material requirements based on the electrical characteristics of the circuits you use and the installation environment.

ET 200SP in the overall configuration

The figure below shows the overall configuration of the ET 200SP distributed I/O system (load current supply and grounding concept) with supply from a TN-S network.

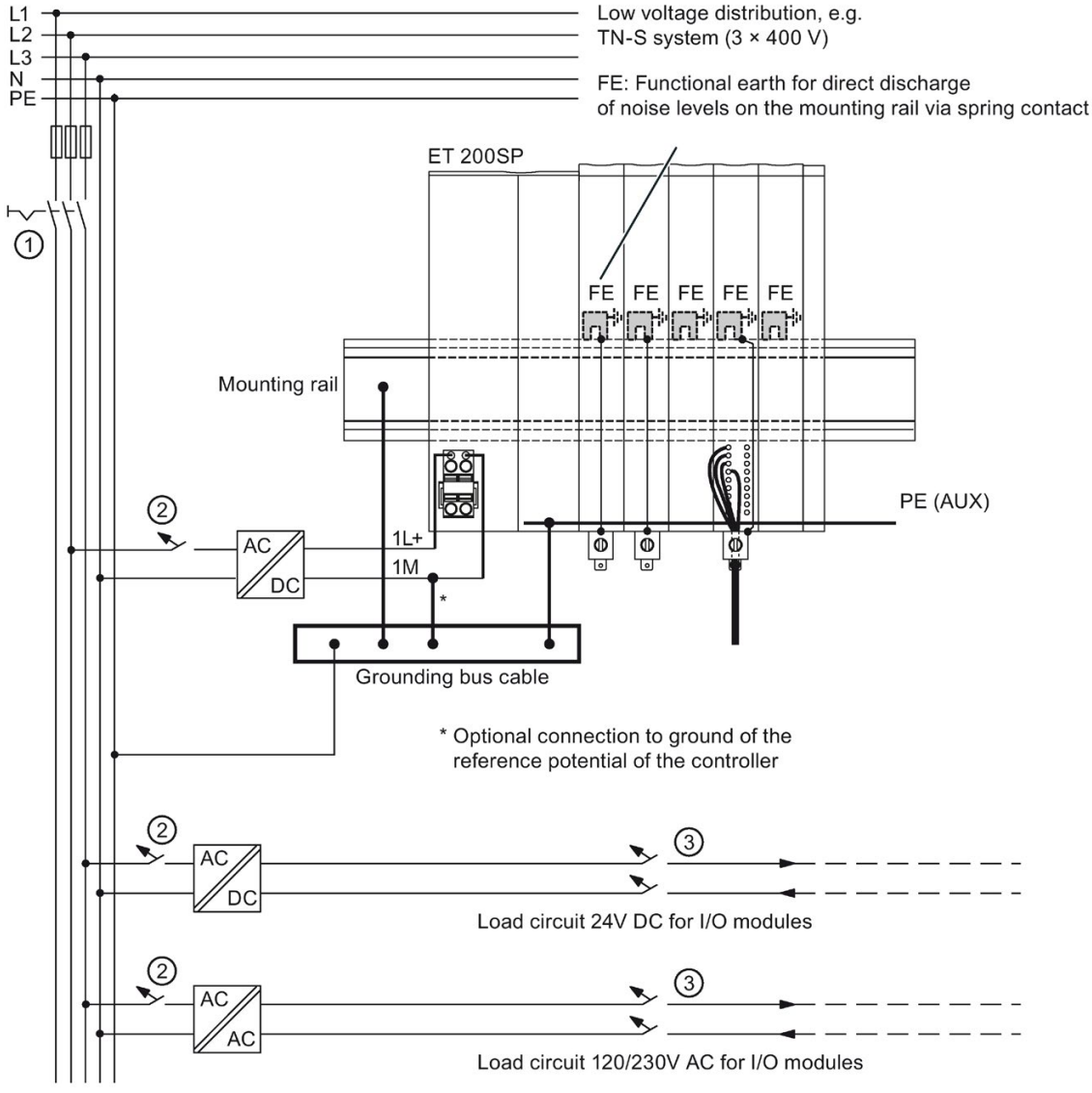

① Main switch

② Short-circuit / overload protection

③ The load current supply (galvanic isolation)

Figure 6-1 ET 200SP in the overall configuration

6.5 Electrical configuration of the ET 200SP

Electrical isolation

Electrical relationships

With the ET 200SP distributed I/O system, there is electrical isolation between:

- The load circuits/process and all other circuit components of the ET 200SP distributed I/O system.
- The communication interfaces of the CPU (PROFINET) or of the interface module (PROFINET/PROFIBUS) and all other circuit components.

The figures below show the electrical relationships of the ET 200SP distributed I/O system with the CPU and the interface module. Only the most important components are represented in the figures.

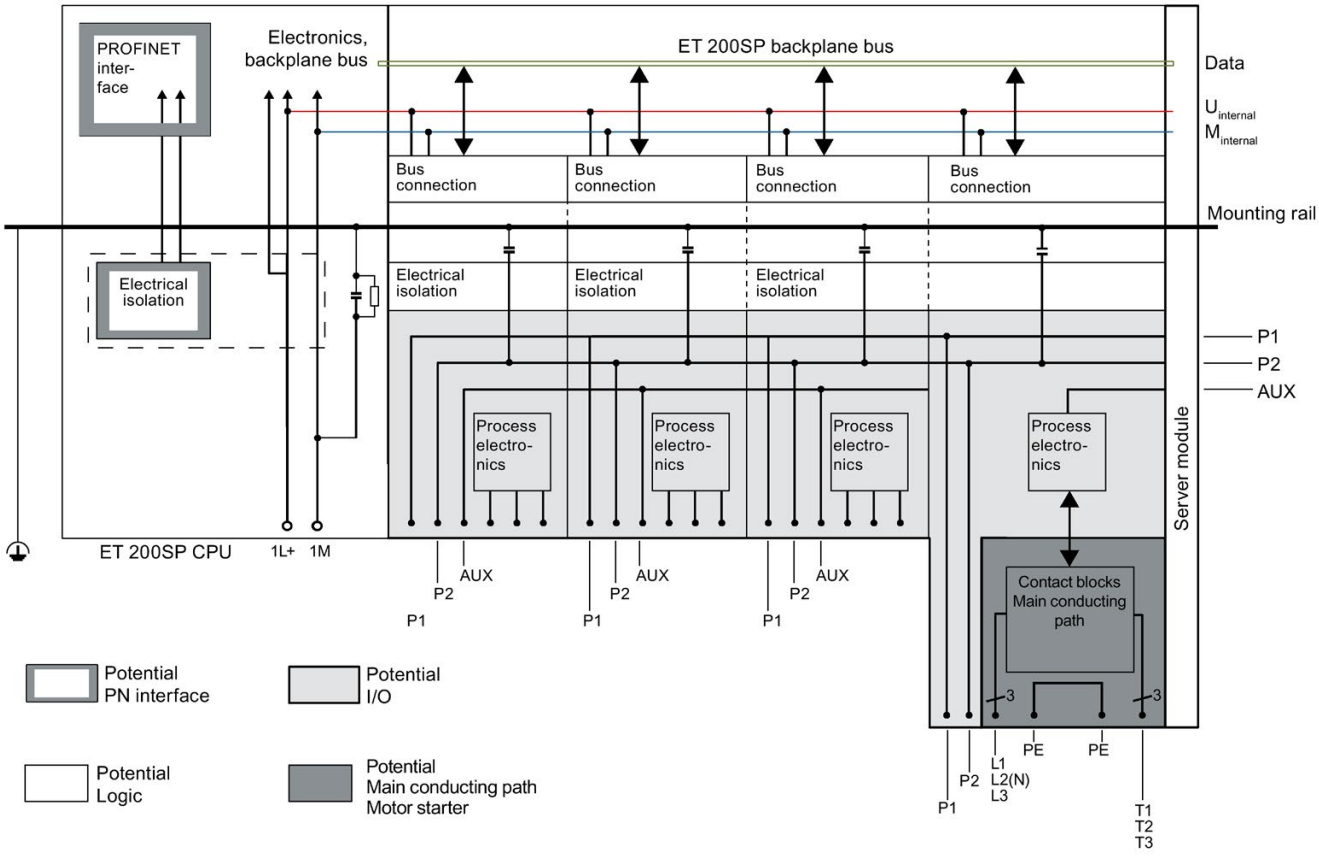

Figure 6-2 Electrical relationships for ET 200SP with CPU

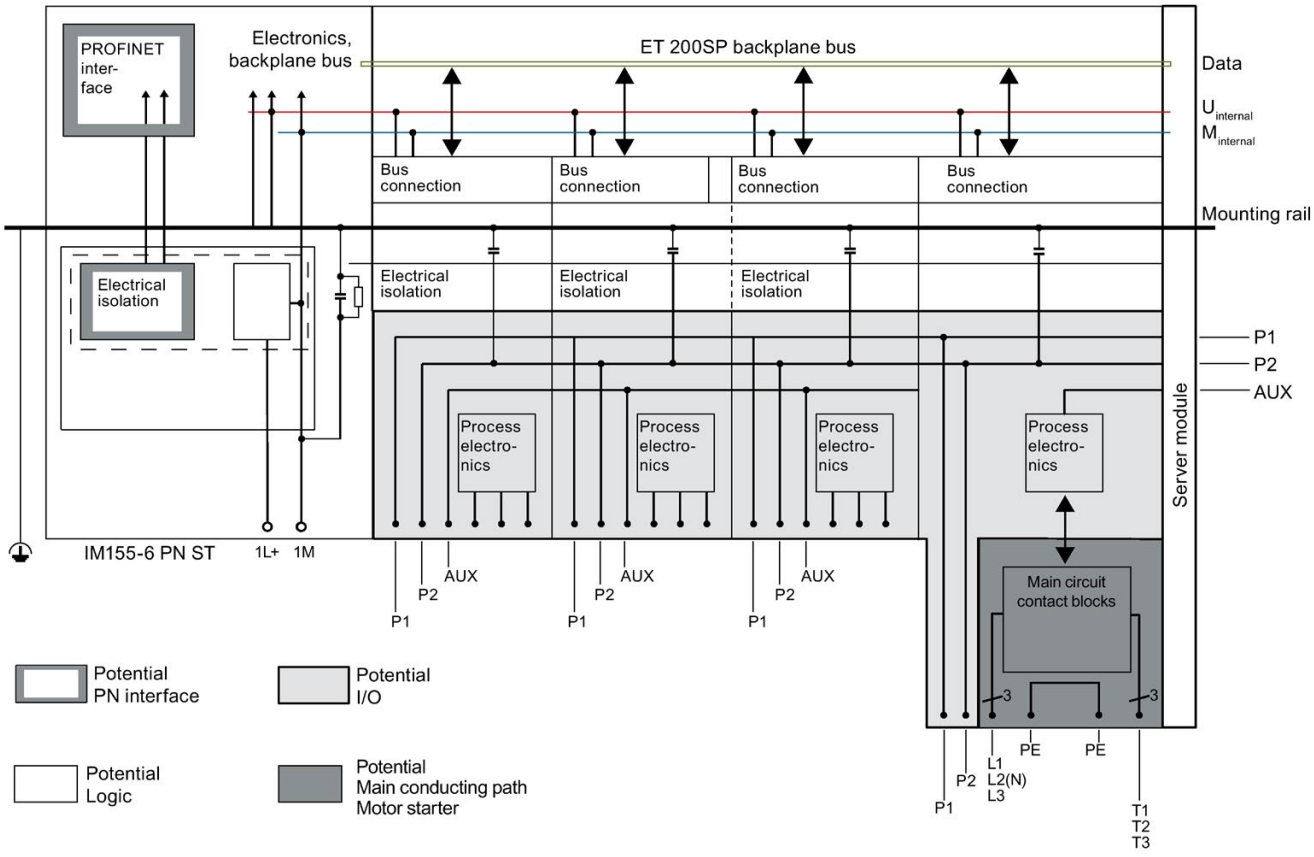

Figure 6-3 Electrical relationships for ET 200SP with interface module (using IM 155-6 PN ST as an example)

6.6 Wiring rules

Wiring rules for the CPU/interface module and BaseUnits for I/O modules

Wiring rules for ...		CPU/interface module (supply voltage)	BaseUnits (push-in terminal)
Permitted cable cross-sections of solid cables (Cu)		0.2 to 2.5 mm^2	
		AWG*: 24 to 13	
Permitted cable cross-sections of flexible cables (Cu)	Without end sleeve	0.2 to 2.5 mm^2	
		AWG*: 24 to 13	AWG*: 24 to 14
	With end sleeve (with plastic sleeve)***	0.25 mm to 1.5 mm^2**	0.14 mm to 1.5 mm^2
		AWG*: 24 to 16	AWG*: 26 to 16
	With TWIN end sleeve***	0.5 mm to 1 mm^2	0.5 to 0.75 mm^2 (see below)
		AWG*: 20 to 17	AWG*: 20 to 18
Stripping length of the wires		8 to 10 mm	
End sleeves in accordance with DIN 46228 with plastic sleeve***		8 and 10 mm long	

* AWG: American Wire Gauge

** End sleeves without plastic sleeve: 0.25 to 2.5 mm^2/AWG: 24 to 13

*** See note on end sleeves

Note

End sleeves

Optimum results with respect to a high-quality and permanent electrical connection with maximum conductor pull forces at the same time can be achieved by using crimping dies, preferably with smooth surfaces, which are provided, for example, with rectangular and trapezoidal crimp cross-sections.

Crimping dies with a pronounced wave profile are unsuitable.

TWIN end sleeves for the cables of the I/O modules' push-in terminals

Due to the space required by TWIN end sleeves with 0.75 mm² cross-section, you must ensure a correct angle for the cable arrangement when crimping the TWIN end sleeve so that the cables are optimally arranged.

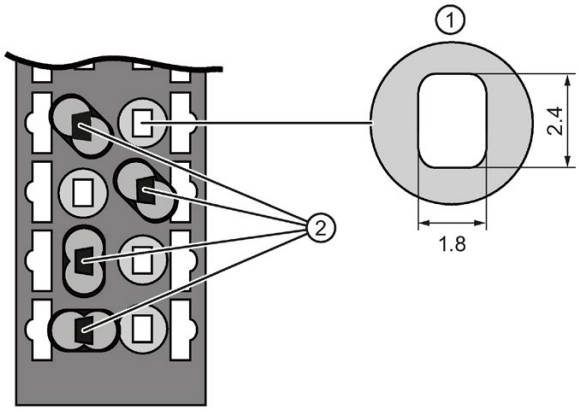

① Cross-section of the terminal compartment
② Crimping TWIN end sleeves at the correct angle

Figure 6-4 TWIN end sleeves

Wiring rules for motor starters

Wiring rules for ...		L1(L), L2(N), L3, PE	T1, T2, T3, PE, 24 V DC, F-DI, M	DI1 ... DI3, LC, M, 24 V OUT
Permitted cable cross-sections of solid cables (Cu)		1 to 6 mm²	0.5 to 2.5 mm²	0.2 to 1.5 mm²
		AWG: 18 to 10	AWG: 20 to 12	AWG: 24 to 16
Permitted cable cross-sections of flexible cables (Cu)	Without end sleeve	1 to 6 mm²	0.5 to 2.5 mm²	0.2 to 1.5 mm²
		AWG: 18 to 10	AWG: 20 to 12	AWG: 24 to 16
	With end sleeve	1 to 6 mm²	0.5 to 2.5 mm²	0.25 to 1.5 mm²
		AWG: 18 to 10	AWG: 20 to 12	AWG: 24 to 16
	With end sleeve (with plastic sleeve)	1 to 4 mm²	0.5 to 1.5 mm²	0.25 to 0.75 mm²
		AWG: 18 to 11	AWG: 20 to 16	AWG: 24 to 18
Stripping length of the wires		15 mm	10 mm	8 mm
End sleeves according to DIN 46228 with plastic sleeve		15 mm long	10 mm long	8 mm long

Safety standards for fail-safe motor starters

Fail-safe motor starters fulfill the following standards under certain conditions:

- PL e/Cat. 4 according to EN ISO 13849-1
- Safety Integrity Level SILCL3 acc. to IEC 62061

To fulfill both standards, lay cross-circuit proof and P-cross-circuit proof control cables from the safe output of a sensor or F-DQ to the safe input of the motor starter, e.g. as a separately sheathed cable or in a separate cable duct.

Line protection

The line protection of the SIMATIC ET 200SP motor starter is provided for the motor outgoing feeder cable when the following condition is met:

The cross-section of the motor outgoing feeder cable must be dimensioned for the load ratios of the motor and for the cable-laying method.

Comply with national regulations. The user is responsible for the correct selection and dimensioning of the motor connection cable to DIN VDE 0100 and DIN VDE 0298-4 and/or UL 508.

The conductor protection for the incoming feeders must be ensured by the owner of the installation depending on the cross-section.

Cable temperature measurement threshold

Note

Cable temperature measurement threshold

When choosing a cable, remember that the cable temperature in operation can be up to 30 °C higher than the ambient temperature of the ET200SP system (example: at an ambient temperature of 60 °C, a connection conductor must be dimensioned for a temperature range of at least 90 °C).

You should specify other connection types and material requirements based on the electrical characteristics of the circuits you use and the installation environment.

6.7 Wiring BaseUnits for I/O modules

Introduction

The BaseUnits connect the ET 200SP distributed I/O system to the process. The following versions of the BaseUnits can be used:

- BaseUnits (with light-colored terminal box) for opening a potential group: BU..D
- BaseUnits (with dark-colored terminal box) for extending the potential group: BU..B
- BaseUnits with additional AUX terminals or additional terminals: BU..+10..
- BaseUnits with integrated thermal resistor for compensation of the reference junction temperature when connecting thermocouples: BU..T

- PotDis-BaseUnits (with light-colored terminal box) for opening a PotDis potential group: PotDis-BU..D
- PotDis-BaseUnits (with dark-colored terminal box) for extending the potential group: PotDis-BU..B

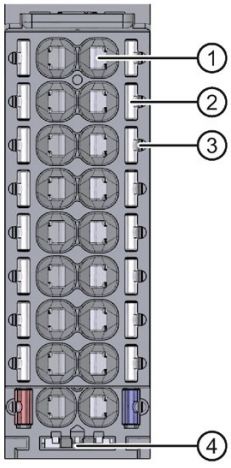

① Push-in terminal
② Spring release
③ Measuring probe (suitable probes: 1 mm diameter, length ≥ 10 mm while observing the permitted voltage category)
④ Holder for shield connection

Figure 6-5 View of the BaseUnit

Note

The pin assignment of the BaseUnit depends on the connected I/O module. Information on the BaseUnits and I/O modules can be found in the associated manuals.

Replacement of the terminal box on the BaseUnit is described in the section Replacing the terminal box on the BaseUnit (Page 255).

Note

Special terminal designations in the wiring and block diagrams of the I/O modules/BaseUnits

- **RES**: Reserve, these terminals must remain unconnected so that they can be used for future expansions
- **n.c.**: Not connected, these terminals have no function. However, they can be connected to potentials specifically defined for a module, for example, for the laying unused wires.

Requirements

- The supply voltages are turned off.
- Follow the wiring rules.
- Color identification labels (Page 130) (optional) have been applied.

Required tools

3 to 3.5 mm screwdriver

Tool-free connection of cables: single-wire without wire end ferrule, multi-wire (stranded) with wire end ferrule or ultrasonically sealed

Watch the video sequence (http://support.automation.siemens.com/WW/view/en/95886218)

To connect a wire without tools, follow these steps:

1. Strip 8 to 10 mm of the wires.
2. Only in the case of stranded conductors (except for 2.5 mm² cross-section):

   Seal or crimp the wire with wire end ferrules.
3. Insert the wire into the push-in terminal as far as it will go.

Connection of cables: multi-wire (stranded), without wire end ferrule, unprocessed

To connect a wire without a wire end ferrule, follow these steps:

1. Strip 8 to 10 mm of the wires.
2. Push with the screwdriver into the spring release.
3. Insert the wire into the push-in terminal as far as it will go.
4. Pull the screwdriver out of the spring release.

Removing wires

Using the screwdriver, press the spring release of the terminal as far as it will go and pull out the wire.

Note

When you press the spring release, you should not pull on the wire/cable at the same time. This prevents you from damaging the terminal.

6.8 Connecting cable shields for I/O modules

Introduction

- You need the shield connector to contact cable shields (e.g. for analog modules). The shield connector conducts interference currents on cable shields to ground via the mounting rail. It is not necessary to contact the shield at where the cable enters the cabinet.
- Attach the shield connector to the BaseUnit.
- The shield connector consists of a shield contact and a shield terminal.
- The shield connector is automatically connected to the functional ground (FG) of the mounting rail after installation.

Requirements

- BaseUnit with a width of 15 mm
- The shield terminal is suitable for cables with max. ∅ 7 mm each.

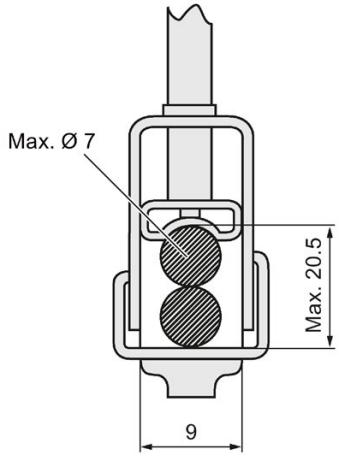

Figure 6-6 Shield terminal

Required tools

- Stripping tool

Procedure

Watch the "Wiring BaseUnits" video sequence (http://support.automation.siemens.com/WW/view/en/95886218)

To connect the cable shield, follow these steps:

1. If necessary, connect the supply voltage L+ and ground to the BaseUnit.
2. Press the shield contact up into the mount until you hear it click into place.
3. Remove the cable insulation material around the shield terminal.

   Connect the cable to the BaseUnit and place the cable in the shield contact.
4. Insert the shield terminal into the shield contact.
5. Tighten the shield terminal with approximately 0.5 Nm.

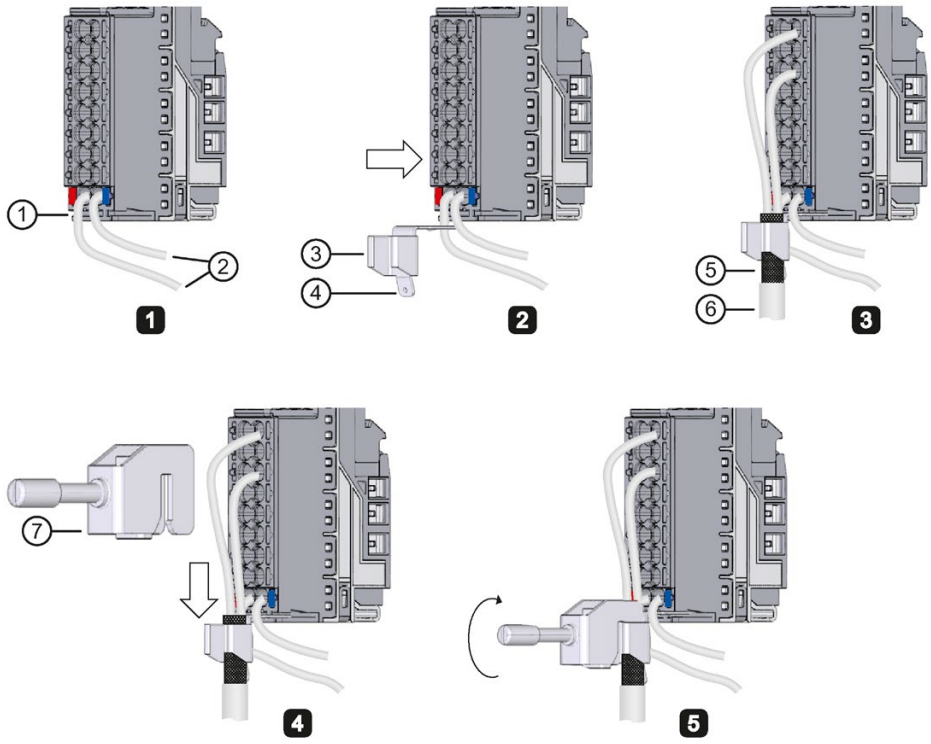

①	Mount	⑤	Insulation material removed (approx. 20 mm)
②	Supply voltage L+, ground	⑥	Cable to the encoder
③	Shield contact	⑦	Shield terminal
④	Flat connector for push-on contacts (6.3 × 0.8 mm)		

Figure 6-7 Mounting the shield contact

6.9 Wiring BaseUnits for motor starters

Introduction

The following versions of BaseUnits can be used:

- BU30-MS1 (with 500 V and 24 V infeed)
- BU30-MS2 (with 500 V infeed and 24 V forwarding)
- BU30-MS3 (with 24 V infeed and 500 V forwarding)
- BU30-MS4 (with 500 V and 24 V forwarding)
- BU30-MS5 (with 500 V infeed, 24 V and F-DI forwarding)
- BU30-MS6 (with 500 V, 24 V and F-DI forwarding)

The following figure shows an example of a BaseUnit BU30-MS1 (with the maximum number of terminals):

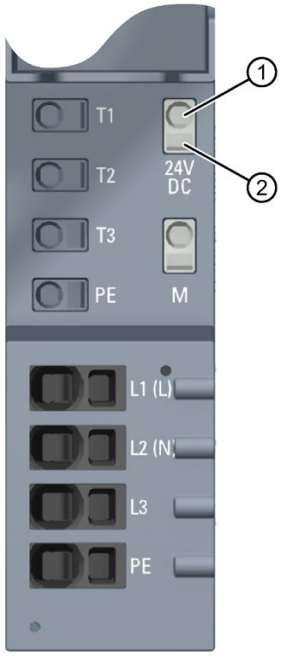

① Push-in terminal
② Spring release

Figure 6-8 Terminals on a BaseUnit BU30-MS1

The following figure shows an example of a BaseUnit BU30-MS5 (with the maximum number of terminals):

① Push-in terminal
② Spring release

Figure 6-9 Terminals on a BaseUnit BU30-MS5

DANGER

Hazardous Voltage
Can Cause Death, Serious Injury, or Property Damage.

Hazardous electrical voltage can cause electric shock, burns and property damage.

Turn off and lock out all power supplying this device before working on this device.

For wiring finely-stranded or stranded conductors without end sleeves on push-in connections, a screwdriver is required.

Requirements

- The supply voltages are switched off
- Observe the wiring rules

NOTICE
Wire the F-DI inputs of the BaseUnits BU-30-MS5 and BU-30-MS6 to surge filters If your system requires overvoltage protection, you must wire the F-DI inputs of the BaseUnits BU-30-MS5 and BU-30-MS6 to surge filters. Please see "Electromagnetic Compatibility" in the technical specifications.

Required tools

Use the screwdriver "SZF 1-0.6x3.5" (for finely-stranded cables only).

Connecting conductors: Solid without end sleeve, stranded (stranded wire) with end sleeve

To connect a cable, proceed as follows:

1. Insulate the cables in accordance with the table in chapter "Electromagnetic compatibility of fail-safe modules (Page 292)".
2. Only in the case of stranded conductors:

   Crimp the cable with end sleeves.
3. Insert the cable into the push-in terminal as far as it will go.
4. Pull on the cable to ensure it is tight.

Connecting conductors: multi-wire (stranded), without end sleeve, unfinished

To connect a cable, proceed as follows:

1. Insulate the cables in accordance with the table in chapter "Wiring rules (Page 99)".
2. Press the screwdriver into the spring release.
3. Insert the conductor into the push-in terminal until it engages.
4. Pull the screwdriver out of the spring release.
5. Check whether or not the conductor is firmly connected by pulling on the cable.

Video sequence

At the following Internet link, you can see a video about connecting conductors: Wire BaseUnits (http://support.automation.siemens.com/WW/view/en/95886218)

Releasing conductors

To release a conductor, proceed as follows:

1. Press the screwdriver into the spring release of the terminal until it engages.
2. Pull the conductor out.

Note

When pressing the spring release, you must not pull on the wire/cable at the same time. In this way, you avoid damaging the terminal.

6.10 Connecting the 3DI/LC module for the motor starter

You will find further information on the 3DI/LC module in the ET 200SP motor starter (https://support.industry.siemens.com/cs/ww/en/view/109479973) manual.

Procedure

The figure below shows the connections of the 3DI/LC module.

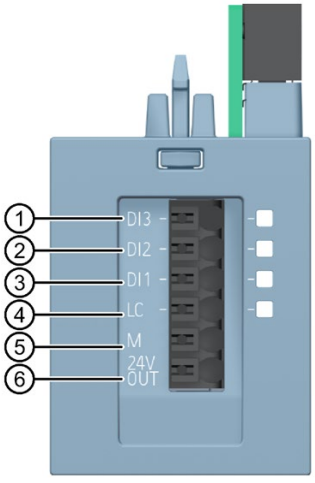

① Digital input 3
② Digital input 2
③ Digital input 1
④ Local control (manual local)
⑤ Ground
⑥ 24 V DC/ 100 mA output

Note

The digital inputs (1 to 4) are not isolated. The reference potential is M (5). Control the digital inputs only via a unit supplied from the 24 V DC output (6).

Connect only cables of a width not exceeding 30 m to the 3DI/LC module.

The supply (5 and 6) is protected against short-circuits.

Terminal sketch of the 3DI/LC module

The following diagram shows a terminal sketch of the 3DI/LC module:

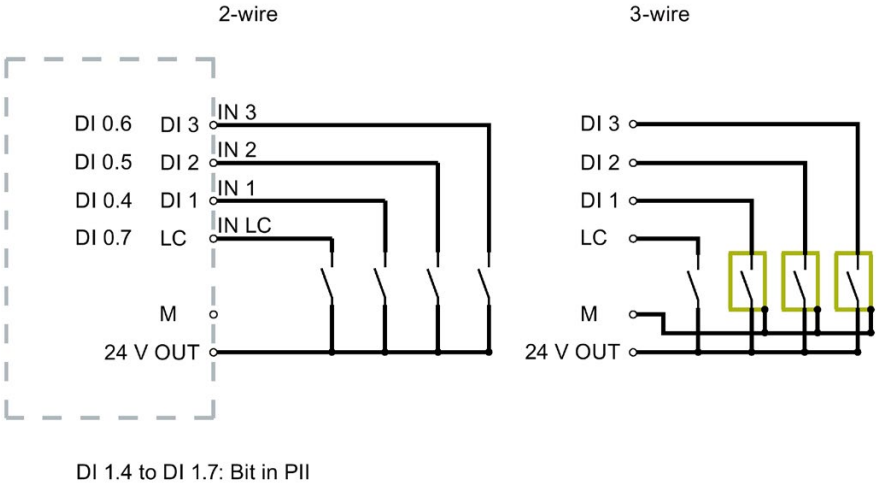

Figure 6-10 Connection example of inputs

6.11 Connecting the supply voltage to the CPU/interface module

Introduction

The supply voltage of the CPU/interface module is supplied by means of a 4-pin connector plug located on the front of the CPU/interface module.

Power supply unit

Only use power supply units of type SELV/PELV with safe electrically isolated functional extra low voltage (≤ 28.8 V DC).

Connection for supply voltage (X80)

The connections have the following meaning:

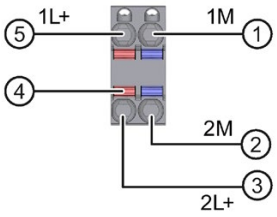

① Ground of the supply voltage
② Ground of the supply voltage for looping through (permitted value 10 A)
③ + 24 V DC of the supply voltage for looping through (permitted value 10 A)
④ Spring release
⑤ + 24 V DC of the supply voltage
1L+ and 2L+ and 1M and 2M are internally jumpered.

Figure 6-11 Supply voltage connection

The maximum cross-section of the connection is 2.5 mm^2 without wire-end ferrule or 1.5 mm^2 with wire-end ferrule. A strain relief is not present. The connector plugs provide you with the option of looping the supply voltage through without interruption, even when it is unplugged.

Requirements

- Only wire up the connector plug when the supply voltage is turned off.
- Follow the wiring rules (Page 99).

Required tools

3 to 3.5 mm screwdriver

Tool-free connection of cables: single-wire without end sleeve, multi-wire (stranded) with end sleeve or ultrasonically sealed

Watch video sequence: "Connect BusAdapter to the interface module" (http://support.automation.siemens.com/WW/view/en/95886218)

To connect a wire without tools, follow these steps:

1. Strip 8 to 10 mm of the wires.
2. Only in the case of stranded conductors:

   Seal or crimp the wire with end sleeves.
3. Insert the cable into the push-in terminal as far as it will go.
4. Push the wired connector plug into the plug socket of the interface module.

Connection of cables: multi-wire (stranded), without end sleeve, unfinished

To connect a wire without an end sleeve, follow these steps:

1. Strip 8 to 10 mm of the wires.
2. Using a screwdriver, press the spring release and insert the wire into the push-in terminal as far as it will go.
3. Pull the screwdriver out of the spring release.
4. Push the wired connector plug into the socket in the interface module.

Removing a wire

Using the screwdriver, press the spring release as far as it will go and pull out the wire.

6.12 Connecting interfaces for communication

Connect the communication interfaces of the ET 200SP distributed I/O system using the standardized connector or directly. If you want to prepare communication cables yourself, the interface assignment is specified in the manuals of the corresponding modules. Observe the mounting instructions for the connectors.

Detailed information on the available BusAdapters and the procedure for connecting PROFINET IO to the CPU/interface module is available in the BusAdapter (https://support.industry.siemens.com/cs/ww/en/view/109751716) manual.

6.12.1 Connecting PROFINET IO (port P3) to the CPU

Introduction

You use the RJ-45 bus connector to connect PROFINET IO (port P3) directly to the CPU.

Required accessories

- Cable ties with standard width of 2.5 mm or 3.6 mm for strain relief
- Please observe the specifications in the PROFINET Installation Guide (http://www.profibus.com).

Mounting the bus connector

Mount the PROFINET connector in accordance with the instructions in the PROFINET Installation Guide (http://www.profibus.com).

Procedure

Insert the RJ45 bus connector into the PROFINET port (port P3) on the CPU.

Note

Cable support and strain relief

If you are using a FastConnect RJ-45 bus connector with 90° cable outlet (6GK1901-1BB20-2AA0), we recommend you provide strain relief for the PROFINET connecting cable. To do so, you need a cable tie with a standard width of 2.5 mm or 3.6 mm.

Use it to fasten the PROFINET connecting cable directly after it exits the bus connector to the intended cable support on the CPU (on the front directly below the PROFINET interface X1P3).

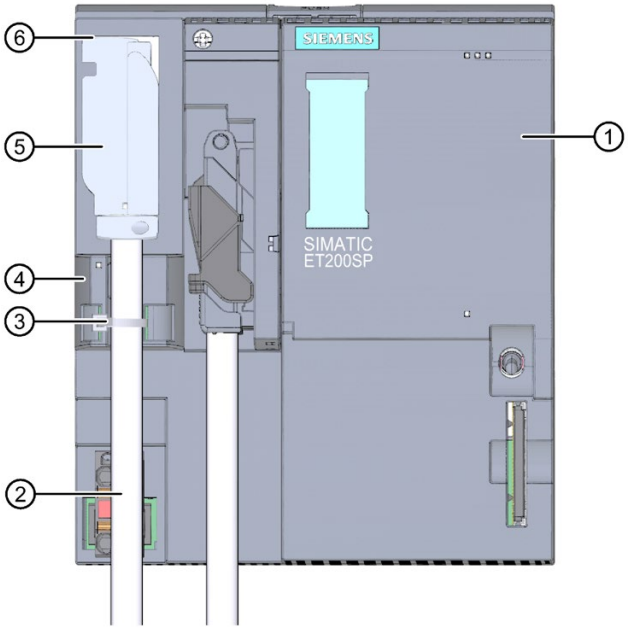

① CPU
② PROFINET connecting cable
③ Strain relief (cable tie)
④ Cable support
⑤ FastConnect RJ45 bus connector with 90° cable outlet
⑥ PROFINET connector (port P3)

Figure 6-12 Connecting PROFINET IO (port P3) to the CPU

6.12.2 Connecting the PROFIBUS DP interface to the interface module/communications module CM DP

Introduction

Using the bus connector (RS485), connect the PROFIBUS DP to the interface module/communications module CM DP.

Required tools

3 to 3.5 mm screwdriver

Procedure

To connect the PROFIBUS DP interface to the interface module / DP communication module CM DP, follow these steps:

1. Connect the PROFIBUS cable to the bus connector.
2. Plug the bus connector into the PROFIBUS DP connector.
3. Securely tighten the fixing screws of the bus connector (0.3 Nm).

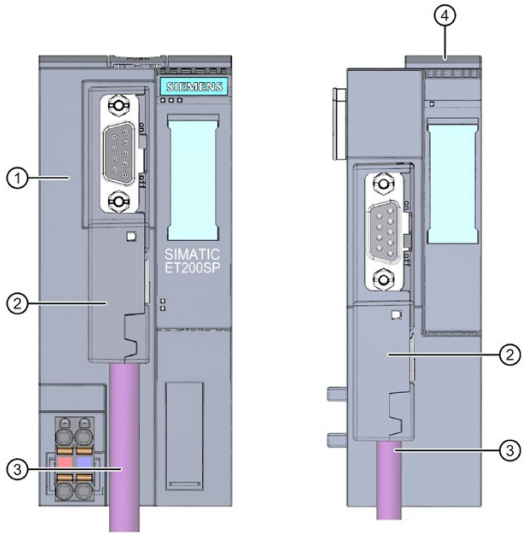

① Interface module
② PROFIBUS FastConnect bus connector
③ PROFIBUS connecting cable
④ Communications module CM DP

Figure 6-13 Connect PROFIBUS DP to the interface module/communications module CM DP

Reference

You can find additional information on the PROFIBUS FastConnect bus connector in the corresponding product information on the Internet (http://support.automation.siemens.com/WW/view/en/58648998).

6.13 Inserting I/O modules / motor starters and BU covers

Introduction

- You insert the I/O modules on the BaseUnits. The I/O modules are self-coding and type-coded.
- You insert the PotDis-TerminalBlocks on the PotDis-BaseUnits.
- You insert the BU covers on BaseUnits whose slots are not equipped with I/O modules/PotDis-TerminalBlocks.
- You insert the BU covers on BaseUnits whose slots have been reserved for future expansion (as empty slots).
- The BU covers for motor starters serve as touch protection covers for unoccupied slots.

  The BU covers have a holder for the reference identification label on the inside. For future expansion of the ET 200SP, remove the reference identification label from the holder and insert it into the final I/O module.
  It is not possible to attach a reference identification label to the BU cover itself.

  There are three versions:

  – BU cover with a width of 15 mm
  – BU cover with a width of 20 mm
  – BU cover with a width of 30 mm (for motor starters)

Requirement

Refer to chapter "Application planning (Page 36)".

Plugging in I/O modules and BU covers

Watch video sequence: "Insert I/O modules"
(http://support.automation.siemens.com/WW/view/en/95886218)

Insert the I/O module or BU cover parallel into the BaseUnit until you hear both latches click into place.

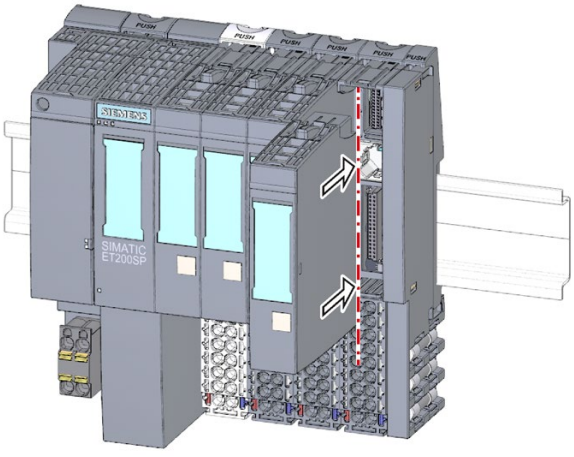

Figure 6-14 Plugging in I/O modules or BU covers (using an I/O module as example)

6.14 Mounting/disassembly of motor starters

6.14.1 Mounting the fan

Procedure

Proceed as follows to mount a fan on a SIMATIC ET 200SP motor starter:

1. Slide the fan onto the motor starter until you can hear the fan engage.

   Observe the blowing direction of the fan when mounting. The air stream must be directed to the inside of the motor starter. The correct blowing direction is indicated by arrows on the bottom of the fan.

2. Insert the connection plug into the opening above the fan.

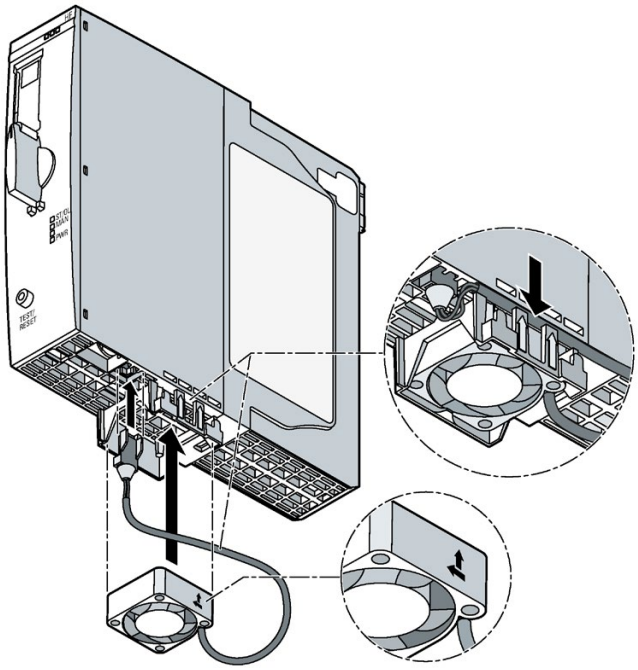

3. Secure the fan cable to the fixing eyes on the right-hand side of the fan cover.

Note

Specified ambient temperatures are not reached if the fan is incorrectly installed

If you do not observe the blowing direction of the fan when mounting, the specified ambient temperatures will not be reached. The device shuts down prematurely due to excessively high temperature.

6.14.2 Mounting/disassembly of motor starters

Procedure

CAUTION

Protection against electrostatic charge

When handling and installing the SIMATIC ET 200SP motor starter, ensure protection against electrostatic charging of the components. Changes to the system configuration and wiring are only permissible after disconnection from the power supply.

To assemble a SIMATIC ET 200SP motor starter, proceed as follows:

- Position the mechanical interlock of the SIMATIC ET 200SP motor starter in the assembly/disassembly position ②
- Place the SIMATIC ET 200SP motor starter onto the BaseUnit.
- Turn the mechanical interlock clockwise to the parking position ③
- Turn the mechanical interlock counterclockwise to the operating position (= end position) ①

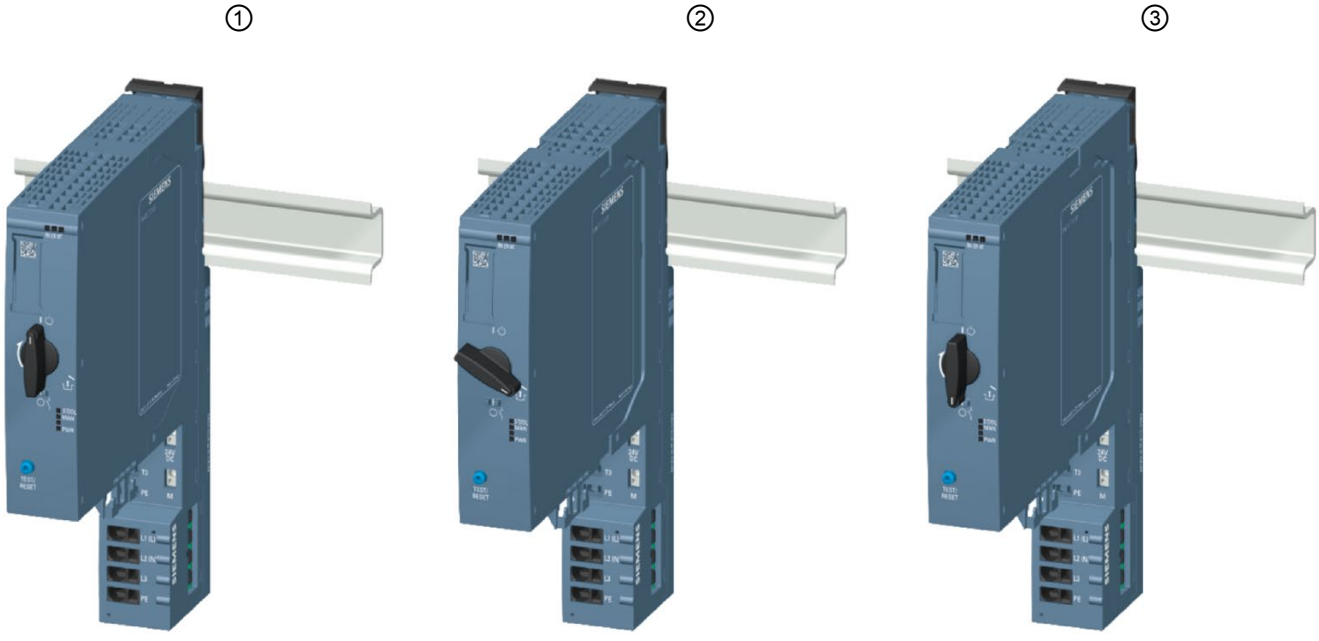

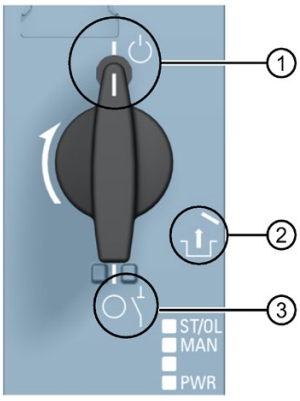

① Operating position/READY

The motor starter is firmly locked in the BaseUnit, and all electrical contacts are connected.

② Assembly/disassembly position

All electrical contacts are open, and you can use the SIMATIC ET 200SP motor starter in the BaseUnit, or you can remove it from the BaseUnit.

③ Parking position/OFF

In this position, you cannot remove the SIMATIC ET 200SP motor starter from the BaseUnit, but all electrical contacts are open. In addition, you can open the locking lever on the mechanical rotary interlock in this position, and fix the position with a padlock (shackle diameter 3 mm). This ensures the isolating function in accordance with IEC 60947-1.

In the parking position, the motor starter counts as a disconnected element for the head module. During operation, the parking position is therefore a hot swapping state. See also Removing and inserting I/O modules/motor starters (hot swapping) (Page 247)

Note

Parking position/OFF

This position is only permissible for maintenance purposes and not for continuous operation. In this position, dust protection and mechanical durability are not ensured.

If you do not use the motor starter for an extended period, remove it and attach the BU cover (3RK1908-1CA00-0BP0).

Mount the touch protection cover for the infeed bus on the last BaseUnit.

Note

Touch protection cover for the infeed bus

You will find out how to mount the touch protection cover of the infeed bus on a SIMATIC ET 200SP motor starter in chapter "Mounting the cover for the 500 V AC infeed bus (Page 81)".

To connect the assembly, mount the server module after the last BaseUnit.

Note

Server module

You can find out how to assemble/disassemble the server module in chapter "Installing the server module (Page 80)".

Note

Removing the motor starter

You will find out how to remove the motor starter in chapter "Replacing a motor starter (Page 254)".

6.14.3 3DI/LC module

Introduction

The optional 3DI/LC module with three inputs and one further LC input can be connected to the motor starter. The status of the inputs of the 3DI/LC module can be seen via the process image input (PII) of the motor starter.

Note

The 3DI/LC module can be used for the motor starter and the fail-safe motor starter.

The input actions can be parameterized. For reasons of operational safety, the LC input is permanently set to manual local mode. For example, by parameterizing the inputs DI1 - DI3 with motor CLOCKWISE or motor COUNTER-CLOCKWISE, you can control the motor in manual local mode.

The figure below shows the 3DI/LC module.

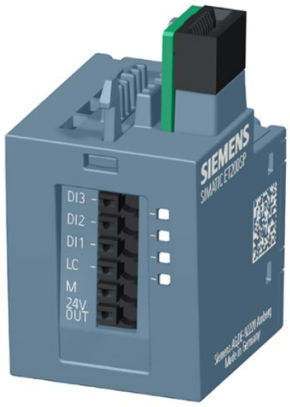

Assembly

WARNING

Risk of injury from automatic restart

When you mount the the 3DI/LC module, the motor starter can switch on autonomously if an ON command (DI1 to DI3) is active. This can result in property damage or serious injury caused by connected devices that are automatically started up.

Revoke the ON commands at DI1 to DI3 before mounting the 3DI/LC module.

Proceed as follows to mount a 3DI/LC module onto a motor starter:

1. Wire the 3DI/LC module according to the connection diagram.

Note

Connecting the 3DI/LC module

You will find out how to connect the 3DI/LC module in chapter "Connecting the 3DI/LC module for the motor starter (Page 111)".

2. Slide the 3DI/LC module into the motor starter until the 3DI/LC module engages.

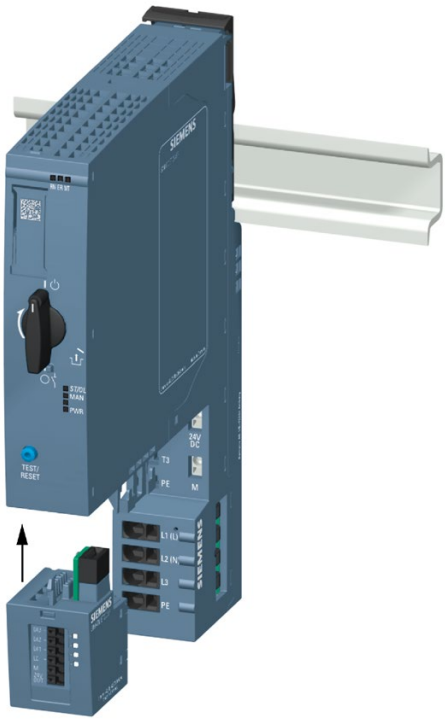

The figure below shows a motor starter with a mounted 3DI/LC module.

Disassembly

Proceed as follows to remove a 3DI/LC module from a motor starter:

1. Push the release lever on the rear of the 3DI/LC module.

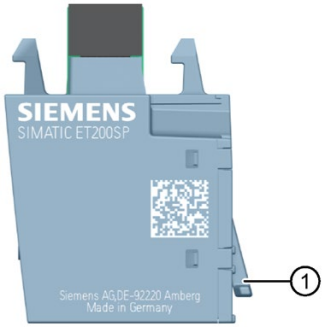

① Release lever

2. Remove the 3DI/LC module from the motor starter while pressing the release lever.

6.15 Labeling ET 200SP

6.15.1 Factory markings

Introduction

For better orientation, the ET 200SP is equipped with various markings ex factory, which help in the configuration and connection of the modules.

Factory markings

- Module labeling
- Color coding of the module classes
  - Digital input modules: white
  - Digital output modules: black
  - Analog input modules: light blue
  - Analog output modules: dark blue
  - Technology module: turquoise
  - Communication module: light gray
  - Special module: mint green
- Module information
  - Functional version of the module, e.g. "X/2/3/4" (= functional version 1)
  - Firmware version of the module at delivery, e.g. "V1.0.0"
  - Color code for usable color identification label, e.g. "CC0"
  - Usable BaseUnit type, e.g. "BU: A0"
- Color coding of the potential group
  - Opening the potential group: Light-colored terminal box and light-colored mounting rail release button
  - Further conduction of the potential group: Dark-colored terminal box and dark-colored mounting rail release button

- Color coding of the spring releases
  - Process terminals: gray, white
  - AUX terminals: turquoise
  - Additional terminals: red, blue
  - Terminals for self-assembling voltage buses P1, P2: red, blue

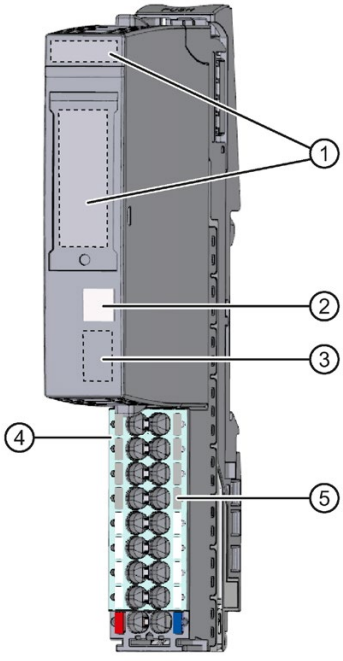

① Module labeling
② Color coding of the module classes
③ Module information
④ Color coding of the potential group
⑤ Color coding of the spring releases (by group)

Figure 6-15 Factory markings

6.15.2 Optional markings

Introduction

In addition to the factory markings, there are also other options for labeling and/or marking terminals, BaseUnits and I/O modules for the ET 200SP distributed I/O system.

Optional markings

Color identification labels

The color identification labels are module-specific labels for color coding the potentials of the I/O modules. A color code (e.g. 01) is printed on each color identification label and I/O module. The color code allows you to read which color identification label is required for the terminals of the associated BaseUnit directly from the I/O module.

The following versions of color coded labels are available:

- Module-specific color combinations for the process terminals (see the device manuals I/O modules (http://support.automation.siemens.com/WW/view/en/55679691/133300)).
  The different colors have the following meaning: Gray = input or output signal, red = potential +, blue = ground.
- For the AUX terminals in the colors yellow-green, blue or red
- For the add-on terminals in the colors blue-red
- For the potential distributor modules (see manual BaseUnits (http://support.automation.siemens.com/WW/view/en/59753521)):
  - For PotDis-BaseUnit PotDis-BU-P1/x-R: red
    For PotDis-BaseUnit PotDis-BU-P2/x-B: blue
  - For PotDis-TB-P1-R: red or gray
    For PotDis-TB-P2-B: blue or gray
    For PotDis-TB-BR-W: depending on application, yellow/green, blue, red or gray
    For PotDis-TB-n.c.-G: gray

Reference identification labels

The reference identification labels (in accordance with EN 81346) can be inserted onto each CPU/interface module, BusAdapter, BaseUnit, I/O module and PotDis-TerminalBlock. This makes it possible to create a fixed assignment between the reference identification label of the BaseUnit and the I/O module/PotDis-TerminalBlock.

With the standard plotter setting, the reference identification label is suitable for automatic labeling with E-CAD systems.

Labeling strips

The labeling strips can be inserted in the CPU/interface module, I/O module and BU cover and allow identification of the ET 200SP distributed I/O system. The labeling strips can be ordered on a roll for thermal transfer printers or as DIN A4 format sheets for laser printers.

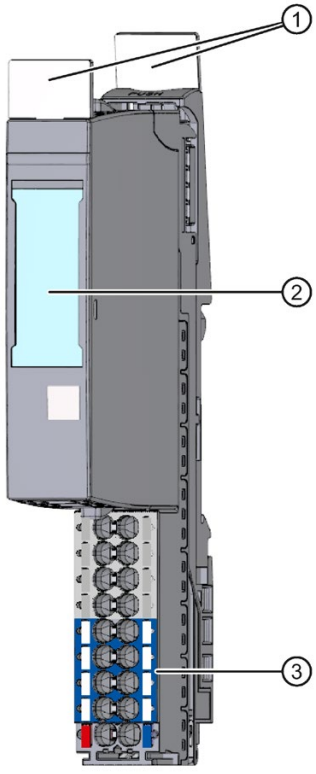

① Reference identification labels
② Labeling strips
③ Color identification labels

Figure 6-16 Optional markings

6.15.3 Applying color identification labels

Requirements

The BaseUnits must not be wired when you apply the color identification labels.

Required tools

3 mm screwdriver (only for removing the color identification labels)

Applying color identification labels

Press color identification labels into the terminal box of the BaseUnit.

Note

To remove the color identification labels, you must first disconnect the wiring on the BaseUnit and then carefully lever the color identification labels out of the holder using a screwdriver.

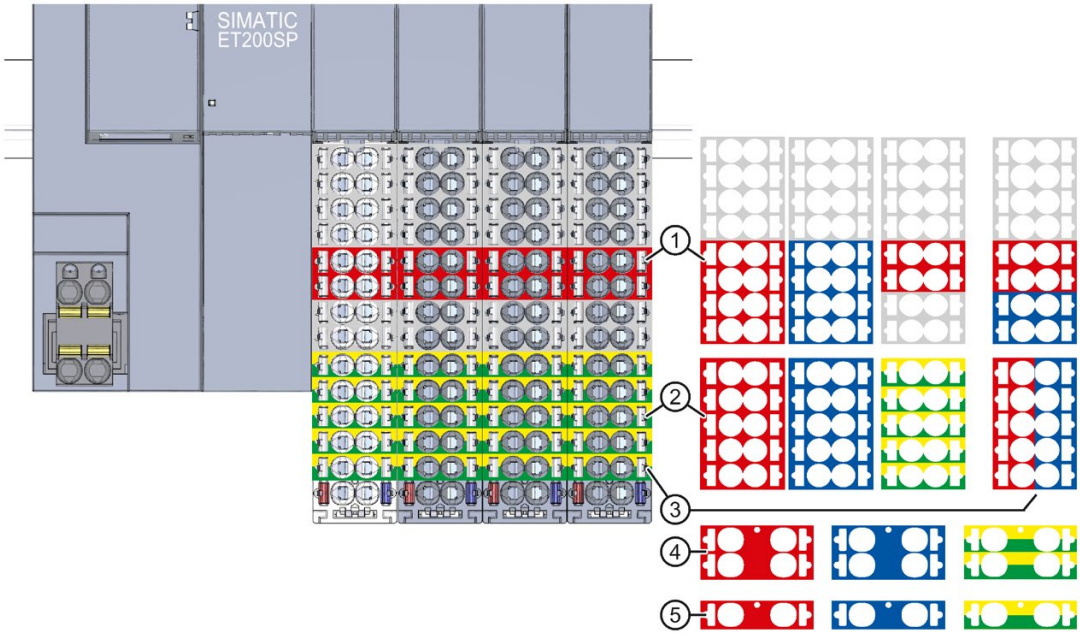

① Module-specific color identification labels (15 mm) for the process terminals. You can find additional information in the I/O Module (http://support.automation.siemens.com/WW/view/en/55679691/133300) manual.

② Color identification labels (15 mm) for the 10 AUX terminals

③ Color identification label (15 mm) for the 10 add-on terminals

④ Color identification labels (20 mm) for the 4 AUX terminals

⑤ Color identification labels (20 mm) for the 2 AUX terminals

Figure 6-17 Applying color identification labels (example)

NOTICE

AUX bus as PE bar

If you use an AUX bus as a protective conductor (PE), attach the yellow-green color identification labels to the AUX terminals.

If you stop using the AUX terminals as a protective conductor bar, remove the yellow-green color identification labels and make sure that the system is still protected.

NOTICE
Supply of incorrect potential possible Check that the color-coded labels/wiring is correct before commissioning the plant.

6.15.4 Applying labeling strips

Procedure

Watch video sequence: "Labeling"
(http://support.automation.siemens.com/WW/view/en/95886218)

Proceed as follows to install a labeling strip:

1. Label the strips.
2. Insert the labeling strip into the interface module or I/O module.

6.15.5 Applying reference identification labels

Procedure

Watch video sequence: "Labeling"
(http://support.automation.siemens.com/WW/view/en/95886218)

Proceed as follows to install a reference identification label:

3. Break off the reference identification labels from the sheet.
4. Insert the reference identification labels into the opening on the CPU/interface module, BusAdapter, BaseUnit, I/O module and PotDis-TerminalBlock. The insertion opening is located on top of the BaseUnit or the I/O module/PotDis-TerminalBlock.

Note

Reference identification label

The printable side of the reference identification label must be facing forward.

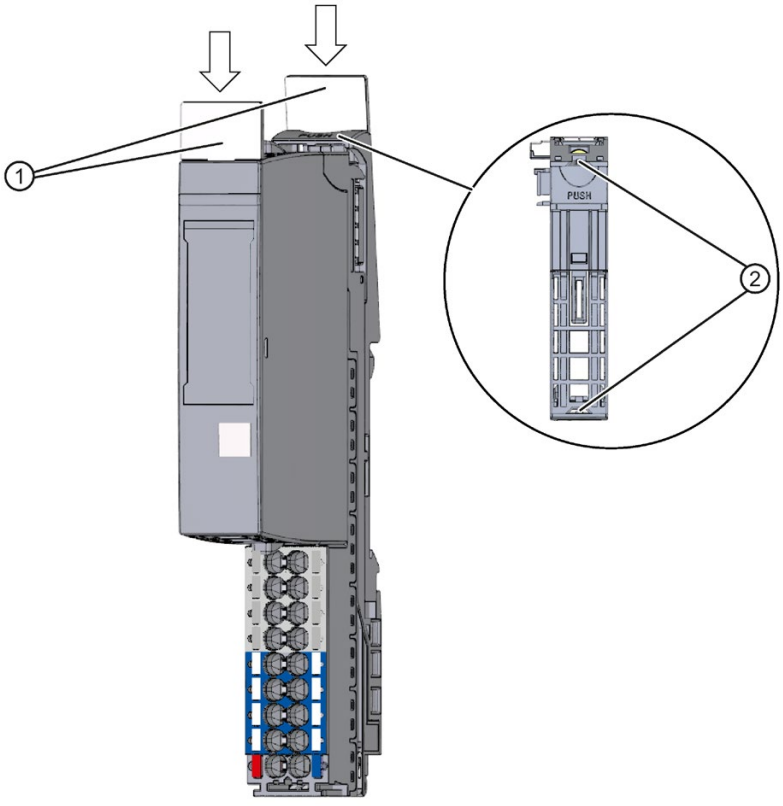

① Reference identification labels
② Opening for label

Figure 6-18 Applying reference identification labels

Configuring 7

7.1 Configuring ET 200SP

Introduction

The ET 200SP distributed I/O system is configured and assigned parameters with STEP 7 (CPU/interface module, I/O modules, motor starter and server module) or using configuration software of a third-party manufacturer (interface module, I/O modules, motor starter and server module).

"**Configuring**" is understood to mean the arranging, setup and networking of devices and modules within the device view or network view. STEP 7 graphically represents modules and racks. Just like "real" module racks, the device view allows the insertion of a defined number of modules.

When the modules are inserted, STEP 7 automatically assigns the addresses and a unique hardware identifier (HW identifier). You can change the addresses later. The hardware identifiers cannot be changed.

When the automation system is started, the CPU/interface module compares the configured planned configuration with the system's actual configuration. You can make parameter settings to control the response of the CPU/interface module to errors in the hardware configuration.

"**Parameterizing**" the components used signifies setting their properties. During parameter assignment, the hardware parameters are set and the settings for data exchange are made:

- Properties of the modules to which parameters can be assigned
- Settings for data exchange between components

STEP 7 compiles the hardware configuration (result of "configuring" and "assigning parameters") and downloads it to the CPU/interface module. The CPU/interface module then connects to the configured components and transfers their configuration and parameters. Modules can be replaced very easily because STEP 7 transfers the configuration and parameters when a new module is inserted.

Requirements for configuration of the CPU

Table 7- 1 Requirement for installing the CPU

Configuration software	Requirements	Installation information
CPU 151xSP-1 PN: STEP 7 (TIA Portal) as of V13 Update 3	• PROFINET IO • PROFIBUS DP (optional): With the communication module CM DP	STEP 7 online help
CPU 151xSP F-1 PN: STEP 7 (TIA Portal) as of V13 SP1		
CPU 151xSP-1PN (as of FW version V1.8), CPU 151xSP F-1 PN (as of FW version V1.8): STEP 7 (TIA Portal) as of V13 SP1 Update 4		

Requirements for configuration of the interface module

Table 7- 2 Requirement for installing the interface module

Configuration software	Requirements	Installation information
STEP 7 (TIA Portal) as of V11 SP2*	• PROFINET IO: As of Support Package HSP0024	STEP 7 online help
STEP 7 as of V5.5 SP2	• PROFINET IO: GSD file GSDML-Vx.y-siemens-et200sp-"Date in format yyyymmdd".xml (http://support.automation.siemens.com/WW/view/en/19698639/130000) • PROFIBUS DP: GSD file SI0xxxxx.gsx (http://support.automation.siemens.com/WW/view/en/10805317/14280)	
Software of third-party manufacturer		Manufacturer documentation

* The TIA Portal supports GSDML specification V2.25. The ET 200SP distributed I/O system is delivered with a GSD file based on specification V2.3. The GSD file can be installed in the TIA Portal and used without restrictions.

Configuring a motor starter

You configure SIMATIC ET 200SP motor starters in exactly the same way as the I/O modules of the ET 200SP distributed I/O system. The GSD files can be used with STEP 7 V5.5 SP4 and higher, and TIA Portal V13 SP1 and higher.

Configuration of the ET 200SP

See the STEP 7 online help or the documentation of the configuration software manufacturer.

Note

For I/O modules that are installed on a BaseUnit BU..D (light-colored BaseUnit), you always have to set the parameter "Potential group" to "Enable new potential group". If you do not set this parameter correctly, the CPU/interface module goes to STOP and generates a parameter error.

Note

For PROFIBUS with configuration via GSD file

In the configuration software, you must set for the BU covers whether these are on a light-colored or dark-colored BaseUnit.

7.2 Configuring the CPU

7.2.1 Reading out the configuration

Introduction

When a connection exists to a physically present CPU, you can load the configuration of this CPU (including centrally present modules) from the device into your project using the "Hardware detection" function. You do not need to manually configure the CPU and the centrally present modules, as the physical configuration is read out automatically.

If you have already configured a CPU and the centrally present modules and you want to load the current configuration and parameters in a new project, it is advisable to use the "Upload device as new station" function. For additional information about this function, refer to section Backing up and restoring the CPU configuration (Page 231).

Procedure for reading out an existing configuration

5. Create a new project and configure an "Unspecified CPU".

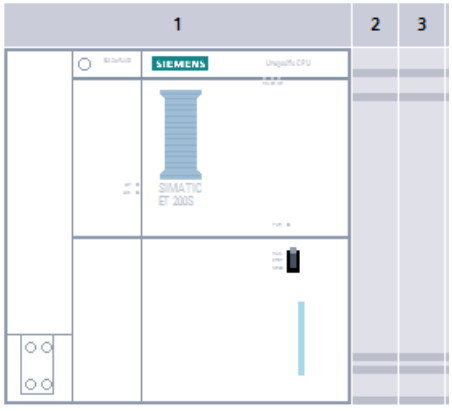

Figure 7-1 Unspecified CPU in the device view

6. In the device view (or in the network view), select the "Hardware detection" command in the "Online" menu.

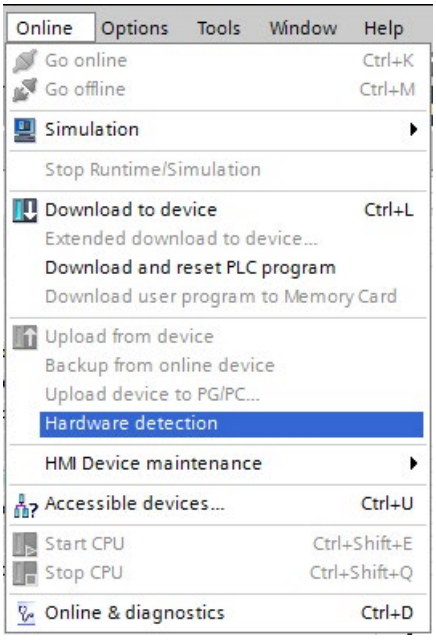

Figure 7-2 Hardware detection in the Online menu

You can also double-click the CPU and click "Detect" in the message.

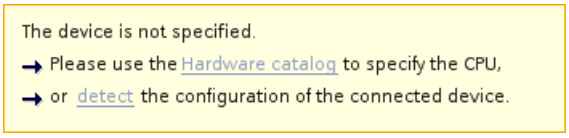

Figure 7-3 Hardware detection message in the device view

7. In the "Hardware detection for PLC_x" dialog box, click "Refresh". Then, select the CPU and the PG/PC interface and click "Detect".
STEP 7 downloads the hardware configuration including the modules from the CPU to your project.

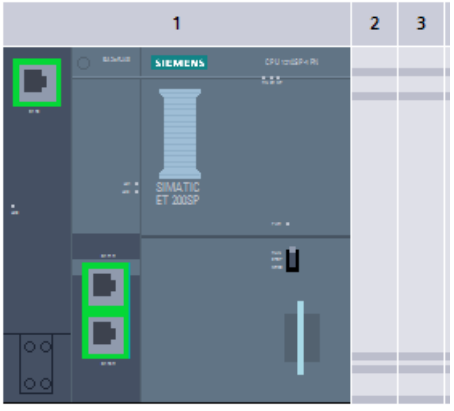

Figure 7-4 Result of the hardware detection in the device view

STEP 7 assigns a valid default parameter assignment for all modules. You can change the parameter assignment subsequently.

Note

If you want to go online after the hardware detection, you have to first download the detected configuration to the CPU; otherwise, an error may occur due to inconsistent configurations.

Properties of central modules

The properties of the CPUs have special significance for system behavior. You can set the following for a CPU using STEP 7:

- Startup behavior
- Parameter assignment of the interface(s), for example, IP address, subnet mask
- Web server, e.g. activation, user administration, and languages
- OPC UA server
- Global Security Certificate Manager
- Cycle times, e.g. maximum cycle time
- System and clock memory
- Protection level for access protection with assigned password parameter
- Time and day settings (daylight saving/standard)

The properties that can be set and the corresponding value ranges are specified by STEP 7. Fields that cannot be edited are grayed out.

Reference

Information about the individual settings can be found in the online help and in the manuals of the relevant CPUs.

7.2.2 Addressing

Introduction

In order to address the automation components or I/O modules, they have to have unique addresses. The following section explains the various address areas.

I/O address

I/O addresses (input/output addresses) are required in the user program to read inputs and set outputs.

STEP 7 automatically assigns input and output addresses when you connect the modules. Each module uses a continuous area in the input and/or output addresses corresponding to its volume of input and output data.

Module	Rack	Slot	I address	Q addr...	Type	Order no.	Firmware
PLC_1	0	1			CPU 1510SP-1 PN	6ES7 510-1DJ00-0AB0	V1.6
PROFINET-Schnittstelle_1	0	1 X1			PROFINET interface		
Port_1	0	1 X1 P1			Port		
Port_2	0	1 X1 P2			Port		
Port_3	0	1 X1 P3			Port		
	0	1 X2					
DI 4x120..230VAC ST_1	0	2	0		DI 4x120..230VAC ST	6ES7 131-6FD00-0BB1	V1.0
DQ 8x24VDC/0.5A ST_1	0	3		0	DQ 8x24VDC/0.5A ST	6ES7 132-6BF00-0BA0	V1.1
AI 8xRTD/TC 2-wire HF_1	0	4	1...16		AI 8xRTD/TC 2-wire ...	6ES7 134-6JF00-0CA1	V2.0
AQ 2xU/I HF_1	0	5		1...4	AQ 2xU/I HF	6ES7 135-6HB00-0CA1	V1.0

Figure 7-5 Example with input / output addresses from STEP 7

STEP 7 assigns the address areas of the modules by default to the process image partition 0 ("Automatic updating"). This process image partition is updated in the main cycle of the CPU.

Device address (e.g. Ethernet address)

Device addresses are addresses of programmable modules with interfaces to a subnet (e.g., IP address or PROFIBUS address). They are required to address the various devices on a subnet, for example, to download a user program.

Hardware identifier

STEP 7 automatically assigns a hardware identifier to identify and address modules and submodules. You use the hardware identifier in the case of diagnostic messages or operations, for example, to identify a defective module or the module addressed.

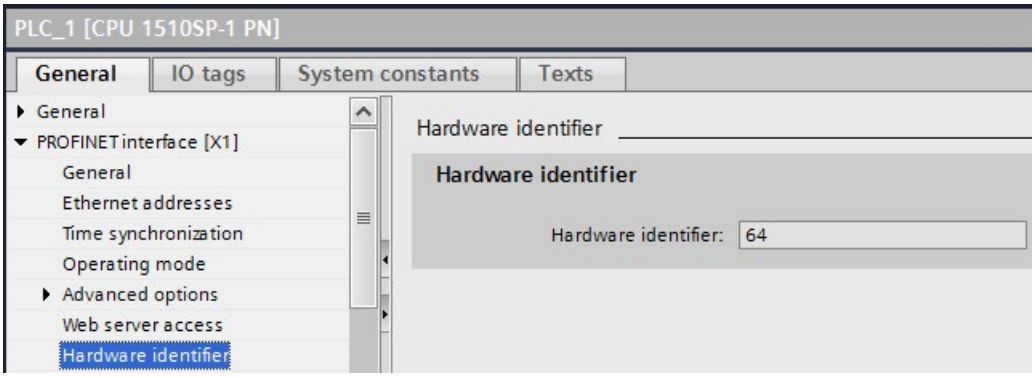

Figure 7-6 Example of a hardware identifier from STEP 7

In the "System constants" tab, you will find all hardware identifiers and their symbolic names (of the hardware identifier) for the selected module.

You can also find the hardware identifiers and names for all modules of a device in the default tag table of the "System constants" tab.

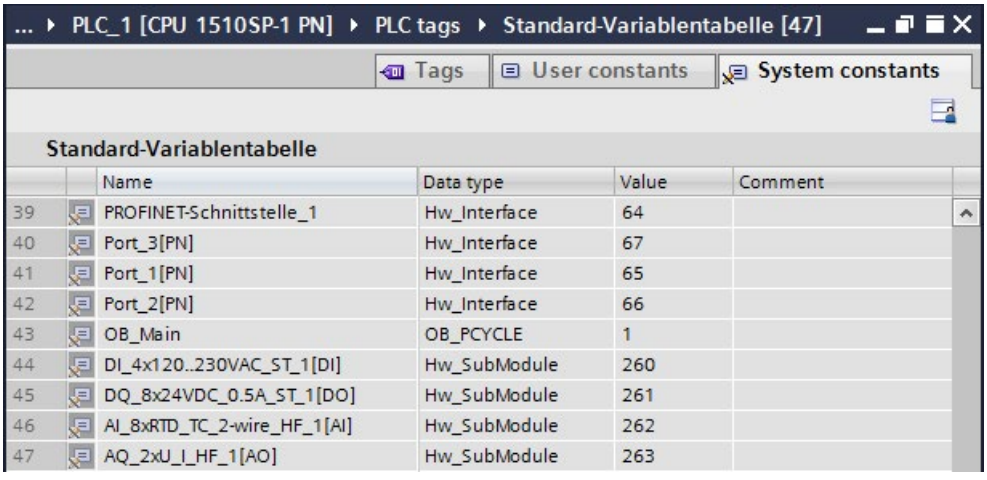

	Name	Data type	Value	Comment
39	PROFINET-Schnittstelle_1	Hw_Interface	64	
40	Port_3[PN]	Hw_Interface	67	
41	Port_1[PN]	Hw_Interface	65	
42	Port_2[PN]	Hw_Interface	66	
43	OB_Main	OB_PCYCLE	1	
44	DI_4x120..230VAC_ST_1[DI]	Hw_SubModule	260	
45	DQ_8x24VDC_0.5A_ST_1[DO]	Hw_SubModule	261	
46	AI_8xRTD_TC_2-wire_HF_1[AI]	Hw_SubModule	262	
47	AQ_2xU_I_HF_1[AO]	Hw_SubModule	263	

Figure 7-7 Example of an excerpt from a default tag table in STEP 7

7.2.3 Process images and process image partitions

7.2.3.1 Process image - overview

Process image of the inputs and outputs

The process image is a memory area of the CPU and includes an image of the signal states of the input/output modules. At the start of the cyclic program, the CPU transfers the signal states of the input modules to the process image of the inputs. At the end of the cyclic program, the CPU transfers the process image of the outputs as a signal state to the output modules. You access this process image memory area in the user program by addressing the operand areas inputs (I) and outputs (O).

Advantages of the process image

A process image offers the advantage that you can access a consistent image of the process signals during cyclic program execution. If a signal state at an input module changes during program processing, the signal state is retained in the process image. The CPU does not update the process image until the next cycle.

You can only assign the addresses of a module to a single process image partition.

32 process image partitions

By means of process image partitions, the CPU synchronizes the updated inputs/outputs of particular modules with defined user program sections.

The overall process image is subdivided into up to 32 process image partitions (PIP).

The CPU updates PIP 0 in each program cycle (automatic update) and assigns it to OB 1.

You can assign the process image partitions PIP 1 to PIP 31 to the other OBs during configuration of the input/output modules in STEP 7.

After the OB has been started, the CPU updates the assigned process image partition for inputs and reads in the process signals. At the end of the OB the CPU writes the outputs of the assigned process image partition directly to the peripheral outputs without having to wait for the completion of the cyclic program processing.

7.2.3.2 Automatically updating process image partitions

You can assign one process image partition to each organization block. In this case, the user program automatically updates the process image partition. The exceptions are PIP 0 and isochronous OBs.

Updating the process image partition

The process image partition is divided into two parts:

- Process image partition of the inputs (PIPI)
- Process image partition of the outputs (PIPQ)

The CPU always updates/reads the process image partition of the inputs (PIPI) before processing of the associated OB. The CPU outputs the process image of the outputs (PIPQ) at the end of the OB.

The figure below illustrates the updating of the process image partitions.

PIPIx read in	Processing of the program in the called OB	PIPQx output

Figure 7-8 Updating process image partitions

7.2.3.3 Update process image partitions in the user program

Requirements

As an alternative to the automatic updating of process image partitions, you can update process images with the "UPDAT_PI" instruction or the "UPDAT_PO" instruction. In STEP 7, these instructions are available on the "Instructions" task card under "Extended instructions". They can be called from any point in the program.

Requirements for updating process image partitions with the "UPDAT_PI" and "UPDAT_PO" instructions:

- The process image partitions are not allowed to be assigned to any OB, which means they are not allowed to be automatically updated.

Note

Update of PPI 0

PIP 0 (automatic update) cannot be updated with the "UPDAT_PI" and "UPDAT_PO" instructions.

UPDAT_PI: updates the process image partition of the inputs

With this instruction you read the signal states from the input modules into the process image partition of the inputs (PIPI).

UPDAT_PO: updates the process image partition of the outputs

With this instruction you transfer the process image partition of the outputs to the output modules.

Synchronous cycle interrupt OB

In the synchronous cycle interrupt OBs, you use the "SYNC_PI" and "SYNC_PO" operations to update the process image partitions of the operations. For additional information on the synchronous cycle interrupt OBs, refer to the STEP 7 Online Help.

Direct I/O access to the inputs and outputs of the module

You also have direct read and write access to the I/O, as an alternative to access via the process image, should direct access be required for programming reasons. This prevents a subsequent output of the process image from again overwriting the value written by direct access.

Reference

Additional information on process image partitions is available in the function manual, Cycle and response times (http://support.automation.siemens.com/WW/view/en/59193558).

7.3 Configuring the interface module

Configuring

Read the STEP 7 online help and/or the documentation of the configuration software manufacturer when configuring the interface module.

The F-destination address is saved permanently on the coding element of the ET 200SP fail-safe modules. Fail-safe motor starters do not need an F-destination address or a coding element.

Note

The supply voltage L+ must be applied to the F-module when the F-destination address is assigned.

Note

Note the following in conjunction with configuration control:

Before you can use configuration control together with F-modules, you must assign the F-destination address to the F-modules at the designated slots. For this, each F-module must be inserted in the slot configured for it. The actual configuration can then differ from the specified configuration.

For additional information on assigning the F-destination address, refer to the SIMATIC Safety - Configuring and Programming (http://support.automation.siemens.com/WW/view/en/54110126) Programming and Operating Manual and to the online help for the *S7 Configuration Pack*.

Basics of program execution 8

8.1 Events and OBs

Response to triggers

The occurrence of a start event results in the following reaction:

- If the event comes from an event source to which you have assigned an OB, this event triggers the execution of the assigned OB. The event enters the queue according to its priority.
- If the event comes from an event source to which you have not assigned an OB, the CPU executes the default system reaction.

Note

Some event sources, such as startup, pull/plug, exist even if you do not configure them.

Start events

The table below provides an overview of:

- Possible event sources
- Possible values for the OB priority
- Possible OB numbers
- Default system reaction
- Number of OBs

Table 8- 1 Start events

Types of event sources	Possible priorities (default priority)	Possible OB numbers	Default system response [1]	Number of OBs
Starting [2]	1	100, ≥ 123	Ignore	0 to 100
Cyclic program [2]	1	1, ≥ 123	Ignore	0 to 100
Time-of-day interrupt [2]	2 to 24 (2)	10 to 17, ≥ 123	Not applicable	0 to 20
Time-delay interrupt [2]	2 to 24 (3)	20 to 23, ≥ 123	Not applicable	0 to 20
Cyclic interrupt [2]	2 to 24 (8 to 17, frequency dependent)	30 to 38, ≥ 123	Not applicable	0 to 20
Hardware interrupt [2]	2 to 26 (18)	40 to 47, ≥ 123	Ignore	0 to 50
Status interrupt	2 to 24 (4)	55	Ignore	0 or 1
Update interrupt	2 to 24 (4)	56	Ignore	0 or 1
Manufacturer-specific or profile-specific interrupt	2 to 24 (4)	57	Ignore	0 or 1

Types of event sources	Possible priorities (default priority)	Possible OB numbers	Default system response [1]	Number of OBs
Synchronous cycle interrupt	16 to 26 (21)	61 to 64, ≥ 123	Ignore	0 to 2
Time error [3]	22	80	Ignore	0 or 1
Cycle monitoring time exceeded once			STOP	
Diagnostics interrupt	2 to 26 (5)	82	Ignore	0 or 1
Pull/plug interrupt for modules	2 to 26 (6)	83	Ignore	0 or 1
Rack error	2 to 26 (6)	86	Ignore	0 or 1
MC-servo [4]	17 to 26 (25)	91	Not applicable	0 or 1
MC-PreServo [4]	17 to 26 (25)	67	Not applicable	0 or 1
MC-PostServo [4]	17 to 26 (25)	95	Not applicable	0 or 1
MC-Interpolator [4]	16 to 26 (24)	92	Not applicable	0 or 1
Programming error (only for global error handling)	2 to 26 (7)	121	STOP	0 or 1
I/O access error (only for global error handling)	2 to 26 (7)	122	Ignore	0 or 1

1) If you have not configured the OB.

2) In the case of these event sources, besides the permanently assigned OB numbers (see column: Possible OB numbers) in STEP 7 you can assign OB numbers from the range ≥ 123.

3) If the maximum cycle time has been exceeded twice within one cycle, the CPU always assumes the STOP state, regardless of whether you have configured OB 80.

4) You will find more information on these event sources and the starting behavior in the S7-1500 Motion Control function manual.

Assignment between event source and OBs

The type of OB determines where you make the assignment between OB and event source:

- With hardware interrupts and isochronous mode interrupts, the assignment is made during the configuration of the hardware or when the OB is created.
- In the case of the MC-Servo, MC-PreServo, MC-PostServo and MC-Interpolator, STEP 7 automatically assigns the OBs 91/92 as soon as you add a technology object.
- For all other types of OB, the assignment is made when the OB is created, where applicable after you have configured the event source.

For hardware interrupts, you can change an assignment which has already been made during runtime with the instructions ATTACH and DETACH. In this case, only the actually effective assignment changes, and not the configured assignment. The configured assignment takes effect after loading, and at startup.

The CPU ignores hardware interrupts to which you did not assign an OB in your configuration or which occur after the DETACH instruction. The CPU does not check whether an OB is assigned to this event when an event arrives, but only prior to the actual processing of the hardware interrupt.

OB priority and runtime behavior

If you have assigned an OB to the event, the OB has the priority of the event. The CPU supports the priority classes 1 (lowest priority) to 26 (highest priority). The following items are essential to the processing of an event:

- Calling and processing of the assigned OB
- The update of the process image partition of the assigned OB

The user program processes the OBs exclusively on a priority basis. This means the program processes the OB with the highest priority first when multiple OB requests occur at the same time. If an event occurs that has a higher priority than the currently active OB, this OB is interrupted. The user program processes events of the same priority in order of occurrence.

Note

Communication

Communication (e.g. test functions with the PG) always works permanently with the priority 15. So as not to unnecessarily prolong program runtime in the case of time-critical applications, these OBs should not be interrupted by communication. Assign a priority >15 for these OBs.

Reference

You can find more information on organization blocks in the STEP 7 online help.

8.2 CPU overload behavior

Requirement

For the event scenarios considered in the following section, we assume that you have assigned an OB to each event source and that these OBs have the same priority. The second condition, in particular, is only for the sake of a simplified representation.

Principle of CPU overload behavior

An occurring event triggers the execution of the associated OB. Depending on the OB priority and the current processor load, a time delay may occur before the OB is executed when there is an overload. The same event can therefore occur once or several times before the user program processes the OB belonging to the preceding event. The CPU treats such a situation as follows: The operating system positions the events in the order of their occurrence into the queue for their priority level.

To cope with temporary overload situations, you can limit the number of pending events originating from one and the same source. The next event is discarded as soon as the maximum number of pending start events of a specific cyclic interrupt OB, for example, is reached.

An overload occurs when events which originate from the same source occur faster than they can be processed by the CPU.

More detailed information is available in the following sections.

Discarding similar events or handling them later

Below, the term "similar events" refers to events from a single source, such as triggers for a specific cyclic interrupt OB.

The OB parameter "Events to be queued" is used to specify how many similar events the operating system places in the associated queue and therefore post-processes. If this parameter has the value 1, for example, exactly one event is stored temporarily.

Note

The post-processing of cyclic events is often undesirable, as this can lead to an overload with OBs of the same or lower priority. Therefore, it is generally advantageous to discard similar events and to react to the overload situation during the next scheduled OB processing. If the value of the "Events to be queued" parameter is low, this ensures that an overload situation is defused rather than aggravated.

If the maximum number of start events is reached in the queue for a cyclic interrupt OB (Cyclic interrupt), for example, each additional start event is only counted and subsequently discarded. During the next scheduled execution of the OB, the CPU provides the number of discarded start events in the "Event_Count" input parameter (in the start information). You can then react appropriately to the overload situation. The CPU then sets the counter for lost events to zero.

If the CPU discards a start event for a cyclic interrupt OB the first time, its further behavior depends on the OB parameter "Report event overflow into diagnostics buffer": If the check box is selected, the CPU enters the event DW#16#0002:3507 once in the diagnostics buffer for the overload situation at this event source. The CPU suppresses additional diagnostics buffer entries of the event DW#16#0002:3507 that refer to this event source until all events from this source have been post-processed.

Threshold mechanism for time error OB request

The cyclic interrupt OB parameter "Enable time error" is used to specify whether the time error interrupt should be called when a specific overload level is reached for similar events. You can find the OB parameter "Enable time error" in the properties of the OB in the "Attributes" category.

If you enable the time error OB (option box set), you define, with the "Event threshold for time error" OB parameter, the number of similar events in the queue that cause the user program to call the time error OB. If this parameter has the value 1, for example, the CPU enters the event DW#16#0002:3502 once in the diagnostics buffer and requests the time error OB when the second event occurs. The CPU suppresses additional diagnostics buffer entries of the event DW#16#0002:3502 until all events from this source have been post-processed.

In the event of an overload, you therefore have the option of programming a reaction well before the limit is reached for similar events and thus before the events are discarded.

The following value range applies to the "Event threshold for time error" parameter: 1 ≤ "Event threshold for time error" ≤ "Events to be queued".

8.3 Asynchronous instructions

Difference between synchronous/asynchronous instructions

In program processing, a differentiation is made between synchronous and asynchronous instructions.

The "synchronous" and "asynchronous" properties relate to the temporal relationship between the call and execution of the instruction.

The following applies to synchronous instructions: When the call of a synchronous instruction is ended, the execution is also ended.

This is different in the case of asynchronous instructions: When the call of an asynchronous instruction is ended, the execution of the asynchronous instruction is not necessarily ended yet. This means the execution of an asynchronous instruction can extend over multiple calls. The CPU processes asynchronous instructions in parallel with the cyclic user program. Asynchronous instructions generate jobs in the CPU for their processing.

Asynchronous instructions are usually instructions for transferring data (data records for modules, communication data, diagnostics data).

Processing of asynchronous instructions

The figure below shows the difference between processing an asynchronous instruction and processing a synchronous instruction. In this figure the asynchronous instruction is called five times before the execution is completed, for example, a data record is completely transferred.

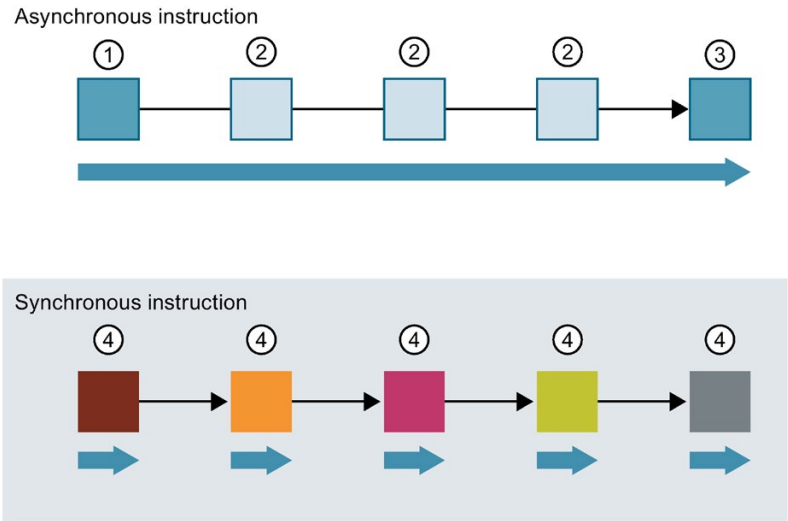

① First call of the asynchronous instruction, start of processing
② Intermediate call of asynchronous instruction, continuation of processing
③ Last call of the asynchronous instruction, termination of processing
④ The synchronous instruction is completely processed at each call
➡ Duration of the complete processing

Figure 8-1 Difference between synchronous and asynchronous instructions

Parallel processing of asynchronous instruction jobs

A CPU can process several asynchronous instruction jobs in parallel. The CPU processes the jobs in parallel under the following conditions:

- Several asynchronous instruction jobs are called at the same time.
- The maximum number of concurrently running jobs for the instruction is not exceeded.

The figure below shows the parallel processing of two jobs of the instruction WRREC. The two instructions are processed in parallel for a specific period here.

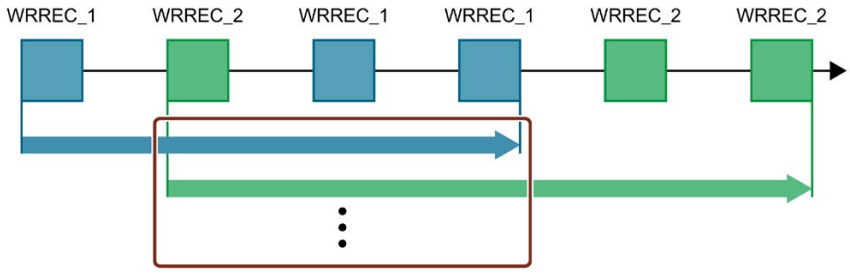

Figure 8-2 Parallel processing of the asynchronous instruction WRREC

Assignment of call to job of the instruction

To execute an instruction over multiple calls, the CPU must be able to uniquely assign a subsequent call to a running job of the instruction.

To assign a call to a job, the CPU uses one of the following two mechanisms, depending on the type of the instruction:

- Via the instance data block of the instruction (in the case of the "SFB" type)
- The input parameters of the instruction identifying the job. These input parameters must match in each call during processing of the asynchronous instruction.
  Example: A "Create_DB" instruction job is identified by the input parameters LOW_LIMIT, UP_LIMIT, COUNT, ATTRIB and SRCBLK.

  The following table shows which instruction you can identify with which input parameters.

Instruction	Job is identified by
DPSYC_FR	LADDR, GROUP, MODE
D_ACT_DP	LADDR
DPNRM_DG	LADDR
WR_DPARM	LADDR, RECNUM
WR_REC	LADDR, RECNUM
RD_REC	LADDR, RECNUM
CREATE_DB	LOW_LIMIT, UP_LIMIT, COUNT, ATTRIB, SRCBLK
READ_DBL	SRCBLK, DSTBLK
WRIT_DBL	SRCBLK, DSTBLK
RD_DPARA	LADDR, RECNUM
DP_TOPOL	DP_ID

Status of an asynchronous instruction

An asynchronous instruction shows its status via the block parameters STATUS/RET_VAL and BUSY. Many asynchronous instructions also use the block parameters DONE and ERROR.

The figure below shows the two asynchronous instructions WRREC and CREATE_DB.

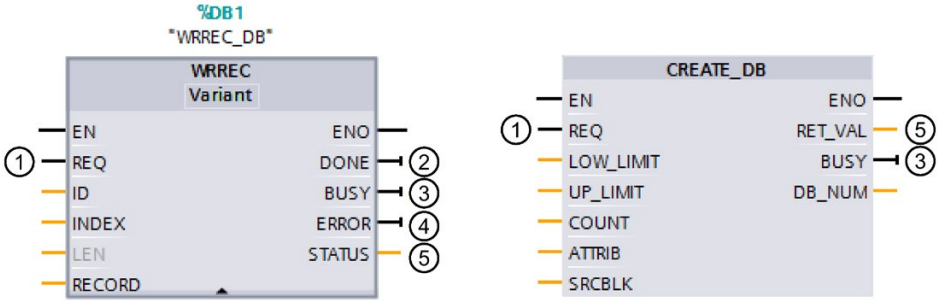

① The input parameter REQ starts the job to execute the asynchronous instruction.

② The output parameter DONE indicates that the job was completed without error.

③ The output parameter BUSY indicates whether the job is currently being processed. When BUSY =1, a resource is assigned for the asynchronous instruction. If BUSY = 0, then the resource is free.

④ The output parameter ERROR indicates that an error has occurred.

⑤ The output parameter STATUS/RET_VAL provides information on the status of the job execution. The output parameter STATUS/RET_VAL receives the error information after the occurrence of an error.

Figure 8-3 Block parameters of asynchronous instructions using the instructions WRREC and CREATE_DB as examples.

Summary

The table below provides you with an overview of the relationships described above. It shows in particular the possible values of the output parameters if processing is not completed after a call.

Note

Following every call, you must evaluate the relevant output parameters in your program.

Relationship between REQ, STATUS/RET_VAL, BUSY and DONE during a "running" job.

Seq. no. of the call	Type of call	REQ	STATUS/RET_VAL	BUSY	DONE	ERROR
1	First call	1	W#16#7001	1	0	0
			Error code (for example, W#16#80C3 for lack of resources)	0	0	1
2 to (n - 1)	Intermediate call	Not relevant	W#16#7002	1	0	0
n	Last call	Not relevant	W#16#0000, if no errors have occurred.	0	1	0
			Error code, if errors have occurred	0	0	1

Consumption of resources

Asynchronous instructions occupy resources in the CPU while they are being processed. The resources are limited depending on the type of CPU and instruction; the CPU can only process a maximum number of asynchronous instruction jobs simultaneously. The resources are available again after a job has been successfully completed or processed with an error.

Example: For the RDREC instruction, a 1512SP-1 PN CPU can process up to 20 jobs in parallel.

If the maximum number of simultaneous jobs for an instruction is exceeded, the instruction returns the error code 80C3 (lack of resources) in the block parameter STATUS. The execution of the job is stopped until a resource becomes free again.

Note

Lower-level asynchronous instructions

Several asynchronous instructions use one or more lower-level asynchronous instructions for their processing. This dependence is shown in the tables below.

Please note that, if there are several lower-level instructions, typically only one lower-level instruction is occupied at one time.

Extended instructions: maximum number of concurrently running jobs

The table below shows the maximum number of concurrently running jobs for asynchronous extended instructions.

Extended instructions	CPU 1510SP-1 PN CPU 1510SP F-1 PN	CPU 1512SP-1 PN CPU 1512SP F-1 PN
Distributed I/O		
RDREC	20	
RD_REC	10	
WRREC	20	
WR_REC	10	
D_ACT_DP	8	
ReconfigIOSystem	uses RDREC, WRREC, D_ACT_DP,	
DPSYC_FR	2	
DPNRM_DG	8	
DP_TOPOL	1	
ASI_CTRL	uses RDREC, WRREC	
PROFIenergy		
PE_START_END	uses RDREC, WRREC	
PE_CMD	uses RDREC, WRREC	
PE_DS3_Write_ET200S	uses RDREC, WRREC	
PE_WOL	uses RDREC, WRREC, TUSEND, TURCV, TCON, TDISCON	
Module parameter assignment		
RD_DPAR	10	
RD_DPARA	10	
RD_DPARM	10	
WR_DPARM	10	
Diagnostics		
Get_IM_Data	10	
GetStationInfo	10	
Recipes and data logging		
RecipeExport	10	
RecipeImport	10	
DataLogCreate	10	
DataLogOpen	10	
DataLogWrite	10	
DataLogClear	10	
DataLogClose	10	
DataLogDelete	10	
DataLogNewFile	10	
Data block functions		
CREATE_DB	10	
READ_DBL	10	

Extended instructions	CPU 1510SP-1 PN CPU 1510SP F-1 PN	CPU 1512SP-1 PN CPU 1512SP F-1 PN
WRIT_DBL	10	
DELETE_DB	10	
File handling		
FileReadC	10	
FileWriteC	10	

Basic instructions: maximum number of concurrently running jobs

The table below shows the maximum number of concurrently running jobs for asynchronous basic instructions.

Basic instructions	CPU 1510SP-1 PN CPU 1510SP F-1 PN	CPU 1512SP-1 PN CPU 1512SP F-1 PN
Array DB		
ReadFromArrayDBL	uses READ_DBL (see Extended instructions)	
WriteToArrayDBL	uses READ_DBL, WRIT_DBL (see Extended instructions)	

Communication: maximum number of concurrently running jobs

The following table shows the maximum number of simultaneously running jobs for asynchronous instructions (Open User Communication) for the various CPUs.

Open User Communication	CPU 1510SP-1 PN CPU 1510SP F-1 PN	CPU 1512SP-1 PN CPU 1512SP F-1 PN
TSEND TUSEND	64	88
TRCV TURCV	64	88
TCON	64	88
TDISCON	64	88
T_RESET	64	88
T_DIAG	64	88
T_CONFIG	1	
TSEND_C	uses TSEND, TUSEND, TRCV, TCON, TDISCON	
TRCV_C	uses TSEND, TUSEND, TRCV, TURCV, TCON, TDISCON	
TMAIL_C	uses TSEND, TUSEND, TRCV, TURCV, TCON, TDISCON	

The following table shows the maximum number of simultaneously running jobs for asynchronous instructions (MODBUS TCP) for the various CPUs.

MODBUS TCP	CPU 1510SP-1 PN CPU 1510P F-1 PN	CPU 1512SP-1 PN CPU 1512SP F-1 PN
MB_CLIENT	uses TSEND, TUSEND, TRCV, TURCV, TCON, TDISCON	
MB_SERVER	uses TSEND, TUSEND, TRCV, TURCV, TCON, TDISCON	

The table below shows the maximum number of simultaneously running jobs for asynchronous instructions (S7 communication) for the various CPUs. The S7 communication instructions use a common pool of resources.

S7 communication	CPU 1510SP-1 PN CPU 1510SP F-1 PN	CPU 1512SP-1 PN CPU 1512SP F-1 PN
PUT GET USEND URCV BSEND BRCV	192	264

The following table shows the maximum number of simultaneously running jobs for asynchronous instructions (communication processors) for the various CPUs.

Communications processors	CPU 1510SP-1 PN CPU 1510SP F-1 PN	CPU 1512SP-1 PN CPU 1512SP F-1 PN
PtP communication		
Port_Config	uses RDDEC, WRREC	
Send_Config	uses RDDEC, WRREC	
Receive_Config	uses RDDEC, WRREC	
Send_P2P	uses RDDEC, WRREC	
Receive_P2P	uses RDDEC, WRREC	
Receive_Reset	uses RDDEC, WRREC	
Signal_Get	uses RDDEC, WRREC	
Signal_Set	uses RDDEC, WRREC	
Get_Features	uses RDDEC, WRREC	
Set_Features	uses RDDEC, WRREC	
USS communication		
USS_Port_Scan	uses RDDEC, WRREC	
MODBUS (RTU)		
Modbus_Comm_Load	uses RDDEC, WRREC	
ET 200S serial interface		
S_USSI	uses CREATE_DB	
SIMATIC NET		
FTP_CMD	uses TSEND, TRCV, TCON, TDISCON	

The following table shows the maximum number of simultaneously running jobs for asynchronous instructions (OPC UA) for the various CPUs.

OPC_UA	CPU 1510SP-1 PN CPU 1510SP F-1 PN	CPU 1512SP-1 PN CPU 1512SP F-1 PN
OPC_UA_Connect	10	
OPC_UA_Disconnect	10	
OPC_UA_NamespaceGetIndexList	10	
OPC_UA_NodeGetHandleList	10	
OPC_UA_NodeReleaseHandleList	10	
OPC_UA_TranslatePathList	10	
OPC_UA_Browse	10	
OPC_UA_ReadList	10	
OPC_UA_WriteList	10	
OPC_UA_MethodGetHandleList	10	
OPC_UA_MethodReleaseHandleList	10	
OPC_UA_MethodCall	10	
OPC_UA_ServerMethodPre	10	
OPC_UA_ServerMethodPost	10	
OPC_UA_ConnectionGetStatus	10	

Technology: maximum number of concurrently running jobs

The following table shows the maximum number of simultaneously running jobs for asynchronous instructions (Technology).

Technology	CPU 1510SP-1 PN CPU 1510SP F-1 PN CPU 1512SP-1 PN CPU 1512SP F-1 PN
Motion Control	
MC_Power MC_Reset MC_Home MC_Halt MC_MoveAbsolute MC_MoveRelative MC_MoveVelocity MC_MoveJog MC_GearIn MC_MoveSuperimposed MC_MeasuringInput MC_MeasuringInputCyclic MC_AbortMeasuringInput MC_OutputCam MC_CamTrack MC_TorqueLimiting	300

Additional information

You can find additional information on block parameter assignment in the STEP 7 online help.

Protection 9

9.1 Overview of the protective functions of the CPU

Introduction

This chapter describes the following functions for protecting the ET 200SP against unauthorized access:

- Access protection
- Know-how protection
- Copy protection

Further measures for protecting the CPU

The following measures additionally increase the protection against unauthorized access to functions and data of the CPU from external sources and via the network:

- Deactivation of the Web server
- Deactivation of the OPC UA server (you will find further information on the security mechanisms for OPC UA servers in the Communication (https://support.industry.siemens.com/cs/ww/en/view/59192925) function manual)
- Deactivation of time synchronization via an NTP server
- Deactivation of PUT/GET communication

When using the Web server, you protect your ET 200SP distributed I/O system against unauthorized access

- By setting password-protected access rights for certain users in user management.
- By using the default "Allow access via HTTPS only" option.
  This option allows access to the Web server with the secure Hypertext transfer protocol HTTPS only.

9.2 Configuring access protection for the CPU

Introduction

The CPU offers four access levels to limit access to specific functions.

By setting up the access levels and the passwords for a CPU, you limit the functions and memory areas that are accessible without entering a password. You specify the individual access levels as well as the entry of their associated passwords in the object properties of the CPU.

Access levels of the CPU

Table 9- 1 Access levels and access restrictions

Access levels	Access restrictions
Full access (no protection)	Any user can read and change the hardware configuration and the blocks.
Read access	With this access level, read-only access to the hardware configuration and the blocks is possible without entering a password, which means you can download the hardware configuration and blocks to the programming device. In addition, HMI access and access to diagnostics data is possible. Without entering the password, you cannot load any blocks or hardware configuration into the CPU. Additionally, the following are **not** possible without the password: • Writing test functions • Firmware update (online)
HMI access	With this access level only HMI access and access to diagnostics data are possible without entering the password. Without entering the password, you can neither load blocks nor the hardware configuration into the CPU, nor load blocks and hardware configuration from the CPU into the programming device. Additionally, the following are **not** possible without the password: • Writing test functions • Changing the mode (RUN/STOP) • Firmware update (online) • Display of the online/offline comparison status
No access (complete protection)	When the CPU has complete protection, no read or write access to the hardware configuration and the blocks is possible (without access authorization in the form of a password). HMI access is also not possible. The server function for PUT/GET communication is disabled in this access level (cannot be changed). Authentication with the password will again provide you full access to the CPU.

You can find a list of which functions are possible in the various protection levels in the STEP 7 online help under the entry "Setting options for the protection".

Properties of the access levels

Each access level allows unrestricted access to certain functions without entering a password, for example, identification using the "Accessible devices" function.

The CPU's default setting is "No restriction" and "No password protection". In order to protect access to a CPU, you need to edit the properties of the CPU and set up a password. In the default access level "Full access (no protection)" every user can read and change the hardware configuration and the blocks. A password is not set and is also not required for online access.

Communication between the CPUs (via the communication functions in the blocks) is not restricted by the access level of the CPU, unless PUT/GET communication is deactivated in the "No access" (complete protection) access level.

Entry of the right password allows access to all the functions that are allowed in the corresponding level.

Note

Configuring an access level does not replace know-how protection

Configuring access levels offers a high degree of protection against unauthorized changes to the CPU by restricting the rights to download the hardware and software configuration to the CPU. However, blocks on the SIMATIC memory card are not write- or read-protected. Use know-how protection to protect the code of blocks on the SIMATIC memory card.

Behavior of functions with different access levels

The STEP 7 online help includes a table which lists the online functions that are available in the different access levels.

Selecting the access levels

To configure the access levels of a CPU, follow these steps:

1. Open the properties of the CPU in the Inspector window.
2. Open the "Protection" entry in the area navigation.

   A table with the possible access levels is available in the Inspector window.

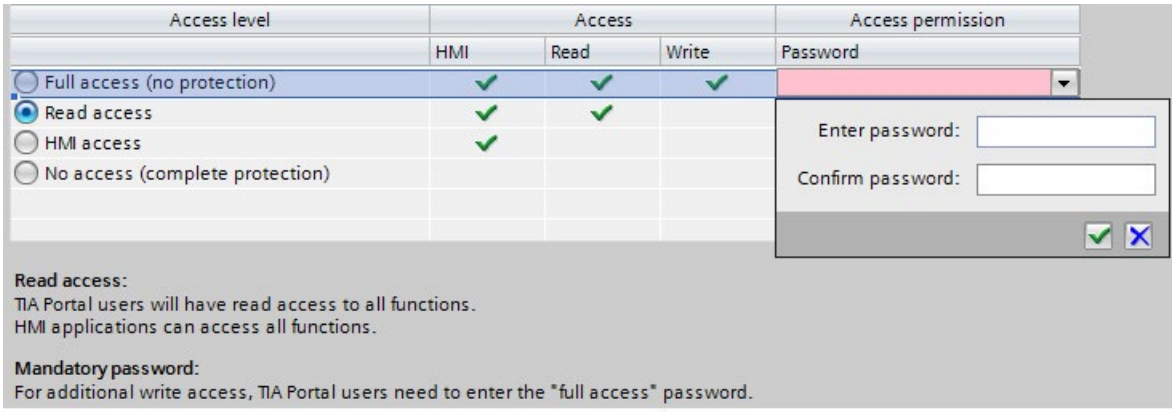

Figure 9-1 Possible access levels

3. Activate the desired protection level in the first column of the table. The green check marks in the columns to the right of the access level show you which operations are still available without entering the password. In the example (see above), read access and HMI access are still possible without a password.
4. In the "Enter password" column, specify a password for the access level "Full access" in the first row. In the "Confirm password" column, enter the selected password again to guard against incorrect entries.

   Ensure that the password is sufficiently secure, i.e. does not follow a pattern that can be recognized by a machine.
5. Assign additional passwords as needed to other access levels if the selected access level allows you to do so.
6. Download the hardware configuration for the access level to take effect.

The CPU logs the entry of the correct or incorrect password and any changes in the configuration of the access levels by a corresponding entry in the diagnostics buffer.

Behavior of a password-protected CPU during operation

The CPU protection takes effect after you have downloaded the settings to the CPU.

Before an online function is executed, the CPU checks the necessary permission and, if necessary, prompts the user to enter a password. You can only execute password-protected functions from one programming device/PC at any time. Another programming device/PC cannot log on.

Access authorization to the protected data is in effect for the duration of the online connection or until you rescind the access authorization manually with "Online > Delete access rights".

Access levels for F-CPUs

For the fail-safe CPUs, there is an additional access level in addition to the four described access levels. For additional information on this access level, refer to the description of the fail-safe system SIMATIC Safety Programming and Operating Manual SIMATIC Safety - Configuring and Programming (http://support.automation.siemens.com/WW/view/en/54110126).

9.3 Using the user program to set additional access protection

Access protection via user program

You can also restrict access to a password-protected CPU in STEP 7 via the ENDIS_PW operation. You can find a description of this block in the online help under the keyword "ENDIS_PW: Limit and enable password legitimation".

9.4 Know-how protection

Application

You can use know-how protection to protect one or more OB, FB or FC blocks as well as global data blocks in your program from unauthorized access. Enter a password to restrict access to a block. The password offers high-level protection against unauthorized reading or manipulation of the block.

Password provider

As an alternative to manual entry of password, you can connect a password provider to STEP 7. When using a password provider, you select a password from a list of available passwords. When a protected block is opened, STEP 7 connects to the password provider and retrieves the corresponding password.

To connect a password provider you have to install and activate it. A settings file in which you define the use of a password provider is also required.

A password provider offers the following advantages:

- The password provider defines and manages the passwords. When know-how protected blocks are opened, you work with symbolic names for passwords. A password is marked, for example, with the symbolic name "Machine_1" n the password provider. The actual password behind "Machine1" remains hidden from you.
  A password provider therefore offers you optimum block protection as the users do not know the password themselves.
- STEP 7 automatically opens know-how protected blocks without the direct entry of a password. This saves you time.

You will find more information on connecting a password provider in the STEP 7 online help.

Readable data

If a block is know-how protected, only the following data is readable without the correct password:

- Block title, comments and block properties
- Block parameters (INPUT, OUTPUT, IN, OUT, RETURN)
- Call structure of the program
- Global tags without information on the point of use

Further actions

Further actions that can be carried out with a know-how protected block:

- Copying and deleting
- Calling in a program
- Online/offline comparison
- Load

Global data blocks and array data blocks

You can provide global data blocks (global DBs) with know-how protection. Users who do not possess the valid password can read the global data block but not change it.

You cannot provide array data blocks (array DBs) with know-how protection.

Setting up block know-how protection

To set up block know-how protection, follow these steps:

1. Open the properties of the block in question.
2. Select the "Protection" option under "General".

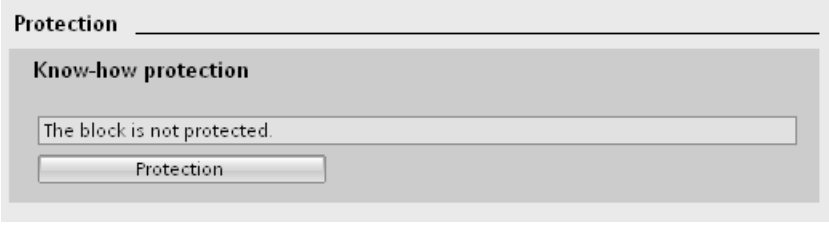

Figure 9-2 Setting up block know-how protection (1)

3. Click the "Protection" button to display the "Know-how protection" dialog.

Figure 9-3 Setting up block know-how protection (2)

4. Click the "Define" button to open the "Define Password" dialog.

Figure 9-4 Setting up block know-how protection (3)

5. Enter the new password in the "New password" box. Enter the same password in the "Confirm password" box.
6. Click "OK" to confirm your entry.
7. Close the "Know-how protection" dialog by clicking "OK".

Result: The selected blocks are now know-how protected. Know-how protected blocks are marked with a lock in the project tree. The password entered applies to all blocks selected.

Note

Password provider

Alternatively, you can set up know-how protection for blocks with a password provider.

Opening know-how protected blocks

To open a know-how protected block, follow these steps:

1. Double-click the block to open the "Access protection" dialog.
2. Enter the password for the know-how protected block.
3. Click "OK" to confirm your entry.

Result: The know-how-protected block is open.

Once you have opened the block, you can edit the program code and the block interface of the block for as long as the block or STEP 7 is open. You must enter the password again the next time you open the block. If you close the "Access protection" dialog with "Cancel", you will be able to open the block but you cannot display the block code or edit the block.

If you copy the block or add it to a library, for example, this does not cancel the know-how protection of the block. The copies will also be know-how-protected.

Removing block know-how protection

To remove block know-how protection, follow these steps:

1. Select the block from which you want to remove know-how protection. The protected block must not be open in the program editor.
2. In the "Edit" menu, select the "Know-how protection" command to open the "Know-how protection" dialog.
3. Clear the "Hide code (Know-how protection)" check box.

Figure 9-5 Removing block know-how protection (1)

4. Enter the password.

Figure 9-6 Removing block know-how protection (2)

5. Click "OK" to confirm your entry.

Result: Know-how protection is removed from the selected block.

9.5 Copy protection

Application

The copy protection allows you to protect your program against unauthorized duplication. With copy protection you associate the blocks with a specific SIMATIC memory card or CPU. Through the linking of the serial number of a SIMATIC memory card or of a CPU the use of this program or of this block is only possible in conjunction with a specific SIMATIC memory card or CPU.

Copy and know-how protection

Recommendation: to prevent unauthorized reset of copy protection, additionally apply know-how protection to a copy-protected block. To do this, first set up copy protection and then apply know-how protection for the block.

Setting up copy protection

To set up copy protection, follow these steps:

1. Open the properties of the block in question.
2. Select the "Protection" option under "General".

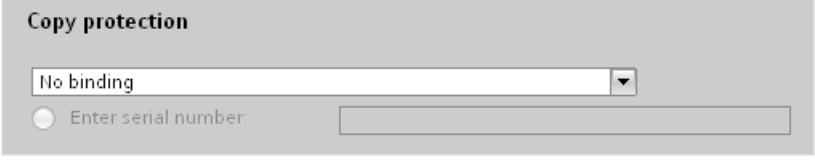

Figure 9-7 Setting up copy protection (1)

3. In the "Copy protection" area, select either the "Bind to serial number of the CPU" entry or the "Bind to serial number of the memory card" entry from the drop-down list.

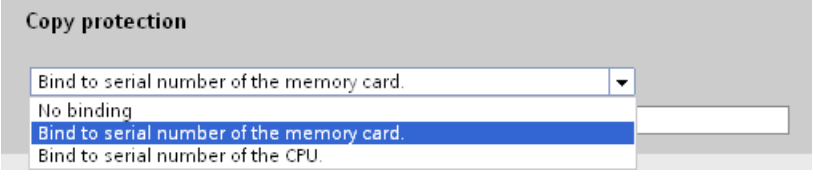

Figure 9-8 Setting up copy protection (2)

4. Activate the option "Serial number is inserted when downloading to a device or a memory card" if the serial number is to be inserted automatically during the uploading process (dynamic binding). Assign a password using the "Define password" button to link the use of a block additionally to the input of a password.
   Activate the option "Enter serial number" if you want to manually bind the serial number of the CPU or the SIMATIC memory card to a block (static binding).
5. You can now set up the know-how protection for the block in the "Know-how protection" area.

Note

If you download a copy-protected block to a device that does not match the specified serial number, the entire download operation will be rejected. This means that blocks without copy protection will also not be downloaded.

Removing copy protection

To remove copy protection, follow these steps:

1. Remove any existing know-how protection.
2. Open the properties of the block in question.
3. Select the "Protection" option under "General".
4. In the "Copy protection" area, select the "No binding" entry from the drop-down list.

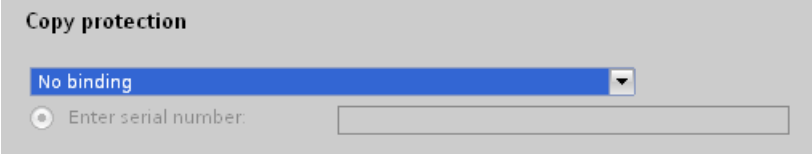

Figure 9-9 Removing copy protection

Configuration control (option handling) 10

Introduction

Configuration control (option handling) is used to operate various standard machine configuration levels in one project without changing the configuration or the user program.

Operating principle of configuration control

You can use configuration control to operate different standard machine configurations with a single configuration of the ET 200SP distributed I/O system.

- A station master is configured in a project (maximum configuration). The station master comprises all modules needed for all possible plant parts of a modular standard machine.
- The project's user program provides for several station options for various standard machine configuration levels as well as selection of a station option. A station option uses, for example, only some of the configured modules of the station master and these modules are inserted in the slots in a different order.
- The standard machine manufacturer selects a station option for a configuration of the standard machine. To do this, the project need not be modified, and it is not necessary to load a modified configuration.

You use a control data record you have programmed to notify the CPU/interface module as to which modules are missing or located on different slots in a station option as compared to the station master. The configuration control does not have an impact on the parameter assignment of the modules.

Configuration control allows you to flexibly vary the centralized/distributed configuration. This is only possible if the station option can be derived from the station master.

The following figure shows three configurations of a standard machine with the corresponding station options of the ET 200SP distributed I/O system.

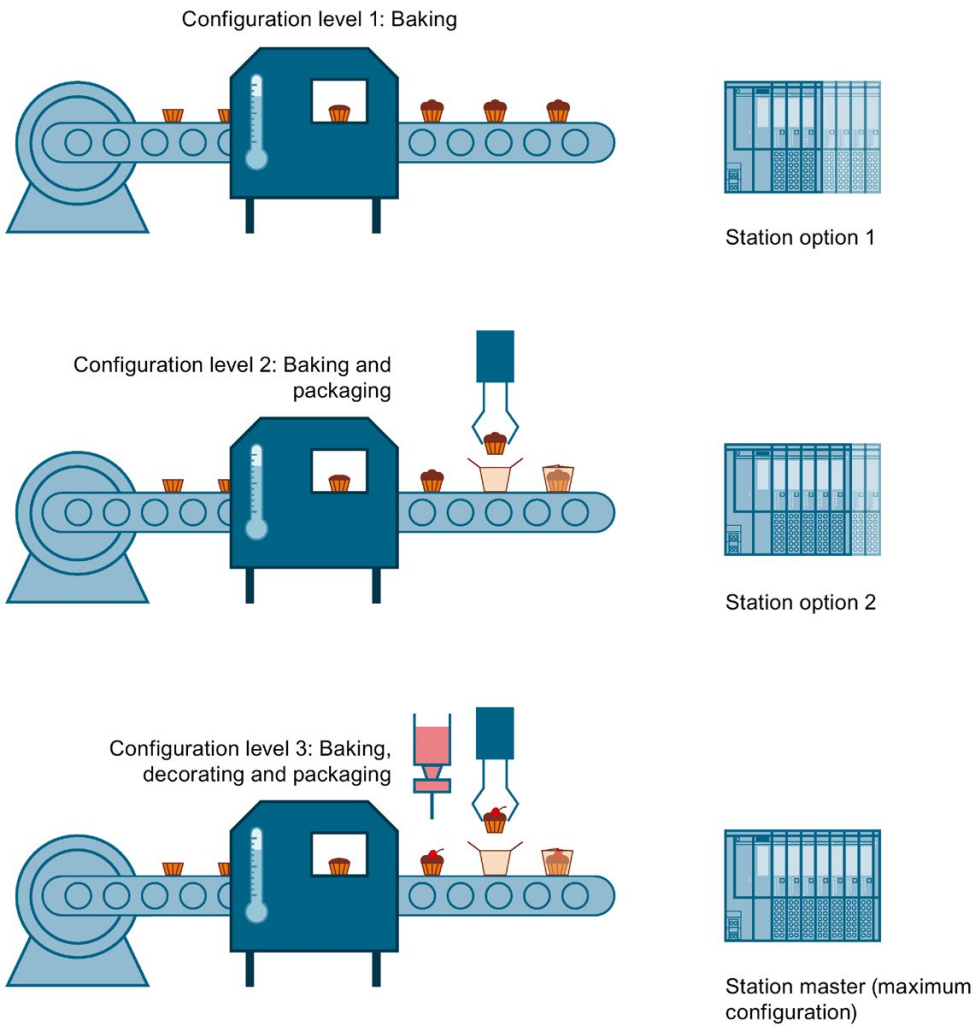

Figure 10-1 Various configuration levels of a standard machine with the corresponding station options of the ET 200SP distributed I/O system.

Advantages

- Simple project management and commissioning by using a single STEP 7 project for all station options.
- Simple handling for maintenance, versioning and upgrade:
- Hardware savings: Only those I/O modules are installed that are required for the machine's current station option.
- Savings potential in the creation, commissioning and the documentation for standard machines.
- Simple station expansion by using pre-wired empty slots. To expand, you simply exchange the BU cover for the new model.

Procedure

To set up the configuration control, follow these steps:

Step	Procedure	See...
1	Enable configuration control in STEP 7	Section Configuring (Page 175)
2	Create control data record	Section Creating the control data record (Page 177)
3	Transfer control data record	Section Transferring the control data record in the startup program of the CPU (Page 188)

Block library "OH_S71x00_Library"

The block library OH_S71x00_Library (https://support.industry.siemens.com/cs/#document/29430270?lc=en-WW) is available for download from the Internet. The block library contains data types with the structure of the control data records for the ET 200SP distributed I/O system. You can implement your flexible automation solution inexpensively with the help of these data types.

Note

Configuration control in the case of motor starters

"Manual local" mode is possible in the case of motor starters when configuration control is active. The motor starter works with the last valid parameters. Do not change the parameterization while "manual local" mode is active.

10.1 Configuring

Requirements

Configuration control is supported by the ET 200SP distributed I/O system with both an ET 200SP CPU and with interface modules via PROFINET IO and PROFIBUS DP.

Centrally for ET 200SP CPU:

- STEP 7 Professional V13 Update 3 or higher
- CPU 1510SP-1 PN/CPU 1512SP-1 PN
- Firmware version V1.6 or higher
- All modules of the CPU must be able to start up even with different configurations.
  - The startup parameter "Comparison preset to actual configuration" of the CPU is set to "Startup CPU even if mismatch" (default setting) and the module parameter "Comparison preset to actual module" of the module is set to "From CPU" (default setting).
    or
  - The module parameter "Comparison preset to actual module" for the module is set to "Startup CPU even if mismatch".

Distributed via PROFINET IO:

- Engineering Tool (e.g. STEP 7)
- IM 155-6 PN BA/ST/HF/HS
- You have assigned the interface module to an IO controller.

Distributed via PROFIBUS DP:

- Engineering Tool (e.g. STEP 7)
- IM 155-6 DP HF
- You have assigned the interface module to a DP master.
- The startup parameter is set to "Operate if preset configuration does not match actual configuration"

Required steps

Enable the "Allow to reconfigure the device via the user program" parameter when configuring the CPU/interface module in STEP 7 (TIA Portal).

- The "Allow to reconfigure the device via the user program" parameter is located in the "Configuration control" area for an ET 200SP CPU.
- The "Allow to reconfigure the device via the user program" parameter is located in the "Module parameter" area under "General" for an IM 155-6 PN interface module.

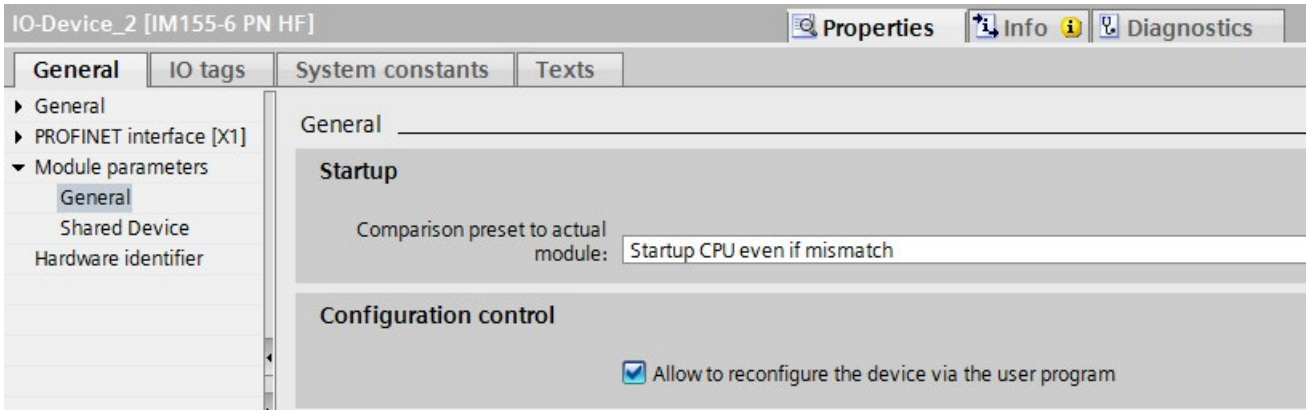

Figure 10-2 Enabling configuration control using an IM 155-6 PN HF as an example

10.2 Creating the control data record

10.2.1 Introduction

Required steps

To create a control data record for the configuration control, follow these steps:

1. Create a PLC data type which contains the structure of the control data record.
   The following figure shows a PLC data type "CTR_REC", which contains the structure of the control data record for an ET 200SP interface module.

CTR_REC

		Name	Data type	Default value	A...	V...	S...	Comment
1		Block_Lenght	USInt	134	☑	☑	☐	4 + (2 x number of Slots)
2		Block_ID	USInt	196	☑	☑	☐	
3		Version	USInt	2	☑	☑	☐	ET 200SP
4		Subversion	USInt	0	☑	☑	☐	
5		Slot 1	USInt	1	☑	☑	☐	assigned "real" slot
6		Add 1	USInt	0	☑	☑	☐	additional function
7		Slot 2	USInt	2	☑	☑	☐	assigned "real" slot
8		Add 2	USInt	0	☑	☑	☐	additional function
9		Slot 3	USInt	3	☑	☑	☐	assigned "real" slot
10		Add 3	USInt	0	☑	☑	☐	additional function
11		Slot 4	USInt	4	☑	☑	☐	assigned "real" slot
12		Add 4	USInt	0	☑	☑	☐	additional function
			USInt	5	☑	☑	☐	

Figure 10-3 Creating control data record 196 using an IM 155-6 PN HF as an example

2. Create a global data block.
3. In the data block, create an array that is based on the created PLC data type.

4. In the control data records, enter the slot assignments in the "Start value" column.

   The figure below shows the global data block "ConfDB". The data block "ConfDB" contains an array [0..5] of the PLC_DataType "CTR_REC".

ConfDB

	Name	Data type	Start value	R..	A...	V...	S..	Comment
1	Static							
2	Option	Int	0	☑	☑	☑	☐	Selection of record
3	ConfigControl	Array[0..5] of "CTR_REC"		☐	☑	☑		
4	ConfigControl[0]	"CTR_REC"			☑	☑		
5	ConfigControl[1]	"CTR_REC"			☑	☑		
6	Block_Length	USInt	0		☑	☑		4 + (2 x number of slots)
7	Block_ID	USInt	196		☑	☑		
8	Version	USInt	2		☑	☑		ET 200SP
9	Subversion	USInt	0		☑	☑		
10	Slot 1	USInt	1		☑	☑		assigned "real" slot
11	Add 1	USInt	0		☑	☑		additional function
12	Slot 2	USInt	2		☑	☑		assigned "real" slot
13	Add 2	USInt	0		☑	☑		additional function
14	Slot 3	USInt	3		☑	☑		assigned "real" slot
15	Add 3	USInt	0		☑	☑		additional function
16	Slot 4	USInt	4		☑	☑		assigned "real" slot
17	Add 4	USInt	0		☑	☑		additional function

Figure 10-4 Data block for configuration control

Rules

Observe the following rules:

- Slot entries in the control data record outside the station master are ignored by the CPU/interface module.
- The control data record must contain the entries up to the last slot of the station option.
- Multiple configured slots may not be assigned to the same actual slot. In other words, each station option slot may be present only once in the control data record.

10.2.2 Control data record for an ET 200SP CPU

Slot assignment

The following table shows the possible slots for the various modules for an ET 200SP CPU:

Table 10- 1 Slot assignment

Modules	Possible slots	Comment
CPU	1	Slot 1 is always the CPU
I/O modules	2 - 65	Downstream of CPU
Server module	2 - 66	The server module completes the configuration of the ET 200SP station after the CPU/the last I/O module.

Control data record

For the configuration control of an ET 200SP CPU, you define a control data record 196 V2.0, which includes a slot assignment. The maximum slot corresponds to the slot of the server module.

The table below shows the structure of a control data record with explanations of the individual elements.

Table 10- 2 Configuration control: Structure of control data record 196

Byte	Element	Code	Explanation
0	Block length	4 + (number of slots × 2)	Header
1	Block ID	196	
2	Version	2	
3	Version	0	
4	Slot 1 of the station master	Slot assignment 1 in the station option (always 1, because the CPU is always in slot 1)	**Control element** Contains the information on which module is inserted in which slot. The value that you need to enter in the corresponding byte depends on the following rule: • If the module exists in the station option, enter the slot number of the module. • If the module exists as empty slot (with BU cover), enter the slot number of the module + 128. (Example: module as empty slot on slot 3: Enter 131 in the control element) • If the module does not exist in the station option, enter 0. **Additional function** Contains information on whether a new potential group will be opened in the station option - by replacing a dark-colored BaseUnit with a light-colored BaseUnit. • If you replace a dark-colored BaseUnit with a light-colored BaseUnit, enter 1 as additional function. • If you accept the BaseUnit from the station master, enter 0 as additional function.
5	Additional function for slot 1		
6	Slot 2 of the station master	Slot assignment in the station option	
7	Additional function for slot 2		
8	Slot 3 of the station master	Slot assignment in the station option	
9	Additional function for slot 3		
:	:	:	
4 + ((max. slot - 1) × 2)	Server module slot	Server module slot assignment in the station option*	
4 + ((max. slot - 1)× 2) + 1	Additional function for server module slot		

* The server module must be present in the station option and must not be marked as empty slot (BU cover).

10.2.3 Control data record for an interface module

Slot assignment

The following table shows the possible slots for the various modules for an ET 200SP interface module:

Table 10- 3 Slot assignment

Modules	Possible slots		Comment
Interface module	0		The interface module (slot 0) is not an element of the configuration control, but instead controls this.
Station extension BA-Send	1		For mixed configuration with ET 200AL modules, BA-Send is always on slot 1.
ET 200SP I/O module	1 - 12	for IM 155-6 PN BA	Downstream from the interface module
	1 - 30	for IM 155-6 PN HS	
	1 - 32	for IM 155-6 PN ST, IM 155-6 DP HF	
	1 - 64	for IM 155-5 PN HF	
Server module	1 - 13	for IM 155-6 PN BA	The server module completes the configuration of the ET 200SP station after the last I/O module.
	1 - 31	for IM 155-6 PN HS	
	1 - 33	for IM 155-6 PN ST, IM 155-6 DP HF	
	1 - 65	for IM 155-5 PN HF	
ET 200AL I/O module	34 - 49	for IM 155-6 DP HF	For mixed configuration with ET 200AL modules
	66 - 81	for IM 155-6 PN ST, IM 155-6 PN HF	

Simplified control data record (V1)

For the configuration control of interface modules of the ET 200SP distributed I/O system, you define a control data record 196 V1.0, which includes a slot assignment. The maximum slot of the configuration corresponds to the slot of the server module or ET 200AL I/O module (in a mixed ET 200SP / ET 200AL configuration).

The table below shows the structure of a control data record with explanations of the individual elements.

Table 10- 4 Structure of the simplified control data record V1.0

Byte	Element	Code	Explanation
0	Block length	4 + maximum slot	Header
1	Block ID	196	
2	Version	1	
3	Version	0	
4	Slot 1 of the station master	Slot assignment in the station option	**Control element ET 200SP** Contains the information on which ET 200SP module is inserted in which slot. The value that you need to enter in the corresponding byte depends on the following rule: • If the module exists in the station option, enter the slot number of the module. • If the module exists as empty slot (with BU cover), enter the slot number of the module + 128. (Example: module as empty slot on slot 3: Enter 131 in the control element) • If the module does not exist in the station option, enter 0.
5	Slot 2 of the station master	Slot assignment in the station option	
:	:	:	
4 + (slot server module - 1)	Server module slot	Server module slot assignment in the station option*	
:	:	:	:
4 + (first slot ET 200AL - 1)	First slot ET 200AL	Slot assignment in the station option	**Control element ET 200AL** Contains information on which ET 200AL module is inserted in which slot. The value that you need to enter in the corresponding byte depends on the following rule: • If the module exists in the station option, enter the slot number of the module. • If the module does not exist in the station option, enter 0.
:	:	:	
4 + (last slot ET 200AL - 1)	Last slot ET 200AL	Slot assignment in the station option	

* The server module must be present in the station option and must not be marked as empty slot (BU cover).

Control data record (V2)

If you change the potential groups in the station option compared to the station master, define a control data record 196 V2.0 for the ET 200SP interface module which contains a slot assignment. The maximum slot of the configuration corresponds to the slot of the server module or ET 200AL I/O module (in a mixed ET 200SP / ET 200AL configuration).

The table below shows the structure of a control data record with explanations of the individual elements.

Table 10- 5 Structure of control data record 196 V2.0

Byte	Element	Code	Explanation
0	Block length	4 + (maximum slot x 2)	Header
1	Block ID	196	
2	Version	2	
3	Version	0	
4	Slot 1 of the station master	Slot assignment in the station option	**Control element ET 200SP** Contains the information on which ET 200SP module is inserted in which slot. The value that you need to enter in the corresponding byte depends on the following rule: • If the module exists in the station option, enter the slot number of the module. • If the module exists as empty slot (with BU cover), enter the slot number of the module + 128. (Example: module as empty slot on slot 3: Enter 131 in the control element) • If the module does not exist in the station option, enter 0. **Additional function** Contains information on whether a new potential group will be opened in the station option - by replacing a dark-colored BaseUnit with a light-colored BaseUnit. • If you replace a dark-colored BaseUnit with a light-colored BaseUnit, enter 1 as additional function. • If you accept the BaseUnit from the station master, enter 0 as additional function.
5	Additional function for slot 1		
6	Slot 2 of the station master	Slot assignment in the station option	
7	Additional function for slot 2		
8	Slot 3 of the station master	Slot assignment in the station option	
9	Additional function for slot 3		
:	:	:	
4 + ((server module slot - 1) × 2)	Server module slot	Server module slot assignment in the station option*	
4 + ((server module slot - 1) × 2) + 1	Additional function for server module slot		

Byte	Element	Code	Explanation
:	:	:	:
4 + ((first slot ET 200AL - 1) x 2)	First slot ET 200AL	Slot assignment in the station option	**Control element ET 200AL** Contains information on which ET 200AL module is inserted in which slot. The value that you need to enter in the corresponding byte depends on the following rule: • If the module exists in the station option, enter the slot number of the module. • If the module does not exist in the station option, enter 0.
4 + ((first slot ET 200AL - 1) x 2) + 1	Reserved		
:	:	:	
4 + ((last slot ET 200AL - 1) x 2)	Last slot ET 200AL	Slot assignment in the station option	
4 + ((last slot ET 200AL - 1) x 2) + 1	Reserved		

* The server module must be present in the station option and must not be marked as empty slot (BU cover).

Note

If a BU cover or no I/O module is plugged on a light-colored BaseUnit, you should enter 1 in the additional function for the slot.

The function "Group diagnostics: Missing supply voltage L+" requires proper assignment of the slots to a shared supply voltage L+ (potential group). All light-colored BaseUnits must be known to the interface module. By entering 1 in the additional function, you make a light-colored BaseUnit known to the interface module, even if an I/O module is not inserted.

Combination of configuration control and shared device (for PROFINET)

The configuration control function in a shared device is therefore only for the I/O modules of the IO controller to which the interface module has subscribed. I/O modules that are assigned to no controller or a different controller behave like a station without activated configuration control.

You cannot make any change to the slot assignment for modules that are assigned to another IO controller or are not assigned to an IO controller (shared device on module level). The CPU assumes a one-to-one assignment for the modules.

If additional IO controllers subscribe to a module intended for configuration control (shared device on submodule level), only one-to-one assignment is permitted for this module. It is not possible to deselect such a module using the control data record (code 0 for this slot in the control data record). This means the combination of "Configuration control" and "Shared device on submodule level" is only possible to a limited extent.

Please note that all modules affected by the configuration control including all assigned submodules are reset when you change the module assignment. Submodules that are assigned to a second IO controller are affected as well.

10.2.4 Feedback data record for interface modules

Operating principle

The feedback data record informs you about the accuracy of the module assignment and gives you the option of detecting assignment errors in the control data record. The feedback data record is mapped via a separate data record 197 V2.0. The feedback data record exists only with configured configuration control.

Slot assignment

The feedback data record refers to the configured station configuration and always includes the maximum configuration limits. The maximum configuration limits comprise 13/49/81 slots depending on the interface module in use. Partial reading of the feedback data record is possible.

The following table shows the slot assignment of the modules:

Table 10- 6 Slot assignment

Modules	Possible slots		Comment
Station extension BA-Send	1		For mixed configuration with ET 200AL modules, BA-Send is always on slot 1.
ET 200SP I/O module	1 - 12	for IM 155-6 PN BA	Downstream from the interface module
	1 - 30	for IM 155-6 PN HS	
	1 - 32	for IM 155-6 PN ST, IM 155-6 DP HF	
	1 - 64	for IM 155-5 PN HF	
Server module	1 - 13	for IM 155-6 PN BA	The server module completes the configuration of the ET 200SP station after the last I/O module.
	1 - 31	for IM 155-6 PN HS	
	1 - 33	for IM 155-6 PN ST, IM 155-6 DP HF	
	1 - 65	for IM 155-5 PN HF	
ET 200AL I/O module	34 - 49	for IM 155-6 DP HF	For mixed configuration with ET 200AL modules
	66 - 81	for IM 155-6 PN ST, IM 155-6 PN HF	

Feedback data record

Table 10- 7 Feedback data record

Byte	Element	Code	Explanation
0	Block length	4 + (number of slots x 2)	Header
1	Block ID	197	
2	Version	2	
3		0	
4	Slot 1 status	0/1	Status = 1: • Module from station master is inserted in the station option • Slot is marked as not available in the control data record Status = 0: • Module pulled • Incorrect module is inserted in the station option*
5	Reserved	0	
6	Slot 2 status	0/1	
7	Reserved	0	
:	:	:	
4 + ((max. slot - 1) × 2)	Max. slot status	0/1	
4 + ((max. slot - 1) × 2) + 1	Reserved	0	

* Not possible if the slot is marked as not available.

Note

The data in the feedback data record is always mapped for all modules. In a shared device configuration, it is therefore irrelevant which IO controller the respective modules are assigned to.

As long as no control data record has been sent, a one-to-one module assignment is assumed for the compilation of data record 197 (station master → station option).

Error messages

In case of error, the RDREC instruction returns the following error messages via the STATUS block parameter while reading the feedback data record:

Table 10- 8 Error messages

Error code	Meaning
$80B1_H$	Invalid length; the length information in data record 197 is not correct.
$80B5_H$	Configuration control not configured
$80B8_H$	Parameter error The following events cause a parameter error: • Incorrect block ID in the header (not equal to 197) • Invalid version identifier in the header • A reserved bit has been set • The same slot in the station option has been assigned to more than one slot in the station master

10.2.5 Data records and functions

Supported data records and functions

The table below shows a comparison of the supported data records and functions depending on the CPU/interface module used.

	CPU...		Interface module (IM...)				
Supported data records and functions	1510SP-1 PN 1510SP F-1 PN	1512SP-1 PN 1512SP F-1 PN	155-6 PN HS	155-6 PN HF	155-6 PN ST	155-6 PN BA	155-6 DP HF
Control data record (V2)	✓	✓	✓	✓	✓	✓	✓
Simplified control data record (V1)	--	--	✓	✓	✓	✓	--
Read back control data record *	✓	✓	✓	✓	✓	✓	✓
Read feedback data record	--	--	✓	✓	✓	✓	✓

* You can read back the control data record with the RDREC instruction.

10.3 Transferring control data record in the startup program of the CPU

Required steps

Transfer the created control data record 196 to the CPU/the interface module using the instruction WRREC (Write data record) instruction.

Parameters of the instruction WRREC

Below, you will find explanations of individual parameters of the WRREC instruction which you must supply with specific values in the configuration control context. You can find additional information on the WRREC instruction in the STEP 7 online help.

ID	Hardware identifier • Use the HW identifier of the CPU for the configuration control for centrally arranged modules. If you have selected the CPU in the network view or device view, the HW identifier is available in the **System constants** tab of the Inspector window. Use the value of the system constant "Local~Configuration". • Use the HW identifier of the interface module for the configuration control for distributed I/O. If you have selected the interface module in the network view or device view, the HW identifier is available in the **System constants** tab of the Inspector window. Use the value of the system constant "<Name_of_the_interface_module>~Head".
INDEX	Data record number: 196 (decimal)
RECORD	Control data record to be transferred. See the section Creating the control data record (Page 177) for the structure of the control data record.

Error messages

In case of error, the instruction WRREC returns the following error messages via the STATUS block parameter:

Table 10- 9 Error messages

Error code	Meaning
$80B1_H$	Invalid length; the length information in data record 196 is not correct.
$80B5_H$	Configuration control parameters not assigned.
$80E2_H$	Data record was transferred in the wrong OB context. The data record must be transferred in the startup program.
$80B8_H$	Parameter error A parameter error is caused by: • Incorrect block ID in the header (not equal to 196) • Invalid version identifier in the header • A reserved bit was set • A station master slot was assigned an invalid slot in the station option • Multiple slots in the station master are assigned to the same slot in the station option • For shared device on submodule level: Violation of defined restrictions

Selection of the station option in the user program

In order for the CPU to know which station option you want to operate, you must set up a selection option between the various control data records in the user program. You can implement the selection, for example, via an Int tag which references an array element.

Note that the tag for selecting the control data record must be located in the retentive memory area. If the tag is not retentive it will be initialized during the startup of the CPU and thus be unavailable for selection of the station option.

Special aspects relating to the transfer of the control data record to the CPU

- If you have enabled configuration control, the CPU is not ready for operation without a control data record. The CPU returns from startup to STOP if a valid control data record is not transferred in the startup OB. The central I/O is not initialized in this case. The cause for the STOP mode is entered in the diagnostics buffer.

  Note

  If an incorrect control data record is transferred to the CPU in the startup OB, the startup of the CPU may be prevented.

  In this case, perform a reset to factory settings of the CPU and then transfer a correct control data record.

- The CPU processes the WRREC instruction for transfer of the control data record asynchronously. For this reason, you must call WRREC in the startup OB repeatedly in a loop until the output parameters "BUSY" or "DONE" indicate that the data record has been transferred.
  - Tip: To program the loop, use the SCL programming language with the REPEAT ... UNTIL instruction.

```
REPEAT
 "WRREC_DB"(REQ := "start_config_control",
            ID := "Local~Configuration",
            INDEX := 196,
            LEN := "conf_LEN",
            DONE => "conf_DONE",
            BUSY => "conf_BUSY",
            RECORD := "ConfDB".ConfigControl["ConfDB".Option],
 //Selection of control data record
            ERROR => "conf_ERROR",
            STATUS => "conf_STATUS");
UNTIL NOT "conf_BUSY"
END_REPEAT;
```

  - In the graphical programming languages, you implement the loop using instructions for program control.

Example in FBD: Use the LABEL (jump label) and JMP (jump at RLO=1) instructions to program a loop.

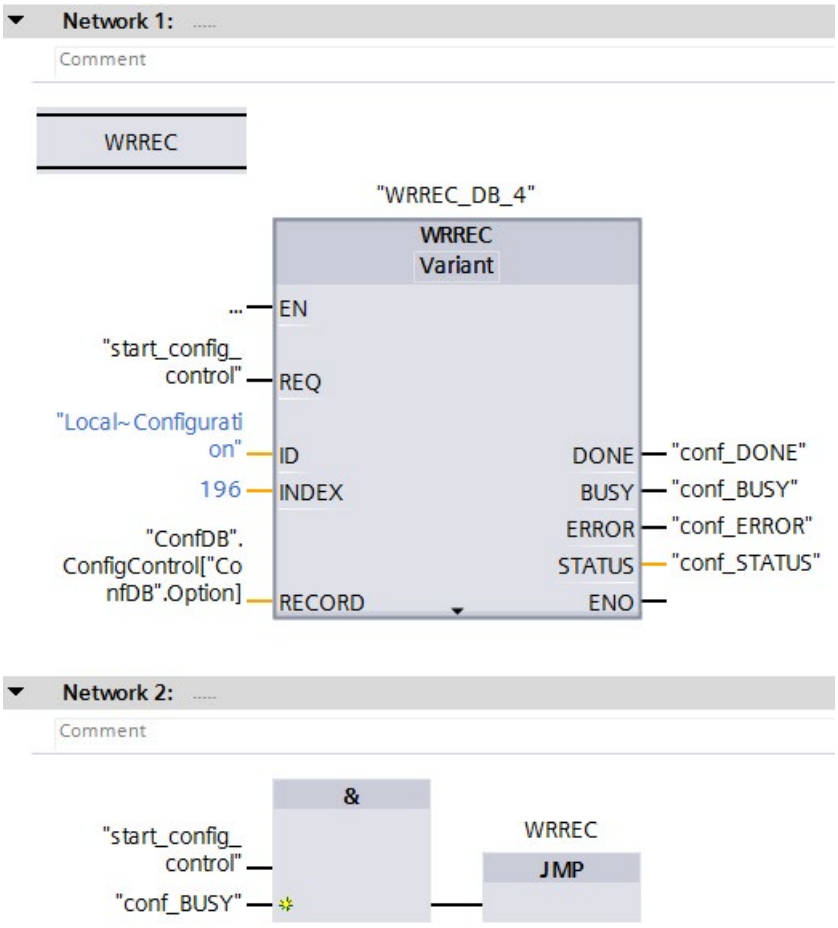

Figure 10-5 WRREC

- The control data record is stored retentively in the CPU. Note:
  - The retentivity of the control data record is independent of the retentivity settings in the STEP 7 memory area. This means that the memory area in which the control data record is configured does not have to be configured as retentive for this purpose.
  - If you write a control data record with modified configuration, the original data record 196 is deleted and the new data record 196 is saved retentively. The CPU will then restart with the modified configuration.

Special aspects relating to the transfer of the control data record to the interface module

- If you have enabled configuration control, the ET 200SP station is not ready for operation without a control data record. As long as no valid control data record has been transferred, the I/O modules are considered as failed by the CPU and exhibit substitute value behavior. The interface module continues to exchange data.
- The control data record is stored retentively in the interface module. Note:
  - If there have been no changes to the configuration, you do not need to rewrite the control data record 196 during restart.
  - If you write a control data record with modified configuration to the interface module, it will result in a station failure in the distributed I/O system. The original data record 196 is deleted and the new data record 196 is saved retentively. The station will then restart with the modified configuration.

10.4 Behavior during operation

Effect of discrepancy between station master and station option

For the online display and for the display in the diagnostics buffer (module OK or module faulty), the station master is always used and not the differing station option.

Example: A module supplies diagnostic information. This module is configured in slot 4 in the station master, but is inserted in slot 3 in the station option (missing module; see example in the next section). The online view (station master) shows a faulty module in slot 4. In the real configuration, the module in slot 3 indicates an error via an LED display.

Response when modules are missing

If modules are entered as not present in the control data record, the automation system behaves as follows:

- Modules designated as not present in the control data record do not supply diagnostics and their status is always OK. The value status is OK.
- Direct write access to the outputs that are not present or write access to the process image of the outputs that are not present: Remains without effect; no access error is signaled.
- Direct read access to the inputs that are not present or read access to the process image of the inputs that are not present: Value "0" is supplied; no access error is signaled.
- Write data record to module that is not present: Remains without effect; no error is signaled.
- Read data record from module that is not present: An error is signaled because a valid data record cannot be returned.

10.5 Examples of configuration control

A station master consisting of an interface module, three I/O modules and the server module is configured in STEP 7 in the following section.

Four station options are derived from the station master with the configuration control:

- Station option 1 with module that is not present
- Station option 2 with modified order of modules
- Station option 3 with empty slot
- Station option 4: Opening a new potential group

Station option 1 with module that is not present

The module that is located in slot 3 in the station master is not present in the station option 1. Slot 3 must be designated in the control data record accordingly with 0 (= not present). The server module is located in slot 3 in the station option.

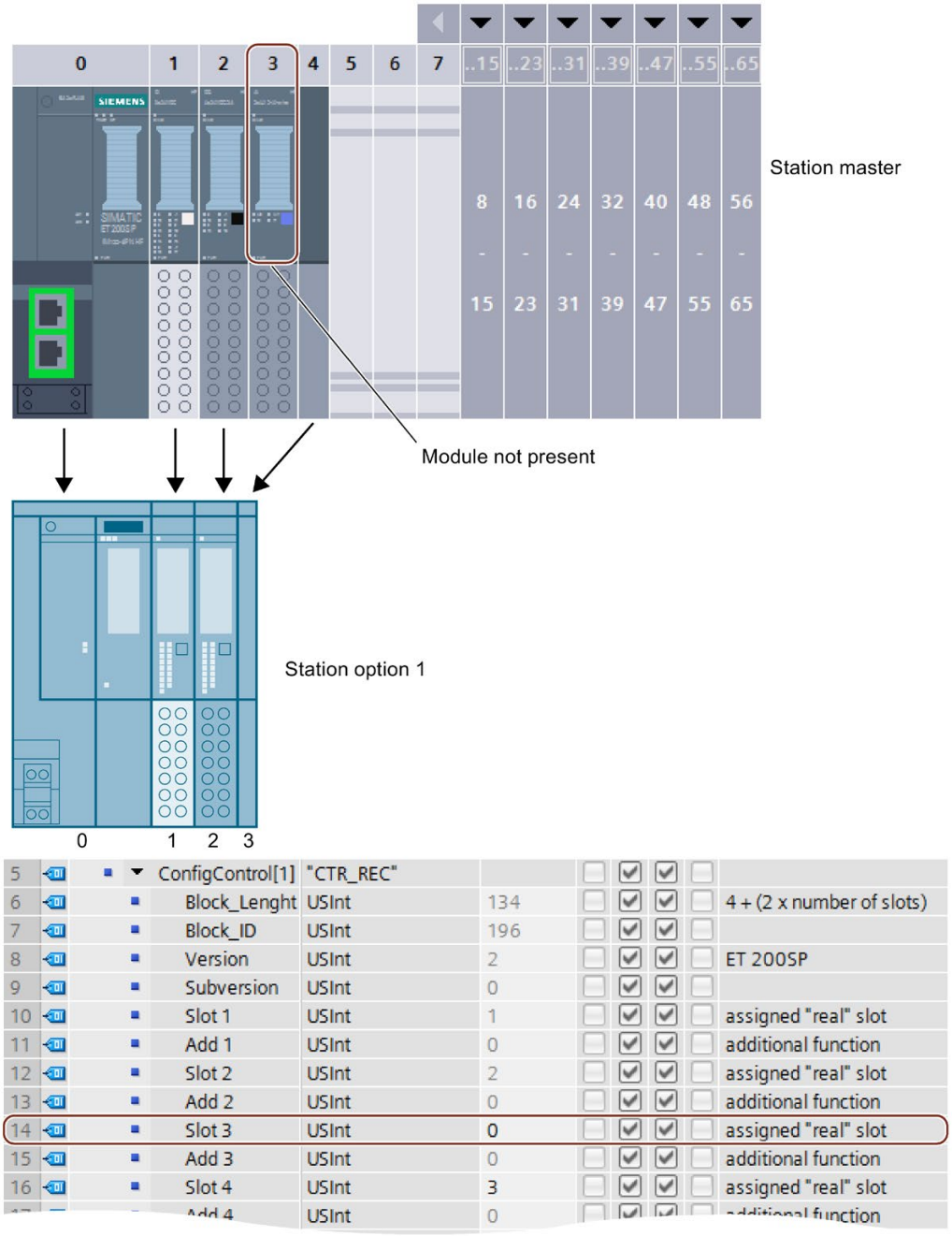

Figure 10-6 Example: Hardware configuration of station option 1 with the associated control data record in STEP 7

Station option 2 with modified order of modules

The order of the modules at slots 2 and 3 is interchanged.

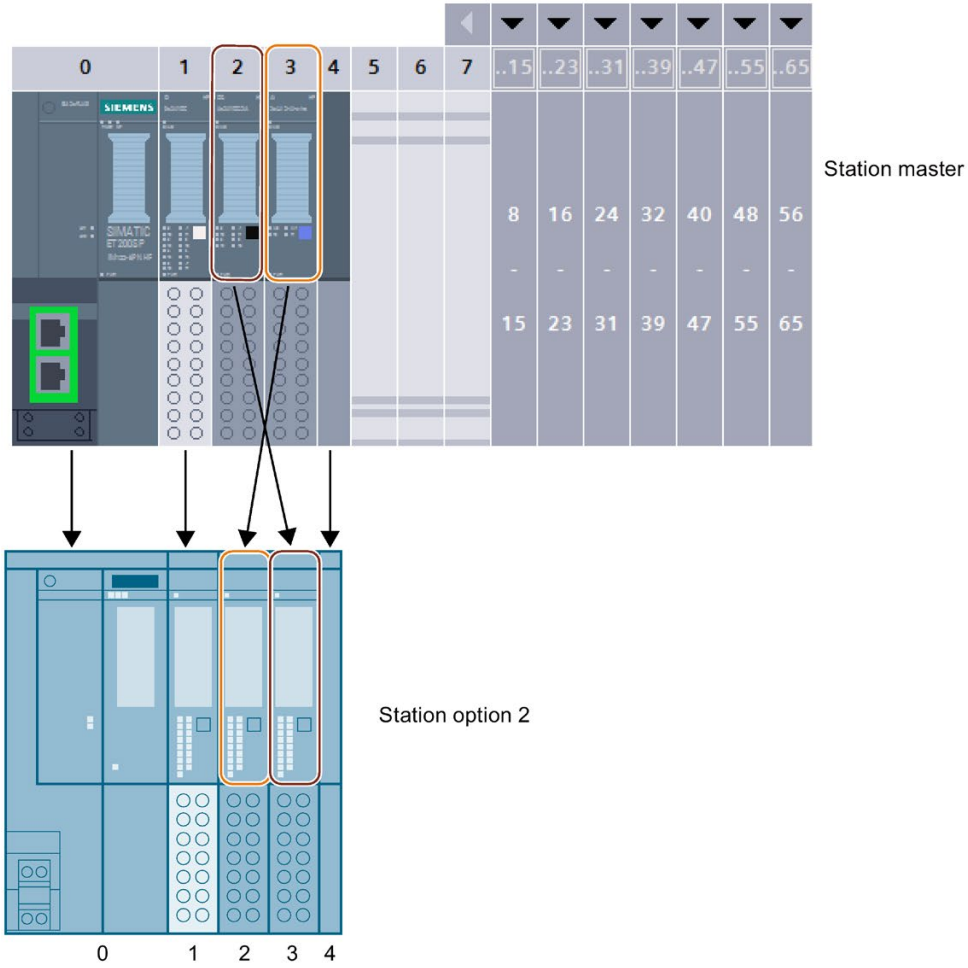

6			ConfigControl[2]	"CTR_REC"						
7			Block_Lenght	USInt	134					4 + (2 x number of slots)
8			Block_ID	USInt	196					
9			Version	USInt	2					ET 200SP
10			Subversion	USInt	0					
11			Slot 1	USInt	1					assigned "real" slot
12			Add 1	USInt	0					additional function
13			Slot 2	USInt	3					assigned "real" slot
14			Add 2	USInt	0					additional function
15			Slot 3	USInt	2					assigned "real" slot
16			Add 3	USInt	0					additional function
17			Slot 4	USInt	4					assigned "real" slot
				USInt	0					

Figure 10-7 Example: Hardware configuration of station option 2 with the associated control data record in STEP 7

Station option 3 with empty slot

The module that is located in slot 3 in the station master occupies an empty slot with BU cover in the station option. Enter the value 130 in slot 3 in the control data record.

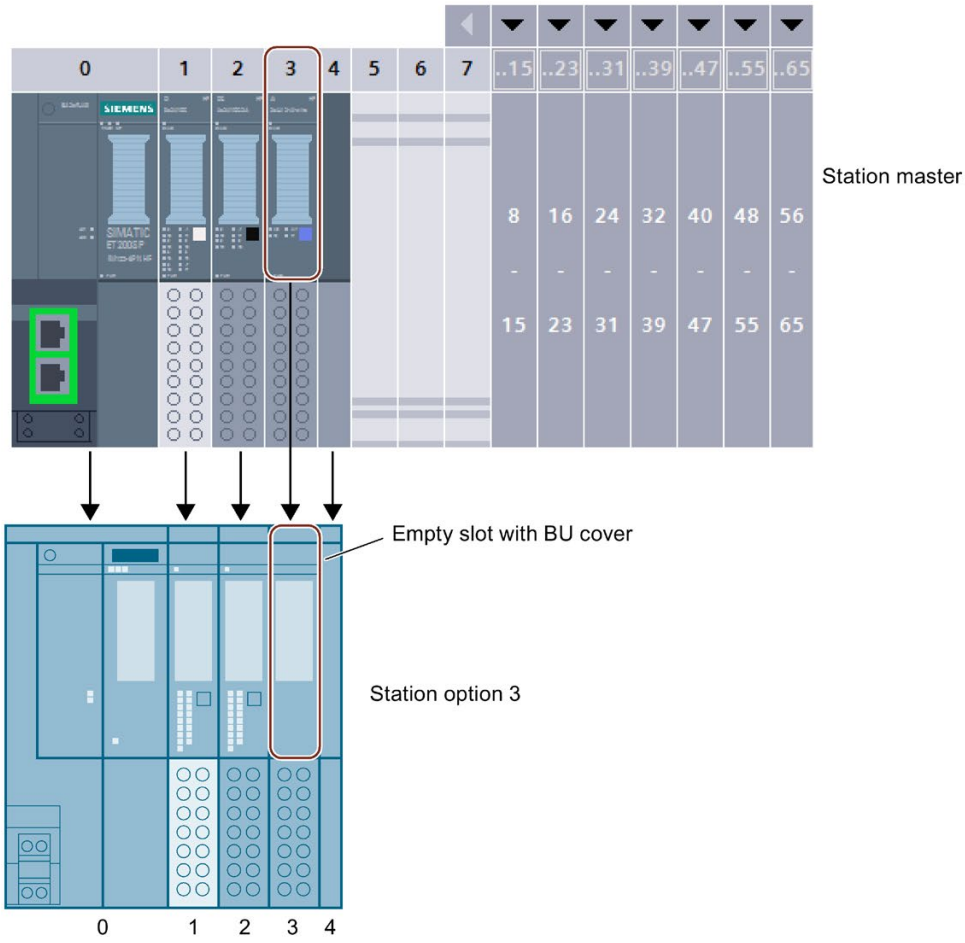

7		ConfigControl[3]	"CTR_REC"						
8		Block_Lenght	USInt	134					4 + (2 x number of slots)
9		Block_ID	USInt	196					
10		Version	USInt	2					ET 200SP
11		Subversion	USInt	0					
12		Slot 1	USInt	1					assigned "real" slot
13		Add 1	USInt	0					additional function
14		Slot 2	USInt	2					assigned "real" slot
15		Add 2	USInt	0					additional function
16		Slot 3	USInt	131					assigned "real" slot
17		Add 3	USInt	0					additional function
		Slot 4	USInt	4					assigned "real" slot

Figure 10-8 Example: Hardware configuration of station option 3 with the associated control data record in STEP 7

Station option 4: Opening a new potential group

A new potential group is opened at slot 3 of station option 4. Compared to the station master, a dark-colored BaseUnit is replaced by a light-colored BaseUnit. Enter the value 1 as additional function.

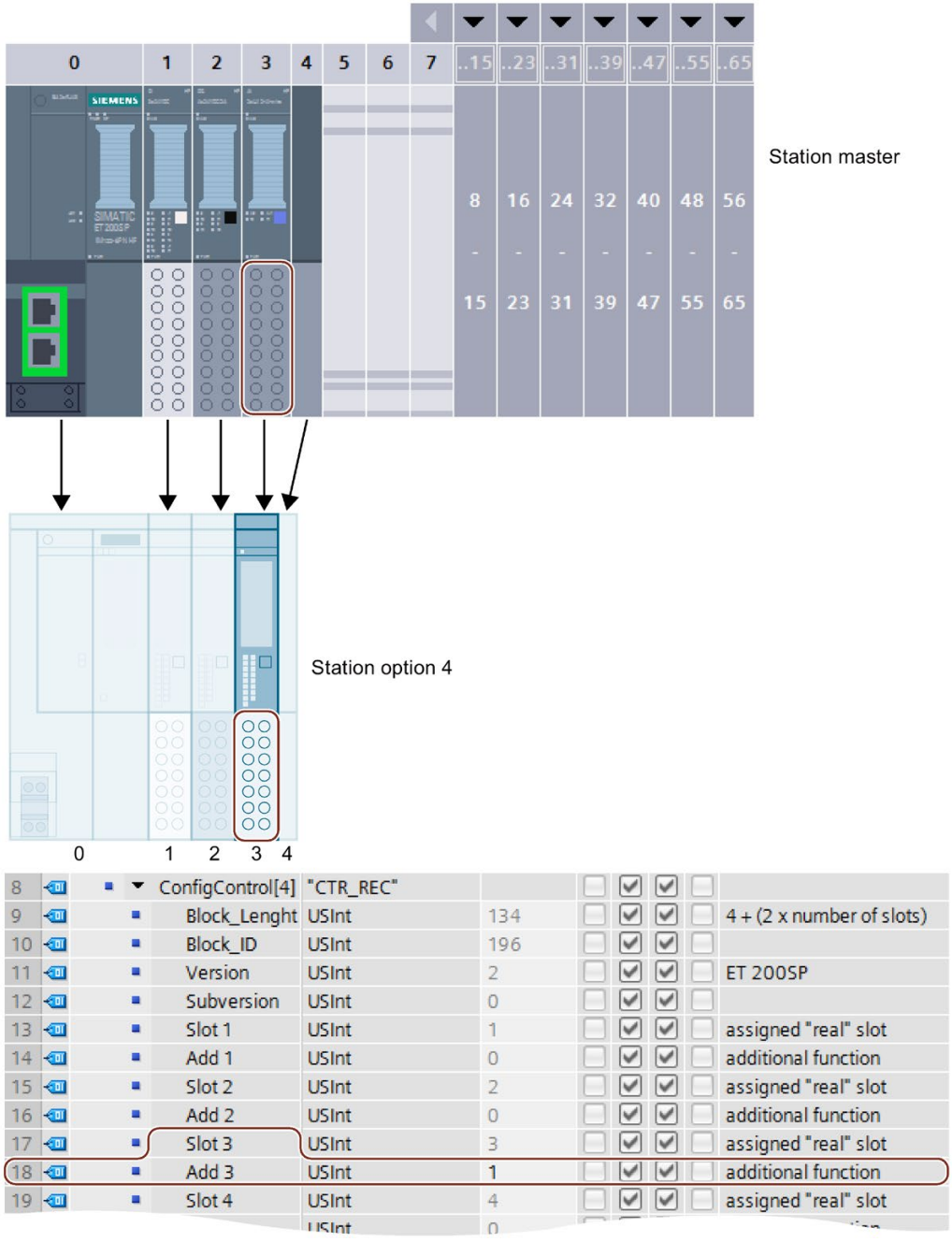

Figure 10-9 Example: Hardware configuration of station option 4 with the associated control data record in STEP 7

Commissioning 11

11.1 Overview

Introduction

This section includes information on the following topics:

- Commissioning the ET 200SP distributed I/O system on the PROFINET IO
- Commissioning the ET 200SP distributed I/O system on the PROFIBUS DP
- Startup of the ET 200SP distributed I/O system with empty slots
- Removing/inserting the SIMATIC memory card
- Operating modes of the CPU
- CPU memory reset
- Reassigning parameters during operation
- Identification and maintenance data

Commissioning requirements

Note

Performing tests

You must ensure the safety of your plant. You therefore need to run a complete functional test and make the necessary safety checks before the final commissioning of a plant.

Also allow for any possible foreseeable errors in the tests. This avoids endangering persons or equipment during operation.

PRONETA

With SIEMENS PRONETA (PROFINET network analysis), you analyze the system network during commissioning. PRONETA features two core functions:

- The topology overview independently scans PROFINET and all connected components.
- The IO check is a fast test of the wiring and the module configuration of a system.

You can find SIEMENS PRONETA on the Internet (http://support.automation.siemens.com/WW/view/en/67460624).

SIMATIC Automation Tool

You can use the SIMATIC Automation Tool to perform commissioning and maintenance activities simultaneously on various SIMATIC S7 stations as a bulk operation independent of the TIA Portal.

General function overview:

- Network browsing and creation of a table showing the accessible devices in the network.
- Flashing of device LEDs or HMI display to locate a device
- Loading addresses (IP, subnet, gateway) into a device
- Loading the PROFINET name (station name) into a device name
- Placing a CPU in RUN or STOP mode
- Setting the time in a CPU to the current time of your programming device/PC
- Downloading a new program to a CPU or an HMI device
- Downloading from CPU, downloading to CPU or deleting recipe data from a CPU
- Downloading from CPU or deleting data log data from a CPU
- Backup/restore of data from/to a backup file for CPUs and HMI devices
- Downloading service data from a CPU
- Reading the diagnostics buffer of a CPU
- General reset of a CPU's memory
- Resetting devices to factory settings
- Downloading a firmware update to a device
- ...

You can find the SIMATIC Automation Tool on the Internet (https://support.industry.siemens.com/cs/ww/de/view/98161300).

11.2 Commissioning the ET 200SP for PROFINET IO

Requirements

- The CPU/interface module is in the "Factory settings" status or has been reset to factory settings (see section Interface module (http://support.automation.siemens.com/WW/view/en/55683316/133300)).
- For CPU: The SIMATIC memory card is as delivered or has been formatted.

11.2.1 ET 200SP CPU as an IO controller

Configuration example

To use the ET 200SP distributed I/O system as an IO controller, you require the CPU 151xSP-1 PN.

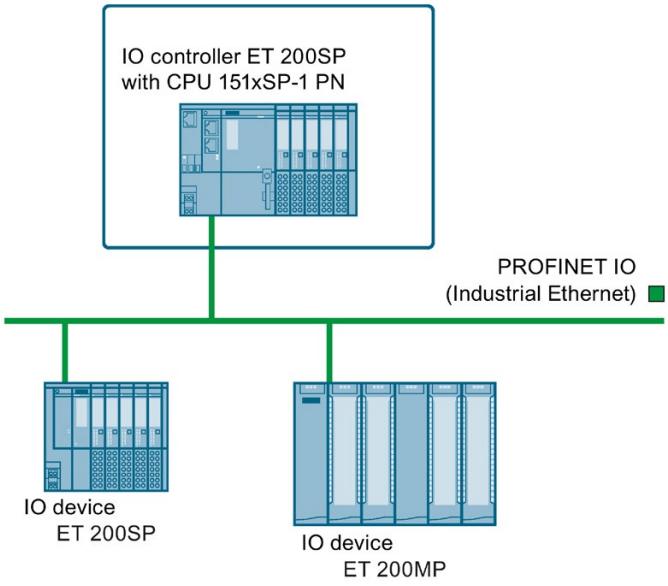

Figure 11-1 ET 200SP CPU as an IO controller

Commissioning procedure

To commission the ET 200SP distributed I/O system CPU as an IO controller for PROFINET IO, we recommend the following procedure:

Table 11- 1 Procedure for commissioning the ET 200SP CPU as an IO controller for PROFINET IO

Step	Procedure	See ...
1	Installing ET 200SP	Section Installation (Page 64)
2	Connecting ET 200SP • Supply voltages • PROFINET IO • Sensors and actuators	Section Wiring (Page 87)
3	Inserting a SIMATIC memory card in the IO controller	Section Removing/inserting a SIMATIC memory card on the CPU (Page 213)
4	Configuring the IO controller[1]	Section Configuring (Page 134)
5	Checking the protective measures	-

Step	Procedure	See ...
6	Switching on supply voltages for the IO controller	CPU 15xxSP-1 PN (http://support.automation.siemens.com/WW/view/en/90466439/133300) manual
7	Switching on supply voltages for IO devices	Documentation of the IO device
8	Downloading the configuration to the IO controller	STEP 7 online help
9	Switching IO controller to RUN mode	CPU 15xxSP-1 PN (http://support.automation.siemens.com/WW/view/en/90466439/133300) manual
10	Checking LEDs	CPU 15xxSP-1 PN (http://support.automation.siemens.com/WW/view/en/90466439/133300) manual
11	Testing inputs and outputs	The following functions are helpful: Monitoring and modifying tags, testing with program status, forcing, controlling the outputs. See section Test functions and eliminating problems (Page 273)

[1] The IO devices are configured with the IO controller.

11.2.2 ET 200SP CPU as an I-device

Configuration example

You need the CPU 151xSP-1 PN to use the ET 200SP distributed I/O system as an I-device.

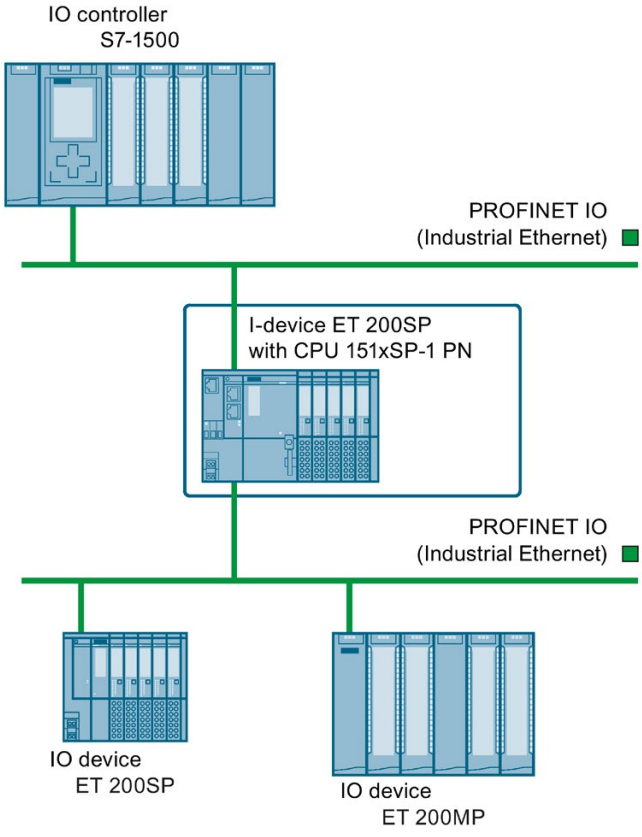

Figure 11-2 ET 200SP CPU as an I-device

Commissioning procedure

For commissioning of the ET 200SP distributed I/O system as an I-device on the PROFINET IO, we recommend the following procedure:

Table 11- 2 Procedure for commissioning the ET 200SP as an I-device on the PROFINET IO

Step	Procedure	See ...
1	Installing ET 200SP	Section Installation (Page 64)
2	Connecting ET 200SP • Supply voltages • PROFINET IO • Sensors and actuators	Section Wiring (Page 87)
3	Inserting a SIMATIC memory card in the I-device	Section Removing/inserting a SIMATIC memory card on the CPU (Page 213)
4	Configuring the I-device	Section Configuring (Page 134)
5	Checking the protective measures	-
6	Switching on supply voltages for the IO controller	Documentation of the IO controller
7	Switching on supply voltages for I-device and IO devices	CPU 15xxSP-1 PN (http://support.automation.siemens.com/WW/view/en/90466439/133300) manual and documentation of the IO devices
8	Download configuration to the I-device	STEP 7 online help
9	Switching IO controller and I-device to RUN mode	Documentation of the IO controller and CPU 15xxSP-1 PN (http://support.automation.siemens.com/WW/view/en/90466439/133300) manual
10	Checking LEDs	CPU 15xxSP-1 PN (http://support.automation.siemens.com/WW/view/en/90466439/133300) manual
11	Testing inputs and outputs	The following functions are helpful: Monitoring and modifying tags, testing with program status, forcing, controlling the outputs. See section Test functions and eliminating problems (Page 273)

11.2.3 ET 200SP as an IO device

Configuration example

To use the ET 200SP distributed I/O system as an IO device, you need the IM 155-6 PNxx interface module.

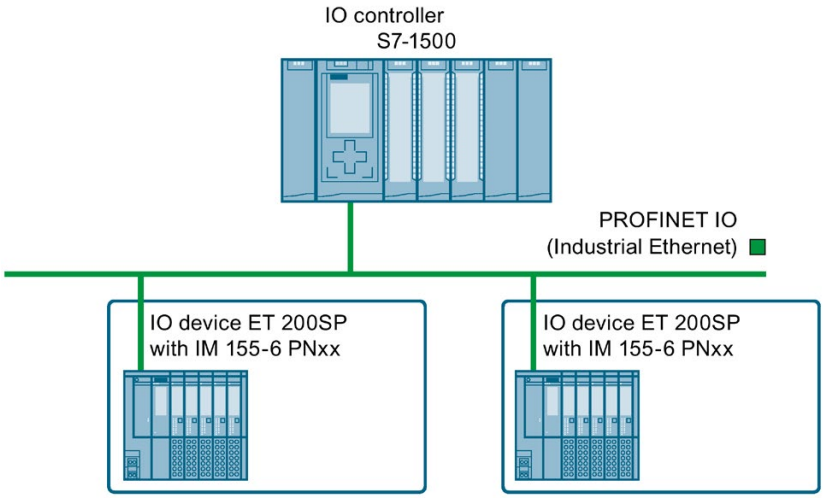

Figure 11-3 ET 200SP as an IO device

Commissioning procedure

For commissioning of the ET 200SP distributed I/O system as an IO device on the PROFINET IO, we recommend the following procedure:

Table 11- 3 Procedure for commissioning the ET 200SP as an IO device for PROFINET IO

Step	Procedure	See ...
1	Installing ET 200SP	Section Installation (Page 64)
2	Connecting ET 200SP • Supply voltages • PROFINET IO • Sensors and actuators	Section Wiring (Page 87)
4	Configuring IO controller	Documentation of the IO controller
5	Checking the protective measures	-
6	Switching on supply voltages for the IO controller	Documentation of the IO controller
7	Switching on supply voltages for IO devices	Interface module (http://support.automation.siemens.com/WW/view/en/55683316/133300) Manual
8	Downloading the configuration to the IO controller	STEP 7 online help
9	Switching IO controller to RUN mode	Documentation of the IO controller

Step	Procedure	See ...
10	Checking LEDs	Interface module (http://support.automation.siemens.com/WW/view/en/55683316/133300) Manual
11	Testing inputs and outputs	The following functions are helpful: Monitoring and modifying tags, testing with program status, forcing, controlling the outputs. Refer to section Test functions and eliminating problems (Page 273)

11.3 Commissioning the ET 200SP on PROFIBUS DP

Requirements

- The CPU/interface module is in the "Factory settings" status or has been reset to factory settings (see section Interface module (http://support.automation.siemens.com/WW/view/en/55683316/133300)).
- For CPU: The SIMATIC memory card is as delivered or has been formatted.

11.3.1 ET 200SP as a DP master

Configuration example

To use the ET 200SP distributed I/O system as a DP master, you need the CPU 151xSP-1 PN and the CM DP communication module.

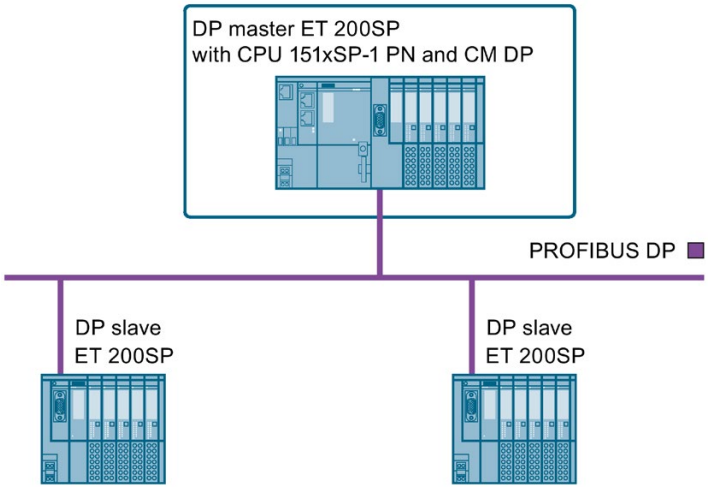

Figure 11-4 ET 200SP as a DP master

Commissioning procedure

To commission the ET 200SP distributed I/O system as a DP master on PROFIBUS DP, we recommend the following procedure:

Table 11- 4 Procedure for commissioning the ET 200SP as a DP master on the PROFIBUS DP

Step	Procedure	See ...
1	Installing ET 200SP (with CPU and CM DP)	Section Installation (Page 64)
2	Connecting ET 200SP • Supply voltages • PROFIBUS DP • Sensors and actuators	Section Wiring (Page 87)
3	Inserting a SIMATIC memory card in the DP master (CPU)	Section Removing/inserting a SIMATIC memory card on the CPU (Page 213)
4	Configuring DP master (including PROFIBUS address)	CPU 15xxSP-1 PN (http://support.automation.siemens.com/WW/view/en/90466439/133300) and CM DP manual
5	Switching on supply voltages for DP master	CPU 15xxSP-1 PN (http://support.automation.siemens.com/WW/view/en/90466439/133300) manual
6	Switching on supply voltages for DP slaves	Documentation of the DP slave
7	Download configuration to the DP master	STEP 7 online help
8	Switching DP master to RUN	CPU 15xxSP-1 PN (http://support.automation.siemens.com/WW/view/en/90466439/133300) manual
9	Checking LEDs	CPU 15xxSP-1 PN (http://support.automation.siemens.com/WW/view/en/90466439/133300) manual
10	Testing inputs and outputs	The following functions are helpful: Monitoring and modifying tags, testing with program status, forcing, controlling the outputs. See section Test functions and eliminating problems (Page 273)

11.3.2 ET 200SP as I-slave

Configuration example

To use the ET 200SP distributed I/O system as I-slave, you need the CPU 151xSP-1 PN and the CM DP communication module.

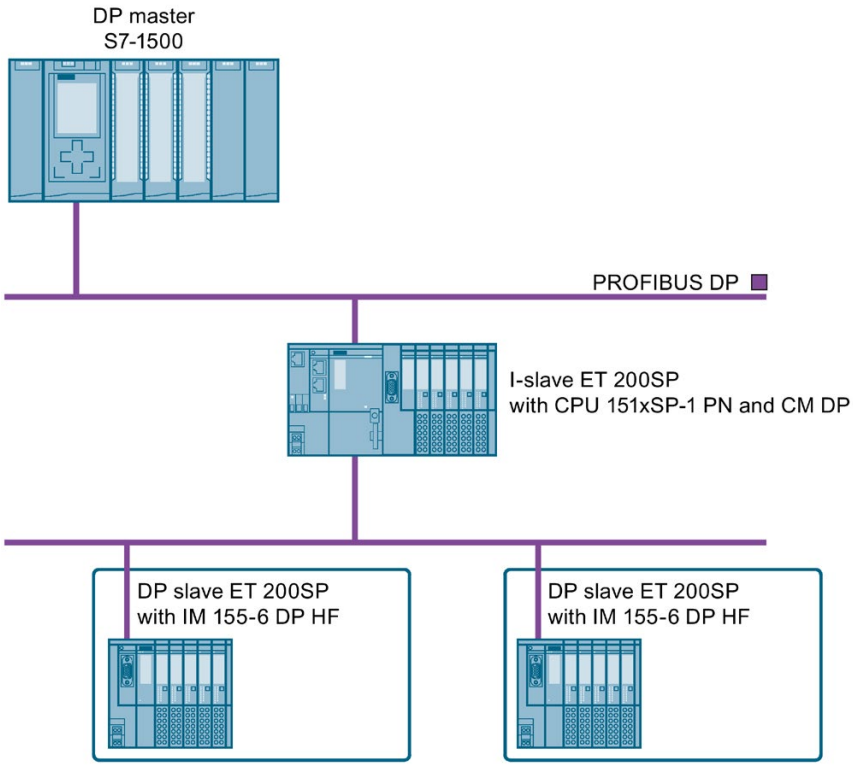

Figure 11-5 ET 200SP as I-slave

Commissioning procedure

For commissioning of the ET 200SP distributed I/O system as an I-slave on the PROFIBUS DP, we recommend the following procedure:

Table 11- 5 Procedure for commissioning the ET 200SP as an I-slave for PROFIBUS DP

Step	Procedure	See ...
1	Installing ET 200SP (with CPU and CM DP)	Section Installation (Page 64)
2	Connecting ET 200SP • Supply voltages • PROFIBUS DP • Sensors and actuators	Section Wiring (Page 87)
3	Configuring DP master (including PROFIBUS address)	Documentation of the DP master
4	Inserting a SIMATIC memory card in the I-slave (CPU)	Section Removing/inserting a SIMATIC memory card on the CPU (Page 213)
5	Configuring I-slave (including PROFIBUS address)	CPU 15xxSP-1 PN (http://support.automation.siemens.com/WW/view/en/90466439/133300) and CM DP manual
6	Switching on supply voltages for DP master	Documentation of the DP master
7	Switching on supply voltages for I-slaves	CPU 15xxSP-1 PN (http://support.automation.siemens.com/WW/view/en/90466439/133300) manual
8	Loading configuration in the DP master and I-slaves	STEP 7 online help
9	Switching DP master and I-slaves to RUN	Documentation of the DP master and CPU 15xxSP-1 PN (http://support.automation.siemens.com/WW/view/en/90466439/133300) manual
10	Checking LEDs	CPU 15xxSP-1 PN (http://support.automation.siemens.com/WW/view/en/90466439/133300) manual
11	Testing inputs and outputs	The following functions are helpful: Monitoring and modifying tags, testing with program status, forcing, controlling the outputs. See the Test functions and fault resolution (http://support.automation.siemens.com/WW/view/en/90466439/133300) section

11.3.3 ET 200SP as a DP slave

Configuration example

To use the ET 200SP distributed I/O system as a DP slave, you need the IM 155-6 DP HF.

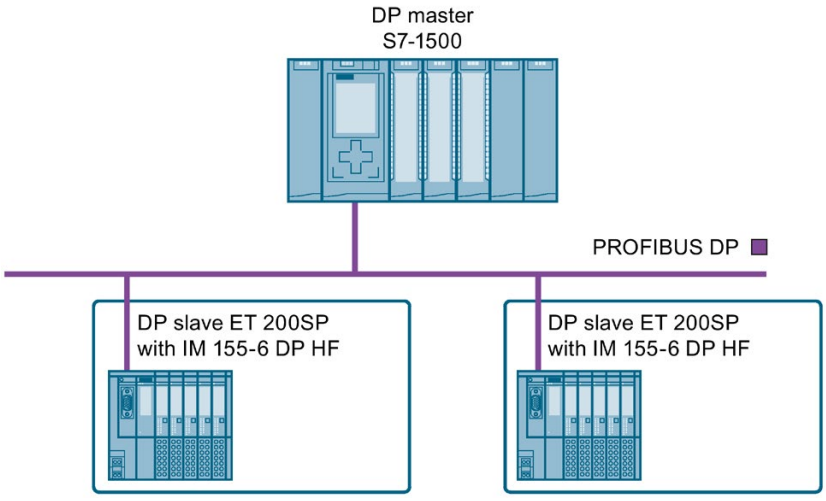

Figure 11-6 ET 200SP as a DP slave

Commissioning procedure

To commission the ET 200SP distributed I/O system as a DP slave on PROFIBUS DP, we recommend the following procedure:

Table 11- 6 Procedure for commissioning the ET 200SP as a DP master for PROFIBUS DP

Step	Procedure	See ...
1	Installing ET 200SP (with IM 155-6 DP HF)	Section Installation (Page 64)
2	Setting the PROFIBUS address on the interface module	Section Interface module (http://support.automation.siemens.com/WW/view/en/55683316/133300)
3	Connecting ET 200SP • Supply voltages • PROFIBUS DP • Sensors and actuators	Section Wiring (Page 87)
4	Configuring DP master (including PROFIBUS address)	Documentation of the DP master
5	Switching on supply voltages for DP master	Documentation of the DP master
6	Switching on supply voltages for DP slaves	Interface module (http://support.automation.siemens.com/WW/view/en/55683316/133300) Manual
7	Download configuration to the DP master	STEP 7 online help

Step	Procedure	See ...
8	Switching DP master to RUN	Documentation of the DP master
9	Checking LEDs	Interface module (http://support.automation.siemens.com/WW/view/en/55683316/133300) Manual
10	Testing inputs and outputs	The following functions are helpful: Monitoring and modifying tags, testing with program status, forcing, controlling the outputs. Refer to section Test functions and eliminating problems (Page 273)

11.4 Startup of the ET 200SP with empty slots

Procedure

You can configure the ET 200SP distributed I/O system with any number of empty slots.

To build the ET 200SP distributed I/O system with any number of empty slots, follow these steps:

1. Cover all empty slots with BU covers.
2. Finish the configuration with a server module.

Special consideration: A "Module missing in slot x" diagnostic message is generated by the CPU/interface module for empty slots in which I/O modules are configured.

11.5 Removing/inserting a SIMATIC memory card on the CPU

Requirement

The CPU only supports pre-formatted SIMATIC memory cards. If necessary, delete all previously stored data before using the SIMATIC memory card. Additional information about deleting the contents of the SIMATIC memory card can be found in the section, SIMATIC memory card - overview (Page 240).

In order to work with the SIMATIC memory card, first ensure that the SIMATIC memory card is not write-protected. If it is, move the slider out of the lock position.

Inserting the SIMATIC memory card

To insert a SIMATIC memory card, follow these steps:

1. Ensure that the CPU is either switched off or in STOP mode.
2. Insert the SIMATIC memory card, as depicted on the CPU, into the slot for the SIMATIC memory card.

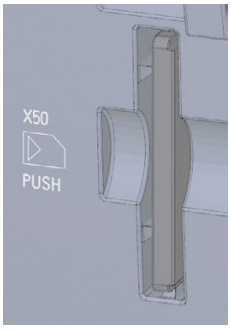

Figure 11-7 Slot for the SIMATIC memory card

3. Insert the SIMATIC memory card with light pressure into the CPU, until the SIMATIC memory card latches.

Removal of the SIMATIC memory card

To remove a SIMATIC memory card, follow these steps:

1. Switch the CPU to STOP mode.
2. Press the SIMATIC memory card into the CPU with light pressure. After audible unlatching of the SIMATIC memory card, remove it.

Only remove the SIMATIC memory card in POWER OFF or STOP mode of the CPU. Ensure that no writing functions (online functions with the programming device, e.g. loading/deleting a block, test functions) are active in STOP mode or were active before POWER OFF.

Reactions after removing/inserting the SIMATIC memory card

Inserting and removing the SIMATIC memory card in STOP, STARTUP or RUN mode triggers a re-evaluation of the SIMATIC memory card. The CPU hereby compares the content of the configuration on the SIMATIC memory card with the backed-up retentive data. If the backed-up retentive data matches the data of the configuration on the SIMATIC memory card, the retentive data is retained. If the data differs, the CPU automatically performs a memory reset (which means the retentive data is deleted) and then goes to STOP.

The CPU evaluates the SIMATIC memory card, and this is indicated by the RUN/STOP LED flashing.

Reference

Additional information on the SIMATIC memory card can be found in the SIMATIC memory card (Page 240) section.

11.6 Operating modes of the CPU

Introduction

Operating modes describe the status of the CPU. The following operating modes are possible using the mode selector:

- STARTUP
- RUN
- STOP

In these operating modes, the CPU can communicate, for example, via the PROFINET interface.

The status LEDs on the front of the CPU indicate the current operating mode.

11.6.1 STARTUP mode

Function

Before the CPU starts to execute the cyclic user program, a startup program is executed.

By suitably programming startup OBs, you can specify initialization tags for your cyclic program in the startup program. You have the option of programming no, one or several startup OBs.

Special features during startup

Note the following points regarding the STARTUP mode:

- All outputs are disabled or react according to the parameter settings for the particular I/O module: They provide a substitute value as set in the parameters or retain the last value output and bring the controlled process to a safe operational status.
- The process image is initialized.

  The process image is not updated.

  In order to read the current state from inputs during STARTUP, you can access inputs directly via I/O access.

  In order to initialize outputs during STARTUP, values can be written via the process image or via direct I/O access. The values are output at the outputs during the transition to the RUN mode.
- The CPU always starts up in warm restart mode.
  - The non-retentive bit memory, timers and counters are initialized.
  - The non-retentive tags in data blocks are initialized.
- During startup, cycle time monitoring is not yet running
- The startup OBs are executed in the order of the startup OB numbers. All startup OBs that you have programmed are executed, regardless of the selected startup mode.
- The following OBs can be started during startup, if a corresponding event occurs:
  - OB 82: Diagnostics interrupt
  - OB 83: Pull/plug interrupt for modules
  - OB 86: Rack error
  - OB 121: Programming error (only for global error handling)
  - OB 122: I/O access error (only for global error handling)

    You can find a description of how to use global and local error handling in the STEP 7 online help.

  No other OBs can be started until after the transition to RUN mode.

Response when expected and actual configurations do not match

The configuration downloaded to the CPU represents the expected configuration. The actual configuration is the actual configuration of the ET 200SP distributed I/O system. If the expected configuration and the actual configuration do not match, the setting of the "Comparison preset to actual configuration" parameter determines the reaction of the CPU (see section Operating mode transitions (Page 218)).

Canceling a startup

If errors occur during startup, the CPU cancels the startup and returns to STOP mode.

The CPU does not execute a startup or cancels a startup under the following conditions:

- If no SIMATIC memory card is inserted or an invalid SIMATIC memory card is inserted.
- If no hardware configuration has been downloaded.

Setting the startup behavior

To set the startup behavior, follow these steps:

1. In the device view of the STEP 7 hardware network editor, select the CPU.
2. In the properties under "General" select the "Startup" area.

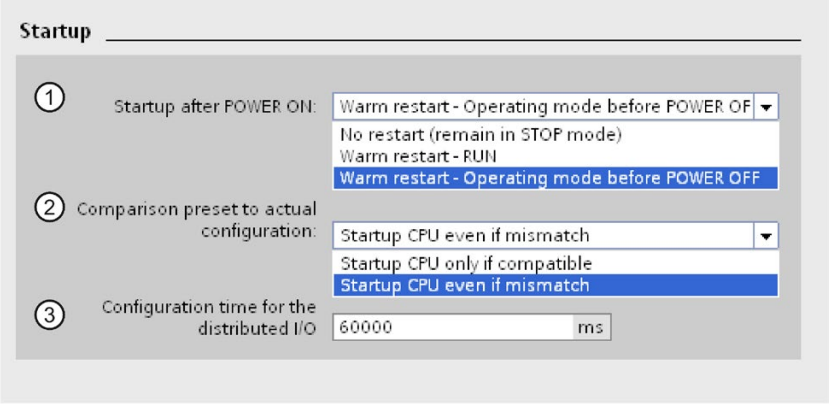

Figure 11-8 Setting the startup behavior

① Sets the startup type after POWER ON

② Defines the startup behavior when a module in a slot does not correspond to the configured module. You can set this parameter centrally, on the CPU or for each module. When you change the setting for a module, the setting made centrally for this module no longer applies.

- Startup CPU only if compatible: In this setting a module on a configured slot has to be compatible with the configured module. Compatible means that the module matches in terms of the number of inputs and outputs and with respect to its electrical and functional properties.
- Startup CPU even if mismatch: With this setting the CPU starts up regardless of the type of module plugged in.

③ Specifies a maximum period (default: 60000 ms) in which the I/O must be ready for operation. The CPU changes to RUN.

If the central and distributed I/O is not ready for operation within the configuration time, the startup characteristics of the CPU depends on the setting of the "Comparison preset to actual configuration" parameter.

Example for the "Comparison preset to actual configuration" parameter

"Startup CPU only if compatible":

The input module DI 16x24VDC ST with 16 digital inputs is a compatible replacement for the input module DI 8x24VDC ST with 8 digital inputs, because the pin assignment and all the electrical and functional properties match.

"Startup CPU even if mismatch":

Instead of a configured digital input module, you insert an analog output module or no module is present in this slot and thus in all subsequent slots. Although the configured inputs cannot be accessed, the CPU starts up.

Note that the user program cannot function correctly in this case and take the appropriate measures.

11.6.2 STOP mode

Function

The CPU does not execute the user program in STOP mode.

All outputs are disabled or react according to the parameter settings for the particular I/O module: They provide a substitute value as set in the parameters or retain the last value output keeping the controlled process in a safe operating status.

In STOP mode, the motor starter responds according to how it was parameterized for the CPU STOP state. The CPU STOP state can be circumvented with the manual local control (Local Control) function. If the CPU is switched off, a motor can be switched on in the motor starter's commissioning mode.

You will find additional information in the Motor starter (https://support.industry.siemens.com/cs/ww/en/view/109479973) manual.

11.6.3 RUN mode

Function

In "RUN" mode the cyclic, time-driven, and interrupt-driven program is executed. Addresses that are in the "Automatic Update" process image are automatically updated in each program cycle. See also the section Process images and process image partitions (Page 142).

Execution of the user program

Once the CPU has read the inputs, the cyclic program is executed from the first instruction to the last instruction.

If you have configured a minimum cycle time, the CPU will not end the cycle until this minimum cycle time is finished even if the user program is completed sooner.

A cycle monitoring time is set to ensure that the cyclic program is completed within a specified time. You can change the cycle monitoring time to suit your requirements. If the cyclic program has not finished running within this time, the system responds with a time error.
Further events such as hardware interrupts and diagnostics interrupts can interrupt the cyclic program flow and prolong the cycle time.

Reference

Further information about cycle and response times is available in the Function Manual Cycle and response times (http://support.automation.siemens.com/WW/view/en/59193558).

11.6.4 Operating mode transitions

Operating modes and operating mode transitions

The following figure shows the operating modes and the operating mode transitions:

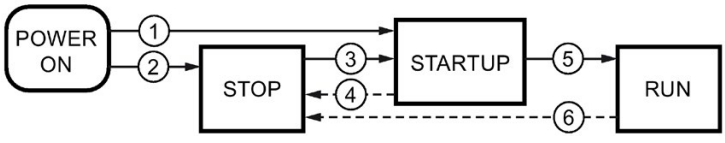

Figure 11-9 Operating modes and operating mode transitions

The table below shows the effects of the operating mode transitions:

Table 11- 7 Operating mode transitions

No.	Operating mode transitions		Effects
①	POWER ON → STARTUP	After switching on, the CPU switches to "STARTUP" mode if: • The hardware configuration and program blocks are consistent. • Startup type "Warm restart - RUN" is set. Or • Startup type "Warm restart mode before POWER OFF" is set and the CPU was in RUN mode before POWER OFF.	The CPU clears the non-retentive memory, and resets the content of non-retentive DBs to the start values of the load memory. Retentive memory and retentive DB contents are retained. The 500 newest entries in the diagnostics buffer are retained.
②	POWER ON → STOP	After switching on, the CPU goes to "STOP" mode if: • The hardware configuration and program blocks are inconsistent. Or • The "No restart" startup type is set. Or • Startup type "Warm restart mode before POWER OFF" is set and the CPU was in STOP mode before POWER OFF.	The CPU clears the non-retentive memory, and resets the content of non-retentive DBs to the start values of the load memory. Retentive memory and retentive DB contents are retained. The 500 newest entries in the diagnostics buffer are retained.

No.	Operating mode transitions		Effects
③	STOP → STARTUP	The CPU switches to "STARTUP" mode if: • The hardware configuration and program blocks are consistent. • You set the CPU to "RUN" mode via the programming device and the mode switch in is RUN position. Or • You set the mode switch from STOP to RUN.	The CPU clears the non-retentive memory, and resets the content of non-retentive DBs to the start values of the load memory. Retentive memory and retentive DB contents are retained. The 500 newest entries in the diagnostics buffer are retained.
④	STARTUP → STOP	The CPU returns to the "STOP" mode in the following cases of "STARTUP": • The CPU detects an error during startup. • You set the CPU to "STOP" via the programming device or mode switch. • The CPU executes a STOP command in the Startup OB.	These operating mode transitions have no effect on data.
⑤	STARTUP → RUN	The CPU goes to the "RUN" mode in the following cases of "START-UP": • The CPU has initialized the PLC tags. • The CPU has executed the startup blocks successfully.	
⑥	RUN → STOP	The CPU returns to the "STOP" mode in the following cases of "RUN": • The CPU detects an error which prevents further work. • The CPU executes a STOP command in the user program. • You set the CPU to "STOP" via the programming device or mode switch.	

11.7 CPU memory reset

Basics of a memory reset

A memory reset on the CPU is possible only in the STOP mode.
When memory is reset, the CPU is changed to a so-called "initial status".
This means that:

- An existing online connection between your programming device/PC and the CPU is terminated.
- The content of the work memory and the retentive and non-retentive data (applies only to manual memory reset by the user) are deleted.
- The diagnostics buffer, time of day, IP address and the device name are retained.
- Subsequently the CPU is initialized with the loaded project data (hardware configuration, code and data blocks, force jobs). The CPU copies this data from the load memory to the work memory.

  Result:
  - If you set an IP address in the hardware configuration ("Set IP address in the project" option) and a SIMATIC memory card with the project is in the CPU, this IP address is valid after the memory reset.
  - Data blocks no longer have current values but rather their configured start values.
  - Force jobs remain active.

How can I tell if the CPU is performing a memory reset?

The RUN/STOP LED flashes yellow at 2 Hz. After completion the CPU goes into STOP mode, and the RUN/STOP LED is switched on (permanently lit yellow).

Result after memory reset

The following table provides an overview of the contents of the memory objects after memory reset.

Table 11- 8 Result after memory reset

Memory object	Content
Actual values of the data blocks, instance data blocks	Initialized
Bit memory, timers and counters	Initialized
Retentive tags from technology objects (for example, adjustment values of absolute encoders)*	Retained
Diagnostics buffer entries	Retained
IP address	Retained
Device name	Retained
Counter readings of the runtime meters	Retained
Time of day	Retained

* The retentive tags from technology objects are retained but the content of specific tags is partly re-initialized.

11.7.1 Automatic memory reset

Possible cause of an automatic memory reset

The CPU executes an automatic memory reset if an error occurs that prevents normal further processing.

Causes for such errors can be:

- User program is too large, and cannot be completely loaded into work memory.
- The project data on the SIMATIC memory card is corrupt, for example, because a file was deleted.
- If you remove or insert the SIMATIC memory card and the backed-up retentive data differs in structure from that of the configuration on the SIMATIC memory card.

11.7.2 Manual memory reset

Reason for a manual memory reset

CPU memory reset is required to reset the CPU to its "original state".

CPU memory reset

There are two options for performing a CPU memory reset:

- Using the mode selector
- Using STEP 7

Procedure using the mode selector

Note

Memory reset ↔ Reset to factory settings

The operation described below also reflects the procedure for resetting to factory settings:

- Selector operation with inserted SIMATIC memory card: CPU executes a memory reset
- Selector operation without inserted SIMATIC memory card: CPU executes reset to factory settings

To reset the CPU memory using the mode selector, proceed as follows:

1. Set the mode selector to the STOP position.

   Result: The RUN/STOP LED lights up yellow.

2. Set the mode selector to the MRES position. Hold the selector in this position until the RUN/STOP LED lights up for the 2nd time and remains continuously lit (this takes three seconds). After this, release the switch.

3. Within the next three seconds, switch the mode selector back to the MRES position, and then back to STOP again.

Result: The CPU executes memory reset.

For information on resetting the CPU to factory settings, refer to the section Resetting the CPU to factory settings (Page 264).

Procedure using STEP 7

For a memory reset of the CPU using STEP 7 proceed as follows:

1. Open the "Online Tools" task card of the CPU.

2. Click the "MRES" button in the "CPU control panel" pane.

3. Click "OK" in response to the confirmation prompt.

Result: The CPU switches to STOP mode and performs a memory reset.

11.8 Reassigning parameters during operation

Introduction

You have the option of reassigning the parameters for the ET 200SP I/O modules during operation.

Changing parameters during operation

You make the parameter settings of the I/O modules using data records. Each I/O module has a separate data record. The instruction "WRREC" applies the changed parameters to the I/O module.
If you are using the CPU as an I-device, you reassign the parameters of the I/O modules via the I-device.

Note
If you write data records from the user program to the modules of the distributed I/O, make sure that these modules actually exist and are available. You can evaluate OB83 for this purpose. After inserting a module, the CPU does not call OB83 until the module has started up and its parameters are assigned. This ensures the execution of the data record operations without errors.

Note
You need to transfer the new parameters with the "WRREC" instruction after a POWER OFF/POWER ON of the ET 200SP.

Instruction for parameter assignment

The following instruction is provided for assigning parameters to the I/O module in the user program:

Instruction	Application
"WRREC"	Transfer the modifiable parameters to the addressed ET 200SP module.

Error message

In the event of an error, the following return values are reported:

Table 11- 9 Error message

Error code	Meaning
$80E0_H$	Error in header information
$80E1_H$	Parameter error

Reference

You will find the setup of the parameter data record in the manuals of the I/O modules (http://support.automation.siemens.com/WW/view/es/55679691/133300).

11.9 Identification and maintenance data

11.9.1 Reading out and entering I&M data

I&M data

I&M identification data is information which is stored on the module either as read-only data (I-data) or read/write data (M-data).

Identification data (I&M0): Manufacturer information about the module that can only be read and is in part also printed on the housing of the module, for example, article number and serial number.
Maintenance data (I&M1, 2, 3): Plant-dependent information, e.g. installation location. Maintenance data is created during configuration and written to the module.
All modules of the ET 200SP distributed I/O system support identification data (I&M0 to I&M3).

The I&M identification data supports you in the following activities:

- Checking the plant configuration
- Locating hardware changes in a plant
- Correcting errors in a plant

Modules can be clearly identified online using the I&M identification data.

STEP 7 allows you to read the identification I&M data (see STEP 7 online help).

Note

The BusAdapter and the interface module IM 155-6 PN HF support the identification data I&M0 to I&M4 (signature).

Options for reading out I&M data

- Via the user program
- Via STEP 7 or HMI devices
- Via the CPU web server

Procedure for reading I&M data by means of the user program

You have the following options to read the modules' I&M data in the user program:

- using the RDREC instruction

  The record structure for distributed modules that are accessible via PROFINET IO/PROFIBUS DP, is described in the chapter Record structure for I&M data (Page 227).

- using the Get_IM_Data instruction

Reference

The description of the instructions can be found in the STEP 7 online help.

Procedure for reading the I&M data via STEP 7

Requirements: There must be an online connection to the CPU/interface module.

To read I&M data using STEP 7, follow these steps:

1. In the project tree, under "Distributed I/O" select the IO device IM 155-6 PN ST (for example).
2. Select **> IO device > Online & diagnostics > Identification & Maintenance**.

Procedure for entering maintenance data via STEP 7

STEP 7 assigns a default module name. You can enter the following information:

- Plant designation (I&M1)
- Location identifier (I&M1)
- Installation date (I&M2)
- Additional information (I&M3)

To enter maintenance data via STEP 7, follow these steps:

1. In the device view of the STEP 7 hardware network editor, select the interface module, for example.
2. In the properties under "General", select the "Identification & Maintenance" area and enter the data.

During the loading of the hardware configuration, the I&M data is also loaded.

Procedure for reading I&M data via the Web server

The procedure is described in detail in the Web server (http://support.automation.siemens.com/WW/view/en/59193560) Function Manual.

11.9.2 Data record structure for I&M data

Reading I&M data records (distributed via PROFINET IO)

You can directly access specific identification data by selecting **Read data record** (RDREC instruction). You obtain the corresponding part of the identification data under the relevant data record index.

The data records are structured as follows:

Table 11- 10 Basic structure of data records with I&M identification data

Content	Length (bytes)	Coding (hex)
Header information		
BlockType	2	I&M0: 0020_H I&M1: 0021_H I&M2: 0022_H I&M3: 0023_H
BlockLength	2	I&M0: 0038_H I&M1: 0038_H I&M2: 0012_H I&M3: 0038_H
BlockVersionHigh	1	01
BlockVersionLow	1	00
Identification data		
Identification data (see table below)	I&M0/index $AFF0_H$: 54 I&M1/index $AFF1_H$: 54 I&M2/index $AFF2_H$: 16 I&M3/index $AFF3_H$: 54	

Table 11- 11 Data record structure for I&M identification data

Identification data	Access	Default	Explanation
Identification data 0: (data record index AFF0 hex)			
VendorIDHigh	Read (1 byte)	00_H	This is where the name of the manufacturer is stored (42_D = SIEMENS AG).
VendorIDLow	Read (1 byte)	2 A_H	
Order_ID	Read (20 bytes)	6ES7155-6AU00-0BN0	Article number of the module (e.g. of the interface module)
IM_SERIAL_NUMBER	Read (16 bytes)	-	Serial number (device-specific)
IM_HARDWARE_REVISION	Read (2 bytes)	1	Corresponding HW version
IM_SOFTWARE_REVISION	Read	Firmware version	Provides information about the firmware version of the module
• SWRevisionPrefix	(1 byte)	V	
• IM_SWRevision_Functional_Enhancement	(1 byte)	00 - FF_H	
• IM_SWRevision_Bug_Fix	(1 byte)	00 - FF_H	

Identification data	Access	Default	Explanation
• IM_SWRevision_Internal_ Change	(1 byte)	00 - FF_H	
IM_REVISION_COUNTER	Read (2 bytes)	0000_H	Provides information about parameter changes on the module (not used)
IM_PROFILE_ID	Read (2 bytes)	0000_H	Generic Device
IM_PROFILE_SPECIFIC_TYPE	Read (2 bytes)	0005_H	Interface modules/BusAdapters
		0003_H	I/O modules and motor starters
		0001_H	CPU
IM_VERSION	Read	0101_H	Provides information on the version of the identification data (0101_H = Version 1.1)
• IM_Version_Major	(1 byte)		
• IM_Version_Minor	(1 byte)		
IM_SUPPORTED	Read (2 bytes)	$000E_H$	Provides information about the available identification data (I&M1 to I&M3)
Maintenance data 1: (data record index AFF1 hex)			
IM_TAG_FUNCTION	Read/write (32 bytes)	-	Enter a module identifier here that is unique plant-wide.
IM_TAG_LOCATION	Read/write (22 bytes)	-	Enter the installation location of the module here.
Maintenance data 2: (data record index AFF2 hex)			
IM_DATE	Read/write (16 bytes)	YYYY-MM-DD HH:MM	Enter the installation date of the module here.
Maintenance data 3: (data record index AFF3 hex)			
IM_DESCRIPTOR	Read/write (54 bytes)	-	Enter a comment describing the module.

Reading I&M data records with data record 255 (distributed via PROFIBUS DP)

The modules support standardized access to identification data via DS 255 (index 65000 to 65003). For further information on the DS 255 data structure, refer to the specifications of the Profile Guidelines Part 1: Identification & Maintenance Functions, Order No.: 3.502, Version 2.1, May 2016

11.9.3 Example: Read out firmware version of the CPU with Get_IM_Data

Automation task

You want to check whether the modules in your automation system have the current firmware. The firmware version of the modules can be found in the I&M 0 data. The IM 0 data are the basic information of a device and contain information such as the manufacturer ID, order number, serial number and the hardware and firmware version.

To read out the I&M 0 data, use the "Get_IM_Data" instruction. You read the I&M 0 data of all the modules in the user program of the CPU via "Get_IM_Data" instructions and store them in a data block.

Conditions and parameters

To read out the I&M data of the CPU, use the following block parameters of the "Get_IM_Data" instruction:

- LADDR: Enter the HW ID of the module at the block parameter "LADDR".
- IM_TYPE: Enter the I&M data number (e.g. "0" for I&M 0 data) at the "IM_TYPE" block parameter.
- DATA: Area for storing the read I&M data (for example. in a global data block). Store the I&M 0 data in an area of the data type "IM0_Data".

This example shows you how to read out the I&M 0 data of an ET 200SP CPU. To read out the I&M 0 data of a different module, simply use the HW ID of the module at the parameter LADDR.

Solution

To read out the I&M 0 data of the CPU, follow these steps:

1. Create a global data block to store the I&M 0 data.
2. Create a structure of the data type "IM0_Data" in the global data block. You can assign any name to the structure ("imData") in this case.

SLI_gDB_Get_IM_Data

		Name	Data type	Start value
1		Static		
2		imData	IM0_Data	
3		done	Bool	false
4		busy	Bool	false
5		error	Bool	false
6		status	Word	16#0

Figure 11-10 Example: Data block for I&M data

3. Create the "Get_IM_Data" instruction in the user program, e.g. in OB 1.

4. Connect the "Get_IM_Data" instruction as follows:

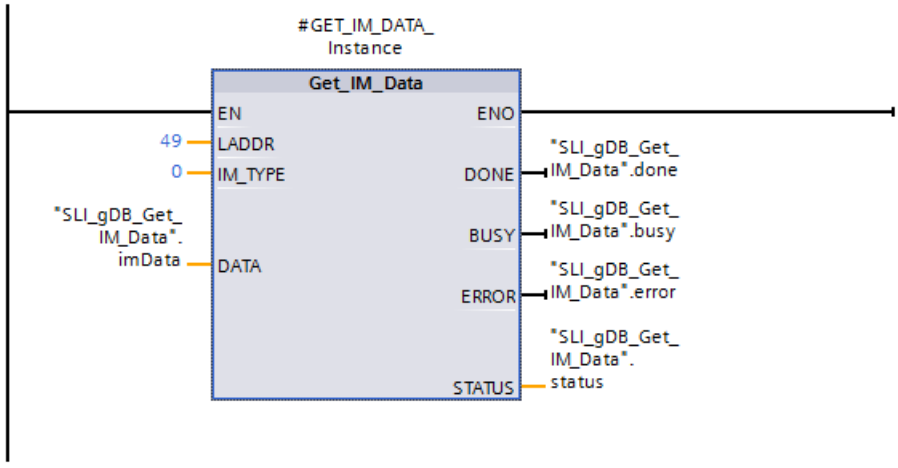

Figure 11-11 Example: Calling the "Get_IM_Data" instruction

5. Call the "Get_IM_Data" instruction in the user program.

Result

The "Get_IM_Data" instruction has stored the I&M 0 data in the data block.

You can view the I&M 0 data online in STEP 7, for example, in the data block with the "Monitor all" button. The CPU in the example is a 1512SP-1 PN (6ES7512-1DK01-0AK0) with the firmware version V2.5.

SLI_gDB_Get_IM_Data

	Name	Data type	Start value	Monitor value
1	Static			
2	imData	IM0_Data		
3	Manufacturer_ID	UInt	0	42
4	Order_ID	String[20]	''	'6ES7 512-1DK01-0...
5	Serial_Number	String[16]	''	'S C-DOS710132013'
6	Hardware_Revision	UInt	0	3
7	Software_Revision	IM0_Version		
8	Type	Char	' '	'V'
9	Functional	USInt	0	2
10	Bugfix	USInt	0	5
11	Internal	USInt	0	0
12	Revision_Counter	UInt	0	0
13	Profile_ID	UInt	0	0
14	Profile_Specific_Ty...	UInt	0	0
15	IM_Version	Word	16#0	16#0101
16	IM_Supported	Word	16#0	16#001E
17	done	Bool	false	TRUE
18	busy	Bool	false	FALSE
19	error	Bool	false	FALSE
20	status	Word	16#0	16#0000

Figure 11-12 Example: I&M 0 data of an ET 200SP CPU

11.10 Shared commissioning of projects

Team Engineering

In Team Engineering several users from various engineering systems work on a project at the same time and access one ET 200SP CPU.

The users can edit separate parts of a master project independently of one another at the same time. The changes of the other editors are displayed in a synchronization dialog during the loading of the configuration in the CPU and synchronized automatically, if possible.

Certain online functions can also be executed at the same time from several engineering systems on a shared CPU, such as:

- Monitoring blocks on the CPU
- Modifying blocks on the CPU
- Trace functions

You can find detailed information on the topic of Team Engineering in the STEP 7 online help.

11.11 Backing up and restoring the CPU configuration

11.11.1 Overview

Backup from online device

You will make a number of changes to your plant over time, for example, add new devices, replace existing devices or adapt the user program. If these changes result in undesirable behavior, you can restore the plant to an earlier state. Before you load a changed configuration to the CPU, first use the option "Backup from online device" to create a complete backup of the current device status.

Upload from device (software)

With the option "Upload from device (software)", you load the software project data from the CPU to an existing CPU in the project.

Upload device as new station

If you are operating a new programming device/PC in the plant, the STEP 7 project that was used to create the plant configuration might not be available. In this case you can use the option "Upload device as new station" to load the device's data into a project in your PG/PC.

Snapshot of the monitor values

You can use the option "Snapshot of the monitor values" to backup the current values of the data block, in order to be able to restore the current values if necessary at a later date.

Overview of backup types

The table below shows the backup of CPU data depending on the selected type of backup and its specific characteristics:

	Backup from online device	Upload from device (software)	Upload device as new station	Snapshot of the monitor values
Current values of all DBs (global and instance data blocks) [1]	✓	✓	✓	✓
Blocks of the type OB, FC, FB and DB	✓	✓	✓	--
PLC tags (tag names and constant names)	✓	✓	✓	--
Technology objects	✓	✓	✓	--
Hardware configuration	✓	--	✓	--
Actual values (bit memories, timers, counters)*	✓	--	--	--
Contents of the SIMATIC memory card	✓	--	--	--
Archives, recipes	✓	--	--	--
Entries in the diagnostics buffer	--	--	--	--
Current time	--	--	--	--
Properties of the type of backup				
Backup possible for fail-safe CPUs	✓	✓ [2]	--	✓
Backup can be edited	--	✓	✓	✓
Backup possible in operating mode	STOP	RUN, STOP	RUN, STOP	RUN, STOP

[1] Only the values of the tags that are set as retentive are saved.

[2] Only possible in the STOP operating state and for individual fail-safe blocks.

Reference

You can find more information on the different backup types in the STEP 7 online help.

Emergency address (emergency IP)

The emergency address (emergency IP address) of a CPU was conceived for diagnostic and downloading functions, e.g. if the CPU can no longer be reached via the IP protocol due to loading of an incorrect project. You can find information on the emergency address in the following FAQ on the Internet (https://support.industry.siemens.com/cs/ww/en/view/97649773).

Archiving multilingual project texts

When you configure a CPU, different categories of texts come into being, e.g.

- Object names (names of blocks, modules, tags, etc.)
- Comments (for blocks, networks, watch tables, etc.)
- Messages and diagnostic texts

Texts are provided by the system (e.g. diagnostic buffer texts) or are created during configuration (e.g. messages).

In a project, texts exist in one single language or in several languages after a translation process. You can maintain project texts in all languages, which are at your disposal in the project navigator (Languages & Resources > Project Texts). The texts arising during configuration can be loaded into the CPU.

The following texts containing the project data are loaded into the CPU in the chosen languages and are also used by the Web server:

- Diagnostic buffer texts (not editable)
- Module status texts (not editable)
- Message texts with associated text lists
- Tag comments and step comments for S7 GRAPH and PLC Code Viewer
- Comments in watch tables

The following texts containing the project languages are also loaded into the CPU in the chosen languages, but are not used by the Web server:

- Comments in tag tables (for tags and constants)
- Comments in global data blocks
- Comments of elements in block interfaces of FBs, FCs, DBs and UDTs
- Network titles in data blocks that are written in ladder logic (LAD), function block diagram (FBD) or statement list (STL)
- Block comments
- Network comments
- Comments of LAD and FBD elements

The CPUs support archiving of multilingual project texts in up to three different project languages. If the project texts belonging to a specific project language nevertheless exceed the memory space reserved for them, it is not possible to load the project into the CPU. The operation is canceled with a message indicating that not enough free storage space is available. In such a case, take measures to reduce the required storage space, for example by shortening comments.

Note

Size of the SIMATIC memory card

If the storage space needed to load projects exceeds the storage space available on the SIMATIC memory card in use, loading into the CPU is canceled with an error message.

Therefore, make sure that there is enough available storage space on your SIMATIC memory card for loading projects.

You will find information on reading out the storage space capacity utilization of the CPU and the SIMATIC memory card in the Structure and use of the CPU memory (https://support.industry.siemens.com/cs/de/de/view/59193101/en) function manual.

You will find information on parameterization of multilingual project texts in STEP 7 in the STEP 7 online help.

11.12 Time synchronization

NTP procedure

All CPUs are equipped with an internal clock. The clock always shows the time-of-day with a resolution of 1 millisecond and the date including the day of the week. The time adjustment for daylight saving time is also taken into account.

You can synchronize the time of the CPUs with an NTP server in NTP mode (NTP: Network Time Protocol).

In NTP mode, the device sends time queries at regular intervals (in client mode) to the NTP server in the subnet (LAN). Based on the replies from the server, the most reliable and most accurate time is calculated and the time on the CPU is synchronized. The advantage of this mode is that it allows the time to be synchronized across subnets. You can configure the IP addresses of up to a maximum of four NTP servers. You address a communications processor or an HMI device, for example, as sources for time synchronization via the IP addresses.

The update interval defines the interval between the time queries (in seconds). The value of the interval ranges between 10 seconds and one day. In NTP mode, it is generally UTC (Universal Time Coordinated) that is transferred; this corresponds to GMT (Greenwich Mean Time).

NTP server for the ET 200SP CPU

You can assign an ET 200SP CPU to up to 4 NTP servers.

In STEP 7 you enable the time synchronization in NTP mode. You can configure up to four NTP servers for the ET 200SP CPU in STEP 7.

If you have enabled time synchronization via NTP for the CPU, then you can enter the IP addresses of up to four NTP servers in the user program. For this, use the "T_CONFIG" instruction.

Enabling time synchronization via NTP server

To enable the time synchronization for the ET 200SP CPU via NTP servers, follow these steps:

1. In the Inspector window, navigate in the properties of the CPU to "General" > "PROFINET interface" > Time synchronization".
2. Enable the option "Enable time synchronization via NTP server".

Configuring NTP server in STEP 7

To configure one or more NTP servers for the ET 200SP CPU, follow these steps:

1. In the Inspector window, navigate in the properties of the CPU to "General" > "PROFINET interface" > Time synchronization".
2. Enter the IP addresses of up to four NTP servers at the parameters "Server 1" to "Server 4".
3. Set the interval of the time queries at the "Update interval" parameter. Set the update interval to between 10 s and 86400 s.

Changing the IP addresses of the NTP servers with the "T_CONFIG" instruction

Requirements:

Before using the instruction you have to specify to the hardware configuration that the IP address is assigned via the user program:

1. For this purpose, open the properties of the PROFINET interface in the device view.
2. Select the following option in the "Time synchronization" dialog: Select "Enable time synchronization via NTP server" and specify the IP address of at least one NTP server.

T_CONFIG instruction:

You store the IP addresses for the NTP time synchronization at the CONF_DATA parameter in the system data type.

Reference

For additional information on time synchronization in the automation environment, refer to the following FAQ on the Internet (https://support.industry.siemens.com/cs/de/en/view/86535497).

11.12.1 Example: Configuring and changing NTP server

Configuring time synchronization with your own NTP server

Automation task

You use your own server in your network. Your own server provides you with the following advantages:

- Protection against unauthorized accesses from outside
- Every device that you synchronize with your own NTP server uses the same time.

You want to synchronize the ET 200SP CPU with this NTP server.

Conditions and parameters

You have your own NTP server in your network with the IP address 192.168.1.15.

They are located in STEP 7 in the Inspector window in the properties of the PROFINET interface X1.

Solution

1. Navigate to "Properties > General > PROFINET interface > Time synchronization > NTP mode".
2. For "Server 1" enter the IP address of the NTP server: 192.168.1.15.

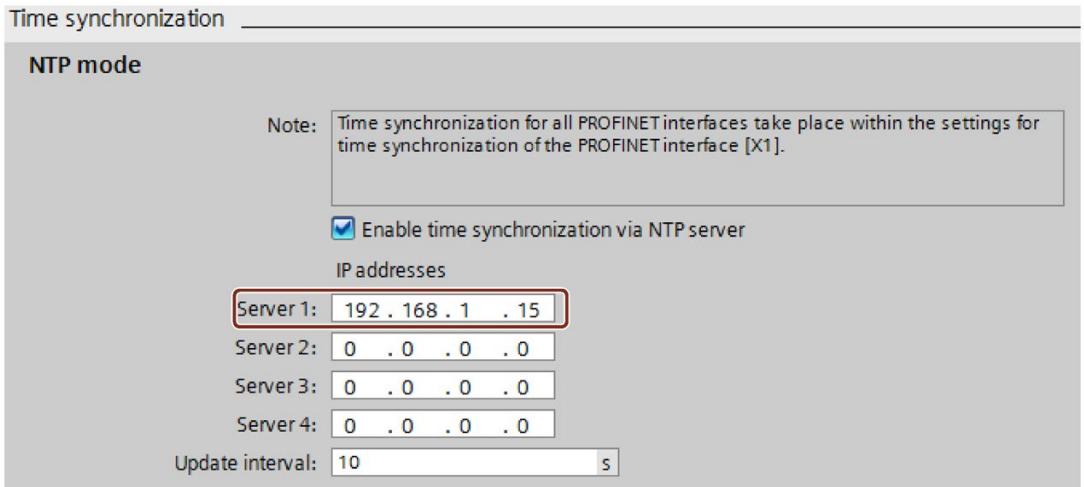

Figure 11-13 Example: Configuring the NTP server

3. Download the hardware configuration to the CPU.

Result

The ET 200SP CPU synchronizes the time with the NTP server 192.168.1.15.

Changing the IP address of an NTP server in the user program

Automation task

You change the NTP server in your network. The new NTP server has the address "192.168.1.10".

You want to change the IP address of the NTP server with which your ET 200SP CPU synchronizes via the user program.

The example shows how you change the IP address of the NTP server to "192.168.1.10"via the user program with the instruction "T_CONFIG".

Conditions and parameters

Requirements:

- You have enabled the option "Enable time synchronization via NTP server" for your CPU in STEP 7.
- You have configured the following NTP servers in STEP 7: Server 1 "192.168.1.15"

To change the IP addressed for NTP servers, use the following block parameter of the "T_CONFIG" instruction:

- Req: A positive edge at the block parameter "Req" starts a job of the "T_CONFIG" instruction.
- Interface: Enter the hardware identifier of the PROFINET interface 1 of the CPU at the "Interface" block parameter. In this example, the HW ID is "64".
- Conf_Data: Area in which you save the IP addresses of the NTP server. Use the data type "IF_CONF_NTP" for this purpose.

Solution

To change the IP address of the NTP server in the user program to "192.168.1.10", follow these steps:

1. Create a global data block in the project tree under "Program blocks > Add new block". Name the global data block "NTP".
2. Create a tag of the data type "IF_CONF_NTP" in the global data block "NTP".

NTP				
	Name	Data type	Start value	Comment
1	Static			
2	NTP_Server	IF_CONF_NTP		
3	Id	UInt	17	
4	Length	UInt	22	
5	Mode	UInt	0	
6	NTP_IP	Array[1..4] of IP_V4		
7	NTP_IP[1]	IP_V4		
8	ADDR	Array[1..4] of Byte		IPv4 address
9	ADDR[1]	Byte	192	IPv4 address
10	ADDR[2]	Byte	168	IPv4 address
11	ADDR[3]	Byte	1	IPv4 address
12	ADDR[4]	Byte	10	IPv4 address
13	NTP_IP[2]	IP_V4		
14	NTP_IP[3]	IP_V4		
15	NTP_IP[4]	IP_V4		
16	change_NTP-Server	Bool	false	
17	done	Bool	false	
18	busy	Bool	false	
19	error	Bool	false	
20	status	DWord	16#0	
21	err_loc	DWord	16#0	

Figure 11-14 Example: Data block with IF_CONF_NTP

3. Create a "T_CONFIG" instruction in the user program.
4. Connect the "T_CONFIG" instruction as follows.

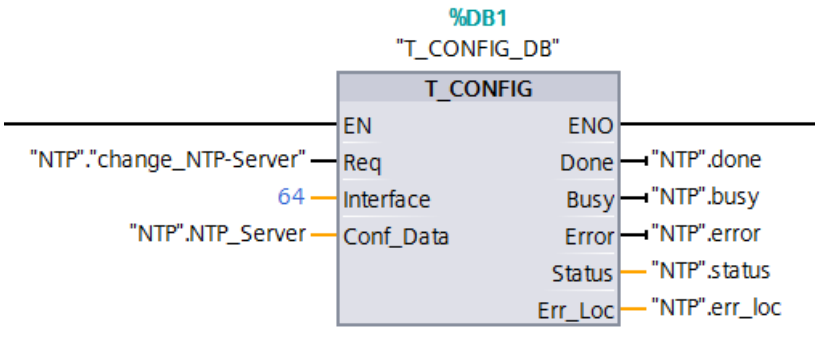

Figure 11-15 Example T_CONFIG: Changing the NTP server

5. In the user program, assign the IP address 192.168.1.10 to the data type "IF_CONF_NTP":

```
"NTP".NTP_Server.NTP_IP[1].ADDR[1] := 192;

"NTP".NTP_Server.NTP_IP[1].ADDR[2] := 168;

"NTP".NTP_Server.NTP_IP[1].ADDR[3] := 1;

"NTP".NTP_Server.NTP_IP[1].ADDR[4] := 10;
```

6. You change the IP address of the NTP server by generating a positive edge for the tag "change_NTP-Server" in the user program.

```
"NTP"."change_NTP-Server" := true;
```

Result

The ET 200SP CPU synchronizes the time with the NTP server 192.168.1.10.

SIMATIC memory card 12

12.1 SIMATIC memory card - overview

Introduction

The CPU uses a SIMATIC memory card as a memory module. The SIMATIC memory card is a preformatted memory card compatible with the Windows file system. The memory card is available in different memory sizes and can be used for the following purposes:

- Transportable data carrier
- Program card
- Firmware update card
- Service data card

If you transfer the user program to the CPU via an online connection, it is written to the SIMATIC memory card, which must be in the card slot of the CPU for this to work.

You can also write the SIMATIC memory card in the PG/PC. A commercially available SD card reader is required to write / read the SIMATIC memory card with the programming device / PC. This is used to copy files directly to the SIMATIC memory card using the Windows Explorer, for example.

A SIMATIC memory card is absolutely required in order to operate the CPU.

Labeling of the SIMATIC memory card

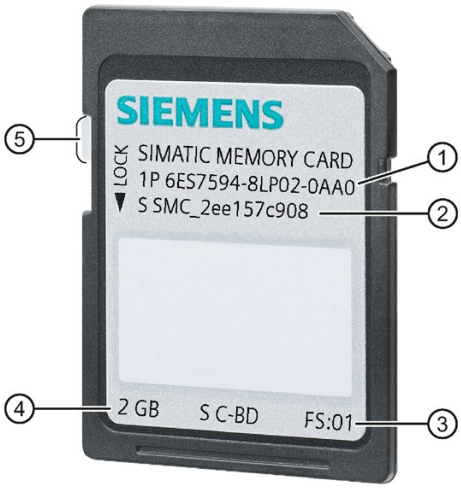

① Article number
② Serial number
③ Production version
④ Memory size
⑤ Slider for enabling write protection:
- Slider up: Not write-protected
- Slider down: Write-protected

Figure 12-1 Labeling of the SIMATIC memory card

Folders and files on the SIMATIC memory card

The following folders and files can be found on the SIMATIC memory card:

Table 12- 1 Folder structure

Folder	Description
FWUPDATE.S7S	Firmware update files for CPU and I/O modules
SIMATIC.S7S	User program, i.e. all blocks (OBs, FCs, FBs, DBs) and system blocks, project data of the CPU
SIMATIC.HMI	HMI-relevant data
DataLogs	DataLog files
Recipes	Recipe files
Backups	Files for backing up and restoring via the display

Table 12- 2 File structure

File type	Description
S7_JOB.S7S	Job file
SIMATIC.HMI\Backup*.psb	Panel backup files
SIMATICHMI_Backups_DMS.bin	Protected file (required to use panel backup files in STEP 7)
__LOG__	Protected system file (required in order to use the card)
crdinfo.bin	Protected system file (required in order to use the card)
DUMP.S7S	Service data file
*.pdf, *.txt, *.csv, etc.	Further files with different formats that you can also store in folders of the SIMATIC memory card

Use the serial number for copy protection

You can set up copy protection for CPUs which binds execution of the block to a specific SIMATIC memory card. Configuration is carried out in STEP 7 in the properties of the block "Bind to serial number of the SIMATIC memory card".

You can only execute the block if it is on the SIMATIC memory card with the specified serial number (see section Copy protection (Page 170)).

Removing a SIMATIC memory card

Only remove the SIMATIC memory card in POWER OFF or STOP mode of the CPU. Make sure that no writing functions (e.g. loading/deleting a block) are active in STOP mode, or were active at POWER OFF. To do this, disconnect the communication connections.

If you remove the SIMATIC memory card during a write process, the following problems can occur:

- The data contents of a file are incomplete.
- The file is no longer readable, or no longer exists.
- The entire content of the card is corrupted.

Inserting the SIMATIC memory card in the CPU in STOP mode triggers a re-evaluation of the SIMATIC memory card. The CPU hereby compares the content of the configuration on the SIMATIC memory card with the backed-up retentive data. If the backed-up retentive data matches the data of the configuration on the SIMATIC memory card, the retentive data is retained. If the data differs, the CPU automatically performs a memory reset (which means the retentive data is deleted) and then goes to STOP.

Also note the following FAQ on the Internet (https://support.industry.siemens.com/cs/ww/en/view/59457183) in connection with the removal of the SIMATIC memory card.

Removing a SIMATIC memory card from Windows computers

If you are using the card in a commercially available card reader under Windows, use the "Eject" function before you remove the card from the card reader. If you remove the card without using the "Eject" function, you may lose data.

Deleting the contents of the SIMATIC memory card

You have the following options for deleting the content of the SIMATIC memory card:

- Delete files using Windows Explorer
- Format with STEP 7

Note

If you format the card with Windows utilities, you will render the SIMATIC memory card unusable as a storage medium for a CPU.

Deletion of files and folders is permitted, with the exception of the "__LOG__" and "crdinfo.bin" system files. The CPU needs these system files. If you delete the files, you will no longer be able to use the SIMATIC memory card with the CPU.

If you have deleted the "__LOG__" and "crdinfo.bin" system files, format the SIMATIC memory card as described in the following section.

Formatting the SIMATIC memory card

Note

You may only format a SIMATIC memory card in the CPU; otherwise, the SIMATIC memory card cannot be used in the CPU.

If you want to format the SIMATIC memory card using STEP 7, an online connection to the relevant CPU must exist. The CPU is in STOP mode.

Follow these steps to format a SIMATIC memory card with inserted SIMATIC memory card:

1. Open the Online and Diagnostics view of the CPU (either from the project context or via "Accessible devices").
2. In the "Functions" folder, select the "Format memory card" group.
3. Click the "Format" button.
4. Click "Yes" in response to the confirmation prompt.

Result:

- The SIMATIC memory card is formatted for use in the CPU.
- The data on the CPU is deleted with the exception of the IP address.

You will find information on how to repair an inconsistently or incorrectly formatted card in the following FAQ on the Internet (https://support.industry.siemens.com/cs/ww/en/view/69063974).

Service life of a SIMATIC memory card

The service life of a SIMATIC memory card depends essentially on the following factors:

- Number of delete or write operations per memory block
- Number of bytes written
- External influences such as ambient temperature

Reference

You will find further information on the service life of the SIMATIC memory card and also storage space capacity utilization, and on the memory areas used, in the Structure and use of the CPU memory (https://support.industry.siemens.com/cs/de/de/view/59193101/en) function manual.

GetSMCinfo instruction

In the TIA Portal, you have the option of reading out the inserted SIMATIC memory card with the GetSMCinfo instruction. The following information can be read via the instruction:

- Memory size in KB
- Assigned memory space in KB
- Maintenance information: Previously used up portion of the service life in %
- Set proportion of the service life as a percentage after which the CPU creates a diagnostics buffer entry and the maintenance LED switches on.

You can find additional information on the GetSMCinfo instruction in the STEP 7 online help.

12.2 Setting the card type

Introduction

You can use the SIMATIC memory card as a program card or as a firmware update card.

Procedure

1. To set the card type, insert the SIMATIC memory card into the card reader of the programming device.
2. Select the "SIMATIC Card Reader" folder in the project navigator.
3. In the properties of the selected SIMATIC memory card, specify the card type:

- **Program card**

  You use a program card as an external load memory for the CPU. It contains the entire user program for the CPU. The CPU transfers the user program from the load memory into the work memory. The user program runs in the work memory.

  The following folder is created on the SIMATIC memory card: SIMATIC.S7

- **Firmware update card**

  You can save firmware for CPUs and for I/O modules on a SIMATIC memory card. It is thus possible to perform a firmware update with the help of a specifically prepared SIMATIC memory card.

  The following folder is created on the SIMATIC memory card: FWUPDATE.S7S

Reference

You can find more information on this topic in the STEP 7 online help.

12.3 Data transfer with SIMATIC memory cards

Transferring objects from the project to a SIMATIC memory card

When the SIMATIC memory card is inserted into the programming device or into an external card reader, you can transfer objects from the project tree (STEP 7) to the SIMATIC memory card as follows:

- Individual blocks (multiple selection possible)

  In this case, the transfer is consistent, i.e. the function takes dependencies between blocks due to block calls into account.

- CPU folder

  In this case, all runtime-relevant objects including blocks and the hardware configuration are transferred onto the SIMATIC memory card - just as when downloading.

- Service data
  In this case, the service data previously saved (see chapter Reading out/saving service data (Page 280)) is transferred to the SIMATIC memory card.

To perform a transfer, you can transfer the objects by dragging and dropping, or use the "Card Reader/USB memory > Write to memory card" command in the "Project" menu.

Firmware update using a SIMATIC memory card

You can find information on how to perform a firmware update using a SIMATIC memory card in the section Firmware update (Page 257).

Reference

For additional information about the SIMATIC memory card, refer to the STEP 7 online help.

Maintenance 13

13.1 Removing and inserting I/O modules/motor starters (hot swapping)

Introduction

The ET 200SP distributed I/O system supports removal and insertion of I/O modules and motor starters (hot swapping) during operation (RUN mode):

- CPU/interface module HF, HS: You can remove and insert any number of I/O modules/motor starters.
- ST, BA interface module: You can only remove and insert one I/O module/motor starter.

This section provides further information on removing and inserting I/O modules/motor starters.

I/O modules/motor starters must not be removed or inserted during operation (RUN operating state) in hazardous areas.

Requirements

The following table describes which modules you may insert and remove under which conditions:

Table 13- 1 Removal and insertion of modules

Modules	Removal and insertion	Conditions
CPU	No	---
BusAdapter	No	---
CM DP module	No	---
Interface module	No	---
I/O modules	Yes	• Digital output modules: Only when load is switched off • Digital modules: For load voltage above the safe extra-low voltage: Only with switched off load voltage supply • Technology modules: Only with switched off supply voltage L+ • AI Energy Meter ST: – Only when measuring voltage on primary side is switched off, or – Without the special current transformer terminal, measuring voltage and load current must be through the converters, which means the machine or the load must be switched off in the process. With the special terminal, the process can continue because the current transformer is isolated safely. However, the measuring voltage on the module, at connections UL1-UL3, still needs to be isolated.

Modules	Removal and insertion	Conditions
PotDis-TerminalBlock	Yes	Only in de-energized state.
Motor starter	Yes [1)]	Only when the load is disconnected; when switched on, the motor starter switches off automatically when the rotary interlock is operated.
Server module	No	---

1) The motor starter also counts as removed in the parking position

NOTICE

Risk of hazardous system states

If you remove and insert digital output modules with the load switched on or technology modules with the supply voltage switched on, this can result in hazardous system states.

The ET 200SP distributed I/O system or the connected sensors may be damaged as a result.

Therefore, a digital output module may only be inserted and removed when the load is switched off and a technology module may only be inserted and removed when the supply voltage is switched off.

NOTICE

Risk of hazardous system states

If you remove and insert the AI Energy Meter ST with the primary-side voltage switched on at the current transformer, this can result in hazardous system states.

The ET 200SP distributed I/O system may be damaged as a result.

For this reason, remove and insert the AI Energy Meter ST

- Only when measuring voltage on primary side is switched off, or
- Only when a special current transformer terminal is used which short-circuits the secondary end of the transformer when a module is removed.

Do not remove or insert the AI Energy Meter ST until you have removed this current transformer terminal. With the special terminal, the process can continue because the current transformer is isolated safely. However, the measuring voltage on the module at the connections UL1-UL3 still needs to be isolated.

WARNING

Risk of injury from automatic restart

Inserting a motor starter can result in dangerous system states. The motor starter can restart again autonomously if an ON command is active.

This can result in serious injury caused by connected devices that are automatically started up.

Withdraw and insert a motor starter only after disconnecting the load.

Removing and inserting I/O module or motor starter with CPU/interface module HF, HS

You can remove and insert any number of I/O modules/motor starters during operation. The CPU/interface module and the inserted I/O modules/motor starters remain in operation.

NOTICE
Reaction of the CPU to removal and insertion of the ET 200SP server module Please note that the backplane bus is deactivated when you remove the server module, regardless of the CPU operating state. Also note that the outputs do not adopt their configured substitute value behavior when you remove the server module. This means you should not remove the server module in the CPU operating states STARTUP, RUN and STOP. If you have nevertheless removed the server module, perform a POWER OFF/POWER ON after you have inserted the server module again.

Removing and inserting BusAdapter or CM DP module

Do not remove or insert the BusAdapter or CM DP module when the supply voltage is switched on. If you remove the BusAdapter or CM DP module after CPU startup, the supply voltage of the BusAdapter or CM DP module is switched off automatically. To switch on the supply voltage again, you need to perform a POWER OFF/POWER ON after inserting the BusAdapter/CM DP module.

Removing and inserting I/O module or motor starter with interface module ST, BA

1. You can remove **one** I/O module/**one** motor starter during operation. If you remove another I/O module/motor starter, this results in a station stop of the ET 200SP distributed I/O system:
   - All I/O modules/motor starters of the ET 200SP distributed I/O system fail → Substitute value behavior.
   - The interface module continues to exchange data with the IO controller and report diagnostics.

   Note

   If you want to replace several I/O modules/motor starters during operation, you must replace them one after the other.

2. If you insert all but one of the I/O modules/motor starters withdrawn during operation, all I/O modules will start up again.

   Note

   I/O modules/motor starters inserted in empty slots and then removed are also regarded as withdrawn during operation.

3. After a POWER OFF/POWER ON of the supply voltage 1L+ of the interface module, all available I/O modules/motor starters start up again in line with the configuration. Evaluation of the I/O modules/motor starters removed during operation starts again (see 1).

Removing I/O modules

To remove an I/O module, follow these steps:

1. Simultaneously press the top and bottom release buttons of the I/O module.
2. Pull the I/O module out of the BaseUnit, parallel in a forward direction.

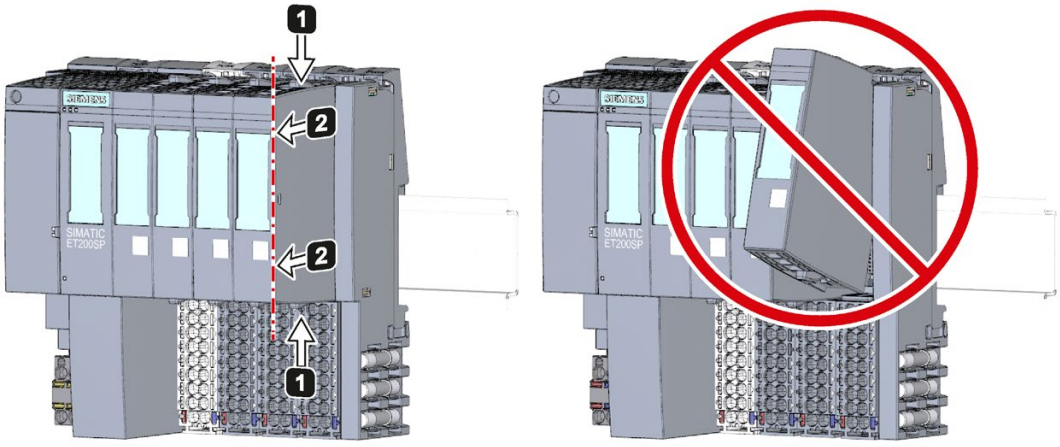

Figure 13-1 Removing I/O modules

See also

Interface modules (http://support.automation.siemens.com/WW/view/en/55683316/133300)

13.2 Changing the type of an I/O module

Introduction

The coding element is a two-part element. When shipped from the factory, both parts are in the I/O module. When an I/O module is installed for the first time, a part of the coding element clicks into the BaseUnit. This mechanically prevents the insertion of a different module type.

There are two versions of the ET 200SP distributed I/O system:

- Mechanical coding element: Ensures the mechanical coding described above.
- Electronic coding element: In addition to the above-mentioned mechanical coding, this version also has an electronic, rewritable memory for module-specific configuration data (such as the F-destination address for fail-safe modules, parameter data for IO link master).

Requirement

Refer to section Application planning (Page 36).

NOTICE
Do not manipulate the coding element Making changes to the coding element may cause dangerous conditions in your plant and/or result in damage to the outputs of the ET 200SP distributed I/O system. To avoid physical damage, do not manipulate the coding.

Changing the type of an I/O module

You have already removed the I/O module.

To make a type change for an I/O module, follow these steps:

1. Push the coding element out of the BaseUnit using a screwdriver.
2. Put the coding element back onto the removed I/O module.
3. Insert the new I/O module (other module type) into the BaseUnit until you hear it click into place.

4. Label the new I/O module.

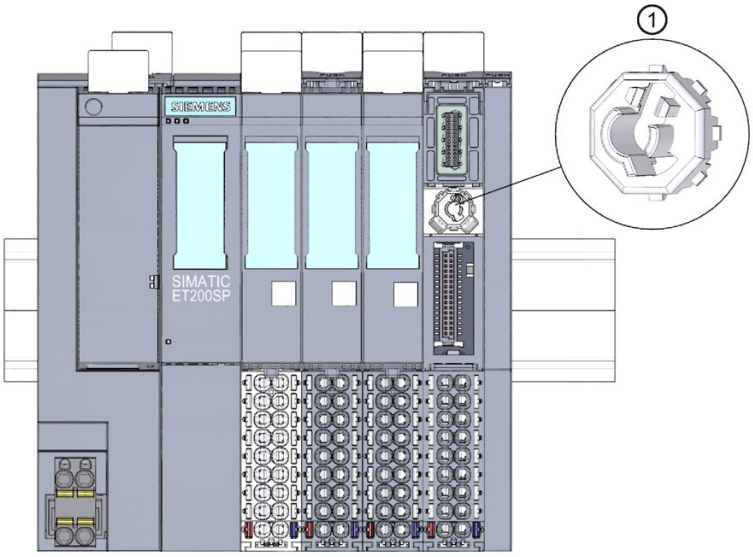

① Coding element

Figure 13-2 Changing the type of an I/O module

13.3 Replacing an I/O module

Introduction

When an I/O module is installed for the first time, a part of the coding element clicks into the BaseUnit. When you replace an I/O module with the same type of module, the correct coding element is already present in the BaseUnit.

Requirement

Refer to section Application planning (Page 36).

Replacing an I/O module

You have already removed the I/O module.

To replace an I/O module, follow these steps:

1. Remove the coding element (part) from the underside of the new I/O module.
2. Insert the new I/O module (same module type) into the BaseUnit until you hear it click into place.
3. Mark the new I/O module (labeling strip, equipment labeling plate).

13.4 Replacing a motor starter

The SIMATIC ET 200SP motor starter is wired.

To replace a SIMATIC ET 200SP motor starter, proceed as follows:

1. Turn the mechanical rotary interlock counter-clockwise to the assembly/disassembly position.

   Note

   Operating position/READY

   Turn the mechanical rotary interlock out of the READY position only in the current-free state (motor off).

2. Remove the SIMATIC ET 200SP motor starter from the BaseUnit.
3. Assemble the new motor starter as described.

   Note

   Mounting the motor starter

   You will find out how to mount the motor starter in chapter "Mounting/disassembly of motor starters (Page 120)".

WARNING

Risk of injury from automatic restart

When you replace the motor starter, the motor starter can restart again autonomously if an ON command is active. This can result in property damage or serious injury caused by connected devices that are automatically started up.

Revoke the ON commands on the motor starter before replacing the motor starter.

CAUTION

Protection against electrostatic charge

When handling and installing the SIMATIC ET 200SP motor starter, ensure protection against electrostatic charging of the components. Changes to the system configuration and wiring are only permissible after disconnection from the power supply.

13.5 Replacing the terminal box on the BaseUnit

Introduction

The terminal box is part of the BaseUnit. You can replace the terminal box if necessary. You do not need to dismantle the BaseUnit to do this.

The power and AUX buses of the potential group are not interrupted when you replace the terminal box.

Requirements

- The BaseUnit is mounted, wired and fitted with an I/O module.
- The terminal may only be replaced when the supply voltage is switched off.

Required tools

3 to 3.5 mm screwdriver

Procedure

Watch the video sequence: "Replace terminal box on BaseUnit" (http://support.automation.siemens.com/WW/view/en/95886218)

Proceed as follows to replace the terminal box on a BaseUnit:

1. If present, turn off the supply voltage on the BaseUnit.
2. Simultaneously press the top and bottom release buttons of the I/O module and pull the module out of the BaseUnit.
3. Disconnect the wiring on the BaseUnit.
4. The release button of the terminal box is located on the underside of the BaseUnit. Use a screwdriver to push in the small opening at an angle from above.
5. Swivel the screwdriver slightly upwards to loosen the locking mechanism of the terminal box and lever the terminal box up out of the BaseUnit at the same time.
6. Remove the coding element (part) from the terminal box and press it onto the coding element (part) of the I/O module that you removed in step 2.
7. Insert the new terminal box into the BaseUnit at the top and swivel it downwards until it clips into the BaseUnit.
8. Wire up the BaseUnit.

9. Insert the I/O module into the BaseUnit.
10. Switch on a supply voltage on the BaseUnit.

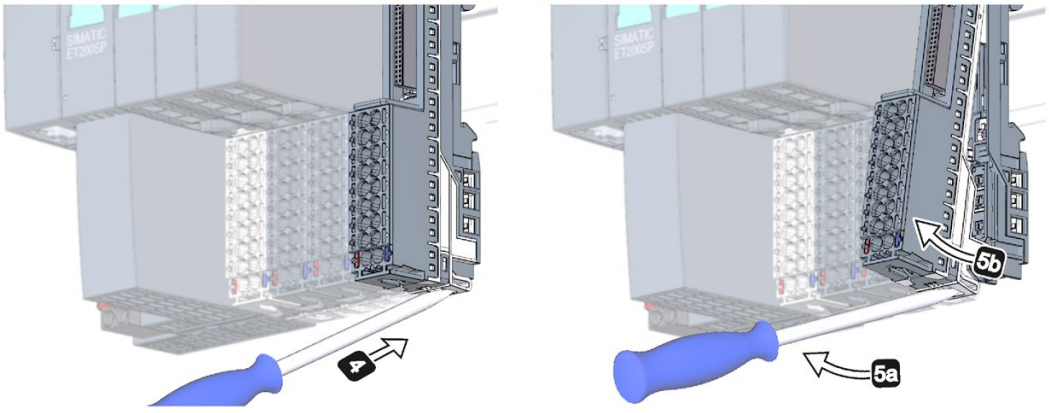

Figure 13-3 Replacing the terminal box on the BaseUnit

13.6 Firmware update

Introduction

During operation it may be necessary to update the firmware (e.g. to extend the available functions).

Update the firmware of the CPU/interface module and the I/O modules using firmware files. The retentive data is retained after the firmware has been updated.

Requirement

- You have downloaded the file(s) for the firmware update from the Product Support (https://support.industry.siemens.com/cs/ww/en/ps) web page.

  On this web page, select:

  – Automation Technology > Automation Systems > Industrial Automation Systems SIMATIC > SIMATIC ET 200 I/O Systems > ET 200 systems for the cabinet > ET 200SP.

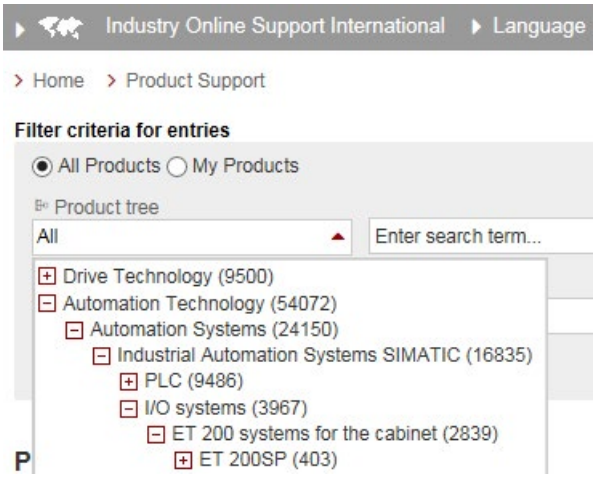

Figure 13-4 ET 200SP in the product tree

From there, navigate to the specific type of module that you want to update. To continue, click on the "Software downloads" link under "Support". Save the desired firmware update files.

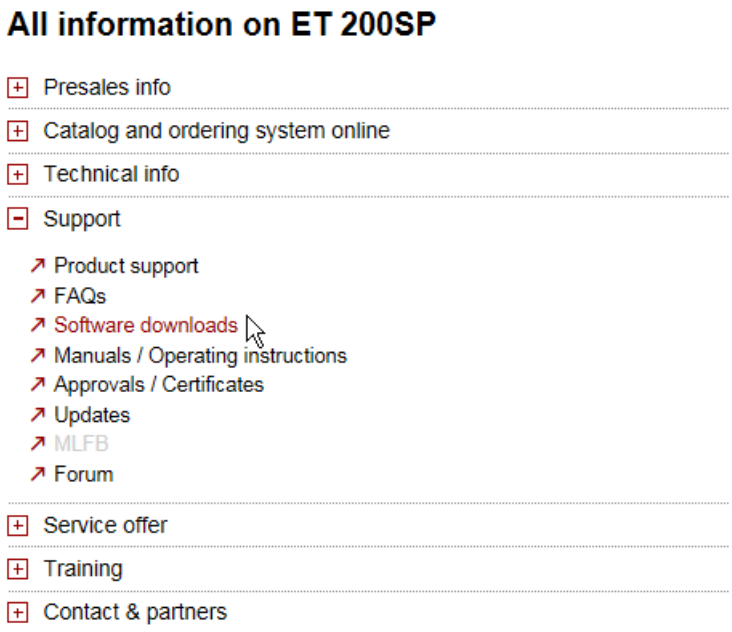

Figure 13-5 Selecting the software downloads

- Before installing the firmware update, make sure that the modules are not being used.

Note

Firmware update of I/O modules

The L+ supply voltage must be present on the module at the start of and during the firmware update.

Additional requirement for fail-safe modules

WARNING

Check the firmware version

When using a new firmware version, always check that the version is approved for use in the module in question.

The attachments of the certificate (http://support.automation.siemens.com/WW/view/en/49368678/134200) for SIMATIC Safety specify the firmware version that is approved.

Options for the firmware update

The following options are available for updating firmware:

- Online in STEP 7 via Online & Diagnostics
- Online in STEP 7 via accessible devices (PROFINET)
- Using a SIMATIC memory card (possible for CPU and central I/O modules)
- Via the integrated Web server (possible for CPU as well as centralized and distributed I/O modules)
- Online via the SIMATIC Automation Tool

Note

Firmware files of the CPU

If you perform a CPU update with STEP 7, you require STEP 7 (TIA Portal as of V13 Update 3).

The table below provides an overview of the media that can be used to update the firmware of a specific module.

Table 13- 2 Overview of firmware update options

Firmware update	CPU	Interface module	I/O module
STEP 7 (TIA Portal)	✓ [1]	✓	✓
STEP 7 (V5.5 SP2 or higher) [2]	--	✓	✓
Accessible devices	✓	✓	✓
SIMATIC memory card	✓	--	✓
Web server of the CPU	✓	--	✓
SIMATIC Automation Tool	✓	✓	✓

[1] V13 update 3 or higher

[2] If the firmware files are only available in this format, you can also install the files using STEP 7 (TIA Portal) but not the SIMATIC memory card or the Web server.

Firmware update for the motor starter

The following options are available for updating firmware for the motor starter.

- Online via PROFINET IO/PROFIBUS DP (with STEP 7)
- Via the integrated Web server (possible for CPU as well as centralized and distributed I/O modules)
- With the TIA Portal:
  - As of SIMATIC STEP 7 V13 SP1 with installed HSP for the ET 200SP motor starter
  - SIMATIC STEP 7 V14 and higher

  Over a SIMATIC memory card
- With SIMATIC STEP 7 version V5.5 SP4 and higher
- For fail-safe motor starters with the TIA Portal Version V14 SP1 or higher and installed HSP.

Note

The firmware update for fail-safe motor starters must take place in a separate ET 200SP system in which only the fail-safe motor starter that is to be updated is inserted.

Installation of the firmware update

WARNING

Risk of impermissible system states

The CPU switches to STOP mode or the interface module to "station failure" as a result of the firmware update being installed. STOP or station failure can have an adverse effect on the operation of an online process or a machine.

Unexpected operation of a process or a machine can lead to fatal or severe injuries and/or to material damages.

Make sure that the CPU/interface module is not executing any active process before installing the firmware update.

Procedure online in STEP 7 via Online & Diagnostics

Proceed as follows to perform an online firmware update via STEP 7:

1. Select the module in the device view.
2. Select the "Online & diagnostics" command from the shortcut menu.
3. Select the "Firmware update" group in the "Functions" folder.
4. Click the "Browse" button to select the path to the firmware update files in the "Firmware update" area.
5. Select the suitable firmware file. The table in the firmware update area lists all modules for which an update is possible with the selected firmware file.
6. Click the "Run update" button. If the module can interpret the selected file, the file is downloaded to the module.

Updating the firmware

The "Run firmware after update" check box is always selected.

When the loading process is complete, the CPU adopts the firmware and then operates with this new firmware.

Note

If a firmware update is interrupted, you need to remove and insert the module before starting the firmware update again.

Procedure online in STEP 7 via accessible devices

To perform a firmware update online via accessible devices, follow these steps:

1. From the "Online" menu, select the "Accessible devices" menu item.
2. In the "Accessible devices" dialog, search for the accessible devices for the selected PROFINET interface.
3. To go to a device in the project tree, select the desired device from the list of accessible devices and click the "Show" button.
4. In the project tree, select the "Online & diagnostics" option of the relevant device and perform the firmware update under the category "Functions/Firmware Update" (CPU, Local modules).

Procedure using the SIMATIC memory card

To perform a firmware update using the SIMATIC memory card, follow these steps:

1. Insert a SIMATIC memory card into the SD card reader of your programming device/computer.
2. To store the update file on the SIMATIC memory card, select the SIMATIC memory card in the "Card Reader/USB memory" folder in the project tree.
3. Select the "Card Reader/USB memory > Create firmware update memory card" command in the "Project" menu.
4. Use a file selection dialog to navigate to the firmware update file. In a further step you can decide whether you want to delete the content of the SIMATIC memory card or whether you want to add the firmware update files to the SIMATIC memory card.
5. Insert the SIMATIC memory card with the firmware update files into the CPU.

Point to note when updating firmware for analog modules and the IO-Link Master CM 4xIO-Link communication module

If you want to update firmware for analog modules or the IO-Link Master CM 4xIO-Link communication module, you must supply a load current of 24 V DC to the modules through the infeed element.

Procedure

1. Remove any inserted SIMATIC memory card.
2. Insert the SIMATIC memory card with the firmware update files into the CPU.
3. The firmware update begins shortly after the SIMATIC memory card has been inserted.
4. Remove the SIMATIC memory card after the firmware update has been completed. The RUN LED on the CPU lights up yellow, the MAINT LED flashes yellow.

If you want to use the SIMATIC memory card later as a program card, delete the firmware update files manually.

Note

If your hardware configuration contains several modules, the CPU updates all affected modules in the slot sequence, which means in ascending order of the module position in the STEP 7 device configuration.

Note

Memory size of the SIMATIC memory card

If you perform a firmware update via the SIMATIC memory card, you must use a large enough card based on the CPU used and the associated I/O modules.

Therefore, be sure to note the file size of the update files when downloading them from the Product Support website. The file size information is especially important when you perform the firmware update not only for the CPU but also for the associated I/O modules, communication modules, etc. The total size of the update files must not exceed the available memory size of your SIMATIC memory card.

Procedure: via the integrated Web server

The procedure is described in the Web server (http://support.automation.siemens.com/WW/view/en/59193560) function manual.

Procedure: online via the SIMATIC Automation Tool

The procedure is described in the SIMATIC Automation Tool (https://support.industry.siemens.com/cs/ww/en/view/98161300) manual (included in the SIMATIC Automation Tool).

Behavior during the firmware update

Note the following behavior of the relevant I/O module when carrying out a firmware update:

- The DIAG LED display flashes red.
- The I/O module retains its current diagnostic status.
- Diagnostics alarm: Channel temporarily unavailable (error code $31_D/1F_H$)
- All outputs are in a current-free/voltage-free state

Note the following behavior when carrying out the firmware update of the motor starter:

- RN flashes green and ER flashes red.
- ST/OL flashes green and MAN flashes yellow.
- The motor starter powers up after completion of the firmware update. Diagnoses are reset. The firmware update does not affect the TMM and the cooling time.
- The sensor supply of the DI module remains active.

Behavior after the firmware update

After the firmware update, check the firmware version of the updated module.

Reference

You will find more information on these procedures in the STEP 7 online help.

13.7 Resetting CPU/interface module (PROFINET) to factory settings

13.7.1 Resetting the CPU to factory settings

Function

The CPU can be reset to its delivery state using "Reset to factory settings". The function deletes all information saved internally on the CPU.

Recommendation:

If you want to remove a PROFINET CPU and use it elsewhere with a different program, or put it into storage, we recommend that you reset the CPU to its factory settings. When restoring the factory settings, remember that you also delete the IP address parameters.

Options for resetting a CPU to factory settings

The following options are available for resetting the CPU to its factory settings:

- Using the mode selector
- Using STEP 7
- Using the SIMATIC Automation Tool

Procedure using the mode selector

Make sure that there is no SIMATIC memory card in the CPU and that the CPU is in STOP mode (the RUN/STOP LED is lit yellow).

Note

Reset to factory settings ↔ Memory reset

The procedure described below also corresponds to the procedure for a memory reset:

- Selector operation with inserted SIMATIC memory card: CPU executes a memory reset
- Selector operation without inserted SIMATIC memory card: CPU executes reset to factory settings

---

Perform a reset to factory settings when there is no SIMATIC memory card inserted as follows:

1. Set the mode selector to the STOP position.

   Result: The RUN/STOP LED lights up yellow.

2. Set the mode selector to the MRES position. Hold the mode selector in this position until the RUN/STOP LED lights up for the 2nd time and remains continuously lit (after three seconds). After this, release the switch.

3. Within the next three seconds, switch the mode selector back to the MRES position, and then back to STOP again.

Result: The CPU executes the "Reset to factory settings", during which time the RUN/STOP LED flashes yellow. When the RUN/STOP LED lights up yellow, the CPU has been reset to factory settings and is in the STOP mode. The "Reset to factory settings" event is entered in the diagnostics buffer.

Note

The IP address of the CPU is also deleted when the CPU is reset to the factory settings through the mode selector.

For information on the memory reset of the CPU, refer to the section CPU memory reset (Page 221).

Procedure using STEP 7

Make sure that an online connection to the CPU exists.

To reset a CPU to factory settings using STEP 7, follow these steps:

1. Open the Online and Diagnostics view of the CPU.

2. In the "Functions" folder, select the "Reset to factory settings" group.

3. If you want to keep the IP address, select the "Retain IP address" option button. If you want to delete the IP address, select the "Reset IP address" option button.

   Note

   The "Delete IP address" option deletes all IP addresses. This applies regardless of how you established the online connection.

   If a SIMATIC memory card is inserted, the "Delete IP address" option deletes the IP addresses and resets the CPU to factory settings. Then, the configuration (including IP address) that is stored on the SIMATIC memory card is transferred to the CPU (see below). If you formatted the memory card before the reset to factory settings or if the memory card is empty, no IP address is transferred to the CPU.

   ---

4. Click the "Reset" button.

5. Click "OK" in response to the confirmation prompts.

Result: The CPU executes the "Reset to factory settings", during which time the RUN/STOP LED flashes yellow. When the RUN/STOP LED lights up yellow, the CPU has been reset to factory settings and is in the STOP mode. The "Reset to factory settings" event is entered in the diagnostics buffer.

Procedure using the SIMATIC Automation Tool

The procedure is described in the SIMATIC Automation Tool (https://support.industry.siemens.com/cs/ww/en/view/98161300) manual (included in the SIMATIC Automation Tool).

Result after resetting to factory settings

The following table provides an overview of the contents of the memory objects after the reset to factory settings.

Table 13- 3 Result after resetting to factory settings

Memory object	Content
Actual values of the data blocks, instance data blocks	Initialized
Bit memory, timers and counters	Initialized
Certain retentive tags from technology objects (e.g. adjustment values of absolute encoders)	Initialized
Diagnostics buffer entries	Initialized
IP address	Depends on the procedure: • Using mode switch: is deleted • Using STEP 7: Depending on the setting of the "Keep IP address"/"Delete IP address" option buttons
Device name	Initialized
Counter readings of the runtime meters	Initialized
Time of day	Initialized

If a SIMATIC memory card was inserted prior to the factory reset, the CPU downloads the configuration contained on the SIMATIC memory card (hardware and software). A configured IP address then becomes valid again.

Reference

Additional information on the topic "Resetting to factory settings" can be found in the Structure and use of the CPU memory (http://support.automation.siemens.com/WW/view/en/59193101) function manual, section on memory areas and retentivity, and in the STEP 7 online help.

13.7.2 Resetting interface module (PROFINET IO) to factory settings

Function

The "Reset to factory settings" function returns the interface module (PROFINET) to its delivery state.

Reset options

- Using STEP 7 (online via PROFINET IO)
- Using a reset button on the interface module (on rear). Exception: The IM 155-6 PN BA does not possess this reset button. See section Resetting the interface module (PROFINET IO) to factory settings with a RESET button (Page 268).

Procedure using STEP 7

To reset an interface module to factory settings using STEP 7, follow these steps:

Make sure that an online connection to the interface module exists.

1. Open the online and diagnostics view of the interface module.
2. In the "Functions" folder, select the "Reset to factory settings" group.
3. Click the "Reset" button.
4. Click "OK" in response to the confirmation prompt.

Result: The interface module then performs "Reset to factory settings".

Result after resetting to factory settings

The following table shows the values of the interface module properties after a factory reset:

Table 13- 4 Properties of the interface module as shipped

Properties	Value
Parameters	Default setting
IP address	Not available
Device name	Not available
MAC address	Available
I&M data	Identification data (I&M0) available Maintenance data (I&M1, 2, 3, 4) reset *
Firmware version	Available

* Can be selected with STEP 7 V14 or higher: "Keep I&M data"/"Delete I&M data"

Note

Failure of downstream stations is possible

Downstream stations on a bus segment can fail when the factory settings are restored on an interface module.

Note

Behavior of the installed I/O modules during reset to factory settings

When "Resetting to factory settings", the I/O modules of the ET 200SP distributed I/O system take on the non-configured state, which means input data are not entered and output data are not output.

Reference

You will find more information on the procedure in the STEP 7 online help.

13.7.3 Resetting the interface module (PROFINET IO) to factory settings with a RESET button

Requirement

The supply voltage to the interface module is turned on.

Required tools

3 to 3.5 mm screwdriver (for resetting with a RESET button)

Procedure

Proceed as follows to reset an interface module to factory settings by means of the RESET button:

1. Remove the interface module from the mounting rail (see Mounting the CPU/interface module (Page 70)) and swivel it downwards.
2. The RESET button is located on the rear of the interface module behind a small opening: Press a screwdriver into the small opening for at least 3 seconds to activate the RESET button.
3. Install the interface module back on the mounting rail (see Mounting the CPU/interface module (Page 70)).
4. Assign parameters to the interface module again.

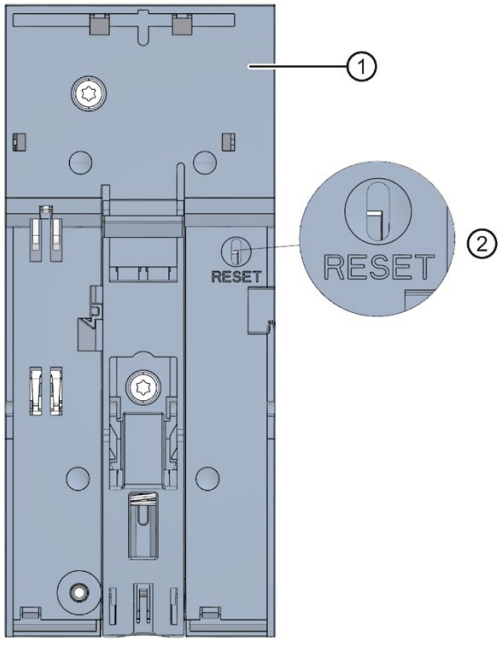

① Rear of the interface module
② RESET button

Figure 13-6 RESET button

13.8 Reaction to faults in fail-safe modules and fail-safe motor starters

Safe state (safety concept)

The basic principle behind the safety concept is the existence of a safe state for all process variables.

Note

For digital F-modules, this safe state is the value "0". This applies to both sensors and actuators. In the case of the fail-safe motor starters, the load is shut down in a fail-safe manner.

Fault reactions and startup of the F-system

The safety function means that fail-safe modules use substitute values (safe state) instead of process values (**passivation of the fail-safe module**) in the following situations:

- When the F-system is started up
- If errors are detected during safety-related communication between the F-CPU and the F-module via the PROFIsafe safety protocol (communication error)
- If F-I/O faults or channel faults are detected (e.g. crossover or discrepancy errors)

Detected faults are written to the diagnostic buffer of the F-CPU and communicated to the safety program in the F-CPU.

F-modules cannot save errors as retentive data. After a POWER OFF / POWER ON, any faults still existing are detected again during startup. However, you have the option of saving faults in your safety program.

WARNING

For channels that you set to "deactivated" in STEP 7, no diagnostic response or error handling is triggered when a channel fault occurs, not even when such a channel is affected indirectly by a channel group fault ("Channel activated/deactivated" parameter).

Remedying faults in the F-system

To remedy faults in your F-system, follow the procedure described in IEC 61508-1:2010 section 7.15.2.4 and IEC 61508-2:2010 section 7.6.2.1 e.

The following steps must be performed:

1. Diagnosing and repairing the fault
2. Revalidation of the safety function
3. Recording in the service report

Substitute value output for fail-safe modules

In the case of F-modules with inputs, if there is passivation, the F-system provides substitute values (0) for the safety program instead of the process data pending at the fail-safe inputs.

In the case of F-modules with outputs, if there is passivation, the F-system transfers substitute values (0) to the fail-safe outputs instead of the output values provided by the safety program. The output channels are de-energized. This also applies when the F-CPU goes into STOP mode. Assignment of substitute values is not possible.

Depending on which F-system you are using and the type of fault that occurred (F-I/O fault, channel fault or communication error), substitute values are used either for the relevant channel only or for all channels of the relevant fail-safe module.

Reintegration of a fail-safe module

The system changes from fail-safe to process values (reintegration of an F-module) either automatically or only after user acknowledgment in the safety program. If channel faults occur, it may be necessary to remove and reinsert the F-module. A detailed listing of faults requiring removal and insertion of the F-module can be found in the section Diagnostic messages of the respective F-module.

After reintegration, the following occurs:

- In the case of an F-module with inputs, the process data pending at the fail-safe inputs is made available to the safety program again
- In the case of an F-module with outputs, the output values provided in the safety program are transferred to the fail-safe outputs again

Additional information on passivation and reintegration

For additional information on passivation and reintegration of F-I/O, refer to the SIMATIC Safety, Configuring and Programming (http://support.automation.siemens.com/WW/view/en/54110126) manual.

Behavior of the fail-safe module with inputs in the event of a communication disruption

F-modules with inputs respond differently to communication errors compared to other errors.

If a communication error is detected, the current process values remain set at the inputs of the F-module. There is no passivation of the channels. The current process values are passivated in the F-CPU.

13.9 Maintenance and repair

The components of the SIMATIC ET 200SP system are maintenance-free.

Note

Repairs to a SIMATIC ET 200SP system may only be carried out by the manufacturer.

13.10 Warranty

To meet the conditions of the warranty, you must observe the safety and commissioning instructions.

Test functions and eliminating problems 14

14.1 Test functions

Introduction

You have the option of testing the operation of your user program on the CPU. You can then monitor signal states and values of tags and can assign values to tags to simulate specific situations in the running of the program.

Note

Using test functions

The use of test functions can influence the program execution time and thus the cycle and response times of the controller to a slight extent (a few milliseconds).

Requirements

- There is an online connection to the relevant CPU.
- An executable program is in the CPU.

Test options

- Testing with program status
- Testing with breakpoints
- Testing with a watch table
- Testing with a force table
- Testing with PLC tag table
- Testing with data block editor
- Testing with the LED flash test
- Testing with trace function

Testing with program status

The program status allows you to monitor the execution of the program. You can display the values of operands and the results of logic operations (RLO) allowing you to recognize and fix logical errors in your program.

Note

Restrictions for the "Program status" function

Monitoring loops can clearly increase the cycle time, depending on the number of tags monitored and depending on the actual number of loops run through.

WARNING

Testing with program status

A test with the "Program status" function can produce serious property damage and personal injury in the event of malfunctions or program errors.

Make sure that you take appropriate measures to exclude the risk of hazardous conditions occurring before running a test with the "Program status" function.

Testing with breakpoints

With this test option, you set breakpoints in your program, establish an online connection, and enable the breakpoints on the CPU. You then execute a program from one breakpoint to another.

Requirements:

- Setting breakpoints is possible in the programming language SCL or STL.

Testing with breakpoints provides you with the following advantages:

- Localization of logic errors step by step
- Simple and quick analysis of complex programs prior to actual commissioning
- Recording of current values within individual executed loops
- Use of breakpoints for program validation also possible in SCL/STL networks within LAD/FBD blocks

Note

Restriction during testing with breakpoints

When you test with breakpoints, there is a risk of overwriting the cycle time of the CPU.

Note

F-System SIMATIC Safety

Setting breakpoints in the standard user program results in errors in the security program:

- Sequence of F cycle time monitoring
- Error in communication with the fail-safe I/O
- Error during safety-oriented CPU-CPU communication
- internal CPU error

If you still wish to use breakpoints for testing, you must deactivate the safety mode beforehand. This will result in the following errors:

- Error in communication with the fail-safe I/O
- Error during safety-oriented CPU-CPU communication

Testing with watch tables

The following functions are available in the watch table:

- Monitoring of tags

  With watch tables, you can monitor the current values of individual tags of a user program or a CPU on the PG/PC and Web server. For the Web server to be able to display the value of tags, you must specify a symbolic name for each tag in the "Name" column of the watch table.

  You can monitor the following operand areas:

  – Inputs and outputs (process image) and bit memory
  – Contents of data blocks
  – Peripheral inputs and peripheral outputs
  – Timers and counters

- Modifying tags

  Use this function to assign fixed values to the individual tags of a user program or CPU. Modifying is also possible for testing with program status.

  You can control the following operand areas:

  – Inputs and outputs (process image) and bit memory
  – Contents of data blocks
  – Peripheral inputs and peripheral outputs (for example, %I0.0:P, %Q0.0:P)
  – Timers and counters

- "Enable peripheral outputs" and "Control immediately"

  These two functions enable you to assign fixed values to individual peripheral outputs of a CPU in the STOP mode. You can also use them to check your wiring.

Testing with the force table

The following functions are available in the force table.

- Monitoring of tags

  With force tables, you can display the current values of individual tags of a user program or a CPU on the PG/PC and Web server. You can monitor the table with or without a trigger condition. For the Web server to be able to display the value of tags, you must specify a symbolic name for each tag in the "Name" column of the force table.

  You can monitor the following tags:

  – Bit memory
  – Contents of data blocks
  – Peripheral inputs (e.g. %I0.0:P)

- Modifying tags

  With this function, you assign fixed values to the individual tags of a user program or a CPU on the PG/PC and Web server. Modifying is also possible for testing with program status.

  You can control the following tags:

  – Bit memories
  – Contents of data blocks
  – Peripheral inputs (e.g. %I0.0:P)

- Forcing of peripheral inputs and peripheral outputs

  You can force individual peripheral inputs or peripheral outputs.

  – Peripheral inputs: Forcing of peripheral inputs (for example %I0.0:P) represents the "bypassing" of sensors/inputs by specifying fixed values to the program. Instead of the actual input value (via process image or via direct access) the program receives the force value.
  – Peripheral outputs: Forcing of peripheral outputs (for example %Q0.0:P) represents the "bypassing" of the complete program by setting fixed values for the actuators.

The force table offers the advantage both of being able to simulate different test environments and also of being able to overwrite tags in the CPU with a fixed value. Thus, you have a possibility of intervening in the ongoing process to regulate it.

Difference between modifying and forcing

The fundamental difference between the modifying and forcing functions consists in the storage behavior:

- Modifying: Modifying of tags is an online function and is not stored in the CPU. You can end modifying of tags in the watch table or by disconnecting the online connection.
- Forcing: A force job is written to the SIMATIC memory card and is retained after a POWER OFF. You can only end the forcing of peripheral inputs and peripheral outputs in the force table.

Testing with PLC tag table

You can monitor the data values that tags currently assume in the CPU directly in the PLC tag table. To do this, open the PLC tag table and start monitoring.

Additionally, you have a possibility of copying PLC tags to a monitoring or force table and of monitoring, controlling or forcing them there.

Testing with data block editor

Various possibilities of monitoring and controlling tags are at your disposal in the data block editor. These functions directly access the current values of the tags in the online program. Current values are the values that the tags assume at the current time during program execution in the CPU's work memory. The following functions for monitoring and control are possible via the data block editor:

- Monitoring tags online
- Controlling individual actual values
- Creating a snapshot of the actual values
- Overwriting actual values with a snapshot

Note

Setting data values during commissioning

During commissioning of a system, data values often have to be adjusted to optimally adapt the program to the general conditions prevailing locally. To this end, the declaration table offers a few functions for data blocks.

Testing with the LED flash test

In many online dialogs, you can perform an LED flash test. This function is useful, for example, when you are not sure which device in the hardware configuration corresponds to the device currently selected in the software.

When you click the "Flash LED" button, an LED flashes on the currently selected device. In the case of the CPU, the RUN/STOP, ERROR and MAINT LEDs flash. They flash until you cancel the flashing test.

Testing with trace function

The trace function is used to record the CPU tags, depending on the settable trigger conditions. Tags are, for example, the drive parameters or system and user tags of a CPU. The CPU saves the recordings. You can display and evaluate the recordings with STEP 7, if necessary.

The trace function can be called from the CPU's folder in the project tree, under the name "Traces".

In connection with trace functions, also pay attention to the following FAQ on the Internet (https://support.industry.siemens.com/cs/ww/en/view/102781176).

Simulation

With STEP 7 you can run and test the hardware and software of the project in a simulated environment. Start the simulation using the menu command "Online" > "Simulation" > "Start".

Reference

You can find more information on test functions in the STEP 7 online help.

Further information about testing with trace and logic analyzer functions is available in the Function Manual Using the trace and logic analyzer function (http://support.automation.siemens.com/WW/view/en/64897128).

14.2 Reading out/saving service data

Service data

In addition to the contents of the diagnostics buffer, the service data contains a wide range of extra information about the internal status of the CPU. If a problem occurs the CPU that cannot be solved with other methods, send the service data to our Service & Support team. The service data allows Service & Support to run fast analysis of the problems that have occurred.

Note

You cannot simultaneously execute a download to the device while reading out the service data of the CPU.

Methods of reading service data

You can read service data with:

- The Web server
- STEP 7
- the SIMATIC memory card

Procedure using the Web server

To read service data using the Web server, follow these steps:

1. Open a Web browser that is suitable for communication with the CPU.
2. Enter the following address in the address bar of the web browser: https://<CPU IP address>/save_service_data, e.g. https://172.23.15.3/save_service_data
3. The service data page will appear on your screen, with a button for saving the service data.

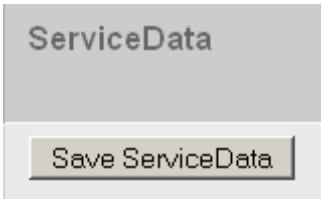

Figure 14-1 Reading out service data with the Web server

4. Save the service data locally on your PC/programming device, by clicking "Save ServiceData".

Result: The CPU stores the data in a .dmp file with the following naming convention: "<Article number> <Serial number> <Time stamp>.dmp". The file name cannot be changed.

Note

If you have defined your user page as the Web server's home page, direct access to the service data by entering the CPU's IP address is not possible. You will find further information on reading out service data via a user-defined page in the Web server (http://support.automation.siemens.com/WW/view/en/59193560) function manual.

Procedure using STEP 7

A description of how to save service data is available under the keyword "Save service data" in STEP 7 online help.

Procedure via the SIMATIC memory card

Use the SIMATIC memory card to read out the service data only if you are no longer able to communicate with the CPU via Ethernet. In all other cases it is preferable to read out the service data via the Web server or STEP 7.

The procedure using the SIMATIC memory card is more time-consuming than the other options for reading out the service data. You must also ensure before reading out that there is sufficient memory space on the SIMATIC memory card.

To read service data using the SIMATIC memory card, follow these steps:

1. Insert the SIMATIC memory card into the card reader of your PC / programming device.
2. Open the job file S7_JOB.S7S in an editor.
3. Overwrite the entry PROGRAM with the string DUMP in the editor.
   Do not use any spaces/line breaks/quotation marks to ensure that the file size is exactly 4 bytes.
4. Save the file under the existing file name.
5. Ensure that the SIMATIC memory card is not write protected and insert it in the card slot of the CPU. Pay attention to the procedure described in Removing/inserting the SIMATIC memory card on the CPU (Page 213).

Result: The CPU writes the service data file DUMP.S7S to the SIMATIC memory card and remains in STOP mode.

The transfer of the service data has been completed as soon as the STOP LED stops flashing and lights up continuously. If the transfer was successful, only the STOP LED lights up. If transfer was not successful, the STOP LED and the ERROR LED flash. In case of an error, the CPU stores a text file with a note on the error that occurred in the DUMP.S7S folder.

Technical specifications 15

Introduction

This chapter lists the technical specifications of the system:

- The standards and test values that the ET 200SP distributed I/O system complies with and fulfills.
- The test criteria according to which the ET 200SP distributed I/O system was tested.

Technical specifications for the modules

The technical specifications of the individual modules can be found in the manuals of the modules themselves. In the event of deviations between the statements in this document and the manuals, the statements in the manuals take priority.

15.1 Standards, approvals and safety notes

Currently valid markings and approvals

Note

Information on the components of the ET 200SP

The currently valid markings and approvals are printed on the components of the ET 200SP distributed I/O system.

Safety information

WARNING

Personal injury and damage to property may occur

In hazardous areas, personal injury and damage to property may occur if you disconnect plug-in connections during operation of an ET 200SP distributed I/O system.

Always switch off the power to the ET 200SP distributed I/O system when disconnecting plug-in connections in hazardous areas.

WARNING

Explosion hazard

If you replace components, compliance with Class I, Div. 2 or zone 2 may become invalid.

WARNING

Area of application

This device is only suitable for use in Class I, Div. 2, Group A, B, C, D; Class I, zone 2, Group IIC, or in non-hazardous areas.

Five safety rules for work in or on electrical installations

A set of rules, which are summarized in DIN VDE 0105 as the "five safety rules", are defined for work in or on electrical installations as a preventative measure against electrical accidents:

1. Isolate
2. Secure against switching on again
3. Verify that the equipment is not live
4. Ground and short-circuit
5. Erect barriers around or cover adjacent live parts

These five safety rules must be applied in the above order prior to starting work on an electrical system. After completing the work, proceed in the reverse order.

It is assumed that every electrician is familiar with these rules.

CE marking

The ET 200SP distributed I/O system meets the general and safety-related requirements of the following directives and conforms to the harmonized standards (EN) for programmable controllers published in the official journals of the European Union:

- 2014/35/EU "Electrical equipment designed for use within certain voltage limits" (Low Voltage Directive)
- 2014/30/EU "Electromagnetic Compatibility" (EMC Directive)
- 2014/34/EU "Equipment and protective systems intended for use in potentially explosive atmospheres" (Explosion Protection Directive)
- 2011/65/EU "Restriction of the use of certain hazardous substances in electrical and electronic equipment" (RoHS Directive)
- 2006/42/EC "Machinery Directive" for ET 200SP fail-safe modules

The EC declarations of conformity are available for the responsible authorities at:

Siemens AG
Digital Factory

Factory Automation
DF FA AS SYS
Postfach 1963
D-92209 Amberg

They are also available for download on the Siemens Industry Online Support (https://support.industry.siemens.com/cs/ww/en/) website, keyword "Declaration of Conformity".

cULus approval

Underwriters Laboratories Inc., complying with

- UL 508 (Industrial Control Equipment)
- CSA C22.2 No. 142 (Process Control Equipment)

OR

cULus HAZ. LOC. approval

HAZ. LOC.

Underwriters Laboratories Inc., complying with

- UL 508 (Industrial Control Equipment)
- CSA C22.2 No. 142 (Process Control Equipment)
- ANSI/ISA 12.12.01
- CSA C22.2 No. 213 (Hazardous Location)

APPROVED for use in
Class I, Division 2, Group A, B, C, D Tx;
Class I, Zone 2, Group IIC Tx

Installation Instructions for cULus haz.loc.

- WARNING – Explosion Hazard – Do not disconnect while circuit is live unless area is known to be non-hazardous.
- WARNING - Explosion Hazard - Substitution of components may impair suitability for Class I, Division 2 or Zone 2.
- This equipment is suitable for use in Class I, Division 2, Groups A, B, C, D; Class I, Zone 2, Group IIC; or non-hazardous locations.

WARNING: EXPOSURE TO SOME CHEMICALS MAY DEGRADE THE SEALING PROPERTIES OF MATERIALS USED IN THE RELAYS.

OR

CSA

CSA C22.2 (Industrial Control Equipment Motor Controllers)

OR

UL

UL 60947-4-2 Low-Voltage Switchgear and Controlgear

OR

FM approval

Factory Mutual Research (FM) in accordance with
Approval Standard Class Number 3611, 3600, 3810
ANSI/ISA 82.02.01 (IEC 61010-1)
CSA C22.2 No. 213
CSA C22.2 No. 1010-1
APPROVED for use in Class I, Division 2, Group A, B, C, D Tx;
Class I, Zone 2, Group IIC Tx

Installation Instructions for FM

- WARNING – Explosion Hazard – Do not disconnect while circuit is live unless area is known to be non-hazardous.
- WARNING - Explosion Hazard - Substitution of components may impair suitability for Class I, Division 2 or Zone 2.
- This equipment is suitable for use in Class I, Division 2, Groups A, B, C, D; Class I, Zone 2, Group IIC; or non-hazardous locations.

WARNING: EXPOSURE TO SOME CHEMICALS MAY DEGRADE THE SEALING PROPERTIES OF MATERIALS USED IN THE RELAYS.

OR

ATEX approval

According to EN 60079-15 (Electrical apparatus for potentially explosive atmospheres; Type of protection "n") and EN 60079-0 (Electrical apparatus for potentially explosive gas atmospheres - Part 0: General Requirements)

II 3 G Ex nA IIC Tx Gc
DEKRA 12ATEX0038X

OR

IECEx approval

According to IEC 60079-15 (Explosive atmospheres - Part 15: Equipment protection by type of protection "n") and IEC 60079-0 (Explosive atmospheres - Part 0: Equipment - General requirements)

Ex nA IIC Tx Gc
IECEx DEK 13.0011X

RCM (C-Tick) Declaration of conformity for Australia/New Zealand

The ET 200SP distributed I/O system fulfills the requirements of the standards

- EN 61000-6-4.

Korea Certificate KCC-REM-S49-ET200SP

Note that this device corresponds to limit class A in terms of the emission of radio frequency interference. This device can be used in all areas, except residential areas.

이 기기는 업무용(A급) 전자파 적합기기로서 판매자 또는 사용자는 이 점을 주의하시기 바라며 가정 외의 지역에서 사용하는 것을 목적으로 합니다.

Marking for the Eurasian Customs Union

EAC (Eurasian Conformity)

Customs Union of Russia, Belarus and Kazakhstan

Declaration of conformity with the technical requirements of the Customs Union (TR CU).

IEC 61131

The ET 200SP distributed I/O system meets the requirements and criteria of the standard IEC 61131-2 (Programmable logic controllers, part 2: Equipment requirements and tests).

IEC 60947

The motor starters belonging to the ET 200SP distributed I/O system meet the requirements and criteria of the IEC 60947 standard.

PROFINET standard

The ET 200SP distributed I/O system is based on IEC 61158 Type 10.

PROFIBUS standard

The ET 200SP distributed I/O system is based on IEC 61158 Type 3.

IO-Link standard

The ET 200SP distributed I/O system is based on IEC 61131-9.

Shipbuilding approval

Classification societies:

- ABS (American Bureau of Shipping)
- BV (Bureau Veritas)
- DNV-GL (Det Norske Veritas - Germanischer Lloyd)
- LRS (Lloyds Register of Shipping)
- Class NK (Nippon Kaiji Kyokai)
- KR (Korean Register of Shipping)
- CCS (China Classification Society)

Use in industrial environments

The ET 200SP distributed I/O system is suitable for use in industrial environments. It meets the following standards for this type of use:

- Requirements on interference emission EN 61000-6-4: 2007 + A1: 2011
- Requirements on immunity EN 61000-6-2: 2005

Use in mixed areas

Under specific prerequisites you can use the ET 200SP distributed I/O system in a mixed area. A mixed area is used for residential purposes and for commercial operations that do not significantly impact the residential purpose.

If you want to use the ET 200SP distributed I/O system in residential areas, you must ensure that its radio frequency interference emission complies with limit class B in accordance with EN 61000-6-3. Suitable measures for observing these limits for use in a mixed area are, for example:

- Installation of the ET 200SP distributed I/O system in grounded control cabinets
- Use of filters in the supply lines

An additional individual acceptance test is also required.

Use in residential areas

Note

ET 200SP distributed I/O system is not intended for use in residential areas

The ET 200SP distributed I/O system is not intended for use in residential areas. If you are using the ET 200SP distributed I/O system in residential areas, radio and TV reception may be affected.

Reference

The certificates for the markings and approvals can be found on the Internet under Service&Support (http://www.siemens.com/automation/service&support).

15.2 Electromagnetic compatibility

Definition

Electromagnetic compatibility (EMC) is the ability of an electrical installation to function satisfactorily in its electromagnetic environment without interfering with that environment.

Among other things, the ET 200SP distributed I/O system also meets the requirements of the EMC legislation for the European single market. The prerequisite is that the ET 200SP distributed I/O system complies with the requirements and guidelines relating to electrical equipment.

EMC in accordance with NE21

The ET 200SP distributed I/O system meets the EMC specifications of the NAMUR recommendation NE21.

Pulse-shaped disturbance variables of the ET 200SP system

The table below shows the electromagnetic compatibility of the ET 200SP distributed I/O system with regard to pulse-shaped disturbance variables.

Table 15- 1 Pulse-shaped disturbance variables

Pulse-shaped disturbance variable	Tested with	Equivalent to severity
Electrostatic discharge in accordance with IEC 61000-4-2	Air discharge ±8 kV Contact discharge: ±6 kV	3 3
Burst pulses (fast transients) in accordance with IEC 61000-4-4	±2 kV (power supply line) ±2 kV (signal line >30 m) ±1 kV (signal cable <30 m)	3 3
High-energy single pulse (surge) in accordance with IEC 61000-4-5 External protective circuit required (see Function manual Designing interference-free controllers (http://support.automation.siemens.com/WW/view/en/59193566))		3
• Asymmetric coupling	±2 kV (power supply lines) DC with protective elements ±2 kV (signal lines/data lines only >30 m) with protective elements if necessary	
• Symmetric coupling	±1 kV (power supply line) DC with protective elements ±1 kV (signal line/data line only >30 m) with protective elements if necessary	

Pulse-shaped disturbance variables of motor starters

The following table shows the electromagnetic compatibility of the ET 200SP motor starters with regard to pulse-shaped interference.

Table 15- 2 Pulse-shaped disturbance variables

Pulse-shaped disturbance variable	Tested with	Equivalent to severity
Burst pulses (fast transients) in accordance with IEC 61000-4-4, tested with 5 kHz.	±2 kV (24 V supply cables) ±2 kV (500 V AC infeed*) ±1 kV (signal cable <30 m)	3
If you mount the motor starter to the right of a 15 mm or 20 mm I/O module or immediately next to a head module, use a dummy module. You will find further information in "Selecting motor starters with a suitable BaseUnit (Page 42)."		
High-energy single pulse (surge) in accordance with IEC 61000-4-5	500 V AC infeed ±2 kV conducted interference - phase to ground ±1 kV conducted interference - phase to phase 24 V supply cable: ±1 kV conducted interference - phase to ground **) ±0.5 kV conducted interference - phase to phase **)	3
**) An RC circuit is not required for hybrid switching devices. If higher values (2 kV (phase to ground) or 1 kV (phase to phase) are required, you will need an additional external protective circuit (see Designing interference-free controllers (http://support.automation.siemens.com/WW/view/en/59193566) function manual).		

Sinusoidal disturbance variables

The tables below show the electromagnetic compatibility of the ET 200SP distributed I/O system with regard to sinusoidal disturbance variables.

- RF radiation

Table 15- 3 Sinusoidal disturbance variables with RF radiation

RF radiation according to IEC 61000-4-3/NAMUR 21 Electromagnetic RF field, amplitude-modulated		Corresponds to degree of severity
80 to 1000 MHz; 1.0 to 2.0 GHz	2.0 GHz to 6.0 GHz	3
10 V/m	3 V/m	
80% AM (1 kHz)		

- RF coupling

Table 15- 4 Sinusoidal disturbance variables with RF coupling

RF coupling in accordance with IEC 61000-4-6	Corresponds to degree of severity
(10 kHz) 150 kHz to 80 MHz	3
10 V_{rms} unmodulated	
80% AM (1 kHz)	
150 Ω source impedance	

Emission of radio frequency interference

Interference emission of electromagnetic fields according to EN 55016 (measured at a distance of 10 m).

Table 15- 5 Interference emission of electromagnetic fields

Frequency	Interference emission
30 MHz to 230 MHz	<40 dB (µV/m) Q
230 MHz to 1000 MHz	<47 dB (µV/m) Q
1 GHz to 3 GHz	<66 dB (µV/m) P
3 GHz to 6 GHz	<70 dB (µV/m) P

Interference emission via the AC power supply according to EN 55016.

Table 15- 6 Interference emission via the AC power supply

Frequency	Interference emission
0.15 MHz to 0.5 MHz	< 79 dB (µV/m)Q < 66 dB (µV/m) M
0.5 MHz to 30 MHz	< 73 dB (µV/m)Q < 60 dB (µV/m) M

15.3 Electromagnetic compatibility of fail-safe modules

Protecting ET 200SP with fail-safe modules against overvoltages

If your equipment requires protection from overvoltage, we recommend that you use an external protective circuit (surge filter) between the load voltage power supply and the load voltage input of the BaseUnits to ensure surge immunity for the ET 200SP with fail-safe modules.

Note

Overvoltage protection measures always require a case-by-case examination of the entire plant. Almost complete protection from overvoltages, however, can only be achieved if the entire building surroundings have been designed for overvoltage protection. In particular, this involves structural measures in the building design phase.

For detailed information regarding overvoltage protection, we recommend that you contact your Siemens representative or a company specializing in lightning protection.

The following figure shows an example configuration with fail-safe modules. Voltage is supplied by one power supply unit. Note, however, that the total current of the modules fed by the power supply unit must not exceed the permissible limits. You can also use multiple power supply units.

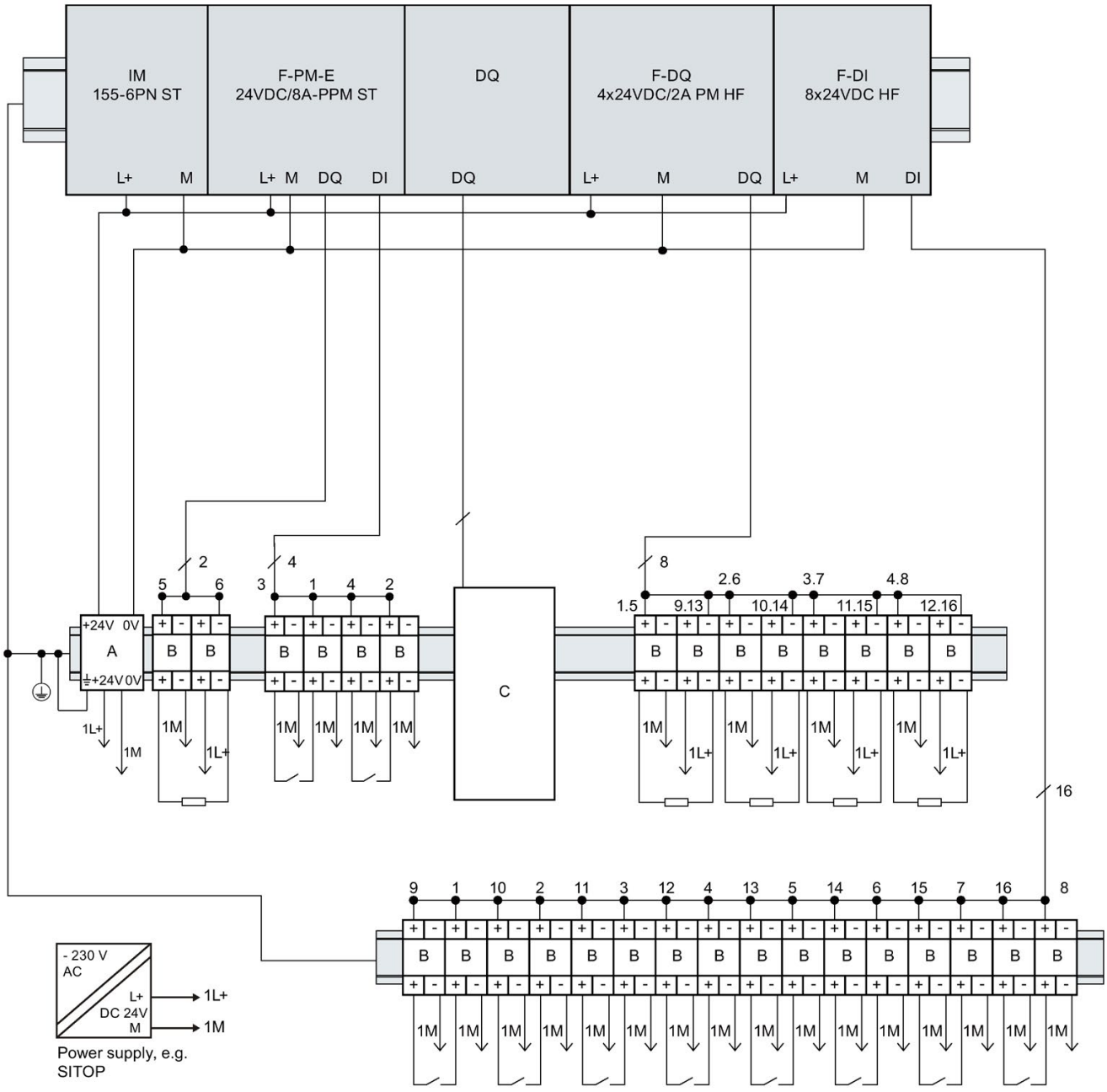

Figure 15-1 External protective circuit (surge filter) for ET 200SP with failsafe modules

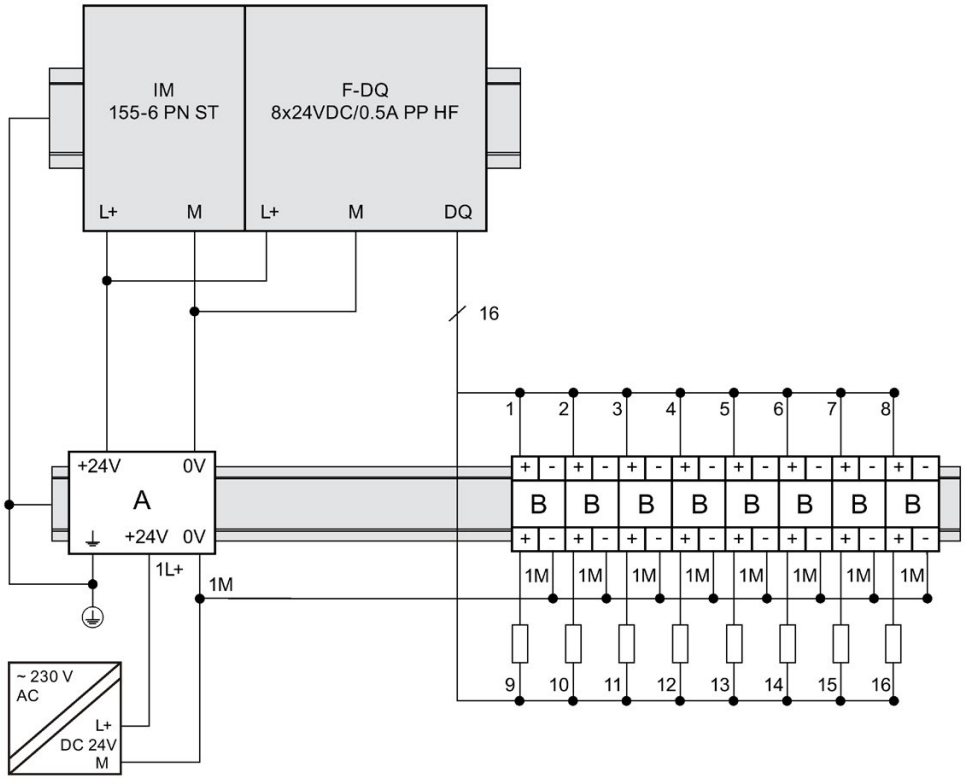

Figure 15-2 External protective circuit (surge filter) for ET 200SP with fail-safe modules

Name	Part number of Dehn Co.
A = BVT AVD 24	918 422
B = DCO RK D 5 24	919 986
C = The external protective circuit required at the outputs of the modules F-PM-E power module load group can be found in the Designing interference-free controllers (http://support.automation.siemens.com/WW/view/en/59193566) function manual.	

15.4 Shipping and storage conditions

Introduction

The ET 200SP distributed I/O system exceeds requirements in terms of shipping and storage conditions according to IEC 61131-2. The following information applies to modules that are shipped and/or stored in their original packaging.

Table 15- 7 Shipping and storage conditions for modules

Type of condition	Permissible range
Free fall (in shipping package)	≤1 m
Temperature	From -40 °C to +70 °C
Barometric pressure	from 1140 to 660 hPa (corresponds to an elevation of -1000 to 3500 m)
Relative humidity	5% to 95%, without condensation
Sinusoidal oscillations according to IEC 60068-2-6	5 - 8.4 Hz: 3.5 mm 8.4 - 500 Hz: 9.8 m/s^2
Impact acc. to IEC 60068-2-27[1)]	250 m/s^2, 6 ms, 1000 shocks

1) Not applicable to motor starters

15.5 Mechanical and climatic environmental conditions

Operating conditions

The ET 200SP distributed I/O system is suitable for use in weather-proof, fixed locations. The operating conditions are based on the requirements of DIN IEC 60721-3-3:

- Class 3M3 (mechanical requirements)
- Class 3K3 (climatic requirements)

You will find the permissible ambient conditions for the motor starter in the Technical data of the motor starter (https://support.industry.siemens.com/cs/ww/en/ps/21859/td).

Mechanical environmental conditions

The following table shows the mechanical environmental conditions in the form of sinusoidal vibrations.

Table 15- 8 Mechanical environmental conditions

Frequency band	ET 200SP with IM 155-6 DP HF, BusAdapters BA 2×FC, BA 2xSCRJ, BA SCRJ/FC, BA 2xLC and BA LC/FC	ET 200SP with BusAdapters BA 2×RJ45, BA SCRJ/RJ45 and BA LC/RJ45	ET 200SP with IM 155-6 PN BA	ET 200SP with digital output module F-RQ 1x24VDC/24..230VAC/5 A
5 ≤ f ≤ 8.4 Hz	3.5 mm amplitude			
8.4 ≤ f ≤ 150 Hz	1 g constant acceleration			
10 ≤ f ≤ 60 Hz	0.35 mm amplitude	---	---	---
60 ≤ f ≤ 1000 Hz	5 g constant acceleration			

Tests of mechanical environmental conditions

The following table provides important information with respect to the type and scope of the tests of environmental mechanical conditions.

Table 15- 9 Tests of mechanical environmental conditions

Condition tested	Test standard	Comment
Vibrations [2]	Vibration test according to IEC 60068-2-6 (sinusoidal)	Type of vibration: Frequency sweeps with a rate of change of 1 octave/minute. BA 2×RJ45, BA SCRJ/RJ45, BA LC/RJ45, IM 155-6 PN BA, digital output module F-RQ 1x24VDC/24..230VAC/5A • 5 Hz ≤ f ≤ 8.4 Hz, 3.5 mm constant amplitude • 8.4 Hz ≤ f ≤ 150 Hz, 1 g constant acceleration IM 155-6 DP HF, BA 2×FC, BA 2xSCRJ, BA SCRJ/FC, BA 2xLC, BA LC/FC • 10 Hz ≤ f ≤ 60 Hz, 0.35 mm constant amplitude • 60 Hz ≤ f ≤ 1000 Hz, 5 g constant acceleration Duration of vibration: 10 frequency sweeps per axis at each of three vertically aligned axes
Shock [2]	Shock, tested according to IEC 60068-2-27	Type of shock: Half-sine Shock intensity: 150 m/s^2 peak value, 11 ms duration Direction of shock: 3 shocks in each direction (+/-) at each of three vertically aligned axes
Repetitive shock [1] [2]	Shock, tested according to IEC 60068-2-27	Type of shock: Half-sine Shock intensity: 25 g peak value, 6 ms duration Direction of shock: 1000 shocks in each direction (+/-) at each of three vertically aligned axes

[1] Not applicable in the case of the digital output module F-RQ 1x24VDC/24..230VAC/5A

[2] Not applicable for motor starters

Climatic environmental conditions

The table below shows the permissible climatic environmental conditions for the ET 200SP distributed I/O system:

Table 15- 10 Climatic environmental conditions

Environmental conditions	Permissible range	Comments
Temperature: horiz. mounting position: vertical mounting position:	 0 to 60 °C 0 to 50 °C	-
Permitted temperature change	10 K/h	-
Relative humidity	from 10 to 95%	Without condensation
Barometric pressure	from 1140 to 795 hPa	Corresponds to an altitude of -1000 to 2000 m
Pollutant concentration	ANSI/ISA-71.04 severity level G1; G2; G3	-

SIPLUS products based on ET 200SP are offered for reliable operation under heavy to extreme operating conditions.

15.6 Insulation, protection class, degree of protection and rated voltage

Insulation

The insulation for the I/O modules is designed in accordance with the requirements of EN 61131-2:2007. The insulation for the motor starters is designed in accordance with the requirements of IEC 60947-1.

Note

In the case of modules with 24 V DC (SELV/PELV) supply voltage, galvanic isolations are tested with 707 V DC (type test).

Pollution degree/overvoltage category according to IEC 61131

- Pollution degree 2
- Overvoltage category: II

Pollution degree/overvoltage category according to IEC 60947

- Pollution degree 2
- Overvoltage category: III

Protection class according to IEC 61131-2:2007

The ET 200SP distributed I/O system meets protection class I and includes parts of protection classes II and III.

The grounding of the mounting rail must meet the requirements for a functional earth FE.

Recommendation: For a configuration immune to interference, the line for the ground should have a cross-section > 6 mm^2.

The installation location (e.g. enclosure, control cabinet) must have a protective conductor connection that meets the standard to maintain protection class I.

Degree of protection IP20

Degree of protection IP20 in accordance with IEC 60529 for all modules of the ET 200SP distributed I/O system, which means:

- Protection against contact with standard probes
- Protection against foreign objects with diameters in excess of 12.5 mm
- No protection against water

Note

Use a BU cover

To meet the requirements of the degree of protection "IP20", fit a BU cover onto unfitted BaseUnits.

To ensure touch safety, fit a cover onto the opening of the infeed bus contacts belonging to the last plugged-in motor starter BaseUnit.

Rated voltage for operation

The ET 200SP distributed I/O system works with the rated voltage and corresponding tolerances listed in the following table.

Note the supply voltage of each module when selecting the rated voltage.

Table 15- 11 Rated voltage for operation

Rated voltage	Tolerance range
24 V DC	19.2 to 28.8 V DC [1]
	18.5 to 30.2 V DC [2]
120 V AC	93 to 132 V AC
230 V AC	187 to 264 V AC
400 V AC [3]	48 to 500 V AC

[1] Static value: Creation as functional extra-low voltage with safe electrical isolation according to IEC 60364-4-41

[2] Dynamic value: Including ripple, e.g. as in the case of three-phase bridge power rectification

[3] Valid for the infeed bus of the modules and BaseUnits of motor starters only

15.7 Use of the ET 200SP in zone 2 potentially explosive atmospheres

See product information "Use of subassemblies/modules in Zone 2 Hazardous Area" (http://support.automation.siemens.com/WW/view/en/19692172).

Dimension drawings

A

A.1 Shield connector

Dimensional diagram of the shield connector

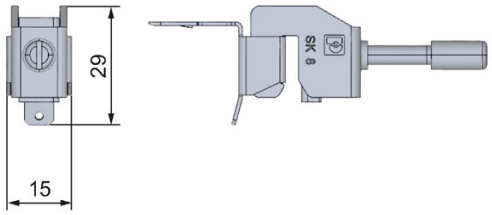

Figure A-1 Dimensional diagram of the shield connector

A.2 Labeling strip

Dimension drawing of the labeling strips (roll)

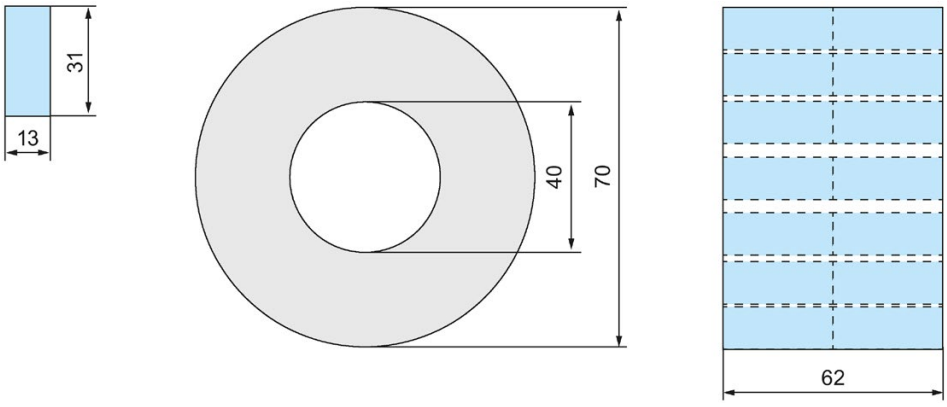

Figure A-2 Dimension drawing of the labeling strips (roll)

Dimension drawing of the labeling strips (DIN A4 sheet)

The product information for the labeling strips (DIN A4 sheets) is available for download on the Internet (https://mall.industry.siemens.com/mall/en/de/Catalog/Product/6ES7193-6LA10-0AA0).

A.3 Reference identification labels

Dimensional diagram of reference identification label and sheet

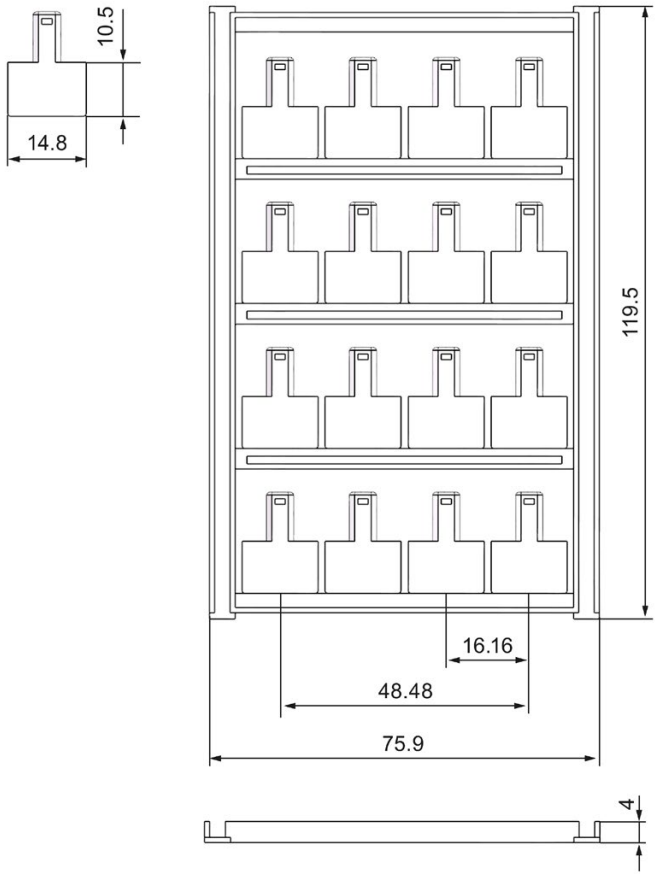

Figure A-3 Dimensional diagram of reference identification label and sheet

Accessories/spare parts

B

Accessories for the ET 200SP distributed I/O system

Table B- 1 Accessories, general

Accessories, general	Packing unit	Article number
Cover for the BusAdapter interface	5 units	6ES7591-3AA00-0AA0
PROFIBUS FastConnect bus connector	1 unit	6ES7972-0BB70-0XA0
Server module (spare part)	1 unit	6ES7193-6PA00-0AA0
BU cover		
• 15 mm wide	5 units	6ES7133-6CV15-1AM0
• 20 mm wide	5 units	6ES7133-6CV20-1AM0
24 V DC connector (spare part)	10 units	6ES7193-4JB00-0AA0
Shield connection for BaseUnit (shield contacts and shield terminals)	5 units	6ES7193-6SC00-1AM0
Reference identification label, sheet with 16 labels	10 units	6ES7193-6LF30-0AW0
Labeling strips (for labeling the I/O modules)		
• Roll, light gray labeling strips (with a total of 500 strips), film, for labeling with thermal transfer roll printer	1 unit	6ES7193-6LR10-0AA0
• Roll, yellow labeling strips (with a total of 500 strips), film, for labeling with thermal transfer roll printer	1 unit	6ES7193-6LR10-0AG0
• DIN A4 sheets, light gray labeling strips (with a total of 1000 labels), paper, perforated, for labeling with laser printer	10 units	6ES7193-6LA10-0AA0
• DIN A4 sheets, yellow labeling strips (with a total of 1000 labels), paper, perforated, for labeling with laser printer	10 units	6ES7193-6LA10-0AG0
Electronic coding element (type H) (spare part)	5 units	6ES7193-6EH00-1AA0
Electronic coding element (type F, for fail-safe modules) (spare part)	5 units	6ES7193-6EF00-1AA0
Mounting rails, tinned steel strip		
• Length: 483 mm	1 unit	6ES5710-8MA11
• Length: 530 mm	1 unit	6ES5710-8MA21
• Length: 830 mm	1 unit	6ES5710-8MA31
• Length: 2000 mm	1 unit	6ES5710-8MA41

Table B- 2 Accessories, color identification labels (push-in terminals), 15 mm wide

Accessories, color identification labels (push-in terminals), 15 mm wide	Packing unit	Article number
16 process terminals (see I/O module manual)		
• Gray (terminals 1 to 16); color code CC00	10 units	6ES7193-6CP00-2MA0
• Gray (terminals 1 to 8), red (terminals 9 to 16); color code CC01	10 units	6ES7193-6CP01-2MA0
• Gray (terminals 1 to 8), red (terminals 9 to 16); color code CC01	50 units	6ES7193-6CP01-4MA0
• Gray (terminals 1 to 8), blue (terminals 9 to 16); color code CC02	10 units	6ES7193-6CP02-2MA0
• Gray (terminals 1 to 8), blue (terminals 9 to 16); color code CC02	50 units	6ES7193-6CP02-4MA0
• Gray (terminals 1 to 8), red (terminals 9 to 12), gray (terminals 13 to 16); color code CC03	10 units	6ES7193-6CP03-2MA0
• Gray (terminals 1 to 8), red (terminals 9 to 12), blue (terminals 13 to 16); color code CC04	10 units	6ES7193-6CP04-2MA0
• Gray (terminals 1 to 12), red (terminals 13 and 14), blue (terminals 15 and 16)	10 units	6ES7193-6CP05-2MA0
10 AUX terminals (for BU15-P16+**A10**+2D, BU15-P16+**A10**+2B)		
• Yellow-green (terminals 1 A to 10 A); color code CC71	10 units	6ES7193-6CP71-2AA0
• Red (terminals 1 A to 10 A); color code CC72	10 units	6ES7193-6CP72-2AA0
• Blue (terminals 1 A to 10 A); color code CC73	10 units	6ES7193-6CP73-2AA0
• Blue (terminals 1 A to 10 A); color code CC73	50 units	6ES7193-6CP73-4AA0
10 add-on terminals (for BU15-P16+A0+**12**D/T, BU15-P16+A0+**12**B/T)		
• Red (terminals 1B to 5B), blue (terminals 1 to 5C); color code CC74	10 units	6ES7193-6CP74-2AA0
16 potential terminals (for PotDis-BU-**P1**/x-R)		
• Red (terminals 1 to 16); color code CC62	10 units	6ES7193-6CP62-2MA0
16 potential terminals (for PotDis-BU-**P2**/x-B)		
• Blue (terminals 1 to 16); color code CC63	10 units	6ES7193-6CP63-2MA0
18 potential terminals (for PotDis-TB-**P1**-R)		
• Red (terminals 1 to 18); color code CC12	10 units	6ES7193-6CP12-2MT0
• Gray (terminals 1 to 18); color code CC10	10 units	6ES7193-6CP10-2MT0
18 potential terminals (for PotDis-TB-**P2**-B)		
• Blue (terminals 1 to 18); color code CC13	10 units	6ES7193-6CP13-2MT0
• Gray (terminals 1 to 18); color code CC10	10 units	6ES7193-6CP10-2MT0
18 potential terminals (for PotDis-TB-**BR**-W)		
• Yellow/green (terminals 1 to 18); color code CC11	10 units	6ES7193-6CP11-2MT0

Accessories, color identification labels (push-in terminals), 15 mm wide	Packing unit	Article number
• Red (terminals 1 to 18); color code CC12	10 units	6ES7193-6CP12-2MT0
• Blue (terminals 1 to 18); color code CC13	10 units	6ES7193-6CP13-2MT0
• Gray (terminals 1 to 18); color code CC10	10 units	6ES7193-6CP10-2MT0
18 potential terminals (for PotDis-TB-**n.c.**-G)		
• Gray (terminals 1 to 18); color code CC10	10 units	6ES7193-6CP10-2MT0

Table B- 3 Accessories, color identification labels (push-in terminals), 20 mm wide

Accessories, color identification labels (push-in terminals), 20 mm wide	Packing unit	Article number
12 process terminals (see I/O module manual)		
• Gray (terminals 1 to 4), red (terminals 5 to 8), blue (terminals 9 to 12); color code CC41	10 units	6ES7193-6CP41-2MB0
• Gray (terminals 1 to 8), red (terminals 9 and 10), blue (terminals 11 and 12), color code CC42	10 units	6ES7193-6CP42-2MB0
6 process terminals (see I/O module manual)		
• Gray (terminals 1 to 4), red (terminal 5), blue (terminal 6); color code CC51	10 units	6ES7193-6CP51-2MC0
• Gray (terminals 1, 2 and 5), red (terminals 3 and 4), blue (terminal 6); color code CC52	10 units	6ES7193-6CP52-2MC0
4 AUX terminals (for BU20-P12+**A4**+0B)		
• Yellow-green (terminals 1 A to 4 A); color code CC81	10 units	6ES7193-6CP81-2AB0
• Red (terminals 1 A to 4 A); color code CC82	10 units	6ES7193-6CP82-2AB0
• Blue (terminals 1 A to 4 A); color code CC83	10 units	6ES7193-6CP83-2AB0
2 AUX terminals (for BU20-P6+**A2**+4D, BU20-P6+**A2**+4B)		
• Yellow-green (terminals 1 A and 2 A); color code CC84	10 units	6ES7193-6CP84-2AC0
• Red (terminals 1 A and 2 A); color code CC85	10 units	6ES7193-6CP85-2AC0
• Blue (terminals 1 A and 2 A); color code CC86	10 units	6ES7193-6CP86-2AC0

Table B- 4 SIMATIC memory card accessories

Capacity	Packing unit	Article number
4 MB	1 unit	6ES7954-8LCxx-0AA0
12 MB	1 unit	6ES7954-8LExx-0AA0
24 MB	1 unit	6ES7954-8LFxx-0AA0
256 MB	1 unit	6ES7954-8LL02-0AA0

Capacity	Packing unit	Article number
2 GB	1 unit	6ES7954-8LPxx-0AA0
32 GB	1 unit	6ES7954-8LTxx-0AA0

Table B- 5 Accessories for motor starters

Short designation	Packing unit	Article number
3DI/LC module (connecting terminal)	1 unit	3RK1908-1AA00-0BP0
Fan	1 unit	3RW4928-8VB00
BU cover 30	1 unit	3RK1908-1CA00-0BP0
Touch protection cover for the infeed bus	10 units	3RK1908-1DA00-2BP0
Mechanical bracket for BaseUnit	5 units	3RK1908-1EA00-1BP0

Components for lightning protection (lightning protection zone transition 0_B to 1, 1 to 2 and 2 to 3)

You must install overvoltage protection devices in the ET 200SP distributed I/O system for lightning protection purposes. You can find more information in the Designing interference-free controllers (http://support.automation.siemens.com/WW/view/en/59193566) function manual.

Online catalog

Additional article numbers for ET 200SP can be found on the Internet (http://mall.industry.siemens.com) in the online catalog and online ordering system.

B.1 Lightning protection and overvoltage protection for fail-safe modules

Overvoltage arrestors for fail-safe modules

Note

This section only lists the overvoltage arrestors that may be used to protect the fail-safe modules.

Be sure to observe the detailed information on lightning protection and overvoltage protection of the ET 200SP distributed I/O system in Electromagnetic compatibility of fail-safe modules (Page 292).

Components for overvoltage protection of fail-safe modules (lightning protection zone transition 0_B to 1)

The overvoltage arrestors are only required for unshielded cables. The Configuring interference-free controllers (http://support.automation.siemens.com/WW/view/en/59193566) Function Manual lists the overvoltage arrestors which you may use for fail-safe modules.

Calculating the leakage resistance

C

Introduction

If you wish to protect the ET 200SP using a ground-fault detector or a residual current circuit breaker, then you need the leakage resistance to select the correct safety components.

Ohmic resistance

When determining the leakage resistance of the ET 200SP, you must take into account the ohmic resistance from the RC combination of the module in question:

Table C- 1 Ohmic resistance

Module	Ohmic resistance from RC network
CPU/interface module	10 MΩ (±5 %)
BaseUnit BU15...D	10 MΩ (±5 %)
BaseUnit BU30-MSx	10 MΩ (±5 %)

Formula

You can calculate the leakage resistance of the ET 200SP using the following formula if you protect all of the modules listed above with one ground-fault detector:

$R_{ET200SP}$ = R_{module} / N

$R_{ET200SP}$ = Leakage resistance of the ET 200SP

R_{module} = Leakage resistance of a module

N = Number of BaseUnits BU15...D and interface module in the ET 200SP

$R_{CPU/IM}$ = $R_{BU15...D}$ = R_{Module} = 9.5 MΩ

$R_{CPU/IM}$ = Leakage resistance of CP/interface module

$R_{BU15...D}$ = Leakage resistance of the BaseUnit BU15...D

If you protect the modules listed above within an ET 200SP with several ground-fault detectors, you must determine the leakage resistance for each individual ground-fault detector.

Example

The structure of an ET 200SP system consists of an IM 155-6 PN ST, two BaseUnits BU15...D and various input and output modules. The entire ET 200SP is protected with **one** ground-fault detector:

$$R_{ET\ 200SP} = \frac{9.5\ M\Omega}{3} = 3.17\ M\Omega$$

Figure C-1 Calculation example for leakage resistance

Safety-relevant symbols

D

D.1 Safety-related symbols for devices without Ex protection

The following table contains an explanation of the symbols located in your SIMATIC device, its packaging or the accompanying documentation.

Symbol	Meaning
	General warning sign **Caution/Notice** You must read the product documentation. The product documentation contains information about the potential risks and enable you to recognize risks and implement countermeasures.
	Read the information provided by the product documentation. ISO 7010 M002
	Ensure the device is only installed by electrically skilled person. IEC 60417 No. 6182
CABLE SPEC.	Note that connected mains lines must be designed according to the expected minimum and maximum ambient temperature.
EMC	Note that the device must be constructed and connected in accordance with EMC regulations.
230V MODULES	Note that a 230 V device can be exposed to electrical voltages which can be dangerous. ANSI Z535.2
III 24V MODULES	Note that a device of Protection Class III may only be supplied with a protective low voltage according to the standard SELV/PELV. IEC 60417-1-5180 "Class III equipment"
INDOOR USE ONLY INDUSTRIAL USE ONLY	Be aware that the device is only approved for the industrial field and only for indoor use.
	Note that an enclosure is required for installing the device. Enclosures are considered: • Standing control cabinet • Serial control cabinet • Terminal boxes • Wall enclosure

D.2 Safety-related symbols for devices with Ex protection

The following table contains an explanation of the symbols located in your SIMATIC device, its packaging or the accompanying documentation.

Symbol	Meaning
ONLY EX MODULES	The assigned safety symbols apply to devices **with Ex approval**. You must read the product documentation. The product documentation contains information about the potential risks and enable you to recognize risks and implement countermeasures.
	Read the information provided by the product documentation. ISO 7010 M002
	Ensure the device is only installed by electrically skilled person. IEC 60417 No. 6182
F<2N DISPLAY F<4N HOUSING	Observe the mechanical rating of the device.
CABLE SPEC.	Note that connected mains lines must be designed according to the expected minimum and maximum ambient temperature.
EMC	Note that the device must be constructed and connected in accordance with EMC regulations.
U = 0V	When the device is under voltage, note that it may not be installed or removed, or plugged or pulled.
230V MODULES	Note that a 230 V device can be exposed to electrical voltages which can be dangerous. ANSI Z535.2
III 24V MODULES	Note that a device of Protection Class III may only be supplied with a protective low voltage according to the standard SELV/PELV. IEC 60417-1-5180 "Class III equipment"
INDOOR USE ONLY INDUSTRIAL USE ONLY	Be aware that the device is only approved for the industrial field and only for indoor use.

Symbol	Meaning
ZONE 2 INSIDE CABINET IP54 EN60079-15	For Zone 2 potentially explosive atmospheres, be aware that the device may only be used when it is installed in an enclosure with a degree of protection ≥ IP54.
ZONE 22 INSIDE CABINET IP6x EN60079-31	For Zone 22 potentially explosive atmospheres, be aware that the device may only be used when it is installed in an enclosure with a degree of protection ≥ IP6x.

Glossary

1oo1 evaluation

Type of → sensor evaluation – in the case of the 1oo1 evaluation, there → is one sensor with a 1-channel connection to the F module.

1oo2 evaluation

Type of → sensor evaluation – in the case of 1oo2 evaluation , two input channels are assigned one two-channel sensor or two one-channel sensors. The input signals are compared internally for equivalence or nonequivalence.

Acknowledgment time

During the acknowledgment time, the → F-I/O acknowledge the sign of life specified by the → F-CPU. The acknowledgment time is included in the calculation of the → monitoring time and → response time of the overall fail-safe system.

Actuator

Actuators are, for example, power relays or contactors for switching on load devices or load devices themselves (e.g. directly controlled solenoid valves).

Automation system

Programmable logic controller for the open-loop and closed-loop control of process sequences of the process engineering industry and manufacturing technology. The automation system consists of different components and integrated system functions depending on the automation task.

AUX bus

Self-assembling bus, can be used individually, for example, as a protective conductor bus or for additional required voltage.

Availability

Availability is the probability that a system is functional at a specific point in time. Availability can be increased by redundancy, e.g., by using multiple -> sensors at thesame measuring point.

AWG (American Wire Gauge)

A standard measure for conductors used in the USA, which is assigned to a specific cross-sectional area of a conductor or wire. Each AWG number represents a jump of 26% in the cross-sectional area. The thicker the wire, the smaller the AWG number.

BaseUnit

BaseUnits realize the electrical and mechanical connection of the I/O modules with the interface module and the server module.

The inserted I/O module determines the signals at the terminals of the BaseUnits. Depending on the selected BaseUnit, only certain terminals are available.

BaseUnit, dark-colored

Conduction of the internal power and AUX buses from the left adjacent module to the subsequent modules on the right.

BaseUnit, light-colored

Inserted as first BaseUnit and opens a new potential group with electrical isolation. The power and AUX buses are separate from the adjacent module on the left. It feeds the supply voltage.

Baud rate

Speed at which data is transferred, indicating the number of transmitted bits per second (baud rate = bit rate).

BU cover

Cover for unused slots on the BaseUnit or placeholder for planned I/O modules. For a future expansion, the reference identification label of the planned I/O module can be kept here.

Bus

Joint transmission path to which all participants of a fieldbus system are connected; has two defined ends.

BusAdapter

Enables free selection of the connection technology for the PROFINET fieldbus.

Channel fault

Channel-specific fault, such as a wire break or short circuit.

In channel-specific passivation, the affected channel is either automatically reintegrated or the fail-safe module must be removed and reinserted after the fault has been eliminated.

Channel group

The channels of a module are grouped together in a channel group. Certain parameters in STEP 7 can only be assigned to channel groups, rather than to individual channels.

Channel number

Channel numbers are used to uniquely identify the inputs and outputs of a module and to assign channel-specific diagnostic messages.

Channel-specific passivation

With this type of passivation, only the affected channel is passivated in the event of a → channel fault. In the event of a → module fault, all channels of the → fail-safe module are passivated.

Configuration

Systematic arrangement of the individual modules.

Configuration control

Function that enables a flexible adjustment of the actual configuration based on a configured maximum configuration via the user program. Input, output and diagnostics addresses remain unchanged.

Connecting to common potential

Configuring a new potential group for which a new infeed is set up for the supply voltage.

Connection plug

Physical connection between device and cable.

CPU

The CPU uses the integrated system power supply to supply the electronics of the modules via the backplane bus. The CPU contains the operating system and executes the user program. The user program is located on the SIMATIC memory card and is processed in the work memory of the CPU. The PROFINET interfaces of the CPU establish an Industrial Ethernet connection. The CPUs of the ET 200SP support operation as an IO controller, I-device or standalone CPU.

CRC

Cyclic Redundancy Check

CRC signature

The validity of the process values in the safety frame, the accuracy of the assigned address references, and the safety-related parameters are validated by means of the CRC signature in the safety frame.

Crimping

Procedure in which two components, e.g. end sleeve and cable, are connected with each other by plastic strain.

Dark period

Dark periods occur during shutdown tests and complete bit pattern tests. The fail-safe output module switches test-related zero signals to the active output. This output is then briefly disabled (= dark period). An adequate carrier → actuator will not respond to this and will remain activated.

Derating

Derating allows devices to be used even in harsh operating conditions by selectively restricting the output capacity. In the case of motor starters, this usually refers to operation at high ambient temperatures.

Device name

Before an IO device can be addressed by an IO controller, it must have a device name.
An IO device is delivered without a device name. An IO device can only be addressed by the IO controller after it has been assigned a device name via the PG/PC or via the topology, e.g. for the transfer of configuration data (such as IP address) during startup or for the exchange of user data during cyclic operation.

Diagnostics

Monitoring functions for the recognition, localization, classification, display and further evaluation of errors, faults and alarms. They run automatically during plant operation. This increases the availability of plants because commissioning times and downtimes are reduced.

Discrepancy analysis

The discrepancy analysis for equivalence/non-equivalence is used for fail-safe applications to prevent errors from time differences between two signals for the same function. The discrepancy analysis is initiated when different levels are detected in two associated input signals (when testing for non-equivalence: the same levels). A check is performed to determine whether the difference (for nonequivalence testing: the same levels) has disappeared after an assignable time period, the so-called discrepancy time. If not, this means that a discrepancy error exists.

The discrepancy analysis compares the two input signals of the 1oo2 sensor evaluation in the fail-safe input module.

Discrepancy time

Configurable time for the → discrepancy analysis. If the discrepancy time is set too high, the fault detection time and → fault reaction time are extended unnecessarily. If the discrepancy time is set too low, availability is decreased unnecessarily since a discrepancy error is detected when, in reality, no error exists.

Distributed I/O system

System with input and output modules that are configured on a distributed basis, far away from the CPU controlling them.

DP

→ *Distributed I/O system*

Earth

Conductive earth whose electrical potential can be set equal to zero at any point.

Equipotential bonding

Electrical connection (potential equalization conductor) that brings the bodies of electrical equipment and other conductive bodies to the same or almost the same potential, in order to prevent disruptive or dangerous voltages between these bodies.

Explosion protection

Requirement for the use of electrical equipment in hazardous areas in accordance with DIN EN 60079-0.

Fail-safe modules

ET 200SP modules with integrated safety functions that can be used for safety-related operation (safety mode).

Fail-safe systems

Fail-safe systems (F-systems) remain in a safe state or immediately assume another safe state as soon as particular failures occur.

Fault reaction time

The maximum fault reaction time of an F-system defines the interval between the occurrence of any fault and a safe reaction at all affected fail-safe outputs.

For → F-system overall: The maximum fault reaction time defines the interval between the occurrence of any fault in any → F-I/O and a safe response at the relevant fail-safe output.

For digital inputs: The maximum fault reaction time defines the interval between the occurrence of the fault and the safe reaction on the backplane bus.

For digital outputs: The maximum fault reaction time defines the interval between the occurrence of the fault and the safe reaction at the digital output.

Fault tolerance time

The fault tolerance time of a process is the time a process can be left unattended without risk to life and limb of the operating personnel, or damage to the environment.

Any type of F-system control is tolerated within this fault tolerance time, i.e. the → F-system can control its processes incorrectly or even not at all. The fault tolerance time depends on the type of process and must be determined on a case-by-case basis.

F-CPU

An F-CPU is a central processing unit with fail-safe capability that is permitted for use in SIMATIC Safety. A standard user program can also be run on the F-CPU.

F-I/O

Collective name for fail-safe inputs and outputs available in SIMATIC S7 for integration into the SIMATIC Safety F-system. Available F-I/O modules:

- Fail-safe I/O module for ET 200eco
- Fail-safe signal modules S7-300 (F-SMs)
- Fail-safe modules for ET 200S
- Fail-safe modules for ET 200SP
- Fail-safe modules for ET 200MP
- Fail-safe DP standard slaves
- Fail-safe PA field devices
- Fail-safe IO devices

Firmware update

Upgrade of firmware for modules (interface modules, I/O modules etc.), e.g. after function extensions, to the newest firmware version (update).

F-monitoring time

→ PROFIsafe monitoring time

F-Systems

→ fail-safe systems

Functional ground

Functional ground is a low-impedance current path between electric circuits and ground. It is not designed as a safety measure but instead, for example, as a measure to improve interference immunity.

Ground

All interconnected, inactive parts of a piece of equipment that cannot accept any dangerous contact voltage, even in the event of a fault.

Grounding

Grounding means connecting an electrically conductive part to a grounding electrode by means of a grounding system.

GSD file

As a Generic Station Description, this file contains all properties of a PROFINET or PROFIBUS device that are necessary for its configuration in XML format.

I/O modules

All modules, with the exception of the motor starters, that can be operated with a CPU or an interface module.

Identification data

Information that is saved in modules and that supports the user in checking the plant configuration and locating hardware changes.

Infeed system

The infeed system with the terminals L1(L), L2(N), L3, PE enables several SIMATIC ET 200SP motor starters to be supplied using a single infeed terminal.

Interface module

Module in the distributed I/O system. The interface module connects the distributed I/O system via a fieldbus to the CPU (IO controller) and prepares the data for and from I/O modules.

IO-Link

IO-Link is a point-to-point connection to conventional and intelligent sensors/actuators by unshielded standard cables in proven 3-wire technology. IO-Link is downward compatible to all DI/DQ sensors/actuators. Switching status channel and data channel are designed in proven 24 V DC technology.

Line

All the modules attached to a mounting rail.

Load current supply

Supply of modules like the interface module, power supply modules, I/O modules, and (if applicable) sensors and actuators.

MAC address

Device identification unique worldwide, which is already assigned to each PROFINET device in the factory. Its 6 bytes are divided into 3 bytes for the manufacturer ID and 3 bytes for the device ID (serial number). The MAC address is usually legible on the device.

Main switch

Every industrial machine that falls under the scope of DIN EN 60204 Part 1 (VDE 0113, Part 1) must be equipped with a main switch that disconnects all electrical equipment from the network while cleaning, maintenance, and repair work is being carried out, as well as during long periods of downtime. Usually a switch which can be operated by hand that is stipulated for electrical or mechanical prevention of a hazard. The main switch can also function as an EMERGENCY-OFF device.

The main switch must meet the following requirements:

- Externally accessible mechanical rotary lock.
- Only one OFF position and one ON position with allocated stops.
- Two positions labeled "0" and "I". 4th lockable OFF position.
- Cover for the power supply terminals to protect against accidental contact.
- The switching capacity must correspond to AC-23 for motor switches and AC-22 for load-break switches (utilization category).
- Switch position displayed automatically.

Module fault

Module faults can be external faults (e.g. missing load voltage) or internal faults (e.g. processor failure). Internal faults always require module replacement.

Monitoring time

→ PROFIsafe monitoring time

Motor starter

Motor starter is the generic term for direct-on-line and reversing starters.

M-switch

Each fail-safe digital output of ET 200SP F-modules consists of a P-switch DO-P_x (current sourcing) and an M-switch DO-M_x (current sinking). The load is connected between the P-switch and M-switch. The two switches are always activated so that voltage is applied to the load.

Node

Device that can send, receive or amplify data via the bus, e.g. IO device via PROFINET IO.

Nonequivalent sensor

A nonequivalent → sensor is a two-way switch that is connected to two inputs of an → F-I/O (via 2 channels) in → fail-safe systems (for → 1oo2 evaluation of sensor signals).

Overload release

Overcurrent release that provides protection against overload.

Parameter assignment

Parameter assignment is the transfer of parameters from the IO controller/DP master to the IO device/DP slave.

Passivation

If an → F-I/O module detects a fault it switches either the affected channel or all channels to a → safe state, i.e. the channels of this F-I/O module are passivated. The F-I/O module signals the detected faults to the → F-CPU.

When passivating channels at F-I/O with inputs, the → F-System provides fail-safe values for the → safety program instead of the process values pending at the fail-safe inputs.

When passivating channels at F-I/O with outputs, the F-system returns fail-safe values (0) to the fail-safe outputs instead of the output values provided by the safety program.

PELV

Protective **E**xtra **L**ow **V**oltage

Performance Level

Performance Level (PL) in accordance with ISO 13849-1 or EN ISO 13849-1

Potential group

Group of I/O modules that are jointly supplied with voltage.

Prewiring

Wiring the electrics on a mounting rail before the I/O modules are connected.

Process image (I/O)

The CPU transfers the values from the input and output modules to this memory area. At the start of the cyclic program, the signal states of the input modules are transmitted to the process image input. At the end of the cyclic program, the process image output is transmitted as signal state to the output modules.

Product version (ES) = Functional status (FS)

The product version or functional status provides information on the hardware version of the module.

PROFIBUS

PROcess FIeld BUS, process and fieldbus standard that is specified in IEC 61158 Type 3. It specifies functional, electrical and mechanical properties for a bit-serial fieldbus system. PROFIBUS is available with the following protocols: DP (= Distributed Periphery), FMS (= Fieldbus Message Specification), PA (= Process Automation) or TF (= Technological Functions).

PROFINET

PROcess FIeld NETwork, open industrial Ethernet standard which continues PROFIBUS and Industrial Ethernet. A cross-manufacturer communication, automation and engineering model by PROFIBUS International e.V., defined as an automation standard.

PROFINET IO controller

Device used to address connected I/O devices (e.g. distributed I/O systems). This means: The IO controller exchanges input and output signals with assigned I/O devices. The IO controller often corresponds to the CPU in which the automation program is running.

PROFINET IO

Communication concept for the realization of modular, distributed applications within the scope of PROFINET.

PROFINET IO device

Distributed field device that can be assigned to one or more IO controllers (e.g. distributed I/O system, valve terminals, frequency converters, switches).

PROFIsafe

Safety-oriented PROFINET I/O bus profile for communication between the → safety program and the → F-I/O module in a → fail-safe system.

PROFIsafe address

The PROFIsafe address (code name according to IEC 61784-3-3: 2010) is used to protect standard addressing mechanisms such as IP addresses. The PROFIsafe address consists of the F-source address and F-destination address. Every → fail-safe module therefore has two address portions, the F-source address and the F-destination address.

The PROFIsafe address must be configured in the hardware and network editor.

PROFIsafe monitoring time

Monitoring time for safety-related communication between the F-CPU and F-I/O

Proof-test interval

Period after which a component must be forced to fail-safe state, that is, it is either replaced with an unused component, or is proven faultless.

Provider-Consumer principle

Principle of data communication on the PROFINET IO: in contrast to PROFIBUS, both parties are independent providers when sending data.

P-switch

→ M-switch

Push-in terminal

Push-in connections are a form of spring-loaded terminals allowing wiring without tools for rigid conductors or conductors equipped with end sleeves.

Redundancy, availability-enhancing

Multiple instances of components with the objective of maintaining component functionality in the event of hardware faults.

Redundancy, safety-enhancing

Multiple availability of components with the aim of exposing hardware faults based on comparison; such as → 1oo2 evaluation in → fail-safe modules.

Reference identification

In accordance with EN 81346, a specific object is clearly referenced in relation to the system to whose components the object belongs. Thus, unique identification of the modules in the entire system is possible.

Reference potential

Potential from which the voltages of the participating circuits are considered and/or measured.

Reintegration

After the elimination of a fault, it is necessary to ensure the reintegration (depassivation) of the → F-I/O. Reintegration (switchover from fail-safe values to process values) occurs either automatically or only after a user acknowledgment in the safety program.

In the case of a fail-safe input module, the process values pending at the fail-safe inputs are made available to thesafety program again after reintegration. In the case of a fail-safe output module, the → fail-safe system transfers the output values in the safety program to the fail-safe outputs again.

RIOforFA-Safety

Remote IO for Factory Automation with PROFIsafe; Profile for F-I/O

RoHS

EC Directive 2011/65/EU concerning the restriction of certain dangerous substances in electrical and electronic devices regulates the use of hazardous substances in devices and components. The English abbreviation RoHS is used to refer to this directive: (Restriction of the use of certain hazardous substances), as well as all related measures for implementing it into national legislation.

Safe state

The basic principle of the safety concept in F-systems is the existence of a safe state for all process variables. For the digital F-I/O, for example, the safe state is the value "0".

Safety class

Safety level (Safety Integrity Level) SIL according to IEC 61508:2010. The higher the Safety Integrity Level, the more rigid the measures for prevention of systematic faults and for management of systematic faults and hardware failures.

The fail-safe modules support operation in safety mode up to safety class SIL3.

Safety frame

In safety mode, data are transferred between the → F-CPU and → F-I/O in a safety frame.

Safety function

A mechanism integrated in the → F-CPU and → F-I/O that enables their use in → the fail-safe system SIMATIC Safety.

According to IEC 61508:2010: A safety function is implemented by a safety system in order to maintain or force a system safe state in the event of a specific fault.

Safety mode

Operating mode of → F-I/O that enables → safety-related communication via → safety frames.

→ ET 200SP fail-safe modules can only used in safety mode.

Safety program

Safety-related user program

Safety-related communication

Communication used to exchange fail-safe data.

Self-assembling voltage buses

Three internal, self-assembling buses (P1, P2 and AUX) that supply the I/O modules with power.

SELV

Safety **E**xtra **L**ow **V**oltage

Sensor evaluation

There are two types of sensor evaluation:

→ 1oo1 evaluation – sensor signal is read once

→ 1oo2 evaluation – sensor signal is read in twice by the same F-module and compared internally

Sensors

Sensors are used for the accurate detection of routes, positions, velocities, rotational speeds, masses, etc. in the form of digital and analog signals.

Server module

The server module completes the configuration of the ET 200SP.

Service life

Period of time for which the switching device will work properly under normal operating conditions. This is specified as the number of operating cycles, the electrical durability (e.g. contact erosion), and the mechanical durability (e.g. operating cycles without load).

SIL (Safety Integrity Level)

Discrete level (one of three possibilities) for defining safety integrity specifications of safety-related control functions. Safety integrity level 3 is the highest possible level, level 1 the lowest.

Slave station

A slave can only exchange data after being requested to do so by the master.

SNMP

SNMP (Simple Network Management Protocol) is the standardized protocol for diagnosing and also configuring the Ethernet infrastructure.

In the office area and in automation technology, devices support a wide range of manufacturers on the Ethernet SNMP.

SNMP-based applications can be operated on the same network in parallel to applications with PROFINET.

Standard mode

Operating mode of F-I/O in which standard communication is possible by means of → safety frames, but not → safety-related communication.

Fail-safe ET 200SP modules can only be operated in safety mode.

Switch

PROFIBUS is a linear network. The communication nodes are linked by means of a passive cable - the bus.

By contrast, Industrial Ethernet consists of point-to-point connections: each communication node is interconnected directly with precisely one other communication node.

If a communication node is linked to several communication nodes, this communication node is connected to the port of an active network component - the switch. Other communications devices (including switches) can then be connected to the other ports of the switch. The connection between a communication node and the switch remains a point-to-point connection.

The task of a switch is thus to regenerate and distribute received signals. The switch "learns" the Ethernet address(es) of a connected PROFINET device or additional switches and only forwards those signals that are intended for the connected PROFINET device or switch.

A switch has a specific number of connections (ports). You connect at most one PROFINET device or additional switch to each port.

Technology object

A technology object supports you in the configuration and commissioning of a technological function.

The properties of real objects are represented by the technology objects in the controller. Real objects can be, for example, controlled systems or drives.

The technology object includes all data of the real object that is required for its open-loop or closed-loop control, and it signals the status information.

TIA Portal

Totally Integrated Automation Portal

The TIA Portal is the key to the full performance capability of Totally Integrated Automation. The software optimizes all operating, machine and process sequences.

Total current

Sum of the currents of all output channels of a digital output module.

TWIN end sleeve

End sleeve for two cables

Type of coordination 1

The motor starter may be non-operational after a short circuit has been cleared. Damage to the motor starter is permissible.

Types of coordination

The IEC 60947-4-1 (VDE 0660 Part 102) standard distinguishes between two types of coordination referred to as coordination type "1" and coordination type "2". The short circuit that needs to be dealt with is cleared reliably and safely with both types of coordination; the only differences are in the extent of the damage sustained by the device following a short circuit.

Index

2

24 V DC supply, 88

3

3DI/LC module, 35, 123
  Assembling, 124
  Connections, 111
  Disassembling, 126
  Functions, 111
3-wire connection, 61

A

Accessible devices
  Firmware update, 261
Accessories, 302
Addressing, 139
  Basics, 139
Application
  in industrial environments, 288
  in mixed areas, 288
  in residential areas, 288
Approvals, 282
Assembling, 77
  3DI/LC module, 123
  BU cover, 86
  Infeed bus, 81
Assembly/disassembly position, 122
AUX bus (AUX(iliary) bus), 53

B

BaseUnit, 30, 36
  Assembling, 77, 121
  Disassembling, 254
  Modules with temperature measurement, 41
  Modules without temperature measurement, 40
  Mounting, dismantling, 74
  Potential group, 50, 55
  Replacing the terminal box, 255
  Types, 36
  wiring, 102
  Wiring, 107
  Wiring rules, 99
BU cover
  Assembling, 86
  Description, 32
  Installation, 118
BusAdapter, 29

C

Cable shield, 105
Changes
  Compared to previous version, 17
Changing type
  Coding element, 251
  I/O module, 251
Climatic environmental conditions, 297
Color identification label, 128
  Description, 34
  Installing, 130
Commissioning, 199, 200, 207
  Removing/inserting a SIMATIC memory card, 213
  Reset to factory settings, 268
  Startup, 212
Components
  ET 200SP at a glance, 27
  In accordance with DIN VDE regulation, 95
Configuration, 20
  Basics, **Error! Bookmark not defined.**
  Electrical, 97
  On grounded reference potential, 94
Configuration control, 172
Configuration example, 201, 203, 205, 207, 209, 211
Configuration software, 134
Configuring, 134
  Properties of the CPUs, 139
Connecting
  Cable shield, 105
Connecting the PROFIBUS DP interface to the interface module, 117
Control data record, 181
  S7-1500, 179
CPU
  Backup/restore contents, 232
  Reading out service data, 280
  Reset to factory settings, 264
  Synchronizing the time, 234

D

Degree of protection, 299
Dimensional diagram
  Labeling strip, 300
  Reference identification label, 301
  Shield connector, 300
Disassembling, 254
Dummy module
  mounting, 69

E

Electrical isolation, 97
Electrical relationships, 97
Electromagnetic compatibility (EMC), 289
EMC (Electromagnetic compatibility), 289
EMERGENCY STOP devices, 87
Environmental conditions
  Climatic, 297
  Mechanical, 296
ET 200SP
  Area of application, 20
  Commissioning, 199
  Components, 27
  Configuration example, 21, 24
  Configuring, 134
  Overall configuration, 96
  Rules and regulations for operation, 87
  Selecting a BaseUnit, 36
  Short-circuit / overload protection, 95
Example
  ET 200SP configuration, 21, 24
  Leakage resistance, 308
  Potential group, configuration, 60

F

Factory settings, 264
Fan, 35
  Mounting, 120
FAQ
  Emergency address, 233
  Removing a SIMATIC memory card, 242
  Repairing the SIMATIC memory card, 243
  Trace function, 279
Firmware update, 257

G

Grounding
  Configuration on grounded reference potential, 94
  Graphical overview of ET 200SP, 96

I

I/O module, 31
  Changing type, 251
  Inserting or removing, 247
  Installation, 118
  replace, 253
Identification data, 225
Incoming supply, grounded, 94
Infeed bus
  Assembling, 82
  Cover, 35
Infeed bus cover, 35
Installation
  BaseUnit, 74
  BU cover, 118
  I/O module, 118, 247
  Installation position, 64
  Interface module, 70
  Minimum clearances, 66
  Mounting rail, 65
  Rules, 66
  Server module, 80
Installation position, 64
Insulation, 298
Interface module, 28
  Connecting the supply voltage, 113
  Mounting, dismantling, 70
  RESET, 268
  Reset to factory settings, 268
  Wiring rules, 99
Interference-free design, 68

L

Labeling strip
  Dimensional diagram, 300
Labeling strips, 34
  Installing, 132
Leakage resistance, 307
Lightning protection, 88
Line voltage, 88

M

Maintenance, 247
Changing type, 251
Firmware update, 257
Reading out service data, 280
Removal and insertion, 247
Replacing modules, 253
Replacing the terminal box, 255
Reset to factory settings, 264
Test functions, 273
Marking, 127
Color coding, factory setting, 127
Optional, 128
Maximum configuration, 48
Maximum cycle time, (Cycle monitoring time)
Mechanical bracket, 35
Mounting, 84
Mechanical environmental conditions, 296
Memory reset
Automatic, 222
Basics, 221
Manual, 222
Minimum clearances, 66
Motor starter, 31
Assembling, 77, 121
Disassembling, 121, 254
Mounting, 52, 66, 81, 86
Dummy module, 69
Mechanical bracket, 83
Mounting rail, 27, 65

N

Network Time Protocol, 234
NTP procedure, 234

O

OBs, 146
Event source, 147
Events, 149
Overload behavior, 149
Priorities, 146
Priorities and runtime behavior, 148
Queue, 146
Start events, 146
Threshold mechanism, 150
Time error OB, 150
Operating modes
Basics, 214
Operating mode transitions, 218
RUN, 217
Setting the startup behavior, 216
STARTUP, 215
STOP, 217
Operating position, 122
Option handling, (See configuration control)
Overall configuration, 96
Overload behavior, 149
Overview, graphic
Grounding the ET 200SP, 96

P

Parking position/OFF, 122
Password provider, 166
PELV, 94
Potential distributor module, 30
Installing, 79
Selecting a PotDis-BaseUnit, 45
Selecting a PotDis-TerminalBlock, 46
Potential group
Configuration example, 60
Forming, 50, 55
Operating principle, graphical overview, 54, 55
Process image
Inputs and outputs, 142
Process image partition
Updating in the user program, 143
updating, automatically, 143
PROFINET IO, 199
Protection, 162, 167, 170
Access levels, 162
Behavior of a password-protected CPU, 165
Copy protection, 170
Know-how protection, 167
Protection against short circuit, 93
Protection class, 298, 298

R

Radio interference, 288, 291
Rated voltage, 299
Reading out service data, 280
Reassigning parameters, 224
Reference identification label, 34, 128
Dimensional diagram, 301
Installing, 133
Remove, 247
Replacement
Coding element, 253

I/O module, 253
Terminal box on the BaseUnit, 255
Replacing the terminal box, 255
RESET, 268
Reset to factory settings, 268
with RESET button, 268

S

Safe electrical isolation, 94
Safety rules, 283
Server module, 33
Mounting, dismantling, 80
Shield connection
Description, 34
Shield connector
Dimensional diagram, 300
Shipping conditions, 295
Short-circuit and overload protection according to DIN VDE regulation, 95
Short-circuit protection, 93
SIMATIC ET 200SP, 19
SIMATIC Memory Card, 240, 245, 246
Basics, 240
Firmware card, 245
Possible applications, 246
Program card, 245
repairing, 243
Updating firmware, 246
Spare parts, 302
Standards, 282
Starting up the ET 200SP, 212
Storage conditions, 295
Supply of external components, 63
Supply voltage, 113
Connecting, 113
Potential group, 50, 55
Synchronizing the time, 234

T

Technical specifications
Climatic environmental conditions, 297
Electromagnetic compatibility (EMC), 289
Mechanical environmental conditions, 296
Shipping and storage conditions, 295
Standards and approvals, 282
Test functions, 273
Test voltage, 298

V

Video sequence, 109

W

Wiring
BaseUnit, 107
BaseUnits, 102
General rules for ET 200SP, 87
Rules, 99

Z

Zone 2 potentially explosive atmosphere, 299

SIEMENS

Preface

Module overview of ET 200SP 1

Supplements to ET 200SP documentation 2

SIMATIC

ET 200SP
Product information on the documentation of the ET 200SP distributed I/O system

Product Information

01/2019
A5E03799595-BB

Legal information

Warning notice system

This manual contains notices you have to observe in order to ensure your personal safety, as well as to prevent damage to property. The notices referring to your personal safety are highlighted in the manual by a safety alert symbol, notices referring only to property damage have no safety alert symbol. These notices shown below are graded according to the degree of danger.

⚠ DANGER

indicates that death or severe personal injury **will** result if proper precautions are not taken.

⚠ WARNING

indicates that death or severe personal injury **may** result if proper precautions are not taken.

⚠ CAUTION

indicates that minor personal injury can result if proper precautions are not taken.

NOTICE

indicates that property damage can result if proper precautions are not taken.

If more than one degree of danger is present, the warning notice representing the highest degree of danger will be used. A notice warning of injury to persons with a safety alert symbol may also include a warning relating to property damage.

Qualified Personnel

The product/system described in this documentation may be operated only by **personnel qualified** for the specific task in accordance with the relevant documentation, in particular its warning notices and safety instructions. Qualified personnel are those who, based on their training and experience, are capable of identifying risks and avoiding potential hazards when working with these products/systems.

Proper use of Siemens products

Note the following:

⚠ WARNING

Siemens products may only be used for the applications described in the catalog and in the relevant technical documentation. If products and components from other manufacturers are used, these must be recommended or approved by Siemens. Proper transport, storage, installation, assembly, commissioning, operation and maintenance are required to ensure that the products operate safely and without any problems. The permissible ambient conditions must be complied with. The information in the relevant documentation must be observed.

Trademarks

All names identified by ® are registered trademarks of Siemens AG. The remaining trademarks in this publication may be trademarks whose use by third parties for their own purposes could violate the rights of the owner.

Disclaimer of Liability

We have reviewed the contents of this publication to ensure consistency with the hardware and software described. Since variance cannot be precluded entirely, we cannot guarantee full consistency. However, the information in this publication is reviewed regularly and any necessary corrections are included in subsequent editions.

Siemens AG
Division Digital Factory
Postfach 48 48
90026 NÜRNBERG
GERMANY

A5E03799595-BB
℗ 01/2019 Subject to change

Copyright © Siemens AG 2012 - 2019.
All rights reserved

Preface

Validity

This product information supplements the documentation for the ET 200SP and takes precedence over our system manuals, function manuals and product manuals.

Security information

Siemens provides products and solutions with industrial security functions that support the secure operation of plants, systems, machines and networks.

In order to protect plants, systems, machines and networks against cyber threats, it is necessary to implement – and continuously maintain – a holistic, state-of-the-art industrial security concept. Siemens' products and solutions constitute one element of such a concept.

Customers are responsible for preventing unauthorized access to their plants, systems, machines and networks. Such systems, machines and components should only be connected to an enterprise network or the internet if and to the extent such a connection is necessary and only when appropriate security measures (e.g. firewalls and/or network segmentation) are in place.

For additional information on industrial security measures that can be implemented, please visit (https://www.siemens.com/industrialsecurity).

Siemens' products and solutions undergo continuous development to make them more secure. Siemens strongly recommends that product updates are applied as soon as they are available and that the latest product versions are used. Use of product versions that are no longer supported, and failure to apply the latest updates may increase customers' exposure to cyber threats.

To stay informed about product updates, subscribe to the Siemens Industrial Security RSS Feed visit (https://www.siemens.com/industrialsecurity).

Table of contents

Preface 3

1 Module overview of ET 200SP 5

1.1 Possible combinations of BaseUnits and I/O modules 5

1.2 CPUs 12

1.3 Interface modules 13

1.4 BaseUnits 15

1.5 I/O modules 17

1.6 Motor starters 19

1.7 Accessories 20

2 Supplements to ET 200SP documentation 25

2.1 System manual 25

2.2 BaseUnits manual 27

2.2.1 Special consideration for BaseUnits with functional versions < 04 27

2.2.2 Terminal labeling of the PotDis-TB 28

2.3 CPU manuals 29

2.4 Interface module manuals 30

2.5 I/O module manuals 35

2.5.1 Digital module device manuals 37

2.5.2 Analog module device manuals 41

2.5.3 Communications module manuals 45

2.5.4 Device manuals Technology modules 47

Module overview of ET 200SP

1

1.1 Possible combinations of BaseUnits and I/O modules

Contents

This product information includes amendments and corrections to the documentation of the ET 200SP Distributed I/O System (https://support.industry.siemens.com/cs/ww/en/view/109742709).

Which I/O modules / motor starters fit on a BaseUnit?

The following table provides an overview of the I/O modules / motor starters that fit on the corresponding compatible BaseUnits:

Table 1- 1 Possible combinations of BaseUnits and I/O modules

I/O module	BaseUnit BU15-		BaseUnit BU20-							Color-coded label for process terminals	
	BU type A0 P16+A10+2D P16+A0+2D P16+A10+2B P16+A0+2B	BU type A1 P16+A0+12D/T P16+A0+2D/T P16+A0+12B/T P16+A0+2B/T	BU type B0 P12+A4+0B	BU type B1 P12+A0+4B	BU type C0 P6+A2+4D	BU type C1 P6+A2+4B	BU type D0 P12+A0+0B	BU type F0 P8+A4+0B	BU type U0 P16+A0+2D P16+A0+2B		
Digital I/O modules											
DI 16x24VDC ST	✓									CC00	
DI 8x24VDC ST	✓									CC01	
DI 8x24VDC HF	✓									CC01	
DI 8x24VDC HS	✓									CC01	
DI 8x24VDC BA	✓									CC01	

I/O module	BaseUnit BU15-		BaseUnit BU20-							Color-coded label for process terminals	
	BU type A0 P16+A10+2D P16+A0+2D P16+A10+2B P16+A0+2B	BU type A1 P16+A0+12D/T P16+A0+2D/T P16+A0+12B/T P16+A0+2B/T	BU type B0 P12+A4+0B	BU type B1 P12+A0+4B	BU type C0 P6+A2+4D	BU type C1 P6+A2+4B	BU type D0 P12+A0+0B	BU type F0 P8+A4+0B	BU type U0 P16+A0+2D P16+A0+2B		
DI 8x24VDC SRC BA	✓									CC02	
DI 8xNAMUR HF	✓									CC01	
DI 4x120..230VAC ST				✓						CC41	
DQ 16x24VDC/0.5A ST	✓									CC00	
DQ 4x24VDC/2A ST	✓									CC02	
DQ 8x24VDC/0.5 ST	✓									CC02	
DQ 8x24VDC/0.5A HF	✓									CC02	
DQ 8x24VDC/0.5A BA	✓									CC02	
DQ 8x24VDC/0.5A SNK BA	✓									CC01	

I/O module	BaseUnit BU15-		BaseUnit BU20-							Color-coded label for process terminals	
	BU type A0 P16+A10+2D P16+A0+2D P16+A10+2B P16+A0+2B	BU type A1 P16+A0+12D/T P16+A0+2D/T P16+A0+12B/T P16+A0+2B/T	BU type B0 P12+A4+0B	BU type B1 P12+A0+4B	BU type C0 P6+A2+4D	BU type C1 P6+A2+4B	BU type D0 P12+A0+0B	BU type F0 P8+A4+0B	BU type U0 P16+A0+2D P16+A0+2B		
DQ 4x24..230VAC/2A ST				✓						CC41	
DQ 4x24..230VAC/2A HF				✓						CC20	
DQ 4x24VDC/2A HF	✓									CC02	
DQ 4x24VDC/2A HS	✓									CC00	
RQ 4x24VUC/2A CO ST	✓									CC00	
RQ 4x120VDC-230VAC/5A NO ST			✓	✓						---	---
RQ 4x120VDC-230VAC/5A NO MA ST			✓	✓						---	---
Analog I/O modules											
AI 4xRTD/TC 2-/3-/4-wire HF	✓	✓								CC00	
AI 8xRTD/TC 2-wire HF	✓	✓								CC00	
AI 8xU BA	✓	✓								CC02	

I/O module	BaseUnit BU15-		BaseUnit BU20-							Color-coded label for process terminals	
	BU type A0 P16+A10+2D P16+A0+2D P16+A10+2B P16+A0+2B	BU type A1 P16+A0+12D/T P16+A0+2D/T P16+A0+12B/T P16+A0+2B/T	BU type B0 P12+A4+0B	BU type B1 P12+A0+4B	BU type C0 P6+A2+4D	BU type C1 P6+A2+4B	BU type D0 P12+A0+0B	BU type F0 P8+A4+0B	BU type U0 P16+A0+2D P16+A0+2B		
AI 2xU ST	✓	✓								CC00	
AI 2xI 2-/4-wire ST	✓	✓								CC05	
AI 4xU/I 2-wire ST	✓	✓								CC03	
AI 2xU/I 2-/4-wire HF	✓	✓								CC05	
AI 2xU/I 2-/4-wire HS	✓	✓								CC00	
AI 8xI 2-/4-wire BA	✓	✓								CC01	
AI 4xI 2-/4-wire ST	✓	✓								CC03	
AI 4xI 2-wire 4...20mA HART	✓	✓								CC03	
AQ 2xU ST	✓	✓								CC00	

I/O module	BaseUnit BU15-		BaseUnit BU20-							Color-coded label for process terminals	
	BU type A0 P16+A10+2D P16+A0+2D P16+A10+2B P16+A0+2B	**BU type A1** P16+A0+12D/T P16+A0+2D/T P16+A0+12B/T P16+A0+2B/T	**BU type B0** P12+A4+0B	**BU type B1** P12+A0+4B	**BU type C0** P6+A2+4D	**BU type C1** P6+A2+4B	**BU type D0** P12+A0+0B	**BU type F0** P8+A4+0B	**BU type U0** P16+A0+2D P16+A0+2B		
AQ 2xI ST	✓	✓								CC00	
AQ 4xU/I ST	✓	✓								CC00	
AQ 2xU/I HS	✓	✓								CC00	
AQ 2xU/I HF	✓	✓								CC00	
AI Energy Meter 400VAC ST							✓			---	---
AI Energy Meter 480VAC ST							✓			---	---
AI Energy Meter 480VAC/CT HF									✓	CC20	
AI Energy Meter 480VAC/RC HF									✓	CC20	

I/O module	BaseUnit BU15-		BaseUnit BU20-							Color-coded label for process terminals	
	BU type A0 P16+A10+2D P16+A0+2D P16+A10+2B P16+A0+2B	BU type A1 P16+A0+12D/T P16+A0+2D/T P16+A0+12B/T P16+A0+2B/T	BU type B0 P12+A4+0B	BU type B1 P12+A0+4B	BU type C0 P6+A2+4D	BU type C1 P6+A2+4B	BU type D0 P12+A0+0B	BU type F0 P8+A4+0B	BU type U0 P16+A0+2D P16+A0+2B		
Fail-safe modules											
F-PM-E 24VDC/8A PPM ST					✓					CC52	
F-DI 8x24VDC HF	✓									CC01	
F-DQ 4x24VDC/2A PM HF	✓									CC02	
F-DQ 8x24VDC/0.5A PP HF	✓									CC02	
F-RQ 1x24VDC/24..230VAC/5A								✓		CC42	
F-AI 4xI 0(4)..20mA 2-/4-wire HF	✓	✓								CC00	
Communication modules											
CM 4xIO-Link	✓									CC04	
CM AS-i Master ST					✓					---	---
F-CM AS-i Safety ST					✓	✓				---	---
CM PtP	✓									---	---
Technology modules											
TM Count 1x24V	✓									---	---
TM PosInput 1	✓									---	---
TM Timer DIDQ 10x24V	✓									---	---
TM Pulse 2x24V				✓						---	---
SIWAREX WP321	✓									---	---

Table 1- 2 Possible combinations of BaseUnits and motor starters

Motor starters	BaseUnit BU30-						Color-coded label for process terminals	
	MS1 with infeed 24 V DC and 500 V AC	MS2 with infeed 500 V AC	MS3 with infeed 24 V DC	MS4 without infeed	MS5 with infeed 500 V AC and F-DI terminals	MS6 without infeed with F-DI terminals		
Direct starter								
DS 0.3 - 1 A HF	✓				✓*		---	---
DS 0.9 - 3 A HF	✓				✓*		---	---
DS 2.8 - 9 A HF	✓				✓*		---	---
DS 4.0 - 12 A HF	✓				✓*		---	---
Reversing starter								
RS 0.3 - 1 A HF	✓				✓*		---	---
RS 0.9 - 3 A HF	✓				✓*		---	---
RS 2.8 - 9 A HF	✓				✓*		---	---
RS 4.0 - 12 A HF	✓				✓*			
Failsafe direct starter								
F-DS 0.3 - 1 A HF	✓				✓		---	---
F-DS 0.9 - 3 A HF	✓				✓		---	---
F-DS 2.8 - 9 A HF	✓				✓		---	---
F-DS 4.0 - 12 A HF	✓				✓		---	---
Fail-safe reversing starter								
F-RS 0.3 - 1 A HF	✓				✓		---	---
F-RS 0.9 - 3 A HF	✓				✓		---	---
F-RS 2.8 - 9 A HF	✓				✓		---	---
F-RS 4.0 - 12 A HF	✓				✓		---	---

* The F-DI terminals do not have a function in this combination.

Table 1- 3 Combination possibilities between potential distributor BaseUnit and potential distributor terminal block

Potential distributor terminal block	Potential distributor BaseUnit			
	PotDis-BU-P1/D-R	PotDis-BU-P1/B-R	PotDis-BU-P2/D-B	PotDis-BU-P2/B-B
PotDis-TB-P1-R	✓	✓	✓	✓
PotDis-TB-P2-B	✓	✓	✓	✓
PotDis-TB-n.c.-G	✓	✓	✓	✓
PotDis-TB-BR-W	✓	✓	✓	✓

1.2 CPUs

CPUs

CPU	Number in pack	Article number
CPU 1510SP-1 PN with server module	Pack of 1	6ES7510-1DJ0x-0AB0
CPU 1510SP F-1 PN with server module	Pack of 1	6ES7510-1SJ0x-0AB0
CPU 1512SP-1 PN with server module	Pack of 1	6ES7512-1DK0x-0AB0
CPU 1512SP F-1 PN with server module	Pack of 1	6ES7512-1SK0x-0AB0
CPU 1515SP PC with server module	Pack of 1	6ES7677-2AAxx-0xx0

Important differences between CPUs...PN				
Features	**CPU 1510SP-1 PN**	**CPU 1510SP F-1 PN**	**CPU 1512SP-1 PN**	**CPU 1512SP F-1 PN**
Bus connection	PROFINET: BusAdapter (port 1, 2) • BA 2xRJ45 (as of firmware version 1.6) • BA 2xFC (as of firmware version V1.6) RJ45, integrated (port 3)		PROFINET: BusAdapter (port 1, 2) • BA 2xRJ45 (as of firmware version 1.6) • BA 2xFC (as of firmware version V1.6) • BA 2xSCRJ (as of firmware V1.8)[1] • BA SCRJ/RJ45 (as of firmware V1.8)[1] • BA SCRJ/FC (as of firmware V1.8)[1] • BA 2xLC (as of firmware V2.0)[1] • BA LC/RJ45 (as of firmware V2.0)[1] • BA LC/FC (as of firmware V2.0)[1] RJ45, integrated (port 3)	
	PROFIBUS: PROFIBUS DP connection socket via CM DP communication module			
Number of modules	64			
Data work memory	750 KB	750 KB	1 MB	1 MB
Code work memory	100 KB	150 KB	200 KB	300 KB
Address space	1280 bytes/2560 bytes[2]			
Multi hot-swapping	Yes			
Can be used for safety applications (supports PROFIsafe V2.0)	No	Yes	No	Yes

1 Only with article numbers 6ES7512-1DK01-0AB0 and 6ES7512-1SK01-0AB0

2 Only 6ES7510-1DJ01-0AB0, 6ES7512-1SJ01-0AB0, 6ES7512-1DK01-0AB0 and 6ES7512-1SK01-0AB0 with FW version V2.0

Note

The CM AS-i Master ST and F-CM AS-i Safety ST communication modules are supported as of firmware V1.8 of the CPUs. Note the following additional requirements:

CM AS-i Master ST:

- Firmware version of the CM AS-i Master ST: V1.1
- STEP 7 (TIA Portal): V13 SP1 Update 4 or higher

F-CM AS-i Safety ST

- Firmware version of the CM AS-i Safety ST: V1.0
- STEP 7 (TIA Portal): as of V13 SP1 Update 4 and HSP0070 V3.0

1.3 Interface modules

Interface modules

Interface modules	Number in pack	Article number
Interface module IM 155-6 PN BA	Pack of 1	6ES7155-6AR00-0AN0
Interface module IM 155-6 PN ST		
• with BusAdapter BA 2xRJ45 and server module	Pack of 1	6ES7155-6AA01-0BN0
• with server module	Pack of 1	6ES7155-6AU01-0BN0
Interface module IM 155-6 PN/2 HF with server module	Pack of 1	6ES7155-6AU01-0CN0
Interface module IM 155-6 PN/3 HF with server module	Pack of 1	6ES7155-6AU30-0CN0
Interface module IM 155-6 PN HS with server module	Pack of 1	6ES7155-6AU00-0DN0
Interface module IM 155-6 DP HF with PROFIBUS FastConnect bus connector (6ES7972-0BB70-0XA0) and server module	Pack of 1	6ES7155-6BA01-0CN0

Important differences between the interface modules					
Features	**IM 155-6 PN BA**	**IM 155-6 PN ST**	**IM 155-6 PN/2 HF** **IM 155-6 PN/3 HF**	**IM 155-6 PN HS**	**IM 155-6 DP HF**
Bus connection	PROFINET: 2xRJ45, integrated	PROFINET: BusAdapter • BA 2xRJ45 (as of firmware V1.0) • BA 2xFC (as of firmware V1.0)	PROFINET: BusAdapter • BA 2xRJ45 (as of firmware V2.0) • BA 2xFC (as of firmware V2.0) • BA 2xSCRJ (as of firmware V2.2) • BA SCRJ/RJ45 (as of firmware V3.1) • BA SCRJ/FC (as of firmware V3.1) • BA 2xLC (as of firmware V3.3) • BA LC/RJ45 (as of firmware V3.3) • BA LC/FC (as of firmware V3.3)	PROFINET: BusAdapter • BA 2xRJ45 (as of firmware V4.0) • BA 2xFC (as of firmware V4.0) • BA 2xSCRJ (as of firmware V4.0) • BA SCRJ/RJ45 (as of firmware V4.0) • BA SCRJ/FC (as of firmware V4.0) • BA 2xLC (as of firmware V4.0) • BA LC/RJ45 (as of firmware V4.0) • BA LC/FC (as of firmware V4.0)	PROFIBUS: PROFIBUS DP connection socket
Number of modules	12	32	64	30	32
RESET button	No	Yes	IM 155-6 PN/2 HF: Yes IM 155-6 PN/3 HF: No	Yes	Not necessary
Address space (I/O data)	32 bytes	798 bytes	1440 bytes	968 bytes	244 bytes
Multi hot-swapping	No	No	Yes	Yes	Yes

Table 1- 4 Station expansion via ET-Connection (mixed configuration ET 200SP/ET 200AL)

Modules	Number in pack	Article number
BU-Send	Pack of 1	6ES7193-6BN00-0NE0
BA-Send 1xFC	Pack of 1	6ES7193-6AS00-0AA0

1.4 BaseUnits

BaseUnits

Table 1- 5 BaseUnits for I/O modules

BU type	BaseUnits (short name)	Color-coded labels*	Packaging unit	Article number
A0	BU15-P16+A10+2D	**P16:** CC00 to CC05 **A10:** CC71 to CC73	Pack of 1	6ES7193-6BP20-0DA0
			Pack of 10	6ES7193-6BP20-2DA0
A0	BU15-P16+A0+2D	**P16:** CC00 to CC05	Pack of 1	6ES7193-6BP00-0DA0
			Pack of 10	6ES7193-6BP00-2DA0
A0	BU15-P16+A10+2B	**P16:** CC00 to CC05 **A10:** CC71 to CC73	Pack of 1	6ES7193-6BP20-0BA0
			Pack of 10	6ES7193-6BP20-2BA0
A0	BU15-P16+A0+2B	**P16:** CC00 to CC05	Pack of 1	6ES7193-6BP00-0BA0
			Pack of 10	6ES7193-6BP00-2BA0
A1	BU15-P16+A0+12D/T	**P16:** CC00 to CC05 **12D:** CC74	Pack of 1	6ES7193-6BP40-0DA1
A1	BU15-P16+A0+2D/T	**P16:** CC00 to CC05	Pack of 1	6ES7193-6BP00-0DA1
A1	BU15-P16+A0+12B/T	**P16:** CC00 to CC05 **12B:** CC74	Pack of 1	6ES7193-6BP40-0BA1
A1	BU15-P16+A0+2B/T	**P16:** CC00 to CC05	Pack of 1	6ES7193-6BP00-0BA1
B0	BU20-P12+A4+0B	**A4:** CC81 to CC83	Pack of 1	6ES7193-6BP20-0BB0
			Pack of 10	6ES7193-6BP20-2BB0
B1	BU20-P12+A0+4B	**P12:** CC41	Pack of 1	6ES7193-6BP20-0BB1
C0	BU20-P6+A2+4D	**P6:** CC51, CC52 **A2:** CC84 to CC86	Pack of 1	6ES7193-6BP20-0DC0
C1	BU20-P6+A2+4B	**P6:** CC51 **A2:** CC84 to CC86	Pack of 1	6ES7193-6BP20-0BC1
D0	BU20-P12+A0+0B	---	Pack of 1	6ES7193-6BP00-0BD0
F0	BU20-P8+A4+0B	**P8:** CC42	Pack of 1	6ES7193-6BP20-0BF0
U0	BU20-P16+A0+2D	**P16**: CC00 to CC05	Pack of 1	6ES7193-6BP00-0BU0
			Pack of 10	6ES7193-6BP00-2BU0
U0	BU20-P16+A0+2B	**P16**: CC00 to CC05	Pack of 1	6ES7193-6BP00-0DU0
			Pack of 10	6ES7193-6BP00-2DU0

* not included in the scope of delivery of the BaseUnit

Table 1- 6 BaseUnit PotDis

PotDis type	Potential distributor (short name)	Color coded labels	Packaging unit	Article number
P1	PotDis-BU-P1/D-R	CC62	Pack of 1	6ES7193-6UP00-0DP1
P1	PotDis-BU-P1/B-R	CC62	Pack of 1	6ES7193-6UP00-0BP1
P2	PotDis-BU-P2/D-B	CC63	Pack of 1	6ES7193-6UP00-0DP2
P2	PotDis-BU-P2/B-B	CC63	Pack of 1	6ES7193-6UP00-0BP2

Table 1- 7 BaseUnit PotDis-TB

Terminal block type	Terminal block (short name)	Color coded labels	Packaging unit	Article number
P1	PotDis-TB-P1-R	CC12	Pack of 1	6ES7193-6TP00-0TP1
P2	PotDis-TB-P2-B	CC13	Pack of 1	6ES7193-6TP00-0TP2
N0	PotDis-TB-n.c.-G	CC10	Pack of 1	6ES7193-6TP00-0TN0
P0	PotDis-TB-BR-W	CC10	Pack of 1	6ES7193-6TP00-0TP0

Table 1- 8 BaseUnits for motor starters

BU type	BaseUnits (short name)	Color-coded labels	Packaging unit	Article number
MS1	BU30-MS1	-	Pack of 1	3RK1908-0AP00-0AP0
MS2	BU30-MS2	-	Pack of 1	3RK1908-0AP00-0CP0
MS3	BU30-MS3	-	Pack of 1	3RK1908-0AP00-0BP0
MS4	BU30-MS4	-	Pack of 1	3RK1908-0AP00-0DP0
MS5	BU30-MS5	-	Pack of 1	3RK1908-0AP00-0EP0
MS6	BU30-MS6	-	Pack of 1	3RK1908-0AP00-0FP0

1.5 I/O modules

I/O modules

Digital I/O modules	Number in pack	Article number
DI 16x24VDC ST	Pack of 1	6ES7131-6BH01-0BA0
	Pack of 10	6ES7131-6BH01-2BA0
DI 8x24VDC ST	Pack of 1	6ES7131-6BF01-0BA0
	Pack of 10	6ES7131-6BF01-2BA0
DI 8x24VDC HF	Pack of 1	6ES7131-6BF00-0CA0
	10 units	6ES7131-6BF00-2CA0
DI 8x24VDC HS	Pack of 1	6ES7131-6BF00-0DA0
DI 8xNAMUR HF	Pack of 1	6ES7131-6TF00-0CA0
DI 8x24VDC BA	Pack of 1	6ES7131-6BF01-0AA0
	Pack of 10	6ES7131-6BF01-2AA0
DI 8x24VDC SRC BA	Pack of 1	6ES7131-6BF61-0AA0
DI 4x120..230VAC ST	Pack of 1	6ES7131-6FD01-0BB1
DQ 16x24VDC/0.5A ST	Pack of 1	6ES7132-6BH01-0BA0
	Pack of 10	6ES7132-6BH01-2BA0
DQ 8x24VDC/0.5A ST	Pack of 1	6ES7132-6BF01-0BA0
	Pack of 10	6ES7132-6BF01-2BA0
DQ 8x24VDC/0.5A HF	Pack of 1	6ES7132-6BF00-0CA0
	10 units	6ES7132-6BF00-2CA0
DQ 8x24VDC/0.5A BA	Pack of 1	6ES7132-6BF01-0AA0
	Pack of 10	6ES7132-6BF01-2AA0
DQ 8x24VDC/0.5A SNK BA	Pack of 1	6ES7132-6BF61-0AA0
DQ 4x24VDC/2A ST	Pack of 1	6ES7132-6BD20-0BA0
	Pack of 10	6ES7132-6BD20-2BA0
DQ 4x24..230VAC/2A ST	Pack of 1	6ES7132-6FD00-0BB1
	Pack of 10	6ES7132-6FD00-2BB1
DQ 4x24..230VAC/2A HF	Pack of 1	6ES7132-6FD00-0CU0
DQ 4x24VDC/2A HF	Pack of 1	6ES7132-6BD20-0CA0
DQ 4x24VDC/2A HS	Pack of 1	6ES7132-6BD20-0DA0
RQ 4x24VUC/2A CO ST	Pack of 1	6ES7132-6GD51-0BA0
RQ 4x120VDC-230VAC/5A NO ST	Pack of 1	6ES7132-6HD01-0BB1
	Pack of 10	6ES7132-6HD01-2BB1
RQ 4x120VDC-230VAC/5A NO MA ST	Pack of 1	6ES7132-6MD00-0BB1

Analog I/O modules	Number in pack	Article number
AI 8xU BA	Pack of 1	6ES7134-6FF00-0AA1
AI 2xU ST	Pack of 1	6ES7134-6FB00-0BA1
AI 4xU/I 2-wire ST	Pack of 1	6ES7134-6HD01-0BA1
	Pack of 10	6ES7134-6HD01-2BA1
AI 2xU/I 2-/4-wire HF	Pack of 1	6ES7134-6HB00-0CA1
AI 2xU/I 2-/4-wire HS	Pack of 1	6ES7134-6HB00-0DA1
AI 8xI 2-/4-wire BA	Pack of 1	6ES7134-6GF00-0AA1
AI 2xI 2-/4-wire ST	Pack of 1	6ES7134-6GB00-0BA1
AI 4xI 2-/4-wire ST	Pack of 1	6ES7134-6GD01-0BA1
	10 units	6ES7134-6GD01-2BA1
AI 8xRTD/TC 2-wire HF	Pack of 1	6ES7134-6JF00-0CA1
	Pack of 10	6ES7134-6JF00-2CA1
AI 4xRTD/TC 2-/3-/4-wire HF	Pack of 1	6ES7134-6JD00-0CA1
	Pack of 10	6ES7134-6JD00-2CA1
AI 4xI 2-wire 4...20mA HART	Pack of 1	6ES7134-6TD00-0CA1
AQ 2xU ST	Pack of 1	6ES7135-6FB00-0BA1
AQ 2xI ST	Pack of 1	6ES7135-6GB00-0BA1
AQ 4xU/I ST	Pack of 1	6ES7135-6HD00-0BA1
AQ 2xU/I HF	Pack of 1	6ES7135-6HB00-0CA1
AQ 2xU/I HS	Pack of 1	6ES7135-6HB00-0DA1
AI Energy Meter 400VAC ST	Pack of 1	6ES7134-6PA01-0BD0
AI Energy Meter 480VAC ST	Pack of 1	6ES7134-6PA20-0BD0
AI Energy Meter 480VAC/CT HF	Pack of 1	6ES7134-6PA00-0CU0
AI Energy Meter 480VAC/RC HF	Pack of 1	6ES7134-6PA20-0CU0

Fail-safe modules	Number in pack	Article number
F-PM-E 24VDC/8A PPM ST	Pack of 1	6ES7136-6PA00-0BC0
F-DI 8x24VDC HF	Pack of 1	6ES7136-6BA00-0CA0
F-DQ 4x24VDC/2A PM HF	Pack of 1	6ES7136-6DB00-0CA0
F-DQ 8x24VDC/0.5A PP HF	Pack of 1	6ES7136-6DC00-0CA0
F-RQ 1x24VDC/24..230VAC/5A	Pack of 1	6ES7136-6RA00-0BF0
F-AI 4xI 0(4)..20mA 2-/4-wire HF	Pack of 1	6ES7136-6AA00-0CA1

Communication modules	Number in pack	Article number
CM 4xIO-Link	Pack of 1	6ES7137-6BD00-0BA0
CM AS-i Master ST	Pack of 1	3RK7137-6SA00-0BC1
F-CM AS-i Safety ST	Pack of 1	3RK7136-6SC00-0BC1
CM PtP	Pack of 1	6ES7137-6AA00-0BA0
CM DP (for CPU)	Pack of 1	6ES7545-5DA00-0AB0

Technology modules	Number in pack	Article number
TM Count 1x24V	Pack of 1	6ES7138-6AA00-0BA0
TM PosInput 1	Pack of 1	6ES7138-6BA00-0BA0
TM Timer DIDQ 10x24V	Pack of 1	6ES7138-6CG00-0BA0
TM Pulse 2x24V	Pack of 1	6ES7138-6DB00-0BB1
SIWAREX WP321	Pack of 1	7MH4138-6AA00-0BA0

1.6 Motor starters

Motor starters

Direct starter	Packaging unit	Article number
DS 0.3 - 1 A HF	Pack of 1	3RK1308-0AB00-0CP0
DS 0.9 - 3 A HF	Pack of 1	3RK1308-0AC00-0CP0
DS 2.8 - 9 A HF	Pack of 1	3RK1308-0AD00-0CP0
DS 4.0 - 12 A HF	Pack of 1	3RK1308-0AE00-0CP0

Reversing starter	Packaging unit	Article number
RS 0.3 - 1 A HF	Pack of 1	3RK1308-0BB00-0CP0
RS 0.9 - 3 A HF	Pack of 1	3RK1308-0BC00-0CP0
RS 2.8 - 9 A HF	Pack of 1	3RK1308-0BD00-0CP0
RS 4.0 - 12 A HF	Pack of 1	3RK1308-0BE00-0CP0

Failsafe direct starter	Number in pack	Article number
F-DS 0.3 - 1 A HF	Pack of 1	3RK1308-0CB00-0CP0
F-DS 0.9 - 3 A HF	Pack of 1	3RK1308-0CC00-0CP0
F-DS 2.8 - 9 A HF	Pack of 1	3RK1308-0CD00-0CP0
F-DS 4.0 - 12 A HF	Pack of 1	3RK1308-0CE00-0CP0

Fail-safe reversing starter	Number in pack	Article number
F-RS 0.3 - 1 A HF	Pack of 1	3RK1308-0DB00-0CP0
F-RS 0.9 - 3 A HF	Pack of 1	3RK1308-0DC00-0CP0
F-RS 2.8 - 9 A HF	Pack of 1	3RK1308-0DD00-0CP0
F-RS 4.0 - 12 A HF	Pack of 1	3RK1308-0DE00-0CP0

1.7 Accessories

Accessories

General accessories	Packaging unit	Article number
BusAdapter		
• BA 2×RJ45 (PROFINET BusAdapter with standard Ethernet socket)	Pack of 1	6ES7193-6AR00-0AA0
• BA 2×FC (PROFINET BusAdapter with FastConnect Ethernet connection)	Pack of 1	6ES7193-6AF00-0AA0
• BA 2xSCRJ (PROFINET BusAdapter with POF/PCF fiber-optic cable connection)	Pack of 1	6ES7193-6AP00-0AA0
• BA SCRJ/RJ45 (media converter, PROFINET BusAdapter with fiber-optic cable FOC ⇔ standard RJ45 connector)	Pack of 1	6ES7193-6AP20-0AA0
• BA SCRJ/FC (media converter, PROFINET bus adapter with fiber-optic cable FOC ⇔ direct connection of bus cable)	Pack of 1	6ES7193-6AP40-0AA0
• BA 2xLC (PROFINET BusAdapter with glass fiber-optic cable connection)	Pack of 1	6ES7193-6AG00-0AA0
• BA LC/RJ45 (media converter, PROFINET BusAdapter with glass fiber-optic cable ⇔ standard RJ45 connector)	Pack of 1	6ES7193-6AG20-0AA0
• BA LC/FC (Media converter, PROFINET bus adapter with glass fiber-optic cable ⇔ direct connection of bus cable)	Pack of 1	6ES7193-6AG40-0AA0
PROFIBUS FastConnect bus connector	Pack of 1	6ES7972-0BB70-0XA0
Server module (spare part)	Pack of 1	6ES7193-6PA00-0AA0
BU cover		
• 15 mm wide	Pack of 5	6ES7133-6CV15-1AM0
• 20 mm wide	Pack of 5	6ES7133-6CV20-1AM0
Shield connector for BaseUnit (shield contacts and shield terminals)	Pack of 5	6ES7193-6SC00-1AM0
Reference identification label, sheet with 16 labels	Pack of 10	6ES7193-6LF30-0AW0
Labeling strips (for labeling the I/O modules)		
• Roll, light gray (with a total of 500 labeling strips)	Pack of 1	6ES7193-6LR10-0AA0
• Roll, yellow (with a total of 500 labeling strips)	Pack of 1	6ES7193-6LR10-0AG0
• DIN A4 sheets, light gray (with a total of 1000 labeling strips)	Pack of 10	6ES7193-6LA10-0AA0
• DIN A4 sheets, yellow (with a total of 1000 labeling strips)	Pack of 10	6ES7193-6LA10-0AG0
Mounting rails, tin-plated steel strip		
• Length: 483 mm	Pack of 1	6ES5710-8MA11
• Length: 530 mm	Pack of 1	6ES5710-8MA21
• Length: 830 mm	Pack of 1	6ES5710-8MA31
• Length: 2000 mm	Pack of 1	6ES5710-8MA41

Accessories, color identification labels (push-in terminals), 15 mm wide	Packaging unit		Article number
16 process terminals (you can find additional information in the I/O Module manual)			
• Gray (terminals 1 to 16); color code CC00	Pack of 10		6ES7193-6CP00-2MA0
• Gray (terminals 1 to 8), red (terminals 9 to 16); color code CC01	Pack of 10		6ES7193-6CP01-2MA0
• Gray (terminals 1 to 8), blue (terminals 9 to 16); color code CC02	Pack of 10		6ES7193-6CP02-2MA0
• Gray (terminals 1 to 8), red (terminals 9 to 12), gray (terminals 13 to 16); color code CC03	Pack of 10		6ES7193-6CP03-2MA0
• Gray (terminals 1 to 8), red (terminals 9 to 12), blue (terminals 13 to 16); color code CC04	Pack of 10		6ES7193-6CP04-2MA0
• Gray (terminals 1 to 12), red (terminals 13 and 14), blue (terminals 15 and 16); color code CC05	Pack of 10		6ES7193-6CP05-2MA0
10 AUX terminals (for BU15-P16+**A10**+2D, BU15-P16+**A10**+2B)			
• Yellow-green (terminals 1A to 10A); color code CC71	Pack of 10		6ES7193-6CP71-2AA0
• Red (terminals 1A to 10A); color code CC72	Pack of 10		6ES7193-6CP72-2AA0
• Blue (terminals 1A to 10A); color code CC73	Pack of 10		6ES7193-6CP73-2AA0
10 add-on terminals (for BU15-P16+A0+**12**D/T, BU15-P16+A0+**12**B/T)			
• Red (terminals 1B to 5B), blue (terminals 1 to 5C); color code CC74	Pack of 10		6ES7193-6CP74-2AA0

Accessories, color identification labels (push-in terminals), 20 mm wide	Packaging unit		Article number
12 process terminals (you can find additional information in the I/O Module manual)			
• Gray (terminals 1 to 4), red (terminals 5 to 8), blue (terminals 9 to 12); color code CC41	Pack of 10		6ES7193-6CP41-2MB0
• Gray (terminals 1 to 8), red (terminals 9 and 10), blue (terminals 11 and 12), color code CC42	Pack of 10		6ES7193-6CP42-2MB0
6 process terminals (you can find additional information in the I/O Module manual)			
• Gray (terminals 1 to 4), red (terminal 5), blue (terminal 6); color code CC51	Pack of 10		6ES7193-6CP51-2MC0
• Gray (terminals 1, 2 and 5), red (terminals 3 and 4), blue (terminal 6); color code CC52	Pack of 10		6ES7193-6CP52-2MC0
4 AUX terminals (for BU20-P12+**A4**+0B)			
• Yellow-green (terminals 1A to 4A); color code CC81	Pack of 10		6ES7193-6CP81-2AB0
• Red (terminals 1A to 4A); color code CC82	Pack of 10		6ES7193-6CP82-2AB0
• Blue (terminals 1A to 4A); color code CC83	Pack of 10		6ES7193-6CP83-2AB0
2 AUX terminals (for BU20-P6+**A2**+4D, BU20-P6+**A2**+4B)			
• Yellow-green (terminals 1A and 2A); color code CC84	Pack of 10		6ES7193-6CP84-2AC0
• Red (terminals 1A and 2A); color code CC85	Pack of 10		6ES7193-6CP85-2AC0
• Blue (terminals 1A and 2A); color code CC86	Pack of 10		6ES7193-6CP86-2AC0

Accessories, color identification labels (push-in terminals) PotDis	Packaging unit		Article number
PotDis-BU, 16 potential terminals			
• Red for PotDis-BU-P1/x-R (terminals 1 to 16); color code CC62	Pack of 10		6ES7193-6CP62-2MA0
• Blue for PotDis-BU-P2/x-B (terminals 1 to 16), color code CC63	Pack of 10		6ES7193-6CP63-2MA0
PotDis-TB-P1-R, 18 potential terminals			
• Red (terminals 1 to 18); color code CC12	Pack of 10		6ES7193-6CP12-2MT0
• Gray (terminals 1 to 18); color code CC10	Pack of 10		6ES7193-6CP10-2MT0
PotDis-TB-P2-B, 18 potential terminals			
• Blue (terminals 1 to 18); color code CC13	Pack of 10		6ES7193-6CP13-2MT0
• Gray (terminals 1 to 18); color code CC10	Pack of 10		6ES7193-6CP10-2MT0

Accessories, color identification labels (push-in terminals) PotDis	Packaging unit		Article number
PotDis-TB-BR-W, 18 potential terminals			
• Yellow/green (terminals 1 to 18); color code CC11	Pack of 10		6ES7193-6CP11-2MT0
• Red (terminals 1 to 18); color code CC12	Pack of 10		6ES7193-6CP12-2MT0
• Blue (terminals 1 to 18); color code CC13	Pack of 10		6ES7193-6CP13-2MT0
• Gray (terminals 1 to 18); color code CC10	Pack of 10		6ES7193-6CP10-2MT0
PotDis-TB-n.c.-G, 18 potential terminals			
• Gray (terminals 1 to 18); color code CC10	Pack of 10		6ES7193-6CP10-2MT0

Accessories for motor starter	Packaging unit	Article number
3DI / LC module	Pack of 1	3RK1908-1AA00-0BP0
Fan	Pack of 1	3RW4928-8VB00
Additional mechanical bracket for BaseUnit	Pack of 1	3RK1908-1EA00-1BP0
Cover for an empty BaseUnit	Pack of 1	3RK1908-1CA00-0BP0
Touch protection cover for infeed bus	Pack of 1	3RK1908-1DA00-2BP0

Supplements to ET 200SP documentation 2

2.1 System manual

System manual ET 200SP Distributed I/O system, Edition 02/2018

Section 10.2 Creating the control data record

For the configuration control (option handling) you can plug the following communication modules:

- CM DP
- CP 1542SP-1
- CP 1543SP-1
- CP 1542SP-1 IRC
- BusAdapter BA-Send 1xFC

For the communication modules listed above special slot rules apply for use with the ET 200SP CPUs applies:

If you plug the communication modules in the central configuration control as mentioned above (e.g. CM DP), then these modules cannot be influenced by the configuration control. You must therefore leave these modules in the slots preassigned in the station master and enter the slot numbers from the station master in the control data record ("Station option slot = Station master slot").

In a station option, all slots up to the module furthest from the CPU (see list above) must be present in the control data record.

Section 13.6 Firmware update

Modules with firmware version V0.0.0 do not support the "firmware update" function.

Section 15.5 Climatic ambient conditions

The following table shows the permissible climatic ambient conditions for the ET 200SP distributed I/O system:

Table 2- 1 Climatic ambient conditions

Ambient conditions	Permitted range	Comments
Temperature: Horizontal mounting position: Vertical mounting position:	 From 0 °C to 60 °C From 0 °C to 50 °C	Information on extended temperature ranges are defined in the respective product data sheet.
Permitted temperature change	10 K/h	-
Relative humidity	From 10% to 95%	Without condensation or icing.
Air pressure	From 1140 hPa to 795 hPa	Corresponds to an altitude of -1000 m to 2000 m
Pollutant concentration	ANSI/ISA-71.04 severity level G1; G2; G3	-

SIPLUS products based on ET 200SP are offered for reliable operation under heavy to extreme operating conditions.

Using the distributed IO system ET 200SP over 2000 m above sea level.

The maximum "operating elevation in relation to sea level" depends on the module and is described in the technical specifications of the respective module.

For altitudes > 2000 m the following constraints apply for the maximum specified ambient temperature:

Restrictions of the maximum ambient temperature specified with regard to the operating altitude

Operating altitude	Derating factor for ambient temperature [1)]
-1000 m to 2000 m	1.0
2000 m to 3000 m	0.9
3000 m to 4000 m	0.8
4000 m to 5000 m	0.7

1) Base value for application of the derating factor is the maximum permissible ambient temperature in °C for 2000 m.

Note

- Linear interpolation between altitudes is permissible.
- The derating factors compensate for the decreasing cooling effect of air in higher altitudes due to lower density.
- Note the mounting position of the respective module in the technical specifications. The basis is the standard IEC 61131-2:2017.

Note

Power supplies

Make sure that the power supplies you use are rated for altitudes > 2000 m.

Details about certification on the components of the distributed I/O system ET 200SP

Fail-safe modules are certified for operation in safety mode up to the maximum altitude listed in the product data sheet (in accordance with IEC 61508-1: 2010, EN ISO 13849-1: 2015 and EN 62061:2005/ A2:2015).

All other markings and certifications are currently based on an altitude of up to 2000 m.

Effects on the availability of modules

The higher cosmic radiation present during operation at altitudes above 2000 m will also start to have an effect on the failure rate of electronic components (the so-called soft error rate). In rare cases this can result in a transition of the module into the safe state, especially for fail-safe modules. However, the functional safety of the module is fully retained.

2.2 BaseUnits manual

2.2.1 Special consideration for BaseUnits with functional versions < 04

The following BaseUnits with functional version < 04 can only be used in potential groups with rated voltages ≤ 48 V DC or 24 V AC:

- BaseUnit BU20-P12+A0+4B (6ES7193-6BP20-0BB1).
- BaseUnit BU20-P12+A0+0B (6ES7193-6BP00-0BD0).

2.2.2 Terminal labeling of the PotDis-TB

New specification of the terminal labeling

New specification offers the following advantages:

- Unique terminal numbering per slot, even though the same reference identifier is used for the PotDis-BU and the PotDis-TB of a slot.
- Best possible readability
- Shortest possible designation to keep the work for conductor labeling as low as possible
- Compliant with ECAD rules
- Complies with the previous ET 200SP Logic
- You can continue using the color identification label CC00

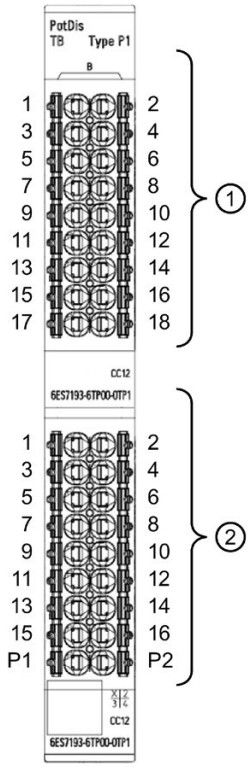

①	**Terminal labeling of the PotDis-TB**	B1 to B18. To save space the preceding character "B" is printed once at the top and may not be covered by the color identification labels.
②	**Terminal labeling of the PotDis-BU**	1 to 16, the supply terminals P1 and P2.

2.3 CPU manuals

Manual CPU 1512SP-1 PN, Edition 09/2016

Section 4.1 Status and error display of the CPU

MT1/MT2 LEDs on BusAdapter BA 2xSCRJ, BA SCRJ/RJ45, BA SCRJ/FC

Table 2- 2 Status and error displays of MT1/MT2 LEDs

LED MT1/MT2*	Meaning	Solution
□ Off	No error	---
■ On	• Fiber-optic error • Maintenance demanded: Attenuation through the fiber-optic cable is so high that operation will soon no longer be possible.	Causes and measures for the transmission route: • Replacement of fiber-optic cable if damaged or aged • Correct installation of the PROFINET connect-or/PROFINET connections • Adherence to maximum length of 50 m for POF cable or 100 m for PCF cable • Secure fit of the FOC connector.

* Only available on BusAdapter BA 2xSCRJ

Section 6 Technical specifications

Technical specifications of the BusAdapters BA 2×SCRJ, BA SCRJ/RJ45, BA SCRJ/FC

The maximum length of the PCF-GI fiber-optic cable is 250 m.

Device manuals CPU 1510SP-1 PN and CPU 1512SP-1 PN, Edition 09/2016

"LED" instruction

You can read the status (e.g. "On" or "Off") of LEDs of a CPU or a module using the "LED" instruction. Note, however, that is not possible to read the LED status of the LINK RX/TX LEDs of the CPU 1510SP-1 PN and CPU 1512SP-1 PN.

You can find additional information on the "LED" instruction in the STEP 7 online help.

2.4 Interface module manuals

Configuration notes on interface modules depending on the I/O modules

Module		IM 155-6 PN BA	IM 155-6 PN ST					IM 155-6 PN HF IM 155-6 PN/2 HF V4.2 and higher IM 155-6 PN/3 HF V4.2 and higher							IM 155-6 PN HS	IM 155-DP HF				
	Firmware version	V3.2	V1.0	V1.1	V3.1	V3.3	V4.1	V2.0	V2.1	V2.2	V3.0	V3.1	V3.3	V4.2	V4.0	V1.0	V1.1	V3.0	V3.1	V4.2
AI 2xI 2-/4-wire ST	V1.0	✓	---	---	✓	✓	✓	---	---	---	✓	✓	✓	✓	✓	---	---	✓	✓	✓
AI 2xU ST	V1.0	✓	---	---	✓	✓	✓	---	---	---	✓	✓	✓	✓	✓	---	---	✓	✓	✓
AI 2xU/I 2-/4-wire HF	V2.0	✓	✓	✓	✓	✓	✓	✓	✓	✓	✓	✓	✓	✓	✓	✓	✓	✓	✓	✓
AI 8xI 2-/4-wire BA	V1.0	✓	---	✓	✓	✓	✓	---	---	✓	✓	✓	✓	✓	✓	---	✓	✓	✓	✓
AI 8xU BA	V1.0	✓	---	✓	✓	✓	✓	---	---	✓	✓	✓	✓	✓	✓	---	✓	✓	✓	✓
AI Energy Meter 400VAC ST	V3.0	✓	✓	✓	✓	✓	✓	✓	✓	✓	✓	✓	✓	✓	✓	✓	✓	✓	✓	✓
AI Energy Meter 480VAC ST	V4.0	✓	---	---	✓	✓	✓	---	---	---	✓	✓	✓	✓	✓	---	---	✓	✓	✓
AI Energy Meter 480VAC/CT HF	V6.0	✓	✓	✓	✓	✓	✓	✓	✓	✓	✓	✓	✓	✓	✓	✓	✓	✓	✓	✓
AI Energy Meter 480VAC/RC HF	V6.0	✓	✓	✓	✓	✓	✓	✓	✓	✓	✓	✓	✓	✓	✓	✓	✓	✓	✓	✓
AQ 2xI ST	V1.0	✓	---	---	✓	✓	✓	---	---	---	✓	✓	✓	✓	✓	---	---	✓	✓	✓
AQ 2xU ST	V1.0	✓	---	---	✓	✓	✓	---	---	---	✓	✓	✓	✓	✓	---	---	✓	✓	✓
DI 8x24VDC BA	V1.0	✓	---	✓	✓	✓	✓	---	---	✓	✓	✓	✓	✓	✓	---	✓	✓	✓	✓
DI 8x24VDC HS	V1.0	✓	---	✓	✓	✓	✓	---	---	✓	✓	✓	✓	✓	✓	---	✓	✓	✓	✓
DI 8x24VDC HF	V2.0	✓	✓	✓	✓	✓	✓	✓	✓	✓	✓	✓	✓	✓	✓	✓	✓	✓	✓	✓

Module		IM 155-6 PN BA	IM 155-6 PN ST					IM 155-6 PN HF IM 155-6 PN/2 HF V4.2 and higher IM 155-6 PN/3 HF V4.2 and higher							IM 155-6 PN HS	IM 155-DP HF				
	Firmware version	V3.2	V1.0	V1.1	V3.1	V3.3	V4.1	V2.0	V2.1	V2.2	V3.0	V3.1	V3.3	V4.2	V4.0	V1.0	V1.1	V3.0	V3.1	V4.2
DI 16x24V DC ST	V1.1	✓	✓	✓	✓	✓	✓	✓	✓	✓	✓	✓	✓	✓	✓	✓	✓	✓	✓	✓
DQ 4x24VDC/2A HS	V1.0	✓	---	✓	✓	✓	✓	---	---	✓	✓	✓	✓	✓	✓	---	✓	✓	✓	✓
DQ 4x24VDC/2A HF	V2.0	✓	✓	✓	✓	✓	✓	✓	✓	✓	✓	✓	✓	✓	✓	✓	✓	✓	✓	✓
DQ 4x24 … 230VAC/2A HF	V1.0	✓	---	---	---	✓	✓	---	---	---	---	✓	✓	✓	✓	---	---	✓	✓	✓
RQ 4x120VDC-230VAC/5A NO MA ST	V1.0	✓	---	---	✓	✓	✓	---	---	---	✓	✓	✓	✓	✓	---	---	✓	✓	✓
DQ 8x24VDC/0.5A HF	V2.0	✓	✓	✓	✓	✓	✓	✓	✓	✓	✓	✓	✓	✓	✓	✓	✓	✓	✓	✓
DQ 8x24VDC/0.5A BA	V1.0	✓	---	---	✓	✓	✓	---	---	---	✓	✓	✓	✓	✓	---	---	✓	✓	✓
DQ 16x24VDC/0.5A BA	V0.0	✓	---	---	---	✓	✓	---	---	---	---	✓	✓	✓	✓	---	---	✓	✓	✓
DQ 16x24VDC/0.5A ST	V1.1	✓	✓	✓	✓	✓	✓	✓	✓	✓	✓	✓	✓	✓	✓	✓	✓	✓	✓	✓
PotDis-TB-P1-R	-	✓	---	---	---	✓	✓	---	---	---	---	✓	✓	✓	✓	---	---	✓	✓	✓
PotDis-TB-P2-B	-	✓	---	---	---	✓	✓	---	---	---	---	✓	✓	✓	✓	---	---	✓	✓	✓
PotDis-TB-n.c.-G	-	✓	---	---	---	✓	✓	---	---	---	---	✓	✓	✓	✓	---	---	✓	✓	✓
PotDis-TB-BR-W	-	✓	---	---	---	✓	✓	---	---	---	---	✓	✓	✓	✓	---	---	✓	✓	✓

--- This combination is not permitted in the configuration

Compilation error with IM 155-6 PN HF as of V2.1, IM 155-6 PN HS V4.0

Affected components:

- IM 155-6 PN HF as of V2.1
- IM 155-6 PN HS V4.0

A compilation error can occur in isochronous mode of the ET200SP (IM 155-6 PN HF as of V2.1, IM 155-6 PN HS V4.0) with the setting "From OB" even if the settings are valid. The typical error message is: "The specific Ti value is invalid" or "The specific To value is invalid". But other error messages are possible as well.

Solution:

Upgrade the module description of the IM in this case. You can upgrade the module description of the IM in the network view or in the device view of the inspector window with the function "Update module description". The error can still occur with the current module description after the first compilation. If you have selected valid settings, the error will no longer occur with the subsequent compilation.

IM 155-6 PN ST Manual, Edition 04/2017

Response times

The response time of the IM 155-6 PN ST is made up of:

- Backplane bus cycle time
- Operating system processing

Note

Validity of the formula

The following formula applies to the ET 200SP backplane bus.

The formula does not apply to the ET-Connection bus.

Backplane bus cycle time

The backplane bus cycle time is the time the interface module requires to output new output data, read new input data and then copy the data to the PROFINET send buffer.

The backplane bus cycle time is the result of the update time configured for the interface module as IO device and amounts to at least 1 ms.

- If the configured update time ≥ 1 ms, the backplane bus cycle time is equal to the configured update time.
- If the configured update time < 1 ms, the backplane bus cycle time is the product of an integer multiple of the configured update time.

Table 2- 3 Example calculation

Configured update time	Backplane bus cycle time (integer multiple, minimum 1 ms)
250 µs	4 x 250 µs = 1000 µs
750 µs	2 x 750 µs = 1500 µs
1000 µs	1000 µs
2000 µs	2000 µs

Operating system processing time

The operating system processing time is calculated based on the following formula:

Operating system processing time output

Operating system processing time_output[µs] = 147 + 3.775 number_m + 0.275 bytes_out

Operating system processing time input

Operating system processing time_input[µs] = 158.3 + 2.325 number_m + 0.325 bytes_in

Explanation of the parameters:

Number_m: Total number of all modules (incl. server module)

Bytes_out: Sum of all output bytes

Bytes_in: Sum of all input bytes

Calculating the response time

Response time output

The response time output of the IM 155-6 PN ST is made up of:

- Backplane bus cycle time
- Operating system processing time_output.

Response time input

The response time input of the IM 155-6 PN ST is made up of:

- Backplane bus cycle time
- Operating system processing time_input.

IM 155-6 PN HF manual, Edition 12/2015

Section 3.1 Pin assignment

PROFINET interface X1 Port 2:

If autonegotiation is disabled, the RJ-45 socket (X1 Port 2) has the switch assignment (MDI-X).

IM 155-6 PN HS manual, Edition 09/2016

Section 3.1 Pin assignment

PROFINET interface X1 Port 2:

If autonegotiation is disabled, the RJ-45 socket (X1 Port 2) has the switch assignment (MDI-X).

Section 7 Technical specifications

- The PROFINET certification of network Class 3 is in preparation.
- Technical specifications of the BusAdapters BA 2×SCRJ, BA SCRJ/RJ45, BA SCRJ/FC: The maximum length of the PCF-GI fiber-optic cable is 250 m.

2.5 I/O module manuals

Configuration notes on the I/O modules (supplement to Product overview section in the manual)

I/O module		Article number	Firmware version	STEP 7 (TIA Portal)	STEP 7 V5.5 SP3
Digital input modules	DI 16x24VDC ST	6ES7131-6BH00-0BA0	V1.1.0	HSP0162 V13 SP1 or higher	HSP0229 V6.0
	DI 8x24VDC BA	6ES7131-6BF00-0AA0	V1.0.0	HSP0126	HSP0229 V5.0
	DI 8x24VDC ST	6ES7131-6BF00-0BA0	V1.1.0	V13 Update 3	HSP0229 V4.0
	DI 8x24VDC HF	6ES7131-6BF00-0CA0	V2.0.0	HSP0163 V13 SP1 Update 4 or higher	HSP0229 V6.0
	DI 8x24VDC HS	6ES7131-6BF00-0DA0	V1.0.2	Integrated as of V14	HSP0229 V5.0
Digital output modules	DQ 8x24VDC/0.5A BA	6ES7132-6BF00-0AA1	V1.0.0	HSP0162 V13 SP1 or higher	HSP0230 V6.0
	DQ 4x24VDC/2A ST	6ES7132-6BD20-0BA0	V1.1.0	V13 Update 3	HSP0230 V4.0
	DQ 8x24VDC/0.5A ST	6ES7132-6BF00-0BA0	V1.1.0	V13 Update 3	HSP0230 V4.0
	DQ 16x24VDC/0.5A ST	6ES7132-6BH00-0BA0	V1.1.0	HSP0162 V13 SP1 or higher	HSP0230 V6.0
	DQ 8x24VDC/0.5A HF	6ES7132-6BF00-0CA0	V2.0.0	HSP0163 V13 SP1 Update 4 or higher	HSP0230 V6.0
	DQ 4x24VDC/2A HF	6ES7132-6BD20-0CA0	V2.0.0	HSP0163 V13 SP1 Update 4 or higher	HSP0230 V6.0
	DQ 4x24VDC/2A HS	6ES7132-6BD20-0DA0	V1.0.2	Integrated as of V14	HSP0230 V5.0
	DQ 4x24...230VAC/2A ST	6ES7132-6FD00-0BB1	V1.0	as of V13	HSP0230 V3.0
	DQ 4x24...230VAC/2A HF	6ES7132-6FD00-0CU0	V1.0.0	as of V14 with HSP0240	HSP 0230 as of V8.0
	RQ 4x120VDC-230VAC/5A NO ST	6ES7132-6HD00-0BB1	V1.0.0	HSP0128	HSP0232 V5.0
	RQ 4x120VDC-230VAC/5A NO MA ST	6ES7132-6MD00-0BB1	V1.0.0	HSP0162 V13 SP1 or higher	HSP0232 V6.0

I/O module		Article number	Firmware version	STEP 7 (TIA Portal)	STEP 7 V5.5 SP3
Analog input modules	AI 8xU BA	6ES7134-6FF00-0AA1	V1.0.0	HSP0126	HSP0227 V5.0
	AI 2xU ST	6ES7134-6FB00-0BA1	V1.0.0	HSP0160 V13 SP1 or higher	HSP0227 V6.0
	AI 8xI 2-/4-wire BA	6ES7134-6GF000AA1	V1.0.0	HSP0126	HSP0227 V5.0
	AI 4xI 2-/4-wire ST	6ES7134-6GD00-0BA1	V1.1.0	V13 Update 3	HSP0227 V4.0
	AI 2xI 2-/4-wire ST	6ES7134-6GB00-0BA1	V1.0.0	HSP0160 V13 SP1 or higher	HSP0227 V6.0
	AI 4xU/I 2-wire ST	6ES7134-6HD00-0BA1	V1.1.0	V13 Update 3	HSP0227 V4.0
	AI 2xU/I 2-/4-wire HF	6ES7134-6HB00-0CA1	V2.0.0	HSP0161 V13 SP1 or higher	HSP0227 V6.0 V5.5 SP4 HF7 or higher
	AI 2xU/I 2-/4-wire HS	6ES7134-6HB00-0DA1	V2.0.1	Integrated as of V14	HSP0227 V5.0
	AI Energy Meter 400VAC ST	6ES7134-6PA01-0BD0	V3.0.0	V13 SP1 Update 4 HSP0159	HSP0227 V6.0
	AI Energy Meter 480VAC ST	6ES7134-6PA20-0BD0	V4.0.0	V13 SP1 Update 4 HSP0159	HSP0227 V6.0 V5.5 SP4 HF7 or higher
	AI Energy Meter 480VAC/CT HF	6ES7134-6PA00-0CU0	V6.0.0	V15 or higher with HSP0253	V5.5 SP3 or higher
	AI Energy Meter 480VAC/RC HF	6ES7134-6PA20-0CU0	V6.0.0	V15 or higher with HSP0253	V5.5 SP3 or higher
Analog output modules	AQ 2xU ST	6ES7135-6FB00-0BA1	V1.0.0	HSP0160 V13 SP1 or higher	HSP0228 V6.0
	AQ 2xI ST	6ES7135-6GB00-0BA1	V1.0.0	HSP0160 V13 SP1 or higher	HSP0228 V6.0
	AQ 4xU/I ST	6ES7135-6HD00-0BA1	V1.1.0	V13 Update 3	HSP0228 V4.0
	AQ 2xU/I HS	6ES7135-6HB00-0DA1	V2.0.1	Integrated as of V14	HSP0228 V5.0

2.5.1 Digital module device manuals

Manuals for I/O modules ST, BA

When you have deactivated all channels of the I/O module, a diagnostics alarm is still generated in the case of a fault if the "Missing supply voltage L+" diagnostics is enabled. For the following I/O modules, this behavior is corrected as of firmware version > V1.1.0:

- DI 16x24VDC ST
- DI 8x24VDC ST
- DQ 16x24VDC/0.5A ST
- DQ 8x24VDC/0.5 A ST
- DQ 4x24VDC/0.5A ST

Manuals for digital input modules with wire-break detection

When wire-break detection is configured the module requires a low quiescent current at the digital input in case of "0" signal for the monitoring. The parallel connection of a resistor with 25 kΩ to 45 kΩ is required in order that this quiescent current can flow when encoder contacts are open.

If wire-break detection is disabled in the configuration, no parallel connection of the resistor is required.

If wire-break detection is configured, connect a resistor with 25 kΩ to 45 kΩ parallel to each mechanical encoder contact.

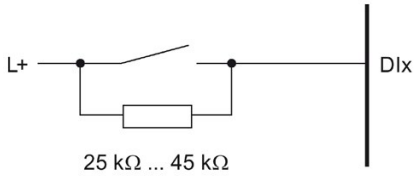

Figure 2-1 Connect mechanical encoder contact with resistor

Manuals DI 4x120...230VAC ST, Edition 02/2014; DQ 4x24...230VAC/2A ST, Edition 02/2014

Section 4.3 Address space

If you have enabled value status, the module returns value status 1, regardless of the state of the connected supply voltage.

Manual DI 8x24VDC HF, Edition 02/2014

Section 6.1 Technical specifications

- 24 V encoder supply
  - Output current, max.: 700 mA, total current

Manual DI 8xNAMUR HF, Edition 02/2014

Section A.2 Parameter assignment and structure of parameter data record

With data records 0 to 7, you can configure individual channels.

When the interface module IM 155-6 DP HF (PROFIBUS DP) is used and data records 0 and 1 are read, the module returns the diagnostics data records and not the parameter data records of the DI 8xNAMUR HF.

DQ 4x24VDC/2A HS manual, Edition 09/2016

Section 6.1 Technical specifications

For this module, the marine approval for the bridge and deck zone is valid from a bus cycle time of at least 250 µs.

Manual DQ 4x24..230VAC/2A ST digital output module, Edition 03/2015

Section 3.1 Pin assignment; Supply voltage fuse protection

The module has neither short-circuit protection nor overload protection. Protect the module from being destroyed by impermissible high current and install a fine fuse in the supply line. The maximum rated current of the fine fuse depends on the hardware function status (FS) of the module.

HW functional status of the module	Max. rated current of fuse	Tripping characteristic
FS ≤ 3	8 A	Quick response
FS ≥ 4	10 A	Quick response

Section 6.1 Technical specifications, Switching frequency with inductive load

The switching frequency of the outputs with inductive loads is max. 0.5 Hz.

Higher switching frequency is possible in spite of this, and depends on the alternating voltage and switched inductors or the power factor of the electric motor used.

Alternating voltage	Condition	Max. switching frequency
200 VAC or lower	---	10 Hz
200 VAC or higher	• Power factor of the electric motor cos φ > 0.35 • Electric motor must only be turned off after startup (no jogging mode). Electric motors which are turned off during startup could create inductive shutoff voltages > 600 V , which could destroy the output electronics (Triac).	10 Hz

DQ 8x24VDC/0.5A ST manual, Edition 07/2014

Section 4.2 Explanation of the parameters (as of functional version FS-05 of DQ 8x24VDC/0.5A ST)

Diagnostics: Wire break:
The module responds to a wire break as follows:

- Disabled:
  - Channel status LED lit green
  - Output voltage present at channel
- Enabled:
  - Channel status LED is off
  - Output is switched off
  - In addition, the wire break diagnostics is signaled and the DIAG LED on the module flashes red

---

Note

If one of the two parameters "Diagnostics: Short-circuit to L+" or "Diagnostics: Wire break" is enabled and one of these diagnostics occurs, the affected channel is switched off. This prevents undefined load switching and supports detection of a faulty channel for module diagnostics.

DQ 4x24..230VAC/2A HF Manual, Edition 02/2018

Section 3.1.1. und 4.1.1 Wiring and block diagram

The following figure shows an example for the terminal assignment of the digital output module DQ 4x24...230VAC/2A HF on the BaseUnit BU type U0 (3-wire connection) in combination with a potential distribution module and terminal block.

For a 3-wire connection you connect the protective earth (PE) of the actuator to the terminal block.

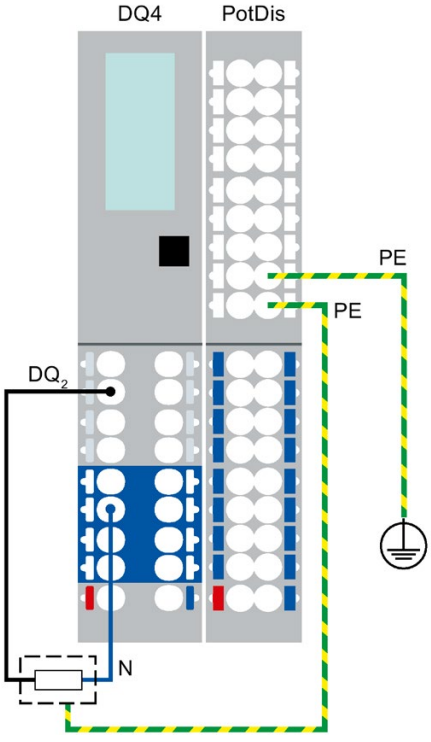

Figure 2-2 3-wire connection of actuators with potential distribution module at the digital output module DQ 4x24...230VAC/2A HF

RQ 4x120VDC-230VAC/5A NO ST manual, Edition 03/2015 and RQ 4x120VDC-230VAC/5A NO MA ST manual, Edition 12/2015

Section 3.1 Wiring and block diagram

The AUX terminals of the self-assembling voltage bus can be used for the connection of the protective conductor (PE) or for voltages up to a maximum of 24 V DC.

2.5.2 Analog module device manuals

Manuals for analog input modules

Manual	Edition
AI 8xI 2-/4-wire BA	03/2015
AI 8xU BA	03/2015
AI 2xU ST	12/2015
AI 4xI 2-wire 4..20mA HART	11/2014
AI 2xU/I 2-/4-wire HF	12/2015

Section 5.2 Parameters

Note

Please note that the settings in the "Interference frequency suppression" parameter have a direct effect on the cycle time of the module. The analog value is therefore also affected by additionally set filtering via the "Smoothing" parameter.

Manuals AI 2xU/I 2-/4-wire HF, Edition 12/2015; AI Energy Meter 480VAC ST, Edition 12/2015

For configuration with STEP 7 V13 or higher (TIA Portal), real values between $-7x10^{28}$ and $+7x10^{28}$ can be input. This is true for configuration via HSP and via GSD file (PROFINET).

For configuration with STEP 7 V5.5 SP4 as of HF7, configuration by means of GSD file (PROFINET) with REAL values of $-1.175x10^{38}$ to $+3.402x10^{38}$ is possible.

With STEP 7 SP4 to HF6, parameter assignment of REAL values is not possible. Functions that require REAL values are not available in this case.

AI Energy Meter 480VAC/CT HF, Edition 07/2018, and AI Energy Meter 480VAC/RC HF, Edition 07/2018 device manuals

Section A.2 Structure of the parameter data record 128 for the entire module

Module parameter block

Byte 4

7	6	5	4	3	2	1	0

Connection type of the phases

00_H	= Disabled	
$0B_H$	= 1P2W:	1-phase AC, 2 conductors
$0C_H$	= 3P4W:	3-phase, 4 conductors
$0D_H$	= 3P4WI:	3-phase current measurement, 4 conductors
$0E_H$	= 3P4W1:	3-phase, 4 conductors, balanced load
$0F_H$	= 3x1P2W:	3x1-phase AC, 2 conductors
10_H	= 2P3W:	2-phase, 3-wire
11_H	= 3P3W:	3-phase, 3-wire
12_H	= 3P3W1:	3-phase, 3-wire, balanced load

Byte 5

7	6	5	4	3	2	1	0

Voltage measuring range of the power supply system
(Supply voltage, nominal value of phase voltage)

01_H	= 100 V
02_H	= 110 V
03_H	= 115 V
04_H	= 120 V
05_H	= 127 V
06_H	= 190 V
07_H	= 200 V
08_H	= 208 V
09_H	= 220 V
$0A_H$	= 230 V
$0B_H$	= 240 V
$0C_H$	= 277 V

Byte 6

7	6	5	4	3	2	1	0

Line frequency of the power supply system

0001	= 60 Hz
0010	= 50 Hz

End value for energy meter

000	= No end value - infinite counting
001	= Count periodically to 10^3
010	= Count periodically to 10^6
011	= Count periodically to 10^9
100	= Count periodically to 10^{12}
101	= Count periodically to 10^{15}

Energy meter gate

0	= Energy meters always counting
1	= Energy meter gate

Byte 7

7	6	5	4	3	2	1	0
0	0	0	0	0	0	0	0

Reserved

Section D.5 User data variants with 32 bytes input data / 20 bytes output data

Table D7 - Total energy L1L2L3 (ID249 or F9h)

Table 2- 4 Total energy L1L2L3

Byte	Allocation	Data type	Unit	Value range	Measured value ID
0	User data variant	BYTE	-	249 ($F9_H$)	-
1	Quality information = QQ_1 I_3 U_3 I_2 U_2 I_1 U_1	BYTE	Bit string	qq xx xx xx	-
2	Reserved	BYTE	-	-	-
3	Reserved	BYTE	-	-	-
4 ... 7	Total active energy inflow L1L2L3	UDINT	1 Wh	0 to 2147483647	220
8 ... 11	Total active energy outflow L1L2L3	UDINT	1 Wh	0 to 2147483647	221
11 ... 15	Total reactive energy inflow L1L2L3	UDINT	1 varh	0 to 2147483647	222
16 ... 19	Total reactive energy outflow L1L2L3	UDINT	1 varh	0 to 2147483647	223
20 ... 23	Total apparent energy L1L2L3	UDINT	1 VAh	0 to 2147483647	224
24	Reserved	BYTE	-	-	-
25	Scaling active energy, inflow	USINT	-	0 ... 255	-
26	Scaling active energy, outflow	USINT	-	0 ... 255	-
27	Scaling reactive energy, inflow	USINT	-	0 ... 255	-
28	Scaling reactive energy, outflow	USINT	-	0 ... 255	-
29	Scaling apparent energy	USINT	-	0 ... 255	-
30	Reserved	BYTE	-	-	-
31	Total power factor L1L2L3	USINT	0.01	0 … 100	66037

Manuals AI Energy Meter 400VAC ST, Edition 12/2015; AI Energy Meter 480VAC ST, Edition 12/2015

Requirements for the operation of the AI Energy Meter on slot 1 of the ET 200SP:

Interface module / CPU	AI Energy Meter 400VAC ST (6ES7134-6PA01-0BD0)	AI Energy Meter 480VAC ST (6ES7134-6PA20-0BD0)
IM 155-6 PN BA (6ES7155-6AR00-0AN0)	Can be operated on slot 1 for all IM 155-6 PN BA	
IM 155-6 PN ST (6ES7155-6AU00-0BN0)	Can be operated on slot 1 for IM 155-6 PN ST from firmware version V3.1 and higher and functional status FS 07	
IM 155-6 PN HF (6ES7155-6AU00-0CN0)	Can be operated on slot 1 for IM 155-6 PN HF from firmware version V3.0 and higher and functional status FS 05	
IM 155-6 DP HF (6ES7 155-6BU00-0CN0)	Can be operated on slot 1 for IM 155-6 DP HF from firmware version V3.0 and higher	
CPU 1510SP-1 PN, CPU 1512SP-1 PN, CPU 1515SP PC	Can be operated on slot 1 for all CPUs	

In the manual for Energy Meter 480VAC ST, Edition 12/2015

In the device manual for Energy Meter 480VAC ST, the measured value ID and the associated measured variables for the complete performance are reversed. The correct association is shown in the table below:

Measured value ID	Measured variables	Unit
34	Total active power L1L2L3	W
35	Total reactive power L1L2L3	var
36	Total apparent power L1L2L3	VA
65	Max. total active power	W
66	Max. total reactive power	var
67	Max. total apparent power	VA
95	Min. total active power	W
96	Min. total reactive power	var
97	Min. total apparent power	VA

If you use the user-data mapping via data record DS 130, please note that the texts for the measured variables are also displayed incorrectly during configuration.

During configuration of the measured variables for the total active, reactive, and apparent power, select the following texts:

Desired measured variable for the user-data mapping	Text to select during configuration
Total active power L1L2L3	Total apparent power L1L2L3 (ID00034)
Total reactive power L1L2L3	Total active power L1L2L3 (ID00035)
Total apparent power L1L2L3	Total reactive power L1L2L3 (ID00036)
Max. total active power	Max. total apparent power (ID00065)
Max. total reactive power	Max. total active power (ID00066)
Max. total apparent power	Max. total reactive power (ID00067)
Min. total active power	Min. total apparent power (ID00095)
Min. total reactive power	Min. total active power (ID00096)
Min. total apparent power	Min. total reactive power (ID00097)

The project configuration modification described above is no longer required if the following tools and GSD files are used:

- STEP 7 (TIA Portal) as of V14
- STEP 7 (TIA Portal) as of V5.5 SP4 with HSP 0227
- GSD file GSDML-V2.32-ET200SP-20160706

Manual for AQ 2xU/I HF, Edition 02/2014

Section 3.1 Wiring and block diagram, pin assignment

You can now also use the 3-wire connection in addition to the 2-wire and 4-wire connection for the analog module AQ 2xU/I HF.

Pin assignment for AQ 2xU/I HF			Explanation
Voltage 2-wire connection 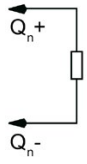 	Voltage 3-wire connection 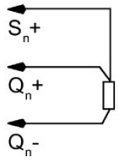 	Voltage 4-wire connection 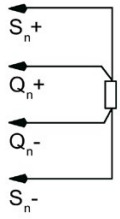 	• Qn+: Analog output voltage/current (positive), channel n • Qn-: Analog output voltage/current (negative), channel n • Sn+: Sensor line positive, channel n • Sn-: Sensor line negative, channel n

The 3-wire connection and 4-wire connection make compensation for line impedance possible. The compensation is not possible for 2-wire connections due to the missing sensor cable.

2.5.3 Communications module manuals

Communications module CM DP, Edition 12/2014

The communications module CM DP supports the PROFIsafe protocol V2.

Exception: Fail-safe modules that only support PROFIsafe V1 mode.

Communications module IO-Link Master CM 4xIO-Link, Edition 10/2017

Section Connecting, Wiring and block diagram

Connection: 2-wire and 3-wire connection in DQ operating mode:

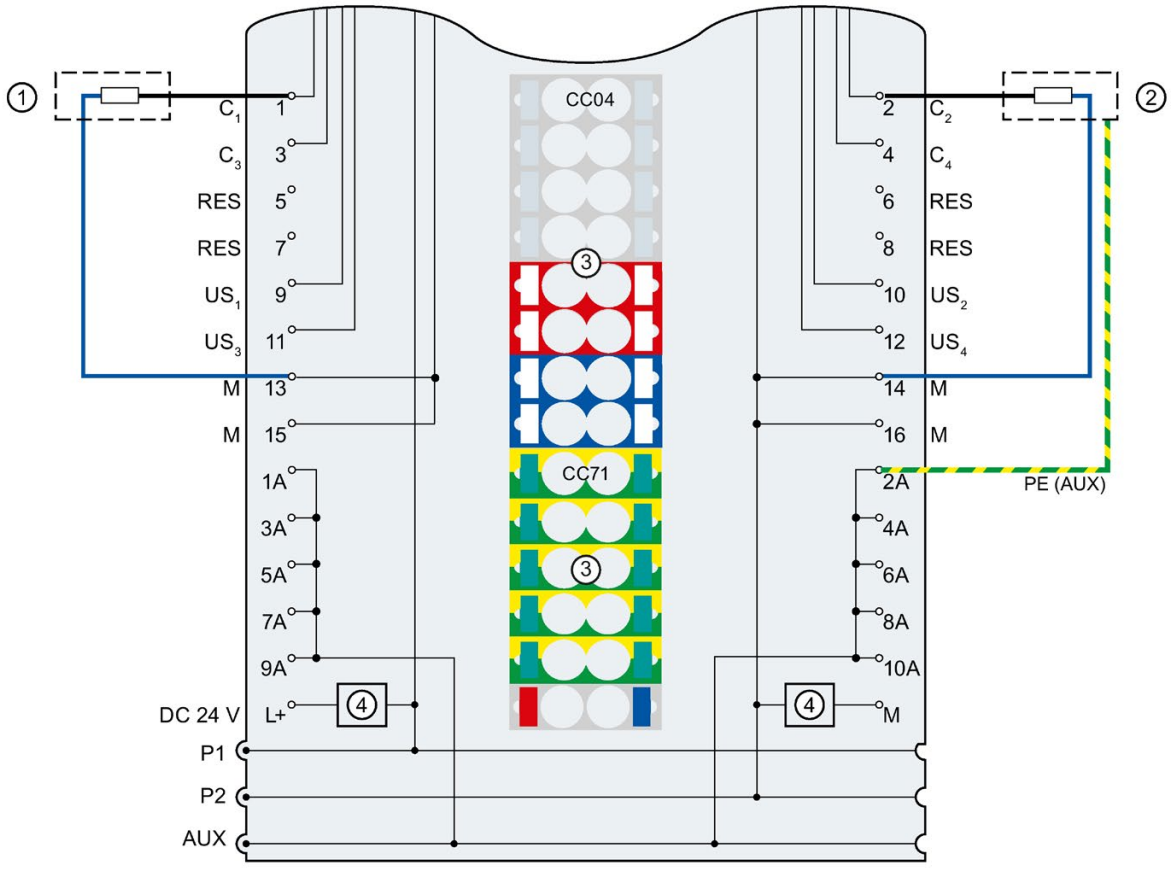

①	2-wire connection	1 A to 10 A	AUX terminals
②	3-wire connection	PE (AUX)	Protective conductor connection
③	Color-coded labels with color code CC04 and CC71 (optional)	P1, P2, AUX	Internal self-assembling voltage buses Connection to the left (dark-colored BaseUnit) Connection to the left interrupted (light-colored BaseUnit)
④	Filter connection supply voltage (only when light-colored BaseUnit is present)	C_n	Communication signal, DI, DQ
24 V DC	Supply voltage L+ (infeed for light-colored BaseUnit only)	RES	Reserved, must not be assigned
M	Ground	US_n	Supply voltage (positive)

Figure 2-3 Terminal assignment for 2-wire and 3-wire connection in DQ operating mode

2.5.4 Device manuals Technology modules

Technology module TM Pulse 2x24V, Edition 09/2015

Supplement in the section Preface

Please read the information about Open Source Software on the Internet (https://support.industry.siemens.com/cs/ww/en/view/109740777).

SIEMENS

SIMATIC

ET 200SP
PROFIenergy product information

Product Information

12/2015
A5E03871936-AH

Legal information

Warning notice system

This manual contains notices you have to observe in order to ensure your personal safety, as well as to prevent damage to property. The notices referring to your personal safety are highlighted in the manual by a safety alert symbol, notices referring only to property damage have no safety alert symbol. These notices shown below are graded according to the degree of danger.

⚠ DANGER

indicates that death or severe personal injury **will** result if proper precautions are not taken.

⚠ WARNING

indicates that death or severe personal injury **may** result if proper precautions are not taken.

⚠ CAUTION

indicates that minor personal injury can result if proper precautions are not taken.

NOTICE

indicates that property damage can result if proper precautions are not taken.

If more than one degree of danger is present, the warning notice representing the highest degree of danger will be used. A notice warning of injury to persons with a safety alert symbol may also include a warning relating to property damage.

Qualified Personnel

The product/system described in this documentation may be operated only by **personnel qualified** for the specific task in accordance with the relevant documentation, in particular its warning notices and safety instructions. Qualified personnel are those who, based on their training and experience, are capable of identifying risks and avoiding potential hazards when working with these products/systems.

Proper use of Siemens products

Note the following:

⚠ WARNING

Siemens products may only be used for the applications described in the catalog and in the relevant technical documentation. If products and components from other manufacturers are used, these must be recommended or approved by Siemens. Proper transport, storage, installation, assembly, commissioning, operation and maintenance are required to ensure that the products operate safely and without any problems. The permissible ambient conditions must be complied with. The information in the relevant documentation must be observed.

Trademarks

All names identified by ® are registered trademarks of Siemens AG. The remaining trademarks in this publication may be trademarks whose use by third parties for their own purposes could violate the rights of the owner.

Disclaimer of Liability

We have reviewed the contents of this publication to ensure consistency with the hardware and software described. Since variance cannot be precluded entirely, we cannot guarantee full consistency. However, the information in this publication is reviewed regularly and any necessary corrections are included in subsequent editions.

Siemens AG
Division Digital Factory
Postfach 48 48
90026 NÜRNBERG
GERMANY

A5E03871936-AH
℗ 11/2015 Subject to change

Copyright © Siemens AG 2012 - 2015.
All rights reserved

Table of contents

1 PROFIenergy 4

1.1 Introduction 4

1.2 Principle of operation 6

1.3 Parameter assignment 9

1.4 PROFIenergy control data records 11

1.5 I/O modules 12

1.5.1 Digital input module 12

1.5.2 Digital output modules 14

1.5.3 Analog input modules 15

1.5.4 Analog output module 17

1.5.5 IO-Link Master 19

1.5.5.1 DI operating mode 19

1.5.5.2 DQ operating mode 21

1.5.5.3 IO-Link operating mode 22

PROFIenergy 1

Security information

For the secure operation of Siemens products and solutions, it is necessary to take suitable preventive action (e.g. cell protection concept) and integrate each component into a holistic, state-of-the-art industrial security concept. Third-party products that may be in use should also be considered. You can find more information about industrial security on the Internet (http://www.siemens.com/industrialsecurity).

1.1 Introduction

Introduction

PROFIenergy is a data interface based on PROFINET for switching off consumers centrally and in a coordinated manner during idle times, regardless of the manufacturer or device type. The goal is that the process is only provided with the energy that is absolutely required. The majority of the energy is saved by the process itself; the PROFINET device itself only contributes a few watts of saving potential. This operating mode is termed "pause" in PROFIenergy.

The PROFINET devices are turned off by special commands in the user program of the PROFINET IO controller. No additional hardware is required; the PROFIenergy commands are directly interpreted by the PROFINET devices.

The device which provides the PROFIenergy interface and supports the required control data record has the so-called PE-Entity, the access point for these control data records. This PE-Entity is located on the interface module as a substitute for I/O modules that do not have their own PE-Entity. I/O modules that have their own PE-Entity are always addressed directly.

Requirements

- Interface module IM 155-6 PN ST
- Interface module IM 155-6 PN HF
- ET 200SP I/O modules which support PROFIenergy
  - Digital input module DI 8x24VDC ST (6ES7131-6BF00-0BA0)
  - Digital input module DI 8x24VDC HF (6ES7131-6BF00-0CA0)
  - Digital input module DI 8xNAMUR HF (6ES7131-6TF00-0CA0)
  - Digital input module DI 8x24VDC HS (6ES7131-6BF00-0DA0)
  - Digital output module DQ 4x24VDC/2A ST (6ES7132-6BD20-0BA0)
  - Digital output module DQ 4x24VDC/2A HF (6ES7132-6BD20-0CA0)
  - Digital output module DQ 4x24VDC/2A HS (6ES7132-6BD20-0DA0)
  - Digital output module DQ 8x24VDC/0,5A ST (6ES7132-6BF00-0BA0)
  - Digital output module DQ 8x24VDC/0,5A HF (6ES7132-6BF00-0CA0)
  - Digital output module DQ 16x24VDC/0,5A ST (6ES7132-6BH00-0BA0)
  - Digital output module DQ 4x24..230VAC/2A ST (6ES7132-6FD00-0BB1)
  - Digital output module RQ 4x24VUC/2A CO ST (6ES7132-6GD50-0BA0)
  - Digital output module RQ 4x120VDC-230VAC/5A NO ST (6ES7132-6HD00-0BB0)
  - Digital output module RQ 4x120VDC-230VAC/5A NO MA ST (6ES7132-6MD00-0BB1)
  - Analog input module AI 2xU ST (6ES7134-6FB00-0BA1)
  - Analog input module AI 2xI 2-/4-wire ST (6ES7134-6GB00-0BA1)
  - Analog input module AI 4xI 2-/4-wire ST (6ES7134-6GD00-0BA1)
  - Analog input module AI 2xU/I 2-/4-wire HF (6ES7134-6HB00-0CA1)
  - Analog input module AI 4xU/I 2-wire ST (6ES7134-6HD00-0BA1)
  - Analog input module AI 2xU/I 2-/4-wire HS (6ES7134-6HB00-0DA0)
  - Analog output module AQ 2xU ST (6ES7135-6FB00-0BA1)
  - Analog output module AQ 2xI ST (6ES7135-6GB00-0BA1)
  - Analog output module AQ 4xU/I ST (6ES7135-6HD00-0BA1)
  - Analog output module AQ 2xU/I HF (6ES7135-6HB00-0CA1)
  - Analog output module AQ 2xU/I HS (6ES7135-6HB00-0DA1)
  - Communication module IO-Link Master CM 4xIO-Link (6ES7137-6BD00-0BA0)
- User program for sending the parameter data record, index 3
- User program with the function blocks for controlling the PROFIenergy commands ("PE_START_END" - FB 815, "PE_CMD" - FB 816).

Procedure

1. Create the parameter data record, Index 3 in STEP 7
2. Transfer the parameter data record to the interface module with the instruction "WRREC" - SFB 53.
3. Create the user program with the FBs for controlling the PROFIenergy commands ("PE_START_END" - FB 815, "PE_CMD" - FB 816).
4. Transfer the user program to the CPU.

Additional information

- System manual ET 200SP Distributed I/O System
- Device manual Interface Module
- Device manuals Digital and Analog I/O Modules
- System manual PROFINET System Description
- You will find additional information on PROFIenergy services, parameters of the service IDs on the Internet under Common Application Profile PROFIenergy; Technical Specification for PROFINET; Version 1.0; January 2010; Order No: 3.802.
- Additional information on PROFIenergy FBs ("PE_START_END" - FB 815, "PE_CMD" - FB 816) is available in the online help for STEP 7 V5.5 as of SP2 "Help on System Functions/System Function Blocks".

1.2 Principle of operation

"Pause" control and "Pause" behavior

At the beginning and end of pauses, you enable or disable the pause function of the system; the IO controller then sends the PROFIenergy command "Start_Pause" or "End_Pause" to the PROFINET devices. The device then interprets the contents of the PROFIenergy command and switches on or off. The interface module is the PE-Entity for I/O modules with PROFIenergy capability of the ET 200SP.

Other PROFIenergy commands allow device information to be accessed during the pauses. You can use these commands to transfer the "Start_Pause" / "End_Pause" command in good time.

Note

A complete PROFIenergy sequence consists of the commands "Start_Pause" and "End_Pause". Always observe this sequence during programming.

LED displays

In general, PROFIenergy does not have an effect on the LED display. Please see the device manuals of the relevant I/O modules for exceptions.

Response to error detection

All channels whose pause mode is set to "PE_MODE_PROCEED" report errors as in productive operation.

The following rules apply to channels which switch to a pause mode other than "PE_MODE_PROCEED":

- All errors that are unrelated to the switch to "Pause" are reported.
- If error recognition is possible during "Pause", these errors continue to be reported.
- All error messages which are caused by the switch to "Pause" are suppressed.
- The following applies if error recognition is not possible during the "Pause":
  - The status of errors already pending before the "Pause" is retained.
  - Incoming and outgoing errors are reported once the "pause" has ended.

Note

Switching to "Pause" and out of "Pause" may cause an error to be reported.

Additional information

Additional information on diagnostics can be found in the I/O module device manuals.

Hardware interrupt

No hardware interrupts are triggered within the "pause". The hardware interrupts are re-evaluated when the "pause" ends.

"Pause" behavior under certain operating conditions

A "Pause" is ended in the following cases:

Table 1- 1 Ending a "pause"

Ending a "pause"	Explanation
The supply voltage 1L+ of the interface module has failed	The "pause" is exited and can be re-activated by re-sending the PROFIenergy parameter assignment followed by the "Start_Pause" command.
• Controller stop[1] • Controller failure (connection interrupted)[1] • Firmware update • Reset to factory settings • Deactivation of the IO device[1]	
The I/O module is pulled and plugged	
Station stop[1] • Removal of more than one I/O module (depending on the interface module used) • Dismounting of the server module	The "pause" is exited , the PROFIenergy parameter assignment is still on the I/O module and the "pause" can be re-activated by the "Start_Pause" command.
Failure of the supply voltage L+ of the I/O module.	
Modification of the parameter settings of the I/O module during operation using data record 128	

[1] The substitute value behavior is activated.

1.3 Parameter assignment

Parameter assignment

- Parameter assignment of PROFIenergy takes place by means of the user program and parameter data record (version2), index 3. The interface module distributes the PROFIenergy parameters to the I/O modules.
- The parameter assignment of an additional pause behavior is possible immediately after the start of the previous "Pause". The required state for the following pause is activated with a new "Start_Pause" command.
- The parameter assignment can be written as often as necessary.
- The interface module checks the distribution of the parameters to the I/O modules and returns the result of the write job by means of return value. In the case of a negative return value, there are one or more I/O modules that have not accepted the parameter data record. In this case, the I/O modules respond according to their last valid PROFIenergy parameter assignment with an incoming "Start_Pause" command.
- Parameter assignment by means of the parameter data record has to be repeated in case of an I/O module failure or station failure.
- ET 200SP supports the setting for the behavior of one "Pause". If a different response is required for an additional "Pause", you will have to assign parameters again.

Note

Effect: The response (shutdown) of the I/O modules to PROFIenergy is related to the slot, which means that all channels of the slot show the same behavior.

Parameter data record

You specify which I/O modules (slots) are controlled with PROFIenergy commands in the parameter data record for PROFIenergy.

The content of the parameter data record for PROFIenergy, index 3 is described below; you can create it yourself and transmit it to the interface module.

Table 1- 2 Parameter data record for PROFIenergy (version 2), index 3

Byte	Element		Coding	Explanation
0	Version		02_D	Cannot be modified
1	Number of blocks		01_D to n	Slots 1 to n depending • on the number of slots supported by the interface module and • the current configuration of the ET 200SP.
2	Block 1	Slot number	00_D	Unassigned
			01_D to n	I/O module slot with PROFIenergy
3		Mode	0_D: PE_MODE_PROCEED, proceed at "Pause" 1_D: PE_MODE_SHUTDOWN, shut down at "Pause" [1] 3_D: PE_MODE_LAST_VALUE, last output or measured value is retained 4_D: PE_MODE_SUBST_VALUE, substitute value "0" [2]	
:	:	:	:	
128	Block 64	Slot number	See Block 1	
129		Mode		

[1] The specific behavior depends on the used I/O module (with a digital input module, for example, the sensor supply is turned off or the outputs of an analog output module are de-energized)

[2] An analog output module (e. g. with the output range 0 mA to 20 mA, ± 20 mA) or a digital output module issues the value "0".

Error messages

The feedback data record returns the following error messages, if needed:

Table 1- 3 Error messages

Error code	Meaning	
$80B1_H$	Impermissible length	Check the length of the data record
$80E0_H$	Error in header information	Check the data record header information
$80E1_H$	Parameter error • At least one I/O module does not support PROFIenergy • A parameter value has been incorrectly encoded	Check the content of the data record and correct the parameter assignment error before starting the "Pause". Parameter assignment errors which are not corrected can result in incorrect I/O module shutdown behavior.

1.4 PROFIenergy control data records

PROFIenergy control data records

The control data record for PROFIenergy, Index $80A0_H$, supports the following services of the Common Application Profile PROFIenergy V1.0 for the IM 155-6 PN ST, IM 155-6 PN HF:

Table 1- 4 Control data records for PROFIenergy

Service	Service ID	Meaning
Start pause [1]	01_H	Assuming the configured Pause behavior, suppressing all associated diagnostics data
End Pause	02_H	Leaving the pause
Query Modes	03_H	Reads the supported modes • Request List Energy Saving Modes • Request Get Mode (Energy Saving Mode Data)
PEM status	04_H	Reads the PROFIenergy status Status messages: • 00_H: PROFIenergy is ready for operation • 01_H: "Pause" is active • FF_H: "Pause" is not active
PE_Identify	05_H	Reads the supported PROFIenergy services

[1] The minimum (configurable) pause time for the ET 200SP is 10 s.

1.5 I/O modules

1.5.1 Digital input module

Requirements

- Digital input module DI 8x24VDC ST (6ES7131-6BF00-0BA0)
- Digital input module DI 8x24VDC HF (6ES7131-6BF00-0CA0)
- Digital input module DI 8xNAMUR HF (6ES7131-6TF00-0CA0)
- Digital input module DI 8x24VDC HS (6ES7131-6BF00-0DA0)

Display

DI 8x24VDC ST/ DI 8x24VDC HF/ DI 8x24VDC HS

- The channel LEDs are directly affected by the signal level at the terminal.
- Switching off the sensor supply also switches off the channel LED if an external sensor supply is connected.

DI 8xNAMUR

- The channel LEDs correspond to the signal state supplied by the I/O module.

Response to error detection

The error "Missing supply voltage L+" is detected, reported and ends the "pause" regardless of whether the pause status is applied.

All channels which are set to "PE_MODE_PROCEED" in pause mode report errors as in productive operation.

The following applies for all channels which switch to a different pause mode:

- Sensor supply switch-off upon the start of "pause" does not result in the messages "Line break" or "Short circuit".
- "Line break" and "Short circuit" error recognition is not possible during the "pause":
  - Messages for errors already pending before the "pause" are retained.
  - After the "pause" is over, the error status is updated and incoming/outgoing errors are reported correspondingly.

Ending a "pause"

The pause is ended in the following cases:

- Failure of the supply voltage L+
- Change in parameter assignment of I/O module with DS128
- "End_Pause" command
- Controller failure
- Firmware update
- Station stop
- Restart of the interface module

Mode parameter

Only the "Mode" parameter is shown below. The complete configuration can be found in the "Parameter assignment" chapter.

Table 1- 5 Mode parameter

Element	Coding	Explanation
Mode	0_D: PE_MODE_PROCEED	Proceed at "pause"
	1_D: PE_MODE_SHUTDOWN	Shut down at "Pause" [1] • Sensor supply switched off [2] • Pause substitute value: 0_B
	3_D: PE_MODE_LAST_VALUE	Last value at "pause" • Sensor supply switched off [2] • Pause substitute value: Last input value
	4_D: PE_MODE_SUBST_VALUE	Substitute value at "pause" • Sensor supply switched off [2] • Pause substitute value: Configured pause substitute value

[1] DI 8xNAMUR HF: A channel is set to "inverted". During the "pause", the PE substitute value is read in 1:1 (as in the parameter settings and not inverted again).

[2] DI 8x24VDC ST: As there is only one sensor supply for all channels, the supply can only be switched off at a "pause" if all channel parameters have been set to switch off.

1.5.2 Digital output modules

Requirements

- Digital output module DQ 4x24VDC/2A ST (6ES7132-6BD20-0BA0)
- Digital output module DQ 4x24VDC/2A HF (6ES7132-6BD20-0CA0)
- Digital output module DQ 4x24VDC/2A HS (6ES7132-6BD20-0DA0)
- Digital output module DQ 8x24VDC/0,5A ST (6ES7132-6BF00-0BA0)
- Digital output module DQ 8x24VDC/0,5A HF (6ES7132-6BF00-0CA0)
- Digital output module DQ 16x24VDC/0,5A ST (6ES7132-6BH00-0BA0)
- Digital output module DQ 4x24..230VAC/2A ST (6ES7132-6FD00-0BB1)
- Digital output module RQ 4x24VUC/2A CO ST (6ES7132-6GD50-0BA0)
- Digital output module RQ 4x120VDC-230VAC/5A NO ST (6ES7132-6HD00-0BB0)
- Digital output module RQ 4x120VDC-230VAC/5A NO MA ST (6ES7132-6MD00-0BB1)

Display

The channel LEDs are directly affected by the output value at the terminal.

Response to error detection

The error "Missing supply voltage L+" is detected, reported and ends the "pause" regardless of whether the pause status is applied.

Line break and short circuit error recognition continues to be possible during the "pause". All channels therefore report errors as in productive operation, regardless of their pause mode.

Ending a "pause"

The pause is ended in the following cases:

- Failure of the supply voltage L+ (exception: The DQ 4x24..230VAC/2A ST remains in "Pause")
- Change in parameter assignment of I/O module with DS128
- "End_Pause" command
- Controller failure
- Firmware update
- Station stop
- Restart of the interface module

Mode parameter

Only the "Mode" parameter is shown below. The complete configuration can be found in the "Parameter assignment" chapter.

Table 1- 6 Mode parameter

Element	Coding	Explanation
Mode	0_D: PE_MODE_PROCEED	Proceed at "pause"
	1_D: PE_MODE_SHUTDOWN	Switch off at "pause" • Pause substitute value: 0_B
	3_D: PE_MODE_LAST_VALUE	Last value at "pause" • Pause substitute value: Last output value is maintained[1]
	4_D: PE_MODE_SUBST_VALUE	Substitute value at "pause" • Pause substitute value: Configured pause substitute value is output

[1] DQ 4x24VDC/2A HS: In the "Pulse width modulation" mode, the last value is output as frequency.

1.5.3 Analog input modules

Requirements

- Analog input module AI 2xU ST (6ES7134-6FB00-0BA1)
- Analog input module AI 2xI 2-/4-wire ST (6ES7134-6GB00-0BA1)
- Analog input module AI 4xI 2-/4-wire ST (6ES7134-6GD00-0BA1)
- Analog input module AI 2xU/I 2-/4-wire HF (6ES7134-6HB00-0CA1)
- Analog input module AI 4xU/I 2-wire ST (6ES7134-6HD00-0BA1)
- Analog input module AI 2xU/I 2-/4-wire HS (6ES7134-6HB00-0DA0)

Display

The channel LEDs are not affected by PROFIenergy.

Response to error detection

The error "Missing supply voltage L+" is detected, reported and ends the "pause" regardless of whether the pause status is applied.

All channels which are set to "PE_MODE_PROCEED" in pause mode report errors as in productive operation.

The following applies for all channels which switch to a different pause mode:

- Sensor supply switch-off upon the start of "pause" does not result in the message "Line break".
- "Line break", "Short circuit", "High limit exceeded" and "Low limit exceeded" error recognition is not possible during the "pause":
  - Messages for errors already pending before the "pause" are retained.
  - After the "pause" is over, the error status is updated and incoming/outgoing errors are reported correspondingly.

Ending a "pause"

The pause is ended in the following cases:

- Failure of the supply voltage L+
- Change in parameter assignment of I/O module with DS128
- "End_Pause" command
- Controller failure
- Firmware update
- Station stop
- Restart of the interface module

Mode parameter

Only the "Mode" parameter is shown below. The complete configuration can be found in the "Parameter assignment" chapter.

Table 1- 7 Mode parameter

Element	Coding	Explanation
Mode	0_D: PE_MODE_PROCEED	Proceed at "pause"
	1_D: PE_MODE_SHUTDOWN	Switch off at "pause" • Sensor supply switched off [1] • Pause substitute value: $7FFF_H$
	3_D: PE_MODE_LAST_VALUE	Last value at "pause" • Sensor supply switched off [1] • Pause substitute value: Last input value
	4_D: PE_MODE_SUBST_VALUE	Substitute value at "pause" • Sensor supply switched off [1] • Pause substitute value: Configured pause substitute value

[1] AI 2xI 2-/4-wire ST, AI 4xI 2-/4-wire ST, AI 4xU/I 2-wire ST, AI 2xU/I 2-/4-wire HS: As there is only one sensor supply for all channels, the supply can only be switched off at a "pause" if all channels have been configured to switch off.

1.5.4 Analog output module

Requirements

- Analog output module AQ 2xU ST (6ES7135-6FB00-0BA1)
- Analog output module AQ 2xI ST (6ES7135-6GB00-0BA1)
- Analog output module AQ 4xU/I ST (6ES7135-6HD00-0BA1)
- Analog output module AQ 2xU/I HF (6ES7135-6HB00-0CA1)
- Analog output module AQ 2xU/I HS (6ES7135-6HB00-0DA1)

Display

The channel LEDs are not affected by PROFIenergy.

Response to error detection

The error "Missing supply voltage L+" is detected, reported and ends the "pause" regardless of whether the pause status is applied.

All channels which are set to "PE_MODE_PROCEED" in pause mode report errors as in productive operation.

The following applies to all channels which switch to the pause mode "PE_MODE_SHUTDOWN":

- "Line break" and "Short circuit" error recognition is not possible during the pause.
  - Messages for errors already pending before the "pause" are retained.
  - Incoming and outgoing errors are reported once the "pause" has ended.

The following applies for all channels which switch to a different pause mode:

- "Line break" and "Short circuit" error recognition continues to be possible during the pause. These errors are reported.
- The selection of an incorrect pause substitute value which does not correspond to the output range may result in the message "High limit exceeded" or "Low limit exceeded". The pause substitute output value effective at the terminal is limited to the high or low control limit for the output range.

Ending a "pause"

The pause is ended in the following cases:

- Failure of the supply voltage L+
- Change in parameter assignment of I/O module with DS128
- "End_Pause" command
- Controller failure
- Firmware update
- Station stop
- Restart of the interface module

Mode parameter

Only the "Mode" parameter is shown below. The complete configuration can be found in the "Parameter assignment" chapter.

Table 1- 8 Mode parameter

Element	Coding	Explanation
Mode	0_D: PE_MODE_PROCEED	Proceed at "pause"
	1_D: PE_MODE_SHUTDOWN	Switch off at "pause" • Outputs free from current and voltage
	3_D: PE_MODE_LAST_VALUE	Last value at "pause" • Pause substitute value: Last output value is maintained
	4_D: PE_MODE_SUBST_VALUE	Substitute value at "pause" • Pause substitute value: Configured pause substitute value is output

1.5.5 IO-Link Master

Requirements

Communication module IO-Link Master CM 4xIO-Link (6ES7137-6BD00-0BA0)

Note

The minimum pause time (10 s) must be observed. If it is undershot, problems may occur with the restart of IO-Link communication.

1.5.5.1 DI operating mode

Display

Switching off the supply voltage USn (port) also switches off the associated channel status LED Qn if an external supply voltage is connected.

Response to error detection

The error "Missing supply voltage L+" is detected, reported and ends the "pause" regardless of whether the pause status is adopted.

Ending a "pause"

The pause is ended in the following cases:

- Failure of the supply voltage L+
- Re-assignment of the I/O module parameters
- "End_Pause" command
- Controller failure
- Firmware update
- Station stop
- Restart of the interface module

Mode parameter

Only the "Mode" parameter is shown below. The complete configuration can be found in the "Parameter assignment" chapter.

Table 1- 9 Mode parameter

Element	Coding	Explanation
Mode	0_D: PE_MODE_PROCEED	Proceed at "pause"
	1_D: PE_MODE_SHUTDOWN	Switch off at "pause" • Supply voltage USn (port) switched off • Pause substitute value: 0_B
	3_D: PE_MODE_LAST_VALUE	Last value at "pause" • Supply voltage USn (port) switched off • Pause substitute value: Last input value
	4_D: PE_MODE_SUBST_VALUE	Substitute value at "pause" • Supply voltage USn (port) switched off • Pause substitute value: Configured pause substitute value

1.5.5.2 DQ operating mode

Display

The channel status LEDs Qn show the output value.

Response to error detection

The error "Missing supply voltage L+" is detected, reported and ends the "pause" regardless of whether the pause status is adopted.

Ending a "pause"

The pause is ended in the following cases:

- Failure of the supply voltage L+
- Re-assignment of the I/O module parameters
- "End_Pause" command
- Controller failure
- Firmware update
- Station stop
- Restart of the interface module

Mode parameter

Only the "Mode" parameter is shown below. The complete configuration can be found in the "Parameter assignment" chapter.

Table 1- 10 Mode parameter

Element	Coding	Explanation
Mode	0_D: PE_MODE_PROCEED	Proceed at "pause"
	1_D: PE_MODE_SHUTDOWN	Switch off at "pause" • Pause substitute value: 0_B
	3_D: PE_MODE_LAST_VALUE	Last value at "pause" • Pause substitute value: Last output value is maintained
	4_D: PE_MODE_SUBST_VALUE	Substitute value at "pause" • Pause substitute value: Configured pause substitute value is output

1.5.5.3 IO-Link operating mode

Display

When supply voltage USn (port) is switched off, the associated port status LED Cn and port error LED Fn are also switched off.

Response to error detection

The error "Missing supply voltage L+" is detected, reported and ends the "pause" regardless of whether the pause status is adopted.

All channels which are set to "PE_MODE_PROCEED" and "PE_MODE_LAST_VALUE" in pause mode report errors as in productive operation.

The following conditions apply to all channels (ports) which switch to a different pause mode ("PE_MODE_SHUTDOWN" and "PE_MODE_SUBST_VALUE"):

- Switching off the supply voltage USn (port) at the start of "pause" does not result in the messages "Line break" or "Short circuit".
- Error detection is not possible during the "pause" (no IO-Link device communication):
  - Messages for errors already pending before the "pause" are retained.
  - After the "pause" is over, the error status is updated and incoming/outgoing errors are reported correspondingly.

Ending a "pause"

The pause is ended in the following cases:

- Failure of the supply voltage L+
- Re-assignment of the I/O module parameters
- "End_Pause" command
- Controller failure
- Firmware update
- Station stop
- Restart of the interface module

Mode parameter

Only the "Mode" parameter is shown below. The complete configuration can be found in the "Parameter assignment" chapter.

Table 1- 11 Mode parameter

Element	Coding	Explanation
Mode	0_D: PE_MODE_PROCEED	Proceed at "pause"
	1_D: PE_MODE_SHUTDOWN	Switch off at "pause" • Supply voltage USn (port) switched off[1] • Pause substitute value (input): 0_B
	3_D: PE_MODE_LAST_VALUE[2]	• Supply voltage USn (port) switched off • Last input and output value is maintained
	4_D: PE_MODE_SUBST_VALUE	see: 1_D: PE_MODE_SHUTDOWN

[1] Supply voltage USn of the assigned port is switched off. Result: The IO-Link device fails.

[2] With time-based IO, the IO-Link master behaves according to 1_D: PE_MODE_SHUTDOWN

SIEMENS

SIMATIC

ET 200SP
Product Information Mixed Configuration ET 200SP / ET 200AL

Product Information

Preface

Application planning 1

Mounting 2

Connection 3

Configuring 4

BaseUnit BU-Send 5

BusAdapter BA-Send 1xFC 6

02/2016

A5E33344611-AC

Legal information

Warning notice system

This manual contains notices you have to observe in order to ensure your personal safety, as well as to prevent damage to property. The notices referring to your personal safety are highlighted in the manual by a safety alert symbol, notices referring only to property damage have no safety alert symbol. These notices shown below are graded according to the degree of danger.

⚠ DANGER

indicates that death or severe personal injury **will** result if proper precautions are not taken.

⚠ WARNING

indicates that death or severe personal injury **may** result if proper precautions are not taken.

⚠ CAUTION

indicates that minor personal injury can result if proper precautions are not taken.

NOTICE

indicates that property damage can result if proper precautions are not taken.

If more than one degree of danger is present, the warning notice representing the highest degree of danger will be used. A notice warning of injury to persons with a safety alert symbol may also include a warning relating to property damage.

Qualified Personnel

The product/system described in this documentation may be operated only by **personnel qualified** for the specific task in accordance with the relevant documentation, in particular its warning notices and safety instructions. Qualified personnel are those who, based on their training and experience, are capable of identifying risks and avoiding potential hazards when working with these products/systems.

Proper use of Siemens products

Note the following:

⚠ WARNING

Siemens products may only be used for the applications described in the catalog and in the relevant technical documentation. If products and components from other manufacturers are used, these must be recommended or approved by Siemens. Proper transport, storage, installation, assembly, commissioning, operation and maintenance are required to ensure that the products operate safely and without any problems. The permissible ambient conditions must be complied with. The information in the relevant documentation must be observed.

Trademarks

All names identified by ® are registered trademarks of Siemens AG. The remaining trademarks in this publication may be trademarks whose use by third parties for their own purposes could violate the rights of the owner.

Disclaimer of Liability

We have reviewed the contents of this publication to ensure consistency with the hardware and software described. Since variance cannot be precluded entirely, we cannot guarantee full consistency. However, the information in this publication is reviewed regularly and any necessary corrections are included in subsequent editions.

Siemens AG
Division Digital Factory
Postfach 48 48
90026 NÜRNBERG
GERMANY

A5E33344611-AC
℗ 02/2016 Subject to change

Copyright © Siemens AG 2014 - 2016.
All rights reserved

Preface

Scope

This product information supplements the ET 200SP system manual documentation.

Security information

For the secure operation of Siemens products and solutions, it is necessary to take suitable preventive action (e.g. cell protection concept) and integrate each component into a holistic, state-of-the-art industrial security concept. Third-party products that may be in use should also be considered. You can find more information about industrial security in the Internet (http://www.siemens.com/industrialsecurity).

Table of contents

Preface 3
1 Application planning 5
2 Mounting 8
3 Connection 9
4 Configuring 13
5 BaseUnit BU-Send 17
5.1 Product overview 17
5.2 Connection 18
5.3 Technical specifications 19
6 BusAdapter BA-Send 1xFC 20
6.1 Properties 20
6.2 Pin assignment 22
6.3 Schematic circuit diagram 22
6.4 Diagnostics by means of LED display 23
6.5 Technical specifications 24

Application planning

1

Mixed configuration ET 200SP and ET 200AL with ET-Connection

You have the option of integrating the I/O modules of the ET 200AL distributed I/O system (IP65/IP67) in a configuration of the ET 200SP distributed I/O system (IP20).

The figure below shows a combination of the modules of the ET 200AL and ET 200SP distributed I/O system.

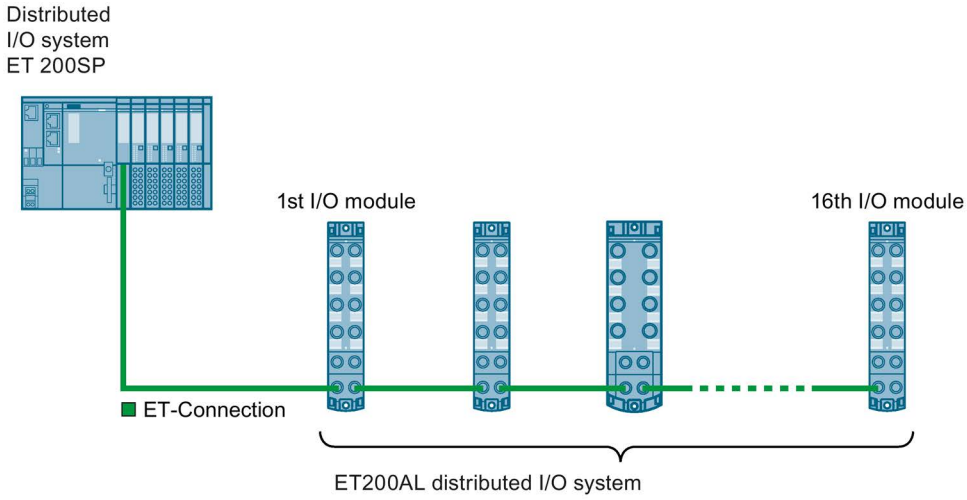

Image 1-1 Mixed configuration ET 200SP and ET 200AL with ET-Connection

Requirement

The following components support mixed configuration:

- Interface module
  - IM 155-6 PN HF (V3.0 or higher)
  - IM 155-6 PN ST (V3.1 or higher)
  - IM 155-6 DP HF (V3.0 or higher)
- CPU
  - CPU 1510SP-1 PN (V2.0 or higher)
  - CPU 1510SP F-1 PN (V2.0 or higher)
  - CPU 1512SP-1 PN (V2.0 or higher)
  - CPU 1512SP F-1 PN (V2.0 or higher)
- BaseUnit BU-Send with BusAdapter BA-Send 1xFC
- ET-Connection cable
- Power cable

Rules

You must observe the following rules when assembling a mixed configuration:

- The bus length of the ET 200SP distributed I/O system must not exceed 1 m (without interface module, including BU-Send/BA-Send 1xFC and server module)
- A maximum of 16 ET 200AL I/O modules can be connected to ET-Connection.
- The maximum length of the bus cable for ET-Connection between BA-Send and the first module or between two modules is 15 m.

The following table shows which firmware versions of your IM or CPU support which maximum bus cable length.

IM/CPU	2 m	5 m	10 m	15 m
IM 155-6 PN HF	V3.0 or higher	V3.0 or higher	V3.0 or higher	V3.3 or higher
IM 155-6 PN ST	V3.1 or higher	V3.1 or higher	V3.1 or higher	V3.3 or higher
IM 155-6 DP HF	V3.0 or higher	V3.0 or higher	V3.0 or higher	--
CPU 1510SP-1 PN	V2.0 or higher	V2.0 or higher	V2.0 or higher	V2.0 or higher
CPU 1510SP F-1 PN	V2.0 or higher	V2.0 or higher	V2.0 or higher	V2.0 or higher
CPU 1512SP-1 PN	V2.0 or higher	V2.0 or higher	V2.0 or higher	V2.0 or higher
CPU 1512SP F-1 PN	V2.0 or higher	V2.0 or higher	V2.0 or higher	V2.0 or higher

Procedure

To assemble a multi-tier configuration, follow these steps:

1. Install the BaseUnit BU-Send to the immediate right of the ET 200SP CPU/interface module.
   When the BaseUnit BU-Send is used next to the ET 200SP CPU, a CM DP and an Ethernet CP or a maximum of 2 Ethernet CPs can be inserted between the CPU and BU-Send.
2. Then mount the additional BaseUnits / I/O modules for the ET 200SP distributed I/O system and the server module.
3. Connect the bus cable for ET-Connection to the BusAdapter BA-Send 1xFC and mount this on the BaseUnit BU-Send.
4. Screw the BusAdapter BA-Send 1×FC to the BaseUnit BU-Send (1 screw with 0.2 Nm tightening torque). To do this, use a screwdriver with a 3 to 3.5 mm blade.
5. Connect the other end of the bus cable for ET-Connection (with M8 connector) to the first ET 200AL I/O module (X30 socket ET-Connection IN).
6. Connect the supply voltage (24 V DC) to the ET 200AL I/O modules (X80 connector).

Note

Firmware update of an ET 200AL I/O module

When you run a firmware update of an ET 200AL I/O module, ET-Connection is briefly interrupted by the restart of the module. All downstream ET 200AL I/O modules report a pull/plug interrupt.

Mounting

2

Introduction

For the connection of the ET 200AL I/O module via ET-Connection to the ET 200SP, you require the BaseUnit BU-Send with the BusAdapter BA-Send 1xFC.

Requirement

- The mounting rail is mounted.
- The interface module is mounted.

Required tools

3 to 3.5 mm screwdriver (only for dismantling the BusAdapter)

Mounting BaseUnit BU-Send

To mount the BaseUnit BU-Send, follow these steps:

1. Mount the BU-Send to the right of the CPU/interface module.
2. Swivel the BU-Send back until you hear the mounting rail release click into place.
3. Move the BU-Send to the left until you hear it click into place on the CPU/interface module.

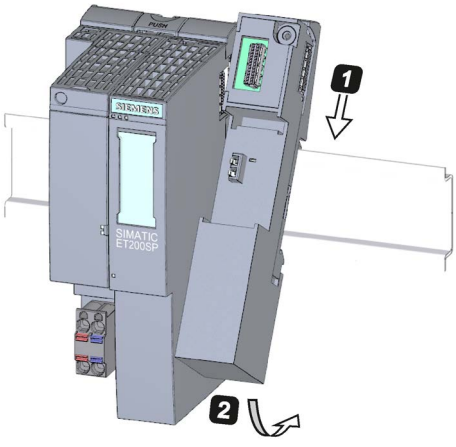

Image 2-1 Mounting BU-Send

4. Mount the BusAdapter BA-Send 1xFC only after you have connected the bus cable for ET-Connection (see section Connecting (Page 9)).

Connection

3

Introduction

You connect the ET 200AL I/O modules via the BusAdapter BA-Send 1×FC using ET-Connection.

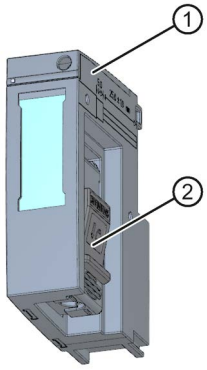

① BusAdapter BA-Send 1×FC

② Connection element for ET-Connection bus cable

Image 3-1 BusAdapter BA-Send 1xFC

Required tools

Screwdriver with 3 to 3.5 mm blade

Required accessories

Use the bus cable for ET-Connection as connecting cable between the BusAdapter BA-Send 1xFC and the ET 200AL I/O modules.

We recommend using the stripping tool for ET-Connection (6ES7194-2KA00-0AA0) with blade cassette green (6GK1901-1B...). This guarantees fast and safe stripping.

The bus cable for ET-Connection M8, prefabricated on one side with 1 x M8 connector, 4-pole, shielded, is available in the following lengths:

- Length 2 m: 6ES7194-2LH20-0AC0
- Length 5 m: 6ES7194-2LH50-0AC0
- Length 10 m: 6ES7194-2LN10-0AC0
- Length 15 m: 6ES7194-2LN15-0AB0

Procedure

To connect the BusAdapter BA-Send 1xFC, follow these steps:

1. Strip the sheath of the bus cable at the open end as follows:

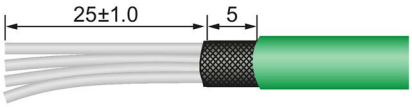

Image 3-2 Connecting cable

Use the stripping tool for ET-Connection to do this. The relevant settings are shown on the tool.

2. Pull back the locking slide of the BusAdapter BA-Send 1×FC and open the cover of the connection element.
3. Lift the cable routing up as far as it will go.
4. Insert the unstripped single cores of the bus cable (according to the imprinted color coding) into the cable routing as far as they will go and press the cable routing down as far as it will go.
5. Close the cover of the connection element and push the locking slide forward.

6. Connect and screw the BusAdapter BA-Send 1×FC to the BaseUnit BU-Send (1 screw with 0.2 Nm tightening torque.) To do this, use a screwdriver with a 3 to 3.5 mm blade.
7. Connect the M8 connector of the bus cable to the first ET 200AL I/O module (socket X30 ET-Connection IN). For more information about wiring the ET 200AL I/O module refer to the system manual of the ET 200AL distributed I/O system.

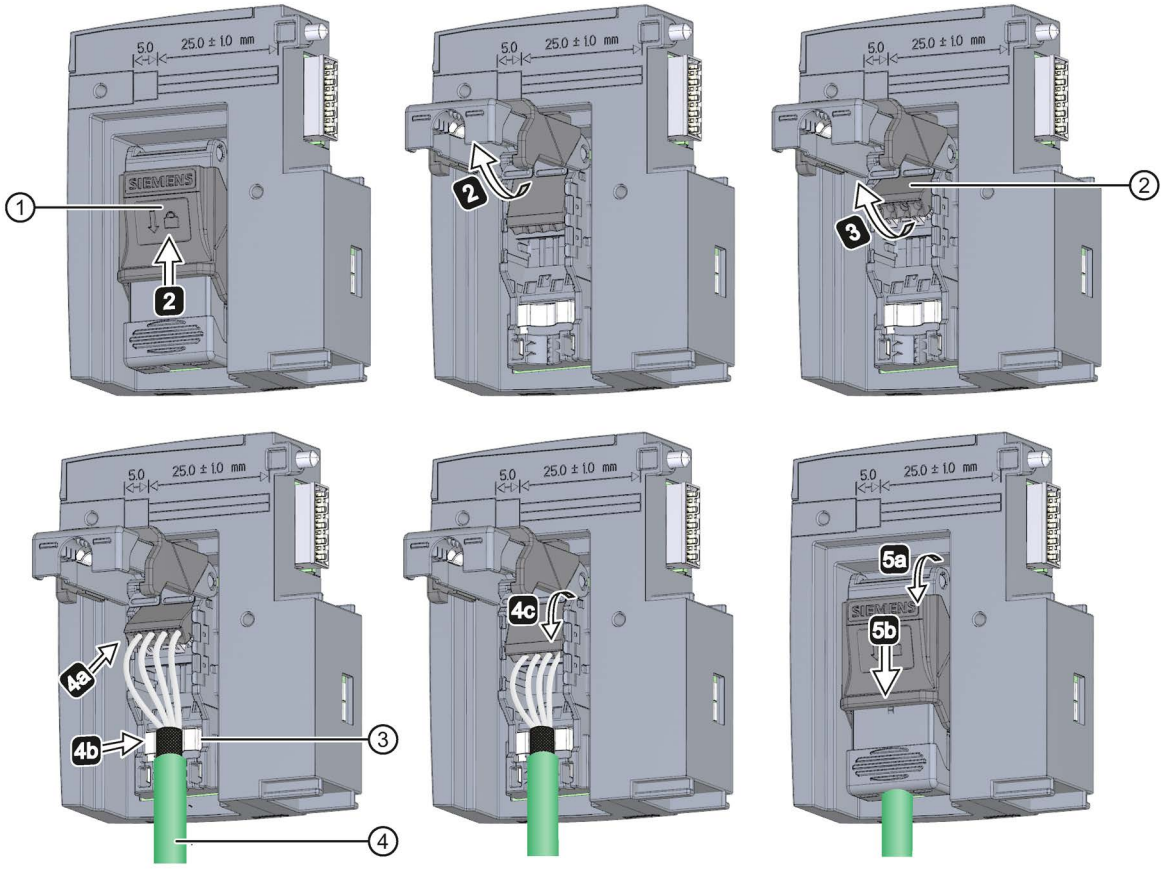

①	Locking slide	③	Shield contact
②	Cable routing	④	Bus cable for ET-Connection

Image 3-3 Connection of the BusAdapeter BA-Send 1xFC

BusAdapter BA-Send 1×FC mounted

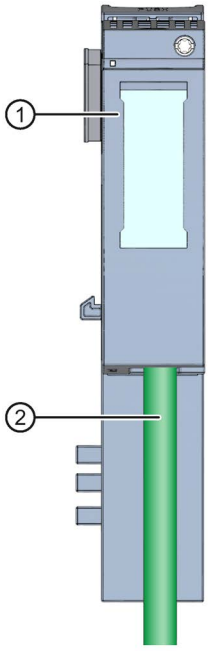

① BusAdapter BA-Send 1×FC
② Bus cable for ET-Connection

Image 3-4 BusAdapter BA-Send 1×FC mounted

Configuring

4

Introduction

The mixed configuration allows the connection of up to 16 ET 200AL I/O modules to the ET 200SP via ET-Connection. The figure below shows the configuration of the ET-Connection and the assignment of the slots.

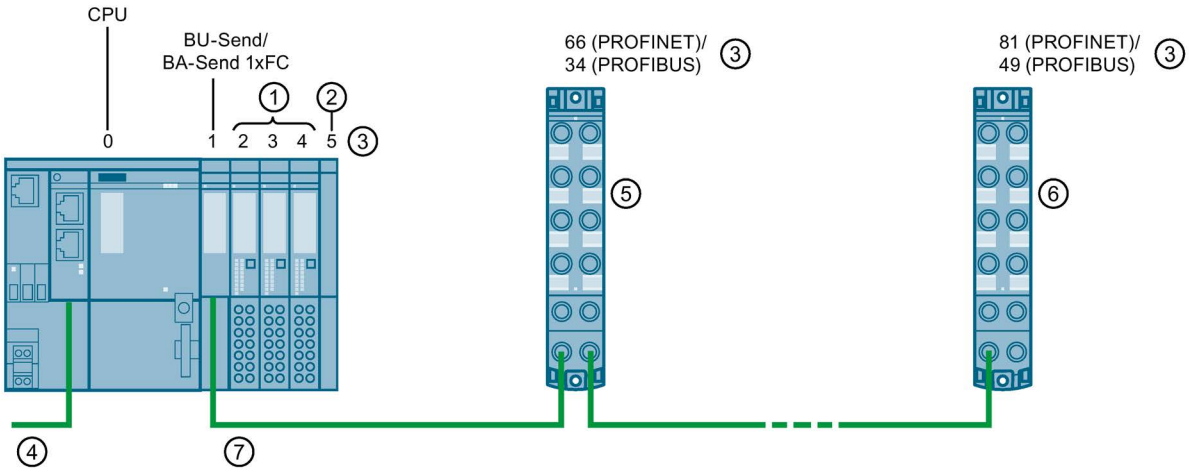

① ET 200SP I/O modules
② ET 200SP server module
③ Slots
④ PROFINET IO
⑤ 1st ET 200AL I/O module
⑥ 16th ET 200AL I/O module
⑦ ET-Connection

Image 4-1 Mixed configuration

For more information about connecting the ET-Connection, supply voltages, actuators and sensors, refer to the ET 200AL system manual.

Configuration with a CPU

In a configuration with a CPU, a maximum of 2 slots can be used immediately to the right of the CPU with CM DP module or Ethernet CP. Combinations are also possible, i.e. CM DP module and one Ethernet CP or two Ethernet CPs.

BU-Send and BA-Send should always be inserted to the immediate right of the CM/CP.

Rules

Observe the following rules when configuring:

- With mixed configurations, the following maximum configuration is possible:
  - 31 (IM 155-6 DP HF and IM 155-6 PN ST)/63 (IM 155-6 PN HF and CPUs) slots for ET 200SP modules
  - 16 slots for ET 200AL I/O modules
  - 1 slot for BU-Send/BA-Send 1xFC
  - 1 slot for server module.
- The mixed configuration may contain a maximum of 31 (IM 155-6 DP HF and IM 155-6 PN ST)/63 (IM 155-6 PN HF) ET 200SP I/O modules.
- The server module can also be mounted right next to the BU-Send/BA-Send 1xFC.
- Supported functions:

Function	Mixed configuration		
	ET 200SP		ET 200AL I/O modules on ET-Connection
	IM	CPU	
Isochronous mode	⑥	--	--
Configuration control	⑥	⑥	⑥
Shared device	⑥	⑥	⑥
PROFIenergy	⑥	--	⑥
System redundancy S2	--	--	--

Configuring

Observe the following points when configuring:

- BU-Send/BA-Send 1xFC and server module must be configured. With BU-Send/BA-Send 1xFC, no parameters are available.
- Arrangement of the modules in the configuration:
  - Configure the BU-Send/BA-Send 1xFC downstream from the interface module in slot 1. Position the ET 200SP modules behind it.
  - Configure the ET 200AL I/O modules from slot 66 (PROFINET)/67 (CPU)/34 (PROFIBUS).
- The layout of the modules represents a preset configuration and is independent of the configuration control.
- The system redundancy S2 function is not available in a mixed configuration.

Configuration example

An example of a mixed configuration is shown below:

Hardware configuration

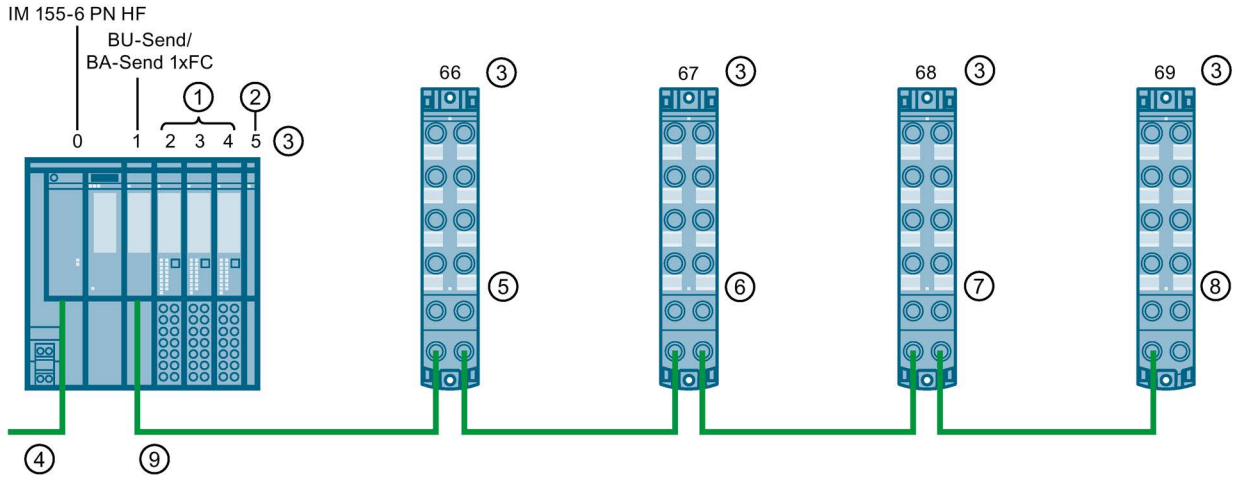

① ET 200SP I/O modules
② ET 200SP server module
③ Slots
④ PROFINET IO
⑤ 1st ET 200AL I/O module
⑥ 2nd ET 200AL I/O module
⑦ 3rd ET 200AL I/O module
⑧ 4th ET 200AL I/O module
⑨ ET-Connection

Image 4-2 Mixed configuration

Configuring configuration example

Table 4- 1 Overview

Mixed configuration	Module	Slot
ET 200SP	IM 155-6 PN HF	0
	BA-Send 1xFC	1
	DI 16×24VDC ST	2
	DI 16×24VDC ST	3
	DI 16×24VDC ST	4
	Server module	5
ET 200AL	DI 8x24VDC 8xM8	66
	DIQ 4+DQ 4x24VDC/0.5A 8xM8	67
	AI 4xU/I/RTD 4xM12	68
	CM 4xIO-Link 4xM12	69

Note

Configuration using PROFIBUS GSD file

When you use the PROFIBUS GSD file for the configuration, you must configure the gaps between the server module and the first ET 200AL I/O module with BU-Cover.

BaseUnit BU-Send

5

5.1 Product overview

Article number

6ES7193-6BN00-0NE0

View

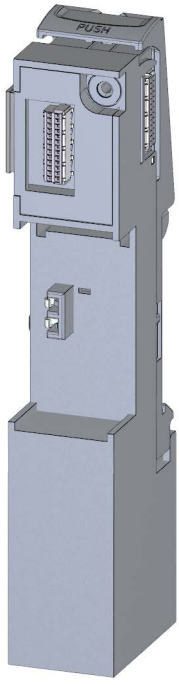

Image 5-1 BaseUnit BU-Send

Properties

BaseUnit suitable for BusAdapter BA-Send 1xFC

5.2 Connection

Pin assignment

The BaseUnit BU-Send has only one slot for an expansion module. No other connections are available.

Schematic circuit diagram

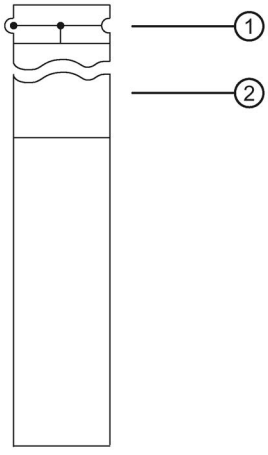

① Backplane bus
② BA-Send 1xFC expansion module

Image 5-2 Schematic circuit diagram BU-Send

5.3 Technical specifications

Technical specifications of the BaseUnit BU-Send

	6ES7193-6BN00-0NE0
Product type designation	BaseUnit BU-Send
Installation type/mounting	
Rack mounting possible	Yes
Front installation possible	Yes
Rail mounting possible	Yes
Wall/direct mounting possible	No
Hardware configuration	
Slots	
Number of slots	1
Plug-in modules, other	Yes; BusAdapter BA-Send
Dimensions	
Width	20 mm
Height	117 mm
Depth	32 mm
Weights	
Weight, approx.	30 g

BusAdapter BA-Send 1xFC

6

6.1 Properties

Article number

6ES7193-6AS00-0AA0

View of the module

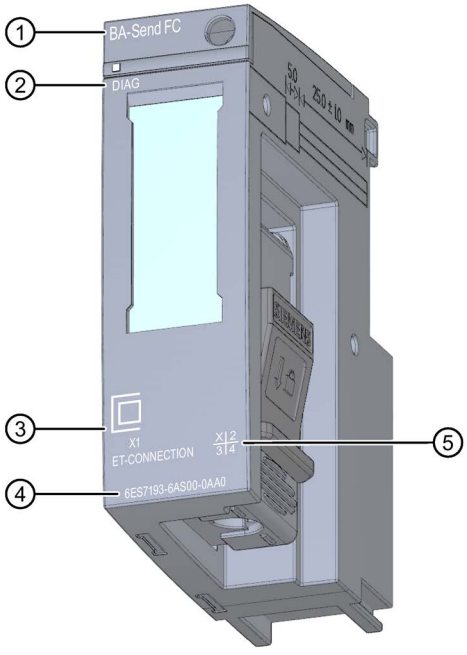

① Module type and name
② LED for diagnostics
③ ((Connection for ET-CONNECTION))
④ Article number
⑤ Functional version

Image 6-1 View of the BusAdapter BA-Send 1xFC

Properties

The module has the following technical properties:

- BusAdapter for the direct connection of ET-Connection
- Connects the interface module via ET-Connection with the ET 200AL I/O modules
- Supports all ET 200AL I/O modules

The module supports the following functions:

- Identification data I&M 0 to 3. See system manual ET 200SP Distributed I/O System (http://support.automation.siemens.com/WW/view/en/58649293).

Maximum configuration

- 16 ET 200AL I/O modules
- 15 m bus cable between BusAdapter BA Send and the first ET 200AL I/O module and between two ET 200AL I/O modules.
- Supported functions:

Function	Mixed configuration		
	ET 200SP		ET 200AL I/O modules on ET-Connection
	IM	CPU	
Isochronous mode	⑥	--	--
Configuration control	⑥	⑥	⑥
Shared device	⑥	⑥	⑥
PROFIenergy	⑥	--	⑥
System redundancy S2	--	--	--

Accessories

The following components must be ordered separately:

- Labeling strips
- Reference identification label
- Stripping tool for ET-Connection
- Bus cables for ET-Connection

See also

You can find more information on accessories and additional components in the Accessories/spare parts section of the ET 200AL distributed I/O system (http://support.automation.siemens.com/WW/view/en/89254965) system manual.

6.2 Pin assignment

ET-Connection with BusAdapter BA-Send 1xFC

The following table shows the signal names and the designations for the pin assignment of the BusAdapter BA-Send 1xFC.

Table 6- 1 ET-Connection pin assignment with BusAdapter BA-Send 1×FC

View	Signal name		Description
Port 1 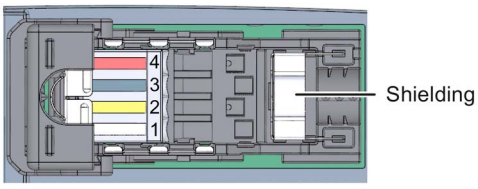	1	TD	Transmit data +
	2	RD	Receive data +
	3	TD_N	Transmit data –
	4	RD_N	Receive data -

6.3 Schematic circuit diagram

Schematic circuit diagram

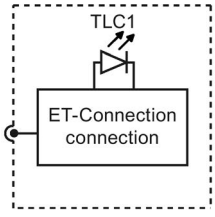

Image 6-2 Schematic circuit diagram for BusAdapter BA-Send 1xFC

6.4 Diagnostics by means of LED display

LED display

The figure below shows the LED display (status and fault display) of the BusAdapter BA-Send 1xFC.

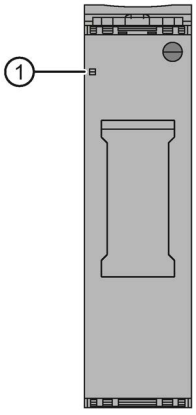

① DIAG (green/red)

Image 6-3 LED display

Meaning of the LED display

The table below explains the meaning of the status and fault display.

DIAG LED

Table 6- 2 Status and fault display DIAG

DIAG LED	Meaning	Remedy
Off	There is no connection between the ET-Connection interface of the BusAdapter BA-Send 1xFC and ET 200AL.	Check whether the bus cable is interrupted.
	The interface module does not support the BA-Send 1xFC.	Run a firmware update.
On	There is a connection between the ET-Connection interface of the BusAdapter BA-Send 1xFC and ET 200AL.	---
Flashes	There is (at least) one diagnostics alarm of an ET-Connection device. Group error for all ET-Connection bus nodes.	Check the ET-Connection device.
	Set configuration does not match the actual configuration on the ET-Connection.	Check the configuration of the ET-Connection to see whether a module is missing or defective, or whether a non-configured module is wired.

6.5 Technical specifications

Technical specifications of the BusAdapter BA-Send 1xFC

	6ES7193-6AS00-0AA0
Interfaces	
PROFINET IO	
Cable length	
• Copper cables	15 m; as of IM firmware V3.3: Bus nodes between BA-Send and the first ET-Connection as well as between all other bus nodes.
ET-Connection	
Number of interfaces ET-Connection	1
FC (FastConnect)	Yes
Ambient conditions	
Ambient temperature in operation	
Min.	0 °C
Max.	60 °C
Dimensions	
Width	20 mm
Weights	
Weight, approx.	44 g

SIEMENS

SIMATIC

ET 200SP
User calibration of analog modules

Product Information

Security information 1

Introduction 2

Requirement 3

Mode of operation 4

Performing user calibration 5

Example 6

Appendix A A

09/2014

A5E34352075-AA

Legal information

Warning notice system

This manual contains notices you have to observe in order to ensure your personal safety, as well as to prevent damage to property. The notices referring to your personal safety are highlighted in the manual by a safety alert symbol, notices referring only to property damage have no safety alert symbol. These notices shown below are graded according to the degree of danger.

⚠ DANGER

indicates that death or severe personal injury **will** result if proper precautions are not taken.

⚠ WARNING

indicates that death or severe personal injury **may** result if proper precautions are not taken.

⚠ CAUTION

indicates that minor personal injury can result if proper precautions are not taken.

NOTICE

indicates that property damage can result if proper precautions are not taken.

If more than one degree of danger is present, the warning notice representing the highest degree of danger will be used. A notice warning of injury to persons with a safety alert symbol may also include a warning relating to property damage.

Qualified Personnel

The product/system described in this documentation may be operated only by **personnel qualified** for the specific task in accordance with the relevant documentation, in particular its warning notices and safety instructions. Qualified personnel are those who, based on their training and experience, are capable of identifying risks and avoiding potential hazards when working with these products/systems.

Proper use of Siemens products

Note the following:

⚠ WARNING

Siemens products may only be used for the applications described in the catalog and in the relevant technical documentation. If products and components from other manufacturers are used, these must be recommended or approved by Siemens. Proper transport, storage, installation, assembly, commissioning, operation and maintenance are required to ensure that the products operate safely and without any problems. The permissible ambient conditions must be complied with. The information in the relevant documentation must be observed.

Trademarks

All names identified by ® are registered trademarks of Siemens AG. The remaining trademarks in this publication may be trademarks whose use by third parties for their own purposes could violate the rights of the owner.

Disclaimer of Liability

We have reviewed the contents of this publication to ensure consistency with the hardware and software described. Since variance cannot be precluded entirely, we cannot guarantee full consistency. However, the information in this publication is reviewed regularly and any necessary corrections are included in subsequent editions.

Siemens AG
Industry Sector
Postfach 48 48
90026 NÜRNBERG
GERMANY

A5E34352075-AA
Ⓟ 10/2014 Subject to change

Copyright © Siemens AG 2014.
All rights reserved

Table of contents

1 Security information 5
2 Introduction 6
3 Requirement 8
4 Mode of operation 9
4.1 Procedure 9
4.2 Data set structure 10
4.2.1 Job data set 11
4.2.2 Acknowledgment data set 15
5 Performing user calibration 21
5.1 Calibration start 21
5.2 Calibration sequence 22
5.3 Calibration exit 22
5.4 Calibration completion 23
5.5 Status and error codes 24
5.6 Time stamp, Date/time 26
5.7 Re-parameterization of the input/output range 26
5.8 Calibration counter 27
5.9 Behavior at CPU-STOP 27
5.10 Behavior with parameter assignment of analog modules during calibration 27
6 Example 28
6.1 User calibration (mode = 2) 28
6.1.1 Example: Analog input module RTD (resistance thermometer) 29
6.1.1.1 Step A: Start 29
6.1.1.2 Step B: Zero-Scale calibration 31
6.1.1.3 Step C: Intermediate step 33
6.1.1.4 Step D: Full-Scale calibration positive 35
6.1.1.5 Step E: Closure 37
6.1.2 Example: Analog output module +/-10 V 38
6.1.2.1 Step A: Start 38
6.1.2.2 Step B: Zero-Scale calibration 40
6.1.2.3 Step C: Intermediate step 42
6.1.2.4 Step D: Full-Scale calibration positive 44
6.2 Abort (mode = 3) 46
6.2.1 User abort 46
6.2.2 Module abort 47

6.3 Read calibration values (mode = 4) 48
6.3.1 Step A: Start 48
6.3.2 Step B: Closure 50
6.4 Restore factory calibration (mode = 5) 51
6.5 Reset (mode = 6) 53
A Appendix A 55
A.1 Input type/range format: Input channels 55
A.2 Output type/range format: Output channels 58

Security information 1

To ensure the secure operation of products and solutions from Siemens, it is necessary to take suitable preventive action (e.g. cell protection concept) and integrate each component into a holistic, state-of-the-art industrial security concept. Third-party products that may be in use should also be considered. You can find more information about industrial security on the Internet (http://www.siemens.com/industrialsecurity).

Introduction 2

The characteristics of analog-digital/digital-analog converters in analog modules are usually offset and not uniform in their slope. This means you must calibrate the characteristics to the conditions of the analog module. A general distinction is made between factory calibration and user calibration.

Factory calibration

To ensure the accuracy of an analog module, it is calibrated during production in the factory. You cannot delete or change the factory calibration. You can only read the factory calibration values.

User calibration

You can start, delete and read back a user calibration for an analog module with error-free parameter assignment at any time. User calibration is used to increase the accuracy for specific use cases with deviations that can be compensated, for example, by sensors or wiring.

Zero-Scale/Offset calibration

Zero-Scale or Offset calibration is the calibration of the zero point. Usually "0" for bipolar ranges and the low limit of the nominal range for unipolar ranges. The characteristic of the converter is offset corrected and thus shifted into the zero point.

Full-Scale/Gain/Gain calibration

Full-Scale or Gain calibration is the calibration of the end point. It is usually the high limit of the nominal range. The slope of the converter characteristic is adjusted so that it also intersects the end point.

Converter characteristic

The figure below shows the shift of the converter characteristic into the zero point on the left. The right part of the figure shows the change in the converter characteristic slope so that the converter characteristic intersects the end point.

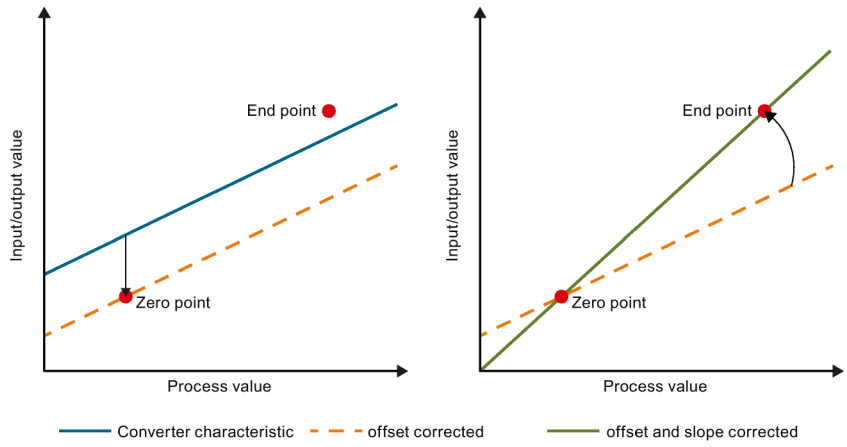

Figure 2-1 Correction of the converter characteristic

Requirement 3

The accuracy/quality of a user calibration depends on the following points:

- Stable temperature condition (e.g., 25 °C)
- The settling time of the used calibrator/measuring instrument and the analog module (e.g., for input or output modules with integrated measuring process → sigma-delta converter)
- Cables (if possible, short, shielded and grounded at one side)
- Accuracy of the used calibrator and/or measuring instrument

---

Note

Measuring accuracy

The measuring accuracy may deteriorate if the user calibration is not performed properly.

It is not immediately clear if a channel works with factory calibration values or user calibration values.

Mode of operation

4

You must perform the user calibration for each channel. To do so, always calibrate the selected channel in the set input/output range. You can start the user calibration at any time for a channel with error-free parameter assignment. After successful user calibration the newly calibrated channel works in the current input/output range with the newly determined calibration values.

4.1 Procedure

The user calibration is controlled by the data sets (DS). You must write a job data set for the analog module and receive instructions for further actions in the acknowledgment data set. This procedure is described in more detail in the section Performing user calibration (Page 21).

The figure below shows the steps required for the user calibration of an instruction to the analog module.

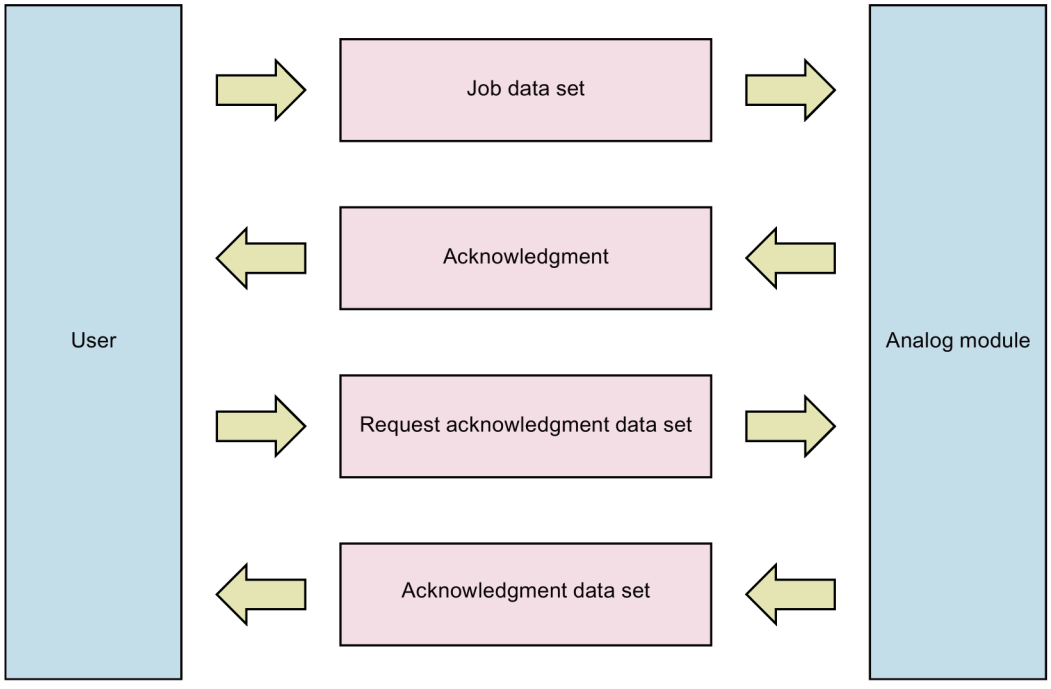

Figure 4-1 Steps in the user calibration for an instruction

The analog module saves the user calibration values. The values always apply only to the input/output range for which they were created. If the input/output range is re-parameterized, the factory calibration values are used once again. But the user calibration values still exist (see section Re-parameterization of the input/output range (Page 26)).

Each user calibration receives a time stamp (for each channel) which includes the date and time of the last user calibration of the channel. You must transfer the date and time to the analog module during calibration, because these values are not generated by the analog module.

The analog module controls the number of required calibration steps for a user calibration.

The actions which you must start or confirm during user calibration are also initiated by the analog module.

The set input/output range of a channel can only be calibrated completely during a user calibration (zero-scale and full-scale). Partial calibration is not possible (e.g., zero-scale only).

4.2 Data set structure

You can start a calibration process with the Write data set (job data set) and Read data set (acknowledgment data set) mechanisms, DS 237 for each.

The structure of the job data set and the acknowledgment data set is identical. This means the acknowledgment data set read last serves as the template for the next job data set.

Job data set and acknowledgment data set also apply to mixed modules with input and output channels. Mixed modules have an input channel and an output channel with channel number 0. To determine if you are calibrating an output channel or an input channel, the channel number for output channels generally has the offset value 40_H added to it.

4.2.1 Job data set

The following table shows the structure of the job data set.

Table 4- 1 Structure of the job data set (18 bytes long)

Byte address	Element	Value range	Format
0	Command/job ID	1: Factory calibration 2: User calibration 3: Abort, normal channel processing 4: Read calibration values 5: Restore factory calibration 6: Reset	Byte
1	Identifier	0 1	Byte
2	Channel number	00_H … $3F_H$ 40_H … $7F_H$ FF_H	Byte
3	Calibration step	FF_H FE_H … 00_H	Byte
4	Not relevant	-	Byte
5	Not relevant	-	Byte
6	Not relevant	-	Byte
7	Input/output size	0: Not relevant 1: mV 2: µA 3: - 4: Time/date 5: Ohm 6: Degrees 7: - 8: - 9: U~ (0.01 V) effective value AC 10: I~ (0.0001 A) effective value AC 11: Phi (0.01 degrees) (phase angle)	Byte
8	Substitute value behavior of inputs	0: retain last value 1: Overflow ($7FFF_H$) 2: Substitute value 3: continue to supply values*	Byte
9	Reserved	-	Byte
10 … 17	Extended Record	See section below Extended Record	

* Only for analog modules AI 4xRTD/TC 2-/3-/4-wire HF and AI 8xRTD/TC 2-wire HF

The tables below show the value ranges of the elements and description of the job data set.

Command/job ID

Table 4- 2 Command/job ID

Value range	Description
1: Factory calibration	Not relevant
2: User calibration	See section User calibration (mode = 2) (Page 28)
3: Abort, normal channel processing	See section Abort (mode = 3) (Page 46)
4: Read calibration values	See section Read calibration values (mode = 4) (Page 48)
5: Restore factory calibration	See section Restore factory calibration (mode = 5) (Page 51)
6: Reset	See section Reset (mode = 6) (Page 53)

Identifier

Table 4- 3 Identifier

Value range	Description
0	Not relevant
1	Execute

Channel number

Table 4- 4 Channel number

Value range	Description
00_H … $3F_H$	Input channels
40_H … $7F_H$	Output channels
FF_H	All channels, only permitted for command = 6 (Reset)

Calibration step

Table 4- 5 Calibration step

Value range	Description
FF_H	Start
FE_H … 00_H	Apply from last acknowledgment data set

Input/output size

Table 4- 6 Input/output size

Value range	Description
0: Not relevant	Specifies how to interpret the values as of byte 10.
1: mV	
2: µA	
3: -	
4: Time/date	
5: Ohm	
6: Degrees	
7: -	
8: -	
9: U~ (0.01 V) effective value AC	
10: I~ (0.0001 A) effective value AC	
11: Phi (0.01 degrees) (phase angle)	

Substitute value behavior of inputs

Table 4- 7 Substitute value behavior of inputs

Value range	Description
0: retain last value	Only relevant for analog input modules. Evaluated at start only.
1: Overflow ($7FFF_H$)	
2: Substitute value	
3: continue to supply values*	

* Only for analog modules AI 4xRTD/TC 2-/3-/4-wire HF and AI 8xRTD/TC 2-wire HF

Extended Record

Table 4- 8 Extended Record for input/output size = 1 (mV), 2 (µA), 5 (Ohm), 6 (Degrees)

Byte address	Element	Format	Value range	Description
10	Date1	Word	-32768 … 32767	Place before the decimal point
12	Date2	Word	-999 … 999	Places after decimal point * 1000
14	Date3	Word	Not used	
16	Substitute value	Word	Not used	

Extended Record for input/output size = 4 (Date/Time), BCD coded: See section Time stamp, date/time (Page 26)

Table 4- 9 Extended Record for input/output size = 9 (U~), 10 (I~), 11 (Phi)

Byte address	Element	Format	Value range	Description
10	Date1	Word	Not used	
12	Date2	Word	Not used	
14	Date3	Word	0 … 65535	Setpoint for calibration operating point
16	Substitute value	Word	Not used	

Table 4- 10 Extended Record for substitute value behavior of inputs = 2 (substitute value)

Byte address	Element	Format	Value range	Description
10	Date1	Word	0	Not relevant
12	Date2	Word	0	Not relevant
14	Date3	Word	0	Not relevant
16	Substitute value	Word	8000_H … $7FFF_H$	Must be within parameterized measuring range

4.2.2 Acknowledgment data set

The following table shows the structure of the acknowledgment data set.

Table 4- 11 Structure of the job or acknowledgment data set (18 bytes long)

Byte address	Element	Value range	Format
0	Command/mode	1: Factory calibration 2: User calibration 3: Abort, normal channel processing 4: Read calibration values	Byte
1	Status/error code	00_H: OK, Working 01_H: OK, Ready ≥ 10_H: Error	Byte
2	Channel number	00_H … $3F_H$ 40_H … $7F_H$ FF_H	Byte
3	Calibration step	FF_H … 00_H	Byte
4	Input/output type	00_H … $F9_H$	Byte
5	Input/output range	00_H … $F9_H$	Byte
6	User action	0: None 1: Short-circuit 2: Feed, connection 3: Measurement 4: Remove connections	Byte
7	Input/output size	0: Not relevant 1: mV 2: µA 3: Calibration values 4: Time/date 5: Ohm 6: Degrees 7: - 8: - 9: U~ (0.01 V) effective value AC 10: I~ (0.0001 A) effective value AC 11: Phi (0.01 degrees) (phase angle)	Byte
8	Calibration counter	00_H … FF_H	Byte
9	Reserved	-	Byte
10 … 17	Extended Record	See section below Extended Record	

The tables below show the value ranges of the elements and description of the acknowledgment data set.

Command/mode

Is mirrored from the command with error-free processing of the job data set.

Table 4- 12 Command/mode

Value range	Description
1: Factory calibration	Not relevant
2: User calibration	See section User calibration (mode = 2) (Page 28)
3: Abort, normal channel processing	See section Abort (mode = 3) (Page 46)
4: Read calibration values	See section Read calibration values (mode = 4) (Page 48)

Status/error code

Table 4- 13 Status/error code

Value range	Description
00_H: OK, Working	Job processing still ongoing
01_H: OK, Ready	Job processing successfully completed
≥ 10_H: Error	See section Status and error codes (Page 24)

Channel number

Table 4- 14 Channel number

Value range	Description
00_H … $3F_H$	Input channels
40_H … $7F_H$	Output channels
FF_H	All channels

Calibration step

Table 4- 15 Calibration step

Value range	Description
FF_H … 00_H	Number of calibration steps still required

Input/output type

Table 4- 16 Input/output type

Value range	Description
00_H … $F9_H$	Currently parameterized input/output type of the channel, see Parameter tables in the sections Format input type/range: Input channels (Page 55) and Format output type/range: Output channels (Page 58)

Input/output range

Table 4- 17 Input/output range

Value range	Description
00_H … $F9_H$	Currently parameterized input/output range of the channel, see Parameter tables in the sections Format input type/range: Input channels (Page 55) and Format output type/range: Output channels (Page 58)

User action

Table 4- 18 User action

Value range	Description
0: None	Indicates how to wire the terminals specified under Terminal1/Terminal2.
1: Short-circuit	
2: Feed, connection	
3: Measurement	
4: Remove connections	

Input/output size

Table 4- 19 Input/output size

Value range	Description
0: Not relevant	Specifies how to interpret the values as of byte 10. For user actions = 2 and 3 the corresponding unit is specified here.
1: mV	
2: µA	
3: Calibration values	
4: Time/date	
5: Ohm	
6: Degrees	
7: -	
8: -	
9: U~ (0.01 V) effective value AC	
10: I~ (0.0001 A) effective value AC	
11: Phi (0.01 degrees) (phase angle)	

Calibration counter

Table 4- 20 Calibration counter

Value range	Description
00_H … FF_H	Number of successful user calibrations 00_H = Factory calibration values

Extended Record

Table 4- 21 Extended Record for input/output size = 1 (mV), 2 (µA), 5 (Ω), 6 (Degrees)

Byte address	Element	Format	Value range	Description
10	Date1	Word	-32768 … 32767	Place before the decimal point
12	Date2	Word	-999 … 999	Place after decimal point * 1000
14	Date3	Word	Not used	
16	Terminal1	Byte	0 … x (0 = invalid)	Terminal at BaseUnit
17	Terminal2	Byte	0 … x (0 = invalid)	Terminal at BaseUnit

Table 4- 22 Extended Record for input/output size = 9 (U~), 10 (I~), 11 (Phi)

Byte address	Element	Format	Value range	Description
10	Date1	Double word	00_H … $FFFFFFFF_H$	Calibration register content (last calibration step executed)
14	Date2	Word	0 … 65535	Setpoint for next step
16	Terminal1	Byte	0 … x (0 = invalid)	Terminal at BaseUnit
17	Terminal2	Byte	0 … x (0 = invalid)	Terminal at BaseUnit

Extended Record for input/output size = 4 (Date/Time): See section Time stamp, date/time (Page 26)

Table 4- 23 Extended Record for input/output size = 3 (calibration values)

Byte address	Element	Format	Value range	Description
10	Date1	Word	Format 1	Offset (converter units)
12	Date2	Word	Format 2	Gain
14	Date3	Word	Module-specific Format 1 or Format 2	Add1
16	Date4	Word		Add2

The values can be output in two formats:

Format 1 (identifier = 0):

WORD, value range -32767 ... +32768

Format 2 (identifier = 1):

Value range -31.999 to +31.999

Table 4- 24 Extended Record: Places before and after the decimal point

2^{15}	2^{14}	2^{13}	2^{12}	2^{11}	2^{10}	2^{9}	2^{8}	2^{7}	2^{6}	2^{5}	2^{4}	2^{3}	2^{2}	2^{1}	2^{0}
VZ	Places before the decimal point (0 … 31)					Places after decimal point * 1000 (0 … 999)									

Format Terminal1/Terminal2:

For user actions = 1, 2, 3, 4 the terminal number of the terminal at BaseUnit are displayed here (1 … x).

Performing user calibration 5

5.1 Calibration start

You must start the user calibration using the job data set with command = 2 (user calibration) and calibration step = FF_H (Start).

An active/running calibration is displayed with Mode = 2 (user calibration) in the acknowledgment data set.

A diagnostic is also reported for analog modules with diagnostic capability:

- Analog modules with channel diagnostics signal error 31 (Channel temporarily unavailable) for the affected channel, channel fault LED lights up red, the module fault LED flashes.
- Analog modules which support the value status (QI) set QI to "BAD".

The user calibration can be started at any time. The start requires that the channel was parameterized without errors and that it is not already in another calibration mode which can be recognized by command 3 and status > 00_H in the acknowledgment data set:

- After starting the user calibration and until it is completed, only command = 2 is accepted and processed for this channel.
  All other commands result in the user calibration being aborted.
- The acknowledgment data set is generated immediately by mirroring it from the job data set and entering it in the status = 00_H (OK, Working).
- After completing the calibration step, the acknowledgment data set is updated and the status > 00_H is set:
  - The command was accepted with status = 01_H (OK, Ready). The number of steps that still have to executed is specified in the calibration step. The action that you need to execute next is specified in the user action.
  - For user action = 1 (Short-circuit), 2 (Infeed), 3 (Measuring) and 4 (Remove connections), the relevant terminals are specified in the Extended Record under Terminal1 and Terminal2 whereby Terminal1 is always the positive terminal.
  - For user action = 2 (Infeed) or 3 (Measuring) the unit is specified for measured variable (e.g., µA or mV).
  - For status > 10_H, an error was detected and calibration was aborted. In Command/Mode, "Abort, normal channel processing" is signaled. The analog module resumes the same status as before calibration was started.

5.2 Calibration sequence

Each calibration step is triggered by writing the job data set with calibration step = FF_H (for start) or FE_H … 00_H, applied from the previously signaled acknowledgment data set and identifier = 01_H.

Next the analog module has to read and evaluate the acknowledgment data set.

- For status = 00_H (OK, Working), the calibration of the analog module initiated with the job data set is still in progress.
- For status = 01_H (OK, Ready), the calibration of the analog module initiated with the job data set is complete and was processed without errors.
- For status ≥ 10_H (Error), the calibration of the analog module initiated with the job data set was not processed successfully and was acknowledged with an error. The ongoing calibration is aborted and any determined calibration values are discarded.

Note

Non-relevant elements

Elements that are not relevant for a calibration step are not taken into consideration by the module. The user calibration is not aborted by these elements.

5.3 Calibration exit

You can exit the calibration in any calibration step by means of a job data set with command = 3 (Abort, normal channel processing). Any calibration values determined until then are lost. The analog module resumes the same status as before calibration was started. If user calibration values existed before the calibration, these will become effective again after the abort. If no user calibration values existed, the factory calibration values are still in effect.

Any calibration initiated previously can also be aborted with the following actions:

- POWER OFF/POWER ON of the supply voltage
- Pulling & plugging of the analog module
- Re-parameterization of the analog module
- Re-parameterization of the analog module
- Firmware update of the analog module

5.4 Calibration completion

The last calibration step is the confirmation of the calibration or of the determined calibration values. This calibration step is initialized by the analog module for a user calibration with calibration step = 1 in the acknowledgment data set. All calibration values of the current calibration process are determined and signaled back.

Confirm the calibration values with the job data set and calibration step = 1. With input/output size = 4 (Date/Time) a time stamp in S7 BCD format is entered starting with byte 10 (see section Time stamp, Date/Time (Page 26)).

As soon as the calibration values and the time stamp of the analog module have been checked and applied, mode = 3 (normal channel processing) and status = 01_H (OK, Ready) are signaled in the acknowledgment data set. The channel number, the input/output type and the input/
output range remain the same; the remaining data equals zero.

The newly determined calibration values are now valid and in effect.

The previous user calibration values are overwritten and cannot be restored.

In case of an error in the last calibration step (e.g., error in time stamp), the corresponding error code is signaled in the status. The new calibration values are discarded.

5.5 Status and error codes

Table 5- 1 Status codes

Status code	Description
00_H	OK, Working; job in progress
01_H	OK, Ready; job executed without error
02_H … $0F_H$	Reserved

Calibration is aborted with an error if an error occurs during calibration.

Table 5- 2 Error codes

Error codes	Description	Remedy/Cause
General errors of the calibration process		
10_H	Invalid command	Correct job data set; table Command/job ID (Page 12)
11_H	Invalid channel number	Correct job data set; table Identification (Page 12)
12_H	Invalid identification	Correct job data set; table Channel number (Page 12)
13_H	Invalid calibration step	Correct job data set; table Calibration step (Page 12)
14_H	Error in input/output type or input/output range	Input/output type or input/output range cannot be scaled; see Analog Module Manual
15_H	Invalid module action	Irrelevant for user calibration
16_H	Invalid input/output size information	Extended Record, invalid content; Correct job data set (Page 11)
17_H	Reserved	–
18_H	Time stamp error (year)	Invalid time stamp; correct job data set; section Time stamp, Date/Time (Page 26)
19_H	Time stamp error (month)	
$1A_H$	Time stamp error (day)	
$1B_H$	Time stamp error (hour)	
$1C_H$	Time stamp error (minute)	
$1D_H$	Time stamp error (day of the week)	
$1E_H$	Invalid substitute value behavior of inputs	Correct job data set; table Substitute value behavior of inputs (Page 13)
$1F_H$	Substitute value out of the measuring range	

Error codes	Description	Remedy/Cause
Technology errors		
20_H	Value measured by user deviates too much from setpoint	Circuit, check measuring technique; correct job data set
21_H	Value supplied by user deviates too much from setpoint	Circuit, check infeed technique
22_H … 23_H	Reserved	–
24_H	User calibration not supported	See Analog Module Manual
25_H … $2F_H$	Reserved	–
System errors/general module errors		
30_H	Error writing to EEPROM/Flash	Replace analog module
31_H	Error in procedure	A job data set with a command other than the one active came in during the calibration process. Follow procedure; see section Example (Page 28)
32_H	Channel not parameterized	Correct configuration/parameter assignment
33_H	Reserved	–
34_H	Abort due to parameter assignment during ongoing calibration	See section Behavior with parameter assignment of analog modules during calibration (Page 27)
35_H … $3F_H$	Reserved	–
Other faults/errors		
40_H	Reserved	–
41_H	No calibration values available	No calibration values available to delete; See section Prepare factory calibration (mode = 5) (Page 51) and Reset (mode = 6) (Page 53)
42_H … FF_H	Reserved	–

5.6 Time stamp, Date/time

During user calibration, you transfer the date and time of the synchronization to the analog module in calibration step = 1 Date and time.

When reading the calibration values (command = 4), the date and time of the read calibration values are output in calibration step = 1.

Both take place with measured variable = 4 as time stamp in the acknowledgment data set as well as in the job data set as of byte 10 in S7 BCD format.

Byte address	Value	Format	Value range
10	Year	Byte	00_H = 2000, 99_H = 2099
11	Month	Byte	01_H … 12_H
12	Tag	Byte	01_H … 31_H
13	Hour	Byte	00_H … 23_H
14	Minute	Byte	00_H … 59_H
15	Second	Byte	00_H … 59_H
16	ms	Byte	00_H … 99_H
17.4 … 17.7	ms	High nibble	0_H … 9_H
17.0 … 17.3	Day of the week	Low nibble	0 = undefined 1 = Sunday 2 = Monday 3 = Tuesday 4 = Wednesday 5 = Thursday 6 = Friday 7 = Saturday

5.7 Re-parameterization of the input/output range

If you have conducted a user calibration on a channel, the user calibration values are in effect for this channel. The user calibration values always apply only to the input/output range for which they were created. If the input/output range is re-parameterized to another input/output range, the factory calibration values are used once again for this range. The user calibration values still exist.

When you start a user calibration in the new input/output range, the new calibration values are saved for this new input/output range. The user calibration values of the previous input/output range are overwritten because only one user calibration can be saved per channel.

If you do not start user calibration and switch back to the previous input/output range, the previous user calibration values will be in effect once again.

Other channel parameters (e.g., interference frequency suppression) have no effect on the validity of the calibration values.

5.8 Calibration counter

Each error-free and complete user calibration of a channel is counted. More than 255 calibration processes do not increase the calibration counter.

The current counter status (including ongoing calibration) is displayed in calibration step = 1 together with the currently determined calibration values. When you acknowledge this calibration step with the job data set, the calibration counter is saved retentively with the determined user calibration values and will be in effect.

Each command = 5 (Restore factory calibration) or 6 (Reset) deletes the calibration counter.

A re-parameterization of the input/output ranges does not delete the calibration counter.

When you start a user calibration in the new input/output range, the calibration counter is reset and starts counting from 1 again.

If you do not start user calibration and switch back to the previous input/output range, the previous user calibration values will be in effect once again.

5.9 Behavior at CPU-STOP

Reading and writing of data sets is not possible in CPU STOP.

5.10 Behavior with parameter assignment of analog modules during calibration

Each parameter data set that comes in during an ongoing user calibration results in the calibration being aborted.

The acknowledgment data set is updated with a corresponding error message.

Example 6

6.1 User calibration (mode = 2)

All processes described below are based on the initial state of the acknowledgment data set.

Byte	Element	Value
0	Mode	3: normal channel processing
1	Status/error code	> 0
2	Channel number	X
3	Calibration step	FF_H*
4	Input/output type	0
5	Input/output range	0
6	User action	0: None
7	Input/output size	0
8	Calibration counter	0
9	Reserved	0
10	Date1	0
12	Date2	0
14	Date3	0
16	Terminal1	0
17	Terminal2	0

* The calibration step can only take place immediately after run-up FF_H. After completion/abort of a calibration step, "0 = no more steps" is signaled.

Only the data necessary for the current calibration step are entered in the job/ acknowledgment data set.

- The command and the channel number must remain the same for each job data set of a calibration sequence; otherwise, the calibration is aborted.
- The calibration step must be transferred to the analog module again in each job data set according to the last acknowledgment data set. The start is an exception.
- The channel must be parameterized.
- A job data set may only be transferred to the analog module with status > 00_H.
- The current calibration step is to be executed with identifier = 1 in the job data set.

6.1.1 Example: Analog input module RTD (resistance thermometer)

6.1.1.1 Step A: Start

Job data set:

Start the user calibration with channel X. The specified substitute value behavior of the inputs and the substitute value apply to the triggered calibration and are evaluated and applied by the analog module during the initial call only.

Byte	Element	Value
0	Command	2: User calibration
1	Identifier	
2	Channel number	X
3	Calibration step	FF_H: Start
4	Not relevant	
5	Not relevant	
6	Not relevant	
7	Input/output size	
8	Substitute value behavior	0: retain last value
9	Reserved	
10	Date1	
12	Date2	
14	Datem3	
16	Substitute value	

Acknowledgment data set:

The analog module acknowledges the change to user calibration (mode = 2) with channel = X and status = 00_H (OK, Working). As soon as the analog module signals in status = 01_H (OK, Ready), the remaining data of the acknowledgment data set are valid and you can evaluate the data. The input/output range currently set on this channel as well as the number of required calibration steps is signaled. The analog module requests channel X in the next calibration step; short-circuit at terminals Y and Z.

Byte	Element	Value		Value
0	Mode	2: User calibration		2: User calibration
1	Status/error code	00_H: OK, Working		01_H: OK, Ready
2	Channel number	X		X
3	Calibration step	FF_H		**4 more steps**
4	Input/output type			09_H: RTD, 2-wire
5	Input/output range			02_H: PT100, Std.
6	User action			1: Short-circuit
7	Input/output size			
8	Calibration counter			
9	Reserved			
10	Date1			
12	Date2			
14	Date3			
16	Terminal1			Y
17	Terminal2			Z

6.1.1.2 Step B: Zero-Scale calibration

Job data set:

Acknowledge calibration step 4. The requested action (short-circuit terminals Y, Z) is finished.

Byte	Element	Value
0	Command	2: User calibration
1	Identifier	1: Execute
2	Channel number	X
3	Calibration step	4
4	Not relevant	
5	Not relevant	
6	Not relevant	
7	Input/output size	
8	Substitute value behavior	
9	Reserved	
10	Date1	
12	Date2	
14	Date3	
16	Substitute value	

Acknowledgment data set:

As soon as the analog module signals in status = 01_H (OK, Ready), the remaining data of the acknowledgment data set are valid and you can evaluate the data.

The number of necessary calibration steps is decremented. The analog module requests channel X in the next calibration step; infeed; remove connections.

Byte	Element	Value		Value
0	Mode	2: User calibration		2: User calibration
1	Status/error code	00_H: OK, Working		01_H: OK, Ready
2	Channel number	X		X
3	Calibration step	4		**3 more steps**
4	Input/output type			09_H: RTD, 2-wire
5	Input/output range			02_H: PT100, Std.
6	User action			4: Remove connec-tions
7	Input/output size			
8	Calibration counter			
9	Reserved			
10	Date1			
12	Date2			
14	Date3			
16	Terminal1			Y
17	Terminal2			Z

6.1.1.3 Step C: Intermediate step

Job data set:

Acknowledge calibration step 3. The requested action (remove connections at terminals Y, Z) is finished.

Byte	Element	Value
0	Command	2: User calibration
1	Identifier	1: Execute
2	Channel number	X
3	Calibration step	3
4	Not relevant	
5	Not relevant	
6	Not relevant	
7	Input/output size	
8	Substitute value behavior	
9	Reserved	
10	Date1	
12	Date2	
14	Date3	
16	Substitute value	

Acknowledgment data set:

As soon as the analog module signals in status = 01_H (OK, Ready), the remaining data of the acknowledgment data set are valid and you can evaluate the data.

The number of necessary calibration steps is decremented. The analog module requests channel X in the next calibration step; infeed 390.5 Ω at terminals Y and Z.

Byte	Element	Value		Value
0	Mode	2: User calibration		2: User calibration
1	Status/error code	00_H: OK, Working		01_H: OK, Ready
2	Channel number	X		X
3	Calibration step	3		**2 more steps**
4	Input/output type			09_H: RTD, 2-wire
5	Input/output range			02_H: PT100, Std.
6	User action			2: Infeed
7	Input/output size			5: Ohm
8	Calibration counter			
9	Reserved			
10	Date1			390
12	Date2			500
14	Date3			
16	Terminal1			Y
17	Terminal2			Z

6.1.1.4 Step D: Full-Scale calibration positive

Job data set:

Acknowledge calibration step 2. The requested action (infeed 390.5 Ω at terminals Y, Z) is finished.

Byte	Element	Value
0	Command	2: User calibration
1	Identifier	1: Execute
2	Channel number	X
3	Calibration step	2
4	Not relevant	
5	Not relevant	
6	Not relevant	
7	Input/output size	
8	Substitute value behavior	
9	Reserved	
10	Date1	
12	Date2	
14	Date3	
16	Substitute value	

Acknowledgment data set:

As soon as the analog module signals in status = 01_H (OK, Ready), the remaining data of the acknowledgment data set are valid and you can evaluate the data.

The number of necessary calibration steps is decremented. The calibration values determined by the analog module are signaled (identified by measured variable = 3). The offset is in Date1, the gain in Date2, Add1 in Date3 (if present) and Add2 in Date4 (if present).

The number of successful calibration processes is signaled for this input/output range in the calibration counter.

1 is not signaled back in calibration step, which means the last calibration step.

Byte	Element	Value		Value
0	Mode	2: User calibration		2: User calibration
1	Status/error code	00_H: OK, Working		01_H: OK, Ready
2	Channel number	X		X
3	Calibration step	2		**1 more step**
4	Input/output type			09_H: RTD, 2-wire
5	Input/output range			02_H: PT100, Std.
6	User action			0: None
7	Input/output size			3: Calibration values
8	Calibration counter			X: 1 … 255
9	Reserved			
10	Date1			Offset
12	Date2			Gain
14	Date3			Add1
16	Date4			Add2

6.1.1.5 Step E: Closure

Job data set:

Acknowledge calibration step 1. The synchronization values signaled by the analog module are accepted. You must enter the date and the time with measured variable = 4 in S7 BCD format as of byte 10.

Byte	Element	Value
0	Command	2: User calibration
1	Identifier	1: Execute
2	Channel number	X
3	Calibration step	1
4	Not relevant	
5	Not relevant	
6	Not relevant	
7	Input/output size	4: Date/time
8	Substitute value behavior	
9	Reserved	
10	Date/time	Date and time in S7 BCD format

Acknowledgment data set:

As soon as the analog module signals in status = 01_H (OK, Ready) and mode = 3 (normal channel processing), the determined calibration values and date/time are applied and saved.

0 is not signaled back in calibration step, which means no more calibration steps. Calibration complete.

Byte	Element	Value		Value
0	Mode	2: User calibration		3: normal channel processing
1	Status/error code	00_H: OK, Working		01_H: OK, Ready
2	Channel number	X		X
3	Calibration step	1		**0 (ready now)**
4	Input/output type			09_H: RTD, 2-wire
5	Input/output range			02_H: PT100, Std.
6	User action			0
7	Input/output size			0
8	Calibration counter			0
9	Reserved			0
10	Date1			0
12	Date2			0
14	Date3			0
16	Terminal1			0
17	Terminal2			0

6.1.2 Example: Analog output module +/-10 V

6.1.2.1 Step A: Start

Job data set:

Start the user calibration with channel X.

Byte	Element	Value
0	Command	2: User calibration
1	Identifier	
2	Channel number	X
3	Calibration step	FF_H: Start
4	Not relevant	
5	Not relevant	
6	Not relevant	
7	Input/output size	
8	Substitute value behavior	
9	Reserved	
10	Date1	
12	Date2	
14	Date3	
16	Substitute value	

Acknowledgment data set:

The analog module acknowledges the change to user calibration (mode = 2) with channel = X and status = 00_H (OK, Working). As soon as the analog module signals in status = 01_H (OK, Ready), the remaining data of the acknowledgment data set are valid and you can evaluate the data.

The input/output range currently set on this channel as well as the number of required calibration steps is signaled.

The analog module requests channel X in the first calibration step; measuring at terminals Y and Z.

Byte	Element	Value		Value
0	Mode	2: User calibration		2: User calibration
1	Status/error code	00_H: OK, Working		01_H: OK, Ready
2	Channel number	X		X
3	Calibration step	FF_H		**3 more steps**
4	Input/output type			01_H: Voltage
5	Input/output range			02_H: 0 … 10 V
6	User action			3: Measurement
7	Input/output size			1: mV
8	Calibration counter			
9	Reserved			
10	Date1			
12	Date2			
14	Date3			
16	Terminal1			Y
17	Terminal2			Z

6.1.2.2 Step B: Zero-Scale calibration

Job data set:

Acknowledge calibration step 3. The requested action (voltage measuring at terminals Y, Z) is finished. The measured voltage is transferred to the analog module in Date1 in the unit specified under measured variable. The place in front of the decimal point of the voltage in mV is entered in Date1, and the value after the decimal point of the voltage in mV multiplied by 1000 is entered in Date2. Example: 15.6 mV.

Byte	Element	Value
0	Command	2: User calibration
1	Identifier	1: Execute
2	Channel number	X
3	Calibration step	3
4	Not relevant	
5	Not relevant	
6	Not relevant	
7	Input/output size	1: mV
8	Substitute value behavior	
9	Reserved	
10	Date1	15
12	Date2	600
14	Date3	
16	Substitute value	

Acknowledgment data set:

As soon as the analog module signals in status = 01_H (OK, Ready), the remaining data of the acknowledgment data set are valid and you can evaluate the data.

The number of necessary calibration steps is decremented.

The analog module requests channel X in the next calibration step; measuring at terminals Y and Z.

Byte	Element	Value		Value
0	Mode	2: User calibration		2: User calibration
1	Status/error code	00_H: OK, Working		01_H: OK, Ready
2	Channel number	X		X
3	Calibration step	3		**2 more steps**
4	Input/output type			01_H: Voltage
5	Input/output range			02_H: 0 … 10 V
6	User action			3: Measurement
7	Input/output size			1: mV
8	Calibration counter			
9	Reserved			
10	Date1			
12	Date2			
14	Date3			
16	Terminal1			Y
17	Terminal2			Z

6.1.2.3 Step C: Intermediate step

Job data set:

Acknowledge calibration step 2. The requested action (voltage measuring at terminals Y, Z) is finished. The measured voltage is transferred to the analog module in Date1 in the unit specified under measured variable. The place in front of the decimal point of the voltage in mV is entered in Date1, and the value after the decimal point of the voltage in mV multiplied by 1000 is entered in Date2. Example: 9986.3 mV.

Byte	Element	Value
0	Command	2: User calibration
1	Identifier	1: Execute
2	Channel number	X
3	Calibration step	2
4	Not relevant	
5	Not relevant	
6	Not relevant	
7	Input/output size	1: mV
8	Substitute value behavior	
9	Reserved	
10	Date1	9986
12	Date2	300
14	Date3	
16	Substitute value	

Acknowledgment data set:

As soon as the analog module signals in status = 01_H (OK, Ready), the remaining data of the acknowledgment data set are valid and you can evaluate the data.

The number of necessary calibration steps is decremented. The calibration values determined by the analog module are signaled (identified by measured variable = 3). The offset is in Date1, the gain in Date2, Add1 in Date3 (if present) and Add2 in Date4 (if present). The number of successful calibration processes is signaled for this input/output range in the calibration counter.

1 is not signaled back in calibration step, which means the last calibration step.

Byte	Element	Value		Value
0	Mode	2: User calibration		2: User calibration
1	Status/error code	00_H: OK, Working		01_H: OK, Ready
2	Channel number	X		X
3	Calibration step	2		**1 more step**
4	Input/output type			01_H: Voltage
5	Input/output range			02_H: 0 … 10 V
6	User action			0: None
7	Input/output size			3: Calibration values
8	Calibration counter			X: 1 … 255
9	Reserved			
10	Date1			Offset
12	Date2			Gain
14	Date3			Add1
16	Date4			Add2

6.1.2.4 Step D: Full-Scale calibration positive

Job data set:

Acknowledge calibration step 1. The synchronization values signaled by the analog module are accepted.

You must enter the date and the time with measured variable = 4 in S7 BCD format as of Date1.

Byte	Element	Value
0	Command	2: User calibration
1	Identifier	1: Execute
2	Channel number	X
3	Calibration step	1
4	Not relevant	
5	Not relevant	
6	Not relevant	
7	Input/output size	4: Date/time
8	Substitute value behavior	
9	Reserved	
10	Date1	Date and time in S7 BCD format

Acknowledgment data set:

As soon as the analog module signals in status = 01_H (OK, Ready) and mode = 3 (normal channel processing), the determined calibration values and date/time are applied and saved.

0 is not signaled back in calibration step, which means no more calibration steps. Calibration complete.

Byte	Element	Value		Value
0	Mode	2: User calibration		3: normal channel processing
1	Status/error code	00_H: OK, Working		01_H: OK, Ready
2	Channel number	X		X
3	Calibration step	1		**0 (ready now)**
4	Input/output type			01_H: Voltage
5	Input/output range			02_H: 0 … 10 V
6	User action			0
7	Input/output size			0
8	Calibration counter			0
9	Reserved			0
10	Date1			0
12	Date2			0
14	Date3			0
16	Terminal1			0
17	Terminal2			0

6.2 Abort (mode = 3)

6.2.1 User abort

Job data set:

An ongoing calibration can be aborted in any calibration step and in any state, even with status = 00_H (OK, Working), with the command = 3 (Abort, channel processing).

Byte	Element	Value
0	Command	3: Abort, channel processing
1	Identifier	
2	Channel number	X
3	Calibration step	
4	Not relevant	
5	Not relevant	
6	Not relevant	
7	Input/output size	
8	Substitute value behavior	
9	Reserved	
10	Date1	
12	Date2	
14	Date3	
16	Substitute value	

Acknowledgment data set:

As soon as the analog module signals in status = 01_H (OK, Ready) and mode = 3 (abort, normal channel processing), the calibration of channel X is aborted. The channel has the same state as before the calibration. The input/output range currently set on the channel is signaled.

Byte	Element	Value		Value
0	Mode	3: Abort, channel processing		3: Abort, channel processing
1	Status/error code	00_H: OK, Working		01_H: OK, Ready
2	Channel number	X		X
3	Calibration step			0
4	Input/output type			01_H: Voltage
5	Input/output range			02_H: 0 … 10 V
6	User action			0
7	Input/output size			0
8	Calibration counter			0
9	Reserved			
10	Date1			
12	Date2			
14	Date3			
16	Terminal1			
17	Terminal2			

6.2.2 Module abort

If the analog module detects an error during a calibration process, this error aborts the calibration. The error code is signaled in the status.

See also

Calibration exit (Page 22)

6.3 Read calibration values (mode = 4)

All current calibration values of an analog module channel are read with command = 4 (Read calibration values); these are either the values from the factory calibration or the user calibration.

The command is only permitted in status > 00_H. The channel number must be specified and the calibration step must be set to FF_H (Start).

6.3.1 Step A: Start

Job data set:

Byte	Element	Value
0	Command	4: Read calibration values
1	Identifier	
2	Channel number	X
3	Calibration step	FF_H: Start
4	Not relevant	
5	Not relevant	
6	Not relevant	
7	Input/output size	
8	Substitute value behavior	
9	Reserved	
10	Date1	
12	Date2	
14	Date3	
16	Substitute value	

Acknowledgment data set:

As soon as the analog module signals in status = 01_H (OK, Ready), the remaining data of the acknowledgment data set are valid and you can evaluate the data. Measured variable = 3 identifies the data as of Date1 as calibration values. Only the current calibration values of the specified channel are read with command = 4; these are the calibration values associated with the parameterized input/output range.

Byte	Element	Value		Value
0	Mode	4: Read calibration values		4: Read calibration values
1	Status/error code	00_H: OK, Working		01_H: OK, Ready
2	Channel number	X		X
3	Calibration step	FF_H		**1 more step**
4	Input/output type			01_H: Voltage
5	Input/output range			02_H: 0 … 10 V
6	User action			0: None
7	Input/output size			3: Calibration values
8	Calibration counter			X: 0 … 255
9	Reserved			0
10	Date1			Offset
12	Date2			Gain
14	Date3			Add1
16	Date4			Add2

The input/output range currently set on the channel is signaled.

The offset is in Date1, the gain in Date2, Add1 in Date3 (if present) and Add2 in Date4 (if present).

The calibration counter specifies if the values are factory calibration values (calibration counter = 0) or user calibration values (calibration counter > 0). For user calibration values, the value of the calibration counter is equal to the number of successful calibration processes for this input/output range (since the last user calibration of a different input/output range).

Calibration step = 1 indicates that one more step is necessary.

6.3.2 Step B: Closure

Job data set:

Acknowledge calibration step 1.

Byte	Element	Value
0	Command	4: Read calibration values
1	Identifier	
2	Channel number	X
3	Calibration step	1
4	Not relevant	
5	Not relevant	
6	Not relevant	
7	Input/output size	
8	Substitute value behavior	
9	Reserved	
10	Date1	
12	Date2	
14	Date3	
16	Substitute value	

Acknowledgment data set:

As soon as the analog module signals in status = 01_H (OK, Ready), the remaining data of the acknowledgment data set are valid and you can evaluate the data. Measured variable = 4 identifies the data as of Date1 Time stamp. A time stamp that matches the previously read calibration values is signaled.

Byte	Element	Value		Value
0	Mode	4: Read calibration values		3: normal channel processing
1	Status/error code	00_H: OK, Working		01_H: OK, Ready
2	Channel number	X		X
3	Calibration step	1		0
4	Input/output type			01_H: Voltage
5	Input/output range			02_H: 0 … 10 V
6	User action			0: None
7	Input/output size			4: Date/time
8	Calibration counter			X: 0 … 255
9	Reserved			
10	Date/time			Date and time in S7 BCD format

6.4 Restore factory calibration (mode = 5)

Use command = 5 (Restore factory calibration) to undo the executed user calibration of the specified channel for the set input/output range. The analog module applies the calibration values determined at the factory which will be in effect again. Delete saved user calibration values.

If user calibration values of the channel exist which do not belong to the set input/output range, these are not deleted.

The command is only permitted in status > 00_H.

Specify the channel number and set the calibration step to FF_H (Start).

The calibration counter is set to 0 again with this command.

Job data set:

Byte	Element	Value
0	Command	5: Restore factory calibration
1	Identifier	
2	Channel number	X
3	Calibration step	FF_H
4	Not relevant	
5	Not relevant	
6	Not relevant	
7	Input/output size	
8	Substitute value behavior	
9	Reserved	
10	Date1	
12	Date2	
14	Date3	
16	Substitute value	

Acknowledgment data set:

As soon as the analog module signals in status = 01_H (OK, Ready) and mode = 3 (normal channel processing), restoration is complete. The user calibration was deleted and the channel continues operating in the previous state with factory calibration values.

Byte	Element	Value		Value
0	Mode	5: Restore factory calibration		3: normal channel processing
1	Status/error code	00: OK, Working		01: OK, Ready
2	Channel number	X		X
3	Calibration step	FF_H		**0 (ready now)**
4	Input/output type			01_H: Voltage
5	Input/output range			02_H: 0 … 10 V
6	User action			
7	Input/output size			
8	Calibration counter			
9	Reserved			
10	Date1			
12	Date2			
14	Date3			
16	Terminal1			
17	Terminal2			

6.5 Reset (mode = 6)

Use the command = 6 (Reset) to restore the factory calibration for a channel or the entire analog module regardless of the parameter assignment of the channels.

The factory calibration of a channel is restored according to the channel number, and any saved user calibration values are deleted (even if the saved user calibration values do not belong to the currently set input/output range). With channel number FF_H, restoration takes place for all channels of the analog module.

The command is only permitted in status > 00_H. Set the calibration step to FF_H (Start). The channel or the analog module must not be parameterized.

The involved calibration counters are set to 0 again with this command.

Job data set:

Byte	Element	Value
0	Command	6: Reset
1	Identifier	
2	Channel number	X
3	Calibration step	FF_H
4	Not relevant	
5	Not relevant	
6	Not relevant	
7	Input/output size	
8	Substitute value behavior	
9	Reserved	
10	Date1	
12	Date2	
14	Date3	
16	Substitute value	

Acknowledgment data set:

As soon as the analog module signals in status = 01_H (OK, Ready) and mode = 3 (normal channel processing), reset is complete. The user calibration values were deleted. All channels involved continue operating in their previous state with factory calibration values.

Byte	Element	Value		Value
0	Mode	6: Reset		3: normal channel processing
1	Status/error code	00_H: OK, Working		01_H: OK, Ready
2	Channel number	X		X
3	Calibration step	FF_H		**0 (ready now)**
4	Input/output type			
5	Input/output range			
6	User action			
7	Input/output size			
8	Calibration counter			
9	Reserved			
10	Date1			
12	Date2			
14	Date3			
16	Terminal1			
17	Terminal2			

Appendix A

A

A.1 Input type/range format: Input channels

Input type format: Input channels

$Value_D$	Input type
00	Deactivated
01	Voltage
02	Current (4-wire transducer)
03	Current (2-wire transducer)
04	resistance (4-wire connection)
05	resistance (3-wire connection)
06	resistance (2-wire connection)
07	Thermal resistance (linear, 4-conductor connection)
08	Thermal resistance (linear, 3-conductor connection)
09	Thermal resistance (linear, 2-conductor connection)
10	Thermocouple

Input range format: Input channels

An input type that is not as listed in this table can also be used for specific modules. You must note, however, that the input type in the acknowledgment data set no longer matches the general definition.

$Value_D$	Input type
For input type = 01 (voltage)	
00	± 25 mV
01	± 50 mV
02	± 80 mV
03	± 250 mV
04	± 500 mV
05	± 1 V
06	± 1.25 V
07	± 2.5 V
08	± 5 V
09	± 10 V
10	1 … 5 V
11	0 … 10 V

$Value_D$	Input type
For input type = 02, 03 (current)	
00	± 3.2 mA
01	± 10 mA
02	0 … 20 mA
03	4 … 20 mA
04	± 20 mA
05	± 5 mA
For input type = 04, 05, 06 (resistor: 4-wire, 3-wire , 2-wire connection)	
00	48 Ω
01	150 Ω
02	300 Ω
03	600 Ω
04	3000 Ω
05	6000 Ω
06	10000 Ω
15	PTC (DIN VDE 0660 Part 303 Type A)
For input type = 07, 08, 09 (thermistor: 4-wire, 3-wire , 2-wire connection)	
00	Pt100 climatic range
01	Ni100 climatic range
02	Pt100 Standard range
03	Ni100 standard range
04	Pt500 standard range
05	Pt1000 standard range
06	Ni1000 standard range
07	Pt200 climatic range
08	Pt500 climatic range
09	Pt1000 climatic range
10	Ni1000 climatic range
11	Pt200 standard range
12	Ni120 standard range
13	Ni120 climatic range
14	Cu10 climatic range
15	Cu10 standard range
16	Ni200 standard range
17	Ni200 climatic range
18	Ni500 standard range
19	Ni500 climatic range
20	Pt10 standard range
21	Pt10 climatic range
22	Pt50 standard range
23	Pt50 climatic range
24	Cu50 standard range

$Value_D$	Input type
25	Cu50 climatic range
26	Cu100 standard range
27	Cu100 climatic range
28	LG Ni1000 standard range
29	LG Ni1000 climatic range
For input type = 10 (thermocouple)	
00	Type B [PtRh-PtRh]
01	Type N [NiCrSi-NiSi]
02	Type E [NiCr-CuNi]
03	Type R [PtRh-Pt]
04	Type S [PtRh-Pt]
05	Type J [Fe-CuNi]
06	Type L [Fe-CuNi] recalled since 1994 standard (DIN 43710)
07	Type T [Cu-CuNi]
08	Type K [NiCr-Ni]
09	Type U [Cu-CuNi] recalled since 1994 standard (DIN 43710)
10	Type C [W5Re-W26Re]
11	TXK/XK(L) [TXK/XK(L)]

A.2 Output type/range format: Output channels

Output type format: Output channels

An output type that is not as listed in this table can also be used for specific modules. You must note, however, that the output type in the acknowledgment data set no longer matches the general definition.

$Value_D$	Output type
00	Deactivated
01	Voltage
02	Current (4-wire transducer)
03	Current (2-wire transducer)

Output range format: Output channels

$Value_D$	Output range
For output type = 01 (voltage)	
00	± 10 V
01	± 5 V
02	0 … 10 V
03	1 … 5 V
04	± 2.5 V
05	± 1 V
For output type = 02, 03 (current)	
00	± 20 mA
01	0 … 20 mA
02	4 … 20 mA

SIEMENS

SIMATIC
ET 200SP Open Controller
Product information on CPU 1515SP PC2 (F/T/TF)

Product Information

Validity

This product information supplements the documentation for the ET 200SP Open Controller CPU 1515SP PC2 (F/T/TF), edition 09/2018.

The information provided in it should be considered more up-to-date if uncertainties arise.

The described function restrictions apply **exclusively** to the Open Controller CPU 1515SP PC2 (F/T/TF) **V2.5**.

Technical update

Acronis backup is not supported

The Acronis backup is not supported in the current version – please use Image Partition Creator.

No activation of the Windows copy

If you do not have an Internet connection, you do **not** need to activate the Windows copy. There are no functional restrictions.

Display of processor temperature by SIMATIC IPC DiagBase

The **SIMATIC IPC DiagBase** software shows **only** the temperature of the CPU. The temperature of the motherboard and work memory are currently not displayed.

Changing the boot order

The boot order changes automatically when a DVD drive with USB connection is connected to the Open Controller CPU 1515SP PC2 **V2.5**.

Restrictions when using the power management function

The power management function helps to maximize the performance of your PC or to save energy. Activating the "Power saver" function may restrict the functions of the software controller.

Key combination <Ctrl+Alt+Del> during initial commissioning

To ensure that the initial initialization is complete, do **not** use the key combination <Ctrl+Alt+Del> during the initialization phase.

Restriction to one monitor

Use only **one** monitor. If several monitors are used simultaneously, undefined states may occur in the system.

Cables for connecting the DisplayPorts

Use **only** the following cables to connect the DisplayPorts:

- DisplayPort cable, length: 5 m, E74020-C AWM Style 20276, 80°C, 30 V, VW-1 (with integrated ferrite cores at both ends)
- DisplayPort cable, length: 3 m, 6AV7860-0DH30-0AA0
- DisplayPort cable, length: 5 m, 6AV7860-0DH50-0AA0

© Siemens AG 2018. All rights reserved
A5E44910079-AA, 09/2018

Changes to section 12.4: Mechanical and climatic environmental conditions

The tables below show the mechanical environmental conditions in the form of sinusoidal oscillations.

Table 1 Mechanical environmental conditions for BA 2×RJ45

Frequency range	
5 Hz ≤ f ≤ 8.4 Hz	3.5 mm amplitude
8.4 Hz ≤ f ≤ 150 Hz	1 g constant acceleration

Table 2 Mechanical environmental conditions for BA 2×FC

Frequency range	
5 Hz ≤ f ≤ 8.2 Hz	7.5 mm amplitude
8.2 Hz ≤ f ≤ 500 Hz	2 g constant acceleration

The following table provides information about the type and scope of the tests for environmental mechanical conditions.

Table 3 Tests for mechanical environmental conditions

Test for ...	Test standard	Comment
Vibrations	Vibration test according to IEC 60068-2-6 (sine)	Type of vibration: Frequency sweeps with a rate of change of 1 octave/minute. BA 2×RJ45 • 5 Hz ≤ f ≤ 8.4 Hz, 3.5 mm constant amplitude • 8.4 Hz ≤ f ≤ 150 Hz, 1 g constant acceleration BA 2×FC • 5 Hz ≤ f ≤ 8.2 Hz, 7.5 mm constant amplitude • 8.2 Hz ≤ f ≤ 500 Hz, 2 g constant acceleration Duration of vibration: 10 frequency sweeps per axis in each of three perpendicular axes
Shock	Shock, tested according to IEC 60068-2-27	Type of shock: Half-sine Shock intensity: 150 m/s^2 peak value, 11 ms duration Direction of shock: 3 shocks in +/- direction in each of three perpendicular axes

Changes to section 11.5: Windows language packages

Provided language packages

- Chinese (Simplified)
- German
- English
- French
- Italian
- Spanish

Storage location of the language packages

The language packages on the restore USB stick are provided under \LanguagesPackages\.

Installation of the language packs

1. To start a console session, open the "Run" dialog, for example, with <Windows key+R>.
2. Enter the following command: pksetup.exe
3. Click "OK" to confirm.
4. The "Install or uninstall display languages" window opens.
5. Click on "Install display languages".
6. Select the display language to be installed by clicking on "Browse".
7. Navigate to the folder containing the display languages and confirm with "OK".
8. The selected language package is displayed in the "Install or uninstall display languages" window.
9. Click on "Next" and follow the instructions of the installation wizard.

Maximum current consumption

The max. current consumption is: 2.9 A

Ambient temperature during operation

A temperature range of -20° C bis 60° C is approved for operation.

Siemens AG
Division Digital Factory
Postfach 48 48
90026 NÜRNBERG
GERMANY

Product information on CPU 1515SP PC2 (F/T/TF)
A5E44910079-AA, 09/2018

SIEMENS

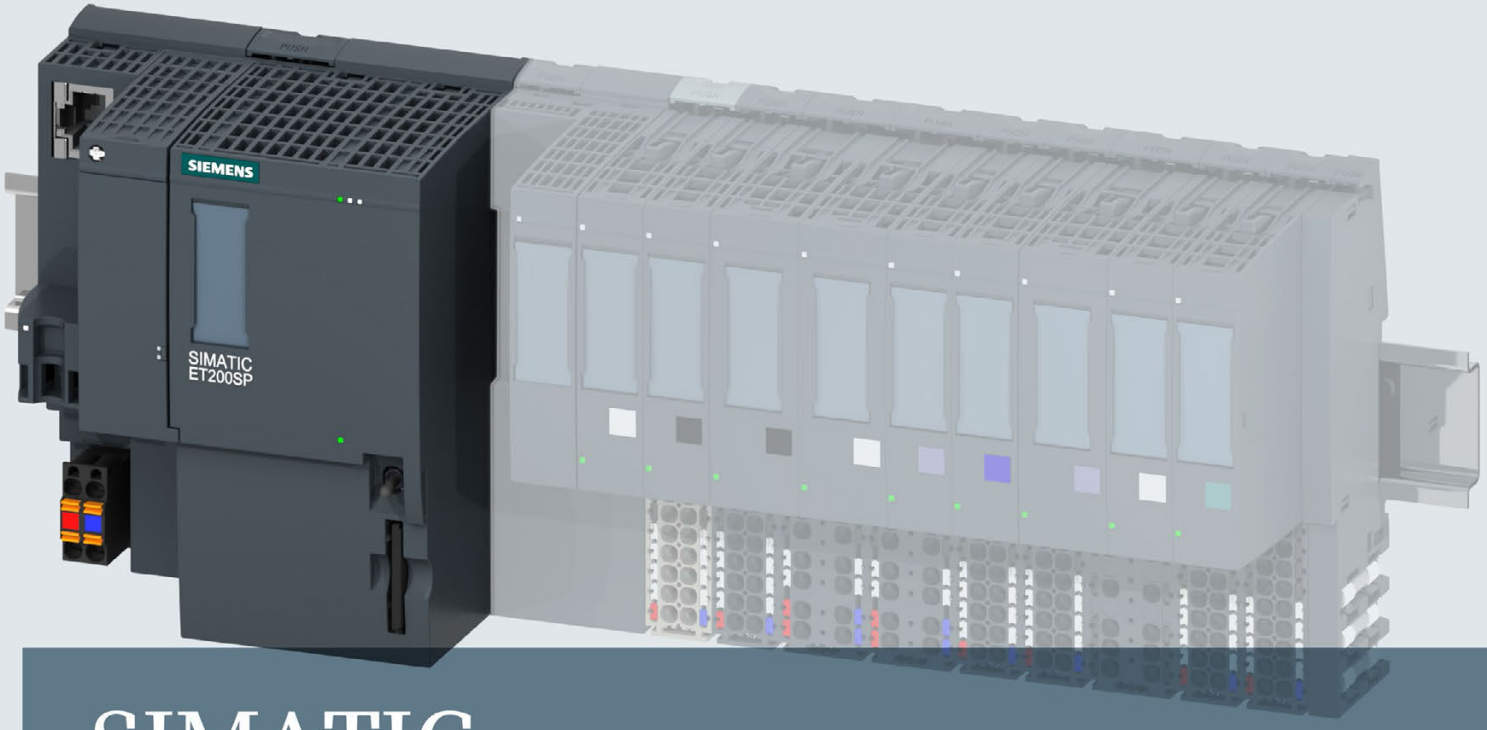

SIMATIC

ET 200SP

CPU 1510SP-1 PN (6ES7510-1DJ01-0AB0)

Manual

Edition 09/2016

siemens.com

SIEMENS

SIMATIC

ET 200SP
CPU 1510SP-1 PN
(6ES7510-1DJ01-0AB0)

Manual

Preface

Documentation guide 1

Product overview 2

Wiring 3

Interrupts, error messages, diagnostics and system alarms 4

Technical specifications 5

Dimension drawing A

09/2016

A5E33589074-AC

Legal information

Warning notice system

This manual contains notices you have to observe in order to ensure your personal safety, as well as to prevent damage to property. The notices referring to your personal safety are highlighted in the manual by a safety alert symbol, notices referring only to property damage have no safety alert symbol. These notices shown below are graded according to the degree of danger.

⚠ DANGER

indicates that death or severe personal injury **will** result if proper precautions are not taken.

⚠ WARNING

indicates that death or severe personal injury **may** result if proper precautions are not taken.

⚠ CAUTION

indicates that minor personal injury can result if proper precautions are not taken.

NOTICE

indicates that property damage can result if proper precautions are not taken.

If more than one degree of danger is present, the warning notice representing the highest degree of danger will be used. A notice warning of injury to persons with a safety alert symbol may also include a warning relating to property damage.

Qualified Personnel

The product/system described in this documentation may be operated only by **personnel qualified** for the specific task in accordance with the relevant documentation, in particular its warning notices and safety instructions. Qualified personnel are those who, based on their training and experience, are capable of identifying risks and avoiding potential hazards when working with these products/systems.

Proper use of Siemens products

Note the following:

⚠ WARNING

Siemens products may only be used for the applications described in the catalog and in the relevant technical documentation. If products and components from other manufacturers are used, these must be recommended or approved by Siemens. Proper transport, storage, installation, assembly, commissioning, operation and maintenance are required to ensure that the products operate safely and without any problems. The permissible ambient conditions must be complied with. The information in the relevant documentation must be observed.

Trademarks

All names identified by ® are registered trademarks of Siemens AG. The remaining trademarks in this publication may be trademarks whose use by third parties for their own purposes could violate the rights of the owner.

Disclaimer of Liability

We have reviewed the contents of this publication to ensure consistency with the hardware and software described. Since variance cannot be precluded entirely, we cannot guarantee full consistency. However, the information in this publication is reviewed regularly and any necessary corrections are included in subsequent editions.

Siemens AG
Division Digital Factory
Postfach 48 48
90026 NÜRNBERG
GERMANY

A5E33589074-AC
℗ 08/2016 Subject to change

Copyright © Siemens AG 2014 - 2016.
All rights reserved

Preface

Purpose of the documentation

This manual supplements the ET 200SP distributed I/O system (http://support.automation.siemens.com/WW/view/en/58649293) system manual as well as the function manuals. This manual contains a description of the module-specific information. The system-related functions are described in the system manual. All system-spanning functions are described in the function manuals.

The information provided in this manual and the system manual allows you to commission the CPU 1510SP-1 PN.

Conventions

STEP 7: In this documentation, "STEP 7" is used as a synonym for all versions of the configuration and programming software "STEP 7 (TIA Portal)".

Please also observe the notes marked as follows:

Note

A note contains important information on the product described in the documentation, on the handling of the product or on the section of the documentation to which particular attention should be paid.

Security information

Siemens provides products and solutions with industrial security functions that support the secure operation of plants, systems, machines and networks.

In order to protect plants, systems, machines and networks against cyber threats, it is necessary to implement – and continuously maintain – a holistic, state-of-the-art industrial security concept. Siemens' products and solutions only form one element of such a concept.

Customer is responsible to prevent unauthorized access to its plants, systems, machines and networks. Systems, machines and components should only be connected to the enterprise network or the internet if and to the extent necessary and with appropriate security measures (e.g. use of firewalls and network segmentation) in place.

Additionally, Siemens' guidance on appropriate security measures should be taken into account. For more information about industrial security, please visit (http://www.siemens.com/industrialsecurity).

Siemens' products and solutions undergo continuous development to make them more secure. Siemens strongly recommends to apply product updates as soon as available and to always use the latest product versions. Use of product versions that are no longer supported, and failure to apply latest updates may increase customer's exposure to cyber threats.

To stay informed about product updates, subscribe to the Siemens Industrial Security RSS Feed under (http://www.siemens.com/industrialsecurity).

Siemens Industry Online Support

You can find current information on the following topics quickly and easily here:

- **Product support**

  All the information and extensive know-how on your product, technical specifications, FAQs, certificates, downloads, and manuals.

- **Application examples**

  Tools and examples to solve your automation tasks – as well as function blocks, performance information and videos.

- **Services**

  Information about Industry Services, Field Services, Technical Support, spare parts and training offers.

- **Forums**

  For answers and solutions concerning automation technology.

- **mySupport**

  Your personal working area in Industry Online Support for messages, support queries, and configurable documents.

This information is provided by the Siemens Industry Online Support in the Internet (http://www.siemens.com/automation/service&support).

Industry Mall

The Industry Mall is the catalog and order system of Siemens AG for automation and drive solutions on the basis of Totally Integrated Automation (TIA) and Totally Integrated Power (TIP).

Catalogs for all the products in automation and drives are available on the Internet (https://mall.industry.siemens.com).

Table of contents

Preface 4

1 Documentation guide 7

2 Product overview 11

2.1 New functions in firmware version V2.0 11

2.2 Operating principle 14

2.3 Properties 15

2.4 Operating and display elements 21

2.4.1 Front view of the module with BusAdapter 21

2.5 Mode switch 22

3 Wiring 23

3.1 Pin assignment 23

4 Interrupts, error messages, diagnostics and system alarms 27

4.1 Status and error display of the CPU 27

5 Technical specifications 30

A Dimension drawing 42

Documentation guide

1

The documentation for the SIMATIC ET 200SP distributed I/O system is arranged into three areas.
This arrangement enables you to access the specific content you require.

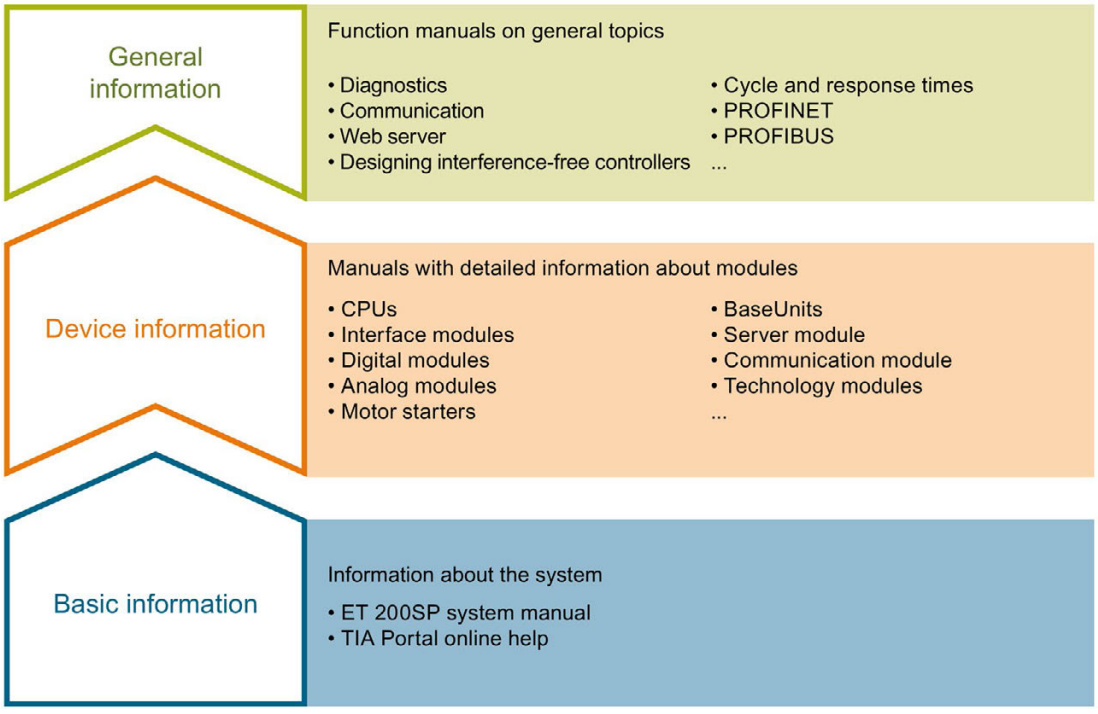

Basic information

The system manual describes in detail the configuration, installation, wiring and commissioning of the SIMATIC ET 200SP. distributed I/O system. The STEP 7 online help supports you in the configuration and programming.

Device information

Product manuals contain a compact description of the module-specific information, such as properties, wiring diagrams, characteristics and technical specifications.

General information

The function manuals contain detailed descriptions on general topics regarding the SIMATIC ET 200SP distributed I/O system, e.g. diagnostics, communication, Web server, motion control and OPC UA.

You can download the documentation free of charge from the Internet (http://w3.siemens.com/mcms/industrial-automation-systems-simatic/en/manual-overview/tech-doc-et200/Pages/Default.aspx).

Changes and supplements to the manuals are documented in a Product Information.

You can download the product information free of charge from the Internet (https://support.industry.siemens.com/cs/us/en/view/73021864).

Manual Collection ET 200SP

The Manual Collection contains the complete documentation on the SIMATIC ET 200SP distributed I/O system gathered together in one file.

You can find the Manual Collection on the Internet (http://support.automation.siemens.com/WW/view/en/84133942).

"mySupport"

With "mySupport", your personal workspace, you make the most of your Industry Online Support.

In "mySupport" you can store filters, favorites and tags, request CAx data and put together your personal library in the Documentation area. Furthermore, your data is automatically filled into support requests and you always have an overview of your current requests.

You need to register once to use the full functionality of "mySupport".

You can find "mySupport" in the Internet (https://support.industry.siemens.com/My/ww/en).

"mySupport" - Documentation

In the Documentation area of "mySupport", you have the possibility to combine complete manuals or parts of them to make your own manual.
You can export the manual in PDF format or in an editable format.

You can find "mySupport" - Documentation in the Internet (http://support.industry.siemens.com/My/ww/en/documentation).

"mySupport" - CAx Data

In the CAx Data area of "mySupport", you can have access the latest product data for your CAx or CAe system.

You configure your own download package with a few clicks.

In doing so you can select:

- Product images, 2D dimension drawings, 3D models, internal circuit diagrams, EPLAN macro files
- Manuals, characteristics, operating manuals, certificates
- Product master data

You can find "mySupport" - CAx Data in the Internet (http://support.industry.siemens.com/my/ww/en/CAxOnline).

Application examples

The application examples support you with various tools and examples for solving your automation tasks. Solutions are shown in interplay with multiple components in the system - separated from the focus in individual products.

You can find the application examples on the Internet (https://support.industry.siemens.com/sc/ww/en/sc/2054).

TIA Selection Tool

With the TIA Selection Tool, you can select, configure and order devices for Totally Integrated Automation (TIA).
This tool is the successor of the SIMATIC Selection Tool and combines the known configurators for automation technology into one tool.
With the TIA Selection Tool, you can generate a complete order list from your product selection or product configuration.

You can find the TIA Selection Tool on the Internet (http://w3.siemens.com/mcms/topics/en/simatic/tia-selection-tool).

SIMATIC Automation Tool

You can use the SIMATIC Automation Tool to run commissioning and maintenance activities simultaneously on various SIMATIC S7 stations as a bulk operation independently of the TIA Portal.

The SIMATIC Automation Tool provides a multitude of functions:

- Scanning of a PROFINET/Ethernet network and identification of all connected CPUs
- Address assignment (IP, subnet, gateway) and station name (PROFINET device) to a CPU
- Transfer of the data and the programming device/PC time converted to UTC time to the module
- Program download to CPU
- Operating mode switchover RUN/STOP
- Localization of the CPU by means of LED flashing
- Reading out CPU error information
- Reading the CPU diagnostic buffer
- Reset to factory settings
- Updating the firmware of the CPU and connected modules

You can find the SIMATIC Automation Tool on the Internet (https://support.industry.siemens.com/cs/ww/en/view/98161300).

PRONETA

With SIEMENS PRONETA (PROFINET network analysis), you analyze the plant network during commissioning. PRONETA features two core functions:

- The topology overview independently scans PROFINET and all connected components.
- The IO check is a fast test of the wiring and the module configuration of a system.

You can find SIEMENS PRONETA on the Internet (https://support.industry.siemens.com/cs/ww/en/view/67460624).

Product overview 2

2.1 New functions in firmware version V2.0

New functions of the CPU in firmware version V2.0

This section lists the new features of the CPU with firmware version V2.0.

You can find additional information in the sections of this manual.

Table 2- 1 New functions of the CPU with firmware version 2.0 compared with firmware version V1.8

New functions	Applications	Customer benefits
OPC UA server	You realize the data communication between different systems, both within the process level and on the control and enterprise levels: • To embedded systems with controllers • To controllers with MES systems and systems of the enterprise level (ERP, asset systems) • To Siemens controllers with controllers from other manufacturers • To intelligent sensors with controllers Supported standard: OPC Data Access, DA.	OPC UA is a unified standard for data communication and is independent of any particular operating system platforms. You have integrated security mechanisms on different automation systems, for example, for data exchange, on the application level, for authentication of the user. OPC UA servers provide a large amount of data: • Values of PLC tags that clients can access • Data types of these PLC tags • Information about the OPC UA server itself and the CPU In this way, clients can gain an overview and can read and write values.
PROFINET IO		
MRPD: Media Redundancy for Planned Duplication for IRT	PROFINET IO IRT enables you to realize applications that place particularly high demands on failure safety and accuracy (isochronous).	By sending the cyclic IO data in both directions in the ring, the communication to the IO devices is maintained even when the ring is interrupted and does not result in device failure even with fast update times. You achieve higher failure safety than with MRP.
PROFINET performance upgrade	You can develop applications with high demands on speed and clock cycles. This is interesting for applications with high demands on performance.	Better utilization of the bandwidth results in short reaction times.
Limitation of the data infeed into the network	You limit the network load for standard Ethernet communication to a maximum value.	You smooth peaks in the data infeed. You share the remaining bandwidth based on requirements.

New functions	Applications	Customer benefits
Web server		
Backing up and restoring via the Web server	You can, for example, backup and restore the configuration of the CPU to the PG/PC on which the Web server is running.	You can make a backup copy of an operational project without STEP 7. In an "emergency", you can simply use an existing configuration without STEP 7, for example, during commissioning or after a program download.
Web server provides up to three project languages for comments and alarm texts	When you export your plants worldwide, for example, comments or alarm texts can be stored on the card in up to 3 languages. For example, German - author's language, English - internationally usable, Portuguese - end user's language.	You provide customers with better service.
Trace via Web server	When you enable trace functions via the Web server, you have better service support. You can send your trace recordings via Web service, for example, to your service partner.	You get plant/project information for diagnostics and maintenance requirements without STEP 7. You can provide trace recordings for each Web server. You save time in troubleshooting.
Monitoring of configured technology objects via a Web server	You can monitor statuses, errors, technology alarms and the current values of technology objects (TOs) with the Web server.	
Motion control		
Greater number of axes for Motion Control applications and new technology objects: Output cam, cam track and measuring input	Speed specification, e.g. for: • Pumps, fans, mixers • Conveyor belts • Auxiliary drives Positioning tasks, e.g.: • Lifting and vertical conveyors • Feeding and gate control • Palletizing equipment Output cams and cam tracks make other applications possible, e.g.: • Applying glue tracks • Triggering switching operations with precise positioning • Very precise processing of products on a conveyor belt Measuring inputs are used, for example: • For measuring products • For detecting the position of the product on a conveyor belt	You can implement additional Motion Control applications with a CPU. The scalable configuration limits allow you to handle all types of application. High machine speeds result in greater productivity with better accuracy.

New functions	Applications	Customer benefits
ET 200SP		
Support for ET 200AL in a central configuration	You can set up a simple connection of IP 65/67 I/O to the CPU. You can connect up to 16 ET 200AL I/O modules via a BA send module on the central bus of the ET 200SP CPU. The distance between two ET 200AL modules can be up to 15 m. You can realize the use of ET 200AL in assembly and handling engineering directly at moving parts, for example in linear axes or drag chains.	You do not have to individually run sensors or actuators at the central control cabinet to the different sections of a machine or assembly line. You save time and costs: • Through lightweight construction • Reduction of wear and exposure to vibration • Increased productivity
Increasing the address space in the station	For example, you can use up to 49 ET 200SP energy meter modules behind an ET 200SP CPU.	A larger address space of 2560 bytes (2048 bytes for ET 200SP module + 512 bytes for ET 200AL modules) is available in the station. The address space has been increased to 288 bytes per module.
Support for communications processors		
CP 1542SP-1	Flexible expansion of the ET 200SP system with an additional Ethernet interface; network separation.	
CP 1542SP-1 IRC	Seamless data recording with time stamping, support for standardized telecontrol protocols DNP3 and IEC.	
CP 1543SP-1 ISEC	With the integrated security functions firewall (Stateful Inspection) and VPN protocol (IPSec), the communications processor protects ET200SP stations and subordinate networks against unauthorized access, and employs encryption to protect data transmission against manipulation and espionage.	

2.2 Operating principle

The CPU contains the operating system and executes the user program. The user program is located on the SIMATIC memory card and is processed in the work memory of the CPU.

The PROFINET interfaces on the CPU allow simultaneous communication with PROFINET devices, PROFINET controllers, HMI devices, programming devices, other controllers and other systems. The CPU 1510SP-1 PN supports operation as an IO controller, I-device or standalone CPU.

With its optional PROFIBUS interface, CM DP, CPU 1510SP-1 PN supports the configuration of PROFIBUS networks in addition to PROFINET IO. When you use the interface as a PROFIBUS DP interface, you can configure the CPU 1510SP-1 PN as a DP master or as an intelligent DP slave (I-slave).

IO controller

CPU 1510SP-1 PN sends and receives data from the connected IO devices within a PROFINET IO system. You can operate the CPU with a maximum of 64 connected IO devices, a maximum of 64 of which use IRT (Isochronous Real Time).

I-device

The "I-device" (intelligent IO device) functionality allows you to exchange data with an IOcontroller. CPU 1510SP-1 PN thus fulfills the role of an intelligent distributed pre-processing unit for sub-processes. The I-device is connected as an IO device to a higher-level IO controller for this purpose.

Advantages:

- Interference-resistant configuration due to short signal and encoder wiring
- Reduced wiring requirements for transmission of the data via PROFINET

Standalone CPU

You can also use the CPU 1510SP-1 PN in the ET 200SP distributed I/O system as a "central system" without a higher-level controller.

DP master

To use the ET 200SP as a DP master, you need the CPU and the optional communication module, CM DP. When used as a DP master, ET 200SP exchanges data with the connected DP slaves via PROFIBUS DP.

Intelligent DP slave (I-slave)

To use the ET 200SP as an intelligent DP slave (I-slave), you need the CPU and the optional communication module, CM DP. As an I-slave, the ET 200SP CPU is connected via PROFIBUS DP to a higher-level DP master and exchanges data with it.

2.3 Properties

Article number

6ES7510-1DJ01-0AB0

View of the module

The following figure shows the CPU 1510SP-1 PN.

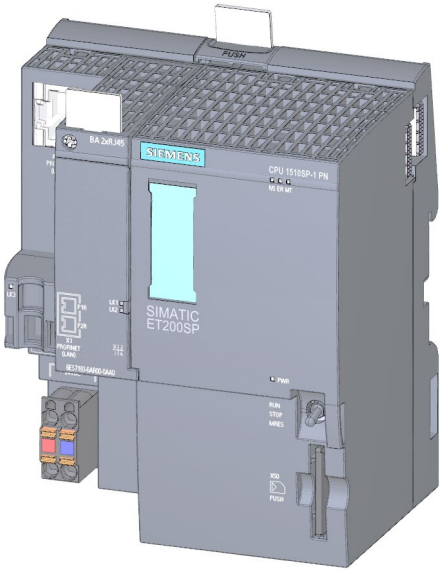

Figure 2-1 CPU 1510SP-1 PN

Properties

The CPU 1510SP-1 PN has the following technical properties:

- Communication:
  - Interfaces

    The CPU 1510SP-1 PN has a PROFINET interface (X1 P3) with an integrated 3-port switch. Port 1 and port 2 are located on the optionally pluggable BusAdapter. Port 3 is integrated in the housing of the CPU. The CPU supports the BusAdapters BA 2xRJ45 and BA 2xFC. You connect the PROFINET IO to the CPU via the BusAdapter.

    In addition to PROFINET basic functionality, the interface also supports PROFINET IO RT (real-time) and IRT (isochronous real-time). PROFINET IO communication or real-time settings can be configured. The basic functionality of PROFINET supports HMI communication, communication with the configuration system, communication with a higher-level network (backbone, router, Internet) and communication with another machine or automation cell.

    Port 1 and port 2 can also be used as ring ports for the configuration of redundant ring structures in Ethernet.

    Note

    The CPU is delivered without a BusAdapter. You can find the article numbers of the supported BusAdapters in the "Accessories/spare parts" section of the ET 200SP distributed automation system (http://support.automation.siemens.com/WW/view/en/58649293) system manual.

    The CM DP is optionally available with a PROFIBUS interface (X2). You can find additional information about this expansion module in the manual Communication module CM DP (http://support.automation.siemens.com/WW/view/en/90156526).

    You can find information about connecting the PROFINET IO BusAdapter to the CPU as well as connecting the optional PROFIBUS interface to the interface module in the system manual ET 200SP distributed I/O system (http://support.automation.siemens.com/WW/view/en/58649293).
  - OPC UA
    With OPC UA, data is exchanged via an open and vendor-neutral communication protocol. The CPU, as OPC UA server, can communicate with OPC UA clients such as HMI panels, SCADA systems, etc.

- Integrated Web server:

  A Web server is integrated in the CPU. You can read out the following information with the Web server:

  - Start page with general CPU information
  - Identification information
  - Contents of the diagnostics buffer
  - Query of module states
  - Firmware update
  - Alarms (without acknowledgment option)
  - Information about communication
  - PROFINET topology
  - Tag status, writing tags
  - Watch tables
  - Memory usage
  - User pages
  - Data logs (if used)
  - Online backup and restoration of the configuration.
  - Diagnostic information for the motion control technology objects
  - Display of trace recordings stored on the SIMATIC memory card
  - Readout service data
  - Basic Web pages
  - Display of the Web server in 3 project languages, for example, comments and message texts
  - Recipes
  - User-defined Web pages

- Integrated technology:
  - Motion Control

    The Motion Control functionality uses technology objects to support speed-controlled axes, positioning axes, synchronous axes, external encoders, cams, cam tracks and measuring inputs, as well as PLCopen blocks for programming the motion control functionality.
    You can find a detailed description of the use of Motion Control and its configuration in the S7-1500 Motion Control (http://support.automation.siemens.com/WW/view/en/109739589) function manual.
    You can also use the TIA Selection Tool (http://w3.siemens.com/mcms/topics/en/simatic/tia-selection-tool) or the SIZER (http://w3.siemens.com/mcms/mc-solutions/en/engineering-software/drive-design-tool-sizer/Pages/drive-design-tool-sizer.aspx) to create or configure axes.
  - Integrated closed-loop control functionality

    - PID Compact (continuous PID controller)

    - PID 3Step (step controller for integrating actuators)

    - PID Temp (temperature controller for heating and cooling with two separate actuators)
- Trace functionality:
  - Trace functionality supports you in troubleshooting and optimizing the user program, especially for motion control or closed-loop control applications. Trace only supports saves measurements on a SIMATIC memory card. You will find additional information on "Trace" in the Using the trace and logic analyzer function (http://support.automation.siemens.com/WW/view/en/64897128) function manual.
- Integrated system diagnostics:
  - The alarms for the system diagnostics are automatically created by the system and displayed on a PG/PC, HMI device or the Web server. System diagnostics information is also available when the CPU is in STOP mode.

- Integrated security:
  - Know-how protection

    The assignment of passwords protects user blocks against unauthorized access and modifications.
  - Copy protection

    Copy protection links user blocks to the serial number of the SIMATIC memory card or to the serial number of the CPU. User programs cannot run without the corresponding SIMATIC memory card or CPU.
  - Access protection

    Extended access protection provides high-quality protection against unauthorized configuration changes. You can use authorization levels to assign separate rights to different user groups.
  - Integrity protection

    The system protects the data transferred to the CPU against manipulation. The CPU detects erroneous or manipulated engineering data.

    You can find additional information on the topic of "Protection" in the system manual ET 200SP distributed I/O system (http://support.automation.siemens.com/WW/view/en/58649293).
- Support for ET 200AL
  - Simple connection of IP 65/67 I/O modules to the CPU.
- Communication CPs
  - CP 1542SP-1: Flexible expansion of the ET 200SP system with an additional Ethernet interface; network separation.
  - CP 1542SP-1 IRC: Seamless data recording with time stamping, support for standardized telecontrol protocols DNP3 and IEC.
  - CP 1543SP-1 ISEC: With the integrated security functions firewall (Stateful Inspection) and VPN protocol (IPSec), the communications processor protects ET200SP stations and subordinate networks against unauthorized access, and employs encryption to protect data transmission against manipulation and espionage.
- Address space
  - A larger address space of 2560 bytes (2048 bytes for ET 200SP module + 512 bytes for ET 200AL modules) is available within the station.

- CPU 1510SP-1 PN supports the following additional functions:
  - PROFIenergy
    You can find information on the topic of "PROFIenergy" in the PROFINET function manual (https://support.industry.siemens.com/cs/ww/en/view/49948856) and in the PROFINET specification on the Internet (http://www.profibus.com).
  - Shared device
    You can find information on the topic of "Shared device" in the PROFINET function manual (https://support.industry.siemens.com/cs/ww/en/view/49948856).
  - Configuration control
    You can find information on the topic of "Configuration control" in the system manual ET 200SP distributed I/O system (http://support.automation.siemens.com/WW/view/en/58649293).
  - Isochronous mode
    You can find information about the "Isochronous mode" topic in the PROFINET (https://support.industry.siemens.com/cs/ww/en/view/49948856) function manual.

2.4 Operating and display elements

2.4.1 Front view of the module with BusAdapter

The figure on the left shows the CPU 1510SP-1 PN including a plugged BA 2xRJ45 BusAdapter. The figure on the right shows a separate view of the BA 2xRJ45 BusAdapter.

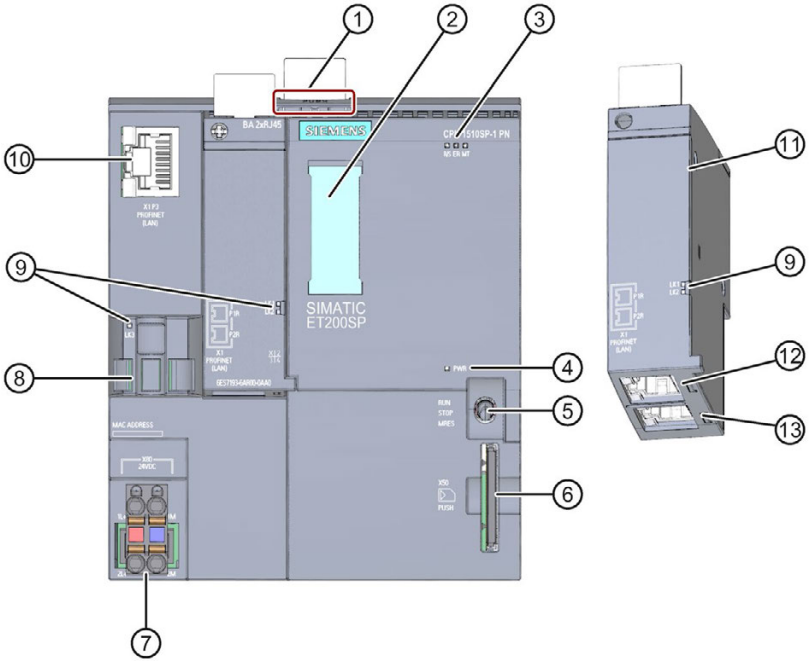

① Mounting rail release
② Labeling strips
③ LEDs for status and error displays
④ LED for display of the supply voltage
⑤ Mode switch
⑥ Slot for the SIMATIC memory card
⑦ Connection for supply voltage (included in product package)
⑧ Cable support and attachment for port P3 of the PROFINET interface
⑨ LEDs for status displays of the PROFINET interface: LK1 and LK2 on BusAdapter, LK3 on CPU
⑩ Port P3 of the PROFINET interface: RJ45 socket
⑪ Separate view of the BusAdapter
⑫ Port P1 R of the PROFINET interface: RJ45 socket on BusAdapter BA 2×RJ45
R: Ring port for configuring a ring topology with media redundancy
⑬ Port P2 R of the PROFINET interface: RJ45 socket on BusAdapter BA 2×RJ45
R: Ring port for configuring a ring topology with media redundancy

Figure 2-2 Front view of the CPU 1510SP-1 PN with BusAdapter

2.5 Mode switch

Use the mode switch to set the CPU operating mode.

The following table shows the position of the switch and the corresponding meaning.

Table 2- 2 Mode switch settings

Position	Meaning	Explanation
RUN	RUN mode	The CPU is executing the user program.
STOP	STOP mode	The user program is not being executed.
MRES	Memory reset	Position for CPU memory reset.

Wiring 3

3.1 Pin assignment

This section provides information on the pin assignment of the individual interfaces and the block diagram of the CPU 1510SP-1 PN.

24 V DC supply voltage (X80)

The connector for the supply voltage is plugged in when the CPU ships from the factory.

The figure below shows the pin assignment for 24 V DC supply voltage.

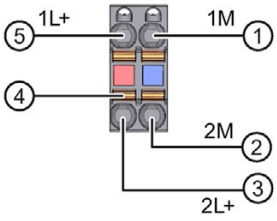

① Ground of the supply voltage
② Ground of the supply voltage for loop-through (maximum of 10 A permitted)
③ +24 V DC of the supply voltage for loop-through (maximum of 10 A permitted)
④ Spring NC contacts
⑤ + 24 V DC of the supply voltage

Internally jumpered:
① and ②
③ and ⑤

Figure 3-1 Supply voltage connection

PROFINET IO interface on the CPU (X1 P3)

The assignment corresponds to the Ethernet standard for an RJ45 connector.

- When autonegotiation is deactivated, the RJ45 socket is allocated as a switch (MDI-X).
- If autonegotiation is activated, then autocrossing is active and the RJ45 socket has either a device assignment (MDI) or switch assignment (MDI-X).

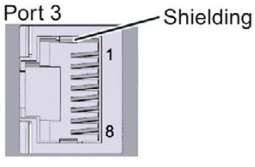

PROFINET IO interface on the BusAdapter BA 2xRJ45 (X1 P1 R and X1 P2 R)

The assignment at the BA 2xRJ45 BusAdapter corresponds to the Ethernet standard for an RJ45 connector.

Table 3- 1 Pin assignment PROFINET IO interface on the BusAdapter BA 2xRJ45

View	Designation
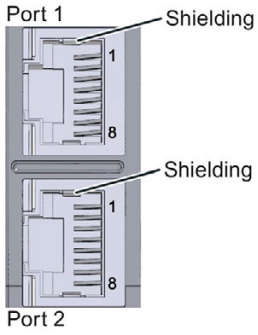	• When autonegotiation is deactivated, the RJ45 socket is allocated as a switch (MDI-X). • If autonegotiation is activated, then autocrossing is active and the RJ45 socket has either a device assignment (MDI) or switch assignment (MDI-X).

PROFINET IO interface on the BusAdapter BA 2xFC (X1 P1 R and X1 P2 R)

The following table shows the pin assignment for the PROFINET IO interface on the BusAdapter BA 2xFC.

Table 3- 2 Pin assignment PROFINET IO interface on the BusAdapter BA 2xFC

View	Signal name		Designation
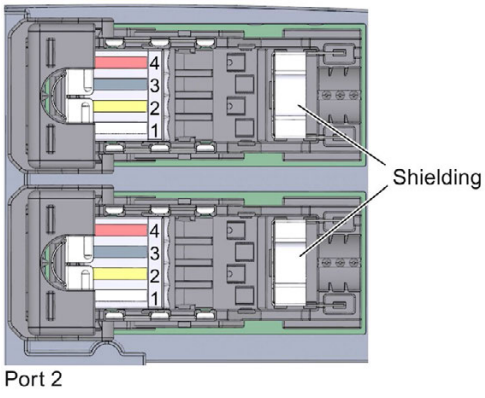	1	TD	Transmit data +
	2	TD_N	Transmit data -
	3	RD	Receive data +
	4	RD_N	Receive data -

Reference

You can find additional information on the topics of "Connecting the CPU" and "Accessories/spare parts" in the system manual ET 200SP distributed I/O system (http://support.automation.siemens.com/WW/view/en/58649293).

Assignment of the MAC addresses

The MAC address is a globally unique device identifier that is assigned to each PROFINET device in the factory. Its 6 bytes are divided into 3 bytes for the manufacturer ID and 3 bytes for the device ID (serial number). The front of the CPU 1510SP-1 PN is lasered with the MAC address of the PROFINET interface.

The PROFINET interface (X1) of the CPU 1510SP-1 PN has three ports. Port 3 is located on the CPU. Ports 1 and 2 are located on the optional BusAdapter. In addition to the PROFINET interface, each PROFINET port also has a separate MAC address. There is therefore a total of four MAC addresses for the CPU 1510SP-1 PN.

The MAC addresses of the PROFINET ports are needed for the LLDP protocol, for example for the neighborhood discovery function.

The table below shows how the MAC addresses are assigned.

Table 3- 3 Assignment of the MAC addresses

	Assignment
MAC address 1	PROFINET interface X1 • Visible in STEP 7 for accessible devices • Lasered on the front of the CPU (start of the number range)
MAC address 2	Port X1 P1 R (required for LLDP, for example)
MAC address 3	Port X1 P2 R (required for LLDP, for example)
MAC address 4	Port X1 P3 (required for LLDP, for example)

Block diagram

The following figure shows the block diagram of the CPU 1510SP-1 PN.

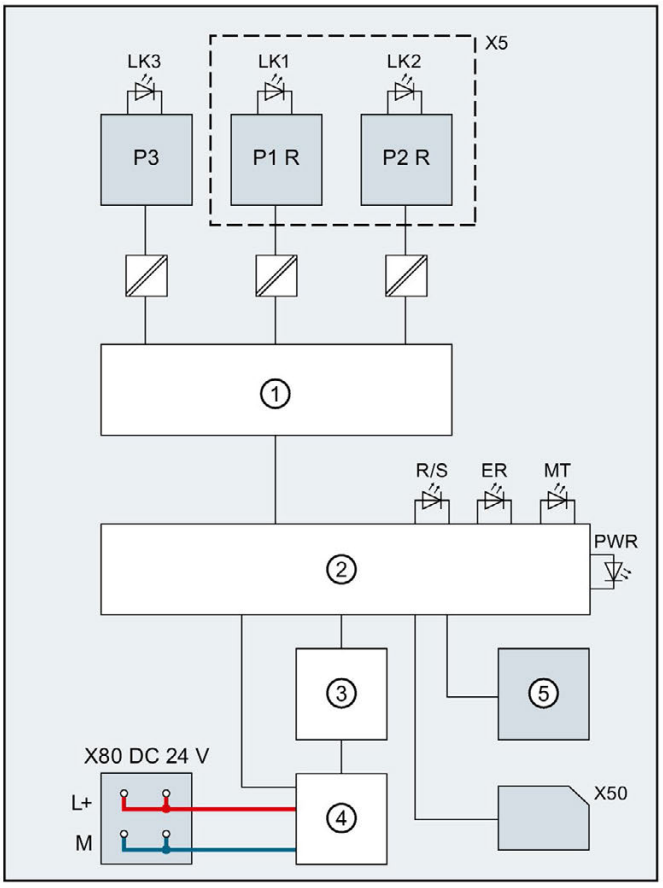

①	PROFINET switch	P1 R	PROFINET interface X1 Port 1
②	Electronics	P2 R	PROFINET interface X1 Port 2
③	Backplane bus interface	P3	PROFINET interface X1 Port 3
④	Internal supply voltage	L+	24 V DC supply voltage
⑤	RUN/STOP/MRES mode selector	M	Ground
X5	BusAdapter	LK1, 2, 3	LED Link TX/RX
X50	SIMATIC memory card	R/S	RUN/STOP LED (yellow/green)
X80 24 V DC	Infeed of supply voltage	ER	ERROR LED (red)
		MT	MAINT LED (yellow)
		PWR	POWER LED (green)

Figure 3-2 Block diagram of the CPU 1510SP-1 PN

Interrupts, error messages, diagnostics and system alarms

4

The status and error displays of the CPU 1510SP-1 PN are described below.

You will find additional information on "Interrupts" in the STEP 7 online help.

You can find additional information on the topics of "Diagnostics" and "System alarms" in the Diagnostics (http://support.automation.siemens.com/WW/view/en/59192926) function manual.

4.1 Status and error display of the CPU

LED displays

The figure below shows the LED displays of the CPU 1510SP-1 PN and the BA 2xRJ45 BusAdapter.

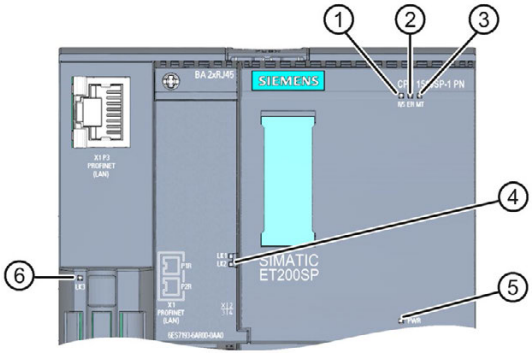

① RUN/STOP LED (yellow/green LED)
② ERROR LED (red LED)
③ MAINT LED (yellow LED)
④ LINK RX/TX LED for ports X1 P1 and X1 P2 (green LEDs on BusAdapter)
⑤ POWER LED (green LED)
⑥ LINK RX/TX LED for port X1 P3 (green LED on CPU)

Figure 4-1 LED displays on the CPU and BusAdapter

Meaning of the POWER, RUN/STOP, ERROR and MAINT LEDs

CPU 1510SP-1 PN features an LED for monitoring the supply voltage of the electronics (PWR) and three LEDs for displaying the current operating and diagnostics status. The following table shows the meaning of the various combinations of colors for the POWER, RUN/STOP, ERROR and MAINT LEDs.

Table 4- 1 Meaning of the LEDs

POWER LED	RUN/STOP LED	ERROR LED	MAINT LED	Meaning
LED off	LED off	LED off	LED off	Missing or insufficient power supply on the CPU.
LED lit green	LED off	LED flashes red	LED off	An error has occurred.
LED lit green	LED lit green	LED off	LED off	CPU is in RUN mode.
LED lit green	LED lit green	LED flashes red	LED off	A diagnostics event is pending.
LED lit green	LED lit green	LED off	LED lit yellow	Maintenance demanded for the plant. The affected hardware must be checked/replaced within a short period of time.
				Active Force job
				PROFIenergy pause
LED lit green	LED lit green	LED off	LED flashes yel-low	Maintenance required for the plant. The affected hardware must be checked/replaced within a foreseeable period of time.
				Bad configuration
LED lit green	LED lit yellow	LED off	LED flashes yel-low	Firmware update successfully completed.
LED lit green	LED lit yellow	LED off	LED off	CPU is in STOP mode.
LED lit green	LED lit yellow	LED flashes red	LED flashes yel-low	The program on the SIMATIC memory card is causing an error.
				CPU defective
LED lit green	LED flashes yel-low	LED off	LED off	CPU is performing internal activities during STOP, e.g. startup after STOP.
				Download of the user program from the SIMATIC memory card
LED lit green	LED flashes yellow/green	LED off	LED off	Startup (transition from RUN → STOP)
LED lit green	LED flashes yellow/green	LED flashes red	LED flashes yel-low	Startup (CPU booting)
				Test of LEDs during startup, inserting a module.
				LED flashing test

Meaning of the LINK LED

Each port has a LINK LED (LK1, LK2, LK3). The table below shows the various "LED scenarios" of the ports of the CPU 1510SP-1 PN.

Table 4- 2 Meaning of the LEDs

LINK LED	Meaning
LED off	There is no Ethernet connection between the PROFINET interface of the PROFINET device and the communication partner. No data is currently being sent/received via the PROFINET interface. There is no LINK connection.
LED flashes green	The "LED flashing test" is being performed.
LED lit green	There is an Ethernet connection between the PROFINET interface of your PROFINET device and a communication partner.

Technical specifications

5

	6ES7510-1DJ01-0AB0
General information	
Product type designation	CPU 1510SP-1 PN
Hardware function version	FS03
Firmware version	V2.0
Engineering with	
STEP 7 TIA Portal can be configured/integrated as of version	V14
Configuration control	
Via data record	Yes
Operator controls	
Mode selector	1
Supply voltage	
Type of supply voltage	24 V DC
Low limit of permitted range (DC)	19.2 V
High limit of permitted range (DC)	28.8 V
Reverse polarity protection	Yes
Power and voltage failure buffering	
Power/voltage failure buffer time	5 ms
Input current	
Current consumption (rated value)	0.6 A
Inrush current, max.	4.7 A; rated value
I^2t	0.14 A^2s
Power	
Incoming power to the backplane bus	8.75 W
Power loss	
Power loss, typ.	5.6 W
Memory	
Number of slots for SIMATIC memory card	1
SIMATIC memory card required	Yes
Work memory	
Integrated (for program)	100 KB
Integrated (for data)	750 KB
Load memory	
Plug-in (SIMATIC memory card), max.	32 GB
Buffering	
Maintenance-free	Yes

	6ES7510-1DJ01-0AB0
CPU processing times	
For bit operations, typ.	72 ns
For word operations, typ.	86 ns
For fixed-point arithmetic, typ.	115 ns
For floating-point arithmetic, typ.	461 ns
CPU blocks	
Number of elements (total)	2000; blocks (OB/FB/FC/DB) and UDTs
DB	
Number range	1 ... 60 999; divided into: Number range that can be used by user: 1 ... 59 999 and number range for DBs generated by SFC 86: 60 000 ... 60 999
Size, max.	750 KB; for absolutely addressed DBs, the max. size is 64 KB
FB	
Number range	0 ... 65 535
Size, max.	100 KB
FC	
Number range	0 ... 65 535
Size, max.	100 KB
OB	
Size, max.	100 KB
Number of free-cycle OBs	100
Number of time-of-day interrupt OBs	20
Number of time-delay interrupt OBs	20
Number of cyclic interrupt OBs	20
Number of hardware interrupt OBs	50
Number of DPV1 interrupt OBs	3
Number of isochronous mode OBs	1
Number of technology synchronous interrupt OBs	2
Number of startup OBs	100
Number of asynchronous error OBs	4
Number of synchronous error OBs	2
Number of diagnostic interrupt OBs	1
Nesting depth	
Per priority class	24
Counters, timers and their retentivity	
S7 counters	
Quantity	2048
Retentivity	
• can be set	Yes

	6ES7510-1DJ01-0AB0
IEC counters	
Quantity	Any (only limited by the work memory)
Retentivity	
• can be set	Yes
S7 timers	
Quantity	2048
Retentivity	
• can be set	Yes
IEC timers	
Quantity	Any (only limited by the work memory)
Retentivity	
• can be set	Yes
Data areas and their retentivity	
Total retentive data area (including timers, counters, bit memories), max.	128 KB; for bit memories, timers, counters, DBs and technological data (axes), usable retentive memory: 88 KB
Bit memory	
Number, max.	16 KB
Number of clock memories	8; there are 8 clock memory bits, grouped in one clock memory byte
Data blocks	
Retentivity can be set	Yes
Retentivity preset	No
Local data	
Per priority class, max.	64 KB; max. 16 KB per block
Address area	
Number of IO modules	1024; max. number of modules/submodules
I/O address area	
Inputs	32 KB; all inputs are in the process image
Outputs	32 KB; all outputs are in the process image
Of which per integrated IO subsystem	
• Inputs (volume)	8 KB
• Outputs (volume)	8 KB
Of which per CM/CP	
• Inputs (volume)	8 KB
• Outputs (volume)	8 KB
Process image partitions	
Number of process image partitions, max.	32
Address space per module	
Address space per module, max.	288 bytes; for both input and output data

	6ES7510-1DJ01-0AB0
Address space per station	
Address space per station, max.	2560 bytes; for central inputs and outputs; depending on configuration; 2048 bytes for ET 200SP modules + 512 bytes for ET 200AL modules
Hardware configuration	
Number of distributed IO systems	32; a distributed IO system is understood to mean the integration of distributed I/O via PROFINET or PROFIBUS communication modules as well as the connection of I/O via AS-i master modules or links (e.g. IE/PB link)
Number of DP masters	
Via CM	1
Number of IO controllers	
Integrated	1
Via CM	0
Rack	
Modules per rack, max.	80; CPU + 64 modules + server module (configuration width max. 1 m) + 16 ET 200AL modules
Number of rows, max.	1
PtP CM	
Number of PtP CMs	The number of PtP CMs that can be connected is only limited by the available slots
Time	
Clock	
Type	Hardware clock
Backup duration	6 wk; at 40 °C ambient temperature, typ.
Deviation per day, max.	10 s; typ.: 2 s
Operating hours counter	
Quantity	16
Time-of-day synchronization	
Supported	Yes
On DP, master	Yes; via CM DP module
On DP, slave	Yes; via CM DP module
In AS, master	Yes
In AS, slave	Yes
On Ethernet via NTP	Yes
Interfaces	
Number of PROFINET interfaces	1
Number of PROFIBUS interfaces	1; via CM DP module
With optical interface	No

	6ES7510-1DJ01-0AB0
1st interface	
Interface hardware	
Number of ports	3; 1st integrated + 2nd via BusAdapter
Integrated switch	Yes
RJ45 (Ethernet)	Yes; X1 P3; opt. X1 P1 and X1 P2 via BusAdapter BA 2xRJ45
BusAdapter (PROFINET)	Yes; usable BusAdapters: BA 2x RJ45, BA 2x FC
Protocols	
PROFINET IO controller	Yes
PROFINET IO device	Yes
SIMATIC communication	Yes
Open IE communication	Yes
Web server	Yes
Media redundancy	Yes
PROFINET IO controller	
Services	
• PG/OP communication	Yes
• S7 routing	Yes
• Isochronous mode	Yes
• Open IE communication	Yes
• IRT	Yes
• MRP	Yes; as MRP redundancy manager and/or MRP client; max. number of devices in the ring: 50
• MRPD	Yes; requirement: IRT
• PROFIenergy	Yes
• Prioritized startup	Yes; max. 32 PROFINET devices
• Number of connectable IO devices, max.	64; a total of up to 256 distributed I/O devices can be connected via AS-i, PROFIBUS or PROFINET
• of these, IO devices with IRT, max.	64
• Number of connectable IO devices for RT, max.	64
• of these, in a line topology, max.	64
• Number of IO devices that can be activated/deactivated simultaneously, max.	8; in total over all interfaces
• Number of IO devices per tool, max.	8
• Update times	The minimum value of the update time also depends on the communication allocation setting for PROFINET IO, the number of IO devices and the amount of configured user data

	6ES7510-1DJ01-0AB0
Update time with IRT	
• With send clock of 250 µs	250 µs to 4 ms; note: with IRT with isochronous mode, the minimum update time of 625 µs of the isochronous OB is crucial
• With send clock of 500 µs	500 µs to 8 ms; note: with IRT with isochronous mode, the minimum update time of 625 µs of the isochronous OB is crucial
• With send clock of 1 ms	1 ms to 16 ms
• with send clock of 2 ms	2 ms to 32 ms
• with send clock of 4 ms	4 ms to 64 ms
• with IRT and "odd" send clock parameter assignment	Update time = set "odd" send clock (any multiple of 125 µs: 375 µs, 625 µs to 3 875 µs)
Update time with RT	
• With send clock of 250 µs	250 µs to 128 ms
• With send clock of 500 µs	500 µs to 256 ms
• With send clock of 1 ms	1 ms to 512 ms
• with send clock of 2 ms	2 ms to 512 ms
• with send clock of 4 ms	4 ms to 512 ms
PROFINET IO device	
Services	
• PG/OP communication	Yes
• S7 routing	Yes
• Isochronous mode	No
• Open IE communication	Yes
• IRT	Yes
• MRP	Yes
• MRPD	Yes; requirement: IRT
• PROFIenergy	Yes
• Shared device	Yes
• Number of IO controllers with shared device, max.	4
2nd interface	
Interface hardware	
Number of ports	1
RS 485	Yes; via CM DP module
Protocols	
PROFIBUS DP master	Yes
PROFIBUS DP slave	Yes
SIMATIC communication	Yes

	6ES7510-1DJ01-0AB0
Interface hardware	
RJ45 (Ethernet)	
100 Mbps	Yes
Autonegotiation	Yes
Autocrossing	Yes
Industrial Ethernet status LED	Yes
RS 485	
Transmission rate, max.	12 Mbps
Protocols	
Number of connections	
Number of connections, max.	96
Number of connections reserved for ES/HMI/Web	10
Number of connections via integrated interfaces	64
Number of connections per CP/CM	32
Number of S7 routing connections	16
SIMATIC communication	
S7 communication, as server	Yes
S7 communication, as client	Yes
User data per job, max.	See online help (S7 communication, user data size)
Open IE communication	
TCP/IP	Yes
• Data length, max.	64 KB
• Multiple passive connections per port, supported	Yes
ISO-on-TCP (RFC1006)	Yes
• Data length, max.	64 KB
UDP	Yes
• Data length, max.	1472 bytes
DHCP	No
SNMP	Yes
DCP	Yes
LLDP	Yes
Web server	
HTTP	Yes; standard and user-defined pages
HTTPS	Yes; standard and user-defined pages

	6ES7510-1DJ01-0AB0
PROFIBUS DP master	
Number of connections, max.	48
Services	
• PG/OP communication	Yes
• S7 routing	Yes
• Data record routing	Yes
• Isochronous mode	No
• Constant bus cycle time	No
• Number of DP slaves	125; a total of up to 256 distributed I/O devices can be connected via AS-i, PROFIBUS or PROFINET
• Activation/deactivation of DP slaves	Yes
OPC UA	
OPC UA server	Yes; Data Access (Read, Write, Subscribe), Runtime license required
• Application authentication	Yes
• Security Policies	Available Security Policies: None, Basic128Rsa15, Basic256Rsa15, Basic256Sha256
• User authentication	"Anonymous" or with user name and password
Additional protocols	
MODBUS	Yes; MODBUS TCP
Media redundancy	
Switchover time in the case of cable break, typ.	200 ms; with MRP; bumpless with MRPD
Number of devices in the ring, max.	50
Isochronous mode	
Isochronous mode (application synchronized up to terminal)	Yes; only with PROFINET; with a minimum OB 6x cycle of 625 µs
S7 signaling functions	
Number of stations that can be logged in for signaling functions, max.	32
Block-related alarms	Yes
Number of configurable interrupts, max.	5000
Number of simultaneously active interrupts in interrupt pool	
• Number of reserved user interrupts	300
• Number of reserved interrupts for system diagnostics	100
• Number of reserved interrupts for motion control technology objects	80

	6ES7510-1DJ01-0AB0
Test/commissioning functions	
Shared commissioning (Team Engineering)	Yes; parallel online access possible for up to 3 engineering systems
Status block	Yes; up to 8 simultaneously (in total over all ES clients)
Single-step	No
Status/modify	
Status/modify tag	Yes
Tags	Inputs/outputs, bit memory, DB, peripheral inputs/outputs, timers, counters
Number of tags, max.	
• Of which are status tags, max.	200; per job
• Of which are modify tags, max.	200; per job
Forcing	
Forcing	Yes
Forcing, tags	Peripheral inputs/outputs
Number of tags, max.	200
Diagnostics buffer	
Available	Yes
Number of entries, max.	1000
• Of which are power failure-proof	500
Traces	
Number of configurable traces	4; up to 512 KB data possible per trace
Interrupts/diagnostics/status information	
Diagnostics display LED	
RUN/STOP LED	Yes
ERROR LED	Yes
MAINT LED	Yes
Monitoring of the supply voltage (PWR LED)	Yes
Connection display LINK TX/RX	Yes
Supported technology objects	
Motion control	Yes; note: the number of axes affects the cycle time of the PLC program; selection guide via the TIA Selection Tool or SIZER
• Number of available motion control resources for technology objects (except cams)	800
• Required Motion Control resources	
– per speed-controlled axis	40
– per positioning axis	80
– per synchronous axis	160
– per external encoder	80
– per output cam	20
– per cam track	160
– per measuring input	40

	6ES7510-1DJ01-0AB0
Controller	
• PID_Compact	Yes; universal PID controller with integrated optimization
• PID_3Step	Yes; PID controller with integrated optimization for valves
• PID temp	Yes; PID controller with integrated optimization for temperature
Counting and measuring	
• High-speed counter	Yes
Standards, approvals, certificates	
Suitable for safety functions	No
Highest safety class achievable in safety mode	
Performance level according to EN ISO 13849-1:2008	None
SIL according to IEC 61508	No
Ambient conditions	
Ambient temperature during operation	
Horizontal mounting position, min.	0 °C
Horizontal mounting position, max.	60 °C
Vertical mounting position, min.	0 °C
Vertical mounting position, max.	50 °C
Ambient temperature during storage/transport	
Min.	-40 °C
Max.	70 °C
Configuring	
Programming	
Programming language	
• LAD	Yes
• FBD	Yes
• STL	Yes
• SCL	Yes
• GRAPH	Yes
Know-how protection	
User program protection	Yes
Copy protection	Yes
Block protection	Yes
Access protection	
Protection level: Write protection	Yes
Protection level: Read/write protection	Yes
Protection level: Complete protection	Yes

	6ES7510-1DJ01-0AB0
Cycle time monitoring	
Low limit	Configurable minimum cycle time
High limit	Configurable maximum cycle time
Dimensions	
Width	100 mm
Height	117 mm
Depth	75 mm
Weights	
Weight, approx.	310 g

Technical specifications of the BusAdapter BA 2×RJ45

Table 5- 1 Technical specifications of the BusAdapter BA 2×RJ45

	6ES7193-6AR00-0AA0
Interfaces	
PROFINET IO	
Number of PROFINET interfaces	1
RJ45	Yes; 2 x
Cable length	
• Copper cables	100 m
Dimensions	
Width	20 mm
Height	69.5 mm
Depth	59 mm
Weights	
Weight, approx.	46 g

Technical specifications of the BusAdapter BA 2×FC

Table 5- 2 Technical specifications of the BusAdapter BA 2×FC

	6ES7193-6AF00-0AA0
Interfaces	
PROFINET IO	
Number of PROFINET interfaces	1
FC (FastConnect)	Yes; 2 x
Cable length	
• Copper cables	100 m
Dimensions	
Width	20 mm
Height	69.5 mm
Depth	59 mm
Weights	
Weight, approx.	53 g

General technical specifications

You can find information on the general technical specifications, such as standards and approvals, electromagnetic compatibility, protection class, etc., in the system manual ET 200SP distributed I/O system (http://support.automation.siemens.com/WW/view/en/58649293).

Dimension drawing

A

This section contains a dimension drawing of the module mounted on a mounting rail. Always observe the specified dimensions for installation in cabinets, control rooms, etc.

Dimension drawing of the CPU 1510SP-1 PN

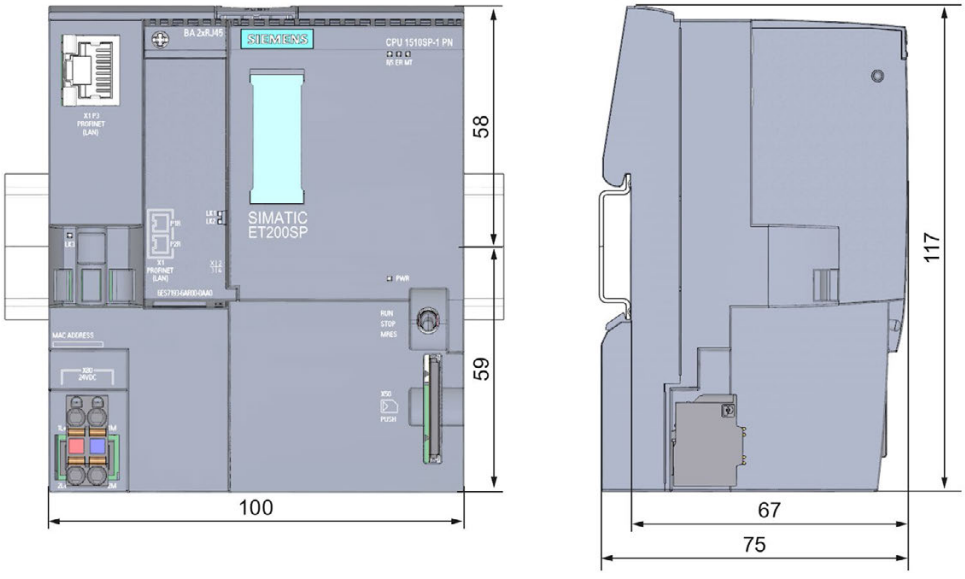

Figure A-1 Dimensional drawing CPU 1510SP-1 PN

SIEMENS

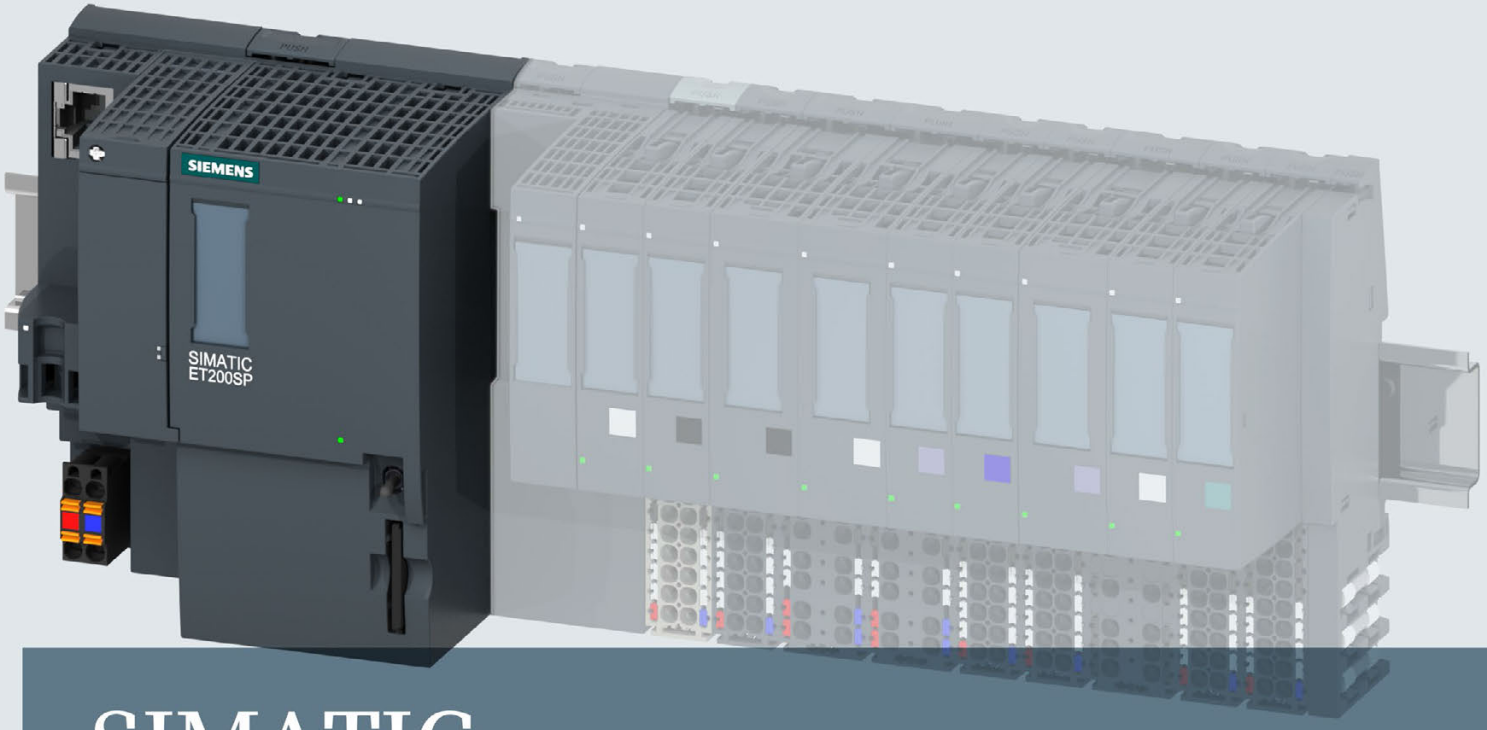

SIMATIC

ET 200SP

CPU 1512SP-1 PN (6ES7512-1DK01-0AB0)

Manual

Edition 09/2016

siemens.com

SIEMENS

SIMATIC

ET 200SP
CPU 1512SP-1 PN
(6ES7512-1DK01-0AB0)

Manual

Preface

Documentation guide 1

Product overview 2

Wiring 3

Interrupts, error messages, diagnostics and system alarms 4

Technical specifications 5

Dimension drawing A

09/2016

A5E33591411-AC

Legal information

Warning notice system

This manual contains notices you have to observe in order to ensure your personal safety, as well as to prevent damage to property. The notices referring to your personal safety are highlighted in the manual by a safety alert symbol, notices referring only to property damage have no safety alert symbol. These notices shown below are graded according to the degree of danger.

⚠ DANGER

indicates that death or severe personal injury **will** result if proper precautions are not taken.

⚠ WARNING

indicates that death or severe personal injury **may** result if proper precautions are not taken.

⚠ CAUTION

indicates that minor personal injury can result if proper precautions are not taken.

NOTICE

indicates that property damage can result if proper precautions are not taken.

If more than one degree of danger is present, the warning notice representing the highest degree of danger will be used. A notice warning of injury to persons with a safety alert symbol may also include a warning relating to property damage.

Qualified Personnel

The product/system described in this documentation may be operated only by **personnel qualified** for the specific task in accordance with the relevant documentation, in particular its warning notices and safety instructions. Qualified personnel are those who, based on their training and experience, are capable of identifying risks and avoiding potential hazards when working with these products/systems.

Proper use of Siemens products

Note the following:

⚠ WARNING

Siemens products may only be used for the applications described in the catalog and in the relevant technical documentation. If products and components from other manufacturers are used, these must be recommended or approved by Siemens. Proper transport, storage, installation, assembly, commissioning, operation and maintenance are required to ensure that the products operate safely and without any problems. The permissible ambient conditions must be complied with. The information in the relevant documentation must be observed.

Trademarks

All names identified by ® are registered trademarks of Siemens AG. The remaining trademarks in this publication may be trademarks whose use by third parties for their own purposes could violate the rights of the owner.

Disclaimer of Liability

We have reviewed the contents of this publication to ensure consistency with the hardware and software described. Since variance cannot be precluded entirely, we cannot guarantee full consistency. However, the information in this publication is reviewed regularly and any necessary corrections are included in subsequent editions.

Siemens AG
Division Digital Factory
Postfach 48 48
90026 NÜRNBERG
GERMANY

A5E33591411-AC
℗ 08/2016 Subject to change

Copyright © Siemens AG 2014 - 2016.
All rights reserved

Preface

Purpose of the documentation

This manual supplements the ET 200SP distributed I/O system (http://support.automation.siemens.com/WW/view/en/58649293) system manual as well as the function manuals. This manual contains a description of the module-specific information. The system-related functions are described in the system manual. All system-spanning functions are described in the function manuals.

The information provided in this manual and the system manual allows you to commission the CPU 1512SP-1 PN.

Conventions

STEP 7: In this documentation, "STEP 7" is used as a synonym for all versions of the configuration and programming software "STEP 7 (TIA Portal)".

Please also observe notes marked as follows:

Note

A note contains important information on the product described in the documentation, on the handling of the product or on the section of the documentation to which particular attention should be paid.

Security information

Siemens provides products and solutions with industrial security functions that support the secure operation of plants, systems, machines and networks.

In order to protect plants, systems, machines and networks against cyber threats, it is necessary to implement – and continuously maintain – a holistic, state-of-the-art industrial security concept. Siemens' products and solutions only form one element of such a concept.

Customer is responsible to prevent unauthorized access to its plants, systems, machines and networks. Systems, machines and components should only be connected to the enterprise network or the internet if and to the extent necessary and with appropriate security measures (e.g. use of firewalls and network segmentation) in place.

Additionally, Siemens' guidance on appropriate security measures should be taken into account. For more information about industrial security, please visit (http://www.siemens.com/industrialsecurity).

Siemens' products and solutions undergo continuous development to make them more secure. Siemens strongly recommends to apply product updates as soon as available and to always use the latest product versions. Use of product versions that are no longer supported, and failure to apply latest updates may increase customer's exposure to cyber threats.

To stay informed about product updates, subscribe to the Siemens Industrial Security RSS Feed under (http://www.siemens.com/industrialsecurity).

Siemens Industry Online Support

You can find current information on the following topics quickly and easily here:

- **Product support**

  All the information and extensive know-how on your product, technical specifications, FAQs, certificates, downloads, and manuals.

- **Application examples**

  Tools and examples to solve your automation tasks – as well as function blocks, performance information and videos.

- **Services**

  Information about Industry Services, Field Services, Technical Support, spare parts and training offers.

- **Forums**

  For answers and solutions concerning automation technology.

- **mySupport**

  Your personal working area in Industry Online Support for messages, support queries, and configurable documents.

This information is provided by the Siemens Industry Online Support in the Internet (http://www.siemens.com/automation/service&support).

Industry Mall

The Industry Mall is the catalog and order system of Siemens AG for automation and drive solutions on the basis of Totally Integrated Automation (TIA) and Totally Integrated Power (TIP).

Catalogs for all the products in automation and drives are available on the Internet (https://mall.industry.siemens.com).

Table of contents

Preface 4

1 Documentation guide 7

2 Product overview 11

2.1 New functions in firmware version V2.0 11

2.2 Operating principle 14

2.3 Properties 15

2.4 Operating and display elements 20

2.4.1 Front view of the module with BusAdapter 20

2.5 Mode switch 21

3 Wiring 22

4 Interrupts, error messages, diagnostics and system alarms 30

4.1 Status and error display of the CPU 30

5 Technical specifications 33

A Dimension drawing 48

Documentation guide

1

The documentation for the SIMATIC ET 200SP distributed I/O system is arranged into three areas.
This arrangement enables you to access the specific content you require.

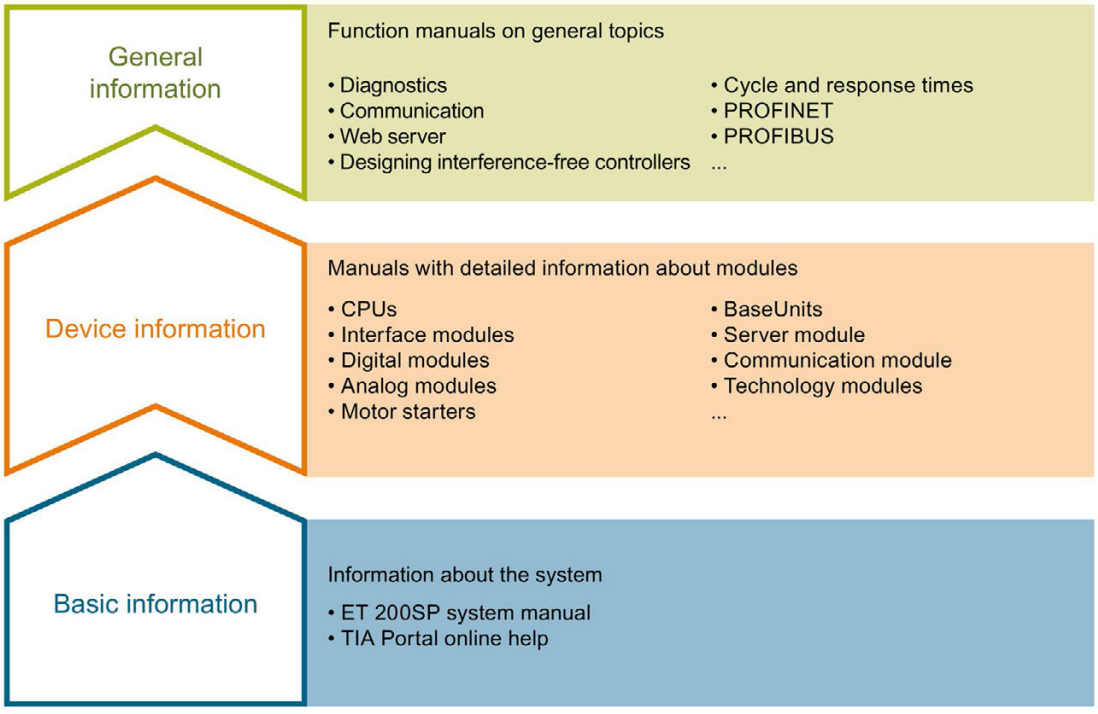

Basic information

The system manual describes in detail the configuration, installation, wiring and commissioning of the SIMATIC ET 200SP. distributed I/O system. The STEP 7 online help supports you in the configuration and programming.

Device information

Product manuals contain a compact description of the module-specific information, such as properties, wiring diagrams, characteristics and technical specifications.

General information

The function manuals contain detailed descriptions on general topics regarding the SIMATIC ET 200SP distributed I/O system, e.g. diagnostics, communication, Web server, motion control and OPC UA.

You can download the documentation free of charge from the Internet (http://w3.siemens.com/mcms/industrial-automation-systems-simatic/en/manual-overview/tech-doc-et200/Pages/Default.aspx).

Changes and supplements to the manuals are documented in a Product Information.

You can download the product information free of charge from the Internet (https://support.industry.siemens.com/cs/us/en/view/73021864).

Manual Collection ET 200SP

The Manual Collection contains the complete documentation on the SIMATIC ET 200SP distributed I/O system gathered together in one file.

You can find the Manual Collection on the Internet (http://support.automation.siemens.com/WW/view/en/84133942).

"mySupport"

With "mySupport", your personal workspace, you make the most of your Industry Online Support.

In "mySupport" you can store filters, favorites and tags, request CAx data and put together your personal library in the Documentation area. Furthermore, your data is automatically filled into support requests and you always have an overview of your current requests.

You need to register once to use the full functionality of "mySupport".

You can find "mySupport" in the Internet (https://support.industry.siemens.com/My/ww/en).

"mySupport" - Documentation

In the Documentation area of "mySupport", you have the possibility to combine complete manuals or parts of them to make your own manual.
You can export the manual in PDF format or in an editable format.

You can find "mySupport" - Documentation in the Internet (http://support.industry.siemens.com/My/ww/en/documentation).

"mySupport" - CAx Data

In the CAx Data area of "mySupport", you can have access the latest product data for your CAx or CAe system.

You configure your own download package with a few clicks.

In doing so you can select:

- Product images, 2D dimension drawings, 3D models, internal circuit diagrams, EPLAN macro files
- Manuals, characteristics, operating manuals, certificates
- Product master data

You can find "mySupport" - CAx Data in the Internet (http://support.industry.siemens.com/my/ww/en/CAxOnline).

Application examples

The application examples support you with various tools and examples for solving your automation tasks. Solutions are shown in interplay with multiple components in the system - separated from the focus in individual products.

You can find the application examples on the Internet (https://support.industry.siemens.com/sc/ww/en/sc/2054).

TIA Selection Tool

With the TIA Selection Tool, you can select, configure and order devices for Totally Integrated Automation (TIA).
This tool is the successor of the SIMATIC Selection Tool and combines the known configurators for automation technology into one tool.
With the TIA Selection Tool, you can generate a complete order list from your product selection or product configuration.

You can find the TIA Selection Tool on the Internet (http://w3.siemens.com/mcms/topics/en/simatic/tia-selection-tool).

SIMATIC Automation Tool

You can use the SIMATIC Automation Tool to run commissioning and maintenance activities simultaneously on various SIMATIC S7 stations as a bulk operation independently of the TIA Portal.

The SIMATIC Automation Tool provides a multitude of functions:

- Scanning of a PROFINET/Ethernet network and identification of all connected CPUs
- Address assignment (IP, subnet, gateway) and station name (PROFINET device) to a CPU
- Transfer of the data and the programming device/PC time converted to UTC time to the module
- Program download to CPU
- Operating mode switchover RUN/STOP
- Localization of the CPU by means of LED flashing
- Reading out CPU error information
- Reading the CPU diagnostic buffer
- Reset to factory settings
- Updating the firmware of the CPU and connected modules

You can find the SIMATIC Automation Tool on the Internet (https://support.industry.siemens.com/cs/ww/en/view/98161300).

PRONETA

With SIEMENS PRONETA (PROFINET network analysis), you analyze the plant network during commissioning. PRONETA features two core functions:

- The topology overview independently scans PROFINET and all connected components.
- The IO check is a fast test of the wiring and the module configuration of a system.

You can find SIEMENS PRONETA on the Internet (https://support.industry.siemens.com/cs/ww/en/view/67460624).

Product overview 2

2.1 New functions in firmware version V2.0

New functions of the CPU in firmware version V2.0

This section lists the new features of the CPU with firmware version V2.0.

You can find additional information in the sections of this manual.

Table 2- 1 New functions of the CPU with firmware version 2.0 compared with firmware version V1.8

New functions	Applications	Customer benefits
OPC UA server	You realize the data communication between different systems, both within the process level and on the control and enterprise levels: • To embedded systems with controllers • To controllers with MES systems and systems of the enterprise level (ERP, asset systems) • To Siemens controllers with controllers from other manufacturers • To intelligent sensors with controllers Supported standard: OPC Data Access, DA.	OPC UA is a unified standard for data communication and is independent of any particular operating system platforms. You have integrated security mechanisms on different automation systems, for example, for data exchange, on the application level, for authentication of the user. OPC UA servers provide a large amount of data: • Values of PLC tags that clients can access • Data types of these PLC tags • Information about the OPC UA server itself and the CPU In this way, clients can gain an overview and can read and write values.
PROFINET IO		
MRPD: Media Redundancy for Planned Duplication for IRT	PROFINET IO IRT enables you to realize applications that place particularly high demands on failure safety and accuracy (isochronous).	By sending the cyclic IO data in both directions in the ring, the communication to the IO devices is maintained even when the ring is interrupted and does not result in device failure even with fast update times. You achieve higher failure safety than with MRP.
PROFINET performance upgrade	You can develop applications with high demands on speed and clock cycles. This is interesting for applications with high demands on performance.	Better utilization of the bandwidth results in short reaction times.
Limitation of the data infeed into the network	You limit the network load for standard Ethernet communication to a maximum value.	You smooth peaks in the data infeed. You share the remaining bandwidth based on requirements.

New functions	Applications	Customer benefits
Web server		
Backing up and restoring via the Web server	You can, for example, backup and restore the configuration of the CPU to the PG/PC on which the Web server is running.	You can make a backup copy of an operational project without STEP 7. In an "emergency", you can simply use an existing configuration without STEP 7, for example, during commissioning or after a program download.
Web server provides up to three project languages for comments and alarm texts	When you export your plants worldwide, for example, comments or alarm texts can be stored on the card in up to 3 languages. For example, German - author's language, English - internationally usable, Portuguese - end user's language.	You provide customers with better service.
Trace via Web server	When you enable trace functions via the Web server, you have better service support. You can send your trace recordings via Web service, for example, to your service partner.	You get plant/project information for diagnostics and maintenance requirements without STEP 7. You can provide trace recordings for each Web server. You save time in troubleshooting.
Monitoring of configured technology objects via a Web server	You can monitor statuses, errors, technology alarms and the current values of technology objects (TOs) with the Web server.	
Motion control		
Greater number of axes for Motion Control applications and new technology objects: Output cam, cam track and measuring input	Speed specification, e.g. for: • Pumps, fans, mixers • Conveyor belts • Auxiliary drives Positioning tasks, e.g.: • Lifting and vertical conveyors • Feeding and gate control • Palletizing equipment Output cams and cam tracks make other applications possible, e.g.: • Applying glue tracks • Triggering switching operations with precise positioning • Very precise processing of products on a conveyor belt Measuring inputs are used, for example: • For measuring products • For detecting the position of the product on a conveyor belt	You can implement additional Motion Control applications with a CPU. The scalable configuration limits allow you to handle all types of application. High machine speeds result in greater productivity with better accuracy.

New functions	Applications	Customer benefits
ET 200SP		
Support for ET 200AL in a central configuration	You can set up a simple connection of IP 65/67 I/O to the CPU. You can connect up to 16 ET 200AL I/O modules via a BA send module on the central bus of the ET 200SP CPU. The distance between two ET 200AL modules can be up to 15 m. You can realize the use of ET 200AL in assembly and handling engineering directly at moving parts, for example in linear axes or drag chains.	You do not have to individually run sensors or actuators at the central control cabinet to the different sections of a machine or assembly line. You save time and costs: • Through lightweight construction • Reduction of wear and exposure to vibration • Increased productivity
Increasing the address space in the station	For example, you can use up to 49 ET 200SP energy meter modules behind an ET 200SP CPU.	A larger address space of 2560 bytes (2048 bytes for ET 200SP module + 512 bytes for ET 200AL modules) is available in the station. The address space has been increased to 288 bytes per module.
BusAdapter with glass-fiber interface	You can achieve long distances (up to 3 km) between the PROFINET devices.	
Support for communications processors		
CP 1542SP-1	Flexible expansion of the ET 200SP system with an additional Ethernet interface; network separation.	
CP 1542SP-1 IRC	Seamless data recording with time stamping, support for standardized telecontrol protocols DNP3 and IEC.	
CP 1543SP-1 ISEC	With the integrated security functions firewall (Stateful Inspection) and VPN protocol (IPSec), the communications processor protects ET200SP stations and subordinate networks against unauthorized access, and employs encryption to protect data transmission against manipulation and espionage.	

2.2 Operating principle

The CPU contains the operating system and executes the user program. The user program is located on the SIMATIC memory card and is processed in the work memory of the CPU.

The PROFINET interfaces on the CPU allow simultaneous communication with PROFINET devices, PROFINET controllers, HMI devices, programming devices, other controllers and other systems. The CPU 1512SP-1 PN supports operation as an IO controller, I-device or standalone CPU.

With its optional PROFIBUS interface, CM DP, CPU 1512SP-1 PN supports the configuration of PROFIBUS networks in addition to PROFINET IO. When you use the interface as a PROFIBUS DP interface, you can configure the CPU 1512SP-1 PN as a DP master or as an intelligent DP slave (I-slave).

IO controller

CPU 1512SP-1 PN sends and receives data from the connected IO devices within a PROFINET IO system. You can operate the CPU with a maximum of 128 connected IO devices, a maximum of 64 of which use IRT (Isochronous Realtime).

I-device

The "I-device" (intelligent IO device) functionality allows you to exchange data with an IO controller. CPU 1512SP-1 PN thus fulfills the role of an intelligent distributed pre-processing unit for sub-processes. The I-device is connected as an IO device to a higher-level IO controller for this purpose.

Advantages:

- Interference-resistant configuration due to short signal and encoder wiring
- Reduced wiring requirements for transmission of the data via PROFINET

Standalone CPU

You can also use the CPU 1512SP-1 PN in the ET 200SP distributed I/O system as a "central system" without a higher-level controller.

DP master

To use the ET 200SP as a DP master, you need the CPU and the optional communication module, CM DP. When used as a DP master, ET 200SP exchanges data with the connected DP slaves via PROFIBUS DP.

Intelligent DP slave (I-slave)

To use the ET 200SP as an intelligent DP slave (I-slave), you need the CPU and the optional communication module, CM DP. As an I-slave, the ET 200SP CPU is connected via PROFIBUS DP to a higher-level DP master and exchanges data with it.

2.3 Properties

Article number

6ES7512-1DK01-0AB0

View of the module

The following figure shows the CPU 1512SP-1 PN.

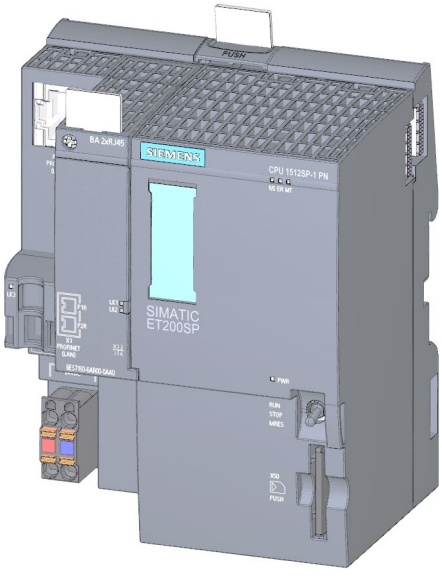

Figure 2-1 CPU 1512SP-1 PN

Properties

The CPU 1512SP-1 PN has the following technical properties:

1. Communication:
   - Interfaces

     The CPU 1512SP-1 PN has a PROFINET interface (X1 P3) with an integrated 3-port switch. Port 1 and port 2 are located on the optionally pluggable BusAdapter. Port 3 is integrated in the housing of the CPU. You connect the PROFINET IO to the CPU via the BusAdapter. You will find information on the BusAdapters supported by the CPU in section Wiring (Page 22).

     In addition to PROFINET basic functionality, the interface also supports PROFINET IO RT (real-time) and IRT (isochronous real-time). PROFINET IO communication or real-time settings can be configured. The basic functionality of PROFINET supports HMI communication, communication with the configuration system, communication with a higher-level network (backbone, router, Internet) and communication with another machine or automation cell.

     Port 1 and port 2 can also be used as ring ports for the configuration of redundant ring structures in Ethernet.

     Note

     The CPU is delivered without a BusAdapter. You can find the article numbers of the supported BusAdapters in the "Accessories/spare parts" section of the ET 200SP distributed automation system (http://support.automation.siemens.com/WW/view/en/58649293) system manual.

     The CM DP is optionally available with a PROFIBUS interface (X2). You can find additional information about this expansion module in the manual Communication module CM DP (http://support.automation.siemens.com/WW/view/en/90156526).

     You can find information about connecting the PROFINET IO BusAdapter to the CPU as well as connecting the optional PROFIBUS interface to the interface module in the system manual ET 200SP distributed I/O system (http://support.automation.siemens.com/WW/view/en/58649293).
   - OPC UA
     With OPC UA, data is exchanged via an open and vendor-neutral communication protocol. The CPU, as OPC UA server, can communicate with OPC UA clients such as HMI panels, SCADA systems, etc.

- Integrated Web server:

  A Web server is integrated in the CPU. You can read out the following information with the Web server:
  - Start page with general CPU information
  - Identification information
  - Contents of the diagnostics buffer
  - Query of module states
  - Firmware update
  - Alarms (without acknowledgment option)
  - Information about communication
  - PROFINET topology
  - Tag status, writing tags
  - Watch tables
  - Memory usage
  - User pages
  - Data logs (if used)
  - Online backup and restoration of the configuration.
  - Diagnostic information for the motion control technology objects
  - Display of trace recordings stored on the SIMATIC memory card
  - Readout service data
  - Basic Web pages
  - Display of the Web server in 3 project languages, for example, comments and message texts
  - Recipes
  - User-defined Web pages
- Integrated technology:
  - Motion Control

    The Motion Control functionality uses technology objects to support speed-controlled axes, positioning axes, synchronous axes, external encoders, cams, cam tracks and measuring inputs, as well as PLCopen blocks for programming the motion control functionality.
    You can find a detailed description of the use of Motion Control and its configuration in the S7-1500 Motion Control (http://support.automation.siemens.com/WW/view/en/109739589) function manual.
    You can also use the TIA Selection Tool (http://w3.siemens.com/mcms/topics/en/simatic/tia-selection-tool) or the SIZER (http://w3.siemens.com/mcms/mc-solutions/en/engineering-software/drive-design-tool-sizer/Pages/drive-design-tool-sizer.aspx) to create or configure axes.
  - Integrated closed-loop control functionality

    - PID Compact (continuous PID controller)

    - PID 3Step (step controller for integrating actuators)

    - PID Temp (temperature controller for heating and cooling with two separate actuators)

- Trace functionality:
  - Trace functionality supports you in troubleshooting and optimizing the user program, especially for motion control or closed-loop control applications. Trace only supports saves measurements on a SIMATIC memory card.
    You will find additional information on "Trace" in the Using the trace and logic analyzer function (http://support.automation.siemens.com/WW/view/en/64897128) function manual.
- Integrated system diagnostics:
  - The alarms for the system diagnostics are automatically created by the system and displayed on a PG/PC, HMI device or the Web server. System diagnostics information is also available when the CPU is in STOP mode.
- Integrated security:
  - Know-how protection

    The assignment of passwords protects user blocks against unauthorized access and modifications.
  - Copy protection

    Copy protection links user blocks to the serial number of the SIMATIC memory card or to the serial number of the CPU. User programs cannot run without the corresponding SIMATIC memory card or CPU.
  - Access protection

    Extended access protection provides high-quality protection against unauthorized configuration changes. You can use authorization levels to assign separate rights to different user groups.
  - Integrity protection

    The system protects the data transferred to the CPU against manipulation. The CPU detects erroneous or manipulated engineering data.

    You can find additional information on the topic of "Protection" in the system manual ET 200SP distributed I/O system (http://support.automation.siemens.com/WW/view/en/58649293).
- Support for ET 200AL
  - Simple connection of IP 65/67 I/O modules to the CPU.
- Communication CPs
  - CP 1542SP-1: Flexible expansion of the ET 200SP system with an additional Ethernet interface; network separation.
  - CP 1542SP-1 IRC: Seamless data recording with time stamping, support for standardized telecontrol protocols DNP3 and IEC.
  - CP 1543SP-1 ISEC: With the integrated security functions firewall (Stateful Inspection) and VPN protocol (IPSec), the communications processor protects ET200SP stations and subordinate networks against unauthorized access, and employs encryption to protect data transmission against manipulation and espionage.

- Address space
  - A larger address space of 2560 bytes (2048 bytes for ET 200SP module + 512 bytes for ET 200AL modules) is available within the station.
- CPU 1512SP-1 PN supports the following additional functions:
  - PROFIenergy
    You can find information on the topic of "PROFIenergy" in the PROFINET function manual (https://support.industry.siemens.com/cs/ww/en/view/49948856) and in the PROFINET specification on the Internet (http://www.profibus.com).
  - Shared device
    You can find information on the topic of "Shared device" in the PROFINET function manual (https://support.industry.siemens.com/cs/ww/en/view/49948856).
  - Configuration control
    You can find information on the topic of "Configuration control" in the system manual ET 200SP distributed I/O system (http://support.automation.siemens.com/WW/view/en/58649293).
  - Isochronous mode
    You can find information about the "Isochronous mode" topic in the PROFINET (https://support.industry.siemens.com/cs/ww/en/view/49948856) function manual.

2.4 Operating and display elements

2.4.1 Front view of the module with BusAdapter

The figure on the left shows the CPU 1512SP-1 PN including a plugged BA 2xRJ45 BusAdapter. The figure on the right shows a separate view of the BA 2xRJ45 BusAdapter.

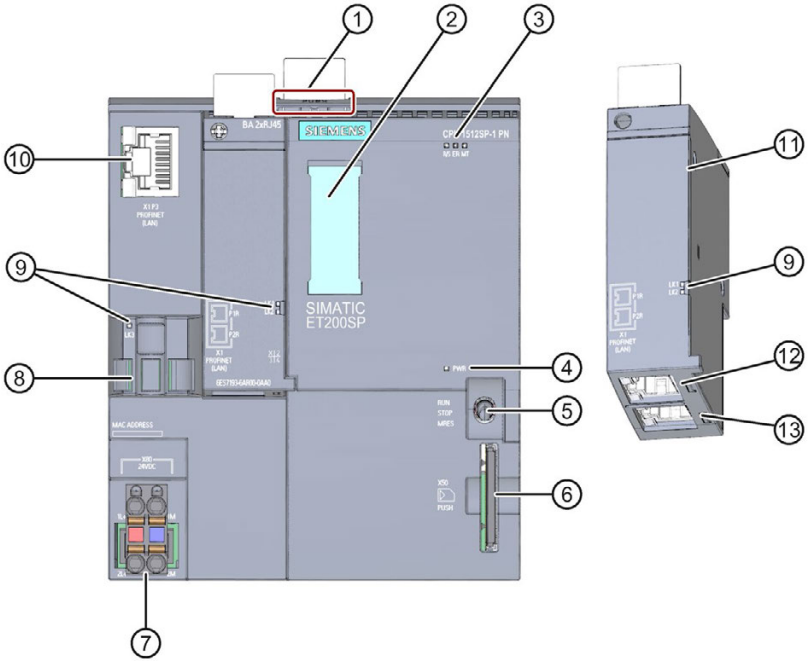

① Mounting rail release
② Labeling strips
③ LEDs for status and error displays
④ LED for display of the supply voltage
⑤ Mode switch
⑥ Slot for the SIMATIC memory card
⑦ Connection for supply voltage (included in product package)
⑧ Cable support and attachment for port P3 of the PROFINET interface
⑨ LEDs for status displays of the PROFINET interface: LK1 and LK2 on BusAdapter, LK3 on CPU
⑩ Port P3 of the PROFINET interface: RJ45 socket
⑪ Separate view of the BusAdapter
⑫ Port P1 R of the PROFINET interface: RJ45 socket on BusAdapter BA 2×RJ45
R: Ring port for configuring a ring topology with media redundancy
⑬ Port P2 R of the PROFINET interface: RJ45 socket on BusAdapter BA 2×RJ45
R: Ring port for configuring a ring topology with media redundancy

Figure 2-2 Front view of the CPU 1512SP-1 PN with BusAdapter

2.5 Mode switch

Use the mode switch to set the CPU operating mode.

The following table shows the position of the switch and the corresponding meaning.

Table 2- 2 Mode switch settings

Position	Meaning	Explanation
RUN	RUN mode	The CPU is executing the user program.
STOP	STOP mode	The user program is not being executed.
MRES	Memory reset	Position for CPU memory reset.

Wiring

3

This section provides information on the pin assignment of the individual interfaces and the block diagram of the CPU 1512SP-1 PN.

24 V DC supply voltage (X80)

The connector for the supply voltage is plugged in when the CPU ships from the factory.

The figure below shows the pin assignment for 24 V DC supply voltage.

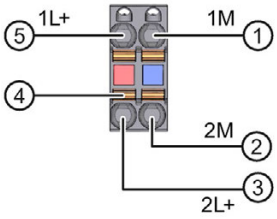

① Ground of the supply voltage
② Ground of the supply voltage for loop-through (maximum of 10 A permitted)
③ +24 V DC of the supply voltage for loop-through (maximum of 10 A permitted)
④ Spring NC contacts
⑤ + 24 V DC of the supply voltage

Internally jumpered:
① and ②
③ and ⑤

Figure 3-1 Supply voltage connection

PROFINET IO interface on the CPU (X1 P3)

The assignment corresponds to the Ethernet standard for an RJ45 connector.

- When autonegotiation is deactivated, the RJ45 socket is allocated as a switch (MDI-X).
- If autonegotiation is activated, then autocrossing is active and the RJ45 socket has either a device assignment (MDI) or switch assignment (MDI-X).

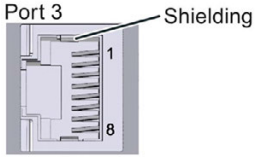

PROFINET IO interface on the BusAdapter BA 2xRJ45 (X1 P1 R and X1 P2 R)

The assignment at the BA 2xRJ45 BusAdapter corresponds to the Ethernet standard for an RJ45 connector.

Table 3- 1 Pin assignment PROFINET IO interface on the BusAdapter BA 2xRJ45

View	Designation
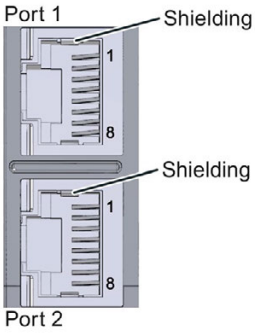	• When autonegotiation is deactivated, the RJ45 socket is allocated as a switch (MDI-X). • If autonegotiation is activated, then autocrossing is active and the RJ45 socket has either a device assignment (MDI) or switch assignment (MDI-X).

PROFINET IO interface on the BusAdapter BA 2xFC (X1 P1 R and X1 P2 R)

The following table shows the pin assignment for the PROFINET IO interface on the BusAdapter BA 2xFC.

Table 3- 2 Pin assignment PROFINET IO interface on the BusAdapter BA 2xFC

View	Signal name		Designation
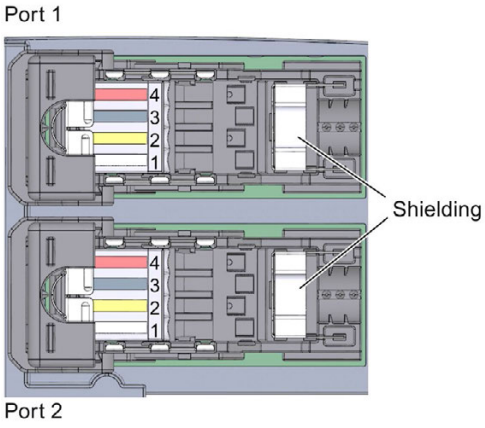	1	TD	Transmit data +
	2	TD_N	Transmit data -
	3	RD	Receive data +
	4	RD_N	Receive data -

PROFINET IO interface with BusAdapter BA 2×LC (X1 P1 R and X1 P2 R) (as of V2.0)

The following table shows the signal names and description of the pin assignment for the BA 2×LC BusAdapter.

Table 3- 3 Pin assignment PROFINET IO with BusAdapter BA 2×LC

View	Signal name	Designation
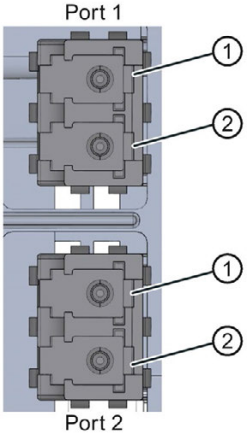	①	Receiver/Receive data
	②	Sender/Transmit data

PROFINET IO interface with BusAdapter BA LC/RJ45 (X1 P1 R and X1 P2 R) (as of V2.0)

The following table shows the signal names and description of the pin assignment for the BA LC/RJ45 BusAdapter.

Table 3- 4 Pin assignment PROFINET IO with BusAdapter BA LC/RJ45

View	Signal name	Designation
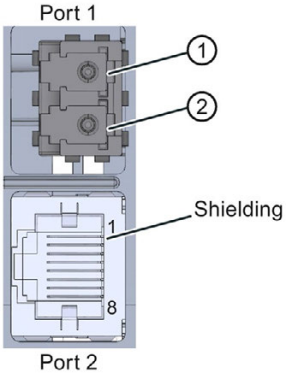	①	Receiver/Receive data
	②	Sender/Transmit data
	RJ45, Port2 • When autonegotiation is deactivated, the RJ45 socket is allocated as a switch (MDI-X). • If autonegotiation is activated, then auto-crossing is active and the RJ45 socket has either a device assignment (MDI) or switch assignment (MDI-X).	

PROFINET IO interface with BusAdapter BA LC/FC (X1 P1 R and X1 P2 R) (as of V2.0)

The following table shows the signal names and description of the pin assignment for the BA LC/FC BusAdapter.

The I/Os of the BA LC/FCBusAdapter are shown individually for a clearer overview.

Table 3- 5 PROFINET IO pin assignment with BusAdapter BA LC/FC

View	Signal name		Designation
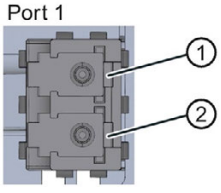	①		Receiver/Receive data
	②		Sender/Transmit data
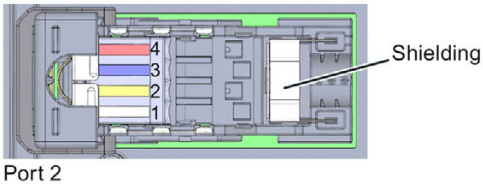	1	TD	Transmit data +
	2	TD_N	Transmit data –
	3	RD	Receive data +
	4	RD_N	Receive data -

PROFINET IO interface with BusAdapter BA 2×SCRJ (X1 P1 R and X1 P2 R)

The following table shows the signal names and description of the pin assignment for the BA 2×SCRJ BusAdapter.

Table 3- 6 PROFINET IO pin assignment with BusAdapter BA 2×SCRJ

View	Signal name	Designation
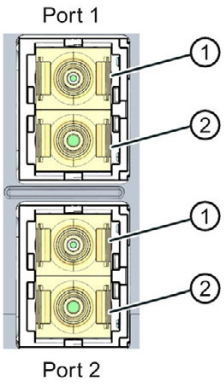	①	Receiver/Receive data
	②	Sender/Transmit data

PROFINET IO interface with BusAdapter BA SCRJ/RJ45 (X1 P1 R and X1 P2 R)

The following table shows the signal names and description of the pin assignment for the BA SCRJ/RJ45 BusAdapter.

Table 3- 7 Pin assignment PROFINET IO with BusAdapter BA SCRJ/RJ45

View	Signal name	Designation
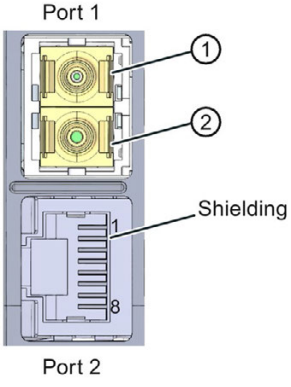	①	Receiver/Receive data
	②	Sender/Transmit data
	RJ45, Port2 • When autonegotiation is deactivated, the RJ45 socket is allocated as a switch (MDI-X). • If autonegotiation is activated, then auto-crossing is active and the RJ45 socket has either a device assignment (MDI) or switch assignment (MDI-X).	

PROFINET IO with BusAdapter BA SCRJ/FC (X1 P1 R and X1 P2 R)

The following table shows the signal names and description of the pin assignment for the BA SCRJ/FC BusAdapter.

The pin assignment for the BA SCRJ/FC BusAdapter is shown individually for a clearer overview.

Table 3- 8 PROFINET IO pin assignment with BusAdapter BA SCRJ/FC

View	Signal name		Designation
Port 1 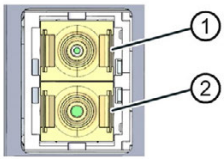	①		Receiver/Receive data
	②		Sender/Transmit data
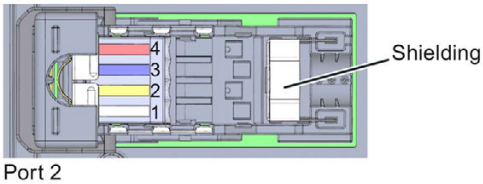 Port 2	1	TD	Transmit data +
	2	TD_N	Transmit data –
	3	RD	Receive data +
	4	RD_N	Receive data -

Reference

You can find additional information on the topics of "Connecting the CPU" and "Accessories/spare parts" in the system manual ET 200SP distributed I/O system (http://support.automation.siemens.com/WW/view/en/58649293).

Assignment of the MAC addresses

The MAC address is a globally unique device identifier that is assigned to each PROFINET device in the factory. Its 6 bytes are divided into 3 bytes for the manufacturer ID and 3 bytes for the device ID (serial number). The front of the CPU 1512SP-1 PN is lasered with the MAC address of the PROFINET interface.

The PROFINET interface (X1) of the CPU 1512SP-1 PN has three ports. Port 3 is located on the CPU. Ports 1 and 2 are located on the optional BusAdapter. In addition to the PROFINET interface, each PROFINET port also has a separate MAC address. There is therefore a total of four MAC addresses for the CPU 1512SP-1 PN.

The MAC addresses of the PROFINET ports are needed for the LLDP protocol, for example for the neighborhood discovery function.

The table below shows how the MAC addresses are assigned.

Table 3- 9 Assignment of the MAC addresses

	Assignment
MAC address 1	PROFINET interface X1 • Visible in STEP 7 for accessible devices • Lasered on the front of the CPU (start of the number range)
MAC address 2	Port X1 P1 R (required for LLDP, for example)
MAC address 3	Port X1 P2 R (required for LLDP, for example)
MAC address 4	Port X1 P3 (required for LLDP, for example)

Block diagram

The following figure shows the block diagram of the CPU 1512SP-1 PN.

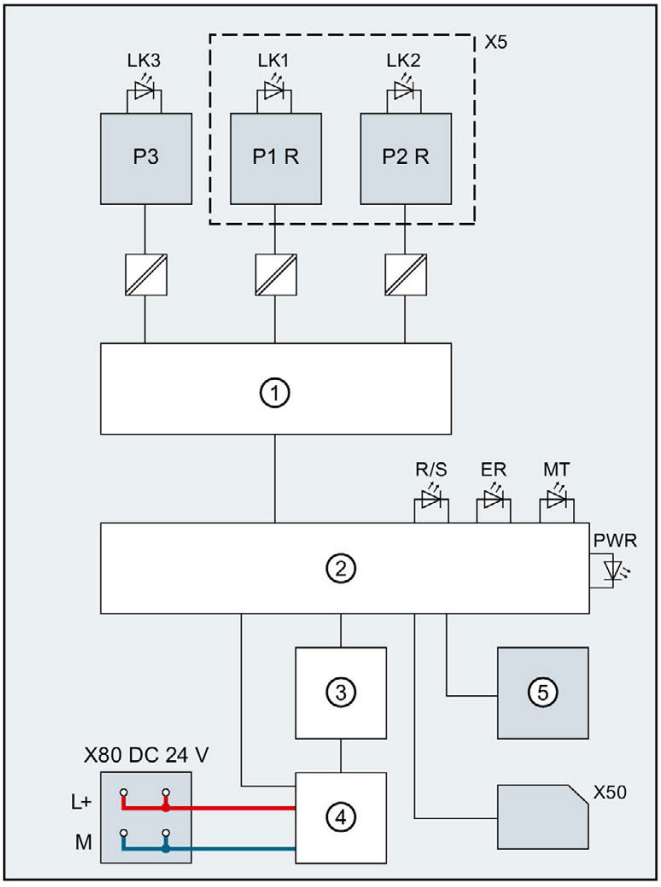

①	PROFINET switch	P1 R	PROFINET interface X1 Port 1
②	Electronics	P2 R	PROFINET interface X1 Port 2
③	Backplane bus interface	P3	PROFINET interface X1 Port 3
④	Internal supply voltage	L+	24 V DC supply voltage
⑤	RUN/STOP/MRES mode selector	M	Ground
X5	BusAdapter	LK1, 2, 3	LED Link TX/RX
X50	SIMATIC memory card	R/S	RUN/STOP LED (yellow/green)
X80 24 V DC	Infeed of supply voltage	ER	ERROR LED (red)
		MT	MAINT LED (yellow)
		PWR	POWER LED (green)

Figure 3-2 Block diagram of the CPU 1512SP-1 PN

Interrupts, error messages, diagnostics and system alarms

4

The status and error displays of the CPU 1512SP-1 PN are described below.

You will find additional information on "Interrupts" in the STEP 7 online help.

You can find additional information on the topics of "Diagnostics" and "System alarms" in the Diagnostics (http://support.automation.siemens.com/WW/view/en/59192926) function manual.

4.1 Status and error display of the CPU

LED displays

The figure below shows the LED displays of the CPU 1512SP-1 PN and the BA 2xRJ45 BusAdapter.

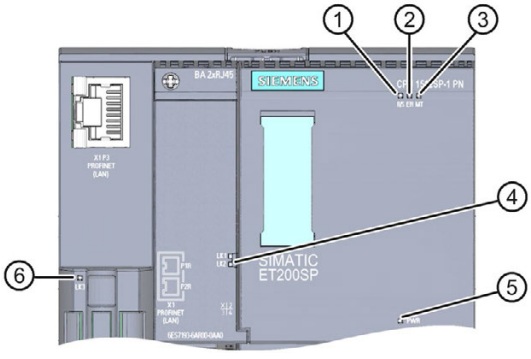

① RUN/STOP LED (yellow/green LED)
② ERROR LED (red LED)
③ MAINT LED (yellow LED)
④ LINK RX/TX LED for ports X1 P1 and X1 P2 (green LEDs on BusAdapter)
⑤ POWER LED (green LED)
⑥ LINK RX/TX LED for port X1 P3 (green LED on CPU)

Figure 4-1 LED displays on the CPU and BusAdapter

Meaning of the POWER, RUN/STOP, ERROR and MAINT LEDs

CPU 1512SP-1 PN features an LED for monitoring the supply voltage of the electronics (PWR) and three LEDs for displaying the current operating and diagnostics status. The following table shows the meaning of the various combinations of colors for the POWER, RUN/STOP, ERROR and MAINT LEDs.

Table 4- 1 Meaning of the LEDs

POWER LED	RUN/STOP LED	ERROR LED	MAINT LED	Meaning
LED off	LED off	LED off	LED off	Missing or insufficient supply voltage on the CPU.
LED lit green	LED off	LED flashes red	LED off	An error has occurred.
LED lit green	LED lit green	LED off	LED off	CPU is in RUN mode.
LED lit green	LED lit green	LED flashes red	LED off	A diagnostics event is pending.
LED lit green	LED lit green	LED off	LED lit yellow	Maintenance demanded for the plant. The affected hardware must be checked/replaced within a short period of time.
				Active Force job
				PROFIenergy pause
LED lit green	LED lit green	LED off	LED flashes yellow	Maintenance required for the plant. The affected hardware must be checked/replaced within a foreseeable period of time.
				Bad configuration
LED lit green	LED lit yellow	LED off	LED flashes yellow	Firmware update successfully completed.
LED lit green	LED lit yellow	LED off	LED off	CPU is in STOP mode.
LED lit green	LED lit yellow	LED flashes red	LED flashes yellow	The program on the SIMATIC memory card is causing an error.
				CPU defective
LED lit green	LED flashes yellow	LED off	LED off	CPU is performing internal activities during STOP, e.g. startup after STOP.
				Download of the user program from the SIMATIC memory card
LED lit green	LED flashes yellow/green	LED off	LED off	Startup (transition from RUN → STOP)
LED lit green	LED flashes yellow/green	LED flashes red	LED flashes yellow	Startup (CPU booting)
				Test of LEDs during startup, inserting a module.
				LED flashing test

Meaning of the LINK LED

Each port has a LINK LED (LK1, LK2, LK3). The table below shows the various "LED scenarios" of ports for the CPU 1512SP-1 PN.

Table 4- 2 Meaning of the LEDs

LINK LED	Meaning
LED off	There is no Ethernet connection between the PROFINET interface of the PROFINET device and the communication partner. No data is currently being sent/received via the PROFINET interface. There is no LINK connection.
LED flashes green	The "LED flashing test" is being performed.
LED lit green	There is an Ethernet connection between the PROFINET interface of your PROFINET device and a communication partner.

Technical specifications

5

	6ES7512-1DK01-0AB0
General information	
Product type designation	CPU 1512SP-1 PN
Hardware function version	FS03
Firmware version	V2.0
Engineering with	
STEP 7 TIA Portal can be configured/integrated as of version	V14
Configuration control	
Via data record	Yes
Operator controls	
Mode selector	1
Supply voltage	
Type of supply voltage	24 V DC
Low limit of permitted range (DC)	19.2 V
High limit of permitted range (DC)	28.8 V
Reverse polarity protection	Yes
Power and voltage failure buffering	
Power/voltage failure buffer time	5 ms
Input current	
Current consumption (rated value)	0.6 A
Inrush current, max.	4.7 A; rated value
I^2t	0.14 A^2s
Power	
Incoming power to the backplane bus	8.75 W
Power loss	
Power loss, typ.	5.6 W
Memory	
Number of slots for SIMATIC memory card	1
SIMATIC memory card required	Yes
Work memory	
Integrated (for program)	200 KB
Integrated (for data)	1 MB
Load memory	
Plug-in (SIMATIC memory card), max.	32 GB
Buffering	
Maintenance-free	Yes

	6ES7512-1DK01-0AB0
CPU processing times	
For bit operations, typ.	48 ns
For word operations, typ.	58 ns
For fixed-point arithmetic, typ.	77 ns
For floating-point arithmetic, typ.	307 ns
CPU blocks	
Number of elements (total)	2000; blocks (OB/FB/FC/DB) and UDTs
DB	
Number range	1 ... 60 999; divided into: Number range that can be used by user: 1 ... 59 999 and number range for DBs generated by SFC 86: 60 000 ... 60 999
Size, max.	1 MB; for absolutely addressed DBs, the max. size is 64 KB
FB	
Number range	0 ... 65 535
Size, max.	200 KB
FC	
Number range	0 ... 65 535
Size, max.	200 KB
OB	
Size, max.	200 KB
Number of free-cycle OBs	100
Number of time-of-day interrupt OBs	20
Number of time-delay interrupt OBs	20
Number of cyclic interrupt OBs	20
Number of hardware interrupt OBs	50
Number of DPV1 interrupt OBs	3
Number of isochronous mode OBs	1
Number of technology synchronous interrupt OBs	2
Number of startup OBs	100
Number of asynchronous error OBs	4
Number of synchronous error OBs	2
Number of diagnostic interrupt OBs	1
Nesting depth	
Per priority class	24
Counters, timers and their retentivity	
S7 counters	
Quantity	2048
Retentivity	
• can be set	Yes

	6ES7512-1DK01-0AB0
IEC counters	
Quantity	Any (only limited by the work memory)
Retentivity	
• can be set	Yes
S7 timers	
Quantity	2048
Retentivity	
• can be set	Yes
IEC timers	
Quantity	Any (only limited by the work memory)
Retentivity	
• can be set	Yes
Data areas and their retentivity	
Total retentive data area (including timers, counters, bit memories), max.	128 KB; for bit memories, timers, counters, DBs and technological data (axes), usable retentive memory: 88 KB
Bit memory	
Number, max.	16 KB
Number of clock memories	8; there are 8 clock memory bits, grouped in one clock memory byte
Data blocks	
Retentivity can be set	Yes
Retentivity preset	No
Local data	
Per priority class, max.	64 KB; max. 16 KB per block
Address area	
Number of IO modules	2048; max. number of modules/submodules
I/O address area	
Inputs	32 KB; all inputs are in the process image
Outputs	32 KB; all outputs are in the process image
Of which per integrated IO subsystem	
• Inputs (volume)	8 KB
• Outputs (volume)	8 KB
Of which per CM/CP	
• Inputs (volume)	8 KB
• Outputs (volume)	8 KB
Process image partitions	
Number of process image partitions, max.	32
Address space per module	
Address space per module, max.	288 bytes; for both input and output data

	6ES7512-1DK01-0AB0
Address space per station	
Address space per station, max.	2560 bytes; for central inputs and outputs; depending on configuration; 2048 bytes for ET 200SP modules + 512 bytes for ET 200AL modules
Hardware configuration	
Number of distributed IO systems	32; a distributed IO system is understood to mean the integration of distributed I/O via PROFINET or PROFIBUS communication modules as well as the connection of I/O via AS-i master modules or links (e.g. IE/PB link)
Number of DP masters	
Via CM	1
Number of IO controllers	
Integrated	1
Via CM	0
Rack	
Modules per rack, max.	80; CPU + 64 modules + server module (configuration width max. 1 m) + 16 ET 200AL modules
Number of rows, max.	1
PtP CM	
Number of PtP CMs	The number of PtP CMs that can be connected is only limited by the available slots
Time	
Clock	
Type	Hardware clock
Backup duration	6 wk; at 40 °C ambient temperature, typ.
Deviation per day, max.	10 s; typ.: 2 s
Operating hours counter	
Quantity	16
Time-of-day synchronization	
Supported	Yes
On DP, master	Yes; via CM DP module
On DP, slave	Yes; via CM DP module
In AS, master	Yes
In AS, slave	Yes
On Ethernet via NTP	Yes
Interfaces	
Number of PROFINET interfaces	1
Number of PROFIBUS interfaces	1; via CM DP module
With optical interface	Yes; via BusAdapter
1st interface	

	6ES7512-1DK01-0AB0
Interface hardware	
Number of ports	3; 1st integrated + 2nd via BusAdapter
Integrated switch	Yes
RJ45 (Ethernet)	Yes; X1 P3; opt. X1 P1 and X1 P2 via BusAdapter BA 2xRJ45
BusAdapter (PROFINET)	Yes; usable BusAdapters: BA 2x RJ45, BA 2x FC, BA 2x SCRJ, BA SCRJ / RJ45, BA SCRJ / FC, BA 2x LC, BA LC / RJ45, BA LC / FC
Protocols	
PROFINET IO controller	Yes
PROFINET IO device	Yes
SIMATIC communication	Yes
Open IE communication	Yes
Web server	Yes
Media redundancy	Yes
PROFINET IO controller	
Services	
• PG/OP communication	Yes
• S7 routing	Yes
• Isochronous mode	Yes
• Open IE communication	Yes
• IRT	Yes
• MRP	Yes; as MRP redundancy manager and/or MRP client; max. number of devices in the ring: 50
• MRPD	Requirement: IRT
• PROFIenergy	Yes
• Prioritized startup	Yes; max. 32 PROFINET devices
• Number of connectable IO devices, max.	128; a total of up to 512 distributed I/O devices can be connected via AS-i, PROFIBUS or PROFINET
• of these, IO devices with IRT, max.	64
• Number of connectable IO devices for RT, max.	128
• of these, in a line topology, max.	128
• Number of IO devices that can be activated/deactivated simultaneously, max.	8; in total over all interfaces
• Number of IO devices per tool, max.	8
• Update times	The minimum value of the update time also depends on the communication allocation setting for PROFINET IO, the number of IO devices and the amount of configured user data

	6ES7512-1DK01-0AB0
Update time with IRT	
• With send clock of 250 µs	250 µs to 4 ms; note: with IRT with isochronous mode, the minimum update time of 500 µs of the isochronous OB is decisive
• With send clock of 500 µs	500 µs to 8 ms
• With send clock of 1 ms	1 ms to 16 ms
• with send clock of 2 ms	2 ms to 32 ms
• with send clock of 4 ms	4 ms to 64 ms
• with IRT and "odd" send clock parameter assignment	Update time = set "odd" send clock (any multiple of 125 µs: 375 µs, 625 µs to 3 875 µs)
Update time with RT	
• With send clock of 250 µs	250 µs to 128 ms
• With send clock of 500 µs	500 µs to 256 ms
• With send clock of 1 ms	1 ms to 512 ms
• with send clock of 2 ms	2 ms to 512 ms
• with send clock of 4 ms	4 ms to 512 ms
PROFINET IO device	
Services	
• PG/OP communication	Yes
• S7 routing	Yes
• Isochronous mode	No
• Open IE communication	Yes
• IRT	Yes
• MRP	Yes
• MRPD	Yes; requirement: IRT
• PROFIenergy	Yes
• Shared device	Yes
• Number of IO controllers with shared device, max.	4
2nd interface	
Interface hardware	
Number of ports	1
RS 485	Yes; via CM DP module
Protocols	
PROFIBUS DP master	Yes
PROFIBUS DP slave	Yes
SIMATIC communication	Yes

	6ES7512-1DK01-0AB0
Interface hardware	
RJ45 (Ethernet)	
100 Mbps	Yes
Autonegotiation	Yes
Autocrossing	Yes
Industrial Ethernet status LED	Yes
RS 485	
Transmission rate, max.	12 Mbps
Protocols	
Number of connections	
Number of connections, max.	128
Number of connections reserved for ES/HMI/Web	10
Number of connections via integrated interfaces	88
Number of connections per CP/CM	32
Number of S7 routing connections	16
SIMATIC communication	
S7 communication, as server	Yes
S7 communication, as client	Yes
User data per job, max.	See online help (S7 communication, user data size)
Open IE communication	
TCP/IP	Yes
• Data length, max.	64 KB
• Multiple passive connections per port, supported	Yes
ISO-on-TCP (RFC1006)	Yes
• Data length, max.	64 KB
UDP	Yes
• Data length, max.	1472 bytes
DHCP	No
SNMP	Yes
DCP	Yes
LLDP	Yes
Web server	
HTTP	Yes; standard and user-defined pages
HTTPS	Yes; standard and user-defined pages

	6ES7512-1DK01-0AB0
PROFIBUS DP master	
Number of connections, max.	48
Services	
• PG/OP communication	Yes
• S7 routing	Yes
• Data record routing	Yes
• Isochronous mode	No
• Constant bus cycle time	No
• Number of DP slaves	125; a total of up to 512 distributed I/O devices can be connected via AS-i, PROFIBUS or PROFINET
• Activation/deactivation of DP slaves	Yes
OPC UA	
OPC UA server	Yes; Data Access (Read, Write, Subscribe), Runtime license required
• Application authentication	Yes
• Security Policies	Available Security Policies: None, Basic128Rsa15, Basic256Rsa15, Basic256Sha256
• User authentication	"Anonymous" or with user name and password
Additional protocols	
MODBUS	Yes; MODBUS TCP
Media redundancy	
Switchover time in the case of cable break, typ.	200 ms; with MRP; bumpless with MRPD
Number of devices in the ring, max.	50
Isochronous mode	
Isochronous mode (application synchronized up to terminal)	Yes; only with PROFINET; with a minimum OB 6x cycle of 625 µs
S7 signaling functions	
Number of stations that can be logged in for signaling functions, max.	32
Block-related alarms	Yes
Number of configurable interrupts, max.	5000
Number of simultaneously active interrupts in interrupt pool	
• Number of reserved user interrupts	300
• Number of reserved interrupts for system diagnostics	100
• Number of reserved interrupts for motion control technology objects	80

	6ES7512-1DK01-0AB0
Test/commissioning functions	
Shared commissioning (Team Engineering)	Yes; parallel online access possible for up to 3 engineering systems
Status block	Yes; up to 8 simultaneously (in total over all ES clients)
Single-step	No
Status/modify	
Status/modify tag	Yes
Tags	Inputs/outputs, bit memory, DB, peripheral inputs/outputs, timers, counters
Number of tags, max.	
• Of which are status tags, max.	200; per job
• Of which are modify tags, max.	200; per job
Forcing	
Forcing	Yes
Forcing, tags	Peripheral inputs/outputs
Number of tags, max.	200
Diagnostics buffer	
Available	Yes
Number of entries, max.	1000
• Of which are power failure-proof	500
Traces	
Number of configurable traces	4; up to 512 KB data possible per trace
Interrupts/diagnostics/status information	
Diagnostics display LED	
RUN/STOP LED	Yes
ERROR LED	Yes
MAINT LED	Yes
Monitoring of the supply voltage (PWR LED)	Yes
Connection display LINK TX/RX	Yes
Supported technology objects	
Motion control	Yes; note: the number of axes affects the cycle time of the PLC program; selection guide via the TIA Selection Tool or SIZER
• Number of available motion control resources for technology objects (except cams)	800
• Required Motion Control resources	
– per speed-controlled axis	40
– per positioning axis	80
– per synchronous axis	160
– per external encoder	80
– per output cam	20
– per cam track	160
– per measuring input	40

	6ES7512-1DK01-0AB0
Controller	
• PID_Compact	Yes; universal PID controller with integrated optimization
• PID_3Step	Yes; PID controller with integrated optimization for valves
• PID temp	Yes; PID controller with integrated optimization for temperature
Counting and measuring	
• High-speed counter	Yes
Standards, approvals, certificates	
Suitable for safety functions	No
Highest safety class achievable in safety mode	
Performance level according to EN ISO 13849-1:2008	None
SIL according to IEC 61508	No
Ambient conditions	
Ambient temperature during operation	
Horizontal mounting position, min.	0 °C
Horizontal mounting position, max.	60 °C
Vertical mounting position, min.	0 °C
Vertical mounting position, max.	50 °C
Ambient temperature during storage/transport	
Min.	-40 °C
Max.	70 °C
Configuring	
Programming	
Programming language	
• LAD	Yes
• FBD	Yes
• STL	Yes
• SCL	Yes
• GRAPH	Yes
Know-how protection	
User program protection	Yes
Copy protection	Yes
Block protection	Yes
Access protection	
Protection level: Write protection	Yes
Protection level: Read/write protection	Yes
Protection level: Complete protection	Yes

	6ES7512-1DK01-0AB0
Cycle time monitoring	
Low limit	Configurable minimum cycle time
High limit	Configurable maximum cycle time
Dimensions	
Width	100 mm
Height	117 mm
Depth	75 mm
Weights	
Weight, approx.	310 g

Technical specifications of the BusAdapter BA 2×RJ45

Table 5- 1 Technical specifications of the BusAdapter BA 2×RJ45

	6ES7193-6AR00-0AA0
Interfaces	
PROFINET IO	
Number of PROFINET interfaces	1
RJ45	Yes; 2 x
Cable length	
• Copper cables	100 m
Dimensions	
Width	20 mm
Height	69.5 mm
Depth	59 mm
Weights	
Weight, approx.	46 g

Technical specifications of the BusAdapter BA 2×FC

Table 5- 2 Technical specifications of the BusAdapter BA 2×FC

	6ES7193-6AF00-0AA0
Interfaces	
PROFINET IO	
Number of PROFINET interfaces	1
FC (FastConnect)	Yes; 2 x
Cable length	
• Copper cables	100 m
Dimensions	
Width	20 mm
Height	69.5 mm
Depth	59 mm
Weights	
Weight, approx.	53 g

Technical specifications of the BusAdapter BA 2×LC

Table 5- 3 Technical specifications of the BusAdapter BA 2×LC

	6ES7193-6AG00-0AA0
Interfaces	
Number of PROFINET interfaces	1; 2 ports (switch) LC multimode glass-fiber
PROFINET IO	
RJ45	No
FC (FastConnect)	No
SCRJ	0
LC	2
Cable length	
• Multimode gradient-index fiber 50/125 µm	3 km
• Multimode gradient-index fiber 62.5/125 µm	3 km
Ambient conditions	
Ambient temperature during operation	
Min.	0 °C
Max.	60 °C
Dimensions	
Width	20 mm
Height	69.5 mm
Depth	59 mm
Weights	
Weight, approx.	40 g

Technical specifications of the BusAdapter BA 2×SCRJ

Table 5- 4 Technical specifications of the BusAdapter BA 2×SCRJ

	6ES7193-6AP00-0AA0
Interfaces	
PROFINET IO	
Number of PROFINET interfaces	1; 2 ports (switch) SCRJ FO
SCRJ	2
Cable length	
• PCF	100 m
• Plastic FOC (POF)	50 m
• PCF-GI	300 m
Dimensions	
Width	20 mm
Height	69.5 mm
Depth	59 mm
Weights	
Weight, approx.	50 g

Technical specifications of the BusAdapter BA LC/RJ45

Table 5- 5 Technical specifications of the BusAdapter BA LC/RJ45

	6ES7193-6AG20-0AA0
Interfaces	
Number of PROFINET interfaces	1; 2 ports (switch) LC / RJ45
PROFINET IO	
RJ45	Yes; 1x
FC (FastConnect)	No
SCRJ	0
LC	1
Cable length	
• Copper cables	100 m
• Multimode gradient-index fiber 50/125 µm	3 km
• Multimode gradient-index fiber 62.5/125 µm	3 km
Ambient conditions	
Ambient temperature during operation	
Min.	0 °C
Max.	60 °C
Dimensions	
Width	20 mm
Height	69.5 mm
Depth	59 mm
Weights	
Weight, approx.	32 g

Technical specifications of the BusAdapter BA LC/FC

Table 5- 6 Technical specifications of the BusAdapter BA LC/FC

	6ES7193-6AG40-0AA0
Interfaces	
Number of PROFINET interfaces	1
PROFINET IO	
RJ45	No
FC (FastConnect)	Yes; 1x
SCRJ	0
LC	1
Cable length	
• Copper cables	100 m
• Multimode gradient-index fiber 50/125 µm	3 km
• Multimode gradient-index fiber 62.5/125 µm	3 km
Ambient conditions	
Ambient temperature during operation	
Min.	0 °C
Max.	60 °C
Dimensions	
Width	20 mm
Height	69.5 mm
Depth	59 mm
Weights	
Weight, approx.	50 g

Technical specifications of the BusAdapter BA SCRJ/RJ45

Table 5- 7 Technical specifications of the BusAdapter BA SCRJ/RJ45

	6ES7193-6AP20-0AA0
Interfaces	
PROFINET IO	
Number of PROFINET interfaces	1; 2 ports (SCRJ + RJ45)
RJ45	Yes; 1 x
SCRJ	1
Cable length	
• PCF	100 m
• Plastic FOC (POF)	50 m
• PCF-GI	300 m
• Copper cables	100 m
Dimensions	
Width	20 mm
Height	69.5 mm
Depth	59 mm
Weights	
Weight, approx.	50 g

Technical specifications of the BusAdapter BA SCRJ/FC

Table 5- 8 Technical specifications of the BusAdapter BA SCRJ/FC

	6ES7193-6AP40-0AA0
Interfaces	
PROFINET IO	
Number of PROFINET interfaces	1; 2 ports (SCRJ + FC)
FC (FastConnect)	Yes; 1 x
SCRJ	1
Cable length	
• PCF	100 m
• Plastic FOC (POF)	50 m
• PCF-GI	300 m
• Copper cables	100 m
Dimensions	
Width	20 mm
Height	69.5 mm
Depth	59 mm
Weights	
Weight, approx.	50 g

General technical specifications

You can find information on the general technical specifications, such as standards and approvals, electromagnetic compatibility, protection class, etc., in the system manual ET 200SP distributed I/O system (http://support.automation.siemens.com/WW/view/en/58649293).

Dimension drawing

A

This section contains a dimension drawing of the module mounted on a mounting rail. Always observe the specified dimensions for installation in cabinets, control rooms, etc.

Dimension drawing of the CPU 1512SP-1 PN

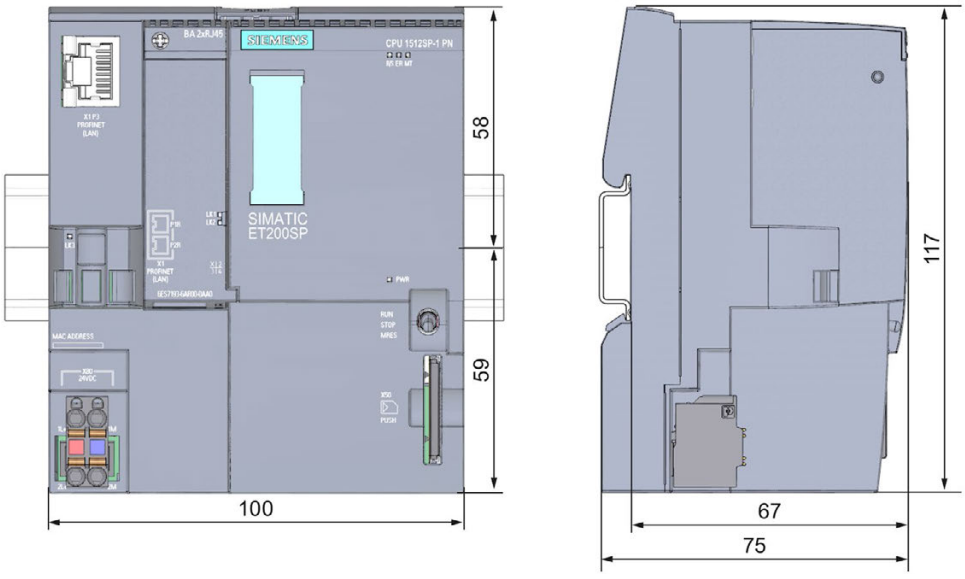

Figure A-1 Dimension drawing CPU 1512SP-1 PN

SIEMENS

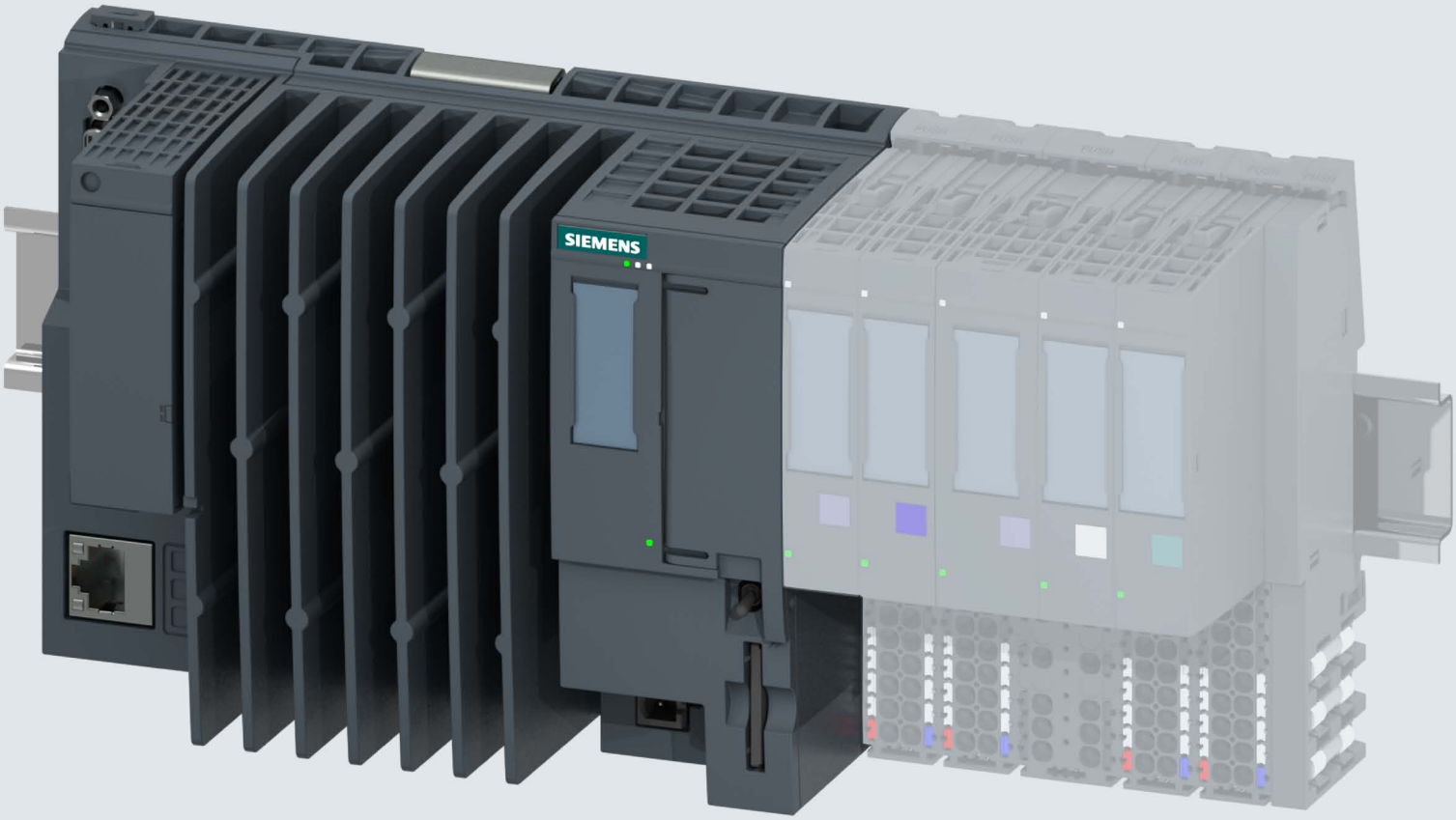

Manual

SIMATIC

ET 200SP Open Controller

CPU 1515SP PC (F) (6ES7677-2xAxx-0xx0)

Edition 05/2017

support.industry.siemens.com

SIEMENS

SIMATIC

ET 200SP Open Controller CPU 1515SP PC (F)

Manual

Preface

Documentation guide 1

Safety notes 2

Product overview 3

Installing 4

Connection 5

Diagnostics, error and system alarm 6

Commissioning 7

Functions 8

Maintenance 9

Technical data 10

Accessories/spare parts A

Abbreviations B

Troubleshooting C

05/2017

A5E32701806-AC

Legal information

Warning notice system

This manual contains notices you have to observe in order to ensure your personal safety, as well as to prevent damage to property. The notices referring to your personal safety are highlighted in the manual by a safety alert symbol, notices referring only to property damage have no safety alert symbol. These notices shown below are graded according to the degree of danger.

⚠ DANGER

indicates that death or severe personal injury **will** result if proper precautions are not taken.

⚠ WARNING

indicates that death or severe personal injury **may** result if proper precautions are not taken.

⚠ CAUTION

indicates that minor personal injury can result if proper precautions are not taken.

NOTICE

indicates that property damage can result if proper precautions are not taken.

If more than one degree of danger is present, the warning notice representing the highest degree of danger will be used. A notice warning of injury to persons with a safety alert symbol may also include a warning relating to property damage.

Qualified Personnel

The product/system described in this documentation may be operated only by **personnel qualified** for the specific task in accordance with the relevant documentation, in particular its warning notices and safety instructions. Qualified personnel are those who, based on their training and experience, are capable of identifying risks and avoiding potential hazards when working with these products/systems.

Proper use of Siemens products

Note the following:

⚠ WARNING

Siemens products may only be used for the applications described in the catalog and in the relevant technical documentation. If products and components from other manufacturers are used, these must be recommended or approved by Siemens. Proper transport, storage, installation, assembly, commissioning, operation and maintenance are required to ensure that the products operate safely and without any problems. The permissible ambient conditions must be complied with. The information in the relevant documentation must be observed.

Trademarks

All names identified by ® are registered trademarks of Siemens AG. The remaining trademarks in this publication may be trademarks whose use by third parties for their own purposes could violate the rights of the owner.

Disclaimer of Liability

We have reviewed the contents of this publication to ensure consistency with the hardware and software described. Since variance cannot be precluded entirely, we cannot guarantee full consistency. However, the information in this publication is reviewed regularly and any necessary corrections are included in subsequent editions.

Siemens AG
Division Digital Factory
Postfach 48 48
90026 NÜRNBERG
GERMANY

A5E32701806-AC
℗ 04/2017 Subject to change

Copyright © Siemens AG 2014 - 2017.
All rights reserved

Preface

Purpose of the documentation

This manual supplements the system manual for the ET 200SP distributed I/O system. Functions that generally relate to the system are described in this manual.

The information contained in this product manual and the system / function manuals enable you put the CPU 1515SP PC (F) into operation.

Basic knowledge required

The system must be operated and used by qualified staff only.
The following knowledge is required:

- Installation guideline for SIMATIC ET 200SP
- Programming with STEP 7
- PC based automation with an S7-1500 software controller and with WinCC Runtime Advanced
- Basic knowledge of PC technology
- Windows Embedded Standard 7 operating system

Scope of validity of the documentation

This documentation is valid for the following devices:

ET 200SP Open Controller	Article number	
	System version WES7 E 32Bit 4GB RAM	System version WES7 P 64Bit 4GB RAM
CPU 1515SP PC	6ES7677-2AA31-0EB0	6ES7677-2AA41-0FB0
CPU 1515SP PC + HMI 128PT	--	6ES7677-2AA41-0FK0
CPU 1515SP PC + HMI 512PT	--	6ES7677-2AA41-0FL0
CPU 1515SP PC + HMI 2048PT	--	6ES7677-2AA41-0FM0
CPU 1515SP PC F	6ES7677-2FA31-0EB0	6ES7677-2FA41-0FB0
CPU 1515SP PC F + HMI 128PT	--	6ES7677-2FA41-0FK0
CPU 1515SP PC F + HMI 512PT	--	6ES7677-2FA41-0FL0
CPU 1515SP PC F + HMI 2048PT	--	6ES7677-2FA41-0FM0
CPU 1515SP PC, spare part, without CFast card, without software	6ES7677-2AA40-0AA0	

Conventions

Conventions STEP 7: In this documentation, "STEP 7" is used as a synonym for all versions of the configuration and programming software "STEP 7 (TIA Portal)".

Please also observe notes marked as follows:

Note

A note contains important information on the product described in the documentation, on the handling of the product or on the section of the documentation to which particular attention should be paid.

Security information

Siemens provides products and solutions with industrial security functions that support the secure operation of plants, systems, machines and networks.

In order to protect plants, systems, machines and networks against cyber threats, it is necessary to implement – and continuously maintain – a holistic, state-of-the-art industrial security concept. Siemens' products and solutions only form one element of such a concept.

Customer is responsible to prevent unauthorized access to its plants, systems, machines and networks. Systems, machines and components should only be connected to the enterprise network or the internet if and to the extent necessary and with appropriate security measures (e.g. use of firewalls and network segmentation) in place.

Additionally, Siemens' guidance on appropriate security measures should be taken into account. For more information about industrial security, please visit (http://www.siemens.com/industrialsecurity).

Siemens' products and solutions undergo continuous development to make them more secure. Siemens strongly recommends to apply product updates as soon as available and to always use the latest product versions. Use of product versions that are no longer supported, and failure to apply latest updates may increase customer's exposure to cyber threats.

To stay informed about product updates, subscribe to the Siemens Industrial Security RSS Feed under (http://www.siemens.com/industrialsecurity).

Siemens Industry Online Support

You can find current information on the following topics quickly and easily here:

- **Product support**

  All the information and extensive know-how on your product, technical specifications, FAQs, certificates, downloads, and manuals.

- **Application examples**

  Tools and examples to solve your automation tasks – as well as function blocks, performance information and videos.

- **Services**

  Information about Industry Services, Field Services, Technical Support, spare parts and training offers.

- **Forums**

  For answers and solutions concerning automation technology.

- **mySupport**

  Your personal working area in Industry Online Support for messages, support queries, and configurable documents.

This information is provided by the Siemens Industry Online Support in the Internet (http://www.siemens.com/automation/service&support).

Industry Mall

The Industry Mall is the catalog and order system of Siemens AG for automation and drive solutions on the basis of Totally Integrated Automation (TIA) and Totally Integrated Power (TIP).

Catalogs for all the products in automation and drives are available on the Internet (https://mall.industry.siemens.com).

Information about third-party software updates

This product contains third-party software. Siemens accepts liability with respect to updates/patches for the third-party software only when these are distributed by Siemens in the context of a Software Update Service contract or officially approved by Siemens. Otherwise, updates/patches are installed at the user's own risk. You can find more information about our software update service offer under (http://w3.siemens.com/mcms/topics/en/simatic/licenses/software-update-service/Pages/Default.aspx).

Notes on protecting administrator accounts

A user with administrator rights has extensive access and manipulation possibilities.

Therefore, make sure that the administrator account is adequately protected to prevent unauthorized changes. To do this, set secure passwords and use a standard user account for regular operation. Other measures, such as the use of security policies, should be applied as required.

Table of contents

Preface 4

1 Documentation guide 11

1.1 Documentation on CPU 1515SP PC (F) 14

2 Safety notes 15

2.1 Notes on use 17

3 Product overview 18

3.1 Fail-safe option 18

3.2 Properties 19

3.3 Sample configuration 21

3.4 Components 23

3.5 Configuration of the devices 24

3.6 Operator controls and display elements 25

3.7 Scope of delivery 28

3.7.1 Unpacking the device 28

3.7.2 Scope of delivery - System version WES7 E 32Bit 4GB RAM 30

3.7.3 Scope of delivery - System version WES7 P 64Bit 4GB RAM 32

4 Installing 34

4.1 Basics 34

4.2 Hardware configuration 37

4.3 Installing CPU 1515SP PC (F) 38

5 Connection 40

5.1 Notes on connection 40

5.2 Terminal and block diagram 41

5.3 Electrical configuration 42

5.4 Connecting devices to networks 44

5.5 Securing cables 44

6 Diagnostics, error and system alarm 46

6.1 Status and error display 46

7 Commissioning 49

7.1 Notes on commissioning 49

7.2 Initial commissioning 50

7.3 Initial configuration of an Open Controller 53

7.4 Installing license keys 55

7.5 Windows Security Center 57

7.6 Switching CPU 1515SP PC (F) on/off 58

8 Functions 59

8.1 Monitoring functions 59

8.2 Retentive memory NVRAM 60

8.3 BIOS description 61
8.3.1 Introduction 61
8.3.2 Starting BIOS setup 62
8.3.3 BIOS setup menus 63
8.3.3.1 Information menu 65
8.3.3.2 Main menu 66
8.3.3.3 Advanced menu 67
8.3.3.4 Security menu 69
8.3.3.5 Power menu 70
8.3.3.6 Boot menu 71
8.3.3.7 Exit menu 73
8.3.4 BIOS setup default settings 74
8.3.5 BIOS update 75

8.4 Power options 76

8.5 Protective functions for data carriers 77
8.5.1 Enhanced Write Filter (EWF) 78
8.5.2 File-Based Write Filter (FBWF) 82

9 Maintenance 84

9.1 Backing up and restoring data 84

9.2 Change partitioning 85
9.2.1 Partitions in the delivery state 85
9.2.2 Change partitioning 86

9.3 Restoring the delivery state 92

9.4 Restoring delivery state using USB stick 95

9.5 Updating software 97

9.6 Windows Embedded Standard 7 98

9.7 Sending the device to customer service 99

9.8 Removing and inserting the CFast card 100

10 Technical data 101

10.1 Standards and approvals 101

10.2 Electromagnetic compatibility 105

10.3 Shipping and storage conditions 108

10.4 Mechanical and climatic ambient conditions 108

10.5 Information on insulation, protection class, degree of protection and rated voltage 110

10.6 Use of the ET 200SP in zone 2 potentially explosive atmospheres 111

10.7 Module data 112
10.7.1 CPU 1515SP PC, system version WES7 E 32Bit 4GB RAM 112
10.7.2 CPU 1515SP PC F, system version WES7 E 32Bit 4GB RAM 115
10.7.3 CPU 1515SP PC, system version WES7 E 32Bit 4GB RAM - spare part 118
10.7.4 CPU 1515SP PC, system version WES7 P 64Bit 4GB RAM 121
10.7.5 CPU 1515SP PC F, system version WES7 P 64Bit 4GB RAM 124
10.7.6 CPU 1515SP PC, system version WES7 E 64Bit 4GB RAM - spare part 127
10.7.7 CPU 1515SP PC (F) + HMI 130
10.7.8 S7-1500 Software Controller CPU 1505SP (F) 130

10.8 Dimension drawings 131
10.8.1 CPU 1515SP PC (F) 131

A Accessories/spare parts 133

B Abbreviations 135

C Troubleshooting 137

Glossary 138

Documentation guide

1

The documentation for the SIMATIC ET 200SP distributed I/O system is arranged into three areas.
This arrangement enables you to access the specific content you require.

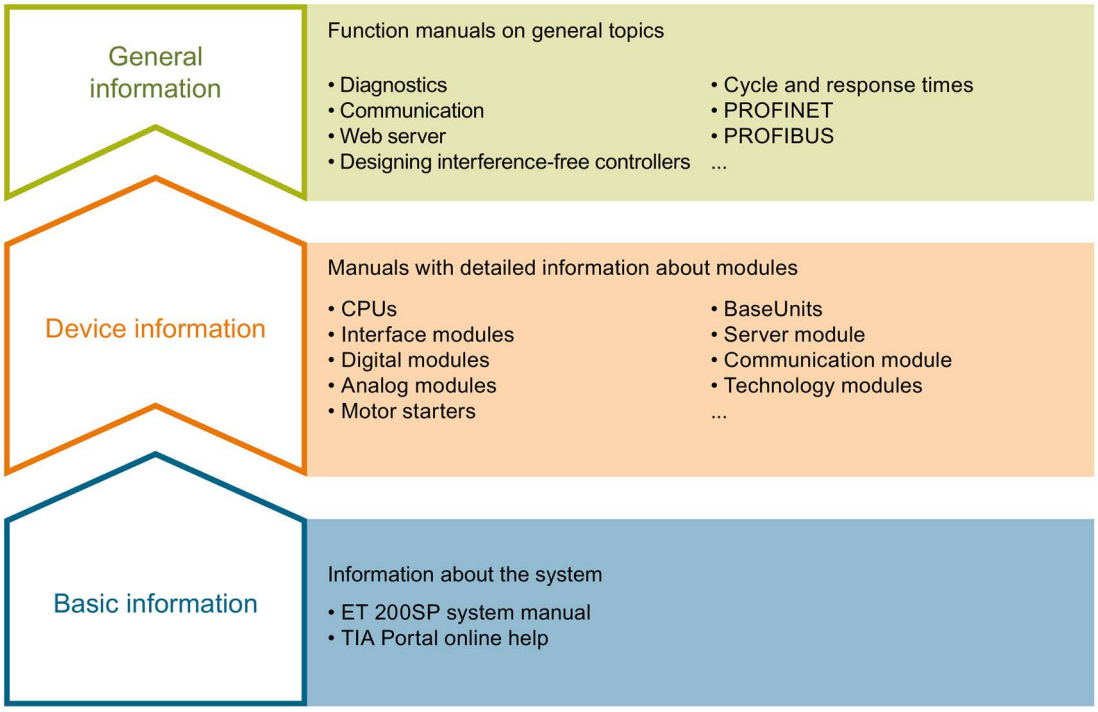

Basic information

The system manual describes in detail the configuration, installation, wiring and commissioning of the SIMATIC ET 200SP. distributed I/O system. The STEP 7 online help supports you in the configuration and programming.

Device information

Product manuals contain a compact description of the module-specific information, such as properties, wiring diagrams, characteristics and technical specifications.

General information

The function manuals contain detailed descriptions on general topics regarding the SIMATIC ET 200SP distributed I/O system, e.g. diagnostics, communication, Web server, motion control and OPC UA.

You can download the documentation free of charge from the Internet (http://w3.siemens.com/mcms/industrial-automation-systems-simatic/en/manual-overview/tech-doc-et200/Pages/Default.aspx).

Changes and supplements to the manuals are documented in a Product Information.

You can download the product information free of charge from the Internet (https://support.industry.siemens.com/cs/us/en/view/73021864).

Manual Collection ET 200SP

The Manual Collection contains the complete documentation on the SIMATIC ET 200SP distributed I/O system gathered together in one file.

You can find the Manual Collection on the Internet (http://support.automation.siemens.com/WW/view/en/84133942).

"mySupport"

With "mySupport", your personal workspace, you make the most of your Industry Online Support.

In "mySupport" you can store filters, favorites and tags, request CAx data and put together your personal library in the Documentation area. Furthermore, your data is automatically filled into support requests and you always have an overview of your current requests.

You need to register once to use the full functionality of "mySupport".

You can find "mySupport" in the Internet (https://support.industry.siemens.com/My/ww/en).

"mySupport" - Documentation

In the Documentation area of "mySupport", you have the possibility to combine complete manuals or parts of them to make your own manual.
You can export the manual in PDF format or in an editable format.

You can find "mySupport" - Documentation in the Internet (http://support.industry.siemens.com/My/ww/en/documentation).

"mySupport" - CAx Data

In the CAx Data area of "mySupport", you can have access the latest product data for your CAx or CAe system.

You configure your own download package with a few clicks.

In doing so you can select:

- Product images, 2D dimension drawings, 3D models, internal circuit diagrams, EPLAN macro files
- Manuals, characteristics, operating manuals, certificates
- Product master data

You can find "mySupport" - CAx Data in the Internet (http://support.industry.siemens.com/my/ww/en/CAxOnline).

Application examples

The application examples support you with various tools and examples for solving your automation tasks. Solutions are shown in interplay with multiple components in the system - separated from the focus in individual products.

You can find the application examples on the Internet (https://support.industry.siemens.com/sc/ww/en/sc/2054).

TIA Selection Tool

With the TIA Selection Tool, you can select, configure and order devices for Totally Integrated Automation (TIA).
This tool is the successor of the SIMATIC Selection Tool and combines the known configurators for automation technology into one tool.
With the TIA Selection Tool, you can generate a complete order list from your product selection or product configuration.

You can find the TIA Selection Tool on the Internet (http://w3.siemens.com/mcms/topics/en/simatic/tia-selection-tool).

SIMATIC Automation Tool

You can use the SIMATIC Automation Tool to run commissioning and maintenance activities simultaneously on various SIMATIC S7 stations as a bulk operation independently of the TIA Portal.

The SIMATIC Automation Tool provides a multitude of functions:

- Scanning of a PROFINET/Ethernet network and identification of all connected CPUs
- Address assignment (IP, subnet, gateway) and station name (PROFINET device) to a CPU
- Transfer of the data and the programming device/PC time converted to UTC time to the module
- Program download to CPU
- Operating mode switchover RUN/STOP
- Localization of the CPU by means of LED flashing
- Reading out CPU error information
- Reading the CPU diagnostic buffer
- Reset to factory settings
- Updating the firmware of the CPU and connected modules

You can find the SIMATIC Automation Tool on the Internet (https://support.industry.siemens.com/cs/ww/en/view/98161300).

PRONETA

With SIEMENS PRONETA (PROFINET network analysis), you analyze the plant network during commissioning. PRONETA features two core functions:

- The topology overview independently scans PROFINET and all connected components.
- The IO check is a fast test of the wiring and the module configuration of a system.

You can find SIEMENS PRONETA on the Internet (https://support.industry.siemens.com/cs/ww/en/view/67460624).

1.1 Documentation on CPU 1515SP PC (F)

The following additional documentation is required for using the CPU 1515SP PC (F):

- Operating manual S7-1500 software controller (http://support.automation.siemens.com/WW/view/en/109249299)
- System manual WinCC Advanced V14 (http://support.automation.siemens.com/WW/view/en/109742297)
- System manual ET 200SP distributed I/O system (http://support.automation.siemens.com/WW/view/en/58649293)
- Manual Server module (http://support.automation.siemens.com/WW/view/en/63257531)

Safety notes

2

WARNING

Life-endangering voltage when control cabinet is open

If the device is installed in a control cabinet, areas or components can be under life-endangering voltage when the control cabinet is open.

Contact with these areas or components may lead to death through electric shock.

Switch off the power before opening the control cabinet.

If the device is operated in a machine in accordance with the machinery directive, the provisions of the guideline 2006/42/EC apply.

Safe operation of a plant

WARNING

Risk of fire

The device is classified for use in the area of Industrial Control Equipment as "Open Type" according to UL508. If overheating occurs, burning material may leak and cause a fire.

For this reason, observe the following information:

- For approval and operation in accordance with UL508, the device must be installed in a housing complying with UL508.
- Install the device in an enclosure that meets the requirements of sections 4.6 and 4.7.3 of the standards EN 60950-1:2006 and IEC/UL/EN/DIN-EN 60950-1.

If you have questions about the validity of installation in the planned environment, please contact our service representatives.

NOTICE

Protective measures

To ensure safe operation of a plant, you have to take suitable IT security measures, for example, network segmentation.

Seal the cover with lead to protect the CFast card with the operating system of the CPU 1515SP PC (F) against unauthorized access.

For more information on Industrial Security, refer to the Internet (http://www.siemens.com/industrialsecurity).

Repairs

⚠ WARNING
Damage caused by opening the device Unauthorized opening of and improper repairs to the device may result in substantial damage to equipment or endanger the user. Only authorized personnel are permitted to repair the device.

For additional information on repairs, see section Sending the device to customer service (Page 99).

ESD guidelines

Modules containing electrostatic sensitive devices (ESDs) can be identified by the following label:

Strictly follow the guidelines mentioned below when handling modules which are sensitive to ESD:

- Before working with modules with ESD, you need to ensure that you are free of electrostatic charge (e.g. by touching a grounded object).
- All devices and tools must be free of static charge.
- Always pull the mains connector and disconnect the battery before installing or removing modules which are sensitive to ESD.
- Handle modules fitted with ESDs only by their edges.
- Do not touch any connector pins or conductors on modules containing ESDs.

See also

Electromagnetic compatibility (Page 105)

2.1 Notes on use

WARNING

Hazards at an unprotected machine or plant

According to the results of a risk analysis, hazards can occur at an unprotected machine. The hazards may lead to personal injury.

According to the risk analysis, the risk of injury to persons can be countered with the following measures:

- Additional protective equipment at the machine or plant. In this case, the programming, parameter assignment and wiring of the I/O used, in particular, must be performed in accordance with the safety criteria (SIL, PL or Cat.) ascertained by means of an appropriate risk analysis.
- Use of the device for its intended purpose, which can be established by performing a functional test on the plant. This allows errors in programming, parameter assignment and wiring to be detected.
- Documentation of the test results which can be entered, if required, into the relevant safety certificates.

NOTICE

Ambient conditions

Ambient conditions for which the device is not suitable can lead to faults or damage the device.

Note the following:

- Only operate the device in enclosed areas. If you do not comply with this instruction, the warranty becomes void.
- Only operate the device in accordance with the ambient conditions given in the technical specifications.
- Protect the device from dust, moisture and heat.
- Do not expose the device to direct sunlight or other strong sources of light.
- The device must not be used in places with more difficult operating conditions through corrosive vapors or gases without taking additional protective measures, for example, supply of clean air.

Product overview 3

3.1 Fail-safe option

Areas of application

F-CPUs are mainly designed for personal and machine protection. In addition to the safety program, you can also program standard applications. You can operate the F-CPUs in safety mode or in standard mode.

Reference

Information on the use of F-CPUs in safety mode is available in the programming and operating manual SIMATIC Safety - Configuring and Programming (http://support.automation.siemens.com/WW/view/en/54110126).

You can find information on using the CPU 1505SP (F) software controller in the corresponding product manual (https://support.industry.siemens.com/cs/ww/en/view/109740725) and in the F product information (https://support.industry.siemens.com/cs/ww/en/view/109478599).

3.2 Properties

Article number

6ES7677-2xAxx-0xx0

The complete article number depends on the system version and the ordering option.

View of the module

The figure below shows the CPU 1515SP PC.

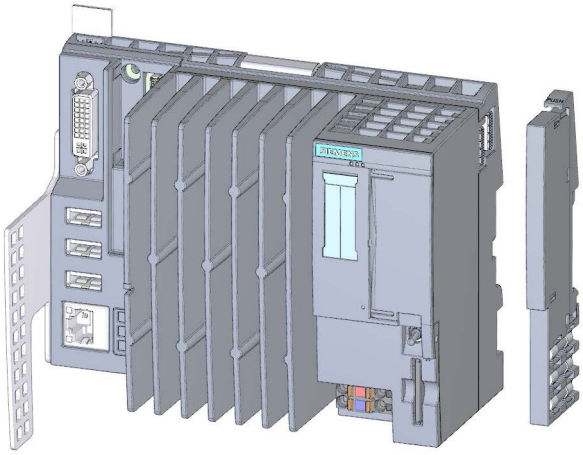

Figure 3-1 CPU 1515SP PC with supplied accessories

Properties

CPU 1515SP PC (F) is a PC based automation device in the design of the ET 200SP. It is used for control and visualization purposes. The supplied IPC DiagBase software provides basic diagnostics functions and supports you in handling the BIOS.

CPU 1515SP PC (F) has the following technical properties:

- A removable CFast card with the following pre-installations is used as storage medium:
  - Windows Embedded Standard 7 operating system
  - S7-1500 Software Controller CPU 1505SP (F)
  - Optionally with HMI: WinCC Runtime Advanced as of V14 SP1
- Interfaces
  - An interface for the exchangeable ET 200SP BusAdapters for connection of PROFINET IO (2 ports)
  - An interface for connecting devices using Industrial Ethernet (Gigabit Ethernet)
  - 3 interfaces for USB devices
  - One DVI-I interface for a monitor
  - A sealable slot for the CFast card
  - A slot for an SD/MMC card as additional optional drive
- Supply voltage 1L+ 24 V DC (SELV/PELV). The connection plug is included in the scope of delivery.
- CPU 1515SP PC (F) is designed for use in industrial environment:
  - Compact design
  - Fan-less operation
  - High robustness
- The CPU 1515SP PC (F) is approved for the degree of protection IP20 and for the installation in a control cabinet.

System versions and ordering options

System version	SIMATIC software	CFast card	Article number
WES7 E 32Bit	CPU 1505SP V2.1	30 GB	6ES7677-2AA31-0EB0
WES7 P 64Bit (multitouch functionality)	CPU 1505SP V2.1	30 GB	6ES7677-2AA41-0FB0
	CPU 1505SP V2.1 & WinCC Runtime Adv. V14 SP1 128PT	30 GB	6ES7677-2AA41-0FK0
	CPU 1505SP V2.1 & WinCC Runtime Adv. V14 SP1 512PT	30 GB	6ES7677-2AA41-0FL0
	CPU 1505SP V2.1 & WinCC Runtime Adv. V14 SP1 2048PT	30 GB	6ES7677-2AA41-0FM0
WES7 E 32Bit	CPU 1505SP F V2.1	30 GB	6ES7677-2FA31-0EB0
WES7 P 64Bit (multitouch functionality)	CPU 1505SP F V2.1	30 GB	6ES7677-2FA41-0FB0
	CPU 1505SP F V2.1 & WinCC Runtime Adv. V14 SP1 128PT	30 GB	6ES7677-2FA41-0FK0
	CPU 1505SP F V2.1 & WinCC Runtime Adv. V14 SP1 512PT	30 GB	6ES7677-2FA41-0FL0
	CPU 1505SP F V2.1 & WinCC Runtime Adv. V14 SP1 2048PT	30 GB	6ES7677-2FA41-0FM0
CPU 1515SP PC, spare part, without CFast card, without software			6ES7677-2AA40-0AA0

3.3 Sample configuration

Configuration

CPU 1515SP PC (F) is mounted on the mounting rail according to EN 60715. A modular system is formed with ET 200SP modules in the central rack.

You can use the CPU 1515SP PC (F) as PROFINET IO controller. The PROFINET IO devices are connected with the SIMATIC BusAdapter BA 2xRJ45 via the ports of the interface X1 PN (LAN).

Devices can be connected via Industrial Ethernet using the integrated interface X2 PN/IE (LAN).

The connection to PROFIBUS can be made using the DP master module.

Sample configuration

The figure below shows an example configuration with CPU 1515SP PC (F).

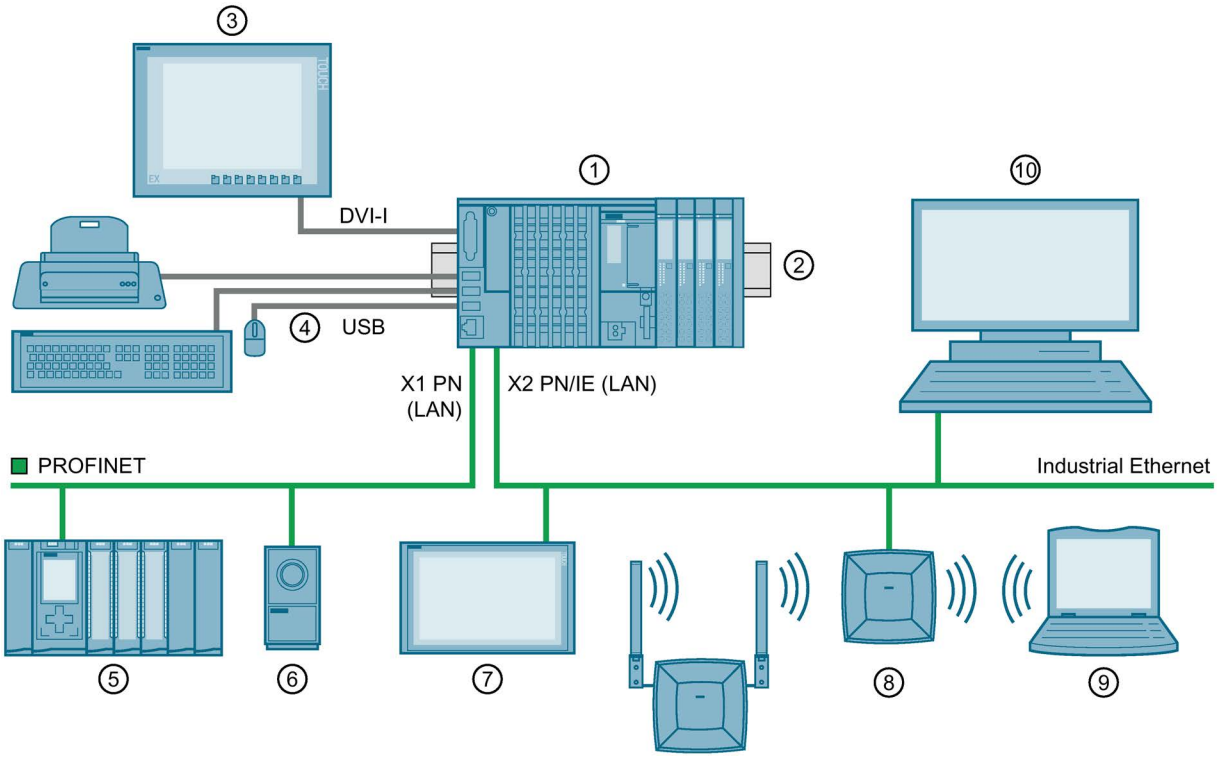

Figure 3-2 Example configuration with the CPU 1515SP PC (F)

① CPU 1515SP PC (F), I/O module, server module
② Mounting rail
③ Flat Panel - Wide Screen Display
④ USB devices: Keyboard, mouse, printer ...
⑤ PROFINET IO device
⑥ Camera
⑦ Industrial Thin Client ITC
⑧ SCALANCE W786
⑨ Field programming device
⑩ PC/Programming device

3.4 Components

Components of the CPU 1515SP PC (F)

The table below contains an overview of the components of the CPU 1515SP PC (F):

Table 3- 1 Components of the CPU 1515SP PC

Component	Function	Figure
Mounting rail in accordance with EN 60715	The mounting rail is the module carrier for the CPU 1515SP PC (F).	
CPU 1515SP PC (F)	CPU with strain relief and white reference labels	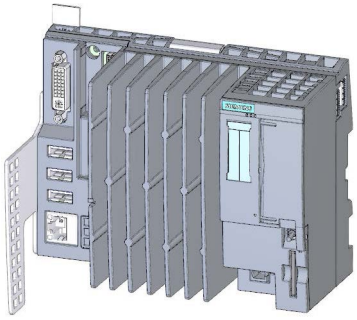
BusAdapter	The BusAdapter allows free selection of the connection technology for PROFINET IO. The following versions are available for CPU 1515SP PC (F): • For standard RJ45 plug (BA 2×RJ45) ① • For direct connection of the bus cable (BA 2×FC) ②	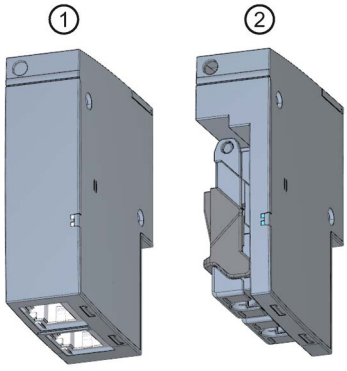
Server module	The server module completes the configuration of the CPU 1515SP PC (F) with I/O modules. The server module is included in the CPU's scope of delivery.	

3.5 Configuration of the devices

Front view

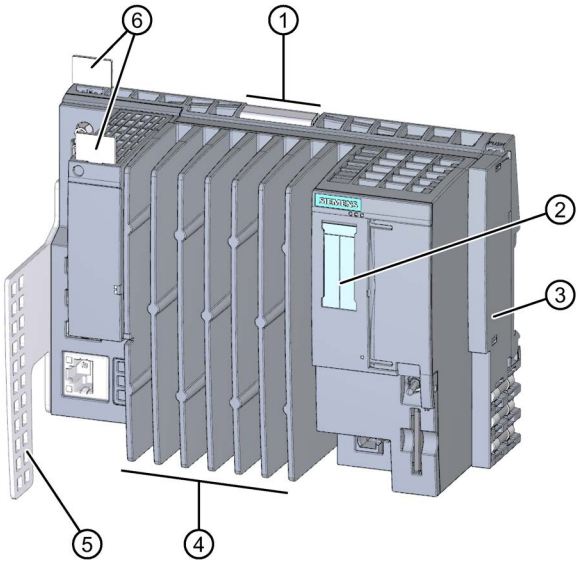

Figure 3-3 Front view CPU 1515SP PC (F)

① Mounting rail release mechanism

② Labeling strips

③ Server module

④ Cooling fins

⑤ Strain relief

⑥ Reference labels

3.6 Operator controls and display elements

Front view of the module

The figure below shows the operator control and connection elements of the CPU 1515SP PC (F).

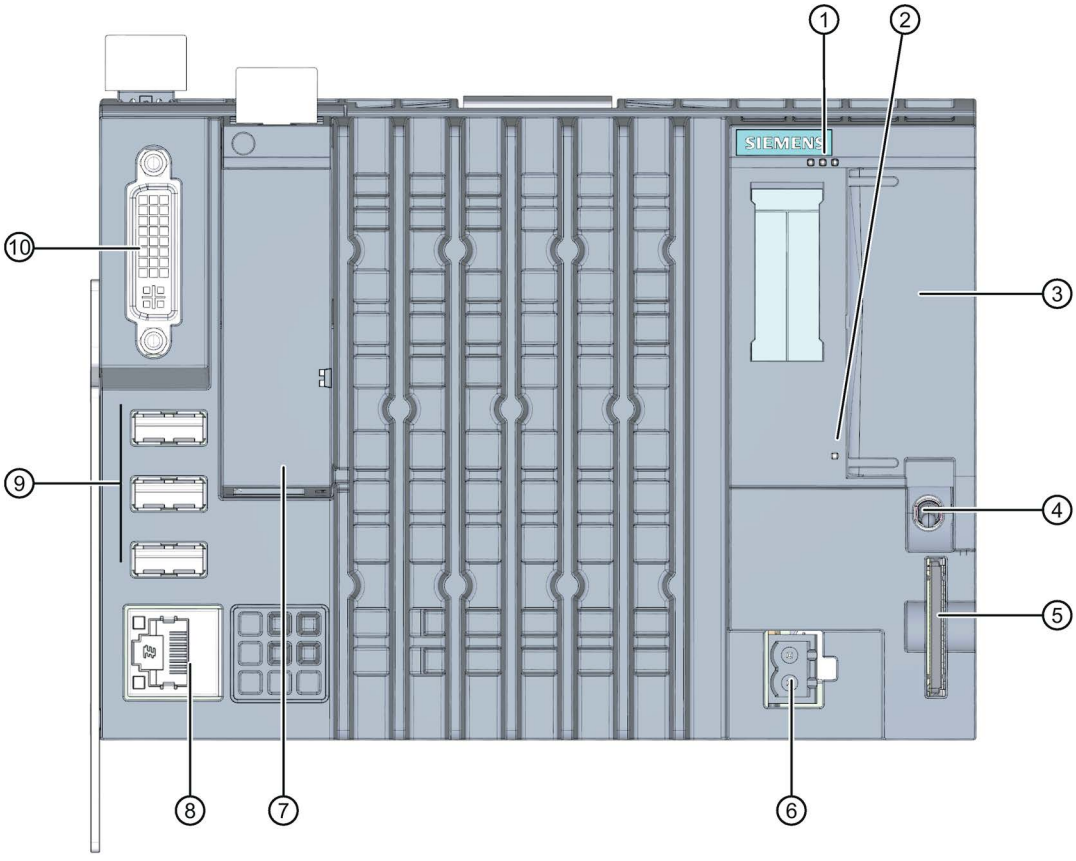

Figure 3-4 View of the CPU 1515SP PC (F)

① LED displays for the current operating mode and diagnostic status of the CPU
② Power LED
③ **X50:** Slot for the CFast card (flash memory), sealable
④ Mode selector
⑤ **X51:** Slot for an optional SD/MMC card
⑥ **X80:** Connector for 24 V DC supply voltage
⑦ **X1 PROFINET (LAN):** Slot for BusAdapter for connection of PROFINET IO; status display for PROFINET
⑧ **X2 PN/IE (LAN):** GbE Ethernet connection with integrated display
⑨ **X60, X61, X62:** 3 USB connections
⑩ **X70 DVI-I:** Connection for monitor

Slot for CFast card

The operating system, Runtime software and project are installed on the supplied SIMATIC CFast card. The CFast card is the only mass storage device of the CPU 1515SP PC (F).

Note

Unauthorized access

Seal the cover of the shaft with lead to protect the CFast card with the operating system of the CPU 1515SP PC (F) against unauthorized access and manipulation.

Slot for SD/MMC card

You can use a SIMATIC SD or MMC card as additional storage drive. This drive can be used to store data via Windows, for example a backup, but not the operating system, the Runtime software or the project.

Permitted SD cards: SDHC up to 32 GB, SDXC up to 2 TB.

USB connections

Two USB high-current (500 mA) interfaces and one low-current (100 mA) interface can be used at the same time.

MAC addresses

The MAC address consists of a 3-byte manufacturer ID and a 3-byte device ID (consecutive number).

Each device is already assigned four MAC addresses in the factory. The front of the CPU 1515SP PC (F) is lasered with the MAC addresses 1 and 4. With the MAC addresses 2 and 3, the consecutive numbers are incremented. If, for example, the first MAC address is 08-00-06-6B-80-C0, the second MAC address is 08-00-06-6B-80-C1.

Table 3- 2 Assignment of the MAC addresses

	Assignment
MAC address 1	X2 PN/IE (LAN) • Visible in STEP 7 for accessible devices • Lasered on the front of the CPU (start of the number range)
MAC address 2	X1 PROFINET (LAN) • Visible in STEP 7 for accessible devices
MAC address 3	Port X1 P1 (required for LLDP, for example)
MAC address 4	Port X1 P2 R (required for LLDP, for example) • Lasered on the front of the CPU (end of the number range)

Connector for supply voltage

CPU 1515SP PC (F) has a 2-pole terminal for the power supply.

The connection plug for the supply voltage is plugged in when the CPU is shipped from the factory.

Mode selector

Use the mode selector to set the CPU operating mode.

Table 3- 3 Mode selector positions

Position	Meaning	Description
RUN	Operating mode RUN[1]	The CPU is processing the user program.
STOP	Operating mode STOP[1]	The CPU is not processing the user program. The outputs are set to a "safe" state.
MRES	Memory reset	**For active S7-1500 software controller**[2] only: CPU memory reset

1 RUN and STOP indicate the **selected** operating state. The LED displays RUN and STOP display the **actual** operating state of the CPU 1515SP PC (F).

2 See the S7-1500 software controller manual

3.7 Scope of delivery

3.7.1 Unpacking the device

When unpacking

When unpacking, make sure to check the following:

- Check packaging and contents for visible damage from transport.
- Check the delivery for completeness.
  Please inform your Siemens contact partner should you determine damages from transport or any irregularities.
- Keep the supplied documentation and licenses. They belong to the device and are the proof that you have purchased the software preinstalled on the CFast card.
  Documentation and licenses are required for initial commissioning and for any questions that arise.
- Keep the original packaging in case the device needs to be transported again.

NOTICE
Damage to the device during transport and storage If a device is transported or stored without packaging, it is unprotected from shocks, vibrations, pressure and moisture. Damaged packaging indicates that environmental conditions have already had a significant impact on the device. The device might be damaged. Do not dispose of the original packaging. Pack the device for transport and storage.

NOTICE
Damage to the device caused by condensation If the device was exposed to low temperatures or extreme variations in temperature during transport, this may cause moisture to build up on or in the device (condensation). Moisture can cause short-circuits in the electrical circuits and damage the device. Proceed as follows to avoid damage: • Store the device in dry conditions. • Make sure it adapts to room temperature before commissioning. • Do not expose the device to direct heat radiation from a heater. • If condensation has developed, wait for approximately 12 hours or until the device is completely dry before you switch it on.

WARNING

Electric shock and fire hazard from damaged device

A damaged device can carry dangerous voltage and trigger a fire in the machine or plant. A damaged device has unpredictable properties and states.

Death or severe injury could occur.

Make sure that the damaged device is not installed and commissioned accidentally. Label the damaged device correspondingly and keep it locked up. Have the device repaired without delay.

Identification data

The identification data can be used to clearly identify the device when a repair is necessary.

Make a note of the following data for your devices:

- The article number of the CPU 1515SP PC (F) is located on the order form.
- Depending on the scope of delivery, the "Certificate-of-License" is included in the license verification for the S7-1500 software controller and for WinCC Runtime Advanced V14 SP1.
- The "Microsoft Windows Product Key" can be found on the "Certificate of Authenticity" label.
- The first and the last MAC addresses are located on the device.

3.7.2 Scope of delivery - System version WES7 E 32Bit 4GB RAM

Note

The designation **CPU 1515SP PC** with the article number 6ES7677-**2AA40-0AA0** is always on the device regardless of the order option.

The following components are included in the scope of delivery of the CPU 1515SP PC:

Order option	**CPU 1515SP PC**	**CPU 1515SP PC (spare part)**
Article number	6ES7677-2AA31-0EB0	6ES7677-2AA40-0AA0
CPU	X	X
Strain relief with fixing screws	X	X
Server module	X	X
30 GB CFast card with the following pre-installations:		
• Windows Embedded Standard 7 E operating system	X	–
• S7-1500 Software Controller CPU 1505SP	X	–
• WinCC RT Advanced as of V14 SP1	–	–
Restore DVD for image restore	X	–
"Documentation and Drivers" DVD	X	–
Windows-Certificate of Authenticity (CoA)	X	–
Certificate of License (COL)	X	–
USB stick with SIMATIC license keys	X	–
Product information	X	–

The following components are contained in the scope of delivery of the CPU 1515SP PC F:

Order option	CPU 1515SP PC F
Article number	6ES7677-2FA31-0EB0
CPU	X
Strain relief with fixing screws	X
Server module	X
30 GB CFast card with the following pre-installations:	
• Windows Embedded Standard 7 E operating system	X
• S7-1500 Software Controller CPU 1505SP F	X
• WinCC RT Advanced as of V14 SP1	–
Restore DVD for image restore	X
"Documentation and Drivers" DVD	X
Windows-Certificate of Authenticity (CoA)	X
Certificate of License (COL)	X
USB stick with SIMATIC license keys	X
Product information	X

3.7.3 Scope of delivery - System version WES7 P 64Bit 4GB RAM

Note

The designation **CPU 1515SP PC** with the article number 6ES7677-**2AA40-0AA0** is always on the device regardless of the order option.

The following components are included in the scope of delivery of the CPU 1515SP PC:

Order option	**CPU 1515SP PC**	**CPU 1515SP PC + HMI**	**CPU 1515SP PC (spare part)**
Article number	6ES7677-2AA41-0FB0	6ES7677-2AA41-0FK0 HMI 128PT 6ES7677-2AA41-0FL0 HMI 512PT 6ES7677-2AA41-0FM0 HMI 2048PT	6ES7677-2AA40-0AA0
CPU	X	X	X
Strain relief with fixing screws	X	X	X
Server module	X	X	X
30 GB CFast card with the following pre-installations:			
• Windows Embedded Standard 7 P operating system	X	X	–
• S7-1500 Software Controller CPU 1505SP	X	X	–
• WinCC RT Advanced as of V14 SP1	–	X	–
Restore DVD for image restore	X	X	–
"Documentation and Drivers" DVD	X	X	–
Windows Certificate of Authenticity (CoA)	X	X	–
Certificate of License (CoL)	X	X	–
USB stick with SIMATIC license keys	X	X	–
Product information	X	X	–

The following components are contained in the scope of delivery of the CPU 1515SP PC F:

Order option	CPU 1515SP PC F	CPU 1515SP PC F + HMI
Article number	6ES7677-2FA41-0FB0	6ES7677-2FA41- • 0FK0 HMI 128PT • 0FL0 HMI 512PT • 0FM0 HMI 2048PT
CPU	X	X
Strain relief with fixing screws	X	X
Server module	X	X
30 GB CFast card with the following pre-installations:		
• Windows Embedded Standard 7 P operating system	X	X
• S7-1500 Software Controller CPU 1505SP F	X	X
• WinCC RT Advanced as of V14 SP1	–	X
Restore DVD for image restore	X	X
"Documentation and Drivers" DVD	X	X
Windows Certificate of Authenticity (CoA)	X	X
Certificate of License (CoL)	X	X
USB stick with SIMATIC license keys	X	X
Product Information	X	X

Installing 4

4.1 Basics

Introduction

The CPU 1515SP PC (F) is an open operation resource. This means that you may only install it in enclosures, cabinets or electrical operating areas. These housings, cabinets or electrical operating areas must only be accessible with a key or tool. Access may only be possible for instructed or authorized personnel.

Installation location

CPU 1515SP PC (F) must be installed in a suitable enclosure or suitable control cabinet with at least IP54 degree of protection according to EN 60529 and the ambient conditions for the operation of the equipment must be taken into consideration.

Installation position

You can install the ET 200SP distributed I/O system in any position. The preferred mounting position is horizontal mounting on a vertical wall.

The restrictions regarding ambient temperature and maximum configuration apply to the CPU 1515SP PC (F) depending on the mounting position.

NOTICE
Damage to the modules Modules can be damaged if exposed to ambient temperatures higher than permitted. The following ambient temperatures must not be exceeded during operation: • Horizontal mounting – 60 °C for an installation with up to 32 I/O modules. – 55 °C for an installation with up to 64 I/O modules. • Vertical mounting – 50 °C for an installation with up to 32 I/O modules.

For more detailed information, refer to section Mechanical and climatic ambient conditions (Page 108)

Mounting rail

CPU 1515SP PC (F) is mounted on a mounting rail according to EN 60715 (35 × 7.5 mm and/or 35 × 15 mm).

You must ground the mounting rail separately in the control cabinet. Exception: If you install the rail on grounded, zinc-plated mounting plates, there is no need to ground the rail separately.

Note

If the ET 200SP distributed I/O system is exposed to vibration and shock loads, both ends of the ET 200SP system assembly must be mechanically fixed to the mounting rail (e.g using 8WA1010-1PH01 ground terminals). This measure prevents the ET 200SP from shifting to the side.

Note

If the ET 200SP distributed I/O system is exposed to high vibration and shock load, we recommend that you screw the mounting rail to the mounting surface at intervals of approx. 200 mm.

Suitable surface finishes are:

- Steel strip in accordance with Appendix A of EN 60715 or
- Tinned steel strip. We recommend the use of the mounting rails in section Accessories/spare parts (Page 133).

Note

Mounting rails of other manufacturers

If you use mounting rails from other manufacturers, ensure that they have the properties required for your climatic and mechanical ambient conditions.

Check whether the mounting rails meet the requirements for a protective conductor.

Minimum clearances

Maintain the following minimum clearances when installing or dismantling the CPU 1515SP PC (F).

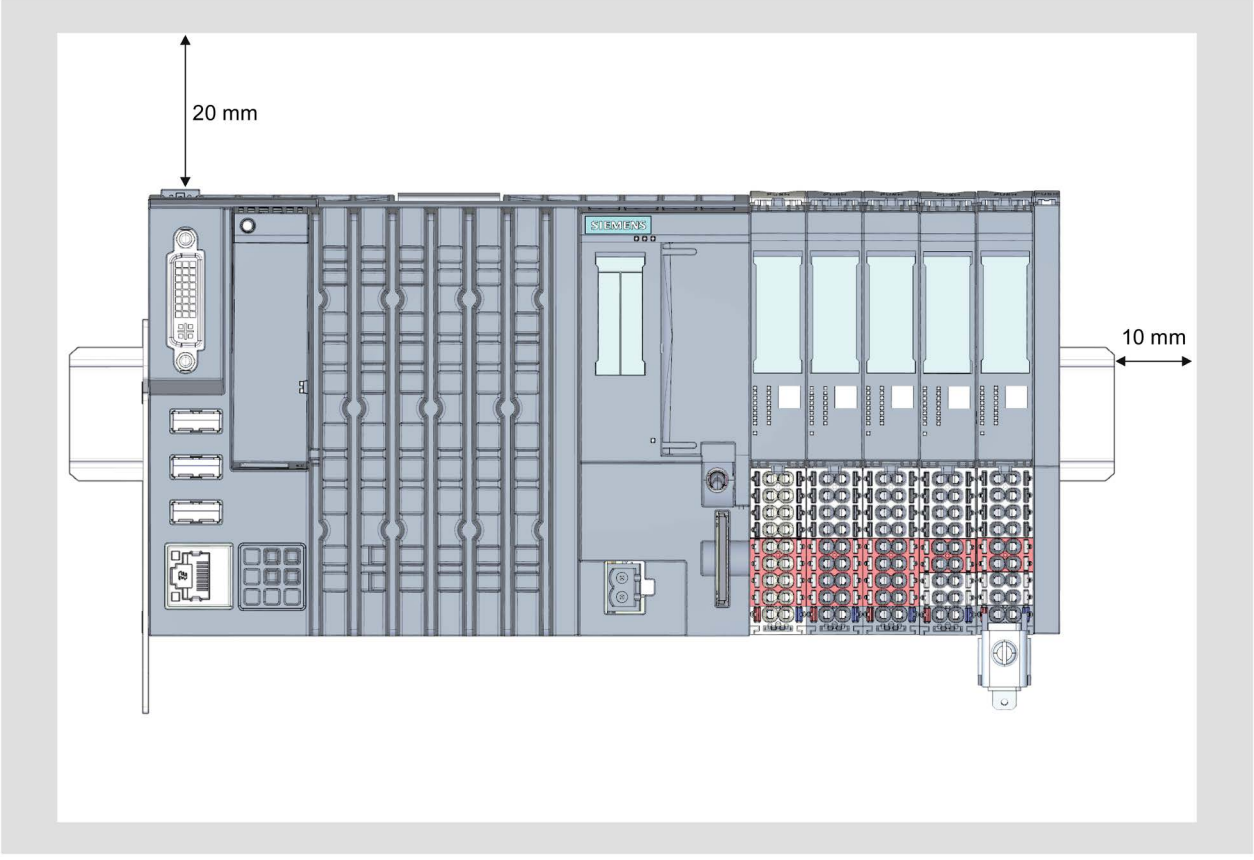

Figure 4-1 Minimum clearances

Installation rules

- After the CPU 1515SP PC (F) there is a BaseUnit BU..D with incoming supply voltage L+ (light terminal box).
- This is followed by BaseUnits BU..B (with dark-colored terminal box).
- The respective corresponding I/O modules can be connected to the BaseUnits. Suitable combinations of BaseUnits and I/O modules can be found in the ET 200SP System Manual (http://support.automation.siemens.com/WW/view/en/84133942).
- The server module completes the installation.

Note

Only install the CPU 1515SP PC (F) when the power supply is switched off.

4.2 Hardware configuration

Maximum mechanical configuration

As soon as one of the following rules applies, the maximum configuration has been reached:

Table 4- 1 Maximum mechanical configuration

Properties	Rule
Number of modules	• Horizontal mounting – 0 to 60 °C ambient temperature: a maximum of 32 I/O modules **and** USB load – 0 to 55 °C ambient temperature: a maximum of 64 I/O modules **and** USB load • Vertical mounting – 0 to 50 °C ambient temperature: a maximum of 32 I/O modules **and** USB load
Backplane bus length	Maximum 1 m mounting width (without CPU 1515SP PC (F), including server module)

Electrical maximum configuration

The number of operable I/O modules of a potential group is limited by the

- Power consumption of the I/O modules
- Power consumption of the components supplied via these I/O modules

The maximum current-carrying capability of the terminals on the BaseUnit L+/ground is 10 A.

USB load

In case of maximum configuration with the CPU 1515SP PC (F), the USB load must also be taken into consideration:

- Horizontal mounting
  - Ambient temperature of 0 to 60 °C with maximum 32 I/O modules **and** 3 x 100 mA USB load
  - Ambient temperature of 0 to 55 °C with maximum 64 I/O modules **and** 2 x 500 mA + 1 x 100 mA USB load
- Vertical mounting
  - Ambient temperature of 0 to 50 °C with maximum 32 I/O modules **and** 3 x 100 mA USB load

Address space

The address space is predefined. However, you can adjust the address space in the user program.

4.3 Installing CPU 1515SP PC (F)

Requirements

The mounting rail is fitted.

Required tools

3 to 3.5 mm screwdriver (only to fix the strain relief and dismantle the BusAdapter)

Fixing strain relief

Fasten the strain relief at the upper and lower left side of the CPU 1515SP PC (F) with the supplied screws.

Installing CPU 1515SP PC (F)

1. Install the CPU on the mounting rail.
2. Swivel the CPU back until you hear the mounting rail release click into place
3. To check that the CPU has correctly clicked into place, pull on the underside of the enclosure.

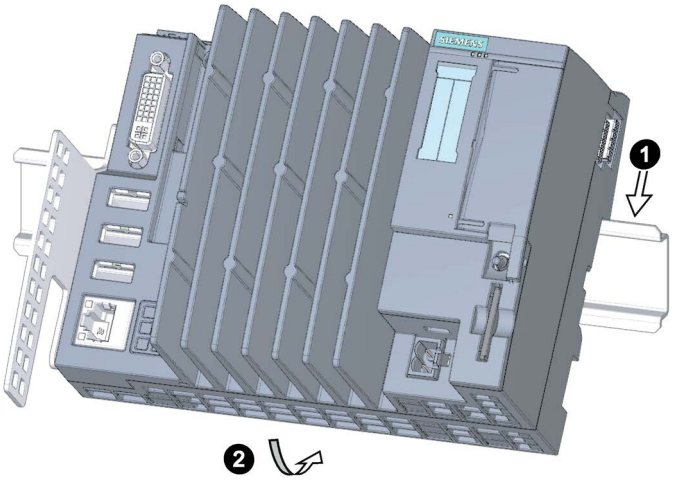

Figure 4-2 Installing CPU 1515SP PC (F)

Disassemble CPU 1515SP PC (F)

The BaseUnits with the I/O modules are located to the left of the CPU 1515SP PC (F):

1. Switch off the supply voltage on the CPU.
2. Press the mounting rail release button on the first BaseUnit and, at the same time, move the CPU in parallel to the left until it comes off the remaining the module group.

   Note: The mounting rail release button is located above the CPU.
3. While pressing the mounting rail release button on the CPU, swivel the CPU out of the mounting rail.

Note

It is not necessary to remove the BusAdapter from the CPU 1515SP PC (F).

Connection 5

5.1 Notes on connection

Note

Rules and regulations for operation

Observe the information contained in the *Wiring* section in the system manual ET 200SP distributed I/O system (http://support.automation.siemens.com/WW/view/en/58649293) and in the function manual Designing interference-free controllers (http://support.automation.siemens.com/WW/view/en/59193566).

NOTICE

Fault caused by I/O devices

The connection of I/O devices can lead to faults on the device.

Injury to persons and damage to the machine or plant could result.

Note the following when connecting I/O devices:

- Read the documentation related to the I/O devices. Follow all instructions given in the documentation.
- Only connect I/O devices which are suitable for use in industrial environments according to EN 61000-6-2/EC 61000-6-2.
- You may only connect hot-plug capable I/O devices when the power supply is switched off.

Note

Feedback through USB devices

If USB devices are connected which - contrary to the USB 2.0 specification - feed voltage back to the host interface, the startup of the CPU 1515SP PC (F) is not ensured upon power-up.

Regenerative feedback is generally not permitted.

5.2 Terminal and block diagram

Block diagram

The figure below shows the block diagram of the CPU 1515SP PC (F).

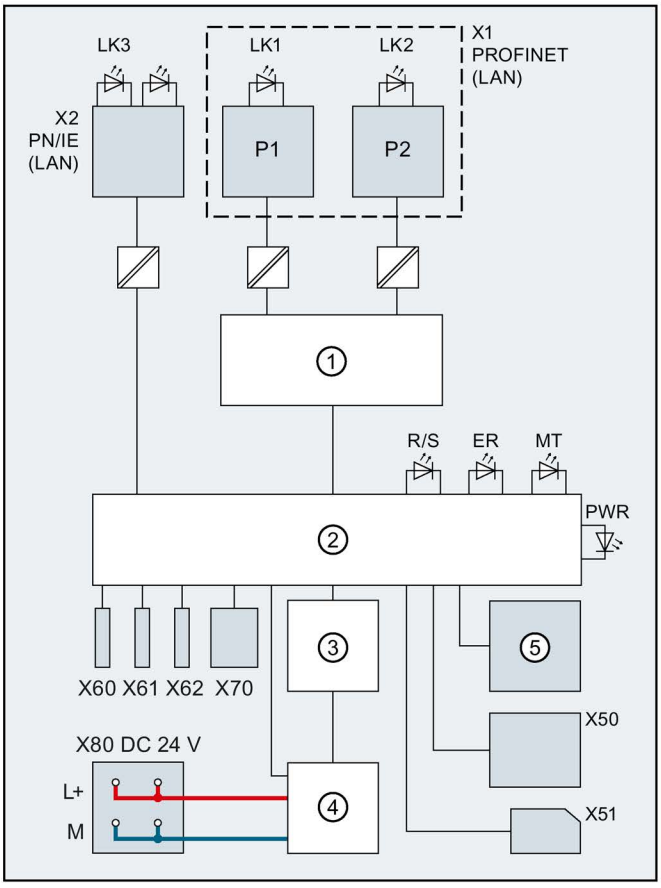

①	Switch	X1 PN (LAN)	PROFINET interface X1
②	Electronics	P1	PROFINET interface X1 Port 1
③	Backplane bus interface	P2	PROFINET interface X1 Port 2
④	Internal supply voltage	L+	24 V DC supply voltage
⑤	Mode selector	M	Ground
X50	CFast card	LK1, LK2	LED Link TX/RX
X51	SD/MMC card	LK3	LED Link
X60	USB interface 2.0, 0.5 A	R/S	RUN/STOP LED (yellow/green)
X61, X62	USB interface 2.0, 0.5 A	ER	ERROR LED (red)
X70	DVI-I interface	MT	MAINT LED (yellow)
X80 24 V DC	Infeed of supply voltage	PWR	POWER LED (yellow/green)
X2 PN/IE (LAN)	Ethernet interface X2		

Figure 5-1 Block diagram for CPU 1515SP PC (F)

5.3 Electrical configuration

Non-isolated configuration

Note

Unlike the distribution I/O system ET 200SP, only a non-isolated configuration is possible the CPU 1515SP PC (F).

The figure below shows a CPU 1515SP PC (F) in the overall configuration with infeed from a TN-S system. The power supply supplies the CPU 1515SP PC (F) and the load circuits for the 24 V DC modules.

With the CPU 1515SP PC (F) there is a fixed connection between the ground infeed terminal and the contact springs to the mounting rail. You must ground the mounting rail separately in the control cabinet.

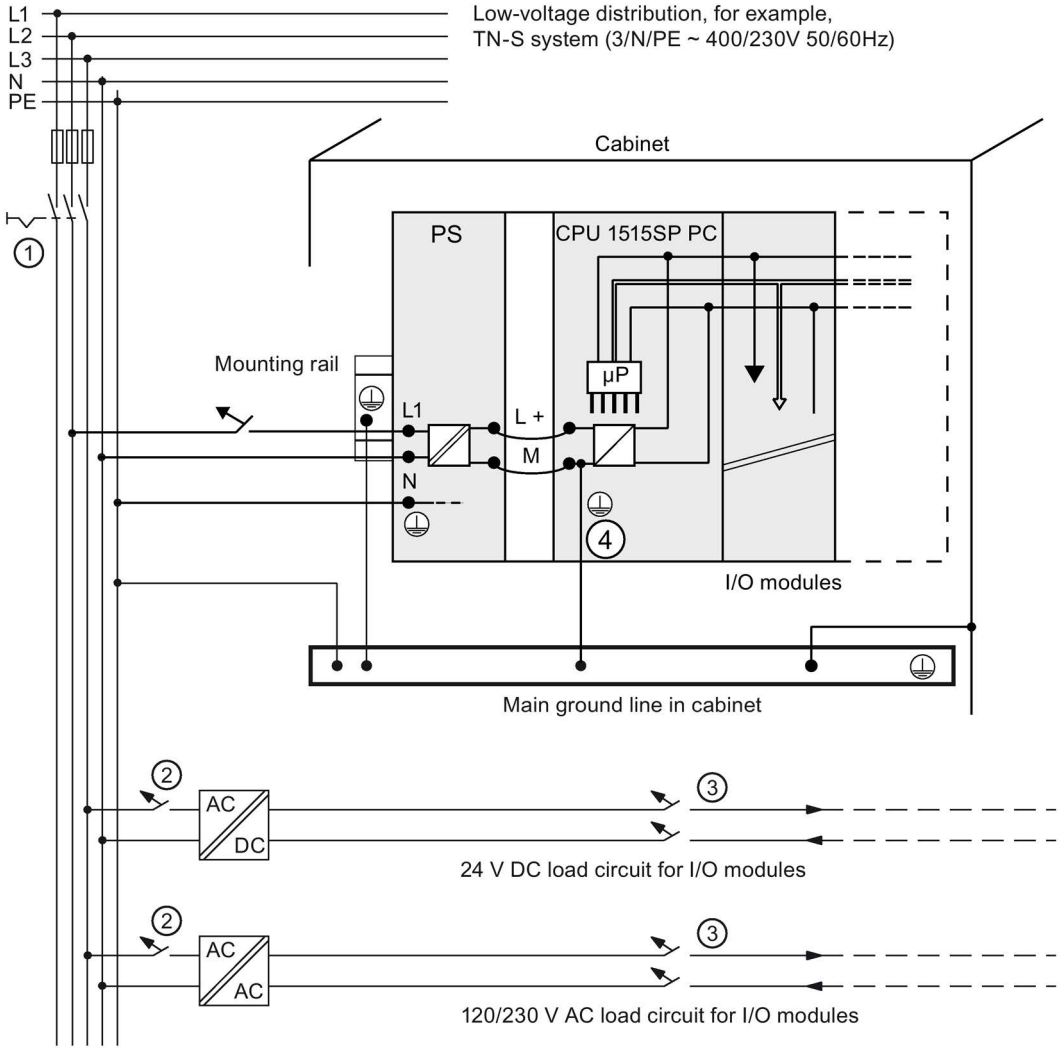

① Master switch

② Short-circuit and overload protection

③ Load current supply (galvanic isolation)

④ In the CPU 1515SP PC (F), this connection is automatically established.

The represented layout of the power connections does not correspond to the actual layout; it was chosen for demonstration purposes only.

Figure 5-2 Connecting the load voltage reference potential

5.4 Connecting devices to networks

The following options are available for integrating devices into existing or planned system environments and networks.

Ethernet

You can use the integrated Ethernet interface X2 PN/IE (LAN) (10/100/1000 Mbps) for communication and data exchange with automation devices, for example, SIMATIC S7. Only ASCII characters are permitted in the name of the interface X2 PN/IE (LAN) in the TIA Portal, e.g. PROFINET_2.

You need suitable software to do this: STEP 7, WinCC, SIMATIC NET.

Note

Use a Category 5e Ethernet cable (Cat-5e cable) for operation with 1000 Mbps.

PROFINET

PROFINET operation is possible via the X1 PN (LAN) interface and the approved BusAdapter.

PROFIBUS

The connection to PROFIBUS can be made using the DP master module.

5.5 Securing cables

The strain relief for connection lines prevents the USB and the PROFINET connector coming loose from the CPU 1515SP PC (F). The strain relief is included in the scope of delivery.

WARNING

Flying sparks due to loose cables

Risk of explosion in hazardous areas.

USB cables and PROFINET connectors may detach from the device in the case of strong oscillation and high vibrating loads.

Attach these cables to the strain relief of the device using cable ties.

Requirements

- The strain relief is fixed to the CPU.
- The CPU is installed.

Procedure

Secure the USB and PROFINET cables to the strain relief using cable ties.

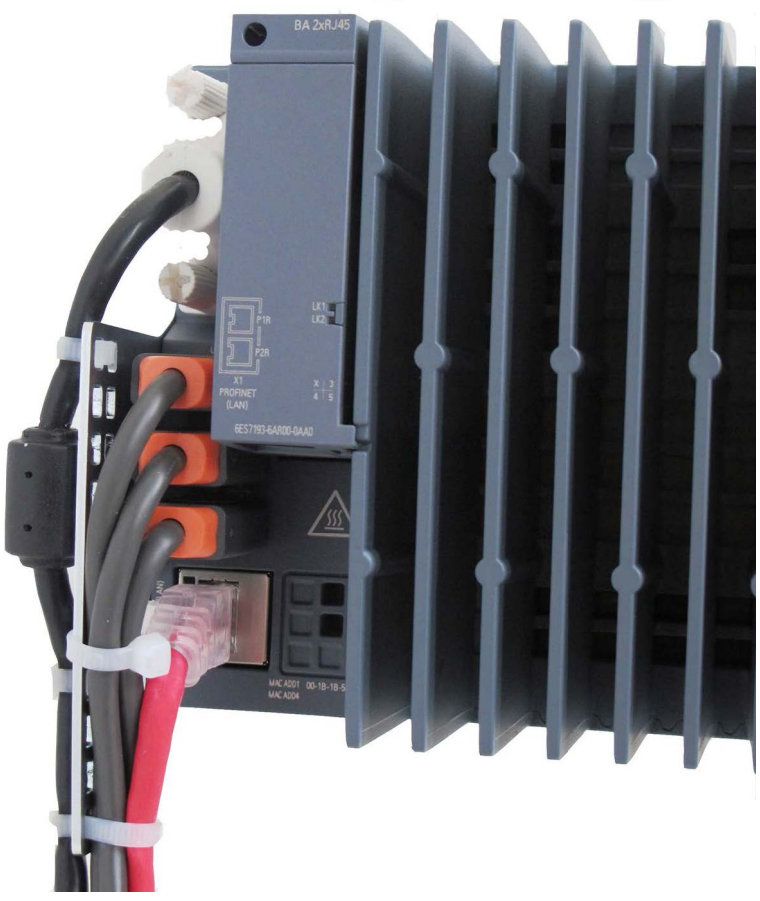

Figure 5-3 Secured cables

Diagnostics, error and system alarm

6

6.1 Status and error display

LED display

The figure below shows the LED displays of the CPU 1515SP PC (F).

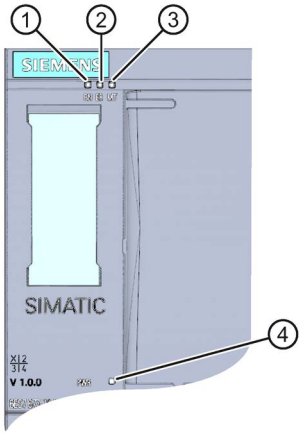

① RUN/STOP LED (yellow/green LED)
② ERROR LED (red LED)
③ MAINT LED (yellow LED)
④ POWER LED (yellow/green LED)

Figure 6-1 LED displays of the CPU 1515SP PC (F).

Meaning of the LED displays with active software controller

CPU 1515SP PC (F) has a display of the current operating state and of the diagnostics status (three LEDs).

The following table shows the meaning of the color combinations of the LED displays in connection with the software controller.

Table 6- 1 Meaning of the LED displays

RUN/STOP LED	ERROR LED	MAINT LED	Meaning
LED off	LED off	LED off	POWER OFF Starting of the CPU 1515SP PC (F) in the "Windows only" mode No power supply. The software controller of the CPU 1515SP PC (F) has not been downloaded or the software controller of the CPU 1515SP PC (F) is in the operating state Power OFF.
LED off	LED flashes red	LED off	An error has occurred.
LED green	LED off	LED off	Software controller of the CPU 1515SP PC (F) is in RUN mode.
LED green	LED flashes red	LED off	A diagnostics event is pending.
LED green	LED off	LED lights up yellow	Maintenance demanded for the plant. The affected hardware must be exchanged within a short period.
LED green	LED off	LED flashes yellow	Maintenance required for the plant. You must exchange the affected hardware within a foreseeable period.
			Firmware update successfully completed
LED lights up yellow	LED off	LED off	Software controller of the CPU is in the operating state STOP.
LED lights up yellow	LED flashes red	LED flashes yellow	The user program is causing an error.
			CPU defective
LED flashes yellow	LED off	LED off	CPU is performing internal activities during STOP, e.g. ramp-up after STOP.
			Loading the user program
LED flashes yellow/green	LED off	LED off	Startup (transition from RUN → STOP)

RUN/STOP LED	ERROR LED	MAINT LED	Meaning
LED flashes yellow/green	LED flashes red	LED flashes yellow	Startup (CPU booting)
			Test of LEDs during startup, inserting a module.
			LED flashing test

POWER LED

Table 6- 2 POWER LED

POWER LED	Meaning
LED off	No supply voltage or supply voltage too low
LED lights up yellow	Supply voltage present; running through BIOS phase; operating system is shut down
LED green	Supply voltage present; Booting or operation of the operating system

Commissioning 7

7.1 Notes on commissioning

WARNING

Improper commissioning in hazardous areas

Device failure or risk of explosion in hazardous areas.

- Do not commission the device unless it is fully mounted and connected according to the specifications in the section Enhanced Write Filter (EWF) (Page 78).
- Before commissioning, please consider the effects on other devices in the plant.

CAUTION

Hot surfaces

Risk of burns due to hot surfaces.

During operation, only touch the device with appropriate protective gloves.

NOTICE

Condensation in the device

Damage to the device due to condensation if the temperature between transport or storage and the installation site differs by more than 20 °C (36 °F).

Before commissioning the device, leave it to stand for several hours in the new environment.

NOTICE

Data loss

Data loss may occur if write filters are used incorrectly.

Therefore, note the information on write filters.

Two write filters are available for configuration under Windows Embedded:

- Enhanced Write Filter (Page 78)
- File Based Write Filter (Page 82)

7.2 Initial commissioning

Requirements

The following conditions must be met before you commission the open controller for the first time.

- CPU 1515SP PC (F) is mounted.
- The CFast card is inserted.
- No data carriers are connected via USB.
- The following hardware is available: A monitor, a USB keyboard, a USB mouse

Procedure

1. Connect a monitor via a DVI-I cable.
2. Connect a keyboard and a mouse to the CPU via USB.
3. Connect the power supply.

   → The PWR LED lights up yellow first, then green.

   → The device carries out the hardware initialization.
4. Wait until the Siemens logo disappears from the screen.
5. Follow the instructions on the screen to configure the device

NOTICE
Faulty installation If you change the default values in the BIOS Setup or switch off the device during the installation, the installation will be disrupted and the operating system will not be installed correctly. The operational reliability of the device and the plant is endangered. Do not switch of the device during the entire installation process. Do not change the default values in the BIOS Setup.

Result

- The WES7 operating system is installed.
- WES7 P: The Multitouch functions are available.
- The operating system's start screen is displayed after each startup.
- A login window appears if a password was entered during the initial commissioning.

Initial commissioning an open controller

The basic settings, user name, administrator password and IP address are prompted for during initial power-up of your CPU 1515SP PC (F). The device is then automatically set up for the operating system that is installed on the CFast card. Restart the device after the operating system has been set up.

Note

The initial commissioning is not possible with a Multitouch panel, as the Multitouch driver is only available after the installation of the operating system.

User name, computer name, password

When you enter a "User name", this is suffixed with "-PC" under "Computer name". The computer name must not exceed 15 characters.

Note

This user has administrator rights!

For security reasons, enter a password for this user (administrator).

IP address

The IP address (192.168.1.1) and the subnet mask (255.255.255.0) for the X2 interface are pre-set in the logon dialog.

You use the buttons to make your changes or to retain the pre-set values.

Note

The initial TIA Portal download must be performed using set IP address via the GB Ethernet interface X2 in order that the PROFINET interface X1 and the hardware configuration are correctly assigned.

User "Operator"

A user "Operator" with standard user rights is already created on the Windows system.

The user is in a user group "SIEMENS TIA Engineer". This grants the user the rights to use the installed SIMATIC software products.

To be able to use the CPU 1515SP PC (F) directly, the Windows "Autologon" is activated for the user "Operator". No password is preset.

Note

When you assign a password, change the entry for the Windows "Autologon" function accordingly in order that the function remains activated.

Administrator rights

You need administrator rights for the following actions:

- Back up the data in the root directory of the C partition.
- Installing the language pack

Screen resolution

In Windows Embedded Standard 7, the values that are determined for the monitor via the DVI-I interface are set for the screen resolution.

7.3 Initial configuration of an Open Controller

Creating the configuration

You have created a new project in the TIA Portal.

To create the configuration in the TIA Portal, follow these steps:

1. Double-click "Add new device" in the project tree.
2. In "PC-Systeme > SIMATIC S7 Open Controller > ET 200SP Open Controller >", select the "CPU 1515SP PC (F) (+HMI)".
3. Select the appropriate version.

   The configured Open Controller is displayed in the device view.
4. The following components can be seen in the Open Controller:
   - Onboard interface X2 (GB Ethernet Windows interface) that is assigned directly to the PC station (1 port)
   - Replaceable BusAdapter X1, which is directly assigned to the software controller (2 ports)
   - On the right side (behind the plugged modules in the rack): the configured software controller CPU 1505SP (F) and WinCC Runtime Advanced.
5. Insert the server module.
   The server module at the right end of the configuration forms the termination of the CPU with the I/O modules.

Setting the IP addresses:

In the Inspector window under "Properties":

- Onboard interface X2: the configured, specified IP address is identical with the Windows IP address that is set during the first commissioning on the open controller.
- BusAdapter X1: the configured, specified IP address is identical with the IP address that is set during the first commissioning in the panel of the software controller (display application).

Important properties of the Software Controller

Change the properties in the Inspector window under "Properties" if required:

- Selecting startup type
- System diagnostics
- Setting the storage location for retentive data
- Setting up copy protection
- Using the LEDs of the hardware
- Configuring the Web server
- Assigning interfaces for the communication

Establish HMI connection

1. Right-click the WinCC RT Advanced in the device view.
2. Start the HMI device wizard.
3. Apply all default settings.
   The wizard creates system images for you with the corresponding navigation.
4. Switch to the connection view in the network view.
5. Click on WinCC RT Advanced.
6. Drag (with mouse button pressed) from the WinCC RT Advanced software to the S7-1500 software controller (for example, CPU 1505SP).
   A network connection is established between the two devices.

Downloading the project to the target system

The complete PC station is downloaded the first time you download the configuration.

1. Select the complete PC system in the device view.
2. Click the "Download to device" button.
3. Make the following settings:
   - Type of connection
   - Specify the interface of the programming device
   - Specify the X2 interface on the Open Controller

Note

The first TIA Portal download **must** be via the "X2" interface.

Only ASCII characters are permitted in the name of the interface X2 PN/IE (LAN) in the TIA Portal, e.g. PROFINET_2.

Download and compile the project. The hardware configuration and the first download are now completed.

WinCC RT Advanced

WinCC Runtime Advanced contains all the essential functions for operator control and monitoring of machinery or plants.

Reference

For more information on WinCC RT Advanced, refer to the WinCC Advanced V14 (http://support.automation.siemens.com/WW/view/en/109742297) system manual.

7.4 Installing license keys

Licensing the software

A license key is not required to operate the S7-1500 software controller CPU 1505SP (F) V2.x. The software controller is permanently coupled to your CPU 1515SP PC (F). It is not necessary to input the key via the Automation License Manager!

WinCC RT Advanced requires a product-specific license key. This is located on the supplied USB stick.

Prior to commissioning, you must install the license key for the HMI powertags using the *Automation License Manager (ALM)*.

Perform the licensing directly via the CPU 1515SP PC (F).

Requirements

- Initial commissioning was successfully completed.
- Windows Embedded Standard 7 has started.
- The enhanced write filter **EWF** must be disabled on the CPU 1515SP PC (F).

Installing License keys with local configuration

The *Automation License Manager* is preinstalled on the CPU 1515SP PC (F).

Open the software using the icon on the desktop or a menu command.

1. In the Windows start bar, select **Start > All Programms > Siemens Automation > Automation License Manager**.
2. Follow the instructions of the *Automation License Manager*.

Using a programming device/PC to install the license keys

The *Automation License Manager* is pre-installed on a programming device / PC with STEP 7 and the CPU 1515SP PC (F).

1. Connect the CPU 1515SP PC (F) to a programming device / PC.
2. Connect the supplied USB stick to the programming device/PC.
3. Select the menu command **Start >SIMATIC >License Management > Automation License Manager**.
4. Select the menu command **Bearbeiten > Rechner verbinden** and enter the IP address of the CPU 1515SP PC (F) (default 192.168.1.1).
5. Drag the license keys from the USB stick to the system partition C: of the CPU 1515SP PC (F).

Saving and securing license keys in the case of restore and repair

Note

Loss of license keys

A SIMATIC license key cannot be copied or duplicated. If you drag the license keys from your USB-Stick to your CPU 1515SP PC (F), no copies are then left on the USB stick.

Secure your purchased license keys **before** restoring the delivery state (Restore) or in the case of repair. To do this, move the license keys to a USB stick and keep this stick in a safe place.

If a fault occurs with your license keys on the CPU 1515SP PC (F), contact your local Siemens representative. Make sure to have the "Certificate of License" (CoL) to hand.

Note

The EWF (Page 78) write filter serves to protect your license keys and your configuration.

Reference

For additional information on licenses, refer to the *Automation License Manager* manual. You can find the manual for the CPU 1515SP PC (F) under **Start > All Programs > Siemens Automation > Documentation** and in the Internet (http://support.automation.siemens.com/WW/view/en/56956174).

7.5 Windows Security Center

Warning from the Windows Security Center

A warning from the Windows Security Center appears when you first switch on your device. The Security Center check the status of the device with regard to the main security aspects listed below. If the Security Center finds a problem during this check, it gives recommendations on how to better protect the device.

- Firewall: The Windows firewall contributes to protecting the device by preventing the access of unauthorized users via a network or the Internet. Windows checks whether the device is protected by a software firewall.
  As delivered, the firewall is enabled.
- Antivirus software: Antivirus programs contribute to protecting the device against viruses and other security threats. Windows checks whether a comprehensive up-to-date program is used on the device.
  No antivirus software is installed as delivered.
- Automatic updates: With the help of automatic updates, Windows can routinely check for the latest major updates for the device and install these automatically. In the delivery state, this option is disabled.

Note

To keep Windows up-to-date, enable either the automatic update function of Windows or install updates manually. Before the installation, check the size of the package to be installed and decide if you need the update and if there is sufficient storage space available.

Some updates may make it necessary to use a larger CFast card or to change the partitioning. You can find information on changing the partition size in the Change partitioning (Page 85) chapter.

Configure the Security Center to suit your requirements.

7.6 Switching CPU 1515SP PC (F) on/off

Requirements

Initial commissioning was successfully completed.

Switching on the CPU 1515SP PC

1. Switch on the power supply of the CPU.

   The Boot Manager GRUB4DOS opens.

2. Select the mode in which the CPU 1515SP PC (F) should start:
   - Only with the Windows operating system.
   - With the Windows operating system and the S7-1500 software controller (default).

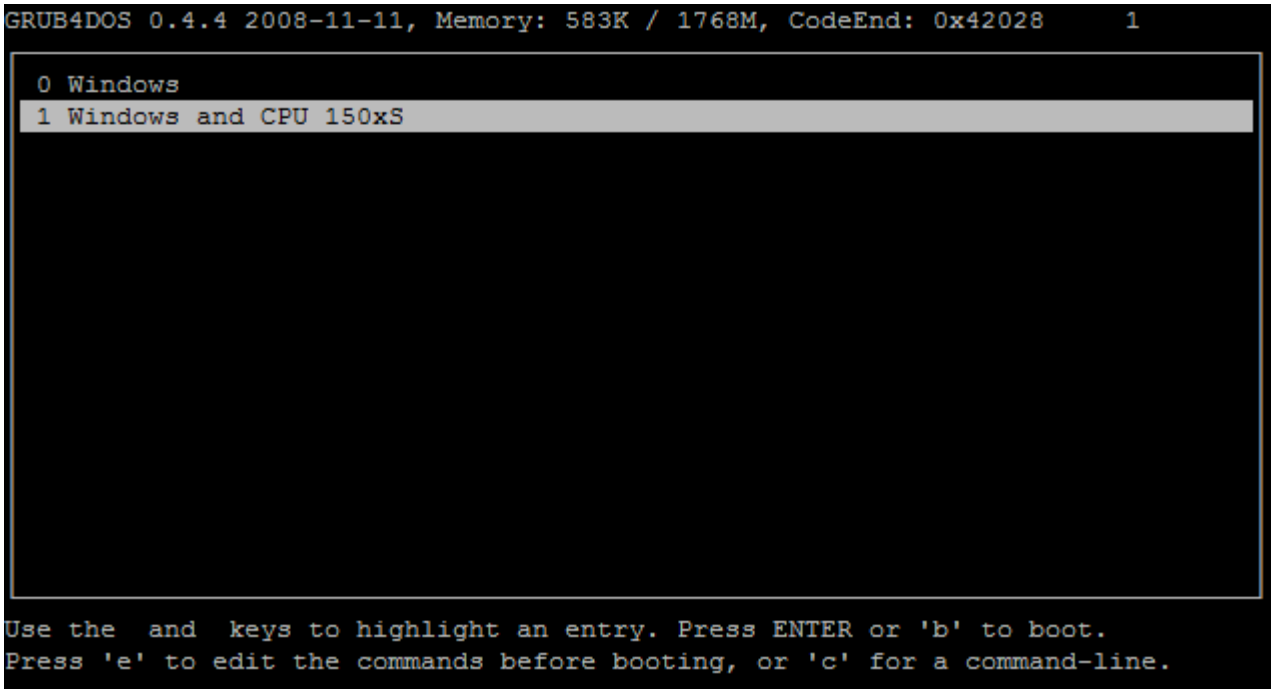

Figure 7-1 Boot Manager GRUB4DOS

Switch off CPU 1515SP PC (F)

1. To switch off the Windows function, use **StartShut down**.

   The PWR LED changes from green to yellow.

   The Windows function shuts down the Windows operating system and the S7-1500 software controller.

If the device will not be used for a longer period after the shutdown, de-energize the device.

Functions 8

8.1 Monitoring functions

Introduction

CPU 1515SP PC (F) has monitoring functions that you can use with the corresponding software. The following display, monitoring and control functions are available.

- Temperature monitoring
- Monitoring of drives with SMART functionality
- Operating hours counter (information on the total runtime)

SIMATIC IPC DiagBase

The SIMATIC IPC DiagBase software is contained in the scope of delivery of the CPU 1515SP PC (F).

With the SIMATIC IPC DiagBase software, you use the functions for local monitoring. Use the DiagBase Management Explorer application to obtain a clearer overview for monitoring. The DiagBase Alarm Manager notifies you of individual alarms.

Note

For additional information, refer to the online help for the SIMATIC IPC DiagBase software.

SIMATIC IPC DiagMonitor

The SIMATIC IPC DiagMonitor software is provided on a CD.

Potential system failures are detected and reported in good time with the diagnostics and alerting software. The software is also used for remote diagnostics.

The software contains:

- The software for the stations to be monitored
- A library for creating your own applications

Temperature monitoring

Three thermistors monitor the temperature at multiple locations of the CPU 1515SP PC (F):

- Processor temperature
- Temperature in the vicinity of the RAM ICs/blocks
- Temperature of the basic module

If one of the temperature values exceeds the set temperature threshold, the temperature monitoring triggers a temperature error. The temperature error activates the IPC DiagBase and/or IPC DiagMonitor software.

The temperature error remains stored until the temperatures fall below the temperature threshold again and it is reset using one of the following measures:

- Acknowledgment of the error message by the monitoring software
- Restart of the device

8.2 Retentive memory NVRAM

Retentive memory is non-volatile memory for saving a limited quantity of data in the event of power failure.

The data defined as retentive is stored in retentive memory. This data is retained beyond a power-off or power failure.

A corresponding function is implemented in the S7-1500 software controller to allow NVRAM to be used there. Up to 410 KB of data is backed up to non-volatile data memeory by this in the event of power failure. This function can be set on the engineering station in the TIA Portal.

8.3 BIOS description

8.3.1 Introduction

BIOS setup

The BIOS setup is located in the BIOS ROM. The information is stored to the memory of the CPU 1515SP PC (F) via the system configuration.

You can set the following using the Setup:

- The hardware configuration, for example, drive type
- The system properties
- time and date

Note

The American keyboard layout applies in the BIOS.

Changing the device configuration

The device configuration is preset for working with the supplied software.

Only change the set values if you have made technical changes to your device.

8.3.2 Starting BIOS setup

Start the setup program as follows:

1. Disconnect the device from the power supply and switch it on again (cold restart).

   The following screen appears in the default setting of the CPU 1515SP PC (F) after it is switched on:

Figure 8-1 BIOS setup

After completion of the startup test, you have the option of starting the SETUP program.

The following BIOS message appears:

```
Press F2 go to Setup Utility

Press F12 go to Boot Manager
```

2. Press the <F2> button while the message is on the screen.

8.3.3 BIOS setup menus

Overview of BIOS setup

The menus and submenus are shown on the following pages.

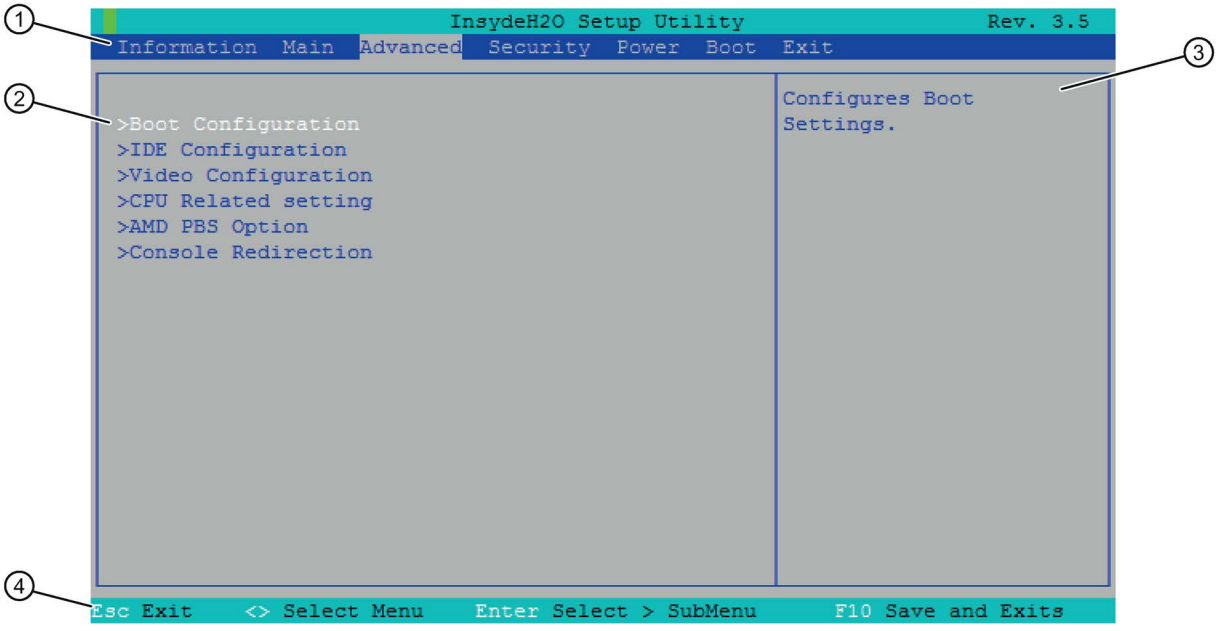

① Menu bar
② Selectable submenu
③ Help window
④ Operating line

Figure 8-2 Structure of the BIOS setup menus

Menu structure

In the menu bar ①, you can select between the following menu forms:
[Information] [Main] [Advanced] [Security] [Power] [Boot] [Exit].

In the main window ②, various settings are displayed or submenus selected.

In the Help window ③ of the respective menu, you can find information on the selected setup entry.

The operating line ④ contains notes on operation.

You can use the cursor keys [←] left and [→] right to switch between the menu forms.

Menu	Meaning
Information	Device-specific information, for example, product version
Main	Setting system functions
Advanced	Advanced system configuration
Security	Safety functions, for example, setting a password
Power	Determining the switch-on behavior of the device
Boot	Determining boot options, such as boot priority
Exit	Exiting and saving

8.3.3.1 Information menu

This menu shows the versions of the device-specific functions.

Keep this information at hand for Customer Support when you have technical questions regarding your system.

Example

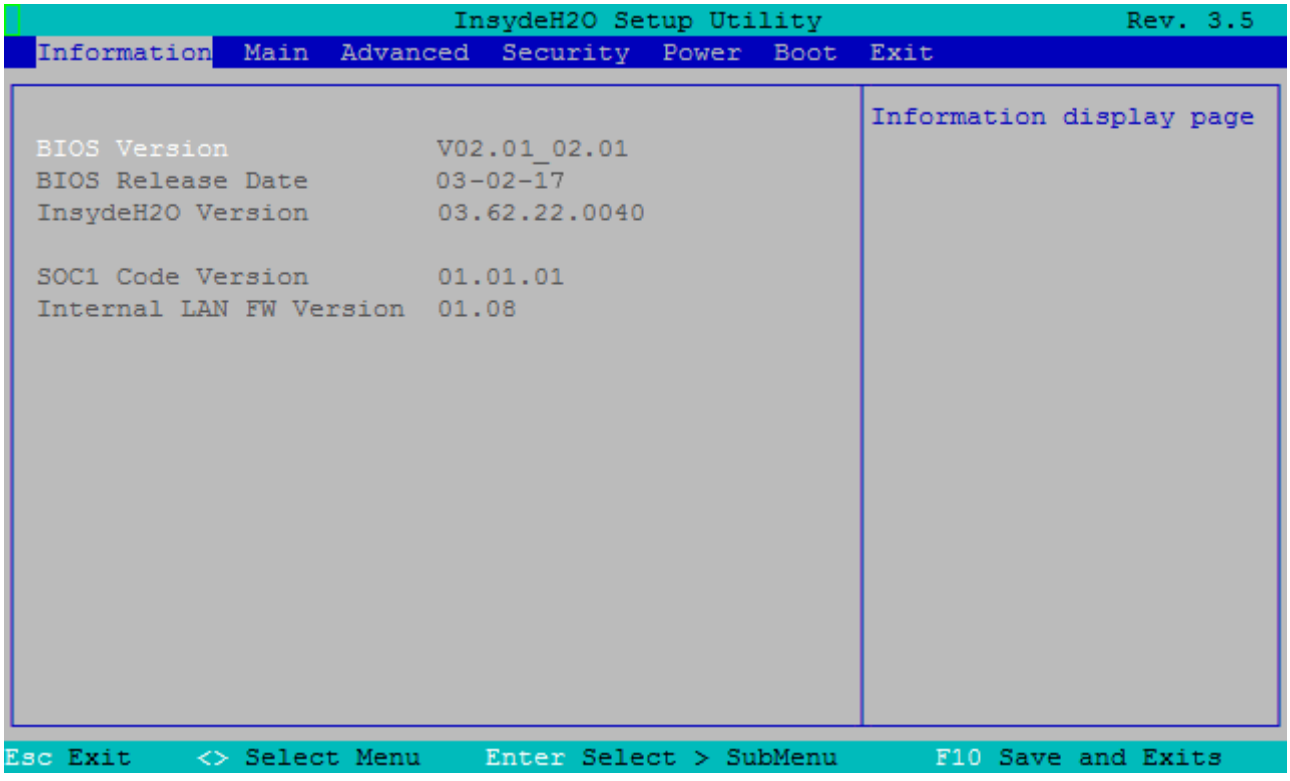

Figure 8-3 Information menu

8.3.3.2 Main menu

Settings in the Main menu

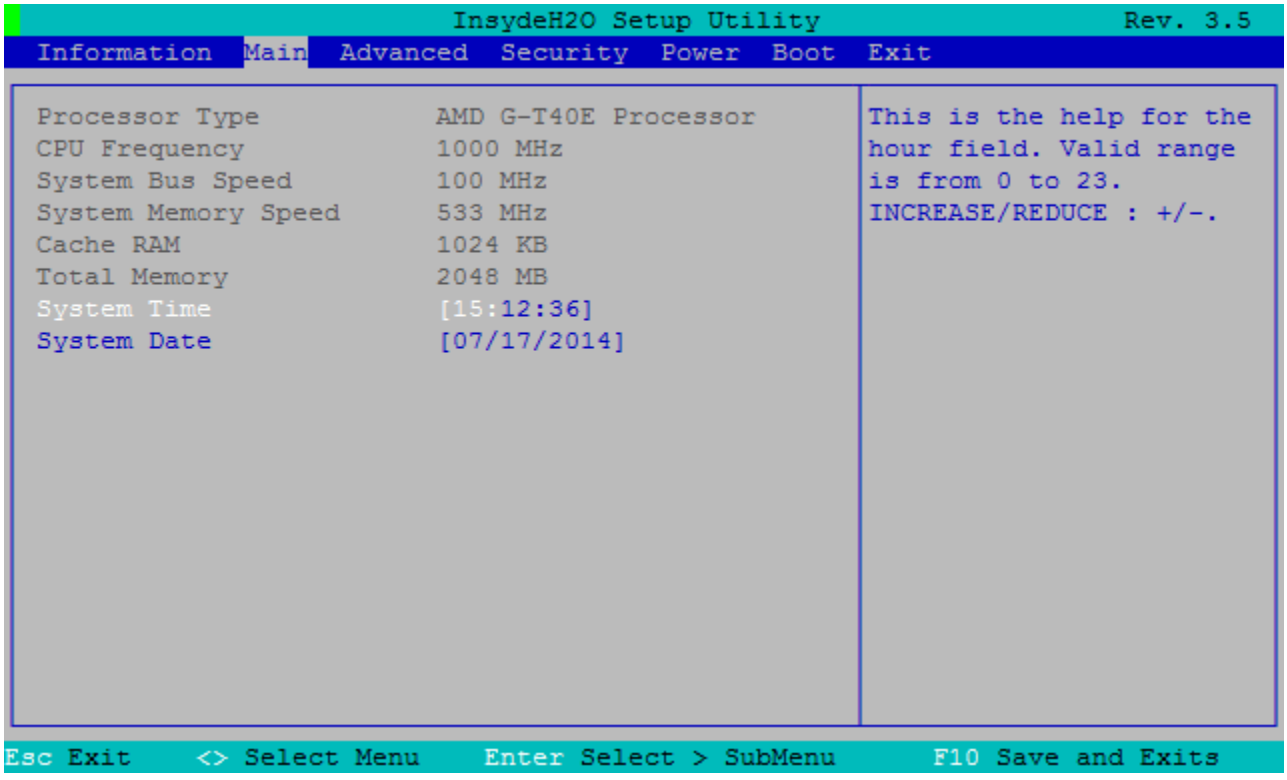

Figure 8-4 Main menu

In the Main menu, you can use the [↑] up and [↓] down arrow keys to select between the following system setting fields:

Array	Meaning
System Time	Displaying and setting the current time
System Date	Displaying and setting the current calendar date

System Time and System Date

System Time and System Date show the current values. After you have selected the corresponding field, you can change the following settings, one after the other, using the [+] and [–] keys:

- For the time of day: Hour: Minute: Second
- For the date: Month/day/year.

You can use the <ENTER> key to switch between the entries within the Date and Time fields (e.g., from hour to minute).

8.3.3.3 Advanced menu

Settings in the Advanced menu

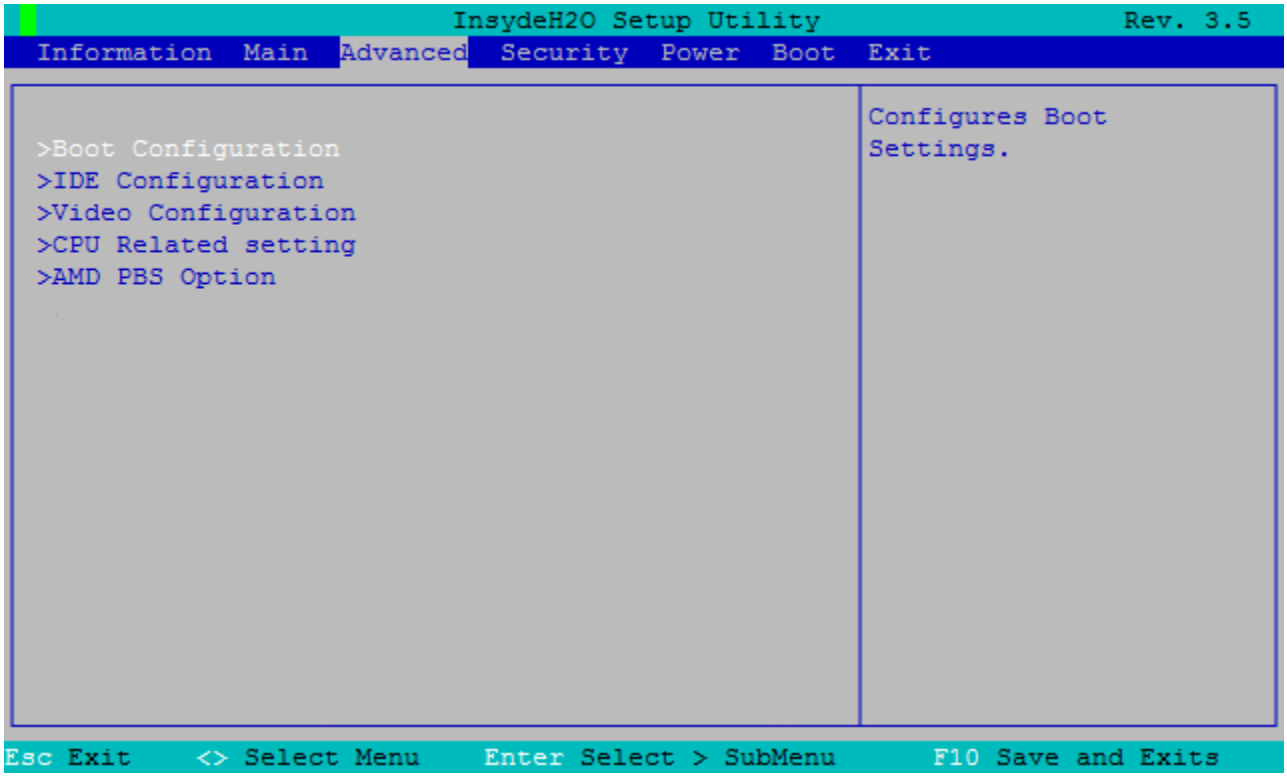

Figure 8-5 Advanced menu

Entry	Meaning
Boot Configuration	Configuring the boot settings
IDE Configuration	Configuring the devices
Video Configuration	Configuring the graphics parameters
CPU Related setting	Configuring CPU parameters
AMD PBS Option	Configuring interfaces

"IDE Configuration" submenu

Entry	Meaning
SATA configure as	Setting the SATA configuration type: IDE, LEGACY IDE, AHCI
Serial ATA Port 0	Serial ATA Port 0 device configuration

"Video Configuration" submenu

Entry	Meaning
UMA Sharing Memory Size (256 MB)	Setting the size of the work memory for the graphics processor. (Unified Memory Architecture; also Shared Memory)

"CPU Related setting" submenu

Entry	Meaning
SVM support	Enabling (Enabled) or disabling (Disabled) Secure Virtual Machine functionality .

"AMD PBS Option" submenu

Entry	Meaning
Internal LAN Controller	Integrated Ethernet interface (10/100/1000 Mbps) X2 PN/IE (LAN)
PXE Boot to INT_LAN	Enabling (Enabled) or disabling (Disabled) internal Southbridge Network Controller.

8.3.3.4 Security menu

Settings in the Security menu

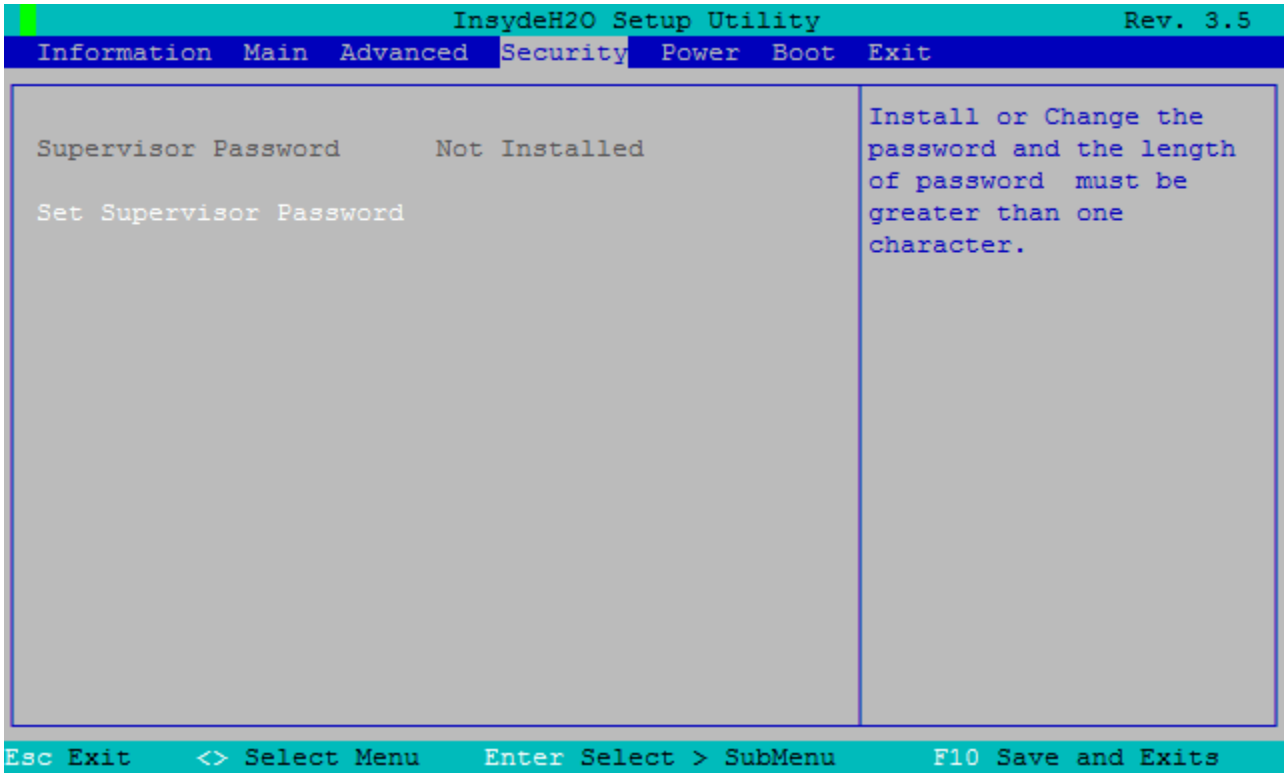

Figure 8-6 Security menu

To protect the CPU 1515SP PC (F) against unauthorized access, assign a password.

Supervisor Pass-word	Installed	Specific setup fields, including the Supervisor password, can be modified by the user.
	Not installed	Password is disabled.
Set Supervisor Password	This field opens a dialog for assigning or changing the password.	

Note

Overwriting of the Supervisor password during a BIOS update

A BIOS update overwrites the password.

After a BIOS update, set up the password again.

8.3.3.5 Power menu

Settings in the Power menu

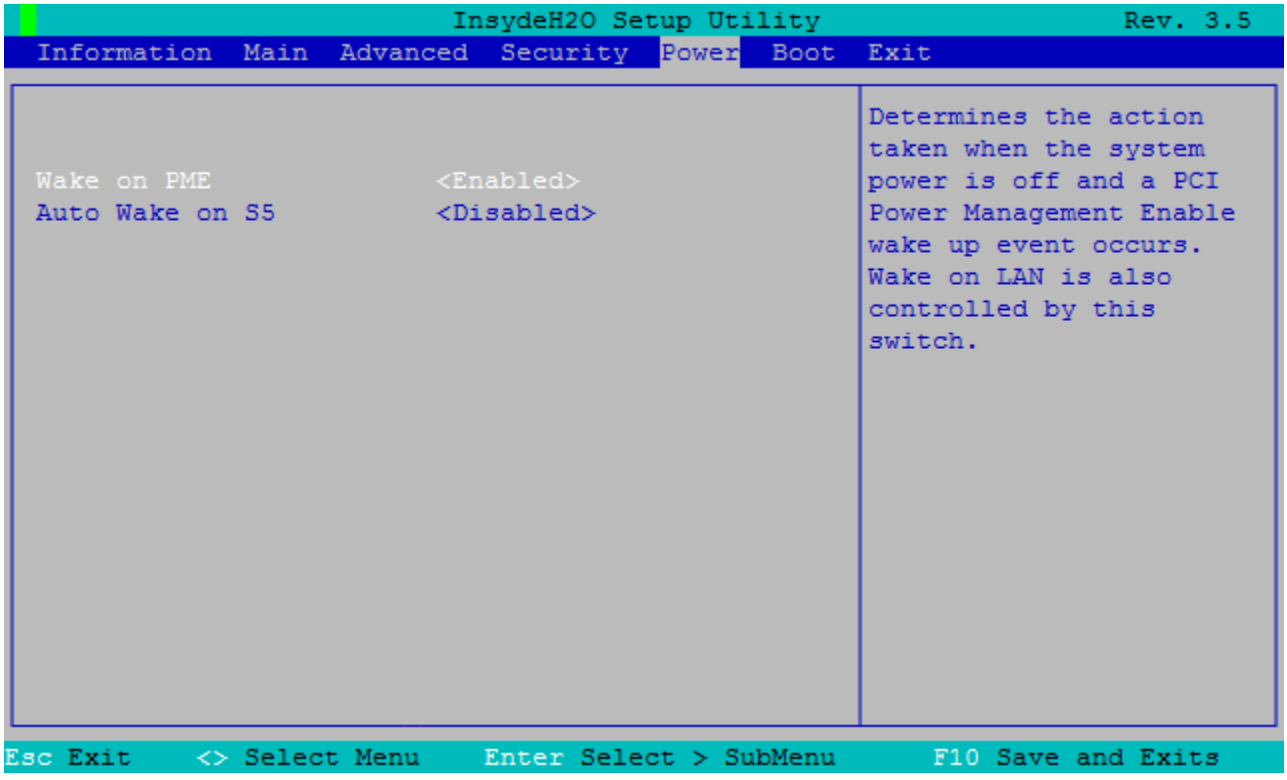

Figure 8-7 Power menu

In the Power menu, you specify the device reaction to a power failure and a Wake Event.

Entry	Meaning
Wake on PME	When activated (Enabled), the device switches itself on when a Power Management Event occurs. Otherwise, the device remains switched off.
Auto Wake on S5	When activated (Enabled), the device switches itself on when a Wake Event occurs. Otherwise, the device remains switched off.

8.3.3.6 Boot menu

Entries in the Boot menu

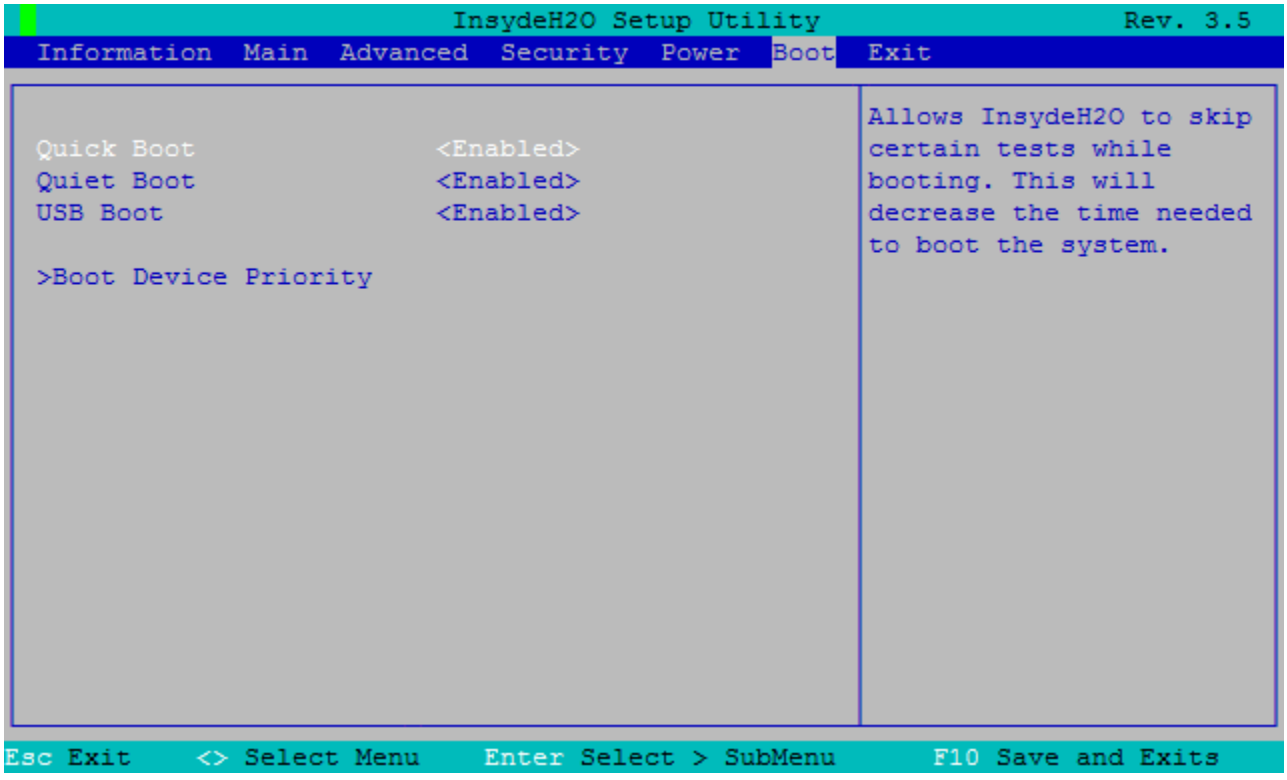

Figure 8-8 Boot menu

In this menu, you define the boot behavior of the device.

Entry	Meaning
Quick Boot	Enabling (Enabled) or disabling (Disabled). The device starts up faster when this option is enabled, because various hardware function tests are skipped.
Quiet Boot	When this option is disabled, the device boots in text mode. When it is enabled, a start screen with logo appears.
USB Boot	Booting from connected USB devices permitted/not permitted.

Boot menu > submenu "Boot Device Priority"

In this menu, you define the sequence of the boot media.

Entry	Meaning
Normal Boot Menu	Normal = boot sequence by component type Advance = individual boot sequence of all components

Boot Device Priority > submenu "Boot Type Order"

Entry	Meaning
Hard Disk Drive	Setting the boot sequence of the group of drives
USB	Setting the boot sequence of the group of USB drives
Others	Setting the boot sequence of the group Others,, e.g. Remote Boot Device

All connected boot-capable components and their boot position are displayed in this menu. The boot position of the components can be moved freely.

The component at the top (highest boot priority) is used for booting. If the component is not available, the system boots from the next component in the list.

You change the boot sequence as follows:

- Select the boot components using the keys <↑>, <↓>
- Move to the required position using the keys <+>, <–>

Note

You can start the Boot Manager by pressing the <F12> key during the boot process.
The Boot Manager shows all available boot components and boots from the device selected by the user.

"Normal Boot Menu > Advance" setting

Boot capable components which were disconnected and reconnected to the CPU 1515SP PC (F) during the boot processes, appear in first place in the BIOS in the "Advance" setting.

Boot Device Priority > submenu "Hard Disk Drive"

The size of the CFast card is displayed in this menu.

8.3.3.7 Exit menu

Settings in the Exit menu

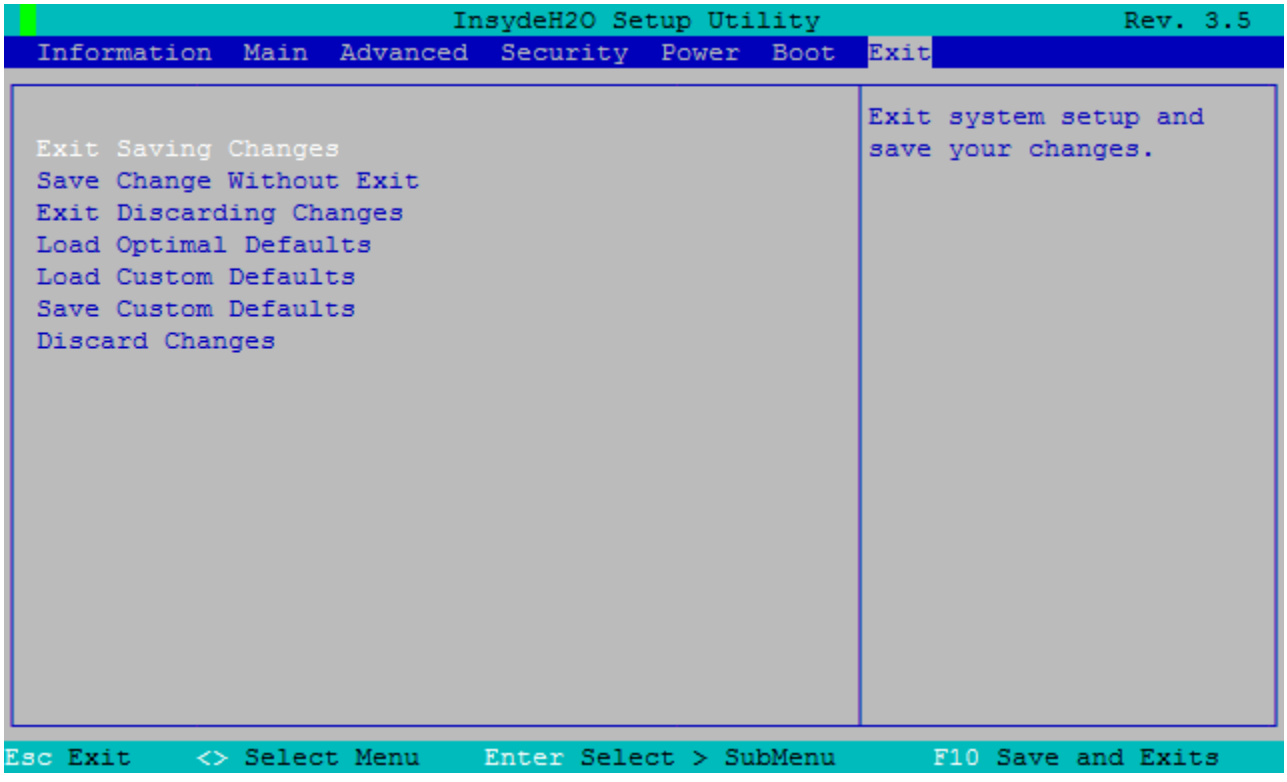

Figure 8-9 Exit menu

The setup program is always terminated via the Exit menu.

The menu is used to save or discard the changes made.

Entry	Meaning
Exit Saving Changes	Saves all changes and then starts the system with the new parameters.
Save Change Without Exit	Saves all changes
Exit Discarding Changes	Discards all changes and then restarts the system with the old parameters.
Load Optimal Defaults	Loads the optimum default values
Load Custom Defaults	Loads the default values
Safe Custom Defaults	Saves the default values
Discard Changes	Discards all changes

8.3.4 BIOS setup default settings

Documenting the device configuration

If you change the default setting of the BIOS Setup, then enter this in the following table. This will ensure that values you set will be readily available if hardware changes are made later.

We recommend that you print out the table below and keep it in a safe place after you have made your entries.

Note

The default settings in the BIOS setup depend on the ordered device configuration.

BIOS setup default settings

Menu	System parameters	Default settings	User settings
Main	System Time	hh:mm:ss	
	System Date	MM/TT/JJJJ	
Advanced > IDE Configuration	SATA configure as	LEGACY IDE	
	Serial ATA Port 0	SIMATIC IPC CFast 30	
Advanced > Video Configuration	UMA Sharing Memory Size	256 MB	
Advanced > CPU Related setting	SVM Support	Enabled	
Advanced > AMD PBS Option	Internal LAN Controller	Auto	
	PXE Boot to INT_LAN	Disabled	
Security	Supervisor Password	Not installed	
	Set Supervisor Password	Inactive (no password assigned)	
Power	Wake on PME	Enabled	
	Auto Wake on S5	Disabled	
Boot	Quick Boot	Enabled	
	Quiet Boot	Disabled	
	USB Boot	Disabled	
Boot > Boot Device Priority > Normal Boot Menu	Normal Advance	Normal	
Boot > Boot Device Priority	Boot Type Order	Hard Disk Drive	
		USB	
		Others	
	Hard Disk Drive	SIMATIC IPC CFast 8/16/30 GByte	

Menu	System parameters	Default settings	User settings
Exit	Exit Saving Change	Standard	
	Save Change Without Exit		
	Exit Discarding Changes		
	Load Optimal Defaults		
	Load Custom Defaults		
	Safe Custom Defaults		
	Discard Changes		

8.3.5 BIOS update

With the SIMATIC IPC DiagBase software (included in scope of delivery), you can perform the following actions:

- Perform a BIOS update.
- Saving and updating the current BIOS version.
- Saving the BIOS settings or loading them from another backup.

For additional information, refer to the online help for the SIMATIC IPC DiagBase software.

Requirements

- The S7-1500 software controller CPU 1505SP (F) must be in STOP mode.
- CPU 1515SP PC (F) must be started in Windows mode.

NOTICE
Malfunctions in the software controllers due to critical actions If you perform a BIOS update during the operation of the S7-1500 software controller CPU 1505SP (F), software controller malfunctions can occur that lead to interruptions in communications and downtimes. Do not perform BIOS updates or other actions that strongly utilize the hardware resources during the operation of the CPU 1505SP (F). **Prior** to a BIOS update, switch the CPU 1505SP (F) to STOP.

Performing a BIOS update

1. Start the CPU 1515SP PC (F) in the GRUB menu in **Windows mode** (see figure (Page 58)).

   → The PWR LED lights up yellow first, then green.

   → The device carries out the hardware initialization.
2. Follow the BIOS update steps described in the help for SIMATIC IPC DiagBase.

   → The update is performed.

   → You are prompted to restart the device.
3. Us thee Windows function **Start > Shut down** to shut down the CPU 1515SP PC (F).

   → The PWR LED lights up green first, then yellow.

   → The Windows function closes the Windows operating system and the software controller.
4. Switch off the power supply at the CPU 1515SP PC (F).
5. Connect the power supply.
6. Wait until the Siemens logo disappears.

   → The CPU 1515SP PC (F) restarts.

NOTICE
Overwriting of the Supervisor password during a BIOS update A BIOS update overwrites the password. After a BIOS update, set up the password again in the Security menu under "Set Supervisor Password".

8.4 Power options

An energy diagram with the name SIMATIC on the CPU 1515SP PC (F). This ensures that the CPU does not deviate from its maximum clock rate in order not to endanger the real-time capability of the software controller.

8.5 Protective functions for data carriers

NOTICE
Data loss The number of write cycles on CFast cards is limited due to technical reasons. To prevent data loss, the CFast card must therefore be provided with special protection. Use a write filter to lengthen of service life of the CFast card and avoid the CPU 1515SP PC (F).

Write filters

Two write filters are available for Windows Embedded:

- To protect an entire partition of the CFast card, use the Enhanced Write Filter EWF (Page 78).
  Unlike FBWF, you can also use EWF with compressed NTFS data systems.
- Use the File-Based Write Filter FBWF (Page 82), to update specific files dynamically. The FBWF can be configured more flexibly and enables direct write access without restart.

NOTICE
Data loss If both write filters are activated, the EWF blocks direct write access of the FBWF. Data get lost after a restart of CPU 1515SP PC (F). Activate **only one** of the two write filters per partition.

8.5.1 Enhanced Write Filter (EWF)

Purpose and function

The Enhanced Write Filter (EWF) allows you to write-protect individual partitions.

EWF is disabled by default on the CPU 1515SP PC (F).

The EWF is activated by means of the pre-installed SIMATIC IPC EWF Manager or the Windows console application ewfmgr.exe.

SIMATIC IPC EWF Manager

Start the software via **Start > All Programs > Siemens Automation > SIMATIC > EWF Manager**.

In the status bar, you can use the SIMATIC IPC EWF Manager icon to check whether the EWF is active.

Table 8- 1 Meaning of the icons

Icons	Meaning
	The partition is protected by the EWF.
	EWF is disabled for this partition.
	The EWF is currently switched off, but is activated after the restart.
	The EWF is currently active, but will be deactivated after the restart.
	The filter is active. A Commit command is executed before the next reboot.
	The filter is currently active, but is deactivated after the restart. A Commit command will also be executed before the next reboot.

The operating instructions for the SIMATIC Industrial PC: IPC EWF Manager (http://support.automation.siemens.com/WW/view/en/50867677) is available on the CPU 1515SP PC (F) under **Start > All Programs > Siemens Automation > Documents > Manuals.**

Console application ewfmgr.exe

The application is called via the Windows command line (Command Prompt).

The following functions are available, among others, for setting, switching on and switching off the EWF:

Table 8- 2 Enhanced Write Filter functions

Function	Command
Write-protect drive C: Switching on	`ewfmgr c: -enable`
Write-protect drive C: disable (modified data is accepted)	`ewfmgr c: -commitanddisable`
Modified files on drive C: Accept	`ewfmgr c: -commit`
Display information about the EWF drive	`ewfmgr c:`
Display help	`ewfmgr /h`

Note

The EWF commands for write protection become effective only after a restart.

Note

The EWF command `ewfmgr c: -commitanddisable` must not be used with the option `-Live`.

Special features when using the EWF

NOTICE
Data loss upon power failure and upon shutdown/restart If the EWF is active, all changes made on the C drive are lost after power failure and on shutdown/restart. Use an UPS to prevent data losses after power failure.

Back up the data in the EWF-RAM overlay to the CFast card before shutting down the CPU 1515SP PC (F). In the command line, enter the following commands:

```
ewfmgr c: -commit
```

Restart the device

Or

```
ewfmgr c: -commitanddisable
```

Restart the device

```
ewfmgr c: -enable
```

Restart the device

Note

Data loss

If EWF is active and you decline a restart after having set the `-commitanddisable` or `-commit` option, your data is lost after a power failure!

Note

Disabling automatic daylight saving changes

In systems without central time management and with activated EWF, the time is advanced or set back by one hour in the daylight saving time or standard time period each time the system performs a cold or warm restart, due to the system-specific function for automatic daylight saving changes.

Reason for this behavior: Windows Embedded Standard 7 sets a flag in a registry entry that indicates completion of the conversion to daylight saving time. Since this file is also protected against modification by the EWF, the marker is lost during the boot sequence and the adjustment is made again.

We therefore recommend that you deactivate the automatic adjustment and change the clock manually.

Proceed as follows:

1. Disable the EWF filter (`ewfmgr c: -commitanddisable`) and reboot the system.
2. Deactivate the automatic switchover in the Control Panel:
   Start > Control Panel > Date and Time > in the tab "Time Zone" clear the check mark for "Automatically adjust clock for daylight saving changes".
3. Save the change (`ewfmgr c: -commit`).
4. Switch on the EWF again (`ewfmgr c: -commitanddisable`) and reboot the system.

8.5.2 File-Based Write Filter (FBWF)

Purpose and function

The FBWF allows you to write-protect specific files and folders of a partition.

FBWF is enabled by default on the CPU 1515SP PC (F).

The FBWF is activated by means of the Windows console application fbwfmgr.exe.

NOTICE
Data loss If both write filters are activated, the EWF blocks direct write access of the FBWF. Data get lost after a restart of CPU 1515SP PC (F). Activate **only one** of the two write filters.

Console application fbwfmgr.exe

The application is called via the Windows command line (Command Prompt).

The following functions, among others, are available for setting, switching on and switching off the FBWF:

Table 8- 3 File-Based Write Filter

Function	Command
Show FBWF status	`fbwfmgr /displayconfig`
Activate FBWF after the next restart	`fbwfmgr /enable`
Write to protected files	`fbwfmgr /commit c: \<Path>\<File Name>`
Display help	`fbwfmgr /?`
Defining exclusions:	
• Add file	`fbwfmgr /addexclusion c: \<Path>\<FileName.ext>`
• Add folder	`fbwfmgr /addexclusion c: \<Path>`
• Remove file	`fbwfmgr /removeexclusion c: \<Path>\<FileName.ext>`
• Remove folder	`fbwfmgr /removeexclusion c: \<Path>`

Note

Note:

- The correct notation is as follows:
  Drive letter: space character "\" relative file path
- The write protection commands become effective only after a restart.

Rule for exclusion list

The following sequence applies if you define exclusions for files and folders that do not yet exist:

- Defining exclusions
- Restart CPU 1515SP PC (F)
- Create file/folder

Display of the partition size with activated FBWF

The partition size displayed in the Explorer does not correspond with the actual size when the FBWF is active. The size displayed is derived from the amount of memory occupied on the partition and from memory released by the FBWF. After the maximum size of the overlay was reached, a message is output warning of insufficient space on the partition.

Reference

Additional information on FBWF is available on the Internet (http://msdn.microsoft.com/en-us/library/ff794219(v=winembedded.60).aspx).
Additional information on the topic of partitions is available in the Change partitioning (Page 85) chapter.

Maintenance 9

9.1 Backing up and restoring data

Introduction

The operating system and the Runtime software are located on the supplied Restore DVD. You can use this to restore the original software of the CPU 1515SP PC (F).

If you use functions from the Restore menu, you must acknowledge a security message. For the functions, 72 hours are available in each case. If the functions are no completed within this period, the CPU 1515SP PC (F) is automatically restarted.

Save your project to partition D: of the CFast card.

SIMATIC IPC Image & Partition Creator

You can also create your own image of your CFast card. This contains the operating system, the Runtime software and the complete project loaded from the TIA Portal.

To back up data in Windows Embedded Standard 7, we recommend the software tool SIMATIC IPC Image & Partition Creator (V3.3 or later). It provides for easy backup and fast restore of the contents of the CFAST card and of individual partitions (images).

Note

The SIMATIC Image & Partition Creator supports the X2 PN/IE (LAN) interface.

You can procure the SIMATIC IPC Image & Partition Creator:

- via the Siemens online ordering system (http://www.siemens.com/automation/mall).
- Pre-installed on the SIMATIC IPC Service USB flash drives.

For additional information, please refer to the corresponding product documentation.

SIMATIC IPC Service USB flash drive

You can use the SIMATIC IPC Service USB flash drives for data backup and restore.

You obtain these through the Siemens online ordering system (http://www.siemens.com/automation/mall).

9.2 Change partitioning

9.2.1 Partitions in the delivery state

Partitioning the CFast card

The following partitions are set up on the CFast card by default:

Partition	Name	30 GB CFast card (WES7 E 32Bit/WES7 P 64Bit)	File system
C:	SYSTEM	19.5 GB	NTFS
D:	DATA	8 GB	NTFS
-	-	0.4 GB	RAW
-	WinCCMB	0.04 GB	NTFS

Note

Partitions in Windows Embedded Standard 7

The partitions need to be set again if they are faulty or if the partitioning is to be changed.

NOTICE

CPU volume for software controller (0.4 GB RAW)

Do not change the CPU volume for software controllers.

This is the only way to ensure that the software controller continues to operate without error.

9.2.2 Change partitioning

If the capacities of the partitions are insufficient, you have the option with Windows 7 to change the size of the partitions (for example, drive C: extend and drive D: reduce).

Free space must be available in order to extend the partition. You can recognize free space by the designation "Unallocated". You may have the reduce or delete other partitions to create space.

Note

Deleting partitions

When partitions are deleted on the data on them are destroyed.

Possible reasons for an expansion of the partition size to drive C:

- Loading security updates for Windows drive C:
- Option of installing large software packages on C, if their size exceeds the available storage space.

Expand/shrink partition

To expand, for example, Partition C: at the cost of Partition D: follow these steps:

In the Windows start bar, select **Start > Control Panel > System and Security > Administrative Tools > Computer Management > Disk Management**. The "Computer Management" window opens.

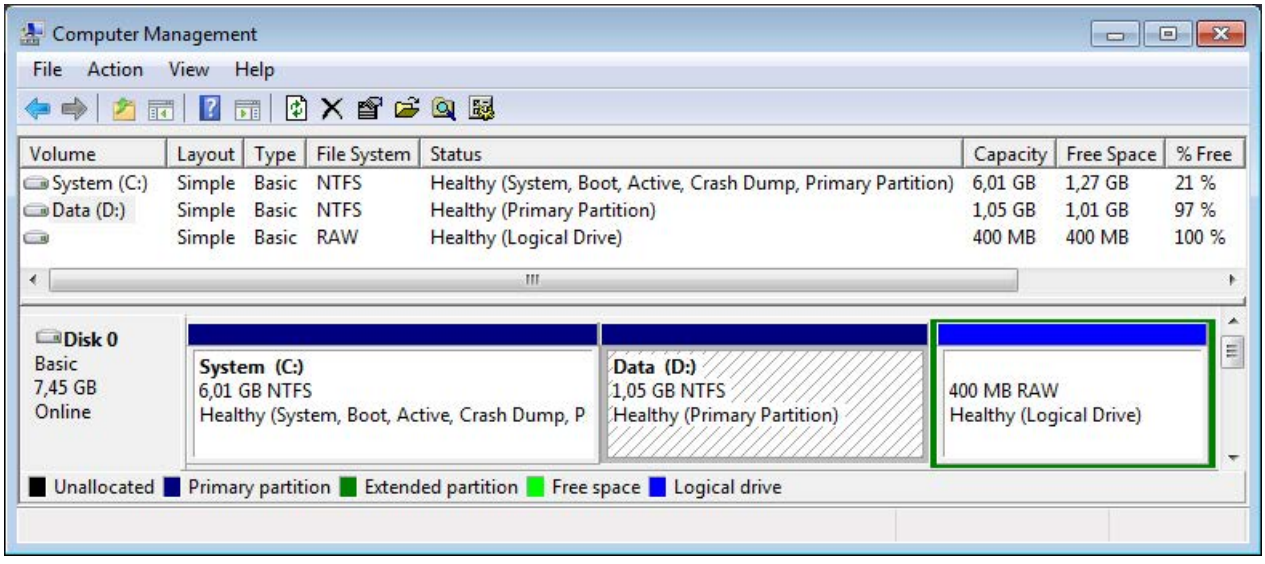

Figure 9-1 Computer Management

To expand Partition C: you must delete Partition D: first. Right-click on Partition D: and select "Delete Volume..."

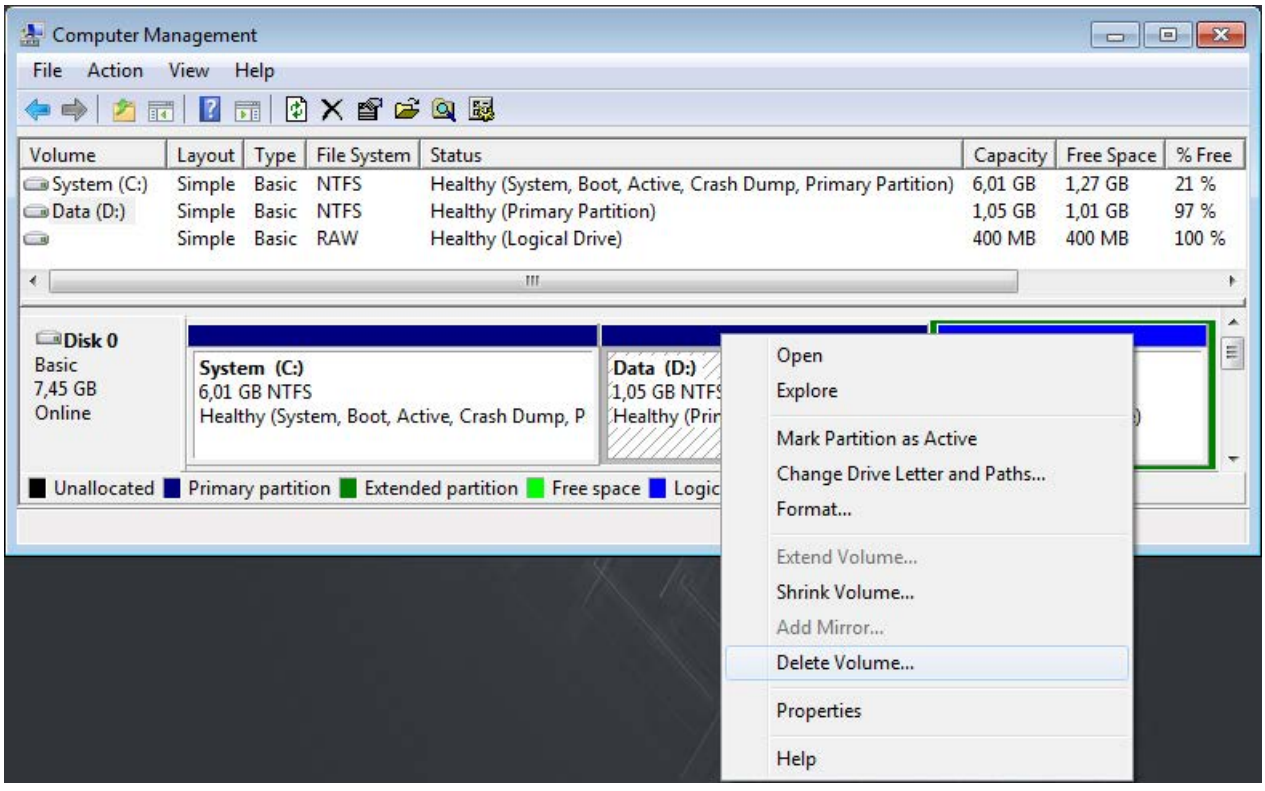

Figure 9-2 Partition D: Delete

The space which was occupied by Partition D: is now available for Partition C: .

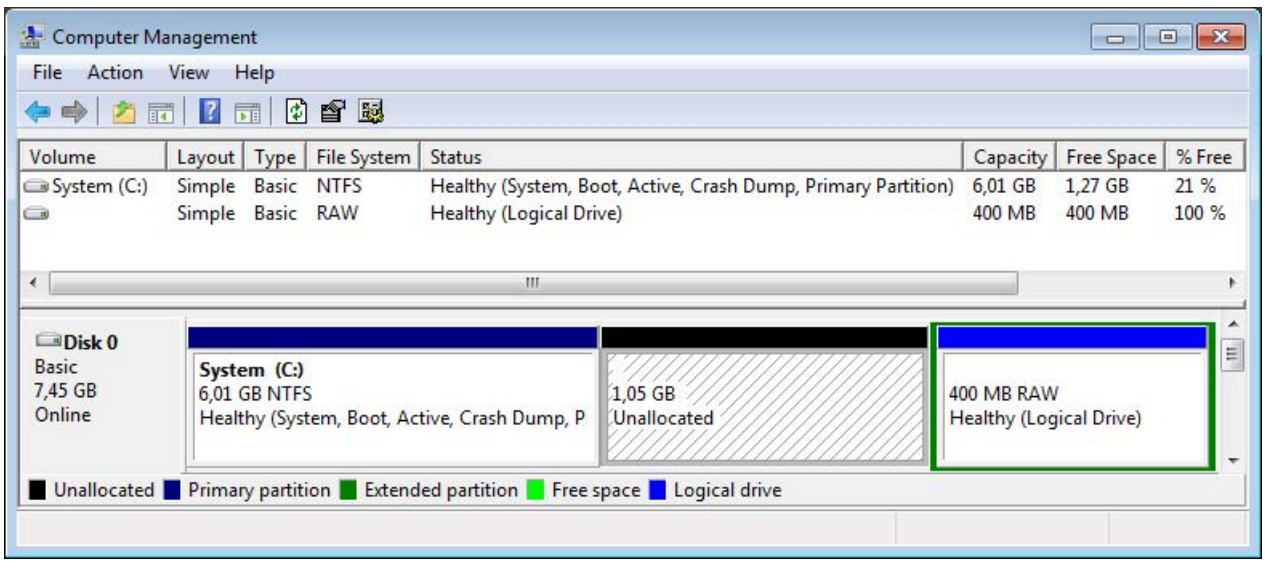

Figure 9-3 Partition D: cleared

Now right-click on Partition C: and select "Extend Volume...".

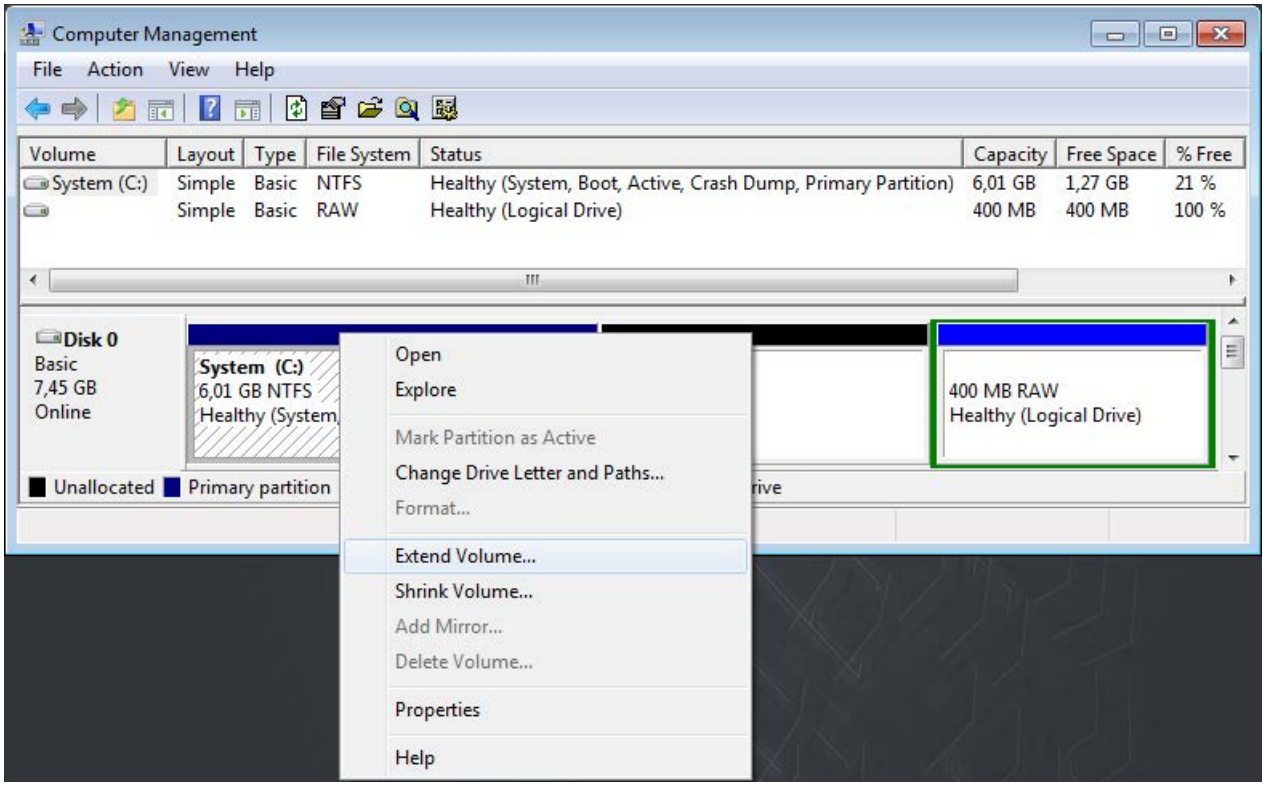

Figure 9-4 Partition C: expand

After selecting the option "Extend Volume...", the "Extend Volume Wizard" appears.

Figure 9-5 Extend Volume Wizard

In the following window you have the option to expand Partition C: by all or part of the available memory. In our example we expand Partition C: by 500 MB.

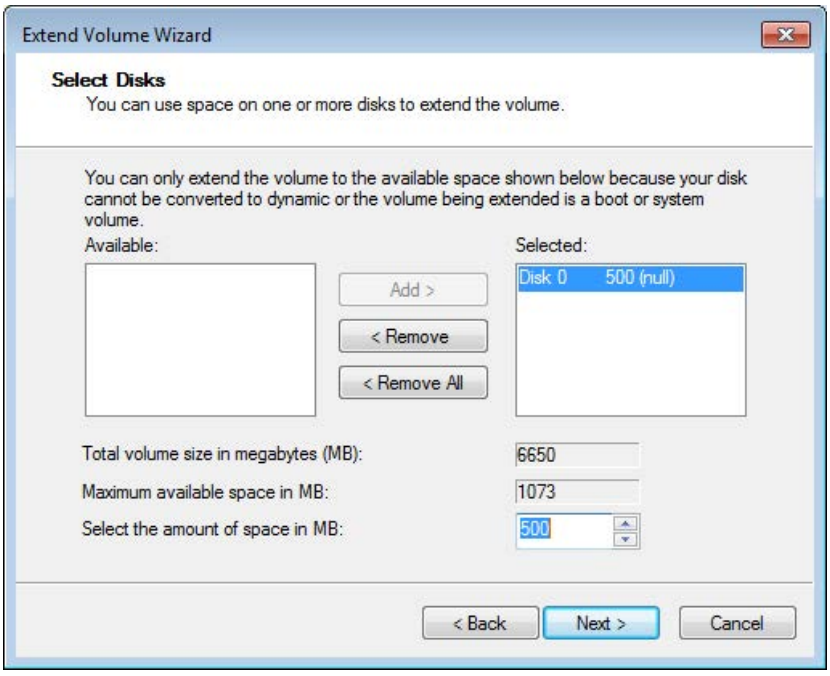

Figure 9-6 Select memory size

When you have completed the steps of the wizard, the Computer Management window shows you the new division of the partition sizes.

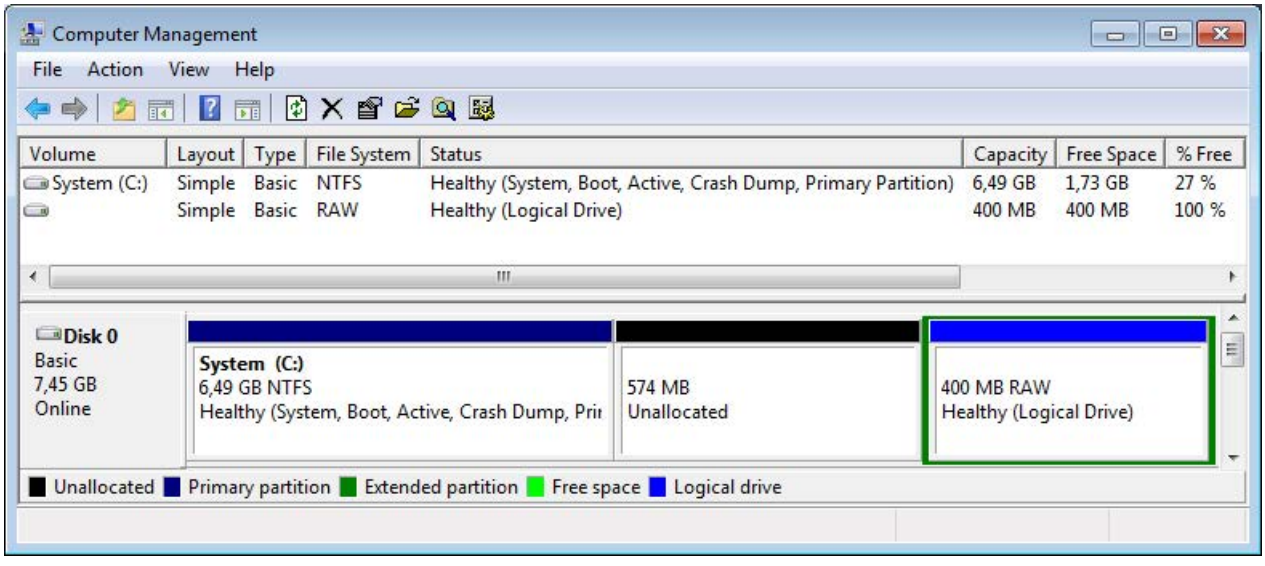

Figure 9-7 Result of the repartitioning

To reassign the unassigned memory to Partition D: right-click on the unassigned memory and select "New Simple Volume..."

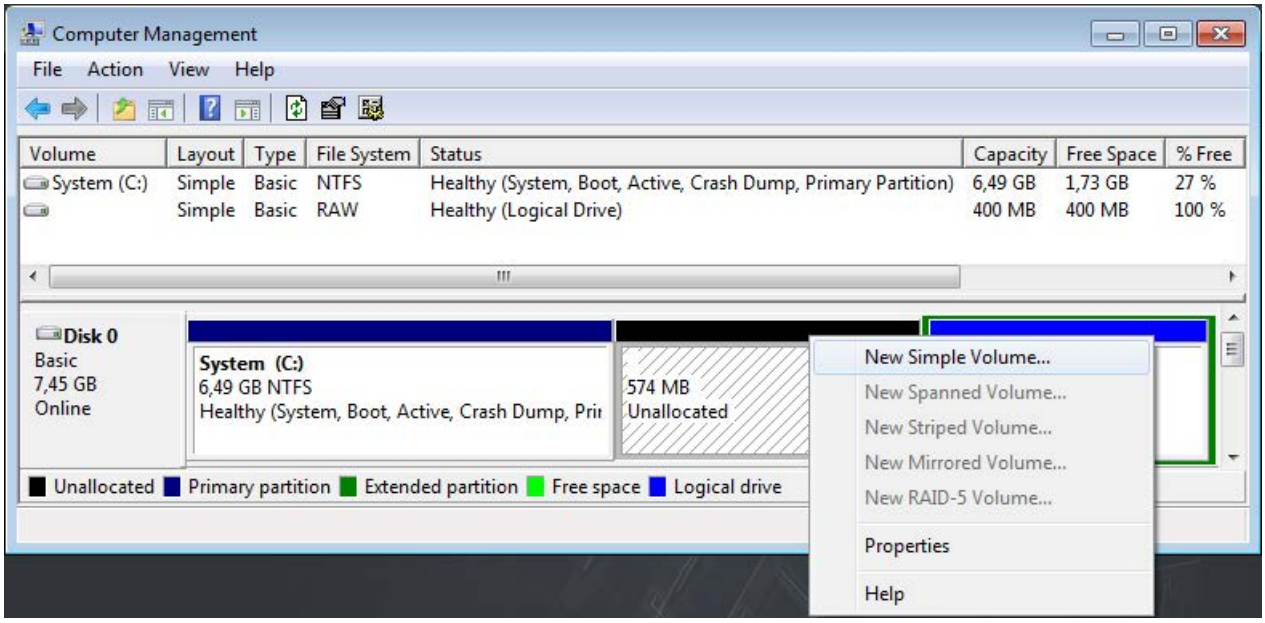

Figure 9-8 Recreate partition

After selecting the option "New Simple Volume...", the "New Simple Volume Wizard" appears. Set the required memory size there.

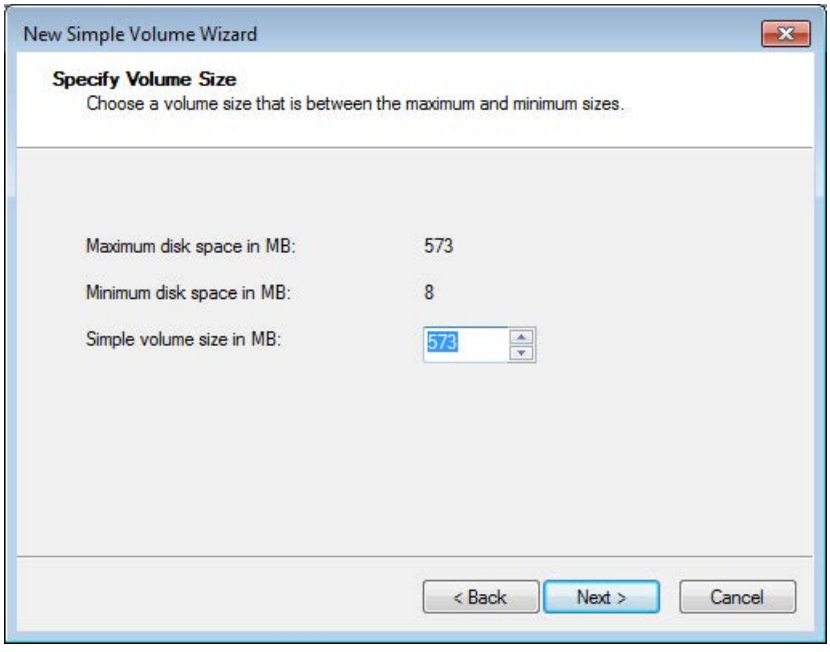

Figure 9-9 Select memory size

In the following window, select Drive D:

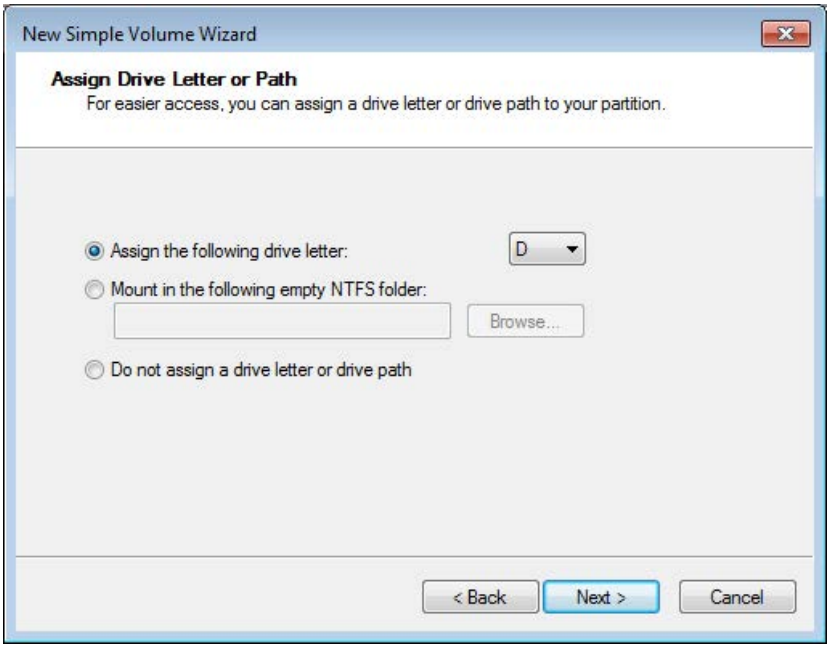

Figure 9-10 Assign drive letter

Specify the formatting for storing data on the partition.

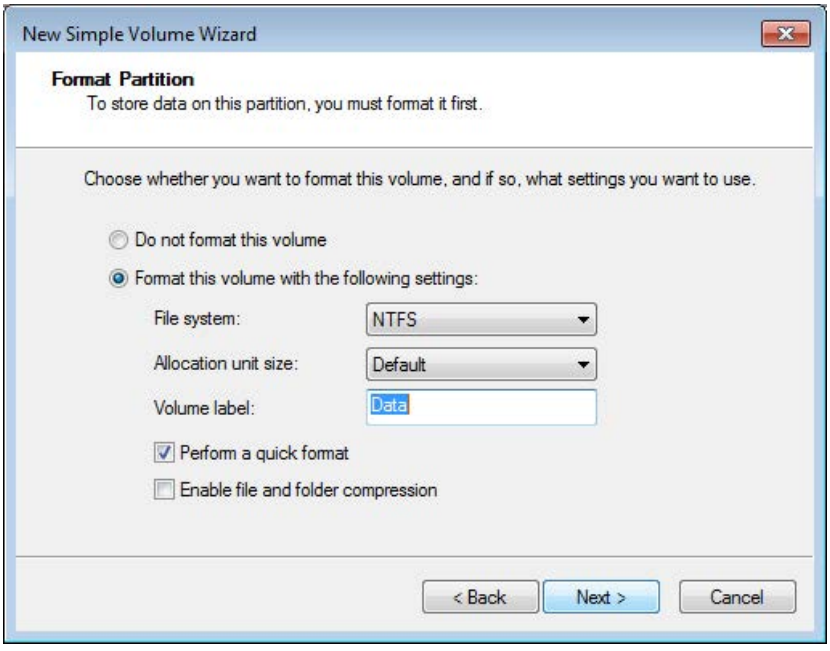

Figure 9-11 Specify formatting

Once you have defined the formatting, an overview of your selected settings appears. Then click "Finish" to complete the process.

The "Computer Management" window now shows the new partition sizes.

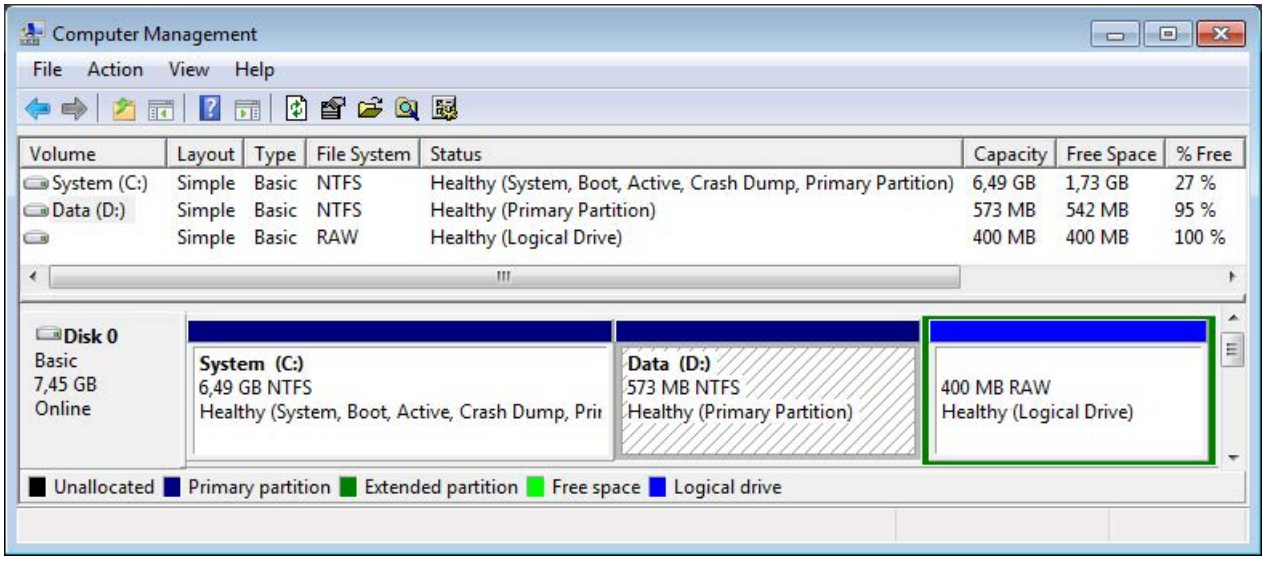

9.3 Restoring the delivery state

Introduction

The entire image of your operating system and your Runtime software are located on the supplied Restore DVD. You can use the SIMATIC Restore menu to restore the original CPU 1515SP PC (F) software.

Alternatively, you can use the Restore menu to create a boot-capable USB stick to restore the original software without a DVD-ROM drive (see chapter Restoring delivery state using USB stick (Page 95)).

Note

Restoring existing system partition

If your projects are stored on partition D: you can then use the option "Restore existing system partition" to restore Partition C: with the operating system and the Runtime software, without your project data being affected.

Note

Using Multitouch panels

The restoration of the original software is not possible with a Multitouch panel, because the Multitouch driver is not available until after the installation of the operating system.

Requirements

To restore the original software of the CPU 1515SP PC (F), the following is required:

- A CFast card. Minimum size of the CFast card for the CPU 1515SP PC (F):
  - WES7 E 32Bit 4GB RAM: 8 GB
  - WES7 P 64Bit 4GB RAM: 16 GB
- A DVD drive with external power supply
- The supplied Restore DVD. Alternatively, a bootable USB stick
- A data backup

NOTICE
Data loss During restoration of the system to delivery state, the CFast card is completely erased and re-formatted, and is then loaded with the original software. All subsequently modified or added data, programs, license keys and partitions on the CFast card will be lost. Back up the data of the CPU 1515SP PC (F), after you have assigned parameters to the module and if you have made changes to the configuration.

NOTICE
Loss of license keys Back up the license keys before the restore by dragging these to your USB stick via *Automation License Manager*. After the restart of the CPU 1515SP PC (F), re-install the license keys on the device via the *Automation License Manager*.

Restore delivery state of the CPU 1515SP PC (F) with the Restore DVD

Before the restore

1. Switch off the power supply of the CPU.
2. Remove all USB devices from the CPU.
3. Connect a DVD drive with restore DVD to a USB interface of the CPU.
4. Switch on the power supply of the CPU.

   → The CPU is started.
5. Press <F12> to start the Boot Manager.
6. Select the list entry for the DVD drive in the Boot Manager.
7. After the prompt, confirm the start by pressing any key.

   → The loading process is displayed (Windows logo).

   → The SIMATIC Restore menu opens.

   – Select a language.
   – Select "CPU1515SP PC (F)" or "CPU1515SP PC (F) + HMI".
   – Select the option "Completely restore system drive".

     → The original software is restored on Partition C:, Partition D: is deleted.

After the restore

1. Exit the Restore menu.
2. Remove all USB devices.
3. Proceed as described in Initial commissioning (Page 50).

Further procedure

- Reconnect the USB devices.
- Install the license keys.

9.4 Restoring delivery state using USB stick

Introduction

You can use the Restore menu to create a bootable USB stick in order to restore the original software of the CPU 1515SP PC (F).

Use the SIMATIC IPC Service USB FlashDrive (6AV7672-8JD02-0AA0) for the creation.

Preparing bootable USB stick using PC

NOTICE
Data loss If you transfer the data from the Restore-DVD to the USB stick, all existing data on the USB stick is deleted. You should back up the data on the USB stick before you create the Restore USB stick.

Transferring Restore DVD data to the USB stick

1. Place the Restore DVD into the DVD drive of a PC.
2. Double-click the CD_Menu.exe file in the root directory of the DVD.
3. Select the option " Create USB flash drive".
4. When all the data has been transferred, remove the Restore USB stick safely from the PC.

Note

If you disturb the User-Interface window during the process (for example, by a mouse click in the window), the process continues unchanged even if no reaction is recognizable within the tool interface.

Restoring delivery state using USB stick

Before the restore

1. Switch off the power supply of the CPU.
2. Remove all USB devices from the CPU.
3. Connect the Restore USB stick directly to the CPU.
4. Switch on the power supply of the CPU.

   The CPU is started.

   The restore process starts.
5. Press <F12> to start the Boot Manager.
6. Select the list entry for the USB stick as boot medium in the Boot Manager.
7. After the prompt, confirm the start by pressing any key.

   The loading process is displayed (Windows logo).

   The SIMATIC Restore menu opens.
8. Select a language.
9. Select "CPU 1515SP PC (F)" or "CPU 1515SP PC (F) + HMI".
10. Select the option "Restore delivery state".

    The original software is restored.

After the restore

1. Exit the Restore menu.
2. Remove all USB devices.
3. Proceed as described in Initial commissioning.

9.5 Updating software

Note

If you update the software, then always start the CPU 1515SP PC (F) in the GRUB menu in Windows mode (see Figure (Page 58)).

Information on updating software can be found on the Internet (https://support.industry.siemens.com/cs/ww/en).

HMI devices

During the installation, make sure that you always use the latest drivers for the HMI devices used (SIMATIC Flat Panels).
Before you install a new driver version, you must uninstall the old driver version in order to ensure proper operation.

You can download the current driver software from SIMATIC Product Support.

9.6 Windows Embedded Standard 7

The Windows Embedded Standard 7 operating system is pre-installed on the CPU 1515SP PC (F). WES7 E 32Bit or WES7 P 64Bit are available depending on the order option.

The WES7 P version supports multi-touch functionality (gesture control).

Windows language packs

English is available as the basic language for the installation of the Windows operating system.

With the system version **WES7 P 64Bit 4GB RAM** of the CPU 1515SP PC (F), other operating system languages can be installed after the first commissioning. Note that you need administrator rights to install language packages.

The following language packages are contained on the Restore DVD in \Packages\x64\LanguagePack:

- Traditional Chinese
- Simplified Chinese
- German
- English
- French
- Italian
- Japanese
- Korean
- Russian
- Spanish

Installing languages

Use the Windows function "Start > Control Panel > Region and Language" to install a language pack. The installation takes around 45 minutes.

Updates

You can install additional updates at a later time. You can find current information on the operating system at Widows (http://www.windows.com).

9.7 Sending the device to customer service

Before sending

Note

Back up data and remove memory cards

Before you send in the CPU 1515SP PC (F) for repair:

- Create a backup of your data.
- Back up your SIMATIC license keys on a USB stick.
- Remove your SD/MMC cards.
- Remove your **CFast card**.

9.8 Removing and inserting the CFast card

Introduction

CPU 1515SP PC (F) has one slot for a CFast card. On this card, you will find the operating system, your Runtime software and, after configuration, the project.

Seal the cover for the CFast card to protect the system against unauthorized access.

You must remove the CFast card before you send in the CPU, for example, for repair.

Requirements

- CPU 1515SP PC (F) is de-energized.

Procedure – Removing the CFast card

1. Remove the seal.
2. Open the cover, using a screwdriver if necessary.
3. Press onto the CFast card.
   The card is pressed out of the slot.
4. Pull the card out of the slot.
   To do this, grip the rib on the underside of the memory card.

Procedure – Inserting the CFast card

1. Open the cover of the slot, using a screwdriver if necessary.
2. Insert the CFast card into the slot.
3. Press the CFast card into the slot.

   The CFast card is properly inserted if the cover can be closed without any resistance.
4. Close the cover.

NOTICE
Unauthorized access Seal the cover with lead to protect the CFast card with the operating system of the CPU 1515SP PC (F) against unauthorized access.

Technical data 10

10.1 Standards and approvals

Introduction

The general technical specifications cover the following:

- The standards and test values which the CPU 1515SP PC (F) complies with and fulfils.
- The test criteria according to which the CPU 1515SP PC (F) was tested.

Currently valid markings and approvals

Note

The currently valid markings and approvals are printed on the CPU 1515SP PC (F).

Safety information

WARNING

Risk of personal injury and damage to property.

In potentially explosive atmospheres, injury to persons and material damage may occur if you disconnect plug-in connections during operation of an ET 200SP.

Always switch off the power to the ET 200SP when disconnecting plug-in connections in potentially explosive atmospheres.

WARNING

Flying sparks due to loose cables

Risk of explosion in hazardous areas.

USB cables and PROFINET connectors may detach from the device in the case of strong oscillation and high vibrating loads.

Attach these cables to the strain relief of the device using cable ties.

WARNING

Explosion hazard

If you replace components, compliance with Class I, DIV. 2 can become invalid.

WARNING

Area of application

This device is only suitable for use in Class I, Div. 2, Group A, B, C, D, or in non-hazardous areas.

CE marking

The CPU 1515SP PC (F) meets the requirements and protection targets of the following EC guidelines and complies with the harmonized European standards (EN) for programmable logic controllers published in the official gazettes of the European Community:

- 2006/95/EC "Electrical equipment designed for use within certain voltage limits" (Low-Voltage Directive)
- 2004/108/EC "Electromagnetic Compatibility" (EMC Directive)
- 94/9/EC "Equipment and protective systems intended for use in potentially explosive atmospheres" (Explosion Protection Directive)

The EC declarations of conformity are available for the responsible authorities at:

Siemens AG
Digital Factory

Factory Automation
DF FA AS DH AMB
Postfach 1963
D-92209 Amberg

These are also available for download on the Customer Support Internet pages, keyword "Declaration of Conformity".

cULus approval

Underwriters Laboratories Inc., complying with

- UL 508 (Industrial Control Equipment)
- CSA C22.2 No. 142 (Process Control Equipment)

OR

cULus HAZ. LOC. approval

Underwriters Laboratories Inc., complying with

- UL 508 (Industrial Control Equipment)
- CSA C22.2 No. 142 (Process Control Equipment)
- ANSI/ISA 12.12.01
- CSA C22.2 No. 213 (Hazardous Location)

APPROVED for use in
Class I, Division 2, Group A, B, C, D Tx;
Class I, Zone 2, Group IIC Tx

Installation Instructions for cULus haz.loc.

- WARNING - Explosion Hazard - Do not disconnect while circuit is live unless area is known to be non-hazardous.
- WARNING - Explosion Hazard - Substitution of components may impair suitability for Class I, Division 2 or Zone 2.
- This equipment is suitable for use in Class I, Division 2, Groups A, B, C, D; Class I, Zone 2, Group IIC; or non-hazardous locations.

WARNING: EXPOSURE TO SOME CHEMICALS MAY DEGRADE THE SEALING PROPERTIES OF MATERIALS USED IN THE RELAYS.

FM approval

Factory Mutual Research (FM) according to
Approval Standard Class Number 3611, 3600, 3810 (ANSI/ISA 82.02.01)
CSA C22.2 No. 213
CSA C22.2 No. 61010-1
APPROVED for use in Class I, Division 2, Group A, B, C, D Tx;
Class I, Zone 2, Group IIC Tx

ATEX approval

in accordance with EN 60079-15 (Electrical apparatus for potentially explosive atmospheres; Type of protection "n") and EN 60079-0 (Electrical apparatus for potentially explosive gas atmospheres - Part 0: General Requirements)

II 3 G Ex nA IIC Tx Gc
DEKRA 12ATEX0038X

IECEx approval

According to IEC 60079-15 (Explosive atmospheres - Part 15: Equipment protection by type of protection "n") and IEC 60079-0 (Explosive atmospheres - Part 0: Equipment - General requirements)

Ex nA IIC Tx Gc
IECEx DEK 13.0011X

Marking for Australia and New Zealand

or

The ET 200SP distributed I/O system meets the requirements of the standard AS/NZS CISPR 16.

Korea Certificate KCC-REM-S49-ET200SP

Note that this device corresponds to limit class A in terms of the emission of radio frequency interference. This device can be used in all areas, except residential areas.

이 기기는 업무용(A급) 전자파 적합기기로서 판매자 또는 사용자는 이 점을 주의하시기 바라며 가정 외의 지역에서 사용하는 것을 목적으로 합니다.

IEC 61131

The CPU 1515SP PC (F) with the S7-1500 software controller CPU 1505SP (F) meets the requirements and criteria of the standard IEC 61131-2 (programmable logic controllers, part 2: Equipment requirements and tests).

PROFINET standard

The ET 200SP distributed I/O system is based on the standard IEC 61158 Type 10.

PROFIBUS standard

The ET 200SP distributed I/O system is based on the standard IEC 61158 Type 3.

IO-Link standard

The ET 200SP distributed I/O system is based on the standard IEC 61131-9.

Use in industrial environments

SIMATIC products are designed for use in industry.

Table 10- 1 Use in industrial environments

Area of application	Interference emission requirements	Interference immunity requirements
Industry	EN 61000-6-4: 2011	EN 61000-6-2: 2005

Use in residential areas

Note

The ET 200SP is intended for use in industrial areas; use in residential areas may have an impact on radio/TV reception.

If you want to use the ET 200SP in residential areas, you must ensure that its radio frequency interference emission complies with limit class B in accordance with EN 55011.

Suitable measures for achieving RF interference level Class B include, for example:

- Installation of the CPU 1515SP PC (F). in grounded control/switch cabinets
- Use of filters in the supply lines

Reference

The certificates for the markings and approvals can be found on the Internet under Service&Support (http://www.siemens.com/automation/service&support).

10.2 Electromagnetic compatibility

Definition

Electromagnetic compatibility (EMC) is the ability of an electrical installation to function satisfactorily in its electromagnetic environment without interfering with that environment.

Among other things, CPU 1515SP PC (F) also meets the requirements of the EMC legislation for the European single market. The prerequisite for this is that the CPU 1515SP PC (F) complies with the requirements and guidelines relating to electrical equipment.

EMC according to NE 21

The CPU 1515SP PC does not meet the EMC specifications of the NAMUR guideline NE21.

The CPU 1515SP PC meets the EMC specifications according to IEC 61131-2 and IEC 61000-6-2.

Pulse-shaped disturbance

The following table shows the electromagnetic compatibility of the CPU 1515SP PC (F) with regard to pulse-shaped interference.

Table 10- 2 Pulse-shaped disturbance

Pulse-shaped disturbance	Test voltage	corresponds to degree of severity
Electrostatic discharge according to IEC 61000-4-2.	Air discharge: ±8 kV Contact discharge ± 4 kV	3 3
Burst pulses (high-speed transient disturbance) according to IEC 61000-4-4.	2 kV (power supply cable) 2 kV (signal cable > 30 m) 1 kV (signal cable < 30 m)	3 3
High-energy single pulse (surge) according to IEC 61000-4-5 External protective circuit required (see function manual Designing interference-free controllers (http://support.automation.siemens.com/WW/view/en/59193566))		3
• asymmetric coupling	2 kV (power supply cable) DC with protective elements 2 kV (signal cable/data cable only > 30 m), possibly with protective elements	
• symmetric coupling	1 kV (power supply cables) DC with protective elements 1 kV (signal cable/data cable only > 30 m), possibly with protective elements	

Sinusoidal disturbance

The following table shows the electromagnetic compatibility of the CPU 1515SP PC (F) with regard to sinusoidal interference.

- RF radiation

Table 10- 3 Sinusoidal disturbance variables with RF radiation

RF radiation according to IEC 61000-4-3/NAMUR 21 Electromagnetic RF field, amplitude-modulated		corresponds to degree of severity
80 to 1000 MHz; 1.0 to 2.0 GHz	2.0 GHz to 2.7 GHz	3
10 V/m	3 V/m	
80% AM (1 kHz)		

- RF coupling

Table 10- 4 Sinusoidal disturbance variables with RF coupling

RF coupling according to IEC 61000-4-6	corresponds to degree of severity
(10 kHz) 150 kHz to 80 MHz	3
10 V_{rms} unmodulated	
80% AM (1 kHz)	
150 Ω source impedance	

Emission of radio interference

Interference emission of electromagnetic fields according to EN 55016: Limit class A, group 1 (measured at a distance of 10 m).

Table 10- 5 Interference emission of electromagnetic fields according to EN 55016

Frequency	Emitted interference
30 MHz to 230 MHz	< 40 dB (µV/m)Q
230 MHz to 1000 MHz	< 47 dB (µV/m)Q

Interference emission via the AC power supply according to EN 55016: Limit value class A, Group 1.

Table 10- 6 Interference emission via the AC power supply according to EN 55016

Frequency	Emitted interference
0.15 to 0.5 MHz	<79 dB (µV) Q <66 dB (µV) M
0.5 to 30 MHz	<73 dB (µV) Q <60 dB (µV) M

10.3 Shipping and storage conditions

Introduction

The CPU 1515SP PC (F) exceeds requirements in terms of shipping and storage conditions according to IEC 61131-2. The following information applies to modules that are shipped and/or stored in their original packaging.

Table 10- 7 Shipping and storage conditions for modules

Type of condition	Permissible range
Free fall (in shipping package)	≤1 m
Temperature	From -40 °C to +70 °C
Barometric pressure	1080 hPa to 660 hPa (corresponds to an altitude of -1000 m to 3500 m)
Relative humidity	5% to 95%, without condensation
Sinusoidal vibrations according to IEC 60068-2-6	5 - 8.4 Hz: 3.5 mm 8.4 - 500 Hz: 9.8 m/s^2
Shock according to IEC 60068-2-27	250 m/s^2, 6 ms, 1000 shocks

10.4 Mechanical and climatic ambient conditions

Note

Restrictions

Deviating from the ambient conditions for the ET 200SP distributed I/O system, the following restrictions apply to the CPU 1515SP PC (F):

- Mechanical ambient conditions:
  - 2 g constant acceleration when using the BusAdapter BA 2×FC
- Ambient temperature:
  - 0 to 60 °C for horizontal installation with maximum 32 I/O modules
  - 0 to 55 °C for horizontal installation with maximum 64 I/O modules
  - 0 to 50 °C for vertical installation with maximum 32 I/O modules

Operating conditions

CPU 1515SP PC (F) is designed for stationary use in weather-proof locations. The operating conditions exceed the requirements according to DIN IEC 60721-3-3:

- Class 3M3 (mechanical requirements)
- Class 3K3 (climatic requirements)

Mechanical ambient conditions

The table below shows the mechanical ambient conditions in the form of sinusoidal oscillations.

Table 10- 8 Mechanical ambient conditions

Frequency band	CPU 1515SP PC (F)
5 ≤ f ≤ 8.4 Hz	3.5 mm amplitude
8.4 ≤ f ≤ 150 Hz	1 g constant acceleration
10 ≤ f ≤ 60 Hz	0.35 mm amplitude
60 ≤ f ≤ 1000 Hz	• 1 g constant acceleration (with BusAdapter BA 2×RJ45) • 2 g constant acceleration (with BusAdapter BA 2×FC)

Test of mechanical ambient conditions

The table below provides important information with respect to the type and scope of the test of ambient mechanical conditions.

Table 10- 9 Test of mechanical ambient conditions

Condition tested	Test Standard	Comment
Vibration	Vibration test according to IEC 60068-2-6 (sine)	Type of oscillation: Frequency sweeps with a rate of change of 1 octave/minute. BA 2×RJ45 • 5 Hz ≤ f ≤ 8.4 Hz, 3.5 mm constant amplitude • 8.4 Hz ≤ f ≤ 150 Hz, 1 g constant acceleration BA 2×FC • 10 Hz ≤ f ≤ 60 Hz, 0.35 mm constant amplitude • 60 Hz ≤ f ≤ 1000 Hz, 2 g constant acceleration Duration of vibration: 10 frequency sweeps per axis in each of 3 vertically aligned axes
Shock	Shock, tested according to IEC 60068-2-27	Type of shock: Half-sine Shock intensity: 150 m/s^2 peak value, 11 ms duration Direction of shock: 3 shocks in each direction (+/-) at each of 3 vertically aligned axes

Climatic ambient conditions

You may use the CPU 1515SP PC (F) under the following climatic, ambient conditions.

Table 10- 10 Climatic ambient conditions

Ambient conditions	Permissible range	Comments
Temperature: Horizontal mounting position:	• from 0 to 60 °C	For configuration with 32 I/O modules and 3 x 100 mA USB load
	• from 0 to 55 °C	For configuration with 64 I/O modules and 2 x 500 mA + 1 x 100 mA USB load
Vertical installation:	• 0 to 50 °C	For configuration with 32 I/O modules and 3 x 100 mA USB load
Permitted temperature change	10 K/h	-
Relative humidity	from 10 to 95%	Without condensation, corresponds to relative humidity (RH) class 2 according to IEC 61131 part 2
Barometric pressure	1080 hPa to 795 hPa	Corresponds to an altitude of -1000 m to 2000 m
Concentration of pollutants	SO_2: <0.5 ppm; RH <60 %, no condensation H_2S: <0.1 ppm; RH <60 %, no condensation	-
	ISA-S71.04 severity level G1; G2; G3	-

10.5 Information on insulation, protection class, degree of protection and rated voltage

Insulation

The insulation is designed according to the requirements of EN 61131-2: 2007.

Note

For modules with 24 V DC supply voltage, the electrical isolation is designed for max. 60 V AC / 75 V DC and basic insulation is designed according to EN 61131-2: 2007.

Pollution degree/overvoltage category according to IEC 61131

- Pollution degree 2
- Overvoltage category: II

Protection class according to IEC 61131-2:2007

CPU 1515SP PC (F) fulfils the protection class I and contains parts of protection class II and III.

The grounding of the mounting rail must meet the requirements for functional earth FE.

The installation location (e.g. enclosure, control cabinet) must have a protective conductor connection that meets the standard to maintain protection class I.

Degree of protection IP20

Degree of protection IP20 according to IEC 60529, i.e.:

- Protection against contact with standard probe
- Protection against foreign objects with diameters in excess of 12.5 mm
- No protection against water

Rated voltage for operation

CPU 1515SP PC (F) works with the rated voltage and corresponding tolerances listed in the following table.

Table 10- 11 Rated voltage for operation

Rated voltage	Tolerance range
24 V	19.2 to 28.8 V DC [1]
	18.5 to 30.2 V DC [2]

[1] Static value: Creation as functional extra-low voltage with safe electrical isolation in accordance with IEC 60364-4-41

[2] Dynamic value: including ripple, for example, with three-phase bridge rectification

10.6 Use of the ET 200SP in zone 2 potentially explosive atmospheres

See product information Use of subassemblies/modules in a Zone 2 Hazardous Area (http://support.automation.siemens.com/WW/view/en/19692172).

10.7 Module data

10.7.1 CPU 1515SP PC, system version WES7 E 32Bit 4GB RAM

CPU 1515SP PC, system version WES7 E 32Bit 4GB RAM

	6ES7677-2AA31-0EB0
General information	
Product type designation	CPU 1515SP PC
HW release number	FS06
Firmware version	V2.1
Engineering with	
STEP 7 TIA Portal can be configured/integrated as of version	V14 SP1
PC configuration	
Processor	Dual-Core 1 GHz, AMD G Series APU T40E
Main memory	4 GB RAM
Flash disk	30 GB
Operating systems	Windows Embedded Standard 7 E 32 bit
Installed SW	
Visualization	No
Controller	S7-1500 Software Controller CPU 1505SP V2.1
Operator controls	
Mode selector	1
Supply voltage	
Type of supply voltage	24 V DC
Low limit of permitted range (DC)	19.2 V
High limit of permitted range (DC)	28.8 V
Reverse polarity protection	Yes
Power and voltage failure backup	
Power/voltage failure backup time	5 ms
Input current	
Current consumption (rated value)	1.5 A; full processor load, incl. ET 200SP modules and USB use
Current consumption (in no-load operation), typ.	0.6 A
Inrush current, max.	4.7 A; rated value
Power	
Power consumption, max.	36 W; incl. ET 200SP modules and USB use
Incoming power to the backplane bus	8.75 W
Power loss	
Power loss, typ.	15 W; without ET 200SP modules and without USB use

	6ES7677-2AA31-0EB0
Memory	
Type of memory	DDR3-SDRAM
CFast memory card	Yes; 30 GB flash memory
SIMATIC memory card required	No
Work memory	
Integrated (for program)	1 MB
Integrated (for data)	5 MB
Integrated (for ODK application)	10 MB
Load memory	
Integrated (on PC mass storage medium)	320 MB
Buffering	
with UPS	Yes; all retentive declared memory areas
with non-volatile memory	Yes
Hardware configuration	
integrated power supply	Yes
Number of DP masters	
Via CM	1
Racks	
Modules per rack, max.	64; CPU 1515SP PC + 64 module + server module
Number of rows, max.	1
Time-of-day	
Clock	
Type	Hardware clock
Buffering time	6 wk; at 40 °C ambient temperature, typ.
Deviation per day, max.	10 s; typ.: 2 s
Interfaces	
Number of Industrial Ethernet interfaces	2
Number of PROFINET interfaces	1
Number of PROFIBUS interfaces	1
Number of interfaces RS 485	1; via CM DP module
Number of USB interfaces	3; 3x USB 2.0 front, 500 mA each – of which 2 x 500 mA and 1 x 100 mA simultaneously
Number of SD card slots	1
Video interfaces	
Graphic interface	1x DVI-I
1st interface	
Interface hardware	
Number of ports	2
Integrated switch	Yes
RJ 45 (Ethernet)	Yes; via BusAdapter BA 2x RJ45
• Transmission rate, max.	100 Mbps
• Industrial Ethernet status LED	Yes

	6ES7677-2AA31-0EB0
2nd interface	
Interface hardware	
Number of ports	1
RJ 45 (Ethernet)	Yes; integrated
• Transmission rate, max.	1000 Mbps
• Industrial Ethernet status LED	No
3rd interface	
Interface hardware	
RS 485	Yes
Interface hardware	
RJ 45 (Ethernet)	
100 Mbps	Yes; for 1st Interface X1
1000 Mbps	Yes; for 2nd Interface X2
Autonegotiation	Yes
Autocrossing	Yes
RS 485	
Transmission rate, max.	12 Mbps
Interrupts/diagnostics/status information	
LED diagnostics display	
RUN/STOP LED	Yes
ERROR LED	Yes
MAINT LED	Yes
Ambient conditions	
Ambient temperature in operation	
Min.	0 °C
Max.	Up to 60 °C with max. 32 ET 200SP modules and 3x 100 mA USB load; up to 55 °C with max 64 ET 200SP modules and 2x max. 500 mA and 1x max. 100 mA USB load
Horizontal installation, min.	0 °C
Horizontal installation, max.	60 °C
Vertical installation, min.	0 °C
Vertical installation, max.	50 °C; with max. 32 ET 200SP modules and 3x 100 mA USB load
Ambient temperature during storage / transport	
Min.	-40 °C
Max.	70 °C
I/O / Options	
I/O	
• SD card	Optional for additional mass storage

	6ES7677-2AA31-0EB0
Dimensions	
Width	160 mm
Height	117 mm
Depth	75 mm
Weights	
Weight, approx.	0.83 kg

10.7.2 CPU 1515SP PC F, system version WES7 E 32Bit 4GB RAM

CPU 1515SP PC F, system version WES7 E 32Bit 4GB RAM

	6ES7677-2FA31-0EB0
General information	
Product type designation	CPU 1515SP PC F
Firmware version	V2.1
Engineering with	
STEP 7 TIA Portal can be configured/integrated as of version	V14 SP1
PC configuration	
Processor	Dual-Core 1 GHz, AMD G Series APU T40E
Main memory	4 GB RAM
Flash disk	30 GB
Operating systems	Windows Embedded Standard 7 E 32 bit
Installed SW	
Visualization	No
Controller	S7-1500 Software Controller CPU 1505SP F
Operator controls	
Mode selector	1
Supply voltage	
Type of supply voltage	24 V DC
Low limit of permitted range (DC)	19.2 V
High limit of permitted range (DC)	28.8 V
Reverse polarity protection	Yes
Power and voltage failure backup	
Power/voltage failure backup time	5 ms
Input current	
Current consumption (rated value)	1.5 A; full processor load, incl. ET 200SP modules and USB use
Current consumption (in no-load operation), typ.	0.6 A
Inrush current, max.	4.7 A; rated value

	6ES7677-2FA31-0EB0
Power	
Power consumption, max.	36 W; incl. ET 200SP modules and USB use
Incoming power to the backplane bus	8.75 W
Power loss	
Power loss, typ.	15 W; without ET 200SP modules and without USB use
Memory	
Type of memory	DDR3-SDRAM
CFast memory card	Yes; 30 GB flash memory
SIMATIC memory card required	No
Work memory	
Integrated (for program)	1.5 MB
Integrated (for data)	5 MB
Integrated (for ODK application)	10 MB
Load memory	
Integrated (on PC mass storage medium)	320 MB
Buffering	
with UPS	Yes; all retentive declared memory areas
with non-volatile memory	Yes
Hardware configuration	
integrated power supply	Yes
Number of DP masters	
Via CM	1
Racks	
Modules per rack, max.	64; CPU 1515SP PC + 64 module + server module
Number of rows, max.	1
Time-of-day	
Clock	
Type	Hardware clock
Buffering time	6 wk; at 40 °C ambient temperature, typ.
Deviation per day, max.	10 s; typ.: 2 s
Interfaces	
Number of Industrial Ethernet interfaces	2
Number of PROFINET interfaces	1
Number of PROFIBUS interfaces	1
Number of interfaces RS 485	1; via CM DP module
Number of USB interfaces	3; 3x USB 2.0 front, 500 mA each – of which 2 x 500 mA and 1 x 100 mA simultaneously
Number of SD card slots	1
Video interfaces	
Graphics interface	1x DVI-I

	6ES7677-2FA31-0EB0
1st interface	
Interface hardware	
Number of ports	2
integrated switch	Yes
RJ 45 (Ethernet)	Yes; via BusAdapter BA 2x RJ45
• Transmission rate, max.	100 Mbps
• Industrial Ethernet status LED	Yes
2nd interface	
Interface hardware	
Number of ports	1
RJ 45 (Ethernet)	Yes; integrated
• Transmission rate, max.	1000 Mbps
• Industrial Ethernet status LED	No
3rd interface	
Interface hardware	
RS 485	Yes
Interface hardware	
RJ 45 (Ethernet)	
100 Mbps	Yes; for 1st Interface X1
1000 Mbps	Yes; for 2nd Interface X2
Autonegotiation	Yes
Autocrossing	Yes
RS 485	
Transmission rate, max.	12 Mbps
Interrupts/diagnostics/status information	
LED diagnostics display	
RUN/STOP LED	Yes
ERROR LED	Yes
MAINT LED	Yes
Ambient conditions	
Ambient temperature in operation	
Min.	0 °C
Max.	Up to 60 °C with max. 32 ET 200SP modules and 3x 100 mA USB load; up to 55 °C with max 64 ET 200SP modules and 2x max. 500 mA and 1x max. 100 mA USB load
Horizontal installation, min.	0 °C
Horizontal installation, max.	60 °C
Vertical installation, min.	0 °C
Vertical installation, max.	50 °C; with max. 32 ET 200SP modules and 3x 100 mA USB load

	6ES7677-2FA31-0EB0
Ambient temperature during storage / transport	
Min.	-40 °C
Max.	70 °C
I/O / Options	
I/O	
• SD card	optional for additional mass storage
Dimensions	
Width	160 mm
Height	117 mm
Depth	75 mm
Weights	
Weight, approx.	0.83 kg

10.7.3 CPU 1515SP PC, system version WES7 E 32Bit 4GB RAM - spare part

CPU 1515SP PC, system version WES7 E 32Bit 4GB RAM - spare part

	6ES7677-2AA40-0AA0
General information	
Product type designation	CPU 1515SP PC
Engineering with	
STEP 7 TIA Portal can be configured/integrated as of version	as of STEP 7 V14
PC configuration	
Processor	Dual-Core 1 GHz, AMD G Series APU T40E
Main memory	4 GB RAM
Installed SW	
Visualization	No
Controller	No
Operator controls	
Mode selector	1
Supply voltage	
Type of supply voltage	24 V DC
Low limit of permitted range (DC)	19.2 V
High limit of permitted range (DC)	28.8 V
Reverse polarity protection	Yes
Power and voltage failure backup	
Power/voltage failure backup time	5 ms

	6ES7677-2AA40-0AA0
Input current	
Current consumption (rated value)	1.5 A; full processor load, incl. ET 200SP modules and USB use
Current consumption (in no-load operation), typ.	0.6 A
Inrush current, max.	4.7 A; rated value
Power	
Power consumption, max.	36 W; incl. ET 200SP modules and USB use
Incoming power to the backplane bus	8.75 W
Power loss	
Power loss, typ.	15 W; without ET 200SP modules and without USB use
Memory	
Type of memory	DDR3-SDRAM
CFast memory card	No
Work memory	
Integrated	4 GB
Hardware configuration	
integrated power supply	Yes
Number of DP masters	
Via CM	1
Racks	
Modules per rack, max.	64; CPU + 64 Module + server module (mounting width max. 1 m)
Number of rows, max.	1
Time-of-day	
Clock	
Type	Hardware clock
Buffering time	6 wk; at 40 °C ambient temperature, typ.
Deviation per day, max.	10 s; typ.: 2 s
Interfaces	
Number of Industrial Ethernet interfaces	2
Number of PROFINET interfaces	1
Number of PROFIBUS interfaces	1; via CM DP module
Number of interfaces RS 485	1; via CM DP module
Number of USB interfaces	3; 3x USB 2.0 front, 500 mA each – of which 2 x 500 mA and 1 x 100 mA simultaneously
Number of SD card slots	1
Video interfaces	
Graphics interface	1x DVI-I

	6ES7677-2AA40-0AA0
1st interface	
Interface hardware	
Number of ports	2
integrated switch	Yes
RJ 45 (Ethernet)	Yes; via BusAdapter BA 2x RJ45
• Transmission rate, max.	100 Mbps
• Industrial Ethernet status LED	Yes
2nd interface	
Interface hardware	
Number of ports	1
RJ 45 (Ethernet)	Yes; integrated
• Transmission rate, max.	1000 Mbps
• Industrial Ethernet status LED	No
3rd interface	
Interface hardware	
RS 485	Yes; via CM DP module
Interface hardware	
RJ 45 (Ethernet)	
100 Mbps	Yes; for 1st Interface X1
1000 Mbps	Yes; for 2nd Interface X2
Autonegotiation	Yes
Autocrossing	Yes
RS 485	
Transmission rate, max.	12 Mbps
Ambient conditions	
Ambient temperature in operation	
Min.	0 °C
Max.	Up to 60 °C with max. 32 ET 200SP modules and 3x 100 mA USB load; up to 55 °C with max 64 ET 200SP modules and 2x max. 500 mA and 1x max. 100 mA USB load
Horizontal installation, min.	0 °C
Horizontal installation, max.	60 °C
Vertical installation, min.	0 °C
Vertical installation, max.	50 °C; with max. 32 ET 200SP modules and 3x 100 mA USB load
Ambient temperature during storage / transport	
Min.	-40 °C
Max.	70 °C

	6ES7677-2AA40-0AA0
I/O / Options	
I/O	
• SD card	optional for additional mass storage
Dimensions	
Width	160 mm
Height	117 mm
Depth	75 mm
Weights	
Weight, approx.	0.83 kg

10.7.4 CPU 1515SP PC, system version WES7 P 64Bit 4GB RAM

CPU 1515SP PC, system version WES7 P 64Bit 4GB RAM

	6ES7677-2AA41-0FB0
General information	
Product type designation	CPU 1515SP PC
HW release number	FS05
Firmware version	V2.1
Engineering with	
STEP 7 TIA Portal can be configured/integrated as of version	V14 SP1
PC configuration	
Processor	Dual-Core 1 GHz, AMD G Series APU T40E
Main memory	4 GB RAM
Flash disk	30 GB
Operating systems	Windows Embedded Standard 7 P 64 bit
Installed SW	
Visualization	No
Controller	S7-1500 Software Controller CPU 1505SP V2.1
Operator controls	
Mode selector	1
Supply voltage	
Type of supply voltage	24 V DC
Low limit of permitted range (DC)	19.2 V
High limit of permitted range (DC)	28.8 V
Reverse polarity protection	Yes
Power and voltage failure backup	
Power/voltage failure backup time	5 ms

	6ES7677-2AA41-0FB0
Input current	
Current consumption (rated value)	1.5 A; full processor load, incl. ET 200SP modules and USB use
Current consumption (in no-load operation), typ.	0.6 A
Inrush current, max.	4.7 A; rated value
Power	
Power consumption, max.	36 W; incl. ET 200SP modules and USB use
Incoming power to the backplane bus	8.75 W
Power loss	
Power loss, typ.	15 W; without ET 200SP modules and without USB use
Memory	
Type of memory	DDR3-SDRAM
CFast memory card	Yes; 30 GB flash memory
SIMATIC memory card required	No
Work memory	
Integrated (for program)	1 MB
Integrated (for data)	5 MB
Integrated (for ODK application)	10 MB
Load memory	
Integrated (on PC mass storage medium)	320 MB
Buffering	
with UPS	Yes; all retentive declared memory areas
with non-volatile memory	Yes
Hardware configuration	
integrated power supply	Yes
Number of DP masters	
Via CM	1
Racks	
Modules per rack, max.	64; CPU 1515SP PC + 64 module + server module
Number of rows, max.	1
Time-of-day	
Clock	
Type	Hardware clock
Buffering time	6 wk; at 40 °C ambient temperature, typ.
Deviation per day, max.	10 s; typ.: 2 s
Interfaces	
Number of Industrial Ethernet interfaces	2
Number of PROFINET interfaces	1
Number of PROFIBUS interfaces	1
Number of interfaces RS 485	1; via CM DP module
Number of USB interfaces	3; 3x USB 2.0 front, 500 mA each – of which 2 x 500 mA and 1 x 100 mA simultaneously
Number of SD card slots	1

	6ES7677-2AA41-0FB0
Video interfaces	
Graphics interface	1x DVI-I
1st interface	
Interface hardware	
Number of ports	2
integrated switch	Yes
RJ 45 (Ethernet)	Yes; via BusAdapter BA 2x RJ45
• Transmission rate, max.	100 Mbps
• Industrial Ethernet status LED	Yes
2nd interface	
Interface hardware	
Number of ports	1
RJ 45 (Ethernet)	Yes; integrated
• Transmission rate, max.	1000 Mbps
• Industrial Ethernet status LED	No
3rd interface	
Interface hardware	
RS 485	Yes
Interface hardware	
RJ 45 (Ethernet)	
100 Mbps	Yes; for 1st Interface X1
1000 Mbps	Yes; for 2nd Interface X2
Autonegotiation	Yes
Autocrossing	Yes
RS 485	
Transmission rate, max.	12 Mbps
Interrupts/diagnostics/status information	
LED diagnostics display	
RUN/STOP LED	Yes
ERROR LED	Yes
MAINT LED	Yes
Ambient conditions	
Ambient temperature in operation	
Min.	0 °C
Max.	Up to 60 °C with max. 32 ET 200SP modules and 3x 100 mA USB load; up to 55 °C with max 64 ET 200SP modules and 2x max. 500 mA and 1x max. 100 mA USB load
Horizontal installation, min.	0 °C
Horizontal installation, max.	60 °C
Vertical installation, min.	0 °C
Vertical installation, max.	50 °C; with max. 32 ET 200SP modules and 3x 100 mA USB load

	6ES7677-2AA41-0FB0
Ambient temperature during storage / transport	
Min.	-40 °C
Max.	70 °C
I/O / Options	
I/O	
• SD card	optional for additional mass storage
Dimensions	
Width	160 mm
Height	117 mm
Depth	75 mm
Weights	
Weight, approx.	0.83 kg

10.7.5 CPU 1515SP PC F, system version WES7 P 64Bit 4GB RAM

CPU 1515SP PC F, system version WES7 P 64Bit 4GB RAM

	6ES7677-2FA41-0FB0
General information	
Product type designation	CPU 1515SP PC
HW release number	FS02
Firmware version	V2.1
Engineering with	
STEP 7 TIA Portal can be configured/integrated as of version	V14 SP1
PC configuration	
Processor	Dual-Core 1 GHz, AMD G Series APU T40E
Main memory	4 GB RAM
Flash disk	30 GB
Operating systems	Windows Embedded Standard 7 P 64 bit
Installed SW	
Visualization	No
Controller	S7-1500 Software Controller CPU 1505SP F
Operator controls	
Mode selector	1
Supply voltage	
Type of supply voltage	24 V DC
Low limit of permitted range (DC)	19.2 V
High limit of permitted range (DC)	28.8 V
Reverse polarity protection	Yes

	6ES7677-2FA41-0FB0
Power and voltage failure backup	
Power/voltage failure backup time	5 ms
Input current	
Current consumption (rated value)	1.5 A; full processor load, incl. ET 200SP modules and USB use
Current consumption (in no-load operation), typ.	0.6 A
Inrush current, max.	4.7 A; rated value
Power	
Power consumption, max.	36 W; incl. ET 200SP modules and USB use
Incoming power to the backplane bus	8.75 W
Power loss	
Power loss, typ.	15 W; without ET 200SP modules and without USB use
Memory	
Type of memory	DDR3-SDRAM
CFast memory card	Yes; 30 GB flash memory
SIMATIC memory card required	No
Work memory	
Integrated (for program)	1.5 MB
Integrated (for data)	5 MB
Integrated (for ODK application)	10 MB
Load memory	
Integrated (on PC mass storage medium)	320 MB
Buffering	
with UPS	Yes; all retentive declared memory areas
with non-volatile memory	Yes
Hardware configuration	
integrated power supply	Yes
Number of DP masters	
Via CM	1
Racks	
Modules per rack, max.	64; CPU 1515SP PC + 64 module + server module
Number of rows, max.	1
Time-of-day	
Clock	
Type	Hardware clock
Buffering time	6 wk; at 40 °C ambient temperature, typ.
Deviation per day, max.	10 s; typ.: 2 s

	6ES7677-2FA41-0FB0
Interfaces	
Number of Industrial Ethernet interfaces	2
Number of PROFINET interfaces	1
Number of PROFIBUS interfaces	1
Number of interfaces RS 485	1; via CM DP module
Number of USB interfaces	3; 3x USB 2.0 front, 500 mA each – of which 2 x 500 mA and 1 x 100 mA simultaneously
Number of SD card slots	1
Video interfaces	
Graphics interface	1x DVI-I
1st interface	
Interface hardware	
Number of ports	2
integrated switch	Yes
RJ 45 (Ethernet)	Yes; via BusAdapter BA 2x RJ45
• Transmission rate, max.	100 Mbps
• Industrial Ethernet status LED	Yes
2nd interface	
Interface hardware	
Number of ports	1
RJ 45 (Ethernet)	Yes; integrated
• Transmission rate, max.	1000 Mbps
• Industrial Ethernet status LED	No
3rd interface	
Interface hardware	
RS 485	Yes
Interface hardware	
RJ 45 (Ethernet)	
100 Mbps	Yes; for 1st Interface X1
1000 Mbps	Yes; for 2nd Interface X2
Autonegotiation	Yes
Autocrossing	Yes
RS 485	
Transmission rate, max.	12 Mbps
Interrupts/diagnostics/status information	
LED diagnostics display	
RUN/STOP LED	Yes
ERROR LED	Yes
MAINT LED	Yes

	6ES7677-2FA41-0FB0
Ambient conditions	
Ambient temperature in operation	
Min.	0 °C
Max.	Up to 60 °C with max. 32 ET 200SP modules and 3x 100 mA USB load; up to 55 °C with max 64 ET 200SP modules and 2x max. 500 mA and 1x max. 100 mA USB load
Horizontal installation, min.	0 °C
Horizontal installation, max.	60 °C
Vertical installation, min.	0 °C
Vertical installation, max.	50 °C; with max. 32 ET 200SP modules and 3x 100 mA USB load
Ambient temperature during storage / transport	
Min.	-40 °C
Max.	70 °C
I/O / Options	
I/O	
• SD card	optional for additional mass storage
Dimensions	
Width	160 mm
Height	117 mm
Depth	75 mm
Weights	
Weight, approx.	0.83 kg

10.7.6 CPU 1515SP PC, system version WES7 E 64Bit 4GB RAM - spare part

CPU 1515SP PC, system version WES7 E 64Bit 4GB RAM - spare part

	6ES7677-2AA40-0AA0
General information	
Product type designation	CPU 1515SP PC
Engineering with	
STEP 7 TIA Portal can be configured/integrated as of version	as of STEP 7 V14
PC configuration	
Processor	Dual-Core 1 GHz, AMD G Series APU T40E
Main memory	4 GB RAM
Installed SW	
Visualization	No
Controller	No

	6ES7677-2AA40-0AA0
Operator controls	
Mode selector	1
Supply voltage	
Type of supply voltage	24 V DC
Low limit of permitted range (DC)	19.2 V
High limit of permitted range (DC)	28.8 V
Reverse polarity protection	Yes
Power and voltage failure backup	
Power/voltage failure backup time	5 ms
Input current	
Current consumption (rated value)	1.5 A; full processor load, incl. ET 200SP modules and USB use
Current consumption (in no-load operation), typ.	0.6 A
Inrush current, max.	4.7 A; rated value
Power	
Power consumption, max.	36 W; incl. ET 200SP modules and USB use
Incoming power to the backplane bus	8.75 W
Power loss	
Power loss, typ.	15 W; without ET 200SP modules and without USB use
Memory	
Type of memory	DDR3-SDRAM
CFast memory card	No
Work memory	
Integrated	4 GB
Hardware configuration	
integrated power supply	Yes
Number of DP masters	
Via CM	1
Racks	
Modules per rack, max.	64; CPU + 64 Module + server module (mounting width max. 1 m)
Number of rows, max.	1
Time-of-day	
Clock	
Type	Hardware clock
Buffering time	6 wk; at 40 °C ambient temperature, typ.
Deviation per day, max.	10 s; typ.: 2 s
Interfaces	
Number of Industrial Ethernet interfaces	2
Number of PROFINET interfaces	1
Number of PROFIBUS interfaces	1; via CM DP module
Number of interfaces RS 485	1; via CM DP module
Number of USB interfaces	3; 3x USB 2.0 front, 500 mA each – of which 2 x 500 mA and 1 x 100 mA simultaneously

	6ES7677-2AA40-0AA0
Number of SD card slots	1
Video interfaces	
Graphics interface	1x DVI-I
1st interface	
Interface hardware	
Number of ports	2
integrated switch	Yes
RJ 45 (Ethernet)	Yes; via BusAdapter BA 2x RJ45
• Transmission rate, max.	100 Mbps
• Industrial Ethernet status LED	Yes
2nd interface	
Interface hardware	
Number of ports	1
RJ 45 (Ethernet)	Yes; integrated
• Transmission rate, max.	1000 Mbps
• Industrial Ethernet status LED	No
3rd interface	
Interface hardware	
RS 485	Yes; via CM DP module
Interface hardware	
RJ 45 (Ethernet)	
100 Mbps	Yes; for 1st Interface X1
1000 Mbps	Yes; for 2nd Interface X2
Autonegotiation	Yes
Autocrossing	Yes
RS 485	
Transmission rate, max.	12 Mbps
Ambient conditions	
Ambient temperature in operation	
Min.	0 °C
Max.	Up to 60 °C with max. 32 ET 200SP modules and 3x 100 mA USB load; up to 55 °C with max 64 ET 200SP modules and 2x max. 500 mA and 1x max. 100 mA USB load
Horizontal installation, min.	0 °C
Horizontal installation, max.	60 °C
Vertical installation, min.	0 °C
Vertical installation, max.	50 °C; with max. 32 ET 200SP modules and 3x 100 mA USB load
Ambient temperature during storage / transport	
Min.	-40 °C
Max.	70 °C

	6ES7677-2AA40-0AA0
I/O / Options	
I/O	
• SD card	optional for additional mass storage
Dimensions	
Width	160 mm
Height	117 mm
Depth	75 mm
Weights	
Weight, approx.	0.83 kg

10.7.7 CPU 1515SP PC (F) + HMI

The technical specifications of the following devices modules can be found in the product information under (http://support.automation.siemens.com/WW/view/en/104117388).

ET 200SP Open Controller System version WES7 P 64Bit 4GB RAM	Article number
CPU 1515SP PC	
CPU 1515SP PC + HMI 128PT	6ES7677-2AA41-0FK0
CPU 1515SP PC + HMI 512PT	6ES7677-2AA41-0FL0
CPU 1515SP PC + HMI 2048PT	6ES7677-2AA41-0FM0
CPU 1515SP PC F	
CPU 1515SP PC F + HMI 128PT	6ES7677-2FA41-0FK0
CPU 1515SP PC F + HMI 512PT	6ES7677-2FA41-0FL0
CPU 1515SP PC F + HMI 2048PT	6ES7677-2FA41-0FM0

10.7.8 S7-1500 Software Controller CPU 1505SP (F)

CPU 1505SP (F) is a PC-based controller of the SIMATIC S7-1500 Software Controller family. For more information about the CPU 1505SP (F), refer to the corresponding manual at (https://support.industry.siemens.com/cs/ww/en/view/109740725). For the CPU 1505SP F, also note the information in the F product information at (https://support.industry.siemens.com/cs/ww/en/view/109478599).

Technical specifications

You can find all technical specifications on CPU 1505SP with the article number 6ES7672-5DC01-0YA0 under (https://support.industry.siemens.com/cs/ww/en/pv/6ES7672-5DC01-0YA0/td). You can find all technical specifications on CPU 1505SP F with the article number 6ES7672-5SC01-0YA0 under (https://support.industry.siemens.com/cs/ww/en/pv/6ES7672-5SC01-0YA0/td).

10.8 Dimension drawings

10.8.1 CPU 1515SP PC (F)

This section contains a dimension drawing of the module mounted on a mounting rail. Always observe the specified dimensions for installation in cabinets.

Dimension drawings of the CPU 1515SP PC (F).

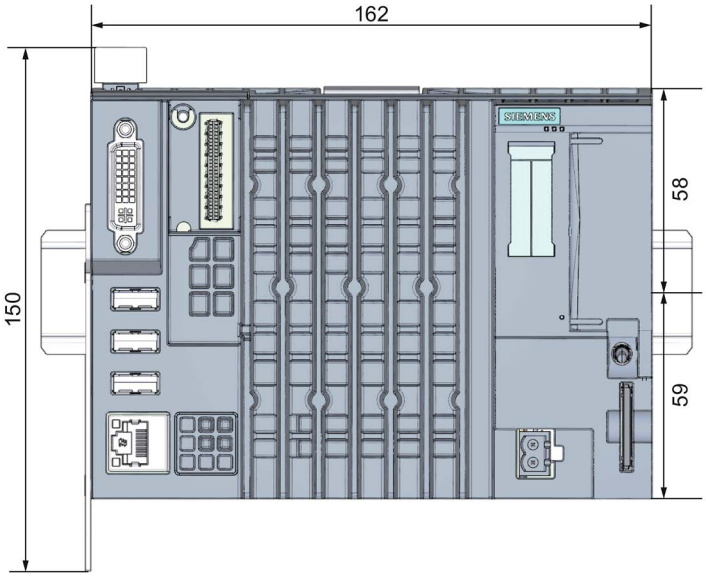

Figure 10-1 Dimension drawing of CPU 1515SP PC, front view

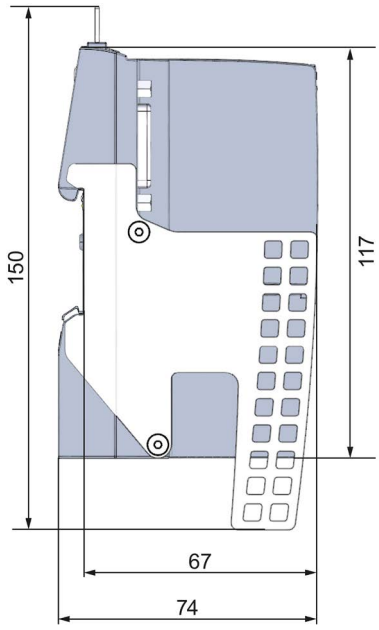

Figure 10-2 Dimension drawing of CPU 1515SP PC, side view

Accessories/spare parts

A

Ordering options and accessories for CPU 1515SP PC (F)

Table A- 1 Order options for CPU 1515SP PC

Description	Article number
System version WES7 E 32Bit 4GB RAM [1]	
CPU 1515SP PC, 30 GB CFast card with pre-installed S7-1500 Software Controller CPU 1505SP	6ES7677-2AA31-0EB0
CPU 1515SP PC, 30 GB CFast card with pre-installed S7-1500 Software Controller CPU 1505SP F	6ES7677-2FA31-0EB0
CPU 1515SP PC 4 GB, spare part (without CFast card, without software)	6ES7677-2AA40-0AA0
System version WES7 P 64Bit 4GB RAM [1]	
CPU 1515SP PC, 30 GB CFast card with pre-installed S7-1500 Software Controller CPU 1505SP	6ES7677-2AA41-0FB0
CPU 1515SP PC, 30 GB CFast card with pre-installed S7-1500 Software Controller CPU 1505SP and WinCC Runtime Advanced as of V14	
• CPU 1515SP PC + HMI 128PT	6ES7677-2AA41-0FK0
• CPU 1515SP PC + HMI 512PT	6ES7677-2AA41-0FL0
• CPU 1515SP PC + HMI 2048PT	6ES7677-2AA41-0FM0
CPU 1515SP PC F, 30 GB CFast card with pre-installed S7-1500 Software Controller CPU 1505SP	6ES7677-2FA41-0FB0
CPU 1515SP PC, 30 GB CFast card with pre-installed S7-1500 Software Controller CPU 1505SP F and WinCC Runtime Advanced as of V14	
• CPU 1515SP PC F + HMI 128PT	6ES7677-2FA41-0FK0
• CPU 1515SP PC F + HMI 512PT	6ES7677-2FA41-0FL0
• CPU 1515SP PC F + HMI 2048PT	6ES7677-2FA41-0FM0

[1] Windows Embedded Standard 7

Table A- 2 Accessories for CPU 1515SP PC (F)

Description	Article number
BusAdapter, 1 unit	
• BA 2×RJ45 (PROFINET BusAdapter with standard Ethernet socket)	6ES7193-6AR00-0AA0
• BA 2×FC (PROFINET BusAdapter with Fast Connect Ethernet connection)	6ES7193-6AF00-0AA0
Server module; 1 unit	6ES7193-6PA00-0AA0
Strain relief for CPU 1515SP PC (F)	A5E32291462
SIMATIC IPC Service USB flash drive 8 GB (SLC), pre-installed BIOS-MANAGER V3.3, Image/Partition Creator V3.3 and installation CD	6AV7672-8JD01-0AA0
SIMATIC IPC Service USB Flashdrive 16 GB, USB3.0, pre-installed BIOS-MANAGER V3.3, Image/Partition Creator V3.4 and installation CD	6AV7672-8JD02-0AA0
SIMATIC IPC DiagMonitor Software V4.4	6ES7648-6CA04-4YX0
SIMATIC PC, adapter cable, DVI-I compliant with VGA, 250 mm long	6ES7648-3AB00-0XA0
Reference identification label, sheet with 16 labels, 10 units	6ES7193-6LF30-0AW0
Mounting rails, tin-plated steel strip	
• Length: 483 mm	6ES5710-8MA11
• Length: 430 mm	6ES5710-8MA21
• Length: 830 mm	6ES5710-8MA31
• Length: 2000 mm	6ES5710-8MA41
SIMATIC IPC CFast cards	
• CFast 4 GB Industrial Grade	6ES7648-2BF10-0XG10
• CFast 8 GB Industrial Grade	6ES7648-2BF10-0XH10
• CFast 16 GB Industrial Grade	6ES7648-2BF10-0XJ10
• CFast 30 GB Industrial Grade	6ES7648-2BF10-0XK10

Online catalog

Additional article numbers can be found on the Internet in the online catalog and online ordering system (http://www.siemens.com/automation/mall).

Abbreviations

B

Abbreviation	Term	Meaning
AC	Alternating current	Alternating current
ALM	Automation License Manager	Tool for managing license keys in STEP 7
BIOS	Basic Input Output System	Basic Input Output System. A set of important software routines used after the startup of the CPU to load the operating system and to provide the routines for data exchange between hardware components.
CE	Communauté Européenne	CE label
CFast	CompactFlash ATA Serial Transfer	Memory card
CoA	Certificate of Authenticity	Certificate of Authenticity, label with Microsoft Windows "Product Key"
CoL	Certificate of License	Certificate of License for the SIMATIC software loaded
DC	Direct Current	DC current
DVD	Digital Versatile Disc	Digital storage medium with high memory capacity.
DVI-I	Digital Visual Interface	Interface for transfer of image and video data for DVI-I monitors.
ESD	Components sensitive to electrostatic charge	
EN	European standard	
EWF	Enhanced Write Filter	Enhanced write filter
FBWF	File Based Write Filter	File based write filter
GbE	Gigabit Ethernet	
GRUB / GRUB4DOS	GRand Unified Bootloader	Boot Manager
HMI	Human Machine Interface	User interface
IEC	International Electronical Commission	
IM	Interface module	The interface module connects the ET 200SP distributed I/O system with the IO controller and exchanges data with the I/O modules via the backplane bus.
LAN	Local Area Network	Computer network that is limited to a local area.
LED	Light Emitting Diode	Light emitting diode
LLDP	Link Layer Discovery Protocol	Protocol that enables the exchange of information between adjacent devices.
MMC	Multi Media Card	Memory card
NTFS	New Technology File System	File system that offers targeted access protection at the file level.
NVRAM	Non-Volatile Random-Access Memory	Non-volatile data memory that is RAM-based, the data content of which is retained without external power supply.
PC	Personal Computer	

Abbreviation	Term	Meaning
PELV	Protective Extra Low Voltage	PELV, previously called "extra low voltage with safe isolation", is a protective measure against electrical shock. See EN 50178.
PN	PROFINET	
PG	Programming device	Compact programming device which meets the special requirements of industry. The PG is fully equipped for programming SIMATIC PLCs.
PS	Power supply	Power supply
PT	Power Tags	Process tags; tags enable data exchange between the components of an automation process, for example, between the HMI device and the controller.
RAM	Random Access Memory	Main or work memory of a computer with direct access, allowing read access to data and editing.
RT	Runtime	
SD	Secure Digital card	Memory card
SELV	Safety Extra Low Voltage	Safety extra-low voltage; protective measure in which circuits with a rated voltage of up to 50 V AC or 120 V DC are operated ungrounded and feeds from circuits with a higher voltage are separated from these by, for example, a safety transformer.
UL	Underwriters Laboratories Inc.	
USB	Universal Serial Bus	Serial bus system for connecting a computer to external devices.

Troubleshooting

C

Problem	Possible cause	Remedy
CPU 1515SP PC (F) is not working.	CPU 1515SP PC (F) is not supplied with current.	Check the power supply.
CPU 1515SP PC (F) does not start.	Feedback through USB devices.	Use USB devices that comply with the USB 2.0 specification.
Windows no longer boots.	Settings in the BIOS setup are not correct. Windows clock is set incorrectly.	Check the settings in the BIOS setup menu Boot.
Time and/or date of the CPU 1515SP PC (F) do not match.	CPU 1515SP PC (F) was not connected for more than 6 weeks.	Correct the settings in the BIOS setup menu Main or in Windows.
USB device is not working.	USB power supply is overloaded.	Use an external power supply for the USB device (see section Application planning (Page 37).

Glossary

Cold restart

A startup procedure commencing when the CPU is switched on. Upon a cold restart, the system typically performs some basic hardware checks and then loads the operating system from the hard disk into the work memory.

Controller

Integrated hardware and software controlling the operation of a specific internal or I/O device (e.g. keyboard controller).

Device configuration

The device configuration of a PC/programming device includes information on the features and options of the PC/programming device such as memory configuration, drive types, monitor, network address etc. The data is stored in a configuration file and is used by the operating system to load the corresponding device drivers or assign device parameters.

Drivers

Program sections of the operating system. They convert data from the user programs to the specific formats required by the I/O devices (e.g. hard disks, monitors, printers).

Enhanced Write Filter (EWF)

Configurable write filter making it possible to boot Windows Embedded Standard from write-protected media (e.g. from CD-ROM), to write-protect individual partitions and to adapt file system performance to the user's requirements (e.g. when using CFast cards).

Ethernet

Local network (bus structure for text and data communication with a data transmission rate of 10/100/1000 Mbps.

File-Based Write Filter (FBWF)

Configurable write filter making it possible to write-protect individual files.

Image

An image is a copy of hard-disk partitions, for example, which is stored as backup in a file so that it can be restored if necessary.

Interface

- Connection between individual hardware elements such as PCs, programming device, printer or screen by means of physical plug-in connections (cables).
- Connection between different programs to allow them to be used together.

LAN

Local Area Network: LAN refers to a local network consisting of a group of computers and other devices which are distributed over a relatively restricted area and connected through communication lines. The devices connected to a LAN are referred to as nodes. The purpose of networks is the shared use of files, printers or other resources.

License key

The license key is the electronic license stamp of a license. Siemens AG provides a license key for software that is protected by licensing laws.

Operating system

Generic term which describes all functions for controlling and monitoring user program execution and distribution of system resources to the user programs as well as maintenance of the operating mode in cooperation with the hardware.

Power options

The power options can be used to reduce the power consumption of the computer while still keeping it ready for immediate use. In Windows via **Start** > **Control Panel** > **Hardware and Sound** > **Power Options**.

Restart

The restart of the company that is already in operation using, for example, the <Ctrl+Alt+Del> shortcut without switching off the power supply.

Restore DVD

You use the Restore DVD to reset your system partition or the entire hard disk to the delivery state in the event of an error. The DVD contains all the image files required and is bootable.

ROM

Read Only Memory. ROM refers to a read-only memory where each memory location can be addressed individually. The stored programs or data are hard-coded and are preserved even in the event of a power failure.

S.M.A.R.T

Self-Monitoring, Analysis and Reporting Technology (SMART or S.M.A.R.T.) is an industry standard for storage media. It provides for permanent monitoring of relevant parameters and thus early recognition of pending defects.

SATA

Serial ATA. An interface for hard disk drives and optical drives with serial data transfer.

SETUP (BIOS setup)

A program used to determine information on the device configuration. The device configuration of the CPU 1515SP PC (F) is pre-set. Changes must be made whenever a memory expansion, new modules or drives are to be activated.

SIEMENS

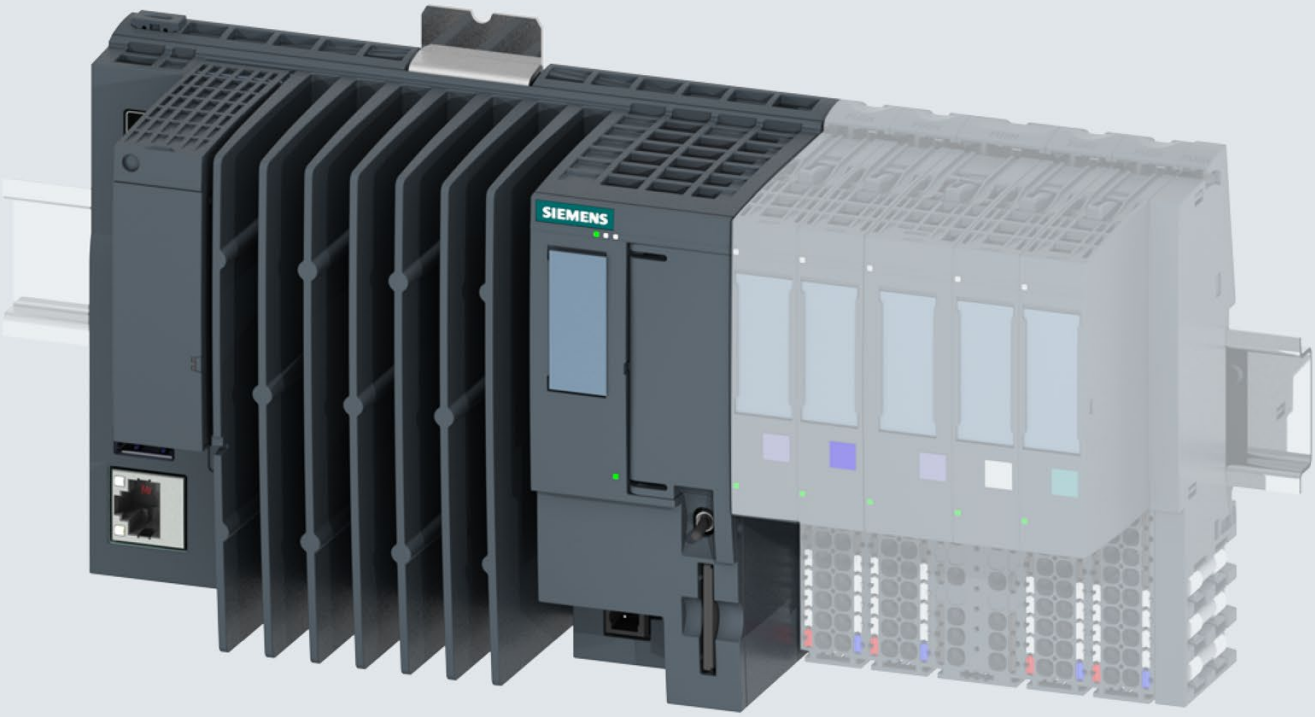

Manual

SIMATIC

ET 200SP Open Controller

CPU 1515SP PC2 (F/T/TF)

Edition 09/2018

support.industry.siemens.com

SIEMENS

SIMATIC

ET 200SP Open Controller CPU 1515SP PC2 (F/T/TF)

Operating Instructions

Introduction 1

Safety information 2

Areas of application 3

Product overview 4

Application planning 5

Installation 6

Wiring 7

Commissioning 8

Interrupt, error and system messages 9

Functions 10

Maintenance 11

Technical specifications 12

Dimension drawings 13

Spare parts/accessories 14

Appendix A

List of abbreviations B

09/2018

A5E42603425-AA

Legal information

Warning notice system

This manual contains notices you have to observe in order to ensure your personal safety, as well as to prevent damage to property. The notices referring to your personal safety are highlighted in the manual by a safety alert symbol, notices referring only to property damage have no safety alert symbol. These notices shown below are graded according to the degree of danger.

⚠ DANGER

indicates that death or severe personal injury **will** result if proper precautions are not taken.

⚠ WARNING

indicates that death or severe personal injury **may** result if proper precautions are not taken.

⚠ CAUTION

indicates that minor personal injury can result if proper precautions are not taken.

NOTICE

indicates that property damage can result if proper precautions are not taken.

If more than one degree of danger is present, the warning notice representing the highest degree of danger will be used. A notice warning of injury to persons with a safety alert symbol may also include a warning relating to property damage.

Qualified Personnel

The product/system described in this documentation may be operated only by **personnel qualified** for the specific task in accordance with the relevant documentation, in particular its warning notices and safety instructions. Qualified personnel are those who, based on their training and experience, are capable of identifying risks and avoiding potential hazards when working with these products/systems.

Proper use of Siemens products

Note the following:

⚠ WARNING

Siemens products may only be used for the applications described in the catalog and in the relevant technical documentation. If products and components from other manufacturers are used, these must be recommended or approved by Siemens. Proper transport, storage, installation, assembly, commissioning, operation and maintenance are required to ensure that the products operate safely and without any problems. The permissible ambient conditions must be complied with. The information in the relevant documentation must be observed.

Trademarks

All names identified by ® are registered trademarks of Siemens AG. The remaining trademarks in this publication may be trademarks whose use by third parties for their own purposes could violate the rights of the owner.

Disclaimer of Liability

We have reviewed the contents of this publication to ensure consistency with the hardware and software described. Since variance cannot be precluded entirely, we cannot guarantee full consistency. However, the information in this publication is reviewed regularly and any necessary corrections are included in subsequent editions.

Siemens AG
Division Digital Factory
Postfach 48 48
90026 NÜRNBERG
GERMANY

A5E42603425-AA
Ⓟ 07/2018 Subject to change

Copyright © Siemens AG 2018.
All rights reserved

Table of contents

1 Introduction 6
1.1 Documentation on CPU 1515SP PC2 8
1.2 Information about third-party software updates 12
1.3 Notes on protecting administrator accounts 12
2 Safety information 13
2.1 Security information 13
2.2 General safety instructions 14
2.3 Notes on use 16
3 Areas of application 17
3.1 Areas of application of fail-safe CPUs 17
3.2 Areas of application of technology CPUs 17
4 Product overview 18
4.1 Field of application 18
4.2 Characteristics 19
4.3 Sample configuration 20
4.4 Components 22
4.5 Operator controls and connection elements 24
4.6 Scope of delivery 27
5 Application planning 28
5.1 Basics 28
5.2 Unpacking the device 29
5.3 Identification data 30
5.4 Installation location 31
5.5 Hardware configuration 33
6 Installation 34
6.1 Installing the device 34
7 Wiring 36
7.1 Notes on connection 36
7.2 Terminal and block diagram 37
7.3 Electrical configuration 38
7.4 Connecting devices to networks 40

7.5 Securing cables ... 41

8 Commissioning ... 42

8.1 Notes on commissioning ... 42

8.2 Basic commissioning procedure ... 43
8.2.1 Requirements ... 43
8.2.2 Preparing commissioning ... 43
8.2.3 Commissioning procedure ... 43

8.3 Initial commissioning an open controller ... 45
8.3.1 Creating the configuration of the Open Controller ... 45
8.3.2 Setting the IP address ... 46
8.3.3 Changing the properties of the S7-1500 Software Controller ... 46
8.3.4 Establishing the HMI connection ... 47
8.3.5 Downloading a project to the target system ... 47
8.3.6 Transferring license keys ... 48
8.3.7 Switching the Open Controller on/off ... 50

9 Interrupt, error and system messages ... 51

9.1 Status and error display ... 51

10 Functions ... 54

10.1 Monitoring functions ... 54
10.1.1 Requirements ... 54
10.1.2 Temperature monitoring ... 55
10.1.3 Monitoring drives ... 55
10.1.4 Operating hours counter ... 55

10.2 Retentive memory NVRAM ... 55

10.3 BIOS setup ... 56

10.4 Power options ... 56

10.5 "Unified Write Filter (UWF)" write filter ... 57

11 Maintenance ... 58

11.1 Backing up and restoring data ... 58

11.2 Partitions in the delivery state ... 59

11.3 Restoring the delivery state ... 60

11.4 Updating software ... 62

11.5 Windows 10 IoT Enterprise (64-bit) ... 62

11.6 Sending the device to customer service ... 63

11.7 Removing and inserting the CFast card ... 64

11.8 Recycling and disposal ... 65

12 Technical specifications ... 66

12.1 Standards and approvals ... 66

12.2 Electromagnetic compatibility ... 71

12.3 Shipping and storage conditions ... 73

12.4 Mechanical and climatic ambient conditions 74
12.5 Information on insulation, protection class, degree of protection and rated voltage 76
12.6 Use of the ET 200SP in zone 2 potentially explosive atmospheres 77
12.7 Module data 78
12.7.1 Technical specifications of CPU 1515SP PC2 - basic device 78
12.7.2 Technical specifications CPU 1515SP PC2 81
12.7.3 Technical specifications of CPU 1515SP PC2 + HMI 128PT 85
12.7.4 Technical specifications of CPU 1515SP PC2 + HMI 512PT 89
12.7.5 Technical specifications of CPU 1515SP PC2 + HMI 2048PT 93
12.7.6 Technical specifications of CPU 1515SP PC2 F 97
12.7.7 Technical specifications of CPU 1515SP PC2 F + HMI 128PT 101
12.7.8 Technical specifications of CPU 1515SP PC2 F + HMI 512PT 105
12.7.9 Technical specifications of CPU 1515SP PC2 F + HMI 2018PT 109
12.7.10 Technical specifications of CPU 1515SP PC2 T 113
12.7.11 Technical specifications of CPU 1515SP PC2 TF 117
12.7.12 S7-1500 Software Controller CPU 1505SP (F/T/TF) 120

13 Dimension drawings 121

13.1 CPU 1515SP PC2 121

14 Spare parts/accessories 123

14.1 Accessories/spare parts 123

A Appendix 124

A.1 Siemens Industry Online Support 124
A.2 Industry Mall 124
A.3 Troubleshooting 125

B List of abbreviations 126

B.1 Abbreviations 126

Glossary 128

Index 131

Introduction 1

Purpose of the documentation

These operating instructions supplement the system manual
ET 200SP distributed I/O system. Functions that generally relate to the system are described in this manual.

The information provided in these operating instructions and in the system/function manuals supports you in commissioning the CPU 1515SP PC2.

Basic knowledge required

The system must be operated and used by qualified staff only.
The following knowledge is required:

- Installation guideline for SIMATIC ET 200SP
- Totally Integrated Automation Portal, in particular:
  - Hardware configuration with *hardware and network editor*
  - Communication between CPUs
- PC based automation with an S7-1500 software controller and with WinCC Runtime Advanced
- Basic knowledge of fail-safe automation systems
- Basic knowledge of PC technology
- Windows 10 IoT Enterprise operating system (64-bit)

Conventions

STEP 7: In this documentation, "STEP 7" is used as a synonym for all versions of the configuration and programming software "STEP 7 (TIA Portal)".

"CPU1515SP PC2 T" means that the respective section applies **only** to the "CPU 1515SP PC2 T".

"CPU1515SP PC2 F" means that the respective section applies **only** to the "CPU 1515SP PC2 F".

"CPU1515SP PC2 TF" means that the respective section applies **only** to the "CPU 1515SP PC2 TF".

"CPU 1515SP PC2" also includes "CPU1 515SP PC2 F", "CPU 1515SP PC2 T" and "CPU 1515SP PC2 TF".

Please also observe notes marked as follows:

Note

A note contains important information on the product described in the documentation, on the handling of the product or on the section of the documentation to which particular attention should be paid.

Scope of validity of the documentation

This documentation is valid for the following products:

ET 200SP Open Controller	Article number
Standard CPU	
• CPU 1515SP PC2 basic device	6ES7677-2DB40-0AA0
• CPU 1515SP PC2	6ES7677-2DB42-0GB0
• CPU 1515SP PC2 + HMI 128PT	6ES7677-2DB42-0GK0
• CPU 1515SP PC2 + HMI 512PT	6ES7677-2DB42-0GL0
• CPU 1515SP PC2 + HMI 2048PT	6ES7677-2DB42-0GM0
Fail-safe CPUs	
• CPU 1515SP PC2 F	6ES7677-2SB42-0GB0
• CPU 1515SP PC2 F + HMI 128PT	6ES7677-2SB42-0GK0
• CPU 1515SP PC2 F + HMI 512PT	6ES7677-2SB42-0GL0
• CPU 1515SP PC2 F + HMI 2048PT	6ES7677-2SB42-0GM0
Technology CPUs	
• CPU 1515SP PC2 T	6ES7677-2VB42-0GB0
Fail-safe technology CPUs	
• CPU 1515SP PC2 TF	6ES7677-2WB42-0GB0

1.1 Documentation on CPU 1515SP PC2

The following additional documentation is required to use the CPU 1515SP PC2:

- Operating instructions CPU 1505SP (F/T/TF), CPU 1507S (F) Version 2.5 (http://support.automation.siemens.com/WW/view/en/109740725)
- STEP 7 and WinCC Engineering V15 system manual (https://support.industry.siemens.com/cs/ww/en/view/109755202)
- ET 200SP distributed I/O system manual (http://support.automation.siemens.com/WW/view/en/58649293)
- ET 200SP server module manual (http://support.automation.siemens.com/WW/view/en/63257531)
- SIMATIC Safety - Configuring and Programming (http://support.automation.siemens.com/WW/view/en/54110126)
- SIMATIC S7-1200/S7-1500 F-CPUs (http://support.automation.siemens.com/WW/view/en/109478599)

The documentation for the SIMATIC ET 200SP distributed I/O system is arranged into three areas.
This arrangement enables you to access the specific content you require.

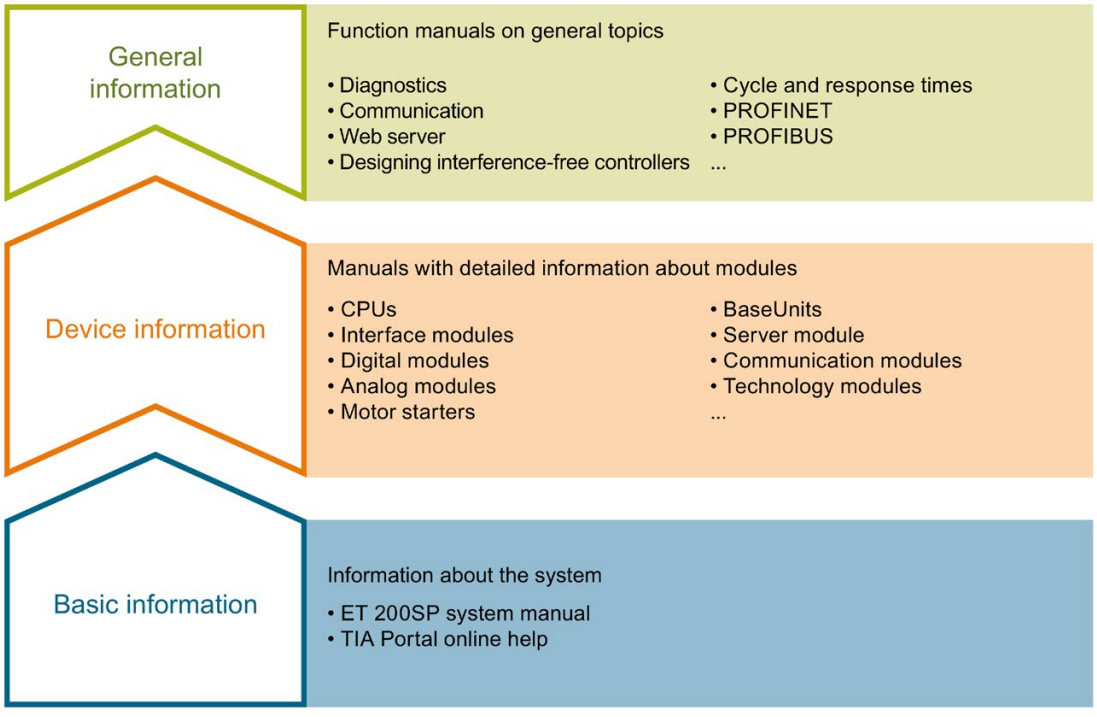

Basic information

The system manual describes in detail the configuration, installation, wiring and commissioning of the SIMATIC ET 200SP. distributed I/O system. The STEP 7 online help supports you in the configuration and programming.

Device information

Product manuals contain a compact description of the module-specific information, such as properties, wiring diagrams, characteristics and technical specifications.

General information

The function manuals contain detailed descriptions on general topics regarding the SIMATIC ET 200SP distributed I/O system, e.g. diagnostics, communication, Web server, motion control and OPC UA.

You can download the documentation free of charge from the Internet (http://w3.siemens.com/mcms/industrial-automation-systems-simatic/en/manual-overview/tech-doc-et200/Pages/Default.aspx).

Changes and supplements to the manuals are documented in a Product Information.

You can download the product information free of charge from the Internet (https://support.industry.siemens.com/cs/us/en/view/73021864).

Manual Collection ET 200SP

The Manual Collection contains the complete documentation on the SIMATIC ET 200SP distributed I/O system gathered together in one file.

You can find the Manual Collection on the Internet (http://support.automation.siemens.com/WW/view/en/84133942).

"mySupport"

With "mySupport", your personal workspace, you make the most of your Industry Online Support.

In "mySupport" you can store filters, favorites and tags, request CAx data and put together your personal library in the Documentation area. Furthermore, your data is automatically filled into support requests and you always have an overview of your current requests.

You need to register once to use the full functionality of "mySupport".

You can find "mySupport" in the Internet (https://support.industry.siemens.com/My/ww/en).

"mySupport" - Documentation

In the Documentation area of "mySupport", you have the possibility to combine complete manuals or parts of them to make your own manual.
You can export the manual in PDF format or in an editable format.

You can find "mySupport" - Documentation in the Internet (http://support.industry.siemens.com/My/ww/en/documentation).

"mySupport" - CAx Data

In the CAx Data area of "mySupport", you can have access the latest product data for your CAx or CAe system.

You configure your own download package with a few clicks.

In doing so you can select:

- Product images, 2D dimension drawings, 3D models, internal circuit diagrams, EPLAN macro files
- Manuals, characteristics, operating manuals, certificates
- Product master data

You can find "mySupport" - CAx Data in the Internet (http://support.industry.siemens.com/my/ww/en/CAxOnline).

Application examples

The application examples support you with various tools and examples for solving your automation tasks. Solutions are shown in interplay with multiple components in the system - separated from the focus in individual products.

You can find the application examples on the Internet (https://support.industry.siemens.com/sc/ww/en/sc/2054).

TIA Selection Tool

With the TIA Selection Tool, you can select, configure and order devices for Totally Integrated Automation (TIA).
This tool is the successor of the SIMATIC Selection Tool and combines the known configurators for automation technology into one tool.
With the TIA Selection Tool, you can generate a complete order list from your product selection or product configuration.

You can find the TIA Selection Tool on the Internet (http://w3.siemens.com/mcms/topics/en/simatic/tia-selection-tool).

SIMATIC Automation Tool

You can use the SIMATIC Automation Tool to run commissioning and maintenance activities simultaneously on various SIMATIC S7 stations as a bulk operation independently of the TIA Portal.

The SIMATIC Automation Tool provides a multitude of functions:

- Scanning of a PROFINET/Ethernet network and identification of all connected CPUs
- Address assignment (IP, subnet, gateway) and station name (PROFINET device) to a CPU
- Transfer of the data and the programming device/PC time converted to UTC time to the module
- Program download to CPU
- Operating mode switchover RUN/STOP
- Localization of the CPU by means of LED flashing
- Reading out CPU error information
- Reading the CPU diagnostic buffer
- Reset to factory settings
- Updating the firmware of the CPU and connected modules

You can find the SIMATIC Automation Tool on the Internet (https://support.industry.siemens.com/cs/ww/en/view/98161300).

PRONETA

With SIEMENS PRONETA (PROFINET network analysis), you analyze the plant network during commissioning. PRONETA features two core functions:

- The topology overview independently scans PROFINET and all connected components.
- The IO check is a fast test of the wiring and the module configuration of a system.

You can find SIEMENS PRONETA on the Internet (https://support.industry.siemens.com/cs/ww/en/view/67460624).

SINETPLAN

SINETPLAN, the Siemens Network Planner, supports you in planning automation systems and networks based on PROFINET. The tool facilitates professional and predictive dimensioning of your PROFINET installation as early as in the planning stage. In addition, SINETPLAN supports you during network optimization and helps you to exploit network resources optimally and to plan reserves. This helps to prevent problems in commissioning or failures during productive operation even in advance of a planned operation. This increases the availability of the production plant and helps improve operational safety.

The advantages at a glance

- Network optimization thanks to port-specific calculation of the network load
- Increased production availability thanks to online scan and verification of existing systems
- Transparency before commissioning through importing and simulation of existing STEP 7 projects
- Efficiency through securing existing investments in the long term and optimal exploitation of resources

You can find SINETPLAN on the Internet.

1.2 Information about third-party software updates

This product contains third-party software. Siemens accepts liability with respect to updates/patches for the third-party software only when these are distributed by Siemens in the context of a Software Update Service contract or officially approved by Siemens. Otherwise, updates/patches are installed at the user's own risk. You can find more information about our software update service offer under (http://w3.siemens.com/mcms/topics/en/simatic/licenses/software-update-service/Pages/Default.aspx).

1.3 Notes on protecting administrator accounts

A user with administrator rights has extensive access and manipulation possibilities.

Therefore, make sure that the administrator account is adequately protected to prevent unauthorized changes. To do this, set secure passwords and use a standard user account for regular operation. Other measures, such as the use of security policies, should be applied as required.

Safety information 2

2.1 Security information

Siemens provides products and solutions with industrial security functions that support the secure operation of plants, systems, machines and networks.

In order to protect plants, systems, machines and networks against cyber threats, it is necessary to implement – and continuously maintain – a holistic, state-of-the-art industrial security concept. Siemens' products and solutions constitute one element of such a concept.

Customers are responsible for preventing unauthorized access to their plants, systems, machines and networks. Such systems, machines and components should only be connected to an enterprise network or the internet if and to the extent such a connection is necessary and only when appropriate security measures (e.g. firewalls and/or network segmentation) are in place.

For additional information on industrial security measures that may be implemented, please visit (https://www.siemens.com/industrialsecurity).

Siemens' products and solutions undergo continuous development to make them more secure. Siemens strongly recommends that product updates are applied as soon as they are available and that the latest product versions are used. Use of product versions that are no longer supported, and failure to apply the latest updates may increase customers' exposure to cyber threats.

To stay informed about product updates, subscribe to the Siemens Industrial Security RSS Feed under (https://www.siemens.com/industrialsecurity).

2.2 General safety instructions

WARNING

Life-endangering voltage when control cabinet is open

If the device is installed in a control cabinet, areas or components can be under life-endangering voltage when the control cabinet is open.

Contact with these areas or components may lead to death through electric shock.

Switch off the power before opening the control cabinet.

If the device is operated in a machine in accordance with the machinery directive, the provisions of the guideline 2006/42/EC apply.

Safe operation of a plant

NOTICE

Protective measures

To ensure safe operation of a plant, you have to take suitable IT security measures, for example, network segmentation.

Seal the cover to protect the CFast card with the operating system of the CPU 1515SP PC2 from unauthorized access.

For more information on Industrial Security, refer to the Internet (http://www.siemens.com/industrialsecurity).

If you have questions about whether it is permissible to install the device in the planned environment, please contact your service representative.

Repairs

WARNING

Damage caused by opening the device

Unauthorized opening of and improper repairs to the device may result in substantial damage to equipment or endanger the user.

Only authorized personnel are permitted to repair the device.

You can find more information on the repair in the section Sending device in for repair (Page 63).

ESD guidelines

Modules containing electrostatic sensitive devices (ESDs) can be identified by the following label:

Strictly follow the guidelines mentioned below when handling modules which are sensitive to ESD:

- Before working with modules with ESD, you need to ensure that you are free of electrostatic charge (e.g. by touching a grounded object).
- All devices and tools must be free of static charge.
- Always pull the mains connector and disconnect the battery before installing or removing modules which are sensitive to ESD.
- Handle modules fitted with ESDs only by their edges.
- Do not touch any connector pins or conductors on modules containing ESDs.

2.3 Notes on use

WARNING

Hazards at an unprotected machine or plant

According to the results of a risk analysis, hazards can occur at an unprotected machine. The hazards may lead to personal injury.

According to the risk analysis, the risk of injury to persons can be countered with the following measures:

- Additional protective equipment at the machine or plant. In this case, the programming, parameter assignment and wiring of the I/O used, in particular, must be performed in accordance with the safety criteria (SIL, PL or Cat.) ascertained by means of an appropriate risk analysis.
- Use of the device for its intended purpose, which can be established by performing a functional test on the plant. This allows errors in programming, parameter assignment and wiring to be detected.
- Documentation of the test results which can be entered, if required, into the relevant safety certificates.

NOTICE

Ambient conditions

Ambient conditions for which the device is not suitable can lead to faults or damage the device.

Note the following:

- Only operate the device in enclosed areas. If you do not comply with this instruction, the warranty becomes void.
- Only operate the device in accordance with the ambient conditions given in the technical specifications.
- Protect the device from dust, moisture and heat.
- Do not expose the device to direct sunlight or other strong sources of light.
- The device must not be used in places with more difficult operating conditions through corrosive vapors or gases without taking additional protective measures, for example, supply of clean air.

Areas of application 3

3.1 Areas of application of fail-safe CPUs

Areas of application

F-CPUs are mainly designed for personal and machine protection. In addition to the safety program, you can also program standard applications. You can operate the F-CPUs in safety mode or in standard mode.

Reference

Information on the use of F-CPUs in safety mode is available in the programming and operating manual SIMATIC Safety - Configuring and Programming (http://support.automation.siemens.com/WW/view/en/54110126).

You can find information on using the CPU 1505SP (F) Software Controller in the associated manual (https://support.industry.siemens.com/cs/ww/en/view/109740725) and in the F-product information (https://support.industry.siemens.com/cs/ww/en/view/109478599).

3.2 Areas of application of technology CPUs

Areas of application

Areas of application of T-CPUs are motion control applications such as gearing and camming as well as control of kinematics. Due to the supported technology functions, the S7-1500T CPUs are suitable for controlling packaging machines, converting applications, assembly automation, etc.

You can operate the TF-CPUs in safety mode or in standard mode.

Reference

You can find information on using the T-CPUs in the function manual SIMATIC S7-1500T Motion Control (http://support.automation.siemens.com/WW/view/en/109749263).

You can find information on using the T-CPUs in the function manual SIMATIC S7-1500T kinematics functions (http://support.automation.siemens.com/WW/view/en/109749264).

You can find information on using the F-CPUs and TF-CPUs in safety mode in the product information for SIMATIC S7-1200/S7-1500 F-CPUs (http://support.automation.siemens.com/WW/view/en/109478599).

Product overview

4

4.1 Field of application

Article number

The article number depends on the pre-installed S7-1500 Software Controller and HMI Runtime.

You can find an overview of the article numbers in the section Scope of validity of the documentation (Page 6).

View of the module

The following figure shows the CPU 1515SP PC2:

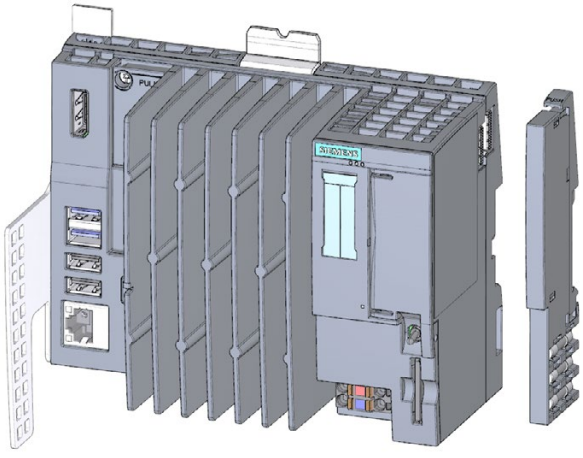

Figure 4-1 CPU 1515SP PC2 with supplied accessories

4.2 Characteristics

The CPU 1515SP PC2 is a PC-based automation device in the design of the ET 200SP. It is used for control and visualization purposes. The supplied IPC DiagBase software provides basic diagnostics functions and supports you in handling the BIOS.

General characteristics

- A removable CFast card with the following pre-installations is used as storage medium:
  - Windows 10 IoT Enterprise operating system (64-bit)
  - S7-1500 Software Controller CPU 1505SP, CPU 1505SP F, CPU 1505SP T, CPU 1505SP TF
  - Optionally with HMI: WinCC Runtime Advanced as of V15
- Interfaces:
  - An interface for the exchangeable ET 200SP BusAdapters for connection of PROFINET IO (2 ports) Accessories/spare parts (Page 123)
  - An interface for connecting devices using Industrial Ethernet (Gigabit Ethernet)
  - 4 interfaces for USB devices (2 x USB 3.0 and 2 x USB 2.0)
  - A DisplayPort interface (DPP) for a monitor
  - A sealable slot for the CFast card
  - A slot for an SD/MMC card as additional optional drive
- Supply voltage 1L+ 24 V DC (SELV/PELV). The connection plug is included in the scope of delivery.
- The CPU 1515SP PC2 is suitable for use in industrial environments:
  - Compact design
  - Fan-less operation
  - High robustness
- The CPU 1515SP PC2 complies with IP 20 degree of protection and is intended for installation in a control cabinet.

Additional information

You can find more information on the system versions and ordering options in the section Scope of validity of the documentation (Page 6).

4.3 Sample configuration

Configuration

The CPU 1515SP PC2 is mounted on a mounting rail according to EN 60715. A modular system is formed with ET 200SP modules in the central rack. You can also expand the CPU 1515SP PC2 with fail-safe I/O modules.

You can use the CPU 1515SP PC2 as PROFINET IO controller. The PROFINET IO devices are connected via the ports of the X1 PN(LAN) interface using a SIMATIC BusAdapter.

Devices can be connected via Industrial Ethernet using the integrated interface X2 PN/IE(LAN).

The connection to PROFIBUS can be made using the DP master module.

Sample configuration

The following figure shows a sample configuration with the CPU 1515SP PC2:

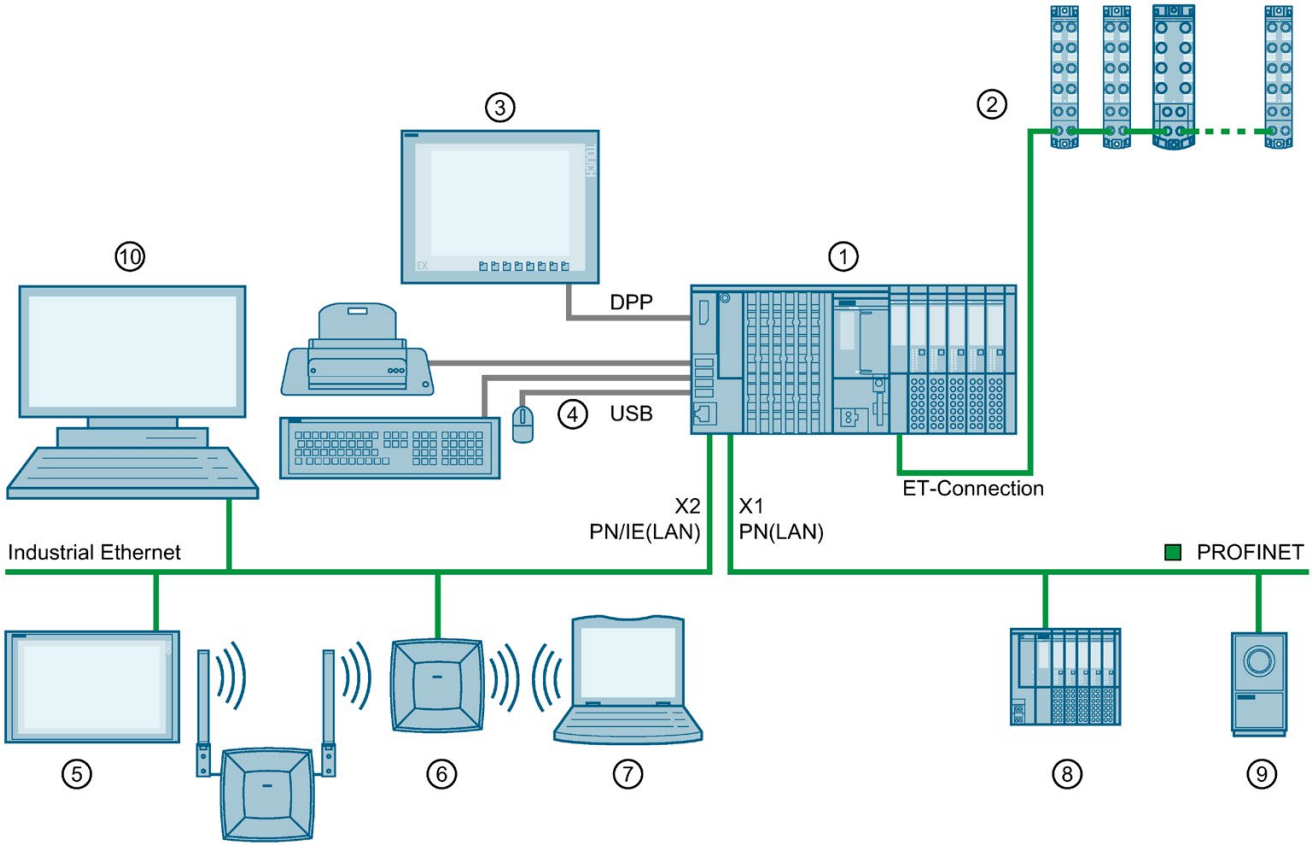

① CPU 1515SP PC2, I/O modules, server module, BusAdapter
② ET 200AL modules with ET-Connection
③ Flat Panel - Wide Screen Display
④ USB devices: Keyboard, mouse, printer ...
⑤ Industrial Thin Client ITC
⑥ SCALANCE W786
⑦ Field PG
⑧ PROFINET IO device
⑨ Camera
⑩ PC/Programming device

Figure 4-2 Configuration example with the CPU 1515SP PC2

Reference

You can find more information about configuring the ET 200AL modules in the system manual ET 200AL distributed I/O system (https://support.industry.siemens.com/cs/ww/en/view/89254965).

4.4 Components

Components of the CPU 1515SP PC2

The following table provides an overview of the components of the CPU 1515SP PC2:

Table 4- 1 Components of the CPU 1515SP PC2

Component	Function	Figure
Mounting rail in accordance with EN 60715	The mounting rail is the rack for the CPU 1515SP PC2.	
CPU 1515SP PC2	CPU with strain relief and white reference labels	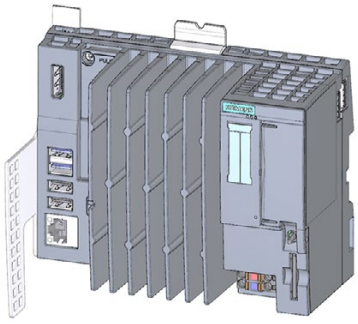

Component	Function	Figure
BusAdapter	The BusAdapter allows free selection of the connection technology for PROFINET IO. The following versions are available for CPU 1515SP PC2: • For standard RJ45 connector (BA 2×RJ45) ① • For direct connection of the bus cable (BA 2×FC) ② • For POF/PCF fiber-optic cable (BA 2xSCRJ) ③ • As media converter for POF/PCF fiber-optic cable ⇔ standard RJ45 connector (BA SCRJ/RJ45) ④ • As media converter for POF/PCF fiber-optic cable ⇔ direct connection of the bus cable (BA SCRJ/FC) ⑤ • For glass fiber-optic cable (BA 2xLC) ⑥ • As media converter for glass fiber-optic cable ⇔ standard RJ45 connector (BA LC/RJ45) ⑦ • As media converter for glass fiber-optic cable ⇔ direct connection of the bus cable (BA LC/FC) ⑧	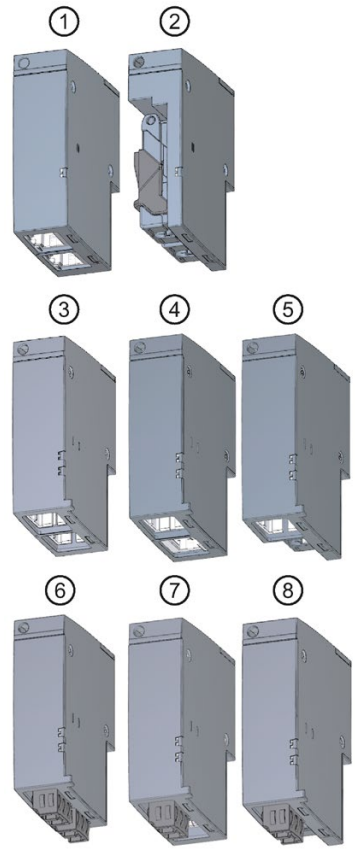
	For mixed configuration with an ET 200AL , you require the BusAdapter BA-Send 1xFC ① (plugged into the BaseUnit BU-Send). Connect the bus cable for ET-Connection to the BusAdapter BA-Send 1xFC.	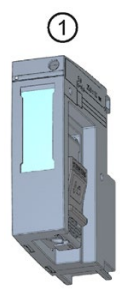
Server module	The server module completes the configuration of the CPU 1515SP PC2 with I/O modules. The server module is included in the CPU's scope of delivery.	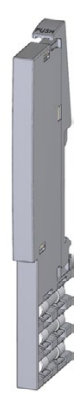

4.5 Operator controls and connection elements

View of the module

The following figure shows the operator controls and connection elements of the CPU 1515SP PC2:

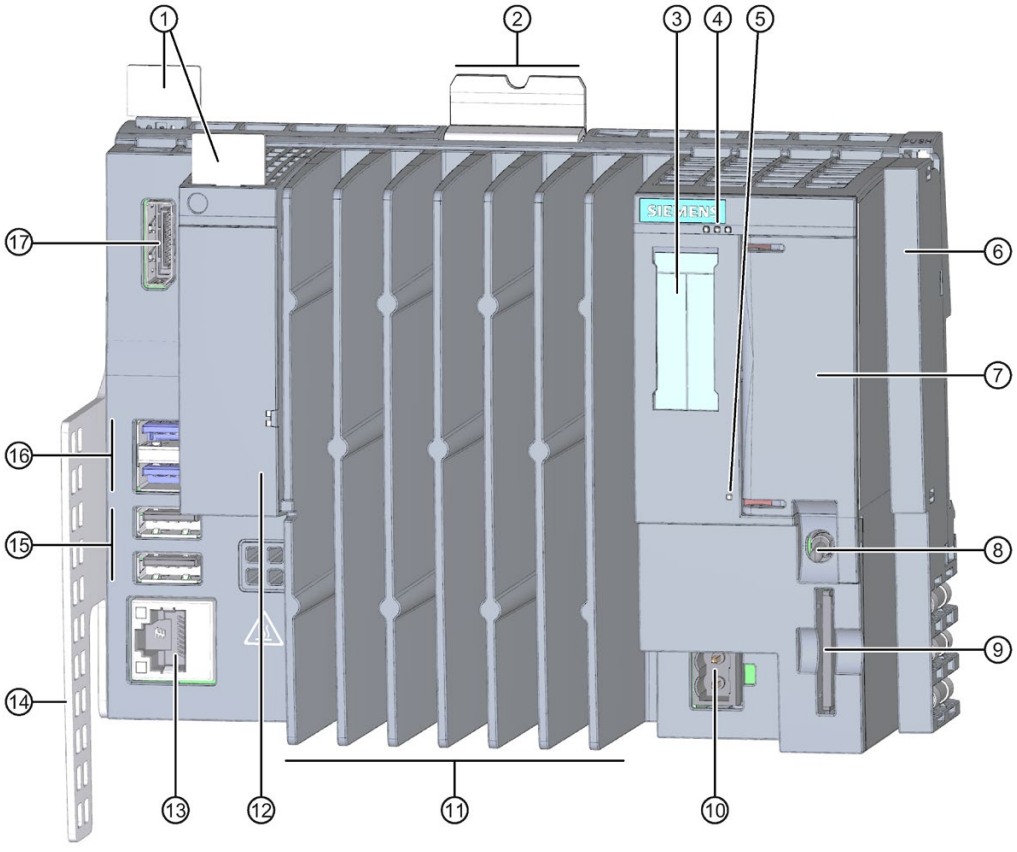

① Reference identification labels
② Mounting rail release
③ Labeling strips
④ LEDs for the current operating state and diagnostic status of the CPU 1505SP
⑤ Power LED
⑥ Server module
⑦ **X50:** Slot for the CFast card (flash memory), sealable
⑧ Mode selector
⑨ **X51:** Slot for an optional SD/MMC card
⑩ **X80:** Connector for 24 V DC supply voltage
⑪ Cooling fins
⑫ **X1 PROFINET (LAN):** Slot for BusAdapter for connection of PROFINET IO; Status display for PROFINET
⑬ **X2 PN/IE(LAN):** GbE Ethernet connection with integrated display
⑭ Strain relief
⑮ **X62, X63:** 2 x USB 2.0 ports
⑯ **X60, X61:** 2 x USB 3.0 ports
⑰ **X70:** DisplayPort interface (DPP)

Figure 4-3 View of the CPU 1515SP PC2

Slot for CFast card

The operating system, Runtime software and project are installed on the supplied SIMATIC CFast card. The CFast card is the only mass storage device of the CPU 1515SP PC2.

Note

Unauthorized access

Seal the cover of the slot to protect the CFast card with the operating system of the CPU 1515SP PC2 from unauthorized access and manipulation.

Slot for SD/MMC card

You can use a SIMATIC SD or MMC card as additional storage drive. This drive can be used to store data via Windows, for example a backup, but not the operating system, the Runtime software or the project.

Permitted SD cards: SDHC up to 32 GB, SDXC up to 2 TB.

USB connections

- 2 x USB 3.0 with I_{max} = 1 A per interface
- 2 x USB 2.0 with I_{max} = 0.5 A per interface

MAC addresses

The MAC address consists of a 3-byte manufacturer ID and a 3-byte device ID (consecutive number).

Each device is already assigned four MAC addresses in the factory. The front of the CPU 1515SP PC2 is lasered with the MAC address 1 and 4. With the MAC addresses 2 and 3, the consecutive numbers are incremented. If, for example, the first MAC address is 08-00-06-6B-80-C0, the second MAC address is 08-00-06-6B-80-C1.

Table 4- 2 Assignment of the MAC addresses

	Assignment
MAC address 1	X2 PN/IE(LAN) • Visible in STEP 7 for accessible devices • Lasered on the front of the CPU (start of the number range)
MAC address 2	X1 PROFINET (LAN) • Visible in STEP 7 for accessible devices
MAC address 3	Port X1 P1 (required for LLDP, for example)
MAC address 4	Port X1 P2 R (required for LLDP, for example) • Lasered on the front of the CPU (end of the number range)

Connector for supply voltage

The CPU 1515SP PC2 is equipped with a 2-pin connection terminal for the power supply.

The connection plug for the supply voltage is plugged in when the CPU is shipped from the factory.

Mode selector

Use the mode selector to set the CPU operating mode.

Table 4- 3 Mode selector positions

Position	Meaning	Description
RUN	Operating mode RUN[1]	The CPU is processing the user program.
STOP	Operating mode STOP[1]	The CPU is not processing the user program. The outputs are set to a "safe" state.
MRES	Memory reset	**For active S7-1500 software controller**[2] only: CPU memory reset

[1] RUN and STOP indicate the **selected** operating state. The RUN and STOP LEDs indicate the **actual** operating mode of the CPU 1515SP PC2.

[2] See manual S7-1500 Software Controller CPU 1505SP (F), CPU 1507S (F) Version 2

4.6 Scope of delivery

Note

The device always comes with the **CPU 1515SP PC2** label with article number 6ES7677-2DB40-0AA0, regardless of the order options.

The following components are included in the scope of delivery of the CPUs:

- CPU 1515SP PC2 basic device
- Strain relief with fixing screws
- Server module
- CFast card with the following pre-installations:
  - Windows 10 IOT Enterprise operating system (64-bit)
  - S7-1500 Software Controller CPU 1505SP
  - Optional **only** for CPU 1515SP PC2/CPU 1515SP PC2 F: WinCC RT Advanced as of V15
- Restore USB stick for image restore
- Windows-Certificate of Authenticity (CoA)
- Certificate of License (CoL)
- **Only** for CPU 1515SP PC2 (F) with HMI and CPU 1515SP PC2 T/ TF**:** USB stick with SIMATIC license keys
- Product information

Application planning 5

5.1 Basics

Introduction

The CPU 1515SP PC2 is open equipment. This means you may only set up the CPU in enclosures, cabinets or electrical equipment rooms and in a dry environment (IP20 degree of protection). The housings, cabinets and electrical operating rooms must guarantee protection against electric shock and spread of fire. The requirements regarding mechanical strength must also be observed. The housings, cabinets, and electrical operating rooms must not be accessible without a key or tool. Access may only be possible for instructed or authorized personnel.

Installation location

Install the CPU 1515SP PC2 in a suitable enclosure/control cabinet with at least IP54 degree of protection according to EN 60529 and take into consideration the ambient conditions for operating the devices.

Installation position

You can install the ET 200SP distributed I/O system in any position. The preferred mounting position is horizontal mounting on a vertical wall.

Depending on the mounting position, restrictions on ambient temperature and maximum configuration apply to the CPU 1515SP PC2.

NOTICE
Damage to the modules Modules can be damaged if exposed to ambient temperatures higher than permitted. The following ambient temperatures must not be exceeded during operation: • Horizontal mounting 60 °C for an installation with up to 32 I/O modules. 55 °C for an installation with up to 64 I/O modules. • Vertical mounting 50 °C for an installation with up to 32 I/O modules.

Additional information can be found in the section Mechanical and climatic environmental conditions (Page 74).

5.2 Unpacking the device

When unpacking

When unpacking, make sure to check the following:

- Check packaging and contents for visible damage from transport. Damaged or incomplete devices should never be commissioned.
- Check the delivery for correctness and completeness.
  Please inform your Siemens contact partner should you notice any irregularities.
- Keep the supplied documentation and licenses. They belong to the device and are the proof that you have purchased the software preinstalled on the CFast card.
  Documentation and licenses are required for initial commissioning and for any questions that arise.
- Keep the original packaging in case the device needs to be transported again.
- Note the identification data (Page 30) of the device.

NOTICE
Damage to the device during transport and storage If a device is transported or stored without packaging, it is unprotected from shocks, vibrations, pressure and moisture. Damaged packaging indicates that environmental conditions have already had a significant impact on the device. The device might be damaged. Do not dispose of the original packaging. Pack the device for transport and storage.

NOTICE
Damage to the device caused by condensation If the device was exposed to low temperatures or extreme variations in temperature during transport, this may cause moisture to build up on or in the device (condensation). Please note the specified mechanical and climatic ambient conditions (Page 74). Moisture can cause short-circuits in the electrical circuits and damage the device. Proceed as follows to avoid damage: • Store the device in dry conditions. • Make sure it adapts to room temperature before commissioning. • Do not expose the device to direct heat radiation from a heater. • If condensation has developed, wait until the device is completely dry before you switch it on.

⚠ WARNING
Electric shock and fire hazard from damaged device A damaged device can carry dangerous voltage and trigger a fire in the machine or plant. A damaged device has unpredictable properties and states. Death or severe injury could occur. Make sure that the damaged device is not installed and commissioned accidentally. Label the damaged device correspondingly and keep it locked up. Have the device repaired without delay.

5.3 Identification data

The identification data can be used to clearly identify the device when a repair is necessary.

Note the following data:

- Printed on the nameplate of the device, please find the following information:
  - Article number
  - Serial number
  - The first and the last MAC address
- Depending on the scope of delivery, the "Certificate-of-License" is provided as proof of license. This document is valid for the following product:
  - S7-1500 Software Controller CPU 1505SP
  - S7-1500 Software Controller CPU 1505SP F/T/TF
  - WinCC Runtime Advanced V15
- The "Microsoft Windows Product Key" can be found on the "Certificate of Authenticity" label.

5.4 Installation location

Introduction

Install the CPU 1515SP PC2 in a suitable housing/control cabinet with sufficient mechanical strength, fire protection and at least IP54 degree of protection according to EN 60529, and take into consideration the ambient conditions for operating the devices.

Mounting rail

You must ground the mounting rail separately in the control cabinet. Exception: If you install the rail on grounded, zinc-plated mounting plates, there is no need to ground the rail separately.

Note

If the ET 200SP distributed I/O system is exposed to vibration and shock loads, both ends of the ET 200SP system assembly must be mechanically fixed to the mounting rail (e.g using 8WA1010-1PH01 ground terminals). This measure prevents the ET 200SP from shifting to the side.

Note

If the ET 200SP distributed I/O system is exposed to high vibration and shock load, we recommend that you screw the mounting rail to the mounting surface at intervals of approx. 200 mm.

Suitable surface finishes are:

- Steel strip in accordance with Appendix A of EN 60715 or
- Tinned steel strip. We recommend the use of the mounting rails in section (Page 123).

Note

Mounting rails of other manufacturers

If you use mounting rails from other manufacturers, ensure that they have the properties required for your climatic and mechanical ambient conditions.

Minimum clearances

Make sure to maintain the following minimum clearances when installing the CPU 1515SP PC2.

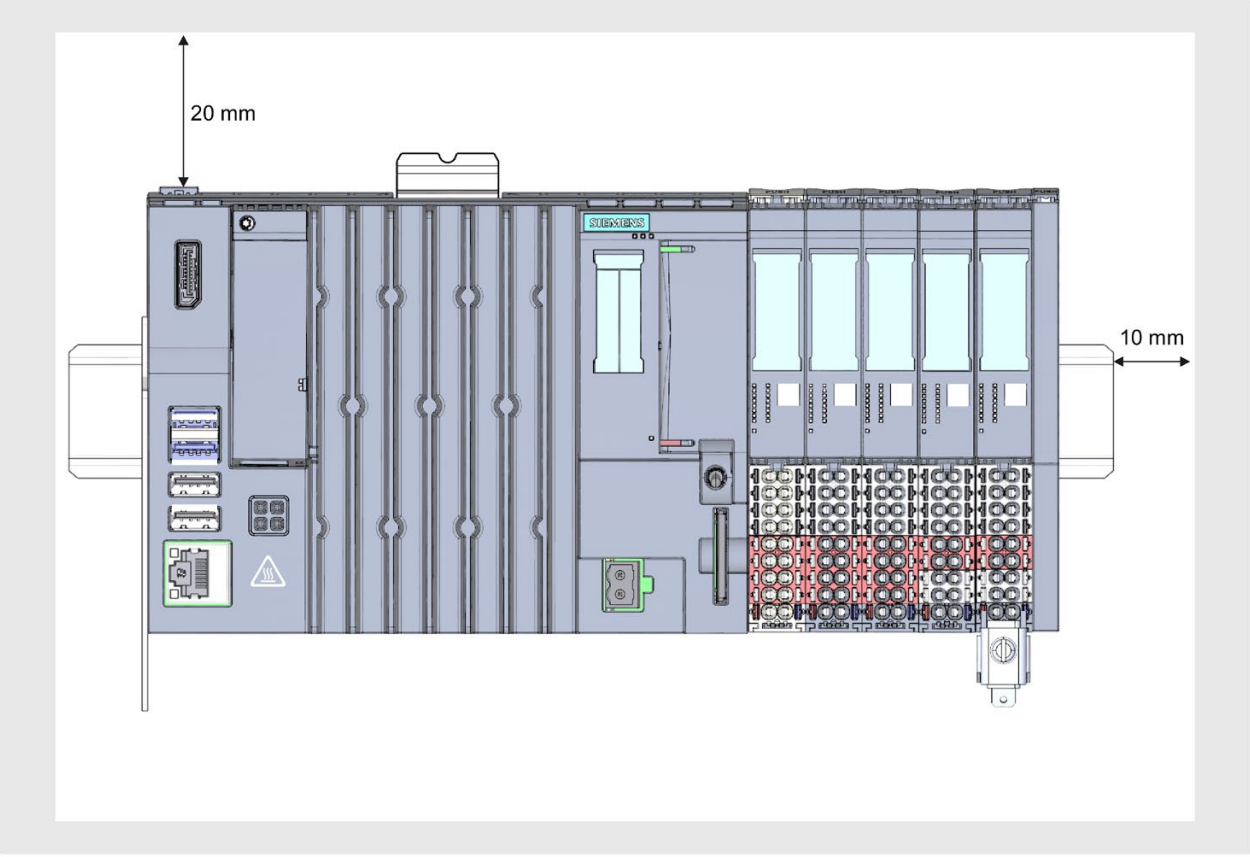

Figure 5-1 Minimum clearances

Installation rules

- After the CPU 1515SP PC2, there is a BaseUnit BU..D with incoming supply voltage L+ (light-colored terminal box).
- This is followed by BaseUnits BU..B (with dark-colored terminal box).
- The respective corresponding I/O modules can be connected to the BaseUnits. Suitable combinations of BaseUnits and I/O modules can be found in the ET 200SP System Manual (http://support.automation.siemens.com/WW/view/en/84133942).
- The server module completes the installation.

Note

Install the CPU 1515SP PC2 only with disconnected supply voltage.

5.5 Hardware configuration

As soon as one of the following rules applies, the maximum configuration has been reached.

Maximum mechanical configuration

Backplane bus length: Maximum 1 m mounting width (without CPU 1515SP PC2, including server module)

Electrical maximum configuration

The number of operable I/O modules of a potential group is limited by the

- Power consumption of the I/O modules
- Power consumption of the components supplied via these I/O modules

The maximum current-carrying capability of the terminals on the BaseUnit L+/ground is 10 A.

USB load

When using the CPU 1515SP PC2 with the maximum configuration, the USB load must also be considered:

- Horizontal mounting
  - Ambient temperature of 0 to 60 °C with maximum 32 I/O modules **and** 4 x low-current (500 mA) USB load
  - Ambient temperature of 0 to 55 °C with maximum 64 I/O modules **and** 2 x high-current (900 mA) + 2 x low-current (500 mA) USB load
- Vertical mounting
  - Ambient temperature of 0 to 50 °C with maximum 32 I/O modules **and** 4 x low-current (500 mA) USB load

Address space

The address space is predefined. However, you can adjust the address space in the user program.

Installation

6

6.1 Installing the device

Requirements

The mounting rail is fitted.

Required tools

3 to 3.5 mm screwdriver (only to fix the strain relief and dismantle the BusAdapter)

Fixing strain relief

Fix the strain relief to the top and bottom of the left-hand side of the CPU 1515SP PC2 with the supplied screws.

Installing the CPU 1515SP PC2

1. Install the CPU on the mounting rail.
2. Swivel the CPU back until you hear the mounting rail release click into place
3. To check that the CPU has correctly clicked into place, pull on the underside of the enclosure.

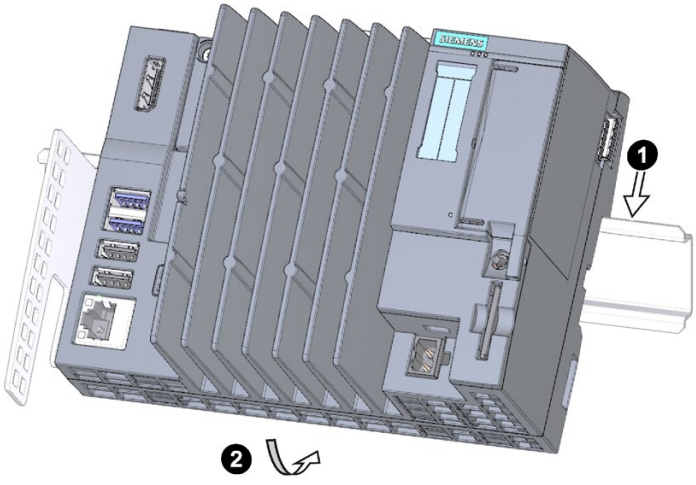

Figure 6-1 Installing the CPU 1515SP PC2

Uninstalling the CPU 1515SP PC2

The BaseUnits with the I/O modules are located to the right of the CPU 1515SP PC2:

1. Switch off the supply voltage on the CPU.
2. Press the mounting rail release button on the first BaseUnit and, at the same time, move the CPU parallel to the left until it comes off the rest of the module group.

   Note: The mounting rail release button is located above the CPU.
3. While pressing the mounting rail release button on the CPU, swivel the CPU out of the mounting rail.

Note

It is not necessary to remove the BusAdapter from the CPU 1515SP PC2.

Wiring 7

7.1 Notes on connection

Note

Rules and regulations for operation

Observe the information contained in the *Wiring* section in the system manual ET 200SP distributed I/O system (http://support.automation.siemens.com/WW/view/en/84133942) and in the function manual Designing interference-free controllers function manual (http://support.automation.siemens.com/WW/view/en/59193566).

NOTICE

Risk of hazardous system states

If you remove and insert I/O devices with the supply voltage switched on, this can result in hazardous system states.

Injury to persons and damage to the machine or plant could result.

Therefore, I/O devices can only be inserted and removed when the supply voltage is switched off.

Only connect I/O devices which are suitable for use in industrial environments according to EN 61000-6-2 / IEC 61000-6-2.

7.2 Terminal and block diagram

Block diagram

The following figure shows the block diagram for the CPU 1515SP PC2.

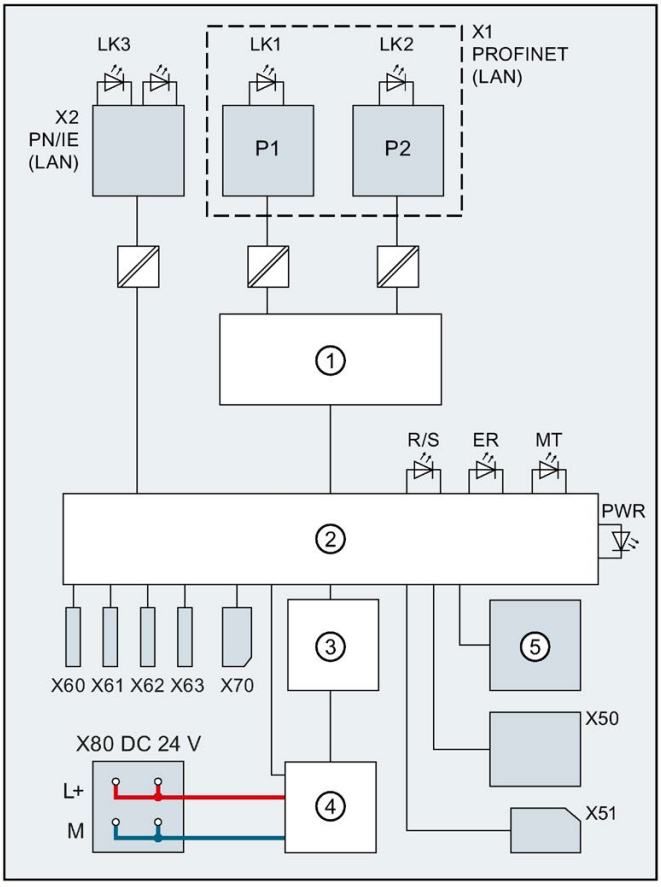

①	Switch	X1 PN(LAN)	PROFINET interface X1
②	Electronics	P1	PROFINET interface X1 Port 1
③	Backplane bus interface	P2	PROFINET interface X1 Port 2
④	Internal supply voltage	L+	24 V DC supply voltage
⑤	Mode selector	M	Ground
X50	CFast card	LK1, LK2	LED Link TX/RX
X51	SD/MMC card	LK3	LED Link
X60, X61	USB 3.0 interfaces, max. 0.9 A	R/S	RUN/STOP LED (yellow/green)
X62, X63	USB 2.0 interfaces, max. 0.5 A	ER	ERROR LED (red)
X70	DPP interface	MT	MAINT LED (yellow)
X80 24 V DC	Infeed of supply voltage	PWR	POWER LED (yellow/green)
X2 PN/IE(LAN)	Ethernet interface X2		

Figure 7-1 Block diagram for the CPU 1515SP PC2

7.3 Electrical configuration

Non-isolated configuration

Note

Unlike the ET 200SP distributed I/O system, the CPU 1515SP PC2 can only be operated with a non-isolated configuration.

The following figure shows the overall configuration of a CPU 1515SP PC2 with power supply from a TN-S system. The power supply supplies the CPU 1515SP PC2 and the load circuit for the 24 V DC modules.

For the CPU 1515SP PC2, there is a fixed connection between the ground infeed terminal and the contact springs to the mounting rail. You must ground the mounting rail separately in the control cabinet.

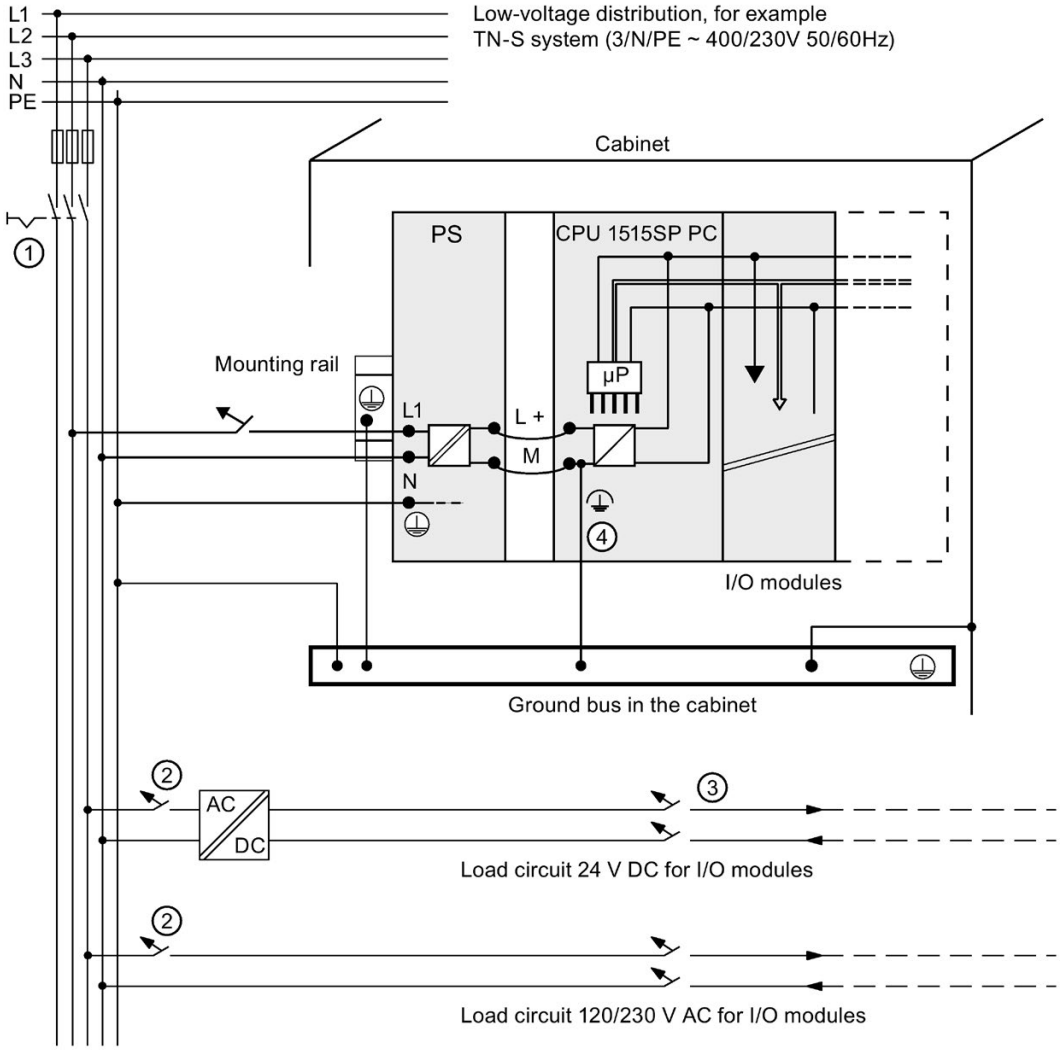

① Master switch
② Short-circuit and overload protection
③ Load current supply (galvanic isolation)
④ This connection is established automatically with the CPU 1515SP PC2.

The represented layout of the power connections does not correspond to the actual layout; it was chosen for demonstration purposes only.

Figure 7-2 Connecting the load voltage reference potential

7.4 Connecting devices to networks

The following options are available for integrating devices into existing or planned system environments and networks.

Ethernet

You can use the integrated Ethernet interface X2 PN/IE(LAN) (10/100/1000 Mbps) for communication and data exchange with automation devices, for example, SIMATIC S7. Only ASCII characters are permitted in the name of the X2 PN/IE(LAN) interface in the TIA Portal, e.g. PROFINET_2.

You need suitable software to do this: STEP 7, WinCC, SIMATIC NET.

Note

Use a Category 5e Ethernet cable (Cat-5e cable) for operation with 1000 Mbps.

PROFINET

PROFINET operation is possible via the X1 PN(LAN) interface and the approved BusAdapter.

PROFIBUS

The connection to PROFIBUS can be made using the DP master module.

7.5 Securing cables

The strain relief for connecting cables prevents the USB cables and PROFINET connectors detaching from the CPU 1515SP PC2. The strain relief is included in the scope of delivery.

⚠ WARNING
Flying sparks due to loose cables Risk of explosion in hazardous areas. USB cables and PROFINET connectors may detach from the device in the case of strong oscillation and high vibrating loads. Attach these cables to the strain relief of the device using cable ties.

Requirements

- The strain relief is fixed to the CPU.
- The CPU is installed.

Procedure

Secure the USB and PROFINET cables to the strain relief using cable ties.

Figure 7-3 Secured cables

Commissioning 8

8.1 Notes on commissioning

WARNING

Improper commissioning in hazardous areas

Device failure or risk of explosion in hazardous areas.

- Do not commission the device unless it is fully mounted and connected according to the specifications in the section Wiring (Page 36).
- Before commissioning, please consider the effects on other devices in the plant.

NOTICE

Condensation in the device

Damage to the device due to condensation if the temperature between transport or storage and the installation point differs.

Before commissioning the device, leave it to stand until it is dry.

NOTICE

Data loss

Data loss may occur if write filters are used incorrectly.

Therefore, note the information on write filters.

The following configurable write filter is available under Windows 10:

- Unified Write Filter (UWF) (Page 57)

8.2 Basic commissioning procedure

Step	Execution	Section
1	Requirements	8.2.1 (Page 43)
2	Preparing commissioning	8.2.2 (Page 43)
3	Commissioning procedure	8.2.3 (Page 43)

8.2.1 Requirements

The following requirements must be met before you commission the Open Controller for the first time:

- The CPU 1515SP PC2 is mounted.
- The supplied CFast card is inserted.
- No data carriers are connected via USB.

8.2.2 Preparing commissioning

Procedure

When the requirements are met, proceed as follows with the commissioning:

1. Connect a monitor using a DisplayPort cable.
2. Connect a keyboard and a mouse to the CPU via USB.

Result

The Open Controller is prepared for commissioning.

8.2.3 Commissioning procedure

When you start up your CPU 1515SP PC2 for the first time, basic settings and the administrator password are queried. The device is then automatically set up for the operating system that is installed on the CFast card. Restart the device after the operating system has been set up.

Note

The initial commissioning is not possible with a Multitouch panel, as the Multitouch driver is only available after the installation of the operating system.

Procedure

When the requirements (Page 43) are met and the preparations for commissioning (Page 43) are complete, proceed as follows with the commissioning:

1. Connect the power supply.
   → The PWR LED lights up yellow first, then green.
   → The device carries out the hardware initialization.
2. Wait until the Siemens logo disappears from the screen.
3. Follow the instructions on the screen to configure the device:
   – Set <Language>, <Country/region>, <App language>, <Keyboard layout>, <Time zone for>
   – Accept license conditions
   – Setting the account
4. Finally, you will be prompted to restart the device.

NOTICE
Faulty installation If you change the device during the installation, the installation will be disrupted and the operating system will not be installed correctly. The operational reliability of the device and the plant is endangered. Do **not** switch off the device during the entire installation process.

Information on users/user groups in Windows

A user "Operator" with standard user rights is already created on the Windows system.

The user is in a user group "SIEMENS TIA Engineer". This grants the user the rights to use the installed SIMATIC software products.

To use the CPU 1515SP PC2 directly, the Windows "Autologon" function is enabled for the "Operator" user. No password is preset.

Note

When you assign a password, change the entry for the "Autologon" function accordingly using the Windows user administration.

Result

- The Windows 10 IOT Enterprise operating system (64-bit) is installed.
- The "Operator" user is logged on automatically.
- The software controller and WinCC Runtime Advanced, if required, are ready for use.
- For administrative purposes, the "Operator" user can be logged off and the administrator created during commissioning can be logged on.
- The operating system's start screen is displayed after each startup.

8.3 Initial commissioning an open controller

Step	Execution	Section
1	Creating the configuration of the Open Controller	8.3.1 (Page 45)
2	Setting the IP address	8.3.2 (Page 46)
3	Changing the properties of the Software Controller	8.3.3 (Page 46)
4	Establishing the HMI connection	8.3.4 (Page 47)
5	Downloading a project to the target system	8.3.5 (Page 47)
6	Transferring the license key	8.3.6 (Page 48)
7	Switching the Open Controller on/off	8.3.7 (Page 50)

8.3.1 Creating the configuration of the Open Controller

Requirements

The following requirements must be met before you can create the configuration of the Open Controller:

- TIA Portal V15 + HSP 0269 **or** TIA Portal ≥ V15 SP1 must be installed.
- You have started the TIA Portal and created a new project.

Creating the configuration

To create the configuration in the TIA Portal, follow these steps:

1. Double-click "Add new device" in the project tree.
2. Select "PC systems > SIMATIC S7 Open Controller > ET 200SP Open Controller >".
3. Select the required device.
4. Select the desired version and click "OK".
   The configured Open Controller is displayed in the device view.
5. The following interfaces can be seen in the Open Controller:
   – Onboard interface X2 (GB Ethernet Windows interface) that is assigned directly to the PC station (1 port)
   – Exchangeable BusAdapter that is assigned directly to the Software Controller (2 ports)
6. The following preconfigured components can be seen in the device view:
   – **CPU 1515SP PC2 / CPU 1515SP PC2 F/T/TF:** CPU 1505SP (F/T/TF) Software Controller
   – **CPU 1515SP PC2 + HMI / CPU 1515SP PC2 F + HMI:** CPU 1505SP (F) Software Controller and WinCC Runtime Advanced
7. Insert the server module from the hardware catalog.
   The server module forms the termination of the CPU with the I/O modules. If no server module is configured, the server module is added automatically during compiling.

8.3.2 Setting the IP address

Set the IP address as follows:

- BusAdapter [X1]: The configured IP address becomes effective on the Open Controller after a download. To go online via the [X1] interface, the configured address must match the [X1] address entered in the panel of the software controller.
- Onboard interface [X2]: The configured IP address should be identical to the Windows IP address of the Open Controller.

8.3.3 Changing the properties of the S7-1500 Software Controller

Information on the property of the CPU is available in the Inspector window under "Properties". You can change these properties if required.

8.3.4 Establishing the HMI connection

Procedure

The WinCC RT software is integrated in the SIMATIC HMI devices (e.g. Basic/Comfort/Mobile Panel) and permits data exchange over HMI connections.

No HMI connection exists between the WinCC RT Advanced software and the S7-1500 Software Controller at the time of the configuration.

To establish a HMI connection between the WinCC RT Advanced software on the S7-1500 Software Controller, proceed as follows:

1. In the network view, switch to "Connections".
2. Click on WinCC RT Advanced.
3. Draw a line from the WinCC RT Advanced software to the S7-1500 Software Controller (e.g. CPU 1505SP) while keeping the mouse button pressed.

A network connection is established between the two devices.

Reference

You can find additional information on configuring an HMI connection in the TIA Portal online help or in the STEP 7 and WinCC Engineering V15 (https://support.industry.siemens.com/cs/ww/en/view/109755202) system manual.

8.3.5 Downloading a project to the target system

Key statement

To set up your automation system, you need to download the project data you generated offline to the connected devices. This project data is generated, for example when configuring hardware, networks, and connections or when programming the user program or when creating recipes. The first time you download, the entire project data is downloaded. During later download operations, only changes are downloaded.

Proceed as follows to download the configuration:

1. Select the complete PC system in the device view.
2. Right-click on the PC system.
3. Select the option you require in the "Download to device" menu command.

Note

Note that the options available to you always depend on the selected device.

4. Select the interfaces with which you want to establish the online connection to the device. You have the option of showing all compatible devices by selecting the corresponding option and clicking the "Start search" command.

   Note

   The first TIA Portal download **must** be via the "X2" interface.

   Only ASCII characters are permitted in the name of the X2 PN/IE(LAN) interface in the TIA Portal, e.g. PROFINET_2.

5. Download and compile the project.

The hardware configuration and the first download are now completed.

Reference

Additional information on the possible options for downloading is available in the online help of the TIA Portal.

8.3.6 Transferring license keys

Licensing the software

For the following products, you need to transfer the product-specific license key with the *Automation License Manager (ALM)* before commissioning:

- WinCC RT Advanced incl. PowerTag
- CPU 1505SP T/TF

Note

No license key is required to operate the S7-1500 Software Controller CPU 1505SP (F) V2.x.

Requirements

- Initial commissioning was successfully completed.
- Windows 10 IoT Enterprise (64-bit) has been started.
- The extended write filter **UWF must be deactivated** on the CPU 1515SP PC2.

Transferring license keys with local configuration

The *Automation License Manager* is pre-installed on the CPU 1515SP PC2.

Open the software using the icon on the desktop or a menu command.

1. In the Windows start bar, select **Start > Siemens Automation > Automation License Manager**.
2. Follow the instructions of the *Automation License Manager*.

Transferring license keys via programming device/PC

The *Automation License Manager* is pre-installed on a programming device/PC with STEP 7 and the CPU 1515SP PC2.

1. Connect the CPU 1515SP PC2 to a programming device/PC.
2. Connect the supplied USB stick to the programming device/PC.
3. Select the menu command **Start > Siemens Automation > Automation License Manager**.
4. Select the menu command **Edit > Connect computer** and enter the IP address of the CPU 1515SP PC2.
5. if the option "Forbid license keys transfer from local computer" is disabled on the source computer, drag the license keys from the USB stick to the system partition C: of the CPU 1515SP PC2.

Backing up license keys for restore and repair

Note

Loss of license keys

A SIMATIC license key cannot be copied or duplicated. No more license key copies exist on the USB stick once you have dragged the license keys from the USB stick to your CPU 1515SP PC2.

Secure your purchased license keys **before** restoring the delivery state (Restore) or in the case of repair. To do this, move the license keys to a USB stick and keep this stick in a safe place.

If an error occurs on your license keys on the CPU 1515SP PC2, please contact your Siemens representative. Make sure to have the "Certificate of License" (CoL) to hand.

Reference

For additional information on licenses, refer to the *Automation License Manager* manual. You can find the manual on the CPU 1515SP PC2 under **Start > All Programs > Siemens Automation > Documentation** and on the Internet (http://support.automation.siemens.com/WW/view/en/56956174).

You can find more information on the UWF write filter in the section: Protective function for data carriers (Page 57).

8.3.7 Switching the Open Controller on/off

Requirements

Initial commissioning was successfully completed.

Switching on the CPU 1515SP PC2

Proceed as follows to switch on the CPU 1515SP PC2:

1. Switch on the power supply of the CPU.

   The Boot Manager GRUB2DOS starts.

2. Select the mode in which the CPU 1515SP PC2 should start:
   - Default: with the Windows operating system and the S7-1500 software controller
   - Only with the Windows operating system (e.g. with updates)

Switching off the CPU 1515SP PC2

Proceed as follows to switch off the CPU 1515SP PC2:

1. Use the Windows function **Start > Power > Shut down** to switch off.

   The PWR LED changes from green to yellow.

   The Windows function shuts down the Windows operating system and the S7-1500 software controller.

If the device will not be used for a longer period after the shutdown, de-energize the device.

Interrupt, error and system messages

9

9.1 Status and error display

LED display

The following figure shows the LED displays of the CPU 1515SP PC2.

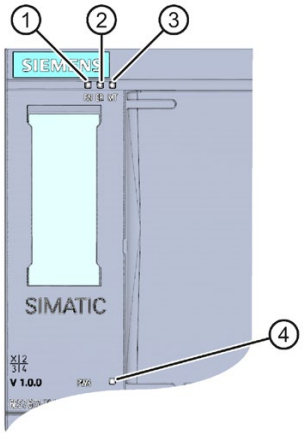

① RUN/STOP LED (yellow/green LED)
② ERROR LED (red LED)
③ MAINT LED (yellow LED)
④ POWER LED (yellow/green LED)

Figure 9-1 LEDs of the CPU 1515SP PC2

Meaning of the LED displays with active S7-1500 Software Controller

The CPU 1515SP PC2 has three LEDs to indicate the current operating state and diagnostics status.

The following table shows the meaning of the color combinations of the LED displays in connection with the S7-1500 Software Controller.

Table 9- 1 Meaning of the LED displays

RUN/STOP LED	ERROR LED	MAINT LED	Meaning
LED off	LED off	LED off	POWER OFF Starting of the CPU 1515 SP PC2 in "Windows only" mode No power supply. Software Controller of the CPU 1515SP PC2: • is not downloaded • is in the operating state Power OFF Use of the hardware LEDs was disabled (configuration via TIA Portal).
LED off	LED flashes red	LED off	An error has occurred.
LED green	LED off	LED off	Software Controller of the CPU 1515SP PC2 is in RUN mode.
LED green	LED flashes red	LED off	A diagnostics event is pending.
LED green	LED off	LED lights up yellow	Maintenance demanded for the plant. The affected hardware must be exchanged within a short period.
LED green	LED off	LED flashes yellow	Maintenance required for the plant. You must exchange the affected hardware within a foreseeable period.
			Firmware update successfully completed

RUN/STOP LED	ERROR LED	MAINT LED	Meaning
LED lights up yellow	LED off	LED off	Software controller of the CPU is in the operating state STOP.
LED lights up yellow	LED flashes red	LED flashes yellow	The user program is causing an error.
LED flashes yellow	LED off	LED off	CPU is performing internal activities during STOP, e.g. ramp-up after STOP.
			Loading the user program
LED flashes yellow/green	LED off	LED off	Startup (transition from STOP → RUN)
LED flashes yellow/green	LED flashes red	LED flashes yellow	Startup (CPU booting)
			Test of LEDs during startup, inserting a module.
			LED flashing test
LED flashes green	LED flashes red	LED flashes red	CPU defective

POWER LED

Table 9- 2 POWER LED

POWER LED	Meaning
LED off	No supply voltage or supply voltage too low
LED lights up yellow	Supply voltage present; running through BIOS phase; operating system is shut down
LED green	Supply voltage present; Booting or operation of the operating system

Functions 10

10.1 Monitoring functions

10.1.1 Requirements

Introduction

The CPU 1515SP PC2 has monitoring functions that you can use with the corresponding monitoring software.
The following display, monitoring and control functions are available:

- Temperature monitoring
- Monitoring of drives with S.M.A.R.T. functionality
- Operating hours counter (information on the total runtime)
- HW LED status display (RUN/STOP, ERROR, MAINT)

Monitoring software

- SIMATIC IPC DiagBase

  The SIMATIC DiagBase software is included in the scope of delivery of the CPU 1515SP PC2.

  Use the DiagBase Management Explorer application to obtain a clearer overview for monitoring. The DiagBase Alarm Manager notifies you of individual alarms.

  Note

  For additional information, refer to the online help for the SIMATIC IPC DiagBase software.

- SIMATIC IPC DiagMonitor

  The SIMATIC DiagMonitor software is provided on a CD. You can find the order number of the license in the section Accessories/Spare parts (Page 123).

  Potential system failures are detected and reported in good time with the diagnostics and alerting software. The software is also used for remote diagnostics.

  The software contains:

  – The software for the stations to be monitored
  – A library for creating your own applications

10.1.2 Temperature monitoring

Three temperature sensors monitor the temperature at different locations of the CPU 1515SP PC2:

- Processor temperature
- Temperature in the vicinity of the RAM ICs/blocks
- Temperature of the basic module

If one of the temperature values exceeds the set temperature threshold, the temperature monitoring triggers a temperature error. The temperature error activates the IPC DiagBase and/or IPC DiagMonitor software.

The temperature error remains stored until the temperatures fall below the temperature threshold again and it is reset using one of the following measures:

- Acknowledgment of the error message by the monitoring software
- Restart of the device

10.1.3 Monitoring drives

The **S.M.A.R.T. function** is a monitoring function of storage media. With this function, different parameters are queried in order to detect possible defects at an early stage. This information is shown to the user with corresponding software.

10.1.4 Operating hours counter

You can use an operating hours counter for a variety of applications:

- For calculating the operating time of the CPU
- For calculating the operating time of controlled equipment

You can find more information about the operating hours counter in the "Operating hours counter" group in the "Diagnostics" folder of the Online and Diagnostics view in the TIA Portal.

10.2 Retentive memory NVRAM

Retentive memory is non-volatile memory for saving a limited quantity of data in the event of power failure.

The data defined as retentive is stored in retentive memory. This data is retained beyond a power-off or power failure.

A corresponding function is implemented in the S7-1500 software controller to allow NVRAM to be used there. This saves up to 410 KB of data in non-volatile data memory in the case of power failure. This function can be set on the engineering station in the TIA Portal.

10.3 BIOS setup

BIOS setup

The boot order can be set using the BIOS Setup.

Changing the device configuration

The device configuration is preset for working with the supplied software.

Only change the set values if you have made technical changes to your device.

10.4 Power options

A power plan with the name SIMATIC S7 is set as default on the CPU 1515SP PC2. This ensures that the CPU does not deviate from its maximum clock rate in order not to endanger the real-time capability of the software controller.

10.5 "Unified Write Filter (UWF)" write filter

General information on the UWF write filter

The Unified Write Filter (UWF) is a configurable write filter which provides the CFast cards with a write protection.

External removable media such as USB sticks and other flash drives that are recognized as removable media by the operating system are not supported.

NOTICE
Data loss on CFast cards The number of write cycles on CFast cards is limited due to technical reasons. To prevent data loss, the CFast card must therefore be provided with special protection. Use the UWF write filter to extend the service life of the CFast card and to avoid a possible failure of the CPU 1515SP PC2.

Note

Write protection is deactivated in the delivery state!

Note that the work memory is reduced when UWF is activated.

NOTICE
Risk of data loss when UWF is activated If UWF is activated, all changes made to data carriers which are write protected by the UWF after the boot operation may be lost when the device is shut down. Proceed as follows to prevent this situation: • Make changes to data carriers only when write protection is disabled.

Reference

You can find additional information on the UWF write filter on the Internet in the online help for Microsoft® Windows® 10.

Maintenance 11

11.1 Backing up and restoring data

Introduction

The operating system and the Runtime software are located on the supplied restore USB stick. You can use the USB stick to restore the delivery state of the CPU 1515SP PC2.

If you use functions from the Restore menu, you must acknowledge a security message. For the functions, 72 hours are available in each case. If the functions are not completed within this time period, CPU 1515SP PC2 is automatically restarted without a further prompt.

If you want to back up your projects, save them to the D: partition of the CFast card.

SIMATIC IPC Image & Partition Creator

You can also create your own image of your CFast card. This contains the operating system, the Runtime software and the complete project loaded from the TIA Portal.

We recommend the SIMATIC IPC Image & Partition Creator (≥ V3.5) software tool to back up data under Windows. It provides for easy backup and fast restore of the contents of the CFAST card and of individual partitions (images).

Note

Data can only be backed up to a network drive with the SIMATIC IPC Image & Partition Creator software using the X2 PN/IE(LAN) interface.

You can procure the SIMATIC IPC Image & Partition Creator:

- Via the Siemens online ordering system.
- Pre-installed on the SIMATIC IPC Service USB flash drives.

For additional information, please refer to the corresponding product documentation.

SIMATIC IPC Service USB flash drive

You can use the SIMATIC IPC Service USB flash drives for data backup and restore.

You obtain these through the Siemens online ordering system.

11.2 Partitions in the delivery state

Partitioning the CFast card

The following partitions are set up on the CFast card by default:

Partition	Name	30 GB CFast card	File system
C:	SYSTEM	19.5 GB	NTFS
D:	DATA	8 GB	NTFS
-	-	0.4 GB	RAW
-	WinCCMB	0.04 GB	NTFS

Note

Partitions under Windows 10 IoT Enterprise (64-bit)

The partitions need to be set again if they are faulty or if the partitioning is to be changed.

NOTICE

CPU volume for S7-1500 Software Controller (0.4 GB RAW)

Do not change the CPU volume for software controllers.

This is the only way to ensure that the software controller continues to operate without error.

11.3 Restoring the delivery state

Introduction

The entire image of your operating system and your Runtime software are located on the supplied restore USB stick. You can use the SIMATIC restore menu to restore the delivery state of the CPU 1515SP PC2.

Note

Restoring existing system partition

If your projects are stored on partition D: you can use the "Restore existing system partition" option to restore partition C: with the operating system and the Runtime software, without your project data being affected.

Note

Using Multitouch panels

The restoration of the original software is not possible with a Multitouch panel, because the Multitouch driver is not available until after the installation of the operating system.

Requirements

To restore the original software of the CPU 1515SP PC2, the following is required:

- the supplied CFast card
- the supplied restore USB stick

NOTICE

Data loss

During restoration of the system to delivery state, the CFast card is completely erased and re-formatted, and is then loaded with the original software. All subsequently modified or added data, programs, license keys and partitions on the CFast card will be lost.

Back up the data of the CPU 1515SP PC2 after you have assigned parameters to the module and if you have made changes to the configuration.

NOTICE

Loss of license keys

Back up the license keys before the restore by dragging these to your USB stick via *Automation License Manager*.

After the restart of the CPU 1515SP PC2, transfer the license keys back to the device via the *Automation License Manager*.

Restoring the delivery state of the CPU 1515SP PC2 with restore USB stick

Before the restore

1. Connect a monitor and a keyboard to the CPU.
2. Switch off the power supply of the CPU.
3. Remove all USB drives from the CPU.
4. Connect the restore USB stick to a USB port.
5. Switch on the power supply of the CPU.
   → The CPU is started.
6. Press <Esc> to start the Boot Manager.
7. Select the list entry for the USB stick in the Boot Manager.
8. After the prompt, confirm the start by pressing any key.
   → The loading process is displayed (Windows logo).
   → The SIMATIC Restore menu opens.
   – Select a language.
   – Select "CPU 1515SP PC2 (F/T/TF)" or "CPU 1515SP PC2 (F) + HMI".
   – Select the option "Completely restore system drive".
     → The original software is restored on Partition C:, Partition D: is deleted.

After the restore

1. Exit the Restore menu.
2. Remove the restore USB stick.
3. Proceed as described in Initial commissioning.

Further procedure

- Re-connect any other required USB devices.
- Transfer the license keys.

11.4 Updating software

Note

When you update software (such as Windows, drivers, BIOS, etc.), always start the CPU 1515SP PC2 in the GRUB menu in Windows mode.

Information on updating software for the respective product can be found on the Internet (https://support.industry.siemens.com/cs/ww/en).

HMI devices

During the installation, make sure that you always use the latest drivers for the HMI devices used (SIMATIC Flat Panels).
Before you install a new driver version, you must uninstall the old driver version in order to ensure proper operation.

You can download the current driver software from SIMATIC Product Support.

11.5 Windows 10 IoT Enterprise (64-bit)

The Windows 10 IoT Enterprise operating system (64-bit) is pre-installed on the CPU 1515SP PC2.

Windows language packs

English and German are available as the basic language for the installation of the Windows operating system.

After initial commissioning of the CPU 1515SP PC2, additional operating system languages can be installed. Note that you need administrator rights to install language packages.

The following language packs are contained on the restore USB stick under \Packages\x64\LanguagePack:

- Traditional Chinese
- Simplified Chinese
- German
- English
- French
- Italian
- Spanish

Installing languages

Use the Windows function "Start > Settings > Speech Recognition, Region, Date > Languages" to install a language pack.

Updates

You can install additional updates at a later time. You can find current information on the operating system at Widows (http://www.windows.com).

Note

In the delivery state, partitions are set up on drive C: and D: on the CFast card with free memory. See section Partitions in the delivery state (Page 59).

Make sure that sufficient free memory space is available on your CFast card for the installation of updates.

11.6 Sending the device to customer service

Before sending

Before you send in the CPU 1515SP PC2 for repair:

- Create a backup of your data.
- Back up your SIMATIC license keys on a USB stick.
- Remove your SD/MMC cards.
- Remove your **CFast card**.

Sending in the device

- Pack the device in its original packaging.
- Enclose identification data (Page 30).
- Send to your Siemens contact partner.

11.7 Removing and inserting the CFast card

Introduction

The CPU 1515SP PC2 has a slot for a CFast card. On this card, you will find the operating system, your Runtime software and, after configuration, the project.

Seal the cover for the CFast card to protect the system against unauthorized access.

You must remove the CFast card before you send in the CPU, for example, for repair.

Requirements

- The CPU 1515SP PC2 is disconnected from the power supply.

Procedure – Removing the CFast card

1. Remove the seal.
2. Open the cover, using a screwdriver if necessary.
3. Press onto the CFast card.
   The card is pressed out of the slot.
4. Pull the card out of the slot.
   To do this, grip the rib on the underside of the memory card.

Procedure – Inserting the CFast card

1. Open the cover of the slot, using a screwdriver if necessary.
2. Insert the CFast card into the slot.
3. Press the CFast card into the slot until it clicks into place.

   The CFast card is properly inserted if the cover can be closed without any resistance.
4. Close the cover.

NOTICE
Unauthorized access Seal the cover to protect the CFast card with the operating system of the CPU 1515SP PC2 from unauthorized access.

11.8 Recycling and disposal

For ecologically sustainable recycling and disposal of your old device, contact a certificated disposal service for electronic scrap or dispose of the device in accordance with the regulations in your country.

Technical specifications 12

12.1 Standards and approvals

Introduction

The general technical specifications cover the following:

- The standards and test values that the CPU 1515SP PC2 complies with and fulfills.
- The test criteria according to which the CPU 1515SP PC2 was tested.

Currently valid markings and approvals

Note

Information for CPU 1515SP PC2

The currently valid markings and approvals are printed on the CPU 1515SP PC2.

Safety information

WARNING

Risk of personal injury and damage to property.

In hazardous areas, there is a risk of injury or damage if you disconnect any connectors while the CPU 1515SP PC2 is in operation.

Always de-energize the CPU 1515SP PC2 operated in such areas before you disconnect the connectors.

WARNING

Flying sparks due to loose cables

Risk of explosion in hazardous areas.

USB cables and PROFINET connectors may detach from the device in the case of strong oscillation and high vibrating loads.

Attach these cables to the strain relief of the device using cable ties.

WARNING
Explosion hazard If you replace components, compliance with Class I, DIV. 2 can become invalid.

WARNING
Area of application This device is only suitable for use in Class I, Div. 2, Group A, B, C, D, or in non-hazardous areas.

CE marking

The CPU 1515SP PC2 meets the requirements and safety objectives of the following guidelines and complies with the harmonized European standards (EN) for programmable logic controllers published in the official journals of the European Community:

- 2014/30/EU "Electromagnetic Compatibility" (EMC Directive)
- 2014/34/EU "Equipment and protective systems intended for use in potentially explosive atmospheres" (Explosion Protection Directive)
- 2011/65/EU "Restriction of the use of certain hazardous substances in electrical and electronic equipment" (RoHS Directive)
- 2006/42/EC "Machinery Directive" for fail-safe modules

The conformity declaration certificates are available for the responsible authorities and are kept at the following address:

Siemens AG
Digital Factory
Factory Automation
DF FA AS SYS
P.O. Box 1963
D-92209 Amberg, Germany

They are also available for download on the Siemens Industry Online Support (https://support.industry.siemens.com/cs/ww/en/) web pages, keyword "Declaration of Conformity".

cULus approval

Underwriters Laboratories Inc., complying with

- UL 508 (Industrial Control Equipment)
- CSA C22.2 No. 142 (Process Control Equipment)

OR

cULus HAZ. LOC. approval

Underwriters Laboratories Inc., complying with

- UL 508 (Industrial Control Equipment)
- CSA C22.2 No. 142 (Process Control Equipment)
- ANSI/ISA 12.12.01
- CSA C22.2 No. 213 (Hazardous Location)

APPROVED for use in
Class I, Division 2, Group A, B, C, D Tx;
Class I, Zone 2, Group IIC Tx

Installation Instructions for cULus haz.loc.

- WARNING - Explosion Hazard - Do not disconnect while circuit is live unless area is known to be non-hazardous.
- WARNING - Explosion Hazard - Substitution of components may impair suitability for Class I, Division 2 or Zone 2.
- This equipment is suitable for use in Class I, Division 2, Groups A, B, C, D; Class I, Zone 2, Group IIC; or non-hazardous locations.

WARNING: EXPOSURE TO SOME CHEMICALS MAY DEGRADE THE SEALING PROPERTIES OF MATERIALS USED IN THE RELAY.

FM approval

Factory Mutual Research (FM) according to
Approval Standard Class Number 3611, 3600, 3810

(ANSI/ISA 82.02.01)
CSA C22.2 No. 213
CSA C22.2 No. 61010-1
APPROVED for use in Class I, Division 2, Group A, B, C, D Tx;
Class I, Zone 2, Group IIC Tx

Installation Instructions for FM

- WARNING - Explosion Hazard - Do not disconnect while circuit is live unless area is known to be non-hazardous.
- WARNING - Explosion Hazard - Substitution of components may impair suitability for Class I, Division 2 or Zone 2.
- This equipment is suitable for use in Class I, Division 2, Groups A, B, C, D; Class I, Zone 2, Group IIC; or non-hazardous locations.

WARNING: EXPOSURE TO SOME CHEMICALS MAY DEGRADE THE SEALING PROPERTIES OF MATERIALS USED IN THE RELAYS.

OR

ATEX approval

In accordance with EN 60079-15 (Electrical apparatus for potentially explosive atmospheres; Type of protection "n") and EN 60079-0 (Electrical apparatus for potentially explosive gas atmospheres - Part 0: General Requirements)

II 3 G Ex nA IIC Tx Gc
DEKRA 12ATEX0038X

OR

IECEx approval

According to IEC 60079-15 (Explosive atmospheres - Part 15: Equipment protection by type of protection "n") and IEC 60079-0 (Explosive atmospheres - Part 0: Equipment - General requirements)

Ex nA IIC Tx Gc
IECEx DEK 13.0011X

RCM (C-Tick) Declaration of conformity for Australia/New Zealand

CPU 1515SP PC2 meets the requirements of the standard EN 61000-6-4:2007 + A1:2011.

Korea Certificate KCC-REM-S49-ET200SP

Note that this device corresponds to limit class A in terms of the emission of radio frequency interference. This device can be used in all areas, except residential areas.

이 기기는 업무용(A급) 전자파 적합기기로서 판매자 또는 사용자는 이 점을 주의하시기 바라며 가정 외의 지역에서 사용하는 것을 목적으로 합니다.

IEC 61131

The CPU 1515SP PC2 with the S7-1500 Software Controller CPU 1505SP (F/T/TF) fulfills the requirements and criteria of the IEC 61131-2 standard (programmable logic controllers, Part 2: Equipment requirements and tests).

PROFINET standard

CPU 1515SP PC2 is based on standard IEC 61158 Type 10.

PROFIBUS standard

CPU 1515SP PC2 is based on standard IEC 61158 Type 3.

IO-Link standard

CPU 1515SP PC2 is based on standard IEC 61131-9.

Use in industrial environments

CPU 1515SP PC2 is designed for use in industrial environments. It meets the following standards for this type of use:

- Requirements on interference emission EN 61000-6-4: 2007 + A1: 2011
- Requirements on immunity EN 61000-6-2: 2005

Use in mixed areas

Under certain circumstances, you can use the CPU 1515SP PC2 in a mixed area. A mixed area is used for residential purposes and for commercial operations that do not significantly impact on residents.

If you want to use the CPU 1515SP PC2 in mixed areas, you must ensure that its radio frequency interference emission complies with the limit classes of the EN 61000-6-3 generic standard. Suitable measures for observing these limits for use in a mixed area are, for example:

- Installation of the CPU 1515SP PC2 in grounded control cabinets
- Use of noise filters in the supply cables

An individual acceptance test is also required.

Use in residential areas

Note

CPU 1515SP PC2 not intended for use in residential areas

CPU 1515SP PC2 is not intended for use in residential areas. Using the CPU 1515SP PC2 in residential areas can affect radio and television reception.

Reference

The certificates for the markings and approvals can be found on the Internet under Service&Support (http://www.siemens.com/automation/service&support).

12.2 Electromagnetic compatibility

Definition

Electromagnetic compatibility (EMC) is the ability of an electrical installation to function satisfactorily in its electromagnetic environment without interfering with that environment.

The CPU 1515SP PC2 meets the requirements of the EMC legislation for the European single market, among other requirements. The prerequisite for this is that the CPU 1515SP PC2 complies with the specifications and guidelines relating to electrical configuration.

EMC according to NE 21

The CPU 1515SP PC2 meets the EMC specifications of NAMUR guideline NE 21.

Pulse-shaped disturbance

The following table shows the electromagnetic compatibility of the CPU 1515SP PC2 with regard to pulse-shaped disturbances.

Table 12- 1 Pulse-shaped disturbance

Pulse-shaped disturbance	Test voltage	corresponds to degree of severity
Electrostatic discharge according to IEC 61000-4-2.	Air discharge: ±8 kV Contact discharge ± 4 kV	3 3
Burst pulses (high-speed transient disturbance) according to IEC 61000-4-4.	±2 kV (power supply lines) ±2 kV (signal lines > 30 m) ±1 kV (signal lines < 30 m)	3 3
High-energy single pulse (surge) according to IEC 61000-4-5 External protective circuit required (see function manual Designing interference-free controllers (http://support.automation.siemens.com/WW/view/en/59193566))		3
• asymmetric coupling	±2 kV (power supply lines) DC with protective elements ±2 kV (signal/data line only > 30 m), with protective elements	
• symmetric coupling	±1 kV (power supply lines) DC with protective elements ±1 kV (signal/data line only > 30 m), with protective elements	

Sinusoidal disturbance

The following table shows the electromagnetic compatibility of the CPU 1515SP PC2 with regard to sinusoidal disturbances.

- RF radiation

Table 12- 2 Sinusoidal disturbance variables with RF radiation

RF radiation according to IEC 61000-4-3/NAMUR 21 Electromagnetic RF field, amplitude-modulated		corresponds to degree of severity
80 to 1000 MHz; 1.0 to 2.0 GHz	2.0 GHz to 6.0 GHz	3
10 V/m	3 V/m	
80% AM (1 kHz)		

- RF coupling

Table 12- 3 Sinusoidal disturbance variables with RF coupling

RF coupling according to IEC 61000-4-6	corresponds to degree of severity
(10 kHz) 150 kHz to 80 MHz	3
10 V_{rms} unmodulated	
80% AM (1 kHz)	
150 Ω source impedance	

Emission of radio interference

Interference emission of electromagnetic fields in accordance with IEC61000-6-4 (measured at a distance of 10 m).

Table 12- 4 Interference emission of electromagnetic fields

Frequency	Emitted interference
30 MHz to 230 MHz	< 40 dB (µV/m)Q
230 MHz to 1000 MHz	< 47 dB (µV/m)Q

Emission of interference via AC supply voltage in accordance with EN 55016.

Table 12- 5 Interference emission via the AC power supply

Frequency	Emitted interference
0.15 to 0.5 MHz	<79 dB (µV) Q <66 dB (µV) M
0.5 to 30 MHz	<73 dB (µV) Q <60 dB (µV) M

12.3 Shipping and storage conditions

Introduction

The CPU 1515SP PC2 exceeds the requirements of IEC 61131-2 in terms of shipping and storage conditions. The following information applies to modules that are shipped and/or stored in their original packaging.

Table 12- 6 Shipping and storage conditions for modules

Type of condition	Permissible range
Free fall (in shipping package)	≤1 m
Temperature	From -40 °C to +70 °C
Barometric pressure	from 1140 hPa to 660 hPa (corresponds to an altitude of -1000 m to 3500 m)
Relative humidity	5% to 95%, without condensation
Sinusoidal vibrations according to IEC 60068-2-6	5 - 8.4 Hz: 3.5 mm 8.4 - 500 Hz: 9.8 m/s²
Shock according to IEC 60068-2-27	250 m/s², 6 ms, 1000 shocks

12.4 Mechanical and climatic ambient conditions

Note

Restrictions

In contrast to the ambient conditions for the ET 200SP distributed I/O system, the following restrictions apply to the CPU 1515SP PC2:

- Mechanical ambient conditions:
  - 2 g constant acceleration when using the BusAdapter BA 2×FC
- Ambient temperature:
  - 0 to 60 °C for horizontal installation with maximum 32 I/O modules
  - 0 to 55 °C for horizontal installation with maximum 64 I/O modules
  - 0 to 50 °C for vertical installation with maximum 32 I/O modules

Operating conditions

The CPU 1515SP PC2 is suitable for use in weather-proof, fixed locations. The operating conditions are based on the requirements of DIN IEC 60721-3-3:

- Class 3M3 (mechanical requirements)
- Class 3K3 (climatic requirements)

Mechanical ambient conditions

The table below shows the mechanical ambient conditions in the form of sinusoidal oscillations.

Table 12- 7 Mechanical ambient conditions

Frequency band	CPU 1515SP PC2
5 ≤ f ≤ 8.4 Hz	3.5 mm amplitude
8.4 ≤ f ≤ 150 Hz	1 g constant acceleration
10 ≤ f ≤ 60 Hz	0.35 mm amplitude
60 ≤ f ≤ 1000 Hz	• 1 g constant acceleration (with BusAdapter BA 2×RJ45) • 2 g constant acceleration (with BusAdapter BA 2×FC)

Test of mechanical ambient conditions

The table below provides important information with respect to the type and scope of the test of ambient mechanical conditions.

Table 12- 8 Test of mechanical ambient conditions

Condition tested	Test Standard	Comment
Vibration	Vibration test according to IEC 60068-2-6 (sine)	Type of oscillation: Frequency sweeps with a rate of change of 1 octave/minute. BA 2×RJ45 • 5 Hz ≤ f ≤ 8.4 Hz, 3.5 mm constant amplitude • 8.4 Hz ≤ f ≤ 150 Hz, 1 g constant acceleration BA 2×FC • 10 Hz ≤ f ≤ 60 Hz, 0.35 mm constant amplitude • 60 Hz ≤ f ≤ 1000 Hz, 2 g constant acceleration Duration of vibration: 10 frequency sweeps per axis in each of 3 vertically aligned axes
Shock	Shock, tested according to IEC 60068-2-27	Type of shock: Half-sine Shock intensity: 150 m/s^2 peak value, 11 ms duration Direction of shock: 3 shocks in each direction (+/-) at each of 3 vertically aligned axes

Climatic ambient conditions

You can use the CPU 1515SP PC2 under the following climatic ambient conditions:

Table 12- 9 Climatic ambient conditions

Ambient conditions	Permissible range	Comments
Temperature: Horizontal mounting position:	• from 0 to 60 °C	For configuration with 32 I/O modules
	• from 0 to 55 °C	For configuration with 64 I/O modules
Vertical installation:	• 0 to 50 °C	For configuration with 32 I/O modules
Permitted temperature change	10 K/h	-
Relative humidity	from 10 to 95%	Without condensation
Barometric pressure	From 1140 to 795 hPa	Corresponds to an altitude of -1000 m to 2000 m
Concentration of pollutants	ANSI/ISA-71.04 severity level G1; G2; G3	-

12.5 Information on insulation, protection class, degree of protection and rated voltage

Insulation

The insulation is designed according to the requirements of EN 61131-2: 2007.

Note

In the case of modules with 24 V DC (SELV/PELV) supply voltage, galvanic isolations are tested with 707 V DC (type test).

Note

The ground/minus pole of the 24 V DC power supply is connected via the device with functional ground (FE).

Pollution degree / overvoltage category according to IEC 61131

- Pollution degree 2
- Overvoltage category: II

Protection class in accordance with IEC 61131-2:2007

The distributed I/O system ET 200SP fulfills protection class I and includes parts of protection class II and III. The CPU 1515SP PC2 is a part of protection class III.

The grounding of the mounting rail must meet the requirements for functional earth FE.

The installation location (e.g. enclosure, control cabinet) must have a protective conductor connection that meets the standard to maintain protection class I.

Degree of protection IP20

Degree of protection IP20 according to IEC 60529, i.e.:

- Protection against contact with standard probe
- Protection against foreign objects with diameters in excess of 12.5 mm
- No protection against water

Rated voltage for operation

The CPU 1515SP PC2 works with the rated voltage and corresponding tolerances listed in the following table.

Table 12- 10 Rated voltage for operation

Rated voltage	Tolerance range
24 V DC	19.2 to 28.8 V DC [1]

[1] Static value: Creation as functional extra-low voltage with safe electrical isolation in accordance with IEC 60364-4-41

12.6 Use of the ET 200SP in zone 2 potentially explosive atmospheres

See product information Use of subassemblies/modules in a Zone 2 Hazardous Area (http://support.automation.siemens.com/WW/view/en/19692172).

12.7 Module data

12.7.1 Technical specifications of CPU 1515SP PC2 - basic device

Technical specifications

The following table shows the technical specifications as of 08/2018. You will find a data sheet including daily updated technical specifications on the Internet (https://support.industry.siemens.com/cs/ww/en/pv/6ES7677-2DB40-0AA0/td).

Article number	6ES7677-2DB40-0AA0
General information	
Product type designation	CPU 1515SP PC2
HW functional status	FS01
Firmware version	V2.5
Engineering with	
• STEP 7 TIA Portal configurable/integrated as of version	V15 with HSP 255
Installed software	
• Visualization	No
• Control	No
Control elements	
Mode selector switch	1
Supply voltage	
Type of supply voltage	24 V DC
permissible range, lower limit (DC)	19.2 V
permissible range, upper limit (DC)	28.8 V
Reverse polarity protection	Yes
Mains buffering	
• Mains/voltage failure stored energy time	5 ms
Input current	
Current consumption (rated value)	1.8 A; Full processor load, incl. ET 200SP modules and using USB
Current consumption (in no-load operation), typ.	0.5 A
I^2t	0.426 $A^2 \cdot s$; with starting current inrush
Power	
Active power input, max.	43 W; incl. ET 200SP modules and using USB
Infeed power to the backplane bus	8.75 W
Power loss	
Power loss, typ.	16 W

Article number	6ES7677-2DB40-0AA0
Memory	
Type of memory	DDR3L
Main memory	8 GB RAM
CFast memory card	No
SIMATIC memory card required	No
Hardware configuration	
Integrated power supply	Yes
Number of DP masters	
• Via CM	1
Rack	
• Modules per rack, max.	64; CPU + 64 modules + server module (mounting width max. 1 m)
Time of day	
Clock	
• Type	Hardware clock
• Backup time	6 wk; At 40 °C ambient temperature, typically
• Deviation per day, max.	10 s; Typ.: 2 s
Interfaces	
Number of industrial Ethernet interfaces	2
Number of PROFINET interfaces	1
Number of PROFIBUS interfaces	1; Via CM DP module
Number of RS 485 interfaces	1; Via CM DP module
Number of USB interfaces	4; 2x USB 2.0, 2x USB 3.0 on front side
Video interfaces	
• Graphics interface	1x DisplayPort
1. Interface	
Interface types	
• Number of ports	2
• integrated switch	Yes
• RJ 45 (Ethernet)	Yes; Via BusAdapter BA 2x RJ45
– Transmission rate, max.	100 Mbit/s
– Industrial Ethernet status LED	Yes
2. Interface	
Interface types	
• Number of ports	1
• RJ 45 (Ethernet)	Yes; Integrated
– Transmission rate, max.	1 000 Mbit/s
– Industrial Ethernet status LED	No

Article number	6ES7677-2DB40-0AA0
Ambient conditions	
Ambient temperature during operation	
• min.	0 °C
• max.	Up to 60 °C with max. 32 ET 200SP modules and 3x 100 mA USB load; up to 55 °C with max. 64 ET 200SP modules and 2x max. 500 mA and 1x max. 100 mA USB load
• horizontal installation, min.	0 °C
• horizontal installation, max.	60 °C
• vertical installation, min.	0 °C
• vertical installation, max.	50 °C; With max. 32 ET 200SP modules and 3x 100 mA USB load
Ambient temperature during storage/transportation	
• min.	-40 °C
• max.	70 °C
Peripherals/Options	
Peripherals	
• SD card	Optionally for additional mass storage
Dimensions	
Width	160 mm
Height	117 mm
Depth	75 mm
Weights	
Weight, approx.	0.83 kg

12.7.2 Technical specifications CPU 1515SP PC2

Technical specifications

The following table shows the technical specifications as of 08/2018. You will find a data sheet including daily updated technical specifications on the Internet (https://support.industry.siemens.com/cs/ww/en/pv/6ES7677-2DB42-0GB0/td).

Article number	6ES7677-2DB42-0GB0
General information	
Product type designation	CPU 1515SP PC2
HW functional status	FS01
Firmware version	V2.5
Engineering with	
• STEP 7 TIA Portal configurable/integrated as of version	V15 with HSP 269
Installed software	
• Visualization	No
• Control	S7-1500 Software Controller CPU 1505SP
Control elements	
Mode selector switch	1
Supply voltage	
Type of supply voltage	24 V DC
permissible range, lower limit (DC)	19.2 V
permissible range, upper limit (DC)	28.8 V
Reverse polarity protection	Yes
Mains buffering	
• Mains/voltage failure stored energy time	5 ms
Input current	
Current consumption (rated value)	1.8 A; Full processor load, incl. ET 200SP modules and using USB
Current consumption (in no-load operation), typ.	0.5 A
I^2t	0.426 $A^2 \cdot s$; with starting current inrush
Power	
Active power input, max.	43 W; incl. ET 200SP modules and using USB
Infeed power to the backplane bus	8.75 W
Power loss	
Power loss, typ.	16 W
Processor	
Processor type	Intel Atom E3940, 1.6 GHz, 4 cores

Article number	6ES7677-2DB42-0GB0
Memory	
Type of memory	DDR3L
Main memory	8 GB RAM
CFast memory card	Yes; 30 GB flash memory
SIMATIC memory card required	No
Flash Disk	30 GB
Work memory	
• integrated (for program)	1 Mbyte
• integrated (for data)	5 Mbyte
• integrated (for CPU function library of CPU Runtime)	10 Mbyte
Load memory	
• integrated (on PC mass storage)	320 Mbyte
Backup	
• with UPS	Yes; all memory areas declared retentive
• with non-volatile memory	Yes
Hardware configuration	
Integrated power supply	Yes
Number of DP masters	
• Via CM	1
Rack	
• Modules per rack, max.	64; CPU 1515SP PC + 64 modules + server module
• Number of lines, max.	1
Time of day	
Clock	
• Type	Hardware clock
• Backup time	6 wk; At 40 °C ambient temperature, typically
• Deviation per day, max.	10 s; Typ.: 2 s
Interfaces	
Number of industrial Ethernet interfaces	2
Number of PROFINET interfaces	1
Number of PROFIBUS interfaces	1
Number of RS 485 interfaces	1; Via CM DP module
Number of USB interfaces	4; 2x USB 2.0, 2x USB 3.0 on front side
Number of SD card slots	1
Video interfaces	
• Graphics interface	1x DisplayPort

Article number	6ES7677-2DB42-0GB0
1. Interface	
Interface types	
• Number of ports	2
• integrated switch	Yes
• RJ 45 (Ethernet)	Yes; Via BusAdapter BA 2x RJ45
– Transmission rate, max.	100 Mbit/s
– Industrial Ethernet status LED	Yes
2. Interface	
Interface types	
• Number of ports	1
• RJ 45 (Ethernet)	Yes; Integrated
– Transmission rate, max.	1 000 Mbit/s
– Industrial Ethernet status LED	No
3. Interface	
Interface types	
• RS 485	Yes
RS 485	
• Transmission rate, max.	12 Mbit/s
Interrupts/diagnostics/status information	
Diagnostics indication LED	
• RUN/STOP LED	Yes
• ERROR LED	Yes
• MAINT LED	Yes
Ambient conditions	
Ambient temperature during operation	
• min.	0 °C
• max.	Up to 60 °C with max. 32 ET 200SP modules and 3x 100 mA USB load; up to 55 °C with max. 64 ET 200SP modules and 2x max. 500 mA and 1x max. 100 mA USB load
• horizontal installation, min.	0 °C
• horizontal installation, max.	60 °C
• vertical installation, min.	0 °C
• vertical installation, max.	50 °C; With max. 32 ET 200SP modules and 3x 100 mA USB load

Article number	6ES7677-2DB42-0GB0
Ambient temperature during storage/transportation	
• min.	-40 °C
• max.	70 °C
Operating systems	
Operating systems	Windows 10 IoT Enterprise LTSB 2016 (64-bit) MUI
Peripherals/Options	
Peripherals	
• SD card	Optionally for additional mass storage
Dimensions	
Width	160 mm
Height	117 mm
Depth	75 mm
Weights	
Weight, approx.	0.83 kg

12.7.3 Technical specifications of CPU 1515SP PC2 + HMI 128PT

Technical specifications

The following table shows the technical specifications as of 08/2018. You will find a data sheet including daily updated technical specifications on the Internet (https://support.industry.siemens.com/cs/ww/en/pv/6ES7677-2DB42-0GK0/td).

Article number	6ES7677-2DB42-0GK0
General information	
Product type designation	CPU 1515SP PC2 + HMI 128
HW functional status	FS01
Firmware version	V2.5
Engineering with	
• STEP 7 TIA Portal configurable/integrated as of version	V15 with HSP 269
Installed software	
• Visualization	WinCC Runtime Advanced V15
• Control	S7-1500 Software Controller CPU 1505SP
Control elements	
Mode selector switch	1
Supply voltage	
Type of supply voltage	24 V DC
permissible range, lower limit (DC)	19.2 V
permissible range, upper limit (DC)	28.8 V
Reverse polarity protection	Yes
Mains buffering	
• Mains/voltage failure stored energy time	5 ms
Input current	
Current consumption (rated value)	1.8 A; Full processor load, incl. ET 200SP modules and using USB
Current consumption (in no-load operation), typ.	0.5 A
I^2t	0.426 $A^2 \cdot s$; with starting current inrush
Power	
Active power input, max.	43 W; incl. ET 200SP modules and using USB
Infeed power to the backplane bus	8.75 W
Power loss	
Power loss, typ.	16 W
Processor	
Processor type	Intel Atom E3940, 1.6 GHz, 4 cores

Article number	6ES7677-2DB42-0GK0
Memory	
Type of memory	DDR3L
Main memory	8 GB RAM
CFast memory card	Yes; 30 GB flash memory
SIMATIC memory card required	No
Flash Disk	30 GB
Work memory	
• integrated (for program)	1 Mbyte
• integrated (for data)	5 Mbyte
• integrated (for CPU function library of CPU Runtime)	10 Mbyte
Load memory	
• integrated (on PC mass storage)	320 Mbyte
Backup	
• with UPS	Yes; all memory areas declared retentive
• with non-volatile memory	Yes
Hardware configuration	
Integrated power supply	Yes
Number of DP masters	
• Via CM	1
Rack	
• Modules per rack, max.	64; CPU 1515SP PC + 64 modules + server module
• Number of lines, max.	1
Time of day	
Clock	
• Type	Hardware clock
• Backup time	6 wk; At 40 °C ambient temperature, typically
• Deviation per day, max.	10 s; Typ.: 2 s
Interfaces	
Number of industrial Ethernet interfaces	2
Number of PROFINET interfaces	1
Number of PROFIBUS interfaces	1
Number of RS 485 interfaces	1; Via CM DP module
Number of USB interfaces	4; 2x USB 2.0, 2x USB 3.0 on front side
Number of SD card slots	1
Video interfaces	
• Graphics interface	1x DisplayPort

Article number	6ES7677-2DB42-0GK0
1. Interface	
Interface types	
• Number of ports	2
• integrated switch	Yes
• RJ 45 (Ethernet)	Yes; Via BusAdapter BA 2x RJ45
– Transmission rate, max.	100 Mbit/s
– Industrial Ethernet status LED	Yes
2. Interface	
Interface types	
• Number of ports	1
• RJ 45 (Ethernet)	Yes; Integrated
– Transmission rate, max.	1 000 Mbit/s
– Industrial Ethernet status LED	No
3. Interface	
Interface types	
• RS 485	Yes
RS 485	
• Transmission rate, max.	12 Mbit/s
Interrupts/diagnostics/status information	
Diagnostics indication LED	
• RUN/STOP LED	Yes
• ERROR LED	Yes
• MAINT LED	Yes
Ambient conditions	
Ambient temperature during operation	
• min.	0 °C
• max.	Up to 60 °C with max. 32 ET 200SP modules and 3x 100 mA USB load; up to 55 °C with max. 64 ET 200SP modules and 2x max. 500 mA and 1x max. 100 mA USB load
• horizontal installation, min.	0 °C
• horizontal installation, max.	60 °C
• vertical installation, min.	0 °C
• vertical installation, max.	50 °C; With max. 32 ET 200SP modules and 3x 100 mA USB load
Ambient temperature during storage/transportation	
• min.	-40 °C
• max.	70 °C

Article number	6ES7677-2DB42-0GK0
Operating systems	
Operating systems	Windows 10 IoT Enterprise LTSB 2016 (64-bit) MUI
Peripherals/Options	
Peripherals	
• SD card	Optionally for additional mass storage
Dimensions	
Width	160 mm
Height	117 mm
Depth	75 mm
Weights	
Weight, approx.	0.83 kg

12.7.4 Technical specifications of CPU 1515SP PC2 + HMI 512PT

Technical specifications

The following table shows the technical specifications as of 08/2018. You will find a data sheet including daily updated technical specifications on the Internet (https://support.industry.siemens.com/cs/ww/en/pv/6ES7677-2DB42-0GL0/td).

Article number	6ES7677-2DB42-0GL0
General information	
Product type designation	CPU 1515SP PC2 + HMI 512
HW functional status	FS01
Firmware version	V2.5
Engineering with	
• STEP 7 TIA Portal configurable/integrated as of version	V15 with HSP 269
Installed software	
• Visualization	WinCC Runtime Advanced V15
• Control	S7-1500 Software Controller CPU 1505SP
Control elements	
Mode selector switch	1
Supply voltage	
Type of supply voltage	24 V DC
permissible range, lower limit (DC)	19.2 V
permissible range, upper limit (DC)	28.8 V
Reverse polarity protection	Yes
Mains buffering	
• Mains/voltage failure stored energy time	5 ms
Input current	
Current consumption (rated value)	1.8 A; Full processor load, incl. ET 200SP modules and using USB
Current consumption (in no-load operation), typ.	0.5 A
I^2t	0.426 $A^2 \cdot s$; with starting current inrush
Power	
Active power input, max.	43 W; incl. ET 200SP modules and using USB
Infeed power to the backplane bus	8.75 W
Power loss	
Power loss, typ.	16 W
Processor	
Processor type	Intel Atom E3940, 1.6 GHz, 4 cores

Article number	6ES7677-2DB42-0GL0
Memory	
Type of memory	DDR3L
Main memory	8 GB RAM
CFast memory card	Yes; 30 GB flash memory
SIMATIC memory card required	No
Flash Disk	30 GB
Work memory	
• integrated (for program)	1 Mbyte
• integrated (for data)	5 Mbyte
• integrated (for CPU function library of CPU Runtime)	10 Mbyte
Load memory	
• integrated (on PC mass storage)	320 Mbyte
Backup	
• with UPS	Yes; all memory areas declared retentive
• with non-volatile memory	Yes
Hardware configuration	
Integrated power supply	Yes
Number of DP masters	
• Via CM	1
Rack	
• Modules per rack, max.	64; CPU 1515SP PC + 64 modules + server module
• Number of lines, max.	1
Time of day	
Clock	
• Type	Hardware clock
• Backup time	6 wk; At 40 °C ambient temperature, typically
• Deviation per day, max.	10 s; Typ.: 2 s
Interfaces	
Number of industrial Ethernet interfaces	2
Number of PROFINET interfaces	1
Number of PROFIBUS interfaces	1
Number of RS 485 interfaces	1; Via CM DP module
Number of USB interfaces	4; 2x USB 2.0, 2x USB 3.0 on front side
Number of SD card slots	1
Video interfaces	
• Graphics interface	1x DisplayPort

Article number	6ES7677-2DB42-0GL0
1. Interface	
Interface types	
• Number of ports	2
• integrated switch	Yes
• RJ 45 (Ethernet)	Yes; Via BusAdapter BA 2x RJ45
– Transmission rate, max.	100 Mbit/s
– Industrial Ethernet status LED	Yes
2. Interface	
Interface types	
• Number of ports	1
• RJ 45 (Ethernet)	Yes; Integrated
– Transmission rate, max.	1 000 Mbit/s
– Industrial Ethernet status LED	No
3. Interface	
Interface types	
• RS 485	Yes
RS 485	
• Transmission rate, max.	12 Mbit/s
Interrupts/diagnostics/status information	
Diagnostics indication LED	
• RUN/STOP LED	Yes
• ERROR LED	Yes
• MAINT LED	Yes
Ambient conditions	
Ambient temperature during operation	
• min.	0 °C
• max.	Up to 60 °C with max. 32 ET 200SP modules and 3x 100 mA USB load; up to 55 °C with max. 64 ET 200SP modules and 2x max. 500 mA and 1x max. 100 mA USB load
• horizontal installation, min.	0 °C
• horizontal installation, max.	60 °C
• vertical installation, min.	0 °C
• vertical installation, max.	50 °C; With max. 32 ET 200SP modules and 3x 100 mA USB load
Ambient temperature during storage/transportation	
• min.	-40 °C
• max.	70 °C

Article number	6ES7677-2DB42-0GL0
Operating systems	
Operating systems	Windows 10 IoT Enterprise LTSB 2016 (64-bit) MUI
Peripherals/Options	
Peripherals	
• SD card	Optionally for additional mass storage
Dimensions	
Width	160 mm
Height	117 mm
Depth	75 mm
Weights	
Weight, approx.	0.83 kg

12.7.5 Technical specifications of CPU 1515SP PC2 + HMI 2048PT

Technical specifications

The following table shows the technical specifications as of 08/2018. You will find a data sheet including daily updated technical specifications on the Internet (https://support.industry.siemens.com/cs/ww/en/pv/6ES7677-2DB42-0GM0/td).

Article number	6ES7677-2DB42-0GM0
General information	
Product type designation	CPU 1515SP PC2 + HMI 2048
HW functional status	FS01
Firmware version	V2.5
Engineering with	
• STEP 7 TIA Portal configurable/integrated as of version	V15 with HSP 269
Installed software	
• Visualization	WinCC Runtime Advanced V15
• Control	S7-1500 Software Controller CPU 1505SP
Control elements	
Mode selector switch	1
Supply voltage	
Type of supply voltage	24 V DC
permissible range, lower limit (DC)	19.2 V
permissible range, upper limit (DC)	28.8 V
Reverse polarity protection	Yes
Mains buffering	
• Mains/voltage failure stored energy time	5 ms
Input current	
Current consumption (rated value)	1.8 A; Full processor load, incl. ET 200SP modules and using USB
Current consumption (in no-load operation), typ.	0.5 A
I^2t	0.426 $A^2 \cdot s$; with starting current inrush
Power	
Active power input, max.	43 W; incl. ET 200SP modules and using USB
Infeed power to the backplane bus	8.75 W
Power loss	
Power loss, typ.	16 W
Processor	
Processor type	Intel Atom E3940, 1.6 GHz, 4 cores

Article number	6ES7677-2DB42-0GM0
Memory	
Type of memory	DDR3L
Main memory	8 GB RAM
CFast memory card	Yes; 30 GB flash memory
SIMATIC memory card required	No
Flash Disk	30 GB
Work memory	
• integrated (for program)	1 Mbyte
• integrated (for data)	5 Mbyte
• integrated (for CPU function library of CPU Runtime)	10 Mbyte
Load memory	
• integrated (on PC mass storage)	320 Mbyte
Backup	
• with UPS	Yes; all memory areas declared retentive
• with non-volatile memory	Yes
Hardware configuration	
Integrated power supply	Yes
Number of DP masters	
• Via CM	1
Rack	
• Modules per rack, max.	64; CPU 1515SP PC + 64 modules + server module
• Number of lines, max.	1
Time of day	
Clock	
• Type	Hardware clock
• Backup time	6 wk; At 40 °C ambient temperature, typically
• Deviation per day, max.	10 s; Typ.: 2 s
Interfaces	
Number of industrial Ethernet interfaces	2
Number of PROFINET interfaces	1
Number of PROFIBUS interfaces	1
Number of RS 485 interfaces	1; Via CM DP module
Number of USB interfaces	4; 2x USB 2.0, 2x USB 3.0 on front side
Number of SD card slots	1
Video interfaces	
• Graphics interface	1x DisplayPort

Article number	6ES7677-2DB42-0GM0
1. Interface	
Interface types	
• Number of ports	2
• integrated switch	Yes
• RJ 45 (Ethernet)	Yes; Via BusAdapter BA 2x RJ45
– Transmission rate, max.	100 Mbit/s
– Industrial Ethernet status LED	Yes
2. Interface	
Interface types	
• Number of ports	1
• RJ 45 (Ethernet)	Yes; Integrated
– Transmission rate, max.	1 000 Mbit/s
– Industrial Ethernet status LED	No
3. Interface	
Interface types	
• RS 485	Yes
RS 485	
• Transmission rate, max.	12 Mbit/s
Interrupts/diagnostics/status information	
Diagnostics indication LED	
• RUN/STOP LED	Yes
• ERROR LED	Yes
• MAINT LED	Yes
Ambient conditions	
Ambient temperature during operation	
• min.	0 °C
• max.	Up to 60 °C with max. 32 ET 200SP modules and 3x 100 mA USB load; up to 55 °C with max. 64 ET 200SP modules and 2x max. 500 mA and 1x max. 100 mA USB load
• horizontal installation, min.	0 °C
• horizontal installation, max.	60 °C
• vertical installation, min.	0 °C
• vertical installation, max.	50 °C; With max. 32 ET 200SP modules and 3x 100 mA USB load
Ambient temperature during storage/transportation	
• min.	-40 °C
• max.	70 °C

Article number	6ES7677-2DB42-0GM0
Operating systems	
Operating systems	Windows 10 IoT Enterprise LTSB 2016 (64-bit) MUI
Peripherals/Options	
Peripherals	
• SD card	Optionally for additional mass storage
Dimensions	
Width	160 mm
Height	117 mm
Depth	75 mm
Weights	
Weight, approx.	0.83 kg

12.7.6 Technical specifications of CPU 1515SP PC2 F

Technical specifications

The following table shows the technical specifications as of 08/2018. You will find a data sheet including daily updated technical specifications on the Internet (https://support.industry.siemens.com/cs/ww/en/pv/6ES7677-2SB42-0GB0/td).

Article number	6ES7677-2SB42-0GB0
General information	
Product type designation	CPU 1515SP PC2 F
HW functional status	FS01
Firmware version	V2.5
Engineering with	
• STEP 7 TIA Portal configurable/integrated as of version	V15 with HSP 269
Installed software	
• Visualization	No
• Control	S7-1500 Software Controller CPU 1505SP F
Control elements	
Mode selector switch	1
Supply voltage	
Type of supply voltage	24 V DC
permissible range, lower limit (DC)	19.2 V
permissible range, upper limit (DC)	28.8 V
Reverse polarity protection	Yes
Mains buffering	
• Mains/voltage failure stored energy time	5 ms
Input current	
Current consumption (rated value)	1.8 A; Full processor load, incl. ET 200SP modules and using USB
Current consumption (in no-load operation), typ.	0.5 A
I^2t	0.426 $A^2 \cdot s$; with starting current inrush
Power	
Active power input, max.	43 W; incl. ET 200SP modules and using USB
Infeed power to the backplane bus	8.75 W
Power loss	
Power loss, typ.	16 W
Processor	
Processor type	Intel Atom E3940, 1.6 GHz, 4 cores

Article number	6ES7677-2SB42-0GB0
Memory	
Type of memory	DDR3L
Main memory	8 GB RAM
CFast memory card	Yes; 30 GB flash memory
SIMATIC memory card required	No
Flash Disk	30 GB
Work memory	
• integrated (for program)	1.5 Mbyte
• integrated (for data)	5 Mbyte
• integrated (for CPU function library of CPU Runtime)	10 Mbyte
Load memory	
• integrated (on PC mass storage)	320 Mbyte
Backup	
• with UPS	Yes; all memory areas declared retentive
• with non-volatile memory	Yes
Hardware configuration	
Integrated power supply	Yes
Number of DP masters	
• Via CM	1
Rack	
• Modules per rack, max.	64; CPU 1515SP PC + 64 modules + server module
• Number of lines, max.	1
Time of day	
Clock	
• Type	Hardware clock
• Backup time	6 wk; At 40 °C ambient temperature, typically
• Deviation per day, max.	10 s; Typ.: 2 s
Interfaces	
Number of industrial Ethernet interfaces	2
Number of PROFINET interfaces	1
Number of PROFIBUS interfaces	1
Number of RS 485 interfaces	1; Via CM DP module
Number of USB interfaces	4; 2x USB 2.0, 2x USB 3.0 on front side
Number of SD card slots	1
Video interfaces	
• Graphics interface	1x DisplayPort

Article number	6ES7677-2SB42-0GB0
1. Interface	
Interface types	
• Number of ports	2
• integrated switch	Yes
• RJ 45 (Ethernet)	Yes; Via BusAdapter BA 2x RJ45
– Transmission rate, max.	100 Mbit/s
– Industrial Ethernet status LED	Yes
2. Interface	
Interface types	
• Number of ports	1
• RJ 45 (Ethernet)	Yes; Integrated
– Transmission rate, max.	1 000 Mbit/s
– Industrial Ethernet status LED	No
3. Interface	
Interface types	
• RS 485	Yes
RS 485	
• Transmission rate, max.	12 Mbit/s
Interrupts/diagnostics/status information	
Diagnostics indication LED	
• RUN/STOP LED	Yes
• ERROR LED	Yes
• MAINT LED	Yes
Ambient conditions	
Ambient temperature during operation	
• min.	0 °C
• max.	Up to 60 °C with max. 32 ET 200SP modules and 3x 100 mA USB load; up to 55 °C with max. 64 ET 200SP modules and 2x max. 500 mA and 1x max. 100 mA USB load
• horizontal installation, min.	0 °C
• horizontal installation, max.	60 °C
• vertical installation, min.	0 °C
• vertical installation, max.	50 °C; With max. 32 ET 200SP modules and 3x 100 mA USB load
Ambient temperature during storage/transportation	
• min.	-40 °C
• max.	70 °C

Article number	6ES7677-2SB42-0GB0
Operating systems	
Operating systems	Windows 10 IoT Enterprise LTSB 2016 (64-bit) MUI
Peripherals/Options	
Peripherals	
• SD card	Optionally for additional mass storage
Dimensions	
Width	160 mm
Height	117 mm
Depth	75 mm
Weights	
Weight, approx.	0.83 kg

12.7.7 Technical specifications of CPU 1515SP PC2 F + HMI 128PT

Technical specifications

The following table shows the technical specifications as of 08/2018. You will find a data sheet including daily updated technical specifications on the Internet (https://support.industry.siemens.com/cs/ww/en/pv/6ES7677-2SB42-0GK0/td).

Article number	6ES7677-2SB42-0GK0
General information	
Product type designation	CPU 1515SP PC2 F + HMI 128
HW functional status	FS01
Firmware version	V2.5
Engineering with	
• STEP 7 TIA Portal configurable/integrated as of version	V15 with HSP 269
Installed software	
• Visualization	WinCC Runtime Advanced V15
• Control	S7-1500 Software Controller CPU 1505SP F
Control elements	
Mode selector switch	1
Supply voltage	
Type of supply voltage	24 V DC
permissible range, lower limit (DC)	19.2 V
permissible range, upper limit (DC)	28.8 V
Reverse polarity protection	Yes
Mains buffering	
• Mains/voltage failure stored energy time	5 ms
Input current	
Current consumption (rated value)	1.8 A; Full processor load, incl. ET 200SP modules and using USB
Current consumption (in no-load operation), typ.	0.5 A
I^2t	0.426 $A^2 \cdot s$; with starting current inrush
Power	
Active power input, max.	43 W; incl. ET 200SP modules and using USB
Infeed power to the backplane bus	8.75 W
Power loss	
Power loss, typ.	16 W
Processor	
Processor type	Intel Atom E3940, 1.6 GHz, 4 cores

Article number	6ES7677-2SB42-0GK0
Memory	
Type of memory	DDR3L
Main memory	8 GB RAM
CFast memory card	Yes; 30 GB flash memory
SIMATIC memory card required	No
Flash Disk	30 GB
Work memory	
• integrated (for program)	1.5 Mbyte
• integrated (for data)	5 Mbyte
• integrated (for CPU function library of CPU Runtime)	10 Mbyte
Load memory	
• integrated (on PC mass storage)	320 Mbyte
Backup	
• with UPS	Yes; all memory areas declared retentive
• with non-volatile memory	Yes
Hardware configuration	
Integrated power supply	Yes
Number of DP masters	
• Via CM	1
Rack	
• Modules per rack, max.	64; CPU 1515SP PC + 64 modules + server module
• Number of lines, max.	1
Time of day	
Clock	
• Type	Hardware clock
• Backup time	6 wk; At 40 °C ambient temperature, typically
• Deviation per day, max.	10 s; Typ.: 2 s
Interfaces	
Number of industrial Ethernet interfaces	2
Number of PROFINET interfaces	1
Number of PROFIBUS interfaces	1
Number of RS 485 interfaces	1; Via CM DP module
Number of USB interfaces	4; 2x USB 2.0, 2x USB 3.0 on front side
Number of SD card slots	1
Video interfaces	
• Graphics interface	1x DisplayPort

Article number	6ES7677-2SB42-0GK0
1. Interface	
Interface types	
• Number of ports	2
• integrated switch	Yes
• RJ 45 (Ethernet)	Yes; Via BusAdapter BA 2x RJ45
– Transmission rate, max.	100 Mbit/s
– Industrial Ethernet status LED	Yes
2. Interface	
Interface types	
• Number of ports	1
• RJ 45 (Ethernet)	Yes; Integrated
– Transmission rate, max.	1 000 Mbit/s
– Industrial Ethernet status LED	No
3. Interface	
Interface types	
• RS 485	Yes
RS 485	
• Transmission rate, max.	12 Mbit/s
Interrupts/diagnostics/status information	
Diagnostics indication LED	
• RUN/STOP LED	Yes
• ERROR LED	Yes
• MAINT LED	Yes
Ambient conditions	
Ambient temperature during operation	
• min.	0 °C
• max.	Up to 60 °C with max. 32 ET 200SP modules and 3x 100 mA USB load; up to 55 °C with max. 64 ET 200SP modules and 2x max. 500 mA and 1x max. 100 mA USB load
• horizontal installation, min.	0 °C
• horizontal installation, max.	60 °C
• vertical installation, min.	0 °C
• vertical installation, max.	50 °C; With max. 32 ET 200SP modules and 3x 100 mA USB load
Ambient temperature during storage/transportation	
• min.	-40 °C
• max.	70 °C

Article number	6ES7677-2SB42-0GK0
Operating systems	
Operating systems	Windows 10 IoT Enterprise LTSB 2016 (64-bit) MUI
Peripherals/Options	
Peripherals	
• SD card	Optionally for additional mass storage
Dimensions	
Width	160 mm
Height	117 mm
Depth	75 mm
Weights	
Weight, approx.	0.83 kg

12.7.8 Technical specifications of CPU 1515SP PC2 F + HMI 512PT

Technical specifications

The following table shows the technical specifications as of 08/2018. You will find a data sheet including daily updated technical specifications on the Internet (https://support.industry.siemens.com/cs/ww/en/pv/6ES7677-2SB42-0GL0/td).

Article number	6ES7677-2SB42-0GL0
General information	
Product type designation	CPU 1515SP PC2 F + HMI 512
HW functional status	FS01
Firmware version	V2.5
Engineering with	
• STEP 7 TIA Portal configurable/integrated as of version	V15 with HSP 269
Installed software	
• Visualization	WinCC Runtime Advanced V15
• Control	S7-1500 Software Controller CPU 1505SP F
Control elements	
Mode selector switch	1
Supply voltage	
Type of supply voltage	24 V DC
permissible range, lower limit (DC)	19.2 V
permissible range, upper limit (DC)	28.8 V
Reverse polarity protection	Yes
Mains buffering	
• Mains/voltage failure stored energy time	5 ms
Input current	
Current consumption (rated value)	1.8 A; Full processor load, incl. ET 200SP modules and using USB
Current consumption (in no-load operation), typ.	0.5 A
I^2t	0.426 $A^2 \cdot s$; with starting current inrush
Power	
Active power input, max.	43 W; incl. ET 200SP modules and using USB
Infeed power to the backplane bus	8.75 W
Power loss	
Power loss, typ.	16 W
Processor	
Processor type	Intel Atom E3940, 1.6 GHz, 4 cores

Article number	6ES7677-2SB42-0GL0
Memory	
Type of memory	DDR3L
Main memory	8 GB RAM
CFast memory card	Yes; 30 GB flash memory
SIMATIC memory card required	No
Flash Disk	30 GB
Work memory	
• integrated (for program)	1.5 Mbyte
• integrated (for data)	5 Mbyte
• integrated (for CPU function library of CPU Runtime)	10 Mbyte
Load memory	
• integrated (on PC mass storage)	320 Mbyte
Backup	
• with UPS	Yes; all memory areas declared retentive
• with non-volatile memory	Yes
Hardware configuration	
Integrated power supply	Yes
Number of DP masters	
• Via CM	1
Rack	
• Modules per rack, max.	64; CPU 1515SP PC + 64 modules + server module
• Number of lines, max.	1
Time of day	
Clock	
• Type	Hardware clock
• Backup time	6 wk; At 40 °C ambient temperature, typically
• Deviation per day, max.	10 s; Typ.: 2 s
Interfaces	
Number of industrial Ethernet interfaces	2
Number of PROFINET interfaces	1
Number of PROFIBUS interfaces	1
Number of RS 485 interfaces	1; Via CM DP module
Number of USB interfaces	4; 2x USB 2.0, 2x USB 3.0 on front side
Number of SD card slots	1
Video interfaces	
• Graphics interface	1x DisplayPort

Article number	6ES7677-2SB42-0GL0
1. Interface	
Interface types	
• Number of ports	2
• integrated switch	Yes
• RJ 45 (Ethernet)	Yes; Via BusAdapter BA 2x RJ45
– Transmission rate, max.	100 Mbit/s
– Industrial Ethernet status LED	Yes
2. Interface	
Interface types	
• Number of ports	1
• RJ 45 (Ethernet)	Yes; Integrated
– Transmission rate, max.	1 000 Mbit/s
– Industrial Ethernet status LED	No
3. Interface	
Interface types	
• RS 485	Yes
RS 485	
• Transmission rate, max.	12 Mbit/s
Interrupts/diagnostics/status information	
Diagnostics indication LED	
• RUN/STOP LED	Yes
• ERROR LED	Yes
• MAINT LED	Yes
Ambient conditions	
Ambient temperature during operation	
• min.	0 °C
• max.	Up to 60 °C with max. 32 ET 200SP modules and 3x 100 mA USB load; up to 55 °C with max. 64 ET 200SP modules and 2x max. 500 mA and 1x max. 100 mA USB load
• horizontal installation, min.	0 °C
• horizontal installation, max.	60 °C
• vertical installation, min.	0 °C
• vertical installation, max.	50 °C; With max. 32 ET 200SP modules and 3x 100 mA USB load
Ambient temperature during storage/transportation	
• min.	-40 °C
• max.	70 °C

Article number	6ES7677-2SB42-0GL0
Operating systems	
Operating systems	Windows 10 IoT Enterprise LTSB 2016 (64-bit) MUI
Peripherals/Options	
Peripherals	
• SD card	Optionally for additional mass storage
Dimensions	
Width	160 mm
Height	117 mm
Depth	75 mm
Weights	
Weight, approx.	0.83 kg

12.7.9 Technical specifications of CPU 1515SP PC2 F + HMI 2018PT

Technical specifications

The following table shows the technical specifications as of 08/2018. You will find a data sheet including daily updated technical specifications on the Internet (https://support.industry.siemens.com/cs/ww/en/pv/6ES7677-2SB42-0GM0/td).

Article number	6ES7677-2SB42-0GM0
General information	
Product type designation	CPU 1515SP PC2 F + HMI 2048
HW functional status	FS01
Firmware version	V2.5
Engineering with	
• STEP 7 TIA Portal configurable/integrated as of version	V15 with HSP 269
Installed software	
• Visualization	WinCC Runtime Advanced V15
• Control	S7-1500 Software Controller CPU 1505SP F
Control elements	
Mode selector switch	1
Supply voltage	
Type of supply voltage	24 V DC
permissible range, lower limit (DC)	19.2 V
permissible range, upper limit (DC)	28.8 V
Reverse polarity protection	Yes
Mains buffering	
• Mains/voltage failure stored energy time	5 ms
Input current	
Current consumption (rated value)	1.8 A; Full processor load, incl. ET 200SP modules and using USB
Current consumption (in no-load operation), typ.	0.5 A
I^2t	0.426 $A^2 \cdot s$; with starting current inrush
Power	
Active power input, max.	43 W; incl. ET 200SP modules and using USB
Infeed power to the backplane bus	8.75 W
Power loss	
Power loss, typ.	16 W
Processor	
Processor type	Intel Atom E3940, 1.6 GHz, 4 cores

Article number	6ES7677-2SB42-0GM0
Memory	
Type of memory	DDR3L
Main memory	8 GB RAM
CFast memory card	Yes; 30 GB flash memory
SIMATIC memory card required	No
Flash Disk	30 GB
Work memory	
• integrated (for program)	1.5 Mbyte
• integrated (for data)	5 Mbyte
• integrated (for CPU function library of CPU Runtime)	10 Mbyte
Load memory	
• integrated (on PC mass storage)	320 Mbyte
Backup	
• with UPS	Yes; all memory areas declared retentive
• with non-volatile memory	Yes
Hardware configuration	
Integrated power supply	Yes
Number of DP masters	
• Via CM	1
Rack	
• Modules per rack, max.	64; CPU 1515SP PC + 64 modules + server module
• Number of lines, max.	1
Time of day	
Clock	
• Type	Hardware clock
• Backup time	6 wk; At 40 °C ambient temperature, typically
• Deviation per day, max.	10 s; Typ.: 2 s
Interfaces	
Number of industrial Ethernet interfaces	2
Number of PROFINET interfaces	1
Number of PROFIBUS interfaces	1
Number of RS 485 interfaces	1; Via CM DP module
Number of USB interfaces	4; 2x USB 2.0, 2x USB 3.0 on front side
Number of SD card slots	1
Video interfaces	
• Graphics interface	1x DisplayPort

Article number	6ES7677-2SB42-0GM0
1. Interface	
Interface types	
• Number of ports	2
• integrated switch	Yes
• RJ 45 (Ethernet)	Yes; Via BusAdapter BA 2x RJ45
– Transmission rate, max.	100 Mbit/s
– Industrial Ethernet status LED	Yes
2. Interface	
Interface types	
• Number of ports	1
• RJ 45 (Ethernet)	Yes; Integrated
– Transmission rate, max.	1 000 Mbit/s
– Industrial Ethernet status LED	No
3. Interface	
Interface types	
• RS 485	Yes
RS 485	
• Transmission rate, max.	12 Mbit/s
Interrupts/diagnostics/status information	
Diagnostics indication LED	
• RUN/STOP LED	Yes
• ERROR LED	Yes
• MAINT LED	Yes
Ambient conditions	
Ambient temperature during operation	
• min.	0 °C
• max.	Up to 60 °C with max. 32 ET 200SP modules and 3x 100 mA USB load; up to 55 °C with max. 64 ET 200SP modules and 2x max. 500 mA and 1x max. 100 mA USB load
• horizontal installation, min.	0 °C
• horizontal installation, max.	60 °C
• vertical installation, min.	0 °C
• vertical installation, max.	50 °C; With max. 32 ET 200SP modules and 3x 100 mA USB load
Ambient temperature during storage/transportation	
• min.	-40 °C
• max.	70 °C

Article number	6ES7677-2SB42-0GM0
Operating systems	
Operating systems	Windows 10 IoT Enterprise LTSB 2016 (64-bit) MUI
Peripherals/Options	
Peripherals	
• SD card	Optionally for additional mass storage
Dimensions	
Width	160 mm
Height	117 mm
Depth	75 mm
Weights	
Weight, approx.	0.83 kg

12.7.10 Technical specifications of CPU 1515SP PC2 T

Technical specifications

The following table shows the technical specifications as of 08/2018. You will find a data sheet including daily updated technical specifications on the Internet (https://support.industry.siemens.com/cs/ww/en/pv/6ES7677-2VB42-0GB0/td).

Article number	6ES7677-2VB42-0GB0
General information	
Product type designation	CPU 1515SP PC2 T
HW functional status	FS01
Firmware version	V2.5
Engineering with	
• STEP 7 TIA Portal configurable/integrated as of version	V15 with HSP 269
Installed software	
• Visualization	No
• Control	S7-1500 Software Controller CPU 1505SP T
Control elements	
Mode selector switch	1
Supply voltage	
Type of supply voltage	24 V DC
permissible range, lower limit (DC)	19.2 V
permissible range, upper limit (DC)	28.8 V
Reverse polarity protection	Yes
Mains buffering	
• Mains/voltage failure stored energy time	5 ms
Input current	
Current consumption (rated value)	1.8 A; Full processor load, incl. ET 200SP modules and using USB
Current consumption (in no-load operation), typ.	0.5 A
I^2t	0.426 $A^2 \cdot s$; with starting current inrush
Power	
Active power input, max.	43 W; incl. ET 200SP modules and using USB
Infeed power to the backplane bus	8.75 W
Power loss	
Power loss, typ.	16 W
Processor	
Processor type	Intel Atom E3940, 1.6 GHz, 4 cores

Article number	6ES7677-2VB42-0GB0
Memory	
Type of memory	DDR3L
Main memory	8 GB RAM
CFast memory card	Yes; 30 GB flash memory
SIMATIC memory card required	No
Flash Disk	30 GB
Work memory	
• integrated (for program)	1.5 Mbyte
• integrated (for data)	5 Mbyte
• integrated (for CPU function library of CPU Runtime)	10 Mbyte
Load memory	
• integrated (on PC mass storage)	320 Mbyte
Backup	
• with UPS	Yes; all memory areas declared retentive
• with non-volatile memory	Yes
Hardware configuration	
Integrated power supply	Yes
Number of DP masters	
• Via CM	1
Rack	
• Modules per rack, max.	64; CPU 1515SP PC + 64 modules + server module
• Number of lines, max.	1
Time of day	
Clock	
• Type	Hardware clock
• Backup time	6 wk; At 40 °C ambient temperature, typically
• Deviation per day, max.	10 s; Typ.: 2 s
Interfaces	
Number of industrial Ethernet interfaces	2
Number of PROFINET interfaces	1
Number of PROFIBUS interfaces	1
Number of RS 485 interfaces	1; Via CM DP module
Number of USB interfaces	4; 2x USB 2.0, 2x USB 3.0 on front side
Number of SD card slots	1
Video interfaces	
• Graphics interface	1x DisplayPort

Article number	6ES7677-2VB42-0GB0
1. Interface	
Interface types	
• Number of ports	2
• integrated switch	Yes
• RJ 45 (Ethernet)	Yes; Via BusAdapter BA 2x RJ45
– Transmission rate, max.	100 Mbit/s
– Industrial Ethernet status LED	Yes
2. Interface	
Interface types	
• Number of ports	1
• RJ 45 (Ethernet)	Yes; Integrated
– Transmission rate, max.	1 000 Mbit/s
– Industrial Ethernet status LED	No
3. Interface	
Interface types	
• RS 485	Yes
RS 485	
• Transmission rate, max.	12 Mbit/s
Interrupts/diagnostics/status information	
Diagnostics indication LED	
• RUN/STOP LED	Yes
• ERROR LED	Yes
• MAINT LED	Yes
Ambient conditions	
Ambient temperature during operation	
• min.	0 °C
• max.	Up to 60 °C with max. 32 ET 200SP modules and 3x 100 mA USB load; up to 55 °C with max. 64 ET 200SP modules and 2x max. 500 mA and 1x max. 100 mA USB load
• horizontal installation, min.	0 °C
• horizontal installation, max.	60 °C
• vertical installation, min.	0 °C
• vertical installation, max.	50 °C; With max. 32 ET 200SP modules and 3x 100 mA USB load
Ambient temperature during storage/transportation	
• min.	-40 °C
• max.	70 °C

Article number	6ES7677-2VB42-0GB0
Operating systems	
Operating systems	Windows 10 IoT Enterprise LTSB 2016 (64-bit) MUI
Peripherals/Options	
Peripherals	
• SD card	Optionally for additional mass storage
Dimensions	
Width	160 mm
Height	117 mm
Depth	75 mm
Weights	
Weight, approx.	0.83 kg

12.7.11 Technical specifications of CPU 1515SP PC2 TF

Technical specifications

The following table shows the technical specifications as of 08/2018. You will find a data sheet including daily updated technical specifications on the Internet (https://support.industry.siemens.com/cs/ww/en/pv/6ES7677-2WB42-0GB0/td).

Article number	6ES7677-2WB42-0GB0
General information	
Product type designation	CPU 1515SP PC2 TF
HW functional status	FS01
Firmware version	V2.5
Engineering with	
• STEP 7 TIA Portal configurable/integrated as of version	V15 with HSP 269
Installed software	
• Visualization	No
• Control	S7-1500 Software Controller CPU 1505SP TF
Control elements	
Mode selector switch	1
Supply voltage	
Type of supply voltage	24 V DC
permissible range, lower limit (DC)	19.2 V
permissible range, upper limit (DC)	28.8 V
Reverse polarity protection	Yes
Mains buffering	
• Mains/voltage failure stored energy time	5 ms
Input current	
Current consumption (rated value)	1.8 A; Full processor load, incl. ET 200SP modules and using USB
Current consumption (in no-load operation), typ.	0.5 A
I^2t	0.426 $A^2 \cdot s$; with starting current inrush
Power	
Active power input, max.	43 W; incl. ET 200SP modules and using USB
Infeed power to the backplane bus	8.75 W
Power loss	
Power loss, typ.	16 W
Processor	
Processor type	Intel Atom E3940, 1.6 GHz, 4 cores

Article number	6ES7677-2WB42-0GB0
Memory	
Type of memory	DDR3L
Main memory	8 GB RAM
CFast memory card	Yes; 30 GB flash memory
SIMATIC memory card required	No
Flash Disk	30 GB
Work memory	
• integrated (for program)	1.5 Mbyte
• integrated (for data)	5 Mbyte
• integrated (for CPU function library of CPU Runtime)	10 Mbyte
Load memory	
• integrated (on PC mass storage)	320 Mbyte
Backup	
• with UPS	Yes; all memory areas declared retentive
• with non-volatile memory	Yes
Hardware configuration	
Integrated power supply	Yes
Number of DP masters	
• Via CM	1
Rack	
• Modules per rack, max.	64; CPU 1515SP PC + 64 modules + server module
• Number of lines, max.	1
Time of day	
Clock	
• Type	Hardware clock
• Backup time	6 wk; At 40 °C ambient temperature, typically
• Deviation per day, max.	10 s; Typ.: 2 s
Interfaces	
Number of industrial Ethernet interfaces	2
Number of PROFINET interfaces	1
Number of PROFIBUS interfaces	1
Number of RS 485 interfaces	1; Via CM DP module
Number of USB interfaces	4; 2x USB 2.0, 2x USB 3.0 on front side
Number of SD card slots	1
Video interfaces	
• Graphics interface	1x DisplayPort

Article number	6ES7677-2WB42-0GB0
1. Interface	
Interface types	
• Number of ports	2
• integrated switch	Yes
• RJ 45 (Ethernet)	Yes; Via BusAdapter BA 2x RJ45
– Transmission rate, max.	100 Mbit/s
– Industrial Ethernet status LED	Yes
2. Interface	
Interface types	
• Number of ports	1
• RJ 45 (Ethernet)	Yes; Integrated
– Transmission rate, max.	1 000 Mbit/s
– Industrial Ethernet status LED	No
3. Interface	
Interface types	
• RS 485	Yes
RS 485	
• Transmission rate, max.	12 Mbit/s
Interrupts/diagnostics/status information	
Diagnostics indication LED	
• RUN/STOP LED	Yes
• ERROR LED	Yes
• MAINT LED	Yes
Ambient conditions	
Ambient temperature during operation	
• min.	0 °C
• max.	Up to 60 °C with max. 32 ET 200SP modules and 3x 100 mA USB load; up to 55 °C with max. 64 ET 200SP modules and 2x max. 500 mA and 1x max. 100 mA USB load
• horizontal installation, min.	0 °C
• horizontal installation, max.	60 °C
• vertical installation, min.	0 °C
• vertical installation, max.	50 °C; With max. 32 ET 200SP modules and 3x 100 mA USB load

Article number	6ES7677-2WB42-0GB0
Ambient temperature during storage/transportation	
• min.	-40 °C
• max.	70 °C
Operating systems	
Operating systems	Windows 10 IoT Enterprise LTSB 2016 (64-bit) MUI
Peripherals/Options	
Peripherals	
• SD card	Optionally for additional mass storage
Dimensions	
Width	160 mm
Height	117 mm
Depth	75 mm
Weights	
Weight, approx.	0.83 kg

12.7.12 S7-1500 Software Controller CPU 1505SP (F/T/TF)

The CPU 1505SP (F/T/TF) is a PC-based controller of the SIMATIC S7-1500 Software Controller family. You can find additional information about the CPU 1505SP (F/T/TF) in the relevant manual (https://support.industry.siemens.com/cs/ww/en/view/109740725). For the CPU 1505SP (F/T/TF), please also note the information in the F product information (https://support.industry.siemens.com/cs/ww/en/view/109478599).

Technical specifications

You can find technical specifications of CPU 1505SP with the article number 6ES7672-5DC11-0YA0 on the Internet under the following link (https://support.industry.siemens.com/cs/ww/en/pv/6ES7672-5DC11-0YA0/td).

You can find technical specifications of CPU 1505SP F with the article number 6ES7672-5SC11-0YA0 on the Internet under the following link (https://support.industry.siemens.com/cs/ww/en/pv/6ES7672-5SC11-0YA0/td).

You can find technical specifications of CPU 1505SP T with the article number 6ES7672-5VC11-0YA0 on the Internet under the following link (https://support.industry.siemens.com/cs/ww/en/pv/6ES7672-5VC11-0YA0/td).

You can find all technical specifications of CPU 1505SP TF with the article number 6ES7672-5W11-0YA0 on the Internet under the following link (https://support.industry.siemens.com/cs/ww/en/pv/6ES7672-5WC11-0YA0/td).

Dimension drawings

13

13.1 CPU 1515SP PC2

This section contains a dimension drawing of the module mounted on a mounting rail. Always observe the specified dimensions for installation in cabinets.

Dimension drawings of the CPU 1515SP PC2

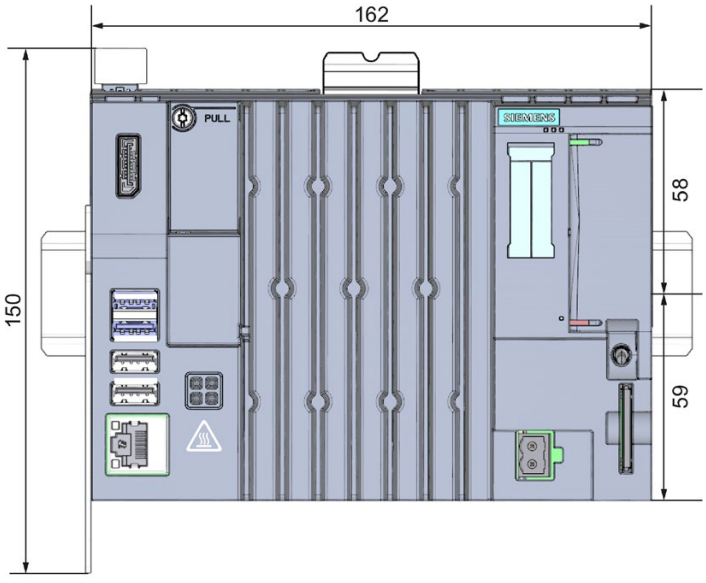

Figure 13-1 Dimension drawing CPU 1515SP PC2, front view

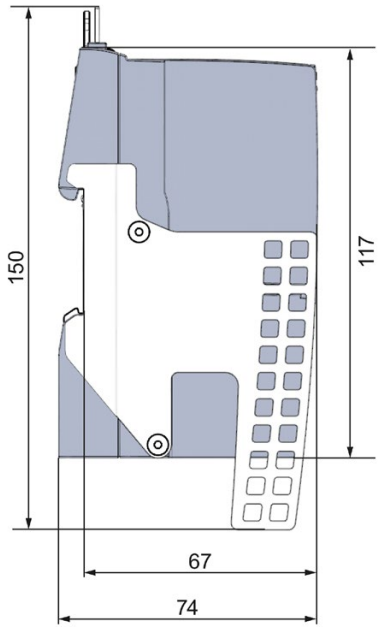

Figure 13-2 Dimension drawing CPU 1515SP PC2, side view

Spare parts/accessories 14

14.1 Accessories/spare parts

Accessories for CPU 1515SP PC2

Table 14- 1 Accessories for CPU 1515SP PC2

Description	Article number
BusAdapter/media converter; 1 unit	
• BA 2×FC (PROFINET BusAdapter with FastConnect Ethernet connection)	6ES7193-6AF00-0AA0
• BA 2xLC (BusAdapter 2x LC glass fiber-optic connectors, for PROFINET)	6ES7193-6AG00-0AA0
• BA LC/RJ45 (media converter glass fiber-optic/CU 1x LC FO connector 1x RJ45 connector for PROFINET)	6ES7193-6AG20-0AA0
• BA LC/FC (media converter glass fiber-optic/CU 1x LC FO connector and 1x FastConnect (FC) connector for PROFINET)	6ES7193-6AG40-0AA0
• BA 2xSCRJ (BusAdapter 2 SCRJ FO connectors, for PROFINET)	6ES7193-6AP00-0AA0
• BA SCRJ/RJ45 (media converter fiber-optic CU 1x SCRJ FO connector and 1x RJ45 connector for PROFINET)	6ES7193-6AP20-0AA0
• BA SCRJ/FC (media converter fiber-optic CU 1x SCRJ FO connector and 1x FastConnect (FC) connector for PROFINET)	6ES7193-6AP40-0AA0
• BA 2×RJ45 (PROFINET BusAdapter with standard Ethernet socket)	6ES7193-6AR00-0AA0
• BA-Send 1xFC (1x FastConnect connector for ET-Connection)	6ES7193-6AS00-0AA0
Server module; 1 unit	6ES7193-6PA00-0AA0
Strain relief for CPU 1515SP PC2	A5E32291462
SIMATIC IPC Service USB flash drive 8 GB (SLC), pre-installed BIOS-MANAGER V3.3, Image/Partition Creator V3.3 and installation CD	6AV7672-8JD01-0AA0
SIMATIC IPC Service USB flash drive 16 GB, USB3.0, pre-installed BIOS-MANAGER V3.3, Image/Partition Creator V3.4 and installation CD	6AV7672-8JD02-0AA0
SIMATIC IPC DiagMonitor software	6ES7648-6CA05-0YX0
SIMATIC PC, DisplayPort according to DVI-I for onboard graphics	6ES7648-3AF00-0XA0
Reference identification label, sheet with 16 labels, 10 units	6ES7193-6LF30-0AW0
Mounting rails, tin-plated steel strip	
• Length: 483 mm	6ES5710-8MA11
• Length: 430 mm	6ES5710-8MA21
• Length: 830 mm	6ES5710-8MA31
• Length: 2000 mm	6ES5710-8MA41

Online catalog

Additional article numbers can be found on the Internet in the online catalog and online ordering system (http://www.siemens.com/automation/mall).

Appendix A

A.1 Siemens Industry Online Support

You can find current information on the following topics quickly and easily here:

- **Product support**

  All the information and extensive know-how on your product, technical specifications, FAQs, certificates, downloads, and manuals.

- **Application examples**

  Tools and examples to solve your automation tasks – as well as function blocks, performance information and videos.

- **Services**

  Information about Industry Services, Field Services, Technical Support, spare parts and training offers.

- **Forums**

  For answers and solutions concerning automation technology.

- **mySupport**

  Your personal working area in Industry Online Support for messages, support queries, and configurable documents.

This information is provided by the Siemens Industry Online Support in the Internet (http://www.siemens.com/automation/service&support).

A.2 Industry Mall

The Industry Mall is the catalog and order system of Siemens AG for automation and drive solutions on the basis of Totally Integrated Automation (TIA) and Totally Integrated Power (TIP).

You can find catalogs for all automation and drive products on the Internet.

See also

Industry Mall (https://mall.industry.siemens.com)

A.3 Troubleshooting

Problem	Possible cause	Remedy
CPU 1515SP PC2 does not work.	CPU 1515SP PC2 is not supplied with power.	Check the power supply.
Time and/or date of the CPU 1515SP PC2 not correct.	CPU 1515SP PC2 was not connected for more than 6 weeks.	Check the settings in Windows.
USB device is not working.	USB power supply is overloaded.	Use an external power supply for the USB device (see section Application planning (Page 33)).

List of abbreviations

B

B.1 Abbreviations

Abbreviation	Term	Meaning
AC	Alternating current	Alternating current
ALM	Automation License Manager	Tool for managing license keys in STEP 7
BIOS	Basic Input Output System	Basic Input Output System. A set of important software routines used after the startup of the CPU to load the operating system and to provide the routines for data exchange between hardware components.
CE	Communauté Européenne	CE label
CFast	CompactFlash ATA Serial Transfer	Memory card
CoA	Certificate of Authenticity	Certificate of Authenticity, label with Microsoft Windows "Product Key"
CoL	Certificate of License	Certificate of License for the SIMATIC software loaded
DC	Direct current	DC current
DPP	Dual-mode DisplayPort	Interface for transfer of image and video data for monitors
ESD	Components sensitive to electrostatic charge	
EN	European standard	
GbE	Gigabit Ethernet	
GRUB / GRUB2DOS	GRand Unified Bootloader	Boot Manager
HMI	Human Machine Interface	User interface
IEC	International Electrotechnical Commission	
IM	Interface module	The interface module connects the ET 200SP distributed I/O system with the IO controller and exchanges data with the I/O modules via the backplane bus.
LAN	Local Area Network	Computer network that is limited to a local area.
LED	Light Emitting Diode	Light emitting diode
LLDP	Link Layer Discovery Protocol	Protocol that enables the exchange of information between adjacent devices.
MMC	Multi Media Card	Memory card
NTFS	New Technology File System	File system that offers targeted access protection at the file level.
NVRAM	Non-Volatile Random-Access Memory	Non-volatile data memory that is RAM-based, the data content of which is retained without external power supply.
PC	Personal computer	
PELV	Protective Extra Low Voltage	PELV, previously called "extra low voltage with safe isolation", is a protective measure against electrical shock. See EN 50178.
PN	PROFINET	

Abbreviation	Term	Meaning
PG	Programming device	Compact programming device which meets the special requirements of industry. The PG is fully equipped for programming SIMATIC PLCs.
PS	Power supply	Power supply
PT	Power Tags	Process tags; tags enable data exchange between the components of an automation process, for example, between the HMI device and the controller.
RAM	Random Access Memory	Main or work memory of a computer with direct access, allowing read access to data and editing.
RT	Runtime	
SD	Secure Digital card	Memory card
SELV	Safety Extra Low Voltage	Safety Extra Low Voltage; electrical circuit in which the voltage cannot exceed 30 V AC (RMS), 42.4 V AC peak or 60 V DC under NORMAL CONDITIONS and CONDITIONS OF A SINGLE FAULT, including ground faults in other circuits.
UL	Underwriters Laboratories Inc.	
UWF	Unified Write Filter	Configurable write protection under Windows 10, for protection of data carriers (for example, CFast card, internal USB drives, etc.)"Unified Write Filter (UWF)" write filter (Page 57)
USB	Universal Serial Bus	Serial bus system for connecting a computer to external devices.

Glossary

Cold restart

A startup procedure commencing when the CPU is switched on. Upon a cold restart, the system typically performs some basic hardware checks and then loads the operating system from the hard disk into the work memory.

Controller

Integrated hardware and software controlling the operation of a specific internal or I/O device (e.g. keyboard controller).

Device configuration

The device configuration of a PC/programming device includes information on the features and options of the PC/programming device such as memory configuration, drive types, monitor, network address etc. The data is stored in a configuration file and is used by the operating system to load the corresponding device drivers or assign device parameters.

Drivers

Program sections of the operating system. They convert data from the user programs to the specific formats required by the I/O devices (e.g. hard disks, monitors, printers).

Ethernet

Local network (bus structure) for text and data communication with a data transmission rate of 10/100/1000 Mbps.

Image

An image is a copy of hard-disk partitions, for example, which is stored as backup in a file so that it can be restored if necessary.

Interface

- Connection between individual hardware elements such as PCs, programming device, printer or screen by means of physical plug-in connections (cables).
- Connection between different programs to allow them to be used together.

LAN

Local Area Network: LAN refers to a local network consisting of a group of computers and other devices which are distributed over a relatively restricted area and connected through communication lines. The devices connected to a LAN are referred to as nodes. The purpose of networks is the shared use of files, printers or other resources.

License key

The license key is the electronic license stamp of a license. Siemens AG provides a license key for software that is protected by licensing laws.

Operating system

Generic term which describes all functions for controlling and monitoring user program execution and distribution of system resources to the user programs as well as maintenance of the operating mode in cooperation with the hardware.

Power options

The power options can be used to reduce the power consumption of the computer while still keeping it ready for immediate use. In Windows via **Start** > **Control Panel** > **Hardware and Sound** > **Power Options**.

Restart

The restart of the company that is already in operation using, for example, the <Ctrl+Alt+Del> shortcut without switching off the power supply.

Restore USB stick

You use the Restore USB stick to reset your system partition or the entire hard disk to the delivery state in the event of an error. The USB stick contains all the necessary image files and is bootable.

ROM

Read Only Memory. ROM refers to a read-only memory where each memory location can be addressed individually. The stored programs or data are hard-coded and are preserved even in the event of a power failure.

S.M.A.R.T

Self-Monitoring, Analysis and Reporting Technology (SMART or S.M.A.R.T.) is an industry standard for storage media. It provides for permanent monitoring of relevant parameters and thus early recognition of pending defects.

SATA

Serial ATA. An interface for hard disk drives and optical drives with serial data transfer.

SETUP (BIOS setup)

A program used to determine information on the device configuration. The device configuration of the CPU 1515SP PC2 is preset. Changes must be made whenever a memory expansion, new modules or drives are to be activated.

Index

A

AC
    Alternating current, 126
Accessories, 123
Address space, 33
ALM
    Automation License Manager, 126
Alternating current
    AC, 126
Ambient conditions
    Climatic, 75
    Mechanical, 74
Approvals, 66
Areas of application, 17
    Fail-safe CPUs, 17
    Technology CPUs, 17
Automation License Manager, 48
    ALM, 126

B

Basic Input Output System
    BIOS, 126
Basic knowledge, 6
BIOS
    Basic Input Output System, 126
BIOS setup, 56
    changing the device configuration, 56
Boot Manager, 50

C

CE
    Communauté Européenne, 126
Certificate of Authenticity
    CoA, 126
Certificate of License
    Col, 126
CFast
    CompactFlash ATA Serial Transfer, 126
CFast card
    insert, 64
    Partitioning, 59
    remove, 64
Characteristics
    Control cabinet, 19
    Degree of protection, 19
    General, 19
    Interfaces, 19
    Power supply, 19
    Pre-installations, 19
Climatic ambient conditions, 75
CoA
    Certificate of Authenticity, 126
Col
    Certificate of License, 126
Commissioning
    Commissioning procedure, 43
    Creating the configuration, 46
    Notes, 42
    Operator user, 44
    Procedure, 44
    Requirements, 43
    Setting the IP address, 46
Communauté Européenne
    CE, 126
CompactFlash ATA Serial Transfer
    CFast, 126
Components
    BusAdapter, 23
    Mounting rail, 22
    Overview of CPU 1515SP PC2, 22
    Server module, 23
Components sensitive to electrostatic charge
    ESD, 126
Configuration
    Commissioning, 46
    Non-isolated configuration, 38
    Reference potential of the load voltage, 38
    TN-S grid, 38
Conventions, 7
CPU
    Damage, 29
    LED displays, 51
    Switching on, 50
    Unpacking, 29
CPU
    Switching off, 50
CPU 1515SP PC2
    Components, 22
    Dimension drawing, 121

D

Data
    Backup, 58
    Restoring, 58
Data backup, 58
    SIMATIC IPC Image & Partition Creator, 58, 58
DC
    Direct current, 126
Degree of protection, 76
Dimension drawing
    CPU 1515SP PC2, 121
Direct current
    DC, 126
Disposal
    Recycling, 65
Downloading a project
    Target system, 47
DPP
    Dual-mode DisplayPort, 126
Dual-mode DisplayPort
    DPP, 126

E

Electromagnetic compatibility (EMC), 71
EMC (Electromagnetic compatibility), 71
EN
    European standard, 126
ESD
    Components sensitive to electrostatic charge, 126
European standard
    EN, 126

F

Functions, 55, 55
    BIOS setup, 56
    Monitoring drives, 55
    Monitoring functions, 54
    Operating hours counter, 55
    Power options, 56
    Retentive memory NVRAM, 55
    SIMATIC IPC DiagBase, 54
    SIMATIC IPC DiagMonitor, 54
    Temperature monitoring, 55

G

GbE
    Gigabit Ethernet, 126
Gigabit Ethernet
    GbE, 126
GRand Unified Bootloader
    GRUB/GRUB2DOS, 126
GRUB/GRUB2DOS
    GRand Unified Bootloader, 126

H

HMI
    Human Machine Interface, 126
HMI connection
    establish, 47
HMI devices
    Updating software, 62
Human Machine Interface
    HMI, 126

I

Identification data
    Repairs, 30
IEC
    International Electrotechnical Commission, 126
IM
    Interface module, 126
Installation rules, 32
Insulation, 76
Interface module
    IM, 126
International Electrotechnical Commission
    IEC, 126
IP address
    Commissioning, 46
    Setting, 46

L

LAN
    Local Area Network, 126
Language packs
    for installing Windows, 62
    Windows, 62
LED
    Light Emitting Diode, 126
LED displays
    CPU, 51
    ERROR, 52
    MAINT, 52
    Meaning, 52

Power, 52
RUN/STOP, 52
License
Certificate of License, 49
Software, 48
License key
Backup, 49
Restore, 49
transfer, 48
Light Emitting Diode
LED, 126
Link Layer Discovery Protocol
LLDP, 126
LLDP
Link Layer Discovery Protocol, 126
Local Area Network
LAN, 126

M

MAC addresses
Assignment, 25
Maximum configuration, 28
Address space, 33
Electrical, 33
Mechanical, 33
Rules, 33
USB load, 33
mechanical ambient conditions, 74
Minimum clearances
Mounting, 32
MMC
Multi Media Card, 126
Mode selector
Positions, 26
Monitoring functions, 54
Mounting
Ambient temperatures, 28, 33
Fixing strain relief, 34
Installation location, 28
Installation position, 28
Installing the CPU, 34
Maximum configuration, 28
Minimum clearances, 32
Mounting rail, 31
Required tool, 34
Rules, 32
Strain relief, 41
Uninstalling the CPU, 35
USB load, 33
Mounting rail
Mounting, 31
Multi Media Card
MMC, 126

N

Network connection
HMI, 47
Networks
Ethernet, 40
PROFIBUS, 40
PROFINET, 40
New Technology File System
NTFS, 126
Non-Volatile Random-Access Memory
NVRAM, 126
Notes on use, 16
Ambient conditions, 16
Hazards at an unprotected machine or plant, 16
NTFS
New Technology File System, 126
NVRAM
Non-Volatile Random-Access Memory, 126
Retentive memory, 55

O

Operator controls and display elements, 24
CFast card, 25
Interfaces, 24
MAC addresses, 25
Mode selector, 26
Power supply, 26
SD/MMC card, 25
USB connections, 25
Operator user
Commissioning, 44

P

Packaging
CPU, 29
Damage, 29
Partitioning
CFast card, 59
PC
Personal computer, 126
PELV
Protective Extra Low Voltage, 126
Personal computer
PC, 126

PG
Programming device, 127
PN
PROFINET, 126
Power options
Functions, 56
Power supply
PS, 127
Power Tags
PT, 127
Procedure
Commissioning, 44
PROFINET
PN, 126
Programming device
PG, 127
Proof of license, 27
Certificate of Authenticity, 30
Certificate of License, 30
Protection class, 76, 76
Protective Extra Low Voltage
PELV, 126
PS
Power supply, 127
PT
Power Tags, 127

R

Radio interference, 70, 72
RAM
Random Access Memory, 127
Random Access Memory
RAM, 127
Rated voltage, 77
Recycling
Disposal, 65
Repair, 63
Restoring the delivery state, 60
Requirements, 60
with restore USB stick, 61
Retentive memory NVRAM
Functions, 55
RT
Runtime, 127
Runtime
RT, 127

S

Safety Extra Low Voltage
SELV, 127
Safety information, 14
ESD guidelines, 15
Repairs, 14
Safe operation of a plant, 14
Sample configuration, 20
Configuration, 20
Scope, 7
Documentation, 7
Scope of delivery, 27
CPU 1515SP PC2, 27
CPU 1515SP PC2 F, 27
CPU 1515SP PC2 T, 27
CPU 1515SP PC2 TF, 27
Proof of license, 27
SD
Secure Digital card, 127
Secure Digital card
SD, 127
SELV
Safety Extra Low Voltage, 127
Sending in the device, 63
Shipping conditions, 73
SIMATIC IPC DiagBase, 54
SIMATIC IPC DiagMonitor, 54
SIMATIC IPC Image&Partition Creator
Data backup, 58
SIMATIC IPC Service USB flash drive
Data backup, 58
Software
update for HMI devices, 62
Spare parts, 123
Standards, 66
Storage conditions, 73
Strain relief
mounting, 41

T

Technical specifications
Climatic ambient conditions, 75
Electromagnetic compatibility (EMC), 71
mechanical ambient conditions, 74
Shipping and storage conditions, 73
Standards and approvals, 66
Temperature monitoring, 55
Test voltage, 76
Transfer
License key, 48

U

UL
    Underwriters Laboratories Inc., 127
Underwriters Laboratories Inc.
    UL, 127
Unified Write Filter
    UWF, 127
Universal Serial Bus
    USB, 127
Updates
    for installing Windows, 63
USB
    Universal Serial Bus, 127
Use
    in industrial environments, 70
    in mixed areas, 70
    in residential areas, 70
UWF
    Unified Write Filter, 127

W

Windows
    Installing updates, 63
    Language packs, 62
Wiring, 37
    Block diagram, 37
    Pin assignment, 37
    Rules and regulations, 36

Z

zone 2 explosion-proof atmosphere, 77

SIEMENS

SIMATIC S7-1200/S7-1500 F-CPUs

Produktinformation

Security-Hinweise

Siemens bietet Produkte und Lösungen mit Industrial Security-Funktionen an, die den sicheren Betrieb von Anlagen, Systemen, Maschinen und Netzwerken unterstützen.

Um Anlagen, Systeme, Maschinen und Netzwerke gegen Cyber-Bedrohungen zu sichern, ist es erforderlich, ein ganzheitliches Industrial Security-Konzept zu implementieren (und kontinuierlich aufrechtzuerhalten), das dem aktuellen Stand der Technik entspricht. Die Produkte und Lösungen von Siemens formen einen Bestandteil eines solchen Konzepts.

Die Kunden sind dafür verantwortlich, unbefugten Zugriff auf ihre Anlagen, Systeme, Maschinen und Netzwerke zu verhindern. Diese Systeme, Maschinen und Komponenten sollten nur mit dem Unternehmensnetzwerk oder dem Internet verbunden werden, wenn und soweit dies notwendig ist und nur wenn entsprechende Schutzmaßnahmen (z. B. Firewalls und/oder Netzwerksegmentierung) ergriffen wurden.

Weiterführende Informationen zu möglichen Schutzmaßnahmen im Bereich Industrial Security finden Sie unter (https://www.siemens.com/industrialsecurity).

Die Produkte und Lösungen von Siemens werden ständig weiterentwickelt, um sie noch sicherer zu machen. Siemens empfiehlt ausdrücklich, Produkt-Updates anzuwenden, sobald sie zur Verfügung stehen und immer nur die aktuellen Produktversionen zu verwenden. Die Verwendung veralteter oder nicht mehr unterstützter Versionen kann das Risiko von Cyber-Bedrohungen erhöhen.

Um stets über Produkt-Updates informiert zu sein, abonnieren Sie den Siemens Industrial Security RSS Feed unter (https://www.siemens.com/industrialsecurity).

Inhalt

Einleitung

Diese Produktinformation enthält wichtige Informationen zu den im Absatz "Geltungsbereich" genannten F-CPUs. Die Produktinformation ist Bestandteil des gelieferten Produkts. Die in dieser Produktinformation enthaltenen Aussagen sind in Zweifelsfällen als aktueller anzusehen.

Geltungsbereich

Die Aussagen in dieser Produktinformation sind für die nachfolgend aufgezählten F-CPUs gültig:

F-CPUs S7-1200	F-CPUs S7-1500		
• CPU 1212FC DC/DC/DC • CPU 1212FC DC/DC/Rly • CPU 1214FC DC/DC/DC • CPU 1214FC DC/DC/Rly • CPU 1215FC DC/DC/DC • CPU 1215FC DC/DC/Rly	• CPU 1511(T)F-1 PN • CPU 1513F-1 PN • CPU 1515(T)F-2 PN • CPU 1516(T)F-3 PN/DP • CPU 1517(T)F-3 PN/DP • CPU 1518F-4 PN/DP • CPU 1518F-4 PN/DP (MFP/ODK)	• CPU 1510SP F-1 PN • CPU 1512SP F-1 PN • CPU 1516proF-2 PN	S7-1500 F Software Controller • CPU 1505SP (T)F • CPU 1507S F • CPU 1508S F

© Siemens AG 2015 - 2018. Alle Rechte vorbehalten

Einsatzgebiete

Haupteinsatzgebiete der F-CPUs S7-1200/1500 sind Personen- und Maschinenschutz und Brennersteuerungen. Neben dem Sicherheitsprogramm können Sie auch Standard-Anwendungen programmieren.

Die F-CPUs S7-1200/1500 können Sie im Sicherheitsbetrieb oder im Standardbetrieb betreiben.

Für den Sicherheitsbetrieb ist das installierte Optionspaket *STEP 7 Safety* notwendig. Ohne installiertes Optionspaket *STEP 7 Safety* können Sie die F-CPUs S7-1200/1500 im Standard-Betrieb einsetzen. Im Standardbetrieb verhalten sich F-CPUs S7-1200/1500 wie Standard-CPUs S7-1200/1500.

Informationen zum Einsatz der F-CPUs S7-1200/1500 im Sicherheitsbetrieb erhalten Sie im Programmier- und Bedienhandbuch "SIMATIC Safety - Projektieren und Programmieren (http://support.automation.siemens.com/WW/view/de/54110126)".

Informationen zum Einsatz der F-CPUs S7-1200 im Standardbetrieb erhalten Sie im Systemhandbuch "S7-1200 Automatisierungssystem (https://support.industry.siemens.com/cs/ww/de/view/109478121)".

Informationen zum Einsatz der F-CPUs S7-1500 im Standardbetrieb erhalten Sie in den jeweiligen Gerätehandbüchern der Standard-CPUs S7-1500 und den Standard-T-CPUs S7-1500 unter den folgenden Links:

- CPUs 151x (http://support.automation.siemens.com/WW/view/de/67295862/133300)
- CPUs 151xT (https://support.industry.siemens.com/cs/ww/de/ps/22057/man)
- CPUs 151xSP (http://support.automation.siemens.com/WW/view/de/90466439/133300)
- CPU 1516pro-2 PN (https://support.industry.siemens.com/cs/ww/de/ps/13906/man)
- S7-1500 Software Controller (http://support.automation.siemens.com/WW/view/de/109740725)

Die aktuelle Firmware für die jeweilige F-CPU finden Sie mit einer Suche nach Downloads mit der jeweiligen Artikelnummer im Industy Online Support (https://support.industry.siemens.com).

Hinweis

Beachten Sie anwendungsspezifische Anforderungen z. B. zur Netzausfallüberbrückung bei Netzteilen/Netzgeräten.

PFD_{avg}-, PFH-Werte für F-CPUs

Nachfolgend finden Sie die Versagenswahrscheinlichkeitswerte (PFD_{avg}-, PFH-Werte) für die oben genannten F-CPUs bei einer Gebrauchsdauer von 20 Jahren und bei einer Reparaturzeit von 100 Stunden:

Betrieb im geringen Anforderungsmodus low demand mode **gemäß IEC 61508:2010:** **PFD_{avg} = Average probability of a dangerous failure on demand**	**Betrieb im häufigen Anforderungs- oder kontinuierlichen Modus** high demand/continuous mode **gemäß IEC 61508:2010:** **PFH = Average frequency of a dangerous failure [h^{-1}]**
< 2E-05	< 1E-09

Überblick über den Arbeitsspeicher der F-CPUs im Vergleich mit den Standard-CPUs

CPU	Arbeitsspeicher	F-CPU	Arbeitsspeicher
CPU 1212C DC/DC/DC CPU 1212C DC/DC/Rly	75 kbyte	CPU 1212FC DC/DC/DC CPU 1212FC DC/DC/Rly	100 kbyte
CPU 1214C DC/DC/DC CPU 1214C DC/DC/Rly	100 kbyte	CPU 1214FC DC/DC/DC CPU 1214FC DC/DC/Rly	125 kbyte
CPU 1215C DC/DC/DC CPU 1215C DC/DC/Rly	125 kbyte	CPU 1215FC DC/DC/DC CPU 1215FC DC/DC/Rly	150 kbyte
CPU 1511-1 PN	150 kbyte	CPU 1511F-1 PN	225 kbyte
CPU 1511T-1 PN	225 kbyte	CPU 1511TF-1 PN	225 kbyte
CPU 1513-1 PN	300 kbyte	CPU 1513F-1 PN	450 kbyte
CPU 1515-1 PN	500 kbyte	CPU 1515F-1 PN	750 kbyte
CPU 1515T-1 PN	750 kbyte	CPU 1515TF-1 PN	750 kbyte
CPU 1516-3 PN/DP	1 Mbyte	CPU 1516F-3 PN/DP	1,5 Mbyte

CPU	Arbeitsspeicher	F-CPU	Arbeitsspeicher
CPU 1516T-3 PN/DP	1,5 Mbyte	CPU 1516TF-3 PN/DP	1,5 Mbyte
CPU 1517-3 PN/DP	2 Mbyte	CPU 1517F-3 PN/DP	3 Mbyte
CPU 1517T-3 PN/DP	3 Mbyte	CPU 1517TF-3 PN/DP	3 Mbyte
CPU 1518-4 PN/DP (MFP/ODK)	4 Mbyte	CPU 1518F-4 PN/DP (MFP/ODK)	6 Mbyte
CPU 1510SP-1 PN	100 kbyte	CPU 1510SP F-1 PN	150 kbyte
CPU 1512SP-1 PN	200 kbyte	CPU 1512SP F-1 PN	300 kbyte
CPU 1516pro-2 PN	1 Mbyte	CPU 1516proF-2 PN	1,5 Mbyte
CPU 1505SP (T)	1 Mbyte	CPU 1505SP (T)F	1,5 Mbyte
CPU 1507S	5 Mbyte	CPU 1507S F	7,5 Mbyte
CPU 1508S	10 Mbyte	CPU 1508S F	12,5 Mbyte

Unterstützung von PROFIsafe V2

Schnittstellen, die PROFINET IO unterstützen, unterstützen auch PROFIsafe V2.

Einschränkung bei den Anweisungen "CREAT_DB" und "DELETE_DB"

F-DBs können weder erzeugt noch gelöscht werden.

Einschränkung bei den Anweisungen "READ_DBL" und "WRIT_DBL"

Die Zieladresse darf nicht auf einen F-DB zeigen.

Einschränkung bei der Projektierung des Remanenzverhaltens von Datenbausteinen

Die Projektierung der Remanenz von Datenbausteinen wird für F-DBs nicht unterstützt. D. h., bei NETZ-AUS/EIN und Neustart (STOP-RUN) der F-CPU sind die Aktualwerte der F-DBs nicht remanent. Die F-DBs erhalten die Anfangswerte aus dem Ladespeicher.

In F-DBs ist für alle Variablen das Kontrollkästchen "Remanenz" gegraut dargestellt.

Konfigurationssteuerung (Optionenhandling) auf einer F-CPU S7-1200

Die Konfigurationssteuerung (Optionenhandling) auf einer F-CPU S7-1200 ist mit zentralen Modulen unter folgender Einschränkung möglich:

- Die fehlersicheren Module S7-1200 dürfen nicht getauscht werden und müssen auch immer an Ihrem projektierten Steckplatz physikalisch gesteckt werden.

Platzieren Sie die fehlersicheren Module S7-1200 direkt neben der F-CPU. Platzieren Sie die Standard-Module rechts neben den fehlersicheren Modulen S7-1200.

Vorgehen zum Laden einer Projektierung für Firmware < V2.0 für F-CPUs S7-1500

Wenn Sie eine F-CPU S7-1500 mit einer Projektierung für Firmware ab V2.0 mit projektierter Schutzstufe "Vollzugriff inkl. Fail-safe (kein Schutz)" geladen haben und nun eine Projektierung für Firmware <= V1.8 auf diese F-CPU laden wollen, müssen Sie Folgendes beachten:

Beim Laden der Projektierung mit Firmware <= V1.8 auf die F-CPU wird das Passwort abgefragt und als ungültig erkannt.

Als Abhilfe formatieren Sie die SIMATIC Memory Card wie in der Online-Hilfe zu STEP 7 unter "Eine S7-1500-Memory Card formatieren" beschrieben. Anschließend können Sie die Projektierung für Firmware <= V1.8 auf die F-CPU laden.

Einsatz von Taktsynchronalarm-(F-)OBs

Die Anzahl der verwendbaren Taktsynchronalarm-(F-)OBs ist von der eingesetzten F-CPU abhängig. Informationen dazu erhalten Sie in den technischen Daten der CPU.

Überschreitet die Summe der Taktsynchronalarm-OBs und des Taktsynchronalarm-F-OBs die in den technischen Daten der CPU angegebene Anzahl, ist das Laden des Standard-Anwenderprogramms im RUN nicht mehr möglich.

Display (bei F-CPUs S7-1500 mit Display bzw. Panel)

F-CPUs S7-1500 mit Display zeigen Ihnen im Menü "Übersicht" unter "Fehlersicher" Folgendes an:

- Sicherheitsbetrieb aktiviert/deaktiviert
- F-Gesamtsignatur
- Letzte fehlersichere Änderung
- Die Version von *STEP 7 Safety*, mit der das Sicherheitsprogramm übersetzt wurde.
- Informationen zu den F-Ablaufgruppen
  - Name der F-Ablaufgruppe
  - F-Ablaufgruppen-Signatur
  - Aktuelle Zykluszeit
  - Max. Zykluszeit
  - Aktuelle Laufzeit
  - Max. Laufzeit

Für jede F-Peripherie wird Ihnen unter "Fehlersichere Parameter" Folgendes angezeigt:

- F-Parameter-Signatur (mit Adresse)
- Sicherheitsbetrieb
- F-Überwachungszeit
- F-Quelladresse
- F-Zieladresse

Im Menü "Einstellungen" unter "Schutz" wird der folgende zusätzliche Menüpunkt angezeigt:

- F-Passwort freigeben/sperren

Der schreibende Zugriff auf F-Bausteine ist nicht zulässig.

Hinweis

Das Steuern von fehlersicheren Ein-/Ausgängen kann zum STOP der F-CPU führen.

Hinweis

Bei der Display-Firmware V2.5 wird nach dem Laden von Programmänderungen das Display für wenige Minuten nicht aktualisiert und ist nicht bedienbar, anschließend startet das Display neu.

Webserver

Die F-CPUs S7-1200/1500 zeigt Ihnen auf der Startseite des Webservers Folgendes an:

- Sicherheitsbetrieb aktiviert/deaktiviert
- F-Gesamtsignatur
- Letzte fehlersichere Änderung
- Die Version von *STEP 7 Safety*, mit der das Sicherheitsprogramm übersetzt wurde.
- Informationen zu den F-Ablaufgruppen
  - Name der F-Ablaufgruppe
  - F-Ablaufgruppen-Signatur
  - Aktuelle Zykluszeit
  - Max. Zykluszeit
  - Aktuelle Laufzeit
  - Max. Laufzeit

Für jede F-Peripherie wird Ihnen auf der Webseite "Baugruppenzustand" im Reiter "Fehlersicherheit" Folgendes angezeigt:

- F-Parameter-Signatur (mit Adresse)
- Sicherheitsbetrieb
- F-Überwachungszeit
- F-Quelladresse
- F-Zieladresse

Der schreibende Zugriff auf F-Bausteine ist nicht zulässig.

Hinweis

Das Steuern von fehlersicheren Ein-/Ausgängen kann zum STOP der F-CPU führen.

Die folgenden Punkte betreffen den S7-1500 F Software Controller

Der S7-1500 F Software Controller ist eine fehlersichere Software-CPU, die auf den folgenden Geräten zum Einsatz kommt:

S7-1500 F Software Controller	Gerät
CPU 1505SP (T)F	• CPU 1515SP PC
CPU 1507S F	• IPC 2x7E* • IPC 4x7D* • IPC 4x7E* • IPC 627D** • IPC 677D** • IPC 827D**
CPU 1508S F	• IPC 4x7E* • IPC 627D** • IPC 677D** • IPC 827D**

* Nur einsetzbar, wenn NVRAM vorhanden (wird automatisch zugewiesen)

** Nur einsetzbar mit PROFIBUS- bzw. PROFINET-Schnittstelle und, wenn NVRAM vorhanden (wird automatisch zugewiesen)

Die in der obigen Tabelle genannten Geräte reagieren beim Einsatz des S7-1500 F Software Controllers und *STEP 7 Safety* auch bei erhöhter elektromagnetischer Störbeeinflussung fehlersicher. Spezielle Typprüfungen im Hinblick auf funktionale Sicherheit sind daher für diese Geräte - im Gegensatz zur F-Peripherie - nicht erforderlich. Beachten Sie jedoch im Hinblick auf Verfügbarkeit anwendungsspezifische Anforderungen, insbesondere die Normen zur Brennersteuerung.

Der im Lieferumfang enthaltene gelbe Aufkleber mit dem TÜV SÜD-Prüfzeichen für funktionale Sicherheit ist ausschließlich für die Verwendung im Zusammenhang mit den S7-1500 F Software Controllern bestimmt (nicht im Lieferumfang der Download-Version). Den Aufkleber können Sie zur Kennzeichnung der Hardware verwenden, auf der der S7-1500 F Software Controller installiert wurde. Wenn Sie den S7-1500 F Software Controller deinstallieren, müssen Sie den Aufkleber entfernen.

Sichern und Wiederherstellen

Das Sichern und Wiederherstellen von Projektdaten wird nicht unterstützt.

Passwörter für Schutzstufen

Die PC Station unterscheidet nicht zwischen den beiden Passwörtern der Schutzstufen "Vollzugriff inkl. Fail-safe (kein Schutz)" und "Vollzugriff (kein Schutz)". Der S7-1500 F Software Controller unterscheidet zwischen den beiden Passwörtern der Schutzstufen "Vollzugriff inkl. Fail-safe (kein Schutz)" und "Vollzugriff (kein Schutz)".

Anweisung ENDIS_PW

Beim Einsatz der Anweisung ENDIS_PW auf einem IPC können Sie sich von Ihrem System aussperren, weil ein IPC keinen Betriebsartenschalter besitzt. Als Abhilfe können Sie sinngemäß vorgehen wie in der Online-Hilfe zur Anweisung ENDIS_PW unter "Ungewolltes Aussperren bei einer S7-1200-CPU verhindern" beschrieben.

Für PC-Stationen bis einschließlich V2.0 gilt: Wenn es zu einer ungewollten Aussperrung gekommen ist, dann können Sie die Sperre nur durch deinstallieren und installieren des S7-1500 F Software Controllers aufheben.

Für PC-Station ab V2.1 gilt: Mitglieder der Windowsbenutzergruppe "Failsafe Operators" können mit der Funktion "Delete Configuration" die Aussperrung umgehen.

Hinweis

Der Windowsbenutzer "Jedermann" wird nicht berücksichtigt, wenn er in der Windowsbenutzergruppe "Failsafe Operators" ist.

Funktionalität TPM

Die Funktionalität TPM darf für S7-1500 F Software Controller nicht genutzt werden, da dies zu einem STOP führen kann.

Nutzung von EWF bzw. UWF und dem EWF- bzw. UWF-Manager

Sie dürfen EWF bzw. UWF und den EWF- bzw. UWF-Manager nicht für das CPU-Volume anwählen.

Weitere Besonderheiten

⚠ WARNUNG

Sie müssen den Zugang für den S7-1500 F Software Controller durch einen Zugangsschutz auf Personen begrenzen, die zum Installieren bzw. Deinstallieren der Software des S7-1500 F Software Controllers berechtigt sind.

Hinweis

Bei einem S7-1500 F Software Controller mit einer PC-Station Version bis einschließlich V2.1 wird die Funktion "Delete Configuration" am PC-Station Panel nur angeboten, wenn an der F-CPU kein Zugriffsschutz (kein Schutz) eingerichtet ist.

Bei einer PC-Station ab V2.2 wird geprüft, ob der Windowsbenutzer Mitglied der Windowsbenutzergruppe "Failsafe Operators" ist. Wenn der eingeloggte Windowsbenutzer Mitglied der Gruppe ist, kann er die Funktion "Delete Configuration" auch beim gesetzten F-Passwort ausführen. Wenn der eingeloggte Windowsbenutzer nicht Mitglied der Gruppe ist, verhält sich die PC-Station wie bis V2.1.

Hinweis

Wenn der S7-1500 F Software Controller mit einem Zugriffsschutz versehen ist, wird dieser mit "Delete Configuration" nicht gelöscht und bleibt erhalten.

Hinweis

Benötigte BIOS-Version für CPU 1505SP F kleiner V2.5

Für den Einsatz der CPU 1505SP F benötigen Sie mindestens die BIOS-Version V2.00_02.01.

Hinweis

Der CPU-Takt darf sich im RUN nicht ändern, da dies zu einem STOP führen würde. Dies können Sie durch das Deaktivieren der Energiesparfunktion verhindern.

Hinweis

Zuweisung der PROFIsafe-Adressen für F-Module am PROFIBUS an IPCs mit S7-1500 F Software Controller kleiner V2.5

Wenn Sie PROFIsafe-Adressen F-Modulen zuweisen wollen, die über PROFIBUS an einem IPC mit einem S7-1500 F Software Controller betrieben werden, dann weisen Sie die PROFIsafe-Adressen den F-Modulen zu und führen Sie anschließend ein Netzaus/Netzein der PROFIBUS-Station durch.

Hinweis

Sicherheitsprogramm laden bzw. Sicherheitsbetrieb aktivieren für S7-1500 F Software Controller kleiner V2.5

Schließen Sie nach dem Laden des Sicherheitsprogramms bzw. nach dem Aktivieren des Sicherheitsbetriebs das Panel und öffnen Sie es wieder, damit die Anzeige im Panel aktualisiert wird.

Hinweis

Wenn Sie bei einem S7-1500 F Software Controller mit Version 2.0 ein Update auf eine Version > 2.0 durchführen, wird, wenn sich bereits ein Sicherheitsprogramm auf dem S7-1500 F Software Controller befindet, der Wert "Letzte fehlersichere Änderung" auf den Installationszeitpunkt gesetzt.

Hinweis

Die Funktionalität "Konfigurationsdatei Export" setzt das Optionspaket *STEP 7 Safety* ab V15 und einen S7-1500 F Software Controller ab V2.5 voraus.

Siemens AG
Division Digital Factory
Postfach 48 48
90026 NÜRNBERG
DEUTSCHLAND

F-CPUs
A5E35635424-AG, 11/2018

SIEMENS

SIMATIC S7-1200/S7-1500 F-CPUs

Product Information

Security information

Siemens provides products and solutions with industrial security functions that support the secure operation of plants, systems, machines and networks.

In order to protect plants, systems, machines and networks against cyber threats, it is necessary to implement – and continuously maintain – a holistic, state-of-the-art industrial security concept. Siemens' products and solutions constitute one element of such a concept.

Customers are responsible for preventing unauthorized access to their plants, systems, machines and networks. Such systems, machines and components should only be connected to an enterprise network or the internet if and to the extent such a connection is necessary and only when appropriate security measures (e.g. firewalls and/or network segmentation) are in place.

For additional information on industrial security measures that can be implemented, please visit (https://www.siemens.com/industrialsecurity).

Siemens' products and solutions undergo continuous development to make them more secure. Siemens strongly recommends that product updates are applied as soon as they are available and that the latest product versions are used. Use of product versions that are no longer supported, and failure to apply the latest updates may increase customers' exposure to cyber threats.

To stay informed about product updates, subscribe to the Siemens Industrial Security RSS Feed visit (https://www.siemens.com/industrialsecurity).

Content

Introduction

This Product Information contains important information on the F-CPUs specified in the section "Scope of validity". The Product Information is part of the product supplied. The information in this Product Information should be considered more up-to-date than other documentation if uncertainties arise.

Scope of validity

The statements in this product information apply to the F-CPUs listed below:

S7-1200 F-CPUs	S7-1500 F-CPUs		
• CPU 1212FC DC/DC/DC • CPU 1212FC DC/DC/Rly • CPU 1214FC DC/DC/DC • CPU 1214FC DC/DC/Rly • CPU 1215FC DC/DC/DC • CPU 1215FC DC/DC/Rly	• CPU 1511(T)F-1 PN • CPU 1513F-1 PN • CPU 1515(T)F-2 PN • CPU 1516(T)F-3 PN/DP • CPU 1517(T)F-3 PN/DP • CPU 1518F-4 PN/DP • CPU 1518F-4 PN/DP (MFP/ODK)	• CPU 1510SP F-1 PN • CPU 1512SP F-1 PN • CPU 1516proF-2 PN	S7-1500 F-Software Controller • CPU 1505SP (T)F • CPU 1507S F • CPU 1508S F

© Siemens AG 2015 - 2018. All rights reserved
A5E35635424-AG, 11/2018

Areas of application

Main areas of application of the S7-1200/1500 F-CPUs are personal and machine safety and burner controls. In addition to the safety program, you can also program standard applications.

You can operate the S7-1200/1500 F-CPUs in safety or standard mode.

The installed *STEP 7 Safety* optional package is required for safety mode. If the *STEP 7 Safety* optional package is not installed, you can use the S7-1200/S7-1500 F-CPUs in standard mode. In standard mode, S7-1200/1500 F-CPUs behave like standard S7-1200/1500 CPUs.

Additional information on using the S7-1200/1500 F-CPUs in safety mode is available in the programming and operating manual "SIMATIC Safety - Configuring and Programming (http://support.automation.siemens.com/WW/view/en/54110126)".

Additional information on using the S7-1200 F-CPUs in standard mode is available in the "S7-1200 Programmable controller (https://support.industry.siemens.com/cs/ww/en/view/109478121)" system manual.

Additional information on using the S7-1500 F-CPUs in standard mode is available in the relevant manuals for the S7-1500 and the standard-T-CPUs S7-1500 at the following links:

- CPUs 151x (http://support.automation.siemens.com/WW/view/en/67295862/133300)
- CPUs 151xT (https://support.industry.siemens.com/cs/ww/en/ps/22057/man)
- CPUs 151xSP (http://support.automation.siemens.com/WW/view/en/90466439/133300)
- CPU 1516pro-2 PN (https://support.industry.siemens.com/cs/ww/en/ps/13906/man)
- S7-1500 Software Controller (http://support.automation.siemens.com/WW/view/en/109740725)

You can find the latest firmware for the relevant F-CPU by searching for downloads with the respective article number in the Industry Online Support (https://support.industry.siemens.com).

Note

Observe any application-specific requirements, for example on mains buffering for power supplies/power packs.

PFD_{avg} and PFH values for F-CPUs

Below are the probability of failure on demand values (PFD_{avg}, PFH values) for the above-named F-CPUs with a service life of 20 years and an MTTR of 100 hours:

Operation in low demand mode low demand mode **According to IEC 61508:2010:** **PFD_{avg} = Average probability of a dangerous failure on demand**	**Operation in high demand or continuous mode** high demand/continuous mode **According to IEC 61508:2010:** **PFH = Average frequency of a dangerous failure [h^{-1}]**
< 2E-05	< 1E-09

Overview of the work memory of F-CPUs compared with standard CPUs

CPU	Work memory	F-CPU	Work memory
CPU 1212C DC/DC/DC CPU 1212C DC/DC/Rly	75 KB	CPU 1212FC DC/DC/DC CPU 1212FC DC/DC/Rly	100 KB
CPU 1214C DC/DC/DC CPU 1214C DC/DC/Rly	100 KB	CPU 1214FC DC/DC/DC CPU 1214FC DC/DC/Rly	125 KB
CPU 1215C DC/DC/DC CPU 1215C DC/DC/Rly	125 KB	CPU 1215FC DC/DC/DC CPU 1215FC DC/DC/Rly	150 KB
CPU 1511-1 PN	150 KB	CPU 1511F-1 PN	225 KB
CPU 1511T-1 PN	225 KB	CPU 1511TF-1 PN	225 KB
CPU 1513-1 PN	300 KB	CPU 1513F-1 PN	450 KB
CPU 1515-1 PN	500 KB	CPU 1515F-1 PN	750 KB
CPU 1515T-1 PN	750 KB	CPU 1515TF-1 PN	750 KB
CPU 1516-3 PN/DP	1 MB	CPU 1516F-3 PN/DP	1.5 MB

CPU	Work memory	F-CPU	Work memory
CPU 1516T-3 PN/DP	1.5 MB	CPU 1516TF-3 PN/DP	1.5 MB
CPU 1517-3 PN/DP	2 MB	CPU 1517F-3 PN/DP	3 MB
CPU 1517T-3 PN/DP	3 MB	CPU 1517TF-3 PN/DP	3 MB
CPU 1518-4 PN/DP (MFP/ODK)	4 MB	CPU 1518F-4 PN/DP (MFP/ODK)	6 MB
CPU 1510SP-1 PN	100 KB	CPU 1510SP F-1 PN	150 KB
CPU 1512SP-1 PN	200 KB	CPU 1512SP F-1 PN	300 KB
CPU 1516pro-2 PN	1 MB	CPU 1516proF-2 PN	1.5 MB
CPU 1505SP (T)	1 MB	CPU 1505SP (T)F	1.5 MB
CPU 1507S	5 MB	CPU 1507S F	7.5 MB
CPU 1508S	10 MB	CPU 1508S F	12.5 MB

Support of PROFIsafe V2

Interfaces that support PROFINET IO also support PROFIsafe V2.

Restriction with "CREAT_DB" and "DELETE_DB" instructions

F-DBs can neither be created nor deleted.

Restriction with "READ_DBL" and "WRIT_DBL" instructions

The destination address must not point to an F-DB.

Restrictions when configuring the retentive behavior of data blocks

The configuration of the retentive behavior of data blocks is not supported for F-DBs. This means that the actual values of the F-DBs will not be retentive in the event of Power OFF/ON and Restart (STOP-RUN) of the F-CPU. The F-DBs retain the initial values from the load memory.

The "Retain" check box is grayed-out for all tags in F-DBs.

Configuration control (option handling) on an S7-1200 F-CPU

Configuration control (option handling) on an S7-1200 F-CPU is possible with central modules subject to the following limitation:

- The fail-safe S7-1200 modules cannot be swapped and must also always be physically inserted into their configured slot.

Position the fail-safe S7-1200 modules directly next to the F-CPU. Position the standard modules on the right next to the fail-safe S7-1200 modules.

Procedure for loading a configuration for firmware < V2.0 for S7-1500 F-CPUs

If you have loaded an S7-1500 F-CPU with a configuration for firmware as of V2.0 with configured protection level "Full access with fail-safe (no protection)" and you now want to load a configuration for firmware <= V1.8 to this F-CPU, you must observe the following:

When the configuration with firmware <= V1.8 is loaded to the F-CPU, you will be prompted to enter the password and the entered password will be identified as invalid.

As a remedy, format the SIMATIC Memory Card as described in the online help for STEP 7 under "Formatting an S7-1500 memory card". You can then load the configuration for firmware <= V1.8 to the F-CPU.

Use of isochronous mode interrupt (F-)OBs

The number of isochronous mode interrupt (F-)OBs depends on the F-CPU used. You can obtain information in the technical specification of the CPU.

If the sum of the isochronous mode interrupt OBs and the isochronous mode interrupt F-OBs exceeds the number specified in the technical specifications of the CPU, it is no longer possible to load the standard user program in RUN.

Display (for S7-1500 F-CPUs with display or panel)

S7-1500 F-CPUs with display show you the following in the "Overview" menu under "Fail-safe":

- Safety mode activated/deactivated
- Collective F-signature
- Last fail-safe change
- Version of *STEP 7 Safety* with which the safety program was compiled.
- Information on the F-runtime groups
  - Name of F-runtime group
  - F-runtime groups signature
  - Current cycle time
  - Max. cycle time
  - Current runtime
  - Max. runtime

The following is displayed for each F-I/O under "Fail-safe parameters":

- F-parameter signature (with addresses)
- Safety mode
- F-monitoring time
- F-source address
- F-destination address

The following additional menu command is displayed in the "Settings" menu under "Protection":

- Enable/disable F-password

Write access to F-blocks is not permitted.

Note

Controlling fail-safe inputs/outputs can result set the F-CPU to STOP.

Note

With the display firmware V2.5, the display is not refreshed and cannot be operated for a few minutes after loading program changes. Afterwards, the display restarts.

Web server

S7-1200/1500 F-CPUs show you the following on the start page of the Web server:

- Safety mode activated/deactivated
- Collective F-signature
- Last fail-safe change
- Version of *STEP 7 Safety* with which the safety program was compiled.
- Information on the F-runtime groups
  - Name of F-runtime group
  - F-runtime groups signature
  - Current cycle time
  - Max. cycle time
  - Current runtime
  - Max. runtime

The following is displayed for each F-I/O on the "Module information" web page in the "Fail-safe" tab:

- F-parameter signature (with addresses)
- Safety mode
- F-monitoring time
- F-source address
- F-destination address

Write access to F-blocks is not permitted.

Note

Controlling fail-safe inputs/outputs can result set the F-CPU to STOP.

The following points relate to the S7-1500 F-Software Controller

The S7-1500 F-Software Controller is a fail-safe software CPU that is used on the following devices.

S7-1500 F-Software Controller	Device
CPU 1505SP (T)F	• CPU 1515SP PC
CPU 1507S F	• IPC 2x7E* • IPC 4x7D* • IPC 4x7E* • IPC 627D** • IPC 677D** • IPC 827D**
CPU 1508S F	• IPC 4x7E* • IPC 627D** • IPC 677D** • IPC 827D**

* Can only be used when NVRAM is present (to be automatically allocated)

** Can only be used with PROFIBUS or PROFINET interface and when NVRAM is present (to be automatically allocated)

The devices specified in the table above react in a fail-safe manner when the S7-1500 F-Software Controller and *STEP 7 Safety* are used, even in the case of elevated electromagnetic interference. Special type tests for functional safety are therefore not required for these devices – in contrast to F-I/O. With regard to availability, however, you must observe the application-specific requirements, especially the standards for burner control.

The yellow adhesive label with the TÜV SÜD test mark for functional safety included in the scope of delivery is exclusively intended for use in connection with S7-1500 F-Software Controllers (not included in the download version of the product package). You can use the adhesive label to mark the hardware on which the S7-1500 F-Software Controller is installed. You must remove the adhesive label when you uninstall the S7-1500 F-Software Controller.

Backup and restore

Backup and restoration of project data is not supported.

Passwords for protection levels

The PC station does not distinguish between the two passwords of protection levels "Full access with fail-safe (no protection)" and "Full access (no protection)". The S7-1500 F-Software Controller distinguishes between the two passwords of protection levels "Full access with fail-safe (no protection)" and "Full access (no protection)".

ENDIS_PW instruction

When the ENDIS_PW instruction is used on an IPC, you can be locked out of your system because an IPC has no mode selector. As a remedy, you can follow a procedure similar to that described in the online help for the ENDIS_PW instruction under "Preventing unintentional lockout of an S7-1200 CPU".

The following applies for PC stations up to and including V2.0: If an unintentional lockout occurs, you can remedy this only by uninstalling and installing the S7-1500 F-Software Controller.

The following applies for PC stations as of V2.1: Members of the Windows "Failsafe Operators" user group can bypass the lockout using the "Delete Configuration" function.

Note

The Windows user "Everyone" is not taken into consideration if it is in the "Failsafe Operators" Windows user group.

TPM functionality

The TPM functionality cannot be used for S7-1500 F-Software Controllers because it could result in a STOP.

Using EWF or UWF and the EWF or UWF Manager

You cannot select EWF or UWF and the EWF or UWF Manager for the CPU volume.

Other particularities

WARNING

You must limit access for the S7-1500 F-Software Controller through access protection to persons who are authorized to install or uninstall the software of the S7-1500 F-Software Controller.

Note

With an S7-1500 F-Software Controller with a PC station up to and including V2.1, the "Delete Configuration" function is only offered on the PC-station panel when no access protection (no protection) is set up on the F-CPU.

With a PC station as of V2.2, it is checked whether the Windows user is a member of the "Failsafe Operators" Windows user group. If the logged-on Windows user is a member of the group, he can execute the "Delete Configuration" function even when the F-password is set. If the logged-on Windows user is not a member of the group, the PC station behaves as up to V2.1.

Note

If the S7-1500 F-Software Controller features an access protection, this is not deleted with "Delete Configuration" and is retained.

Note

Required BIOS version for CPU 1505SP F prior to V2.5

For use of the CPU 1505SP F, you require BIOS version V2.00_02.01 or higher.

Note

The CPU clock must not be changed in RUN because this would result in a STOP. You can prevent this by disabling the energy-saving function.

Note

Assignment of PROFIsafe addresses for F-modules via PROFIBUS on IPCs with S7-1500 F Software Controller prior to V2.5

If you want to assign PROFIsafe addresses for F-modules that are being operated via PROFIBUS on an IPC with an S7-1500 F-Software Controller, assign the PROFIsafe addresses to the F-modules and then perform a power on/power off of the PROFIBUS station.

Note

Loading the safety program or activating safety mode for S7-1500 F Software Controller prior to V2.5

After loading the safety program or activating safety mode, close the panel and then open it again to update the display on the panel.

Note

If you execute an update for a S7-1500 F Software Controller with V2.0 to a version > 2.0, the value "Last fail-safe change" is set to the time of installation if a safety program is already installed on the S7-1500 F-Software Controller.

Note

The "Configuration file export" functionality requires the *STEP 7 Safety* add-on package as of V15 and an S7-1500 F Software Controller prior to V2.5.

Siemens AG
Division Digital Factory
Postfach 48 48
90026 NÜRNBERG
GERMANY

F-CPUs
A5E35635424-AG, 11/2018

SIEMENS

SIMATIC S7-1200/S7-1500 CPU F

Information produit

Notes relatives à la sécurité

Siemens commercialise des produits et solutions comprenant des fonctions de sécurité industrielle qui contribuent à une exploitation sûre des installations, solutions, machines, équipements et réseaux.

Pour garantir la sécurité des installations, systèmes, machines et réseaux contre les cybermenaces, il est nécessaire d'implémenter (et de préserver) un concept de sécurité industrielle global et de pointe. Les produits et solutions de Siemens constituent une partie de ce concept.

Il incombe aux clients d'empêcher tout accès non autorisé à leurs installations, systèmes, machines et réseaux. Ces systèmes, machines et composants doivent uniquement être connectés au réseau d'entreprise ou à Internet si et dans la mesure où cela est nécessaire et seulement si des mesures de protection adéquates (ex: pare-feux et/ou segmentation du réseau) ont été prises.

Pour plus d'informations sur les mesures de protection pouvant être mises en œuvre dans le domaine de la sécurité industrielle, rendez-vous sur (https://www.siemens.com/industrialsecurity).

Les produits et solutions Siemens font l'objet de développements continus pour être encore plus sûrs. Siemens recommande vivement d'effectuer des mises à jour dès que celles-ci sont disponibles et d'utiliser la dernière version des produits. L'utilisation de versions qui ne sont plus prises en charge et la non-application des dernières mises à jour peut augmenter le risque de cybermenaces pour nos clients.

Pour être informé des mises à jour produit, abonnez-vous au flux RSS Siemens Industrial Security à l'adresse suivante (https://www.siemens.com/industrialsecurity).

Contenu

Introduction

Cette Information produit contient des indications importantes concernant les CPU F citées au paragraphe "Domaine de validité". L'Information produit fait partie de la livraison du produit. Les informations contenues dans cette information produit prévalent en cas de doute sur celles d'autres documents.

Domaine de validité

Les informations contenues dans cette Information produit s'appliquent aux CPU F suivantes :

CPU F S7-1200	CPU F S7-1500		
• CPU 1212FC DC/DC/DC • CPU 1212FC DC/DC/Rly • CPU 1214FC DC/DC/DC • CPU 1214FC DC/DC/Rly • CPU 1215FC DC/DC/DC • CPU 1215FC DC/DC/Rly	• CPU 1511(T)F-1 PN • CPU 1513F-1 PN • CPU 1515(T)F-2 PN • CPU 1516(T)F-3 PN/DP • CPU 1517(T)F-3 PN/DP • CPU 1518F-4 PN/DP • CPU 1518F-4 PN/DP (MFP/ODK)	• CPU 1510SP F-1 PN • CPU 1512SP F-1 PN • CPU 1516proF-2 PN	Contrôleur logiciel S7-1500 F • CPU 1505SP (T)F • CPU 1507S F • CPU 1508S F

© Siemens AG 2015 - 2018. Tous droits réservés

Champs d'application

Les principaux champs d'application des CPU F S7-1200/1500 sont la sécurité des personnes et des machines ainsi que la commande de brûleurs. Outre le programme de sécurité, vous pouvez programmer des applications standard.

Vous pouvez exploiter les CPU F S7-1200/1500 en mode de sécurité ou en mode standard.

L'installation du logiciel optionnel *STEP 7 Safety* est requise pour le mode de sécurité. Si le logiciel optionnel *STEP 7 Safety* n'est pas installé, vous pouvez utiliser les CPU F S7-1200/1500 en mode standard. En mode standard, les CPU F S7-1200/1500 ont le même comportement que les CPU S7-1200/1500 standard.

Pour plus d'informations sur l'utilisation des CPU F S7-1200/1500 en mode de sécurité, référez-vous au manuel de programmation et d'utilisation "SIMATIC Safety - Configuring and Programming (http://support.automation.siemens.com/WW/view/en/54110126)".

Pour plus d'informations sur l'utilisation des CPU F S7-1200 en mode standard, référez-vous au manuel système "Système d'automatisation S7-1200 (https://support.industry.siemens.com/cs/ww/fr/view/109478121)".

Pour plus d'informations sur l'utilisation des CPU F S7-1500 en mode standard, référez-vous aux manuels des CPU standard S7-1500 et des CPU T standard S7-1500 respectifs sous les liens internet suivants :

- CPU 151x (http://support.automation.siemens.com/WW/view/fr/67295862/133300)
- CPUs 151xT (https://support.industry.siemens.com/cs/ww/de/fr/22057/man)
- CPU 151xSP (http://support.automation.siemens.com/WW/view/fr/90466439/133300)
- CPU 1516pro-2 PN (https://support.industry.siemens.com/cs/ww/fr/ps/13906/man)
- Contrôleur logiciel S7-1500 (http://support.automation.siemens.com/WW/view/fr/109740725)

Vous trouverez le firmware actuel de la CPU F concernée en parcourant les téléchargements avec le n° d'article respectif sur le portail Industry Online Support (https://support.industry.siemens.com).

Remarque

Tenez compte des exigences spécifiques à une application, p. ex. l'immunité aux microcoupures pour les blocs d'alimentation.

Valeurs PFD_{avg}, PFH pour les CPU F

Vous trouverez ci-dessous les valeurs de la probabilité de défaillance (valeurs PFD_{avg}, PFH) pour les CPU F précitées avec un temps de mission de 20 ans et une durée de panne de 100 heures :

Fonctionnement en mode demande faible low demand mode **selon la norme CEI 61508:2010 :** **PFD_{avg} = Average probability of a dangerous failure on demand**	**Fonctionnement en mode demande élevé / mode continu** high demand/continuous mode **selon la norme CEI 61508:2010 :** **PFH = Average frequency of a dangerous failure [h^{-1}]**
< 2E-05	< 1E-09

Aperçu de la mémoire de travail des CPU F, comparaison avec les CPU standard

CPU	Mémoire de travail	CPU F	Mémoire de travail
CPU 1212C DC/DC/DC CPU 1212C DC/DC/Rly	75 Ko	CPU 1212FC DC/DC/DC CPU 1212FC DC/DC/Rly	100 Ko
CPU 1214C DC/DC/DC CPU 1214C DC/DC/Rly	100 Ko	CPU 1214FC DC/DC/DC CPU 1214FC DC/DC/Rly	125 Ko
CPU 1215C DC/DC/DC CPU 1215C DC/DC/Rly	125 Ko	CPU 1215FC DC/DC/DC CPU 1215FC DC/DC/Rly	150 Ko
CPU 1511-1 PN	150 Ko	CPU 1511F-1 PN	225 Ko
CPU 1511T-1 PN	225 Ko	CPU 1511TF-1 PN	225 Ko
CPU 1513-1 PN	300 Ko	CPU 1513F-1 PN	450 Ko
CPU 1515-1 PN	500 Ko	CPU 1515F-1 PN	750 Ko
CPU 1515T-1 PN	750 Ko	CPU 1515TF-1 PN	750 Ko

CPU	Mémoire de travail	CPU F	Mémoire de travail
CPU 1516-3 PN/DP	1 Mo	CPU 1516F-3 PN/DP	1,5 Mo
CPU 1516T-3 PN/DP	1,5 Mo	CPU 1516TF-3 PN/DP	1,5 Mo
CPU 1517-3 PN/DP	2 Mo	CPU 1517F-3 PN/DP	3 Mo
CPU 1517T-3 PN/DP	3 Mo	CPU 1517TF-3 PN/DP	3 Mo
CPU 1518-4 PN/DP (MFP/ODK)	4 Mo	CPU 1518F-4 PN/DP (MFP/ODK)	6 Mo
CPU 1510SP-1 PN	100 Ko	CPU 1510SP F-1 PN	150 Ko
CPU 1512SP-1 PN	200 Ko	CPU 1512SP F-1 PN	300 Ko
CPU 1516pro-2 PN	1 Mo	CPU 1516proF-2 PN	1,5 Mo
CPU 1505SP (T)	1 Mo	CPU 1505SP (T)F	1,5 Mo
CPU 1507S	5 Mo	CPU 1507S F	7,5 Mo
CPU 1508S	10 Mo	CPU 1508S F	12,5 Mo

Prise en charge de PROFIsafe V2

Les interfaces qui prennent en charge PROFINET IO prennent également en charge PROFIsafe V2.

Restriction pour les instructions "CREAT_DB" et "DELETE_DB"

Les blocs de données F ne peuvent être ni générés ni effacés.

Restriction pour les instructions "READ_DBL" et "WRIT_DBL"

L’adresse de destination ne peut pas être celle d’un bloc de données F (DB F).

Restriction lors de la configuration du comportement rémanent des blocs de données

La configuration de la rémanence des blocs de données F n’est pas prise en charge. Ainsi, les valeurs effectives des DB F ne sont pas rémanentes après une mise hors tension puis sous tension et un redémarrage (STOP-RUN) de la CPU F. Les DB F prennent les valeurs initiales de la mémoire de chargement.

La case à cocher "Rémanence" est grisée pour toutes les variables dans les DB F.

Commande de configuration (gestion des options) sur une CPU F S7-1200

La commande de configuration (gestion des options) sur une CPU F S7-1200 est possible avec des modules centralisés avec les restrictions suivantes :

- Les modules de sécurité S7-1200 ne doivent pas être échangés et doivent toujours être enfichés à l'emplacement qui a été configuré pour eux.

Placez les modules de sécurité S7-1200 directement à côté de la CPU F. Placez les modules standard à droite à côté des modules de sécurité S7-1200.

Marche à suivre pour charger une configuration pour un firmware de version antérieure à la V2.0 pour des CPU F S7-1500

Si vous avez chargé une CPU F S7-1500 avec une configuration pour firmware à partir de la version V2.0 avec le niveau de protection "Accès complet, y compris failsafe (pas de protection)" configuré et que vous souhaitez charger une configuration pour un firmware de version antérieure à la version V1.8 sur cette CPU F, vous devez tenir compte de ce qui suit :

Lors du chargement de la configuration avec un firmware de version antérieure à la version V1.8 sur la CPU F, le mot de passe est demandé et détecté comme incorrect.

Pour remédier à ce problème, formatez la carte mémoire SIMATIC en suivant la description de l'aide en ligne de STEP 7 sous "Formater une carte mémoire S7-1500". Vous pouvez ensuite charger la configuration pour le firmware de version antérieure à la version V1.8 sur la CPU F.

Utilisation des OB (F) d'alarme d'isochronisme

Le nombre d'OB (F) d'alarme d'isochronisme qu'il est possible d'utiliser est fonction de la CPU F mise en œuvre. Pour plus d'informations à ce sujet, référez-vous aux caractéristiques techniques de la CPU.

Si la somme des OB d'alarme d'isochronisme et des OB F d'alarme d'isochronisme dépasse le nombre spécifié dans les caractéristiques techniques de la CPU, il n'est plus possible de charger le programme utilisateur standard en RUN.

Écran (pour les CPU F S7-1500 avec écran ou panneau)

Les CPU F S7-1500 avec écran affichent les indications suivantes dans le menu "Vue d'ensemble", sous "De sécurité" :

- Mode de sécurité activé/désactivé
- Signature globale
- Dernière modification de sécurité
- La version de *STEP 7 Safety* avec laquelle le programme de sécurité a été compilé.
- Informations sur les groupes d'exécution F
  - Nom du groupe d'exécution F
  - Signature de groupe d'exécution F
  - Temps de cycle actuel
  - Temps de cycle max.
  - Temps d'exécution actuel
  - Temps d'exécution max.

Vous avez les indications suivantes sous "Paramètres de sécurité" pour chaque périphérie de sécurité :

- Signature de paramètres F (avec adresse)
- Mode de sécurité
- Temps de surveillance F
- Adresse source F
- Adresse cible F

La commande de menu supplémentaire suivante s'affiche dans le menu "Paramètres", sous "Protection".

- Verrouiller/déverrouiller le mot de passe F

L'accès en écriture aux blocs F n'est pas autorisé.

Remarque

La commande d'entrées /sorties de sécurité entraîne l'arrêt de la CPU F.

Remarque

Après un chargement des modifications du programme, le rafraîchissement de l'écran avec la version de firmware V2.5 est retardé de quelques minutes et l'écran n'est pendant ce temps pas utilisable, puis l'écran redémarre.

Serveur Web

Les CPU F S7-1200/1500 vous fournissent les indications suivantes sur la page d'accueil du serveur Web :

- Mode de sécurité activé/désactivé
- Signature globale F
- Dernière modification de sécurité
- La version de *STEP 7 Safety* avec laquelle le programme de sécurité a été compilé.
- Informations sur les groupes d'exécution F
  - Nom du groupe d'exécution F
  - Signature de groupe d'exécution F
  - Temps de cycle actuel
  - Temps de cycle max.
  - Temps d'exécution actuel
  - Temps d'exécution max.

L'onglet "Sécurité en cas de défaut" sur la page Web "Etat du module" vous fournit les informations suivantes pour chaque périphérie de sécurité :

- Signature de paramètres F (avec adresse)
- Mode de sécurité
- Temps de surveillance F
- Adresse source F
- Adresse cible F

L'accès en écriture aux blocs F n'est pas autorisé.

Remarque

La commande d'entrées /sorties de sécurité entraîne l'arrêt de la CPU F.

Les points suivants concernent le contrôleur logiciel S7-1500 F

Le contrôleur logiciel S7-1500 F est une CPU logicielle de sécurité qui est utilisée sur les appareils suivants :

Contrôleur logiciel S7-1500 F	Appareil
CPU 1505SP (T)F	• CPU 1515SP PC
CPU 1507S F	• IPC 2x7E* • IPC 4x7D* • IPC 4x7E* • IPC 627D** • IPC 677D** • IPC 827D**
CPU 1508S F	• IPC 4x7E* • IPC 627D** • IPC 677D** • IPC 827D**

* Utilisable seulement lorsqu'une NVRAM est présente (affectation automatique)

** Utilisable seulement avec interface PROFIBUS ou PROFINET et si une NVRAM est présente (affectation automatique)

Les appareils présentés dans le tableau ci-dessus réagissent de manière sûre lors de l'utilisation du contrôleur logiciel S7-1500 F et de *STEP 7 Safety*, y compris en cas d'importantes interférences électromagnétiques. C'est pourquoi des essais de sécurité spéciaux ne sont pas nécessaires pour ces appareils. Seule la périphérie de sécurité doit être soumise à un examen correspondant. Tenez compte cependant des exigences spécifiques d'une application, notamment des normes relatives à la commande de brûleurs concernant la disponibilité.

L'étiquette jaune fournie à la livraison et qui porte la marque d'homologation du TÜV SÜD pour la sécurité fonctionelle est prévue exclusivement pour l'utilisation de contrôleurs logiciels S7-1500 F (ne fait pas partie de la livraison en cas de téléchargement). Vous pouvez utiliser l'étiquette pour identifier le matériel sur lequel a été installé le contrôleur logiciel S7-1500 F. Si vous désinstallez le contrôleur logiciel S7-1500 F, vous devez retirer l'étiquette.

Sauvegarde et restauration

La sauvegarde et la restauration de données de projet ne sont pas prises en charge.

Mots de passe pour les niveaux de protection

La station PC ne fait pas la différence entre les deux mots de passe des niveaux de protection "Accès complet, y compris failsafe (pas de protection)" et "Accès complet (pas de protection)". Le contrôleur logiciel S7-1500 F ne fait pas la différence entre les deux mots de passe des niveaux de protection "Accès complet, y compris failsafe (pas de protection)" et "Accès complet (pas de protection)".

Instruction ENDIS_PW

Lors de l'utilisation de l'instruction ENDIS_PW sur un IPC, vous pouvez perdre tout accès à votre système puisqu'un IPC ne possède pas de sélecteur de mode. Pour remédier à ce problème, vous pouvez suivre ce qui est décrit dans l'aide en ligne à propos de l'instruction ENDIS_PW sous "Éviter le blocage involontaire pour une CPU S7-1200".

Pour les stations PC jusqu'à la version V2.0 : Si un blocage involontaire se produit, vous ne pouvez procéder au déblocage qu'en désinstallant et installant le contrôleur logiciel S7-1500 F.

Pour la station PC à partir de la V2.1 : Les membres du groupe d'utilisateurs Windows "Failsafe Operators" peuvent utiliser la fonction "Delete Configuration" pour éviter le blocage.

Remarque

L'utilisateur Windows "Tout le monde" n'est pas pris en compte s'il appartient au groupe d'utilisateurs Windows "Failsafe Operators".

Fonction TPM

La fonction TPM ne peut pas être utilisée pour le contrôleur logiciel S7-1500 F, sous peine de provoquer un ARRÊT.

Utilisation du EWF ou UWF et du gestionnaire EWF ou UWF

Vous ne devez pas sélectionner EWF ou UWF et le gestionnaire EWF ou UWF pour le volume de la CPU.

Particularités supplémentaires

⚠ ATTENTION

Une sécurité d'accès vous permet de restreindre le droit d'accès au contrôleur logiciel S7-1500 F à un cercle de personnes qui seront alors les seules à avoir le droit d'installer ou de désinstaller le logiciel du contrôleur logiciel S7-1500 F.

Remarque

Dans le cas d'un contrôleur logiciel S7-1500 F jusqu'à V2.1 comprise, la fonction "Delete Configuration" n'est proposée sur le panneau de commande de la station PC que si aucune protection d'accès n'est configurée sur la CPU F (pas de protection).

Dans le cas d'une station PC à partir de V2.2, une vérification est effectuée pour déterminer si l'utilisateur est membre du groupe d'utilisateurs Windows "Failsafe Operators". Si l'utilisateur Windows est membre du groupe, il peut également exécuter la fonction "Delete Configuration" en ayant entré le mot de passe F. Si l'utilisateur Windows identifié n'est pas membre du groupe, la station PC se comporte comme les versions jusqu'à V2.1.

Remarque

Si le contrôleur logiciel S7-1500 F est pourvu d'une protection d'accès, cette dernière n'est pas supprimée avec "Delete Configuration", elle est conservée.

Remarque

Version BIOS requise pour la CPU 1505SP F inférieure à V2.5

Pour pouvoir utiliser la CPU 1505SP F, il vous faut au moins la version V2.00_02.01 du BIOS.

Remarque

L'horloge de la CPU ne doit pas être modifiée en mode MARCHE, sous peine de provoquer un ARRÊT. Vous pouvez empêcher cela en désactivant la fonction d'économie d'énergie.

Remarque

Affectation d'adresses PROFIsafe à des modules F avec PROFIBUS sur des IPC avec contrôleur logiciel S7-1500 F de version inférieure à V2.5.

Si vous voulez affecter des adresses PROFIsafe à des modules de sécurité qui fonctionnent avec PROFIBUS sur un IPC avec un contrôleur logiciel S7-1500 F, attribuez les adresses PROFIsafe aux modules F puis effectuez une mise hors tension puis une mise sous tension de la station PROFIBUS.

Remarque

Charger le programme de sécurité ou activer le mode de sécurité pour le contrôleur logiciel S7-1500 F de version inférieure à V2.5.

Après avoir chargé le programme de sécurité ou activé le mode de sécurité, fermez le panneau de commande et ouvrez-le de nouveau pour actualiser l'affichage.

Remarque

Lors de la mise à jour d'un contrôleur logiciel S7-1500 F version 2.0 à une version > 2.0, la valeur "Dernière modification de sécurité" est mise sur le dernier événement d'installation si le programme de sécurité se trouve déjà sur le contrôleur logiciel S7-1500 F.

Remarque

La fonctionnalité "Exportation du fichier de configuration" requiert le pack logiciel *STEP 7 Safety* à partir de la version V15 et la version S7-1500 F Software Controller à partir de V2.5.

Siemens AG
Division Digital Factory
Postfach 48 48
90026 NÜRNBERG
ALLEMAGNE

CPU F
A5E35635424-AG, 11/2018

SIEMENS

SIMATIC S7-1200/S7-1500 CPU F

Información del producto

Información de seguridad

Siemens ofrece productos y soluciones con funciones de seguridad industrial con el objetivo de hacer más seguro el funcionamiento de instalaciones, sistemas, máquinas y redes.

Para proteger las instalaciones, los sistemas, las máquinas y las redes de amenazas cibernéticas, es necesario implementar (y mantener continuamente) un concepto de seguridad industrial integral que sea conforme a la tecnología más avanzada. Los productos y las soluciones de Siemens constituyen únicamente una parte de este concepto.

Los clientes son responsables de impedir el acceso no autorizado a sus instalaciones, sistemas, máquinas y redes. Dichos sistemas, máquinas y componentes solo deben estar conectados a la red corporativa o a Internet cuando y en la medida que sea necesario y siempre que se hayan tomado las medidas de protección adecuadas (p. ej. uso de cortafuegos y segmentación de la red).

Para obtener información adicional sobre las medidas de seguridad industrial que podrían ser implementadas, por favor visite (https://www.siemens.com/industrialsecurity).

Los productos y las soluciones de Siemens están sometidos a un desarrollo constante con el fin de mejorar todavía más su seguridad. Siemens recomienda expresamente realizar actualizaciones en cuanto estén disponibles y utilizar únicamente las últimas versiones de los productos. El uso de versiones anteriores o que ya no se soportan puede aumentar el riesgo de amenazas cibernéticas.

Para mantenerse informado de las actualizaciones de productos, recomendamos que se suscriba al Siemens Industrial Security RSS Feed en (https://www.siemens.com/industrialsecurity).

Contenido

Introducción

Esta información de producto contiene datos importantes sobre las CPU F mencionadas en el apartado "Ámbito de validez". La información de producto forma parte del producto suministrado. En caso de duda, el contenido de esta información del producto prevalece sobre lo indicado en otras fuentes.

Ámbito de validez

El contenido de esta información del producto es válido para las CPU F que se indican a continuación:

CPU F S7-1200	CPU F S7-1500		
• CPU 1212FC DC/DC/DC • CPU 1212FC DC/DC/Rly • CPU 1214FC DC/DC/DC • CPU 1214FC DC/DC/Rly • CPU 1215FC DC/DC/DC • CPU 1215FC DC/DC/Rly	• CPU 1511(T)F-1 PN • CPU 1513F-1 PN • CPU 1515(T)F-2 PN • CPU 1516(T)F-3 PN/DP • CPU 1517(T)F-3 PN/DP • CPU 1518F-4 PN/DP • CPU 1518F-4 PN/DP (MFP/ODK)	• CPU 1510SP F-1 PN • CPU 1512SP F-1 PN • CPU 1516proF-2 PN	Controladores por software S7-1500 F • CPU 1505SP (T)F • CPU 1507S F • CPU 1508S F

© Siemens AG 2015 - 2018. Reservados todos los derechos
A5E35635424-AG, 11/2018

Campos de aplicación

Los principales campos de aplicación de las CPU F S7-1200/1500 son la protección de personas y máquinas así como el control de quemadores. Además del programa de seguridad, también se pueden programar aplicaciones estándar.

Las CPU F S7-1200/1500 se pueden utilizar en modo de seguridad o en modo estándar.

Para el modo de seguridad es necesario que esté instalado el paquete opcional *STEP 7 Safety*. Si no está instalado el paquete opcional *STEP 7 Safety*, puede utilizar las CPU F S7-1200/1500 en modo estándar. En el modo estándar, las CPU F S7-1200/1500 se comportan como CPU estándar S7-1200/1500.

Encontrará información sobre el uso de las CPU F S7-1200/1500 en modo de seguridad en el manual de programación y de manejo "SIMATIC Safety: Configuring and Programming (http://support.automation.siemens.com/WW/view/en/54110126)" (en inglés).

Encontrará información sobre el uso de las CPU F S7-1200 en modo estándar en el manual de sistema "Sistema de automatización S7-1200 (https://support.industry.siemens.com/cs/ww/es/view/109478121)".

Encontrará información sobre el uso de las CPU F S7-1500 en modo estándar en los respectivos manuales de producto de las CPU estándar S7-1500 y CPU T estándar S7-1500, en los enlaces siguientes:

- CPU 151x (http://support.automation.siemens.com/WW/view/es/67295862/133300)
- CPU 151xT (https://support.industry.siemens.com/cs/ww/es/ps/22057/man)
- CPU 151xSP (http://support.automation.siemens.com/WW/view/es/90466439/133300)
- CPU 1516pro-2 PN (https://support.industry.siemens.com/cs/ww/es/ps/13906/man)
- Controladores por software S7-1500 (http://support.automation.siemens.com/WW/view/es/109740725)

Encontrará el firmware actual para la CPU en cuestión si busca descargas con la referencia correspondiente en el Industry Online Support (https://support.industry.siemens.com).

Nota

Tenga en cuenta los requisitos específicos de la aplicación, p. ej., en lo que respecta al tiempo de regulación por pérdida de alimentación en el caso de fuentes de alimentación o generadores de alta tensión.

Valores PFD_{avg}, PFH para CPU F

A continuación se ofrecen los valores de probabilidad de fallo (valores PFD_{avg}, PFH) para las CPU antes mencionadas con una vida útil de 20 años y un tiempo de reparación de 100 horas:

Funcionamiento en modo de baja demanda low demand mode **según IEC 61508:2010:** **PFD_{avg} = Average probability of a dangerous failure on demand**	**Funcionamiento en modo de demanda alta o continua** high demand/continuous mode **según IEC 61508:2010:** **PFH = Average frequency of a dangerous failure [h^{-1}]**
< 2E-05	< 1E-09

Comparativa de la memoria de trabajo de las CPU F frente a la de las CPU estándar

CPU	Memoria de trabajo	CPU F	Memoria de trabajo
CPU 1212C DC/DC/DC CPU 1212C DC/DC/Rly	75 kbytes	CPU 1212FC DC/DC/DC CPU 1212FC DC/DC/Rly	100 kbytes
CPU 1214C DC/DC/DC CPU 1214C DC/DC/Rly	100 kbytes	CPU 1214FC DC/DC/DC CPU 1214FC DC/DC/Rly	125 kbytes
CPU 1215C DC/DC/DC CPU 1215C DC/DC/Rly	125 kbytes	CPU 1215FC DC/DC/DC CPU 1215FC DC/DC/Rly	150 kbytes
CPU 1511-1 PN	150 kbytes	CPU 1511F-1 PN	225 kbytes
CPU 1511T-1 PN	225 kbytes	CPU 1511TF-1 PN	225 kbytes
CPU 1513-1 PN	300 kbytes	CPU 1513F-1 PN	450 kbytes
CPU 1515-1 PN	500 kbytes	CPU 1515F-1 PN	750 kbytes
CPU 1515T-1 PN	750 kbytes	CPU 1515TF-1 PN	750 kbytes

CPU	Memoria de trabajo	CPU F	Memoria de trabajo
CPU 1516-3 PN/DP	1 Mbyte	CPU 1516F-3 PN/DP	1,5 Mbytes
CPU 1516T-3 PN/DP	1,5 Mbytes	CPU 1516TF-3 PN/DP	1,5 Mbytes
CPU 1517-3 PN/DP	2 Mbytes	CPU 1517F-3 PN/DP	3 Mbytes
CPU 1517T-3 PN/DP	3 Mbytes	CPU 1517TF-3 PN/DP	3 Mbytes
CPU 1518-4 PN/DP (MFP/ODK)	4 Mbytes	CPU 1518F-4 PN/DP (MFP/ODK)	6 Mbytes
CPU 1510SP-1 PN	100 kbytes	CPU 1510SP F-1 PN	150 kbytes
CPU 1512SP-1 PN	200 kbytes	CPU 1512SP F-1 PN	300 kbytes
CPU 1516pro-2 PN	1 Mbyte	CPU 1516proF-2 PN	1,5 Mbytes
CPU 1505SP (T)	1 Mbyte	CPU 1505SP (T)F	1,5 Mbytes
CPU 1507S	5 Mbytes	CPU 1507S F	7,5 Mbytes
CPU 1508S	10 Mbytes	CPU 1508S F	12,5 Mbytes

Soporte de PROFIsafe V2

Las interfaces que soportan PROFINET IO también soportan PROFIsafe V2.

Restricción con las instrucciones "CREAT_DB" y "DELETE_DB"

Los bloques de datos F no se pueden crear ni eliminar.

Restricción con las instrucciones "READ_DBL" y "WRIT_DBL"

La dirección de destino no debe apuntar a un bloque de datos F.

Restricción en la configuración del comportamiento remanente de bloques de datos

No se puede configurar la remanencia de bloques de datos F. Esto significa que en caso de Power Off/On y rearranque (STOP-RUN) de la CPU F, los valores actuales de los bloques de datos F no son remanentes. Los bloques de datos F contienen los valores iniciales de la memoria de carga.

La casilla de verificación "Remanencia" de los bloques de datos F se visualiza en gris para todas las variables.

Control de configuración (configuración futura) en una CPU F S7-1200

El control de configuración (configuración futura) en una CPU F S7-1200 se puede realizar con módulos centrales con la siguiente restricción:

- Los módulos de seguridad S7-1200 no puede cambiarse y deben estar siempre físicamente enchufados en el slot que tienen configurado.

Coloque los módulos de seguridad S7-1200 directamente junto a la CPU F. Coloque los módulos estándar a la derecha de los módulos de seguridad S7-1200.

Procedimiento para cargar una configuración para firmware < V2.0 en CPU F S7-1500

Si ha cargado en una CPU F S7-1500 una configuración para el firmware V2.0 o sup. con el nivel de protección configurado "Acceso completo incl. de seguridad (sin protección)" y ahora quiere cargar una configuración para firmware <= V1.8 en esta CPU F, deberá tener en cuenta lo siguiente:

Cuando se carga la configuración con firmware <= V1.8 en la CPU F la contraseña se consulta y se reconoce como no válida.

Para solucionarlo, formatee la SIMATIC Memory Card como se describe en la ayuda en pantalla de STEP 7, en "Formatear una S7-1500 Memory Card". A continuación puede cargar la configuración para firmware <= V1.8 en la CPU F.

Uso de OB (de seguridad) de alarma de sincronismo

El número de OB (de seguridad) de sincronismo depende de la CPU de seguridad utilizada. Encontrará información al respecto en los datos técnicos de la CPU.

Si la suma de los OB de sincronismo y del OB F de sincronismo excede el número indicado en los datos técnicos de la CPU, ya no será posible cargar el programa de usuario estándar en RUN.

Display (en CPU F S7-1500 con display o panel)

Las CPU F S7-1500 con display muestran lo siguiente en el menú "Vista general", bajo "Seguridad":

- Modo de seguridad activado/desactivado
- Firma general F
- Última modificación de seguridad
- La versión de *STEP 7 Safety* con la que se ha compilado el programa de seguridad.
- Información sobre los grupos de ejecución F
  - Nombre del grupo de ejecución F
  - Firma del grupo de ejecución F
  - Tiempo de ciclo actual
  - Tiempo de ciclo máx.
  - Tiempo de ejecución actual
  - Tiempo de ejecución máx.

Para cada periferia F, en "Parámetros de seguridad" se muestra lo siguiente:

- Firma de parámetros F (con dirección)
- Modo de seguridad
- Tiempo de vigilancia F
- Dirección de origen F
- Dirección de destino F

En el menú "Ajustes", dentro de "Protección", se muestra la siguiente opción de menú adicional:

- Habilitar/bloquear contraseña F

No está permitido el acceso de escritura a los bloques F.

Nota

El control de entradas y salidas de seguridad puede producir un STOP de la CPU F.

Nota

Con el firmware V2.5 del display, tras cargar los cambios en el programa no se actualiza durante algunos pocos minutos el display y no puede manejarse, seguidamente se reinicia el display.

Servidor web

Las CPU S7-1200/1500 muestran lo siguiente en la página de inicio del servidor web:

- Modo de seguridad activado/desactivado
- Firma general F
- Última modificación de seguridad
- La versión de *STEP 7 Safety* con la que se ha compilado el programa de seguridad.
- Información sobre los grupos de ejecución F
  - Nombre del grupo de ejecución F
  - Firma del grupo de ejecución F
  - Tiempo de ciclo actual
  - Tiempo de ciclo máx.
  - Tiempo de ejecución actual
  - Tiempo de ejecución máx.

Para cada periferia F, la página web "Información del módulo" muestra lo siguiente en la pestaña "Fail-safe":

- Firma de parámetros F (con dirección)
- Modo de seguridad
- Tiempo de vigilancia F
- Dirección de origen F
- Dirección de destino F

No está permitido el acceso de escritura a los bloques F.

Nota

El control de entradas y salidas de seguridad puede producir un STOP de la CPU F.

Los puntos siguientes afectan al controlador por software S7-1500 F

El controlador por software S7-1500 F Software Controller es una CPU por software de seguridad que se utiliza en los siguientes equipos:

Controladores por software S7-1500 F	Equipo
CPU 1505SP (T)F	• CPU 1515SP PC
CPU 1507S F	• IPC 2x7E* • IPC 4x7D* • IPC 4x7E* • IPC 627D** • IPC 677D** • IPC 827D**
CPU 1508S F	• IPC 4x7E* • IPC 627D** • IPC 677D** • IPC 827D**

* Posible solo si se dispone de NVRAM (se asigna de forma automática)

** Solo puede utilizarse con interfaz PROFINET y PROFIBUS y, si hay NVRAM (se asigna de forma automática)

Los equipos indicados en la tabla anterior reaccionan de forma segura cuando se utiliza el controlador por software S7-1500 F Software Controller y *STEP 7 Safety* incluso bajo fuertes perturbaciones electromagnéticas. Así pues, para estos equipos no son necesarios ensayos de tipo especiales por lo que respecta a la seguridad funcional, a diferencia de lo que ocurre con la periferia F. Sin embargo, en lo que se refiere a la disponibilidad de los requisitos específicos de las aplicaciones deben tenerse en cuenta especialmente las normas sobre control de quemadores.

La etiqueta adhesiva amarilla con el sello TÜV SÜD de seguridad funcional que se incluye en el paquete de suministro está prevista exclusivamente para el uso con los controladores por software S7-1500 F (no se incluye en la versión de descarga). Puede emplear la etiqueta para marcar el hardware en el que se ha instalado el controlador por software S7-1500 F. Si desinstala el controlador por software S7-1500 F Software Controller, deberá retirar la etiqueta.

Copia de seguridad y restauración

No se soporta la copia de seguridad y restauración de datos de proyecto.

Contraseñas para niveles de protección

La estación PC no hace distinción entre las dos contraseñas de los niveles de protección "Acceso completo incl. de seguridad (sin protección)" y "Acceso completo (sin protección)". El controlador por software S7-1500 F sí hace distinción entre las dos contraseñas de los niveles de protección "Acceso completo incl. de seguridad (sin protección)" y "Acceso completo (sin protección)".

Instrucción ENDIS_PW

En caso de utilizar la instrucción ENDIS_PW en un IPC puede verse bloqueado por parte del sistema porque un IPC no dispone de selector de modo. Para solucionarlo puede proceder de forma análoga a como se indica en el apartado "Impedir el bloqueo no intencionado en una CPU S7-1200" de la ayuda en pantalla para la instrucción ENDIS_PW.

Para las estaciones de PC hasta la versión V2.0 vale lo siguiente: Si se ha producido un bloqueo no intencionado, solo puede anular el bloqueo desinstalando e instalando de nuevo el controlador por software S7-1500 F.

Para la estación de PC a partir de la versión V2.1 vale lo siguiente: Los miembros del grupo de usuarios de Windows "Failsafe Operators" pueden omitir el bloqueo con la función "Delete Configuration".

Nota

El usuario de Windows "Cualquiera" no se tiene en cuanta si forma parte del grupo de usuarios de Windows "Failsafe Operators".

Funcionalidad TPM

La funcionalidad TPM no puede utilizarse para el controlador por software S7-1500 F porque podría dar lugar a un STOP.

Uso de EWF o UWF y el EWF o UWF-Manager

No está permitido seleccionar el EWF o UWF y el EWF o UWF Manager para el volumen de la CPU.

Otras particularidades

⚠ ADVERTENCIA

Debe utilizar una protección de acceso para limitar el acceso al controlador por software S7-1500 F a aquellas personas autorizadas para instalar o desinstalar el software del controlador por software S7-1500 F.

Nota

En un controlador por software S7-1500 F con una estación PC hasta la versión V2.1, la función "Delete Configuration" solo estará disponible en el panel de la estación PC si en la CPU F no se ha configurado ninguna protección de acceso (sin protección).

En una estación PC a partir de la versión V2.2 se comprueba si el usuario de Windows es miembro del grupo de usuarios de Windows "Failsafe Operators". Si el usuario de Windows registrado es miembro del grupo, puede ejecutar la función "Delete Configuration" incluso si se ha definido la contraseña F. Si el usuario de Windows que ha iniciado sesión no es miembro del grupo, la estación PC se comportará como hasta la versión V2.1.

Nota

Si el controlador por software S7-1500 F dispone de protección de acceso, esta no se borra con "Delete Configuration", sino que se mantiene.

Nota

Versión necesaria de la BIOS para CPU 1505SP F anterior a la versión V2.5

Para el uso de la CPU 1505SP F se necesita la versión BIOS V2.00_02.01 o superior.

Nota

El ciclo de la CPU no se puede modificar en RUN, ya que provocaría un STOP. Puede evitarlo desactivando la función de ahorro de energía.

Nota

Asignación de las direcciones PROFIsafe para módulos F conectados a PROFIBUS en IPC con controladores por software S7-1500 F anteriores a la versión V2.5

Si desea asignar direcciones PROFIsafe a módulos F conectados mediante PROFIBUS a un IPC con un controlador por software S7-1500 F, asigne las direcciones PROFIsafe a los módulos F y a continuación realice un Power Off/On de la estación PROFIBUS.

Nota

Cargar el programa de seguridad o activar el modo de seguridad para controladores por software S7-1500 F anteriores a la versión V2.5

Después de cargar el programa de seguridad o de activar el modo de seguridad, cierre el panel y ábralo de nuevo para que se actualice la imagen en el panel.

Nota

Si en S7-1500 F Software Controller con versión 2.0 se actualiza a una versión > 2.0 y este controlador ya contiene un programa de seguridad, el valor "Última modificación de seguridad" se ajustará a la hora de la instalación.

Nota

La funcionalidad "Archivo de configuración exportación" requiere el paquete opcional *STEP 7 Safety* a partir de la versión V15 y un controlador por software S7-1500 F a partir de la versión V2.5.

Siemens AG
Division Digital Factory
Postfach 48 48
90026 NÜRNBERG
ALEMANIA

CPU F
A5E35635424-AG, 11/2018

SIEMENS

SIMATIC S7-1200/S7-1500 CPU F

Informazioni sul prodotto

Indicazioni di sicurezza

Siemens commercializza prodotti e soluzioni dotati di funzioni Industrial Security che contribuiscono al funzionamento sicuro di impianti, soluzioni, macchine e reti.

La protezione di impianti, sistemi, macchine e reti da minacce cibernetiche, richiede l'implementazione e la gestione continua di un concetto globale di Industrial Security che corrisponda allo stato attuale della tecnica. I prodotti e le soluzioni Siemens costituiscono parte integrante di questo concetto.

E' responsabilità dei clienti prevenire accessi non autorizzati ai propri impianti, sistemi, macchine e reti. Tali sistemi, macchine e componenti dovrebbero essere connessi unicamente a una rete aziendale o a internet se e nella misura in cui detta connessione sia necessaria e solo quando siano attive appropriate misure di sicurezza (ad es. firewall e segmentazione della rete).

Per ulteriori informazioni relative a misure di Industrial Security implementabili potete visitare il sito (https://www.siemens.com/industrialsecurity).

I prodotti e le soluzioni Siemens vengono costantemente perfezionati per incrementarne la sicurezza. Siemens raccomanda espressamente che gli aggiornamenti dei prodotti siano effettuati non appena disponibili e che siano utilizzate le versioni più aggiornate. L'utilizzo di versioni di prodotti non più supportate ed il mancato aggiornamento degli stessi incrementa il rischio di attacchi cibernetici.

Per essere informati sugli update dei prodotti, potete iscrivervi a Siemens Industrial Security RSS Feed al sito (https://www.siemens.com/industrialsecurity).

Contenuto

Introduzione

Le presenti Informazioni sul prodotto contengono importanti avvertenze sulle CPU F trattate al paragrafo Ambito di validità. Le informazioni sul prodotto sono parte integrante del prodotto oggetto della fornitura e hanno, in caso di dubbio, priorità su qualsiasi altra affermazione.

Ambito di validità

Le affermazioni contenute nella presente informazioni sul prodotto hanno validità per le CPU F elencate nel seguito:

CPU F S7-1200	CPU F S7-1500		
• CPU 1212FC DC/DC/DC • CPU 1212FC DC/DC/Rly • CPU 1214FC DC/DC/DC • CPU 1214FC DC/DC/Rly • CPU 1215FC DC/DC/DC • CPU 1215FC DC/DC/Rly	• CPU 1511(T)F-1 PN • CPU 1513F-1 PN • CPU 1515(T)F-2 PN • CPU 1516(T)F-3 PN/DP • CPU 1517(T)F-3 PN/DP • CPU 1518F-4 PN/DP • CPU 1518F-4 PN/DP (MFP/ODK)	• CPU 1510SP F-1 PN • CPU 1512SP F-1 PN • CPU 1516proF-2 PN	S7-1500 F Software Controller • CPU 1505SP (T)F • CPU 1507S F • CPU 1508S F

© Siemens AG 2015 - 2018. Tutti i diritti riservati

Campi di impiego

I principali campi di impiego delle CPU F S7-1200/1500 consistono nella protezione del personale e delle macchine nonché nel comando di bruciatori. Oltre al programma di sicurezza si possono programmare anche applicazioni standard.

Le CPU F S7-1200/1500 possono essere impiegate sia nel funzionamento di sicurezza, sia nel funzionamento standard.

Per il funzionamento di sicurezza è richiesta l'installazione del pacchetto opzionale *STEP 7 Safety* . In assenza del pacchetto opzionale *STEP 7 Safety* installato, le CPU F S7-1200/1500 possono essere impiegate nel funzionamento standard. Nel funzionamento standard le CPU F S7-1200/1500 si comportano come le CPU S7-1200/1500.

Informazioni sull'impiego delle CPU F S7-1200/1500 nel funzionamento di sicurezza sono reperibili nel Manuale di programmazione e d'uso SIMATIC Safety - Configuring and Programming (http://support.automation.siemens.com/WW/view/en/54110126)

Informazioni sull'impiego delle CPU F S7-1200 nel funzionamento standard sono reperibili nel Manuale di sistema "Sistema di automazione S7-1200 (https://support.industry.siemens.com/cs/ww/it/view/109478121)".

Informazioni sull'impiego delle CPU F S7-1500 nel funzionamento standard sono reperibili nei rispettivi manuali del prodotto delle CPU standard S7-1500 e delle T-CPU standard S7-1500 accessibili dai seguenti link:

- CPU 151x (http://support.automation.siemens.com/WW/view/it/67295862/133300)
- CPU 151xT (https://support.industry.siemens.com/cs/ww/it/ps/22057/man)
- CPU 151xSP (http://support.automation.siemens.com/WW/view/fr/90466439/133300)
- CPU 1516pro-2 PN (https://support.industry.siemens.com/cs/ww/it/ps/13906/man)
- S7-1500 Software Controller (http://support.automation.siemens.com/WW/view/it/109740725)

La ricerca dei firmware aggiornati, disponibili per il download, delle rispettive CPU F, avviene alla sezione Industy Online Support (https://support.industry.siemens.com) indicando il numero dell'articolo interessato.

Nota

Osservare i requisiti specifici dell'applicazione per quanto concerne ad es. il superamento di cadute di rete negli alimentatori o nelle apparecchiature di rete.

Valori PFD_{avg} e PFH nelle CPU F

Nel seguito sono riportati i valori inerenti le probabilità di guasto (valori PFD_{avg} e PFH) per le CPU F sopra indicate, riferiti ad una durata di utilizzo ventennale e a interventi di riparazione pari a 100 ore:

Funzionamento a bassa richiesta della funzione di sicurezza low demand mode **ai sensi della Norma IEC 61508:2010:** **PFD_{avg} = Average probability of a dangerous failure on demand**	**Funzionamento ad alta richiesta o modalità continua** high demand/continuous mode **ai sensi della Norma IEC 61508:2010:** **PFH = Average frequency of a dangerous failure [h^{-1}]**
< 2E-05	< 1E-09

Confronto della memoria di lavoro delle CPU F rispetto alle CPU standard.

CPU	Memoria di lavoro	CPU F	Memoria di lavoro
CPU 1212C DC/DC/DC CPU 1212C DC/DC/Rly	75 kbyte	CPU 1212FC DC/DC/DC CPU 1212FC DC/DC/Rly	100 kbyte
CPU 1214C DC/DC/DC CPU 1214C DC/DC/Rly	100 kbyte	CPU 1214FC DC/DC/DC CPU 1214FC DC/DC/Rly	125 Kbyte
CPU 1215C DC/DC/DC CPU 1215C DC/DC/Rly	125 Kbyte	CPU 1215FC DC/DC/DC CPU 1215FC DC/DC/Rly	150 kbyte
CPU 1511-1 PN	150 kbyte	CPU 1511F-1 PN	225 kbyte
CPU 1511T-1 PN	225 kbyte	CPU 1511TF-1 PN	225 kbyte
CPU 1513-1 PN	300 kbyte	CPU 1513F-1 PN	450 kbyte
CPU 1515-1 PN	500 kbyte	CPU 1515F-1 PN	750 kbyte

CPU	Memoria di lavoro	CPU F	Memoria di lavoro
CPU 1515T-1 PN	750 kbyte	CPU 1515TF-1 PN	750 kbyte
CPU 1516-3 PN/DP	1 Mbyte	CPU 1516F-3 PN/DP	1,5 Mbyte
CPU 1516T-3 PN/DP	1,5 Mbyte	CPU 1516TF-3 PN/DP	1,5 Mbyte
CPU 1517-3 PN/DP	2 Mbyte	CPU 1517F-3 PN/DP	3 Mbyte
CPU 1517T-3 PN/DP	3 Mbyte	CPU 1517TF-3 PN/DP	3 Mbyte
CPU 1518-4 PN/DP (MFP/ODK)	4 Mbyte	CPU 1518F-4 PN/DP (MFP/ODK)	6 Mbyte
CPU 1510SP-1 PN	100 kbyte	CPU 1510SP F-1 PN	150 kbyte
CPU 1512SP-1 PN	200 kbyte	CPU 1512SP F-1 PN	300 kbyte
CPU 1516pro-2 PN	1 Mbyte	CPU 1516proF-2 PN	1,5 Mbyte
CPU 1505SP (T)	1 Mbyte	CPU 1505SP (T)F	1,5 Mbyte
CPU 1507S	5 Mbyte	CPU 1507S F	7,5 Mbyte
CPU 1508S	10 Mbyte	CPU 1508S F	12,5 Mbyte

Supporto di PROFIsafe V2

Le interfacce che supportano PROFINET IO supportano anche PROFIsafe V2.

Limitazione per le istruzioni "CREAT_DB" e "DELETE_DB"

I DB F non possono essere creati né cancellati.

Limitazione per le istruzioni "READ_DBL" e "WRIT_DBL"

L'indirizzo di destinazione non può puntare a un DB F.

Limitazione per la progettazione del comportamento di ritenzione dei blocchi dati

La progettazione della ritenzione dei blocchi dati non è supportata per i DB F. In altri termini, in caso di RETE OFF/ON e nuovo avvio (STOP-RUN) della CPU F, i valori attuali dei DB F non sono a ritenzione. I DB F ricevono i valori iniziali dalla memoria di caricamento.

Nei DB F la casella di controllo "Ritenzione" è grigia per tutte le variabili.

Controllo di configurazione (ampliamenti futuri) in una CPU F S7-1200

Il controllo di configurazione (ampliamenti futuri) nelle CPU F S7-1200 con moduli centrali può essere effettuato con le seguenti limitazioni:

- I moduli fail safe S7-1200 non devono essere scambiati e devono essere sempre fisicamente inseriti nel posto connettore appositamente previsto.

Collocare i moduli fail safe S7-1200 direttamente a fianco della CPU F. Collocare i moduli standard a destra accanto ai moduli fail safe S7-1200.

Procedura di caricamento delle progettazione del firmare < V2.0 per le CPU F S7-1500

Se una CPU F S7-1500 è stata caricata con una progettazione per firmware a partire da V2.0, con livello di protezione "Accesso completo incl. fail safe (senza protezione)", e successivamente, nella stessa CPU, si intende caricare una nuova progettazione per firmware <= V1.8, osservare quanto segue:

La password richiesta ed inserita al momento del caricamento della progettazione con firmware <= V1.8, nella CPU F, viene segnalata come non valida.

Per ovviare a quest'inconveniente formattare la SIMATIC Memory Card come descritto nella Guida in linea a STEP 7, alla sezione "Formattazione di una S7-1500-Memory Card". In seguito è possibile caricare la progettazione per il firmware <= V1.8 nella CPU F.

Impiego di OB (F): Allarme di sincronismo di clock

Il numero degli OB (F) utilizzabili dipende dalla CPU F impiegata. Per informazioni sull'argomento consultare i dati tecnici della CPU.

Se la somma degli OB di allarme di sincronismo di clock e degli OB F di allarme di sincronismo di clock supera il numero indicato nei dati tecnici della CPU, non sarà più possibile caricare in RUN il programma utente standard.

Display (nelle CPU F S7-1500 con display o pannello operatore)

Nel menu "Sommario" delle CPU F S7-1500 con display, alla voce "Fail safe", viene visualizzato quanto segue:

- Funzionamento di sicurezza attivato/disattivato
- Codice generale F
- Ultima modifica fail-safe
- La versione con *STEP 7 Safety*, con la quale è stato compilato il programma di sicurezza.
- Informazioni sui gruppo di esecuzione F
  - Nome del gruppo di esecuzione F
  - Firma dei gruppi di esecuzione F
  - Tempo di ciclo attuale
  - Tempo di ciclo max.
  - Tempo di esecuzione attuale
  - Tempo di esecuzione max.

Alla voce "Parametri fail-safe" viene visualizzato quanto segue per ogni periferia F:

- Codice parametri F (con indirizzo)
- Funzionamento di sicurezza
- Tempo di controllo F
- Indirizzo di origine F
- Indirizzo di destinazione F

Inoltre, nel menu "Impostazioni", alla voce "Protezione", viene visualizzata la seguente voce di menu:

- Abilita/inibisci password F

L'accesso in scrittura ai blocchi F non è consentito.

Nota

Il comando di ingressi e uscite fail-safe può causare uno STOP della CPU F.

Nota

Con il firmare del display V2.5, dopo il caricamento delle modifiche del programma il display non viene aggiornato per alcuni minuti e non può essere utilizzato. Successivamente viene riavviato.

Server web

Sulla pagina iniziale del server web delle CPU F S7-1200/1500 è visualizzato quanto segue:

- Funzionamento di sicurezza attivato/disattivato
- Codice generale F
- Ultima modifica fail-safe
- La versione con *STEP 7 Safety*, con la quale è stato compilato il programma di sicurezza.
- Informazioni sui gruppo di esecuzione F
  - Nome del gruppo di esecuzione F
  - Firma dei gruppi di esecuzione F
  - Tempo di ciclo attuale
  - Tempo di ciclo max.
  - Tempo di esecuzione attuale
  - Tempo di esecuzione max.

Sulla pagina web "Stato dell'unità", nella scheda "Fail safe", per ogni periferia F viene visualizzato quanto segue:

- Codice parametri F (con indirizzo)
- Funzionamento di sicurezza
- Tempo di controllo F
- Indirizzo di origine F
- Indirizzo di destinazione F

L'accesso in scrittura ai blocchi F non è consentito.

Nota

Il comando di ingressi e uscite fail-safe può causare uno STOP della CPU F.

I punti elencati nel seguito interessano l'S7-1500 F Software Controller

L'S7-1500 F Software Controller è una CPU software fail safe che trova impiego nei seguenti dispositivi:

S7-1500 F Software Controller	Dispositivo
CPU 1505SP (T)F	• CPU 1515SP PC
CPU 1507S F	• IPC 2x7E* • IPC 4x7D* • IPC 4x7E* • IPC 627D** • IPC 677D** • IPC 827D**
CPU 1508S F	• IPC 4x7E* • IPC 627D** • IPC 677D** • IPC 827D**

* Impiegabile soltanto con disponibilità NVRAM (assegnazione automatica)

* Impiegabile soltanto con interfaccia PROFIBUS o PROFINET e con disponibilità NVRAM (assegnazione automatica)

Con l'impiego dell'S7-1500 F Software Controller e di *STEP 7 Safety*, i dispositivi elencati nella tabella in alto mantengono il comportamento fail safe anche in presenza di elevati disturbi elettromagnetici. Controlli specifici del tipo relativi alla sicurezza funzionale, quali quelli eseguiti nella periferia F, si rendono superflui per questi dispositivi. Per quanto concerne la disponibilità, tenere presente i requisiti specifici dell'applicazione, in particolare le norme sul controllo dei bruciatori.

L'adesivo giallo in dotazione con la fornitura, con il marchio di controllo TÜV SÜD della sicurezza funzionale, è destinato esclusivamente all'S7-1500 F Software Controller (non contenuto nella fornitura della versione di download). L'adesivo può essere utilizzato per l'identificazione dell'hardware sul quale è stato installato l'S7-1500 F Software Controller. In caso di disinstallazione dell'S7-1500 F Software Controller, l'adesivo deve essere rimosso.

Backup e ripristino

Il backup e il ripristino dei dati del progetto non vengono supportati.

Password per i livelli di protezione

La stazione PC opera una distinzione tra le password dei due livelli di protezione "Accesso completo incl. fail safe (senza protezione)" e "Accesso completo (senza protezione)". L'S7-1500 F Software Controller opera una distinzione tra le password dei due livelli di protezione "Accesso completo incl. fail safe (senza protezione)" e "Accesso completo (senza protezione)".

Istruzione ENDIS_PW

Con l'impiego dell'istruzione ENDIS_PW sull'IPC, sussiste il rischio di bloccare il proprio accesso al sistema in quando l'IPC non è provvisto di selettore dei modi operativi. Per evitare quest'inconveniente, procedere come indicato nella Guida in linea all'istruzione ENDIS_PW, alla sezione "Prevenzione del blocco indesiderato nelle CPU S7-1200".

Per stazioni PC fino alla versione V2.0 compresa, vale: La rimozione di un eventuale blocco accidentale che si sia verificato, è possibile soltanto disinstallando e reinstallando l'S7-1500 F Software Controller.

Per la stazione PC a partire dalla V2.1 vale: I membri del gruppo utenti di Windows "Failsafe Operators" possono fare uso della funzione "Delete Configuration" ed evitare il blocco.

Nota

L'utente di Windows "Everyone" non viene considerato se fa parte del gruppo utenti di Windows "Failsafe Operators".

Funzionalità TPM

L'uso della a funzionalità TPM non è consentito per l'S7-1500 F Software Controller in quanto può causare uno STOP.

Utilizzo di EWF o UWF ed EWF o Manager UWF

L'EWF o UWF e il Manager EWF o UWF non possono essere selezionati per il volume della CPU.

Ulteriori particolarità

⚠ AVVERTENZA

L'accesso all'S7-1500 F Software Controller deve essere riservato, tramite protezione di accesso, esclusivamente al personale autorizzato all'installazione e alla disinstallazione del relativo software.

Nota

La funzione "Delete Configuration" viene visualizzata sul pannello della stazione PC dell'S7-1500 F Software Controller con una stazione PC con versione V2.1 compresa soltanto se nella CPU F non è stata configurata una protezione di accesso (senza protezione).

Nella stazione PC con versione V2.2 o successiva viene controllato se l'utente Windows è membro del gruppo di utenti Windows "Failsafe Operators". Se l'utente Windows che ha effettuato il login è membro del gruppo, è autorizzato a eseguire la funzione "Delete Configuration" anche se è impostata la password F. Se l'utente Windows non è membro del gruppo la stazione PC si comporta come prima della versione V2.1.

Nota

Se l'S7-1500 F Software Controller è protetto in accesso, non è eliminabile con la funzione "Delete Configuration" e viene mantenuto.

Nota

Versioni del BIOS richieste per la CPU 1505SP F inferiori alla V2.5

L'impiego della CPU 1505SP F presuppone la disponibilità della versione V2.00_02.01 o superiore del BIOS.

Nota

Il clock della CPU non deve subire variazioni durante il funzionamento in RUN in quanto ciò potrebbe causare uno STOP. Per prevenire questo comportamento, disattivare la funzione di risparmio energetico.

Nota

Assegnazione degli indirizzi PROFIsafe ai moduli F sul PROFIBUS negli IPC con software controller S7-1500 F inferiori alla V2.5

Dopo l'assegnazione di indirizzi PROFIsafe ai moduli F operanti, tramite PROFIBUS, su un IPC con un S7-1500 F Software Controller, eseguire un Rete off/Rete on della stazione PROFIBUS.

Nota

Caricamento del programma di sicurezza e/o attivazione del funzionamento di sicurezza per software controller S7-1500 F inferiori alla V2.5

Chiudere e riaprire il pannello operatore dopo il caricamento del programma di sicurezza risp. dopo l'attivazione del funzionamento di sicurezza per aggiornare la visualizzazione del pannello.

Nota

Se l'S7-1500 F Software Controller con versione 2.0 viene aggiornato alla versione > 2.0 e contiene già un programma di sicurezza, il valore di "Ultima modifica fail safe" viene resettato e impostato sul valore valido al momento dell'installazione.

Nota

La funzionalità "Esporta file di configurazione" richiede il pacchetto opzionale *STEP 7 Safety* a partire dalla versione V15 e un software controller S7-1500 F dalla versione V2.5.

Siemens AG
Division Digital Factory
Postfach 48 48
90026 NÜRNBERG
GERMANIA

CPU F
A5E35635424-AG, 11/2018

SIEMENS

SIMATIC S7-1200/S7-1500 F-CPU

产品信息

安全信息

Siemens 为其产品及解决方案提供了工业安全功能，以支持工厂、系统、机器和网络的安全运行。

为了防止工厂、系统、机器和网络受到网络攻击，需要实施并持续维护先进且全面的工业安全保护机制。Siemens 的产品和解决方案仅构成此类概念的其中一个要素

客户负责防止其工厂、系统、机器和网络受到未经授权的访问。只有在必要时并采取适当安全措施（例如，使用防火墙和/或网络分段）的情况下，才能将系统、机器和组件连接到企业网络或 Internet。

关于可采取的工业信息安全措施的更多信息，请访问 (https://www.siemens.com/industrialsecurity)。

西门子不断对产品和解决方案进行开发和完善以提高安全性。Siemens 强烈建议您及时更新产品并始终使用最新产品版本。如果所用的产品版本不再支持，或未更新到到最新版本，则会增加客户遭受网络攻击的风险。

要及时了解有关产品更新的信息，请订阅西门子的工业信息安全 RSS 新闻推送，请访问 (https://www.siemens.com/industrialsecurity)

内容

简介

本产品信息中包含“适用范围”章节中所列 F-CPU 的重要信息。该产品信息随附产品一同提供。任何不确定之处，应以本产品信息中的内容为准。

适用范围

本产品信息中的说明适用于以下所列 F-CPU 型号：

S7-1200 F-CPU	S7-1500 F-CPU		
• CPU 1212FC DC/DC/DC • CPU 1212FC DC/DC/Rly • CPU 1214FC DC/DC/DC • CPU 1214FC DC/DC/Rly • CPU 1215FC DC/DC/DC • CPU 1215FC DC/DC/Rly	• CPU 1511(T)F-1 PN • CPU 1513F-1 PN • CPU 1515(T)F-2 PN • CPU 1516(T)F-3 PN/DP • CPU 1517(T)F-3 PN/DP • CPU 1518F-4 PN/DP • CPU 1518F-4 PN/DP (MFP/ODK)	• CPU 1510SP F-1 PN • CPU 1512SP F-1 PN • CPU 1516proF-2 PN	S7-1500 F 软件控制器 • CPU 1505SP (T)F • CPU 1507S F • CPU 1508S F

© Siemens AG 2015 - 2018. 保留所有权利
A5E35635424-AG, 11/2018

应用领域

S7-1200/1500 F-CPU 主要适用于人机安全和燃烧器控制的应用领域。除了安全程序之外，也可对标准应用程序进行编程。

S7-1200/1500 F-CPU 可在安全模式下运行，也可在标准模式下运行。

运行在安全模式时，需安装 *STEP 7 Safety* 选件包。如果未安装 *STEP 7 Safety* 选件包，则 S7-1200/S7-1500 F-CPU 只能运行在标准模式下。在标准模式中，S7-1200/1500 F-CPU 的特性与 S7-1200/1500 标准 CPU 的类似。

有关在安全模式下操作 S7-1200/1500 F-CPU 的更多信息，请参见编程和操作手册《SIMATIC 安全 - 组态和编程 (http://support.automation.siemens.com/WW/view/en/54110126)》。

有关在标准模式下操作 S7-1200 F-CPU 的更多信息，请参见《S7-1200 可编程控制器 (https://support.industry.siemens.com/cs/ww/cn/view/109478121)》系统手册。

有关在标准模式下使用 S7-1500 F-CPU 的更多信息，请参见下列链接中 S7-1500 和标准 T-CPU S7-1500 的相关手册：

- CPU 151x (http://support.automation.siemens.com/WW/view/zh/67295862/133300)
- CPUs 151xT (https://support.industry.siemens.com/cs/ww/zh/ps/22057/man)
- CPU 151xSP (http://support.automation.siemens.com/WW/view/zh/90466439/133300)
- CPU 1516pro-2 PN (https://support.industry.siemens.com/cs/ww/zh/ps/13906/man)
- S7-1500 软件控制器 (http://support.automation.siemens.com/WW/view/zh/109740725)

通过在“工业在线支持 (https://support.industry.siemens.com)”网站中输入相应的文章编号，可搜索到相应 F-CPU 的最新固件文件并进行下载。

说明

取决于应用中的特定要求，如电源/电源组的电源缓冲。

F-CPU 的 PFD_{avg} 和 PFH 值

下面根据请求值给出了上述的使用寿命为 20 年且 MTTR 为 100 小时的 F-CPU 的故障发生率（PFD_{avg} 和 PFH 值）：

低请求模式下的操作 low demand mode **符合 IEC 61508:2010：** **PFD_{avg} = Average probability of a dangerous failure on demand**	**高请求或持续模式下的操作** high demand/continuous mode **符合 IEC 61508:2010：** **PFH = Average frequency of a dangerous failure [h^{-1}]**
< 2E-05	< 1E-09

F-CPU 与标准 CPU 的工作存储器对比概述

CPU	工作存储器	F-CPU	工作存储器
CPU 1212C DC/DC/DC CPU 1212C DC/DC/Rly	75 KB	CPU 1212FC DC/DC/DC CPU 1212FC DC/DC/Rly	100 KB
CPU 1214C DC/DC/DC CPU 1214C DC/DC/Rly	100 KB	CPU 1214FC DC/DC/DC CPU 1214FC DC/DC/Rly	125 KB
CPU 1215C DC/DC/DC CPU 1215C DC/DC/Rly	125 KB	CPU 1215FC DC/DC/DC CPU 1215FC DC/DC/Rly	150 KB
CPU 1511-1 PN	150 KB	CPU 1511F-1 PN	225 KB
CPU 1511T-1 PN	225 KB	CPU 1511TF-1 PN	225 KB
CPU 1513-1 PN	300 KB	CPU 1513F-1 PN	450 KB
CPU 1515-1 PN	500 KB	CPU 1515F-1 PN	750 KB
CPU 1515T-1 PN	750 KB	CPU 1515TF-1 PN	750 KB
CPU 1516-3 PN/DP	1 MB	CPU 1516F-3 PN/DP	1.5 MB
CPU 1516T-3 PN/DP	1.5 MB	CPU 1516TF-3 PN/DP	1.5 MB
CPU 1517-3 PN/DP	2 MB	CPU 1517F-3 PN/DP	3 MB
CPU 1517T-3 PN/DP	3 MB	CPU 1517TF-3 PN/DP	3 MB

CPU	工作存储器	F-CPU	工作存储器
CPU 1518-4 PN/DP (MFP/ODK)	4 MB	CPU 1518F-4 PN/DP (MFP/ODK)	6 MB
CPU 1510SP-1 PN	100 KB	CPU 1510SP F-1 PN	150 KB
CPU 1512SP-1 PN	200 KB	CPU 1512SP F-1 PN	300 KB
CPU 1516pro-2 PN	1 MB	CPU 1516proF-2 PN	1.5 MB
CPU 1505SP (T)	1 MB	CPU 1505SP (T)F	1.5 MB
CPU 1507S	5 MB	CPU 1507S F	7.5 MB
CPU 1508S	10 MB	CPU 1508S F	12.5 MB

PROFIsafe V2 的支持

支持 PROFINET IO 的接口也支持 PROFIsafe V2。

“CREAT_DB”和“DELETE_DB”指令的使用限制

F-DB 既不能创建也不能删除。

“READ_DBL”和“WRIT_DBL”指令的使用限制

目标地址不能指向 F-DB。

组态数据块保持特性时的限制

F-DB 不支持组态数据块的保持性。这意味着，在 F-CPU 电源关闭/打开和重启 (STOP-RUN) 时，F-DB 的实际值不会被保留。F-DB 中将保留装载存储器中的初始值。

在 F-DB 中，所有变量的“保持性”(Retain) 复选框均为灰显。

S7-1200 F-CPU 的组态控制（选件处理）

S7-1200 F-CPU 上的组态控制可通过中央模块实现，但具有以下条件限制：

- 故障安全 S7-1200 模块无法交换并且必须始终插在为其组态的插槽中。

故障安全 S7-1200 模块需紧挨着 F-CPU 插入，而标准模块需插入在故障安全 S7-1200 模块的右侧。

S7-1500 F-CPU 固件版本 V2.0 及以下版本中组态加载的操作过程

如果 S7-1500 F-CPU 加载有固件版本 V2.0 及以上版本且所组态的保护等级为“完全访问，含故障安全（无保护）”(Full access with fail-safe (no protection)) 的组态，同时还希望为该 F-CPU 加载固件版本 V1.8 及以下版本的组态，则需注意以下事项：

将固件版本 V1.8 及以下版本的组态加载到 F-CPU 中时，系统将提示用户输入密码并将所输入的密码将标识为无效。

为了进行补救，可按照 STEP 7 在线帮助中“格式化 S7-1500 存储卡”部分内的说明信息，对 SIMATIC 存储卡进行格式化。之后，F-CPU 即可加载固件版本 V1.8 及以下版本的组态。

使用等时同步模式中断 (F-)OB

等时同步模式中断 (F-)OB 的数量取决于所用的 F-CPU。具体信息，请参见 CPU 的技术规范。

如果等时同步模式中断 OB 与等时同步模式中断 F-OB 的总数量大于 CPU 技术规范中所指定的数量，则在 RUN 模式下无法再加载标准用户程序。

显示屏（S7-1500 F-CPU 带显示屏或面板）

在“总览”(Overview) 菜单中的“故障安全”(Fail-safe) 内，将显示 S7-1500 F-CPU（带显示屏）的以下信息：

- 激活/取消激活安全模式 (Safety mode activated/deactivated)
- 集体 F 签名 (Collective F-signature)
- 上一次故障安全更改 (Last fail-safe change)
- 编译安全程序时的 *STEP 7 Safety* 版本。
- F 运行组的信息
  - F 运行组的名称 (Name of F-runtime group)
  - F 运行组签名
  - 当前循环时间 (Max. cycle time)
  - 最大循环时间 (Max. cycle time)
  - 当前运行时间 (Current runtime)
  - 最长运行时间 (Max. runtime)

在“故障安全参数”(Fail-safe parameters) 中，将显示每个 F-I/O 的以下信息：

- F 参数签名（带地址）(F-parameter signature (with addresses))
- 安全模式 (Safety mode)
- F 监视时间 (F-monitoring time)
- F 源地址 (F-source address)
- F 目标地址 (F-destination address)

在“设置”(Settings) 菜单的“保护”(Protection) 下，将显示以下附加菜单命令：

- 启用/禁用 F 密码 (Enable/disable F-password)

不允许对 F 块进行写访问。

说明

控制故障安全输入/输出会将 F-CPU 设置为 STOP。

说明

显示屏固件版本为 V2.5 时，加载程序更新后数分钟内，屏幕不刷新也无法操作。之后，显示屏重新启动。

Web 服务器

在 Web 服务器的起始页面中，将显示 S7-1200/1500 F-CPU 的以下信息：

- 激活/取消激活安全模式 (Safety mode activated/deactivated)
- 集体 F 签名 (Collective F-signature)
- 上一次故障安全更改 (Last fail-safe change)
- 编译安全程序时的 *STEP 7 Safety* 版本。
- F 运行组的信息
  - F 运行组的名称 (Name of F-runtime group)
  - F 运行组签名
  - 当前循环时间 (Max. cycle time)
  - 最大循环时间 (Max. cycle time)
  - 当前运行时间 (Current runtime)
  - 最长运行时间 (Max. runtime)

在“模块信息”(Module information) Web 页面的“故障安全”(Fail-safe) 选项卡中，将显示每个 F-I/O 的以下信息：

- F 参数签名（带地址）(F-parameter signature (with addresses))
- 安全模式 (Safety mode)
- F 监视时间 (F-monitoring time)
- F 源地址 (F-source address)
- F 目标地址 (F-destination address)

不允许对 F 块进行写访问。

说明

控制故障安全输入/输出会将 F-CPU 设置为 STOP。

下列信息与 S7-1500 F 软件控制器相关

S7-1500 F 软件控制器是用于下列设备的故障安全软件 CPU。

S7-1500 F 软件控制器	设备
CPU 1505SP (T)F	• CPU 1515SP PC
CPU 1507S F	• IPC 2x7E* • IPC 4x7D* • IPC 4x7E* • IPC 627D** • IPC 677D** • IPC 827D**
CPU 1508S F	• IPC 4x7E* • IPC 627D** • IPC 677D** • IPC 827D**

* 仅能在存在 NVRAM 时使用（自动分配）

** 仅能在存在 NVRAM 时才可以与 PROFIBUS 或 PROFINET 接口结合使用（自动分配）

在上表中指定的设备在使用 S7-1500 F 软件控制器和 *STEP 7 Safety*
时将以故障安全方法进行响应，甚至在高电磁干扰条件下也采用这种响应方式。因此，这些设备不需要功能安全的特殊类型测试 - 与 F I/O 相反。然而，就可用性而言，必须遵守应用特定的要求，尤其是燃烧器控制的标准。

带有功能安全 TÜV SÜD 测试标记的黄色不干胶标签包含在供货范围内，专用于与 S7-1500 F
软件控制器结合使用（不包含在产品包的下载版本中）。可用此不干胶标签来标记安装有 S7-1500 F
软件控制器的硬件。在卸载 S7-1500 F 软件控制器时必须移除该不干胶标签。

备份与恢复

不支持项目数据的备份与恢复。

保护等级的密码

PC 站不会区分“故障安全完全访问（无保护）”和“完全访问（无保护）”这两个保护等级的密码。S7-1500 F
软件控制器会区分“故障安全完全访问（无保护）”和“完全访问（无保护）”这两个保护等级的密码。

ENDIS_PW 指令

当对 IPC 使用 ENDIS_PW 指令时，由于 IPC 没有模式选择器，因此系统可能会锁定。作为补救，可以采用与“防止 S7-1200 CPU 的意外锁定”下的 ENDIS_PW 指令在线帮助中所述步骤类似的步骤。

以下内容适用于 V2.0 及以下版本的 PC 站：如果发生意外锁定，仅可以通过卸载并安装 S7-1500 F 软件控制器来进行补救。

以下内容适用于 V2.1 及以上版本的 PC 站：Windows“故障安全操作员”用户组成员可以使用“删除组态”(Delete Configuration) 功能跳过锁定。

说明

即使 Windows 用户“Everyone”包含在“Failsafe Operators”Windows 用户组中，也不具有上述功能。

TPM 功能

TPM 功能无法应用于 S7-1500 F 软件控制器，因为这可能会导致 STOP 状态。

使用 EWF 或 UWF 和 EWF 或 UWF 管理器

使用 EWF 或 UWF 以及 EWF 或 UWF 管理器，无法对 CPU 卷进行管理。

其它特性

⚠ 警告
必须通过访问保护将 S7-1500 F 软件控制器的访问权限限制为有权安装或卸载 S7-1500 F 软件控制器的软件的人员。

说明

使用带有 PC 站 V2.1 及以下版本的 S7-1500 F 软件控制器时，仅当 F-CPU 中未设置访问保护（无保护）时，PC 站的面板中才能使用“删除组态”(Delete Configuration) 功能。

使用 PC 站 V2.2 及以上版本时，系统将检查 Windows 用户是否为 Windows 用户组“故障安全操作员”(Failsafe Operators) 的组成员。如果登录的 Windows 用户为该组成员，即使设置了 F 密码，也可执行“删除组态”(Delete Configuration) 功能。如果登录的 Windows 用户不在该组中，则该 PC 站仅支持版本 V2.1 及以下版本的功能。

说明

如果 S7-1500 F 软件控制器设置了访问保护，则无法使用“删除组态”功能进行删除，组态将保留不变。

说明

CPU 1505SP F V2.5 以下版本所需的 BIOS 版本

若要使用 CPU 1505SP F，需要 BIOS V2.00_02.01 或更高版本。

说明

处于 RUN 状态时不得修改 CPU 时钟，因为这会导致进入 STOP 状态。可通过禁用节能功能防止这种情况事件发生。

说明

使用 S7-1500 F 软件控制器 V2.5 以下版本通过 IPC 的 PROFIBUS 为 F 模块分配 PROFIsafe 地址

如果想要使用 S7-1500 F 软件控制器为通过 IPC 的 PROFIBUS 操作的 F 模块分配 PROFIsafe 地址，将 PROFIsafe 地址分配给 F 模块，然后执行 PROFIBUS 站通电和断电。

说明

为 S7-1500 F 软件控制器 V2.5 以下版本加载安全程序或激活安全模式

加载安全程序或激活安全模式后，关闭面板并随后重新将其打开以更新面板上的显示屏。

说明

如果将 S7-1500 F 软件控制器 V2.0 的版本升级为 V2.0 以上版本，且 S7-1500 F
软件控制器上安装有安全程序，则“上一次故障安全更改”(Last fail-safe change) 值将设置为该程序的安装时间。

说明

“组态文件导出”(Configuration file export) 功能需要 *STEP 7 Safety* 附加包 V15 及以上版本和 S7-1500 F 软件控制器 V2.5
以下版本。

Siemens AG
Division Digital Factory
Postfach 48 48
90026 NÜRNBERG
德国

F-CPU
A5E35635424-AG, 11/2018

SIEMENS

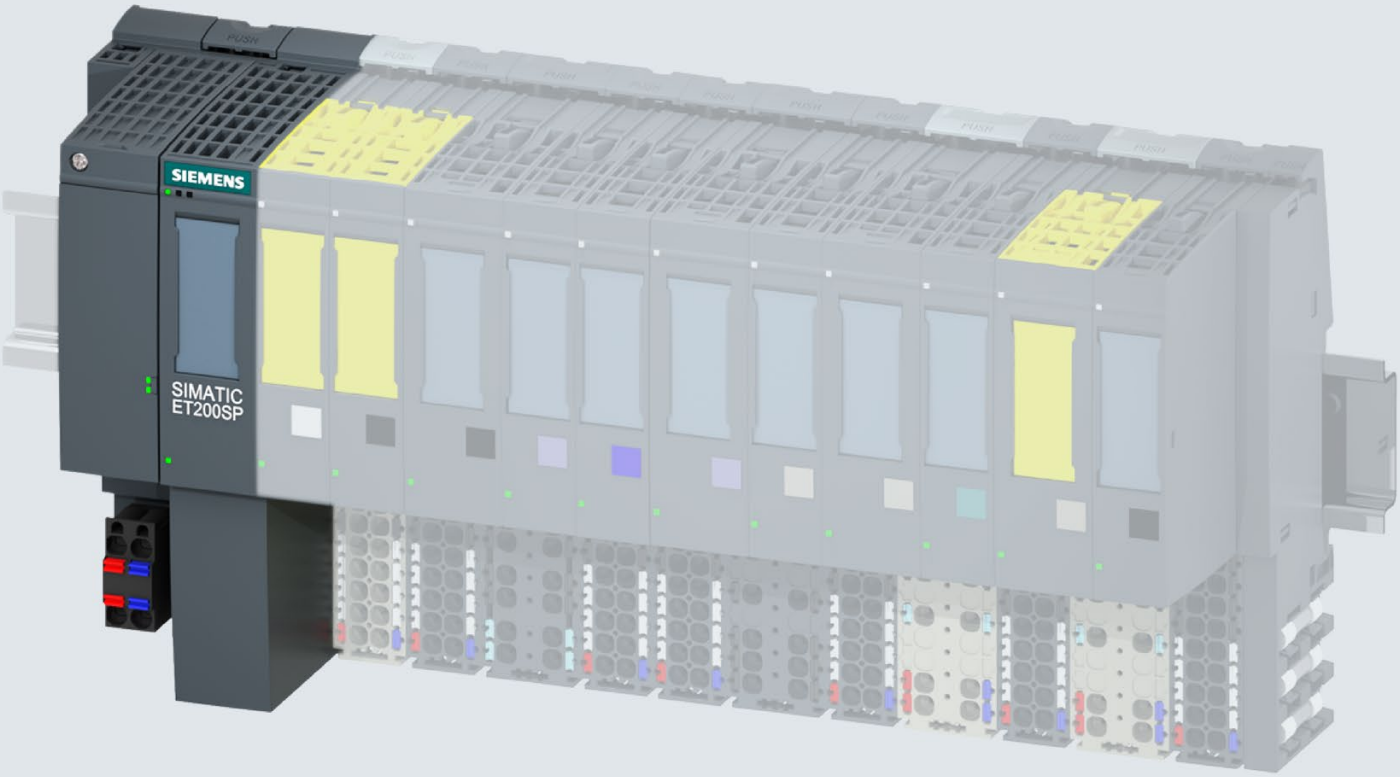

Manual

SIMATIC

ET 200SP

Interface module IM 155-6 DP HF
(6ES7155-6BA01-0CN0)

Edition 10/2018

support.industry.siemens.com

SIEMENS

SIMATIC

ET 200SP
Interface module IM 155-6 DP HF (6ES7155-6BA01-0CN0)

Manual

Preface

Guide to documentation 1

Product overview 2

Connecting 3

Parameters/address space 4

Interrupts, error messages, diagnostics and system alarms 5

Compatibility 6

Technical specifications 7

Dimension drawing A

10/2018

A5E03916550-AD

Legal information

Warning notice system

This manual contains notices you have to observe in order to ensure your personal safety, as well as to prevent damage to property. The notices referring to your personal safety are highlighted in the manual by a safety alert symbol, notices referring only to property damage have no safety alert symbol. These notices shown below are graded according to the degree of danger.

⚠ DANGER

indicates that death or severe personal injury **will** result if proper precautions are not taken.

⚠ WARNING

indicates that death or severe personal injury **may** result if proper precautions are not taken.

⚠ CAUTION

indicates that minor personal injury can result if proper precautions are not taken.

NOTICE

indicates that property damage can result if proper precautions are not taken.

If more than one degree of danger is present, the warning notice representing the highest degree of danger will be used. A notice warning of injury to persons with a safety alert symbol may also include a warning relating to property damage.

Qualified Personnel

The product/system described in this documentation may be operated only by **personnel qualified** for the specific task in accordance with the relevant documentation, in particular its warning notices and safety instructions. Qualified personnel are those who, based on their training and experience, are capable of identifying risks and avoiding potential hazards when working with these products/systems.

Proper use of Siemens products

Note the following:

⚠ WARNING

Siemens products may only be used for the applications described in the catalog and in the relevant technical documentation. If products and components from other manufacturers are used, these must be recommended or approved by Siemens. Proper transport, storage, installation, assembly, commissioning, operation and maintenance are required to ensure that the products operate safely and without any problems. The permissible ambient conditions must be complied with. The information in the relevant documentation must be observed.

Trademarks

All names identified by ® are registered trademarks of Siemens AG. The remaining trademarks in this publication may be trademarks whose use by third parties for their own purposes could violate the rights of the owner.

Disclaimer of Liability

We have reviewed the contents of this publication to ensure consistency with the hardware and software described. Since variance cannot be precluded entirely, we cannot guarantee full consistency. However, the information in this publication is reviewed regularly and any necessary corrections are included in subsequent editions.

Siemens AG
Division Digital Factory
Postfach 48 48
90026 NÜRNBERG
GERMANY

A5E03916550-AD
℗ 10/2018 Subject to change

Copyright © Siemens AG 2013 - 2018.
All rights reserved

Preface

Purpose of the documentation

This manual supplements the ET 200SP distributed I/O system (http://support.automation.siemens.com/WW/view/en/58649293) system manual.

Functions that generally relate to the system are described in this manual.

The information provided in this manual and in the system/function manuals supports you in commissioning the ET 200SP distributed I/O system.

Conventions

Please also observe notes marked as follows:

Note

A note contains important information on the product described in the documentation, on the handling of the product or on the section of the documentation to which particular attention should be paid.

Recycling and disposal

For environmentally friendly recycling and disposal of your old equipment, contact a certified electronic waste disposal company and dispose of the equipment according to the applicable regulations in your country.

Security information

Siemens provides products and solutions with industrial security functions that support the secure operation of plants, systems, machines and networks.

In order to protect plants, systems, machines and networks against cyber threats, it is necessary to implement – and continuously maintain – a holistic, state-of-the-art industrial security concept. Siemens' products and solutions constitute one element of such a concept.

Customers are responsible for preventing unauthorized access to their plants, systems, machines and networks. Such systems, machines and components should only be connected to an enterprise network or the internet if and to the extent such a connection is necessary and only when appropriate security measures (e.g. firewalls and/or network segmentation) are in place.

For additional information on industrial security measures that may be implemented, please visit (https://www.siemens.com/industrialsecurity).

Siemens' products and solutions undergo continuous development to make them more secure. Siemens strongly recommends that product updates are applied as soon as they are available and that the latest product versions are used. Use of product versions that are no longer supported, and failure to apply the latest updates may increase customers' exposure to cyber threats.

To stay informed about product updates, subscribe to the Siemens Industrial Security RSS Feed under (https://www.siemens.com/industrialsecurity).

Table of contents

Preface 3

1 Guide to documentation 7

2 Product overview 12

2.1 Properties 12

2.2 Functions 14
2.2.1 Functions 14
2.2.2 Configuration control 16

3 Connecting 17

3.1 Terminal assignment 17

3.2 Block diagram 19

3.3 Setting the PROFIBUS DP address 20

4 Parameters/address space 21

4.1 Parameters 21

4.2 Description of parameters 22
4.2.1 Configuration control 22
4.2.2 Startup when expected/actual config differ 23
4.2.3 Diagnostic interrupt 23
4.2.4 Hardware interrupt 23
4.2.5 Insert/remove module interrupt 23

4.3 Substitute value behavior 24

5 Interrupts, error messages, diagnostics and system alarms 25

5.1 Status and error displays 25

5.2 Interrupts 29
5.2.1 Introduction 29
5.2.2 Evaluating interrupts of ET 200SP 38
5.2.3 Triggering of a diagnostics interrupt 38
5.2.4 Triggering a hardware interrupt 38
5.2.5 Triggering an insert/remove module interrupt 38

5.3 Alarms 39
5.3.1 Slave diagnostics 40
5.3.2 Station statuses 1 to 3 41
5.3.3 Master PROFIBUS address 42
5.3.4 Identifier-related diagnostics 43
5.3.5 Module status 44
5.3.6 Channel diagnostics 45
5.3.7 H status 46
5.3.8 Invalid configuration states of the ET 200SP on PROFIBUS DP 47
5.3.9 Load voltage failure on the BaseUnit BU...D 48

6 Compatibility 49
6.1 Compatibility of modules 49
7 Technical specifications 52
7.1 Technical specifications 52
A Dimension drawing 55

Guide to documentation

1

The documentation for the SIMATIC ET 200SP distributed I/O system is arranged into three areas.
This arrangement enables you to access the specific content you require.

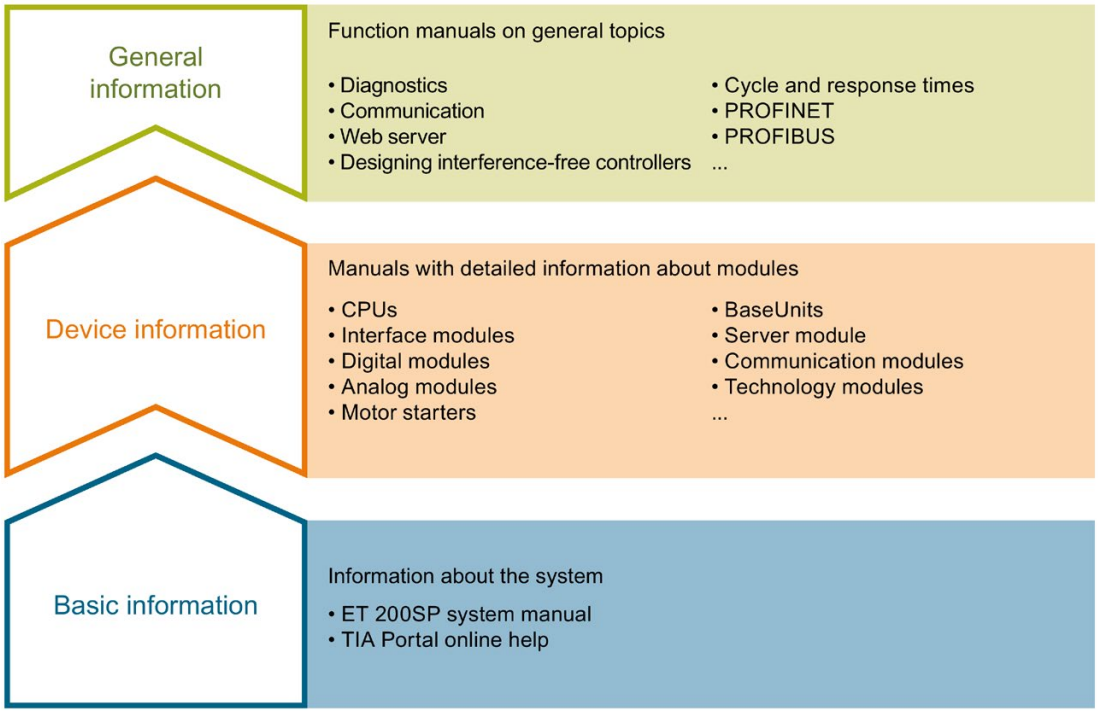

Basic information

The system manual describes in detail the configuration, installation, wiring and commissioning of the SIMATIC ET 200SP. distributed I/O system. The STEP 7 online help supports you in the configuration and programming.

Device information

Product manuals contain a compact description of the module-specific information, such as properties, wiring diagrams, characteristics and technical specifications.

General information

The function manuals contain detailed descriptions on general topics regarding the SIMATIC ET 200SP distributed I/O system, e.g. diagnostics, communication, Web server, motion control and OPC UA.

You can download the documentation free of charge from the Internet (https://support.industry.siemens.com/cs/ww/en/view/109742709).

Changes and supplements to the manuals are documented in a Product Information.

You can download the product information free of charge from the Internet (https://support.industry.siemens.com/cs/us/en/view/73021864).

Manual Collection ET 200SP

The Manual Collection contains the complete documentation on the SIMATIC ET 200SP distributed I/O system gathered together in one file.

You can find the Manual Collection on the Internet (http://support.automation.siemens.com/WW/view/en/84133942).

"mySupport"

With "mySupport", your personal workspace, you make the most of your Industry Online Support.

In "mySupport" you can store filters, favorites and tags, request CAx data and put together your personal library in the Documentation area. Furthermore, your data is automatically filled into support requests and you always have an overview of your current requests.

You need to register once to use the full functionality of "mySupport".

You can find "mySupport" in the Internet (https://support.industry.siemens.com/My/ww/en).

"mySupport" - Documentation

In the Documentation area of "mySupport", you have the possibility to combine complete manuals or parts of them to make your own manual.
You can export the manual in PDF format or in an editable format.

You can find "mySupport" - Documentation in the Internet (http://support.industry.siemens.com/My/ww/en/documentation).

"mySupport" - CAx Data

In the CAx Data area of "mySupport", you can have access the latest product data for your CAx or CAe system.

You configure your own download package with a few clicks.

In doing so you can select:

- Product images, 2D dimension drawings, 3D models, internal circuit diagrams, EPLAN macro files
- Manuals, characteristics, operating manuals, certificates
- Product master data

You can find "mySupport" - CAx Data in the Internet (http://support.industry.siemens.com/my/ww/en/CAxOnline).

Application examples

The application examples support you with various tools and examples for solving your automation tasks. Solutions are shown in interplay with multiple components in the system - separated from the focus in individual products.

You can find the application examples on the Internet (https://support.industry.siemens.com/sc/ww/en/sc/2054).

TIA Selection Tool

With the TIA Selection Tool, you can select, configure and order devices for Totally Integrated Automation (TIA).
This tool is the successor of the SIMATIC Selection Tool and combines the known configurators for automation technology into one tool.
With the TIA Selection Tool, you can generate a complete order list from your product selection or product configuration.

You can find the TIA Selection Tool on the Internet (http://w3.siemens.com/mcms/topics/en/simatic/tia-selection-tool).

SIMATIC Automation Tool

You can use the SIMATIC Automation Tool to run commissioning and maintenance activities simultaneously on various SIMATIC S7 stations as a bulk operation independently of the TIA Portal.

The SIMATIC Automation Tool provides a multitude of functions:

- Scanning of a PROFINET/Ethernet network and identification of all connected CPUs
- Address assignment (IP, subnet, gateway) and station name (PROFINET device) to a CPU
- Transfer of the data and the programming device/PC time converted to UTC time to the module
- Program download to CPU
- Operating mode switchover RUN/STOP
- Localization of the CPU by means of LED flashing
- Reading out CPU error information
- Reading the CPU diagnostic buffer
- Reset to factory settings
- Updating the firmware of the CPU and connected modules

You can find the SIMATIC Automation Tool on the Internet (https://support.industry.siemens.com/cs/ww/en/view/98161300).

PRONETA

With SIEMENS PRONETA (PROFINET network analysis), you analyze the plant network during commissioning. PRONETA features two core functions:

- The topology overview independently scans PROFINET and all connected components.
- The IO check is a fast test of the wiring and the module configuration of a system.

You can find SIEMENS PRONETA on the Internet (https://support.industry.siemens.com/cs/ww/en/view/67460624).

SINETPLAN

SINETPLAN, the Siemens Network Planner, supports you in planning automation systems and networks based on PROFINET. The tool facilitates professional and predictive dimensioning of your PROFINET installation as early as in the planning stage. In addition, SINETPLAN supports you during network optimization and helps you to exploit network resources optimally and to plan reserves. This helps to prevent problems in commissioning or failures during productive operation even in advance of a planned operation. This increases the availability of the production plant and helps improve operational safety.

The advantages at a glance

- Network optimization thanks to port-specific calculation of the network load
- Increased production availability thanks to online scan and verification of existing systems
- Transparency before commissioning through importing and simulation of existing STEP 7 projects
- Efficiency through securing existing investments in the long term and optimal exploitation of resources

You can find SINETPLAN on the Internet (https://www.siemens.com/sinetplan).

Product overview

2

2.1 Properties

Article number

6ES7155-6BA01-0CN0

Article number 6ES7155-6BA01-0CN0 contains the following components:

- Interface module IM 155-6 DP HF (6ES7155-6BU01-0CN0)
- Server module (6ES7193-6PA00-0AA0)
- PROFIBUS FastConnect bus connector (6ES7972-0BB70-0XA0)

View of the module

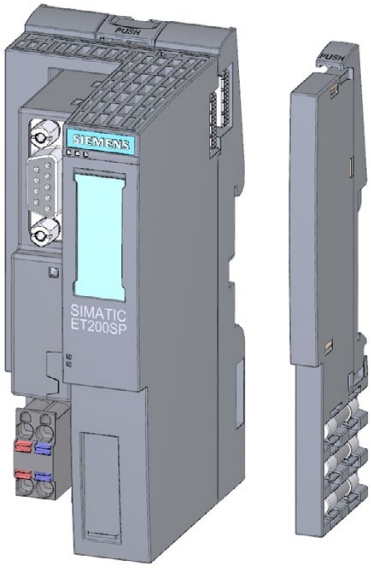

Figure 2-1 View of the 155-6 DP HF interface module with supplied accessories

Properties

The module has the following technical properties:

- Connects the ET 200SP distributed I/O system with PROFIBUS DP
- Power supply 1 L+ 24 V DC (SELV/PELV)
- Bus connection via RS485 interface

The module supports the following functions (Page 14):

Maximum configuration

- 244 bytes I/O data
- 32 I/O modules and 16 ET 200AL modules

Accessories

You order the following accessories separately:

- Labeling strips
- Reference identification label

You can find additional information on the accessories in the ET 200SP distributed I/O system (http://support.automation.siemens.com/WW/view/en/58649293) system manual.

Server module

The server module is included in the product package of the interface module and available separately as an accessory.

The server module has the following properties:

- Terminates the backplane bus of the ET 200SP distributed I/O system
- Features a support for 3 spare fuses (5 × 20 mm)
- Provides station functions, e.g., status bytes
- Identification data I&M 0 to 3

Note

You need to configure the server module in the configuration software.

To do so, place the server module with the required length of status bytes at the last slot of the configuration. When there are 32 I/O modules, the server module is inserted at slot 33.

PROFIBUS FastConnect bus connector

The PROFIBUS FastConnect bus connector is included in the product package of the interface module and also available separately as an accessory.

You can find additional information on the PROFIBUS FastConnect bus connector in the corresponding product information on the Internet (http://support.automation.siemens.com/WW/view/en/58648998).

Configuration with more than 244 bytes of parameter data

With a configuration as of STEP 7 V5.5 SP 3 with HSP 242, you have the option of operating the IM 155-6 DP HF interface module as of 6ES7155-6BA00-0CN0 in DPV1 mode with more than 244 bytes of parameter data. Configuration with the GSD file does not offer this option.

Reference

You can find additional information on identification data in the ET 200SP distributed I/O system (http://support.automation.siemens.com/WW/view/en/58649293) system manual.

2.2 Functions

2.2.1 Functions

Introduction

The interface module supports the following functions:

- Identification data I&M 0 to 3
- PROFIBUS DP
- Firmware update via PROFIBUS DP
- Configuration control by means of the user program
- Operation as DPV1 slave
- Operation after Y-link (not with F-modules)
- Station extension via ET-Connection
- F-direct data exchange

Requirements

The table below shows the software requirements for a configuration with the IM 155-6 DP HF interface module:

Table 2- 1 Version dependencies of other module functions

Function	Product version of the module as of	Firmware version of the module as of	Configuration software		
			Configuration with GSD file (http://support.automation.siemens.com/WW/view/en/19698639/130000) / software from a third-party manufacturer[1]	STEP 7 as of V5.5 SP3 with HSP0242	STEP 7 (TIA Portal) as of V13
Operation after Y-link (not with F-modules)	1	V1.1.0	X	-	-
Hot-swapping	1	V1.0.0	X	X	X
Station extension via ET-Connection	1	V3.0.0	X	X (as of HSP0242 V2)	-
F-direct data exchange	1	V3.1.0	-	X (as of HSP0242 V3)	-
Interface module; article number: 6ES7155-6BA01-0CN0	1	V4.2	-	X [2]	X (as of V15.1)

[1] Systems of third-party manufacturers: Depending on the range of functions of the third-party system

[2] Configure the module as version 6ES7155-6BA00-0CN0 FW V3.1 (as of HSP0242 V3)

2.2.2 Configuration control

Properties

Configuration control allows you to prepare your distributed I/O system for future extensions or options. Configuration control means that you can configure the planned maximum configuration of your distributed I/O system in advance and vary it later in a flexible manner by means of the user program.

Reference

You can find more information on configuration control

- in the ET 200SP distributed I/O system (http://support.automation.siemens.com/WW/view/en/58649293) system manual
- on the Internet under the following link: Application collection (http://support.automation.siemens.com/WW/view/en/29430270)
- in the STEP 7 online help.

Connecting

3

3.1 Terminal assignment

24 V DC supply voltage

The table below shows the signal names and descriptions of the pin assignment of the 24 V DC supply voltage.

Table 3- 1 Pin assignment 24 V DC supply voltage

View		Signal name[1)]	Description
Connector	IM connection		
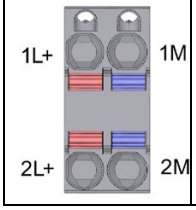	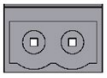	1L+	24 V DC
		2L+	24 V DC (for looping through)[2]
		1M	Ground
		2M	Ground (for looping through)[2]

1 1L+ and 2L+ as well as 1M and 2M are internally bridged.

2 Maximum 10 A permitted.

PROFIBUS DP with RS485 interface

The following table shows the signal names and descriptions of the terminal assignment of the PROFIBUS DP interface.

Table 3- 2 Terminal assignment PROFIBUS DP with RS485 interface

View	Signal name		Description
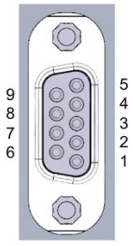	1	-	-
	2	-	-
	3	RxD/TxD-P	Data line B
	4	RTS	Request To Send
	5	M5V2	DP data reference potential (from station)
	6	P5V2	Supply plus (from station)
	7	-	-
	8	RxD/TxD-N	Data line A
	9	-	-

Reference

You can find additional information on connecting the interface module and on the accessories in the ET 200SP distributed I/O system (http://support.automation.siemens.com/WW/view/en/58649293) system manual.

3.2 Block diagram

The following figure show the block diagram of the IM 155-6 DP HF interface module.

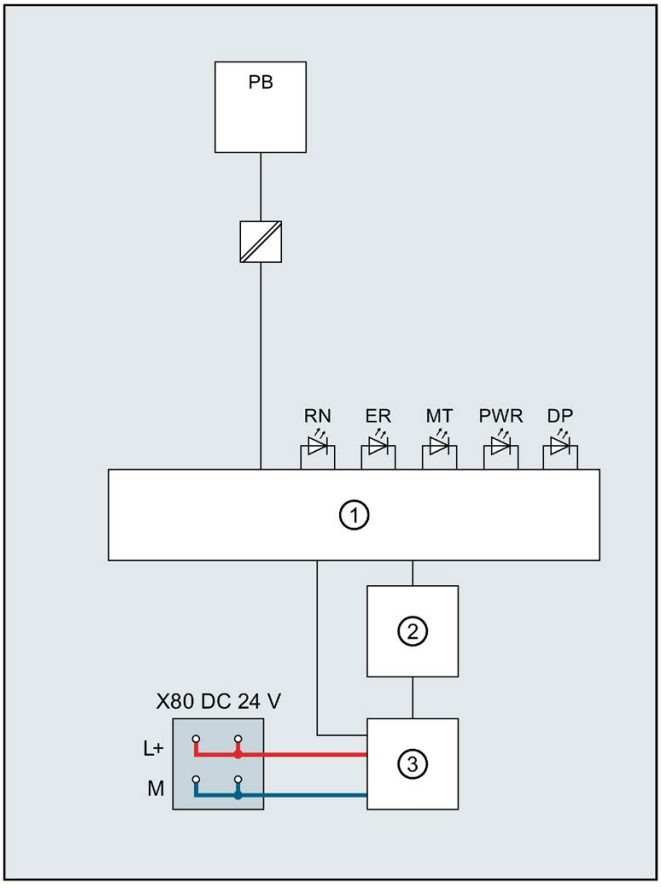

①	ET 200SP backplane bus interface and electronics	L+	24 V DC supply voltage
②	Backplane bus	M	Ground
③	Internal power supply	RN	RUN/STOP LED (green)
X80 24 V DC	Feed supply voltage	ER	ERROR LED (red)
PB	PROFIBUS interface	MT	MAINT LED (yellow)
		PWR	POWER LED (green)
		DP	PROFIBUS DP LED (green)

Figure 3-1 Block diagram of the IM 155-6 DP HF interface module

3.3 Setting the PROFIBUS DP address

Introduction

On the interface module (PROFIBUS), set the PROFIBUS DP address for PROFIBUS DP using the DIP switch. By setting the PROFIBUS DP address, you specify where the ET 200SP is to be addressed on the PROFIBUS DP.

Requirements

- Each PROFIBUS DP address may be assigned only once on the PROFIBUS DP.
- Valid PROFIBUS DP addresses are 1 to 125.
- The set PROFIBUS DP address must match the PROFIBUS DP address specified for the ET 200SP in the configuration software.

Required tools

Screwdriver 3 - 3.5 mm

Setting the PROFIBUS DP address

1. Slide the window of the interface module upwards.
2. Use a screwdriver to set the required PROFIBUS address via the DIP switch.
3. Close the window.

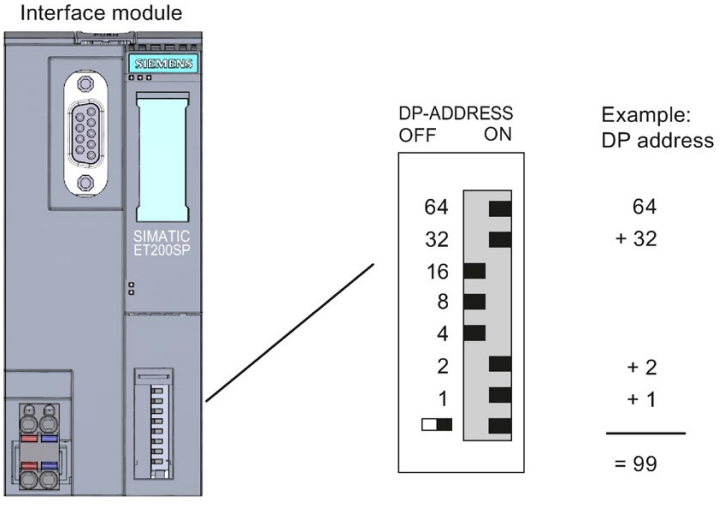

Figure 3-2 Setting the PROFIBUS DP address

Changing the PROFIBUS DP address

You can change the PROFIBUS DP address in exactly the same way as you set it. **A change in the PROFIBUS DP address only becomes valid for the ET 200SP** after a POWER ON of the interface module.

Parameters/address space 4

4.1 Parameters

Parameters for IM 155-6 DP HF interface module

The following table shows the parameters for the IM 155-6 DP HF interface module.

Table 4- 1 Parameters for IM 155-6 DP HF interface module (GSD file)

Parameters	Value range	Default[3]	Effective range
Configuration control [1]	Disable/enable	Disable	ET 200SP
Startup when preset/actual configuration differ	Yes/No	No	ET 200SP
Diagnostics interrupt	Yes/No	Yes	ET 200SP
Hardware interrupt	Yes/No	Yes	ET 200SP
Pull/plug module interrupt[2]	Yes/No	No	ET 200SP

1 Note that the "Startup if preset configuration does not match actual configuration" parameter is always activated when you use configuration control.

2 The “Pull/plug” parameter is always activated in the GSD file.

3 The defaults apply to the default startup. If no other parameters are specified by the DP master, the IM 155-6 DP HF starts up with these parameters.

Note

Only for configuration using the PROFIBUS GSD file, does not affect configuration with STEP 7 via HSP:

Not all parameters of an I/O module are provided by the GSD file with GSD configuration, because the PROFIBUS standard limits the number of parameters to 244 bytes per ET 200SP. These parameters can be configured later using data record 128, if necessary. The description is available in the respective manual of the employed I/O module.

Note

PROFIBUS GSD configuration as of STEP 7 V5.5 SP3

The universal module must not be configured.

4.2 Description of parameters

4.2.1 Configuration control

You can use this parameter to enable the configuration control function in the ET 200SP distributed I/O system.

Note

Configuration control

The "Configuration control" function can only be used if you set the parameter "Startup if preset configuration does not match actual configuration" to yes at the same time.

Note

Configuring the enable

If you configure the enable, the ET 200SP distributed I/O system requires control data record 196 from the user program so that the ET 200SP distributed I/O system can operate the I/O modules.

Reference

You can find additional information in the ET 200SP distributed I/O system (http://support.automation.siemens.com/WW/view/en/58649293) system manual and in the STEP 7 online help.

4.2.2 Startup when expected/actual config differ

If the parameter is enabled and

- modules are removed and inserted during operation, this does not lead to a station failure of the ET 200SP distributed I/O system.
- If the preset configuration does not match the actual configuration, the ET 200SP distributed I/O system continues to exchange data with the DP master.

If the parameter is disabled and

- modules are removed and inserted during operation, this leads to a station failure of the ET 200SP distributed I/O system.
- If the preset configuration does not match the actual configuration, data exchange does not take place between the DP master and the ET 200SP distributed I/O system.

4.2.3 Diagnostic interrupt

You can use this parameter to enable or disable diagnostic interrupts.

4.2.4 Hardware interrupt

You can use this parameter to enable or disable hardware interrupts.

4.2.5 Insert/remove module interrupt

You can use this parameter to enable or disable insert/remove module interrupts.

4.3 Substitute value behavior

The substitute value behavior is implemented by the DP master per slot in the ET 200SP distributed I/O system.

The respective output reacts according to its configured substitute value behavior:

- Current-free/voltage-free
- Keep last value
- Output substitute value

The substitute value behavior is triggered in the following cases:

- STOP DP master
- DP master failure (connection interruption)
- Firmware update
- Station stop, for example, due to:
  - No server module
  - At least one I/O module installed on an incorrect BaseUnit
- Deactivate DP slave

Note

Reducing a configuration

If you reduce the configuration of the ET 200SP distributed I/O system and download the new configuration to the CPU, the modules no longer configured but still present retain their original substitute value behavior. This applies until the supply voltage on the BaseUnit BU...D or on the interface module is switched off.

The "current-free/voltage-free" behavior takes effect in the following cases:

- Firmware update
- Configuration control: receipt of a new control data record
- Incorrectly configured module
- Module with incorrect parameter assignment

Interrupts, error messages, diagnostics and system alarms

5

5.1 Status and error displays

LED displays

The figure below shows the LED display on the interface module:

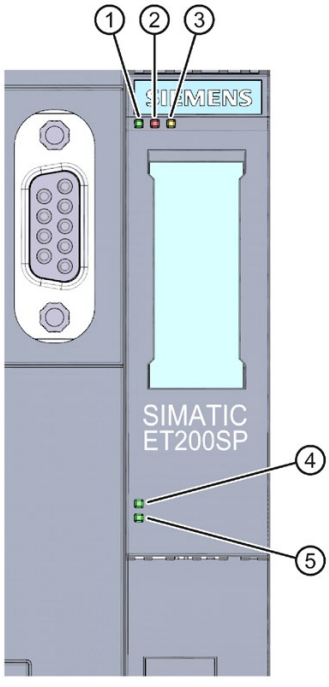

① RN (green)
② ER (red)
③ MT (yellow)
④ DP (green)
⑤ PWR (green)

Figure 5-1 LED displays on the interface module

Meaning of the LED displays

The following tables contain the meaning of the status and error displays.

RN/ER/MT LEDs on the interface module

Table 5- 1 Status and error displays of RN/ER/MT LEDs

LEDs			Meaning	Remedy
RN (RUN)	ER (ERROR)	MT (MAINT)		
Off	Off	Off	No or too little supply voltage at interface module	Check the supply voltage or switch it on at the interface module.[1]
On	On	On	Test of LEDs during startup: The three LEDs light up simultaneously for approximately 0.25 s.	-
Flashes	Off	Off	Interface module is deactivated.	Activate the interface module with the configuration software or the user program.
			Interface module is not configured.	Configure the interface module with the configuration software.
			ET 200SP starts up.	-
			ET 200SP is being assigned parameters.	
On	Not relevant	Not relevant	ET 200SP is currently exchanging data with the DP master.	-
Not relevant	Flashes	Not relevant	Group error and group error channels	Evaluate the diagnostics and eliminate the error.
			The preset configuration does not match the actual configuration of the ET 200SP.	Check the configuration of the ET 200SP to see whether a module is missing or faulty, or whether a non-configured module is inserted.
			Invalid configuration states	See the Invalid configuration states of the ET 200SP on PROFINET DP (Page 47) section.
			Parameter assignment error in the I/O module	Evaluate the display of the module status in STEP 7 and correct the error in the corresponding I/O module.
Not relevant	Not relevant	On	Maintenance is demanded.	Perform maintenance
Flashes	Flashes	Flashes	Hardware or firmware faulty.[2]	Run a firmware update. If the error persists, contact Siemens Industry Online Support. Replace the interface module.

1 PWR LED On (on interface module): Check the backplane bus for a short-circuit.

2 DP LED Off

PWR LED on the interface module

Table 5- 2 Status display of the PWR LED

PWR LED	Meaning	Remedy
□ Off	No or too little supply voltage	Check the supply voltage.
■ On	Supply voltage present	-

LED DP on the RS485 interface

Table 5- 3 Status display of the DP LED

LED DP	Meaning	Remedy
□ Off	There is no connection between the PROFIBUS interface of your PROFIBUS device and a communication partner (for example, DP master).	Check whether the bus cable to the DP master is broken.
■ On	There is a connection between the PROFIBUS interface of your PROFIBUS device and a communication partner (for example, DP master).	-

LED display of configuration errors

Configuration errors of the ET 200SP distributed I/O system are output on the interface module by the ERROR (red) and MAINT (yellow) LEDs.

The following configuration errors are signaled by the LEDs:

- No server module
- Interruptions or short-circuit on the backplane bus

Operating principle

The LED error display provides information on the cause of the error. After a notification by means of a flashing signal, the error type and then the error location/error code are displayed in each case.

The LED error display:

- Is activated during POWER ON and during operation
- Has priority over all other states that are displayed by means of the ERROR- and MAINT-LED
- Remains on until the cause of the error has been eliminated

Table 5- 4 Display of error type and error location

Sequence		Description
1	ERROR- and MAINT-LED flash 3x with 0.5 Hz	Indication of the error type
2	MAINT-LED flashes with 1 Hz	Display of error type (decimal)
3	ERROR- and MAINT-LED flash 3x with 2 Hz	Indication of error location/error code
4	ERROR-LED flashes with 1 Hz	Display of the tens position (decimal) of the error location/error code
5	MAINT-LED flashes with 1 Hz	Display of the units position (decimal) of the error location/error code
6	Repetition of 1 to 5 until the cause of the error has been eliminated.	

Error display

The following table shows the possible causes of error that can occur.

Table 5- 5 Error display

Error type (MAINT)	Error location (ERROR/MAINT)	Cause of error	Solution
1	33*	• No server module • Interruptions on the backplane bus • Short-circuit on the backplane bus	Check the configuration of the ET 200SP.

* Slot

Note

The following LEDs indicate a short-circuit in the backplane bus supply or in the bus connection supply:

- PWR-LED: On
- RN-, ER- and MT-LED: Off

5.2 Interrupts

5.2.1 Introduction

Definition

The interrupt section of the slave diagnostics indicates the interrupt type and the event that led to an interrupt being triggered. The interrupt section comprises 62 bytes including an interrupt header.

Position in the diagnostics frame

The interrupt section is located after the channel diagnostics.

Data record

The diagnostic data of a module are located in the data records 0 and 1:

- Data record 0 contains 4 bytes of diagnostics data that describe the current status of the distributed I/O system. DS0 is part of the header information of OB 82 (local data bytes 8 to 11).
- Data record 1 contains 4 bytes of diagnostics data that are also available in data record 0.

The figure below shows the structure of data record 1:

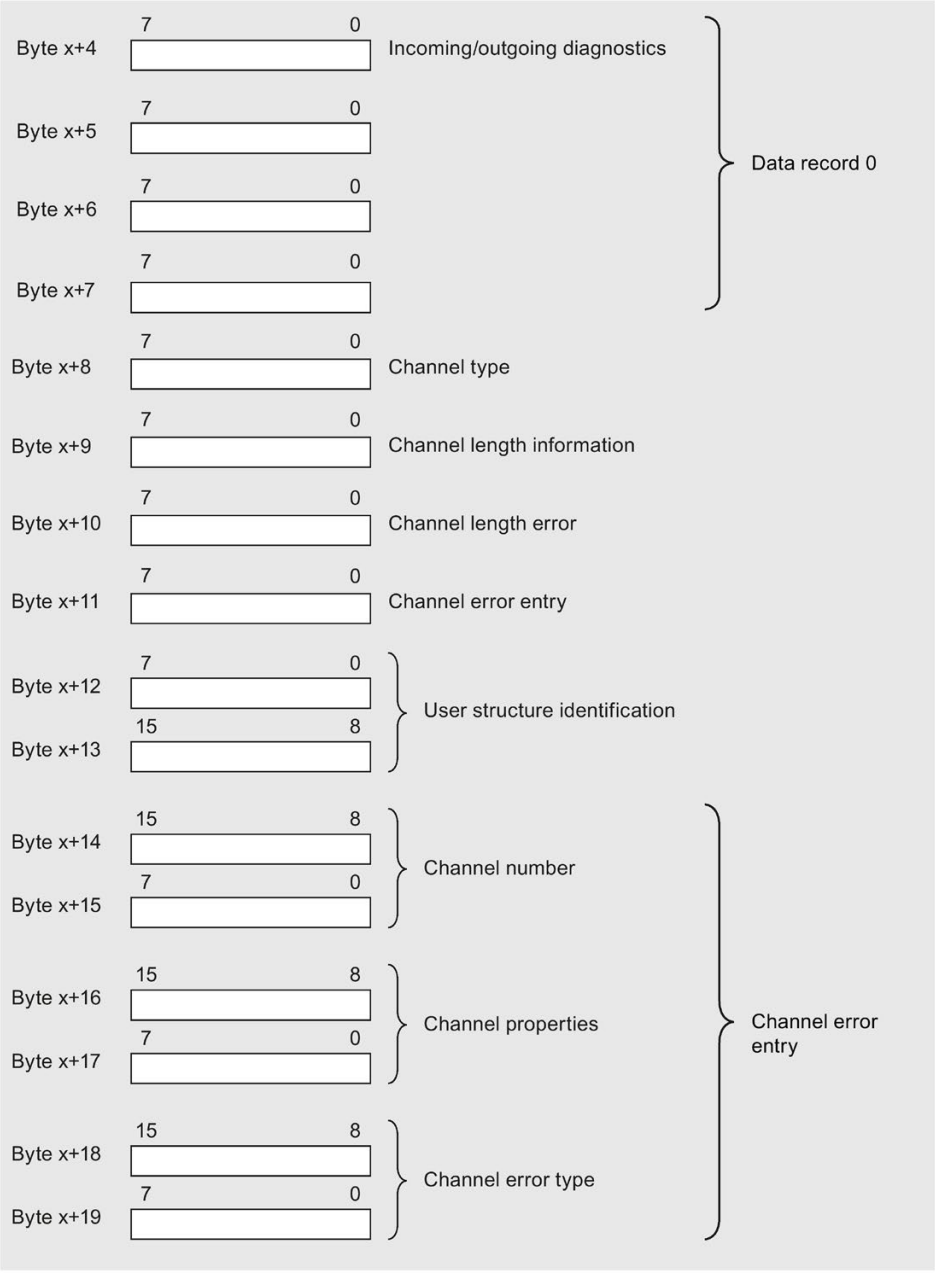

Figure 5-2 Structure of data record 1

Reading data records

DS0 and DS1 can be read with SFC 59 (RD_REC) or SFB 52 (RDREC). The data length of DS 1 can be up to 240 bytes. In this case, DS1 includes up to 38 channel error entries.

Note the figures below in this section.

Content

The contents of the interrupt information depend on the interrupt type:

- In the case of diagnostic interrupts, diagnostic data record 1 (up to 58 bytes) is sent as interrupt status information (starting from byte x+4).
- The length of the interrupt status information for hardware interrupts is 4 bytes.

Structure of interrupts

The figure below shows the structure of the interrupt section for the ET 200SP distributed I/O system:

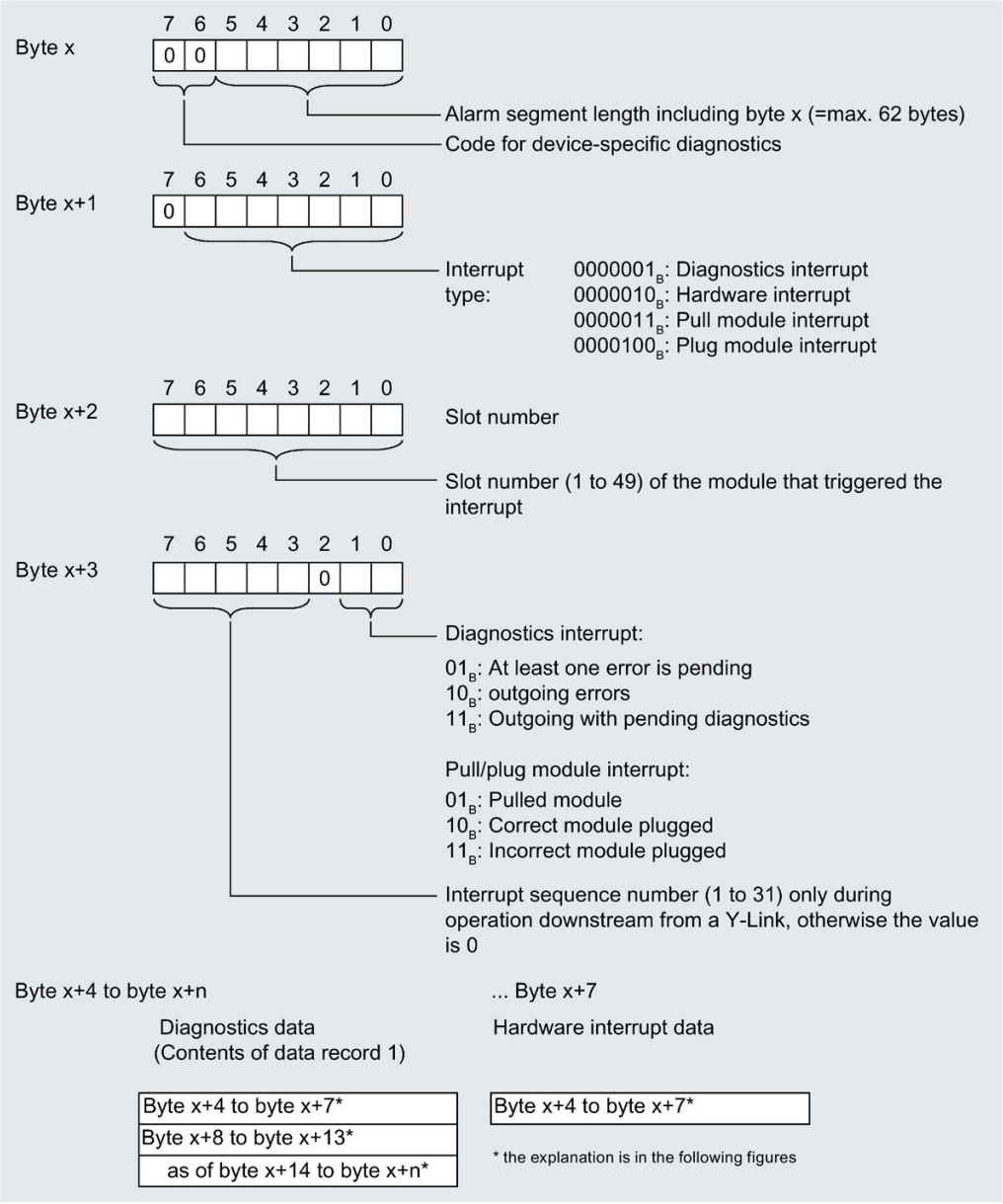

Figure 5-3 Structure of the interrupt status of the interrupt section

Diagnostic interrupt, byte x+4 to x+7

The figure below shows the structure starting at byte x+4 to x+7 for diagnostic interrupt:

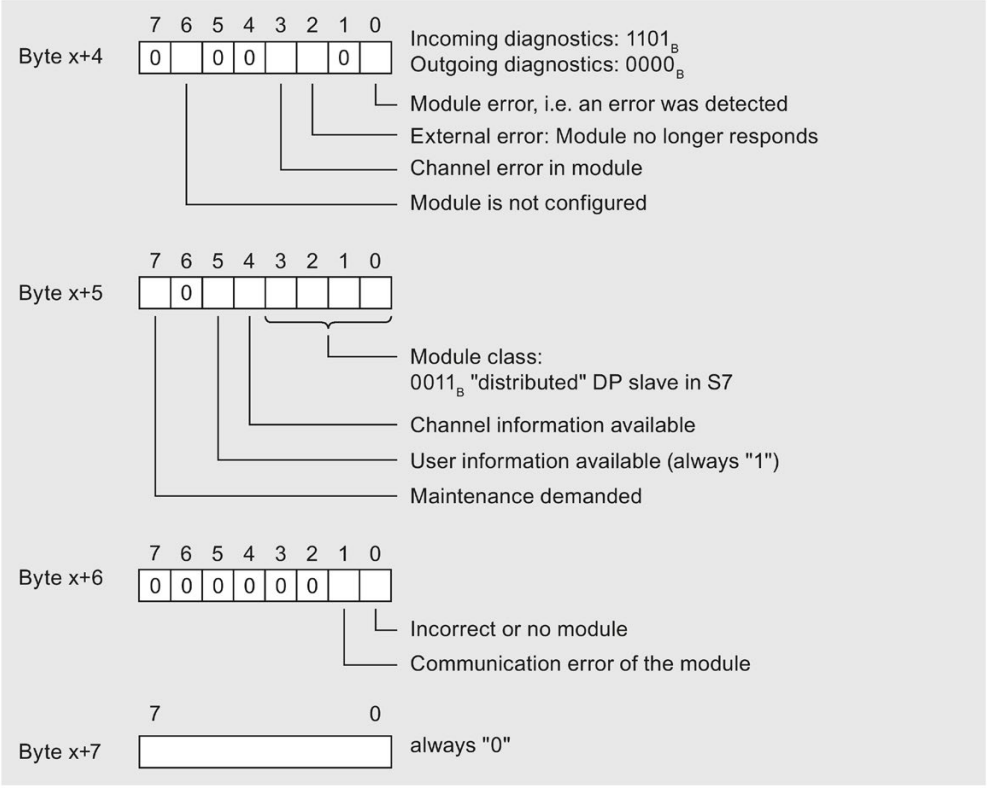

Figure 5-4 Structure of bytes x+4 to x+7 for diagnostic interrupt

Diagnostic interrupt from the modules, starting at byte x+8

The figure below shows the structure starting at byte x+8:

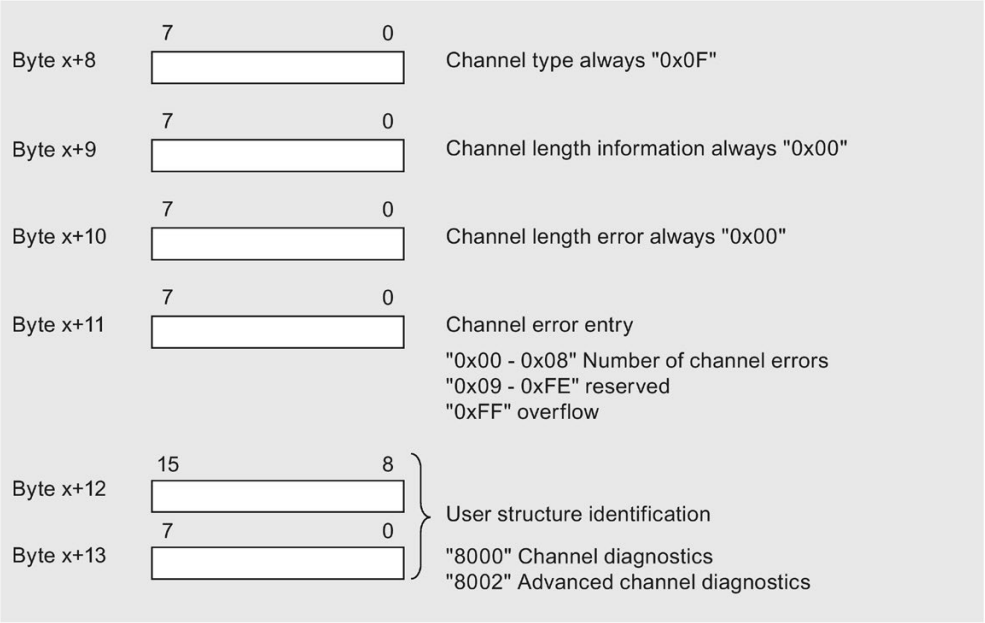

Figure 5-5 Structure starting at byte x+8

Diagnostic interrupt from the modules, starting at byte x+14

The channel error entries start from byte x+14. A channel error entry is 6 bytes long and can follow 8 times starting from byte x+14.

If you read the channel error entries using an SFB or SFC, 38 channel diagnostics are possible.

The figure below shows the structure starting at byte x+14:

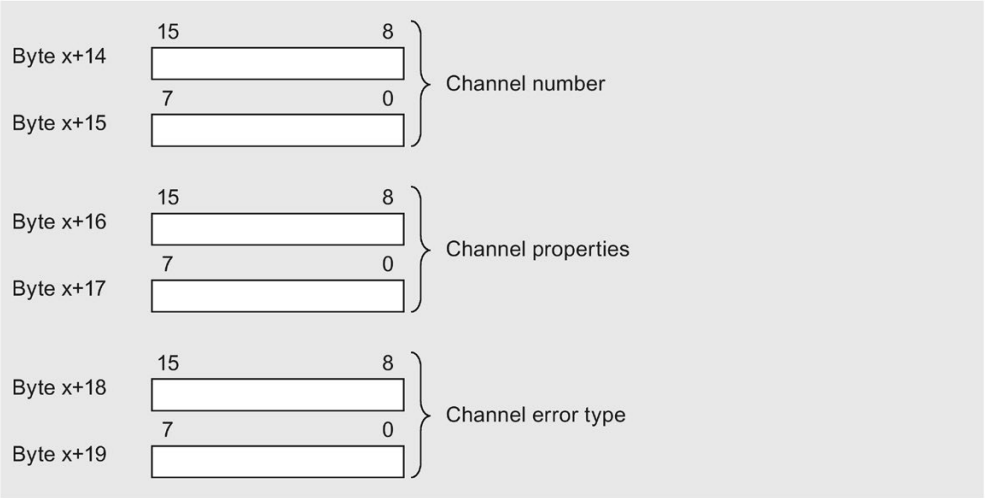

Figure 5-6 Structure starting from byte x+14

The following table is used to explain the channel error entries:

	Description	
Channel number	0 to 63: Channel number for channel error 0x8000: Entire submodule	
Channel properties	Bit 0 to 7	00_H: Free data type 01_H: bit 02_H: 2 bit 03_H: 4 bit 04_H: byte 05_H: word 06_H: Double word 07_H bis FF_H: Reserve
	Bit 8	0: Channel 1: Channel group
	Bit 9, 10	00_H: Diagnostics 01_H: Maintenance demanded 02_H: Maintenance required 03_H: Reserve
	Bit 11, 12	00_H: Channel error-free 01_H: Incoming diagnostics 02_H: Outgoing diagnostics 03_H: Outgoing diagnostics, but other diagnostics are also pending on this channel
	Bit 13 to 15	00_H: Reserve 01_H: Input channel 02_H: Output channel 03_H: Input/output channel
Channel error type	Refer to respective manual for explanation.	

Example of a diagnostic interrupt

The figure below shows an example of a diagnostic interrupt (part 1):

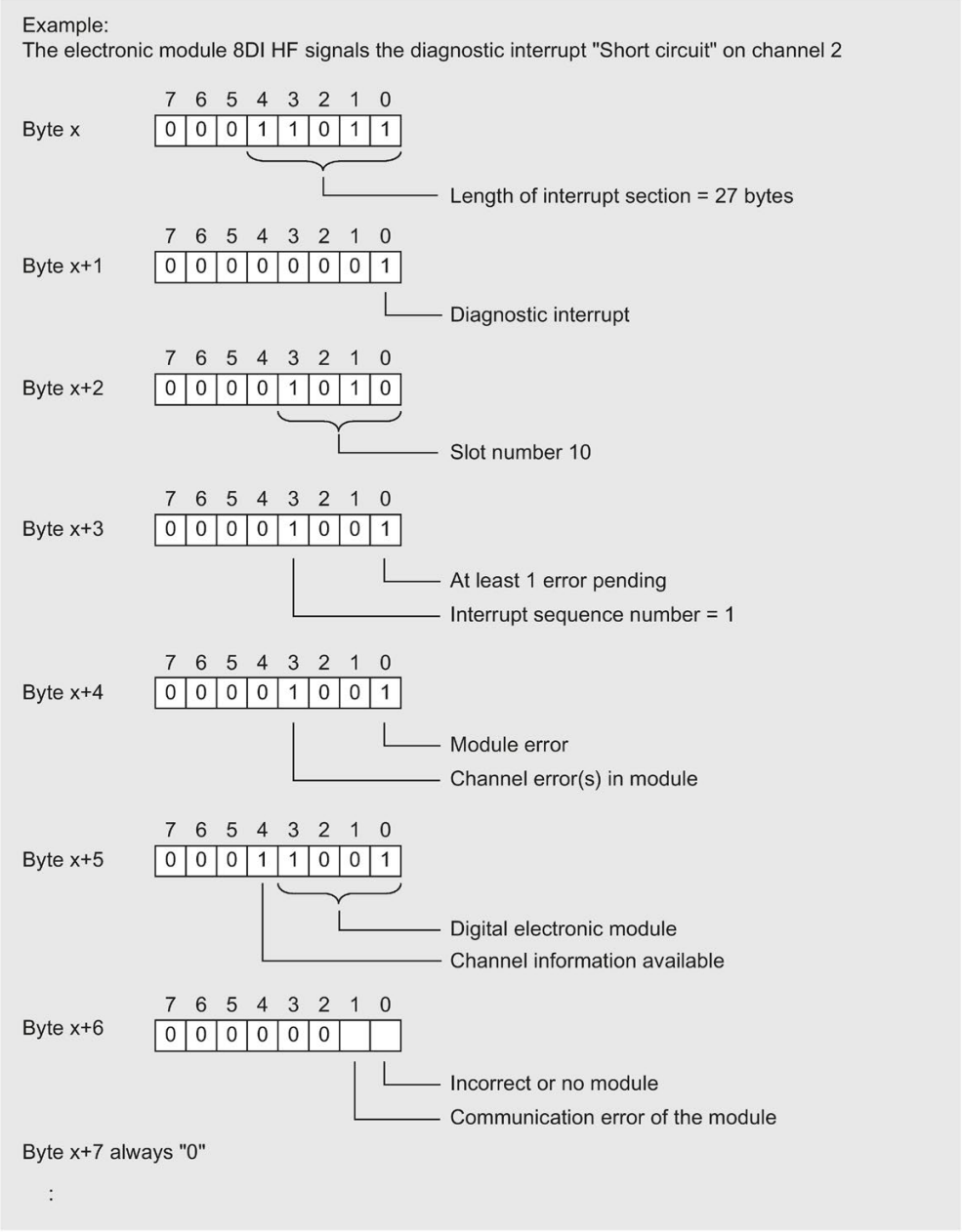

Figure 5-7 Example of a diagnostic interrupt (part 1)

The figure below shows an example of a diagnostic interrupt (part 2):

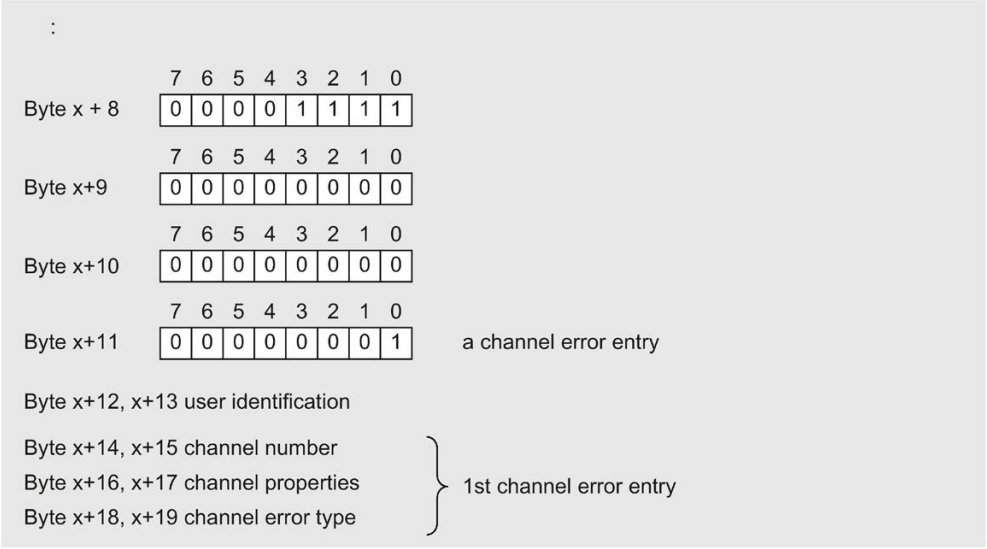

Figure 5-8 Example of a diagnostic interrupt (part 2)

Hardware interrupt of digital and analog input modules

The figure below shows the structure starting at byte x+4 for the hardware interrupt:

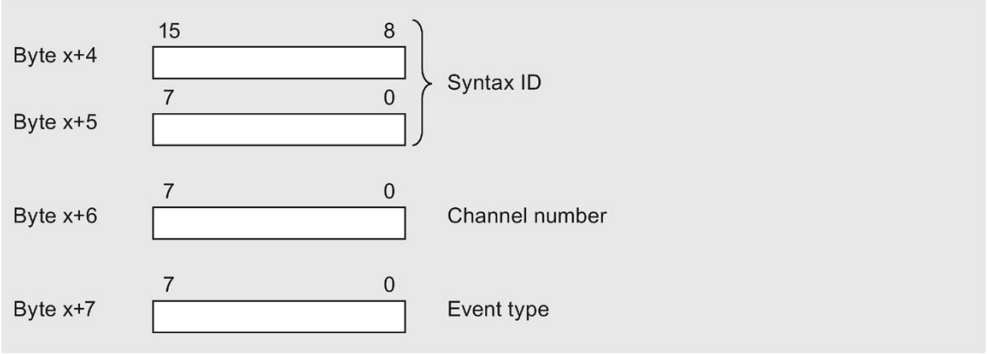

Figure 5-9 Structure starting at byte x+4 for hardware interrupt

5.2.2 Evaluating interrupts of ET 200SP

Introduction

With certain process statuses/errors, the DP slave in each case creates an interrupt block with the corresponding information in the diagnostics frame (DPV1 interrupt mechanism). Regardless of this, the diagnostic status of the DP slave is displayed in the identifier-related diagnostics, in the module status, and in the channel diagnostics.

Interrupts in DPV1 mode

The ET 200SP distributed I/O system supports the following interrupts:

- Diagnostic interrupts
- Hardware interrupts
- Insert/remove module interrupts

5.2.3 Triggering of a diagnostics interrupt

When an event comes or goes (e.g. wire break on a channel of an I/O module), the module triggers a diagnostics interrupt if "Enable: diagnostic interrupt" is set.

The CPU interrupts user program execution and processes the diagnostic interrupt OB (OB 82). The event that triggered the interrupt is entered in the start information of the diagnostic interrupt OB.

5.2.4 Triggering a hardware interrupt

When a hardware interrupt occurs, the CPU interrupts execution of the user program and processes the hardware interrupt OB, for example OB 40. The event that triggered the interrupt is entered in the start information of the hardware interrupt OB.

Note

Diagnostics "Hardware interrupt lost" (from I/O module)

Do not use hardware interrupts for technological purposes (e.g., cyclical generation of hardware interrupts).

If the hardware interrupt load is too high, hardware interrupts can get lost depending on the number of I/O modules and the communication load.

5.2.5 Triggering an insert/remove module interrupt

When an insert/remove module interrupt occurs, the CPU interrupts execution of the user program and processes the insert/remove module interrupt OB (OB 83). The event that triggered the interrupt is entered in the start information of the insert/remove module interrupt OB.

5.3 Alarms

Actions after a diagnostics alarm in DPV1 mode

The error is entered in the channel diagnostics in the diagnostics frame:

- In DPV1 mode, diagnostics can be reported as diagnostic interrupts.
- After a diagnostics alarm, this is
  - entered in the diagnostics frame as diagnostic interrupt block (always for one interrupt only).
  - Stored in the diagnostics buffer of the CPU.
- The ERROR LED of the interface module flashes.
- OB 82 is called. If OB 82 does not exist, the CPU changes to STOP mode.
- Acknowledgment of diagnostic interrupt (a new interrupt is then possible)

Length of the diagnostics frame

- The maximum frame length for the ET 200SP distributed I/O system with IM155-6 DP HF interface module (DPV1 mode) is 244 bytes.
- The minimum frame length is 6 bytes.

Reading out the diagnostics data

Table 5- 6 Reading out the diagnostics data with STEP 7

Automation system with DP master	Application	See...
SIMATIC S7/M7	Slave diagnostics data as plain text in the "DP slave diagnostics" tab in the STEP 7 user interface	"Diagnosing hardware" in the STEP 7 online help
	Instruction "DP NRM_DG" (SFC 13) Reading out slave diagnostics (store in the data area of the user program)	SFC, see STEP 7 online help
	Instruction "RD_REC" (SFC 59) Reading out data records of the S7 diagnostics data (store in the data area of the user program)	See System and Standard Functions reference manual
	Instruction "RDREC" (SFB 52) Reading data records from the DP slave	SFB, see STEP 7 online help (system functions/function blocks)
	Instruction "RALRM" (SFB 54) Receiving interrupts from the interrupt OBs	SFB, see STEP 7 online help (system functions/function blocks)

5.3.1 Slave diagnostics

The figure below shows the structure of the slave diagnostics.

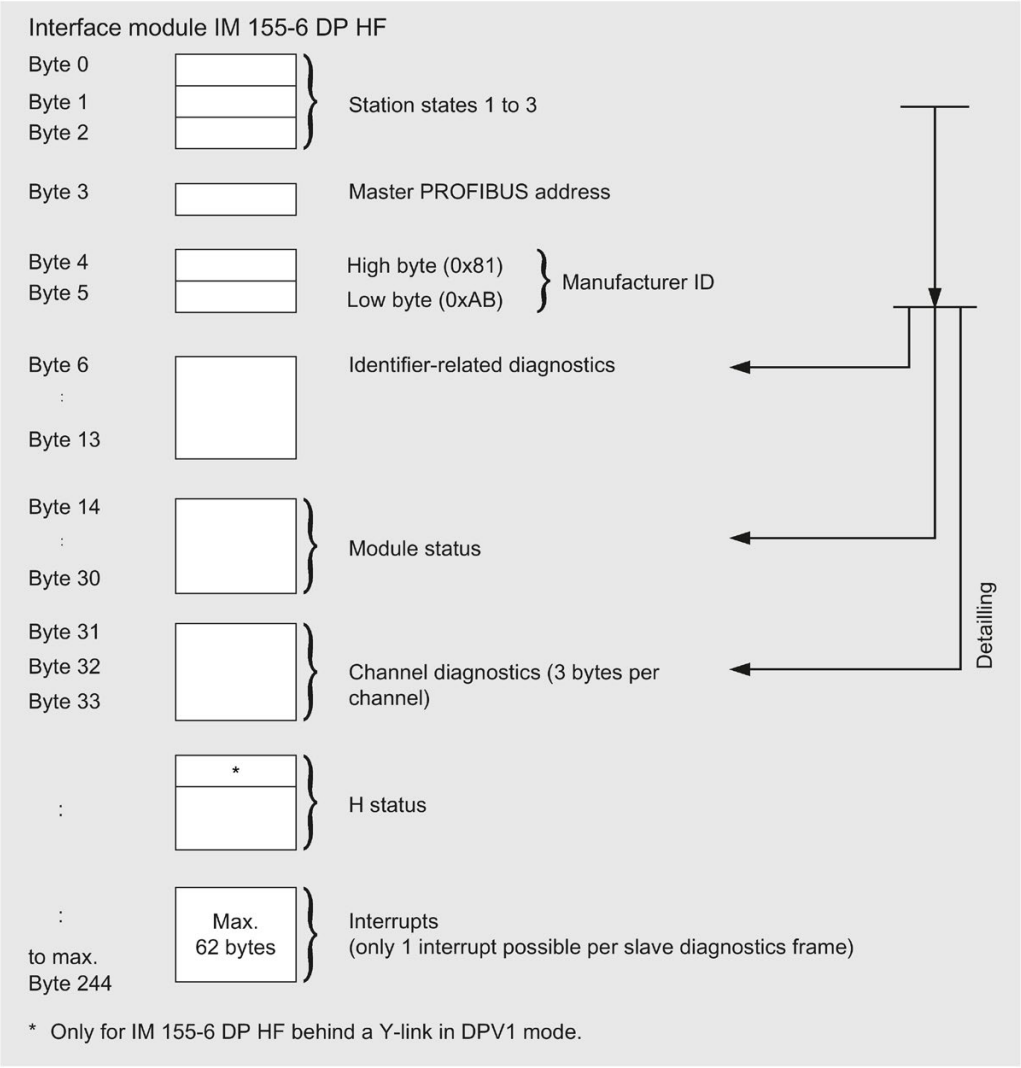

Figure 5-10 Structure of the slave diagnostics

Note

The length of the diagnostics frame varies with the IM 155-6 DP HF (depending on parameter assignment) between 6 and 244 bytes in DPV1 mode.

You can identify the length of the last received diagnostics frame in STEP 7 from the RET_VAL parameter of the SFC 13.

5.3.2 Station statuses 1 to 3

Station statuses 1 to 3 provide an overview of the status of a DP slave.

Structure of station status 1 (byte 0)

Table 5- 7 Structure of station status 1 (byte 0)

Bit	Meaning	Cause/Remedy
0	1: The DP slave is not responding to the DP master.	• Is the correct PROFIBUS address set on the DP slave? • Is the bus connector plugged in? • Is the DP slave connected to the voltage supply? • Is the RS485 repeater properly configured?
1	1: The DP slave is not yet ready to exchange data.	• Wait; the DP slave is currently starting up.
2	1: The configuration data transferred from the DP master to the DP slave does not match the DP slave configuration.	• Has the correct station type or the correct DP slave configuration been entered in the configuration software?
3	1: External diagnostics is available. (Group diagnostics display)	• Evaluate the ID-specific diagnostics, the module status, and/or the channel diagnostics. As soon as all errors have been eliminated, bit 3 is reset. The bit is set again when there is a new diagnostics alarm in the bytes of the aforementioned diagnostics.
4	1: The required function is not supported by the DP slave (for example, changing the PROFIBUS address by means of software).	• Check the configuration.
5	1: The DP master cannot interpret the response of the DP slave.	• Check the bus configuration.
6	1: The DP slave type does not match the software configuration.	• Has the correct station type been entered in the configuration software?
7	1: Parameters have been assigned to the DP slave by a different DP master (not the one that currently has access to the DP slave).	• The bit is always 1, for example, if you access the DP slave with the programming device or another DP master. • The PROFIBUS address of the DP master that assigned parameters to the DP slave is located in the "Master PROFIBUS address" diagnostics byte.

Structure of station status 2 (byte 1)

Table 5- 8 Structure of station status 2 (byte 1)

Bit	Meaning	
0	1:	The DP slave parameters need to be reassigned.
1	1:	A diagnostics alarm is present. The DP slave will not operate until the problem is eliminated (static diagnostics alarm).
2	1:	The bit on the DP slave is always "1".
3	1:	The watchdog is activated for this DP slave.
4	1:	The DP slave has received the "FREEZE" control command.[1]
5	1:	The DP slave has received the "SYNC" control command.[1]
6	0:	Bit is always "0".
7	1:	The DP slave is disabled, that is, it has been removed from the processing in progress.
[1] The bit is updated only if another diagnostics alarm also changes.		

Structure of station status 3 (byte 2)

Table 5- 9 Structure of station status 3 (byte 2)

Bit	Meaning	
0 to 6	0:	Bits are always set to "0".
7	1:	• There are more diagnostic alarms pending than the DP slave is able to store. • The DP master cannot enter all the diagnostics alarms sent by the DP slave in its (channel) diagnostics buffer.

5.3.3 Master PROFIBUS address

The master PROFIBUS address diagnostics byte contains the PROFIBUS address of the DP master:

- That assigned parameters to the DP slave
- That has read and write access to the DP slave

The master PROFIBUS address is located in byte 3 of the slave diagnostics.

5.3.4 Identifier-related diagnostics

The identifier-related diagnostics indicates whether modules of the ET 200SP distributed I/O system have errors or not. Identifier-related diagnostics start at byte 6 and comprise 8 bytes.

The figure below shows how the identifier-related diagnostics for the ET 200SP distributed I/O system is structured with the IM 155-6 DP HF interface module:

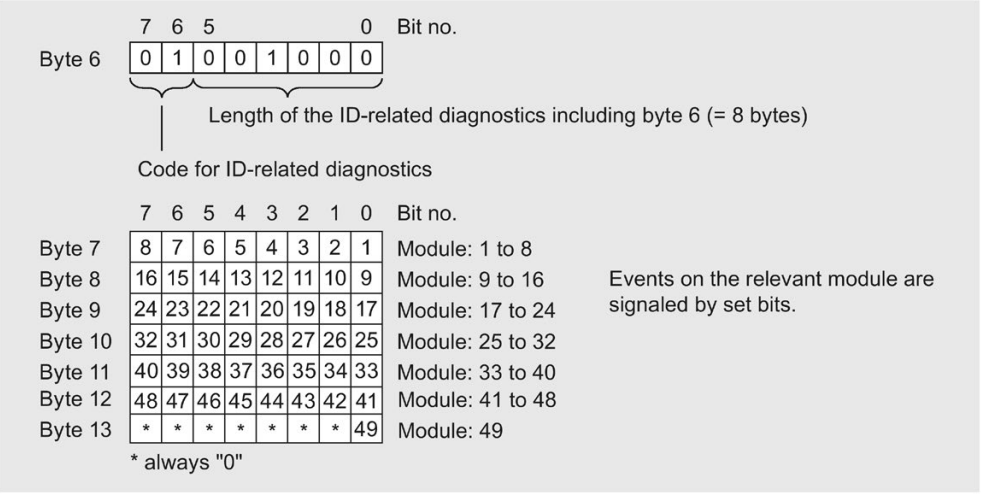

Figure 5-11 Structure of the identifier-related diagnostics

5.3.5 Module status

The module status indicates the status of the configured modules and provides more information on the identifier-related diagnostics with respect to the configuration. The module status begins after the identifier-related diagnostics and comprises 17 bytes.

The following figure shows how the module status for the ET 200SP distributed I/O system is structured with the IM 155-6 DP HF interface module:

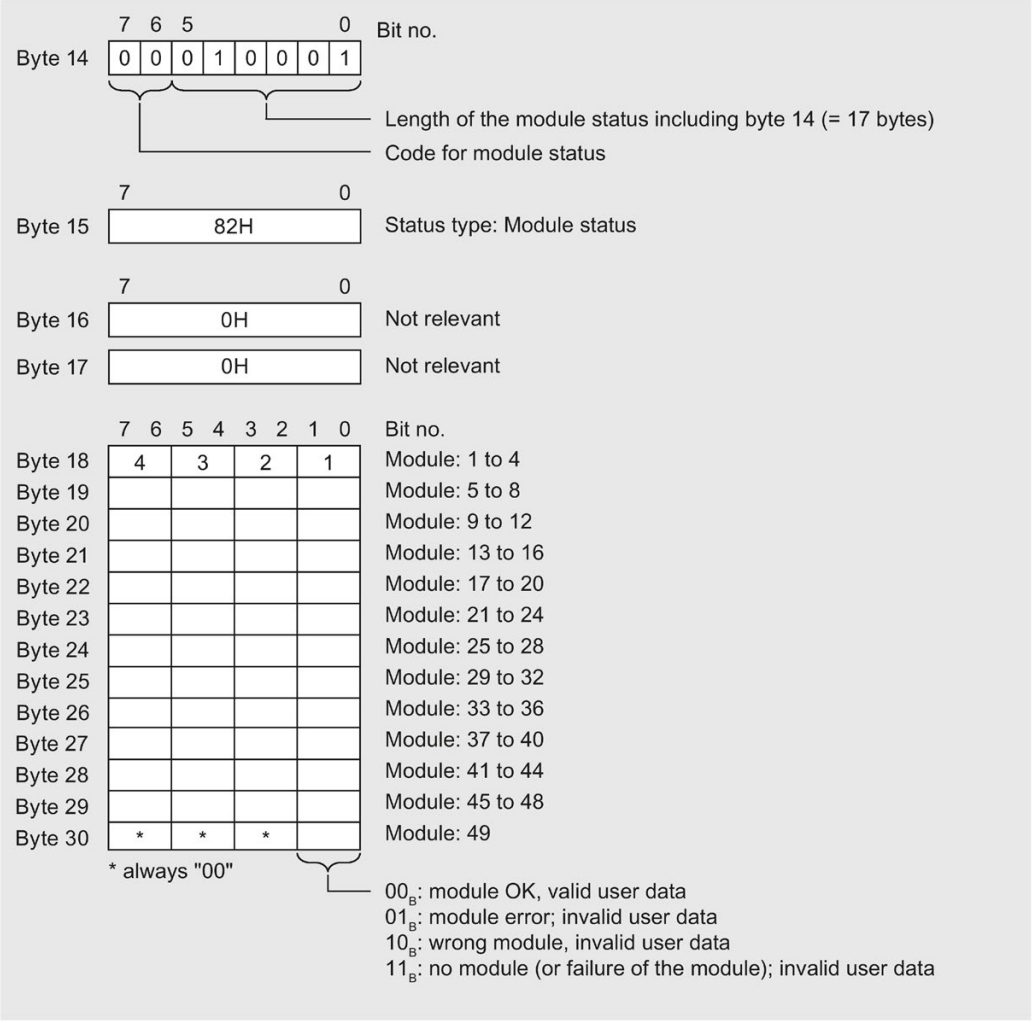

Figure 5-12 Module status structure

5.3.6 Channel diagnostics

Channel diagnostics provides information about channel errors in modules and details of the identifier-related diagnostics. Channel diagnostics begins after the module status. Channel diagnostics does not affect the module status.

The following figure shows how the channel diagnostics for the ET 200SP distributed I/O system is structured with the IM 155-6 DP HF interface module:

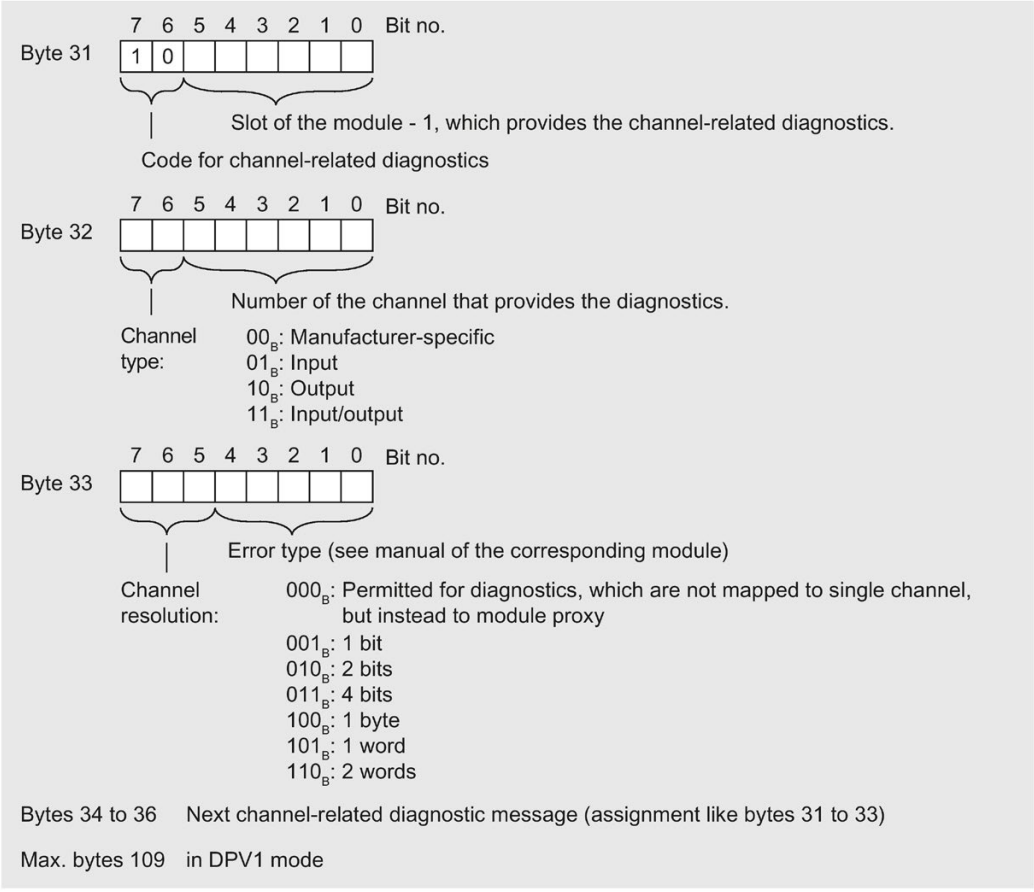

Figure 5-13 Structure of channel diagnostics

When a BaseUnit is incorrectly configured, mapping is made to channel diagnostics. The slot is then apparent from the first byte. In this case, the error type is coded with 0x10 - parameter error. All other fields are set to "0".

5.3.7 H status

Requirements

The H status in the diagnostics frame supplies the IM 155-6 DP HF interface module only when operated behind a Y link (e.g. IM 157) in DPV1 mode. This block can be passed over during the evaluation of the diagnostics frame. The configuration is described in the following section.

Structure of the H status

The following figure shows the structure of the H status of the IM 155-6 DP HF interface module.

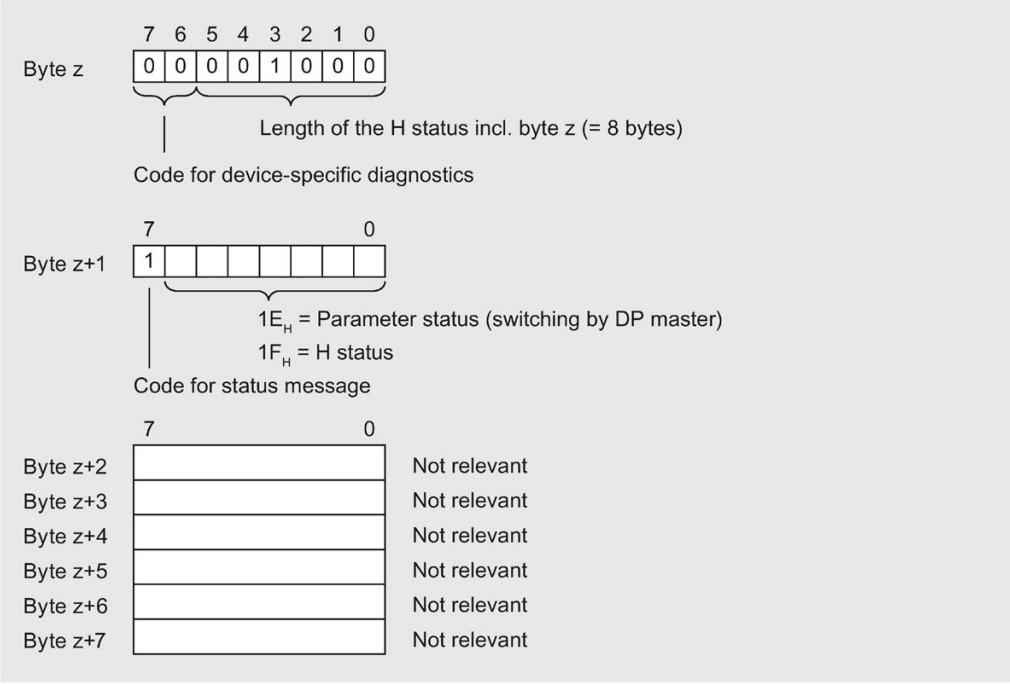

Figure 5-14 Structure of the H status

5.3.8 Invalid configuration states of the ET 200SP on PROFIBUS DP

Incorrect configuration states

The following incorrect configuration states of the ET 200SP distributed I/O system lead to a failure of the DP slave or prevent the start of data exchange.

- Number of modules exceeds maximum configuration.
- Faulty backplane bus (e.g., defective BaseUnit). No interrupt is generated when the ET 200SP backplane bus is interrupted
- No server module
- Configuration exceeds maximum length of 1 m
- Configuration of an incorrect BaseUnit

Note

All I/O modules of the ET 200SP distributed I/O system fail (substitute value behavior) at a station stop. However, the interface module will continue to exchange data.

Revoking the station stop (by correcting the invalid configuration state) leads to a brief failure of the ET 200SP distributed I/O system and automatic restart.

Diagnostics

The table below shows the incorrect configurations and their diagnostics:

Table 5- 10 Diagnostics

Identifier-related diagnostics	Module status	Cause	Response
Slot 33 set, remaining slots not relevant	Slot 33 with 11_B: “"No module; invalid user data" set	• No server module • More than 32 I/O modules • Defective backplane bus	All I/O modules and interface modules fail
All 33 bits set	01_B: "Module error; invalid user data" for all modules	• Configuration > 1 m	All I/O modules and interface modules fail

If the BaseUnit is configured incorrectly, the channel diagnostics "Parameter assignment error" is signaled for the respective slot. Check the parameter "Potential group“ in the parameters of the I/O module.

5.3.9 Load voltage failure on the BaseUnit BU...D

Load voltage failure

If supply voltage fails on the BaseUnit BU...D, the I/O modules react as follows:

- A remove module interrupt is generated if an I/O module is removed during the failure of the supply voltage.
- An insert module interrupt is generated if an I/O module is inserted during the failure of the supply voltage.

Compatibility 6

6.1 Compatibility of modules

Valid firmware versions

The table below lists the valid firmware versions and their field of application for the I/O modules.

I/O modules	Firmware version	Comment
DI 8x24VDC ST	V1.0.1	As of this version, you have the option to operate I/O modules after an IM 155-6 DP HF (6ES7155-6BA00-0CN0) interface module.
DI 16x24VDC ST		
DQ 4x24VDC/2A ST		
DQ 8x24VDC/0.5A ST		
DQ 16x24VDC/0.5A ST		
AI 4xI 2-,4-wire ST		
AI 4xU/I 2-wire ST		
AI 4xRTD/TC 2-,3-,4-wire HF		
AQ 4xU/I ST		

Status of the supply voltage

Load voltage diagnostics are only valid if the station started up with a valid and complete configuration.

- For modules without parameter assignment in the following table, the status of the supply voltage (status byte of the server module) is always signaled as "1" regardless of the actual status of the supply voltage.
- When a potential group is exclusively made up of modules without parameter assignment from the table below, no group diagnostics "Missing supply voltage L+" is signaled for this potential group.

Modules	Article number
DI 8x24VDC ST	6ES7131-6BF00-0BA0
DI 16x24VDC ST	6ES7131-6BH00-0BA0
DI 8x24VDC HF	6ES7131-6BF00-0CA0
DQ 4x24VC/2A ST	6ES7132-6BD20-0BA0
DQ 8x24VDC/0.5A ST	6ES7132-6BF00-0BA0
DQ 16x24VDC/0.5A ST	6ES7132-6BH00-0BA0
DQ 8x24VDC/0.5A HF	6ES7132-6BF00-0CA0

Plugging and pulling (hot-swapping) of ET 200SP I/O modules

NOTICE

Pulling and plugging (hot swapping) of ET 200SP I/O modules during operation on S7-300 via PROFIBUS **DP**

ET 200SP I/O modules can be pulled and plugged:

- As of STEP7 V5.5 SP3 HSP 242 and
- If "Operation if preset configuration <> actual configuration" parameter is enabled.

Note the following when operating the ET 200SP with S7-300 via PROFIBUS DP: Plugging of ET 200SP I/O modules results in a brief station failure of the ET 200SP.

Note

ET 200SP I/O modules can be pulled and plugged without restrictions for all other DP master systems if you enable the "Pull/plug module (OB83)" parameter.

Communication module IO-Link Master CM 4xIO-Link

Note

Communication module IO-Link Master CM 4xIO-Link

Operation of the CM 4xIO-Link IO-Link Master communication module with the IM 155-6 DP HF interface module is supported as of S7-PCT V3.1 and an updated module firmware version/GSD file.

Reaction times for fail-safe modules

The following maximum reaction time of the interface module must be taken into account when calculating the reaction times of fail-safe modules: **Maximum reaction time = 2.3 ms**

First BaseUnit of an ET 200SP in the configuration

The interface modules support plugging a dark-colored BaseUnit in slot 1. This means that modules without a connection to the integrated voltage buses P1 and P2 can now also be configured starting with slot 1. Currently, this applies to the following modules:

- AI EnergyMeter ST (6ES7134-6PA00-0BD0)
- DI 4x120 … 230VAC ST (6ES7131-6FD00-0BB1)
- DQ 4x24 … 230VAC/2A ST (6ES7132-6FD00-0BB1)

Note

First BaseUnit of an ET 200SP in the configuration

Please note the information on limiting the overvoltage and power rating in the AC I/O module manuals.

The 24 V DC supply voltage is fed in via an external fuse.

The 24 V DC supply voltage is provided by a light-colored BaseUnit.

Requirement for configuration of these modules in slot 1:

- Configuration via GSD or GSDML
- Configuration as of STEP7 V5.5 SP4 as of
  - HSP0242 V2.0 for IM155-6 DP HF
- Configuration as of STEP7 V13 SP1

See also: Functions (Page 14)

Technical specifications 7

7.1 Technical specifications

Technical specifications of the IM 155-6 DP HF

The following table shows the technical specifications as of 08/2018. You can find a data sheet including daily updated technical specifications on the Internet (https://support.industry.siemens.com/cs/de/en/pv/6ES7155-6BA01-0CN0/td?dl=de).

Article number	6ES7155-6BA01-0CN0
General information	
Product type designation	IM 155-6DP HF with PROFIBUS connector and server module
Firmware version	V4.2
Product function	
• I&M data	Yes; I&M0 to I&M3
• Module swapping during operation (hot swapping)	Yes; Multi-hot swapping
Engineering with	
• STEP 7 TIA Portal configurable/integrated as of version	V15 SP1
• STEP 7 configurable/integrated as of version	As of V5.5 SP4, only up to FW V3.1
• PROFIBUS as of GSD version/GSD revision	One GSD file each, Revision 3 and 5 and higher
Configuration control	
via dataset	Yes
Supply voltage	
Rated value (DC)	24 V
permissible range, lower limit (DC)	19.2 V
permissible range, upper limit (DC)	28.8 V
Reverse polarity protection	Yes
Mains buffering	
• Mains/voltage failure stored energy time	10 ms
Input current	
Current consumption, max.	335 mA
Inrush current, max.	1.6 A
I^2t	0.038 $A^2 \cdot s$
Power loss	
Power loss, typ.	1.5 W

Article number	6ES7155-6BA01-0CN0
Address area	
Address space per module	
• Address space per module, max.	32 byte; per input / output
Address space per station	
• Address space per station, max.	244 byte; per input / output
Hardware configuration	
Rack	
• Modules per rack, max.	32; + 16 ET 200AL modules
Interfaces	
Number of PROFIBUS interfaces	1
1. Interface	
Interface types	
• RS 485	Yes
• Output current of the interface, max.	90 mA
Protocols	
• PROFIBUS DP slave	Yes
RS 485	
• Transmission rate, max.	12 Mbit/s
PROFIBUS DP	
Services	
– SYNC capability	Yes
– FREEZE capability	Yes
– DPV0	Yes
– DPV1	Yes
Isochronous mode	
Isochronous operation (application synchronized up to terminal)	No
Interrupts/diagnostics/status information	
Status indicator	Yes
Alarms	Yes
Diagnostics function	Yes
Diagnostics indication LED	
• RUN LED	Yes; Green LED
• ERROR LED	Yes; Red LED
• MAINT LED	Yes; yellow LED
• Monitoring of the supply voltage (PWR-LED)	Yes; green PWR LED
• Connection display DP	Yes; Green DP LED
Potential separation	

Article number	6ES7155-6BA01-0CN0
between backplane bus and electronics	No
between PROFIBUS DP and all other circuit components	Yes
between supply and all other circuits	No
Permissible potential difference	
between different circuits	Safety extra low voltage SELV
Isolation	
Isolation tested with	707 V DC (type test)
Ambient conditions	
Ambient temperature during operation	
• horizontal installation, min.	0 °C
• horizontal installation, max.	60 °C
• vertical installation, min.	0 °C
• vertical installation, max.	50 °C
Altitude during operation relating to sea level	
• Installation altitude above sea level, max.	2 000 m; On request: Installation altitudes greater than 2 000 m
Connection method	
ET-Connection	
• via BU/BA Send	Yes; + 16 ET 200AL modules
Dimensions	
Width	50 mm
Height	117 mm
Depth	74 mm
Weights	
Weight, approx.	150 g

Dimension drawing

A

This appendix contains a dimension drawing of the module installed on a mounting rail. Always observe the specified dimensions for installation in cabinets, control rooms, etc.

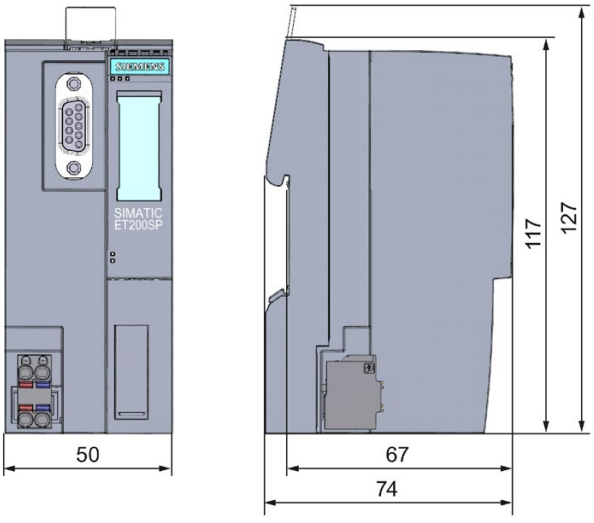

Figure A-1 Dimension drawing of the IM 155-6 DP HF interface module (front and side view)

SIEMENS

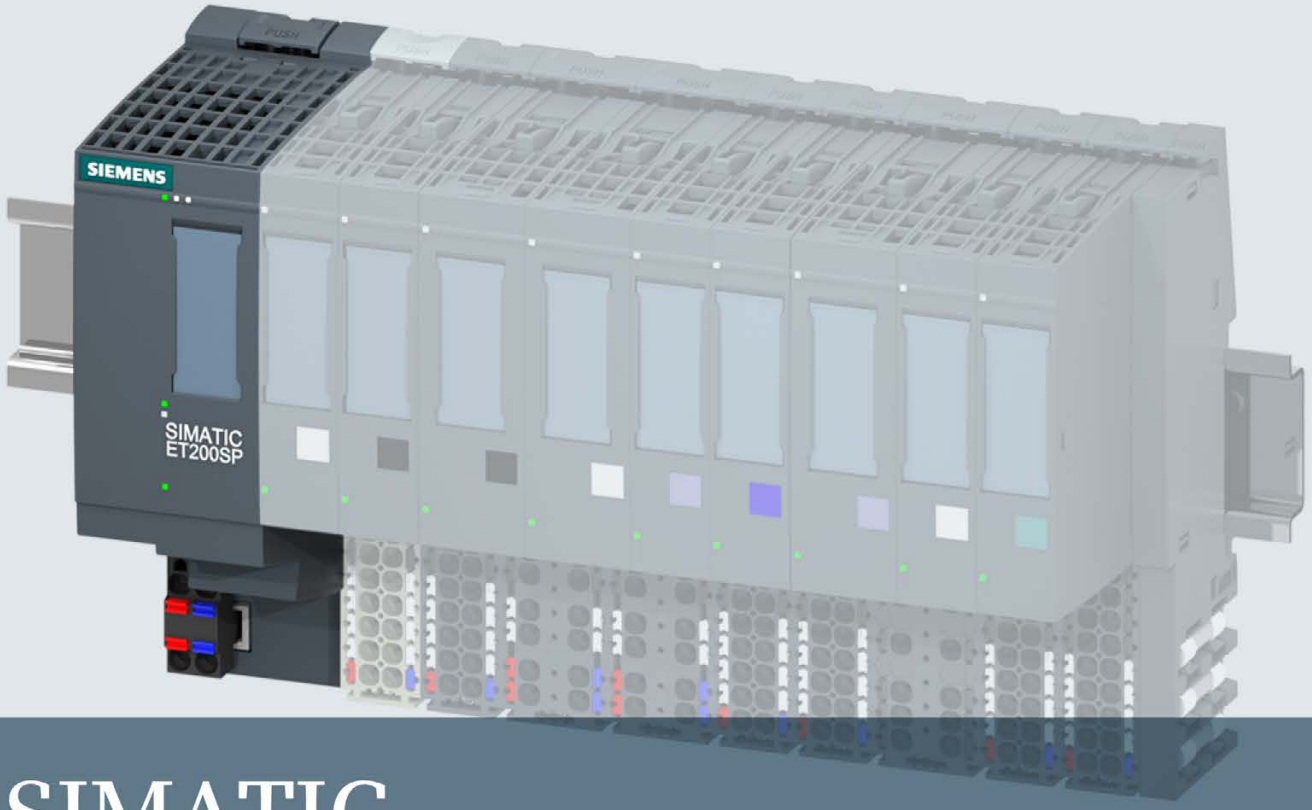

SIMATIC

ET 200SP

Interface module IM 155-6 PN BA (6ES7155-6AR00-0AN0)

Manual

Edition 03/2015

Answers for industry.

SIEMENS

SIMATIC

ET 200SP
IM 155-6 PN BA interface module
(6ES7155-6AR00-0AN0)

Manual

Preface

Documentation guide 1

Product overview 2

Wiring 3

Parameters/address space 4

Interrupts, error messages, diagnostics and system alarms 5

Compatibility 6

Technical specifications 7

Dimension drawing A

03/2015

A5E34934425-AA

Legal information

Warning notice system

This manual contains notices you have to observe in order to ensure your personal safety, as well as to prevent damage to property. The notices referring to your personal safety are highlighted in the manual by a safety alert symbol, notices referring only to property damage have no safety alert symbol. These notices shown below are graded according to the degree of danger.

⚠ DANGER

indicates that death or severe personal injury **will** result if proper precautions are not taken.

⚠ WARNING

indicates that death or severe personal injury **may** result if proper precautions are not taken.

⚠ CAUTION

indicates that minor personal injury can result if proper precautions are not taken.

NOTICE

indicates that property damage can result if proper precautions are not taken.

If more than one degree of danger is present, the warning notice representing the highest degree of danger will be used. A notice warning of injury to persons with a safety alert symbol may also include a warning relating to property damage.

Qualified Personnel

The product/system described in this documentation may be operated only by **personnel qualified** for the specific task in accordance with the relevant documentation, in particular its warning notices and safety instructions. Qualified personnel are those who, based on their training and experience, are capable of identifying risks and avoiding potential hazards when working with these products/systems.

Proper use of Siemens products

Note the following:

⚠ WARNING

Siemens products may only be used for the applications described in the catalog and in the relevant technical documentation. If products and components from other manufacturers are used, these must be recommended or approved by Siemens. Proper transport, storage, installation, assembly, commissioning, operation and maintenance are required to ensure that the products operate safely and without any problems. The permissible ambient conditions must be complied with. The information in the relevant documentation must be observed.

Trademarks

All names identified by ® are registered trademarks of Siemens AG. The remaining trademarks in this publication may be trademarks whose use by third parties for their own purposes could violate the rights of the owner.

Disclaimer of Liability

We have reviewed the contents of this publication to ensure consistency with the hardware and software described. Since variance cannot be precluded entirely, we cannot guarantee full consistency. However, the information in this publication is reviewed regularly and any necessary corrections are included in subsequent editions.

Siemens AG
Division Digital Factory
Postfach 48 48
90026 NÜRNBERG
GERMANY

A5E34934425-AA
℗ 03/2015 Subject to change

Copyright © Siemens AG 2015.
All rights reserved

Preface

Purpose of the documentation

This manual supplements the ET 200SP distributed I/O system (http://support.automation.siemens.com/WW/view/en/58649293) system manual.

Functions that generally relate to the system are described in this manual.

The information provided in this manual and in the system/function manuals supports you in commissioning the ET 200SP distributed I/O system.

Conventions

Please also observe notes marked as follows:

Note

A note contains important information on the product described in the documentation, on the handling of the product or on the section of the documentation to which particular attention should be paid.

Security information

Siemens provides products and solutions with industrial security functions that support the secure operation of plants, solutions, machines, equipment and/or networks. They are important components in a holistic industrial security concept. With this in mind, Siemens' products and solutions undergo continuous development. Siemens recommends strongly that you regularly check for product updates.

For the secure operation of Siemens products and solutions, it is necessary to take suitable preventive action (e.g. cell protection concept) and integrate each component into a holistic, state-of-the-art industrial security concept. Third-party products that may be in use should also be considered. You can find more information about industrial security on the Internet (http://www.siemens.com/industrialsecurity).

To stay informed about product updates as they occur, sign up for a product-specific newsletter. You can find more information on the Internet (http://support.automation.siemens.com).

Table of contents

Preface 4

1 Documentation guide 6

2 Product overview 8

2.1 Properties 8

2.2 Functions 10

2.2.1 Configuration control (option handling) 12

3 Wiring 13

3.1 Terminal assignment 13

3.2 Block diagram 15

4 Parameters/address space 16

4.1 Parameters 16

4.2 Explanation of the parameters 16

4.2.1 Enabling configuration control 16

4.3 Substitute value behavior 17

4.4 Status of the supply voltage L+ of the I/O modules 17

5 Interrupts, error messages, diagnostics and system alarms 18

5.1 Status and error displays 18

5.2 Interrupts 23

5.2.1 Triggering a diagnostics interrupt 23

5.2.2 Triggering a hardware interrupt 24

5.2.3 Triggering a pull/plug interrupt 24

5.3 Alarms 25

5.3.1 Channel diagnostics 26

5.3.2 Invalid configuration states of the ET 200SP on PROFINET IO 27

5.3.3 Failure of supply voltage L+ at BaseUnit BU...D 27

5.3.4 STOP of the IO controller and recovery of the IO device 28

6 Compatibility 29

7 Technical specifications 30

A Dimension drawing 33

Documentation guide

1

The documentation for the SIMATIC ET 200SP distributed I/O system is arranged into three areas.
This arrangement enables you to access the specific content you require.

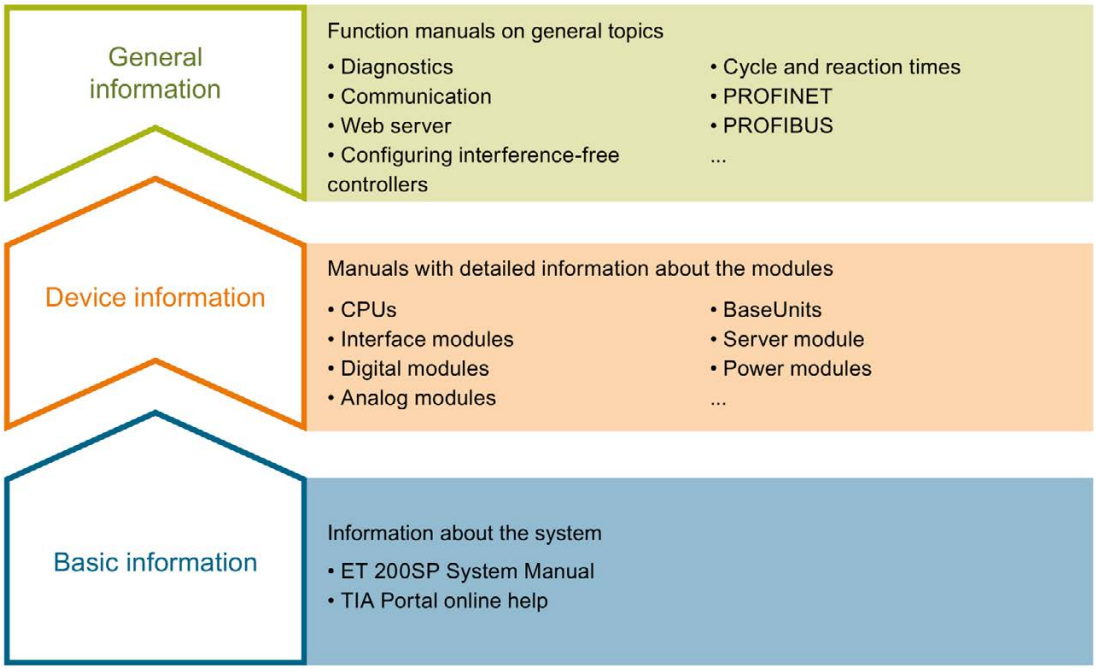

Basic information

The system manual describes in detail the configuration, installation, wiring and commissioning of the SIMATIC ET 200SP. distributed I/O system. The STEP 7 online help supports you in the configuration and programming.

Device information

Product manuals contain a compact description of the module-specific information, such as properties, terminal diagrams, characteristics and technical specifications.

General information

The function manuals contain detailed descriptions on general topics regarding the SIMATIC ET 200SP distributed I/O system, e.g. diagnostics, communication, Web server, designing interference-free controllers.

You can download the documentation free of charge from the Internet (http://www.automation.siemens.com/mcms/industrial-automation-systems-simatic/en/manual-overview/tech-doc-controllers/Pages/Default.aspx).

Changes and supplements to the manuals are documented in a Product Information.

Manual Collection ET 200SP

The Manual Collection contains the complete documentation on the SIMATIC ET 200SP distributed I/O system gathered together in one file.

You can find the Manual Collection on the Internet (http://support.automation.siemens.com/WW/view/en/84133942).

My Documentation Manager

The My Documentation Manager is used to combine entire manuals or only parts of these to your own manual.
You can export the manual as PDF file or in a format that can be edited later.

You can find the My Documentation Manager on the Internet (http://support.industry.siemens.com/My/ww/en/documentation).

Application examples

Applications examples support you with various tools and examples for solving your automation tasks. Solutions are shown in interplay with multiple components in the system - separated from the focus in individual products.

You can find application examples on the Internet (https://support.industry.siemens.com/sc/ww/en/sc/2054).

CAx Download Manager

The CAx Download Manager is used to access the current product data for your CAx or CAe systems.

You configure your own download package with a few clicks.

In doing so you can select:

- Product images, 2D dimension drawings, 3D models, internal circuit diagrams, EPLAN macro files
- Manuals, characteristics, operating manuals, certificates
- Product master data

You can find the CAx Download Manager on the Internet (http://support.industry.siemens.com/my/ww/en/CAxOnline).

TIA Selection Tool

With the TIA Selection Tool, you can select, configure and order devices for Totally Integrated Automation (TIA).
This tool is the successor of the SIMATIC Selection Tool and combines the known configurators for automation technology into one tool.
With the TIA Selection Tool, you can generate a complete order list from your product selection or product configuration.

You can find the TIA Selection Tool on the Internet (http://w3.siemens.com/mcms/topics/en/simatic/tia-selection-tool).

Product overview 2

2.1 Properties

Article number

6ES7155-6AR00-0AN0 (IM 155-6 PN BA interface module and server module)

View of the module

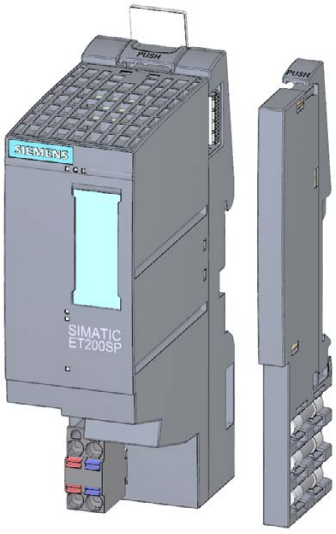

Figure 2-1 View of the IM 155-6 PN BA interface module and the server module

Properties

The module has the following properties:

- Technical properties
  - Connects the ET 200SP distributed I/O system with PROFINET IO
  - Supply voltage 1L+ 24 V DC (SELV/PELV). The connection plug is included in the scope of delivery of the interface module.
- Supported functions (Page 10)

Maximum configuration

- 12 I/O modules

Maximum amount of I/O data

The maximum amount of I/O data is 32 bytes input/output data.

Accessories

The following accessories must be ordered separately:

- Labeling strips
- Reference identification label

A detailed list of the available accessories can be found in the system manual ET 200SP distributed I/O system (http://support.automation.siemens.com/WW/view/en/58649293).

Server module

The server module (V1.1.1 and higher) is included in the scope of delivery of the interface module and also available separately as an accessory. The server module has the following properties:

- Terminates the backplane bus of the ET 200SP distributed I/O system
- Features a support for 3 spare fuses (5 × 20 mm)
- Identification data I&M 0 to 3
- Retentive storage of the device name for device replacement without topological configuration

Note

You need to configure and assign parameters to the server module in the configuration software.

To do this, place the server module in the last configuration slot and enable the parameter Group diagnostics: No supply voltage L+. If there are 12 I/O modules, the server module is plugged in slot 13.

You can find more information in the Server module (http://support.automation.siemens.com/WW/view/en/63257531) manual.

2.2 Functions

Introduction

The interface module supports the following PROFINET IO functions:

- Integrated switch with 2 ports
- Supported Ethernet services: ping, arp, network diagnostics (SNMP: MIB2, LLDP-MIP and MRP-MIB)
- Port diagnostics
- Deactivating of ports
- Minimum update time 1 ms
- Media redundancy MRP
- Device replacement without programming device
- Reset to factory settings via PROFINET IO
- Firmware update via PROFINET IO

The interface module supports additional functions:

- Identification data I&M 0 to 3
- Device replacement with and without topological configuration
- Configuration control (option handling)

Requirements

Configuration takes place with GSDML or STEP 7 V13/HSPxyz.

Cabling with fixed connection setting

If you set a fixed connection setting of the port in STEP 7, you must also disable "Autonegotiation/Autocrossover".

You can find more information on this topic in the STEP 7 online help and

- As of STEP 7 V12, in the function manual PROFINET with STEP 7 V13 (http://support.automation.siemens.com/WW/view/de/49948856/0/en)
- As of STEP 7 V5.5, in the system manual PROFINET System Description (http://support.automation.siemens.com/WW/view/en/19292127).

Device replacement without topological configuration

In addition to the interface module, the device name is also saved on the server module (V1.1.1 and higher). A device name saved on the server module is the requirement for device replacement without topological configuration.

Storing the name on the server module and the interface module produces a range of scenarios for using the device name when the interface module is replaced.

Table 2- 1 Scenarios for using the device name

	Interface module empty	Interface module with device name
Server module empty	No device name available.	The device name from the interface module is used and copied to the server module.
Server module with device name	The device name from the server module is used and copied to the interface module.	The device name from the server module is used and copied to the interface module if this has a different device name.

Be aware of the following constraints:

- Resetting to factory settings deletes the device name in both the interface module and the server module. To prevent the device name from being deleted in the server module, you can remove the server module from the interface module before resetting to factory settings.
- When a server module is replaced, a device name stored in the server module is applied to the interface module after a POWER ON.
- Do not pull/plug the server module while under voltage. If you pull/plug the server module while under voltage, the interface module restarts.
- If you use a server module with an invalid firmware version (< V1.1.1), channel-specific diagnostics is generated with the error number 27 (general error). To correct this error, you need to replace the server module or update the server module firmware.

IO devices that have already been used in another configuration should be reset to their factory settings before reuse (see system manual ET 200SP distributed I/O system (http://support.automation.siemens.com/WW/view/en/58649293)).

You can find more information on this topic in the STEP 7 online help and

- As of STEP 7 V12, in the function manual PROFINET with STEP 7 V13 (http://support.automation.siemens.com/WW/view/de/49948856/0/en)
- As of STEP 7 V5.5, in the system manual PROFINET System Description (http://support.automation.siemens.com/WW/view/en/19292127).

Replacement of an IM 155-6 PN BA

If a spare part is required, any IO devices in operation must be reset to their delivery state via "Reset to factory settings" (see the system manual ET 200SP distributed I/O system (http://support.automation.siemens.com/WW/view/en/58649293)).

Media redundancy (MRP)

Function for safeguarding communication and plant availability. A ring topology ensures that an alternative communication path is made available if a transmission route fails.

You can find more information on this topic in the STEP 7 online help and

- As of STEP 7 V12, in the function manual PROFINET with STEP 7 V13 (http://support.automation.siemens.com/WW/view/de/49948856/0/en)
- As of STEP 7 V5.5, in the system manual PROFINET System Description (http://support.automation.siemens.com/WW/view/en/19292127).

2.2.1 Configuration control (option handling)

Properties

Configuration control allows you to prepare your distributed I/O system for future extensions or changes. Configuration control means that you can configure the planned maximum configuration of your distributed I/O system in advance and vary it later in a flexible manner by means of the user program.

Reference

You can find more information on configuration control

- in the ET 200SP distributed I/O system (http://support.automation.siemens.com/WW/view/en/58649293) system manual
- on the Internet under the following link Application collection (http://support.automation.siemens.com/WW/view/en/29430270)
- in the STEP 7 online help.

Wiring

3

3.1 Terminal assignment

24 V DC supply voltage

The following table shows the signal names and the descriptions of the terminal assignment for a 24 V DC supply voltage.

Table 3- 1 Terminal assignment 24 V DC supply voltage

View		Signal name[1]	Description
Connector	IM connection		
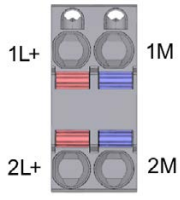	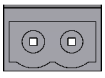	1L+	24 V DC
		2L+	24 V DC (for looping through)[2]
		1M	Ground
		2M	Ground (for looping through)[2]

[1] 1L+ and 2L+ as well as 1M and 2M are bridged internally.

[2] Maximum 10 A permitted.

PROFINET IO

The following table shows the signal name and description of the terminal assignment.

Table 3- 2 PROFINET IO terminal assignment

View	Signal name		Description
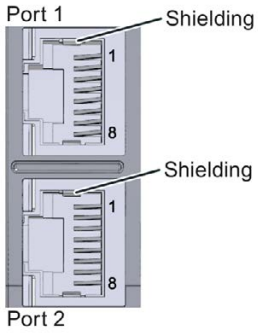	1	TD	Transmit data +
	2	TD_N	Transmit data -
	3	RD	Receive data +
	4	GND	Ground
	5	GND	Ground
	6	RD_N	Receive data -
	7	GND	Ground
	8	GND	Ground

Reference

You can find more information on accessories and how to connect the interface module in the system manual ET 200SP distributed I/O system (http://support.automation.siemens.com/WW/view/en/58649293).

3.2 Block diagram

The following figure shows the block diagram of the interface module IM 155-6 PN BA.

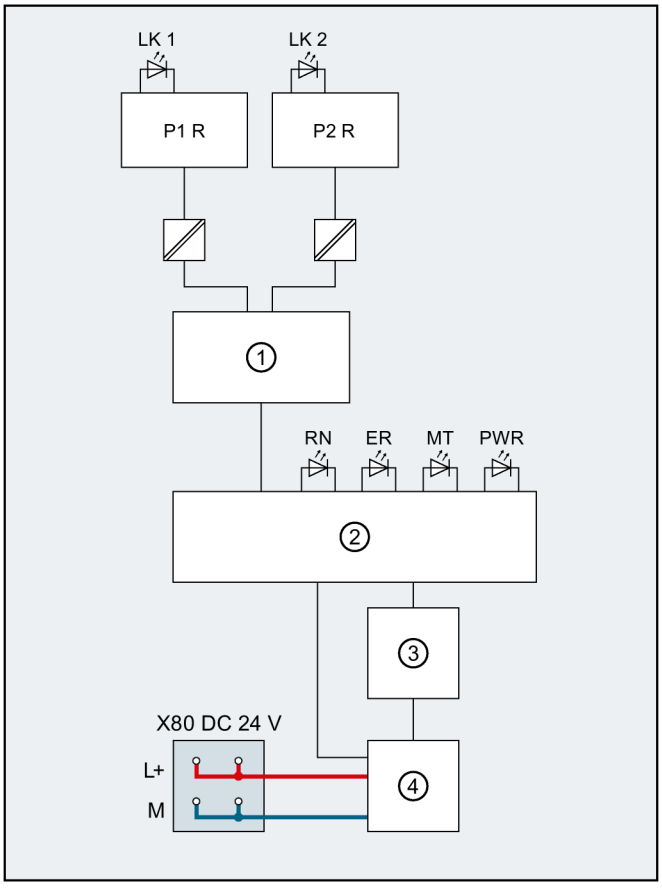

①	Switch	L+	24 V DC supply voltage
②	ET 200SP backplane bus interface and electronics	M	Ground
③	Backplane bus	LK 1,2	LED Link TX/RX
④	Internal power supply	RN	LED RUN/STOP (green/yellow)
X80 24 V DC	Infeed of supply voltage	ER	ERROR LED (red)
P1 R	PROFINET interface X1 Port 1	MT	MAINT LED (yellow)
P2 R	PROFINET interface X1 Port 2	PWR	POWER LED (red)

Figure 3-1 Block diagram of IM 155-6 PN BA interface module

Parameters/address space 4

4.1 Parameters

Parameters for IM 155-6 PN BA interface module

The following table shows the parameters for the IM 155-6 BA interface module.

Table 4- 1 Parameters for interface module IM 155-6 PN BA (GSD file)

Parameters	Range of values	Default	Efficiency range
Configuration control	Disable/enable	Disable	ET 200SP

4.2 Explanation of the parameters

4.2.1 Enabling configuration control

You can use this parameter to enable the configuration control function in the ET 200SP distributed I/O system.

Note

If you configure the enable, the ET 200SP distributed I/O system requires a control data record 196 from the user program in order for the ET 200SP distributed I/O system to operate the I/O modules.

Reference

You can find more information on the control data record in the ET 200SP distributed I/O system (http://support.automation.siemens.com/WW/view/en/58649293) system manual and in the STEP 7 online help.

4.3 Substitute value behavior

The substitute value behavior in the ET 200SP distributed I/O system is executed by the IO controller for each slot.

The respective output behaves according to its configured substitute value behavior:

- Current-free/voltage-free
- Output substitute value
- Keep last value

The substitute value behavior is triggered in the following cases:

- STOP controller
- Controller failure (connection interrupted)
- Station stop, for example, due to:
  - Missing server module
  - Removing more than one I/O module at a time
  - At least one I/O module installed on an incorrect BaseUnit
- Deactivating the IO device

Note

Reducing a configuration

If you reduce the configuration of the ET 200SP distributed I/O system and download the configuration to the CPU, the modules which are no longer configured but still present retain their original substitute value behavior. This applies until the supply voltage is switched off at the interface module.

The "current-free/voltage-free" behavior takes effect in the following cases:

- Firmware update
- Reset to factory settings
- Configuration control: receipt of a new control data record
- Incorrectly configured module
- Module with incorrect parameter assignment

4.4 Status of the supply voltage L+ of the I/O modules

Configurations

The "Status of supply voltage L+ of the I/O modules" is configured in the IM 155-6 PN BA on the server module. The input data can then be read out on the server module. You will find the relevant description in the Server module (http://support.automation.siemens.com/WW/view/en/63257531) manual.

Interrupts, error messages, diagnostics and system alarms

5

5.1 Status and error displays

Introduction

Diagnostics by means of LEDs is an initial tool for error localization. In order to localize errors still further, you usually evaluate the display of the module status in STEP 7 or the diagnostics buffer of the CPU. The buffer contains plain text information on the error that has occurred. For example, you will find the number of the relevant error OB in the plain text information.

LED display

The following diagram shows the LED display on the interface module and the BusAdapter.

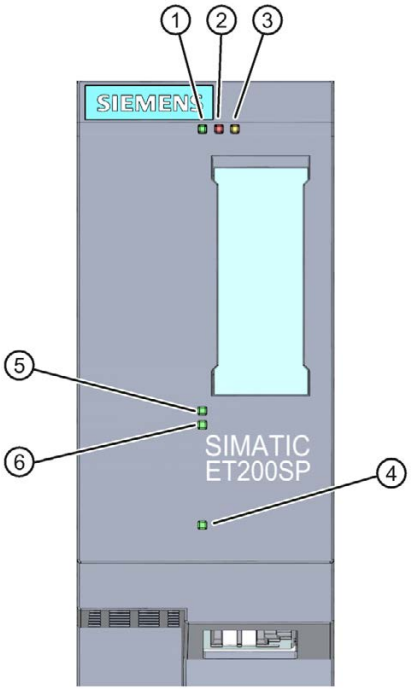

① RN (green)
② ER (red)
③ MT (yellow)
④ PWR (green)
⑤ LK1 (green)
⑥ LK2 (green)

Figure 5-1 LED display on the interface module

Meaning of the LEDs

The following tables describe the meanings of the status and error displays.

RN/ER/MT LED on the interface module

Table 5- 1 RN/ER/MT status and error displays

LEDs			Meaning	Solution
RN (RUN)	ER (ERROR)	MT (MAINT)		
Off	Off	Off	No or insufficient supply voltage on interface module.	Check the supply voltage or turn it on at the interface module. *
On	On	On	Test of LEDs during startup: The three LEDs light up simultaneously for approximately 0.25 s.	-
Flashes	Off	Off	Interface module is deactivated.	Activate the interface module with the configuration software or the user program.
			Interface module is not configured.	Configure the interface module with the configuration software.
			ET 200SP starts up.	-
			ET 200SP is being assigned parameters.	
			ET 200SP is being reset to factory settings.	
On	Not relevant	Not relevant	ET 200SP is currently exchanging data with the IO controller.	
Not relevant	Flashes	Not relevant	Group errors and group error channels.	Evaluate the diagnostics and eliminate the error.
			The preset configuration does not correspond to the actual configuration of the ET 200SP .	Check the structure of the ET 200SP to see whether a module is missing or defective, or whether a non-configured module is plugged.
			Invalid configuration states.	Refer to section Invalid configuration states of the ET 200SP on PROFINET IO (Page 27)
			Parameter error in the I/O module.	Evaluate the display of the module status in STEP 7 and eliminate the error in the respective I/O module.
Flashes	Flashes	Flashes	The "Node flash test" is running (the LEDs LK1 and LK2 of the PROFINET interface also flash).	-
			Hardware or firmware defective (the LEDs LK1 and LK2 of the PROFINET interface do not flash).	Run a firmware update. If the error persists, contact Siemens Industry Online Support. Replace the interface module.

* PWR LED on (on the interface module): Check the backplane bus for a short circuit.

PWR LED on the interface module

Table 5- 2 PWR status display on the interface module

PWR LED	Meaning	Solution
□ Off	No or insufficient supply voltage	Check the supply voltage.
■ On	Supply voltage present	-

LK1/LK2 LED on the interface module

Table 5- 3 LK1/LK2 status display on the interface module

LEDs LK1/LK2	Meaning	Solution
□ Off	There is no Ethernet connection between the PROFINET IO interface of your PROFINET device and a communication partner (e.g. IO controller).	Check whether the bus cable to the switch/IO controller is interrupted.
■ On	There is an Ethernet connection between the PROFINET IO interface of your PROFINET device and a communication partner (e.g. IO controller).	-
☼ Flashes	The "Node flash test" is running (the RN/ER/MT LEDs also flash).	-

LED display of configuration errors

Configuration errors of the ET 200SP distributed I/O system are output on the interfacemodule by the ERROR (red) and MAINT (yellow) LEDs.

The following configuration errors are indicated by the LEDs:

- More than one I/O module pulled
- Missing server module
- Interruptions or short circuit on the backplane bus

Operating principle

You determine the information for cause of the error with the LED error display. After notification by the flash signal, the error type is displayed followed by the error location/error code.

The LED error display

- is active during POWER ON as well as during operation.
- has priority before all other states displayed by the ERROR and MAINT LED.
- remains turned on until the cause of the error has been corrected.

Table 5- 4 Display of error type and error location

Sequence		Description
1	The ERROR and MAINT LEDs flash 3x at 0.5 Hz	Signaling of error type
2	MAINT LED flashes at 1 Hz	Display of the error type (decimal)
3	The ERROR and MAINT LEDs flash 3x at 2 Hz	Signaling of error location/error code
4	The ERROR LED flashes at 1 Hz	Display of tens digit (decimal) of the error location/error code
5	The MAINT LED flashes at 1 Hz	Display of ones digit (decimal) of the error location/error code
6	Repeat steps 1 to 5 until the cause of the error has been corrected.	

Error display

The following table shows the possible causes of error that can occur.

Table 5- 5 Error display

Error type (MAINT)	Error location (ERROR/MAINT)	Cause of error	Remedy
1	02 to 12*	The number of pulled I/O modules is displayed. The diagnostics data is generated starting with two pulled I/O modules.	Check the configuration of the ET 200SP.
	65*	• Missing server module • Interruptions at the backplane bus • Short circuit of communication on the backplane bus	

* Slot

Note

A short circuit in the backplane bus supply or the bus connection supply is indicated by the following LEDs:

- PWR LED: On
- RN, ER and MT LED: Off

5.2 Interrupts

Introduction

The I/O device generates interrupts as a reaction to specific error events. Interrupts are evaluated based on the I/O controller used.

Evaluating interrupts with I/O controllers

The ET 200SP distributed I/O system supports the following interrupts:

- Diagnostics interrupts
- Hardware interrupts
- Pull/plug module interrupts
- Maintenance events

In the event of an interrupt, interrupt OBs are automatically called in the CPU of the IO controller.

Information on the cause and class of the error is already available, based on the OB number and start information.

Detailed information on the error event can be obtained in the error OB using the instruction "RALRM" (read additional interrupt information).

System diagnostics

STEP 7 (TIA portal) offers innovative system diagnostics for the devices of the S7-1500 (IO controller CPU S7-1500) and the ET 200SP (IO device) automation system. Independent of the cyclic user program, alarms are made available on the display of the CPU S7-1500, the CPU web server and the HMI device.

For more information on system diagnostics, refer to the System Diagnostics function manual. (http://support.automation.siemens.com/WW/view/en/59192926).

5.2.1 Triggering a diagnostics interrupt

Triggering a diagnostics interrupt

For an incoming or outgoing event (e.g. wire break on a channel of an I/O module), the module triggers a diagnostics interrupt if this is configured accordingly.

The CPU interrupts the user program and processes the diagnostics block OB 82. The interrupt triggering event is logged in the start information of OB 82.

5.2.2 Triggering a hardware interrupt

Triggering a hardware interrupt

If there is a hardware interrupt, the CPU interrupts user program execution and processes the hardware interrupt block OB 40. The result that triggered the interrupt is added to the start information of the hardware interrupt block.

Note

Diagnostics "Hardware interrupt lost" (from I/O module)

Avoid creating hardware interrupts cyclically.

If the hardware interrupt load is too high, hardware interrupts can get lost depending on the number of I/O modules and the communication load.

5.2.3 Triggering a pull/plug interrupt

Triggering a pull/plug interrupt

If there is a pull/plug interrupt, the CPU interrupts user program execution and processes the hardware interrupt block OB 83. The result that triggered the interrupt is added to the start information of OB 83.

5.3 Alarms

Actions after a diagnostics alarm

There can be more than one diagnostic alarm at a given time. Actions initiated by diagnostics alarms:

- The ERROR LED of the interface module flashes.
- Diagnostic data is reported as diagnostic interrupts to the CPU of the IO controller and can be read via data records.
- Incoming diagnostics alarms are saved to the diagnostics buffer of the I/O controller.
- OB 82 is called.

You can find more information on this topic in the STEP 7 online help.

Reading out the diagnostics data

Table 5- 6 Reading the diagnostics with STEP 7

Automation system with IO controller	Application	See...
SIMATIC S7	Diagnostics as plain text in STEP 7 in online and diagnostics view	STEP 7 online help • As of STEP 7 V13, function manual PROFINET with STEP 7 V13 (http://support.automation.siemens.com/WW/view/de/49948856/0/en) • As of STEP 7 V5.5 system manual PROFINET System Description (http://support.automation.siemens.com/WW/view/en/19292127)
	Instruction "RDREC" (SFB 52) Read data records from the IO device	
	Instruction "RALRM" (SFB 54) Receive interrupts from the IO device	

Additional information on the data records for PROFINET IO

The structure of the diagnostic data records and programming examples are available in the programming manual From PROFIBUS DP to PROFINET IO (http://support.automation.siemens.com/WW/view/en/19289930) and in Application example (http://support.automation.siemens.com/WW/view/en/24000238).

Causes of error and corrective measures

The causes of error and corrective measures for the diagnostics alarms are described in the manuals for I/O modules (http://support.automation.siemens.com/WW/view/en/55679691/133300) in the chapter, "Interrupts/diagnostics alarms".

See also

Channel diagnostics (Page 26)

PROFINET with STEP 7 V11
(http://support.automation.siemens.com/WW/view/en/49948856)

5.3.1 Channel diagnostics

Function

Channel-related diagnostics provides information about channel faults in modules.

Channel faults are mapped as channel diagnostics data in IO diagnostics data records.

The data record is read using the instruction "RDREC".

Structure of the diagnostics data records

The data records supported by the ET 200SP distributed I/O system are based on the PROFINET IO standard - Application Layer Service Definition V2.2 or higher.

You can download the standard PROFIBUS user organization (http://www.profibus.com) from the homepage of the PROFIBUS User Organization free of charge.

5.3.2 Invalid configuration states of the ET 200SP on PROFINET IO

Invalid configuration states

The following invalid configuration states of the ET 200SP distributed I/O system lead to the failure of the IO device or prevent the exchange of user data with the I/O modules.

- Number of modules exceeds maximum configuration
- Faulty backplane bus (e.g. defective BaseUnit). ET 200SP backplane bus interruptions do not trigger an interrupt.
- Missing server module
- At least one I/O module is installed in a different BaseUnit than the one configured in the parameters.

Note

If you remove more than one I/O module or the server module, this results in a station stop. All I/O modules of the ET 200SP distributed I/O system fail (substitute value behavior) but the interface module is still exchanging data.

Revoking the station stop (by correcting the invalid configuration state) leads to a brief failure of the ET 200SP distributed I/O system and automatic restart.

See also

Status and error displays (Page 18)

Channel diagnostics (Page 26)

5.3.3 Failure of supply voltage L+ at BaseUnit BU...D

Failure of the supply voltage L+

The I/O modules react as follows to failure of the supply voltage L+ on the BaseUnit BU...D:

- If an I/O module is removed during failure of the supply voltage, a pull interrupt is generated.
- If an I/O module is installed during failure of the supply voltage, a plug interrupt is generated.

5.3.4 STOP of the IO controller and recovery of the IO device

STOP of the SIMATIC IO controller

Diagnostics frames received from the IO device while the IO controller is in STOP do not initiate a call of any corresponding OBs when the IO controller goes into RUN. You must read the data record $E00C_H$ with the "RDREC" instruction in OB 100. This record contains all diagnostics for the slots assigned to an IO controller in an IO device.

Recovery of the SIMATIC IO device

If you want to read the diagnostics of a station after its return, you have to read the $E00C_H$ data record with the "RDREC" instruction in OB 86. This record contains all diagnostics for the slots assigned to an IO controller in an IO device.

Compatibility

6

Status of the supply voltage

Load voltage diagnostics are only valid if the station started up with a valid and complete configuration.

- For modules in the following table without a parameter assignment, the status of the supply voltage is always signaled as "1" regardless of the actual status of the supply voltage.
- If a potential group is exclusively made up of modules without parameter assignment from the table below, no group diagnostics "No supply voltage L+" is signaled for this potential group.

Module	Order number
DI 8x24VDC ST	6ES7132-6BF00-0BA0
DI 16x24VDC ST	6ES7131-6BH00-0BA0
DI 8x24VDC HF	6ES7132-6BF00-0CA0
DQ 4x24VC/2A ST	6ES7132-6BD20-0BA0
DQ 8x24VDC/0,5A ST	6ES7132-6BF00-0BA0
DQ 16x24VDC/0,5A ST	6ES7132-6BH00-0BA0
DQ 8x24VDC/0,5A HF	6ES7131-6BF00-0CA0

Technical specifications 7

Technical specifications of the IM 155-6 PN BA

Table 7- 1 Technical specifications of the IM 155-6 PN BA

	6ES7155-6AR00-0AN0
Product type designation	IM 155-6 PN BA with 2xRJ45 ports and server module
General information	
Hardware version	FS01
Firmware version	V3.2
Product function	
I&M data	Yes
Engineering with	
STEP 7 TIA Portal can be configured/integrated as of version	STEP 7 V13 SP1 or higher
STEP 7 can be configured/integrated as of version	V5.5 SP4 or higher
PROFINET as of GSD version/GSD revision	V2.3 / -
Supply voltage	
Rated value (DC)	24 V
Valid range, low limit (DC)	19.2 V
Valid range, high limit (DC)	28.8 V
Polarity reversal protection	Yes
Power and voltage failure backup	
Power/voltage failure backup time	5 ms
Input current	
Current consumption (rated value)	0.1 A
Current consumption, max.	300 mA
I^2t	0.09 A^2s
Power	
Incoming power to the backplane bus	1.7 W
Power loss	
Power loss, typ.	1.7 W
Address area	
Address space per module	
Address space per module, max.	32 byte; per input/output
Address space per station	
Address space per station, max.	32 byte; per input/output

	6ES7155-6AR00-0AN0
Hardware configuration	
Rack	
Modules per rack, max.	12
Interfaces	
Number of PROFINET interfaces	1
1st interface	
Interface hardware	
• Number of ports	2
• Integrated switch	Yes
• RJ45 (Ethernet)	Yes; 2 integrated RJ45 ports
• BusAdapter (PROFINET)	No
Protocols	
• PROFINET IO device	Yes
• Open IE communication	Yes
Interface hardware	
RJ45 (Ethernet)	
100 Mbps	Yes; PROFINET with 100 Mbps full duplex (100BASE-TX)
Transmission method	PROFINET with 100 Mbps full duplex (100BASE-TX)
Autonegotiation	Yes
Autocrossing	Yes
Protocols	
PROFINET IO	
PROFINET IO	Yes
PROFINET IO device	
Services	
• Isochronous mode	No
• Open IE communication	Yes
• IRT	No
• PROFIenergy	No
• Prioritized startup	No
• Shared Device	No

	6ES7155-6AR00-0AN0
Interrupts/diagnostics/status information	
Status display	Yes
Interrupts	
Interrupts	Yes
Diagnostics indicator LED	
RUN LED	Yes; green LED
ERROR LED	Yes; red LED
MAINT LED	Yes; yellow LED
Monitoring of the supply voltage (PWR LED)	Yes; green PWR LED
Connection display LINK TX/RX	Yes; 2x green LED
Electrical isolation	
Between backplane bus and electronics	No
Between PROFINET and all other circuits	Yes
Between supply and all other circuits	No
Ambient conditions	
Ambient temperature during operation	
Horizontal installation, min.	0 °C
Horizontal installation, max.	55 °C
Vertical installation, min.	0 °C
Vertical installation, max.	60 °C
Connection technology	
ET-Connection	
Via BU/BA-Send	No
Dimensions	
Width	35 mm
Height	117 mm
Depth	74 mm
Weights	
Weight, approx.	125 g; IM 155-6 PN BA with 2xRJ45 ports and server module

Dimension drawing

A

This appendix contains a dimension drawing of the module mounted on a mounting rail. Always observe the specified dimensions for installation in cabinets, control rooms, etc.

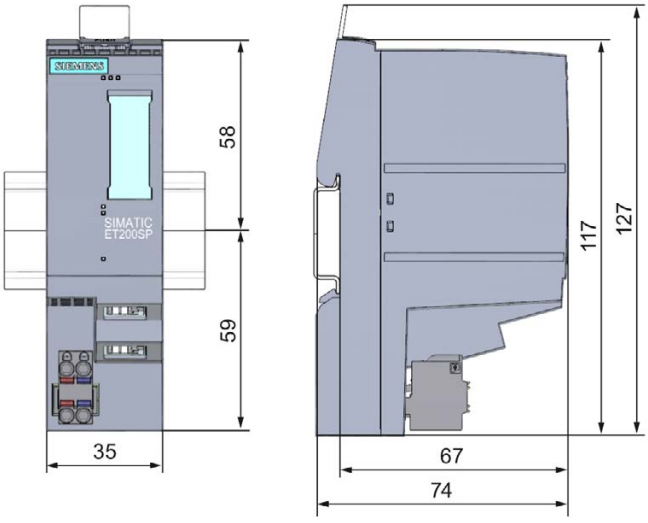

Figure A-1 Dimension drawing of the IM 155-6 PN BA interface module (front and side view)

SIEMENS

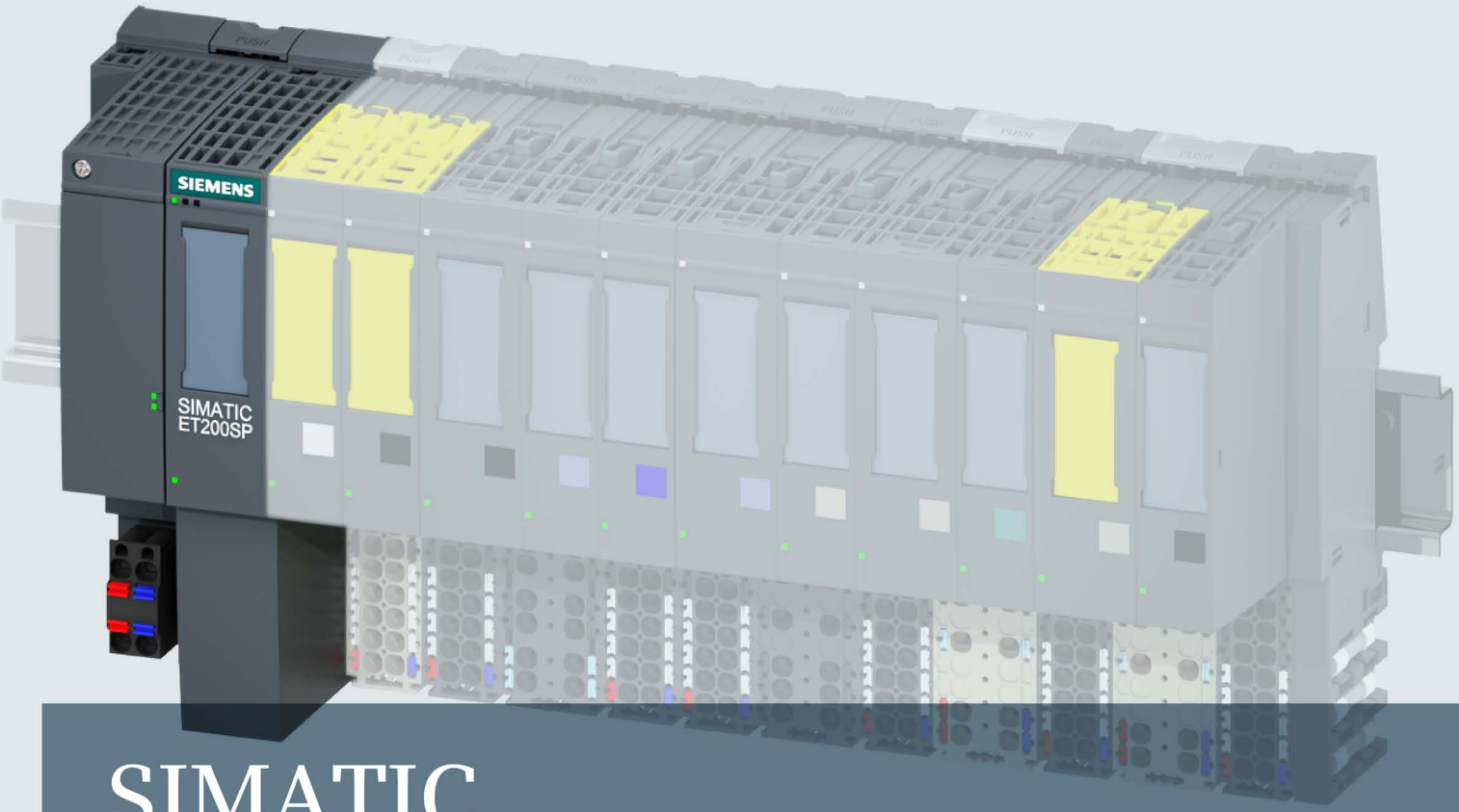

SIMATIC

ET 200SP

Interface module IM 155-6 PN HS (6ES7155-6AU00-0DN0)

Manual

Edition 09/2016

siemens.com

SIEMENS

SIMATIC

ET 200SP
IM 155-6 PN HS interface module
(6ES7155-6AU00-0DN0)

Manual

Preface

Documentation guide 1

Product overview 2

Connecting 3

Parameters/address space 4

Interrupts, diagnostics, error, and system messages 5

Compatibility 6

Technical specifications 7

Dimensional drawing A

09/2016

A5E34928647-AA

Legal information

Warning notice system

This manual contains notices you have to observe in order to ensure your personal safety, as well as to prevent damage to property. The notices referring to your personal safety are highlighted in the manual by a safety alert symbol, notices referring only to property damage have no safety alert symbol. These notices shown below are graded according to the degree of danger.

⚠ DANGER

indicates that death or severe personal injury **will** result if proper precautions are not taken.

⚠ WARNING

indicates that death or severe personal injury **may** result if proper precautions are not taken.

⚠ CAUTION

indicates that minor personal injury can result if proper precautions are not taken.

NOTICE

indicates that property damage can result if proper precautions are not taken.

If more than one degree of danger is present, the warning notice representing the highest degree of danger will be used. A notice warning of injury to persons with a safety alert symbol may also include a warning relating to property damage.

Qualified Personnel

The product/system described in this documentation may be operated only by **personnel qualified** for the specific task in accordance with the relevant documentation, in particular its warning notices and safety instructions. Qualified personnel are those who, based on their training and experience, are capable of identifying risks and avoiding potential hazards when working with these products/systems.

Proper use of Siemens products

Note the following:

⚠ WARNING

Siemens products may only be used for the applications described in the catalog and in the relevant technical documentation. If products and components from other manufacturers are used, these must be recommended or approved by Siemens. Proper transport, storage, installation, assembly, commissioning, operation and maintenance are required to ensure that the products operate safely and without any problems. The permissible ambient conditions must be complied with. The information in the relevant documentation must be observed.

Trademarks

All names identified by ® are registered trademarks of Siemens AG. The remaining trademarks in this publication may be trademarks whose use by third parties for their own purposes could violate the rights of the owner.

Disclaimer of Liability

We have reviewed the contents of this publication to ensure consistency with the hardware and software described. Since variance cannot be precluded entirely, we cannot guarantee full consistency. However, the information in this publication is reviewed regularly and any necessary corrections are included in subsequent editions.

Siemens AG
Division Digital Factory
Postfach 48 48
90026 NÜRNBERG
GERMANY

A5E34928647-AA
℗ 08/2016 Subject to change

Copyright © Siemens AG 2016.
All rights reserved

Preface

Purpose of the documentation

This manual supplements the ET 200SP distributed I/O system (http://support.automation.siemens.com/WW/view/en/58649293) system manual.

Functions that generally relate to the system are described in this manual.

The information provided in this manual and in the system/function manuals supports you in commissioning the ET 200SP distributed I/O system.

Conventions

Please also observe notes labeled as follows:

Note

A note contains important information on the product described in the documentation, on the handling of the product, or on the section of the documentation to which particular attention should be paid.

Security information

Siemens provides products and solutions with industrial security functions that support the secure operation of plants, systems, machines and networks.

In order to protect plants, systems, machines and networks against cyber threats, it is necessary to implement – and continuously maintain – a holistic, state-of-the-art industrial security concept. Siemens' products and solutions only form one element of such a concept.

Customer is responsible to prevent unauthorized access to its plants, systems, machines and networks. Systems, machines and components should only be connected to the enterprise network or the internet if and to the extent necessary and with appropriate security measures (e.g. use of firewalls and network segmentation) in place.

Additionally, Siemens' guidance on appropriate security measures should be taken into account. For more information about industrial security, please visit (http://www.siemens.com/industrialsecurity).

Siemens' products and solutions undergo continuous development to make them more secure. Siemens strongly recommends to apply product updates as soon as available and to always use the latest product versions. Use of product versions that are no longer supported, and failure to apply latest updates may increase customer's exposure to cyber threats.

To stay informed about product updates, subscribe to the Siemens Industrial Security RSS Feed under (http://www.siemens.com/industrialsecurity).

Siemens Industry Online Support

You can find current information on the following topics quickly and easily here:

- **Product support**

  All the information and extensive know-how on your product, technical specifications, FAQs, certificates, downloads, and manuals.

- **Application examples**

  Tools and examples to solve your automation tasks – as well as function blocks, performance information and videos.

- **Services**

  Information about Industry Services, Field Services, Technical Support, spare parts and training offers.

- **Forums**

  For answers and solutions concerning automation technology.

- **mySupport**

  Your personal working area in Industry Online Support for messages, support queries, and configurable documents.

This information is provided by the Siemens Industry Online Support in the Internet (http://www.siemens.com/automation/service&support).

Industry Mall

The Industry Mall is the catalog and order system of Siemens AG for automation and drive solutions on the basis of Totally Integrated Automation (TIA) and Totally Integrated Power (TIP).

Catalogs for all the products in automation and drives are available on the Internet (https://mall.industry.siemens.com).

Table of contents

Preface 4

1 Documentation guide 7

2 Product overview 11

2.1 Properties 11

2.2 Functions 15
2.2.1 PROFIenergy 23
2.2.2 Configuration control (option handling) 23
2.2.3 Use of fail-safe modules 24
2.2.4 Multi Hot Swap 24

3 Connecting 25

3.1 Terminal assignment 25

3.2 Schematic circuit diagram 31

4 Parameters/address space 32

4.1 Parameters 32

4.2 Explanation of parameters 32
4.2.1 Configuration control 32

4.3 Substitute value behavior 33

4.4 Status of the supply voltage L+ of the I/O modules 33

5 Interrupts, diagnostics, error, and system messages 34

5.1 Status and error displays 34

5.2 Interrupts 38
5.2.1 Triggering of a diagnostics interrupt 39
5.2.2 Triggering a hardware interrupt 39
5.2.3 Triggering a swapping interrupt 40

5.3 Alarms 40
5.3.1 Maintenance events 42
5.3.2 Channel diagnostics 43
5.3.3 Invalid configuration states of the ET 200SP on PROFINET IO 44
5.3.4 Failure of supply voltage L+ at BaseUnit BU...D 44
5.3.5 STOP of the IO controller and recovery of the IO device 45

6 Compatibility 46

7 Technical specifications 47

A Dimensional drawing 57

Documentation guide

1

The documentation for the SIMATIC ET 200SP distributed I/O system is arranged into three areas.
This arrangement enables you to access the specific content you require.

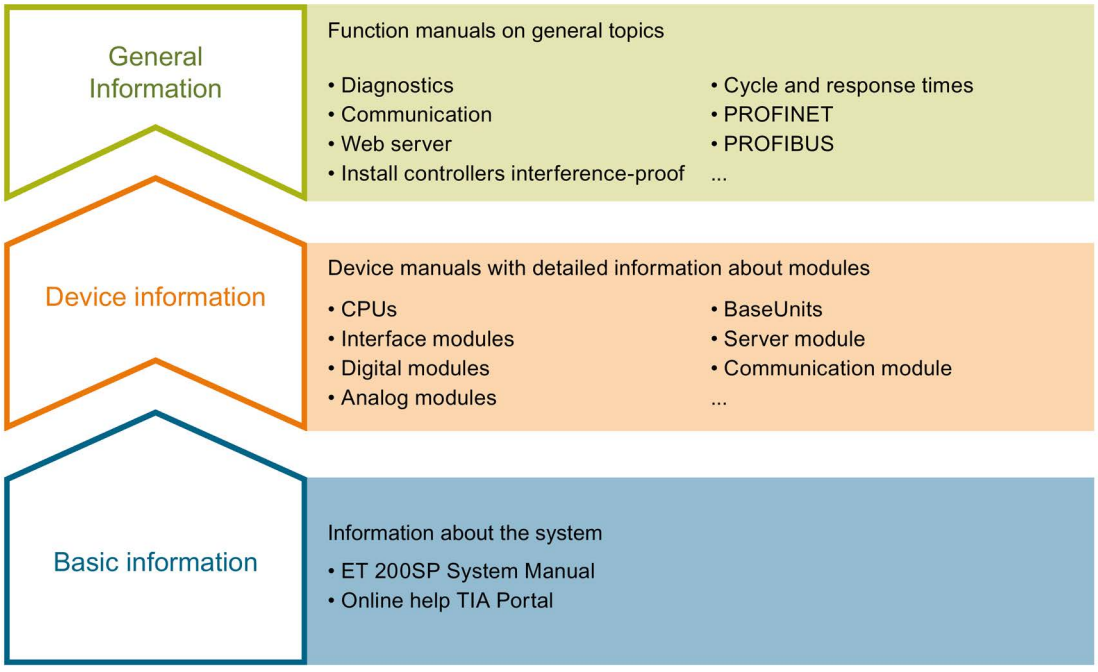

Basic information

The system manual describes in detail the configuration, installation, wiring and commissioning of the SIMATIC ET 200SP. distributed I/O system. The STEP 7 online help supports you in the configuration and programming.

Device information

Product manuals contain a compact description of the module-specific information, such as properties, wiring diagrams, characteristics and technical specifications.

General information

The function manuals contain detailed descriptions on general topics regarding the SIMATIC ET 200SP distributed I/O system, e.g. diagnostics, communication, Web server, designing interference-free controllers.

You can download the documentation free of charge from the Internet (http://w3.siemens.com/mcms/industrial-automation-systems-simatic/en/manual-overview/tech-doc-et200/Pages/Default.aspx).

Changes and supplements to the manuals are documented in a Product Information.

You can download the product information free of charge from the Internet (https://support.industry.siemens.com/cs/us/en/view/73021864).

Manual Collection ET 200SP

The Manual Collection contains the complete documentation on the SIMATIC ET 200SP distributed I/O system gathered together in one file.

You can find the Manual Collection on the Internet (http://support.automation.siemens.com/WW/view/en/84133942).

"mySupport"

With "mySupport", your personal workspace, you make the most of your Industry Online Support.

In "mySupport" you can store filters, favorites and tags, request CAx data and put together your personal library in the Documentation area. Furthermore, your data is automatically filled into support requests and you always have an overview of your current requests.

You need to register once to use the full functionality of "mySupport".

You can find "mySupport" in the Internet (https://support.industry.siemens.com/My/ww/en).

"mySupport" - Documentation

In the Documentation area of "mySupport", you have the possibility to combine complete manuals or parts of them to make your own manual.
You can export the manual in PDF format or in an editable format.

You can find "mySupport" - Documentation in the Internet (http://support.industry.siemens.com/My/ww/en/documentation).

"mySupport" - CAx Data

In the CAx Data area of "mySupport", you can have access the latest product data for your CAx or CAe system.

You configure your own download package with a few clicks.

In doing so you can select:

- Product images, 2D dimension drawings, 3D models, internal circuit diagrams, EPLAN macro files
- Manuals, characteristics, operating manuals, certificates
- Product master data

You can find "mySupport" - CAx Data in the Internet (http://support.industry.siemens.com/my/ww/en/CAxOnline).

Application examples

The application examples support you with various tools and examples for solving your automation tasks. Solutions are shown in interplay with multiple components in the system - separated from the focus in individual products.

You can find the application examples on the Internet (https://support.industry.siemens.com/sc/ww/en/sc/2054).

TIA Selection Tool

With the TIA Selection Tool, you can select, configure and order devices for Totally Integrated Automation (TIA).
This tool is the successor of the SIMATIC Selection Tool and combines the known configurators for automation technology into one tool.
With the TIA Selection Tool, you can generate a complete order list from your product selection or product configuration.

You can find the TIA Selection Tool on the Internet (http://w3.siemens.com/mcms/topics/en/simatic/tia-selection-tool).

SIMATIC Automation Tool

You can use the SIMATIC Automation Tool to run commissioning and maintenance activities simultaneously on various SIMATIC S7 stations as a bulk operation independently of the TIA Portal.

The SIMATIC Automation Tool provides a multitude of functions:

- Scanning of a PROFINET/Ethernet network and identification of all connected CPUs
- Address assignment (IP, subnet, gateway) and station name (PROFINET device) to a CPU
- Transfer of the data and the programming device/PC time converted to UTC time to the module
- Program download to CPU
- Operating mode switchover RUN/STOP
- Localization of the CPU by means of LED flashing
- Reading out CPU error information
- Reading the CPU diagnostic buffer
- Reset to factory settings
- Updating the firmware of the CPU and connected modules

You can find the SIMATIC Automation Tool on the Internet (https://support.industry.siemens.com/cs/ww/en/view/98161300).

PRONETA

With SIEMENS PRONETA (PROFINET network analysis), you analyze the plant network during commissioning. PRONETA features two core functions:

- The topology overview independently scans PROFINET and all connected components.
- The IO check is a fast test of the wiring and the module configuration of a system.

You can find SIEMENS PRONETA on the Internet (https://support.industry.siemens.com/cs/ww/en/view/67460624).

Product overview

2

2.1 Properties

Article number

6ES7155-6AU00-0DN0 (interface module IM 155-6 PN HS and server module)

View of the module

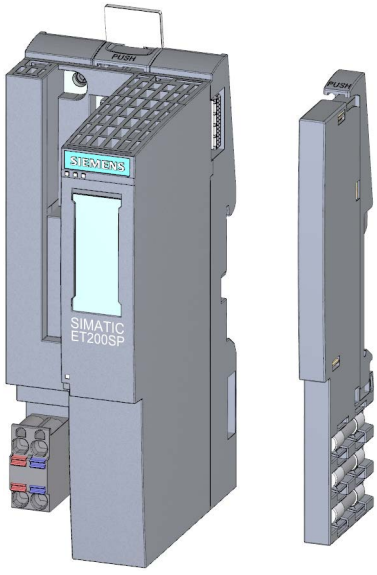

Figure 2-1 View of the IM 155-6 PN HS interface module and the server module

Properties

The module has the following properties:

- Connects the ET 200SP distributed I/O system with PROFINET IO
- High-speed applications as of 125 µs
- Isochronous mode according to PROFINET V2.3
- Supply voltage 1L+ 24 V DC (SELV/PELV).
- The connection plugs for the 24 V DC supply voltage and the server module are included in the scope of delivery of the interface module.
- PROFINET IO connection via selectable BusAdapters
  - For RJ45 bus connection plug (BA 2×RJ45)
  - For direct connection of the bus cable (BA 2×FC)
  - For POF/PCF fiber-optic cable (BA 2xSCRJ)
  - As media converter for POF/PCF fiber-optic cable ⇔ standard RJ45 plug (BA SCRJ/RJ45)
  - As media converter for POF/PCF fiber-optic cable ⇔ direct connection of the bus cable (BA SCRJ/FC)
  - For glass fiber-optic cable (BA 2xLC)
  - As media converter for glass fiber-optic cable ⇔ standard RJ45 plug (BA LC/RJ45)
  - As media converter for glass fiber-optic cable ⇔ direct connection of the bus cable (BA LC/FC)

The module supports the following PROFINET IO functions (see (Page 15))

Maximum configuration

- 30 I/O modules
- 0.5 m backplane bus (without interface module but with server module)

Maximum amount of I/O data

The maximum amount of I/O data without user data qualifier is 968 bytes.

Note

- In the case of a shared device configuration, the 968 bytes apply to the total I/O data of all controllers that share the device.
- If more than two (max. four) controllers share the device, the maximum amount of I/O data including user data qualifier is limited to 360 bytes per controller.

Accessories

You order the following accessories separately:

- BA 2×RJ45 BusAdapter
- BA 2×FC BusAdapter
- BA 2×SCRJ BusAdapter
- BA SCRJ/RJ45 BusAdapter
- BA SCRJ/FC BusAdapter
- BA 2×LC BusAdapter
- BA LC/RJ45 BusAdapter
- BA LC/FC BusAdapter
- Labeling strips
- Reference identification label

A detailed list of the available accessories can be found in the system manual ET 200SP distributed I/O system (http://support.automation.siemens.com/WW/view/en/58649293).

Server module

The server module is included in the scope of delivery of the interface module and is available separately as a spare part. The server module has the following properties:

- Terminates the backplane bus of the ET 200SP distributed I/O system
- Features a support for 3 spare fuses (5 × 20 mm)
- Provides station functions, for example, group load diagnostics, status bytes.
- Identification data I&M 0 to 3

Note

You need to configure and assign parameters to the server module in the configuration software.

To do this, place the server module in the last configuration slot and enable the parameter Group diagnostics: Missing supply voltage L+. When there are 30 I/O modules, the server module is inserted in slot 31.

You can find more information in the Server module (http://support.automation.siemens.com/WW/view/en/63257531) manual.

First BaseUnit of an ET 200SP in the configuration

The interface modules support dark-colored BaseUnits in slot 1. This means that modules without a connection to the integrated voltage buses P1 and P2 can be configured starting with slot 1. Currently, this applies to the following modules:

- AI EnergyMeter
- DI 4x120..230VAC ST (6ES7131-6FD00-0BB1)
- DQ 4x24..230VAC/2A ST (6ES7132-6FD00-0BB1)
- RQ 4x120VDC-230VAC/5A NO ST (6ES7132-6HD00-0BB1)
- RQ 4x120VDC-230VAC/5A NO MA ST (6ES7132-6MD00-0BB1)

Note

First BaseUnit of an ET 200SP in the configuration

The first BaseUnit of an ET 200SP station may be a dark-colored one if an AC I/O module or AI Energy Meter is plugged. Please observe the information on limiting the overvoltage and power rating in the AC I/O module manuals.

A light-colored BaseUnit must be plugged into the slot of the first 24 V DC I/O module to supply the 24 V DC supply voltage.

Pay attention to the type of the BaseUnits during the configuration.

2.2 Functions

PROFINET IO

The interface module supports the following PROFINET IO functions:

- Integrated switch with 2 ports
- Supported Ethernet services: ping, arp, network diagnostics (SNMP)/MIB-2, LLDP-MIB and MRP-MIB
- Port diagnostics
- Disabling ports
- Minimum update time 125 µs
- Device replacement without programming device, also without topological configuration
- Reset to factory settings via PROFINET IO
- Firmware update via PROFINET IO
- Isochronous real-time communication
- Prioritized startup
- Media redundancy (MRP)
- Media redundancy with planned duplication (MRPD)
- Shared device
- Module division of I/O modules (submodules)
- Module-internal Shared Input/Shared Output (MSI/MSO)
- Isochronous mode as of 125 µs
- Performance upgrade PROFINET V2.3
- Freely selectable connection method and connection technology over SIMATIC BusAdapter for PROFINET copper, POF, PCF or fiber-optic cables.

The interface module supports additional functions:

- Identification data I&M 0 to 3
- Oversampling
- PROFIenergy
- Configuration control (option handling)
- Value status of I/O modules
- Use of fail-safe modules
- Multi Hot Swap (removal/insertion of multiple I/O modules during operation)
- Reset to factory settings via RESET button

Note

Docking unit

The use of the IM155-6 PN HS interface module as a docking unit (function: IO device changing in operation) in a docking system is not supported.

Requirements

The table below shows the software requirements for a configuration with the IM 155-6 PN HS interface module:

Table 2- 1 Version dependencies of other module functions

Function	Product version of the module as of	Firmware version of the module as of	Configuration software		
			Configuration with GSD file/software from a third-party manufacturer [1]	STEP 7 as of V5.5 SP4 with HSP0238	STEP 7 (TIA Portal) as of V14
Real-time communication	1	V4.0.0	X	X	X
Isochronous real-time communication according to PROFINET	1	V4.0.0	X	X	X
Prioritized startup	1	V4.0.0	X	X	X
Media redundancy (MRP)	1	V4.0.0	X	X	X
Shared device	1	V4.0.0	X	X	X
Multi Hot Swap	1	V4.0.0	X	X	X
Media redundancy with planned duplication (MRPD)	1	V4.0.0	X	X	X
Isochronous mode ≥ 250 µs	1	V4.0.0	---	X	X
Isochronous mode ≥ 125 µs/187.5 µs	1	V4.0.0	---	---	X
Device replacement without programming device	1	V4.0.0	X	X	X
Module-internal Shared Input/Shared Output (MSI/MSO)	1	V4.0.0	X	X	X
Module division of I/O modules (submodules)	1	V4.0.0	X	X	X
PROFIenergy	1	V4.0.0	X	X	X
Value status	1	V4.0.0	X	X	X
Use of fail-safe modules	1	V4.0.0	---	X	X
Oversampling	1	V4.0.0	---	X	X
BA 2xRJ45 BusAdapter	1	V4.0.0	X	X	X
BA 2xFC BusAdapter	1	V4.0.0	X	X	X
BA 2xSCRJ BusAdapter	1	V4.0.0	X	X	X
BA SCRJ/RJ45 BusAdapter	1	V4.0.0	X	X	X
BA SCRJ/FC BusAdapter	1	V4.0.0	X	X	X
BA 2xLC BusAdapter	1	V4.0.0	X	X	X
BA LC/RJ45 BusAdapter	1	V4.0.0	X	X	X
BA LC/FC BusAdapter	1	V4.0.0	X	X	X

[1] systems of third-party manufacturers: Depending on the range of functions of the third-party system

Cabling with fixed connection setting

If you set a fixed connection setting of the port in STEP 7, you should also disable "Autonegotiation/Autocrossover".

You can find more information on this topic in the STEP 7 online help and

- As of STEP 7 V14, in the PROFINET with STEP 7 V14 (http://support.automation.siemens.com/WW/view/en/49948856) function manual
- As of STEP 7 V5.5, in the PROFINET System Description (http://support.automation.siemens.com/WW/view/en/19292127) system manual

Real-time communication

A transmission method for PROFINET IO based on cyclic data exchange with a provider-consumer model.

Isochronous real-time communication

Synchronized communication protocol for cyclic exchange of IRT data between PROFINET devices. A reserved bandwidth is available in the send cycle for IRT data. The reserved bandwidth ensures that the IRT data can also be transferred with another high network load (e.g. TCP/IP communication or additional real time communication) at reserved, chronologically synchronized intervals.

A topological configuration is required for IRT.

Note

IO controller as sync master with IRT communication

We recommend also operating the IO controller as a sync master when configuring the IRT communication.

Otherwise, IO devices with IRT and RT configuration could fail as a result of sync master failure.

You can find more information on the configuration of synchronized PROFINET devices in sync domains in the STEP 7 online help and

- As of STEP 7 V14, in the PROFINET with STEP 7 V14 (http://support.automation.siemens.com/WW/view/en/49948856) function manual
- As of STEP 7 V5.5, in the PROFINET System Description (http://support.automation.siemens.com/WW/view/en/19292127) system manual

Isochronous mode of I/O data

I/O data, transmission cycle via PROFINET IO, and the user program are synchronized to achieve maximum deterministics. The input and output data of distributed I/O modules in the system is simultaneously collected and simultaneously output. The constant PROFINET IO cycle forms the corresponding clock generator. The interface module supports isochronous mode of I/O data for the modules starting at 125 µs. The IO device can exchange isochronous process data with a maximum of one IO controller.

Note

If the IO controller cannot access a module (for example, module pulled, activated configuration control without written control data record), cycle time violations may occur with activated isochronous mode in the synchronous cycle interrupt OB (OB61). The time error OB (OB80) is called in the event of a cycle time violation.

This behavior is associated with updating the process image by means of the "SYNC_PI" (SFC126) and "SYNC_PO" (SFC127) instructions and depends, among other things, on the set cycle time and the configuration limits.

Note

Isochronous mode restrictions with IM 155-6 PN HS

Isochronous mode of I/O data in combination with the following functions is not possible with the interface module IM 155-6 PN HS:

- PROFIenergy

You can find more information on this topic in the STEP 7 online help and

- As of STEP 7 V14, in the PROFINET with STEP 7 V14 (http://support.automation.siemens.com/WW/view/en/49948856) function manual
- As of STEP 7 V5.5, in the PROFINET System Description (http://support.automation.siemens.com/WW/view/en/19292127) system manual

Prioritized startup

Prioritized startup describes the PROFINET IO functionality for accelerating the startup of IO devices in a PROFINET IO system with IRT and RT communication.

The function reduces the time that the appropriately configured IO devices require in order to return to cyclic user data exchange in the following cases:

- After the supply voltage has returned
- After a station has returned
- After IO devices have been activated

Note

Dependency on the startup time

The startup time depends on the number and type of modules.

The interface module permits startup times from 0.5 s.

You can find more information on this topic in the STEP 7 online help and

- As of STEP 7 V14, in the PROFINET with STEP 7 V14 (http://support.automation.siemens.com/WW/view/en/49948856) function manual
- As of STEP 7 V5.5, in the PROFINET System Description (http://support.automation.siemens.com/WW/view/en/19292127) system manual

Device replacement

Device replacement without topological configuration

The device name is also stored on the BusAdapter in addition to the interface module. A device name saved on the BusAdapter is the requirement for device replacement without topological configuration.

Storing the name on the BusAdapter and the interface module produces a range of scenarios for using the device name when the interface module is replaced.

Table 2- 2 Scenarios for using the device name

	Interface module empty	Interface module with device name
BusAdapter empty	No device name available	The device name from the interface module is used and copied to the BusAdapter.
BusAdapter with device name	The device name from the BusAdapter is used and copied to the interface module.	The device name from the BusAdapter is used and copied to the interface module if this has a different device name.

Be aware of the following constraints:

- Resetting to factory settings via the RESET button deletes the device name in both the interface module and the BusAdapter. To prevent the device name from being deleted in the BusAdapter, you can remove the BusAdapter from the interface module before resetting to factory settings.
- When a BusAdapter is replaced, a device name stored in the BusAdapter is applied to the interface module after a POWER ON.
- Do not pull/plug the BusAdapter while under voltage. If you pull/plug the BusAdapter while under voltage, the interface module restarts.

Device replacement with topological configuration

IO devices having this function can be replaced in a simple manner:

- The device name does not have to be assigned with the programming device.

The replaced IO device is assigned the device name by the IO controller and not by the programming device. The IO controller uses the configured topology and the neighboring relationships determined by the IO devices for this purpose. All involved devices must support the LLDP protocol (Link Layer Discovery Protocol). The configured target topology must match the actual topology.

IO devices that were already operated in a different configuration should be reset to their factory settings before reuse (see system manual ET 200SP Distributed I/O System (http://support.automation.siemens.com/WW/view/en/58649293)).

You can find more information on this topic in the STEP 7 online help and

- As of STEP 7 V14, in the PROFINET with STEP 7 V14 (http://support.automation.siemens.com/WW/view/en/49948856) function manual
- As of STEP 7 V5.5, in the PROFINET System Description (http://support.automation.siemens.com/WW/view/en/19292127) system manual

Replacement scenario of an IM 155-6 PN HS or of a BusAdapter

In a replacement scenario, any IO device or BusAdapter in operation must be reset to its delivery state via "Reset to factory settings" (see the system manual ET 200SP distributed I/O system (http://support.automation.siemens.com/WW/view/en/58649293)).

Media redundancy (MRP)

Function for safeguarding communication and system availability. A ring topology ensures that an alternative communication path is made available if a transmission route fails.

You can find more information on this topic in the STEP 7 online help and

- As of STEP 7 V14, in the PROFINET with STEP 7 V14 (http://support.automation.siemens.com/WW/view/en/49948856) function manual
- As of STEP 7 V5.5, in the PROFINET System Description (http://support.automation.siemens.com/WW/view/en/19292127) system manual

Media redundancy with planned duplication (MRPD)

If bumpless media redundancy is to be reached with short update times (together with IRT), you must use the MRP extension "Media redundancy with planned duplication (MRPD)".

You can find more information on this topic in the STEP 7 online help and

- As of STEP 7 V14, in the PROFINET with STEP 7 V14 (http://support.automation.siemens.com/WW/view/en/49948856) function manual
- As of STEP 7 V5.5, in the PROFINET System Description (http://support.automation.siemens.com/WW/view/en/19292127) system manual

Shared device

IO device which makes its data available to multiple IO controllers.

The interface module supports shared device at submodule level.

Notes on configuring:

- Always load hardware changes to all affected IO controllers.
- Set the same send clocks in the projects.
- Limit the I/O data including user data qualifier to 360 bytes per IO controller.
- Use the same station name and the same IP address for each shared configuration.
- Assign each module or submodule to only one IO controller.
- In the case of an incorrect configuration, you may need to perform a power OFF/ON on the interface module.

You can find more information on this topic in the STEP 7 online help and

- As of STEP 7 V14, in the PROFINET with STEP 7 V14 (http://support.automation.siemens.com/WW/view/en/49948856) function manual
- As of STEP 7 V5.5, in the PROFINET System Description (http://support.automation.siemens.com/WW/view/en/19292127) system manual

Submodules

The IM 155-6 PN HS interface module supports the module division of I/O modules into up to 4 submodules. This allows parts of an I/O module to be separately configured and assigned parameters.

It is possible to assign each of these submodules to different IO controllers.

The functions

- Firmware update
- Write I&M data
- Calibration
- PROFIenergy

can only be executed if you have configured submodule 1 during configuration.

Module-internal Shared Input/Shared Output (MSI/MSO)

The module-internal Shared Input function allows an input module to make its input data available to up to three additional IO controllers. Each controller has read access to the same channels.

The module-internal Shared Output function allows an output module to make the status of its output data available to up to three additional IO controllers. These additional IO controllers can read the status of the channels as input data.

You can find more information on this topic in the STEP 7 online help and:

- As of STEP 7 V14, in the PROFINET with STEP 7 V14 (http://support.automation.siemens.com/WW/view/en/49948856) function manual

Value status

The IM 155-6 PN HS interface module supports I/O modules with value status.

You can find more information on the value status in the manuals for the I/O modules.

Oversampling

The IM 155-6 PN HS interface module supports the oversampling mode of HS modules. With oversampling, the modules reduce the respective PROFINET send clocks in isochronous mode.

You can find more information on oversampling in the manuals for the I/O modules.

2.2.1 PROFIenergy

Properties

PROFIenergy (for PROFINET) reduces the energy consumption by using PROFIenergy commands during production-free periods.

Reference

You can find more information on PROFIenergy in the

- I/O modules (http://support.automation.siemens.com/WW/view/en/55679691/133300) manual
- PROFINET with STEP 7 V14 (http://support.automation.siemens.com/WW/view/en/49948856) function manual
- PROFINET System Description (http://support.automation.siemens.com/WW/view/en/19292127) system manual
- PROFIenergy (http://support.automation.siemens.com/WW/view/en/66928686) product information.
- Internet (http://www.profibus.com) under Common Application Profile PROFIenergy; Technical Specification for PROFINET; Version 1.0; January 2010; Order No: 3.802.

2.2.2 Configuration control (option handling)

Properties

Configuration control allows you to prepare your distributed I/O system for future extensions or changes. Configuration control means that you can configure the planned maximum configuration of your distributed I/O system in advance and vary it later in a flexible manner by means of the user program.

Reference

You can find more information on configuration control

- in the ET 200SP distributed I/O system (http://support.automation.siemens.com/WW/view/en/58649293) system manual
- on the Internet under the following link Application collection (http://support.automation.siemens.com/WW/view/en/29430270)
- in the STEP 7 online help.

2.2.3 Use of fail-safe modules

Properties

The interface module IM 155-6 PN HS supports the use of fail-safe modules.

Reference

You can find more information in the ET 200SP distributed I/O system (http://support.automation.siemens.com/WW/view/en/58649293) system manual.

2.2.4 Multi Hot Swap

Properties

You can remove and insert any number of I/O modules during operation. The interface module and the inserted I/O modules remain in operation.

Note

The IM 155-6 PN HS interface module does not support the removal and insertion of the server module, the interface module and BusAdapter during operation.

Reference

You can find more information on the removal/insertion of modules in the system manual ET 200SP distributed I/O system (http://support.automation.siemens.com/WW/view/en/58649293).

Connecting

3

3.1 Terminal assignment

24 V DC supply voltage

The table below shows the signal names and descriptions of the pin assignment of the 24 V DC supply voltage.

Table 3- 1 Pin assignment 24 V DC supply voltage

View		Signal name[1]	Description
Connector	IM connection		
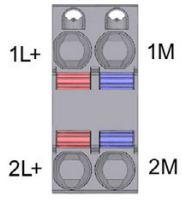	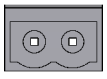	1L+	24 V DC
		2L+	24 V DC (for looping through)[2]
		1M	Ground
		2M	Ground (for looping through)[2]

[1] 1L+ and 2L+ as well as 1M and 2M are bridged internally.

[2] Maximum 10 A permitted.

PROFINET IO with BusAdapter BA 2×RJ45

The following table shows the signal name and description of the pin assignment of the BusAdapter BA 2×RJ45.

Table 3- 2 PROFINET IO pin assignment with BusAdapter BA 2×RJ45

View	Signal name		Description
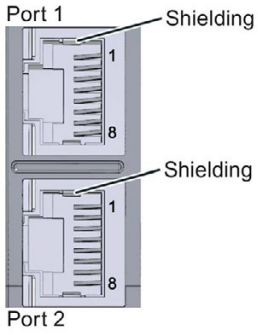	1	TD	Transmit data +
	2	TD_N	Transmit data -
	3	RD	Receive data +
	4	GND	Ground
	5	GND	Ground
	6	RD_N	Receive data -
	7	GND	Ground
	8	GND	Ground

PROFINET IO with BusAdapter BA 2×FC

The following table shows the signal name and description of the pin assignment of the BusAdapter BA 2×FC.

Table 3- 3 PROFINET IO pin assignment with BusAdapter BA 2×FC

View	Signal name		Description
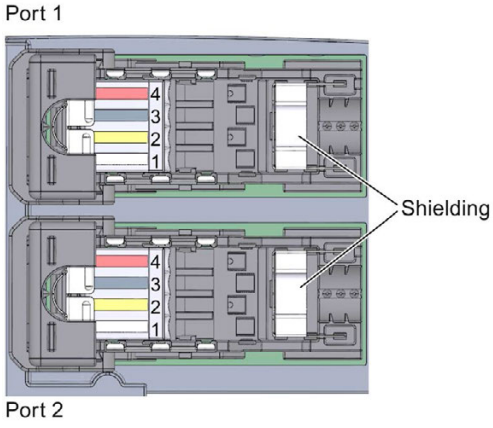	1	TD	Transmit data +
	2	TD_N	Transmit data -
	3	RD	Receive data +
	4	RD_N	Receive data -

PROFINET IO with BusAdapter BA 2×SCRJ

The following table shows the signal names and description of the pin assignment for the BA 2×SCRJ BusAdapter.

Table 3- 4 PROFINET IO pin assignment with BusAdapter BA 2×SCRJ

View	Signal name	Description
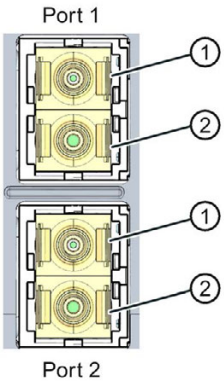	①	Receiver/Receive data
	②	Sender/Transmit data

PROFINET IO with BusAdapter BA 2×LC

The following table shows the signal names and description of the pin assignment for the BA 2×LC BusAdapter.

Table 3- 5 PROFINET IO pin assignment with BusAdapter BA 2×LC

View	Signal name	Description
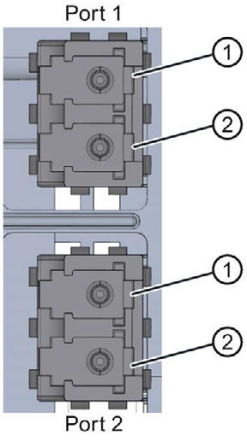	①	Receiver/Receive data
	②	Sender/Transmit data

PROFINET IO with BusAdapter BA SCRJ/RJ45

The following table shows the signal names and description of the pin assignment for the BA SCRJ/RJ45 BusAdapter.

Table 3- 6 PROFINET IO pin assignment with BusAdapter BA SCRJ/RJ45

View	Signal name		Description
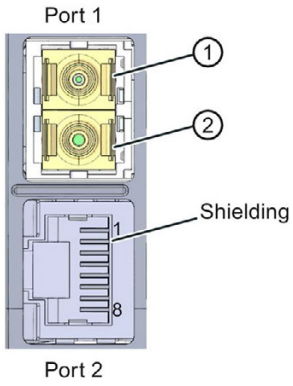	①		Receiver/Receive data
	②		Sender/Transmit data
	1	TD	Transmit data +
	2	TD_N	Transmit data –
	3	RD	Receive data +
	4	GND	Ground
	5	GND	Ground
	6	RD_N	Receive data –
	7	GND	Ground
	8	GND	Ground

PROFINET IO with BusAdapter BA SCRJ/FC

The following table shows the signal names and description of the pin assignment for the BA SCRJ/FC BusAdapter.

The pin assignment for the BA SCRJ/FC BusAdapter is shown individually for a clearer overview.

Table 3- 7 PROFINET IO pin assignment with BusAdapter BA SCRJ/FC

View	Signal name		Description
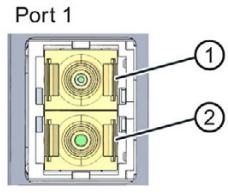	①		Receiver/Receive data
	②		Sender/Transmit data
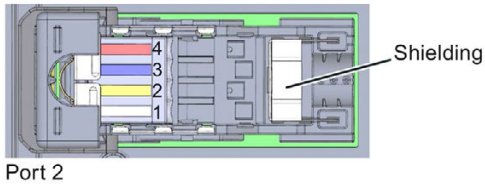	1	TD	Transmit data +
	2	TD_N	Transmit data –
	3	RD	Receive data +
	4	RD_N	Receive data -

PROFINET IO with BusAdapter BA LC/RJ45

The following table shows the signal names and description of the pin assignment for the BA LC/RJ45 BusAdapter.

Table 3- 8 PROFINET IO pin assignment with BusAdapter BA LC/RJ45

View	Signal name		Description
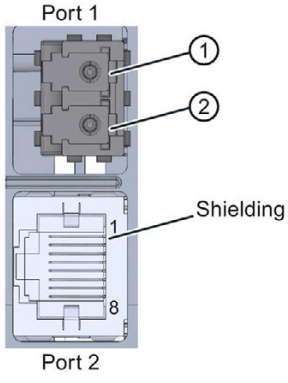	①		Receiver/Receive data
	②		Sender/Transmit data
	1	TD	Transmit data +
	2	TD_N	Transmit data –
	3	RD	Receive data +
	4	GND	Ground
	5	GND	Ground
	6	RD_N	Receive data –
	7	GND	Ground
	8	GND	Ground

PROFINET IO with BusAdapter BA LC/FC

The following table shows the signal names and description of the pin assignment for the BA LC/FC BusAdapter.

The pin assignment for the BA LC/FC BusAdapter is shown individually for a clearer overview.

Table 3- 9 PROFINET IO pin assignment with BusAdapter BA LC/FC

View	Signal name		Description
Port 1 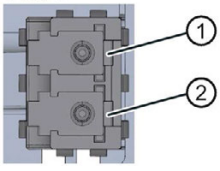	①		Receiver/Receive data
	②		Sender/Transmit data
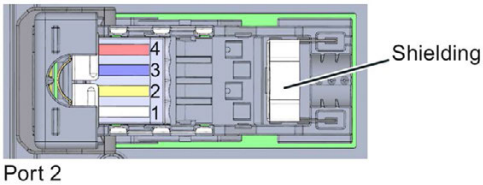 Port 2	1	TD	Transmit data +
	2	TD_N	Transmit data –
	3	RD	Receive data +
	4	RD_N	Receive data -

Reference

You can find more information on accessories and how to connect the interface module in the System Manual ET 200SP distributed I/O system (http://support.automation.siemens.com/WW/view/en/58649293).

3.2 Schematic circuit diagram

The following figure shows the block diagram of the interface module IM 155-6 PN HS.

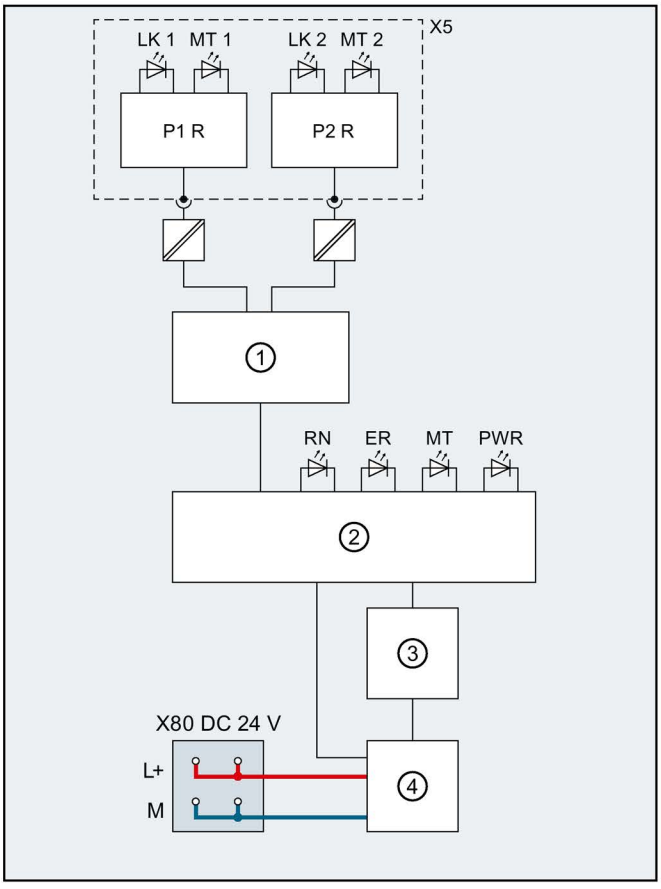

①	Switch	L+	24 V DC supply voltage
②	ET 200SP backplane bus interface and electronics	M	Ground
③	Backplane bus	LK 1,2	Link TX/RX LED (green)
④	Internal power supply	MT 1,2	MAINT FiberOptic LED (SCRJ port) (yellow)
X80 24 V DC	Feed supply voltage	RN	RUN/STOP LED (green/yellow)
X5	BusAdapter	ER	ERROR LED (red)
P1 R	PROFINET interface X1 Port 1	MT	MAINT LED (yellow)
P2 R	PROFINET interface X1 Port 2	PWR	POWER LED (green)

Figure 3-1 Block diagram of the IM 155-6 PN HS interface module

Parameters/address space 4

4.1 Parameters

Parameters for IM 155-6 PN HS interface module

The following table shows the parameters for the IM 155-6 PN HS interface module.

Table 4- 1 Parameters for IM 155-6 PN HS interface module (GSD file)

Parameters	Value range	Default	Efficiency range
Configuration control	Disable/enable	Disable	ET 200SP

4.2 Explanation of parameters

4.2.1 Configuration control

You can use this parameter to enable the configuration control function in the ET 200SP distributed I/O system.

Note

If you configure the enable, the ET 200SP distributed I/O system requires a control data record 196 from the user program in order for the ET 200SP distributed I/O system to operate the I/O modules.

Reference

You can find more information in the ET 200SP distributed I/O system (http://support.automation.siemens.com/WW/view/en/58649293) system manual and in the STEP 7 online help.

4.3 Substitute value behavior

Substitute value behavior

The substitute value behavior in the ET 200SP distributed I/O system is defined through the configuration.

The respective output behaves according to its configured substitute value behavior:

- Current-free/voltage-free
- Output substitute value
- Keep last value

The substitute value behavior is triggered in the following cases:

- STOP controller
- Controller failure (connection interrupted)
- Parameter assignment phase during startup
- Deactivating the IO device
- Station stop:
  - Missing server module
  - At least one I/O module installed on an incorrect BaseUnit

Note

Reducing a configuration

If you reduce the configuration of the ET 200SP distributed I/O system and download the configuration to the CPU, the modules which are no longer configured but still present retain their original substitute value behavior. This applies until the supply voltage is switched off at the interface module.

The "current-free/voltage-free" behavior becomes effective in the following cases:

- Firmware update
- Reset to factory settings
- Configuration control: The IM has not received a valid control data record 196 yet.
- Incorrectly configured module
- Module with incorrect parameter assignment

4.4 Status of the supply voltage L+ of the I/O modules

The status of the supply voltage L+ of the ET 200SP I/O modules is mapped to the server module with the interface module IM 155-6 PN HS.

You can find information on the status of the supply voltage L+ of the I/O modules in the Server module (http://support.automation.siemens.com/WW/view/en/63257531) manual.

Interrupts, diagnostics, error, and system messages 5

5.1 Status and error displays

LED displays

The following figure shows the LED displays on the interface module and BusAdapter.

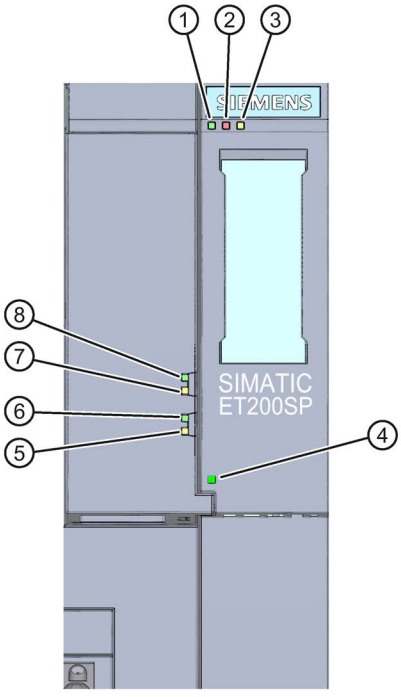

① RN (green)
② ER (red)
③ MT (yellow)
④ PWR (green)
⑤ MT2 (yellow) (SCRJ port)
⑥ LK2 (green)
⑦ MT1 (yellow) (SCRJ port)
⑧ LK1 (green)

Figure 5-1 LED displays on the interface module and BusAdapter

Meaning of the LEDs

The following tables contain the meaning of the status and error displays.

RN/ER/MT LEDs on the interface module

Table 5- 1 Status and error displays of RN/ER/MT LEDs

LEDs			Meaning	Remedy
RN (RUN)	ER (ERROR)	MT (MAINT)		
Off	Off	Off	Missing or insufficient supply voltage on interface module.	Check the supply voltage or turn it on at the interface module.*
On	On	On	Test of LEDs during startup: The three LEDs light up simultaneously for approximately 0.25 s.	---
Flashes	Not relevant	Not relevant	Interface module is deactivated.	Activate the interface module with the configuration software or the user program.
			Interface module is not configured.	Configure the interface module with the configuration software.
			ET 200SP starts up.	---
			ET 200SP is being assigned parameters.	
On	Not relevant	Not relevant	ET 200SP is currently exchanging data with the IO controller.	---
Not relevant	Flashes	Not relevant	Group errors and group error channels.	Evaluate the diagnostics data and remedy the error.
			The configured structure does not correspond to the actual structure of the ET 200SP .	Check the structure of the ET 200SP to see whether a module is missing or defective, or whether a non-configured module is plugged.
			Invalid configuration states.	See section Invalid configuration states of the ET 200SP on PROFINET IO (Page 44)
			Parameter error in the I/O module.	Evaluate the display of the module status in STEP 7 and eliminate the error in the respective I/O module.
Not relevant	Not relevant	On	Maintenance	See section Maintenance events (Page 42)
Flashes	Flashes	Not relevant	Invalid BusAdapter	Check the BusAdapter.
Flashes	Flashes	Flashes	The "Node flash test" is run (the LEDs LK1 and LK2 of the PROFINET interface also flash).	---
			Hardware or firmware defective (the LEDs LK1 and LK2 of the PROFINET interface do not flash).	Run a firmware update. If the error persists, contact Siemens Industry Online Support. Replace the interface module.
Not relevant	Flashes	Flashes	Configuration error on backplane bus	Insert the server module as bus termination or check the number of inserted modules.

* PWR LED on (on the interface module): Check the backplane bus for a short circuit.

PWR LED on the interface module

Table 5- 2 Status display of the PWR LED

PWR LED	Meaning	Remedy
□ Off	Supply voltage not present or too small	Check the supply voltage.
■ On	Supply voltage present	---

LK1/LK2 and MT1/MT2 LEDs on the BusAdapter

Table 5- 3 Status and error displays of LK1/LK2 and MT1/MT2 LEDs

LED		Meaning	Remedy
LK1/LK2	MT1/MT2*		
□ Off	Not relevant	There is no Ethernet connection between the PROFINET IO interface of your PROFINET device and a communication partner (e.g. IO controller).	Check whether the bus cable to the switch/IO controller is interrupted.
■ On	Not relevant	There is an Ethernet connection between the PROFINET IO interface of your PROFINET device and a communication partner (e.g. IO controller).	---
☼ Flashes	Not relevant	The "Node flash test" is run (the RN/ER/MT LEDs also flash).	---
Not relevant	□ Off	No error	---
Not relevant	■ On	• Fiber-optic error • Maintenance demanded: Attenuation through the fiber-optic cable is so high that operation will soon no longer be possible.	Causes and measures for the transmission route: • Replacement of fiber-optic cable if damaged or aged • Correct installation of the PROFINET connector/PROFINET connections • Adherence to maximum length of 50 m for POF cable or 100 m for PCF cable. • Secure fit of the FOC connector

* Available only on BA 2×SCRJ, BA SCRJ/RJ45 and BA SCRJ/FC BusAdapters

LED display of configuration errors

Configuration errors of the ET 200SP distributed I/O system are output on the interface module by the ER (red) and MT (yellow) LEDs.

The following configuration errors are indicated by the LEDs:

- Missing server module
- Interruptions or short circuit on the backplane bus

Principle of operation

You determine the information for cause of the error with the LED error display. After notification by the flash signal, the error type is displayed followed by the error location/error code.

The LED error display

- is active during POWER ON as well as during operation.
- Has priority over all other states that are displayed by means of the ER and MT LEDs.
- remains turned on until the cause of the error has been corrected.

Table 5- 4 Display of error type and error location

Sequence		Description
1	ER and MT LEDs flash 3x with 0.5 Hz	Signaling of error type
2	MT LED flashes with 1 Hz	Display of the error type (decimal)
3	ER and MT LEDs flash 3x with 2 Hz	Signaling of error location/error code
4	ER LED flashes with 1 Hz	Display of tens digit (decimal) of the error location/error code
5	MT LED flashes with 1 Hz	Display of ones digit (decimal) of the error location/error code
6	Repeat steps 1 to 5 until the cause of the error has been corrected.	

Error display

The following table shows the possible causes of error that can occur.

Table 5- 5 Error display

Error type (MT)	Error location (ER/MT)	Cause of error	Remedy
1	65*	• Missing server module • Interruptions at the backplane bus • Short circuit of communication on the backplane bus	Check the configuration of the ET 200SP.

* Slot

Note

A short circuit in the backplane bus supply or the bus connection supply is indicated by the following LEDs:

- PWR LED: On
- RN-, ER and MT LED: Off

5.2 Interrupts

Introduction

The I/O device generates interrupts as a reaction to specific error events. Interrupts are evaluated based on the I/O controller used.

Evaluating interrupts with I/O controllers

The ET 200SP distributed I/O system supports the following interrupts:

- Diagnostics interrupts
- Hardware interrupts
- Swapping interrupts
- Maintenance events

In the event of an interrupt, interrupt OBs are automatically called in the CPU of the IO controller.

Information on the cause and class of the error is already available, based on the OB number and start information.

Detailed information on the error event can be obtained in the error OB using the instruction "RALRM" (read additional interrupt information).

System diagnostics

STEP 7 (TIA Portal) offers innovative system diagnostics for the devices of the S7-1500 (IO controller CPU S7-1500) and the ET 200SP (IO device) automation system. Independent of the cyclic user program, messages are made available on the display of the CPU S7-1500, the CPU web server and the HMI device.

For more information on system diagnostics, refer to the System Diagnostics function manual. (http://support.automation.siemens.com/WW/view/en/59192926).

5.2.1 Triggering of a diagnostics interrupt

Triggering of a diagnostics interrupt

For an incoming or outgoing event (e.g. wire break on a channel of an I/O module), the module triggers a diagnostics interrupt if this is configured accordingly.

The CPU interrupts the processing of the user program and processes the diagnostics interrupt (OB 82). The event which led to the interrupt is entered in the start information of the diagnostics interrupt (OB 82).

5.2.2 Triggering a hardware interrupt

Triggering a hardware interrupt

During a hardware interrupt, the CPU interrupts the processing of the user program and processes the hardware interrupt block (e.g., OB 40). The event that triggered the interrupt is entered in the start information of the hardware interrupt block.

Note

Diagnostics "Hardware interrupt lost" (from I/O module)

Avoid creating hardware interrupts cyclically.

If the hardware interrupt load is too high, hardware interrupts can get lost depending on the number of I/O modules and the communication load.

5.2.3 Triggering a swapping interrupt

Triggering a remove/insert interrupt

In the event of a remove/insert interrupt, the CPU interrupts processing of the user program and processes the remove/insert interrupt (OB 83). The event which led to the interrupt is entered in the start information of the remove/insert interrupt (OB 83).

Note

Parameter assignment error after removal/insertion

If you write data records from the user program to the modules of the distributed I/O, make sure that these modules actually exist and are available. You can do this by evaluating the remove/insert interrupt (OB83). After inserting a module, the remove/insert interrupt (OB83) is not called until the module has started up and its parameters are assigned. This ensures that data record operations can be executed without errors.

5.3 Alarms

Actions after a diagnostics alarm

There can be more than one diagnostic alarm at a given time. Actions initiated by diagnostics alarms:

- The ER LED on the interface module flashes.
- Diagnostic data is reported as diagnostic interrupts to the CPU of the IO controller and can be read via data records.
- Incoming diagnostics alarms are saved to the diagnostics buffer of the I/O controller.
- The diagnostics interrupt (OB 82) is called. If the diagnostics interrupt (OB 82) is not available, the I/O controller goes into STOP mode.

You can find more information on this topic in the STEP 7 online help.

Reading out the diagnostics data

Table 5- 6 Reading the diagnostics with STEP 7

Automation system with IO controller	Application	See...
SIMATIC S7	Diagnostics as plain text in STEP 7 in online and diagnostics view	STEP 7 online help • As of STEP 7 V14, function manual PROFINET with STEP 7 V14 (http://support.automation.siemens.com/WW/view/en/49948856) • As of STEP 7 V5.5, system manual PROFINET System Description (http://support.automation.siemens.com/WW/view/en/19292127)
	Instruction "RDREC" (SFB 52) Read data records from the IO device	
	Instruction "RALRM" (SFB 54) Receive interrupts from the IO device	

Additional information on the data records for PROFINET IO

The structure of the diagnostic data records and programming examples are available in the Programming Manual From PROFIBUS DP to PROFINET IO (http://support.automation.siemens.com/WW/view/en/19289930) and in Example application (http://support.automation.siemens.com/WW/view/en/24000238).

Causes of error and troubleshooting

The causes of error and remedies for the diagnostics alarms are described in the product manuals for I/O modules (http://support.automation.siemens.com/WW/view/en/55679691/133300) in the section "Interrupts/diagnostics alarms".

See also

Channel diagnostics (Page 43)

5.3.1 Maintenance events

Triggering of a maintenance event

The PROFINET IO interfaces of the interface module support the diagnostic concept and maintenance concept in PROFINET IO according to the IEC 61158-6-10 standard. The goal is to detect and remove potential problems as soon as possible.

For the interface module, maintenance events signal to the user when a network component must be checked or replaced.

The CPU interrupts the processing of the user program and processes the diagnostics interrupt (OB 82). The event that triggered the maintenance event is entered in the start information of the diagnostics interrupt (OB 82).

At the following events:

- The interface module signals a maintenance event to the higher-level diagnostic system
- The I/O module signals a maintenance event.

Table 5- 7 Triggering of a maintenance event

Maintenance alarm	Event	Meaning
Maintenance demanded (*maintenance demanded*) MT LED is lit	Synchronization loss	• No synchronization telegram received No synchronization telegram was received by the sync master within the timeout period after parameter assignment or during operation. • Successive synchronization telegrams are located outside permitted limits (jitter)
	Critical FOC attenuation	The received light intensity at the FOC port is critical. The FOC should be replaced.
	Maintenance request from I/O module	An I/O module signals a maintenance event that is sent and displayed by the interface module

System alarms in STEP 7 (TIA Portal)

The maintenance information is generated in STEP 7 with the following system alarms:

- Maintenance demanded - indicated for each port by a yellow wrench icon in the device view or in the hardware configuration.

You can find more information in the STEP 7 online help.

5.3.2 Channel diagnostics

Function

Channel-related diagnostics provides information about channel faults in modules.

Channel faults are mapped as channel diagnostics data in IO diagnostics data records.

The data record is read using the instruction "RDREC".

Structure of the diagnostics data records

The data records supported by the ET 200SP distributed I/O system are based on the standard PROFINET IO - Application Layer Service Definition V2.3.

You can download the standard PROFIBUS user organization (http://www.profibus.com) from the homepage of the PROFIBUS User Organization.

Codes of the extended channel diagnostics

With the IM 155-6 PN HS interface module, the following extended channel diagnostics are reported:

Slot number	ChannelError-Type (CET)	ExtendedChannel-ErrorType (ECET)	Associated value AddValue	Diagnostics
Module slot	0x0602	0x0691	Slot	Station stop - module parameter "Potential group" faulty or incorrect BaseUnit in actual slot (AddValue)
Slot 0	0x0602	0x0693	0x00	Diagnostics with missing server module
	0x0602	0x0698	0x00	Diagnostics backplane bus too long
	0x0602	0x0699	Slot	Diagnostics with incorrect bus configuration
	0x0602	0x069C	0x00	Diagnostics with incorrectly plugged BusAdapter
Server module slot	0x0610	0x06B0	0x00	Group diagnostics: Missing supply voltage L+ for the potential groups Note: The slot in which the light-colored BaseUnit of the respective load module is located is coded in the "ChannelNumber" element.

5.3.3 Invalid configuration states of the ET 200SP on PROFINET IO

Invalid configuration states

The following invalid configuration states of the ET 200SP distributed I/O system lead to the failure of the IO device or prevent the exchange of user data with the I/O modules.

- Number of modules exceeds maximum configuration
- Faulty backplane bus (e.g. defective BaseUnit). ET 200SP backplane bus interruptions do not trigger an interrupt.
- At least one I/O module is installed in a different BaseUnit than the one configured in the parameters.
- Missing server module
- Invalid or incorrectly configured BusAdapter.

Note

Removal of the server module will trigger a station stop. All I/O modules of the ET 200SP distributed I/O system fail (substitute value behavior) but the interface module is still exchanging data.

Revoking the station stop (by correcting the invalid configuration state) leads to a brief failure of the ET 200SP distributed I/O system and automatic restart.

See also

Status and error displays (Page 34)

Channel diagnostics (Page 43)

5.3.4 Failure of supply voltage L+ at BaseUnit BU...D

Failure of the supply voltage L+

The I/O modules react as follows to failure of the supply voltage L+ on the BaseUnit BU...D:

- If an I/O module is removed during failure of the supply voltage, a pull alarm is generated.
- If an I/O module is installed during failure of the supply voltage, an insert alarm is generated.

5.3.5 STOP of the IO controller and recovery of the IO device

STOP of the SIMATIC IO controller

Diagnostics frames received from the IO device while the IO controller is in STOP do not initiate a call of any corresponding OBs when the IO controller goes into RUN. You must read the data record $E00C_H$ with the "RDREC" instruction in OB 100. This record contains all diagnostics for the slots assigned to an IO controller in an IO device.

Recovery of the SIMATIC IO devices

If you want to read the diagnostics of a station after its return, you have to read the $E00C_H$ data record with the "RDREC" instruction in the rack interrupt (OB 86). This record contains all diagnostics for the slots assigned to an IO controller in an IO device.

Compatibility 6

Status of the supply voltage

Load voltage diagnostics are only valid if the station started up with a valid and complete configuration.

- For modules in the following table without a parameter assignment, the status of the supply voltage is always signaled as "1" regardless of the actual status of the supply voltage.
- If a potential group is exclusively made up of modules without parameter assignment from the table below, no group diagnostics "Missing supply voltage L+" is signaled for this potential group.

Modules	Order number
DI 8x24VDC ST	6ES7131-6BF00-0BA0
DI 16x24VDC ST	6ES7131-6BH00-0BA0
DI 8x24VDC HF	6ES7131-6BF00-0CA0
DQ 4x24VDC/2A ST	6ES7132-6BD20-0BA0
DQ 4x24VDC/2A HF	6ES7132-6BD20-0CA0
DQ 8x24VDC/0,5A ST	6ES7132-6BF00-0BA0
DQ 8x24VDC/0,5A HF	6ES7132-6BF00-0CA0
DQ 16x24VDC/0,5A ST	6ES7132-6BH00-0BA0

Reaction times for fail-safe modules

The following maximum reaction time of the interface module must be taken into account when calculating the reaction times of fail-safe modules:
maximum reaction time = configured update time + 400 µs (but at least 1.4 ms)

Technical specifications 7

Technical specifications of the IM 155-6 PN HS

	6ES7155-6AU00-0DN0
General information	
Product type designation	ET 200SP, IM 155-6 PN HS with server module
Firmware version	V4.0
Product function	
I&M data	Yes; I&M0 to I&M3
Engineering with	
STEP 7 TIA Portal can be configured/integrated as of version	As of STEP 7 V14
STEP 7 can be configured/integrated as of version	V5.5 SP4 or higher
PROFINET as of GSD version/GSD revision	- / V2.3
Configuration control	
Via data record	Yes
Supply voltage	
Type of supply voltage	DC
Rated value (DC)	24 V
Valid range low limit (DC)	19.2 V
Valid range high limit (DC)	28.8 V
Reverse polarity protection	Yes
Power and voltage failure backup	
Power/voltage failure backup time	5 ms
Input current	
Current consumption, max.	700 mA
Inrush current, max.	3.7 A
I^2t	0.09 A^2s
Power loss	
Power loss, typ.	2.4 W
Address area	
Address space per module	
Address space per module, max.	32 bytes; for both input and output data
Address space per station	
Address space per station, max.	968 bytes each for input data and output data

	6ES7155-6AU00-0DN0
Hardware configuration	
Racks	
Modules per rack, max.	30
Submodules	
Number of submodules per station, max.	125
Interfaces	
Number of PROFINET interfaces	1; 2 ports (switch)
1st interface	
Interface hardware	
Number of ports	2
Integrated switch	Yes
BusAdapter (PROFINET)	Yes; usable BusAdapters: BA 2x RJ45, BA 2x FC, BA 2x SCRJ, BA SCRJ / RJ45, BA SCRJ / FC, BA 2x LC, BA LC / RJ45, BA LC / FC
Protocols	
PROFINET IO device	Yes
Open IE communication	Yes
Media redundancy	Yes; as MRP or MRPD client, max. 50 or 30 devices in the ring
Interface hardware	
RJ 45 (Ethernet)	
Transmission method	PROFINET with 100 Mbps full duplex (100BASE-TX)
10 Mbps	Yes; for Ethernet services
100 Mbps	Yes; PROFINET with 100 Mbps full duplex (100BASE-TX)
Autonegotiation	Yes
Autocrossing	Yes
Protocols	
PROFINET IO device	
Services	
• S7 communication	Yes
• Isochronous mode	Yes; bus cycle time min. 125 µs
• IRT	Yes; 125 µs, 250 µs, 500 µs, 1 ms, 2 ms, 4 ms additionally with IRT with high performance: 250 µs to 4 ms in 125 µs intervals
• MRP	Yes
• MRPD	Yes
• PROFINET system redundancy	No
• PROFIenergy	Yes
• Prioritized startup	Yes
• Shared device	Yes
• Number of IO controllers with shared device, max.	4

	6ES7155-6AU00-0DN0
Open IE communication	
TCP/IP	Yes
SNMP	Yes
LLDP	Yes
Isochronous mode	
Isochronous mode (application synchronized up to terminal)	Yes
Constant bus cycle time	Yes
Shortest clock pulse	125 µs
Longest clock pulse	4 ms
Bus cycle time (TDP), min.	125 µs
Jitter, max.	0.25 µs
Interrupts/diagnostics/status information	
Status display	Yes
Interrupts	Yes
Diagnostic functions	Yes
Diagnostic indicator LED	
RUN LED	Yes; green LED
ERROR LED	Yes; red LED
MAINT LED	Yes; yellow LED
Monitoring of the supply voltage (PWR LED)	Yes; green PWR LED
Connection display LINK TX/RX	Yes; 2x green Link LED on BusAdapter
Electrical isolation	
Between backplane bus and electronics	No
between PROFINET and all other circuits	Yes
Standards, approvals, certificates	
Network loading class	3
Security level	According to Security Level 1 Test Cases V1.1.1
Ambient conditions	
Ambient temperature during operation	
Horizontal installation, min.	0 °C
Horizontal installation, max.	60 °C
Vertical installation, min.	0 °C
Vertical installation, max.	50 °C
Dimensions	
Width	50 mm
Height	117 mm
Depth	74 mm
Weights	
Weight, approx.	147 g; without BusAdapter

Technical specifications of the BusAdapter BA 2×RJ45

Table 7- 1 Technical specifications of the BusAdapter BA 2×RJ45

	6ES7193-6AR00-0AA0
Interfaces	
PROFINET IO	
Number of PROFINET interfaces	1
RJ45	Yes; 2 x
FC (FastConnect)	No
SCRJ	0
LC	0
Cable length	
• Copper cables	100 m
Dimensions	
Width	20 mm
Height	69.5 mm
Depth	59 mm
Weights	
Weight, approx.	46 g

Technical specifications of the BusAdapter BA 2×FC

Table 7- 2 Technical specifications of the BusAdapter BA 2×FC

	6ES7193-6AF00-0AA0
Interfaces	
PROFINET IO	
Number of PROFINET interfaces	1
FC (FastConnect)	Yes; 2 x
Cable length	
• Copper cables	100 m
Dimensions	
Width	20 mm
Height	69.5 mm
Depth	59 mm
Weights	
Weight, approx.	53 g

Technical specifications of the BusAdapter BA 2×SCRJ

Table 7- 3 Technical specifications of the BusAdapter BA 2×SCRJ

	6ES7193-6AP00-0AA0
Interfaces	
PROFINET IO	
Number of PROFINET interfaces	1; 2 ports (switch) SCRJ FO
RJ45	No
FC (FastConnect)	No
SCRJ	2
LC	0
Cable length	
• PCF	100 m
• Plastic FOC (POF)	50 m
• PCF-GI	300 m
Dimensions	
Width	20 mm
Height	69.5 mm
Depth	59 mm
Weights	
Weight, approx.	50 g

Technical specifications of the BusAdapter BA SCRJ/RJ45

Table 7- 4 Technical specifications of the BusAdapter BA SCRJ/RJ45

	6ES7193-6AP20-0AA0
Interfaces	
PROFINET IO	
Number of PROFINET interfaces	1; 2 ports (SCRJ + RJ45)
RJ45	Yes; 1x
FC (FastConnect)	No
SCRJ	1
LC	0
Cable length	
• PCF	100 m
• Plastic FOC (POF)	50 m
• PCF-GI	300 m
• Copper cables	100 m
Dimensions	
Width	20 mm
Height	69.5 mm
Depth	59 mm
Weights	
Weight, approx.	50 g

Technical specifications of the BusAdapter BA SCRJ/FC

Table 7- 5 Technical specifications of the BusAdapter BA SCRJ/FC

	6ES7193-6AP40-0AA0
Interfaces	
PROFINET IO	
Number of PROFINET interfaces	1; 2 ports (SCRJ + FC)
RJ45	No
FC (FastConnect)	Yes; 1x
SCRJ	1
LC	0
Cable length	
• PCF	100 m
• Plastic FOC (POF)	50 m
• PCF-GI	300 m
• Copper cables	100 m
Dimensions	
Width	20 mm
Height	69.5 mm
Depth	59 mm
Weights	
Weight, approx.	50 g

Technical specifications of the BusAdapter BA 2×LC

Table 7- 6 Technical specifications of the BusAdapter BA 2×LC

	6ES7193-6AG00-0AA0
Interfaces	
Number of PROFINET interfaces	1; 2 ports (switch) LC multimode glass-fiber
PROFINET IO	
RJ45	No
FC (FastConnect)	No
SCRJ	0
LC	2
Cable length	
• Multimode gradient-index fiber 50/125 µm	3 km
• Multimode gradient-index fiber 62.5/125 µm	3 km
Ambient conditions	
Ambient temperature during operation	
Min.	0 °C
Max.	60 °C
Dimensions	
Width	20 mm
Height	69.5 mm
Depth	59 mm
Weights	
Weight, approx.	40 g

Technical specifications of the BusAdapter BA LC/RJ45

Table 7- 7 Technical specifications of the BusAdapter BA LC/RJ45

	6ES7193-6AG20-0AA0
Interfaces	
Number of PROFINET interfaces	1; 2 ports (switch) LC / RJ45
PROFINET IO	
RJ45	Yes; 1x
FC (FastConnect)	No
SCRJ	0
LC	1
Cable length	
• Copper cables	100 m
• Multimode gradient-index fiber 50/125 µm	3 km
• Multimode gradient-index fiber 62.5/125 µm	3 km
Ambient conditions	
Ambient temperature during operation	
Min.	0 °C
Max.	60 °C
Dimensions	
Width	20 mm
Height	69.5 mm
Depth	59 mm
Weights	
Weight, approx.	32 g

Technical specifications of the BusAdapter BA LC/FC

Table 7- 8 Technical specifications of the BusAdapter BA LC/FC

	6ES7193-6AG40-0AA0
Interfaces	
Number of PROFINET interfaces	1
PROFINET IO	
RJ45	No
FC (FastConnect)	Yes; 1x
SCRJ	0
LC	1
Cable length	
• Copper cables	100 m
• Multimode gradient-index fiber 50/125 µm	3 km
• Multimode gradient-index fiber 62.5/125 µm	3 km
Ambient conditions	
Ambient temperature during operation	
Min.	0 °C
Max.	60 °C
Dimensions	
Width	20 mm
Height	69.5 mm
Depth	59 mm
Weights	
Weight, approx.	50 g

Dimensional drawing

A

This appendix contains a dimension drawing of the module installed on a mounting rail. Always observe the specified dimensions for installation in cabinets, control rooms, etc.

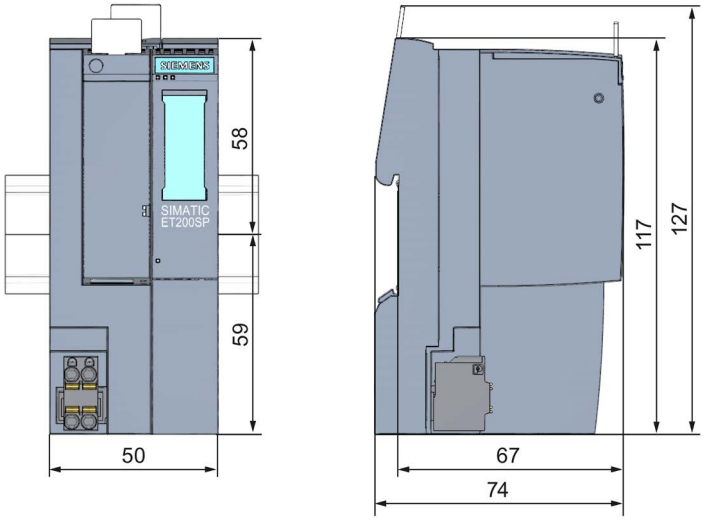

Figure A-1 Dimension drawing of the IM 155-6 PN HS interface module (front and side view)

SIEMENS

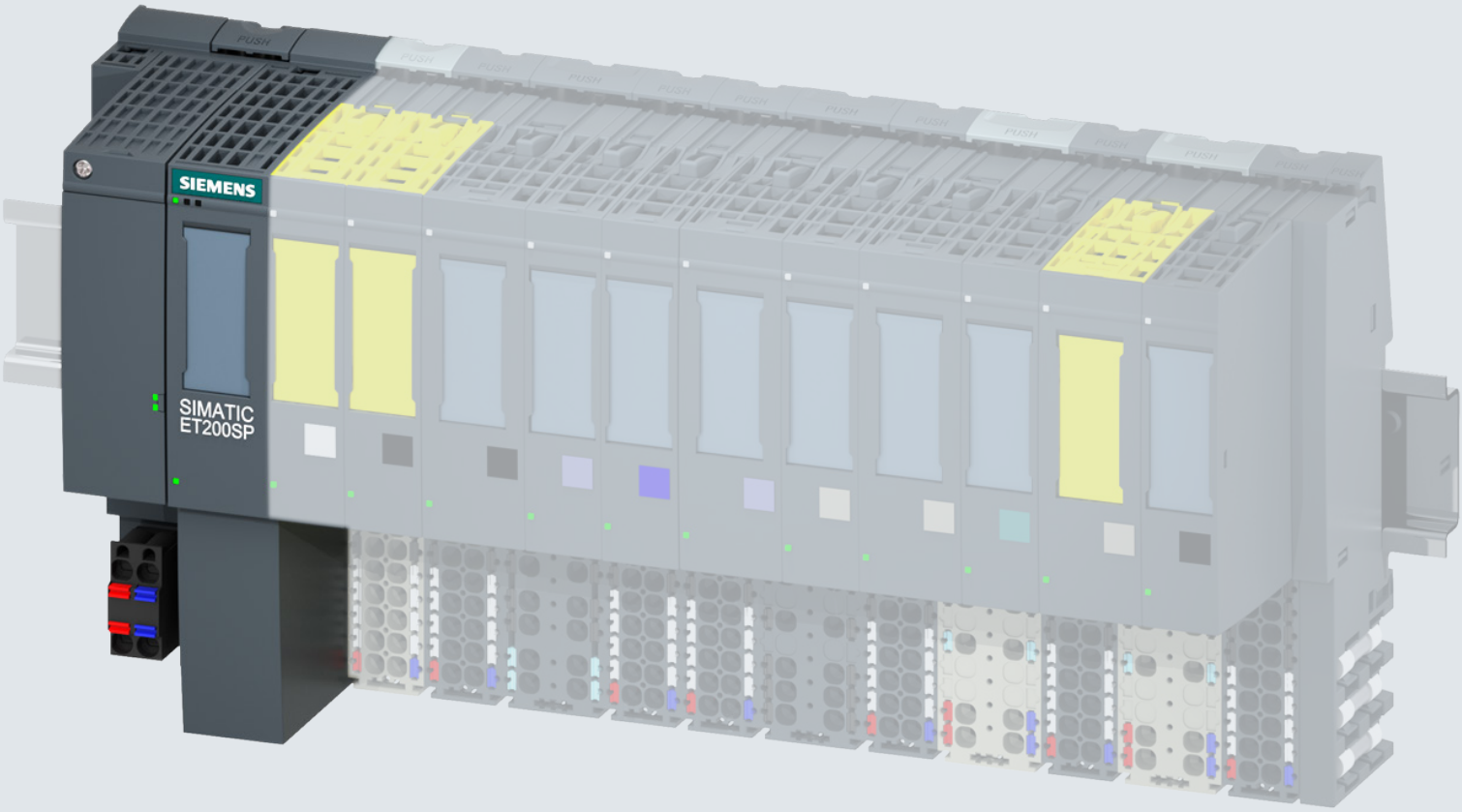

Manual

SIMATIC

ET 200SP

IM 155-6 PN ST interface module
(6ES7155-6AU01-0BN0)

Edition 04/2017

support.industry.siemens.com

SIEMENS

SIMATIC

ET 200SP
IM 155-6 PN ST interface module
(6ES7155-6AU01-0BN0)

Manual

Preface

Guide 1

Product overview 2

Wiring 3

Parameters/address space 4

Interrupts, diagnostics, error, and system messages 5

Compatibility 6

Technical specifications 7

Dimension drawing A

04/2017

A5E03576904-AE

Legal information

Warning notice system

This manual contains notices you have to observe in order to ensure your personal safety, as well as to prevent damage to property. The notices referring to your personal safety are highlighted in the manual by a safety alert symbol, notices referring only to property damage have no safety alert symbol. These notices shown below are graded according to the degree of danger.

⚠ DANGER

indicates that death or severe personal injury **will** result if proper precautions are not taken.

⚠ WARNING

indicates that death or severe personal injury **may** result if proper precautions are not taken.

⚠ CAUTION

indicates that minor personal injury can result if proper precautions are not taken.

NOTICE

indicates that property damage can result if proper precautions are not taken.

If more than one degree of danger is present, the warning notice representing the highest degree of danger will be used. A notice warning of injury to persons with a safety alert symbol may also include a warning relating to property damage.

Qualified Personnel

The product/system described in this documentation may be operated only by **personnel qualified** for the specific task in accordance with the relevant documentation, in particular its warning notices and safety instructions. Qualified personnel are those who, based on their training and experience, are capable of identifying risks and avoiding potential hazards when working with these products/systems.

Proper use of Siemens products

Note the following:

⚠ WARNING

Siemens products may only be used for the applications described in the catalog and in the relevant technical documentation. If products and components from other manufacturers are used, these must be recommended or approved by Siemens. Proper transport, storage, installation, assembly, commissioning, operation and maintenance are required to ensure that the products operate safely and without any problems. The permissible ambient conditions must be complied with. The information in the relevant documentation must be observed.

Trademarks

All names identified by ® are registered trademarks of Siemens AG. The remaining trademarks in this publication may be trademarks whose use by third parties for their own purposes could violate the rights of the owner.

Disclaimer of Liability

We have reviewed the contents of this publication to ensure consistency with the hardware and software described. Since variance cannot be precluded entirely, we cannot guarantee full consistency. However, the information in this publication is reviewed regularly and any necessary corrections are included in subsequent editions.

Siemens AG
Division Digital Factory
Postfach 48 48
90026 NÜRNBERG
GERMANY

A5E03576904-AE
℗ 04/2017 Subject to change

Copyright © Siemens AG 2012 - 2017.
All rights reserved

Preface

Purpose of the documentation

This manual supplements the ET 200SP distributed I/O system (http://support.automation.siemens.com/WW/view/en/58649293) system manual.

Functions that generally relate to the system are described in this manual.

The information provided in this manual and in the system/function manuals supports you in commissioning the ET 200SP distributed I/O system.

Conventions

Please also observe notes marked as follows:

Note

A note contains important information on the product described in the documentation, on the handling of the product or on the section of the documentation to which particular attention should be paid.

Security information

Siemens provides products and solutions with industrial security functions that support the secure operation of plants, systems, machines and networks.

In order to protect plants, systems, machines and networks against cyber threats, it is necessary to implement – and continuously maintain – a holistic, state-of-the-art industrial security concept. Siemens' products and solutions only form one element of such a concept.

Customer is responsible to prevent unauthorized access to its plants, systems, machines and networks. Systems, machines and components should only be connected to the enterprise network or the internet if and to the extent necessary and with appropriate security measures (e.g. use of firewalls and network segmentation) in place.

Additionally, Siemens' guidance on appropriate security measures should be taken into account. For more information about industrial security, please visit (http://www.siemens.com/industrialsecurity).

Siemens' products and solutions undergo continuous development to make them more secure. Siemens strongly recommends to apply product updates as soon as available and to always use the latest product versions. Use of product versions that are no longer supported, and failure to apply latest updates may increase customer's exposure to cyber threats.

To stay informed about product updates, subscribe to the Siemens Industrial Security RSS Feed under (http://www.siemens.com/industrialsecurity).

Table of contents

Preface 4

1 Guide 6

2 Product overview 10

2.1 Properties 10

2.2 Functions 13
2.2.1 PROFIenergy 19
2.2.2 Use of fail-safe modules 20
2.2.3 Use of technology modules 20
2.2.4 Configuration control (option handling) 20

3 Wiring 21

3.1 Pin assignment 21

3.2 Schematic circuit diagram 24

4 Parameters/address space 25

4.1 Parameters 25

4.2 Explanation of parameters 25
4.2.1 Configuration control 25

4.3 Substitute value behavior 26

4.4 Status of the supply voltage L+ of the I/O modules 27

5 Interrupts, diagnostics, error, and system messages 28

5.1 Status and error displays 28

5.2 Interrupts 33
5.2.1 Triggering of a diagnostics interrupt 33
5.2.2 Triggering a hardware interrupt 34
5.2.3 Triggering a swapping interrupt 34

5.3 Alarms 35
5.3.1 Diagnostics alarms 35
5.3.2 Maintenance events 36
5.3.3 Channel diagnostics 37
5.3.4 Invalid configuration states of the ET 200SP on PROFINET IO 41
5.3.5 Failure of supply voltage L+ at BaseUnit BU...D 41
5.3.6 STOP of the IO controller and recovery of the IO device 42

6 Compatibility 43

7 Technical specifications 45

A Dimension drawing 50

Guide

1

The documentation for the SIMATIC ET 200SP distributed I/O system is arranged into three areas.
This arrangement enables you to access the specific content you require.

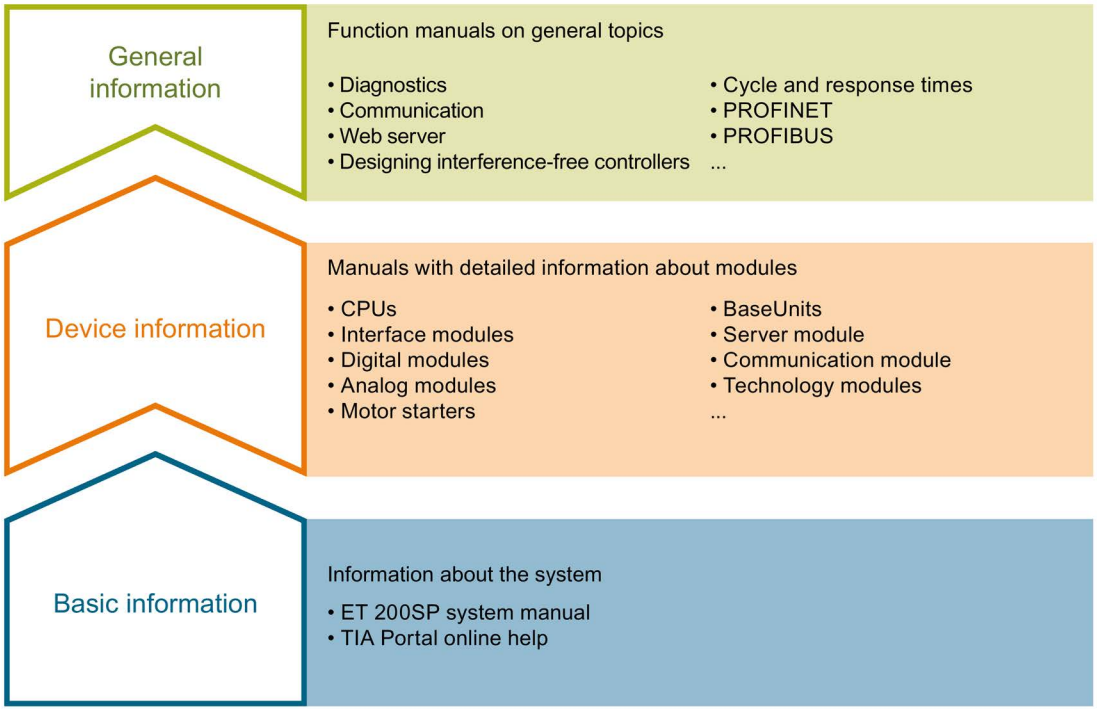

Basic information

The system manual describes in detail the configuration, installation, wiring and commissioning of the SIMATIC ET 200SP. distributed I/O system. The STEP 7 online help supports you in the configuration and programming.

Device information

Product manuals contain a compact description of the module-specific information, such as properties, wiring diagrams, characteristics and technical specifications.

General information

The function manuals contain detailed descriptions on general topics regarding the SIMATIC ET 200SP distributed I/O system, e.g. diagnostics, communication, Web server, motion control and OPC UA.

You can download the documentation free of charge from the Internet (http://w3.siemens.com/mcms/industrial-automation-systems-simatic/en/manual-overview/tech-doc-et200/Pages/Default.aspx).

Changes and supplements to the manuals are documented in a Product Information.

You can download the product information free of charge from the Internet (https://support.industry.siemens.com/cs/us/en/view/73021864).

Manual Collection ET 200SP

The Manual Collection contains the complete documentation on the SIMATIC ET 200SP distributed I/O system gathered together in one file.

You can find the Manual Collection on the Internet (http://support.automation.siemens.com/WW/view/en/84133942).

"mySupport"

With "mySupport", your personal workspace, you make the most of your Industry Online Support.

In "mySupport" you can store filters, favorites and tags, request CAx data and put together your personal library in the Documentation area. Furthermore, your data is automatically filled into support requests and you always have an overview of your current requests.

You need to register once to use the full functionality of "mySupport".

You can find "mySupport" in the Internet (https://support.industry.siemens.com/My/ww/en).

"mySupport" - Documentation

In the Documentation area of "mySupport", you have the possibility to combine complete manuals or parts of them to make your own manual.
You can export the manual in PDF format or in an editable format.

You can find "mySupport" - Documentation in the Internet (http://support.industry.siemens.com/My/ww/en/documentation).

"mySupport" - CAx Data

In the CAx Data area of "mySupport", you can have access the latest product data for your CAx or CAe system.

You configure your own download package with a few clicks.

In doing so you can select:

- Product images, 2D dimension drawings, 3D models, internal circuit diagrams, EPLAN macro files
- Manuals, characteristics, operating manuals, certificates
- Product master data

You can find "mySupport" - CAx Data in the Internet (http://support.industry.siemens.com/my/ww/en/CAxOnline).

Application examples

The application examples support you with various tools and examples for solving your automation tasks. Solutions are shown in interplay with multiple components in the system - separated from the focus in individual products.

You can find the application examples on the Internet (https://support.industry.siemens.com/sc/ww/en/sc/2054).

TIA Selection Tool

With the TIA Selection Tool, you can select, configure and order devices for Totally Integrated Automation (TIA).
This tool is the successor of the SIMATIC Selection Tool and combines the known configurators for automation technology into one tool.
With the TIA Selection Tool, you can generate a complete order list from your product selection or product configuration.

You can find the TIA Selection Tool on the Internet (http://w3.siemens.com/mcms/topics/en/simatic/tia-selection-tool).

SIMATIC Automation Tool

You can use the SIMATIC Automation Tool to run commissioning and maintenance activities simultaneously on various SIMATIC S7 stations as a bulk operation independently of the TIA Portal.

The SIMATIC Automation Tool provides a multitude of functions:

- Scanning of a PROFINET/Ethernet network and identification of all connected CPUs
- Address assignment (IP, subnet, gateway) and station name (PROFINET device) to a CPU
- Transfer of the data and the programming device/PC time converted to UTC time to the module
- Program download to CPU
- Operating mode switchover RUN/STOP
- Localization of the CPU by means of LED flashing
- Reading out CPU error information
- Reading the CPU diagnostic buffer
- Reset to factory settings
- Updating the firmware of the CPU and connected modules

You can find the SIMATIC Automation Tool on the Internet (https://support.industry.siemens.com/cs/ww/en/view/98161300).

PRONETA

With SIEMENS PRONETA (PROFINET network analysis), you analyze the plant network during commissioning. PRONETA features two core functions:

- The topology overview independently scans PROFINET and all connected components.
- The IO check is a fast test of the wiring and the module configuration of a system.

You can find SIEMENS PRONETA on the Internet (https://support.industry.siemens.com/cs/ww/en/view/67460624).

Product overview 2

2.1 Properties

Article number

6ES7155-6AU01-0BN0 (IM 155-6 PN ST interface module and server module)

6ES7155-6AA01-0BN0 (IM 155-6 PN ST interface module with BusAdapter BA 2×RJ45 and server module)

View of the module

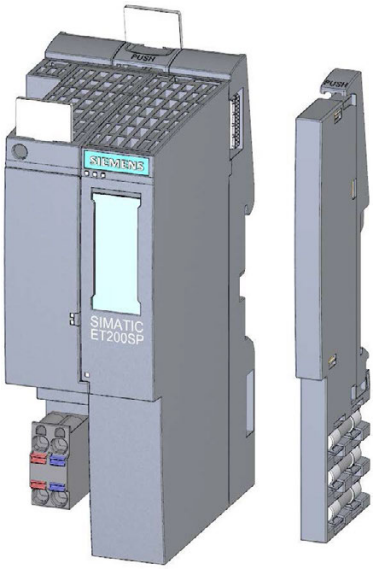

Figure 2-1 View of the IM 155-6 PN ST interface module and the server module

Properties

The module has the following technical properties:

- Connects the ET 200SP distributed I/O system with PROFINET IO
- Supply voltage 1L+ 24 V DC (SELV/PELV). The connection plug is included in the scope of delivery of the interface module.
- PROFINET IO connection via selectable BusAdapter for RJ45 bus connector (BA 2×RJ45) or for direct connection of the bus cable (BA 2×FC)
- Use of fail-safe modules
- As of firmware version V 3.0, you can plug a light-colored or a dark-colored BaseUnit into slot 1.

The module supports the following functions (Page 13)

Maximum configuration

- 32 I/O modules
- 512 bytes I/O data
- 1 m backplane bus (without interface module)

Accessories

The following accessories can be ordered separately:

- BA 2xRJ45 BusAdapter
- BA 2xFC BusAdapter
- 24 V DC connector
- Labeling strips
- Reference identification label

Note

The interface module is also available as a bundle with the BusAdapter BA 2xRJ45 (and the server module). The article number is 6ES7155-6AA01-0BN0.

A detailed list of the available accessories can be found in the system manual ET 200SP distributed I/O system (http://support.automation.siemens.com/WW/view/en/58649293).

Server module

The server module is included in the scope of delivery of the interface module and available separately as an accessory.

The server module has the following properties:

- Terminates the backplane bus of the ET 200SP distributed I/O system
- Features a holder for 3 spare fuses (5 × 20 mm)
- Identification data I&M 0 to 3

Note

You need to configure and assign parameters to the server module in the configuration software.

To do this, place the server module in the last configuration slot and enable the parameter Group diagnostics: Missing supply voltage L+. When there are 32 I/O modules, the server module is inserted in slot 33.

You can find more information in the Server module (http://support.automation.siemens.com/WW/view/en/63257531) manual.

First BaseUnit of an ET 200SP in the configuration (as of V3.0)

Note

First BaseUnit of an ET 200SP in the configuration

The first BaseUnit of an ET 200SP station may be a dark-colored one if an AC I/O module or AI Energy Meter ST is plugged. Please note the information on limiting the overvoltage and power rating in the AC I/O module manuals.

A light-colored BaseUnit must be plugged into the slot of the first 24 V DC I/O module in order to route the 24 V DC supply voltage via a fuse.

Pay attention to the type of the BaseUnits during the configuration.

As of firmware V3.x, the interface modules support plugging dark-colored BaseUnits in slot 1. This means that modules without a connection to the integrated voltage buses P1 and P2 can now also be configured starting with slot 1. Currently, this applies to the following modules:

- AI EnergyMeter
- DI 4x120..230VAC ST (6ES7131-6FD00-0BB1)
- DQ 4x24..230VAC/2A ST (6ES7132-6FD00-0BB1)

Requirement for configuration of these modules in slot 1:

- Configuration via GSD or GSDML
- Configuration as of STEP 7 V5.5 SP4 with
  - HSP0241 V2.0 for IM155-6 PN ST
  - HSP0242 V2.0 for IM155-6 DP HF
  - HSP0255 V3.0 for IM155-6 PN HF
- Configuration as of STEP 7 V13 SP1

2.2 Functions

Introduction

The interface module supports the following PROFINET IO functions:

- Integrated switch with 2 ports
- Supported Ethernet services: ping, arp, network diagnostics (SNMP)/MIB-2, LLDP-MIB and MRP-MIB
- Port diagnostics
- Disabling ports
- Isochronous real-time communication
- Minimum update time 1 ms
- Prioritized startup
- Media redundancy (MRP)
- Shared device
- Support of submodules on suitable I/O modules
- Module-internal Shared Input/Shared Output (MSI/MSO)
- Device replacement without PG and without topological configuration
- Reset to factory settings via PROFINET IO
- Firmware update via PROFINET IO
- Station extension via ET-Connection
- The BusAdapter provides the connection system for PROFINET IO. The following versions are available for the IM 155-6 PN ST interface module:
  - For standard RJ45 connector: BA 2×RJ45
  - For direct connection of the bus cable: BA 2×FC

The interface module supports additional functions:

- Identification data I&M 0 to 3
- PROFIenergy
- Use of fail-safe modules
- Configuration control (option handling)
- Value status (quality information, QI) of I/O modules

Requirements

The table below shows the software requirements for a configuration with the IM 155-6 PN ST interface module:

Table 2- 1 Version dependencies of other module functions

Function	Product version of the module as of	Firmware version of the module as of	Configuration software		
			Configuration with GSD file (http://support.automation.siemens.com/WW/view/en/19698639/130000)/software from a third-party manufacturer [1]	STEP 7 as of V5.5 SP3 with HSP241	STEP 7 (TIA Portal), as of V11 SP2
Real-time communication	1	V1.0.0	X	X	X
Isochronous real-time communication	1	V1.0.0	X	X	X
Prioritized startup	1	V1.0.0	X	X	X
Device replacement without programming device	1	V1.0.0	X	X	X
Media redundancy (MRP)	1	V1.0.0	X	X	X
Shared device	1	V1.0.0	X	X	X (as of V13 SP1)
PROFIenergy	1	V1.0.0	---	X	X
Use of fail-safe modules	1	V1.0.1	X	X	X (as of V13 SP1)
Module-internal Shared Input/Shared Output (MSI/MSO)	1	V3.1.0	X	X	X (as of V13 SP1)
Station extension via ET-Connection	5	V3.1.0	X	X	X (as of V13 SP1)
User data 512 bytes	1	V3.1.0	X	X	X (as of V13 SP1)
Distribution of module channels to multiple submodules	1	V3.3.0	X	X (as of V5.5 SP4, HSP0241 V3)	X (as of V13 SP1, Update 6)
Interface module; article number: 6ES7155-6AU01-0BN0	1	V4.1	X	X (as of V5.5 SP4, HSP241 V4)	X (as of V14 HSP205)

[1] Systems of third-party manufacturers: Depending on the range of functions of the third-party system

Cabling with fixed connection setting

If you set a fixed connection setting of the port in STEP 7, you should also disable "Autonegotiation/Autocrossover".

You can find more information on this topic in the STEP 7 online help and:

- As of STEP 7 V12, in the PROFINET with STEP 7 V13 (http://support.automation.siemens.com/WW/view/en/49948856) function manual
- As of STEP 7 V5.5, in the system manual PROFINET System Description (http://support.automation.siemens.com/WW/view/en/19292127)

Isochronous real-time communication

Synchronized transmission method for cyclic exchange of IRT data between PROFINET devices. A reserved bandwidth within the send clock is available for IRT data. The reserved bandwidth ensures that the IRT data can also be transferred without being affected by another high network load (e.g. TCP/IP communication or additional real time communication) at reserved, chronologically synchronized intervals.

A topological configuration is required for IRT.

Note

IO controller as sync master with IRT communication

We recommend also operating the IO controller as a sync master when configuring the IRT communication.

Otherwise, IO devices with IRT and RT configuration could fail as a result of sync master failure.

You can find more information on the configuration of synchronized PROFINET devices in sync domains in the STEP 7 online help and:

- As of STEP 7 V12, in the PROFINET with STEP 7 V13 (http://support.automation.siemens.com/WW/view/en/49948856) function manual
- As of STEP 7 V5.5, in the system manual PROFINET System Description (http://support.automation.siemens.com/WW/view/en/19292127)

Prioritized startup

Prioritized startup describes the PROFINET IO functionality for accelerating the startup of IO devices in a PROFINET IO system with IRT and RT communication.

The function reduces the time that the appropriately configured IO devices require in order to return to cyclic user data exchange in the following cases:

- After the supply voltage has returned
- After a station has returned
- After IO devices have been activated

Note

Dependency of the startup time

The interface module permits startup times from 0.9 s.

The startup time depends on the number and type of modules.

You can find more information on this topic in the STEP 7 online help and:

- As of STEP 7 V12, in the function manual PROFINET with STEP 7 V13 (http://support.automation.siemens.com/WW/view/en/49948856)
- As of STEP 7 V5.5, in the system manual PROFINET System Description (http://support.automation.siemens.com/WW/view/en/19292127)

Device replacement

Device replacement without topological configuration

The device name is also stored on the BusAdapter in addition to the interface module. A device name saved on the BusAdapter is the requirement for device replacement without topological configuration.

Storing the name on the BusAdapter and the interface module produces a range of scenarios for using the device name when the interface module is replaced.

Table 2- 2 Scenarios for using the device name

	Interface module empty	Interface module with device name
BusAdapter empty	No device name available	The device name from the interface module is used and copied to the BusAdapter.
BusAdapter with device name	The device name from the BusAdapter is used and copied to the interface module.	The device name from the BusAdapter is used and copied to the interface module if this has a different device name.

Be aware of the following constraints:

- Resetting to factory settings deletes the device name in both the interface module and the BusAdapter. To prevent the device name from being deleted in the BusAdapter, you can remove the BusAdapter from the interface module before resetting to factory settings.
- When a BusAdapter is replaced, a device name stored in the BusAdapter is applied to the interface module after a POWER ON.
- Do not pull/plug the BusAdapter while under voltage. If you pull/plug the BusAdapter while under voltage, the interface module restarts.

Device replacement with topological configuration

IO devices with this function can be replaced in a simple manner:

- The device name does not have to be assigned with the programming device.

The replacement IO device is assigned the device name by the IO controller and not by the programming device. The IO controller uses the configured topology and the neighboring relationships determined by the IO devices for this purpose. All involved devices must support the LLDP protocol (Link Layer Discovery Protocol). The configured target topology must match the actual topology.

IO devices that have already been used in another configuration should be reset to their factory settings before reuse (see system manual ET 200SP distributed I/O system (http://support.automation.siemens.com/WW/view/en/58649293)).

You can find more information on this topic in the STEP 7 online help and:

- As of STEP 7 V12, in the PROFINET with STEP 7 V13 (http://support.automation.siemens.com/WW/view/en/49948856) function manual
- As of STEP 7 V5.5, in the system manual PROFINET System Description (http://support.automation.siemens.com/WW/view/en/19292127)

Replacement of an IM 155-6 PN ST

In a replacement scenario, any IO devices in operation must be reset to their as-delivered state via "Reset to factory settings" (see the system manual ET 200SP distributed I/O system (http://support.automation.siemens.com/WW/view/en/58649293)).

Media redundancy (MRP)

Function for safeguarding communication and plant availability. A ring topology ensures that an alternative communication path is made available if a transmission route fails.

You can find more information on this topic in the STEP 7 online help and:

- As of STEP 7 V12, in the function manual PROFINET with STEP 7 V13 (http://support.automation.siemens.com/WW/view/en/49948856)
- As of STEP 7 V5.5, in the system manual PROFINET System Description (http://support.automation.siemens.com/WW/view/en/19292127)

Shared device

IO device which makes its data available to multiple IO controllers.

The interface module supports shared device at submodule level.

If **there is no validity check of the shared device projects by the Engineering System**, note the following:

- Make sure the configurations are consistent. In particular, modules or submodules may only be assigned to one controller. Multiple assignment will result in an error; the module or submodule will only be available in the first controller.
- If you reconfigure the shared device configurations without the validity check mentioned above, you must commission the ET 200SP once again. This means that you have to reload the projects of all involved IO controllers to the specific CPU after reconfiguration and, if necessary, switch the interface module POWER OFF/POWER ON.

You can find more information on this topic in the STEP 7 online help and:

- As of STEP 7 V12, in the function manual PROFINET with STEP 7 V13 (http://support.automation.siemens.com/WW/view/en/49948856)
- As of STEP 7 V5.5, in the PROFINET System Description (http://support.automation.siemens.com/WW/view/en/19292127) system manual

---

Note

In the case of a shared device application, make sure that all controllers work with the same send clock. If controllers do not have the same send clock, the differing send clock can result in communication relationships that are not set up.

If you set up all controllers in one project, the same send clock is ensured. Set the same send clock for engineering in separate projects.

Submodules

The IM 155-6 PN ST interface module supports the division of I/O modules into up to 4 submodules. This allows parts of an I/O module to be separately configured and parameterized.

It is possible to assign each of these submodules to different IO controllers.

The functions:

- Firmware update
- Write I&M data
- Calibration
- PROFIenergy

can only be executed if you have configured submodule 1 during configuration.

Module-internal Shared Input/Shared Output (MSI/MSO)

The Module-internal Shared Input function allows an input module to make its input data available to up to two IO controllers (for ET 200SP PN ST). Each controller has read access to the same channels.

The Module-internal Shared Output function allows an output module to make its output data available to up to two IO controllers. One IO controller has write access. A second IO controller can have read access to the same channels.

You can find more information on this topic in the STEP 7 online help and:

- As of STEP 7 V12, in the function manual PROFINET with STEP 7 V13 (http://support.automation.siemens.com/WW/view/en/49948856)

Value status

The IM 155-6 PN ST interface module supports I/O modules with value status.

Additional information on the value status can be found in the manuals for the I/O modules.

2.2.1 PROFIenergy

Properties

PROFIenergy (for PROFINET) reduces the energy consumption by using PROFIenergy commands during production-free periods.

Reference

You can find more information on PROFIenergy in the:

- Product manual I/O modules (http://support.automation.siemens.com/WW/view/en/55679691/133300)
- PROFINET with STEP 7 V13 (http://support.automation.siemens.com/WW/view/en/49948856) function manual.
- System manual PROFINET system description (http://support.automation.siemens.com/WW/view/en/19292127)
- PROFIenergy (http://support.automation.siemens.com/WW/view/en/66928686) product information.
- Internet (http://www.profibus.com) under Common Application Profile PROFIenergy; Technical Specification for PROFINET; Version 1.0; January 2010; Order No: 3.802.

2.2.2 Use of fail-safe modules

Properties

The IM 155-6 PN ST interface module as of firmware V1.0.1 supports the use of fail-safe modules.

Reference

You can find more information in the ET 200SP distributed I/O system (http://support.automation.siemens.com/WW/view/en/58649293) system manual.

2.2.3 Use of technology modules

Technology modules

As of firmware version V3.1, the interface module IM 155-6 PN ST supports the "Position input for Motion Control" mode of the technology modules TM Count 1x24V (6ES7138-6AA00-0BA0) and TM PosInput 1 (6ES7138-6BA00-0BA0).

2.2.4 Configuration control (option handling)

Properties

Configuration control allows you to prepare your distributed I/O system for future extensions or changes. Configuration control means that you can configure the planned maximum configuration of your distributed I/O system in advance and vary it later in a flexible manner by means of the user program.

Reference

You can find more information on configuration control

- in the ET 200SP distributed I/O system (http://support.automation.siemens.com/WW/view/en/58649293) system manual
- on the Internet under the following link: Application collection (http://support.automation.siemens.com/WW/view/en/29430270)
- in the STEP 7 online help.

Wiring

3

3.1 Pin assignment

24 V DC supply voltage

The following table shows the signal names and the descriptions of the pin assignment for a 24 V DC supply voltage.

Table 3- 1 Pin assignment 24 V DC supply voltage

View		Signal name[1]	Description
Connector	IM connection		
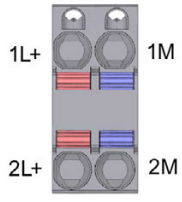	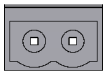	1L+	24 V DC
		2L+	24 V DC (for looping through)[2]
		1M	Ground
		2M	Ground (for looping through)[2]

[1] 1L+ and 2L+ as well as 1M and 2M are bridged internally.

[2] Maximum 10 A permitted.

PROFINET IO with BusAdapter BA 2×RJ45

The following table shows the signal name and description of the pin assignment of the BusAdapter BA 2×RJ45.

Table 3- 2 PROFINET IO pin assignment with BusAdapter BA 2×RJ45

View	Signal name		Description
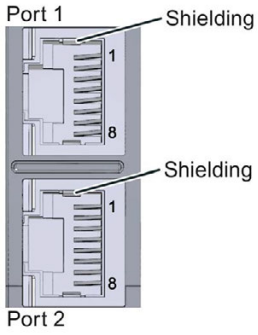	1	TD	Transmit data +
	2	TD_N	Transmit data -
	3	RD	Receive data +
	4	GND	Ground
	5	GND	Ground
	6	RD_N	Receive data -
	7	GND	Ground
	8	GND	Ground

Note

PROFINET interface X1 Port 2

If autonegotiation is disabled, the RJ-45 socket (X1 Port 2) has the switch assignment (MDI-X).

PROFINET IO with BusAdapter BA 2×FC

The following table shows the signal name and description of the pin assignment of the BusAdapter BA 2×FC.

Table 3- 3 PROFINET IO pin assignment with BusAdapter BA 2×FC

View	Signal name		Description
Port 1 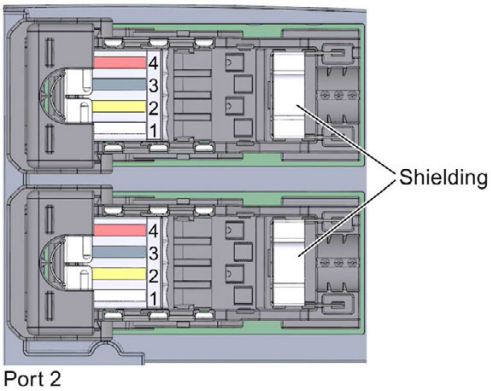 Port 2	1	TD	Transmit data +
	2	RD	Receive data +
	3	TD_N	Transmit data -
	4	RD_N	Receive data -

Reference

You can find more information on accessories and how to connect the interface module in the ET 200SP distributed I/O system (http://support.automation.siemens.com/WW/view/en/58649293) system manual.

3.2 Schematic circuit diagram

The following figure shows a block diagram of the IM 155-6 PN ST interface module.

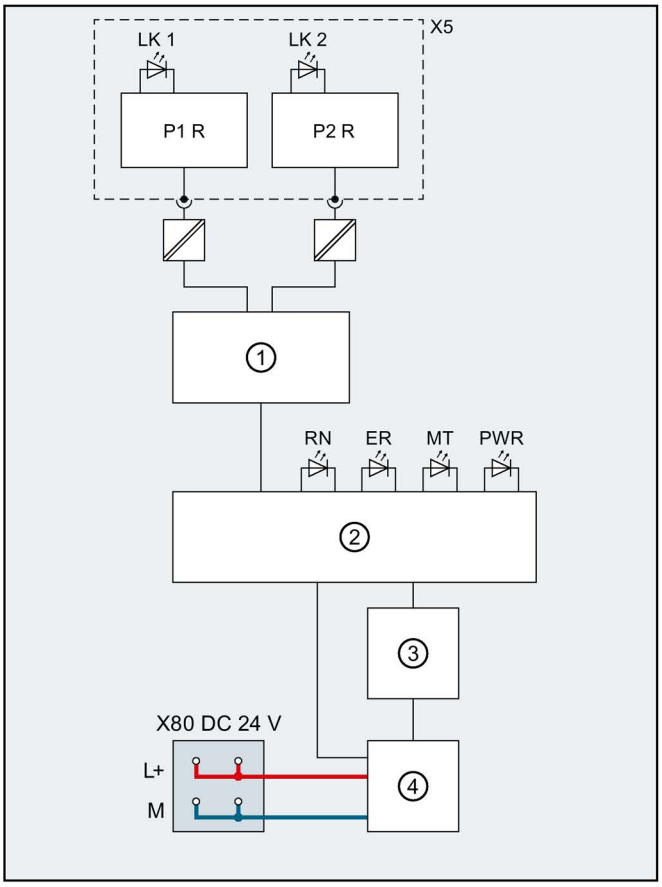

①	Switch	L+	24 V DC supply voltage
②	ET 200SP backplane bus interface and electronics	M	Mass
③	Backplane bus	LK 1,2	TX/RX Link LED
④	Internal power supply	RN	RUN LED (green)
X80 24 V DC	Supply voltage infeed	ER	ERROR LED (red)
X5	BusAdapter	MT	MAINT LED (yellow)
P1 R	PROFINET interface X1 Port 1	PWR	POWER LED (green)
P2 R	PROFINET interface X1 Port 2		

Figure 3-1 Block diagram of the IM 155-6 PN ST interface module

Parameters/address space 4

4.1 Parameters

Parameters for IM 155-6 PN ST interface module

The following table shows the parameters for the IM 155-6 PN ST interface module.

Table 4- 1 Parameters for interface module IM 155-6 PN ST (GSD file)

Parameters	Value range	Default	Efficiency range
Configuration control	Disable/enable	Disable	ET 200SP

4.2 Explanation of parameters

4.2.1 Configuration control

You can use this parameter to enable the configuration control function in the ET 200SP distributed I/O system.

Note

If you configure the enable, the ET 200SP distributed I/O system requires a control data record 196 from the user program in order for the ET 200SP distributed I/O system to operate the I/O modules.

Reference

You can find more information in the ET 200SP distributed I/O system (http://support.automation.siemens.com/WW/view/en/58649293) system manual and in the STEP 7 online help.

4.3 Substitute value behavior

The substitute value behavior in the ET 200SP distributed I/O system is executed by the IO controller for each slot.

The respective output behaves according to its configured substitute value behavior:

- Current-free/voltage-free
- Output substitute value
- Keep last value

The substitute value behavior is triggered in the following cases:

- STOP controller
- Controller failure (connection interrupted)
- Firmware update
- Reset to factory settings
- Station stop, for example, due to:
  - Missing server module
  - Removing more than one I/O module at a time.
  - At least one I/O module installed on an incorrect BaseUnit
- Deactivating the IO device

Note

Reducing a configuration

If you reduce the configuration of the ET 200SP distributed I/O system and download the configuration to the CPU, the modules which are no longer configured but still present retain their original substitute value behavior. This applies until the supply voltage is switched off at the interface module.

The "current-free/voltage-free" behavior takes effect in the following cases:

- Firmware update
- Reset to factory settings
- Configuration control: The IM has not received a valid control data record 196 yet.
- Incorrectly configured module
- Module with incorrect parameter assignment

4.4 Status of the supply voltage L+ of the I/O modules

Introduction

The "Status of the supply voltage L+ of the I/O modules" is configured on the server module as of IM 155-6 PN ST V1.1.x and GSD file 04/2013. The input data can then be read out on the server module. You will find the relevant description in the Server module (http://support.automation.siemens.com/WW/view/en/63257531) device manual.

Configurations

You can select two configurations for the IM 155-6 PN ST or the server module of the IM 155-6 PN ST in the configuration software:

- Configuration without input data
- Configuration with input data

Input data

You can read out the status of the supply voltage L+ for each I/O module of the ET 200SP in the input data (byte 0 to 3).

	7	6	5	4	3	2	1	0
Byte 0	8	7	6	5	4	3	2	1
Byte 1	16	15	14	13	12	11	10	9
Byte 2	24	23	22	21	20	19	18	17
Byte 3	32	31	30	29	28	27	26	25

Slots of the I/O modules

Bit = 0: Supply voltage L+ missing or I/O module not installed

Bit = 1: Supply voltage L+ and I/O module available

Figure 4-1 Status of the supply voltage L+

Note

An inserted or missing server module always signals "bit = 0" for the slot.

Interrupts, diagnostics, error, and system messages 5

5.1 Status and error displays

LED display

The following diagram shows the LED display on the interface module and the BusAdapter.

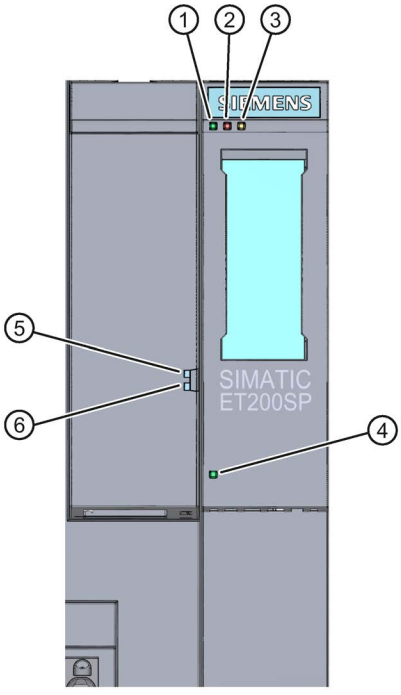

① RN (green)
② ER (red)
③ MT (yellow)
④ PWR (green)
⑤ LK1 (green)
⑥ LK2 (green)

Figure 5-1 LED display on the interface module and BusAdapter

Meaning of the LEDs

The meaning of the status and error messages is described in the following tables.

RN/ER/MT LED on the interface module

Table 5- 1 RN/ER/MT status and error displays

LEDs			Meaning	Remedy
RN (RUN)	ER (ERROR)	MT (MAINT)		
Off	Off	Off	Missing or insufficient supply voltage on interface module.	Check the supply voltage or turn in on at the interface module. *
On	On	On	Test of LEDs during startup: The three LEDs light up simultaneously for approximately 0.25 s.	-
Flashes	Off	Off	Interface module is deactivated.	Activate the interface module with the configuration software or the user program.
			Interface module is not configured.	Configure the interface module with the configuration software.
			ET 200SP starts up.	-
			ET 200SP is configured.	
			ET 200SP is reset to factory settings.	
On	Not relevant	Not relevant	ET 200SP is currently exchanging data with the IO controller.	
Not relevant	Flashes	Not relevant	Group errors and group error channels.	Evaluate the diagnostics data and remedy the error.
			The configured structure does not correspond to the actual structure of the ET 200SP .	Check the structure of the ET 200SP to see whether a module is missing or defective, or whether a non-configured module is plugged.
			Invalid configuration states.	See section Invalid configuration states of the ET 200SP on PROFINET IO (Page 41)
			Parameter error in the I/O module.	Evaluate the display of the module status in STEP 7 and eliminate the error in the respective I/O module.
Not relevant	Not relevant	On	Maintenance	See section Maintenance events (Page 36)
Flashes	Flashes	Flashes	The "Node flash test" is run (the LEDs LK1 and LK2 of the PROFINET interface also flash).	-
			Hardware or firmware defective (the LEDs LK1 and LK2 of the PROFINET interface do not flash).	Run a firmware update. If the error persists, contact Siemens Industry Online Support. Replace the interface module.

* PWR LED on (on the interface module): Check the backplane bus for a short circuit.

PWR LED on the interface module

Table 5- 2 PWR status display on the interface module

PWR LED	Meaning	Remedy
□ Off	Supply voltage not present or too small	Check the supply voltage.
■ On	Supply voltage present	-

LK1/LK2 LED on the BusAdapter

Table 5- 3 LK1/LK2status display on the BusAdapter

LEDs LK1/LK2	Meaning	Remedy
□ Off	There is no Ethernet connection between the PROFINET IO interface of your PROFINET device and a communication partner (e.g. IO controller).	Check whether the bus cable to the switch/IO controller is interrupted.
■ On	There is an Ethernet connection between the PROFINET IO interface of your PROFINET device and a communication partner (e.g. IO controller).	-
☼ Flashes	The "Node flash test" is run (the RN/ER/MT LEDs also flash).	-

LED display of configuration errors

Configuration errors of the ET 200SP distributed I/O system are output on the interfacemodule by the ERROR (red) and MAINT (yellow) LEDs.

The following configuration errors are indicated by the LEDs:

- More than one I/O module pulled
- Missing server module
- Interruptions or short circuit on the backplane bus

Principle of operation

You determine the information for cause of the error with the LED error display. After notification by the flash signal, the error type is displayed followed by the error location/error code.

The LED error display

- is active during POWER ON as well as during operation.
- has priority before all other states displayed by the ERROR and MAINT LED.
- remains turned on until the cause of the error has been corrected.

Table 5- 4 Display of error type and error location

Sequence		Description
1	The ERROR and MAINT LEDs flash 3x at 0.5 Hz	Signaling of error type
2	MAINT LED flashes at 1 Hz	Display of the error type (decimal)
3	The ERROR and MAINT LEDs flash 3x at 2 Hz	Signaling of error location/error code
4	The ERROR LED flashes at 1 Hz	Display of tens digit (decimal) of the error location/error code
5	The MAINT LED flashes at 1 Hz	Display of ones digit (decimal) of the error location/error code
6	Repeat steps 1 to 5 until the cause of the error has been corrected.	

Error display

The following table shows the possible causes of error that can occur.

Table 5- 5 Error display

Error type (MAINT)	Error location (ERROR/MAINT)	Cause of error	Remedy
1	02 to 32*	The number of pulled I/O modules is displayed. The diagnostics data is generated starting with two pulled I/O modules.	Check the configuration of the ET 200SP.
	65*	• Missing server module • Interruptions at the backplane bus • Short circuit of communication on the backplane bus	

* Slot

Note

A short circuit in the backplane bus supply or the bus connection supply is indicated by the following LEDs:

- PWR LED: On
- RN-, ER and MT LED: Off

5.2 Interrupts

Introduction

The I/O device generates interrupts as a reaction to specific error events. Interrupts are evaluated based on the I/O controller used.

Evaluating interrupts with I/O controllers

The ET 200SP distributed I/O system supports the following interrupts:

- Diagnostics interrupts
- Hardware interrupts
- Swapping interrupts
- Maintenance events

In the event of an interrupt, interrupt OBs are automatically called in the CPU of the IO controller.

Information on the cause and class of the error is already available, based on the OB number and start information.

Detailed information on the error event can be obtained in the error OB using the instruction "RALRM" (read additional interrupt information).

System diagnostics

In STEP 7 (TIA Portal), the updated system diagnostics is available for the devices of the S7-1500 automation system (IO controller S7-1500 CPU) and ET 200SP (IO device). Independent of the cyclic user program, messages are made available on the display of the CPU S7-1500, the CPU web server and the HMI device.

You will find more information on system diagnostics in the Diagnostics (http://support.automation.siemens.com/WW/view/en/59192926) function manual.

5.2.1 Triggering of a diagnostics interrupt

Triggering of a diagnostics interrupt

For an incoming or outgoing event (e.g. wire break on a channel of an I/O module), the module triggers a diagnostics interrupt if this is configured accordingly.

The CPU interrupts the user program and processes the diagnostics block OB 82. The interrupt triggering event is logged in the start information of OB 82.

5.2.2 Triggering a hardware interrupt

Triggering a hardware interrupt

If there is a process interrupt, the CPU interrupts user program execution and processes the process interrupt block OB 40. The result that triggered the interrupt is added to the start information of the hardware interrupt block.

Note

Diagnostics "Hardware interrupt lost" (from I/O module)

Avoid creating hardware interrupts cyclically.

If the hardware interrupt load is too high, hardware interrupts can get lost depending on the number of I/O modules and the communication load.

5.2.3 Triggering a swapping interrupt

Triggering a swapping interrupt

If there is a swapping interrupt, the CPU interrupts user program execution and processes the process interrupt block OB 83. The result that triggered the interrupt is added to the start information of OB 83.

5.3 Alarms

5.3.1 Diagnostics alarms

Actions after a diagnostics alarm

There can be more than one diagnostic alarm at a given time. Each diagnostics alarm initiates the following actions:

- The ERROR LED of the interface module flashes.
- Diagnostics are reported as diagnostic error interrupts to the CPU of the IO controller and can be read via data records.
- Incoming diagnostics alarms are saved to the diagnostics buffer of the I/O controller.
- OB 82 is called. If OB 82 is not available, the I/O controller goes into STOP mode.

You can find more information in the STEP 7 online help.

Reading the diagnostics

Table 5- 6 Reading the diagnostics with STEP 7

Automation system with IO controller	Application	See...
SIMATIC S7	Diagnostics as plain text in STEP 7 using Online and Diagnostics view	STEP 7 online help • as of STEP 7 V12 function manual PROFINET with STEP 7 V13 (http://support.automation.siemens.com/WW/view/en/49948856) • as of STEP 7 V5.5 system manual PROFINET System Description (http://support.automation.siemens.com/WW/view/en/19292127)
	Instruction "RDREC" (SFB 52) Read data records from the IO device	
	Instruction "RALRM" (SFB 54) Receive interrupts from the IO device	

Additional information on the data records for PROFINET IO

The structure of the diagnostic data records and programming examples are available in the programming manual From PROFIBUS DP to PROFINET IO (http://support.automation.siemens.com/WW/view/en/19289930) and in Example application (http://support.automation.siemens.com/WW/view/en/24000238).

Causes of error and troubleshooting

The causes of error and remedies for the diagnostics alarms are described in the Product Manuals for I/O modules (http://support.automation.siemens.com/WW/view/en/55679691/133300) in the section, "Interrupts/diagnostics alarms".

See also

Channel diagnostics (Page 37)

5.3.2 Maintenance events

Triggering of a maintenance event

The PROFINET IO interfaces of the interface module support the diagnostic concept and maintenance concept in PROFINET IO according to the IEC 61158-6-10 standard. The goal is to detect and remove potential problems as soon as possible.

For the interface module, maintenance events signal to the user when a network component must be checked or replaced.

The CPU interrupts user program execution and processes the diagnostic block OB 82. The event that triggered the maintenance event is entered in the start information of the OB 82.

The interface module signals a maintenance event to the higher-level diagnostic system in the case of the following events:

Table 5- 7 Triggering of a maintenance event

Maintenance alarm	Event	Meaning
Maintenance demanded (*maintenance demanded*) LED MAINT is lit.	Synchronization loss	• No synchronization frame received No synchronization frame was received by the sync master within the timeout period after parameter assignment or during operation. • Successive synchronization frames are located outside permitted limits (jitter)

System events in STEP 7 (TIA Portal)

The maintenance information is generated in STEP 7 with the following system events:

- Maintenance demanded - indicated for each port by a yellow wrench icon in the device view or in the hardware configuration.

You can find more information in the STEP 7 online help.

5.3.3 Channel diagnostics

Function

Channel-related diagnostics provides information about channel faults in modules.

Channel faults are mapped as channel diagnostics data in IO diagnostics data records.

The data record is read using the instruction "RDREC".

Structure of the diagnostics data records

The data records supported by the ET 200SP distributed I/O system are based on the standard PROFINET IO - Application Layer Service Definition V2.3.

You can purchase the standard from the PROFIBUS User Organization on the Internet (http://www.profibus.com).

Coding of the extended channel diagnostics (as of firmware version V3.3.0)

With the IM 155-6 PN ST interface module, the following extended channel diagnostics are reported:

Slot number	ChannelError-Type (CET)	ExtendedChannel-ErrorType (ECET)	Associated value AddValue	Diagnostics
Module slot	0x0602	0x0691	Slot	Station stop - module parameter "Potential group" faulty or incorrect BaseUnit in actual slot (AddValue)
Slot 0	0x0602	0x0693	0x00	Diagnostics with missing server module
	0x0602	0x0698	0x00	Diagnostics backplane bus too long
	0x0602	0x0699	Slot	Diagnostics with incorrect bus configuration
	0x0602	0x069C	0x00	Diagnostics with incorrectly plugged BusAdapter
Server module slot	0x0610	0x06B0	0x00	Group diagnostics: Missing supply voltage L+ for the potential groups Note: The slot in which the light-colored BaseUnit of the respective load module is located is coded in the "ChannelNumber" element.

Structure of the manufacturer-specific diagnostics data records (firmware version < V3.3.0)

The structure of the diagnostics data records is differentiated by the BlockVersion. The following BlockVersion applies to the IM 155-6 PN ST interface modules:

Table 5- 8 Structure of the manufacturer-specific diagnostics data records

IM 155-6 PN ST interface module	BlockVersion
6ES7155-6AU00-0BN0	W#16#0101

Manufacturer-specific diagnostics in the User Structure Identifier (USI)

The following manufacturer-specific diagnostics are signaled in the USI with the IM 155-6 PN ST interface module:

Table 5- 9 Manufacturer-specific diagnostics in the USI

USI no. W#16#...	Diagnostics
0003	Group diagnostics: Missing supply voltage L+ for the potential groups *
0004	Diagnostics with missing server module
0005	Diagnostics when more than one I/O module has been pulled
0006	Diagnostics with incorrect BaseUnit
0007	Diagnostics with incorrect bus configuration

* As of IM 155-6 PN ST V1.1.x and GSD file 04/2013, this diagnostics is only signaled if the "Group diagnostics: Missing supply voltage L+" parameter has been activated.

USI structure = W#16#0003

Table 5- 10 USI structure = W#16#0003

Data block name		Content	Comment	Bytes
USI		W#16#0003	Manufacturer-specific diagnostics with failure of supply voltage L+ as of slot x	2
Followed by the slot as of which the supply voltage L+ has failed.				
	Slot	W#16#0001 to W#16#0020	Bit 8 to 15	1
			Bit 0 to 7	1
Followed by 2 reserved bytes:				
	Reserved			1
	Reserved			1

USI structure = W#16#0004

Table 5- 11 USI structure = W#16#0004

Data block name		Content	Comment	Bytes
USI		W#16#0004	Manufacturer-specific diagnostics with missing server module Result: Station stop • The I/O modules fail → substitute value behavior • The interface module continues to exchange data with the IO controller.	2
Followed by 4 reserved bytes:				
	Reserved			1
	Reserved			1
	Reserved			1
	Reserved			1

USI structure = W#16#0005

Table 5- 12 USI structure = W#16#0005

Data block name		Content	Comment	Bytes
USI		W#16#0005	Manufacturer-specific diagnostics if more than one I/O module has been pulled. The number of pulled I/O modules is displayed. Result: Station stop • The I/O modules fail → substitute value behavior • The interface module continues to exchange data with the IO controller.	2
The number of pulled I/O modules follows				
	Quantity	W#16#0002 to W#16#0020	Bit 8 to 15	1
			Bit 0 to 7	1
Followed by 2 reserved bytes:				
	Reserved			1
	Reserved			1

USI structure = W#16#0006

Table 5- 13 USI structure = W#16#0006

Data block name		Content	Comment	Bytes
USI		W#16#0006	Manufacturer-specific diagnostics if an I/O module is installed on an incorrect BaseUnit. Result: Station stop • The I/O modules fail → substitute value behavior • The interface module continues to exchange data with the IO controller.	2
Followed by the slot for the I/O module:				
	Slot	W#16#0001 to W#16#0020	Bit 8 to 15	1
			Bit 0 to 7	1
Followed by 2 reserved bytes:				
	Reserved			1
	Reserved			1

USI structure = W#16#0007

Table 5- 14 USI structure = W#16#0007

Data block name		Content	Comment	Bytes
USI		W#16#0007	Manufacturer-specific diagnostics if operation is not possible with existing bus configuration Result: Station stop • The I/O modules fail → substitute value behavior • The interface module continues to exchange data with the IO controller	2
Followed by the slot for the I/O module:				
	Slot	W#16#0001 to W#16#0040	Bit 8 to 15	1
			Bit 0 to 7	1
If slot 0 is specified, check the width of the station configuration (maximum 1 m).				
Followed by 2 reserved bytes:				
	Reserved			1
	Reserved			1

5.3.4 Invalid configuration states of the ET 200SP on PROFINET IO

Invalid configuration states

The following invalid configuration states of the ET 200SP distributed I/O system lead to the failure of the IO device or prevent the exchange of user data with the I/O modules.

- Number of modules exceeds maximum configuration
- Faulty backplane bus (e.g. defective BaseUnit). ET 200SP backplane bus interruptions do not trigger an interrupt.
- At least one I/O module is installed in a different BaseUnit than the one configured in the parameters.
- Missing server module
- Invalid or incorrectly configured BusAdapter

Note

If you drag more than one I/O module or the server module the node will stop. All I/O modules of the ET 200SP distributed I/O system fail (substitute value behavior) but the interface module is still exchanging data.

Revoking the station stop (by correcting the invalid configuration state) leads to a brief failure of the ET 200SP distributed I/O system and automatic restart.

See also

Status and error displays (Page 28)

Channel diagnostics (Page 37)

5.3.5 Failure of supply voltage L+ at BaseUnit BU...D

Failure of the supply voltage L+

The I/O modules react as follows to failure of the supply voltage L+ on the BaseUnit BU...D:

- If an I/O module is removed during failure of the supply voltage, a pull alarm is generated.
- If an I/O module is installed during failure of the supply voltage, an insert alarm is generated.

5.3.6 STOP of the IO controller and recovery of the IO device

STOP of the SIMATIC IO controller

Diagnostics frames received from the IO device while the IO controller is in STOP do not initiate a call of any corresponding OBs when the IO controller goes into RUN. You must read the data record $E00C_H$ with the "RDREC" instruction in OB 100. This record contains all diagnostics for the slots assigned to an IO controller in an IO device.

Recovery of the SIMATIC IO devices

If you want to read the diagnostics of a station after its return, you have to read the $E00C_H$ data record with the "RDREC" instruction in OB 86. This record contains all diagnostics for the slots assigned to an IO controller in an IO device.

Compatibility

6

Compatibility between the versions of the IM 155-6 PN ST

The table below describes which version you can use in the configuration for which actually plugged version of the IM 155-6 PN ST interface module. The table also describes the functional differences of the versions of the IM 155-6 PN ST interface module.

IM 155-6 PN ST configured	IM 155-6 PN ST plugged					Changes compared to previous version
	V1.0.x	V1.1.x	V3.1.x	V3.3.x	V4.1.x	
V1.0	✓	✓	✓	✓	✓	---
V1.1	---	✓	✓	✓	✓	• The "Group diagnostics: Missing supply voltage L+" parameter can be set on the server module • "Status of supply voltage L+ of the I/O modules" can be configured on the server module
V3.1	---	---	✓	✓	✓	• User data 512 bytes • Station extension via ET-Connection
V3.3	---	---	---	✓	✓	• Support of submodules
V4.1	---	---	---	---	✓	---

Note

IM 155-6 PN ST (6ES7155-6AU00-0BN0) with firmware version V4.1

You can upgrade the previous version of the IM 155-6 PN ST interface module (6ES7155-6AU**00**-0BN0) to the firmware version V4.1. In this case configure the module as IM 155-6 PN ST interface module (6ES7155-6AU**01**-0BN0) with firmware version V4.1.

Status of the supply voltage

Load voltage diagnostics are only valid if the station started up with a valid and complete configuration.

- For modules in the following table without a parameter assignment, the status of the supply voltage is always signaled as "1" regardless of the actual status of the supply voltage.
- If a potential group is exclusively made up of modules without parameter assignment from the table below, no group diagnostics "Missing supply voltage L+" is signaled for this potential group.

Modules	Article number
DI 8x24VDC ST	6ES7132-6BF00-0BA0
DI 16x24VDC ST	6ES7131-6BH00-0BA0
DI 8x24VDC HF	6ES7132-6BF00-0CA0
DQ 4x24VC/2A ST	6ES7132-6BD20-0BA0
DQ 8x24VDC/0,5A ST	6ES7132-6BF00-0BA0
DQ 16x24VDC/0,5A ST	6ES7132-6BH00-0BA0
DQ 8x24VDC/0,5A HF	6ES7131-6BF00-0CA0

Reaction times for fail-safe modules

The following maximum reaction time of the interface module must be taken into account when calculating the reaction times of fail-safe modules:
maximum reaction time = configured update time + 400 µs (but at least 1.4 ms)

Technical specifications 7

Technical specifications of the IM 155-6 PN ST

Article number	6ES7155-6AU01-0BN0
General information	
Product type designation	IM 155-6 PN ST with server module
HW functional status	FS01
Firmware version	V4.1
Vendor identification (VendorID)	002AH
Device identifier (DeviceID)	0313H
Product function	
• I&M data	Yes; I&M0 to I&M3
Engineering with	
• STEP 7 TIA Portal configurable/integrated as of version	V13 SP1
• STEP 7 configurable/integrated as of version	V5.5 SP4 and higher
• PROFINET as of GSD version/GSD revision	V2.3 / -
Configuration control	
via dataset	Yes
Supply voltage	
Rated value (DC)	24 V
permissible range, lower limit (DC)	19.2 V
permissible range, upper limit (DC)	28.8 V
Reverse polarity protection	Yes
Short-circuit protection	Yes
Mains buffering	
• Mains/voltage failure stored energy time	10 ms
Input current	
Current consumption (rated value)	450 mA
Current consumption, max.	550 mA
Inrush current, max.	3.7 A
I^2t	0.09 $A^2 \cdot s$
Power	
Infeed power to the backplane bus	4.5 W
Power loss	
Power loss, typ.	1.9 W

Article number	6ES7155-6AU01-0BN0
Address area	
Address space per module	
• Address space per module, max.	256 byte; per input / output
Address space per station	
• Address space per station, max.	512 byte; Dependent on configuration
Hardware configuration	
Rack	
• Modules per rack, max.	32; + 16 ET 200AL modules
Submodules	
• Number of submodules per station, max.	256
Interfaces	
Number of PROFINET interfaces	1; 2 ports (switch)
1. Interface	
Interface types	
• Number of ports	2
• integrated switch	Yes
• BusAdapter (PROFINET)	Yes; Applicable BusAdapter: BA 2x RJ45, BA 2x FC
Functionality	
• PROFINET IO Device	Yes
• Open IE communication	Yes
• Media redundancy	Yes; PROFINET MRP
Interface types	
RJ 45 (Ethernet)	
• Transmission procedure	PROFINET with 100 Mbit/s full duplex (100BASE-TX)
• 10 Mbps	Yes; for Ethernet services
• 100 Mbps	Yes; PROFINET with 100 Mbit/s full duplex (100BASE-TX)
• Autonegotiation	Yes
• Autocrossing	Yes

Article number	6ES7155-6AU01-0BN0
PROFINET IO Device	
Services	
– Isochronous mode	No
– Open IE communication	Yes
– IRT	Yes; with send cycles of between 250 µs and 4 ms in increments of 125 µs
– MRP	Yes
– MRPD	No
– PROFINET system redundancy	No
– PROFIenergy	Yes
– Prioritized startup	Yes
– Shared device	Yes
– Number of IO Controllers with shared device, max.	2
Open IE communication	
• TCP/IP	Yes
• SNMP	Yes
• LLDP	Yes
Isochronous mode	
Isochronous operation (application synchronized up to terminal)	No
Interrupts/diagnostics/status information	
Status indicator	Yes
Alarms	Yes
Diagnostic functions	Yes
Diagnostics indication LED	
• RUN LED	Yes; Green LED
• ERROR LED	Yes; Red LED
• MAINT LED	Yes; yellow LED
• Monitoring of the supply voltage (PWR-LED)	Yes; green PWR LED
• Connection display LINK TX/RX	Yes; 2x green link LEDs on BusAdapter
Potential separation	
between backplane bus and electronics	No
between PROFINET and all other circuits	Yes; 1500 V AC
between supply and all other circuits	No
Permissible potential difference	
between different circuits	Safety extra low voltage SELV
Isolation	
Isolation tested with	707 V DC (type test)

Article number	6ES7155-6AU01-0BN0
Standards, approvals, certificates	
Network loading class	2
Security level	According to Security Level 1 Test Cases V1.1.1
Ambient conditions	
Ambient temperature during operation	
• horizontal installation, min.	0 °C
• horizontal installation, max.	60 °C
• vertical installation, min.	0 °C
• vertical installation, max.	50 °C
Connection method	
ET-Connection	
• via BU/BA Send	Yes; + 16 ET 200AL modules
Dimensions	
Width	50 mm
Height	117 mm
Depth	74 mm
Weights	
Weight, approx.	147 g; without BusAdapter

Technical specifications of the BusAdapter BA 2×RJ45

Table 7- 1 Technical specifications of the BusAdapter BA 2×RJ45

	6ES7193-6AR00-0AA0
Interfaces	
PROFINET IO	
Number of PROFINET interfaces	1
RJ45	Yes; 2 x
Cable length	
• Copper cables	100 m
Dimensions	
Width	20 mm
Height	69.5 mm
Depth	59 mm
Weights	
Weight, approx.	46 g

Technical specifications of the BusAdapter BA 2×FC

Table 7- 2 Technical specifications of the BusAdapter BA 2×FC

	6ES7193-6AF00-0AA0
Interfaces	
PROFINET IO	
Number of PROFINET interfaces	1
FC (FastConnect)	Yes; 2 x
Cable length	
• Copper cables	100 m
Dimensions	
Width	20 mm
Height	69.5 mm
Depth	59 mm
Weights	
Weight, approx.	53 g

Dimension drawing

A

This appendix contains a dimension drawing of the module installed on a mounting rail. Always observe the specified dimensions for installation in cabinets, control rooms, etc.

Figure A-1 Dimension drawing of the IM 155-6 PN ST interface module (front and side view)

SIEMENS

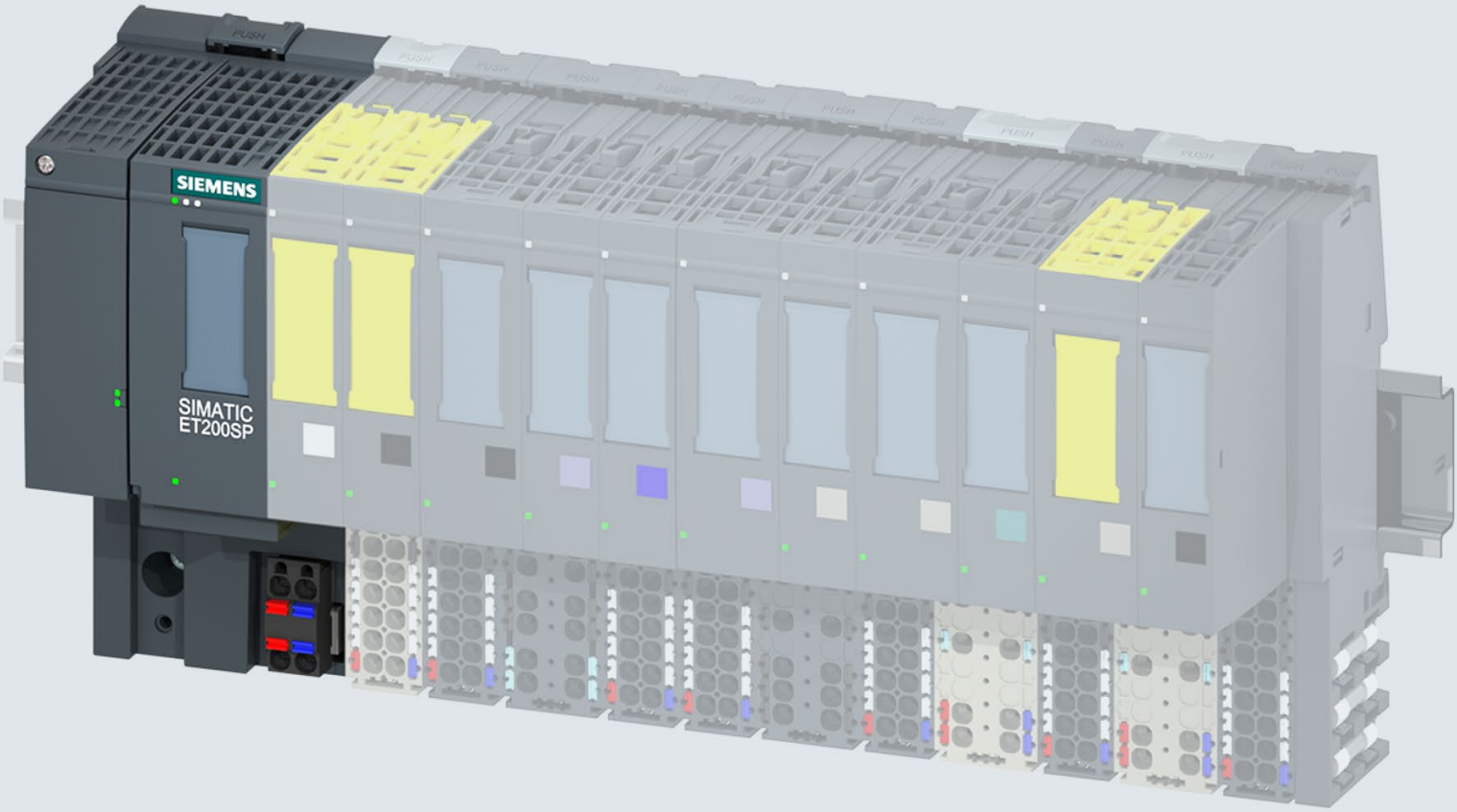

Manual

SIMATIC

ET 200SP

IM 155-6 PN/2 HF interface module
(6ES7155-6AU01-0CN0)

Edition 10/2018

support.industry.siemens.com

SIEMENS

SIMATIC

ET 200SP
Interface module IM 155-6 PN/2 HF (6ES7155-6AU01-0CN0)

Manual

Preface

Guide 1

Product overview 2

Wiring 3

Parameters/address space 4

Interrupts, error messages, diagnostics and system alarms 5

Compatibility 6

Technical specifications 7

Dimension drawing A

10/2018

A5E03915895-AH

Legal information

Warning notice system

This manual contains notices you have to observe in order to ensure your personal safety, as well as to prevent damage to property. The notices referring to your personal safety are highlighted in the manual by a safety alert symbol, notices referring only to property damage have no safety alert symbol. These notices shown below are graded according to the degree of danger.

⚠ DANGER

indicates that death or severe personal injury **will** result if proper precautions are not taken.

⚠ WARNING

indicates that death or severe personal injury **may** result if proper precautions are not taken.

⚠ CAUTION

indicates that minor personal injury can result if proper precautions are not taken.

NOTICE

indicates that property damage can result if proper precautions are not taken.

If more than one degree of danger is present, the warning notice representing the highest degree of danger will be used. A notice warning of injury to persons with a safety alert symbol may also include a warning relating to property damage.

Qualified Personnel

The product/system described in this documentation may be operated only by **personnel qualified** for the specific task in accordance with the relevant documentation, in particular its warning notices and safety instructions. Qualified personnel are those who, based on their training and experience, are capable of identifying risks and avoiding potential hazards when working with these products/systems.

Proper use of Siemens products

Note the following:

⚠ WARNING

Siemens products may only be used for the applications described in the catalog and in the relevant technical documentation. If products and components from other manufacturers are used, these must be recommended or approved by Siemens. Proper transport, storage, installation, assembly, commissioning, operation and maintenance are required to ensure that the products operate safely and without any problems. The permissible ambient conditions must be complied with. The information in the relevant documentation must be observed.

Trademarks

All names identified by ® are registered trademarks of Siemens AG. The remaining trademarks in this publication may be trademarks whose use by third parties for their own purposes could violate the rights of the owner.

Disclaimer of Liability

We have reviewed the contents of this publication to ensure consistency with the hardware and software described. Since variance cannot be precluded entirely, we cannot guarantee full consistency. However, the information in this publication is reviewed regularly and any necessary corrections are included in subsequent editions.

Siemens AG
Division Digital Factory
Postfach 48 48
90026 NÜRNBERG
GERMANY

A5E03915895-AH
℗ 10/2018 Subject to change

Copyright © Siemens AG 2013 - 2018.
All rights reserved

Preface

Purpose of the documentation

This manual supplements the ET 200SP distributed I/O system (http://support.automation.siemens.com/WW/view/en/58649293) system manual.

Functions that generally relate to the system are described in this manual.

The information provided in this manual and in the system/function manuals supports you in commissioning the ET 200SP distributed I/O system.

Conventions

Please also observe notes labeled as follows:

Note

A note contains important information on the product described in the documentation, on the handling of the product, or on the section of the documentation to which particular attention should be paid.

Recycling and disposal

For environmentally friendly recycling and disposal of your old equipment, contact a certified electronic waste disposal company and dispose of the equipment according to the applicable regulations in your country.

Security information

Siemens provides products and solutions with industrial security functions that support the secure operation of plants, systems, machines and networks.

In order to protect plants, systems, machines and networks against cyber threats, it is necessary to implement – and continuously maintain – a holistic, state-of-the-art industrial security concept. Siemens' products and solutions constitute one element of such a concept.

Customers are responsible for preventing unauthorized access to their plants, systems, machines and networks. Such systems, machines and components should only be connected to an enterprise network or the internet if and to the extent such a connection is necessary and only when appropriate security measures (e.g. firewalls and/or network segmentation) are in place.

For additional information on industrial security measures that may be implemented, please visit (https://www.siemens.com/industrialsecurity).

Siemens' products and solutions undergo continuous development to make them more secure. Siemens strongly recommends that product updates are applied as soon as they are available and that the latest product versions are used. Use of product versions that are no longer supported, and failure to apply the latest updates may increase customers' exposure to cyber threats.

To stay informed about product updates, subscribe to the Siemens Industrial Security RSS Feed under (https://www.siemens.com/industrialsecurity).

Table of contents

Preface 3

1 Guide 7

2 Product overview 12

2.1 Properties 12

2.2 Functions 16
2.2.1 Device replacement 20
2.2.2 Real-time communication 21
2.2.3 Isochronous real-time communication 21
2.2.4 Prioritized startup 22
2.2.5 Submodules 22
2.2.6 Media redundancy (MRP) 23
2.2.7 Shared device 23
2.2.8 Isochronous mode 24
2.2.9 Module-internal Shared Input/Shared Output (MSI/MSO) 24
2.2.10 System redundancy S2 25
2.2.11 Alternating IO devices during operation ("docking systems") 25
2.2.12 Oversampling 25
2.2.13 Value status 26
2.2.14 PROFIenergy 26
2.2.15 Configuration control (option handling) 27
2.2.16 Use of fail-safe modules 27
2.2.17 Multi Hot Swap 27
2.2.18 Module-to-Module Communication (MtM) 28
2.2.19 Setting the time 29

3 Wiring 30

3.1 Pin assignment 30

3.2 Block diagram 31

4 Parameters/address space 32

4.1 Parameters 32

4.2 Explanation of parameters 32
4.2.1 Enable configuration control 32
4.2.2 Diagnostics (maintenance) undervoltage 33

4.3 Substitute value behavior 33

4.4 Status of the supply voltage L+ of the I/O modules 34

5 Interrupts, error messages, diagnostics and system alarms ... 35

5.1 Status and error displays ... 35

5.2 Interrupts ... 38
5.2.1 Triggering of a diagnostics interrupt ... 39
5.2.2 Triggering a hardware interrupt ... 39
5.2.3 Triggering of a remove/insert module interrupt ... 40

5.3 Alarms ... 41
5.3.1 Diagnostics alarms ... 41
5.3.2 Maintenance events ... 42
5.3.3 Channel diagnostics ... 43
5.3.4 Invalid configuration states of the ET 200SP on PROFINET IO ... 46
5.3.5 Failure of supply voltage L+ at BaseUnit BU...D ... 47
5.3.6 STOP of the IO controller and recovery of the IO device ... 47

6 Compatibility ... 48

6.1 Compatibility of modules ... 48

7 Technical specifications ... 52

A Dimension drawing ... 56

Guide

1

The documentation for the SIMATIC ET 200SP distributed I/O system is arranged into three areas.
This arrangement enables you to access the specific content you require.

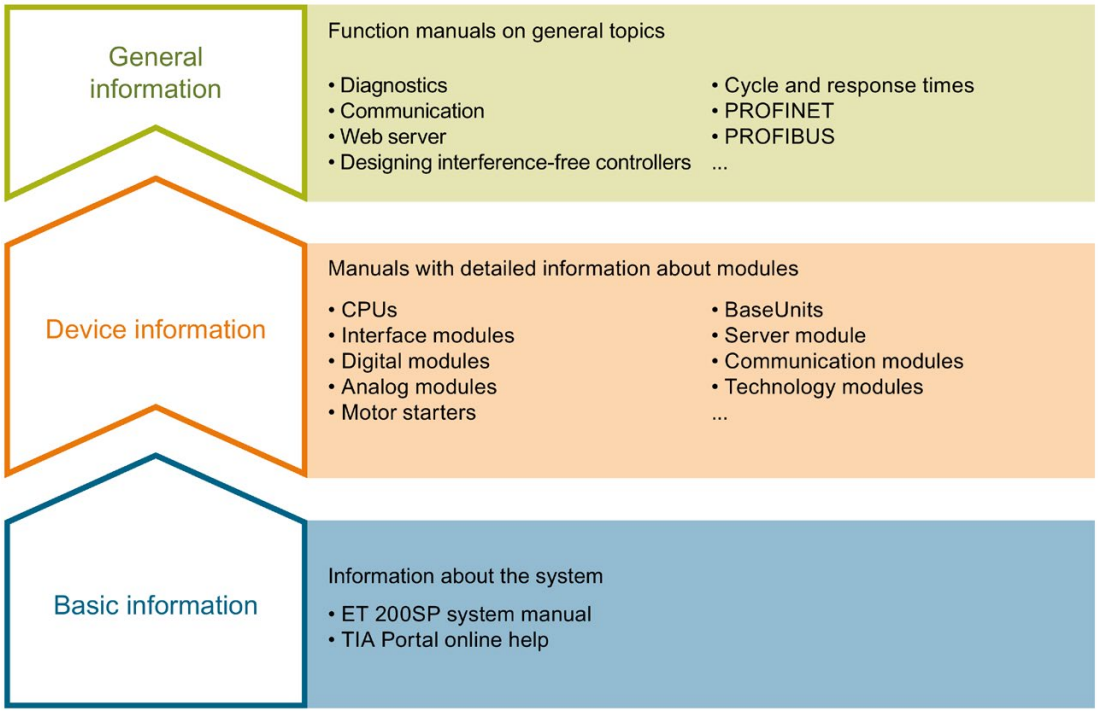

Basic information

The system manual describes in detail the configuration, installation, wiring and commissioning of the SIMATIC ET 200SP. distributed I/O system. The STEP 7 online help supports you in the configuration and programming.

Device information

Product manuals contain a compact description of the module-specific information, such as properties, wiring diagrams, characteristics and technical specifications.

General information

The function manuals contain detailed descriptions on general topics regarding the SIMATIC ET 200SP distributed I/O system, e.g. diagnostics, communication, Web server, motion control and OPC UA.

You can download the documentation free of charge from the Internet (https://support.industry.siemens.com/cs/ww/en/view/109742709).

Changes and supplements to the manuals are documented in a Product Information.

You can download the product information free of charge from the Internet (https://support.industry.siemens.com/cs/us/en/view/73021864).

Manual Collection ET 200SP

The Manual Collection contains the complete documentation on the SIMATIC ET 200SP distributed I/O system gathered together in one file.

You can find the Manual Collection on the Internet (https://support.automation.siemens.com/WW/view/en/84133942).

"mySupport"

With "mySupport", your personal workspace, you make the most of your Industry Online Support.

In "mySupport" you can store filters, favorites and tags, request CAx data and put together your personal library in the Documentation area. Furthermore, your data is automatically filled into support requests and you always have an overview of your current requests.

You need to register once to use the full functionality of "mySupport".

You can find "mySupport" in the Internet (https://support.industry.siemens.com/My/ww/en).

"mySupport" - Documentation

In the Documentation area of "mySupport", you have the possibility to combine complete manuals or parts of them to make your own manual.
You can export the manual in PDF format or in an editable format.

You can find "mySupport" - Documentation in the Internet (https://support.industry.siemens.com/My/ww/en/documentation).

"mySupport" - CAx Data

In the CAx Data area of "mySupport", you can have access the latest product data for your CAx or CAe system.

You configure your own download package with a few clicks.

In doing so you can select:

- Product images, 2D dimension drawings, 3D models, internal circuit diagrams, EPLAN macro files
- Manuals, characteristics, operating manuals, certificates
- Product master data

You can find "mySupport" - CAx Data in the Internet (https://support.industry.siemens.com/my/ww/en/CAxOnline).

Application examples

The application examples support you with various tools and examples for solving your automation tasks. Solutions are shown in interplay with multiple components in the system - separated from the focus in individual products.

You can find the application examples on the Internet (https://support.industry.siemens.com/sc/ww/en/sc/2054).

TIA Selection Tool

With the TIA Selection Tool, you can select, configure and order devices for Totally Integrated Automation (TIA).
This tool is the successor of the SIMATIC Selection Tool and combines the known configurators for automation technology into one tool.
With the TIA Selection Tool, you can generate a complete order list from your product selection or product configuration.

You can find the TIA Selection Tool on the Internet (https://w3.siemens.com/mcms/topics/en/simatic/tia-selection-tool).

SIMATIC Automation Tool

You can use the SIMATIC Automation Tool to run commissioning and maintenance activities simultaneously on various SIMATIC S7 stations as a bulk operation independently of the TIA Portal.

The SIMATIC Automation Tool provides a multitude of functions:

- Scanning of a PROFINET/Ethernet network and identification of all connected CPUs
- Address assignment (IP, subnet, gateway) and station name (PROFINET device) to a CPU
- Transfer of the data and the programming device/PC time converted to UTC time to the module
- Program download to CPU
- Operating mode switchover RUN/STOP
- Localization of the CPU by means of LED flashing
- Reading out CPU error information
- Reading the CPU diagnostic buffer
- Reset to factory settings
- Updating the firmware of the CPU and connected modules

You can find the SIMATIC Automation Tool on the Internet (https://support.industry.siemens.com/cs/ww/en/view/98161300).

PRONETA

With SIEMENS PRONETA (PROFINET network analysis), you analyze the plant network during commissioning. PRONETA features two core functions:

- The topology overview independently scans PROFINET and all connected components.
- The IO check is a fast test of the wiring and the module configuration of a system.

You can find SIEMENS PRONETA on the Internet (https://support.industry.siemens.com/cs/ww/en/view/67460624).

SINETPLAN

SINETPLAN, the Siemens Network Planner, supports you in planning automation systems and networks based on PROFINET. The tool facilitates professional and predictive dimensioning of your PROFINET installation as early as in the planning stage. In addition, SINETPLAN supports you during network optimization and helps you to exploit network resources optimally and to plan reserves. This helps to prevent problems in commissioning or failures during productive operation even in advance of a planned operation. This increases the availability of the production plant and helps improve operational safety.

The advantages at a glance

- Network optimization thanks to port-specific calculation of the network load
- Increased production availability thanks to online scan and verification of existing systems
- Transparency before commissioning through importing and simulation of existing STEP 7 projects
- Efficiency through securing existing investments in the long term and optimal exploitation of resources

You can find SINETPLAN on the Internet (https://www.siemens.com/sinetplan).

Product overview

2

2.1 Properties

Article number

6ES7155-6AU01-0CN0

View of the module

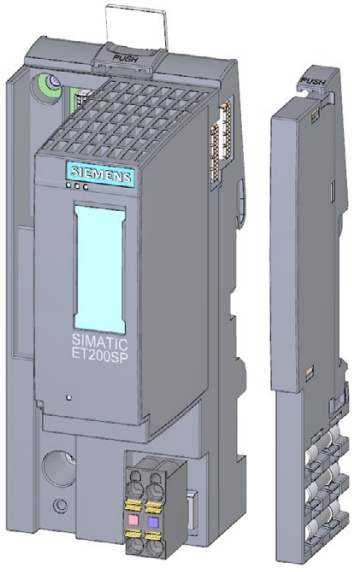

Figure 2-1 View of the AS interface module 155-6 PN/2 HF with included accessory (24 V DC connector and server module) and optional accessories (labeling strips and reference identification label)

Properties

The module has the following technical properties:

- Connects the ET 200SP distributed I/O system with PROFINET IO.
- Power supply 1 L+ 24 V DC (SELV/PELV). The connection plug is included in the scope of delivery of the interface module and is available as replacement part.
- PROFINET IO connection via selectable BusAdapters
  - BA 2×RJ45 for RJ45 bus connector
  - BA 2×FC for direct connection of the bus cable
  - BA 2xLC for glass fiber-optic cable
  - BA 2xSCRJ for POF/PCF fiber-optic cable
  - BA SCRJ/RJ45 as media converter for POF/PCF fiber-optic cable ⇔ standard RJ45 connector
  - BA SCRJ/FC as media converter for POF/PCF fiber-optic cable ⇔ direct connection of the bus cable
  - BA LC/RJ45 as media converter for glass fiber-optic cable ⇔ standard RJ45 connector
  - BA LC/FC as media converter for glass fiber-optic cable ⇔ direct connection of the bus cable

Maximum configuration

- 64 ET 200SP I/O modules + 16 ET 200AL modules
- 1 m backplane bus (without interface and server module)

Maximum amount of I/O data

Gross data length (for input data and output data):

Without system redundancy S2:

- 1440 bytes
- 1440 bytes for shared device with 2 IOC (in total for both IOC)
- 360 bytes for shared device with more than 2 IOC (per IOC)

With system redundancy S2:

- 1000 bytes
- 360 bytes for system redundancy S2 and shared device with min. 1 additional IOC (per IOC)

The number of maximum net data length for input data and output data depends on the number and type of I/O modules used including ET 200AL modules.

Net data length (for input data and output data):

The following minimum lengths can be applied without shared device and without explicit calculation of the maximum net data length.

- 933 bytes without system redundancy S2
- 493 bytes with system redundancy S2

Calculation of the max. net data length:

Max. net data length = Max. gross length - number of I/O submodules (no user data, input or output data) - number of I/O mixed modules (input and output data) - 5 bytes for interface module and server module without ET-Connection (6 bytes for interface module with ET-Connection)

The result of the calculation of the maximum net data length applies equally to input and output data.

Accessories

You order the following accessories separately:

- BA 2×RJ45 BusAdapter
- BA 2×FC BusAdapter
- BA 2×LC BusAdapter
- BA 2xSCRJ BusAdapter
- BA SCRJ/RJ45 BusAdapter
- BA SCRJ/FC BusAdapter
- BA LC/RJ45 BusAdapter
- BA LC/FC BusAdapter
- Strain relief for PROFINET cable
- 24 V DC connector (one included in the scope of delivery)
- Labeling strips
- Reference identification label

Information on the BusAdapters is available in the BusAdapter (https://support.industry.siemens.com/cs/ww/en/view/109751716) manual.

You can find more information on accessories in the ET 200SP distributed I/O system (http://support.automation.siemens.com/WW/view/en/58649293) system manual.

Server module

The server module is included in the scope of delivery of the interface module and available separately as an accessory.

The server module has the following properties:

- Terminates the backplane bus of the ET 200SP distributed I/O system
- Includes a holder for 3 spare fuses (5 × 20 mm).
- Provides station functions, e.g., group diagnostics: No supply voltage L+, status bytes.
- Identification data I&M 0 to 4

Note

You need to configure and assign parameters to the server module in the configuration software.

Place the server module in the last slot of the configuration. If there are 64 I/O modules, the server module is plugged in slot 65.

You can find more information in the Server module (http://support.automation.siemens.com/WW/view/en/63257531) manual.

First BaseUnit of an ET 200SP in the configuration

The interface modules support plugging a dark-colored BaseUnit in slot 1. This means that modules without a connection to the integrated voltage buses P1 and P2 can now also be configured starting with slot 1. Currently, this applies to the following modules:

- AI Energy Meter ST
- DI 4 x 120…230 V AC ST (6ES7131-6FD00-0BB1)
- DQ 4 x 24…230 V AC/2 A ST (6ES7132-6FD00-0BB1)

Note

First BaseUnit of an ET 200SP in the configuration

Please note the information on limiting the overvoltage and power rating in the AC I/O module manuals.

You route the infeed of the 24 V DC supply voltage over an external fuse.

The 24 V DC supply voltage is provided by a light-colored BaseUnit.

Requirement for configuration of these modules in slot 1:

- Configuration via GSD or GSDML
- Configuration as of STEP 7 V5.5 SP4 with
  - HSP0255 V3.0 for IM155-6 PN HF
- Configuration as of STEP 7 V13 SP1

See also

Functions (Page 16)

2.2 Functions

Introduction

The interface module supports the following PROFINET IO functions:

- Integrated switch with 2 ports
- Supported Ethernet services: PING, ARP, SNMP, LLDP
- Port diagnostics
- Disabling ports
- Minimum update time 250 µs
- Device replacement without programming device, also without topological configuration
- Reset to factory settings via PROFINET IO or RESET button
- Firmware update via PROFINET IO
- Isochronous real-time communication
- Prioritized startup
- Media redundancy (MRP)
- Shared device
- Distribution of module channels to a maximum of 4 submodules
- Module-internal or submodule-internal Shared Input/Shared Output (MSI/MSO)
- Isochronous mode
- System redundancy S2
- Station extension via ET-Connection
- Alternating IO devices during operation ("docking systems")
  - Docking station
  - Docking unit
- Supports BusAdapter for different connection technologies to PROFINET IO.

The interface module supports additional functions:

- Identification data I&M 0 to I&M 4
- PROFIenergy
- Configuration control (option handling)
- Use of fail-safe modules
- Removal/insertion of multiple I/O modules during operation (Multi Hot Swap)
- Module-to-Module Communication (MtM)

Requirements

The table below shows the software requirements for a configuration with the IM 155-6 PN/2 HF interface module:

Table 2- 1 Version dependencies of the module functions

Function	Functional status of the module as of	Firmware version of the module as of	Configuration software			
			Configuration with GSD file (http://support.automation.siemens.com/WW/view/en/19698639/130000)/software from a third-party manufacturer [1]	STEP 7 as of V5.5 SP3 with HSP 233	STEP 7 as of V5.5 SP4 with HSP 250/255	STEP 7 (TIA Portal) as of V12.0.1 with HSP 0058
Real-time communication	1	V2.0.0	X	X	X	X
Isochronous real-time communication	1	V2.0.0	X	X	X	X
Prioritized startup	1	V2.0.0	X	X	X	X
Device replacement without programming device	1	V2.0.0	X	X	X	X
Media redundancy (MRP)	1	V2.0.0	X	X	X	X
Shared device	1	V2.0.0	X	X	X	X
Value status	1	V2.0.0	X	X	X	X
PROFIenergy	1	V2.0.0	X	X	X	X
Multi Hot Swap	1	V2.0.0	X	X	X	X
Use of fail-safe modules	1	V2.0.0	---	X	X	X
Oversampling	1	V2.1.0	X	X	X	X
Isochronous mode	1	V2.1.0	---	X	X	X
Module-internal Shared Input/Shared Output (MSI/MSO)	1	V2.2.0	X	---	X	X
BusAdapter for fiber-optic cable FOC: BA 2xSCRJ	3	V2.2.0	X	---	X	X (as of V13 SP1)
System redundancy S2 to S7-400H	1	V3.0.0	X	---	X	---
System redundancy S2 IEC-compliant	1	V4.2.0	X	---	---	---
System redundancy S2 to S7-1500R/H	1	V4.2.0	X	---	---	X (as of V15.1)
Station extension via ET-Connection	1	V3.0.0	X	---	X (as of V5.5 SP4)	X (as of V13 SP1)
Maximum user data length per module: 288 bytes	1	V3.1.0	X	X (as of V5.5 SP4)	X (as of V5.5 SP4)	X (as of V13 SP1)

Function	Functional status of the module as of	Firmware version of the module as of	Configuration software			
			Configuration with GSD file (http://support.automation.siemens.com/WW/view/en/19698639/130000)/software from a third-party manufacturer [1]	STEP 7 as of V5.5 SP3 with HSP 233	STEP 7 as of V5.5 SP4 with HSP 250/255	STEP 7 (TIA Portal) as of V12.0.1 with HSP 0058
BA SCRJ/RJ45 BusAdapter	3	V3.1.0	X	---	X (as of V5.5 SP4, HSP0250 V3)	X (as of V13 SP1, HSP0129 V1.0)
BA SCRJ/FC BusAdapter	3	V3.1.0	X	---	X (as of V5.5 SP4, HSP0250 V3)	X (as of V13 SP1, HSP0129 V1.0)
BA 2xLC BusAdapter	3	V3.3.0	X	---	X (as of V5.5 SP4, HSP0250/255 V4)	X (as of V13 SP1, Update 6)
BA LC/RJ45 BusAdapter	3	V3.3.0	X	---	X (as of V5.5 SP4, HSP0250/255 V4)	X (as of V13 SP1, Update 6)
BA LC/FC BusAdapter	3	V3.3.0	X	---	X (as of V5.5 SP4, HSP0250/255 V4)	X (as of V13 SP1, Update 6)
Distribution of module channels to multiple submodules	3	V3.3.0	X	---	X (as of V5.5 SP4, HSP0255 V4)	X (as of V13 SP1, Update 6)
Maintenance interrupts of I/O modules	3	V3.3.0	X	---	X (as of V5.5 SP4, HSP0255 V4)	X (as of V13 SP1, Update 6)
Extended Channel Diagnostics	3	V3.3.0	X	---	X (as of V5.5 SP4, HSP0255 V4)	X (as of V13 SP1, Update 6)
Module-to-Module Communication (MtM)	1	V4.2.0	X	---	---	X (as of V15.1)

[1] Systems of third-party manufacturers: Depending on the range of functions of the third-party system

Cabling with fixed connection setting

If you set a fixed connection setting of the port in STEP 7, you must also disable "Autonegotiation/Autocrossover".

You can find more information on this topic in the STEP 7 online help and

- As of STEP 7 (TIA Portal) V12, in the function manual PROFINET with STEP 7 (http://support.automation.siemens.com/WW/view/en/49948856).
- As of STEP 7 V5.5, in the system manual PROFINET System Description (http://support.automation.siemens.com/WW/view/en/19292127).

Compatibility with the IM 155-6 PN interface module

In an existing plant, the IM 155-6 PN/2 HF replaces the IM 155-6 PN ST without reconfiguration. When the IM 155-6 PN/2 HF replaces the IM 155-6 PN ST, it is possible to insert and remove several I/O modules during operation.

For more information on compatibility, refer to section: Compatibility (Page 48)

See also

ET 200SP distributed I/O system (http://support.automation.siemens.com/WW/view/en/58649293)

PROFINET with STEP 7 (http://support.automation.siemens.com/WW/view/en/49948856)

2.2.1 Device replacement

Device replacement

Device replacement without topological configuration

The device name is also stored on the BusAdapter in addition to the interface module. A device name saved on the BusAdapter is the requirement for device replacement without topological configuration.

Replacing the interface module produces a range of scenarios for using the device name.

Table 2- 2 Scenarios for using the device name

	Interface module empty	Interface module with device name
BusAdapter without device name	No device name available	The device name from the interface module is used and copied to the BusAdapter.
BusAdapter with device name	The device name from the BusAdapter is used and copied to the interface module.	The device name from the BusAdapter is used and copied to the interface module if this has a different device name.

Be aware of the following constraints:

- Resetting to factory settings deletes the device name in both the interface module and the BusAdapter. To prevent the device name from being deleted in the BusAdapter, you can remove the BusAdapter from the interface module before resetting to factory settings.
- When a BusAdapter is replaced, a device name stored in the BusAdapter is applied to the interface module after a POWER ON.
- Do not pull/plug the BusAdapter while under voltage.

Device replacement with topological configuration

IO devices with this function can be replaced in a simple manner:

- The device name does not have to be assigned with the programming device.

The replacement IO device is assigned the device name by the IO controller and not by the programming device. The IO controller uses the configured topology and the neighboring relationships determined by the IO devices for this purpose. All involved devices must support the LLDP protocol (Link Layer Discovery Protocol). The configured target topology must match the actual topology.

If the IO devices were already used in another configuration, reset them to factory settings before reusing them. You can find information on this in the system manual ET 200SP distributed I/O system (http://support.automation.siemens.com/WW/view/en/58649293).

You can find more information on this topic in the STEP 7 online help and

- As of STEP 7 (TIA Portal) V12, in the function manual PROFINET with STEP 7 (http://support.automation.siemens.com/WW/view/en/49948856).
- As of STEP 7 V5.5, in the system manual PROFINET System Description (http://support.automation.siemens.com/WW/view/en/19292127).

2.2.2 Real-time communication

Real-time communication

A transmission method for PROFINET IO based on cyclic data exchange with a provider-consumer model.

2.2.3 Isochronous real-time communication

Isochronous real-time communication

A synchronized transmission method for cyclic exchange of IO data between PROFINET devices. A reserved bandwidth within the send clock is available for the transmission. The reserved bandwidth ensures that the IRT data is also transmitted in reserved, time-synchronized intervals, unaffected by other high network load (e.g. TCP/IP communication or additional real time communication).

A topology configuration is required for IRT.

Note

IO controller as sync master with IRT communication

We recommend operating the IO controller also as a sync master when configuring the IRT communication. Otherwise, IRT- and RT-configured IO devices may fail if the sync master fails.

You can find more information on the configuration of synchronized PROFINET devices in sync domains in the STEP 7 online help and

- As of STEP 7 (TIA Portal) V12, in the function manual PROFINET with STEP 7 (http://support.automation.siemens.com/WW/view/en/49948856).
- As of STEP 7 V5.5, in the system manual PROFINET System Description (http://support.automation.siemens.com/WW/view/en/19292127).

2.2.4 Prioritized startup

Prioritized startup

Prioritized startup is a PROFINET IO function in a PROFINET IO system with IRT and RT communication. It reduces the time needed for correspondingly configured IO devices to return to cyclic user data exchange.

The function accelerates the startup of IO devices in the following cases:

- After recovery of supply voltage
- After station recovery
- After activation of IO devices

Note

Dependency of the startup time

The interface module permits startup times from 0.5 s.

The startup time depends on the number and type of modules.

You can find more information on this topic in the STEP 7 online help and

- As of STEP 7 (TIA Portal) V12, in the function manual PROFINET with STEP 7 (http://support.automation.siemens.com/WW/view/en/49948856).
- As of STEP 7 V5.5, in the system manual PROFINET System Description (http://support.automation.siemens.com/WW/view/en/19292127).

2.2.5 Submodules

Submodules

The IM 155-6 PN/2 HF interface module supports the division of I/O modules into up to 4 submodules. This allows parts of an I/O module to be separately configured and parameterized.

A maximum of 256 submodules is supported, whereby 4 submodules are used for the interface module and one submodule for the server module.

You can assign each of these submodules to different IO controllers.

The following functions are only executed if you have configured submodule 1 during configuration:

- Firmware update
- Write I&M data
- Calibration
- PROFIenergy

2.2.6 Media redundancy (MRP)

Media redundancy (MRP)

Function for safeguarding communication and plant availability. A ring topology ensures that an alternative communication path is made available if a transmission route fails.

You can find more information on this topic in the STEP 7 online help and

- As of STEP 7 V12, in the function manual PROFINET with STEP 7 (http://support.automation.siemens.com/WW/view/en/49948856).
- As of STEP 7 V5.5, in the system manual PROFINET System Description (http://support.automation.siemens.com/WW/view/en/19292127).

2.2.7 Shared device

Shared device

IO device that makes its data available to up to four IO controllers.

The interface module supports shared device at submodule level.

If **there is no validity check of the shared device projects by the Engineering System**, note the following:

- Make sure the configurations are consistent. Assign each module or submodule to only one IO controller. Multiple assignment will result in an error as the module or submodule will only be available in the first controller.
- If you reconfigure the shared device configurations without the validity check mentioned above, you must commission ET 200SP again. This means you must download the projects of all involved IO controllers to the respective CPU again after reconfiguration. If necessary, perform a POWER OFF/POWER ON of the interface module.

You can find more information on this topic in the STEP 7 online help and

- As of STEP 7 V12, in the function manual PROFINET with STEP 7 (http://support.automation.siemens.com/WW/view/en/49948856).
- As of STEP 7 V5.5, in the system manual PROFINET System Description (http://support.automation.siemens.com/WW/view/en/19292127).

Note

In the case of a shared device application, make sure that all controllers work with the same send clock. If the controller does not have the same send clock, this results in communication relationships not being set up.

If you set up all controllers in one project, the same send clock is ensured. Set the same send clock for engineering in separate projects.

2.2.8 Isochronous mode

Isochronous mode

The input and output data of distributed I/O modules in the system is simultaneously acquired and simultaneously output. For this purpose, the I/O data, the transmission cycle via PROFINET IO, and the user program are synchronized. The constant PROFINET IO cycle forms the corresponding clock generator. The interface module supports isochronous mode of I/O data for the modules starting at 250 µs. The IO device can exchange isochronous process data with a maximum of one IO controller.

Note

When the module is pulled or no written control data record has been written with activated configuration control, the IO controller cannot access a module. In this case, cycle time violations may occur with activated isochronous mode in the synchronous cycle interrupt OB (OB61). The time error OB (OB80) is called in the event of a cycle time violation.

This behavior is associated with updating the process image by means of the "SYNC_PI" (SFC126) and "SYNC_PO" (SFC127) instructions. It depends on the set cycle time and the configuration limits.

You can find additional information in the STEP 7 online help and

- As of STEP 7 V12, in the PROFINET with STEP 7 (http://support.automation.siemens.com/WW/view/en/49948856) function manual.
- As of STEP 7 V5.5, in the system manual PROFINET System Description (http://support.automation.siemens.com/WW/view/en/19292127).

2.2.9 Module-internal Shared Input/Shared Output (MSI/MSO)

Module-internal Shared Input/Shared Output (MSI/MSO)

The Module-internal Shared Input function allows an input module to make its input data available to up to four IO controllers. Each controller has read access to the same channels.

The Module-internal Shared Output function allows an output module to be operated by up to four IO controllers. One IO controller has write access. Up to three additional IO controllers can have read access to the same channels.

You can find more information on this topic in the STEP 7 online help and:

- As of STEP 7 V12, in the function manual PROFINET with STEP 7 (http://support.automation.siemens.com/WW/view/en/49948856).
- As of STEP 7 V5.5, in the system manual PROFINET System Description (http://support.automation.siemens.com/WW/view/en/19292127).

2.2.10 System redundancy S2

System redundancy S2

An IO device with S2 system redundancy supports redundant ARs.

In a redundant system, an IO device with system redundancy S2 has a redundant AR for each of the two CPUs (IO controllers). If one CPU fails, the IO device with S2 system redundancy remains accessible to the remaining IO controller via the AR.

The interface module supports system redundancy S2 on CPUs S7-400H (from firmware version V3.0) and on CPUs S7-1500R/H (from firmware version V4.2).

You can find additional information in the STEP 7 online help and

- As of STEP 7 V12, in the function manual PROFINET with STEP 7 (http://support.automation.siemens.com/WW/view/en/49948856)
- As of STEP 7 V5.5, in the system manual PROFINET System Description (http://support.automation.siemens.com/WW/view/en/19292127)

2.2.11 Alternating IO devices during operation ("docking systems")

Alternating IO devices during operation ("docking systems")

- Docking station
- Docking unit

You can find additional information in the STEP 7 online help and

- As of STEP 7 V12, in the PROFINET with STEP 7 (http://support.automation.siemens.com/WW/view/en/49948856) function manual

2.2.12 Oversampling

Oversampling

The IM 155-6 PN/2 HF interface module supports the oversampling mode of HS modules. With oversampling, the modules reduce the respective PROFINET send clocks in isochronous mode.

Additional information on oversampling can be found in the manuals for the I/O modules.

2.2.13 Value status

Value status

The IM 155-6 PN/2 HF interface module supports I/O modules with value status.

Additional information on the value status can be found in the manuals for the I/O modules.

2.2.14 PROFIenergy

Properties

PROFIenergy (for PROFINET) reduces the energy consumption by using PROFIenergy commands during production-free periods.

Reference

You will find additional information on PROFIenergy in the following manuals:

- Manual I/O modules (http://support.automation.siemens.com/WW/view/en/55679691/133300)
- Function manual PROFINET as of STEP 7 V12 (http://support.automation.siemens.com/WW/view/en/49948856)
- System manual PROFINET System Description (http://support.automation.siemens.com/WW/view/en/19292127)
- PROFIenergy (http://support.automation.siemens.com/WW/view/en/66928686) product information
- Internet (http://www.profibus.com) under Common Application Profile PROFIenergy; Technical Specification for PROFINET; Version 1.0; January 2010; Order No: 3.802

2.2.15 Configuration control (option handling)

Properties

Configuration control allows you to prepare your automation system for future expansions or changes. Configuration control means you can configure the planned maximum expansion of your automation system in advance and flexibly vary it later by means of the user program.

Reference

You can find more information on configuration control:

- In the system manual ET 200SP distributed I/O system. (http://support.automation.siemens.com/WW/view/en/58649293)
- On the Internet under the following link: Application collection (http://support.automation.siemens.com/WW/view/en/29430270).
- In the STEP 7 online help.

2.2.16 Use of fail-safe modules

Properties

The IM 155-6 PN/2 HF interface module supports the use of fail-safe modules.

Reference

You can find more information in the ET 200SP distributed I/O system (http://support.automation.siemens.com/WW/view/en/58649293) system manual.

2.2.17 Multi Hot Swap

Properties

You can remove and insert any number of I/O modules during operation. The interface module and the inserted I/O modules remain in operation.

Note
The IM 155-6 PN/2 HF interface module does not support removal and insertion of the server module, interface module and BusAdapter during operation.

Reference

You can find more information on the removal/insertion of modules in the system manual ET 200SP distributed I/O system (http://support.automation.siemens.com/WW/view/en/58649293).

2.2.18 Module-to-Module Communication (MtM)

Introduction

Module-to-Module Communication (MtM) offers the following advantages:

- Improved performance during transmission of data by bypassing the IO controller.
- Deterministic cycle times
- Cost-effective, high-performance solutions for applications where the performance of a specific technology module is not required.

Module-to-Module Communication (MtM)

Module-to-Module Communication (MtM) enables direct exchange of data between specific IO modules within a station via the interface module. This enables you to move small and/or time-critical tasks to the IO module. You achieve better performance while reducing the load on the CPU.

With Module-to-Module Communication (MtM), the interface module copies the input data of an IO module directly to a different IO module via the ET 200SP backplane bus. The IO module (data sink) carries out application-specific processing of the data.

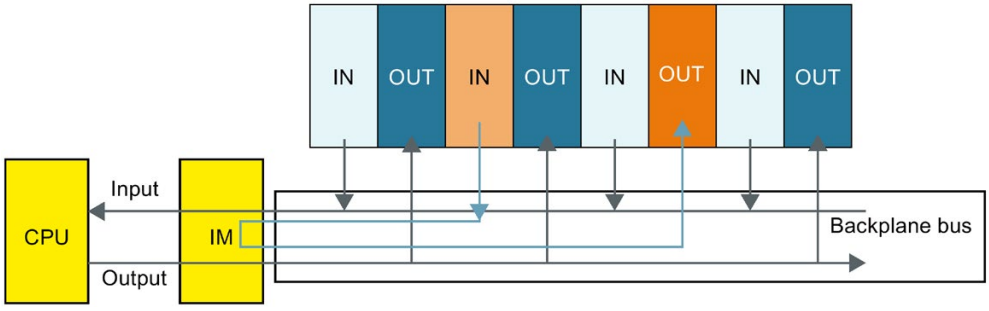

You configure the data source and data sink for Module-to-Module Communication (MtM) in the hardware configuration of the respective output module. Programming of the user program is **not** required in the variant for Module-to-Module Communication (MtM).

Note

The preparation of the input data in the output module (mapping) and the output of the data to the outputs are application- and technology-specific.
Example: The DQ 4x24VDC/2A HS digital output module supports

- the application cam control with Module-to-Module Communication (MtM) under the designation DQ 4x24VDC/2A HS **MCC MtM**

Additional information can be found in the manuals of the corresponding IO modules.

2.2.19 Setting the time

The interface module supports time setting, for example with AI Energy Meter 480VAC/CT HF (6ES7134-6PA00-0CU0).

We show you how to set the time in an application example (https://support.automation.siemens.com/WW/view/en/109754890).

Wiring 3

3.1 Pin assignment

24 V DC supply voltage

The following table shows the signal names and the descriptions of the pin assignment for a 24 V DC supply voltage.

Table 3- 1 Pin assignment 24 V DC supply voltage

View		Signal name[1]	Description
Connector	IM connection		
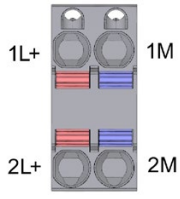	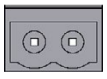	1L+	24 V DC (SELV/PELV)
		2L+	24 V DC (for looping through)[2]
		1M	Ground
		2M	Ground (for looping through)[2]

1 1L+ and 2L+ as well as 1M and 2M are bridged internally.

2 Maximum 10 A permitted.

Reference

You can find more information on accessories and how to connect the interface module in the ET 200SP distributed I/O system (http://support.automation.siemens.com/WW/view/en/58649293) system manual.

3.2 Block diagram

Block diagram

The following figure shows the block diagram of the IM 155-6 PN/2 HF interface module.

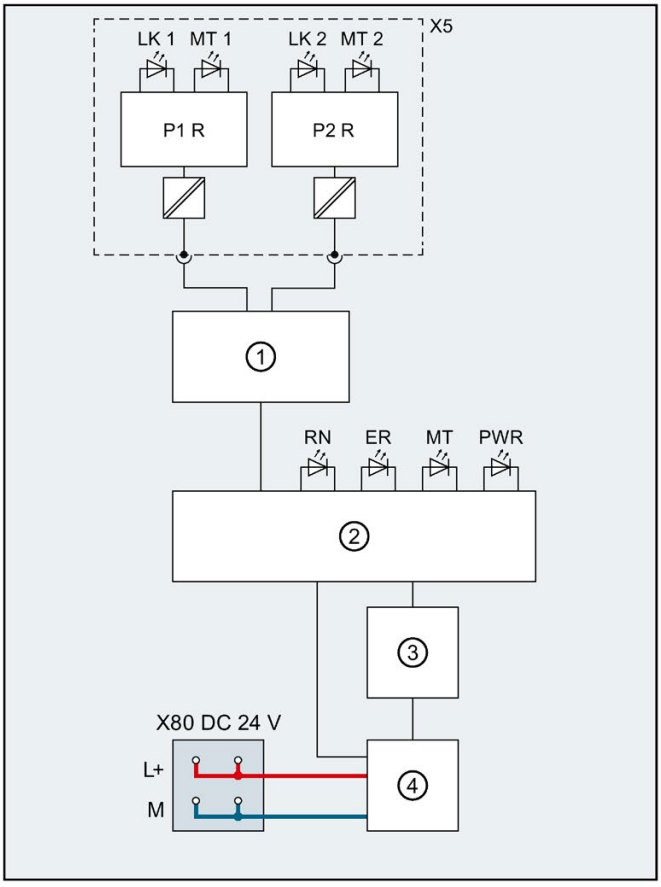

①	Switch	L+	24 V DC supply voltage
②	ET 200SP backplane bus interface and electronics	M	Ground
③	Backplane bus	LK 1,2	Link TX/RX LED (green)
④	Internal power supply	MT 1,2	MAINTENANCE FiberOptic LED (SCRJ port, yellow)
X80 24 V DC	Feed supply voltage	RN	RUN LED (green)
X5	BusAdapter	ER	ERROR LED (red)
P1 R	PROFINET interface X1 Port 1	MT	MAINTENANCE LED (yellow)
P2 R	PROFINET interface X1 Port 2	PWR	POWER LED (green)

Figure 3-1 Block diagram of the IM 155-6 PN/2 HF interface module

Parameters/address space 4

4.1 Parameters

Parameters for IM 155-6 PN/2 HF interface module

The following table shows the parameters for the interface module IM 155-6 PN/2 HF.

Table 4- 1 Parameters for IM 155-6 PN/2 HF interface module (GSD file)

Parameters	Value range	Default	Effective range
Enable configuration control	Yes/No	No	ET 200SP
Diagnostics (maintenance) undervoltage	Yes/No	No	ET 200SP

4.2 Explanation of parameters

4.2.1 Enable configuration control

Enable configuration control

You use this parameter to enable the configuration control function in the ET 200SP distributed I/O system.

Note

If you configure the enable, the ET 200SP distributed I/O system requires a control data record 196 from the user program in order for the ET 200SP distributed I/O system to operate the I/O modules.

Reference

You can find more information on the control data record in the ET 200SP distributed I/O system (http://support.automation.siemens.com/WW/view/en/58649293) system manual and in the STEP 7 online help.

4.2.2 Diagnostics (maintenance) undervoltage

Diagnostics (maintenance) undervoltage

Diagnostics (maintenance) undervoltage is triggered if the supply voltage falls below the value 19.2 V DC. When the supply voltage then exceeds 20.4 V DC, the diagnostics alarm is reported as outgoing.

See also

Channel diagnostics (Page 43)

4.3 Substitute value behavior

Substitute value behavior

The respective output behaves according to its configured substitute value behavior:

- Zero current or zero voltage
- Output substitute value
- Keep last value

The substitute value behavior is triggered in the following cases:

- STOP controller
- Controller failure (connection interrupted)
- Parameter assignment phase during startup
- Deactivating the IO device
- Station stop
  - Missing server module
  - Insertion of invalid I/O modules
  - At least one I/O module is installed on an incorrect BaseUnit

---

Note

Reducing a configuration

If you reduce the configuration of the ET 200SP distributed I/O system and download the configuration to the CPU, the modules which are no longer configured but still present retain their original substitute value behavior. This applies until the supply voltage is switched off at the interface module.

The "current-free/voltage-free" behavior becomes effective in the following cases:

- Firmware update
- Reset to factory settings
- Configuration control: The IM has not received a valid control data record 196 yet
- Incorrectly configured module
- Module with incorrect parameter assignment

Substitute value behavior for module-internal Shared Output (MSO) and module-internal Shared Input (MSI)

Substitute value behavior for module-internal Shared Output (MSO) and module-internal Shared Input (MSI) corresponds to the behavior described above.

4.4 Status of the supply voltage L+ of the I/O modules

The status of the supply voltage L+ of the ET 200SP I/O modules can be mapped to the server module with the interface module IM 155-6 PN/2 HF.

You can find information on the status of the supply voltage L+ of the I/O modules in the Server module (http://support.automation.siemens.com/WW/view/en/63257531) manual.

Interrupts, error messages, diagnostics and system alarms

5

5.1 Status and error displays

LED displays

The following figure shows the LED displays on the interface module and BusAdapter.

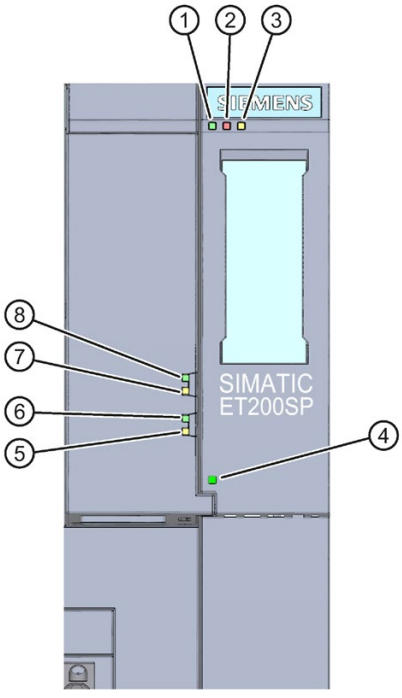

① RN (green)
② ER (red)
③ MT (yellow)
④ PWR (green)
⑤ MT2 (yellow), SCRJ port
⑥ LK2 (green)
⑦ MT1 (yellow), SCRJ port
⑧ LK1 (green)

Figure 5-1 LED displays on the interface module and BusAdapter

Meaning of the LED displays

The following tables contain the meaning of the status and error displays.

RN/ER/MT LEDs on the interface module

Table 5- 1 Status and error displays of RN/ER/MT LEDs

LEDs			Meaning	Solution
RN (RUN)	ER (ERROR)	MT (MAINT)		
Off	Off	Off	Missing or insufficient supply voltage on interface module.	Check the supply voltage or turn it on at the interface module.*
On	On	On	Test of LEDs during startup: The three LEDs light up simultaneously for approximately 0.25 s.	-
Flashes	Not relevant	Not relevant	Interface module is deactivated.	Activate the interface module with the configuration software or via the user program.
			Interface module is not configured.	Configure the interface module with the configuration software.
			ET 200SP starts up.	-
			ET 200SP is being assigned parameters.	
			ET 200SP is being reset to factory settings.	
On	Not relevant	Not relevant	ET 200SP is currently exchanging data with the IO controller.	-
Not relevant	Flashes	Not relevant	Group errors and group error channels.	Evaluate the diagnostics and eliminate the error.
			The preset configuration does not match the actual configuration of the ET 200SP.	Check the configuration of the ET 200SP to see whether a module is missing, faulty or not configured.
			Invalid configuration states.	For additional information, see section Invalid configuration states of the ET 200SP on PROFINET IO (Page 46)
			Parameter assignment error in the I/O module.	Evaluate the display of the module status in STEP 7. Eliminate the error in the corresponding I/O module.
Not relevant	Not relevant	On	Maintenance	For additional information, see section Maintenance events (Page 42)
Flashes	Flashes	Flashes	The "Node flash test" is run (LEDs LK1 and LK2 of the PROFINET interface also flash).	-
			Hardware or firmware defective (LEDs LK1 and LK2 of the PROFINET interface do not flash).	Run a firmware update. If the error persists, contact Siemens Industry Online Support. Replace the interface module.

* PWR LED on (on the interface module): Check the backplane bus for a short-circuit.

PWR LED on the interface module

Table 5- 2 Status display of the PWR LED

PWR LED	Meaning	Solution
□ Off	Supply voltage not present or too small.	Check the supply voltage.
■ On	Supply voltage present. Observe the maintenance messages if the MAIN LED is lit	-

LED display of configuration errors

Configuration errors of the ET 200SP distributed IO system are indicated on the interface module via the red ERROR LED and the yellow MAINT LED.

The following configuration errors are signaled by the LEDs:

- No server module
- Interruptions or short-circuit on the backplane bus

Operating principle

The LED error display provides information on the cause of the error. After notification by the flash signal, the error type is displayed followed by the error location/error code.

The LED error display:

- Is activated during POWER ON and during operation.
- Has priority over all other states that are displayed by means of the ERROR and MAINT LED.
- Remains on until the cause of the error has been eliminated.

Table 5- 3 Display of error type and error location

Sequence		Description
1	The ERROR and MAINT LEDs flash 3x at 0.5 Hz	Indication of the error type
2	The MAINT LED flashes at 1 Hz	Display of error type (decimal)
3	The ERROR and MAINT LEDs flash 3x at 2 Hz	Signaling of error location/error code
4	The ERROR LED flashes at 1 Hz	Display of tens digit (decimal) of the error location/error code
5	The MAINT LED flashes at 1 Hz	Display of ones digit (decimal) of the error location/error code
6	Repetition of 1 to 5 until the cause of the error has been eliminated.	

Error display

Table 5- 4 Error display

Error type (MAINT)	Error location (ERROR/ MAINT)	Cause of error	Solution
1	65	• No server module • Interruptions on the backplane bus • Short circuit of communication on the backplane bus	Check the configuration of the ET 200SP.

Note

A short circuit in the backplane bus supply or the bus connection supply is indicated by the following LEDs:

- PWR LED: On
- RN, ER and MT LED: Off

5.2 Interrupts

Introduction

The I/O device triggers interrupts as a reaction to specific errors. Interrupts are evaluated based on the I/O controller used.

Evaluating interrupts with I/O controllers

The ET 200SP distributed I/O system supports the following interrupts:

- Diagnostic error interrupts
- Hardware interrupts
- Pull/plug interrupts
- Maintenance events

In the event of an interrupt, interrupt OBs are automatically called in the CPU of the IO controller.

Information on the cause and class of the error is already available, based on the OB number and start information.

Detailed information on the error event can be obtained in the error OB using the instruction "RALRM" (read additional interrupt information).

System diagnostics

In STEP 7 (TIA Portal), the innovated system diagnostics is available for the devices of the S7-1500 automation system (IO controller S7-1500 CPU) and ET 200SP (IO device). Independent of the cyclic user program, alarms are made available on the display of the S7-1500 CPU, the CPU web server and the HMI device.

You will find more information on system diagnostics in the Diagnostics (https://support.industry.siemens.com/cs/ww/en/view/59192926) function manual.

5.2.1 Triggering of a diagnostics interrupt

Triggering of a diagnostics interrupt

For an incoming or outgoing event (e.g. wire break on a channel of an I/O module), the module triggers a diagnostic error interrupt if this is configured accordingly.

The CPU interrupts processing of the user program and processes the diagnostic error interrupt OB (OB 82). The event that triggered the interrupt is entered in the start information of the diagnostic error interrupt OB.

5.2.2 Triggering a hardware interrupt

Triggering a hardware interrupt

If there is a hardware interrupt, the CPU interrupts user program execution and processes the hardware interrupt block OB, e.g., OB 40. The result that triggered the interrupt is added to the start information of the hardware interrupt OB.

Note

Diagnostics "Hardware interrupt lost" (from I/O module)

Do not use hardware interrupts for functional purposes (e.g. the cyclic generation of hardware interrupts).

If the hardware interrupt load is too high, hardware interrupts can get lost depending on the number of I/O modules and the communication load.

5.2.3 Triggering of a remove/insert module interrupt

Triggering of a remove/insert module interrupt

In the event of a remove/insert module interrupt, the CPU interrupts processing of the user program and processes the remove/insert module OB, e.g. OB 83. The event that triggered the interrupt is entered in the start information of the remove/insert module OB.

Note

Parameter assignment error after removal/insertion

If you write data records from the user program to the modules of the distributed I/O, make sure that these modules actually exist and are available. You can do this by evaluating OB83. After inserting a module, OB83 is not called until the module has started up and its parameters are assigned. This ensures that data record operations can be executed without errors.

5.3 Alarms

5.3.1 Diagnostics alarms

Actions after a diagnostics alarm

There can be more than one diagnostics alarm at the same time. Each diagnostics alarm initiates the following actions:

- The ERROR LED of the interface module flashes.
- Diagnostics are reported as diagnostic error interrupts to the CPU of the IO controller and can be read via data records.
- Incoming diagnostics alarms are saved to the diagnostics buffer of the I/O controller.
- (S7-300/400) The diagnostic interrupt OB is called. If the diagnostics interrupt OB (OB 82) is not available, the IO controller goes into STOP mode.

You can find more information in the STEP 7 online help.

Reading the diagnostics

Table 5- 5 Reading the diagnostics with STEP 7

Automation system with IO controller	Application	See...
SIMATIC S7	Diagnostics as plain text in STEP 7 using Online and Diagnostics view	STEP 7 online help • as of STEP 7 V12, function manual PROFINET with STEP 7 as of V12 (http://support.automation.siemens.com/WW/view/en/49948856) • as of STEP 7 V5.5, system manual PROFINET System Description (http://support.automation.siemens.com/WW/view/en/19292127)
	Instruction "RDREC" (SFB 52) Read data records from the IO device	
	Instruction "RALRM" (SFB 54) Receive interrupts from the IO device	

Additional information on the data records for PROFINET IO

The structure of the diagnostic data records and programming examples are available in the programming manual From PROFIBUS DP to PROFINET IO (http://support.automation.siemens.com/WW/view/en/19289930) and in Example application (http://support.automation.siemens.com/WW/view/en/24000238).

Causes of error and troubleshooting

The causes of error and remedies for the diagnostic alarms are described in the manuals for I/O modules (http://support.automation.siemens.com/WW/view/en/55679691/133300) in the section, "Interrupts, error messages, and system events".

See also

Channel diagnostics (Page 43)

5.3.2 Maintenance events

Triggering of a maintenance event

The PROFINET IO interfaces of the interface module support the diagnostic concept and maintenance concept in PROFINET IO according to the IEC 61158 Type 10 standard. The goal is to detect and remove potential problems as soon as possible.

For the interface module, maintenance events signal to the user when a plant component must be checked or replaced.

The CPU interrupts user program execution and executes the diagnostic error interrupt OB. The event that triggered the maintenance event is entered in the start information of the diagnostic error interrupt OB.

The interface module signals a maintenance event to the higher-level diagnostic system in the case of the following event:

Table 5- 6 Triggering of a maintenance event

Maintenance alarm	Event	Alarm/Meaning
Maintenance demanded LED MAINT is lit.	Synchronization loss	• No synchronization frame received. No synchronization frame was received by the sync master within the timeout period after parameter assignment or during operation. • Successive synchronization frames are located outside permitted limits (jitter).
	Undervoltage	• Diagnostics Undervoltage If the supply voltage of the interface falls below the value 19.2 V DC, this diagnostics is reported as incoming Maintenance demanded.

System alarms in STEP 7 (TIA Portal)

The maintenance information is generated in STEP 7 (TIA Portal) with the following system alarms:

- Maintenance demanded - indicated for each port by a yellow wrench icon in the device view or in the hardware configuration.

You can find more information in the STEP 7 online help.

5.3.3 Channel diagnostics

Function

Channel-related diagnostics provides information about channel faults in modules.

Channel faults are mapped as channel diagnostics data in IO diagnostics data records.

The data record is read using the instruction "RDREC".

Structure of the diagnostics data records

The data records supported by the ET 200SP distributed I/O system are based on the standard PROFINET IO - Application Layer Service Definition V2.2.

If required, you can find the standard on the Internet (http://www.profibus.com) on the PROFIBUS user organization home page.

Codes of the extended channel diagnostics

With the IM 155-6 PN/2 HF interface module, the following extended channel diagnostics are reported:

ChannelErrorType (CET)	ExtendedChannelError-Type (ECET)	Associated value AddValue	Diagnostics
0x0602	0x0691	Slot	Station stop - module parameter "Potential group" faulty or incorrect BaseUnit in actual slot (AddValue)
0x0602	0x0693	0x00	Diagnostics with missing server module
0x0602	0x0698	0x00	Diagnostics backplane bus too large
0x0602	0x0699	Slot	Diagnostics with incorrect bus configuration
0x0602	0x069C	0x00	Diagnostics with incorrectly plugged BusAdapter
0x0610	0x06B0	0x00	Group diagnostics: Missing supply voltage L+ for the potential groups Note: The slot in which the light-colored BaseUnit of the respective load module is located is coded in the "ChannelNumber" element.
0x0610	0x06B4	0x00	Diagnostics "Undervoltage power supply" Note: This diagnostics is not supported by the hardware IM 155-6 PN HF (6ES7155-6AU00-0CN0). If the supply voltage of the interface falls below the value 19.2 V DC, this diagnostics is reported as incoming Maintenance demanded.

Structure of the manufacturer-specific diagnostics data records (IM 155-6 PN HF Version < V3.3)

The structure of the diagnostics data records is differentiated by the BlockVersion. The following BlockVersion applies to the IM 155-6 PN HF interface modules:

Table 5- 7 Structure of the manufacturer-specific diagnostics data records

IM 155-6 PN HF interface module	BlockVersion
6ES7155-6AU00-0CN0	W#16#0101

Note

Manufacturer-specific diagnostics are not reported as of version V3.3 for the interface module IM 155-6 PN HF.

Manufacturer-specific diagnostics in the User Structure Identifier (USI)

The following manufacturer-specific diagnostics are signaled in the USI with the IM 155-6 PN HF interface module:

Table 5- 8 Manufacturer-specific diagnostics in the USI

USI no. W#16#...	Diagnostics
0003	Group diagnostics: Missing supply voltage L+ for the potential groups
0004	Diagnostics with missing server module
0006	Diagnostics with incorrect BaseUnit
0007	Diagnostics with incorrect bus configuration

USI structure = W#16#0003

Table 5- 9 USI structure = W#16#0003

Data block name		Content	Comment	Bytes
USI		W#16#0003	Manufacturer-specific diagnostics with failure of supply voltage L+ as of slot x of the ET 200SP module	2
Followed by the slot as of which the supply voltage L+ has failed.				
	Slot	W#16#0001 to W#16#0040	Bit 8 to 15	1
			Bit 0 to 7	1
Followed by 2 reserved bytes:				
	Reserved			1
	Reserved			1

USI structure = W#16#0004

Table 5- 10 USI structure = W#16#0004

Data block name	Content	Comment	Bytes
USI	W#16#0004	Manufacturer-specific diagnostics with missing server module Result: Station stop • The I/O modules fail → substitute value behavior • The interface module continues to exchange data with the IO controller	2
Followed by 4 reserved bytes:			
	Reserved		1
	Reserved		1
	Reserved		1
	Reserved		1

USI structure = W#16#0006

Table 5- 11 USI structure = W#16#0006

Data block name	Content	Comment	Bytes
USI	W#16#0006	Manufacturer-specific diagnostics if an ET 200SP I/O module is installed on an incorrect BaseUnit. Result: Station stop • The I/O modules fail → substitute value behavior • The interface module continues to exchange data with the IO controller	2
Followed by the slot for the I/O module:			
Slot	W#16#0001 to W#16#0040	Bit 8 to 15	1
		Bit 0 to 7	1
Followed by 2 reserved bytes:			
	Reserved		1
	Reserved		1

USI structure = W#16#0007

Table 5- 12 USI structure = W#16#0007

Data block name		Content	Comment	Bytes
USI		W#16#0007	Manufacturer-specific diagnostics if operation is not possible with existing bus configuration Result: Station stop • The I/O modules fail → substitute value behavior • The interface module continues to exchange data with the IO controller	2
Followed by the slot for the I/O module:				
	Slot	W#16#0001 to W#16#0040	Bit 8 to 15	1
			Bit 0 to 7	1
If slot 0 is specified, check the width of the station configuration (maximum 1 m).				
Followed by 2 reserved bytes:				
	Reserved			1
	Reserved			1

5.3.4 Invalid configuration states of the ET 200SP on PROFINET IO

Invalid configuration states

The following invalid configuration states of the ET 200SP distributed I/O system lead to the failure of the IO device or prevent data exchange:

- Number of modules exceeds maximum configuration.
- Faulty backplane bus (e.g. defective BaseUnit). ET 200SP backplane bus interruptions do not trigger an interrupt.
- At least one I/O module is plugged into a different BaseUnit as the one configured in the parameters.
- No server module.
- Invalid or incorrectly configured BusAdapter.

Note

Removal of the server module will trigger a station stop. All I/O modules of the ET 200SP distributed I/O system fail (substitute value behavior) but the interface module continues to exchange data.

Revoking the station stop (by correcting the invalid configuration state) leads to a brief failure of the ET 200SP distributed I/O system and automatic restart.

See also

Status and error displays (Page 35)
Channel diagnostics (Page 43)

5.3.5 Failure of supply voltage L+ at BaseUnit BU...D

Failure of the supply voltage L+

The I/O modules react as follows to failure of the supply voltage L+ on the BaseUnit BU...D:

- If an I/O module is removed during failure of the supply voltage, a pull interrupt is generated.
- If an I/O module is installed during failure of the supply voltage, a plug interrupt is generated.

5.3.6 STOP of the IO controller and recovery of the IO device

STOP of the SIMATIC IO controller

Diagnostics received from the IO device while the IO controller is in STOP do not initiate a call of any corresponding OBs when the IO controller goes into RUN. Read the $E00C_H$ data record in startup OB using the instruction "RDREC". This record contains all diagnostics for the slots assigned to an IO controller in an IO device.

Recovery of the SIMATIC IO devices

If you want to read the occurring diagnostics in the STOP state of the IO controller, you have to read the $E00C_H$ data record with the "RDREC" instruction. This record contains all diagnostics for the slots assigned to an IO controller in an IO device.

Compatibility 6

6.1 Compatibility of modules

Compatibility with the IM 155-6 PN/2 HF interface module

If you exchange or replace an interface module, the following table shows the compatibilities:

- Between the interface modules IM 155-6 PN/2 HF and IM 155-6 PN ST
- Between the various firmware versions

	Interface module configured											
Interface module plugged	IM 155-6 PN ST V1.0	IM 155-6 PN ST V1.1	IM 155-6 PN ST V3.1	IM 155-6 PN ST V3.3	IM 155-6 PN ST V4.1	IM 155-6 PN HF V2.0	IM 155-6 PN HF V2.1	IM 155-6 PN HF V2.2	IM 155-6 PN HF V3.0	IM 155-6 PN HF V3.1	IM 155-6 PN HF V3.3	IM 155-6 PN HF V4.2
IM 155-6 PN HF V2.0	Yes*	---	---	---	---	Yes	---	---	---	---	---	---
IM 155-6 PN HF V2.1	Yes*	Yes*	---	---	---	Yes	Yes	---	---	---	---	---
IM 155-6 PN HF V2.2	Yes*	Yes*	---	---	---	Yes	Yes	Yes	---	---	---	---
IM 155-6 PN HF V3.0	Yes*	Yes*	---	---	---	Yes	Yes	Yes	Yes	---	---	---
IM 155-6 PN HF V3.1	Yes*	Yes*	Yes*	---	---	Yes	Yes	Yes	Yes	Yes	---	---
IM 155-6 PN HF V3.3	Yes*	Yes*	Yes*	Yes*	---	Yes	Yes	Yes	Yes	Yes	Yes	---
IM 155-6 PN/2 HF V4.2	Yes*	Yes*	Yes*	Yes*	Yes*	Yes	Yes	Yes	Yes	Yes	Yes	Yes

* The interface module IM 155-6 PN HF only supports the transmission rate 100 Mbps for Ethernet services.

Station configuration with more than 32 I/O modules

Certain I/O modules with functional status 001 and 002 do not support a station configuration with more than 32 I/O modules.

The table below shows all modules that do not support a station configuration with more than 32 I/O modules:

Table 6- 1 Incompatible modules with functional status

Modules	Article number	Up to functional status
Analog modules		
AI 4xI 2-/4-wire ST	6ES7134-6GD00-0BA1	002
AI 4xU/I 2-wire ST	6ES7134-6HD00-0BA1	002
AI 4xRTD/TC 2-/3-/4-wire HF	6ES7134-6JD00-0CA1	002
AI 4xU/I ST	6ES7135-6HD00-0BA1	002
Digital modules		
DI 16x24VDC ST	6ES7131-6BH00-0BA0	002
DI 8x24VDC ST	6ES7131-6BF00-0BA0	002
DQ 16x24VDC/0.5A ST	6ES7132-6BH00-0BA0	002
DQ 4x24VDC/2A ST	6ES7132-6BD20-0BA0	002
DQ 8x24VDC/0.5A ST	6ES7132-6BF00-0BA0	002

Status of the supply voltage

Load voltage diagnostics are only valid if the station started up with a valid and complete configuration.

- For modules without parameter assignment in the following table, the status of the supply voltage (status byte of the server module) is always signaled as "1" regardless of the actual status of the supply voltage.
- If a potential group is exclusively made up of modules without parameter assignment from the table below, no group diagnostics "Missing supply voltage L+" is signaled for this potential group.

Modules	Article number
DI 8x24VDC ST	6ES7131-6BF00-0BA0
DI 16x24VDC ST	6ES7131-6BH00-0BA0
DI 8x24VDC HF	6ES7131-6BF00-0CA0
DQ 4x24VDC/2A ST	6ES7132-6BD20-0BA0
DQ 8x24VDC/0.5A ST	6ES7132-6BF00-0BA0
DQ 16x24VDC/0.5A ST	6ES7132-6BH00-0BA0
DQ 8x24VDC/0.5A HF	6ES7132-6BF00-0CA0

Resetting an interface module to factory settings via the RESET button

There is a special operation for interface module IM 155-6 PN/2 HF to reset it to the factory settings using the Reset button.

Requirements

The supply voltage to the interface module must be switched on.

Required tools

3 to 3.5 mm screwdriver (for resetting via the RESET button)

Procedure

1. Remove the interface module from the mounting rail and swivel it downwards.
2. The RESET button is located on the back of the interface module behind a small opening: Push a screwdriver into the small opening, thus pressing the RESET button.
3. Release the RESET button.
4. Press the RESET button for another 3 seconds.
5. Look at the LED display of the interface module to see whether the reset was successful: RUN LED flashes for 3 seconds, ERROR and MAINT LED are off.
6. Install the interface module back on the mounting rail.
7. Assign parameters to the interface module again.

AQ 4xU/I ST analog output module

Note

For operation of the AQ 4xU/I ST analog output module, firmware version V1.0 (6ES7135-6HD00-0BA1) with the interface module, you need to set the "Reaction to CPU STOP" parameter to "Turn off" with a PROFINET send clock < 1 ms.

Reaction times for fail-safe modules

The following maximum reaction time of the interface module must be taken into account when calculating the reaction times of fail-safe modules: **Maximum reaction time = configured update time + 400 µs (but at least 1.4 ms)**

Operation with activated system redundancy S2

Note

Restrictions in operation with activated system redundancy S2

You cannot use the following functions during operation of the IM155-6 PN/2 HF, firmware version V4.2 with activated system redundancy S2:

- Configuration control (option handling)
- Module-to-Module Communication (MtM)

Interface module IM 155-6 PPN HF (6ES7155-6AU00-0CN0) with version V4.2

Note

You cannot use the following functions during operation of the IM 155-6 PN HF (6ES7155-6AU00-0CN0) with firmware version V4.2:

- Module-to-Module Communication (MtM)
- Setting the time
- Diagnostics (maintenance) undervoltage

Technical specifications 7

Technical specifications of the IM 155-6 PN/2 HF

The following table shows the technical specifications as of 08/2018. You will find a data sheet including daily updated technical specifications on the Internet (https://support.industry.siemens.com/cs/de/en/pv/6ES7155-6AU01-0CN0/td?dl=en).

Article number	6ES7155-6AU01-0CN0
General information	
Product type designation	IM 155-6 PN/2 HF with server module
Firmware version	V4.2
• FW update possible	Yes
Number of MtM communication relationships/connections, max.	16
Product function	
• I&M data	Yes; I&M0 to I&M3
• Module swapping during operation (hot swapping)	Yes; Multi-hot swapping
• Tool changer	Yes; Docking station and docking unit
• Local coupling, IO data	No
• Local coupling, data records	No
Engineering with	
• STEP 7 TIA Portal configurable/integrated as of version	STEP 7 V15.1 or higher
• STEP 7 configurable/integrated as of version	Configurable via GSD file
• PROFINET as of GSD version/GSD revision	GSDML V2.3
Configuration control	
via dataset	Yes
Supply voltage	
Rated value (DC)	24 V
permissible range, lower limit (DC)	19.2 V
permissible range, upper limit (DC)	28.8 V
Reverse polarity protection	Yes
Mains buffering	
• Mains/voltage failure stored energy time	10 ms

Article number	6ES7155-6AU01-0CN0
Input current	
Current consumption, max.	700 mA
Inrush current, max.	4.5 A
I^2t	0.25 $A^2 \cdot s$
Power loss	
Power loss, typ.	2.4 W
Address area	
Address space per module	
• Address space per module, max.	288 byte; For input and output data respectively
Address space per station	
• Address space per station, max.	1 440 byte; Dependent on configuration
Hardware configuration	
Rack	
• Modules per rack, max.	64; + 16 ET 200AL modules
Submodules	
• Number of submodules per station, max.	256
Time stamping	
Accuracy	10 ms
Interfaces	
Number of PROFINET interfaces	1; 2 ports (switch)
1. Interface	
Interface types	
• Number of ports	2; via BusAdapter
• integrated switch	Yes
• BusAdapter (PROFINET)	Yes; Compatible BusAdapter: BA 2x RJ45, BA 2x FC, BA 2x SCRJ, BA SCRJ / RJ45, BA SCRJ / FC, BA 2x LC, BA LC / RJ45, BA LC / FC
Protocols	
• PROFINET IO Device	Yes
• Open IE communication	Yes
• Media redundancy	Yes; PROFINET MRP
Interface types	
RJ 45 (Ethernet)	
• Transmission procedure	PROFINET with 100 Mbit/s full duplex (100BASE-TX)
• 10 Mbps	No
• 100 Mbps	Yes; PROFINET with 100 Mbit/s full duplex (100BASE-TX)
• Autonegotiation	Yes
• Autocrossing	Yes

Article number	6ES7155-6AU01-0CN0
Protocols	
PROFINET IO Device	
Services	
– Isochronous mode	Yes; Bus cycle time: min. 250 µs
– Open IE communication	Yes
– IRT	Yes; 250 µs, 500 µs, 1 ms, 2 ms, 4 ms additionally with IRT with high performance: 250 µs to 4 ms in 125 µs frame
– PROFIenergy	Yes
– Prioritized startup	Yes
– Shared device	Yes
– Number of IO Controllers with shared device, max.	4
Redundancy mode	
– MRP	Yes
– MRPD	No
– PROFINET system redundancy (S2)	Yes; NAP S2
– Redundant PROFINET configuration (R1)	No
– H-Sync forwarding	Yes
Open IE communication	
• TCP/IP	Yes
• SNMP	Yes
• LLDP	Yes
Isochronous mode	
Isochronous operation (application synchronized up to terminal)	Yes
Equidistance	Yes
shortest clock pulse	250 µs
max. cycle	4 ms
Bus cycle time (TDP), min.	250 µs
Jitter, max.	1 µs
Interrupts/diagnostics/status information	
Status indicator	Yes
Alarms	Yes
Diagnostic functions	Yes
Diagnostics indication LED	
• RUN LED	Yes; Green LED
• ERROR LED	Yes; Red LED
• MAINT LED	Yes; yellow LED

Article number	6ES7155-6AU01-0CN0
• Monitoring of the supply voltage (PWR-LED)	Yes; green PWR LED
• Connection to network LINK (green)	Yes; 2x green link LEDs on BusAdapter
Potential separation	
between backplane bus and electronics	No
between PROFINET and all other circuits	Yes
between supply and all other circuits	No
Isolation	
Isolation tested with	707 V DC (type test)
Standards, approvals, certificates	
Network loading class	3
Security level	According to Security Level 1 Test Cases V1.1.1
Ambient conditions	
Ambient temperature during operation	
• horizontal installation, min.	-30 °C; No condensation
• horizontal installation, max.	60 °C
• vertical installation, min.	-30 °C; No condensation
• vertical installation, max.	50 °C
Altitude during operation relating to sea level	
• Installation altitude above sea level, max.	2 000 m; On request: Installation altitudes greater than 2 000 m
Connection method	
ET-Connection	
• via BU/BA Send	Yes; + 16 ET 200AL modules
Mechanics/material	
Strain relief	Yes; Optional
Dimensions	
Width	50 mm
Height	117 mm
Depth	74 mm
Weights	
Weight, approx.	120 g; without BusAdapter

Dimension drawing

A

This appendix contains a dimension drawing of the module mounted on a mounting rail. Always observe the specified dimensions for installation in cabinets, control rooms, etc.

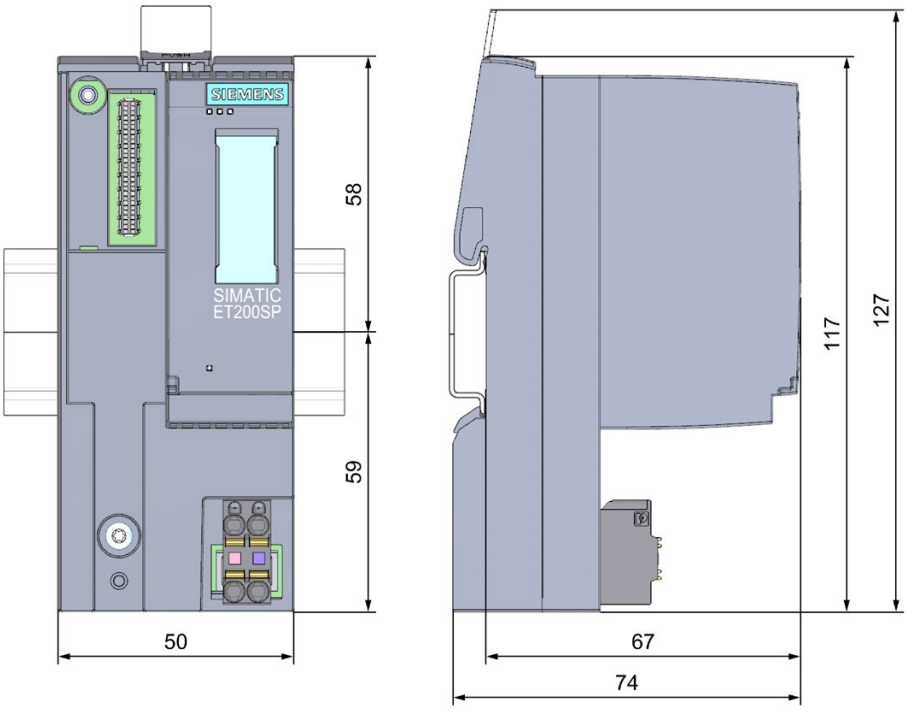

Figure A-1 Dimension drawing of the IM 155-6 PN/2 HF interface module, front and side views

SIEMENS

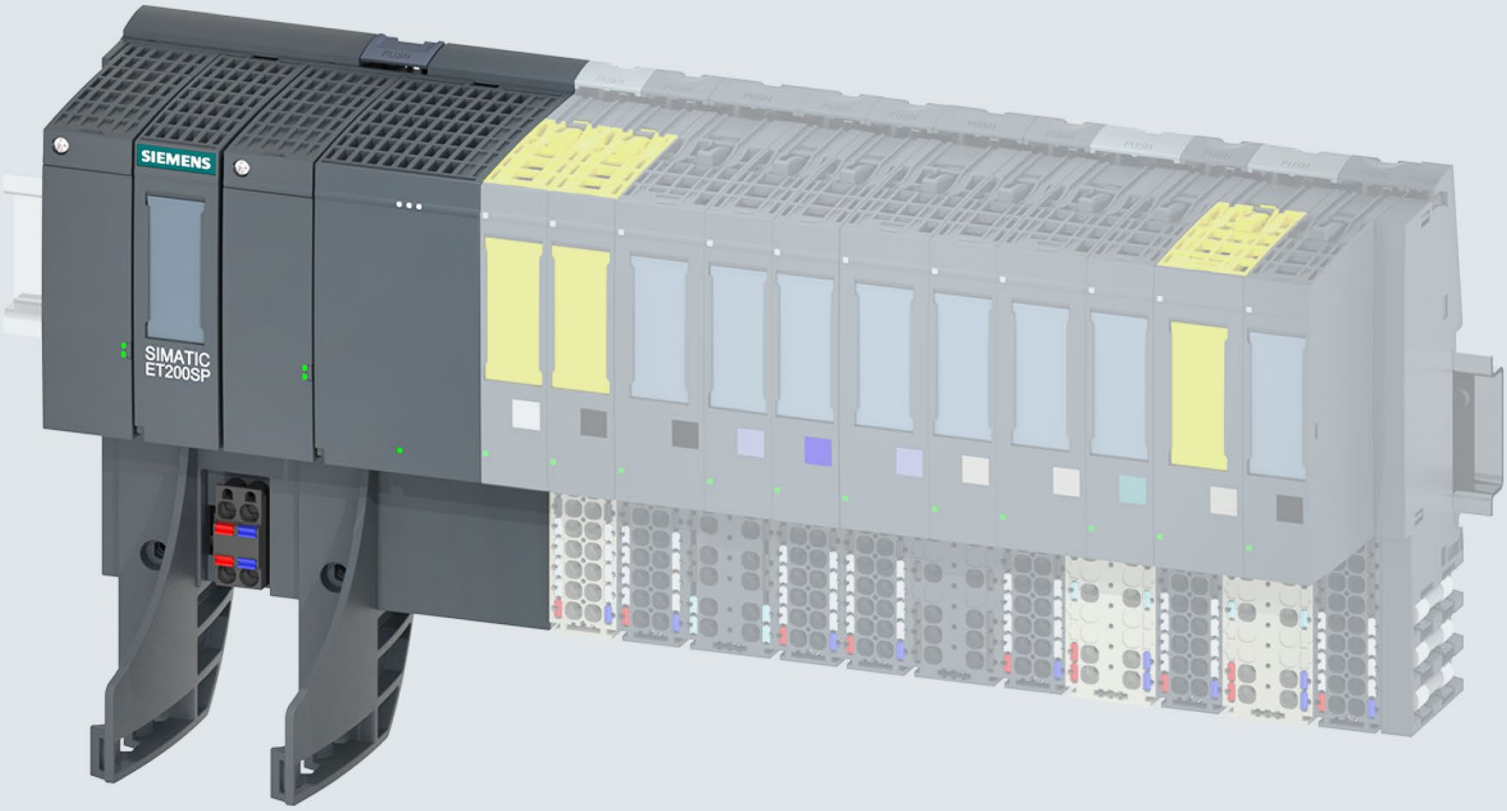

Manual

SIMATIC

ET 200SP

IM 155-6 PN/3 HF interface module
(6ES7155-6AU30-0CN0)

Edition 10/2018

support.industry.siemens.com

SIEMENS

SIMATIC

ET 200SP
Interface module IM 155-6 PN/3 HF (6ES7155-6AU30-0CN0)

Manual

Preface

Guide 1

Product overview 2

Wiring 3

Parameters/address space 4

Interrupts, error messages, diagnostics and system alarms 5

Compatibility 6

Technical specifications 7

Dimension drawing A

10/2018

A5E44899355-AA

Legal information

Warning notice system

This manual contains notices you have to observe in order to ensure your personal safety, as well as to prevent damage to property. The notices referring to your personal safety are highlighted in the manual by a safety alert symbol, notices referring only to property damage have no safety alert symbol. These notices shown below are graded according to the degree of danger.

⚠ DANGER

indicates that death or severe personal injury **will** result if proper precautions are not taken.

⚠ WARNING

indicates that death or severe personal injury **may** result if proper precautions are not taken.

⚠ CAUTION

indicates that minor personal injury can result if proper precautions are not taken.

NOTICE

indicates that property damage can result if proper precautions are not taken.

If more than one degree of danger is present, the warning notice representing the highest degree of danger will be used. A notice warning of injury to persons with a safety alert symbol may also include a warning relating to property damage.

Qualified Personnel

The product/system described in this documentation may be operated only by **personnel qualified** for the specific task in accordance with the relevant documentation, in particular its warning notices and safety instructions. Qualified personnel are those who, based on their training and experience, are capable of identifying risks and avoiding potential hazards when working with these products/systems.

Proper use of Siemens products

Note the following:

⚠ WARNING

Siemens products may only be used for the applications described in the catalog and in the relevant technical documentation. If products and components from other manufacturers are used, these must be recommended or approved by Siemens. Proper transport, storage, installation, assembly, commissioning, operation and maintenance are required to ensure that the products operate safely and without any problems. The permissible ambient conditions must be complied with. The information in the relevant documentation must be observed.

Trademarks

All names identified by ® are registered trademarks of Siemens AG. The remaining trademarks in this publication may be trademarks whose use by third parties for their own purposes could violate the rights of the owner.

Disclaimer of Liability

We have reviewed the contents of this publication to ensure consistency with the hardware and software described. Since variance cannot be precluded entirely, we cannot guarantee full consistency. However, the information in this publication is reviewed regularly and any necessary corrections are included in subsequent editions.

Siemens AG
Division Digital Factory
Postfach 48 48
90026 NÜRNBERG
GERMANY

A5E44899355-AA
℗ 10/2018 Subject to change

Copyright © Siemens AG 2018.
All rights reserved

Preface

Purpose of the documentation

This manual supplements the ET 200SP distributed I/O system (http://support.automation.siemens.com/WW/view/en/58649293) system manual.

Functions that generally relate to the system are described in this manual.

The information provided in this manual and in the system/function manuals supports you in commissioning the ET 200SP distributed I/O system.

Conventions

Please also observe notes labeled as follows:

Note

A note contains important information on the product described in the documentation, on the handling of the product, or on the section of the documentation to which particular attention should be paid.

Recycling and disposal

For environmentally friendly recycling and disposal of your old equipment, contact a certified electronic waste disposal company and dispose of the equipment according to the applicable regulations in your country.

Security information

Siemens provides products and solutions with industrial security functions that support the secure operation of plants, systems, machines and networks.

In order to protect plants, systems, machines and networks against cyber threats, it is necessary to implement – and continuously maintain – a holistic, state-of-the-art industrial security concept. Siemens' products and solutions constitute one element of such a concept.

Customers are responsible for preventing unauthorized access to their plants, systems, machines and networks. Such systems, machines and components should only be connected to an enterprise network or the internet if and to the extent such a connection is necessary and only when appropriate security measures (e.g. firewalls and/or network segmentation) are in place.

For additional information on industrial security measures that may be implemented, please visit (https://www.siemens.com/industrialsecurity).

Siemens' products and solutions undergo continuous development to make them more secure. Siemens strongly recommends that product updates are applied as soon as they are available and that the latest product versions are used. Use of product versions that are no longer supported, and failure to apply the latest updates may increase customers' exposure to cyber threats.

To stay informed about product updates, subscribe to the Siemens Industrial Security RSS Feed under (https://www.siemens.com/industrialsecurity).

Table of contents

Preface 3

1 Guide 7

2 Product overview 12

2.1 Properties 12

2.2 Functions 16
2.2.1 Device replacement 19
2.2.2 Real-time communication 20
2.2.3 Isochronous real-time communication 20
2.2.4 Prioritized startup 21
2.2.5 Submodules 21
2.2.6 Media redundancy (MRP) 22
2.2.7 Shared device 22
2.2.8 Isochronous mode 23
2.2.9 Module-internal Shared Input/Shared Output (MSI/MSO) 23
2.2.10 System redundancy S2 24
2.2.11 Alternating IO devices during operation ("docking systems") 24
2.2.12 Oversampling 24
2.2.13 Value status 25
2.2.14 PROFIenergy 25
2.2.15 Configuration control (option handling) 25
2.2.16 Use of fail-safe modules 26
2.2.17 Multi Hot Swap 26
2.2.18 Module-to-Module Communication (MtM) 27
2.2.19 Setting the time 28
2.2.20 Interface local coupling of IO data 28

3 Wiring 30

3.1 Pin assignment 30

3.2 Block diagram 31

4 Parameters/address space 33

4.1 Parameters 33

4.2 Explanation of parameters 33
4.2.1 Enable configuration control 33
4.2.2 Diagnostics (maintenance) undervoltage 34

4.3 Substitute value behavior 34

4.4 Status of the supply voltage L+ of the I/O modules 35

5 Interrupts, error messages, diagnostics and system alarms ... 36

5.1 Status and error displays ... 36

5.2 Interrupts ... 39
5.2.1 Triggering of a diagnostics interrupt ... 40
5.2.2 Triggering a hardware interrupt ... 40
5.2.3 Triggering of a remove/insert module interrupt ... 41

5.3 Alarms ... 42
5.3.1 Diagnostics alarms ... 42
5.3.2 Maintenance events ... 43
5.3.3 Channel diagnostics ... 44
5.3.4 Invalid configuration states of the ET 200SP on PROFINET IO ... 45
5.3.5 Failure of supply voltage L+ at BaseUnit BU...D ... 45
5.3.6 STOP of the IO controller and recovery of the IO device ... 46

6 Compatibility ... 47

6.1 Compatibility of modules ... 47

7 Technical specifications ... 49

A Dimension drawing ... 53

Guide

1

The documentation for the SIMATIC ET 200SP distributed I/O system is arranged into three areas.
This arrangement enables you to access the specific content you require.

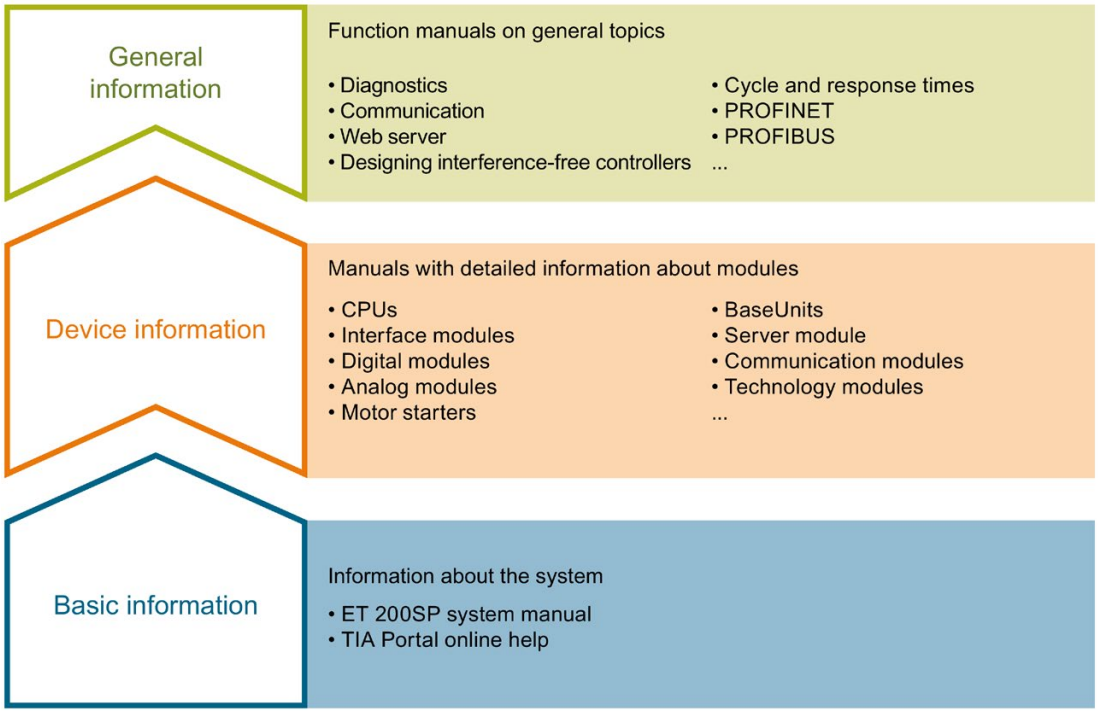

Basic information

The system manual describes in detail the configuration, installation, wiring and commissioning of the SIMATIC ET 200SP. distributed I/O system. The STEP 7 online help supports you in the configuration and programming.

Device information

Product manuals contain a compact description of the module-specific information, such as properties, wiring diagrams, characteristics and technical specifications.

General information

The function manuals contain detailed descriptions on general topics regarding the SIMATIC ET 200SP distributed I/O system, e.g. diagnostics, communication, Web server, motion control and OPC UA.

You can download the documentation free of charge from the Internet (https://support.industry.siemens.com/cs/ww/en/view/109742709).

Changes and supplements to the manuals are documented in a Product Information.

You can download the product information free of charge from the Internet (https://support.industry.siemens.com/cs/us/en/view/73021864).

Manual Collection ET 200SP

The Manual Collection contains the complete documentation on the SIMATIC ET 200SP distributed I/O system gathered together in one file.

You can find the Manual Collection on the Internet (https://support.automation.siemens.com/WW/view/en/84133942).

"mySupport"

With "mySupport", your personal workspace, you make the most of your Industry Online Support.

In "mySupport" you can store filters, favorites and tags, request CAx data and put together your personal library in the Documentation area. Furthermore, your data is automatically filled into support requests and you always have an overview of your current requests.

You need to register once to use the full functionality of "mySupport".

You can find "mySupport" in the Internet (https://support.industry.siemens.com/My/ww/en).

"mySupport" - Documentation

In the Documentation area of "mySupport", you have the possibility to combine complete manuals or parts of them to make your own manual.
You can export the manual in PDF format or in an editable format.

You can find "mySupport" - Documentation in the Internet (https://support.industry.siemens.com/My/ww/en/documentation).

"mySupport" - CAx Data

In the CAx Data area of "mySupport", you can have access the latest product data for your CAx or CAe system.

You configure your own download package with a few clicks.

In doing so you can select:

- Product images, 2D dimension drawings, 3D models, internal circuit diagrams, EPLAN macro files
- Manuals, characteristics, operating manuals, certificates
- Product master data

You can find "mySupport" - CAx Data in the Internet (https://support.industry.siemens.com/my/ww/en/CAxOnline).

Application examples

The application examples support you with various tools and examples for solving your automation tasks. Solutions are shown in interplay with multiple components in the system - separated from the focus in individual products.

You can find the application examples on the Internet (https://support.industry.siemens.com/sc/ww/en/sc/2054).

TIA Selection Tool

With the TIA Selection Tool, you can select, configure and order devices for Totally Integrated Automation (TIA).
This tool is the successor of the SIMATIC Selection Tool and combines the known configurators for automation technology into one tool.
With the TIA Selection Tool, you can generate a complete order list from your product selection or product configuration.

You can find the TIA Selection Tool on the Internet (https://w3.siemens.com/mcms/topics/en/simatic/tia-selection-tool).

SIMATIC Automation Tool

You can use the SIMATIC Automation Tool to run commissioning and maintenance activities simultaneously on various SIMATIC S7 stations as a bulk operation independently of the TIA Portal.

The SIMATIC Automation Tool provides a multitude of functions:

- Scanning of a PROFINET/Ethernet network and identification of all connected CPUs
- Address assignment (IP, subnet, gateway) and station name (PROFINET device) to a CPU
- Transfer of the data and the programming device/PC time converted to UTC time to the module
- Program download to CPU
- Operating mode switchover RUN/STOP
- Localization of the CPU by means of LED flashing
- Reading out CPU error information
- Reading the CPU diagnostic buffer
- Reset to factory settings
- Updating the firmware of the CPU and connected modules

You can find the SIMATIC Automation Tool on the Internet (https://support.industry.siemens.com/cs/ww/en/view/98161300).

PRONETA

With SIEMENS PRONETA (PROFINET network analysis), you analyze the plant network during commissioning. PRONETA features two core functions:

- The topology overview independently scans PROFINET and all connected components.
- The IO check is a fast test of the wiring and the module configuration of a system.

You can find SIEMENS PRONETA on the Internet (https://support.industry.siemens.com/cs/ww/en/view/67460624).

SINETPLAN

SINETPLAN, the Siemens Network Planner, supports you in planning automation systems and networks based on PROFINET. The tool facilitates professional and predictive dimensioning of your PROFINET installation as early as in the planning stage. In addition, SINETPLAN supports you during network optimization and helps you to exploit network resources optimally and to plan reserves. This helps to prevent problems in commissioning or failures during productive operation even in advance of a planned operation. This increases the availability of the production plant and helps improve operational safety.

The advantages at a glance

- Network optimization thanks to port-specific calculation of the network load
- Increased production availability thanks to online scan and verification of existing systems
- Transparency before commissioning through importing and simulation of existing STEP 7 projects
- Efficiency through securing existing investments in the long term and optimal exploitation of resources

You can find SINETPLAN on the Internet (https://www.siemens.com/sinetplan).

Product overview

2

2.1 Properties

Article number

6ES7155-6AU30-0CN0 (interface module 155-6 PN/3 HF and server module)

View of the module

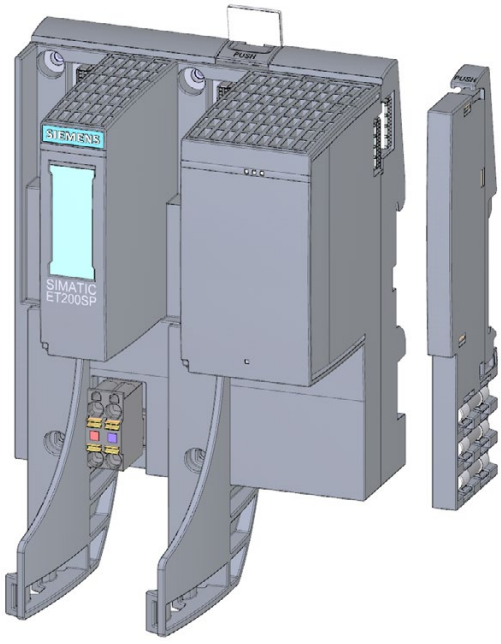

Figure 2-1 View AS interface module 155-6 PN/3 HF with included accessory (24 V DC connector and server module) and optional accessories (strain-relief for PROFINET cable, labeling strips and reference identification label)

Properties

The module has the following technical properties:

- Integrated switch with 3 ports
- Connects the ET 200SP distributed I/O system with PROFINET IO.
- Supply voltage 1 L+ DC 24 V (SELV/PELV). The connection plug is included in the scope of delivery of the interface module and available as replacement part.
- PROFINET IO connection via selectable BusAdapters
  - BA 2×RJ45 for RJ45 bus connector
  - BA 2×FC for direct connection of the bus cable
  - BA 2xSCRJ for POF/PCF fiber-optic cable
  - BA SCRJ/RJ45 as media converter for POF/PCF fiber-optic cable ⇔ standard RJ45 connector
  - BA SCRJ/FC as media converter for POF/PCF fiber-optic cable ⇔ direct connection of the bus cable
  - BA 2xLC for glass fiber-optic cable
  - BA LC/RJ45 as media converter for glass fiber-optic cable ⇔ standard RJ45 connector
  - BA LC/FC as media converter for fiber-optic cable ⇔ direct connection of the bus cable

Maximum configuration

- 64 ET 200SP I/O modules + 16 ET 200AL modules
- 1 m backplane bus (without interface module and server module)

Maximum amount of I/O data

Gross data length (for input and output data):

Without system redundancy S2:

- 1440 bytes
- 1440 bytes for shared device with 2 IOCs (in total for both IOCs)
- 360 bytes for shared device with more than 2 IOCs (per IOC)

With system redundancy S2:

- 1000 bytes
- 360 bytes with system redundancy S2 and shared device with at least 1 additional IOC (per IOC)

The number of the max. net data length for input and output data depends on the number and type of I/O modules used, including ET 200AL modules and virtual modules.

Net data length (for input and output data):

Without explicit calculation of the maximum net data length, the following minimum lengths can be used without shared device.

- 933 bytes (without system redundancy S2)
- 493 bytes (with system redundancy S2)

Calculation of the max. net data length:

Max. length net data = max. gross length - number of I/O submodules (input or output data, without user data) - number of mixed I/O modules (input and output data) - 5 bytes for interface module and server module without ET connection (6 bytes for interface module with ET connection)

The result of the calculation of the maximum net data length applies equally to input and output data.

Accessories

You order the following accessories separately:

- BA 2×RJ45 BusAdapter
- BA 2×FC BusAdapter
- BA 2×LC BusAdapter
- BA 2xSCRJ BusAdapter
- BA SCRJ/RJ45 BusAdapter
- BA SCRJ/FC BusAdapter
- BA LC/RJ45 BusAdapter
- BA LC/FC BusAdapter
- Strain relief for PROFINET cables
- Labeling strips
- Reference identification label

Information on the BusAdapters is available in the BusAdapter (https://support.industry.siemens.com/cs/ww/en/view/109751716) manual.

You can find more information on accessories in the ET 200SP distributed I/O system (http://support.automation.siemens.com/WW/view/en/58649293) system manual.

Server module

The server module is included in the scope of delivery of the interface module and available separately as an accessory.

The server module has the following properties:

- Terminates the backplane bus of the ET 200SP distributed I/O system
- Includes a holder for 3 spare fuses (5 × 20 mm).
- Provides station functions, e.g., group diagnostics: No supply voltage L+, status bytes.
- Identification data I&M 0 to 3

Note

You need to configure and assign parameters to the server module in the configuration software.

Place the server module in the last slot of the configuration. If there are 64 I/O modules, the server module is plugged in slot 65.

You can find more information in the Server module (http://support.automation.siemens.com/WW/view/en/63257531) manual.

First BaseUnit of an ET 200SP in the configuration

The interface modules support plugging dark-colored BaseUnits in slot 1. This means that modules without a connection to the integrated voltage buses P1 and P2 can now also be configured starting with slot 1. Currently, this applies to the following modules:

- AI Energy Meter ST
- DI 4 x 120..230V AC ST (6ES7131-6FD00-0BB1)
- DQ 4 x 24..230V AC/2A ST (6ES7132-6FD00-0BB1)

Note

First BaseUnit of an ET 200SP in the configuration

Please note the information on limiting the overvoltage and power rating in the AC I/O module manuals.

The 24 V DC supply voltage is fed in via an external fuse.

The DC 24 V supply voltage is supplied via a light-colored BaseUnit.

See also

Functions (Page 16)

2.2 Functions

Introduction

The interface module supports the following PROFINET IO functions:

- Integrated switch with 3 ports
- Supported Ethernet services: PING, ARP, SNMP, LLDP
- Port diagnostics
- Disabling ports
- Minimum update time 250 µs
- Device replacement without programming device, also without topological configuration
- Reset to factory settings via PROFINET IO
- Firmware update via PROFINET IO
- Isochronous real-time communication
- Prioritized startup
- Media redundancy (MRP)
- Shared device
- Distribution of module channels to a maximum of 4 submodules
- Module-internal or submodule-internal Shared Input/Shared Output (MSI/MSO)
- Isochronous mode
- System redundancy S2
- Station extension via ET-Connection
- Alternating IO devices during operation ("docking systems")
  - Docking station
  - Docking unit
- Supports BusAdapter for different connection technologies to PROFINET IO.

The interface module supports additional functions:

- Interface local coupling of IO data (configuration only via GSDML)
- Module-to-Module Communication (MtM)
- Identification data I&M 0 to I&M 3
- PROFIenergy
- Configuration control (option handling)
- Use of fail-safe modules
- Removal/insertion of multiple I/O modules during operation (Multi Hot Swap)

You can find more information on this topic in the STEP 7 online help and

- As of STEP 7 (TIA Portal), in the function manual PROFINET with STEP 7 (http://support.automation.siemens.com/WW/view/en/49948856).

Requirements

The table below shows the software requirements for a configuration with the IM 155-6 PN/3 HF interface module:

Table 2- 1 Version dependencies of the module functions

Function	Functional status of the module as of	Firmware version of the module as of	Configuring with GSD file (http://support.automation.siemens.com/WW/view/en/19698639/130000)[1]	Configuration software	
				STEP 7 as of V5.5 SP4	STEP 7 (TIA Portal) as of V15.1
Real-time communication	1	V4.2.0	X	---	X
Isochronous real-time communication	1	V4.2.0	X	---	X
Prioritized startup	1	V4.2.0	X	---	X
Device replacement without programming device	1	V4.2.0	X	---	X
Media redundancy (MRP)	1	V4.2.0	X	---	X
Shared device	1	V4.2.0	X	---	X
Value status	1	V4.2.0	X	---	X
PROFIenergy	1	V4.2.0	X	---	X
Multi Hot Swap	1	V4.2.0	X	---	X
Use of fail-safe modules	1	V4.2.0	---	---	X
Oversampling	1	V4.2.0	X	---	X
Isochronous mode	1	V4.2.0	---	---	X
Module-internal Shared Input/Shared Output (MSI/MSO)	1	V4.2.0	X	---	X
BusAdapter for fiber-optic cable FOC: BA 2xSCRJ	1	V4.2.0	X	---	X
System redundancy S2 to S7-400H	1	V4.2.0	X	---	---
System redundancy S2 IEC compliant	1	V4.2.0	X	---	---
System redundancy S2 on S7-1500R/H	1	V4.2.0	X	---	X
Station extension via ET-Connection	1	V4.2.0	X	---	X
Maximum user data length per module: 288 bytes	1	V4.2.0	X	---	X
BA SCRJ/RJ45 BusAdapter	1	V4.2.0	X	---	X
BA SCRJ/FC BusAdapter	1	V4.2.0	X	---	X

Function	Functional status of the module as of	Firmware version of the module as of	Configuring with GSD file (http://support.automation.siemens.com/WW/view/en/19698639/130000)[1]	Configuration software	
				STEP 7 as of V5.5 SP4	STEP 7 (TIA Portal) as of V15.1
BA 2xLC BusAdapter	1	V4.2.0	X	---	X
BusAdapter BA LC/RJ45	1	V4.2.0	X	---	X
BA LC/FC BusAdapter	1	V4.2.0	X	---	X
Distribution of module channels to multiple submodules	1	V4.2.0	X	---	X
Maintenance interrupts of I/O modules	1	V4.2.0	X	---	X
Extended Channel Diagnostics	1	V4.2.0	X	---	X
Module-to-Module Communication (MtM)	1	V4.2.0	X	---	X
Interface local coupling of IO data	1	V4.2.0	X	---	---

[1] Systems of third-party manufacturers: Depending on the range of functions of the third-party system

Cabling with fixed connection setting

If you set a fixed connection setting of the port in STEP 7, you must also disable "Autonegotiation/Autocrossover".

You can find more information on this topic in the STEP 7 online help and:

- As of STEP 7 V5.5, in the system manual PROFINET System Description (http://support.automation.siemens.com/WW/view/en/19292127).

See also

Compatibility of modules (Page 47)

ET 200SP distributed I/O system (http://support.automation.siemens.com/WW/view/en/58649293)

PROFINET with STEP 7 (http://support.automation.siemens.com/WW/view/en/49948856)

2.2.1 Device replacement

Device replacement

Device replacement without topological configuration

The device name is also stored on both BusAdapters in addition to the interface module. A device name stored in both BusAdapters is required for device replacement without topology configuration.

Replacing the interface module produces a range of scenarios for using the device name.

- The interface module generally starts with the device name of the left BusAdapter. In the case of different device names, the device name is distributed (stored) from the left BusAdapter to the right Bus Adapter and to the interface module.
- If the left BusAdapter is missing or does not yet have a device name, the device name is taken from the right BusAdapter and, if there are differences, distributed (stored) accordingly.
- If only BusAdapters without device names are connected, the device name is taken from the interface module and stored on both BusAdapters.

Be aware of the following constraints:

- Resetting to factory settings deletes the device name in both the interface module and the BusAdapter. To prevent the device name from being deleted in the BusAdapter, you can remove the BusAdapter from the interface module before resetting to factory settings.
- When a BusAdapter is replaced, a device name stored in the BusAdapter is applied to the interface module after a POWER ON.
- Do not pull/plug the BusAdapter while under voltage.

Device replacement with topological configuration

IO devices with this function can be replaced in a simple manner:

- The device name does not have to be assigned with the programming device.

The replacement IO device is assigned the device name by the IO controller and not by the programming device. The IO controller uses the configured topology and the neighboring relationships determined by the IO devices for this purpose. All involved devices must support the LLDP protocol (Link Layer Discovery Protocol). The configured target topology must match the actual topology.

If the IO devices were already used in another configuration, reset them to factory settings before reusing them. You can find information on this in the system manual ET 200SP distributed I/O system (http://support.automation.siemens.com/WW/view/en/58649293).

You can find more information on this topic in the STEP 7 online help and

- As of STEP 7 (TIA Portal) V12, in the function manual PROFINET with STEP 7 (http://support.automation.siemens.com/WW/view/en/49948856).
- As of STEP 7 V5.5, in the system manual PROFINET System Description (http://support.automation.siemens.com/WW/view/en/19292127).

2.2.2 Real-time communication

Real-time communication

A transmission method for PROFINET IO based on cyclic data exchange with a provider-consumer model.

2.2.3 Isochronous real-time communication

Isochronous real-time communication

Is a synchronized communication protocol for cyclic exchange of data between PROFINET devices. A reserved bandwidth within the send clock is available for the transfer. The reserved bandwidth ensures that the IRT data is also transmitted in time-synchronized intervals, unaffected by other high network loading (e.g. TCP/IP communication or additional real time communication).

A topology configuration is required for IRT.

Note

For IRT, both BusAdapters must be plugged in.

Note

IO controller as sync master with IRT communication

We recommend operating the IO controller also as a sync master when configuring the IRT communication.

Otherwise, IRT and RT configured IO devices may fail if the sync master fails.

You can find more information on the configuration of synchronized PROFINET devices in sync domains in the STEP 7 online help and

- As of STEP 7 (TIA Portal) V12, in the function manual PROFINET with STEP 7 (http://support.automation.siemens.com/WW/view/en/49948856).
- As of STEP 7 V5.5, in the system manual PROFINET System Description (http://support.automation.siemens.com/WW/view/en/19292127).

2.2.4 Prioritized startup

Prioritized startup

Prioritized startup is a PROFINET IO function in a PROFINET IO system with IRT and RT communication. It reduces the time needed for correspondingly configured IO devices to return to cyclic user data exchange.

The function accelerates the start-up of IO devices in the following cases:

- After recovery of supply voltage
- After station recovery
- After activation of IO devices

Note

Dependency of the startup time

The interface module permits startup times from 1.2 s.

The startup time depends on the number and type of modules.

You can find more information on this topic in the STEP 7 online help and:

- As of STEP 7 (TIA Portal) V12, in the function manual PROFINET with STEP 7 (http://support.automation.siemens.com/WW/view/en/49948856).
- As of STEP 7 V5.5, in the system manual PROFINET System Description (http://support.automation.siemens.com/WW/view/en/19292127).

2.2.5 Submodules

Submodules

The IM 155-6 PN/3 HF interface module supports the division of I/O modules into up to 4 submodules. This allows parts of an I/O module to be separately configured and parameterized.

A maximum of 256 submodules is supported, whereby 4 submodules are used for the interface module and one submodule for the server module.

You can assign each of these submodules to different IO controllers.

The following functions are only executed if you have configured submodule 1 during configuration:

- Firmware update
- Write I&M data
- Calibration
- PROFIenergy

2.2.6 Media redundancy (MRP)

Media redundancy (MRP)

Function for safeguarding communication and plant availability. A ring topology ensures that an alternative communication path is made available if a transmission route fails.

You can find more information on this topic in the STEP 7 online help and:

- As of STEP 7 V12, in the function manual PROFINET with STEP 7 (http://support.automation.siemens.com/WW/view/en/49948856).
- As of STEP 7 V5.5, in the system manual PROFINET System Description (http://support.automation.siemens.com/WW/view/en/19292127).

2.2.7 Shared device

Shared device

IO device that makes its data available to up to four IO controllers.

The interface module supports shared device at submodule level.

If **there is no validity check of the shared device projects by the Engineering System**, note the following:

- Make sure the configurations are consistent. Assign each module or submodule to only one IO controller. Multiple assignment will result in an error as the module or submodule will only be available in the first controller.
- If you reconfigure the shared device configurations without the validity check mentioned above, you must commission ET 200SP again. This means you must download the projects of all involved IO controllers to the respective CPU again after reconfiguration. If necessary, perform a POWER OFF/POWER ON of the interface module.

You can find more information on this topic in the STEP 7 online help and:

- As of STEP 7 V12, in the function manual PROFINET with STEP 7 (http://support.automation.siemens.com/WW/view/en/49948856).
- As of STEP 7 V5.5, in the system manual PROFINET System Description (http://support.automation.siemens.com/WW/view/en/19292127).

Note

In the case of a shared device application, make sure that all controllers work with the same send clock. If the controller does not have the same send clock, this results in communication relationships not being set up.

If you set up all controllers in one project, the same send clock is ensured. Set the same send clock for engineering in separate projects.

2.2.8 Isochronous mode

Isochronous mode

The input and output data of distributed I/O modules in the system is simultaneously acquired and simultaneously output. The I/O data, the transmission cycle via PROFINET IO, and the user program are synchronized for this purpose. The constant PROFINET IO cycle forms the corresponding clock generator. The interface module supports isochronous mode of I/O data for the modules starting at 250 µs. The IO device can exchange isochronous process data with a maximum of one IO controller.

Note

If the module is pulled or if no control data record was written with activated configuration control, then the IO controller cannot access a module. In this case, cycle time violations may occur with activated isochronous mode in the synchronous cycle interrupt OB (OB61). The time error OB (OB80) is called in the event of a cycle time violation.

This behavior is associated with updating the process image by means of the "SYNC_PI" (SFC126) and "SYNC_PO" (SFC127) instructions. It depends on the set cycle time and the configuration limits.

You can find additional information in the STEP 7 online help and

- As of STEP 7 V12, in the PROFINET with STEP 7 (http://support.automation.siemens.com/WW/view/en/49948856) function manual.
- As of STEP 7 V5.5, in the system manual PROFINET System Description (http://support.automation.siemens.com/WW/view/en/19292127).

2.2.9 Module-internal Shared Input/Shared Output (MSI/MSO)

Module-internal Shared Input/Shared Output (MSI/MSO)

The Module-internal Shared Input function allows an input module to make its input data available to up to four IO controllers. Each controller has read access to the same channels.

The Module-internal Shared Output function allows an output module to be operated by up to four IO controllers. One IO controller has write access. Up to three additional IO controllers can have read access to the same channels.

You can find more information on this topic in the STEP 7 online help and:

- As of STEP 7 V12, in the function manual PROFINET with STEP 7 (http://support.automation.siemens.com/WW/view/en/49948856).
- As of STEP 7 V5.5, in the system manual PROFINET System Description (http://support.automation.siemens.com/WW/view/en/19292127).

2.2.10 System redundancy S2

System redundancy S2

An IO device with S2 system redundancy supports redundant ARs.

In a redundant system, an IO device with system redundancy S2 has a redundant AR for each of the two CPUs (IO controllers). If one CPU fails, the IO device with S2 system redundancy remains accessible to the remaining IO controller via the AR.

The interface module supports system redundancy S2 on S7-400H CPUs and on S7-1500R/H CPUs.

You can find additional information in the STEP 7 online help and

- As of STEP 7 V12, in the function manual PROFINET with STEP 7 (http://support.automation.siemens.com/WW/view/en/49948856)
- As of STEP 7 V5.5, in the system manual PROFINET System Description (http://support.automation.siemens.com/WW/view/en/19292127)

2.2.11 Alternating IO devices during operation ("docking systems")

Alternating IO devices during operation ("docking systems")

- Docking station
- Docking unit

You can find additional information in the STEP 7 online help and

- As of STEP 7 V12, in the PROFINET with STEP 7 (http://support.automation.siemens.com/WW/view/en/49948856) function manual

2.2.12 Oversampling

Oversampling

The IM 155-6 PN/3 HF interface module supports the oversampling mode of HS modules. With oversampling, the modules reduce the respective PROFINET send clocks in isochronous mode.

Additional information on oversampling can be found in the manuals for the I/O modules.

2.2.13 Value status

Value status

The IM 155-6 PN/3 HF interface module supports I/O modules with value status.

Additional information on the value status can be found in the manuals for the I/O modules.

2.2.14 PROFIenergy

Properties

PROFIenergy (for PROFINET) reduces the energy consumption by using PROFIenergy commands during production-free periods.

Reference

You will find additional information on PROFIenergy in the following manuals:

- Manual I/O modules (http://support.automation.siemens.com/WW/view/en/55679691/133300)
- Function manual PROFINET with STEP 7 V12 and higher (http://support.automation.siemens.com/WW/view/en/49948856)
- System manual PROFINET System Description (http://support.automation.siemens.com/WW/view/en/19292127)
- PROFIenergy (http://support.automation.siemens.com/WW/view/en/66928686) product information
- Internet (http://www.profibus.com) under Common Application Profile PROFIenergy; Technical Specification for PROFINET; Version 1.0; January 2010; Order No: 3.802

2.2.15 Configuration control (option handling)

Properties

Configuration control allows you to prepare your automation system for future expansions or changes. Configuration control means you can configure the planned maximum expansion of your automation system in advance and flexibly vary it later by means of the user program.

Reference

You can find more information on configuration control:

- In the system manual ET 200SP distributed I/O system. (http://support.automation.siemens.com/WW/view/en/58649293)
- On the Internet under the following link: Application collection (http://support.automation.siemens.com/WW/view/en/29430270).
- In the STEP 7 online help.

2.2.16 Use of fail-safe modules

Properties

The IM 155-6 PN/3 HF interface module supports the use of fail-safe modules.

Reference

You can find more information in the ET 200SP distributed I/O system (http://support.automation.siemens.com/WW/view/en/58649293) system manual.

2.2.17 Multi Hot Swap

Properties

You can remove and insert any number of I/O modules during operation. The interface module and the inserted I/O modules remain in operation.

Note

The IM 155-6 PN/3 HF interface module does not support the removal and insertion of the server module, the interface module and BusAdapter during operation.

Reference

You can find more information on the removal/insertion of modules in the system manual ET 200SP distributed I/O system (http://support.automation.siemens.com/WW/view/en/58649293).

2.2.18 Module-to-Module Communication (MtM)

Introduction

Module-to-Module Communication (MtM) offers the following advantages:

- Improved performance during transmission of data by bypassing the IO controller.
- Deterministic cycle times
- Cost-effective, high-performance solutions for applications where the performance of a specific technology module is not required.

Module-to-Module Communication (MtM)

Module-to-Module Communication (MtM) enables direct exchange of data between specific IO modules within a station via the interface module. This enables you to move small and/or time-critical tasks to the IO module. You achieve better performance while reducing the load on the CPU.

With Module-to-Module Communication (MtM), the interface module copies the input data of an IO module directly to a different IO module via the ET 200SP backplane bus. The IO module (data sink) carries out application-specific processing of the data.

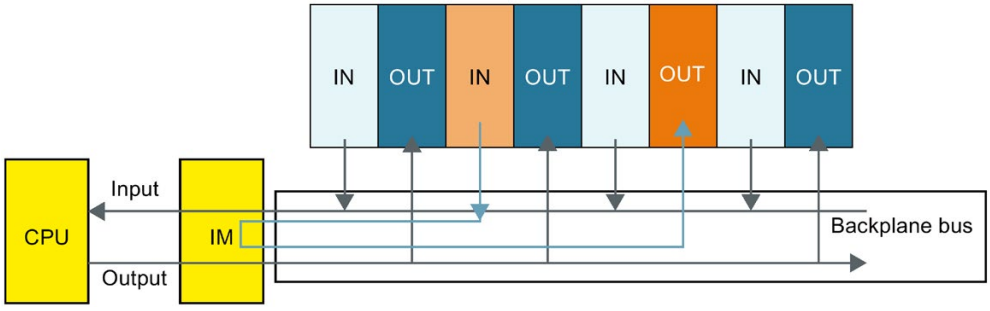

For Module-to-Module Communication (MtM), configure the data source and the data sink in the hardware configuration of the respective output module. Programming of the user program is **not** required in the variant for Module-to-Module Communication (MtM).

Note

The preparation of the input data in the output module (mapping) and the output of the data to the outputs are application- and technology-specific.
Example: The DQ 4x24VDC/2A HS digital output module supports

- the application cam control with Module-to-Module Communication (MtM) under the designation DQ 4x24VDC/2A HS **MCC MtM**

Additional information can be found in the manuals of the corresponding IO modules.

2.2.19 Setting the time

The interface module supports time-setting, for example with AI Energy Meter 480VAC/CT HF (6ES7134-6PA00-0CU0).

In an Application example (https://support.automation.siemens.com/WW/view/en/109754890) we show you how to set the time of day.

2.2.20 Interface local coupling of IO data

Module-internal Shared Output is transferred to other controllers

In this example, IO data are transferred from one controller to other controllers over the PROFINET interface X1 by means of the Module-internal Shared Output.

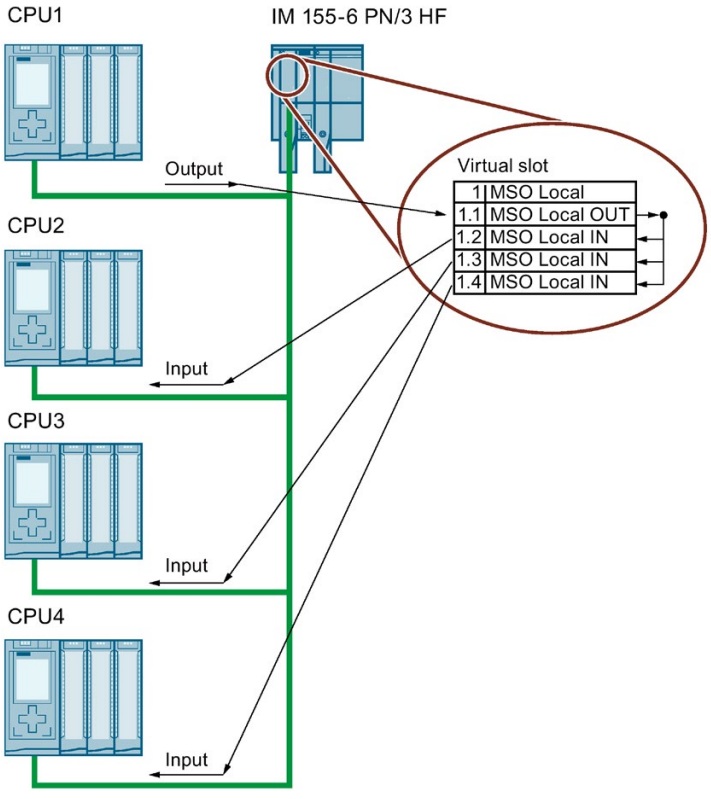

Figure 2-2 I/O data are transferred to other controllers in the same PROFINET network

Configuration

Table 2- 2 Example of the configuration

Virtual slot	Type	I-length	Q-length	Access
1	MSO Local	-	-	-
1.1	MSO Local OUT	-	4 bytes	CPU 1
1.2	MSO Local IN	5 bytes incl. 1 byte DS	-	CPU 2
1.3	MSO Local IN	5 bytes incl. 1 byte DS	-	CPU 3
1.4	MSO Local IN	5 bytes incl. 1 byte DS	-	CPU 4

Editing in the user program

The controller CPU 1 writes I/O data to the MSO Local OUT module with the virtual slot 1.1 of the interface module. The data is available to CPUs 2 to 4 for reading with the remaining MSO Local IN modules. The validity of the provided user data is displayed by the data status byte (DS) of the MSO Local IN modules.

You can also use this example:

- with fewer controllers and
- configure it with other virtual modules.

Note

Virtual IO modules

The use of virtual IO modules increases the communication load. This increases the data update time of all IO data accordingly.

Wiring 3

3.1 Pin assignment

24 V DC supply voltage

The following table shows the signal names and the descriptions of the pin assignment for a 24 V DC supply voltage.

Table 3- 1 Pin assignment 24 V DC supply voltage

View		Signal name[1]	Description
Connector	IM connection		
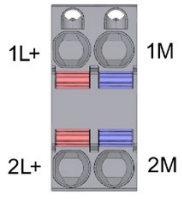	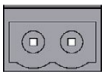	1L+	24 V DC
		2L+	24 V DC (for looping through)[2]
		1M	Ground
		2M	Ground (for looping through)[2]

1 1L+ and 2L+ as well as 1M and 2M are bridged internally.

2 Maximum 10 A permitted.

Reference

You can find more information on accessories and how to connect the interface module in the ET 200SP distributed I/O system (http://support.automation.siemens.com/WW/view/en/58649293) system manual.

3.2 Block diagram

Block diagram

The following figure shows a block diagram of the IM 155-6 PN/3 HF interface module.

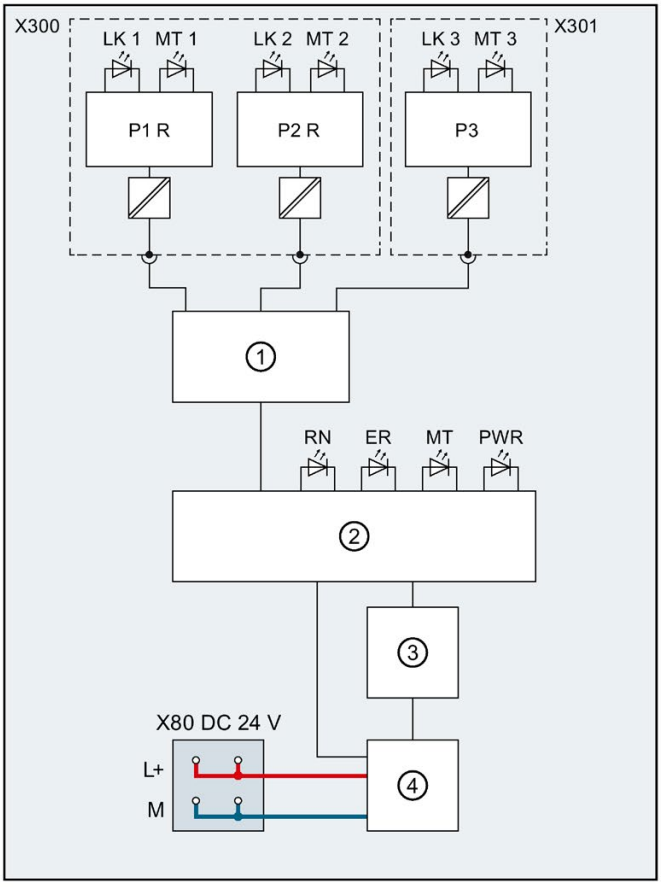

①	Switch	L+	24 V DC supply voltage
②	ET 200SP backplane bus interface and electronics	M	Ground
③	Backplane bus	LK 1, 2, 3	Link TX/RX LED (green)
④	Internal power supply	MT 1,2,3	MAINTENANCE FiberOptic LED (SCRJ port, yellow)
X80 24 V DC	Feed supply voltage	RN	RUN LED (green)
X300, X301	BusAdapter	ER	ERROR LED (red)
P1 R	PROFINET interface X1 Port 1	MT	LED MAINTENANCE (yellow)
P2 R	PROFINET interface X1 Port 2	PWR	POWER LED (green)
P3	PROFINET interface X1 Port 3		

Figure 3-1 Block diagram of the IM 155-6 PN/3 HF interface module

Note

To set up a ring topology, use only the P1 R and P2 R ports.

Note

Operation with only one BusAdapter

If you operate the interface module with only one BusAdapter, then provide the free bus adapter interface with a cover for the BusAdapter interface.

Note

For IRT operation, both bus adapters must be plugged in.

Parameters/address space 4

4.1 Parameters

Parameters for IM 155-6 PN/3 HF interface module

The following table shows the parameters for the interface module IM 155-6 PN/3 HF.

Table 4- 1 Parameters for IM 155-6 PN/3 HF interface module (GSD file)

Parameters	Value range	Default	Effective range
Enable configuration control	Yes/No	No	ET 200SP
Diagnostics (maintenance) undervoltage	Yes/No	No	ET 200SP

4.2 Explanation of parameters

4.2.1 Enable configuration control

Enable configuration control

You use this parameter to enable the configuration control function in the ET 200SP distributed I/O system.

Note

If you configure the enable, the ET 200SP distributed I/O system requires a control data record 196 from the user program in order for the ET 200SP distributed I/O system to operate the I/O modules.

Reference

You can find more information on the control data record in the ET 200SP distributed I/O system (http://support.automation.siemens.com/WW/view/en/58649293) system manual and in the STEP 7 online help.

4.2.2 Diagnostics (maintenance) undervoltage

Diagnostics (maintenance) undervoltage

The diagnostics alarm (maintenance) for undervoltage is triggered (incoming) if the supply voltage falls below the value 19.2 V DC. When the supply voltage then exceeds 20.4 V DC, the diagnostics alarm is reported as outgoing.

4.3 Substitute value behavior

Substitute value behavior

The respective output behaves according to its configured substitute value behavior:

- Zero current or zero voltage
- Output substitute value
- Keep last value

The substitute value behavior is triggered in the following cases:

- STOP controller
- Controller failure (connection interrupted)
- Parameter assignment phase during startup
- Deactivating the IO device
- Station stop
  - Missing server module
  - Insertion of invalid I/O modules
  - At least one I/O module is installed on an incorrect BaseUnit

---

Note

Reducing a configuration

If you reduce the configuration of the ET 200SP distributed I/O system and download the configuration to the CPU, the modules which are no longer configured but still present retain their original substitute value behavior. This applies until the supply voltage is switched off at the interface module.

The "current-free/voltage-free" behavior becomes effective in the following cases:

- Firmware update
- Reset to factory settings
- Configuration control: The IM has not received a valid control data record 196 yet
- Incorrectly configured module
- Module with incorrect parameter assignment

Substitute value behavior for module-internal Shared Output (MSO) and module-internal Shared Input (MSI)

Substitute value behavior for module-internal Shared Output (MSO) and module-internal Shared Input (MSI) corresponds to the behavior described above.

4.4 Status of the supply voltage L+ of the I/O modules

You can find information on the status of the supply voltage L+ of the I/O modules in the Server module (http://support.automation.siemens.com/WW/view/en/63257531) manual.

Interrupts, error messages, diagnostics and system alarms

5

5.1 Status and error displays

LED displays

The figure below shows the LED displays on the interface module and on the BusAdapters:

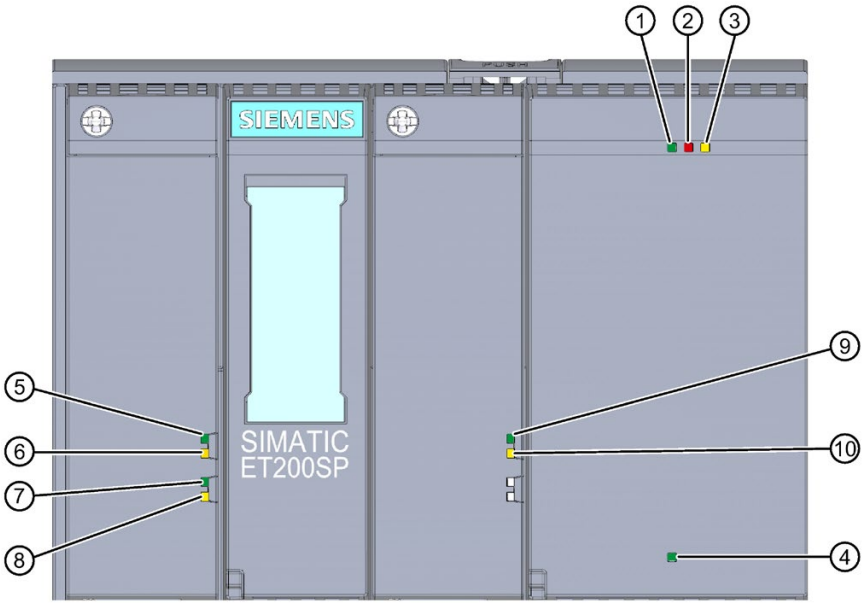

① RN (green)
② ER (red)
③ MT (yellow)
④ PWR (green)
⑤ LK1 (green)
⑥ MT1 (yellow), SCRJ port
⑦ LK2 (green)
⑧ MT2 (yellow), SCRJ port
⑨ LK3 (green)
⑩ MT3 (yellow), SCRJ port

Figure 5-1 LED displays on the interface module and BusAdapter 2xSCRJ

Meaning of the LED displays

The following tables contain the meaning of the status and error displays.

RN/ER/MT LEDs on the interface module

Table 5- 1 Status and error displays of RN/ER/MT LEDs

LEDs			Meaning	Solution
RN (RUN)	ER (ERROR)	MT (MAINT)		
□ Off	□ Off	□ Off	Missing or insufficient supply voltage on interface module.	Check the supply voltage or turn it on at the interface module.*
■ On	■ On	■ On	Test of LEDs during startup: The three LEDs light up simultaneously for approximately 0.25 s.	-
☼ Flashes	Not relevant	Not relevant	Interface module is deactivated.	Activate the interface module with the configuration software or the user program.
			Interface module is not configured.	Configure the interface module with the configuration software.
			ET 200SP starts up.	-
			ET 200SP is being assigned parameters.	
			ET 200SP is being reset to factory settings.	
■ On	Not relevant	Not relevant	ET 200SP is currently exchanging data with the IO controller.	-
Not relevant	☼ Flashes	Not relevant	Group errors and group error channels.	Evaluate the diagnostics and eliminate the error.
			The preset configuration does not match the actual configuration of the ET 200SP.	Check the configuration of the ET 200SP to see whether a module is missing, faulty or not configured.
			Invalid configuration states.	For additional information, see section Invalid configuration states of the ET 200SP on PROFINET IO (Page 45)
			Parameter assignment error in the I/O module.	Evaluate the display of the module status in STEP 7. Eliminate the error in the corresponding I/O module.
Not relevant	Not relevant	■ On	Maintenance	For additional information, see section Maintenance events (Page 43)
☼ Flashes	☼ Flashes	☼ Flashes	The "Node flash test" is run (LEDs LK1 and LK2 of the PROFINET interface also flash).	-
			Hardware or firmware defective (LEDs LK1 and LK2 of the PROFINET interface do not flash).	Run a firmware update. If the error persists, contact Siemens Industry Online Support. Replace the interface module.

* PWR LED on (on the interface module): Check the backplane bus for a short-circuit.

PWR LED on the interface module

Table 5- 2 Status display of the PWR LED

PWR LED	Meaning	Solution
□ Off	Supply voltage not present or too small.	Check the supply voltage.
■ On	Supply voltage present. Observe the maintenance messages if the MAIN LED is lit	-

LED display of configuration errors

Configuration errors of the distributed IO system ET 200SP are indicated on the interface module via the red LED ERROR and the yellow LED MAINT.

The following configuration errors are signaled by the LEDs:

- No server module
- Interruptions or short-circuit on the backplane bus

Operating principle

The LED error display provides information on the cause of the error. After notification by the flash signal, the error type is displayed followed by the error location/error code.

The LED error display:

- Is activated during POWER ON and during operation.
- Has priority over all other states that are displayed by means of the ERROR and MAINT LED.
- Remains on until the cause of the error has been eliminated.

Table 5- 3 Display of error type and error location

Sequence		Description
1	The ERROR and MAINT LEDs flash 3x at 0.5 Hz	Indication of the error type
2	The MAINT LED flashes at 1 Hz	Display of error type (decimal)
3	The ERROR and MAINT LEDs flash 3x at 2 Hz	Signaling of error location/error code
4	The ERROR LED flashes at 1 Hz	Display of tens digit (decimal) of the error location/error code
5	The MAINT LED flashes at 1 Hz	Display of ones digit (decimal) of the error location/error code
6	Repetition of 1 to 5 until the cause of the error has been eliminated.	

Error display

Table 5- 4 Error display

Error type (MAINT)	Error location (ERROR/ MAINT)	Cause of error	Solution
1	65	• No server module • Interruptions on the backplane bus • Short circuit of communication on the backplane bus	Check the configuration of the ET 200SP.

Note

A short circuit in the backplane bus supply or the bus connection supply is indicated by the following LEDs:

- PWR LED: On
- RN, ER and MT LED: Off

5.2 Interrupts

Introduction

The I/O device triggers interrupts as a reaction to specific errors. Interrupts are evaluated based on the I/O controller used.

Evaluating interrupts with I/O controllers

The ET 200SP distributed I/O system supports the following interrupts:

- Diagnostic error interrupts
- Hardware interrupts
- Pull/plug interrupts
- Maintenance events

In the event of an interrupt, interrupt OBs are automatically called in the CPU of the IO controller.

Information on the cause and class of the error is already available, based on the OB number and start information.

Detailed information on the error event can be obtained in the error OB using the instruction "RALRM" (read additional interrupt information).

System diagnostics

In STEP 7 (TIA Portal), the innovated system diagnostics is available for the devices of the S7-1500 automation system (IO controller S7-1500 CPU) and ET 200SP (IO device). Independent of the cyclic user program, alarms are made available on the display of the S7-1500 CPU, the CPU web server and the HMI device.

You will find more information on system diagnostics in the Diagnostics (https://support.industry.siemens.com/cs/ww/en/view/59192926) function manual.

5.2.1 Triggering of a diagnostics interrupt

Triggering of a diagnostics interrupt

For an incoming or outgoing event (e.g. wire break on a channel of an I/O module), the module triggers a diagnostic error interrupt if this is configured accordingly.

The CPU interrupts processing of the user program and processes the diagnostic error interrupt OB (OB 82). The event that triggered the interrupt is entered in the start information of the diagnostic error interrupt OB.

5.2.2 Triggering a hardware interrupt

Triggering a hardware interrupt

If there is a hardware interrupt, the CPU interrupts user program execution and processes the hardware interrupt block OB, e.g., OB 40. The result that triggered the interrupt is added to the start information of the hardware interrupt OB.

Note

Diagnostics "Hardware interrupt lost" (from I/O module)

Do not use hardware interrupts for functional purposes (e.g. the cyclic generation of hardware interrupts).

If the hardware interrupt load is too high, hardware interrupts can get lost depending on the number of I/O modules and the communication load.

5.2.3 Triggering of a remove/insert module interrupt

Triggering of a remove/insert module interrupt

In the event of a remove/insert module interrupt, the CPU interrupts processing of the user program and processes the remove/insert module OB, e.g. OB 83. The event that triggered the interrupt is entered in the start information of the remove/insert module OB.

Note

Parameter assignment error after removal/insertion

If you write data records from the user program to the modules of the distributed I/O, make sure that these modules actually exist and are available. You can do this by evaluating OB83. After inserting a module, OB83 is not called until the module has started up and its parameters are assigned. This ensures that data record operations can be executed without errors.

5.3 Alarms

5.3.1 Diagnostics alarms

Actions after a diagnostics alarm

There can be more than one diagnostics alarm at the same time. Each diagnostics alarm initiates the following actions:

- The ERROR LED of the interface module flashes.
- Diagnostics are reported as diagnostic error interrupts to the CPU of the IO controller and can be read via data records.
- Incoming diagnostics alarms are saved to the diagnostics buffer of the I/O controller.
- (S7-300/400) The diagnostic interrupt OB is called. If the diagnostics interrupt OB (OB 82) is not available, the IO controller goes into STOP mode.

You can find more information in the STEP 7 online help.

Reading the diagnostics

Table 5- 5 Reading the diagnostics with STEP 7

Automation system with IO controller	Application	See...
SIMATIC S7	Diagnostics as plain text in STEP 7 using Online and Diagnostics view	STEP 7 online help • as of STEP 7 V12 function manual PROFINET with STEP 7 as of V12 (http://support.automation.siemens.com/WW/view/en/49948856) • as of STEP 7 V5.5, system manual PROFINET System Description (http://support.automation.siemens.com/WW/view/en/19292127)
	Instruction "RDREC" (SFB 52) Read data records from the IO device	
	Instruction "RALRM" (SFB 54) Receive interrupts from the IO device	

Additional information on the data records for PROFINET IO

The structure of the diagnostic data records and programming examples are available in the programming manual From PROFIBUS DP to PROFINET IO (http://support.automation.siemens.com/WW/view/en/19289930) and in Example application (http://support.automation.siemens.com/WW/view/en/24000238).

Causes of error and troubleshooting

The causes of error and remedies for the diagnostic alarms are described in the manuals for I/O modules (http://support.automation.siemens.com/WW/view/en/55679691/133300) in the section, "Interrupts, error messages, and system events".

See also

Channel diagnostics (Page 44)

5.3.2 Maintenance events

Triggering of a maintenance event

The PROFINET IO interfaces of the interface module support the diagnostic concept and maintenance concept in PROFINET IO according to the IEC 61158 Type 10 standard. The goal is to detect and remove potential problems as soon as possible.

For the interface module, maintenance events signal to the user when a plant component must be checked or replaced.

The CPU interrupts user program execution and executes the diagnostic error interrupt OB. The event that triggered the maintenance event is entered in the start information of the diagnostic error interrupt OB.

The interface module signals a maintenance event to the higher-level diagnostic system in the case of the following event:

Table 5- 6 Triggering of a maintenance event

Maintenance alarm	Event	Alarm/Meaning
Maintenance demanded LED MAINT is lit.	Synchronization loss	• No synchronization frame received. No synchronization frame was received by the sync master within the timeout period after parameter assignment or during operation. • Successive synchronization frames are located outside permitted limits (jitter).
	Undervoltage	• Diagnostics Undervoltage If the supply voltage of the interface falls below the value 19.2 V DC, these diagnostics are reported as incoming Maintenance demanded.

System alarms in STEP 7 (TIA Portal)

The maintenance information is generated in STEP 7 (TIA Portal) with the following system alarms:

- Maintenance demanded - indicated for each port by a yellow wrench icon in the device view or in the hardware configuration.

You can find more information in the STEP 7 online help.

5.3.3 Channel diagnostics

Function

Channel-related diagnostics provides information about channel faults in modules.

Channel faults are mapped as channel diagnostics data in IO diagnostics data records.

The data record is read using the instruction "RDREC".

Structure of the diagnostics data records

The data records supported by the ET 200SP distributed I/O system are based on the standard PROFINET IO - Application Layer Service Definition V2.2.

If required, you can find the standard on the Internet (http://www.profibus.com) at the home page of the PROFIBUS user organization.

Codes of the extended channel diagnostics

With the IM 155-6 PN/3 HF interface module, the following extended channel diagnostics are reported:

ChannelErrorType (CET)	ExtendedChannelError-Type (ECET)	Associated value AddValue	Diagnostics
0x0602	0x0691	Slot	Station stop - module parameter "Potential group" faulty or incorrect BaseUnit in actual slot (AddValue)
0x0602	0x0693	0x00	Diagnostics with missing server module
0x0602	0x0698	0x00	Diagnostics backplane bus too large
0x0602	0x0699	Slot	Diagnostics with incorrect bus configuration
0x0610	0x06B0	0x00	Group diagnostics: Missing supply voltage L+ for the potential groups Note: The slot in which the light-colored BaseUnit of the respective load module is located is coded in the "ChannelNumber" element.
0x0610	0x06B4	0x00	Diagnostics "Undervoltage power supply" If the supply voltage of the interface falls below the value 19.2 V DC, these diagnostics are reported as incoming Maintenance demanded.

5.3.4 Invalid configuration states of the ET 200SP on PROFINET IO

Invalid configuration states

The following invalid configuration states of the ET 200SP distributed I/O system lead to the failure of the IO device or prevent data exchange:

- Number of modules exceeds maximum configuration.
- Faulty backplane bus (e.g. defective BaseUnit). ET 200SP backplane bus interruptions do not trigger an interrupt.
- At least one I/O module is plugged into a different BaseUnit as the one configured in the parameters.
- No server module.
- Invalid or incorrectly configured BusAdapter.

Note

Removal of the server module will trigger a station stop. All I/O modules of the ET 200SP distributed I/O system fail (substitute value behavior) but the interface module continues to exchange data.

Revoking the station stop (by correcting the invalid configuration state) leads to a brief failure of the ET 200SP distributed I/O system and automatic restart.

See also

Status and error displays (Page 36)

Channel diagnostics (Page 44)

5.3.5 Failure of supply voltage L+ at BaseUnit BU...D

Failure of the supply voltage L+

The I/O modules react as follows to failure of the supply voltage L+ on the BaseUnit BU...D:

- If an I/O module is removed during failure of the supply voltage, a pull interrupt is generated.
- If an I/O module is installed during failure of the supply voltage, a plug interrupt is generated.

5.3.6 STOP of the IO controller and recovery of the IO device

STOP of the SIMATIC IO controller

Diagnostics received from the IO device while the IO controller is in STOP do not initiate a call of any corresponding OBs when the IO controller goes into RUN. Read the $E00C_H$ data record in startup OB using the instruction "RDREC". This record contains all diagnostics for the slots assigned to an IO controller in an IO device.

Recovery of the SIMATIC IO devices

If you want to read the occurring diagnostics in the STOP state of the IO controller, you have to read the $E00C_H$ data record with the "RDREC" instruction. This record contains all diagnostics for the slots assigned to an IO controller in an IO device.

Compatibility 6

6.1 Compatibility of modules

Station configuration with more than 32 I/O modules

Certain I/O modules with functional status 001 and 002 do not support a station configuration with more than 32 I/O modules.

The table below shows all modules that do not support a station configuration with more than 32 I/O modules:

Table 6- 1 Incompatible modules with functional versions

Modules	Article number	up to functional status
Analog modules		
AI 4xI 2-/4-wire ST	6ES7134-6GD00-0BA1	002
AI 4xU/I 2-wire ST	6ES7134-6HD00-0BA1	002
AI 4xRTD/TC 2-/3-/4-wire HF	6ES7134-6JD00-0CA1	002
AI 4xU/I ST	6ES7135-6HD00-0BA1	002
Digital modules		
DI 16x24VDC ST	6ES7131-6BH00-0BA0	002
DI 8x24VDC ST	6ES7131-6BF00-0BA0	002
DQ 16x24VDC/0.5A ST	6ES7132-6BH00-0BA0	002
DQ 4x24VDC/2A ST	6ES7132-6BD20-0BA0	002
DQ 8x24VDC/0.5A ST	6ES7132-6BF00-0BA0	002

Status of the supply voltage

Load voltage diagnostics are only valid if the station started up with a valid and complete configuration.

- For modules without parameter assignment in the following table, the status of the supply voltage (status byte of the server module) is always signaled as "1" regardless of the actual status of the supply voltage.
- If a potential group is exclusively made up of modules without parameter assignment from the table below, no group diagnostics "Missing supply voltage L+" is signaled for this potential group.

Modules	Article number
DI 8x24VDC ST	6ES7131-6BF00-0BA0
DI 16x24VDC ST	6ES7131-6BH00-0BA0
DI 8x24VDC HF	6ES7131-6BF00-0CA0
DQ 4x24VDC/2A ST	6ES7132-6BD20-0BA0
DQ 8x24VDC/0.5A ST	6ES7132-6BF00-0BA0
DQ 16x24VDC/0.5A ST	6ES7132-6BH00-0BA0
DQ 8x24VDC/0.5A HF	6ES7132-6BF00-0CA0

AQ 4xU/I ST analog output module

Note

For operation of the AQ 4xU/I ST analog output module, firmware version V1.0 (6ES7135-6HD00-0BA1) with the interface module, you need to set the "Reaction to CPU STOP" parameter to "Turn off" with a PROFINET send clock < 1 ms.

Reaction times for fail-safe modules

The following maximum reaction time of the interface module must be taken into account when calculating the reaction times of fail-safe modules: **Maximum reaction time = configured update time + 400 µs (but at least 1.4 ms)**

Operation with activated system redundancy S2

Note

Restrictions in operation with activated system redundancy S2

You cannot use the following functions during operation of the IM155-6 PN/3 HF, firmware version V4.2 with activated system redundancy S2:

- Configuration control (option handling)
- Module-to-Module Communication (MtM)
- Interface local coupling of IO data

Technical specifications 7

Technical specifications of IM 155-6 PN/3 HF

The following table shows the technical specifications as of 08/2018. You will find a data sheet including daily updated technical specifications on the Internet (https://support.industry.siemens.com/cs/de/en/pv/6ES7155-6AU30-0CN0/td?dl=en).

Article number	6ES7155-6AU30-0CN0
General information	
Product type designation	IM 155-6 PN/3 HF with server module
Firmware version	V4.2
• FW update possible	Yes
Number of MtM communication relationships/connections, max.	16
Product function	
• I&M data	Yes; I&M0 to I&M3
• Module swapping during operation (hot swapping)	Yes; Multi-hot swapping
• Tool changer	Yes; Docking station and docking unit
• Local coupling, IO data	Yes
– Number of coupling modules	16
– Number of coupling submodules per module	4
• Local coupling, data records	No
Engineering with	
• STEP 7 TIA Portal configurable/integrated as of version	V15.1
• STEP 7 configurable/integrated as of version	Configurable via GSD file
• PROFINET as of GSD version/GSD revision	GSDML V2.3
Configuration control	
via dataset	Yes
Supply voltage	
Rated value (DC)	24 V
permissible range, lower limit (DC)	19.2 V
permissible range, upper limit (DC)	28.8 V
Reverse polarity protection	Yes

Article number	6ES7155-6AU30-0CN0
Mains buffering	
• Mains/voltage failure stored energy time	10 ms
Input current	
Current consumption (rated value)	175 mA; At 24 V, 2 slots 2x RJ45 BusAdapter, no I/O modules
Current consumption, max.	950 mA
Inrush current, max.	9 A
I^2t	0.34 $A^2 \cdot s$
Power loss	
Power loss, typ.	4.9 W
Address area	
Address space per module	
• Address space per module, max.	288 byte; For input and output data respectively
Address space per station	
• Address space per station, max.	1 440 byte; Dependent on configuration
Hardware configuration	
Rack	
• Modules per rack, max.	64; + 16 ET 200AL modules
Submodules	
• Number of submodules per station, max.	256
Interfaces	
Number of PROFINET interfaces	1; 3 ports (switch)
1. Interface	
Interface types	
• Number of ports	3; Via 2 BusAdapter slots
• integrated switch	Yes
• BusAdapter (PROFINET)	Yes; Compatible BusAdapter: BA 2x RJ45, BA 2x FC, BA 2x SCRJ, BA SCRJ / RJ45, BA SCRJ / FC, BA 2x LC, BA LC / RJ45, BA LC / FC
Protocols	
• PROFINET IO Device	Yes
• Open IE communication	Yes
• Media redundancy	Yes; PROFINET MRP
Interface types	
RJ 45 (Ethernet)	
• Transmission procedure	PROFINET with 100 Mbit/s full duplex (100BASE-TX)
• 10 Mbps	No
• 100 Mbps	Yes; PROFINET with 100 Mbit/s full duplex (100BASE-TX)
• Autonegotiation	Yes

Article number	6ES7155-6AU30-0CN0
• Autocrossing	Yes
Protocols	
PROFINET IO Device	
Services	
– Isochronous mode	Yes; Bus cycle time: min. 250 µs
– Open IE communication	Yes
– IRT	Yes; 250 µs, 500 µs, 1 ms, 2 ms, 4 ms additionally with IRT with high performance: 250 µs to 4 ms in 125 µs frame
– PROFIenergy	Yes
– Prioritized startup	Yes
– Shared device	Yes
– Number of IO Controllers with shared device, max.	4
Redundancy mode	
– MRP	Yes
– MRPD	No
– PROFINET system redundancy (S2)	Yes; NAP S2
– Redundant PROFINET configuration (R1)	No
– H-Sync forwarding	Yes
Open IE communication	
• TCP/IP	Yes
• SNMP	Yes
• LLDP	Yes
Isochronous mode	
Isochronous operation (application synchronized up to terminal)	Yes
Equidistance	Yes
shortest clock pulse	250 µs
max. cycle	4 ms
Bus cycle time (TDP), min.	250 µs
Jitter, max.	1 µs
Interrupts/diagnostics/status information	
Status indicator	Yes
Alarms	Yes
Diagnostics function	Yes
Diagnostics indication LED	
• RUN LED	Yes; Green LED
• ERROR LED	Yes; Red LED

Article number	6ES7155-6AU30-0CN0
• MAINT LED	Yes; yellow LED
• Monitoring of the supply voltage (PWR-LED)	Yes; green PWR LED
• Connection to network LINK (green)	Yes; 2x green link LEDs on BusAdapter
Potential separation	
between backplane bus and electronics	No
between PROFINET and all other circuits	Yes
between supply and all other circuits	No
Isolation	
Isolation tested with	707 V DC (type test)
Standards, approvals, certificates	
Network loading class	3
Security level	According to Security Level 1 Test Cases V1.1.1
Ambient conditions	
Ambient temperature during operation	
• horizontal installation, min.	-30 °C; No condensation
• horizontal installation, max.	60 °C
• vertical installation, min.	-30 °C; No condensation
• vertical installation, max.	50 °C
Altitude during operation relating to sea level	
• Installation altitude above sea level, max.	2 000 m; On request: Installation altitudes greater than 2 000 m
Connection method	
ET-Connection	
• via BU/BA Send	Yes; + 16 ET 200AL modules
Mechanics/material	
Strain relief	Yes; Optional
Dimensions	
Width	100 mm
Height	117 mm
Depth	74 mm
Weights	
Weight, approx.	220 g; without BusAdapter

Dimension drawing

A

This appendix contains a dimension drawing of the module mounted on a mounting rail. Always observe the specified dimensions for installation in cabinets, control rooms, etc.

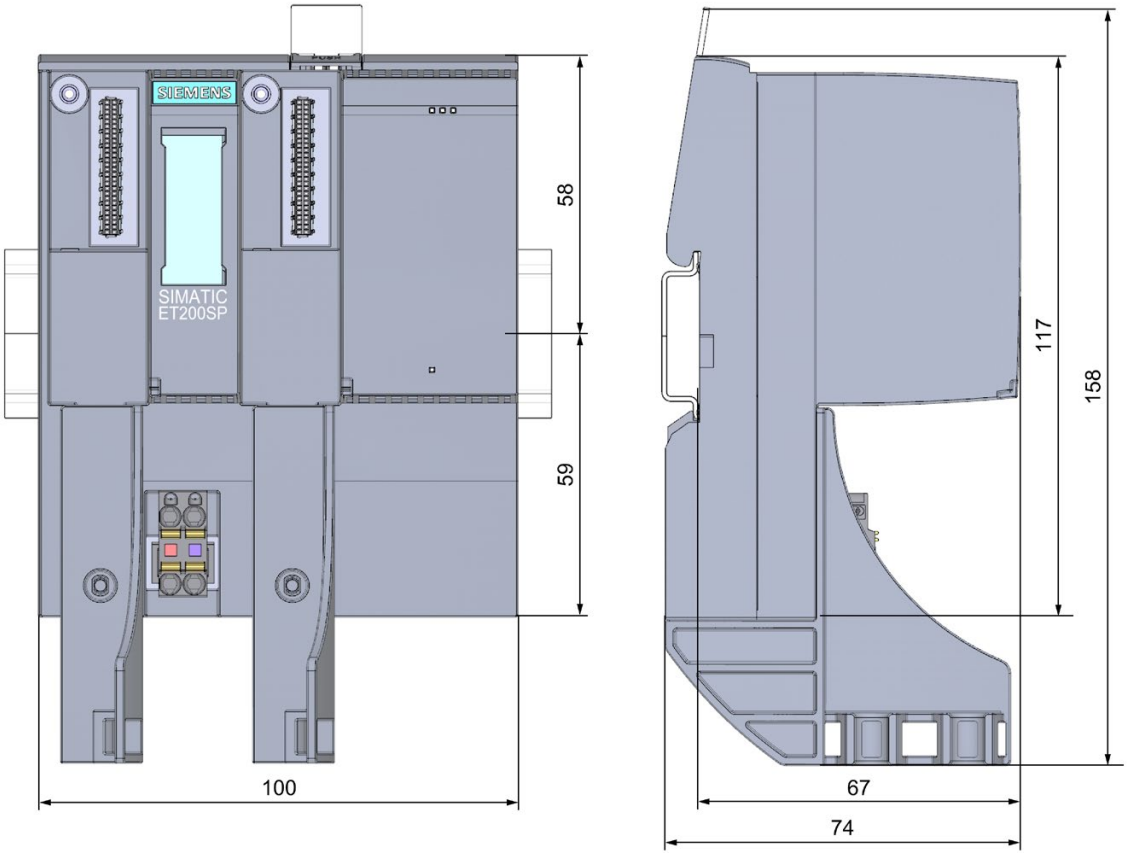

Figure A-1 Dimension drawing of the IM 155-6 PN/3 HF interface module, front and side views

SIEMENS

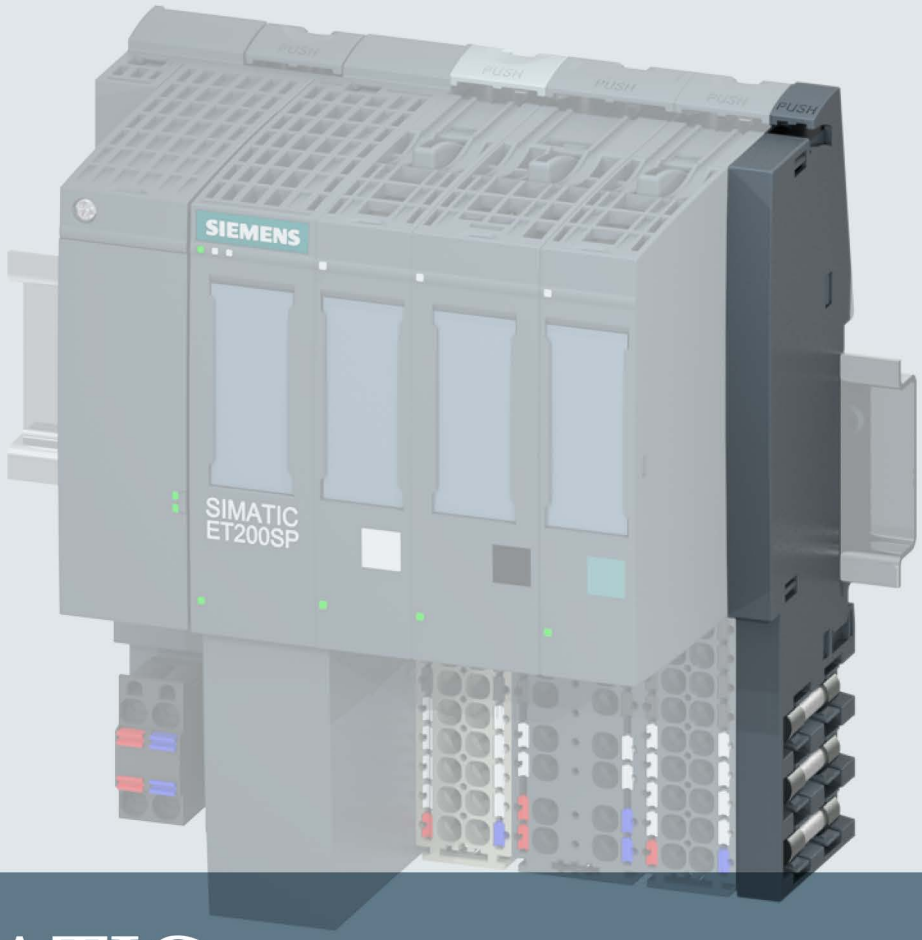

SIMATIC

ET 200SP

Server module (6ES7193-6PA00-0AA0)

Manual

Edition 03/2015

Answers for industry.

SIEMENS

SIMATIC

ET 200SP
Server module
(6ES7193-6PA00-0AA0)

Manual

Preface

Documentation guide 1

Product overview 2

Parameters/address space 3

Diagnostics alarms 4

Technical specifications 5

Parameter data record 6

Dimensional drawing A

03/2015

A5E03575337-AB

Legal information

Warning notice system

This manual contains notices you have to observe in order to ensure your personal safety, as well as to prevent damage to property. The notices referring to your personal safety are highlighted in the manual by a safety alert symbol, notices referring only to property damage have no safety alert symbol. These notices shown below are graded according to the degree of danger.

⚠ DANGER

indicates that death or severe personal injury **will** result if proper precautions are not taken.

⚠ WARNING

indicates that death or severe personal injury **may** result if proper precautions are not taken.

⚠ CAUTION

indicates that minor personal injury can result if proper precautions are not taken.

NOTICE

indicates that property damage can result if proper precautions are not taken.

If more than one degree of danger is present, the warning notice representing the highest degree of danger will be used. A notice warning of injury to persons with a safety alert symbol may also include a warning relating to property damage.

Qualified Personnel

The product/system described in this documentation may be operated only by **personnel qualified** for the specific task in accordance with the relevant documentation, in particular its warning notices and safety instructions. Qualified personnel are those who, based on their training and experience, are capable of identifying risks and avoiding potential hazards when working with these products/systems.

Proper use of Siemens products

Note the following:

⚠ WARNING

Siemens products may only be used for the applications described in the catalog and in the relevant technical documentation. If products and components from other manufacturers are used, these must be recommended or approved by Siemens. Proper transport, storage, installation, assembly, commissioning, operation and maintenance are required to ensure that the products operate safely and without any problems. The permissible ambient conditions must be complied with. The information in the relevant documentation must be observed.

Trademarks

All names identified by ® are registered trademarks of Siemens AG. The remaining trademarks in this publication may be trademarks whose use by third parties for their own purposes could violate the rights of the owner.

Disclaimer of Liability

We have reviewed the contents of this publication to ensure consistency with the hardware and software described. Since variance cannot be precluded entirely, we cannot guarantee full consistency. However, the information in this publication is reviewed regularly and any necessary corrections are included in subsequent editions.

Siemens AG
Division Digital Factory
Postfach 48 48
90026 NÜRNBERG
GERMANY

A5E03575337-AB
℗ 03/2015 Subject to change

Copyright © Siemens AG 2013 - 2015.
All rights reserved

Preface

Purpose of the documentation

This manual supplements the ET 200SP distributed I/O system (http://support.automation.siemens.com/WW/view/en/58649293) system manual.

Functions that generally relate to the system are described in this manual.

The information provided in this manual and in the system/function manuals supports you in commissioning the ET 200SP distributed I/O system.

Conventions

Please also observe notes labeled as follows:

Note

A note contains important information on the product described in the documentation, on the handling of the product, or on the section of the documentation to which particular attention should be paid.

Security information

Siemens provides products and solutions with industrial security functions that support the secure operation of plants, solutions, machines, equipment and/or networks. They are important components in a holistic industrial security concept. With this in mind, Siemens' products and solutions undergo continuous development. Siemens recommends strongly that you regularly check for product updates.

For the secure operation of Siemens products and solutions, it is necessary to take suitable preventive action (e.g. cell protection concept) and integrate each component into a holistic, state-of-the-art industrial security concept. Third-party products that may be in use should also be considered. You can find more information about industrial security on the Internet (http://www.siemens.com/industrialsecurity).

To stay informed about product updates as they occur, sign up for a product-specific newsletter. You can find more information on the Internet (http://support.automation.siemens.com).

Table of contents

Preface 4

1 Documentation guide 6

2 Product overview 8

2.1 Properties 8

3 Parameters/address space 9

3.1 Parameters 9

3.2 Explanation of the parameters 10

3.3 Address space 10

3.3.1 Input data for interface modules with maximum 12 I/O modules 12

3.3.2 Input data for interface modules with maximum 32 I/O modules 13

3.3.3 Input data for CPU/interface modules with maximum 64 I/O modules 14

3.3.4 Evaluating feedback voltage 15

4 Diagnostics alarms 17

5 Technical specifications 18

5.1 Technical specifications 18

6 Parameter data record 19

6.1 Parameter assignment and structure of parameter data record 19

A Dimensional drawing 21

A.1 Server module 21

Documentation guide

1

The documentation for the SIMATIC ET 200SP distributed I/O system is arranged into three areas.
This arrangement enables you to access the specific content you require.

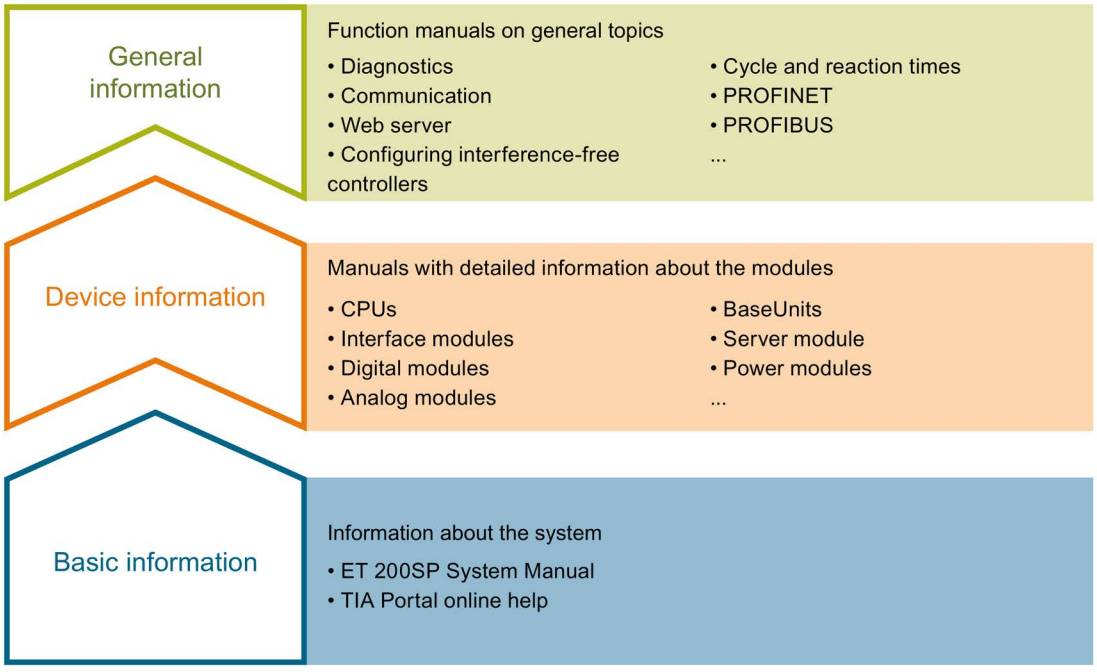

Basic information

The system manual describes in detail the configuration, installation, wiring and commissioning of the SIMATIC ET 200SP. distributed I/O system. The STEP 7 online help supports you in the configuration and programming.

Device information

Product manuals contain a compact description of the module-specific information, such as properties, terminal diagrams, characteristics and technical specifications.

General information

The function manuals contain detailed descriptions on general topics regarding the SIMATIC ET 200SP distributed I/O system, e.g. diagnostics, communication, Web server, designing interference-free controllers.

You can download the documentation free of charge from the Internet (http://w3.siemens.com/mcms/industrial-automation-systems-simatic/en/manual-overview/tech-doc-et200/Pages/Default.aspx).

Changes and supplements to the manuals are documented in a Product Information.

Manual Collection ET 200SP

The Manual Collection contains the complete documentation on the SIMATIC ET 200SP distributed I/O system gathered together in one file.

You can find the Manual Collection on the Internet (http://support.automation.siemens.com/WW/view/en/84133942).

My Documentation Manager

The My Documentation Manager is used to combine entire manuals or only parts of these to your own manual.
You can export the manual as PDF file or in a format that can be edited later.

You can find the My Documentation Manager on the Internet (http://support.industry.siemens.com/My/ww/en/documentation).

Application examples

Applications examples support you with various tools and examples for solving your automation tasks. Solutions are shown in interplay with multiple components in the system - separated from the focus in individual products.

You can find application examples on the Internet (https://support.industry.siemens.com/sc/ww/en/sc/2054).

CAx Download Manager

The CAx Download Manager is used to access the current product data for your CAx or CAe systems.

You configure your own download package with a few clicks.

In doing so you can select:

- Product images, 2D dimension drawings, 3D models, internal circuit diagrams, EPLAN macro files
- Manuals, characteristics, operating manuals, certificates
- Product master data

You can find the CAx Download Manager on the Internet (http://support.industry.siemens.com/my/ww/en/CAxOnline).

TIA Selection Tool

With the TIA Selection Tool, you can select, configure and order devices for Totally Integrated Automation (TIA).
This tool is the successor of the SIMATIC Selection Tool and combines the known configurators for automation technology into one tool.
With the TIA Selection Tool, you can generate a complete order list from your product selection or product configuration.

You can find the TIA Selection Tool on the Internet (http://w3.siemens.com/mcms/topics/en/simatic/tia-selection-tool).

Product overview 2

2.1 Properties

Article number

6ES7193-6PA00-0AA0

View of the module

Figure 2-1 View of the server module

Properties

The module has the following technical properties:

- Closes off the backplane bus of the ET 200SP
- Contains a support for 3 spare fuses (5 × 20 mm)

The module supports the following functions:

- Firmware update
- I&M identification data
- Reconfiguration in RUN
- Representation of the statuses of supply voltage L+ and the feedback voltage (Page 15) per slot.
- Retentive storage of device name for device replacement without topological configuration of the IM 155-6 PN BA.

You can configure the module with STEP 7 (TIA Portal) and with a GSD file.

Function and properties	Product version of the module as of	Firmware version of the module as of
Support of the IM 155-6 PN BA	1	V1.1.1

Parameters/address space 3

3.1 Parameters

Parameters for the server module

The effective range of the configurable parameter depends on the type of configuration. Possible configuration: Distributed operation on PROFINET IO in an ET 200SP system.

When assigning parameters in the user program, use the "WRREC" instruction to transfer the parameter to the module by means of data records, see section Parameter assignment and structure of parameter data record (Page 19).

The following parameter settings are possible:

Table 3- 1 Configurable parameter and its default (GSD file)

Parameters	Range of values	Default	Reconfiguration in RUN	Effective range with configuration software, e.g., STEP 7 (TIA Portal)	
				GSD file PROFINET IO	GSD file PROFIBUS DP
Group diagnostics: No supply voltage L+	• Disable • Enable	No	Yes	ET 200SP	---

3.2 Explanation of the parameters

Group diagnostics: No supply voltage L+

When you enable this parameter, the ET 200SP generates one diagnostic per potential group (as group information) when the supply voltage L+ fails.

This function does not depend on enabling the parameter "Diagnostics: No supply voltage L+" of the I/O modules.

The diagnostics is formed from the states of the supply voltage of the installed I/O modules within the potential group.

Requirements

- All I/O modules must be inserted, i.e. the current configuration must not have any empty slots.
- If no I/O modules are inserted on light-colored BaseUnits BU..D, the beginning of this potential group is not recognized. The I/O modules of this potential group are therefore part of the previous potential group.
  If the I/O module is installed on the light-colored BaseUnit, the potential group is detected, the diagnostics is reevaluated according to the potential group arrangement and new diagnostics may be reported. The position of the light-colored BaseUnit remains stored in the structure until the supply voltage 1L+ of the CPU/interface module is turned off.

3.3 Address space

Introduction

You can read out the status of the supply voltage L+ and the feedback voltage of I/O modules via the address space of the server module:

- All I/O modules:
  No supply voltage L+ or no I/O module available
- Additional digital output module HF:
  feedback voltage present

Requirements

- The I/O module used must support monitoring of the supply voltage.
- The I/O module used must support monitoring of a feedback voltage.

Length of input data

The length of the input data depends on the CPU/interface module:

- Interface module with 12 I/O modules maximum configuration: 2/4 bytes
- Interface module with 32 I/O modules maximum configuration: 4/8 bytes
- CPU/interface module with 64 I/O modules maximum configuration: 8/16 bytes

Configurations

In the configuration software, you can select 3 configurations for the server module for operation on the CPU/interface module:

- Configuration with disabled "Status of the supply voltage L+" and disabled "Status of the feedback voltage":
  - The server module only has one diagnostics address.
- Configuration with enabled "Status of the supply voltage L+" and disabled "Status of the feedback voltage":
  - The server module has 2/4/8 bytes of input data for the display of the status of the supply voltage L+ of the inserted I/O modules.
  - Display in the input data of the server module:

    Supply voltage L+ present/missing or I/O module available/not available
- Configuration with enabled "Status of the supply voltage L+" and enabled "Status of the feedback voltage":
  - The server module has 4/8/16 bytes of input data for the display of the status of the supply voltage L+ and the status of the feedback voltage of the inserted I/O modules.
  - Display in the input data of the server module:

    Supply voltage L+ present/missing or I/O module available/not available

    Feedback voltage present/missing

Table 3- 2 Data length depending on configuration and maximum configuration

Maximum configuration	"Status supply voltage" deactivated	Activated	Activated
	"Status feedback voltage" deactivated	Deactivated	Activated
12 slots	0	2	4
32 slots	0	4	8
64 slots	0	8	16

3.3.1 Input data for interface modules with maximum 12 I/O modules

Configuration with enabled status detection of the supply voltage L+ (2 bytes of input data)

You can read out the following status for each I/O module of the ET 200SP in the input data (byte 0 to 1):

- Supply voltage L+ present/missing or I/O module available/not available (2 bytes)

	7	6	5	4	3	2	1	0
Byte 0	8	7	6	5	4	3	2	1
Byte 1	x	x	x	x	12	11	10	9

Slots of the I/O modules
Bit = 1:
Supply voltage L+ available and I/O module available
Bit = 0:
Missing supply voltage L+ or no I/O module available
X = 0

Figure 3-1 Configuration with enabled status detection of the supply voltage L+ (2 bytes)

Configuration with enabled status detection of the supply voltage L+ and enabled status detection of the feedback voltage (4 bytes of input data)

You can read out the following status for each I/O module of the ET 200SP in the input data (byte 0 to 3).

- Supply voltage L+ present/missing or I/O module available/not available (2 bytes)
- Feedback voltage present/missing (2 bytes)

	7	6	5	4	3	2	1	0
Byte 0	8	7	6	5	4	3	2	1
Byte 1	x	x	x	x	12	11	10	9

Slots of the I/O modules
Bit = 1:
Supply voltage L+ available and I/O module available
Bit = 0:
Missing supply voltage L+ or I/O module not available
x = 0

Byte 2	8	7	6	5	4	3	2	1
Byte 3	x	x	x	x	12	11	10	9

Bit = 1:
Feedback voltage present
Bit = 0:
Feedback voltage missing
x = 0

Figure 3-2 Configuration with enabled status detection of the supply voltage L+ and enabled status detection of the feedback voltage (4 bytes of input data)

Note

- An inserted or missing server module always signals bit=0 for the slot.
- If the server module is missing, the input data is invalid.
- For I/O modules without feedback voltage monitoring, the bit for the feedback voltage is the same as the bit for the missing supply voltage L+.

3.3.2 Input data for interface modules with maximum 32 I/O modules

Configuration with enabled status detection of the supply voltage L+ (4 bytes of input data)

You can read out the following status for each I/O module of the ET 200SP in the input data (byte 0 to 3):

- Supply voltage L+ present/missing or I/O module available/not available (4 bytes)

	7	6	5	4	3	2	1	0
Byte 0	8	7	6	5	4	3	2	1
Byte 1	16	15	14	13	12	11	10	9
Byte 2	24	23	22	21	20	19	18	17
Byte 3	32	31	30	29	28	27	26	25

Slots of the I/O modules
Bit = 1:
Supply voltage L+ available and I/O module available
Bit = 0:
Missing supply voltage L+ or no I/O module available

Figure 3-3 Supply voltage L+ missing or I/O module not available (4 bytes); feedback voltage not available

Configuration with enabled status detection of the supply voltage L+ and enabled status detection of the feedback voltage (8 bytes of input data)

You can read out the following status for each I/O module of the ET 200SP in the input data (byte 0 to 7).

- Supply voltage L+ present/missing or I/O module available/not available (4 bytes)
- Feedback voltage present/missing (4 bytes)

	7	6	5	4	3	2	1	0
Byte 0	8	7	6	5	4	3	2	1
Byte 1	16	15	14	13	12	11	10	9
Byte 2	24	23	22	21	20	19	18	17
Byte 3	32	31	30	29	28	27	26	25

Slots of the I/O modules
Bit = 1:
Supply voltage L+ available and I/O module available
Bit = 0:
Missing supply voltage L+ or I/O module not available

Byte 4	8	7	6	5	4	3	2	1
Byte 5	16	15	14	13	12	11	10	9
Byte 6	24	23	22	21	20	19	18	17
Byte 7	32	31	30	29	28	27	26	25

Bit = 1:
Feedback voltage present
Bit = 0:
Feedback voltage missing

Figure 3-4 Configuration with enabled status detection of the supply voltage L+ and enabled status detection of the feedback voltage (8 bytes of input data)

Note

- An inserted or missing server module always signals bit=0 for the slot.
- If the server module is missing, the input data is invalid.
- For I/O modules without feedback voltage monitoring, the bit for the feedback voltage is the same as the bit for the missing supply voltage L+.

3.3.3 Input data for CPU/interface modules with maximum 64 I/O modules

Configuration with enabled status detection of the supply voltage L+ (8 bytes of input data)

You can read out the following status for each I/O module of the ET 200SP in the input data (byte 0 to 7):

- Supply voltage L+ present/missing or I/O module available/not available (8 bytes)

	7	6	5	4	3	2	1	0
Byte 0	8	7	6	5	4	3	2	1
Byte 1	16	15	14	13	12	11	10	9
Byte 2	24	23	22	21	20	19	18	17
Byte 3	32	31	30	29	28	27	26	25
Byte 4	40	39	38	37	36	35	34	33
Byte 5	48	47	46	45	44	43	42	41
Byte 6	56	55	54	53	52	51	50	49
Byte 7	64	63	62	61	60	59	58	57

Slots of I/O modules
Bit = 1:
Supply voltage L+ present and I/O module available
Bit = 0:
Missing supply voltage L+ or no I/O module available

Figure 3-5 Configuration with enabled status detection of the supply voltage L+ (8 bytes)

Configuration with enabled status detection of the supply voltage L+ and enabled status detection of the feedback voltage (16 bytes of input data)

You can read out the following status for each I/O module of the ET 200SP in the input data (byte 0 to 15):

- Supply voltage L+ present/missing or I/O module available/not available (8 bytes)
- Feedback voltage present/missing (8 bytes)

	7	6	5	4	3	2	1	0
Byte 0	8	7	6	5	4	3	2	1
Byte 1	16	15	14	13	12	11	10	9
Byte 2	24	23	22	21	20	19	18	17
Byte 3	32	31	30	29	28	27	26	25
Byte 4	40	39	38	37	36	35	34	33
Byte 5	48	47	46	45	44	43	42	41
Byte 6	56	55	54	53	52	51	50	49
Byte 7	64	63	62	61	60	59	58	57

Slots of I/O modules
Bit = 1:
Supply voltage L+ present and I/O module available
Bit = 0:
Missing supply voltage L+ or no I/O module available

Byte 8	8	7	6	5	4	3	2	1
Byte 9	16	15	14	13	12	11	10	9
Byte 10	24	23	22	21	20	19	18	17
Byte 11	32	31	30	29	28	27	26	25
Byte 12	40	39	38	37	36	35	34	33
Byte 13	48	47	46	45	44	43	42	41
Byte 14	56	55	54	53	52	51	50	49
Byte 15	64	63	62	61	60	59	58	57

Bit = 1:
Feedback voltage available
Bit = 0:
Feedback voltage not available

Figure 3-6 Configuration with enabled status detection of the supply voltage L+ and enabled status detection of the feedback voltage (16 bytes of input data)

Note

- An inserted or missing server module always signals bit=0 for the slot.
- If the server module is missing, the input data is invalid.
- For I/O modules without feedback voltage monitoring, the bit for the feedback voltage is the same as the bit for the missing supply voltage L+.

3.3.4 Evaluating feedback voltage

Ranges of error

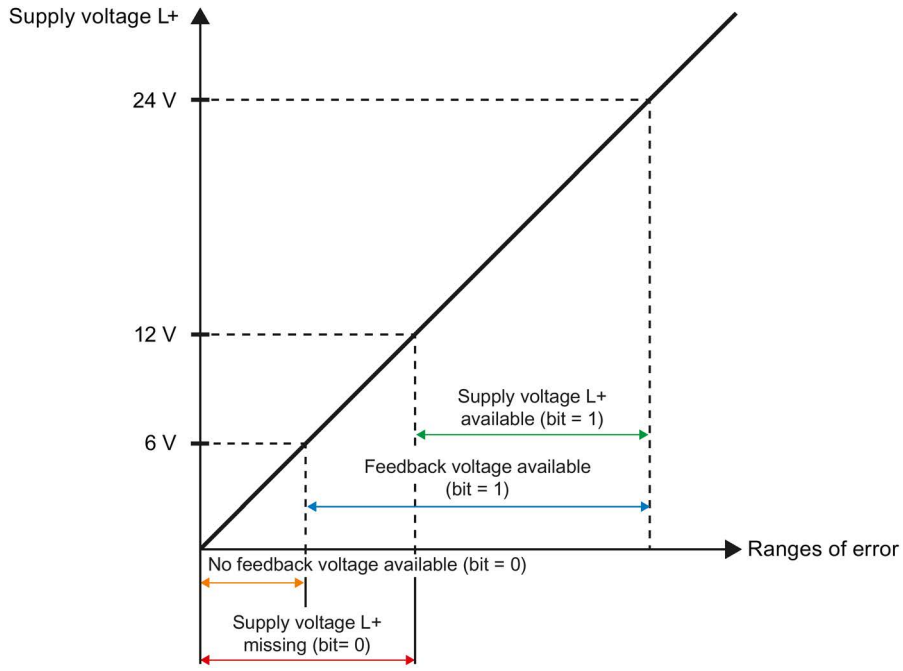

Figure 3-7 Ranges of error of the supply voltage L+ and the feedback voltage

Feedback voltage

A feedback may occur, for example, due to a crossover in a cable of a digital output module and depends on the target status of the supply voltage L+:

If the supply voltage L+ of the I/O module is greater than 6 V, this is entered in the input data in the respective bit.

- Byte 2 and 3 (for 12 I/O modules and 4 bytes of input data)
- Byte 4 to 7 (for 32 I/O modules and 8 bytes of input data)
- Byte 8 to 15 (for 64 I/O modules and 16 bytes of input data)

The feedback voltage can be evaluated via the user program in the following cases:

Table 3- 3 Under what circumstances can the feedback voltage be evaluated via the user program?

Supply voltage L+ safely disconnected[1]	Status detection of supply voltage L+ (input data)	Status detection of feed-back voltage (input data)	Explanation
Yes	Not available: Bit = 0	Available: Bit = 1	The feedback voltage detected is in the range 6 to 12 V (e.g. in the event of a fault in the system)
Yes	Available: Bit = 1	Available: Bit = 1	The feedback voltage detected is > 12 V (e.g. in the event of a fault in the system)

[1] This does not refer to the supply voltage applied to the BaseUnit, but, for example, to the status information of a safety relay.

Diagnostics alarms

4

A diagnostics alarm is output for each diagnostics event. The diagnostics alarms can, for example, be read out in the diagnostics buffer of the CPU. You can evaluate the error codes with the user program.

Table 4- 1 Diagnostics alarms, their meanings and corrective measures

Diagnostics alarm	Error code	Meaning	Solution
Server module with invalid firmware version (< V1.1.1)	$1B_H$	General error	• Replace the server module. • Firmware update of the server module.

Technical specifications

5

5.1 Technical specifications

Technical specifications of the server module

	6ES7193-6PA00-0AA0
Dimensions	
Width	7 mm
Height	117 mm
Depth	36 mm
Weights	
Weight, approx.	19 g

Parameter data record

6

6.1 Parameter assignment and structure of parameter data record

Parameter assignment in the user program

You can change the parameters of the module in RUN.

Changing parameters in RUN

The WRREC instruction is used to transfer the parameters to the module using data record 128. The parameters set in STEP 7 are not changed in the CPU, which means the parameters set in STEP 7 are valid again after a restart.

STATUS output parameter

The module ignores errors that occurred during the transfer of parameters with the WRREC instruction and continues operation with the previous parameter assignment. However, a corresponding error code is written to the STATUS output parameter.

The description of the WRREC instruction and the error codes is available in the STEP 7 online help.

Structure of data record 128

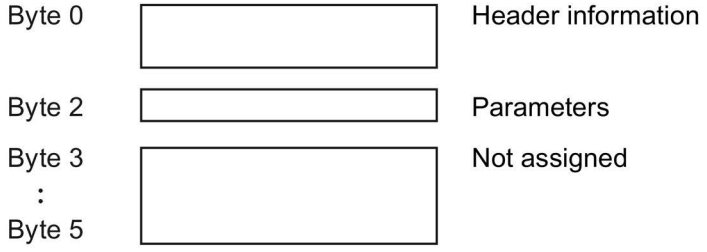

Figure 6-1 Structure of data record 128

Header information

The following diagram shows the structure of the header information.

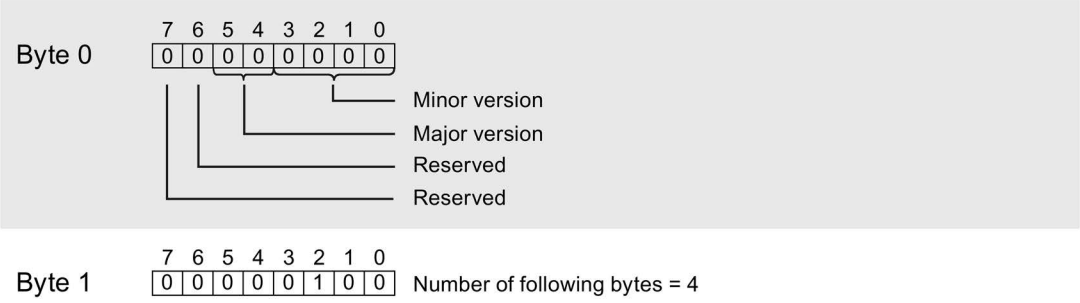

Figure 6-2 Header information

Parameters

The following diagram shows the structure of the parameter in byte 2.

Enable the parameter by setting the corresponding bit to "1".

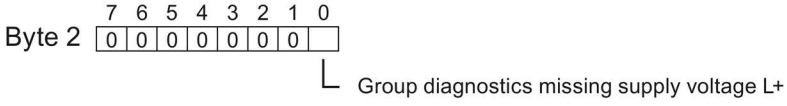

Figure 6-3 Structure of byte 2

Dimensional drawing

A

A.1 Server module

Dimensional drawing of the server module

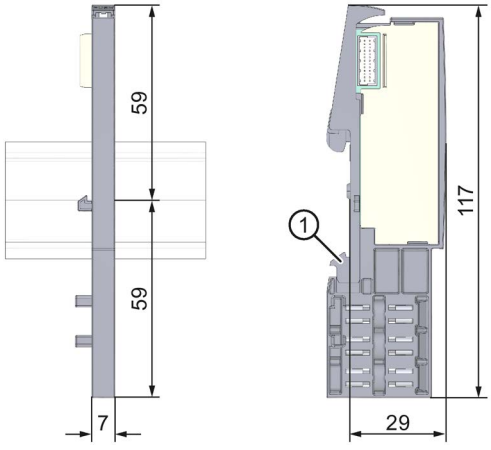

① Contact plating of mounting rail

Figure A-1 Dimensional drawing of the server module

SIEMENS

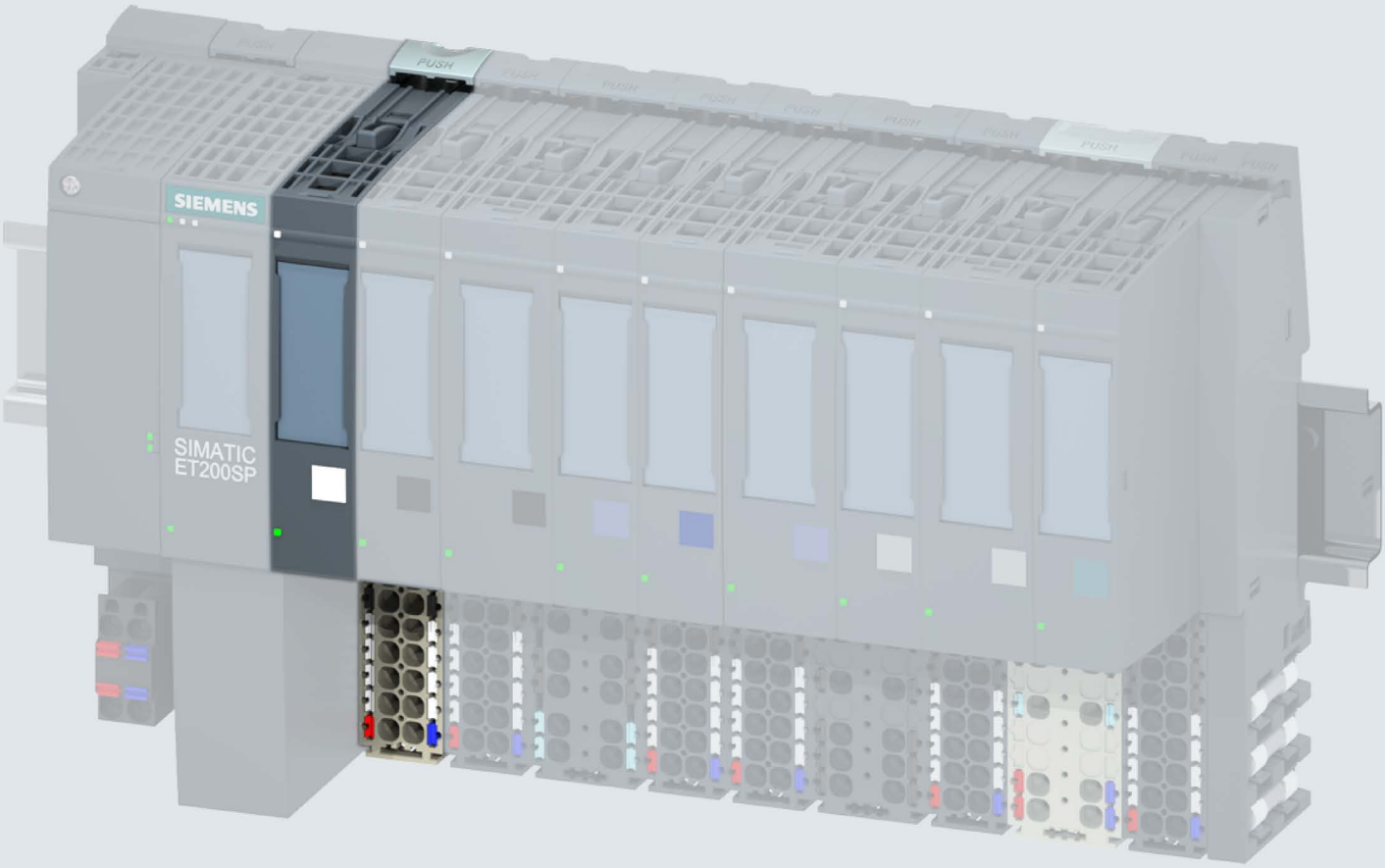

Manual

SIMATIC

ET 200SP

Digital input module
DI 8x24VDC BA (6ES7131-6BF01-0AA0)

Edition 09/2017

support.industry.siemens.com

SIEMENS

SIMATIC

ET 200SP
Digital input module
DI 8x24VDC BA
(6ES7131-6BF01-0AA0)

Manual

Preface

Documentation guide 1

Product overview 2

Wiring 3

Parameters/address space 4

Interrupts/diagnostics alarms 5

Technical specifications 6

Parameter data record A

09/2017

A5E34941724-AC

Legal information

Warning notice system

This manual contains notices you have to observe in order to ensure your personal safety, as well as to prevent damage to property. The notices referring to your personal safety are highlighted in the manual by a safety alert symbol, notices referring only to property damage have no safety alert symbol. These notices shown below are graded according to the degree of danger.

⚠ DANGER

indicates that death or severe personal injury **will** result if proper precautions are not taken.

⚠ WARNING

indicates that death or severe personal injury **may** result if proper precautions are not taken.

⚠ CAUTION

indicates that minor personal injury can result if proper precautions are not taken.

NOTICE

indicates that property damage can result if proper precautions are not taken.

If more than one degree of danger is present, the warning notice representing the highest degree of danger will be used. A notice warning of injury to persons with a safety alert symbol may also include a warning relating to property damage.

Qualified Personnel

The product/system described in this documentation may be operated only by **personnel qualified** for the specific task in accordance with the relevant documentation, in particular its warning notices and safety instructions. Qualified personnel are those who, based on their training and experience, are capable of identifying risks and avoiding potential hazards when working with these products/systems.

Proper use of Siemens products

Note the following:

⚠ WARNING

Siemens products may only be used for the applications described in the catalog and in the relevant technical documentation. If products and components from other manufacturers are used, these must be recommended or approved by Siemens. Proper transport, storage, installation, assembly, commissioning, operation and maintenance are required to ensure that the products operate safely and without any problems. The permissible ambient conditions must be complied with. The information in the relevant documentation must be observed.

Trademarks

All names identified by ® are registered trademarks of Siemens AG. The remaining trademarks in this publication may be trademarks whose use by third parties for their own purposes could violate the rights of the owner.

Disclaimer of Liability

We have reviewed the contents of this publication to ensure consistency with the hardware and software described. Since variance cannot be precluded entirely, we cannot guarantee full consistency. However, the information in this publication is reviewed regularly and any necessary corrections are included in subsequent editions.

Siemens AG
Division Digital Factory
Postfach 48 48
90026 NÜRNBERG
GERMANY

A5E34941724-AC
℗ 10/2017 Subject to change

Copyright © Siemens AG 2015 - 2017.
All rights reserved

Preface

Purpose of the documentation

This manual supplements the system manual ET 200SP distributed I/O system (http://support.automation.siemens.com/WW/view/en/58649293).

Functions that generally relate to the system are described in this manual.

The information provided in this manual and in the system/function manuals supports you in commissioning the system.

Changes compared to previous version

Compared to the previous version, this manual contains the following change:

Due to the change in hardware, the article number of the module has been changed from 6ES7131-6BF00-0AA0 to 6ES7131-6BF01-0AA0. Both modules are compatible, except for the firmware-update function.

Conventions

CPU: When the term "CPU" is used in this manual, it applies to the CPUs of the S7-1500 automation system as well as to the CPUs/interface modules of the distributed I/O system ET 200SP.

STEP 7: In this documentation, "STEP 7" is used as a synonym for all versions of the configuration and programming software "STEP 7 (TIA Portal)".

Please also observe notes marked as follows:

Note

A note contains important information on the product described in the documentation, on the handling of the product or on the section of the documentation to which particular attention should be paid.

Security information

Siemens provides products and solutions with industrial security functions that support the secure operation of plants, systems, machines and networks.

In order to protect plants, systems, machines and networks against cyber threats, it is necessary to implement – and continuously maintain – a holistic, state-of-the-art industrial security concept. Siemens' products and solutions constitute one element of such a concept.

Customers are responsible for preventing unauthorized access to their plants, systems, machines and networks. Such systems, machines and components should only be connected to an enterprise network or the internet if and to the extent such a connection is necessary and only when appropriate security measures (e.g. firewalls and/or network segmentation) are in place.

For additional information on industrial security measures that may be implemented, please visit (http://www.siemens.com/industrialsecurity).

Siemens' products and solutions undergo continuous development to make them more secure. Siemens strongly recommends that product updates are applied as soon as they are available and that the latest product versions are used. Use of product versions that are no longer supported, and failure to apply the latest updates may increase customers' exposure to cyber threats.

To stay informed about product updates, subscribe to the Siemens Industrial Security RSS Feed under (http://www.siemens.com/industrialsecurity).

Table of contents

Preface 4
1 Documentation guide 7
2 Product overview 12
2.1 Properties 12
3 Wiring 14
3.1 Wiring and block diagram 14
4 Parameters/address space 17
4.1 Parameters 17
4.2 Explanation of parameters 19
4.3 Address space 20
5 Interrupts/diagnostics alarms 21
5.1 Status and error displays 21
5.2 Interrupts 23
5.3 Diagnostics alarms 23
6 Technical specifications 24
6.1 Technical specifications 24
A Parameter data record 28
A.1 Parameter assignment and structure of parameter data record 28

Documentation guide

1

The documentation for the SIMATIC S7-1500 automation system and the SIMATIC ET 200MP distributed I/O system is arranged into three areas.
This arrangement enables you to access the specific content you require.

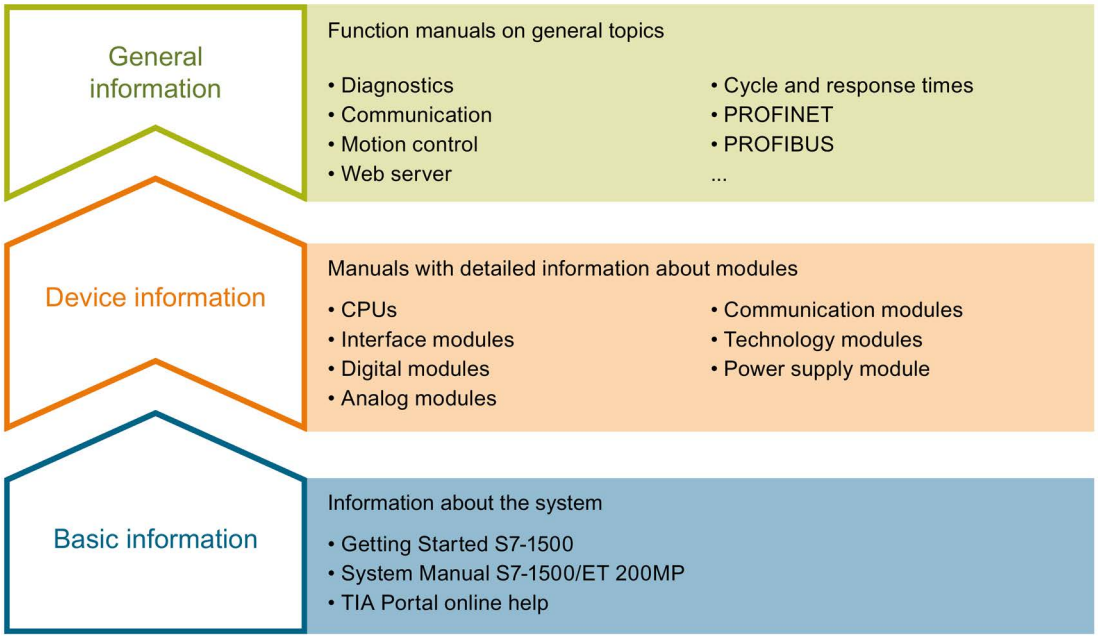

Basic information

The System Manual and Getting Started describe in detail the configuration, installation, wiring and commissioning of the SIMATIC S7-1500 and ET 200MP systems. The STEP 7 online help supports you in the configuration and programming.

Device information

Product manuals contain a compact description of the module-specific information, such as properties, wiring diagrams, characteristics and technical specifications.

General information

The function manuals contain detailed descriptions on general topics regarding the SIMATIC S7-1500 and ET 200MP systems, e.g. diagnostics, communication, motion control, Web server, OPC UA.

You can download the documentation free of charge from the Internet (http://w3.siemens.com/mcms/industrial-automation-systems-simatic/en/manual-overview/Pages/Default.aspx).

Changes and supplements to the manuals are documented in a Product Information.

You can download the product information free of charge from the Internet (https://support.industry.siemens.com/cs/us/en/view/68052815).

Manual Collection S7-1500/ET 200MP

The Manual Collection contains the complete documentation on the SIMATIC S7-1500 automation system and the ET 200MP distributed I/O system gathered together in one file.

You can find the Manual Collection on the Internet (https://support.industry.siemens.com/cs/ww/en/view/86140384).

SIMATIC S7-1500 comparison list for programming languages

The comparison list contains an overview of which instructions and functions you can use for which controller families.

You can find the comparison list on the Internet (https://support.industry.siemens.com/cs/ww/en/view/86630375).

"mySupport"

With "mySupport", your personal workspace, you make the best out of your Industry Online Support.

In "mySupport", you can save filters, favorites and tags, request CAx data and compile your personal library in the Documentation area. In addition, your data is already filled out in support requests and you can get an overview of your current requests at any time.

You must register once to use the full functionality of "mySupport".

You can find "mySupport" on the Internet (https://support.industry.siemens.com/My/ww/en).

"mySupport" - Documentation

In the Documentation area in "mySupport" you can combine entire manuals or only parts of these to your own manual.
You can export the manual as PDF file or in a format that can be edited later.

You can find "mySupport" - Documentation on the Internet (http://support.industry.siemens.com/My/ww/en/documentation).

"mySupport" - CAx data

In the CAx data area in "mySupport", you can access the current product data for your CAx or CAe system.

You configure your own download package with a few clicks.

In doing so you can select:

- Product images, 2D dimension drawings, 3D models, internal circuit diagrams, EPLAN macro files
- Manuals, characteristics, operating manuals, certificates
- Product master data

You can find "mySupport" - CAx data on the Internet (http://support.industry.siemens.com/my/ww/en/CAxOnline).

Application examples

The application examples support you with various tools and examples for solving your automation tasks. Solutions are shown in interplay with multiple components in the system - separated from the focus on individual products.

You will find the application examples on the Internet (https://support.industry.siemens.com/sc/ww/en/sc/2054).

TIA Selection Tool

With the TIA Selection Tool, you can select, configure and order devices for Totally Integrated Automation (TIA).
This tool is the successor of the SIMATIC Selection Tool and combines the known configurators for automation technology into one tool.
With the TIA Selection Tool, you can generate a complete order list from your product selection or product configuration.

You can find the TIA Selection Tool on the Internet (http://w3.siemens.com/mcms/topics/en/simatic/tia-selection-tool).

SIMATIC Automation Tool

You can use the SIMATIC Automation Tool to perform commissioning and maintenance activities simultaneously on various SIMATIC S7 stations as a bulk operation independent of the TIA Portal.

General function overview:

- Network browsing and creation of a table showing the accessible devices in the network.
- Flashing of device LEDs or HMI display to locate a device
- Downloading of addresses (IP, subnet, gateway) to a device
- Downloading the PROFINET name (station name) to a device
- Placing a CPU in RUN or STOP mode
- Setting the time in a CPU to the current time of your PG/PC
- Downloading a new program to a CPU or an HMI device
- Downloading from CPU, downloading to CPU or deleting recipe data from a CPU
- Downloading from CPU or deleting data log data from a CPU
- Backup/restore of data from/to a backup file for CPUs and HMI devices
- Downloading service data from a CPU
- Reading the diagnostics buffer of a CPU
- Performing a CPU memory reset
- Resetting devices to factory settings
- Downloading a firmware update to a device

You can find the SIMATIC Automation Tool on the Internet (https://support.industry.siemens.com/cs/ww/en/view/98161300).

PRONETA

With SIEMENS PRONETA (PROFINET network analysis), you analyze the PROFINET network during commissioning. PRONETA features two core functions:

- The topology overview independently scans PROFINET network and all connected components.
- The IO check is a fast test of the wiring and the module configuration of a system.

You can find SIEMENS PRONETA on the Internet (https://support.industry.siemens.com/cs/ww/en/view/67460624).

SINETPLAN

SINETPLAN, the Siemens Network Planner, supports you in planning automation systems and networks based on PROFINET. The tool facilitates professional and predictive dimensioning of your PROFINET installation as early as in the planning stage. In addition, SINETPLAN supports you during network optimization and helps you to exploit network resources optimally and to plan reserves. This helps to prevent problems in commissioning or failures during productive operation even in advance of a planned operation. This increases the availability of the production plant and helps improve operational safety.

The advantages at a glance

- Network optimization thanks to port-specific calculation of the network load
- Increased production availability thanks to online scan and verification of existing systems
- Transparency before commissioning through importing and simulation of existing STEP 7 projects
- Efficiency through securing existing investments in the long term and optimal exploitation of resources

You can find SINETPLAN on the Internet (https://www.siemens.com/sinetplan).

Product overview

2

2.1 Properties

Article number

6ES7131-6BF01-0AA0 (Number in package unit: 1 unit)

6ES7131-6BF01-2AA0 (Number in package unit: 10 units)

View of the module

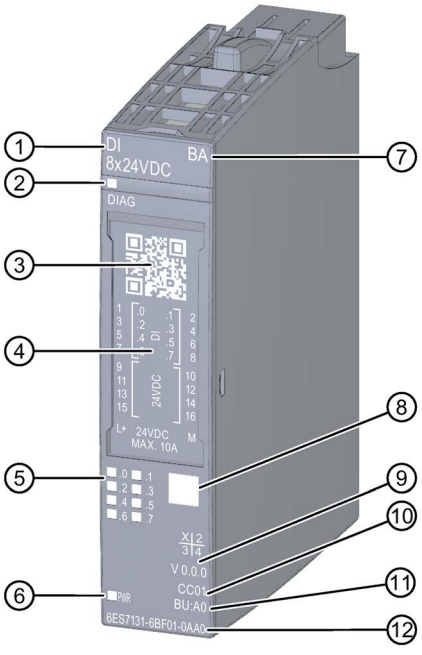

① Module type and name
② LED for diagnostics
③ 2D matrix code
④ Wiring diagram
⑤ LEDs for channel status
⑥ LED for supply voltage
⑦ Function class
⑧ Color coding module type
⑨ Function and firmware version
⑩ Color code for selecting the color identification labels
⑪ BU type
⑫ Article number

Figure 2-1 View of the DI 8×24VDC BA module

Properties

The module has the following technical properties:

- Digital input module with 8 inputs
- Supply voltage L+
- Sink input (PNP, sinking input)
- Configurable input delay 0.05 ms to 20 ms (per channel)
- Suitable for connection of switches and 2-wire sensors according to IEC 61131, type 1, 2 and 3

The module supports the following functions:

Table 2- 1 Version dependencies of the functions

Function	HW version	FW version	STEP 7		GSD file	
			TIA Portal	V5.x	PROFINET IO	PROFIBUS DP
Identification data I&M0 to I&M3	FS01	V0.0.0 and higher	V14 or higher with HSP 0222	V5.5 SP3 or higher with HSP 0229 V7.0	X	X
Configuration in RUN	FS01	V0.0.0 and higher	V14 or higher with HSP 0222	V5.5 SP3 or higher with HSP 0229 V7.0	X	X

You can configure the module with STEP 7 and with a GSD file.

Accessories

The following accessories must be ordered separately:

- Labeling strips
- Color identification labels
- Reference identification labels
- Shield connector

See also

You can find additional information on the accessories in the ET 200SP distributed I/O system (http://support.automation.siemens.com/WW/view/en/58649293) system manual.

Wiring 3

3.1 Wiring and block diagram

This section includes the block diagram of the DI 8x24VDC BA module with the terminal assignments for a 1-wire, 2-wire and 3-wire connection.

Information about wiring of the BaseUnit is available in the system manual ET 200SP distributed I/O system (http://support.automation.siemens.com/WW/view/en/58649293).

Note

You may use and combine the different wiring options for all channels.

Note

The load group of the module must begin with a light-colored BaseUnit. Keep this in mind also during the configuration.

Note

The input channels provide values even without connected supply voltage L+. The characteristic type 2 is only maintained with connected supply voltage L+.

Connection: 1-wire and 2-wire connection

The figure below shows the block diagram and an example of the terminal assignment of the digital input module DI 8x24VDC BA on the BaseUnit BU type A0 without AUX terminals (1-wire and 2-wire connection).

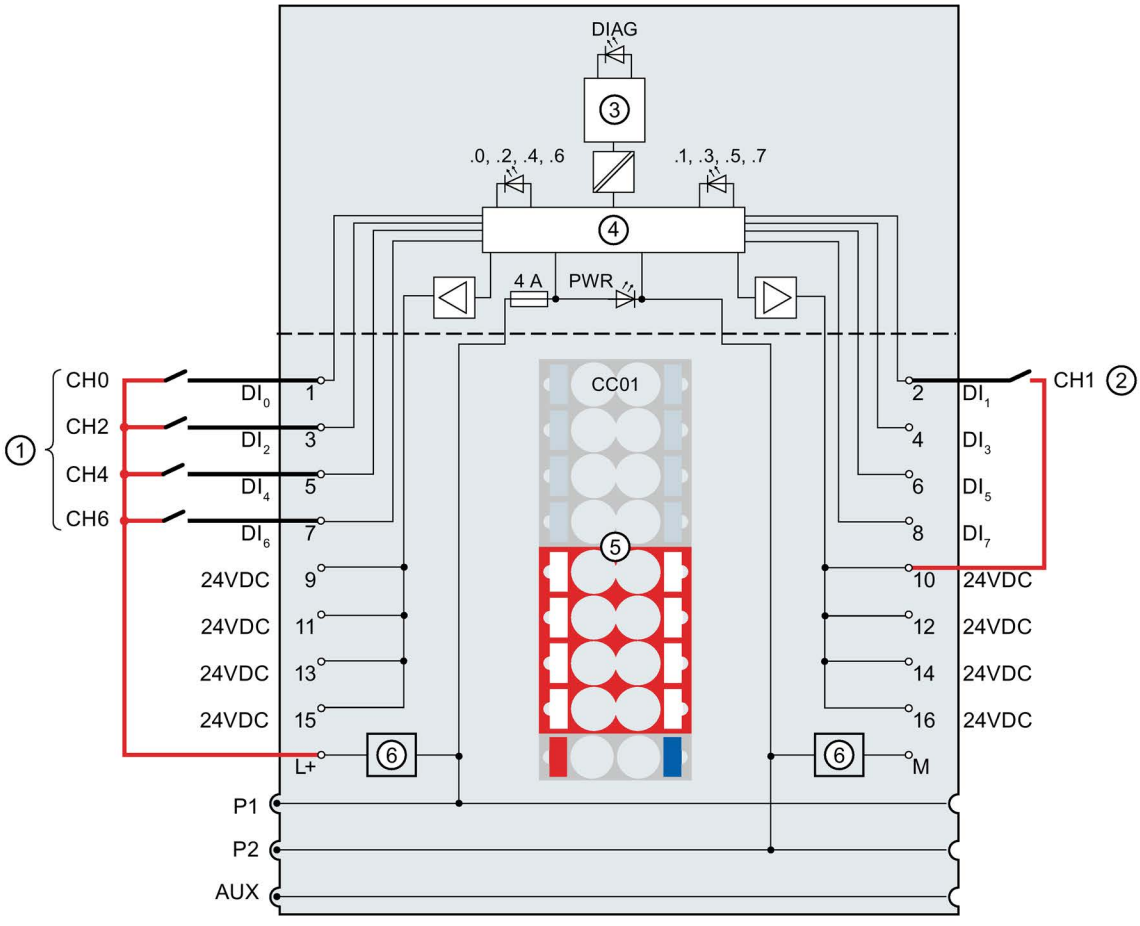

①	1-wire connection	DI_n	Input signal, channel n
②	2-wire connection	24 V DC	Encoder supply, channel n
③	Backplane bus interface	L+	24 V DC (feed for light-colored BaseUnit only)
④	Input electronics	M	Ground
⑤	Color identification label CCxx (optional)	DIAG	Error or Diagnostics LED (green, red)
⑥	Filter connection supply voltage (only when light-colored BaseUnit is present)	.0 to .7	Channel status LED (green)
P1, P2, AUX	Internal self-assembling voltage buses Connection to left (dark-colored BaseUnit) Connection to left interrupted (light-colored BaseUnit)	PWR	Power LED (green)

Figure 3-1 Wiring and block diagram for 1-wire and 2-wire connection of encoders

Connection: 3-wire connection

The figure below shows the block diagram and an example of the terminal assignment of the digital input module DI 8x24VDC BA on the BaseUnit BU type A0 with AUX terminals (3-wire connection).

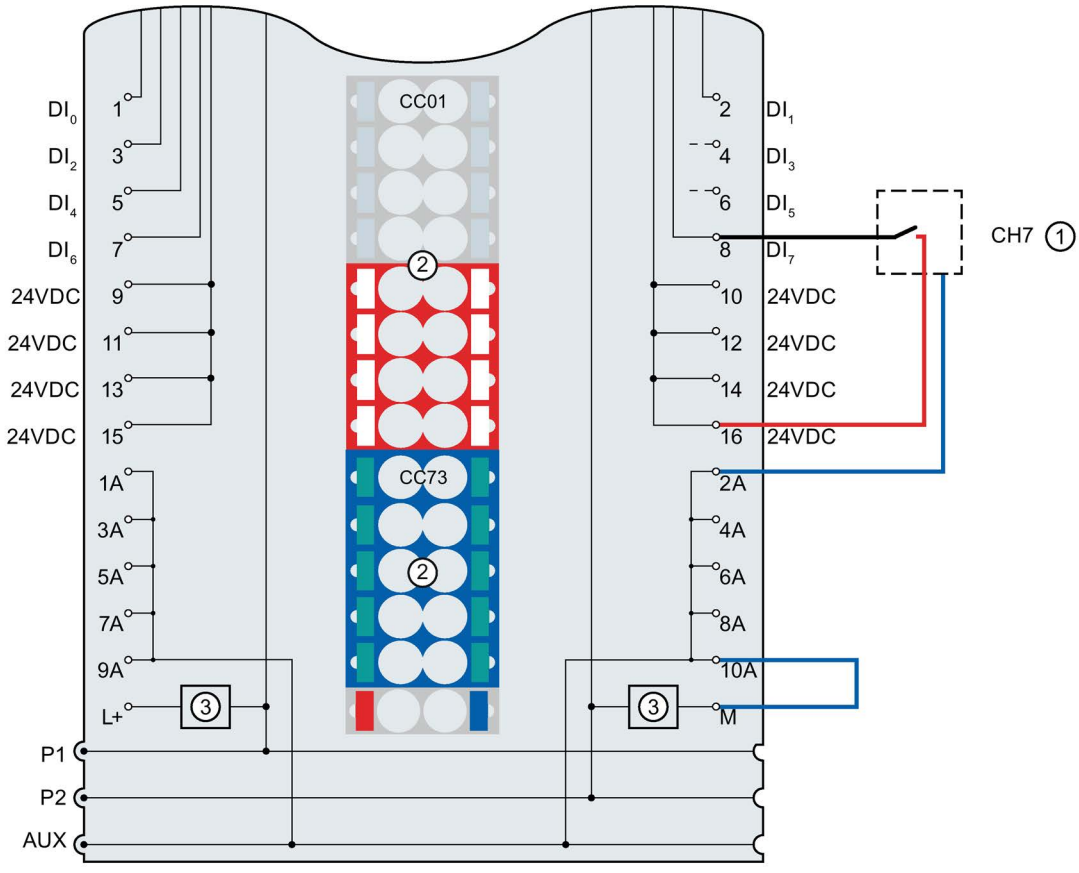

①	3-wire connection
②	Color identification labels CCxx (optional)
③	Filter connection supply voltage (only when light-colored BaseUnit is present)
DI_n	Input signal, channel n
24 V DC	Encoder supply, channel n
L+	24 V DC (feed for light-colored BaseUnit only)
M	Ground
1 A to 10 A	AUX terminals
P1, P2, AUX	Internal self-assembling voltage buses Connection to left (dark-colored BaseUnit) Connection to left interrupted (light-colored BaseUnit)

Figure 3-2 Wiring and block diagram for 3-wire connection of encoders

Parameters/address space 4

4.1 Parameters

DI 8x24VDC BA parameters

Specify the module properties with the various parameters in the course of your STEP 7 configuration. The following table lists the configurable parameters. The effective range of the parameters that can be set depends on the type of configuration.

The following configurations are possible:

- Central operation with an ET 200SP CPU
- Distributed operation on PROFINET IO in an ET 200SP system
- Distributed operation with PROFIBUS DP in an ET 200SP system

When assigning parameters in the user program, use the "WRREC" instruction to transfer the parameters to the module by means of data records; see section Parameter assignment and structure of the parameter data record (Page 28).

The following parameter settings are possible:

Table 4- 1 Configurable parameters and their defaults (GSD file)

Parameter	Value range	Default	Reconfiguration in RUN	Scope with configuration software, e.g. STEP 7 (TIA Portal)	
				GSD file PROFINET IO	GSD file PROFIBUS DP
Diagnostics: No supply voltage L+	• Disable • Enable	Disable	Yes	Module	Module
Channel activated	• Disable • Enable	Enable	Yes	Channel	Channel

Parameter	Value range	Default	Reconfiguration in RUN	Scope with configuration software, e.g. STEP 7 (TIA Portal)	
				GSD file PROFINET IO	GSD file PROFIBUS DP
Input delay	• None • 0.05 ms • 0.1 ms • 0.4 ms • 0.8 ms • 1.6 ms • 3.2 ms • 12.8 ms • 20 ms	3.2 ms	Yes	Channel	Module [1]
Potential group	• Use potential group of the left module (module plugged into a dark-colored BaseUnit) • Enable new potential group (module plugged into light-colored BaseUnit)	Use potential group of the left module	No	Module	Module

[1] Only when configuring using a PROFIBUS GSD file; does not apply to configuration with STEP 7 via HSP: The parameter assignment options are limited because PROFIBUS GSD configuration limits the number of parameters to a maximum of 244 bytes for each ET 200SP station. If required, you can still assign these parameters using the data record 128 as described in the column "GSD file PROFINET IO" (see table above). The parameter length of the I/O module is 16 bytes.

4.2 Explanation of parameters

Diagnostics: No supply voltage L+

Enabling of the diagnostics for no or insufficient supply voltage L+.

Channel activated

Determines whether a channel is activated or deactivated.

Input delay

This parameter can be used to suppress signal interference. Changes to the signal are only detected if they are constantly pending longer than the set input delay time.

Potential group

A potential group consists of a group of directly adjacent I/O modules within an ET 200SP station, which are supplied via a common supply voltage.

A potential group begins with a light-colored BaseUnit through which the required voltage is supplied for all modules of the potential group. The light-colored BaseUnit interrupts the three self-assembling voltage buses P1, P2 and AUX to the left neighbor.

All additional I/O modules of this potential group are plugged into dark-colored BaseUnits. You take the potential of the self-assembling voltage buses P1, P2 and AUX from the left neighbor.

A potential group ends with the dark-colored BaseUnit, which follows a light-colored BaseUnit or server module in the station configuration.

4.3 Address space

The module can be configured differently in STEP 7; see following table. Depending on the configuration, additional/different addresses are assigned in the process image of the inputs.

Configuration options of DI 8x24VDC BA

You can configure the module with STEP 7 (TIA Portal) or with a GSD file. If you configure the module using a GSD file, the configurations are available under various short designations/module names; see the table below. The following configurations are possible:

Table 4- 2 Configuration options with GSD file

Configuration	Short designation/module name in the GSD file	Configuration software, e.g. with STEP 7 (TIA Portal)		
		Integrated in hardware catalog STEP 7	GSD file PROFINET IO	GSD file PROFIBUS DP
1 x 8-channel without value status	DI 8x24VDC BA V0.0	V14, SP1 or higher with HSP 0222	X	X

Address space

The figure below shows the assignment of the address space for DI 8x24VDC BA.

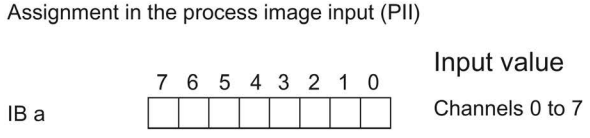

Figure 4-1 Address space of DI 8x24VDC BA

Interrupts/diagnostics alarms

5

5.1 Status and error displays

LED displays

The figure below shows the LED displays (status and error displays) of the DI 8x24VDC BA.

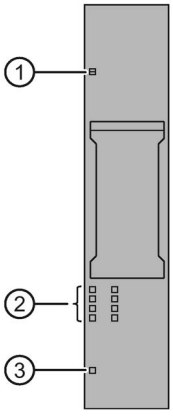

① DIAG (green/red)
② Channel status (green)
③ PWR (green)

Figure 5-1 LED displays

Meaning of the LEDs

The following tables contain the meaning of the status and error displays. Corrective measures for diagnostics alarms can be found in section Diagnostics alarms (Page 23).

DIAG LED

Table 5- 1 Error display of the DIAG LED

DIAG LED	Meaning
Off	Backplane bus supply of the ET 200SP not OK
Flashes	Module parameters not assigned
On	Module parameters assigned
Flashes	Module diagnostics is available

Channel status LED

Table 5- 2 Status display of the channel status LED

Channel status LED	Meaning
Off	Process signal = 0
On	Process signal = 1

PWR LED

Table 5- 3 Status display of the PWR LED

PWR LED	Meaning
Off	Supply voltage L+ missing
On	Supply voltage L+ present

5.2 Interrupts

The DI 8×24VDC BA digital input module supports diagnostic interrupts.

Diagnostic interrupts

The module generates a diagnostic interrupt at the following events:

- Parameter assignment error
- No supply voltage

5.3 Diagnostics alarms

Diagnostics alarms

A diagnostic alarm is generated and the DIAG-LED flashes on the module for each diagnostics event. You can read out the diagnostics alarms, for example, in the diagnostics buffer of the CPU. You can evaluate the error codes with the user program.

Table 5- 4 Diagnostics alarms, their meanings and corrective measures

Diagnostics alarm	Error code	Meaning	Solution
Parameter assignment error	10_H	• The module cannot evaluate parameters for the channel. • Incorrect parameter assignment.	Correct the parameter assignment
No supply voltage	11_H	No or insufficient supply voltage L+.	• Check supply voltage L+ on the BaseUnit • Check BaseUnit type

Technical specifications

6

6.1 Technical specifications

Technical specifications of the DI 8×24VDC BA

Article number	6ES7131-6BF01-0AA0
General information	
Product type designation	DI 8x24 VDC BA
Firmware version	V0.0
• FW update possible	No
usable BaseUnits	BU type A0
Color code for module-specific color identification plate	CC01
Product function	
• I&M data	Yes; I&M0 to I&M3
Engineering with	
• STEP 7 TIA Portal configurable/integrated as of version	V14
• STEP 7 configurable/integrated as of version	V5.5 SP3 / -
• PROFIBUS as of GSD version/GSD revision	One GSD file each, Revision 3 and 5 and higher
• PROFINET as of GSD version/GSD revision	GSDML V2.3
Operating mode	
• DI	Yes
• Counter	No
• Oversampling	No
• MSI	No
Supply voltage	
Rated value (DC)	24 V
permissible range, lower limit (DC)	19.2 V
permissible range, upper limit (DC)	28.8 V
Reverse polarity protection	Yes
Input current	
Current consumption, max.	70 mA; All channels are supplied from the encoder supply

Article number	6ES7131-6BF01-0AA0
Encoder supply	
Number of outputs	8
Output voltage encoder supply, min.	19.2 V
Short-circuit protection	Yes; per module
24 V encoder supply	
• 24 V	Yes
• Short-circuit protection	Yes
Power loss	
Power loss, typ.	1.6 W; 24 V, 8 inputs supplied via encoder supply
Address area	
Address space per module	
• Inputs	1 byte
Hardware configuration	
Automatic encoding	Yes
• Mechanical coding element	Yes
Selection of BaseUnit for connection variants	
• 1-wire connection	BU type A0
• 2-wire connection	BU type A0
• 3-wire connection	BU type A0 with AUX terminals
• 4-wire connection	BU type A0 + Potential isolation module
Digital inputs	
Number of digital inputs	8
Digital inputs, parameterizable	Yes
Source/sink input	P-reading
Input characteristic curve in accordance with IEC 61131, type 2	Yes
Input voltage	
• Type of input voltage	DC
• Rated value (DC)	24 V
• for signal "0"	-30 to +5V
• for signal "1"	+11 to +30V
Input current	
• for signal "1", typ.	6.8 mA

Article number	6ES7131-6BF01-0AA0
Input delay (for rated value of input voltage) for standard inputs	
– parameterizable	Yes; 0.05 / 0.1 / 0.4 / 0.8 / 1.6 / 3.2 / 12.8 / 20 ms (in each case + delay of 30 to 500 µs, depending on line length)
– at "0" to "1", min.	0.05 ms
– at "0" to "1", max.	20 ms
– at "1" to "0", min.	0.05 ms
– at "1" to "0", max.	20 ms
Cable length	
• shielded, max.	1 000 m
• unshielded, max.	600 m
Encoder	
Connectable encoders	
• 2-wire sensor	Yes
– permissible quiescent current (2-wire sensor), max.	2 mA
Isochronous mode	
Isochronous operation (application synchronized up to terminal)	No
Interrupts/diagnostics/status information	
Diagnostics function	Yes
Alarms	
• Diagnostic alarm	Yes
Diagnostic messages	
• Diagnostic information readable	Yes
• Monitoring the supply voltage	Yes
– parameterizable	Yes
• Monitoring of encoder power supply	No
• Wire-break	No
• Short-circuit	No
Diagnostics indication LED	
• Monitoring of the supply voltage (PWR-LED)	Yes; green PWR LED
• Channel status display	Yes; Green LED
• for channel diagnostics	No
• for module diagnostics	Yes; green/red DIAG LED

Article number	6ES7131-6BF01-0AA0
Potential separation	
Potential separation channels	
• between the channels	No
• between the channels and backplane bus	Yes
• between the channels and the power supply of the electronics	No
Isolation	
Isolation tested with	707 V DC (type test)
Ambient conditions	
Ambient temperature during operation	
• horizontal installation, min.	0 °C
• horizontal installation, max.	60 °C
• vertical installation, min.	0 °C
• vertical installation, max.	50 °C
Altitude during operation based on sea level	
• Ambient air temperature-barometric pressure-altitude	On request: Ambient temperatures lower than 0 °C (without condensation) and/or installation altitudes greater than 2 000 m
Dimensions	
Width	15 mm
Height	73 mm
Depth	58 mm
Weights	
Weight, approx.	28 g

Dimension drawing

See the manual ET 200SP BaseUnits (http://support.automation.siemens.com/WW/view/en/58532597/133300)

Parameter data record

A

A.1 Parameter assignment and structure of parameter data record

The data record of the module has an identical structure, regardless of whether you configure the module with PROFIBUS DP or PROFINET IO. With data record 128, you can reconfigure the module in your user program regardless of your programming. This means that you can use all the functions of the module even if you configured it via PROFIBUS-GSD.

Parameter assignment in the user program

The module parameters can be re-assigned in RUN (for example, the input delay of selected channels can be edited in RUN without having an effect on the other channels).

Changing parameters in RUN

The "WRREC" instruction is used to transfer the parameters to the module using data record 128. The parameters set in STEP 7 are not changed in the CPU, which means the parameters set in STEP 7 will be valid again after a restart.

STATUS output parameter

The module ignores errors that occur during the transfer of parameters with the "WRREC" instruction and continues operation with the previous parameter assignment. The STATUS output parameter contains a corresponding error code.

The description of the "WRREC" instruction and the error codes is available in the STEP 7 online help.

Structure of data record 128

Note

Channel 0 includes the diagnostics enable for the entire module.

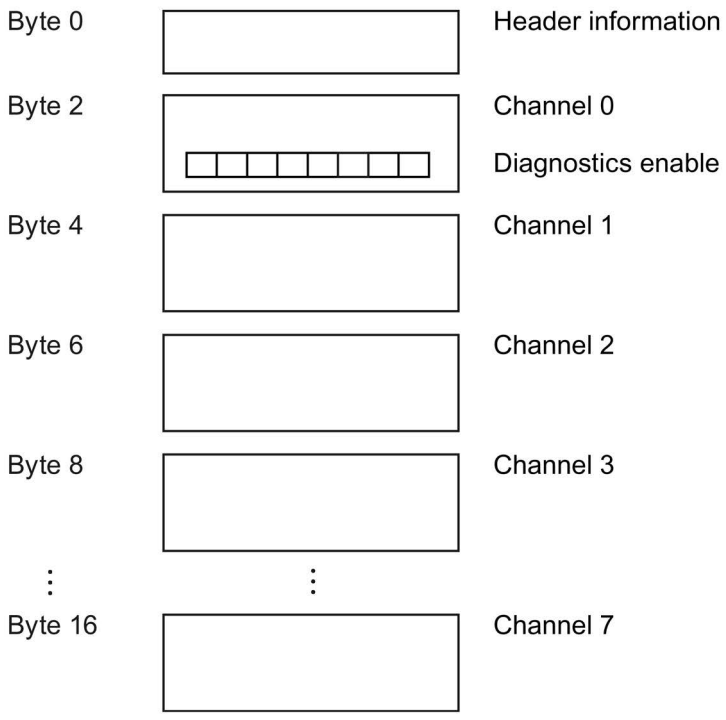

Figure A-1 Structure of data record 128

Header information

The figure below shows the structure of the header information.

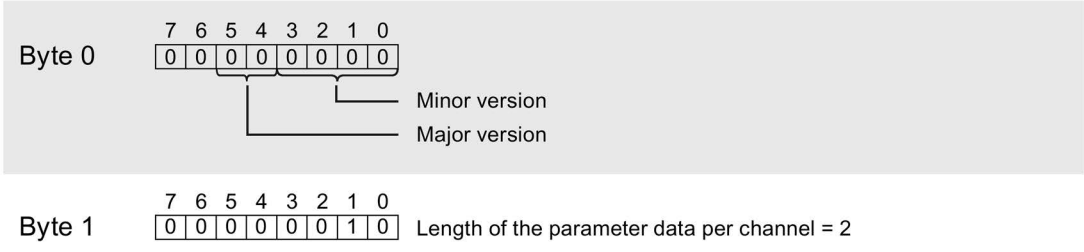

Figure A-2 Header information

Parameters

The figure below shows the structure of the parameters for channels 0 to 7.

Enable a parameter by setting the corresponding bit to "1".

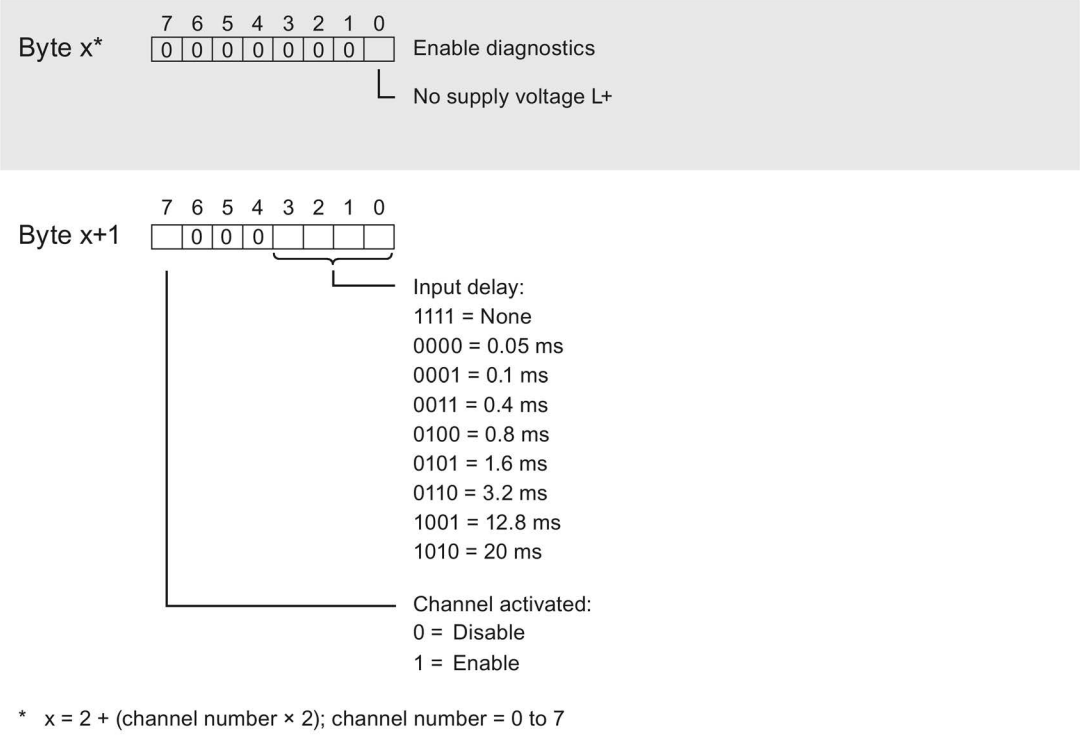

* x = 2 + (channel number × 2); channel number = 0 to 7

Figure A-3 Structure byte x to x+1 for the channels 0 to 7

Error transferring the data record

The module always checks all the values of the transferred data record. Only if all the values were transferred without errors does the module apply the values from the data record.

The WRREC instruction for writing data records returns corresponding error codes when errors occur in the STATUS parameter, see also the description of the "STATUS" parameter in the STEP 7 online help).

The following table shows the module-specific error codes and their meaning for the parameter data record 128.

Error code in STATUS parameter (hexadecimal)				Meaning	Solution
Byte 0	Byte 1	Byte 2	Byte 3		
DF	80	B0	xx	Number of the data record unknown.	Enter a valid number for the data record.
DF	80	B1	xx	Length of the data record incorrect.	Enter a valid value for the data record length.
DF	80	B2	xx	Slot invalid or cannot be accessed.	• Check the station whether the module is plugged or drawn. • Check the assigned values for the parameters of the WRREC instruction.
DF	80	E0	xx	Wrong version or error in the header information.	Correct the version, length and number of parameter blocks.
DF	80	E1	07	Invalid coding for input filter time.	Check the parameters of the module.

SIEMENS

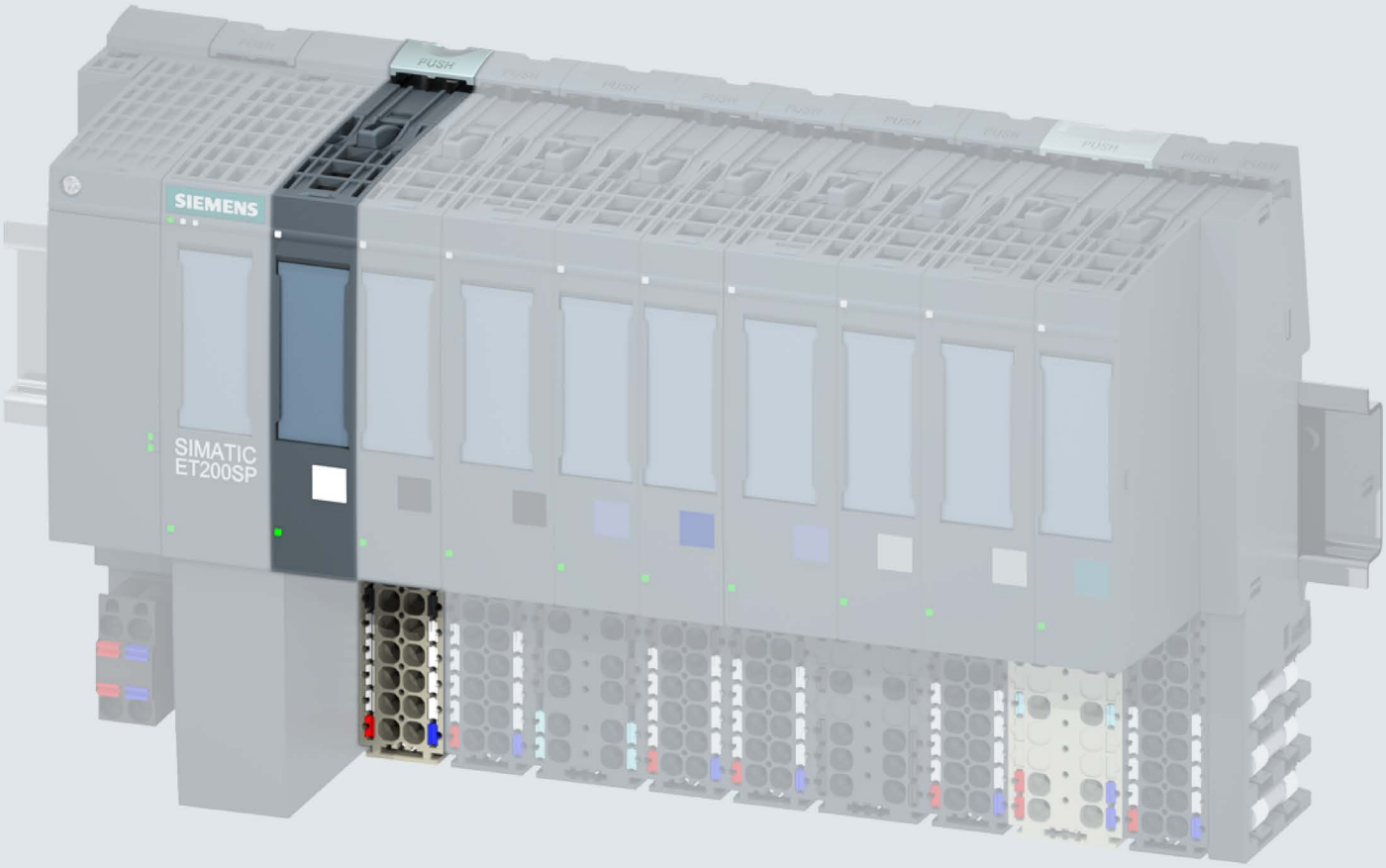

Manual

SIMATIC

ET 200SP

Digital input module
DI 8x24VDC HF (6ES7131-6BF00-0CA0)

Edition 12/2017

support.industry.siemens.com

SIEMENS

SIMATIC

ET 200SP
Digital input module
DI 8x24VDC HF
(6ES7131-6BF00-0CA0)

Manual

Preface

Documentation guide 1

Product overview 2

Wiring 3

Parameters/address space 4

Interrupts/diagnostics alarms 5

Technical specifications 6

Parameter data record A

12/2017

A5E03576305-AE

Legal information

Warning notice system

This manual contains notices you have to observe in order to ensure your personal safety, as well as to prevent damage to property. The notices referring to your personal safety are highlighted in the manual by a safety alert symbol, notices referring only to property damage have no safety alert symbol. These notices shown below are graded according to the degree of danger.

⚠ DANGER

indicates that death or severe personal injury **will** result if proper precautions are not taken.

⚠ WARNING

indicates that death or severe personal injury **may** result if proper precautions are not taken.

⚠ CAUTION

indicates that minor personal injury can result if proper precautions are not taken.

NOTICE

indicates that property damage can result if proper precautions are not taken.

If more than one degree of danger is present, the warning notice representing the highest degree of danger will be used. A notice warning of injury to persons with a safety alert symbol may also include a warning relating to property damage.

Qualified Personnel

The product/system described in this documentation may be operated only by **personnel qualified** for the specific task in accordance with the relevant documentation, in particular its warning notices and safety instructions. Qualified personnel are those who, based on their training and experience, are capable of identifying risks and avoiding potential hazards when working with these products/systems.

Proper use of Siemens products

Note the following:

⚠ WARNING

Siemens products may only be used for the applications described in the catalog and in the relevant technical documentation. If products and components from other manufacturers are used, these must be recommended or approved by Siemens. Proper transport, storage, installation, assembly, commissioning, operation and maintenance are required to ensure that the products operate safely and without any problems. The permissible ambient conditions must be complied with. The information in the relevant documentation must be observed.

Trademarks

All names identified by ® are registered trademarks of Siemens AG. The remaining trademarks in this publication may be trademarks whose use by third parties for their own purposes could violate the rights of the owner.

Disclaimer of Liability

We have reviewed the contents of this publication to ensure consistency with the hardware and software described. Since variance cannot be precluded entirely, we cannot guarantee full consistency. However, the information in this publication is reviewed regularly and any necessary corrections are included in subsequent editions.

Siemens AG
Division Digital Factory
Postfach 48 48
90026 NÜRNBERG
GERMANY

A5E03576305-AE
℗ 12/2017 Subject to change

Copyright © Siemens AG 2013 - 2017.
All rights reserved

Preface

Purpose of the documentation

This manual supplements the system manual ET 200SP distributed I/O system (http://support.automation.siemens.com/WW/view/en/58649293).

Functions that generally relate to the system are described in this manual.

The information provided in this manual and in the system/function manuals supports you in commissioning the system.

Changes compared to previous version

Compared to the previous version, this manual contains the following change:

Number in pack: 10 units (6ES7131-BF00-2CA0)

Conventions

CPU: When the term "CPU" is used in this manual, it applies to the CPUs of the S7-1500 automation system as well as to the CPUs/interface modules of the distributed I/O system ET 200SP.

STEP 7: In this documentation, "STEP 7" is used as a synonym for all versions of the configuration and programming software "STEP 7 (TIA Portal)".

Please also observe notes marked as follows:

Note

A note contains important information on the product described in the documentation, on the handling of the product or on the section of the documentation to which particular attention should be paid.

Security information

Siemens provides products and solutions with industrial security functions that support the secure operation of plants, systems, machines and networks.

In order to protect plants, systems, machines and networks against cyber threats, it is necessary to implement – and continuously maintain – a holistic, state-of-the-art industrial security concept. Siemens' products and solutions constitute one element of such a concept.

Customers are responsible for preventing unauthorized access to their plants, systems, machines and networks. Such systems, machines and components should only be connected to an enterprise network or the internet if and to the extent such a connection is necessary and only when appropriate security measures (e.g. firewalls and/or network segmentation) are in place.

For additional information on industrial security measures that may be implemented, please visit (https://www.siemens.com/industrialsecurity).

Siemens' products and solutions undergo continuous development to make them more secure. Siemens strongly recommends that product updates are applied as soon as they are available and that the latest product versions are used. Use of product versions that are no longer supported, and failure to apply the latest updates may increase customers' exposure to cyber threats.

To stay informed about product updates, subscribe to the Siemens Industrial Security RSS Feed under (https://www.siemens.com/industrialsecurity).

Table of contents

Preface 3
1 Documentation guide 6
2 Product overview 11
2.1 Properties 11
3 Wiring 14
3.1 Wiring and block diagrams 14
4 Parameters/address space 17
4.1 Parameters 17
4.2 Explanation of parameters 19
4.3 Address space 22
5 Interrupts/diagnostics alarms 28
5.1 Status and error displays 28
5.2 Interrupts 30
5.3 Diagnostics alarms 32
6 Technical specifications 33
6.1 Technical specifications 33
A Parameter data record 37
A.1 Parameter assignment and structure of parameter data record 37

Documentation guide

1

The documentation for the SIMATIC ET 200SP distributed I/O system is arranged into three areas.
This arrangement enables you to access the specific content you require.

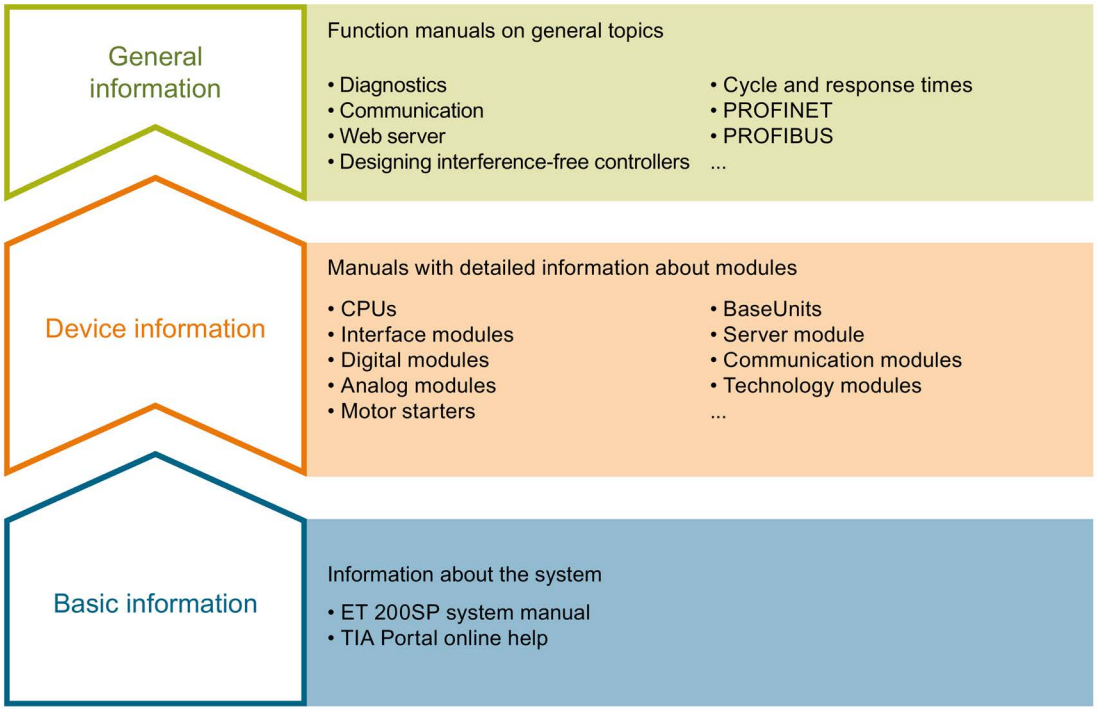

Basic information

The system manual describes in detail the configuration, installation, wiring and commissioning of the SIMATIC ET 200SP. distributed I/O system. The STEP 7 online help supports you in the configuration and programming.

Device information

Product manuals contain a compact description of the module-specific information, such as properties, wiring diagrams, characteristics and technical specifications.

General information

The function manuals contain detailed descriptions on general topics regarding the SIMATIC ET 200SP distributed I/O system, e.g. diagnostics, communication, Web server, motion control and OPC UA.

You can download the documentation free of charge from the Internet (http://w3.siemens.com/mcms/industrial-automation-systems-simatic/en/manual-overview/tech-doc-et200/Pages/Default.aspx).

Changes and supplements to the manuals are documented in a Product Information.

You can download the product information free of charge from the Internet (https://support.industry.siemens.com/cs/us/en/view/73021864).

Manual Collection ET 200SP

The Manual Collection contains the complete documentation on the SIMATIC ET 200SP distributed I/O system gathered together in one file.

You can find the Manual Collection on the Internet (http://support.automation.siemens.com/WW/view/en/84133942).

"mySupport"

With "mySupport", your personal workspace, you make the most of your Industry Online Support.

In "mySupport" you can store filters, favorites and tags, request CAx data and put together your personal library in the Documentation area. Furthermore, your data is automatically filled into support requests and you always have an overview of your current requests.

You need to register once to use the full functionality of "mySupport".

You can find "mySupport" in the Internet (https://support.industry.siemens.com/My/ww/en).

"mySupport" - Documentation

In the Documentation area of "mySupport", you have the possibility to combine complete manuals or parts of them to make your own manual.
You can export the manual in PDF format or in an editable format.

You can find "mySupport" - Documentation in the Internet (http://support.industry.siemens.com/My/ww/en/documentation).

"mySupport" - CAx Data

In the CAx Data area of "mySupport", you can have access the latest product data for your CAx or CAe system.

You configure your own download package with a few clicks.

In doing so you can select:

- Product images, 2D dimension drawings, 3D models, internal circuit diagrams, EPLAN macro files
- Manuals, characteristics, operating manuals, certificates
- Product master data

You can find "mySupport" - CAx Data in the Internet (http://support.industry.siemens.com/my/ww/en/CAxOnline).

Application examples

The application examples support you with various tools and examples for solving your automation tasks. Solutions are shown in interplay with multiple components in the system - separated from the focus in individual products.

You can find the application examples on the Internet (https://support.industry.siemens.com/sc/ww/en/sc/2054).

TIA Selection Tool

With the TIA Selection Tool, you can select, configure and order devices for Totally Integrated Automation (TIA).
This tool is the successor of the SIMATIC Selection Tool and combines the known configurators for automation technology into one tool.
With the TIA Selection Tool, you can generate a complete order list from your product selection or product configuration.

You can find the TIA Selection Tool on the Internet (http://w3.siemens.com/mcms/topics/en/simatic/tia-selection-tool).

SIMATIC Automation Tool

You can use the SIMATIC Automation Tool to run commissioning and maintenance activities simultaneously on various SIMATIC S7 stations as a bulk operation independently of the TIA Portal.

The SIMATIC Automation Tool provides a multitude of functions:

- Scanning of a PROFINET/Ethernet network and identification of all connected CPUs
- Address assignment (IP, subnet, gateway) and station name (PROFINET device) to a CPU
- Transfer of the data and the programming device/PC time converted to UTC time to the module
- Program download to CPU
- Operating mode switchover RUN/STOP
- Localization of the CPU by means of LED flashing
- Reading out CPU error information
- Reading the CPU diagnostic buffer
- Reset to factory settings
- Updating the firmware of the CPU and connected modules

You can find the SIMATIC Automation Tool on the Internet (https://support.industry.siemens.com/cs/ww/en/view/98161300).

PRONETA

With SIEMENS PRONETA (PROFINET network analysis), you analyze the plant network during commissioning. PRONETA features two core functions:

- The topology overview independently scans PROFINET and all connected components.
- The IO check is a fast test of the wiring and the module configuration of a system.

You can find SIEMENS PRONETA on the Internet (https://support.industry.siemens.com/cs/ww/en/view/67460624).

SINETPLAN

SINETPLAN, the Siemens Network Planner, supports you in planning automation systems and networks based on PROFINET. The tool facilitates professional and predictive dimensioning of your PROFINET installation as early as in the planning stage. In addition, SINETPLAN supports you during network optimization and helps you to exploit network resources optimally and to plan reserves. This helps to prevent problems in commissioning or failures during productive operation even in advance of a planned operation. This increases the availability of the production plant and helps improve operational safety.

The advantages at a glance

- Network optimization thanks to port-specific calculation of the network load
- Increased production availability thanks to online scan and verification of existing systems
- Transparency before commissioning through importing and simulation of existing STEP 7 projects
- Efficiency through securing existing investments in the long term and optimal exploitation of resources

You can find SINETPLAN on the Internet (https://www.siemens.com/sinetplan).

Product overview

2

2.1 Properties

Article number

6ES7131-6BF00-0CA0 (number in pack: 1 unit)

6ES7131-6BF00-2CA0 (number in pack: 10 units)

View of the module

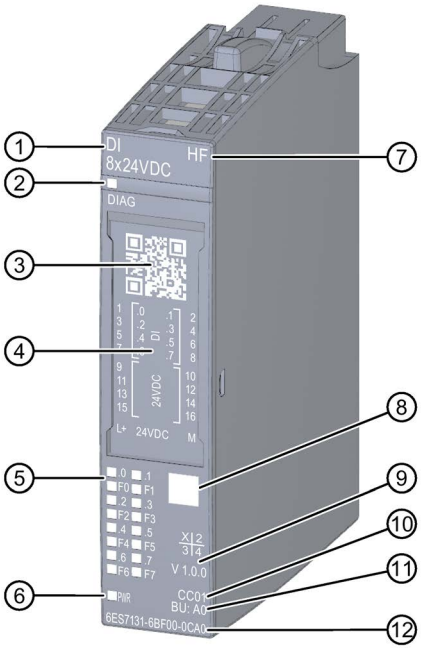

① Module type and name
② LED for diagnostics
③ 2D matrix code
④ Wiring diagram
⑤ LEDs for channel status
⑥ LED for supply voltage
⑦ Function class
⑧ Color coding module type
⑨ Function and firmware version
⑩ Color code for selecting the color identification labels
⑪ BU type
⑫ Article number

Figure 2-1 View of the DI 8x24VDC HF module

Properties

The module has the following technical properties:

- Digital input module with 8 inputs
- Sink input (PNP, active high)
- Supply voltage L+
- Configurable input delay 0.05 ms to 20 ms (per channel)
- Configurable diagnostics (per channel)
- Configurable hardware interrupts (per channel)
- Suitable for connection of switches and 2-wire sensors according to IEC 61131, type 1 and 3

The module supports the following functions:

Table 2- 1 Version dependencies of the functions

Function	HW version	FW version	STEP 7		GSD file	
			TIA Portal	V5.x	PROFINET IO	PROFIBUS DP
Pulse stretching	FS01	V1.0.0 or higher	V12 or higher	V5.5 SP3 or higher with HSP 0229 V1.0 or higher	X	X
Firmware update	FS01	V1.0.0 or higher	V12 or higher	V5.5 SP3 or higher with HSP 0229 V1.0 or higher	X	X
Identification data I&M0 to I&M3	FS01	V1.0.0 or higher	V12 or higher	V5.5 SP3 or higher with HSP 0229 V1.0 or higher	X	X
Reconfiguration in RUN	FS01	V1.0.0 or higher	V12 or higher	V5.5 SP3 or higher with HSP 0229 V1.0 or higher	X	X
Value status	FS01	V1.1.0 or higher	V12, SP1 or higher with HSP 0057	V5.5 SP3 or higher with HSP 0229 V2.0 or higher	X	X
Isochronous mode	FS01	V1.1.0 or higher	V12, SP1 or higher with HSP 0057	V5.5 SP3 or higher with HSP 0229 V2.0 or higher	X	X

Function	HW version	FW version	STEP 7		GSD file	
			TIA Portal	V5.x	PROFINET IO	PROFIBUS DP
Module-internal shared input (MSI)	FS01	V1.2..0 or higher	V13 or higher	V5.5 SP3 or higher with HSP 0229 V3.1 or higher	X	X
Configurable submodule/submodules for shared device	FS01	V2.0.0 or higher	V13 SP1 Update 4 or higher with HSP 0163	V5.5 SP3 or higher with HSP 0229 V6.0 or higher	X	X

Accessories

The following accessories are supplied with the module and can also be ordered separately as spare parts:

- Labeling strips
- Color identification labels
- Reference identification labels
- Shield connector

See also

You can find additional information on the accessories in the system manual Distributed I/O System ET 200SP (https://support.industry.siemens.com/cs/ww/en/view/58649293).

Wiring 3

3.1 Wiring and block diagrams

This section includes the block diagram of the DI 8x24VDC HF module with the terminal assignments for a 1-wire, 2-wire and 3-wire connection in the DI operating mode. You can use and combine the different wiring options for all channels.

You can find information on wiring the BaseUnit in the system manual ET 200SP distributed I/O system (https://support.industry.siemens.com/cs/ww/en/view/91696622).

Note

The load group of the module must begin with a light-colored BaseUnit. Keep this in mind also during the configuration.

Wiring: 1 and 2-wire connection

The following figure shows the block diagram and an example of the terminal assignment of the digital input module DI 8×24VDC HF on the BaseUnit BU type A0 without AUX terminals (1- and 2-wire connection).

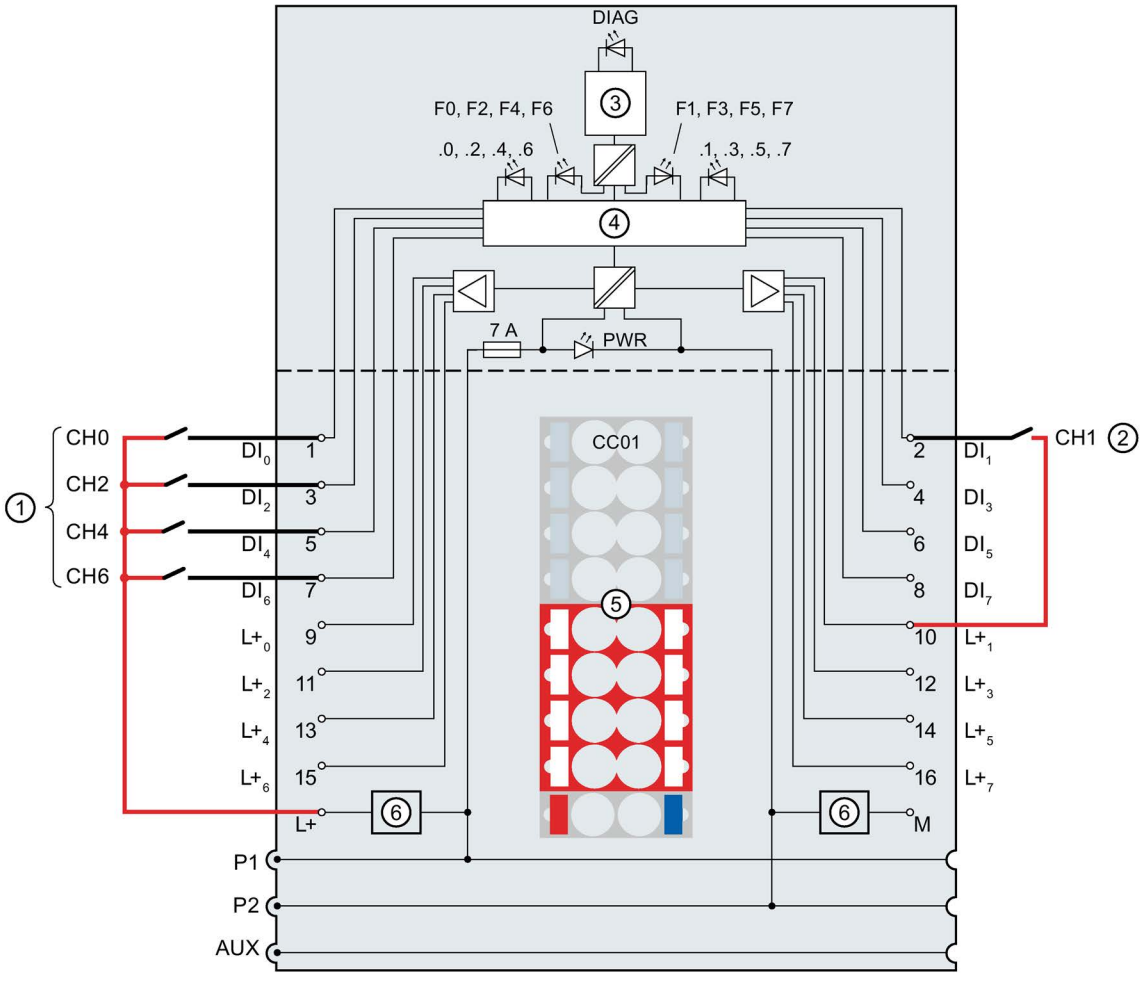

①	1-wire connection	$L+_n$	Encoder supply, channel n
②	2-wire connection	L+	24 V DC (infeed only with light BaseUnit)
③	Backplane bus interface	DIAG	Error or diagnostics LED (green, red)
④	Input electronics	.0 to .7	Channel status LED (green)
⑤	Color-coded label with color code CC01 (optional)	PWR	Power LED (green)
⑥	Supply voltage filter circuit (only available with light BaseUnit)	F0 to F7	Channel fault LED (red)
M	Ground	P1, P2, AUX	Internal self-configuring voltage buses Connection to the left (dark BaseUnit) Connection to the left interrupted (light BaseUnit)
DI_n	Input signal, channel n		

Figure 3-1 Pinout and block diagram for 1 and 2-wire connection of encoders

Wiring: 3-wire connection

The following figure shows an example of the terminal assignment of the digital input module DI 8×24VDC HF on the BaseUnit BU type A0 with AUX terminals (3-wire connection).

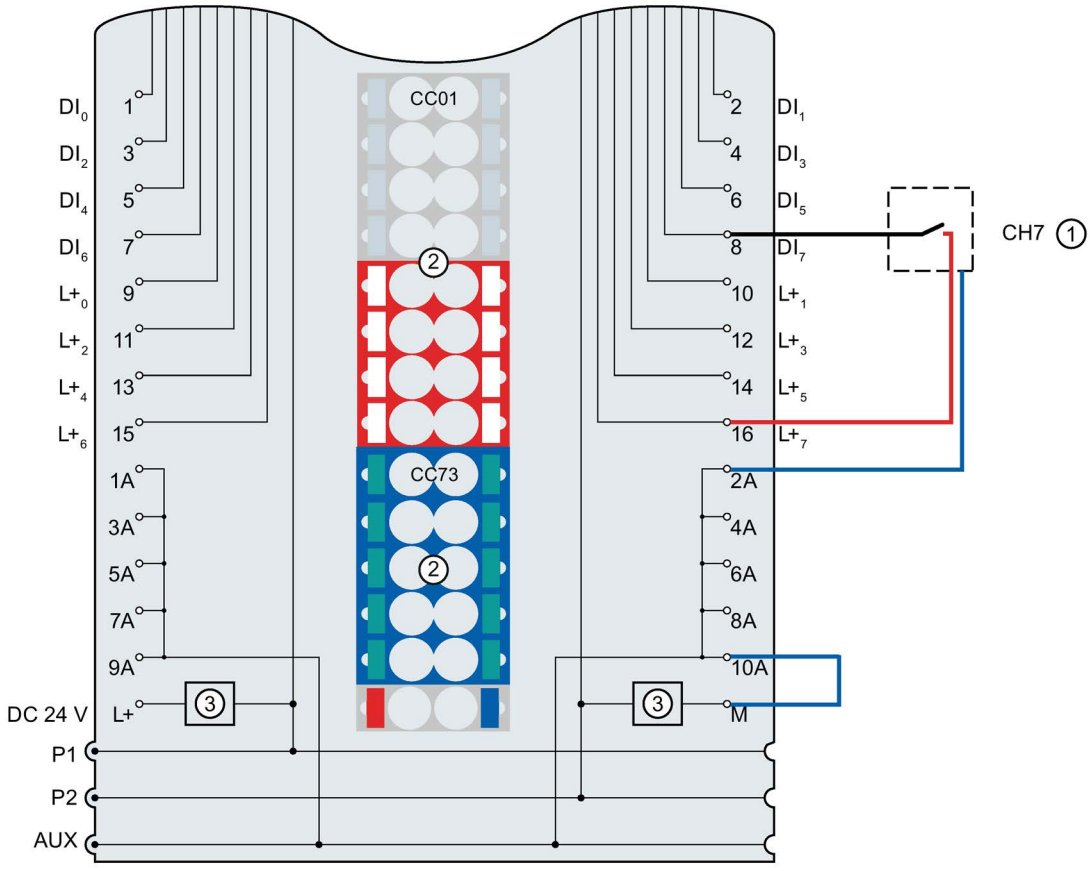

①	3-wire connection
②	Color-coded labels with color code CC01 and CC73 (optional)
③	Supply voltage filter circuit (only available with light BaseUnit)
DI_n	Input signal, channel n
$L+_n$	Encoder supply, channel n
DC 24 V	Supply voltage L+ (infeed only with light BaseUnit)
M	Ground
1A ... 10A	AUX terminals
P1, P2, AUX	Internal self-configuring voltage buses Connection to the left (dark BaseUnit) Connection to the left interrupted (light BaseUnit)

Figure 3-2 Pinout and block diagram for 3-wire connection of encoders

Parameters/address space 4

4.1 Parameters

Parameters of the DI 8x24VDC HF

Specify the module properties with the various parameters in the course of your STEP 7 configuration. The following table lists the configurable parameters. The effective range of the configurable parameters depends on the type of configuration. The following configurations are possible:

- Central operation with an ET 200SP CPU
- Distributed operation on PROFINET IO in an ET 200SP system
- Distributed operation with PROFIBUS DP in an ET 200SP system

When assigning parameters in the user program, use the "WRREC" instruction to transfer the parameters to the module by means of data records (see chapter Parameter assignment and structure of the parameter data record (Page 37)).

Table 4- 1 Configurable parameters and their defaults (GSD file)

Parameter	Value range	Default	Configuration in RUN	Scope with configuration software, e.g., STEP 7 (TIA Portal)	
				GSD file PROFINET IO	GSD file PROFIBUS DP
Diagnostics No supply voltage L+	• Disable • Enable	Disable	Yes	Channel	Channel
Diagnostics Short-circuit to ground	• Disable • Enable	Disable	Yes	Channel	Channel
Diagnostics wire break[1]	• Disable • Enable	Disable	Yes	Channel	Channel
Channel activated	• Disable • Enable	Enable	Yes	Channel	Channel

Parameter	Value range	Default	Configuration in RUN	Scope with configuration software, e.g., STEP 7 (TIA Portal)	
				GSD file PROFINET IO	GSD file PROFIBUS DP
Input delay	• None • 0.05 ms • 0.1 ms • 0.4 ms • 0.8 ms • 1.6 ms • 3.2 ms • 12.8 ms • 20 ms	3.2 ms	Yes	Channel	Module [2]
Pulse stretching	• None • 0.05 s • 0.1 s • 0.2 s • 0.5 s • 1 s • 2 s	None	Yes	Channel	[2]
Hardware interrupt rising edge	• Disable • Enable	Disable	Yes	Channel	[2]
Hardware interrupt falling edge	• Disable • Enable	Disable	Yes	Channel	[2]
Potential group	• Use potential group of the left module (module plugged into a dark-colored BaseUnit) • Enable new potential group (module plugged into light-colored BaseUnit)	Use potential group of the left module	No	Module	Module

[1] If you use a floating switch, you need to connect a resistor in parallel so that the wire break diagnostics is enabled in the open state (sensor resistance for the wire break diagnostics: 25 kΩ to 45 kΩ).

[2] Due to the limited number of parameters of a maximum of 244 bytes per ET 200SP station with a PROFIBUS GSD configuration, the parameter assignment options are restricted. The parameter length of the I/O module is 6 bytes with PROFIBUS GSD configuration. If necessary, you can set this parameter, however, with data records 0 to 7 or data record 128, see Appendix "Parameter data record".

4.2 Explanation of parameters

Diagnostics: No supply voltage L+

Enabling of the diagnostics for no or insufficient supply voltage L+.

Diagnostics: Short-circuit to ground

Enabling of the diagnostics if a short-circuit of the actuator supply to ground occurs.

Diagnostics: Wire break

Enabling diagnostics if the line to the encoder is interrupted.

Channel activated

Determines whether a channel is activated or deactivated.

Input delay

This parameter can be used to suppress signal interference. Changes to the signal are only detected if they are constantly pending longer than the set input delay time.

In isochronous mode, the terminal signal is read in at the time T_i (time for reading the input data). The read-in time T_i refers to the channel for which no input delay time was configured.

For input channels with longer input delays, the read-in time is moved accordingly. This means individual channels can be assigned input delays, if necessary, without having a negative impact on the possible cycle time.

Isochronous configuration is only possible if there is no input delay configured for at least one channel.

Pulse stretching

Pulse stretching is a function used to change a digital input signal. A pulse on a digital input is stretched to at least the configured length. If the input pulse is already longer than the configured length, the pulse is not changed.

In isochronous mode, the terminal signal is read in at time T_i (time for reading in the input data), i.e. smaller pulses than T_DC (data cycle) are not recognized in certain cases.

Principle of pulse stretching

The figure below uses examples to show whether and how input pulses are changed.

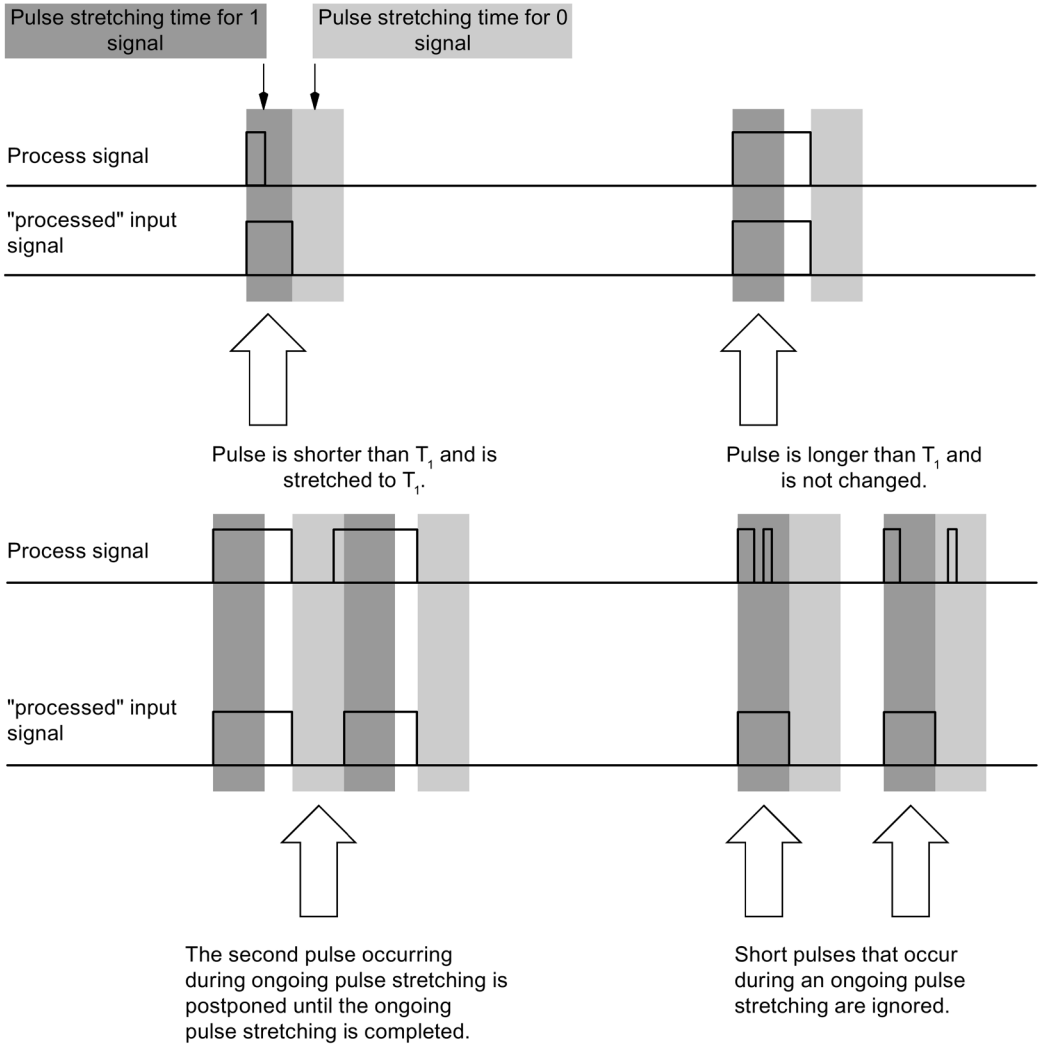

T_1 Pulse stretching parameter

Figure 4-1 Principle of pulse stretching

Hardware interrupt, rising edge

Specifies whether a hardware interrupt is generated by a rising edge.

Hardware interrupt, falling edge

Specifies whether a hardware interrupt is generated by a falling edge.

Potential group

A potential group consists of a group of directly adjacent I/O modules within an ET 200SP station, which are supplied via a common supply voltage.

A potential group begins with a light-colored BaseUnit through which the required voltage is supplied for all modules of the potential group. The light-colored BaseUnit interrupts the three self-assembling voltage buses P1, P2 and AUX to the left neighbor.

All additional I/O modules of this potential group are plugged into dark-colored BaseUnits. You take the potential of the self-assembling voltage buses P1, P2 and AUX from the left neighbor.

A potential group ends with the dark-colored BaseUnit, which follows a light-colored BaseUnit or server module in the station configuration.

See also

You can find additional information in the system manual ET 200SP distributed I/O system (https://support.industry.siemens.com/cs/ww/en/view/91696622).

4.3 Address space

The module can be configured differently in STEP 7; see following table. Depending on the configuration, additional/different addresses are assigned in the process image input.

Configuration options of DI 8x24VDC HF

You can configure the module with STEP 7 (TIA Portal) or with a GSD file. If you configure the module by means of a GSD file, the configurations are available under various short designations/module names; see the table below. The following configurations are possible:

Table 4- 2 Configuration options with GSD file

Configuration	Short designation/module name in the GSD file	Configuration software, e.g. with STEP 7 (TIA Portal)		
		Integrated in the hardware catalog STEP 7, as of V13, SP1	GSD file PROFINET IO	GSD file PROFIBUS DP
1 x 8-channel without value status	DI 8x24VDC HF V1.0	X	X	X
1 x 8-channel without value status	DI 8x24VDC HF V1.1	X	X	X
1 x 8-channel with value status	DI 8x24VDC HF V1.1, QI	X	X	---
1 x 8-channel without value status	DI 8x24VDC HF V1.2	X	X	X
1 x 8-channel with value status for module-internal Shared Input with up to 4 submodules	DI 8x24VDC HF V1.2, MSI	X	X	---
1 x 8-channel with value status	DI 8x24VDC HF V1.2, QI	X	X	---
1 x 8-channel without value status	DI 8x24VDC HF V2.0	---	X	X
1 x 8-channel with value status for module-internal Shared Input with up to 4 submodules	DI 8x24VDC HF V2.0, MSI	---	X	---
1 x 8-channel with value status	DI 8x24VDC HF V2.0, QI	---	X	---
2 x 4-channel without value status	DI 8x24VDC HF V2.0, S.2	---	X	---
2 x 4-channel with value status	DI 8x24VDC HF V2.0, S.2 QI	---	X	---
4 x 2-channel without value status	DI 8x24VDC HF V2.0, S.4	---	X	---
4 x 2-channel with value status	DI 8x24VDC HF V2.0, S.4 QI	---	X	---

Note

The following functions are only fully available when the submodule X.1 is configured and the IO controller to which submodule X.1 is assigned has established a connection to the IO device.

- Firmware update
- I&M identification data
- PROFIenergy

2 x 4- / 4 x 2-channel configuration

For the configuration, the channels of the module are divided into submodules. The submodules can be assigned to different IO controllers when the module is used in a shared device.

The number of usable submodules is dependent on the interface module used. Read the information in the manual for the particular interface module.

Value status (Quality Information, QI)

The value status is always activated for the following module names:

- DI 8x24VDC HF QI,
- DI 8x24VDC HF MSI

An additional bit is assigned to each channel for the value status. The value status bit indicates if the read in digital value is valid. (0 = value is incorrect).

Address space for configuration as 1 x 8-channel DI 8x24VDC HF

The figure below shows the address space assignment for configuration as a 8-channel module without value status.

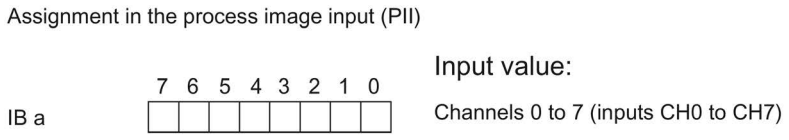

Figure 4-2 Address space for configuration as 1 x 8-channel DI 8x24VDC HF without value status

Address space for configuration as 1 x 8-channel DI 8x24VDC HF, QI

The following figure shows the assignment of the address space for the configuration as a 8-channel module with value status. You can freely assign the start address for the module. The addresses of the channels are derived from the start address.

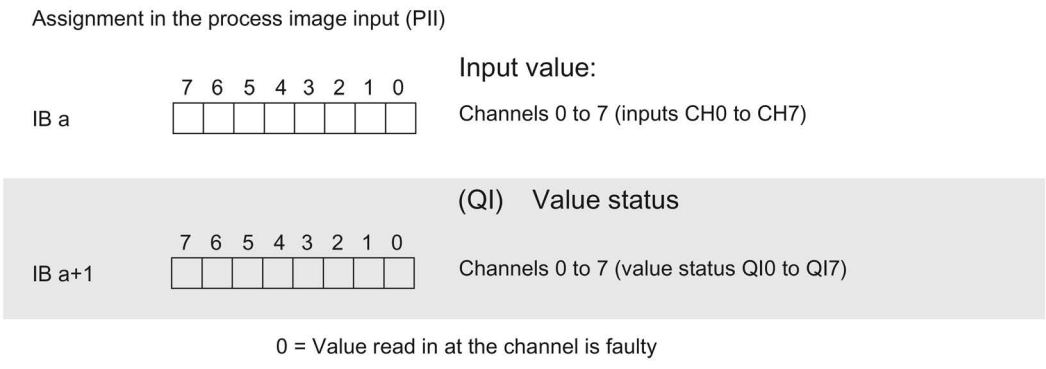

Figure 4-3 Address space for configuration as 1 x 8-channel DI 8x24VDC HF QI with value status

Address space for configuration as 1 x 8-channel DI 8x24VDC HF MSI

The channels 0 to 7 of the module are copied in up to four submodules with configuration 1 x 8-channel module (Module-internal shared input, MSI). Channels 0 to 7 are then available with identical input values in various submodules. These submodules can be assigned to up to four IO controllers when the module is used in a shared device. Each IO controller has read access to the same channels.

The number of usable submodules is dependent on the interface module used. Please observe the information in the manual for the particular interface module.

Value status (Quality Information,QI)

The meaning of the value status depends on the submodule on which it occurs.

For the 1st submodule (=basic submodule), the value status 0 indicates that the value is incorrect.

For the 2nd to 4th submodule (=MSI submodule), the value status 0 indicates that the value is incorrect or the basic submodule has not yet been configured (not ready).

The following figure shows the assignment of the address space with submodule 1, 2, 3 and 4 and the value status.

Assignment in the process image input (PII) for 1st submodule

1st submodule (basic submodule):

	7	6	5	4	3	2	1	0	
IB a									Channels 0 to 7 (inputs CH0 to CH7)
IB a+1									(QI) Value status Channels 0 to 7 (value status QI0 to QI7)

Assignment in the process image input (PII) for 2nd submodule

2nd submodule (MSI submodule):

	7	6	5	4	3	2	1	0	
IB b									Channels 0 to 7 (inputs CH0 to CH7)
IB b+1									(QI) Value status Channels 0 to 7 (value status QI0 to QI7)

Assignment in the process image input (PII) for 3rd submodule

3rd submodule (MSI submodule):

	7	6	5	4	3	2	1	0	
IB c									Channels 0 to 7 (inputs CH0 to CH7)
IB c+1									(QI) Value status Channels 0 to 7 (value status QI0 to QI7)

Assignment in the process image input (PII) for 4th submodule

4th submodule (MSI submodule):

	7	6	5	4	3	2	1	0	
IB d									Channels 0 to 7 (inputs CH0 to CH7)
IB d+1									(QI) Value status Channels 0 to 7 (value status QI0 to QI7)

0 = Value read in at the channel is faulty

Figure 4-4 Address space for configuration as 1 x 8-channel DI 8x24VDC HF MSI with value status

Address space for configuration as 2 x 4-channel DI 8x24VDC HF V2.0, S.2

The figure below shows the address space assignment for configuration as a 2 x 4-channel module without value status.

Assignment in the process image input (PII)

	7	6	5	4	3	2	1	0	Input value:	
IB a	0	0	0	0					Channel 0 to 3 (input CH0 to CH3)	1st submodule
IB b	0	0	0	0					Channel 4 to 7 (input CH4 to CH7)	2nd submodule

Figure 4-5 Address space for configuration as 2 x 4-channel DI 8x24VDC HF V2.0, S.2 without value status

Address space for configuration as 2 x 4-channel DI 8x24VDC HF V2.0, S.2 QI

Each of the two submodules has a freely assignable start address.

Assignment in the process image input (PII)

	7	6	5	4	3	2	1	0	Input value:	
IB a	0	0	0	0					Channel 0 to 3 (input CH0 to CH3)	1st submodule
IB b	0	0	0	0					Channel 4 to 7 (input CH4 to CH7)	2nd submodule
									(QI) Value status	
IB a+1	0	0	0	0					Channel 0 to 3 (value status QI0 to QI3)	1st submodule
IB b+1	0	0	0	0					Channel 4 to 7 (value status QI4 to QI7)	2nd submodule

0 = Value read in at the channel is faulty

Figure 4-6 Address space for configuration as 2 x 4-channel DI 8x24VDC HF V2.0, S.2 QI with value status

Address space for configuration as 4 x 2-channel DI 8x24VDC HF V2.0, S.4

The figure below shows the address space assignment for configuration as a 4 x 2-channel module without value status.

Assignment in the process image input (PII)

	7	6	5	4	3	2	1	0	Input value:	
IB a	0	0	0	0	0	0			Channels 0 and 1 (inputs CH0 and CH1)	1st submodule
IB b	0	0	0	0	0	0			Channel 2 and 3 (input CH2 and CH3)	2nd submodule
IB c	0	0	0	0	0	0			Channel 4 and 5 (input CH4 and CH5)	3rd submodule
IB d	0	0	0	0	0	0			Channel 6 and 7 (input CH6 and CH7)	4th submodule

Figure 4-7 Address space for configuration as 4 x 2-channel DI 8x24VDC HF V2.0, S.4 without value status

Address space for configuration as 4 x 2-channel DI 8x24VDC HF V2.0, S.4 QI

Each of the four submodules has a freely assignable start address.

Assignment in the process image input (PII)

	7	6	5	4	3	2	1	0	Input value:	
IB a	0	0	0	0	0	0			Channels 0 and 1 (inputs CH0 and CH1)	1st submodule
IB b	0	0	0	0	0	0			Channel 2 and 3 (input CH2 and CH3)	2nd submodule
IB c	0	0	0	0	0	0			Channel 4 and 5 (input CH4 and CH5)	3rd submodule
IB d	0	0	0	0	0	0			Channel 6 and 7 (input CH6 and CH7)	4th submodule
									(QI) Value status	
IB a+1	0	0	0	0	0	0			Channels 0 and 1 (value status QI0 and QI1)	1st submodule
IB b+1	0	0	0	0	0	0			Channel 2 and 3 (value status QI2 and QI3)	2nd submodule
IB c+1	0	0	0	0	0	0			Channel 4 and 5 (value status QI4 and QI5)	3rd submodule
IB d+1	0	0	0	0	0	0			Channel 6 and 7 (value status QI6 and QI7)	4th submodule

0 = Value read in at the channel is faulty

Figure 4-8 Address space for configuration as 4 x 2-channel DI 8x24VDC HF V2.0, S.4 QI with value status

Interrupts/diagnostics alarms 5

5.1 Status and error displays

LED displays

The figure below shows the LED displays (status and error displays) of the DI 8x24VDC HF.

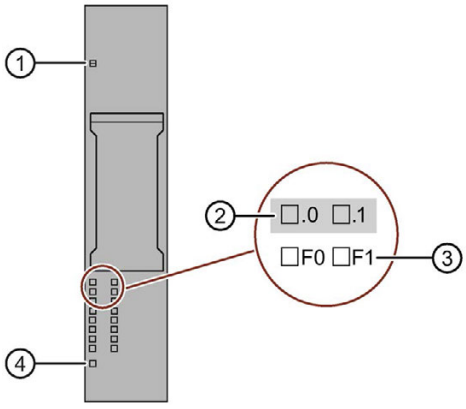

① DIAG (green/red)
② Channel status (green)
③ Channel error (red)
④ PWR (green)

Figure 5-1 LED display

Meaning of the LEDs

The tables below explain the meaning of the status and error displays. Corrective measures for diagnostics alarms can be found in section Diagnostics alarms (Page 32).

DIAG LED

Table 5- 1 Error display of the DIAG LED

DIAG LED	Meaning
□ Off	Backplane bus supply of the ET 200SP not OK
☼ Flashes	Module not ready for operation (no parameters assigned)
■ On	Module parameters assigned and no module/channel diagnostics
☼ Flashes	Module parameters assigned and module/channel diagnostics

LED channel status/channel error

Table 5- 2 Status / error display of the LED channel status / channel error

LED channel status	LED channel error	Meaning
□ Off	□ Off	Channel deactivated or process signal = 0
■ On	□ Off	• No supply voltage present or • Process voltage > 11 V is present regardless of whether or not the channel is activated and regardless of whether diagnostics was detected
□ Off	■ On	Supply voltage is available and process voltage < 11V is present regardless of whether or not the channel is activated and regardless of whether diagnostics was detected
■ On	■ On	Channel activated and diagnostics enable was recognized

PWR LED

Table 5- 3 Status display of the PWR LED

PWR LED	Meaning
□ Off	Missing supply voltage L+
■ On	Supply voltage L+ present

5.2 Interrupts

The digital input module DI 8×24VDC HF supports hardware and diagnostics alarms.

Diagnostics interrupts

The module generates a diagnostic interrupt at the following events:

- Short-circuit
- Wire break
- Parameter assignment error
- Supply voltage missing
- Hardware interrupt lost
- Channel temporarily unavailable

Evaluating hardware interrupts with IO controller

The module generates a hardware interrupt at the following events:

- At positive edge (signal change from 0 to 1)
- At negative edge (signal change from 1 to 0)

In the event of an interrupt, interrupt OBs are automatically executed in the CPU of the IO controller.

You can obtain detailed information on the event in the hardware interrupt organization block with the "RALARM" (read additional interrupt information) instruction and in the STEP 7 online help.

The module channel that triggered the hardware interrupt is entered in the start information of the organization block. The following figure shows the assignment to the bits of double word 8 in local data.

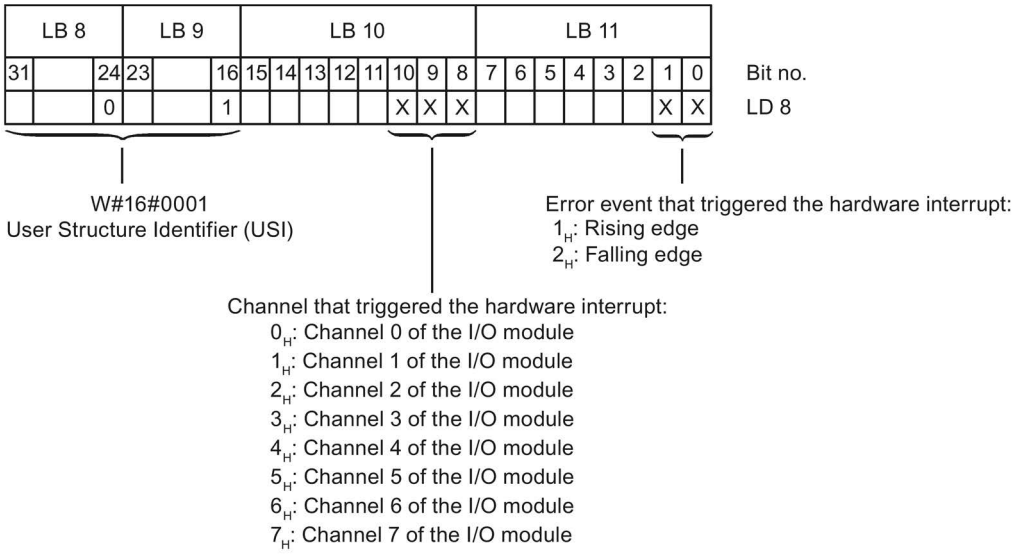

Figure 5-2 Start information of the organization block

Structure of the additional interrupt information

Table 5- 4 Structure of USI = W#16#0001

Data block name		Content	Comment	Bytes
USI		W#16#0001	User Structure Identifier: Additional interrupt information for hardware interrupts of the I/O module	2
The channel that triggered the hardware interrupt follows.				
	Channel	B#16#00 to B#16#07	Channel 0 to 7 of the I/O module	1
It follows the error event that triggered the hardware interrupt.				
	Error event	B#16#01	Positive edge	1
		B#16#02	Negative edge	

5.3 Diagnostics alarms

Diagnostics alarms

A diagnostics alarm is generated and the DIAG-LED flashes on the module for each diagnostics event. You can read out the diagnostics alarms, for example, in the diagnostics buffer of the CPU. You can evaluate the error codes with the user program.

Table 5- 5 Diagnostics alarms, their meaning and corrective measures

Diagnostics alarm	Error code	Meaning	Solution
Short-circuit	1_H	Short-circuit to ground at sensor supply	Correct the process wiring
Wire break	6_H	Impedance of encoder circuit too high	Use a different encoder type or modify the wiring, for example, use cables with larger cross-section
		Wire break between the module and sensor	Connect the cable
		Channel not connected (open)	• Disable diagnostics • Connect in parallel a resistor of 25 kOhm to 45 kOhm to the encoder contacts
Parameter assignment error	10_H	• The module cannot evaluate parameters for the channel. • Incorrect parameter assignment.	Correct the parameter assignment
Supply voltage missing	11_H	No or insufficient supply voltage L+	• Check supply voltage L+ on the BaseUnit • Check BaseUnit type
Hardware interrupt lost	16_H	The module cannot trigger an interrupt because the previous interrupt was not acknowledged; possible configuration error	• Change interrupt processing in the CPU and, if necessary, edit the module parameters. • The error persists until the module is assigned new parameters
Channel/component temporarily unavailable	$1F_H$	Firmware update is currently in progress or has been canceled. The module does not read in process values in this state.	• Wait for firmware update. • Restart the firmware update.

Technical specifications

6

6.1 Technical specifications

Technical specifications of the DI 8×24VDC HF

Article number	6ES7131-6BF00-0CA0
General information	
Product type designation	DI 8x24 V DC HF
Firmware version	V2.0
• FW update possible	Yes
usable BaseUnits	BU type A0
Color code for module-specific color identification plate	CC01
Product function	
• I&M data	Yes; I&M0 to I&M3
Engineering with	
• STEP 7 TIA Portal configurable/integrated as of version	V13 SP1 / -
• STEP 7 configurable/integrated as of version	V5.5 / -
• PCS 7 configurable/integrated as of version	V8.1 SP1
• PROFIBUS as of GSD version/GSD revision	One GSD file each, Revision 3 and 5 and higher
• PROFINET as of GSD version/GSD revision	GSDML V2.3
Operating mode	
• DI	Yes
• Counter	No
• Oversampling	No
• MSI	Yes
Supply voltage	
Rated value (DC)	24 V
permissible range, lower limit (DC)	19.2 V
permissible range, upper limit (DC)	28.8 V
Reverse polarity protection	Yes

Article number	6ES7131-6BF00-0CA0
Encoder supply	
Number of outputs	8
Output voltage encoder supply, min.	19.2 V
Short-circuit protection	Yes
24 V encoder supply	
• 24 V	Yes
• Short-circuit protection	Yes; per channel, electronic
Power loss	
Power loss, typ.	1.5 W; 24 V, 8 inputs supplied via encoder supply
Address area	
Address space per module	
• Inputs	1 byte; + 1 byte for QI information
Hardware configuration	
Automatic encoding	Yes
• Mechanical coding element	Yes
Submodules	
• Number of configurable submodules, max.	4
Selection of BaseUnit for connection variants	
• 1-wire connection	BU type A0
• 2-wire connection	BU type A0
• 3-wire connection	BU type A0 with AUX terminals
• 4-wire connection	BU type A0 + Potential isolation module
Digital inputs	
Number of digital inputs	8
Digital inputs, parameterizable	Yes
Source/sink input	P-reading
Input characteristic curve in accordance with IEC 61131, type 3	Yes
Pulse extension	Yes; Pulse duration from 4 µs
• Length	2 s; 50 ms, 100 ms, 200 ms, 500 ms, 1 s, 2 s
Edge evaluation	Yes; rising edge, falling edge, edge change
Input voltage	
• Type of input voltage	DC
• Rated value (DC)	24 V
• for signal "0"	-30 to +5V
• for signal "1"	+11 to +30V
Input current	
• for signal "1", typ.	2.5 mA

Article number	6ES7131-6BF00-0CA0
Input delay (for rated value of input voltage) for standard inputs	
– parameterizable	Yes; 0.05 / 0.1 / 0.4 / 0.8 / 1.6 / 3.2 / 12.8 / 20 ms (in each case + delay of 30 to 500 µs, depending on line length)
– at "0" to "1", min.	0.05 ms
– at "0" to "1", max.	20 ms
– at "1" to "0", min.	0.05 ms
– at "1" to "0", max.	20 ms
Cable length	
• shielded, max.	1 000 m
• unshielded, max.	600 m
Encoder	
Connectable encoders	
• 2-wire sensor	Yes
– permissible quiescent current (2-wire sensor), max.	1.5 mA
Isochronous mode	
Isochronous operation (application synchronized up to terminal)	Yes
Filtering and processing time (TCI), min.	420 µs
Bus cycle time (TDP), min.	500 µs
Jitter, max.	8 µs
Interrupts/diagnostics/status information	
Diagnostics function	Yes
Alarms	
• Diagnostic alarm	Yes; channel by channel
• Hardware interrupt	Yes; Parameterizable, channels 0 to 7
Diagnostic messages	
• Diagnostic information readable	Yes
• Monitoring the supply voltage	Yes
– parameterizable	Yes
• Monitoring of encoder power supply	Yes; channel by channel
• Wire-break	Yes; Channel by channel, optional protective circuit for preventing wire-break diagnostics in the case of simple encoder contacts: 25 kOhm to 45 kOhm
• Short-circuit	Yes; channel by channel

Article number	6ES7131-6BF00-0CA0
Diagnostics indication LED	
• Monitoring of the supply voltage (PWR-LED)	Yes; green PWR LED
• Channel status display	Yes; Green LED
• for channel diagnostics	Yes; Red LED
• for module diagnostics	Yes; green/red DIAG LED
Potential separation	
Potential separation channels	
• between the channels	No
• between the channels and backplane bus	Yes
• between the channels and the power supply of the electronics	No
Isolation	
Isolation tested with	707 V DC (type test)
Ambient conditions	
Ambient temperature during operation	
• horizontal installation, min.	0 °C
• horizontal installation, max.	60 °C
• vertical installation, min.	0 °C
• vertical installation, max.	50 °C
Altitude during operation relating to sea level	
• Ambient air temperature-barometric pressure-altitude	On request: Negative ambient temperature down to -30 °C (without condensation), installation altitudes between 2 000 m and 5 000 m
Dimensions	
Width	15 mm
Height	73 mm
Depth	58 mm
Weights	
Weight, approx.	28 g

Dimension drawing

See manual ET 200SP BaseUnits
(http://support.automation.siemens.com/WW/view/en/58532597/133300)

Parameter data record A

A.1 Parameter assignment and structure of parameter data record

The data record of the module has an identical structure, regardless of whether you configure the module with PROFIBUS DP or PROFINET IO. With data record 128, you can reconfigure the module in your user program regardless of your programming. This means that you can use all the functions of the module even if you configured it via PROFIBUS-GSD.

With data records 0 to 7, you can reconfigure individual channels.

Operation of the module behind a PROFIBUS DP interface module

If the module is operated behind a PROFIBUS DP interface module, the parameter data records 0 and 1 cannot be read back. You obtain the diagnostics data records 0 and 1 with the read back parameter data records 0 and 1. You can find additional information in the Interrupts section of the PROFIBUS DP interface module manual on the Internet (http://support.automation.siemens.com/WW/view/en/78324181).

Parameter assignment in the user program

The module parameters can be re-assigned in RUN (for example, the input delay of selected channels can be edited in RUN without having an effect on the other channels).

Changing parameters in RUN

The WRREC instruction is used to transfer the parameters to the module using data record 128 or data records 0 to 7. The parameters set in STEP 7 are not changed in the CPU, which means that the parameters set in STEP 7 will be valid again after a restart.

If you reconfigure a module and diagnostics are pending prior to the reconfiguration, these diagnostics are not signaled as "outgoing".

Output parameter STATUS

The module ignores errors that occur during the transfer of parameters with the "WRREC" instruction and continues operation with the previous parameter assignment. The STATUS output parameter contains a corresponding error code.

You will find a description of the "WRREC" instruction and the error codes in the STEP 7 online help.

Data record structure

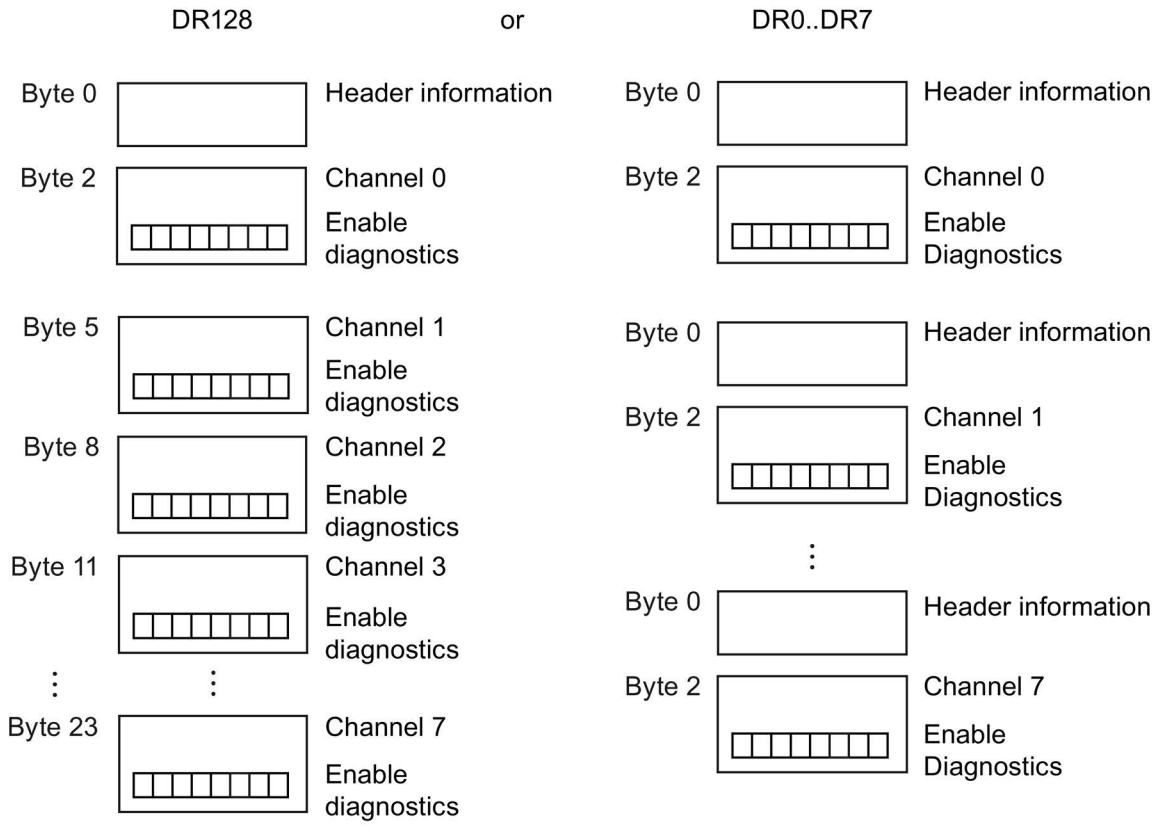

Figure A-1 Structure of data record 128 and data records 0 to 7

Header information

The figure below shows the structure of the header information.

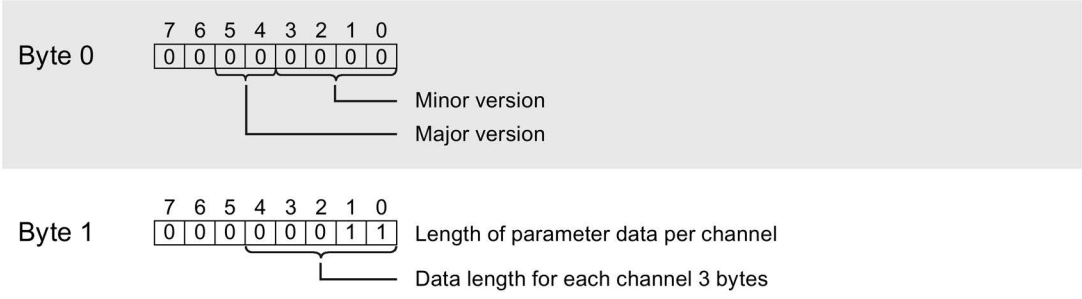

Figure A-2 Header information

Parameter

The figure below shows the structure of the parameters for channels 0 to 7.

You enable a parameter by setting the corresponding bit to "1".

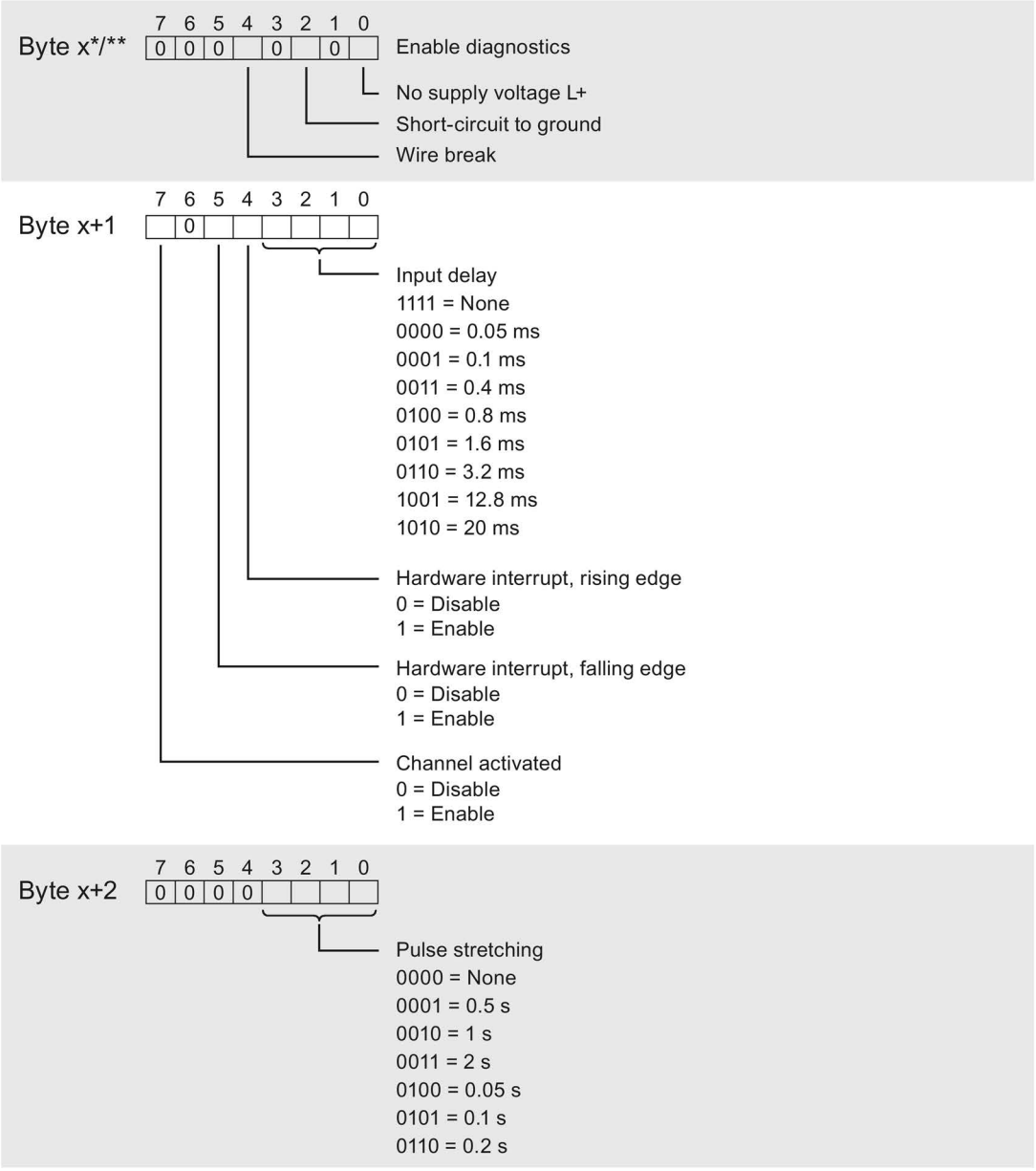

* x = 2 + (channel number × 3); channel number = 0 to 7 for DR 128
** x = 2 for DR 0 to DR 7

Figure A-3 Structure of byte x to x+2 for channels 0 to 7

Error transmitting the data record

The module always checks all values of the data record to be sent. The module applies the values from the data record only when all values have been transmitted without errors.

The WRREC instruction for writing data records returns the appropriate error code if there are errors in the STATUS parameter.

The following table shows the module-specific error codes and their meaning for parameter data record 128.

Error code in the STATUS parameter (hexadecimal)				Meaning	Solution
Byte 0	Byte 1	Byte 2	Byte 3		
DF	80	B0	xx	Number of the data record unknown	Enter a valid number for the data record.
DF	80	B1	xx	Length of the data record incorrect	Enter a valid value for the data record length.
DF	80	B2	xx	Slot invalid or unavailable	• Check the station to determine whether the module is plugged or pulled. • Check assigned values for the parameters of the WREC instruction.
DF	80	E0	xx	Wrong version or error in the header information	Correct the version, length and number of parameter blocks.
DF	80	E1	xx	Parameter error	Check the parameters of the module

SIEMENS

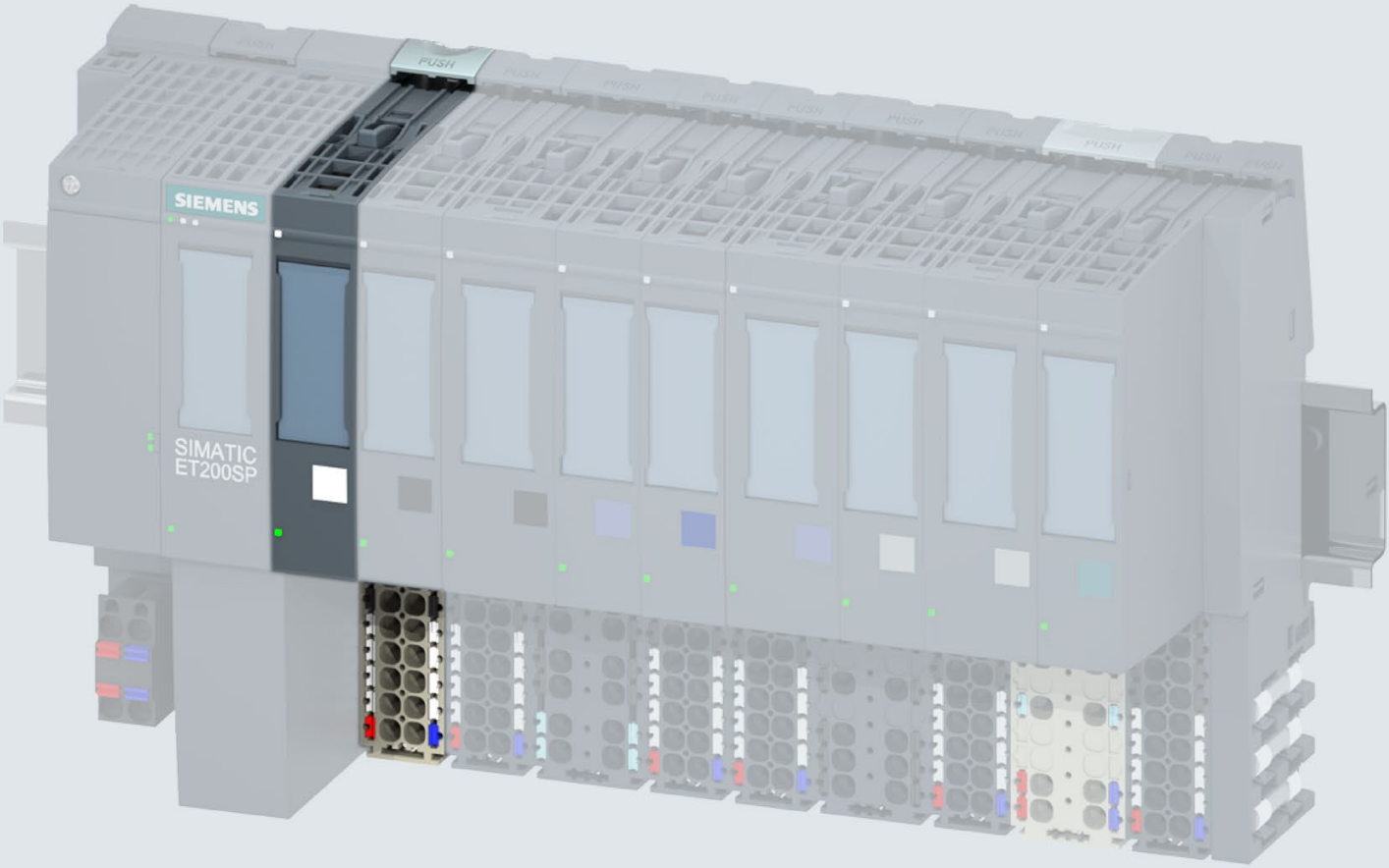

Manual

SIMATIC

ET 200SP

Digital input module
DI 8x24VDC HS (6ES7131-6BF00-0DA0)

Edition 09/2018

support.industry.siemens.com

SIEMENS

SIMATIC

ET 200SP
Digital input module
DI 8x24VDC HS
(6ES7131-6BF00-0DA0)

Manual

Preface

Documentation guide 1

Product overview 2

Operating mode DI 3

Counting operating mode (CNT) 4

Oversampling (OVS) operating mode 5

Technical specifications 6

Parameter data records A

09/2018

A5E35243810-AC

Legal information

Warning notice system

This manual contains notices you have to observe in order to ensure your personal safety, as well as to prevent damage to property. The notices referring to your personal safety are highlighted in the manual by a safety alert symbol, notices referring only to property damage have no safety alert symbol. These notices shown below are graded according to the degree of danger.

⚠ DANGER

indicates that death or severe personal injury **will** result if proper precautions are not taken.

⚠ WARNING

indicates that death or severe personal injury **may** result if proper precautions are not taken.

⚠ CAUTION

indicates that minor personal injury can result if proper precautions are not taken.

NOTICE

indicates that property damage can result if proper precautions are not taken.

If more than one degree of danger is present, the warning notice representing the highest degree of danger will be used. A notice warning of injury to persons with a safety alert symbol may also include a warning relating to property damage.

Qualified Personnel

The product/system described in this documentation may be operated only by **personnel qualified** for the specific task in accordance with the relevant documentation, in particular its warning notices and safety instructions. Qualified personnel are those who, based on their training and experience, are capable of identifying risks and avoiding potential hazards when working with these products/systems.

Proper use of Siemens products

Note the following:

⚠ WARNING

Siemens products may only be used for the applications described in the catalog and in the relevant technical documentation. If products and components from other manufacturers are used, these must be recommended or approved by Siemens. Proper transport, storage, installation, assembly, commissioning, operation and maintenance are required to ensure that the products operate safely and without any problems. The permissible ambient conditions must be complied with. The information in the relevant documentation must be observed.

Trademarks

All names identified by ® are registered trademarks of Siemens AG. The remaining trademarks in this publication may be trademarks whose use by third parties for their own purposes could violate the rights of the owner.

Disclaimer of Liability

We have reviewed the contents of this publication to ensure consistency with the hardware and software described. Since variance cannot be precluded entirely, we cannot guarantee full consistency. However, the information in this publication is reviewed regularly and any necessary corrections are included in subsequent editions.

Siemens AG
Division Digital Factory
Postfach 48 48
90026 NÜRNBERG
GERMANY

A5E35243810-AC
℗ 09/2018 Subject to change

Copyright © Siemens AG 2015 - 2018.
All rights reserved

Preface

Purpose of the documentation

This device manual supplements the system manual ET 200SP distributed I/O system (http://support.automation.siemens.com/WW/view/en/58649293).

Functions that relate generally to the system are described in this manual.

The information provided in this manual and in the system/function manuals supports you when commissioning the ET 200SP distributed I/O system.

Changes compared to the previous version

Compared to the previous version, this manual contains the following change:

Parameters and value range are harmonized in "Counting" mode (GSD file and TIA Portal).

Conventions

Please pay particular attention to notes highlighted as follows:

Note

A note contains important information on the product described in the documentation, on the handling of the product and on the section of the documentation to which particular attention should be paid.

Security information

Siemens provides products and solutions with industrial security functions that support the secure operation of plants, systems, machines and networks.

In order to protect plants, systems, machines and networks against cyber threats, it is necessary to implement – and continuously maintain – a holistic, state-of-the-art industrial security concept. Siemens' products and solutions constitute one element of such a concept.

Customers are responsible for preventing unauthorized access to their plants, systems, machines and networks. Such systems, machines and components should only be connected to an enterprise network or the internet if and to the extent such a connection is necessary and only when appropriate security measures (e.g. firewalls and/or network segmentation) are in place.

For additional information on industrial security measures that may be implemented, please visit (http://www.siemens.com/industrialsecurity).

Siemens' products and solutions undergo continuous development to make them more secure. Siemens strongly recommends that product updates are applied as soon as they are available and that the latest product versions are used. Use of product versions that are no longer supported, and failure to apply the latest updates may increase customers' exposure to cyber threats.

To stay informed about product updates, subscribe to the Siemens Industrial Security RSS Feed under (http://www.siemens.com/industrialsecurity).

Table of contents

Preface 3

1 Documentation guide 7

2 Product overview 12

2.1 Properties 12

3 Operating mode DI 15

3.1 Wiring up 15
3.1.1 Wiring and block diagrams 15

3.2 Parameters/address space 18
3.2.1 High-speed inputs 18
3.2.2 Parameters 18
3.2.3 Explanation of parameters 20
3.2.4 Address space 24

3.3 Interrupts/diagnostics alarms 25
3.3.1 Status and error display 25
3.3.2 Interrupts 27
3.3.3 Diagnostics alarms 29

4 Counting operating mode (CNT) 30

4.1 Connecting 30
4.1.1 Wiring and block diagrams 30

4.2 Parameters/address space 33
4.2.1 Counting 33
4.2.2 Parameters 34
4.2.3 Explanation of parameters 36
4.2.4 Address space 40
4.2.4.1 Assignment of the control interface 40
4.2.4.2 Assignment of the feedback interface 41

4.3 Interrupts/diagnostic messages 45
4.3.1 Status and error display 45
4.3.2 Interrupts 47
4.3.3 Diagnostics alarms 48

5 Oversampling (OVS) operating mode 49

5.1 Connecting 49
5.1.1 Wiring and block diagrams 49

5.2 Parameters/address space 52
5.2.1 Oversampling 52
5.2.2 Parameters 53
5.2.3 Explanation of parameters 55
5.2.4 Address space 56

5.3 Interrupts/diagnostic messages 57
5.3.1 Status and error display 57
5.3.2 Interrupts 59
5.3.3 Diagnostics alarms 60

6 Technical specifications 61

6.1 Technical specifications 61

A Parameter data records 65

A.1 Parameter assignment and structure of parameter data record for DI operating mode 65

A.2 Parameter assignment and structure of parameter data record for Counting operating mode 69

A.3 Parameter assignment and structure of parameter data record for Oversampling operating mode 74

Documentation guide

1

The documentation for the SIMATIC ET 200SP distributed I/O system is arranged into three areas.
This arrangement enables you to access the specific content you require.

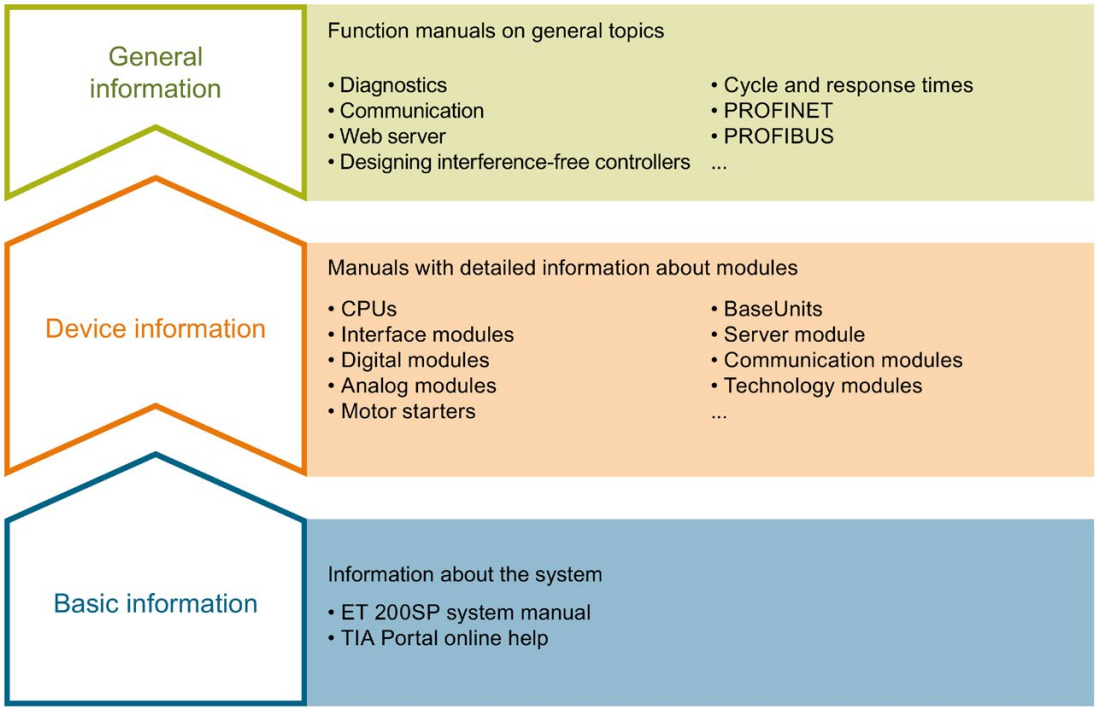

Basic information

The system manual describes in detail the configuration, installation, wiring and commissioning of the SIMATIC ET 200SP. distributed I/O system. The STEP 7 online help supports you in the configuration and programming.

Device information

Product manuals contain a compact description of the module-specific information, such as properties, wiring diagrams, characteristics and technical specifications.

General information

The function manuals contain detailed descriptions on general topics regarding the SIMATIC ET 200SP distributed I/O system, e.g. diagnostics, communication, Web server, motion control and OPC UA.

You can download the documentation free of charge from the Internet (http://w3.siemens.com/mcms/industrial-automation-systems-simatic/en/manual-overview/tech-doc-et200/Pages/Default.aspx).

Changes and supplements to the manuals are documented in a Product Information.

You can download the product information free of charge from the Internet (https://support.industry.siemens.com/cs/us/en/view/73021864).

Manual Collection ET 200SP

The Manual Collection contains the complete documentation on the SIMATIC ET 200SP distributed I/O system gathered together in one file.

You can find the Manual Collection on the Internet (http://support.automation.siemens.com/WW/view/en/84133942).

"mySupport"

With "mySupport", your personal workspace, you make the most of your Industry Online Support.

In "mySupport" you can store filters, favorites and tags, request CAx data and put together your personal library in the Documentation area. Furthermore, your data is automatically filled into support requests and you always have an overview of your current requests.

You need to register once to use the full functionality of "mySupport".

You can find "mySupport" in the Internet (https://support.industry.siemens.com/My/ww/en).

"mySupport" - Documentation

In the Documentation area of "mySupport", you have the possibility to combine complete manuals or parts of them to make your own manual.
You can export the manual in PDF format or in an editable format.

You can find "mySupport" - Documentation in the Internet (http://support.industry.siemens.com/My/ww/en/documentation).

"mySupport" - CAx Data

In the CAx Data area of "mySupport", you can have access the latest product data for your CAx or CAe system.

You configure your own download package with a few clicks.

In doing so you can select:

- Product images, 2D dimension drawings, 3D models, internal circuit diagrams, EPLAN macro files
- Manuals, characteristics, operating manuals, certificates
- Product master data

You can find "mySupport" - CAx Data in the Internet (http://support.industry.siemens.com/my/ww/en/CAxOnline).

Application examples

The application examples support you with various tools and examples for solving your automation tasks. Solutions are shown in interplay with multiple components in the system - separated from the focus in individual products.

You can find the application examples on the Internet (https://support.industry.siemens.com/sc/ww/en/sc/2054).

TIA Selection Tool

With the TIA Selection Tool, you can select, configure and order devices for Totally Integrated Automation (TIA).
This tool is the successor of the SIMATIC Selection Tool and combines the known configurators for automation technology into one tool.
With the TIA Selection Tool, you can generate a complete order list from your product selection or product configuration.

You can find the TIA Selection Tool on the Internet (http://w3.siemens.com/mcms/topics/en/simatic/tia-selection-tool).

SIMATIC Automation Tool

You can use the SIMATIC Automation Tool to run commissioning and maintenance activities simultaneously on various SIMATIC S7 stations as a bulk operation independently of the TIA Portal.

The SIMATIC Automation Tool provides a multitude of functions:

- Scanning of a PROFINET/Ethernet network and identification of all connected CPUs
- Address assignment (IP, subnet, gateway) and station name (PROFINET device) to a CPU
- Transfer of the data and the programming device/PC time converted to UTC time to the module
- Program download to CPU
- Operating mode switchover RUN/STOP
- Localization of the CPU by means of LED flashing
- Reading out CPU error information
- Reading the CPU diagnostic buffer
- Reset to factory settings
- Updating the firmware of the CPU and connected modules

You can find the SIMATIC Automation Tool on the Internet (https://support.industry.siemens.com/cs/ww/en/view/98161300).

PRONETA

With SIEMENS PRONETA (PROFINET network analysis), you analyze the plant network during commissioning. PRONETA features two core functions:

- The topology overview independently scans PROFINET and all connected components.
- The IO check is a fast test of the wiring and the module configuration of a system.

You can find SIEMENS PRONETA on the Internet (https://support.industry.siemens.com/cs/ww/en/view/67460624).

SINETPLAN

SINETPLAN, the Siemens Network Planner, supports you in planning automation systems and networks based on PROFINET. The tool facilitates professional and predictive dimensioning of your PROFINET installation as early as in the planning stage. In addition, SINETPLAN supports you during network optimization and helps you to exploit network resources optimally and to plan reserves. This helps to prevent problems in commissioning or failures during productive operation even in advance of a planned operation. This increases the availability of the production plant and helps improve operational safety.

The advantages at a glance

- Network optimization thanks to port-specific calculation of the network load
- Increased production availability thanks to online scan and verification of existing systems
- Transparency before commissioning through importing and simulation of existing STEP 7 projects
- Efficiency through securing existing investments in the long term and optimal exploitation of resources

You can find SINETPLAN on the Internet.

Product overview

2

2.1 Properties

Article number

6ES7131-6BF00-0DA0

View of the module

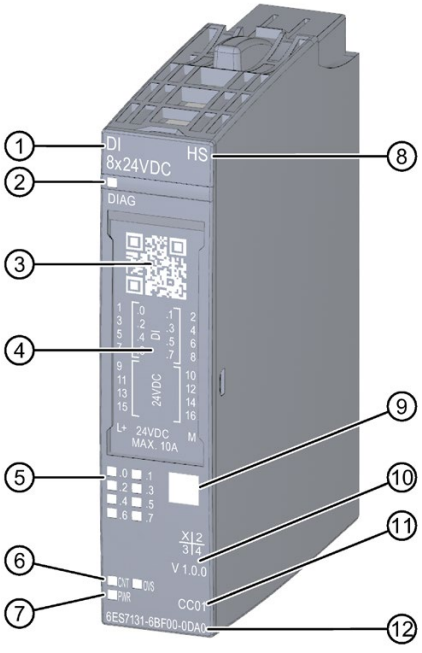

① Module type and name
② LED for diagnostics
③ 2D matrix code
④ Wiring diagram
⑤ LEDs for channel status
⑥ LEDs for operating mode
⑦ LED for supply voltage
⑧ Function class
⑨ Color coding module type
⑩ Function and firmware version
⑪ Color code for selecting the color identification labels
⑫ Article number

Figure 2-1 View of the DI 8×24VDC HS module

Properties

The module has the following technical properties:

- Digital input module with 8 high-speed inputs
- Supply voltage L+
- Sink input (PNP)
- Module-specific configurable diagnostics for supply voltage and short-circuit to M
- Suitable for connection of switches and 2-wire sensors in accordance with IEC 61131, type 1 and 3
- Three operating modes:

Table 2- 1 Operating modes of the DI 8×24VDC HS

Property		Operating mode			
		DI (Page 15)		Counting (CNT) (Page 30)	Oversampling (OVS) (Page 49)
		Without value status (QI)	With value status (QI)		
Number of channels		8	8	4	8
Isochronous mode		Yes, optional	Yes, optional	Yes, optional	Yes, required
• Shortest send clock		125 µs	125 µs	125 µs	250 µs
Oversampling		No	No	No	Yes
• Number of oversampling levels (sampling rate)		—	—	—	2 ... 32
• Shortest sub-cycle (= shortest sampling time)		—	—	—	7.8125 µs
Counter length, max. counting frequency		—	—	32-bit, 10 kHz *	—
Configurable input delay		0 ms ... 20 ms	0 ms ... 20 ms	0.05 ms - 20 ms	0 ms ... 20 ms
Configurable hardware interrupts; rising edge and/or falling edge (per channel)		×	×	—	—
Data length	Inputs	1 byte	2 bytes	25 bytes	32 bytes
	Outputs	0 bytes	0 bytes	20 bytes	0 bytes

* If a diagnostic event occurs, the maximum counting frequency is reduced to 9 kHz.

The module supports the following functions:

- Isochronous mode
- Firmware update
- I&M identification data
- Reconfiguration in RUN
- PROFIenergy

The module can be configured with HSP or a GSD file. The configurations for the operating modes can be found under various codes / module names:

Table 2- 2 Codes / module names for the configuration options

Operating mode		Configuration software			
		HSP0127 for STEP 7 (TIA Portal)	HSP0229 for STEP 7	GSD file PROFINET IO	GSD file PROFIBUS DP
DI	Without QI	DI 8×24VDC HS	DI 8×24VDC HS DI/OVS	DI 8×24VDC HS	DI 8×24VDC HS
	With QI			DI 8×24VDC HS QI	—
Counting (CNT)			DI 8×24VDC HS CNT	DI 8×24VDC HS CNT	DI 8×24VDC HS CNT
Oversampling (OVS) *			DI 8×24VDC HS DI/OVS	—	—

* The interface module or CPU with which the module is used must support isochronous mode.

Accessories

The following accessories must be ordered separately:

- Labeling strips
- Color identification labels
- Reference identification label
- Shield connector

See also

You can find additional information on the accessories in the ET 200SP distributed I/O system (https://support.industry.siemens.com/cs/ww/en/view/58649293) system manual.

Operating mode DI

3

3.1 Wiring up

3.1.1 Wiring and block diagrams

This section contains the block diagram for the DI 8x24VDC HS with the pin assignments for 1, 2 and 3-wire connection in DI operating mode. You may use and combine the different wiring options for all channels.

Information on wiring the BaseUnit can be found in the system manual ET 200SP Distributed I/O System (http://support.automation.siemens.com/WW/view/en/58649293).

Note

The module's load group must start with a light BaseUnit. Keep this in mind also during the configuration.

Wiring: 1 and 2-wire connection

The figure below shows the block diagram and an example of pin assignment for the DI 8×24VDC HS digital input module on the BaseUnit BU type A0 without AUX terminals (1 and 2-wire connection).

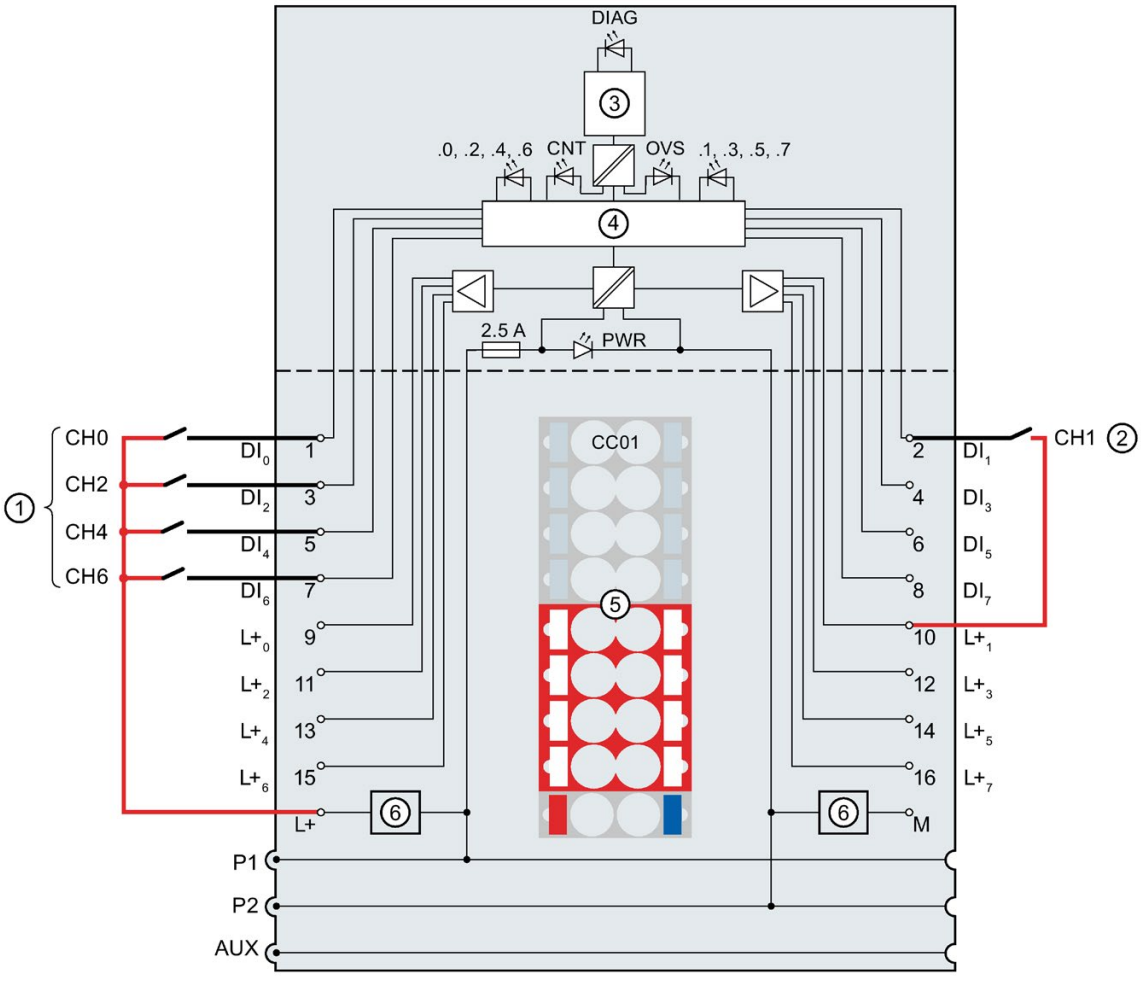

①	1-wire connection	$L+_n$	Encoder supply, channel n
②	2-wire connection	L+	24 V DC (infeed only with light BaseUnit)
③	Backplane bus interface	DIAG	LED error or diagnostics (green, red)
④	Input electronics	.0 to .7	LED channel status (green)
⑤	Color-coded label CCxx (optional)	PWR	LED power (green)
⑥	Supply voltage filter circuit (only available with light BaseUnit)	CNT	LED operating mode Count (green)
M	Ground	OVS	LED operating mode Oversampling (green)
DI_n	Input signal, channel n	P1, P2, AUX	Internal self-configuring voltage buses Connection to the left (dark BaseUnit) Connection to the left interrupted (light BaseUnit)

Figure 3-1 Pinout and block diagram for 1 and 2-wire connection of encoders

Wiring: 3-wire connection

The figure below shows an example of pin assignment for the DI 8×24VDC HS digital input module on the BaseUnit BU type A0 with AUX terminals (3-wire connection).

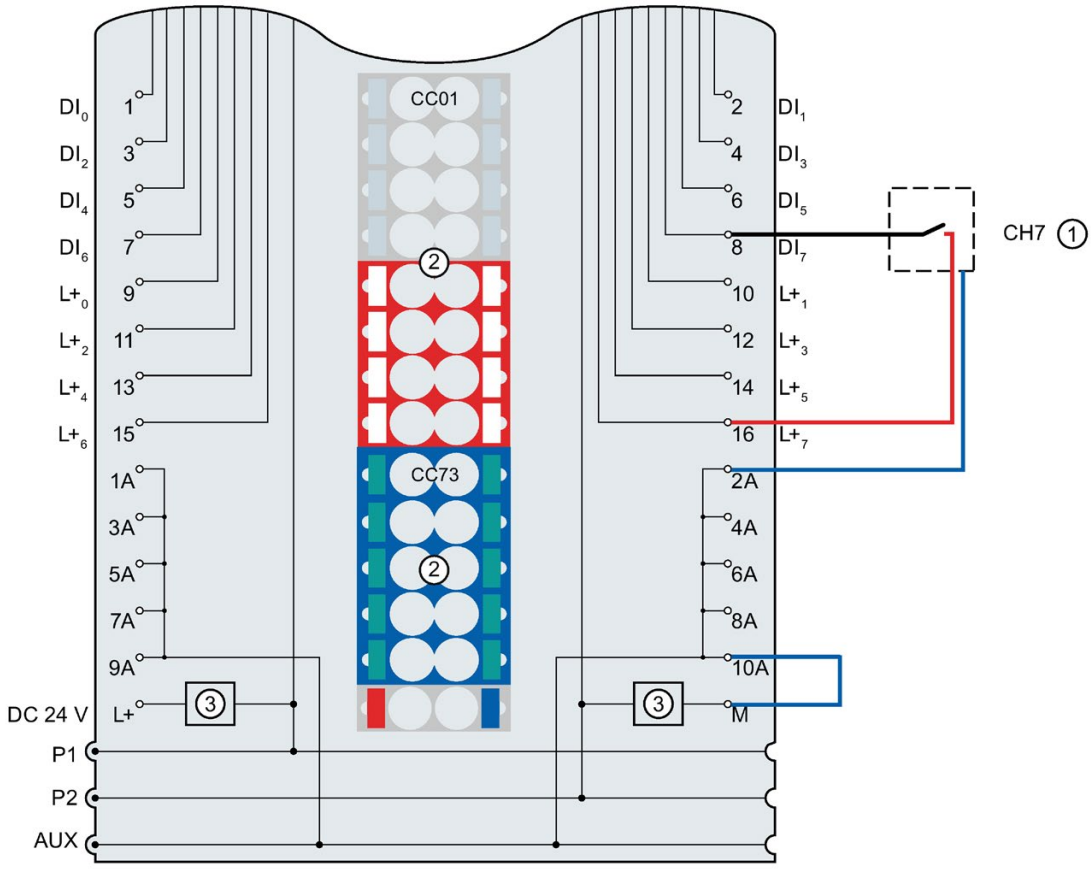

①	3-wire connection
②	Color-coded labels CCxx (optional)
③	Supply voltage filter circuit (only available with light BaseUnit)
DI_n	Input signal, channel n
$L+_n$	Encoder supply, channel n
DC 24 V	Supply voltage L+ (infeed only with light BaseUnit)
M	Ground
1A ... 10A	AUX terminals
P1, P2, AUX	Internal self-configuring voltage buses Connection to the left (dark BaseUnit) Connection to the left interrupted (light BaseUnit)

Figure 3-2 Pinout and block diagram for 3-wire connection of encoders

3.2 Parameters/address space

3.2.1 High-speed inputs

Function

In operating mode DI, use all eight channels as digital high-speed inputs. High-speed inputs make sense when rapid reactions to input signals are needed (reaction time < 2 ms).

Requirement

Low reaction times require a cycle time of less than 750 µs.

3.2.2 Parameters

The effective range of the parameters depends on the type of configuration. The following configurations are possible:

- Central operation on an ET 200SP CPU or on an ET 200SP Open Controller
- Distributed operation on PROFINET IO in an ET 200SP system
- Distributed operation on PROFIBUS DP in an ET 200SP system

In addition to configuration via the configuration software, you can also configure parameters in RUN mode (dynamic) via the user program. When assigning parameters in the user program, use the "WRREC" instruction to transfer the parameters to the module using the data records; refer to the section Parameter assignment and structure of parameter data record for DI operating mode (Page 65).

The following parameter settings are possible for each operating mode:

Table 3- 1 Configurable parameters in DI operating mode

Parameters	Value range	Default	Reconfiguration in RUN	Effective range with configuration software	
				HSP0127 for STEP 7 (TIA Portal); HSP0229 for STEP 7; PROFINET IO GSD file	GSD file PROFIBUS DP
Operating mode[1]	• DI / Oversampling • Counting	—	no	Module	Module
Diagnostics No supply voltage L+	• Disable • Enable	Disable	yes	Module	Module
Diagnostics Short-circuit to ground	• Disable • Enable	Disable	yes	Module	Module
Channel activated	• Disable • Enable	Enable	yes	Channel	Channel
Input delay	• None • 0.05 ms • 0.1 ms • 0.4 ms • 0.8 ms • 1.6 ms • 3.2 ms • 12.8 ms • 20 ms	3.2 ms	yes	Channel	Module [2]
Pulse stretching	• None • 0.05 s • 0.1 s • 0.2 s • 0.5 s • 1 s • 2 s	None	yes	Channel	— [3]
Hardware interrupt: rising edge	• Disable • Enable	Disable	yes	Channel	— [3]

Parameters	Value range	Default	Reconfiguration in RUN	Effective range with configuration software	
				HSP0127 for STEP 7 (TIA Portal); HSP0229 for STEP 7; PROFINET IO GSD file	GSD file PROFIBUS DP
Hardware interrupt: falling edge	• Disable • Enable	Disable	yes	Channel	— [3]
Potential group	• Use potential group of the left module • Enable new potential group	Use potential group of the left module	No	Module	Module

[1] When configuring with HSP0229 for STEP 7 or with a GSD file, the operating mode is specified by selecting the module name.

[2] Due to the limited number of parameters at a maximum of 244 bytes per ET 200SP station with a PROFIBUS GSD configuration, the configuration options are restricted. If your PROFIBUS Master supports the "Read / write data record" function, you can set this parameter via data record 128.

[3] If your PROFIBUS Master supports the "Read / write data record" function, you can set this parameter for each channel via data record 128.

3.2.3 Explanation of parameters

Operating mode

At the module level, specifies the operating mode in which the module's channels are operated:

- DI / Oversampling (Page 49)
- Counting (Page 30)

When configuring with HSP0229 for STEP 7 or with a GSD file, the operating mode is specified by selecting the module name.

Diagnostics: No supply voltage L+

Enabling of the diagnostics for no or insufficient supply voltage L+.

Diagnostics: Short-circuit to ground

Enabling of the diagnostics if a short-circuit of the actuator supply to ground occurs.

Channel activated

Determines whether a channel is enabled or disabled. If a digital input is disabled, the module ignores its signals.

Pulse stretching

Pulse stretching is a function used to change a digital input signal. A pulse on a digital input is stretched to at least the configured length. If the input pulse is already longer than the configured length, the pulse is not changed. With Pulse stretching, you can reliably detect very short input signals without having to use a correspondingly short cycle time.

In isochronous mode, the terminal signal is read in at the time T_i (time for reading the input data). In some cases, pulses that are shorter than the cycle time (send clock) are not detected.

If you want to detect short signals isochronously, the Oversampling operating mode is recommended. Oversampling also provides more precise information about the time at which a signal occurs.

Principle of pulse stretching

The figure below uses examples to show whether and how input pulses are changed.

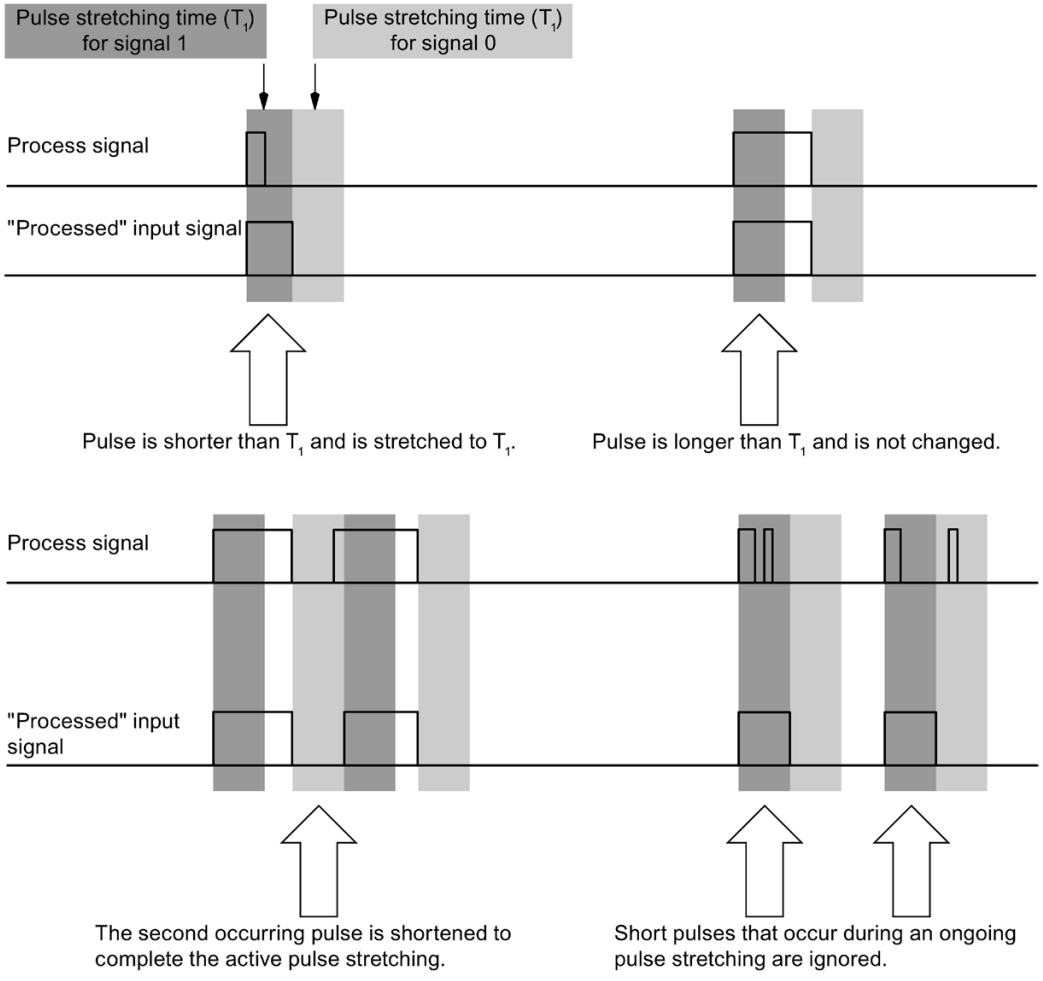

Figure 3-3 Principle of pulse stretching

Input delay

This parameter can be used to avoid signal faults. Changes to the signal are only detected if they are constantly pending longer than the set input delay time.

Isochronous configuration is only possible if there is no input delay configured for at least one channel. In isochronous mode, the terminal signal is read in at the time T_i (time for reading the input data). The read time T_i refers to the channel for which no input delay time was configured.

For input channels with longer input delays, the read time is moved accordingly. This means individual channels can be assigned input delays, if necessary, without having a negative impact on the possible cycle time.

Note

If you select the "None" or "0.05 ms" option for the input delay, you have to use shielded cables for connection of the digital inputs.

Hardware interrupt: rising edge

Specifies whether a hardware interrupt is generated for a rising edge.

Hardware interrupt: falling edge

Specifies whether a hardware interrupt is generated for a falling edge.

Potential group

Specifies whether a light-colored BaseUnit with incoming supply voltage is located on this slot (see ET 200SP Distributed I/O System (http://support.automation.siemens.com/WW/view/en/58649293) system manual).

3.2.4 Address space

Address space with value status (Quality Information, QI)

The figure below shows the assignment of the address space with value status (Quality Information (QI)). "IB x" represents the start address of input byte x.

The addresses for the value status are only available if the value status is enabled.

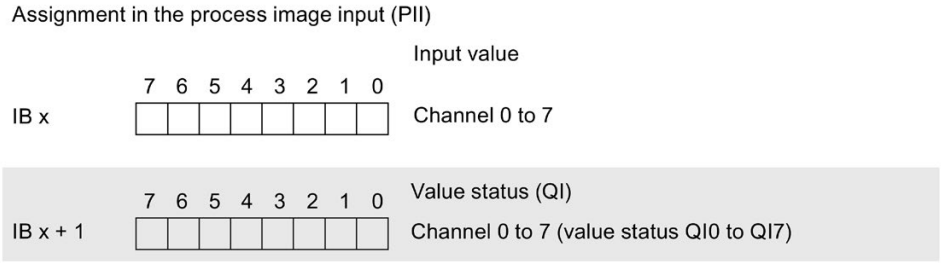

Figure 3-4 Address space with value status

Evaluating the value status

An additional byte is allocated in the input address space if you enable the value status for the digital module. Bits 0 to 7 in this byte are each assigned to a channel. They provide information about the validity of the digital value.

Bit = 1: No fault is present on the channel.

Bit = 0: Channel is disabled or there is a fault/error on the module.

If a fault/error occurs on a channel with this module, the value status for all channels is 0.

3.3 Interrupts/diagnostics alarms

3.3.1 Status and error display

LED display

The figure below shows the LED display of the DI 8×24VDC HS.

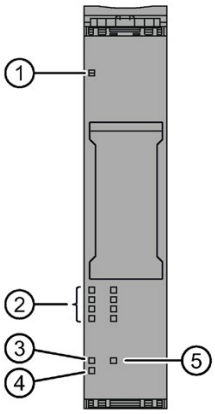

① DIAG (green/red)
② Channel status (green)
③ CNT (green)
④ PWR (green)
⑤ OVS (green)

Figure 3-5 LED display

Meaning of the LED displays

The following tables show the meaning of the status and error displays. Remedial measures for dealing with diagnostic interrupts can be found in the section Diagnostics alarms (Page 29).

DIAG LED

Table 3- 2 DIAG LED fault/error display

DIAG LED	Meaning
Off	Backplane bus supply of the ET 200SP not OK
Flashes	Module parameters not assigned
On	Module parameters assigned and no module diagnostics
Flashes	Module parameters assigned and module diagnostics

Channel status LED

Table 3- 3 Status display of the channel status LED

Channel status LED	Meaning
Off	Process signal = 0
On	Process signal = 1

CNT LED

Table 3- 4 Status display of the CNT LED

CNT LED	Meaning
Off	Counting operating mode disabled
On	Counting operating mode enabled

OVS LED

Table 3- 5 Status display of the OVS LED

OVS LED	Meaning
□ Off	Oversampling operating mode disabled
■ On	Oversampling operating mode enabled

PWR LED

Table 3- 6 Status display of the PWR LED

PWR LED	Meaning
□ Off	No supply voltage L+
■ On	Supply voltage L+ present

3.3.2 Interrupts

The digital input module DI 8×24VDC HS supports hardware and diagnostics alarms in the DI mode.

Diagnostic interrupts

The module generates a diagnostics interrupt at the following events:

- Channel temporarily unavailable
- Short-circuit
- Parameter assignment error
- No load voltage
- Hardware interrupt lost

Evaluating hardware interrupts with IO controller

The module generates a hardware interrupt at the following events:

- At rising edge (signal change from 0 to 1)
- At falling edge (signal change from 1 to 0)

If an interrupt occurs, a corresponding interrupt OB is called in the CPU of the IO controller.

S7-1500

Detailed information on the event is available in the STEP 7 online help.

The block interface is shown here with optimized block access, which is set in the TIA Portal by default.

Name	Data type	Comment
LADDR	HW_IO	Hardware identifier of the module triggering the interrupt
USI	WORD	USI (High/Low)
IChannel	USInt	Channel that triggered the hardware interrupt
EventType	Byte	Error event

S7-300/400 or a different CPU

The module generates a hardware interrupt at the following events:

- At rising edge (signal change from 0 to 1)
- At falling edge (signal change from 1 to 0)

If an interrupt occurs, a corresponding interrupt OB is called in the CPU of the IO controller.

You will find detailed information on the event in the hardware interrupt organization block with the "RALRM" (read additional interrupt information) instruction and in the STEP 7 online help.

The channel of the module that triggered the hardware interrupt is entered in the start information of OB40 in the OB40_POINT_ADDR tag. The following figure shows the assignment to the bits of double word 8 in local data.

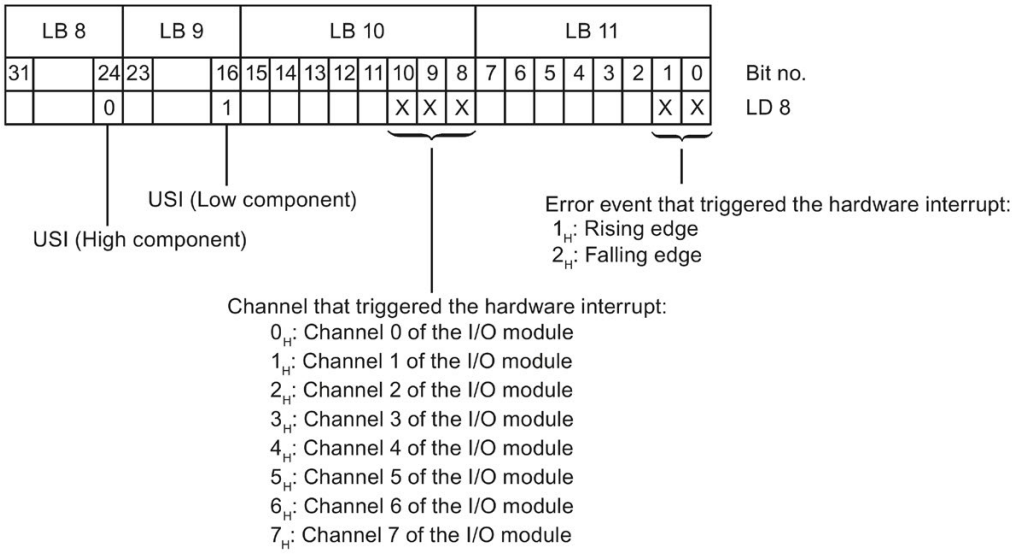

Figure 3-6 OB40_POINT_ADDR tag

Structure of the additional interrupt information

Table 3- 7 Structure of USI = W#16#0001

Data block name		Content	Comment	Bytes
USI		W#16#0001	User Structure Identifier: Additional interrupt info for hardware interrupts of the I/O module	2
The channel that triggered the hardware interrupt follows.				
	Channel	B#16#00 to B#16#07	Channel 0 to 7 of the I/O module	1
It follows the error event that triggered the hardware interrupt.				
	Error event	B#16#01	Rising edge	1
		B#16#02	Falling edge	

3.3.3 Diagnostics alarms

A diagnostic interrupt is output for each diagnostics event and the DIAG LED on the module flashes. The diagnostic interrupts can, for example, be read from the diagnostics buffer of the CPU. You can evaluate the error codes with the user program.

Table 3- 8 Diagnostic interrupts, their meaning and how to deal with them

Diagnostic interrupt	Error code	Meaning	Remedy
Short-circuit	1_H	Short-circuit to ground at encoder supply	Correct process wiring
Parameter assignment error	10_H	• The module cannot evaluate parameters for the channel/module. • Incorrect parameter assignment.	Correct parameter assignment
No load voltage	11_H	No or insufficient supply voltage L+	• Check supply voltage L+ on the BaseUnit • Check BaseUnit type
Hardware interrupt lost	16_H	• Module cannot send an interrupt because a previous interrupt has not been processed • Possible cause: Too many hardware interrupts in too short a time	Change interrupt processing in the CPU and re-assign module parameters correspondingly
Channel temporarily unavailable	$1F_H$	Firmware update in progress or update has been canceled. The module reads no process values in this state.	• Wait for firmware update. • Restart the firmware update.

Counting operating mode (CNT) 4

4.1 Connecting

4.1.1 Wiring and block diagrams

This section contains the block diagram for the DI 8×24VDC HS module with the pin assignments for 1, 2 and 3-wire connection in counting operating mode. You may use and combine the different wiring options for all channels.

Information on wiring the BaseUnit can be found in the system manual ET 200SP Distributed I/O System (http://support.automation.siemens.com/WW/view/en/58649293).

Note

The module's load group must start with a light BaseUnit. Keep this in mind also during the configuration.

Wiring: 1 and 2-wire connection

The figure below shows the block diagram and an example of pin assignment for the DI 8×24VDC HS digital input module on the BaseUnit BU type A0 without AUX terminals (1 and 2-wire connection).

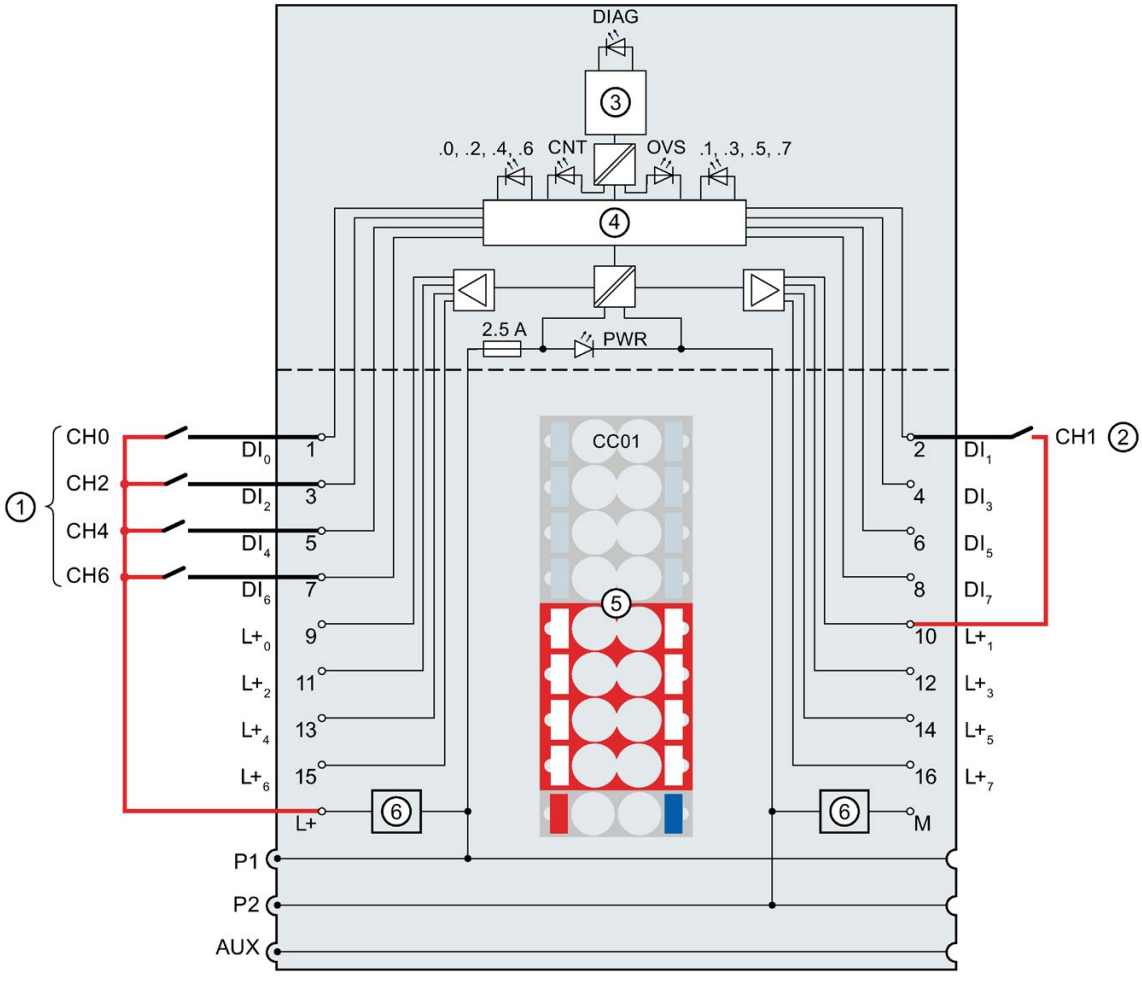

①	1-wire connection	DIAG	LED error or diagnostics (green, red)
②	2-wire connection	.0 to .7	LED channel status (green)
③	Backplane bus interface	PWR	LED power (green)
④	Input electronics	CNT	LED operating mode Count (green)
⑤	Color-coded label CCxx (optional)	OVS	LED operating mode Oversampling (green)
⑥	Supply voltage filter circuit (only available with light BaseUnit)	DI_0 - DI_3	Counter input, channels 0-3
M	Ground	DI_4	Direction input or gate input for DI_0, channel 4
$L+_n$	Encoder supply, channel n	DI_5	Direction input or gate input for DI_1, channel 5
L+	24 V DC (infeed only with light BaseUnit)	DI_6	Direction input or gate input for DI_2, channel 6
P1, P2, AUX	Internal self-configuring voltage buses Connection to the left (dark BaseUnit) Connection to the left interrupted (light BaseUnit)	DI_7	Direction input or gate input for DI_3, channel 7

Figure 4-1 Pinout and block diagram for 1 and 2-wire connection of encoders

Wiring: 3-wire connection

The figure below shows an example of pin assignment for the DI 8×24VDC HS digital input module on the BaseUnit BU type A0 with AUX terminals (3-wire connection).

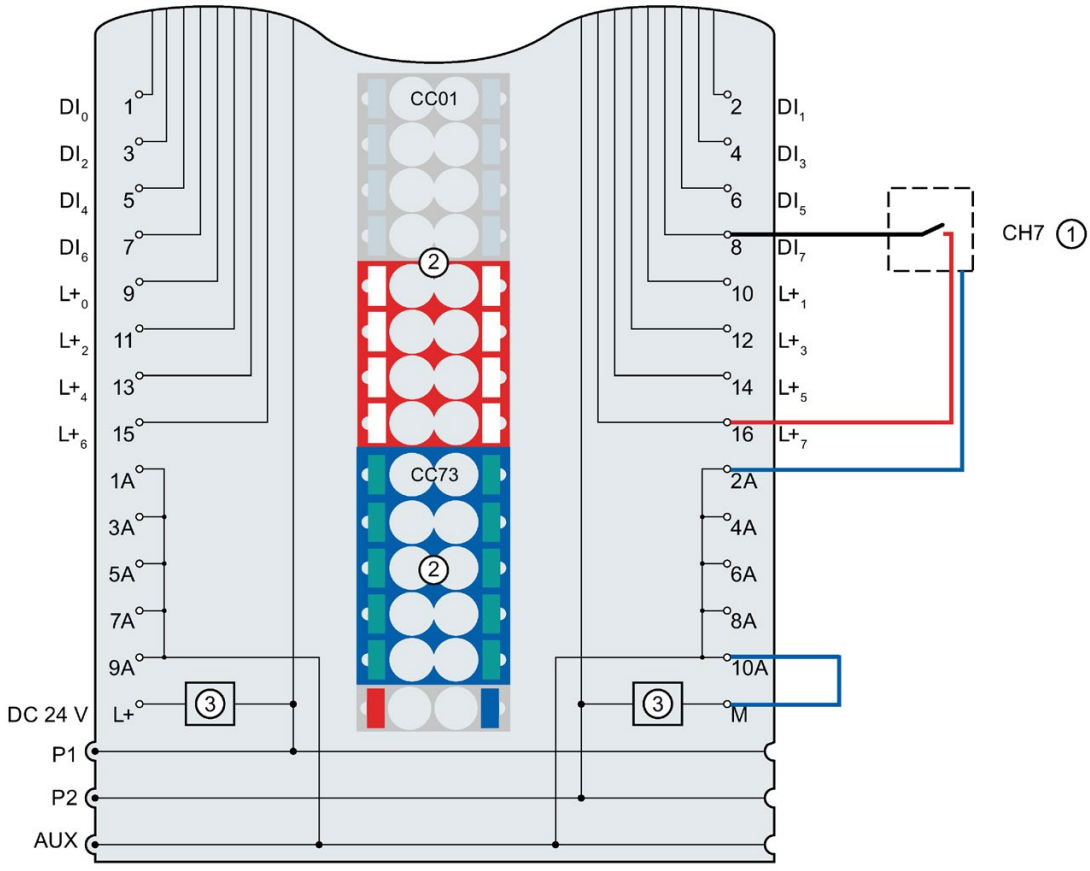

①	3-wire connection
②	Color-coded labels CCxx (optional)
③	Supply voltage filter circuit (only available with light BaseUnit)
DI_n	Input signal, channel n
$L+_n$	Encoder supply, channel n
DC 24 V	Supply voltage L+ (infeed only with light BaseUnit)
M	Ground
1A ... 10A	AUX terminals
P1, P2, AUX	Internal self-configuring voltage buses Connection to the left (dark BaseUnit) Connection to the left interrupted (light BaseUnit)

Figure 4-2 Pinout and block diagram for 3-wire connection of encoders

4.2 Parameters/address space

4.2.1 Counting

Function

Counting refers to the detection and summation of events. The respective counters of the module detect encoder signals and pulses and evaluate them accordingly, for example:

- For counting general piece goods up to a maximum limit
- For applications with recurring counting processes

You can count with DI_0 through DI_3. You can specify each counter's characteristics using the functions described below.

Counter limits

The counting limits define the counter value range used. The counter limits are configurable and can be modified during runtime using the user program.

The maximum possible counting limit is 2147483647 (2^{31}–1). The minimum possible counting limit is –2147483648 (–2^{31}).

You can continue or stop counting upon violation of a counting limit (automatic gate stop) Upon high and low limit violations of the counter value, an event bit is set in the feedback interface (Page 41) in each case.

Start value

You can configure a start value within the counter limits. The start value can be modified during runtime with the user program.

Gate control

Opening and closing the hardware gate and software gate defines the period of time during which the counting signals are recordd.

The control of the hardware gate takes place externally via the digital inputs DI_4 through DI_7. The software gate is controlled via the user program. Use of the hardware gate can be enabled through parameter assignment.

Count direction

The counting direction is specified either via suitable external pulse signals at the each counter's control input or via the configuration.

Comparison values

You define two comparison values that can control the STS_DQ feedback bit, independent of the user program. If the current counter value meets the configured comparison condition, the STS_DQ reset bit is set. You can use the STS_DQ reset bit in order to control a digital output module's digital output.

The comparison values are configurable and can be modified during runtime with the user program. When a comparison event occurs, in each case an event bit is set in the feedback interface (Page 41).

4.2.2 Parameters

The effective range of the parameters depends on the type of configuration. The following configurations are possible:

- Central operation on an ET 200SP CPU or on an ET 200SP Open Controller
- Distributed operation on PROFINET IO in an ET 200SP system
- Distributed operation on PROFIBUS DP in an ET 200SP system

In addition to configuration via the configuration software, you can also configure parameters in RUN mode (dynamic) via the user program. When assigning parameters in the user program, use the "WRREC" instruction to transfer the parameters to the module using the data records; refer to the section Parameter assignment and structure of parameter data record for Counting operating mode (Page 69).

The following parameter settings are possible for each operating mode:

Table 4- 1 Configurable parameters in Counting operating mode

Parameters	Value range	Default	Reconfig-uration in RUN	Effective range with configuration soft-ware	
				HSP0127 for STEP 7 (TIA Portal); HSP0229 for STEP 7; PROFINET IO GSD file	GSD file PROFIBUS DP
Operating mode[1]	• DI / Oversampling • Counting	—	No	Module	Module
Diagnostics No supply voltage L+	• Disable • Enable	Disable	Yes	Module	Module
Diagnostics: Short-circuit to ground	• Disable • Enable	Disable	Yes	Module	Module
Channel activated	• Disable • Enable	Enable	Yes	Channel	Channel

Parameters	Value range	Default	Reconfiguration in RUN	Effective range with configuration software	
				HSP0127 for STEP 7 (TIA Portal); HSP0229 for STEP 7; PROFINET IO GSD file	GSD file PROFIBUS DP
Input delay	• 0.05 ms • 0.1 ms • 0.4 ms • 0.8 ms • 1.6 ms • 3.2 ms • 12.8 ms • 20 ms	3.2 ms	Yes	Channel	Module [2]
Reaction to violation of a counting limit	• Stop counting • Continue counting	Stop counting	Yes	Channel	Channel
Edge selection	• At rising edge • At falling edge	At rising edge	Yes	Channel	Channel
Count direction	• Up • Down	Up	Yes	Channel	Channel
Set output	• Off (DQ = 0) • Off (DQ = 1) • Between comparison value 0 and 1 • Not between comparison value 0 and 1	Off (DQ = 0)	Yes	Channel	Channel
Set function of DI	• Digital input • Gate start/stop • Count direction	Digital input	Yes	Channel	Channel
High counting limit	-2147483648...2147483647	2147483647	Yes	Channel	Channel
Low counting limit	-2147483648...2147483647	0	Yes	Channel	— [3]
Start value	-2147483648...2147483647	0	Yes	Channel	— [3]
Comparison value 1	-2147483648...2147483647	10	Yes	Channel	Channel

Parameters	Value range	Default	Reconfig-uration in RUN	Effective range with configuration soft-ware	
				HSP0127 for STEP 7 (TIA Portal); HSP0229 for STEP 7; PROFINET IO GSD file	GSD file PROFIBUS DP
Comparison value 0	-2147483648...2147483647	0	Yes	Channel	— [3]
Potential group	• Use potential group of the left module • Enable new potential group	Use potential group of the left module	No	Module	Module

[1] When configuring with HSP0229 for STEP 7 or with a GSD file, the operating mode is specified by selecting the module name.

[2] If your PROFIBUS Master supports the "Read / write data record" function, you can set this parameter for each channel via data record 128.

[3] Due to the limited number of parameters at a maximum of 244 bytes per ET 200SP station with a PROFIBUS GSD configuration, the configuration options are restricted. If your PROFIBUS Master supports the "Read / write data record" function, you can set this parameter via data record 128.

4.2.3 Explanation of parameters

Operating mode

Selection of the operating mode in which all of the module's channels are operated.

- DI (Page 15) / Oversampling (Page 49)
- Counting

When configuring with HSP0229 for STEP 7 or with a GSD file, the operating mode is specified by selecting the module name.

Diagnostics: No supply voltage L+

Enabling of the diagnostics for no or insufficient supply voltage L+.

Diagnostics: Short-circuit to ground

Enabling of the diagnostics if a short-circuit of the actuator supply to ground occurs.

Channel activated

Determines whether a channel is enabled or disabled. If a digital input is disabled, the module ignores its signals.

Input delay

You use this parameter to suppress signal interferences. The module only detects changes to the signal if the changed signal is constantly pending longer than the set input delay time.

Note

If you select the "0.05 ms" value range for the input delay, you have to use shielded cables for connection of the digital inputs.

Reaction to violation of a counting limit

Selection of the reaction to violation of the counter high limit in the upward direction or the counter low limit in the downward direction:

- Stop counting:
  After a counting limit is violated, the internal gate is closed. This stops the counting process. The counter value is set to the opposite counting limit. To restart counting, you must close and reopen the software/hardware gate.
- Continue counting:
  After a counting limit is violated, the counter value is set to the opposite counting limit and counting continues.

Edge selection

Selects the edge that is counted:

- At rising edge:
  The respective counter counts all rising edges at the digital input.
- At falling edge:
  The respective counter counts all falling edges at the digital input.

Note

If the "Reverse direction" option is selected in "Set function of DI" and the counting direction in the process changes, the counting edge is automatically adjusted (opposite edges).

Count direction

Count direction selection:

- Up:
  The respective counter counts up.
- Down:
  The respective counter counts down.

Note

This parameter has no effect if the "Reverse direction" option is selected in "Set function of DI".

Set output

Selects the function that controls the response of the STS_DQ feedback bit (Page 41): You use the feedback bit STS_DQ to control a digital output of a digital output module.

- Off (DQ = 0):
  STS_DQ is independent of the counter value and permanently not set.
- Off (DQ = 1):
  STS_DQ is independent of the counter value and permanently set.
- Between comparison value 0 and 1:
  STS_DQ is set if counter value ≥ comparison value 0 and counter value ≤ comparison value 1.
- Not between comparison value 0 and 1:
  STS_DQ is set if counter value < comparison value 0 or counter value > comparison value 1.

Set function of DI

Selects the function of DI_{n+4}, which controls the assigned counter input DI_n:

- Digital input:
  No function is assigned to DI_{n+4}. The signal status of DI_{n+4} is read by the CPU using the feedback interface (Page 41).
- Gate start/stop:
  Setting DI_{n+4} opens the hardware gate for DI_n. Resetting DI_{n+4} closes the hardware gate for DI_n.
- Count direction:
  DI_{n+4} reverses the counting direction at DI_n, in order to adjust it to the process. If DI_{n+4} is not set, DI_n counts up. If DI_{n+4} is set, DI_n counts down.

Counter high limit

Sets counter high limit.

The following applies:

- Counter high limit > counter low limit
- Counter high limit ≤ 2147483647 (2^{31} - 1)

Counter low limit

Sets the counter low limit.

The following applies:

- Counter low limit < counter high limit
- Counter low limit ≥ -2147483648 (-2^{31})

Start value

Sets the start value.

The following applies:

- Start value ≥ counter low limit
- Start value ≤ counter high limit

Comparison value 1

Sets the second comparison value.

The following applies:

- Comparison value 1 > comparison value 0
- Comparison value 1 ≤ counter high limit

Comparison value 0

Sets the first comparison value.

The following applies:

- Comparison value 0 < comparison value 1
- Comparison value 0 ≥ counter low limit

Potential group

Specifies whether a light-colored BaseUnit with incoming supply voltage is located on this slot (see ET 200SP Distributed I/O System (http://support.automation.siemens.com/WW/view/en/58649293) system manual).

4.2.4 Address space

4.2.4.1 Assignment of the control interface

Control interface

The user program uses the control interface to influence the behavior of the module's counter. The figure below shows the address space allocation for the control interface in the process image of the outputs.

"QB x" represents the start address of output byte x.

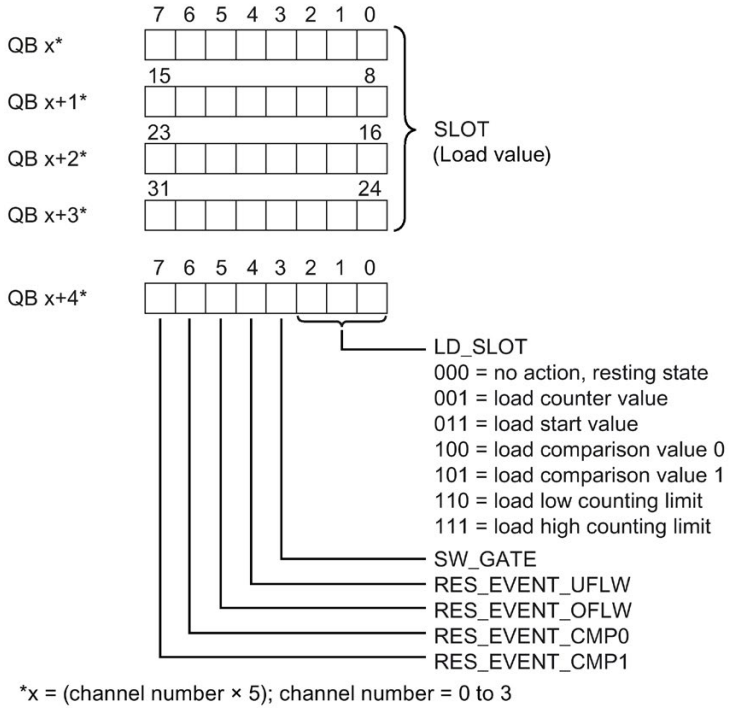

Figure 4-3 Assignment of the control interface

Notes on the control bits

Control bit	Notes
SLOT	This value is used to specify the loaded value for each channel. Use the LD_SLOT load request to evaluate the loaded value.
LD_SLOT	This load request is used to specify the meaning of the SLOT (loaded value) value for each channel. The user program performs the respective action, as soon as LD_SLOT changes. When the loading request LD_SLOT = 011_B is entered and the software gate is opened, each counting operation begins with the start value. If another load request is entered and the software gate is opened, counting continues with the current count at each start of the counting operation. These two situations are also in effect when the hardware gate is configured and the software gate is closed.
SW_GATE	With this bit, you open and close the software gate of the respective channel. Together, the software gate and the hardware gate form the internal gate. The module only counts if the internal gate is open. 0 means: Software gate closed 1 means: Software gate open
RES_EVENT_UFLW	Use this bit to initiate the resetting of the saved event in the EVENT_UFLW feedback bit for the respective channel.
RES_EVENT_OFLW	Use this bit to initiate the resetting of the saved event in the EVENT_OFLW feedback bit for the respective channel.
RES_EVENT_CMP0	Use this bit to initiate the resetting of the saved event in the EVENT_CMP0 feedback bit for the respective channel.
RES_EVENT_CMP1	Use this bit to initiate the resetting of the saved event in the EVENT_CMP1 feedback bit for the respective channel.

4.2.4.2 Assignment of the feedback interface

Feedback interface

The user program receives current values and status information from the module via the feedback interface. The figure below shows the address space allocation for the feedback interface in the process image of the inputs.

Note

In isochronous mode, current values and the status information in the feedback interface is updated at the time T_i (time for reading the input data).

"IB x" represents the start address of input byte x.

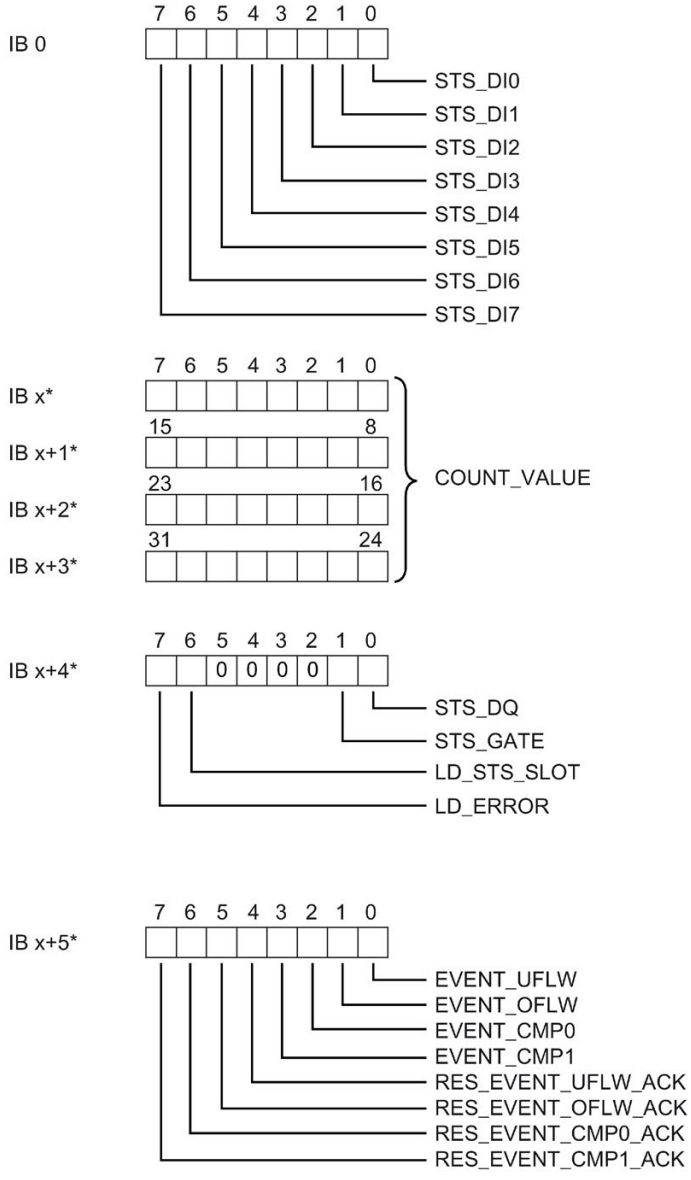

*x = 1 + (channel number × 6); channel = 0 to 3

Figure 4-4 Assignment of the feedback interface

Notes on the feedback bits

Feedback bit	Notes
STS_DIn	This bit indicates the status of the respective digital input DI_n.
COUNT_VALUE	This value returns the current counter value for the respective channel.
STS_DQ	This bit depends on the "Set output" parameter of the respective channel. You can use STS_DQ in each case, in order to control a digital output module's digital output.
STS_GATE	Together, the software gate and the hardware gate form the internal gate. This bit indicates the status of the internal gate for the respective channel. The module only counts if the internal gate is open. 0 means: Gate closed 1 means: Gate open Note: If you change a channel parameter in RUN mode via data record 128, all of the changed channel's values are retransferred to the module. In doing so, the internal gate of the respective channel is closed and the counter value is set to the start value. To restart counting, you need to close and reopen the software gate in each case.
LD_STS_SLOT	This bit indicates for the respective channel, by mean of a status change (toggling), that the load request for SLOT (LD_SLOT) has been detected and executed.
LD_ERROR	This bit indicates for the respective channel that an error occurred (latching) during loading via the control interface. The loaded value was not applied. One of the following conditions has not been met: • Counter low limit ≤ counter value (If this condition is not met, the start value is loaded as the current counter value.) • Counter low limit ≤ start value • Counter low limit ≤ comparison value 0/1 • Counter high limit ≥ counter value (If this condition is not met, the start value is loaded as the current counter value.) • Counter high limit ≥ start value • Counter high limit ≥ comparison value 0/1 • Counter low limit < counter high limit • Comparison value 0 < comparison value 1 • Do not write a reserved load request in LD_SLOT
EVENT_UFLW	For the respective channel, this bit indicates the saved state which shows that there was a counter value underflow (a violation of the counter low limit). You reset the status by acknowledgment with RES_EVENT_UFLW.
EVENT_OFLW	For the respective channel, this bit indicates the saved state which shows that there was a counter value overflow (a violation of the counter high limit). You reset the status by acknowledgment with RES_EVENT_OFLW.
EVENT_CMP0	For the respective channel, this bit indicates the saved status which shows that a comparison event with comparison value 0 has occurred. You reset the status by acknowledgment with RES_EVENT_CMP0. The EVENT_CMP0 bit is not set when you set the counter value to the start value.
EVENT_CMP1	For the respective channel, this bit indicates the saved status which shows that a comparison event with comparison value 1 has occurred. You reset the status by acknowledgment with RES_EVENT_CMP1. The EVENT_CMP1 bit is not set when you set the counter value to the start value.

Feedback bit	Notes
RES_EVENT_UFLW_ACK	This bit indicates for the respective channel that the reset of event bit EVENT_UFLW is active.
RES_EVENT_OFLW_ACK	This bit indicates for the respective channel that the reset of event bit EVENT_OFLW is active.
RES_EVENT_CMP0_ACK	This bit indicates for the respective channel that the reset of event bit EVENT_CMP0 is active.
RES_EVENT_CMP1_ACK	This bit indicates for the respective channel that the reset of event bit EVENT_CMP1 is active.

Complete acknowledgment principle

Saving bits are acknowledged according to the complete acknowledgment principle.

The figure below shows an example of the sequence of the complete acknowledgment principle in the event of an overflow:

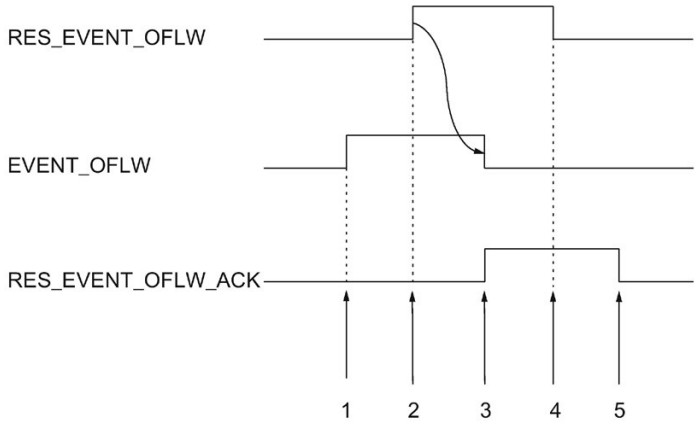

① The EVENT_OFLW feedback bit is set as a saving event upon overflow.
② You set the RES_EVENT_OFLW control bit to trigger EVENT_OFLW reset.
③ The RES_EVENT_OFLW_ACK feedback bit is set when reset of EVENT_OFLW is detected.
④ You then rest the control bit RES_EVENT_OFLW .
⑤ The RES_EVENT_OFLW_ACK feedback bit is reset.

Figure 4-5 Acknowledgment principle

Note

If you have initiated the reset of an event bit, you must wait for the respective feedback bit. Then you can initiate another reset.

Note

Opening the software gate or hardware gate (0-1 transition) resets all event bits.

4.3 Interrupts/diagnostic messages

4.3.1 Status and error display

LED display

The figure below shows the LED display of the DI 8×24VDC HS.

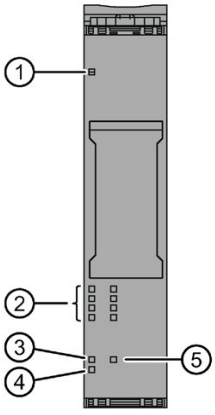

① DIAG (green/red)
② Channel status (green)
③ CNT (green)
④ PWR (green)
⑤ OVS (green)

Figure 4-6 LED display

Meaning of the LED displays

The following tables show the meaning of the status and error displays. Remedial measures for dealing with diagnostic interrupts can be found in the section Diagnostics alarms (Page 48).

DIAG LED

Table 4- 2 DIAG LED fault/error display

DIAG LED	Meaning
Off	Backplane bus supply of the ET 200SP not OK
Flashes	Module parameters not assigned
On	Module parameters assigned and no module diagnostics
Flashes	Module parameters assigned and module diagnostics

Channel status LED

Table 4- 3 Status display of the channel status LED

Channel status LED	Meaning
Off	Process signal = 0
On	Process signal = 1

CNT LED

Table 4- 4 Status display of the CNT LED

CNT LED	Meaning
Off	Counting operating mode disabled
On	Counting operating mode enabled

OVS LED

Table 4- 5 Status display of the OVS LED

OVS LED	Meaning
□ Off	Oversampling operating mode disabled
■ On	Oversampling operating mode enabled

PWR LED

Table 4- 6 Status display of the PWR LED

PWR LED	Meaning
□ Off	No supply voltage L+
■ On	Supply voltage L+ present

4.3.2 Interrupts

The digital input module DI 8×24VDC HS supports diagnostics alarms in the Counting mode.

Diagnostic interrupts

The module generates a diagnostics interrupt at the following events:

- Channel temporarily unavailable
- Short-circuit
- Parameter assignment error
- No load voltage

4.3.3 Diagnostics alarms

A diagnostic interrupt is output for each diagnostics event and the DIAG LED on the module flashes. The diagnostic interrupts can, for example, be read from the diagnostics buffer of the CPU. You can evaluate the error codes with the user program.

Table 4- 7 Diagnostic interrupts, their meaning and how to deal with them

Diagnostic interrupt	Error code	Meaning	Remedy
Short-circuit	1_H	Short-circuit to ground at encoder supply	Correct process wiring
Parameter assignment error	10_H	• The module cannot evaluate parameters for the channel. • Incorrect parameter assignment.	Correct parameter assignment
No load voltage	11_H	No or insufficient supply voltage L+	• Check supply voltage L+ on the BaseUnit • Check BaseUnit type
Channel temporarily unavailable	$1F_H$	Firmware update in progress or update has been canceled. The module reads no process values in this state.	• Wait for firmware update. • Restart the firmware update.

Oversampling (OVS) operating mode 5

5.1 Connecting

5.1.1 Wiring and block diagrams

This section contains the block diagram for the DI 8×24VDC HS module with the pin assignments for 1, 2 and 3-wire connection in Oversampling operating mode. You may use and combine the different wiring options for all channels.

Information on wiring the BaseUnit can be found in the system manual ET 200SP Distributed I/O System (http://support.automation.siemens.com/WW/view/en/58649293).

Note

The module's load group must start with a light BaseUnit. Keep this in mind also during the configuration.

Wiring: 1 and 2-wire connection

The figure below shows the block diagram and an example of pin assignment for the DI 8×24VDC HS digital input module on the BaseUnit BU type A0 without AUX terminals (1 and 2-wire connection).

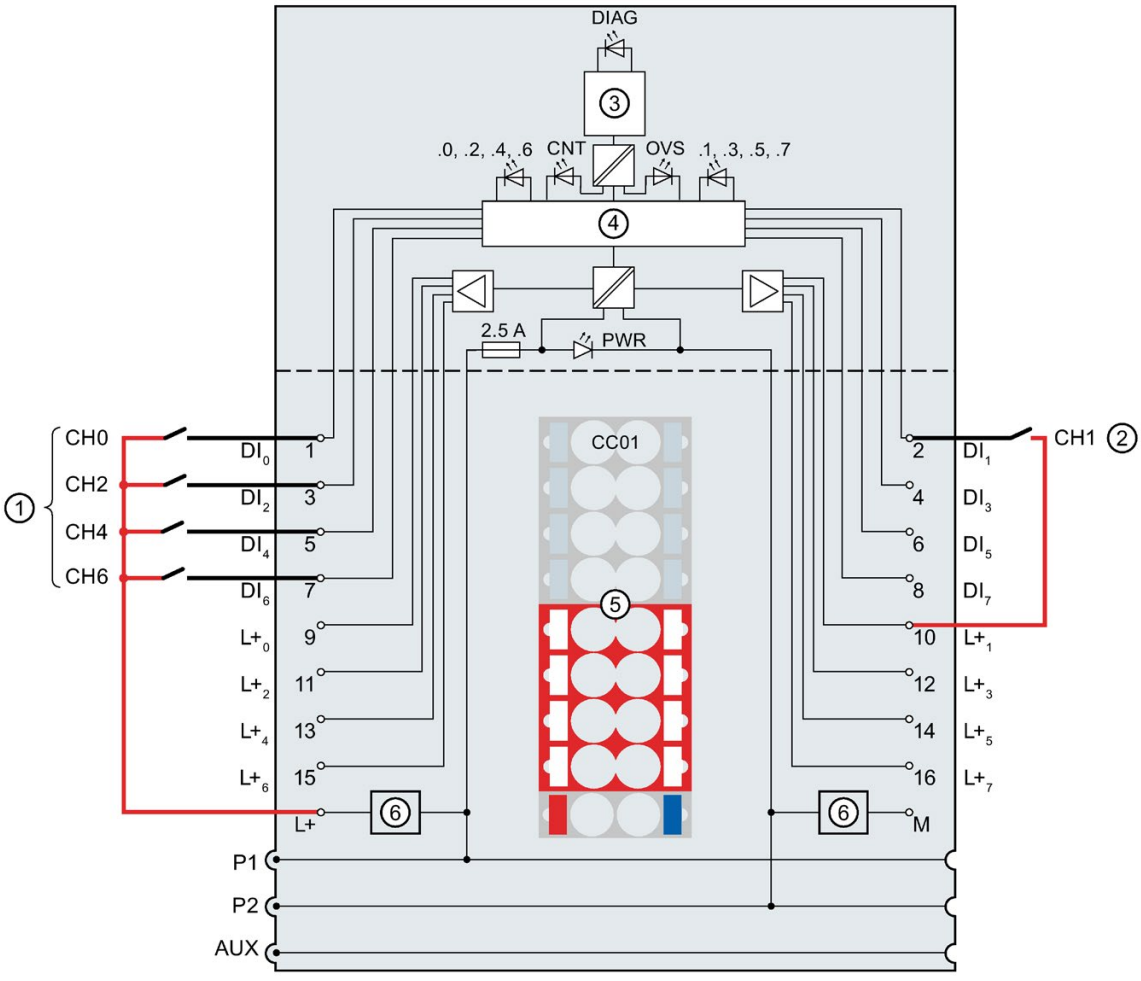

①	1-wire connection	$L+_n$	Encoder supply, channel n
②	2-wire connection	L+	24 V DC (infeed only with light BaseUnit)
③	Backplane bus interface	DIAG	LED error or diagnostics (green, red)
④	Input electronics	.0 to .7	LED channel status (green)
⑤	Color-coded label CCxx (optional)	PWR	LED power (green)
⑥	Supply voltage filter circuit (only available with light BaseUnit)	CNT	LED operating mode Count (green)
M	Ground	OVS	LED operating mode Oversampling (green)
DI_n	Input signal, channel n	P1, P2, AUX	Internal self-configuring voltage buses Connection to the left (dark BaseUnit) Connection to the left interrupted (light BaseUnit)

Figure 5-1 Pinout and block diagram for 1 and 2-wire connection of encoders

Wiring: 3-wire connection

The figure below shows an example of pin assignment for the DI 8×24VDC HS digital input module on the BaseUnit BU type A0 with AUX terminals (3-wire connection).

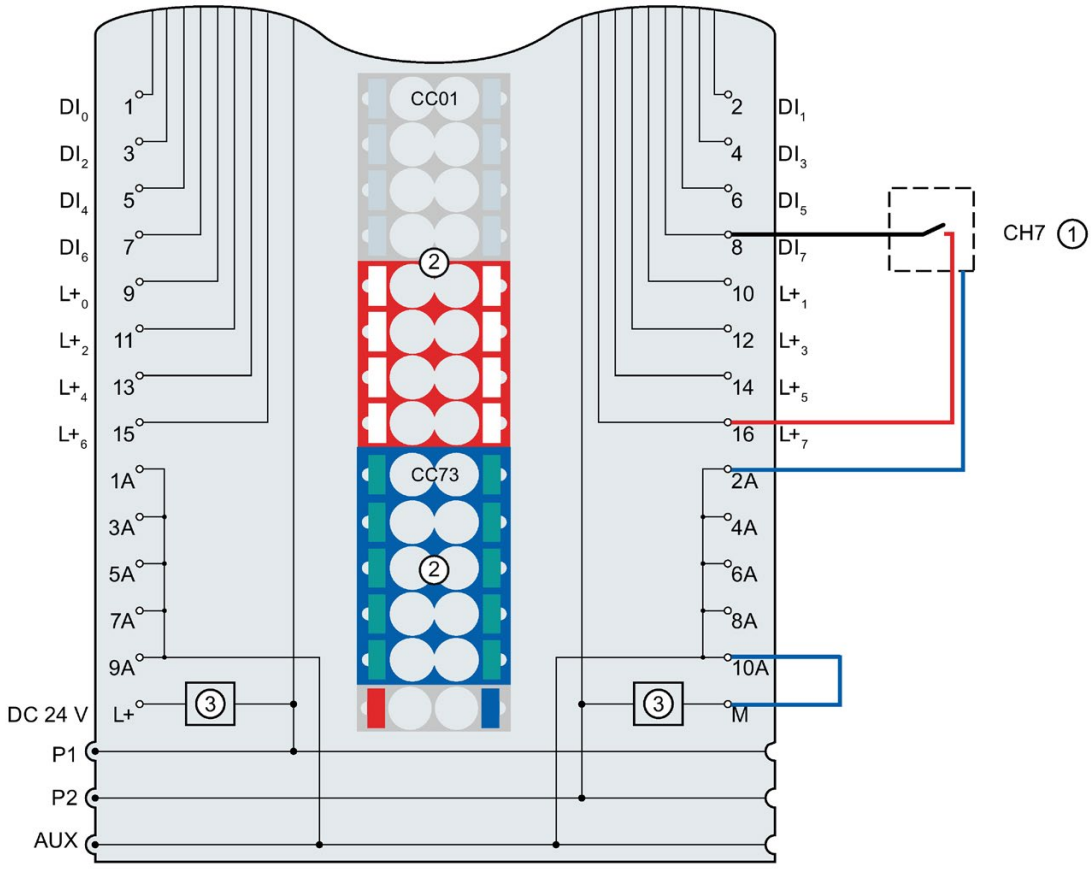

①	3-wire connection
②	Color-coded labels CCxx (optional)
③	Supply voltage filter circuit (only available with light BaseUnit)
DI_n	Input signal, channel n
$L+_n$	Encoder supply, channel n
DC 24 V	Supply voltage L+ (infeed only with light BaseUnit)
M	Ground
1A ... 10A	AUX terminals
P1, P2, AUX	Internal self-configuring voltage buses Connection to the left (dark BaseUnit) Connection to the left interrupted (light BaseUnit)

Figure 5-2 Pinout and block diagram for 3-wire connection of encoders

5.2 Parameters/address space

5.2.1 Oversampling

Function

Oversampling is the acquisition of data in constant bus cycle segments (sub-cycles), whereby n sub-cycles correspond to one PROFINET bus cycle.

Oversampling is useful whenever you require acquisition of data with high time resolution but without using an extremely short PROFINET bus cycle and thus fast CPU cycles.

With the oversampling function, a PROFINET bus cycle is divided into constant bus sub-cycles:

- Each subcycle detects an 8-bit value.
- A subcycle is at least 7.8125 µs in length.
- Subcycles are possible in steps from 2 to 32 (sampling rate).

Requirement

Oversampling is only possible when isochronous mode is set.

Configuration

You configure oversampling with the following parameter:

- Sampling rate

Note

Do not use a reduction ratio for blocks in the case of configuration with oversampling in the runtime groups of your user program. This will ensure that the data processing in the user program of the CPU is synchronized with the acquisition on the module.

Sampling interval

The duration of a subcycle is the sampling interval. The cycle time T (send clock) for isochronous mode is specified in the configuration software. This time, divided by the configured sampling rate n_{Sample}, yields the sampling interval t_{Sample} of the module.

Example calculation:

$$t_{Sample} = \frac{T}{n_{Sample}} = \frac{1\ \text{ms}}{16} = 62{,}5\ \mu\text{s}$$

Figure 5-3 Example of calculating the sampling interval

Chronological sequence

The figure below shows the chronological sequence for oversampling. The detected input data of a data cycle (send clock) is copied to the interface module in the next cycle data and are available to the CPU in the data cycle after the next one.

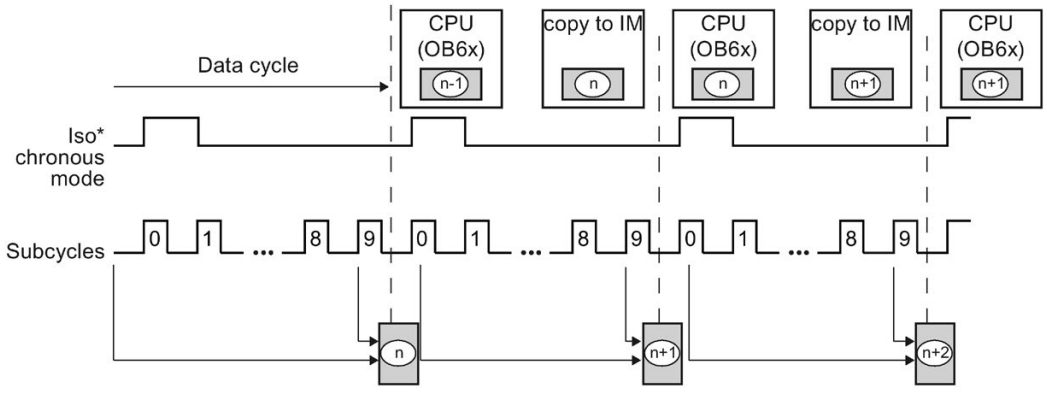

n	Detected value from cycle n
Sub-cycle	8 bits apiece x 32 (max.) = max. 32 bytes of input data per data cycle

Figure 5-4 Oversampling

Note

Do not use a reduction ratio for the send clock in this operating mode for blocks in your user program (for example, OB61). This will ensure that the data processing in the user program of the CPU is synchronized with the acquisition on the module.

5.2.2 Parameters

In distributed mode, you can use the Oversampling operating mode on the PROFINET IO in an ET 200SP system.

In addition to configuration via the configuration software, you can also configure parameters in RUN mode (dynamic) via the user program. When assigning parameters in the user program, use the "WRREC" instruction to transfer the parameters to the module using the data records; refer to the section Parameter assignment and structure of parameter data record for Oversampling operating mode (Page 74).

The following parameter settings are possible:

Table 5- 1 Configurable parameters in the Oversampling operating mode

Parameters	Value range	Default	Reconfiguration in RUN	Effective range with configuration software HSP0127 for STEP 7 (TIA Portal); HSP0229 for STEP 7
Operating mode[1]	• DI / Oversampling • Counting	—	no	Module
Sampling rate	• 2 values / cycle • 3 values / cycle • ... • 32 values / cycle	—	yes	Module
Diagnostics No supply voltage L+	• Disable • Enable	Disable	yes	Module
Diagnostics Short-circuit to ground	• Disable • Enable	Disable	yes	Module
Channel activated	• Disable • Enable	Enable	yes	Channel
Input delay	• None • 0.05 ms • 0.1 ms • 0.4 ms • 0.8 ms • 1.6 ms • 3.2 ms • 12.8 ms • 20 ms	None	yes	Channel
Potential group	• Use potential group of the left module • Enable new potential group	Use potential group of the left module	No	Module

[1] When configuring with HSP0229 for STEP 7, the operating mode is specified by selecting the module name.

5.2.3 Explanation of parameters

Operating mode

At the module level, specifies the operating mode in which the module's channels are operated.

- DI (Page 15) / Oversampling
- Counting (Page 30)

When configuring with HSP0229 for STEP 7, the operating mode is specified by selecting the module name.

Sampling rate

Specifies the number of subcycles per isochronous data cycle.

Diagnostics: No supply voltage L+

Enabling of the diagnostics for no or insufficient supply voltage L+.

Diagnostics: Short-circuit to ground

Enabling of the diagnostics if a short-circuit of the actuator supply to ground occurs.

Channel activated

Determines whether a channel is enabled or disabled. If a digital input is disabled, the module ignores its signals.

Input delay

This parameter can be used to avoid signal faults. Changes to the signal are only detected if they are constantly pending longer than the set input delay time.

Isochronous configuration is only possible if there is no input delay configured for at least one channel. In isochronous mode, the terminal signal is read in at the time T_i (time for reading the input data). The read time T_i refers to the channel for which no input delay time was configured.

For input channels with longer input delays, the read time is moved accordingly. This means individual channels can be assigned input delays, if necessary, without having a negative impact on the possible cycle time.

Note

If you select the "None" or "0.05 ms" option for the input delay, you have to use shielded cables for connection of the digital inputs.

Potential group

Specifies whether a light-colored BaseUnit with incoming supply voltage is located on this slot (see ET 200SP Distributed I/O System (http://support.automation.siemens.com/WW/view/en/58649293) system manual).

5.2.4 Address space

Address space

The figure below shows the assignment of the address space. "IB x" represents the start address of input byte x.

In the respective bit, the subcycles are counted from left to right. Up to 32 subcycles are possible. If fewer than 32 subcycles are configured, the bits that are consequently unused are set to 0.

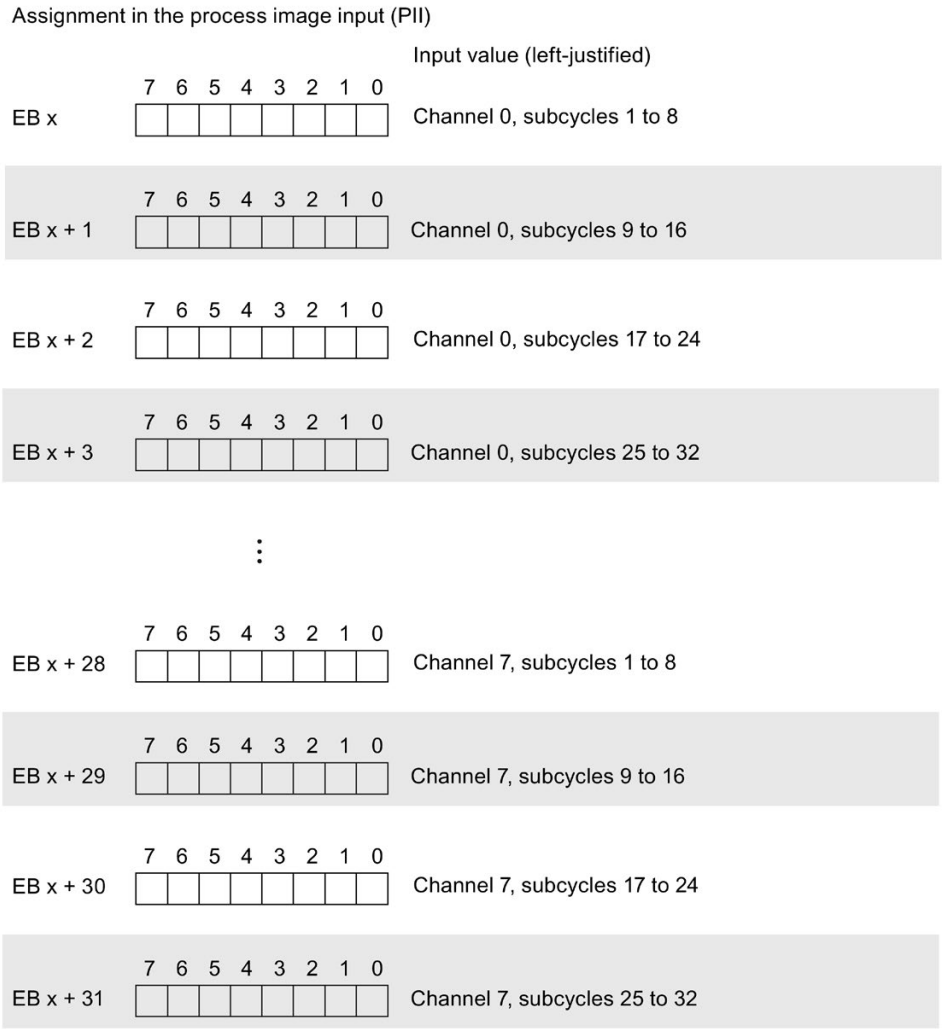

Figure 5-5 Address space for oversampling

Note

While you are changing parameters in RUN mode, corruption of input data can occur.

5.3 Interrupts/diagnostic messages

5.3.1 Status and error display

LED display

The figure below shows the LED display of the DI 8×24VDC HS.

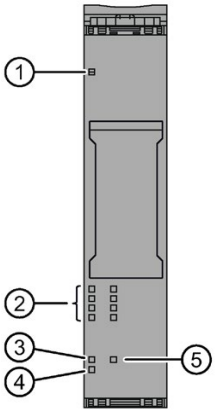

① DIAG (green/red)
② Channel status (green)
③ CNT (green)
④ PWR (green)
⑤ OVS (green)

Figure 5-6 LED display

Meaning of the LED displays

The following tables show the meaning of the status and error displays. Remedial measures for dealing with diagnostic interrupts can be found in the section Diagnostics alarms (Page 60).

DIAG LED

Table 5- 2 DIAG LED fault/error display

DIAG LED	Meaning
Off	Backplane bus supply of the ET 200SP not OK
Flashes	Module parameters not assigned
On	Module parameters assigned and no module diagnostics
Flashes	Module parameters assigned and module diagnostics

Channel status LED

Table 5- 3 Status display of the channel status LED

Channel status LED	Meaning
Off	Process signal = 0
On	Process signal = 1

CNT LED

Table 5- 4 Status display of the CNT LED

CNT LED	Meaning
Off	Counting operating mode disabled
On	Counting operating mode enabled

OVS LED

Table 5- 5 Status display of the OVS LED

OVS LED	Meaning
□ Off	Oversampling operating mode disabled
■ On	Oversampling operating mode enabled

PWR LED

Table 5- 6 Status display of the PWR LED

PWR LED	Meaning
□ Off	No supply voltage L+
■ On	Supply voltage L+ present

5.3.2 Interrupts

The digital input module DI 8×24VDC HS supports diagnostics alarms in the Oversampling mode.

Diagnostic interrupts

The module generates a diagnostics interrupt at the following events:

- Short-circuit
- Parameter assignment error
- No load voltage
- Channel temporarily unavailable

5.3.3 Diagnostics alarms

A diagnostic interrupt is output for each diagnostics event and the DIAG LED on the module flashes. The diagnostic interrupts can, for example, be read from the diagnostics buffer of the CPU. You can evaluate the error codes with the user program.

Table 5- 7 Diagnostic interrupts, their meaning and how to deal with them

Diagnostic interrupt	Error code	Meaning	Remedy
Short-circuit	1_H	Short-circuit to ground at encoder supply	Correct process wiring
Parameter assignment error	10_H	• The module cannot evaluate parameters for the channel. • Incorrect parameter assignment.	Correct parameter assignment
No load voltage	11_H	No or insufficient supply voltage L+	• Check supply voltage L+ on the BaseUnit • Check BaseUnit type
Channel temporarily unavailable	$1F_H$	Firmware update in progress or update has been canceled. The module reads no process values in this state.	• Wait for firmware update. • Restart the firmware update.

Technical specifications

6

6.1 Technical specifications

Technical specifications of the DI 8x24VDC HS

The following table shows the technical specifications as of 09/2018. You will find a data sheet including daily updated technical specifications on the Internet (https://support.industry.siemens.com/cs/ww/en/pv/6ES7131-6BF00-0DA0/td?dl=en)

Article number	6ES7131-6BF00-0DA0
General information	
Product type designation	DI 8x24 V DC HS
Firmware version	V1.0.2
• FW update possible	Yes
usable BaseUnits	BU type A0
Color code for module-specific color identification plate	CC01
Product function	
• I&M data	Yes; I&M0 to I&M3
Engineering with	
• STEP 7 TIA Portal configurable/integrated as of version	V13 SP1
• STEP 7 configurable/integrated as of version	V5.5 SP3 / -
• PROFIBUS as of GSD version/GSD revision	GSD Revision 5
• PROFINET as of GSD version/GSD revision	GSDML V2.3
Operating mode	
• DI	Yes
• Counter	Yes
• Oversampling	Yes
• MSI	No
Supply voltage	
Rated value (DC)	24 V
permissible range, lower limit (DC)	19.2 V
permissible range, upper limit (DC)	28.8 V
Reverse polarity protection	Yes

Article number	6ES7131-6BF00-0DA0
Input current	
Current consumption, max.	70 mA; without sensor supply
24 V encoder supply	
• 24 V	Yes
• Short-circuit protection	Yes; per module, electronic
• Output current, max.	700 mA
Power loss	
Power loss, typ.	1.5 W
Address area	
Address space per module	
• Address space per module, max.	45 byte
• Inputs	32 byte; 1 byte + 1 byte for QI information in DI mode; 32 bytes in Oversampling mode; 25 bytes in Counter mode
• Outputs	20 byte; In count mode
Selection of BaseUnit for connection variants	
• 1-wire connection	BU type A0
• 2-wire connection	BU type A0
• 3-wire connection	BU type A0 with AUX terminals
• 4-wire connection	BU type A0 + external terminals
Digital inputs	
Number of digital inputs	8
Source/sink input	P-reading
Pulse extension	Yes
• Length	2 s; 50 ms, 100 ms, 200 ms, 500 ms, 1 s, 2 s
Digital input functions, parameterizable	
• Gate start/stop	Yes
• Freely usable digital input	Yes
• Counter	Yes
– Number, max.	4
– Counting frequency, max.	10 kHz
– Counting width	32 bit
– Counting direction up/down	Yes
• Digital input with oversampling	Yes
– Number, max.	8
– Values per cycle, max.	32
– Resolution, min.	7.8125 µs

Article number	6ES7131-6BF00-0DA0
Input voltage	
• Type of input voltage	DC
• Rated value (DC)	24 V
• for signal "0"	-30 to +5V
• for signal "1"	+11 to +30V
Input current	
• for signal "1", typ.	6 mA
Input delay (for rated value of input voltage)	
for standard inputs	
– parameterizable	Yes; none / 0.05 / 0.1 / 0.4 / 0.8 / 1.6 / 3.2 / 12.8 / 20 ms
for interrupt inputs	
– parameterizable	Yes
for technological functions	
– parameterizable	Yes
Cable length	
• shielded, max.	50 m
• unshielded, max.	50 m
Encoder	
Connectable encoders	
• 2-wire sensor	Yes
– permissible quiescent current (2-wire sensor), max.	1.5 mA
Isochronous mode	
Isochronous operation (application synchronized up to terminal)	Yes
Bus cycle time (TDP), min.	125 µs
Jitter, max.	5 µs
Interrupts/diagnostics/status information	
Diagnostics function	Yes
Alarms	
• Diagnostic alarm	Yes
• Hardware interrupt	Yes
Diagnostic messages	
• Diagnostic information readable	Yes
• Monitoring the supply voltage	Yes
– parameterizable	Yes
• Monitoring of encoder power supply	Yes; Module-wise
• Wire-break	No
• Short-circuit	Yes; Module-wise

Article number	6ES7131-6BF00-0DA0
Diagnostics indication LED	
• Monitoring of the supply voltage (PWR-LED)	Yes; green PWR LED
• Channel status display	Yes; Green LED
• for channel diagnostics	No
• for module diagnostics	Yes; green/red DIAG LED
Potential separation	
Potential separation channels	
• between the channels	No
• between the channels and backplane bus	Yes
• between the channels and the power supply of the electronics	No
Isolation	
Isolation tested with	707 V DC (type test)
Dimensions	
Width	15 mm
Height	73 mm
Depth	58 mm
Weights	
Weight, approx.	28 g

Dimension drawing

See manual ET 200SP BaseUnits (http://support.automation.siemens.com/WW/view/en/58532597/133300)

Parameter data records

A

A.1 Parameter assignment and structure of parameter data record for DI operating mode

Parameter assignment in the user program

You can change the parameters of the module in RUN.

Changing parameters in RUN

The "WRREC" instruction is used to transfer the parameters to the module using data record 128. The parameters set in STEP 7 are not changed in the CPU, which means that the parameters set in STEP 7 will be valid again after a restart.

Note

Changing parameters in RUN

A parameter data record that has content different from the startup parameter assignment can result in a brief exit from clocked mode and renewed synchronization with the fieldbus cycle.

Output parameter STATUS

If errors occur when transferring parameters with the "WRREC" instruction, the module continues operation with the previous parameter assignment. The STATUS output parameter contains a corresponding error code.

You can find a description of the "WRREC" instruction and the error codes in the STEP 7 online help.

Structure of data record 128 for the complete module

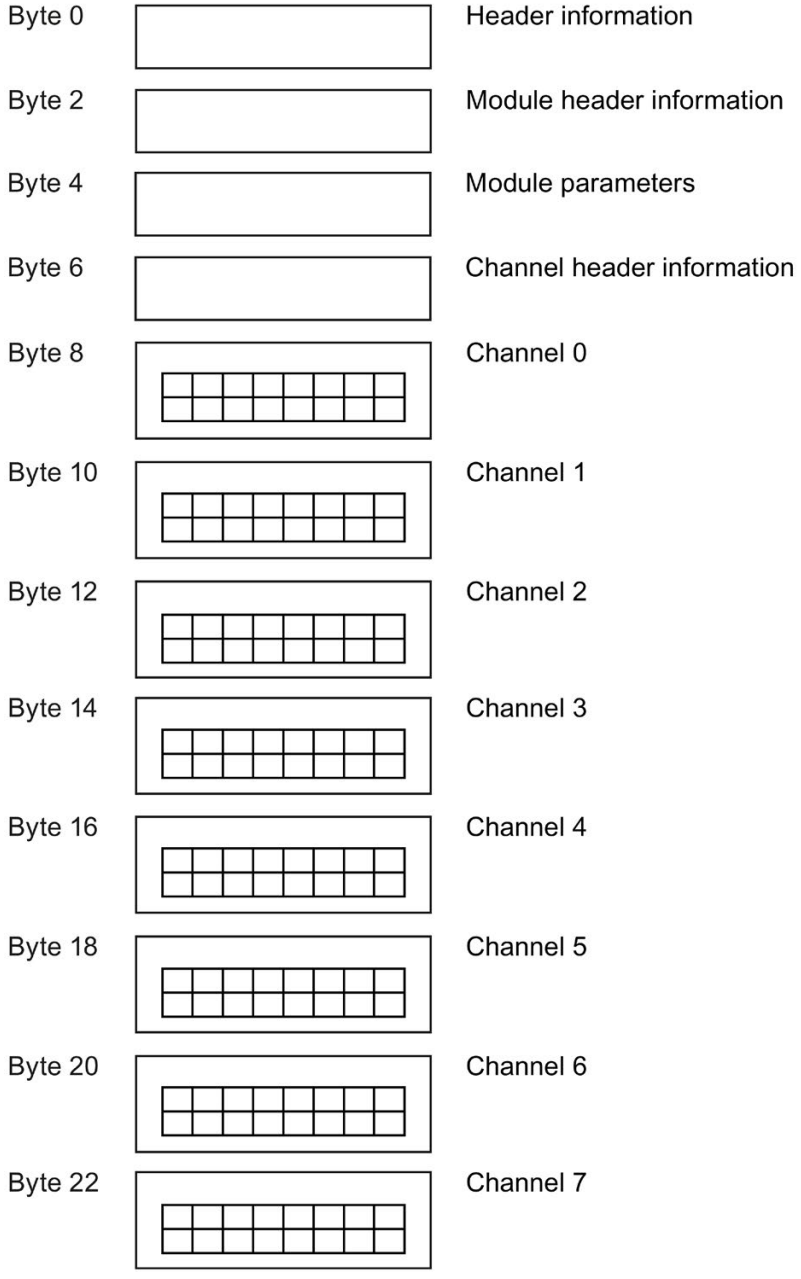

Figure A-1 Structure of data record 128 for the complete module

Header information

The figure below shows the structure of the header information.

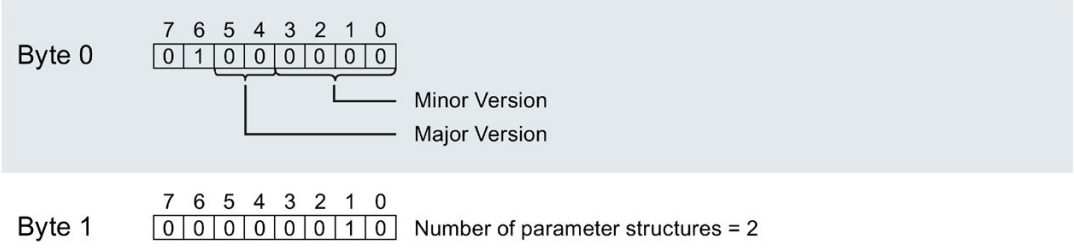

Figure A-2 Structure of the header information

Module header information

The figure below shows the structure of the module header information.

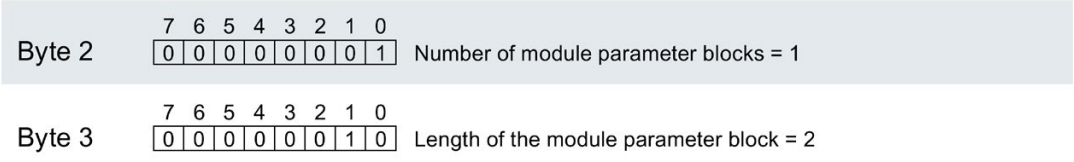

Figure A-3 Module header information

Module parameter block

The figure below shows the structure of the module parameter block for channels 0 to 7. You enable a parameter by setting the corresponding bit to "1".

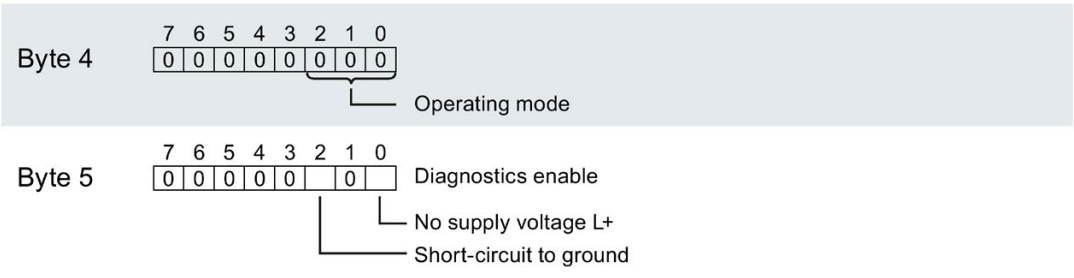

Figure A-4 Module parameter block

Channel header information

The figure below shows the structure of the channel header information.

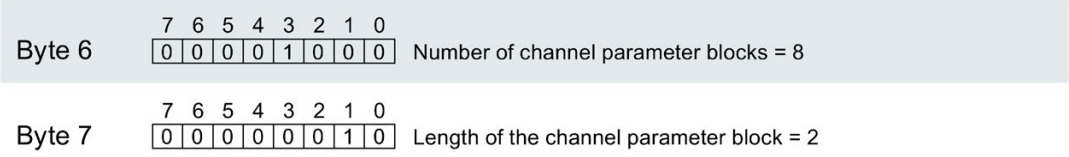

Figure A-5 Channel header information

Channel parameter block

The figure below shows the structure of the channel parameter block. You enable a parameter by setting the corresponding bit to "1".

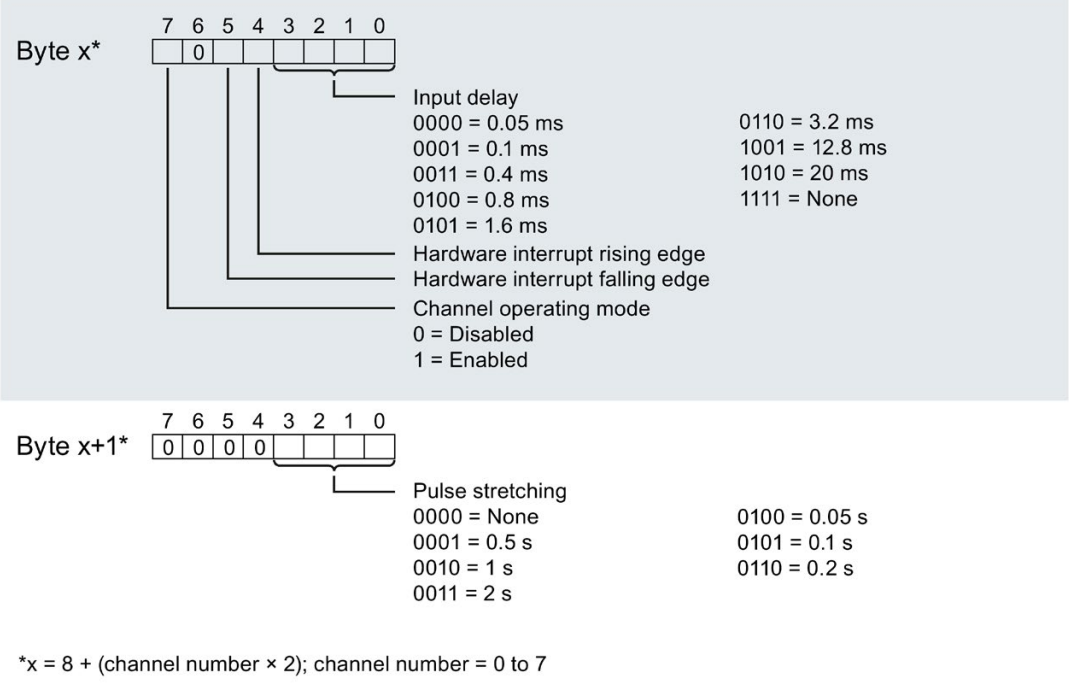

Figure A-6 Structure byte x to x+1 for the channels 0 to 7

A.2 Parameter assignment and structure of parameter data record for Counting operating mode

Parameter assignment in the user program

You can change the parameters of the module in RUN.

Changing parameters in RUN

The "WRREC" instruction is used to transfer the parameters to the module using data record 128. The parameters set in STEP 7 are not changed in the CPU, which means that the parameters set in STEP 7 will be valid again after a restart.

Note

Changing parameters in RUN

A parameter data record that has content different from the startup parameter assignment can result in a brief exit from clocked mode and renewed synchronization with the fieldbus cycle.

Output parameter STATUS

If errors occur when transferring parameters with the "WRREC" instruction, the module continues operation with the previous parameter assignment. The STATUS output parameter contains a corresponding error code.

You can find a description of the "WRREC" instruction and the error codes in the STEP 7 online help.

Structure of data record 128 for the complete module

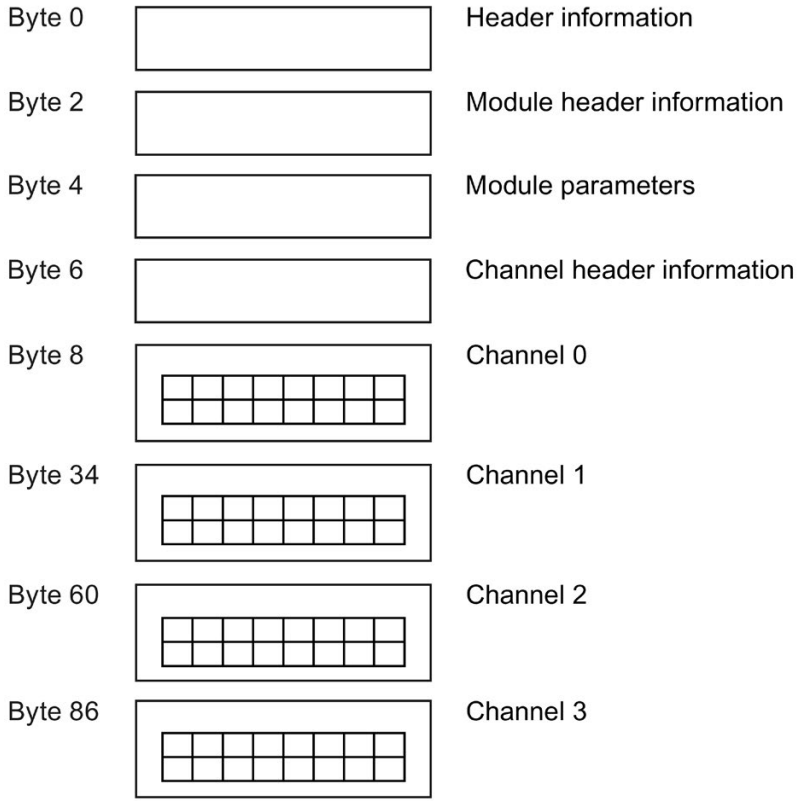

Figure A-7 Structure of data record 128 for the complete module

Header information

The figure below shows the structure of the header information.

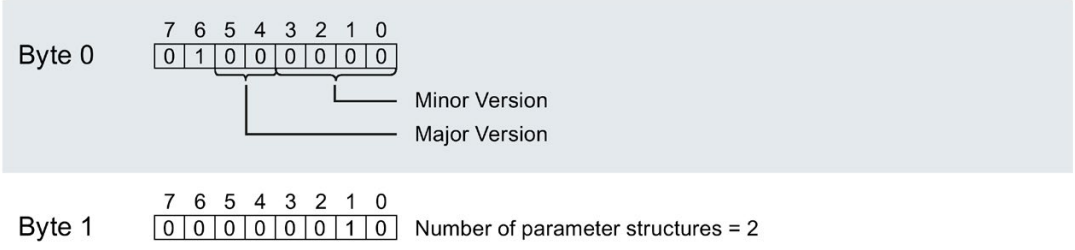

Figure A-8 Structure of the header information

Module header information

The figure below shows the structure of the module header information.

	7	6	5	4	3	2	1	0	
Byte 2	0	0	0	0	0	0	0	1	Number of module parameter blocks = 1
Byte 3	0	0	0	0	0	0	1	0	Length of the module parameter block = 2

Figure A-9 Module header information

Module parameter block

The figure below shows the structure of the module parameter block for channels 0 to 3. You enable a parameter by setting the corresponding bit to "1".

	7	6	5	4	3	2	1	0	
Byte 4	0	0	0	0	0	0	0	1	Operating mode
Byte 5	0	0	0	0	0		0		Diagnostics enable No supply voltage L+ Short-circuit to ground

Figure A-10 Module parameter block

Channel header information

The figure below shows the structure of the channel header information.

	7	6	5	4	3	2	1	0	
Byte 6	0	0	0	0	0	1	0	0	Number of channel parameter blocks = 4
Byte 7	0	0	0	1	1	0	1	0	Length of the channel parameter block = 26

Figure A-11 Channel header information

Channel parameter block

The figure below shows the structure of the parameters for channels 0 to 3. You enable a parameter by setting the corresponding bit to "1".

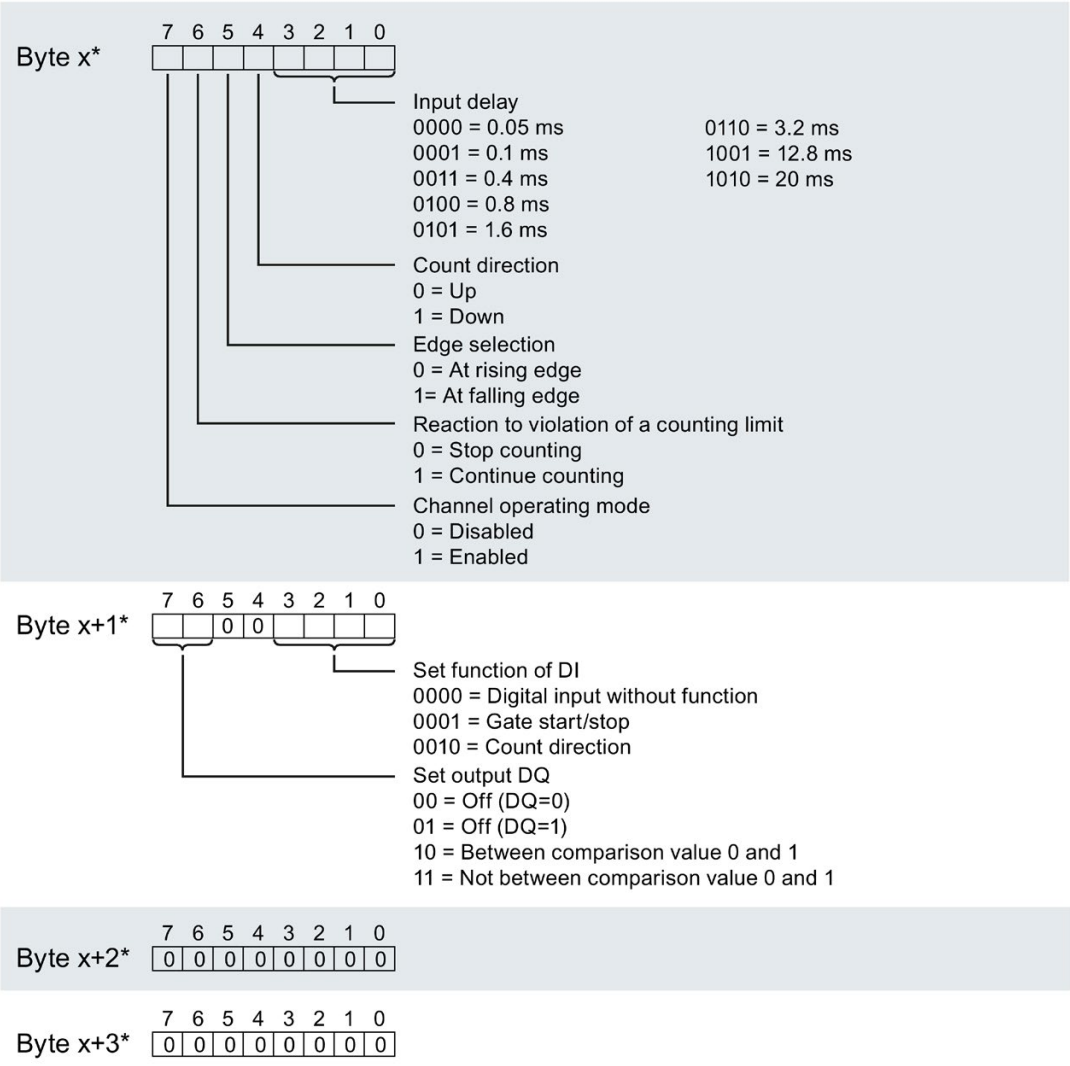

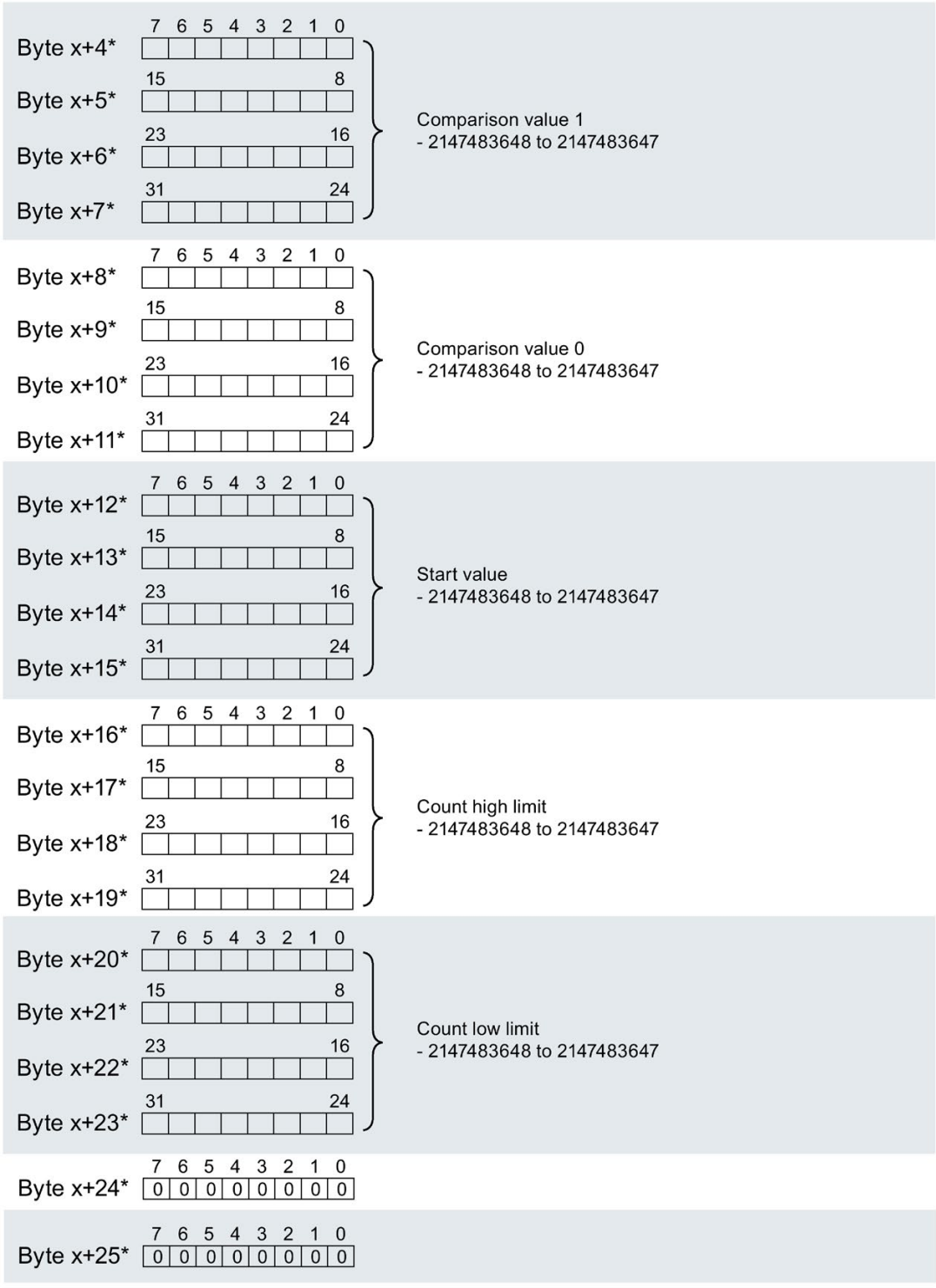

Figure A-12 Structure byte x to x+25 for the channels 0 to 3

A.3 Parameter assignment and structure of parameter data record for Oversampling operating mode

Parameter assignment in the user program

You can change the parameters of the module in RUN.

Changing parameters in RUN

The "WRREC" instruction is used to transfer the parameters to the module using data record 128. The parameters set in STEP 7 are not changed in the CPU, which means that the parameters set in STEP 7 will be valid again after a restart.

Note

Changing parameters in RUN

If you change parameters in RUN mode, falsifications can occur in the input data.

A parameter data record that has content different from the startup parameter assignment can result in a brief exit from clocked mode and renewed synchronization with the fieldbus cycle.

Output parameter STATUS

If errors occur when transferring parameters with the "WRREC" instruction, the module continues operation with the previous parameter assignment. The STATUS output parameter contains a corresponding error code.

You can find a description of the "WRREC" instruction and the error codes in the STEP 7 online help.

Structure of data record 128 for the complete module

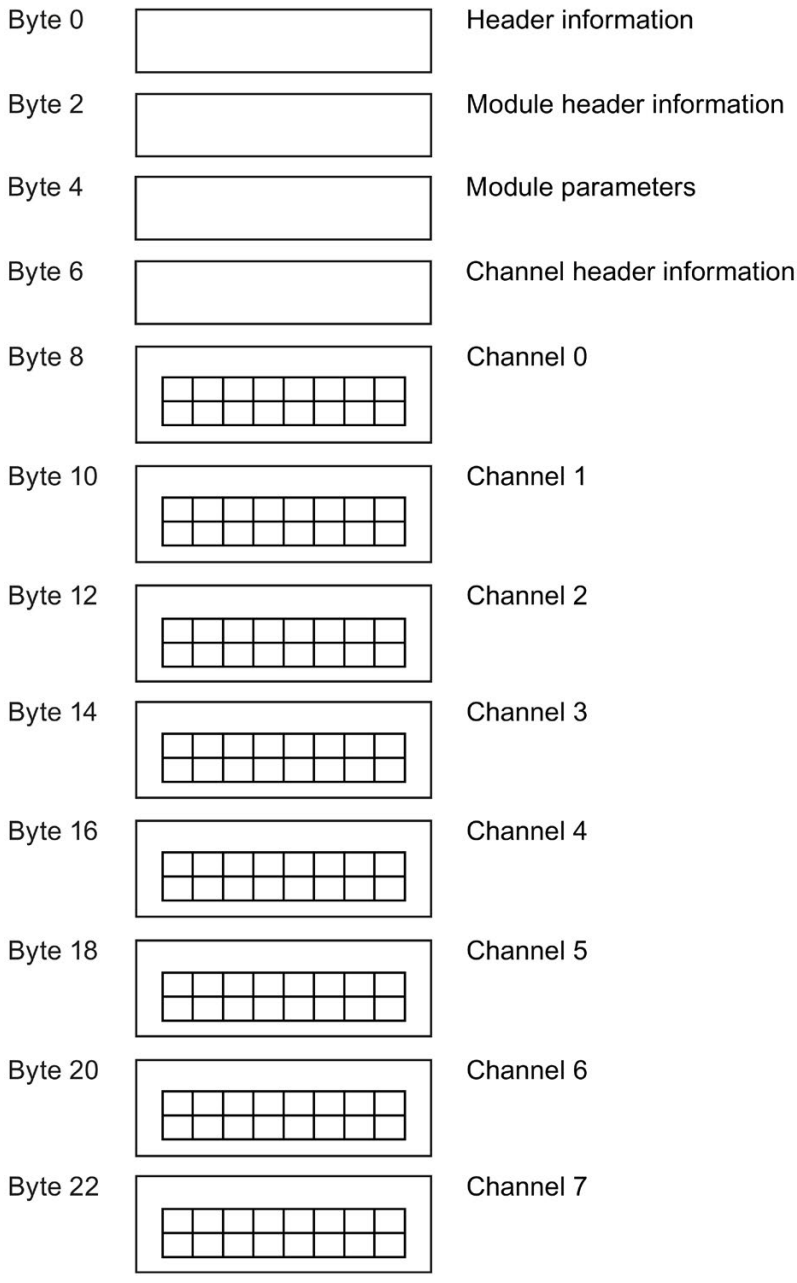

Figure A-13 Structure of data record 128 for the complete module

Header information

The figure below shows the structure of the header information.

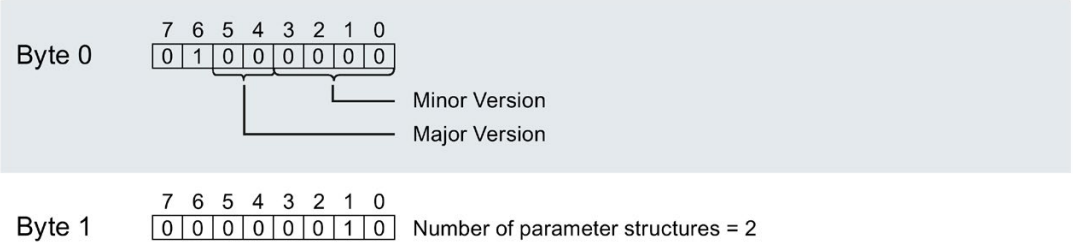

Figure A-14 Structure of the header information

Module header information

The figure below shows the structure of the module header information.

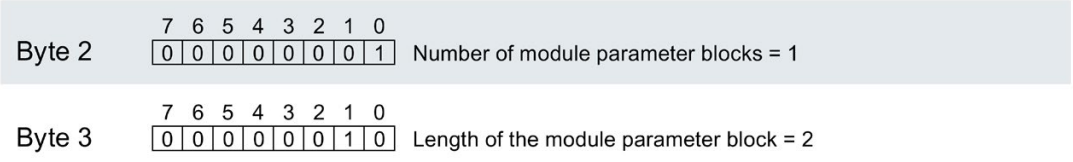

Figure A-15 Module header information

Module parameter block

The figure below shows the structure of the module parameter block for channels 0 to 7. You enable a parameter by setting the corresponding bit to "1".

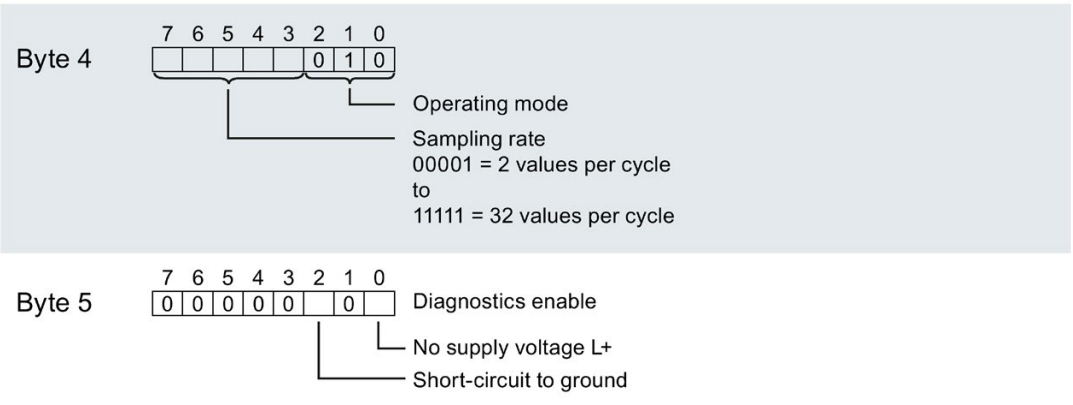

Figure A-16 Module parameter block

Channel header information

The figure below shows the structure of the channel header information.

	7	6	5	4	3	2	1	0	
Byte 6	0	0	0	0	1	0	0	0	Number of channel parameter blocks = 8
Byte 7	0	0	0	0	0	0	1	0	Length of the channel parameter block = 2

Figure A-17 Channel header information

Channel parameter block

The figure below shows the structure of the parameters for channels 0 to 7. You enable a parameter by setting the corresponding bit to "1".

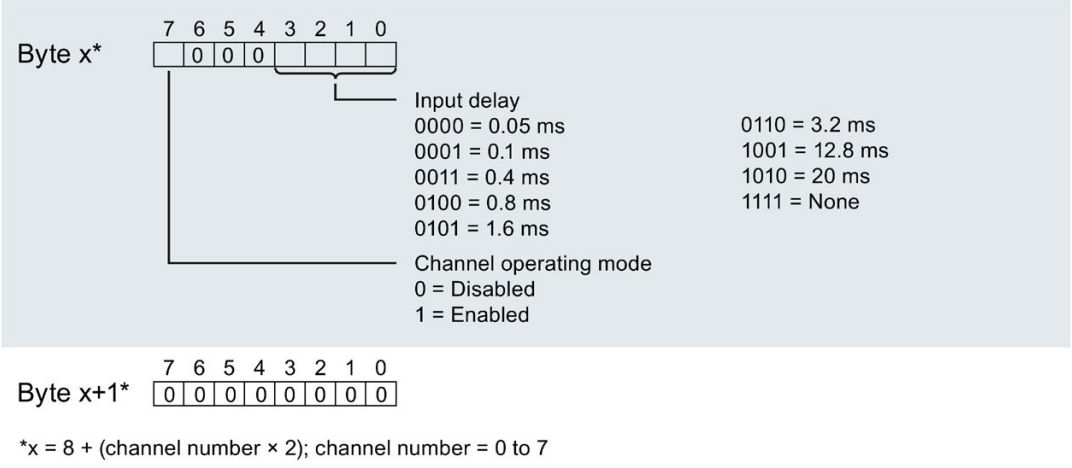

Figure A-18 Structure byte x to x+1 for the channels 0 to 7

SIEMENS

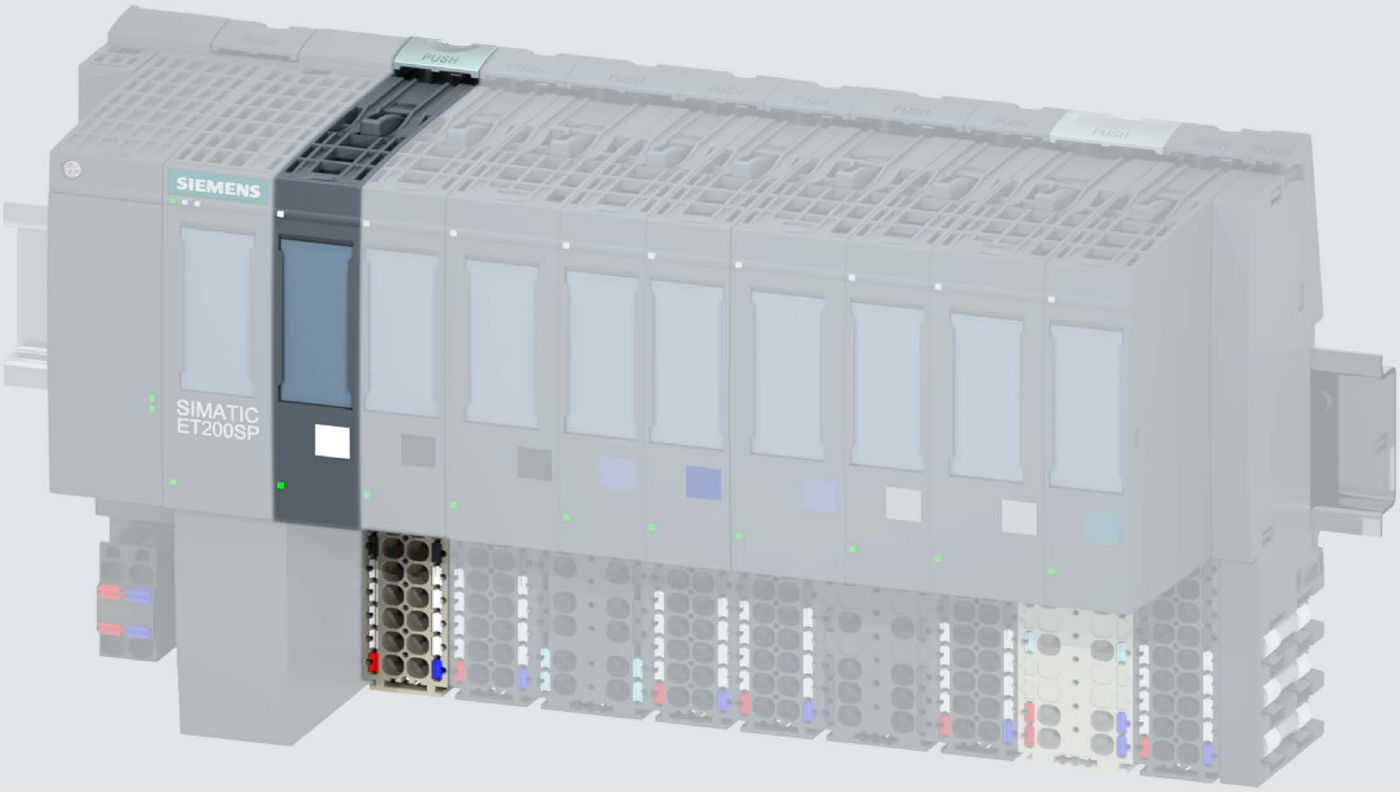

Manual

SIMATIC

ET 200SP

Digital input module
DI 8x24VDC SRC BA (6ES7131-6BF61-0AA0)

Edition 09/2017

support.industry.siemens.com

SIEMENS

SIMATIC

ET 200SP
Digital output module
DI 8x24VDC SRC BA
(6ES7131-6BF61-0AA0)

Manual

Preface

Documentation guide 1

Product overview 2

Wiring 3

Parameters/address space 4

Interrupts/diagnostics alarms 5

Technical specifications 6

Parameter data record A

09/2017

A5E32855511-AC

Legal information

Warning notice system

This manual contains notices you have to observe in order to ensure your personal safety, as well as to prevent damage to property. The notices referring to your personal safety are highlighted in the manual by a safety alert symbol, notices referring only to property damage have no safety alert symbol. These notices shown below are graded according to the degree of danger.

⚠ DANGER

indicates that death or severe personal injury **will** result if proper precautions are not taken.

⚠ WARNING

indicates that death or severe personal injury **may** result if proper precautions are not taken.

⚠ CAUTION

indicates that minor personal injury can result if proper precautions are not taken.

NOTICE

indicates that property damage can result if proper precautions are not taken.

If more than one degree of danger is present, the warning notice representing the highest degree of danger will be used. A notice warning of injury to persons with a safety alert symbol may also include a warning relating to property damage.

Qualified Personnel

The product/system described in this documentation may be operated only by **personnel qualified** for the specific task in accordance with the relevant documentation, in particular its warning notices and safety instructions. Qualified personnel are those who, based on their training and experience, are capable of identifying risks and avoiding potential hazards when working with these products/systems.

Proper use of Siemens products

Note the following:

⚠ WARNING

Siemens products may only be used for the applications described in the catalog and in the relevant technical documentation. If products and components from other manufacturers are used, these must be recommended or approved by Siemens. Proper transport, storage, installation, assembly, commissioning, operation and maintenance are required to ensure that the products operate safely and without any problems. The permissible ambient conditions must be complied with. The information in the relevant documentation must be observed.

Trademarks

All names identified by ® are registered trademarks of Siemens AG. The remaining trademarks in this publication may be trademarks whose use by third parties for their own purposes could violate the rights of the owner.

Disclaimer of Liability

We have reviewed the contents of this publication to ensure consistency with the hardware and software described. Since variance cannot be precluded entirely, we cannot guarantee full consistency. However, the information in this publication is reviewed regularly and any necessary corrections are included in subsequent editions.

Siemens AG
Division Digital Factory
Postfach 48 48
90026 NÜRNBERG
GERMANY

A5E32855511-AC
℗ 10/2017 Subject to change

Copyright © Siemens AG 2014 - 2017.
All rights reserved

Preface

Purpose of the documentation

This manual supplements the system manual ET 200SP distributed I/O system (http://support.automation.siemens.com/WW/view/en/58649293).

Functions that generally relate to the system are described in this manual.

The information provided in this manual and in the system/function manuals supports you in commissioning the system.

Changes compared to previous version

Compared to the previous version, this manual contains the following change:

Due to the change in hardware, the article number of the module has been changed from 6ES7131-6BF60-0AA0 to 6ES7131-6BF61-0AA0. Both modules are compatible, except for the firmware-update function.

Conventions

CPU: When the term "CPU" is used in this manual, it applies to the CPUs of the S7-1500 automation system as well as to the CPUs/interface modules of the distributed I/O system ET 200SP.

STEP 7: In this documentation, "STEP 7" is used as a synonym for all versions of the configuration and programming software "STEP 7 (TIA Portal)".

Please also observe notes marked as follows:

Note

A note contains important information on the product described in the documentation, on the handling of the product or on the section of the documentation to which particular attention should be paid.

Security information

Siemens provides products and solutions with industrial security functions that support the secure operation of plants, systems, machines and networks.

In order to protect plants, systems, machines and networks against cyber threats, it is necessary to implement – and continuously maintain – a holistic, state-of-the-art industrial security concept. Siemens' products and solutions constitute one element of such a concept.

Customers are responsible for preventing unauthorized access to their plants, systems, machines and networks. Such systems, machines and components should only be connected to an enterprise network or the internet if and to the extent such a connection is necessary and only when appropriate security measures (e.g. firewalls and/or network segmentation) are in place.

For additional information on industrial security measures that may be implemented, please visit (http://www.siemens.com/industrialsecurity).

Siemens' products and solutions undergo continuous development to make them more secure. Siemens strongly recommends that product updates are applied as soon as they are available and that the latest product versions are used. Use of product versions that are no longer supported, and failure to apply the latest updates may increase customers' exposure to cyber threats.

To stay informed about product updates, subscribe to the Siemens Industrial Security RSS Feed under (http://www.siemens.com/industrialsecurity).

Table of contents

Preface 4
1 Documentation guide 7
2 Product overview 12
2.1 Properties 12
3 Wiring 14
3.1 Wiring and block diagram 14
4 Parameters/address space 17
4.1 Parameters 17
4.2 Explanation of parameters 19
4.3 Address space 20
5 Interrupts/diagnostics alarms 21
5.1 Status and error displays 21
5.2 Interrupts 23
5.3 Diagnostics alarms 23
6 Technical specifications 24
6.1 Technical specifications 24
A Parameter data record 28
A.1 Parameter assignment and structure of parameter data record 28

Documentation guide

1

The documentation for the SIMATIC ET 200SP distributed I/O system is arranged into three areas.
This arrangement enables you to access the specific content you require.

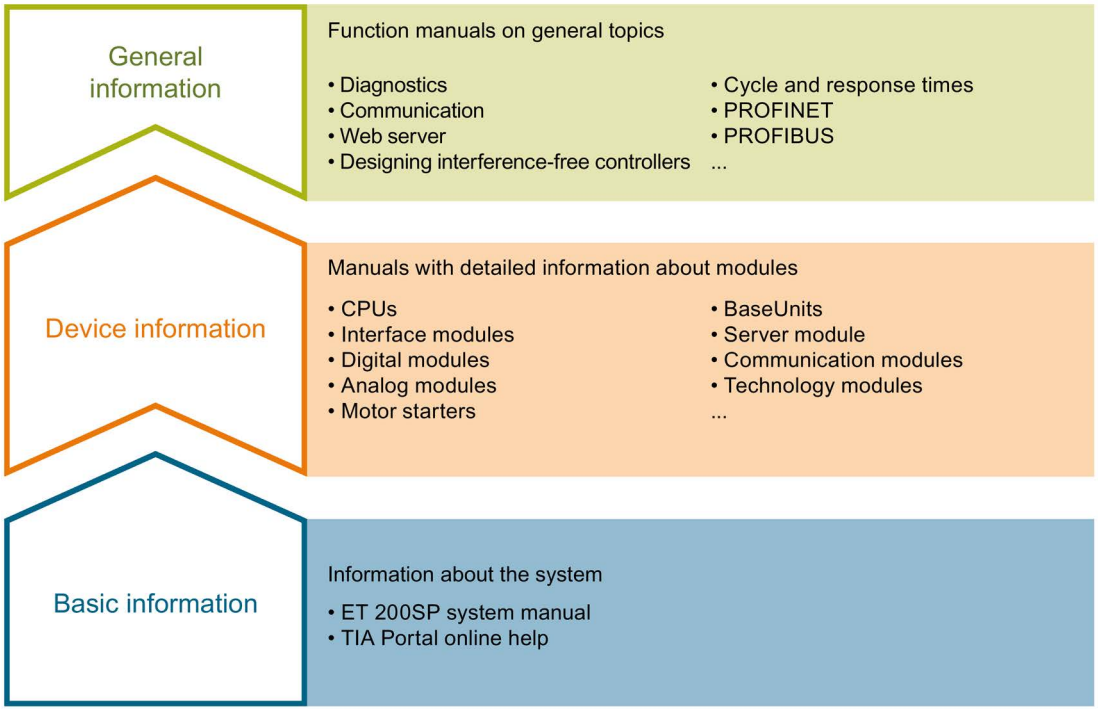

Basic information

The system manual describes in detail the configuration, installation, wiring and commissioning of the SIMATIC ET 200SP. distributed I/O system. The STEP 7 online help supports you in the configuration and programming.

Device information

Product manuals contain a compact description of the module-specific information, such as properties, wiring diagrams, characteristics and technical specifications.

General information

The function manuals contain detailed descriptions on general topics regarding the SIMATIC ET 200SP distributed I/O system, e.g. diagnostics, communication, Web server, motion control and OPC UA.

You can download the documentation free of charge from the Internet (https://support.industry.siemens.com/cs/ww/en/view/109742709).

Changes and supplements to the manuals are documented in a Product Information.

You can download the product information free of charge from the Internet (https://support.industry.siemens.com/cs/us/en/view/73021864).

Manual Collection ET 200SP

The Manual Collection contains the complete documentation on the SIMATIC ET 200SP distributed I/O system gathered together in one file.

You can find the Manual Collection on the Internet (http://support.automation.siemens.com/WW/view/en/84133942).

"mySupport"

With "mySupport", your personal workspace, you make the most of your Industry Online Support.

In "mySupport" you can store filters, favorites and tags, request CAx data and put together your personal library in the Documentation area. Furthermore, your data is automatically filled into support requests and you always have an overview of your current requests.

You need to register once to use the full functionality of "mySupport".

You can find "mySupport" in the Internet (https://support.industry.siemens.com/My/ww/en).

"mySupport" - Documentation

In the Documentation area of "mySupport", you have the possibility to combine complete manuals or parts of them to make your own manual.
You can export the manual in PDF format or in an editable format.

You can find "mySupport" - Documentation in the Internet (http://support.industry.siemens.com/My/ww/en/documentation).

"mySupport" - CAx Data

In the CAx Data area of "mySupport", you can have access the latest product data for your CAx or CAe system.

You configure your own download package with a few clicks.

In doing so you can select:

- Product images, 2D dimension drawings, 3D models, internal circuit diagrams, EPLAN macro files
- Manuals, characteristics, operating manuals, certificates
- Product master data

You can find "mySupport" - CAx Data in the Internet (http://support.industry.siemens.com/my/ww/en/CAxOnline).

Application examples

The application examples support you with various tools and examples for solving your automation tasks. Solutions are shown in interplay with multiple components in the system - separated from the focus in individual products.

You can find the application examples on the Internet (https://support.industry.siemens.com/sc/ww/en/sc/2054).

TIA Selection Tool

With the TIA Selection Tool, you can select, configure and order devices for Totally Integrated Automation (TIA).
This tool is the successor of the SIMATIC Selection Tool and combines the known configurators for automation technology into one tool.
With the TIA Selection Tool, you can generate a complete order list from your product selection or product configuration.

You can find the TIA Selection Tool on the Internet (http://w3.siemens.com/mcms/topics/en/simatic/tia-selection-tool).

SIMATIC Automation Tool

You can use the SIMATIC Automation Tool to run commissioning and maintenance activities simultaneously on various SIMATIC S7 stations as a bulk operation independently of the TIA Portal.

The SIMATIC Automation Tool provides a multitude of functions:

- Scanning of a PROFINET/Ethernet network and identification of all connected CPUs
- Address assignment (IP, subnet, gateway) and station name (PROFINET device) to a CPU
- Transfer of the data and the programming device/PC time converted to UTC time to the module
- Program download to CPU
- Operating mode switchover RUN/STOP
- Localization of the CPU by means of LED flashing
- Reading out CPU error information
- Reading the CPU diagnostic buffer
- Reset to factory settings
- Updating the firmware of the CPU and connected modules

You can find the SIMATIC Automation Tool on the Internet (https://support.industry.siemens.com/cs/ww/en/view/98161300).

PRONETA

With SIEMENS PRONETA (PROFINET network analysis), you analyze the plant network during commissioning. PRONETA features two core functions:

- The topology overview independently scans PROFINET and all connected components.
- The IO check is a fast test of the wiring and the module configuration of a system.

You can find SIEMENS PRONETA on the Internet (https://support.industry.siemens.com/cs/ww/en/view/67460624).

SINETPLAN

SINETPLAN, the Siemens Network Planner, supports you in planning automation systems and networks based on PROFINET. The tool facilitates professional and predictive dimensioning of your PROFINET installation as early as in the planning stage. In addition, SINETPLAN supports you during network optimization and helps you to exploit network resources optimally and to plan reserves. This helps to prevent problems in commissioning or failures during productive operation even in advance of a planned operation. This increases the availability of the production plant and helps improve operational safety.

The advantages at a glance

- Network optimization thanks to port-specific calculation of the network load
- Increased production availability thanks to online scan and verification of existing systems
- Transparency before commissioning through importing and simulation of existing STEP 7 projects
- Efficiency through securing existing investments in the long term and optimal exploitation of resources

You can find SINETPLAN on the Internet (https://www.siemens.com/sinetplan).

Product overview

2

2.1 Properties

Part number

6ES7131-6BF61-0AA0

View of the module

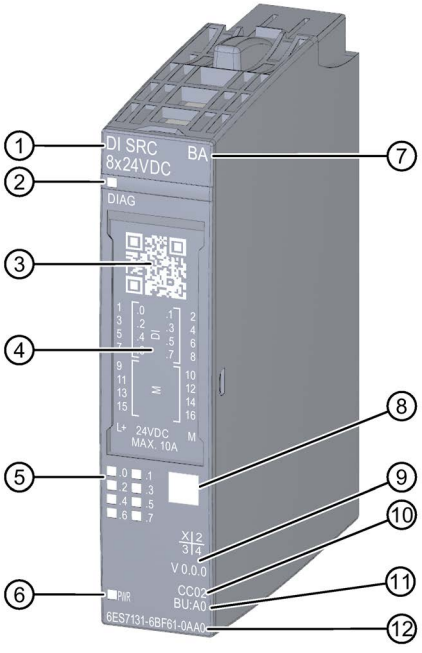

① Module type and name
② LED for diagnostics
③ 2D matrix code
④ Wiring diagram
⑤ LEDs for channel status
⑥ LED for supply voltage
⑦ Function class
⑧ Color coding module type
⑨ Function and firmware version
⑩ Color code for selecting the color identification labels
⑪ BU type
⑫ Article number

Figure 2-1 View of the DI 8×24VDC SRC BA module

Properties

The module has the following technical properties:

- 8 digital inputs
- Source input (NPN, M reading)
- Supply voltage L+
- Configurable input delay 0.05 ms to 20 ms (per channel)
- Configurable diagnostics (per module)
- Suitable for connection of switches and 2-wire sensors according to IEC 61131, type 1 and 3

The module supports the following functions:

Table 2- 1 Version dependencies of the functions

Function	HW version	FW version	STEP 7		GSD file	
			TIA Portal	V5.x	PROFINET IO	PROFIBUS DP
Identification data I&M0 to I&M3	FS01	V0.0.0 and higher	V14 or higher with HSP 0222	V5.5 SP3 or higher with HSP 0229 V7.0	X	X
Configuration in RUN	FS01	V0.0.0 and higher	V14 or higher with HSP 0222	V5.5 SP3 or higher with HSP 0229 V7.0	X	X

Accessories

The following accessories are supplied with the module and can also be ordered separately as spare parts:

- Labeling strips
- Color identification labels
- Reference identification label
- Shield connector

See also

You can find additional information on the accessories in the ET 200SP distributed I/O system (http://support.automation.siemens.com/WW/view/en/58649293) system manual.

Wiring 3

3.1 Wiring and block diagram

This section includes the block diagram of the DI 8x24VDC SRC BA module with the terminal assignments for a 1-wire, 2-wire and 3-wire connection.

Information about wiring of the BaseUnit is available in the system manual ET 200SP distributed I/O system (http://support.automation.siemens.com/WW/view/en/58649293).

Note

You may use and combine the different wiring options for all channels.

Note

The load group of the module must begin with a light-colored BaseUnit. Keep this in mind also during the configuration.

Note

The input channels provide values even without connected supply voltage L+. The characteristic type 2 is only maintained with connected supply voltage L+.

Connection: 1-wire and 2-wire connection

The following figure shows the block diagram and an example of the terminal assignment of the digital input module DI 8x24VDC SRC BA on the BaseUnit BU type A0 without AUX terminals (1-wire and 2-wire connection).

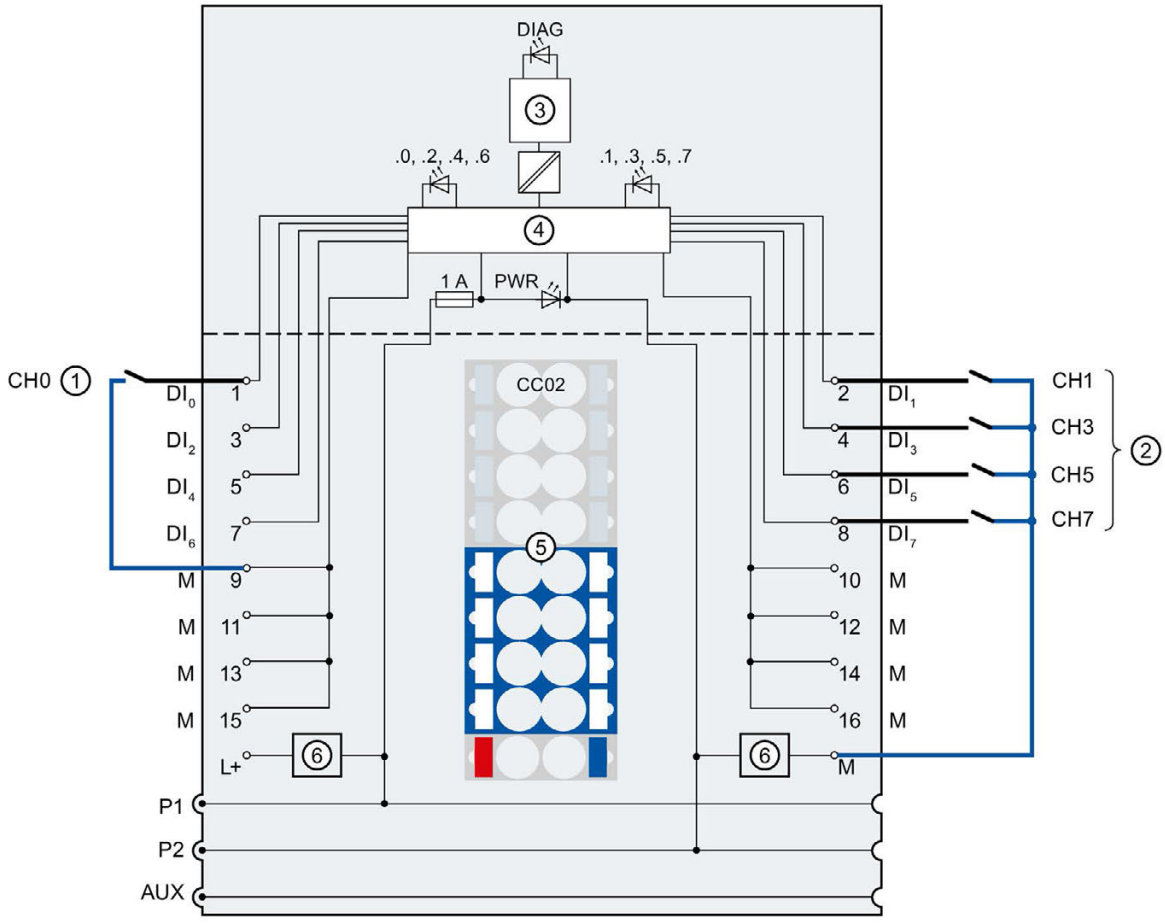

①	1-wire connection	DI_n	Input signal, channel n
②	2-wire connection	24 V DC	Encoder supply, channel n
③	Backplane bus interface	L+	24 V DC (feed for light-colored BaseUnit only)
④	Input electronics	M	Ground
⑤	Color identification label CCxx (optional)	DIAG	Error or Diagnostics LED (green, red)
⑥	Filter connection supply voltage (only when light-colored BaseUnit is present)	.0 to .7	Channel status LED (green)
P1, P2, AUX	Internal self-assembling voltage buses Connection to left (dark-colored BaseUnit) Connection to left interrupted (light-colored BaseUnit)	PWR	Power LED (green)

Figure 3-1 Wiring and block diagram for 1-wire and 2-wire connection of encoders

Connection: 3-wire connection

The following figure shows the block diagram and an example of the terminal assignment of the digital input DI 8x24VDC SRC BA on the BaseUnit BU type A0 with AUX terminals (3-wire connection).

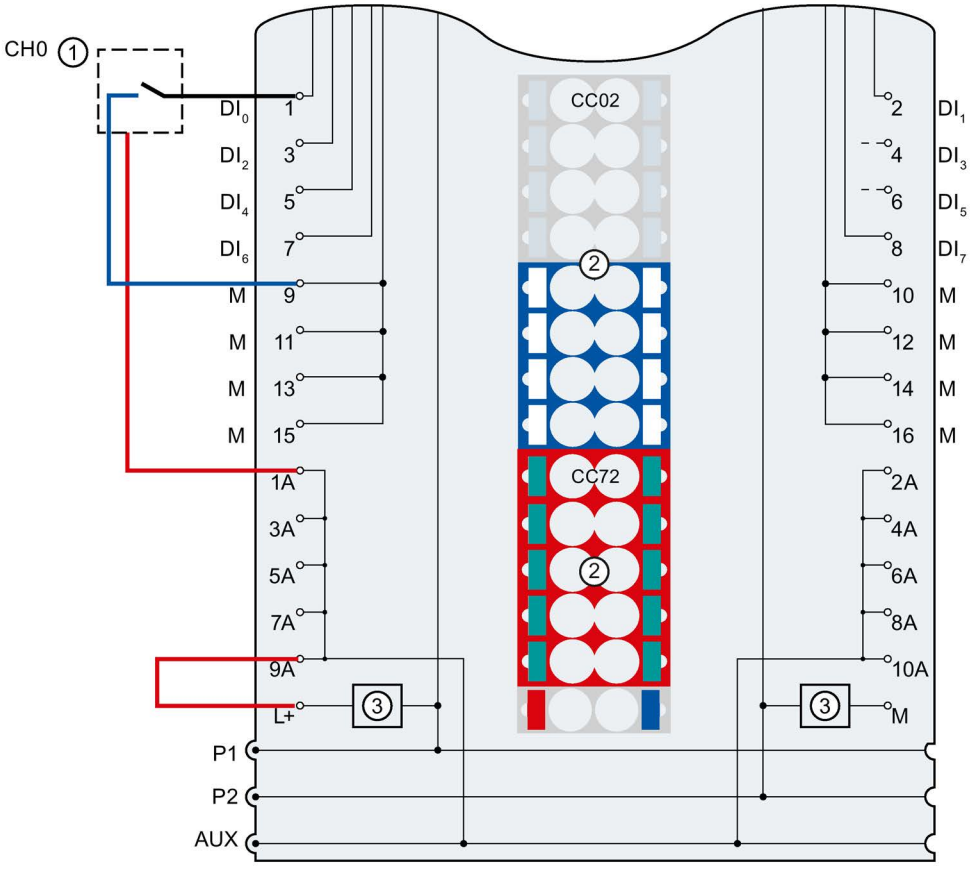

①	3-wire connection
②	Color identification labels CCxx (optional)
③	Filter connection supply voltage (only when light-colored BaseUnit is present)
DI_n	Input signal, channel n
24 V DC	Encoder supply, channel n
L+	24 V DC (feed for light-colored BaseUnit only)
M	Ground
1 A to 10 A	AUX terminals
P1, P2, AUX	Internal self-assembling voltage buses Connection to left (dark-colored BaseUnit) Connection to left interrupted (light-colored BaseUnit)

Figure 3-2 Wiring and block diagram for 3-wire connection of encoders

Parameters/address space 4

4.1 Parameters

DI 8×24VDC SRC BA parameters

Specify the module properties with the various parameters in the course of your STEP 7 configuration. The following table lists the configurable parameters. The effective range of the configurable parameters depends on the type of configuration.

The following configurations are possible:

- Central operation with an ET 200SP CPU
- Distributed operation on PROFINET IO in an ET 200SP system
- Distributed operation with PROFIBUS DP in an ET 200SP system

When assigning parameters in the user program, use the "WRREC" instruction to transfer the parameters to the module by means of data records (see chapter Parameter assignment and structure of the parameter data record (Page 28)).

Table 4- 1 Configurable parameters and their defaults (GSD file)

Parameter	Value range	Default	Reconfig-uration in RUN	Scope with configuration software, e.g. STEP 7 (TIA Portal)	
				GSD file PROFINET IO	GSD file PROFIBUS DP [1]
Diagnostics No supply voltage L+	• Disable • Enable	Disable	Yes	Module	Module
Channel activated	• Disable • Enable	Enable	Yes	Channel	Channel

Parameter	Value range	Default	Reconfig-uration in RUN	Scope with configuration software, e.g. STEP 7 (TIA Portal)	
				GSD file PROFINET IO	GSD file PROFIBUS DP [1]
Input delay	• None • 0.05 ms • 0.1 ms • 0.4 ms • 0.8 ms • 1.6 ms • 3.2 ms • 12.8 ms • 20 ms	3.2 ms	Yes	Channel	Module
Potential group	• Use potential group of the left module (module plugged into a dark-colored BaseUnit) • Enable new potential group (module plugged into light-colored BaseUnit)	Use potential group of the left module	No	Module	Module

[1] Only when configuring using a PROFIBUS GSD file; does not apply to configuration with STEP 7 via HSP. The parameter assignment options are limited because PROFIBUS GSD configuration limits the number of parameters to a maximum of 244 bytes for each ET 200SP station. If required, you can still assign these parameters using the data record 128 as described in the column "GSD file PROFINET IO" (see table above). The parameter length of the I/O module is 16 bytes.

4.2 Explanation of parameters

Diagnostics: No supply voltage L+

Enabling of the diagnostics for no or insufficient supply voltage L+.

Channel activated

Determines whether a channel is activated or deactivated.

Input delay

This parameter can be used to suppress signal interference. Changes to the signal are only detected if they are constantly pending longer than the set input delay time.

Potential group

A potential group consists of a group of directly adjacent I/O modules within an ET 200SP station, which are supplied via a common supply voltage.

A potential group begins with a light-colored BaseUnit through which the required voltage is supplied for all modules of the potential group. The light-colored BaseUnit interrupts the three self-assembling voltage buses P1, P2 and AUX to the left neighbor.

All additional I/O modules of this potential group are plugged into dark-colored BaseUnits. You take the potential of the self-assembling voltage buses P1, P2 and AUX from the left neighbor.

A potential group ends with the dark-colored BaseUnit, which follows a light-colored BaseUnit or server module in the station configuration.

4.3 Address space

The module can be configured differently in STEP 7; see following table. Depending on the configuration, additional/different addresses are assigned in the process image of the inputs.

Configuration options of DI 8x24VDC SRC BA

You can configure the module with STEP 7 (TIA Portal) or with a GSD file. If you configure the module using a GSD file, the configurations are available under various short designations/module names; see the table below. The following configurations are possible:

Table 4- 2 Configuration options with GSD file

Configuration	Short designation/module name in the GSD file	Configuration software, e.g. with STEP 7 (TIA Portal)		
		Integrated in hardware catalog STEP 7	GSD file PROFINET IO	GSD file PROFIBUS DP
1 x 8-channel without value status	DI 8x24VDC SRC BA V0.0	V14, SP1 or higher with HSP 0222	X	X

Address space of the digital input module DI 8x24VDC SRC BA

The figure below shows the assignment of the address space for DI 8x24VDC SRC BA.

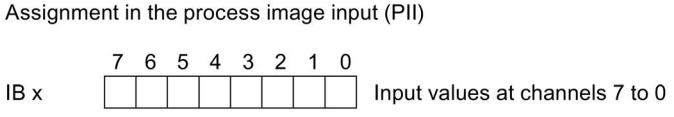

Figure 4-1 Address space of the digital input module DI 8x24VDC SRC BA

Interrupts/diagnostics alarms

5

5.1 Status and error displays

LED displays

The figure below shows the LED displays (status and error displays) of the DI 8x24VDC SRC BA.

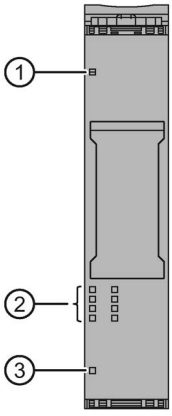

① DIAG (green/red)
② Channel status (green)
③ PWR (green)

Figure 5-1 LED display

Meaning of the LED displays

The tables below explain the meaning of the Status and error displays. Remedial measures for diagnostics alarms can be found in section Diagnostics alarms (Page 23).

LED DIAG

Table 5- 1 Error display of the LED DIAG

LED DIAG	Meaning
☐ Off	Backplane bus supply of the ET 200SP not OK
☼ Flashes	Module parameters not assigned
■ On	Module parameters assigned
☼ Flashes	Module diagnostics is available

LED channel status

Table 5- 2 Status display of the LED channel status

LED channel status	Meaning
☐ Off	Process signal = 0
■ On	Process signal = 1

LED PWR

Table 5- 3 Status display of the LED PWR

LED PWR	Meaning
☐ Off	No supply voltage L+
■ On	Supply voltage L+ present

5.2 Interrupts

The DI 8×24VDC SRC BA digital input module supports diagnostics interrupts.

Diagnostics interrupts

The module generates a diagnostic interrupt at the following event:

- Parameter assignment error
- No supply voltage

Detailed information on the event is available in the STEP 7 online help.

5.3 Diagnostics alarms

Diagnostics alarms

A diagnostic alarm is generated and the DIAG-LED flashes on the module for each diagnostics event. You can read out the diagnostics alarms, for example, in the diagnostics buffer of the CPU. You can evaluate the error codes with the user program.

Table 5- 4 Diagnostics alarms, their meaning and corrective measures

Diagnostics alarm	Error code	Meaning	Remedy
Parameter assignment error	10_H	• The module cannot evaluate parameters for the channel. • Incorrect parameter assignment.	Correct the parameter assignment
No supply voltage	11_H	No or insufficient supply voltage L+	• Check supply voltage L+ on the BaseUnit • Check BaseUnit type

Technical specifications

6

6.1 Technical specifications

Technical specifications of the DI 8×24VDC SRC BA

Article number	6ES7131-6BF61-0AA0
General information	
Product type designation	DI 8x24 VDC SRC BA
Firmware version	V0.0
• FW update possible	No
usable BaseUnits	BU type A0
Color code for module-specific color identification plate	CC02
Product function	
• I&M data	Yes; I&M0 to I&M3
Engineering with	
• STEP 7 TIA Portal configurable/integrated as of version	V14
• STEP 7 configurable/integrated as of version	V5.5 SP3 / -
• PROFIBUS as of GSD version/GSD revision	One GSD file each, Revision 3 and 5 and higher
• PROFINET as of GSD version/GSD revision	GSDML V2.3
Operating mode	
• DI	Yes
• Counter	No
• Oversampling	No
• MSI	No
Supply voltage	
Rated value (DC)	24 V
permissible range, lower limit (DC)	19.2 V
permissible range, upper limit (DC)	28.8 V
Reverse polarity protection	Yes
Encoder supply	
Short-circuit protection	No
Power loss	
Power loss, typ.	1.5 W

Article number	6ES7131-6BF61-0AA0
Address area	
Address space per module	
• Inputs	1 byte
Hardware configuration	
Automatic encoding	Yes
Selection of BaseUnit for connection variants	
• 1-wire connection	BU type A0
• 2-wire connection	BU type A0
• 3-wire connection	BU type A0 with AUX terminals
• 4-wire connection	BU type A0 + Potential isolation module
Digital inputs	
Number of digital inputs	8
Digital inputs, parameterizable	Yes
Source/sink input	m-reading
Input characteristic curve in accordance with IEC 61131, type 1	Yes
Input voltage	
• Type of input voltage	DC
• Rated value (DC)	24 V
• for signal "0"	30 V to -5 V (reference potential is L+)
• for signal "1"	-11 V to -30 V (reference potential is L+)
Input current	
• for signal "1", typ.	6 mA
Input delay (for rated value of input voltage) for standard inputs	
– parameterizable	Yes; 0.05 / 0.1 / 0.4 / 0.8 / 1.6 / 3.2 / 12.8 / 20 ms (in each case + delay of 30 to 500 µs, depending on line length)
– at "0" to "1", min.	0.05 ms
– at "0" to "1", max.	20 ms
– at "1" to "0", min.	0.05 ms
– at "1" to "0", max.	20 ms
Cable length	
• shielded, max.	1 000 m
• unshielded, max.	200 m

Article number	6ES7131-6BF61-0AA0
Encoder	
Connectable encoders	
• 2-wire sensor	Yes
– permissible quiescent current (2-wire sensor), max.	1.5 mA
Isochronous mode	
Isochronous operation (application synchronized up to terminal)	No
Interrupts/diagnostics/status information	
Diagnostics function	Yes
Alarms	
• Diagnostic alarm	Yes
Diagnostic messages	
• Diagnostic information readable	Yes
• Monitoring the supply voltage	Yes
– parameterizable	Yes
• Monitoring of encoder power supply	No
• Wire-break	No
• Short-circuit	No
Diagnostics indication LED	
• Monitoring of the supply voltage (PWR-LED)	Yes; green PWR LED
• Channel status display	Yes; Green LED
• for channel diagnostics	No
• for module diagnostics	Yes; green/red DIAG LED
Potential separation	
Potential separation channels	
• between the channels	No
• between the channels and backplane bus	Yes
• between the channels and the power supply of the electronics	No
Isolation	
Isolation tested with	707 V DC (type test)
Altitude during operation based on sea level	
• Ambient air temperature-barometric pressure-altitude	On request: Ambient temperatures lower than 0 °C (without condensation) and/or installation altitudes greater than 2 000 m

Article number	6ES7131-6BF61-0AA0
Dimensions	
Width	15 mm
Height	73 mm
Depth	58 mm
Weights	
Weight, approx.	28 g

Dimensional drawing

See the manual ET 200SP BaseUnits (http://support.automation.siemens.com/WW/view/en/58532597/133300)

Parameter data record A

A.1 Parameter assignment and structure of parameter data record

The data record of the module has an identical structure, regardless of whether you configure the module with PROFIBUS DP or PROFINET IO. With data record 128, you can reconfigure the module in your user program regardless of your programming. This means that you can use all the functions of the module even if you configured it via PROFIBUS-GSD.

Parameter assignment in the user program

The module parameters can be re-assigned in RUN (for example, the input delay of selected channels can be edited in RUN without having an effect on the other channels).

Changing parameters in RUN

The "WRREC" instruction is used to transfer the parameters to the module using data record 128. The parameters set in STEP 7 are not changed in the CPU, which means the parameters set in STEP 7 will be valid again after a restart.

Output parameter STATUS

The module ignores errors that occur during the transfer of parameters with the "WRREC" instruction and continues operation with the previous parameter assignment. However, a corresponding error code is written to the STATUS output parameter.

The description of the "WRREC" instruction and the error codes is available in the STEP 7 online help.

Structure of data record 128

Note

Channel 0 includes the diagnostics for the entire module.

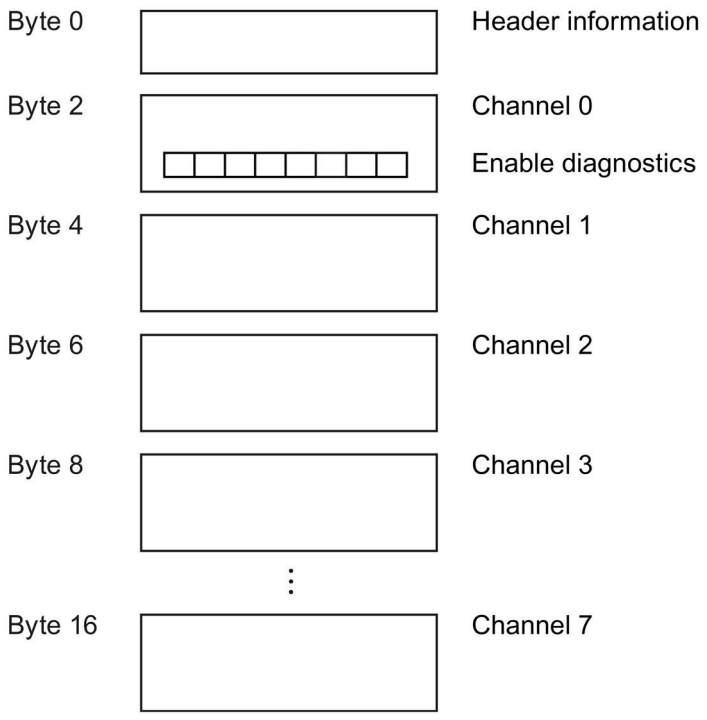

Figure A-1 Structure of data record 128

Header information

The figure below shows the structure of the header information.

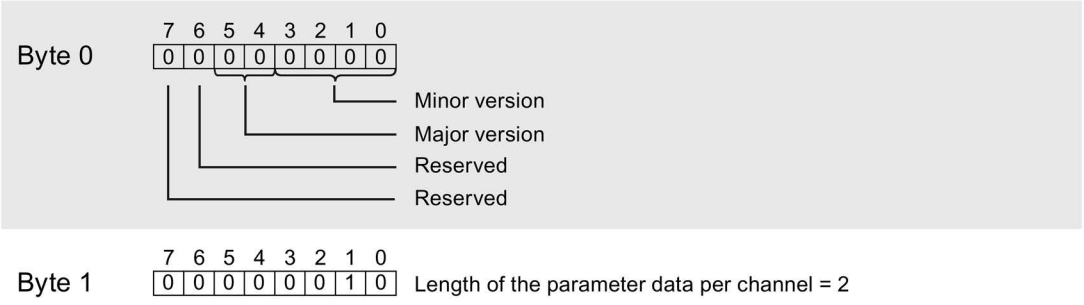

Figure A-2 Header information

Parameters

The figure below shows the structure of the parameters for channels 0 to 7.

Enable a parameter by setting the corresponding bit to "1".

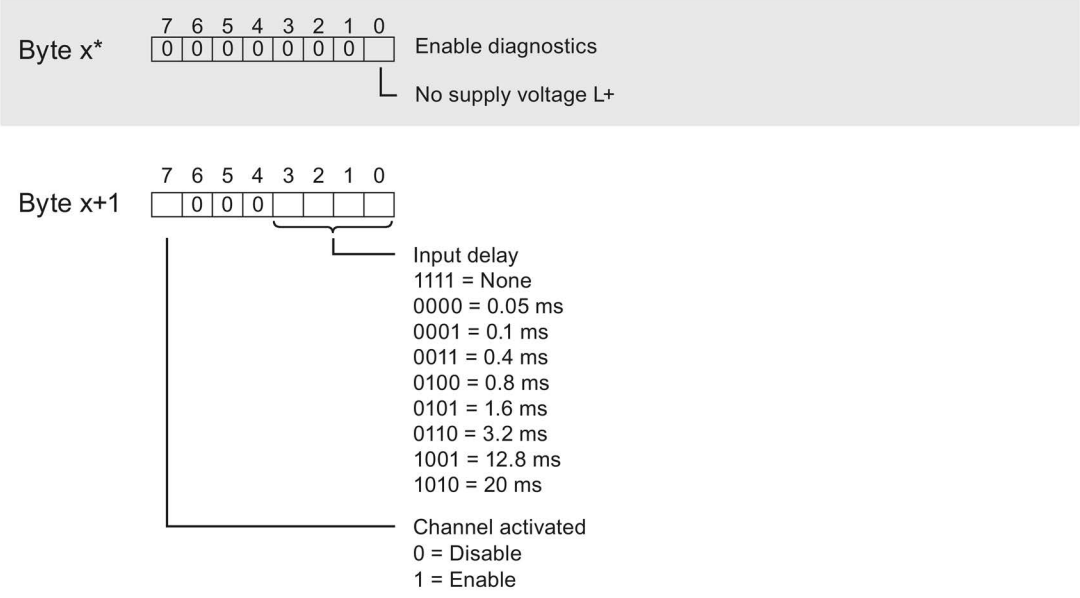

* x = 2 + (channel number × 2); channel number = 0 to 7

Figure A-3 Structure byte x to x+1 for the channels 0 to 7

Error transferring the data record

The module always checks all the values of the transferred data record. Only if all the values were transferred without errors does the module apply the values from the data record.

The WRREC instruction for writing data records returns corresponding error codes when errors occur in the STATUS parameter, see also the description of the "STATUS" parameter in the STEP 7 online help).

The following table shows the module-specific error codes and their meaning for the parameter data record 128.

Error code in STATUS parameter (hexadecimal)				Meaning	Solution
Byte 0	Byte 1	Byte 2	Byte 3		
DF	80	B0	xx	Number of the data record unknown.	Enter a valid number for the data record.
DF	80	B1	xx	Length of the data record incorrect.	Enter a valid value for the data record length.
DF	80	B2	xx	Slot invalid or cannot be accessed.	• Check the station whether the module is plugged or drawn. • Check the assigned values for the parameters of the WRREC instruction.
DF	80	E0	xx	Wrong version or error in the header information.	Correct the version, length and number of parameter blocks.
DF	80	E1	07	Invalid coding for input filter time.	Check the parameters of the module.

SIEMENS

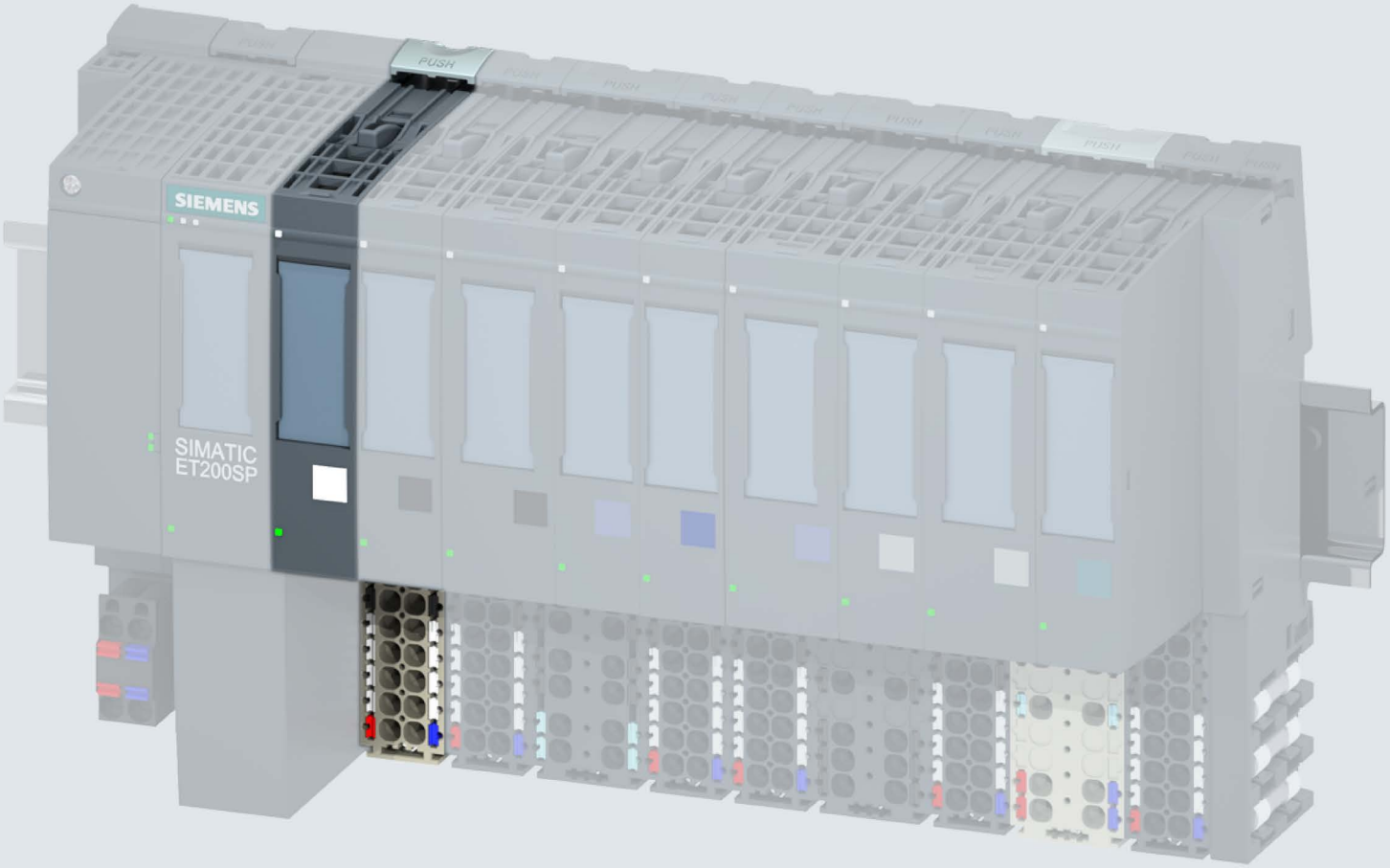

Manual

SIMATIC

ET 200SP

Digital input module
DI 8x24VDC ST (6ES7131-6BF01-0BA0)

Edition 09/2017

support.industry.siemens.com

SIEMENS

SIMATIC

ET 200SP
Digital input module
DI 8x24VDC ST
(6ES7131-6BF01-0BA0)

Manual

Preface

Documentation guide 1

Product overview 2

Wiring up 3

Parameters/address space 4

Interrupts/diagnostics alarms 5

Technical specifications 6

Parameter data record A

09/2017

A5E03574157-AE

Legal information

Warning notice system

This manual contains notices you have to observe in order to ensure your personal safety, as well as to prevent damage to property. The notices referring to your personal safety are highlighted in the manual by a safety alert symbol, notices referring only to property damage have no safety alert symbol. These notices shown below are graded according to the degree of danger.

⚠ DANGER

indicates that death or severe personal injury **will** result if proper precautions are not taken.

⚠ WARNING

indicates that death or severe personal injury **may** result if proper precautions are not taken.

⚠ CAUTION

indicates that minor personal injury can result if proper precautions are not taken.

NOTICE

indicates that property damage can result if proper precautions are not taken.

If more than one degree of danger is present, the warning notice representing the highest degree of danger will be used. A notice warning of injury to persons with a safety alert symbol may also include a warning relating to property damage.

Qualified Personnel

The product/system described in this documentation may be operated only by **personnel qualified** for the specific task in accordance with the relevant documentation, in particular its warning notices and safety instructions. Qualified personnel are those who, based on their training and experience, are capable of identifying risks and avoiding potential hazards when working with these products/systems.

Proper use of Siemens products

Note the following:

⚠ WARNING

Siemens products may only be used for the applications described in the catalog and in the relevant technical documentation. If products and components from other manufacturers are used, these must be recommended or approved by Siemens. Proper transport, storage, installation, assembly, commissioning, operation and maintenance are required to ensure that the products operate safely and without any problems. The permissible ambient conditions must be complied with. The information in the relevant documentation must be observed.

Trademarks

All names identified by ® are registered trademarks of Siemens AG. The remaining trademarks in this publication may be trademarks whose use by third parties for their own purposes could violate the rights of the owner.

Disclaimer of Liability

We have reviewed the contents of this publication to ensure consistency with the hardware and software described. Since variance cannot be precluded entirely, we cannot guarantee full consistency. However, the information in this publication is reviewed regularly and any necessary corrections are included in subsequent editions.

Siemens AG
Division Digital Factory
Postfach 48 48
90026 NÜRNBERG
GERMANY

A5E03574157-AE
℗ 10/2017 Subject to change

Copyright © Siemens AG 2012 - 2017.
All rights reserved

Preface

Purpose of the documentation

This manual supplements the system manual ET 200SP distributed I/O system (http://support.automation.siemens.com/WW/view/en/58649293).

Functions that generally relate to the system are described in this manual.

The information provided in this manual and in the system/function manuals supports you in commissioning the system.

Changes compared to previous version

Compared to the previous version, this manual contains the following change:

Due to the change in hardware, the article number of the module has been changed from 6ES7131-6BF00-0BA0 to 6ES7131-6BF01-0BA0. Both modules are compatible, except for the firmware-update function.

Conventions

CPU: When the term "CPU" is used in this manual, it applies to the CPUs of the S7-1500 automation system as well as to the CPUs/interface modules of the distributed I/O system ET 200SP.

STEP 7: In this documentation, "STEP 7" is used as a synonym for all versions of the configuration and programming software "STEP 7 (TIA Portal)".

Please also observe notes marked as follows:

Note

A note contains important information on the product described in the documentation, on the handling of the product or on the section of the documentation to which particular attention should be paid.

Security information

Siemens provides products and solutions with industrial security functions that support the secure operation of plants, systems, machines and networks.

In order to protect plants, systems, machines and networks against cyber threats, it is necessary to implement – and continuously maintain – a holistic, state-of-the-art industrial security concept. Siemens' products and solutions constitute one element of such a concept.

Customers are responsible for preventing unauthorized access to their plants, systems, machines and networks. Such systems, machines and components should only be connected to an enterprise network or the internet if and to the extent such a connection is necessary and only when appropriate security measures (e.g. firewalls and/or network segmentation) are in place.

For additional information on industrial security measures that may be implemented, please visit (http://www.siemens.com/industrialsecurity).

Siemens' products and solutions undergo continuous development to make them more secure. Siemens strongly recommends that product updates are applied as soon as they are available and that the latest product versions are used. Use of product versions that are no longer supported, and failure to apply the latest updates may increase customers' exposure to cyber threats.

To stay informed about product updates, subscribe to the Siemens Industrial Security RSS Feed under (http://www.siemens.com/industrialsecurity).

Table of contents

Preface 4

1 Documentation guide 7

2 Product overview 12

2.1 Properties 12

3 Wiring up 14

3.1 Wiring and block diagram 14

4 Parameters/address space 17

4.1 Parameters 17

4.2 Explanation of the parameters 19

4.3 Address space 20

5 Interrupts/diagnostics alarms 21

5.1 Status and error display 21

5.2 Interrupts 23

5.3 Diagnostics alarms 23

6 Technical specifications 24

6.1 Technical specifications 24

A Parameter data record 28

A.1 Parameter assignment and structure of the parameter data record 28

Documentation guide

1

The documentation for the SIMATIC S7-1500 automation system and the SIMATIC ET 200MP distributed I/O system is arranged into three areas.
This arrangement enables you to access the specific content you require.

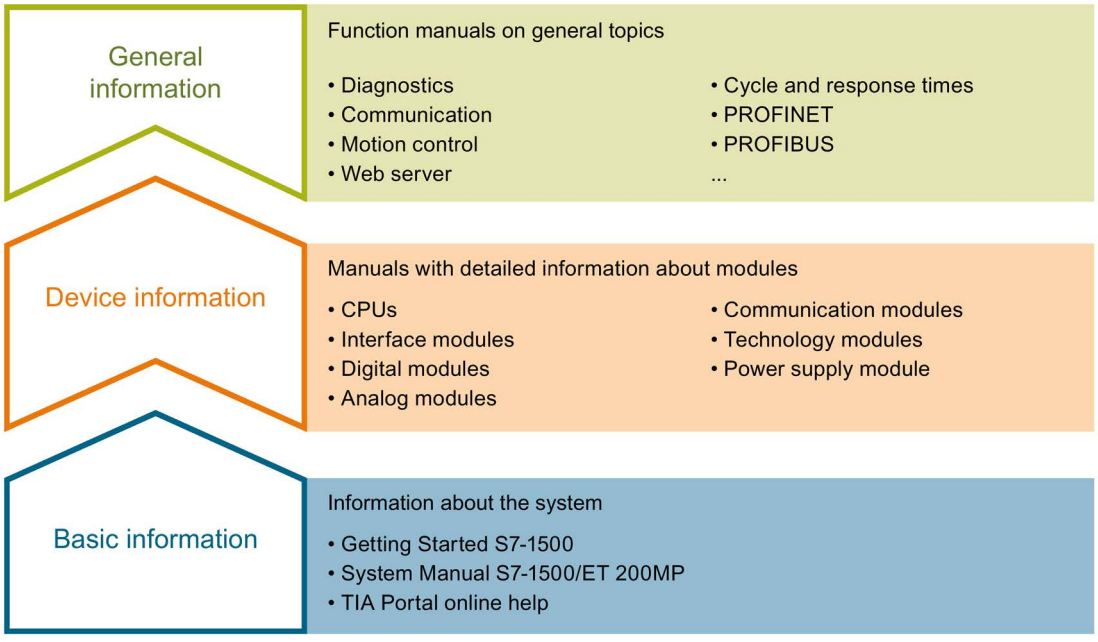

Basic information

The System Manual and Getting Started describe in detail the configuration, installation, wiring and commissioning of the SIMATIC S7-1500 and ET 200MP systems. The STEP 7 online help supports you in the configuration and programming.

Device information

Product manuals contain a compact description of the module-specific information, such as properties, wiring diagrams, characteristics and technical specifications.

General information

The function manuals contain detailed descriptions on general topics regarding the SIMATIC S7-1500 and ET 200MP systems, e.g. diagnostics, communication, motion control, Web server, OPC UA.

You can download the documentation free of charge from the Internet (http://w3.siemens.com/mcms/industrial-automation-systems-simatic/en/manual-overview/Pages/Default.aspx).

Changes and supplements to the manuals are documented in a Product Information.

You can download the product information free of charge from the Internet (https://support.industry.siemens.com/cs/us/en/view/68052815).

Manual Collection S7-1500/ET 200MP

The Manual Collection contains the complete documentation on the SIMATIC S7-1500 automation system and the ET 200MP distributed I/O system gathered together in one file.

You can find the Manual Collection on the Internet (https://support.industry.siemens.com/cs/ww/en/view/86140384).

SIMATIC S7-1500 comparison list for programming languages

The comparison list contains an overview of which instructions and functions you can use for which controller families.

You can find the comparison list on the Internet (https://support.industry.siemens.com/cs/ww/en/view/86630375).

"mySupport"

With "mySupport", your personal workspace, you make the best out of your Industry Online Support.

In "mySupport", you can save filters, favorites and tags, request CAx data and compile your personal library in the Documentation area. In addition, your data is already filled out in support requests and you can get an overview of your current requests at any time.

You must register once to use the full functionality of "mySupport".

You can find "mySupport" on the Internet (https://support.industry.siemens.com/My/ww/en).

"mySupport" - Documentation

In the Documentation area in "mySupport" you can combine entire manuals or only parts of these to your own manual.
You can export the manual as PDF file or in a format that can be edited later.

You can find "mySupport" - Documentation on the Internet (http://support.industry.siemens.com/My/ww/en/documentation).

"mySupport" - CAx data

In the CAx data area in "mySupport", you can access the current product data for your CAx or CAe system.

You configure your own download package with a few clicks.

In doing so you can select:

- Product images, 2D dimension drawings, 3D models, internal circuit diagrams, EPLAN macro files
- Manuals, characteristics, operating manuals, certificates
- Product master data

You can find "mySupport" - CAx data on the Internet (http://support.industry.siemens.com/my/ww/en/CAxOnline).

Application examples

The application examples support you with various tools and examples for solving your automation tasks. Solutions are shown in interplay with multiple components in the system - separated from the focus on individual products.

You will find the application examples on the Internet (https://support.industry.siemens.com/sc/ww/en/sc/2054).

TIA Selection Tool

With the TIA Selection Tool, you can select, configure and order devices for Totally Integrated Automation (TIA).
This tool is the successor of the SIMATIC Selection Tool and combines the known configurators for automation technology into one tool.
With the TIA Selection Tool, you can generate a complete order list from your product selection or product configuration.

You can find the TIA Selection Tool on the Internet (http://w3.siemens.com/mcms/topics/en/simatic/tia-selection-tool).

SIMATIC Automation Tool

You can use the SIMATIC Automation Tool to perform commissioning and maintenance activities simultaneously on various SIMATIC S7 stations as a bulk operation independent of the TIA Portal.

General function overview:

- Network browsing and creation of a table showing the accessible devices in the network.
- Flashing of device LEDs or HMI display to locate a device
- Downloading of addresses (IP, subnet, gateway) to a device
- Downloading the PROFINET name (station name) to a device
- Placing a CPU in RUN or STOP mode
- Setting the time in a CPU to the current time of your PG/PC
- Downloading a new program to a CPU or an HMI device
- Downloading from CPU, downloading to CPU or deleting recipe data from a CPU
- Downloading from CPU or deleting data log data from a CPU
- Backup/restore of data from/to a backup file for CPUs and HMI devices
- Downloading service data from a CPU
- Reading the diagnostics buffer of a CPU
- Performing a CPU memory reset
- Resetting devices to factory settings
- Downloading a firmware update to a device

You can find the SIMATIC Automation Tool on the Internet (https://support.industry.siemens.com/cs/ww/en/view/98161300).

PRONETA

With SIEMENS PRONETA (PROFINET network analysis), you analyze the PROFINET network during commissioning. PRONETA features two core functions:

- The topology overview independently scans PROFINET network and all connected components.
- The IO check is a fast test of the wiring and the module configuration of a system.

You can find SIEMENS PRONETA on the Internet (https://support.industry.siemens.com/cs/ww/en/view/67460624).

SINETPLAN

SINETPLAN, the Siemens Network Planner, supports you in planning automation systems and networks based on PROFINET. The tool facilitates professional and predictive dimensioning of your PROFINET installation as early as in the planning stage. In addition, SINETPLAN supports you during network optimization and helps you to exploit network resources optimally and to plan reserves. This helps to prevent problems in commissioning or failures during productive operation even in advance of a planned operation. This increases the availability of the production plant and helps improve operational safety.

The advantages at a glance

- Network optimization thanks to port-specific calculation of the network load
- Increased production availability thanks to online scan and verification of existing systems
- Transparency before commissioning through importing and simulation of existing STEP 7 projects
- Efficiency through securing existing investments in the long term and optimal exploitation of resources

You can find SINETPLAN on the Internet (https://www.siemens.com/sinetplan).

Product overview

2

2.1 Properties

Article number

6ES7131-6BF01-0BA0 (number in package unit: 1 unit)

6ES7131-6BF01-2BA0 (number in package unit: 10 units)

View of the module

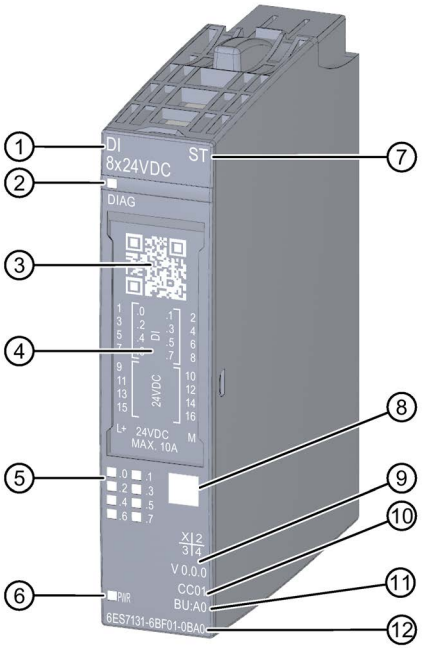

① Module type and name
② LED for diagnostics
③ 2D matrix code
④ Wiring diagram
⑤ LEDs for channel status
⑥ LED for supply voltage
⑦ Function class
⑧ Color coding module type
⑨ Function and firmware version
⑩ Color code for selecting the color identification labels
⑪ BU type
⑫ Article number

Figure 2-1 View of the module DI 8×24VDC ST

Properties

The module has the following technical properties:

- Digital input module with 8 inputs
- Supply voltage L+
- Sink input (PNP)
- Configurable input delay 0.05 ms to 20 ms (per channel)
- Configurable diagnostics (per module)
- Suitable for connection of switches and 2-wire sensors in accordance with IEC 61131, type 1 and 3

The module supports the following functions:

Table 2- 1 Version dependencies of the functions

Function	HW version	FW version	STEP 7		GSD file	
			TIA Portal	V5.x	PROFINET IO	PROFIBUS DP
Identification data I&M0 to I&M3	FS01	V0.0.0 and higher	V14 or higher with HSP 0222	V5.5 SP3 or higher with HSP 0229 V7.0	X	X
Configuration in RUN	FS01	V0.0.0 and higher	V14 or higher with HSP 0222	V5.5 SP3 or higher with HSP 0229 V7.0	X	X
PROFIenergy	FS01	V0.0.0 and higher	V14 or higher with HSP 0222	V5.5 SP3 or higher with HSP 0229 V7.0	X	X
Value status	FS01	V0.0.0 and higher	V14 or higher with HSP 0222	V5.5 SP3 or higher with HSP 0229 V7.0	X	X

Accessories

The following accessories must be ordered separately:

- Labeling strips
- Color identification labels
- Reference identification label
- Shield connector

See also

You will find additional information on the accessories in the ET 200SP distributed I/O system (http://support.automation.siemens.com/WW/view/en/58649293) system manual.

Wiring up

3

3.1 Wiring and block diagram

This section includes the block diagram of the DI 8x24VDC ST module with the terminal assignments for a 1-wire, 2-wire and 3-wire connection.

Information about wiring of the BaseUnit is available in the system manual ET 200SP distributed I/O system (http://support.automation.siemens.com/WW/view/en/58649293).

Note

You may use and combine the different wiring options for all channels.

Note

The load group of the module must begin with a light-colored BaseUnit. Keep this in mind also during the configuration.

Connection: 1-wire and 2-wire connection

The following figure shows the block diagram and an example of the terminal assignment of the digital input module DI 8x24VDC ST on the BaseUnit BU type A0 without AUX terminals (1-wire and 2-wire connection).

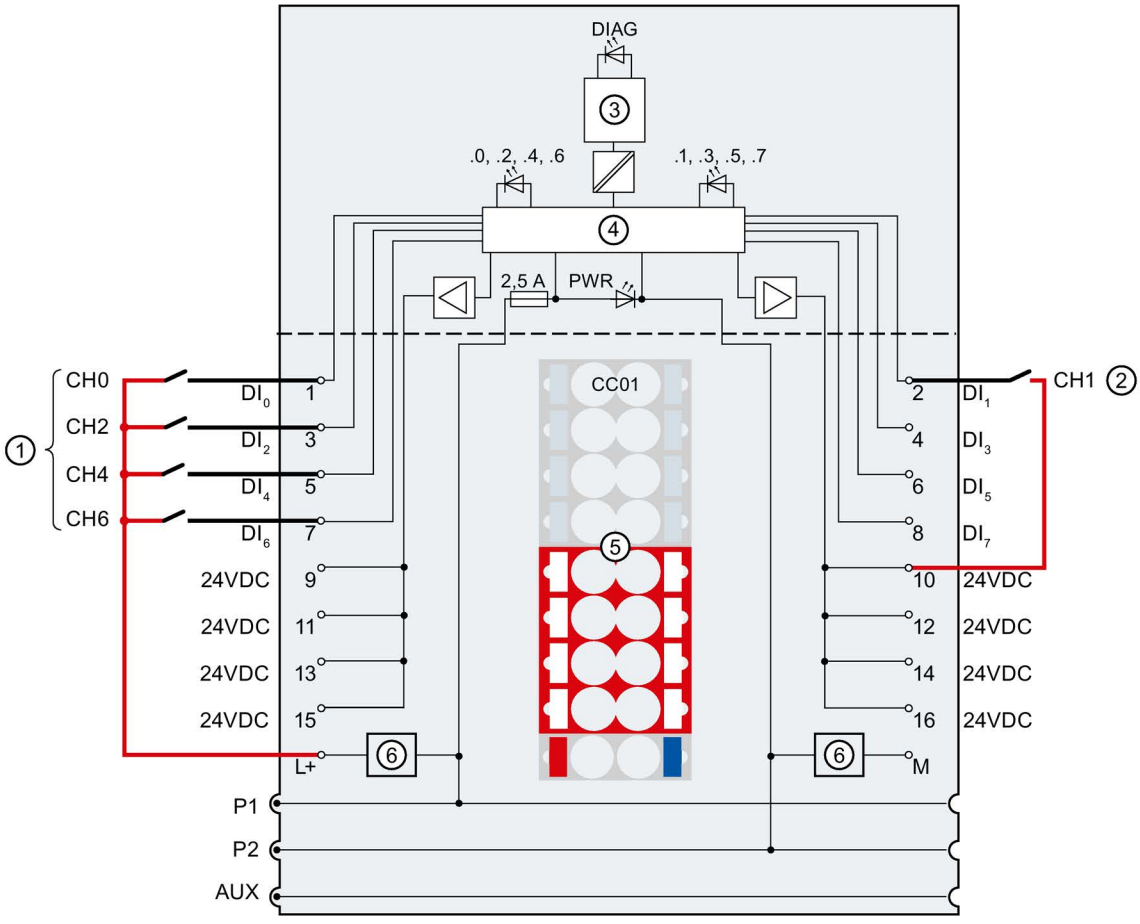

①	1-wire connection	DI_n	Input signal, channel n
②	2-wire connection	24 V DC	Encoder supply, channel n
③	Backplane bus interface	L+	24 V DC (feed for light-colored BaseUnit only)
④	Input electronics	M	Ground
⑤	Color identification label CCxx (optional)	DIAG	Error or Diagnostics LED (green, red)
⑥	Filter connection supply voltage (only when light-colored BaseUnit is present)	.0 to .7	Channel status LED (green)
P1, P2, AUX	Internal self-assembling voltage buses Connection to left (dark-colored BaseUnit) Connection to left interrupted (light-colored BaseUnit)	PWR	Power LED (green)

Figure 3-1 Wiring and block diagram for 1-wire and 2-wire connection of encoders

Connection: 3-wire connection

The following figure shows the block diagram and an example of the terminal assignment of the digital input DI 8x24VDC ST on the BaseUnit BU type A0 with AUX terminals (3-wire connection).

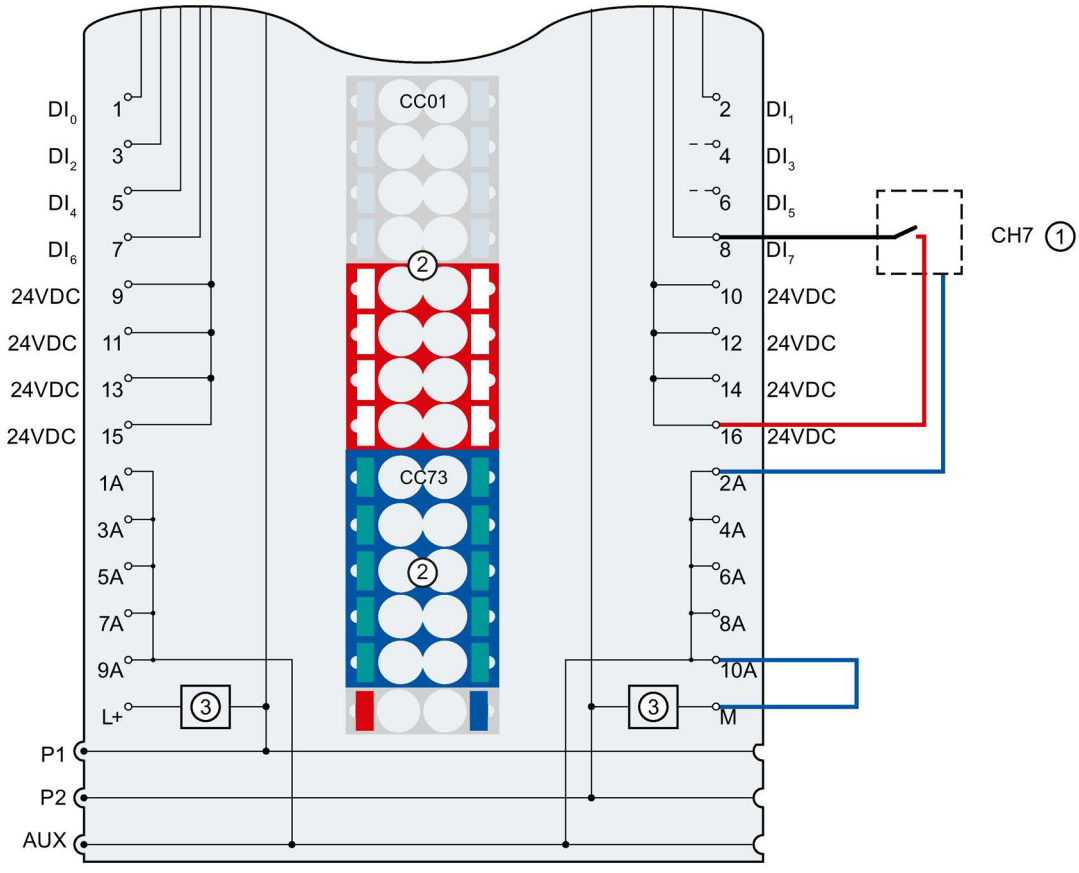

①	3-wire connection
②	Color identification labels CCxx (optional)
③	Filter connection supply voltage (only when light-colored BaseUnit is present)
DI_n	Input signal, channel n
L+	24 V DC (feed for light-colored BaseUnit only)
M	Ground
1 A to 10 A	AUX terminals
P1, P2, AUX	Internal self-assembling voltage buses Connection to left (dark-colored BaseUnit) Connection to left interrupted (light-colored BaseUnit)

Figure 3-2 Wiring and block diagram for 3-wire connection of encoders

Parameters/address space 4

4.1 Parameters

Parameters for DI 8x24VDC ST

Specify the module properties with the various parameters in the course of your STEP 7 configuration. The following table lists the configurable parameters. The effective range of the parameters depends on the type of configuration.

The following configurations are possible:

- Central operation with an ET 200SP CPU
- Distributed operation on PROFINET IO in an ET 200SP system
- Distributed operation with PROFIBUS DP in an ET 200SP system

When assigning parameters in the user program, use the "WRREC" instruction to transfer the parameters to the module using the data records; refer to the section Parameter assignment and structure of the parameter data record (Page 28).

The following parameter settings are possible:

Table 4- 1 Settable parameters and their defaults (GSD file)

Parameters	Value range	Default	Configuration in RUN	Scope with configuration software, e.g. STEP 7 (TIA Portal)	
				GSD file PROFINET IO	GSD file PROFIBUS DP [2]
Diagnostics No supply voltage L+	• Disable • Enable	Disable	yes	Module	Module
Diagnostics Short-circuit to ground	• Disable • Enable	Disable	yes	Module	Module
Diagnostics wire break[1]	• Disable • Enable	Disable	yes	Module	Module
Channel enabled	• Disable • Enable	Enable	yes	Channel	Channel

Parameters	Value range	Default	Configuration in RUN	Scope with configuration software, e.g. STEP 7 (TIA Portal)	
				GSD file PROFINET IO	GSD file PROFIBUS DP [2]
Input delay	• none • 0.05 ms • 0.1 ms • 0.4 ms • 0.8 ms • 1.6 ms • 3.2 ms • 12.8 ms • 20 ms	3.2 ms	yes	Channel	Module
Potential group	• Use potential group of the left module (module plugged into a dark-colored BaseUnit) • Enable new potential group (module plugged into light-colored BaseUnit)	Use potential group of the left module	no	Module	Module

[1] If you use a simple switch, you need to connect a resistor in parallel so that the wire break diagnostics is enabled in the open state (sensor resistance for the wire break diagnostics: 25 kΩ to 45 kΩ).

[2] Due to the limited number of parameters at a maximum of 244 bytes per ET 200SP station with a PROFIBUS GSD configuration, the configuration options are restricted. If required, you can assign these parameters using data record 128 as described in the "GSD file PROFINET IO" column (see table above). The parameter length of the I/O module is 16 bytes.

4.2 Explanation of the parameters

Diagnostics no supply voltage L+

Enabling of the diagnostics for no or insufficient supply voltage L+.

Diagnostics short-circuit to ground

Enabling of the diagnostics if a short-circuit of the encoder supply to ground occurs.

Diagnostics wire break

Enabling of the diagnostics if the module has no current flow or the current is too weak to be measured at the relevant input.

Channel activated

Determines whether a channel is enabled or disabled.

Input delay

This parameter can be used to avoid signal faults. Changes to the signal are only detected if they are constantly pending longer than the set input delay time.

Potential group

A potential group consists of a group of directly adjacent I/O modules within an ET 200SP station, which are supplied via a common supply voltage.

A potential group begins with a light-colored BaseUnit through which the required voltage is supplied for all modules of the potential group. The light-colored BaseUnit interrupts the three self-assembling voltage buses P1, P2 and AUX to the left neighbor.

All additional I/O modules of this potential group are plugged into dark-colored BaseUnits. You take the potential of the self-assembling voltage buses P1, P2 and AUX from the left neighbor.

A potential group ends with the dark-colored BaseUnit, which follows a light-colored BaseUnit or server module in the station configuration.

4.3 Address space

The module can be configured differently in STEP 7; see following table. Depending on the configuration, additional/different addresses are assigned in the process image of the inputs.

Configuration options of DI 8x24VDC ST

You can configure the module with STEP 7 (TIA Portal) or with a GSD file. If you configure the module using a GSD file, the configurations are available under various short designations/module names; see the table below. The following configurations are possible:

Table 4- 2 Configuration options with GSD file

Configuration	Short designation/module name in the GSD file	Configuration software, e.g. with STEP 7 (TIA Portal)		
		Integrated in hardware catalog STEP 7	GSD file PROFINET IO	GSD file PROFIBUS DP
1 x 8-channel without value status	DI 8x24VDC ST V0.0	V14, SP1 or higher with HSP 0222	X	X
1 x 8-channel with value status	DI 8x24VDC ST V0.0, QI	V14, SP1 or higher with HSP 0222	X	---

Evaluating the value status

An additional byte is allocated in the input address space if you enable the value status for the digital module. Bits 0 to 7 in this byte are assigned to a channel. They provide information about the validity of the digital value.

Bit = 1: No fault is present on the channel.

Bit = 0: Channel is disabled or there is a fault/error on the module.

If a fault/error occurs on a channel with this module, the value status for all channels is 0.

Address space

The following figure shows the assignment of the address space for the DI 8×24VDC ST with value status (Quality Information (QI)). The addresses for the value status are only available if the value status is enabled.

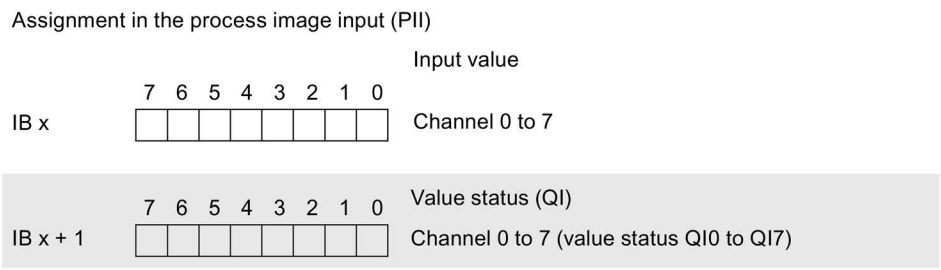

Figure 4-1 Address space of the DI 8×24VDC ST with value status

Interrupts/diagnostics alarms 5

5.1 Status and error display

LED display

The figure below shows the LED displays (status and error displays) of the DI 8x24VDC ST.

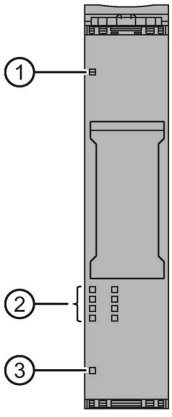

① DIAG (green/red)
② Channel status (green)
③ PWR (green)

Figure 5-1 LED display

Meaning of the LED displays

The following tables show the meaning of the status and error displays. Measures for dealing with diagnostics alarms can be found in the section Diagnostics alarms (Page 23).

DIAG LED

Table 5- 1 DIAG LED fault/error display

DIAG LED	Meaning
□ off	Backplane bus supply of the ET 200SP not OK
☼ Flashes	Module parameters not assigned
■ on	Module parameters assigned
☼ Flashes	Module diagnostics is available

Channel status LED

Table 5- 2 Status display of the channel status LED

Channel status LED	Meaning
□ off	Process signal = 0
■ on	Process signal = 1

PWR LED

Table 5- 3 Status display of the PWR LED

PWR LED	Meaning
□ off	No supply voltage L+
■ on	Supply voltage L+ present

5.2 Interrupts

The DI 8×24VDC ST digital input module supports diagnostic interrupts.

Diagnostics interrupt

The module generates a diagnostics interrupt for the following events:

- Short-circuit
- Wire break
- Parameter assignment error
- No supply voltage

5.3 Diagnostics alarms

A diagnostic alarm is generated and the DIAG-LED flashes on the module for each diagnostics event. You can read out the diagnostics alarms, for example, in the diagnostics buffer of the CPU. You can evaluate the error codes with the user program.

Table 5- 4 Diagnostics alarms, their meaning and how to deal with them

Diagnostics alarm	Error code	Meaning	Remedy
Short-circuit	1_H	Short-circuit to ground at encoder supply	Correct the process wiring
Wire break	6_H	Impedance of encoder circuit too high.	Use a different encoder type or modify the wiring, for example, using cables with larger cross-section
		Wire break between the module and sensor	Connect the cable
		Channel not connected (open)	• Disable diagnostics • Connect a resistor of 25 kilohms to 45 kilohms to the encoder contacts
Parameter assignment error	10_H	• The module cannot evaluate parameters for the channel. • Incorrect parameter assignment.	Correct the parameter assignment
No supply voltage	11_H	No or insufficient supply voltage L+	• Check supply voltage L+ on the BaseUnit • Check BaseUnit type

Technical specifications

6

6.1 Technical specifications

Technical specifications of the DI 8×24VDC ST

Article number	6ES7131-6BF01-0BA0
General information	
Product type designation	DI 8x24 VDC ST
Firmware version	V0.0
• FW update possible	No
usable BaseUnits	BU type A0
Color code for module-specific color identification plate	CC01
Product function	
• I&M data	Yes; I&M0 to I&M3
Engineering with	
• STEP 7 TIA Portal configurable/integrated as of version	V14
• STEP 7 configurable/integrated as of version	V5.5 SP3 or higher
• PCS 7 configurable/integrated as of version	V8.1 SP1
• PROFIBUS as of GSD version/GSD revision	One GSD file each, Revision 3 and 5 and higher
• PROFINET as of GSD version/GSD revision	GSDML V2.3
Operating mode	
• DI	Yes
• Counter	No
• Oversampling	No
• MSI	No
Supply voltage	
Rated value (DC)	24 V
permissible range, lower limit (DC)	19.2 V
permissible range, upper limit (DC)	28.8 V
Reverse polarity protection	Yes

Article number	6ES7131-6BF01-0BA0
Input current	
Current consumption, max.	50 mA; All channels are supplied from the encoder supply
Encoder supply	
Number of outputs	8
Output voltage encoder supply, min.	19.2 V
Short-circuit protection	Yes; per module
24 V encoder supply	
• 24 V	Yes
• Short-circuit protection	Yes
Power loss	
Power loss, typ.	1 W; 24 V, 8 inputs supplied via encoder supply
Address area	
Address space per module	
• Inputs	1 byte; + 1 byte for QI information
Hardware configuration	
Automatic encoding	Yes
• Mechanical coding element	Yes
Submodules	
• Number of configurable submodules, max.	4
Selection of BaseUnit for connection variants	
• 1-wire connection	BU type A0
• 2-wire connection	BU type A0
• 3-wire connection	BU type A0 with AUX terminals
• 4-wire connection	BU type A0 + Potential isolation module
Digital inputs	
Number of digital inputs	8
Digital inputs, parameterizable	Yes
Source/sink input	P-reading
Input characteristic curve in accordance with IEC 61131, type 3	Yes
Input voltage	
• Type of input voltage	DC
• Rated value (DC)	24 V
• for signal "0"	-30 to +5V
• for signal "1"	+11 to +30V
Input current	
• for signal "1", typ.	2.5 mA

Article number	6ES7131-6BF01-0BA0
Input delay (for rated value of input voltage) for standard inputs	
– parameterizable	Yes; 0.05 / 0.1 / 0.4 / 0.8 / 1.6 / 3.2 / 12.8 / 20 ms (in each case + delay of 30 to 500 µs, depending on line length)
– at "0" to "1", min.	0.05 ms
– at "0" to "1", max.	20 ms
– at "1" to "0", min.	0.05 ms
– at "1" to "0", max.	20 ms
Cable length	
• shielded, max.	1 000 m
• unshielded, max.	600 m
Encoder	
Connectable encoders	
• 2-wire sensor	Yes
– permissible quiescent current (2-wire sensor), max.	1.5 mA
Isochronous mode	
Isochronous operation (application synchronized up to terminal)	No
Interrupts/diagnostics/status information	
Diagnostics function	Yes
Alarms	
• Diagnostic alarm	Yes
Diagnostic messages	
• Diagnostic information readable	Yes
• Monitoring the supply voltage	Yes
– parameterizable	Yes
• Monitoring of encoder power supply	Yes; Module-by-module, optional protective circuit for preventing wire-break diagnostics in the case of simple encoder contacts: 25 kOhm to 45 kOhm
• Wire-break	Yes; Module-wise
• Short-circuit	Yes; Module-wise
Diagnostics indication LED	
• Monitoring of the supply voltage (PWR-LED)	Yes; green PWR LED
• Channel status display	Yes; Green LED
• for channel diagnostics	No
• for module diagnostics	Yes; green/red DIAG LED

Article number	6ES7131-6BF01-0BA0
Potential separation	
Potential separation channels	
• between the channels	No
• between the channels and backplane bus	Yes
• between the channels and the power supply of the electronics	No
Isolation	
Isolation tested with	707 V DC (type test)
Ambient conditions	
Ambient temperature during operation	
• horizontal installation, min.	0 °C
• horizontal installation, max.	60 °C
• vertical installation, min.	0 °C
• vertical installation, max.	50 °C
Altitude during operation based on sea level	
• Ambient air temperature-barometric pressure-altitude	On request: Ambient temperatures lower than 0 °C (without condensation) and/or installation altitudes greater than 2 000 m
Dimensions	
Width	15 mm
Height	73 mm
Depth	58 mm
Weights	
Weight, approx.	28 g

Dimension drawing

See manual ET 200SP BaseUnits
(http://support.automation.siemens.com/WW/view/en/58532597/133300)

Parameter data record

A

A.1 Parameter assignment and structure of the parameter data record

The data record of the module has an identical structure, regardless of whether you configure the module with PROFIBUS DP or PROFINET IO. With data record 128, you can reconfigure the module in your user program regardless of your programming. This means that you can use all the functions of the module even if you configured it via PROFIBUS-GSD.

Parameter assignment in the user program

The module parameters can be re-assigned in RUN (for example, the input delay of selected channels can be edited in RUN without having an effect on the other channels).

Changing parameters in RUN

The "WRREC" instruction is used to transfer the parameters to the module using data record 128. The parameters set in STEP 7 are not changed in the CPU, which means that the parameters set in STEP 7 will be valid again after a restart.

Output parameter STATUS

If errors occur when transferring parameters with the "WRREC" instruction, the module continues operation with the previous parameter assignment. The STATUS output parameter contains a corresponding error code.

You will find a description of the "WRREC" instruction and the error codes in the STEP 7 online help.

Structure of data record 128

Note

Channel 0 contains the diagnostics for the entire module.

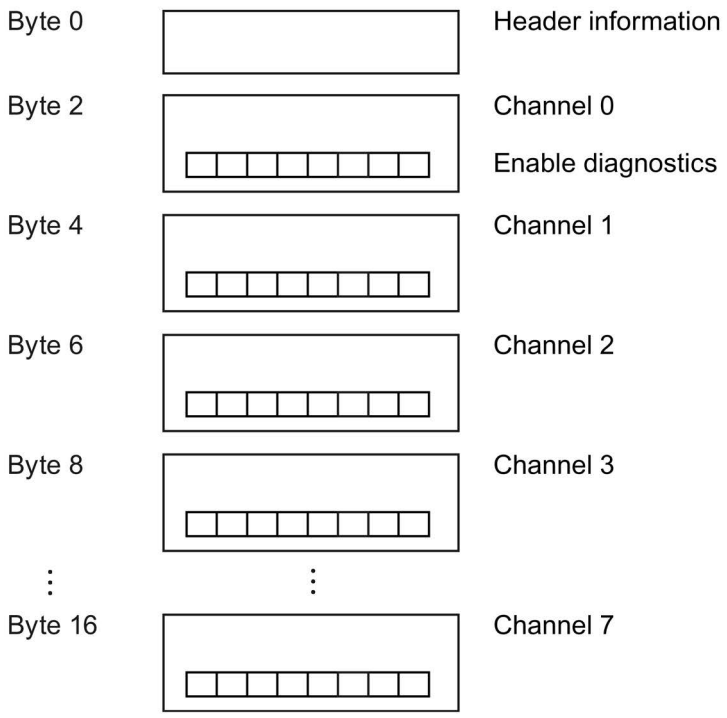

Figure A-1 Structure of data record 128

Header information

The figure below shows the structure of the header information.

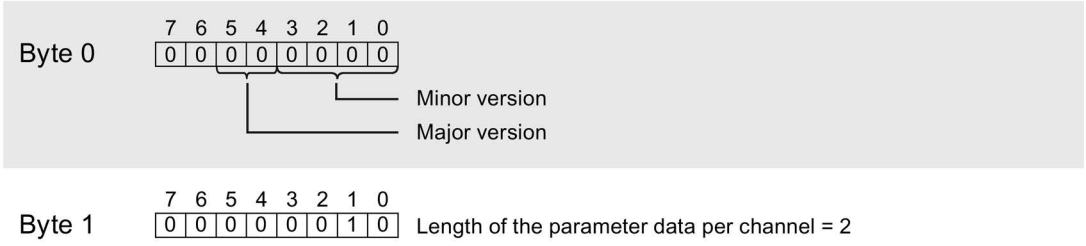

Figure A-2 Header information

Parameters

The figure below shows the structure of the parameters for channels 0 to 7.

You enable a parameter by setting the corresponding bit to "1".

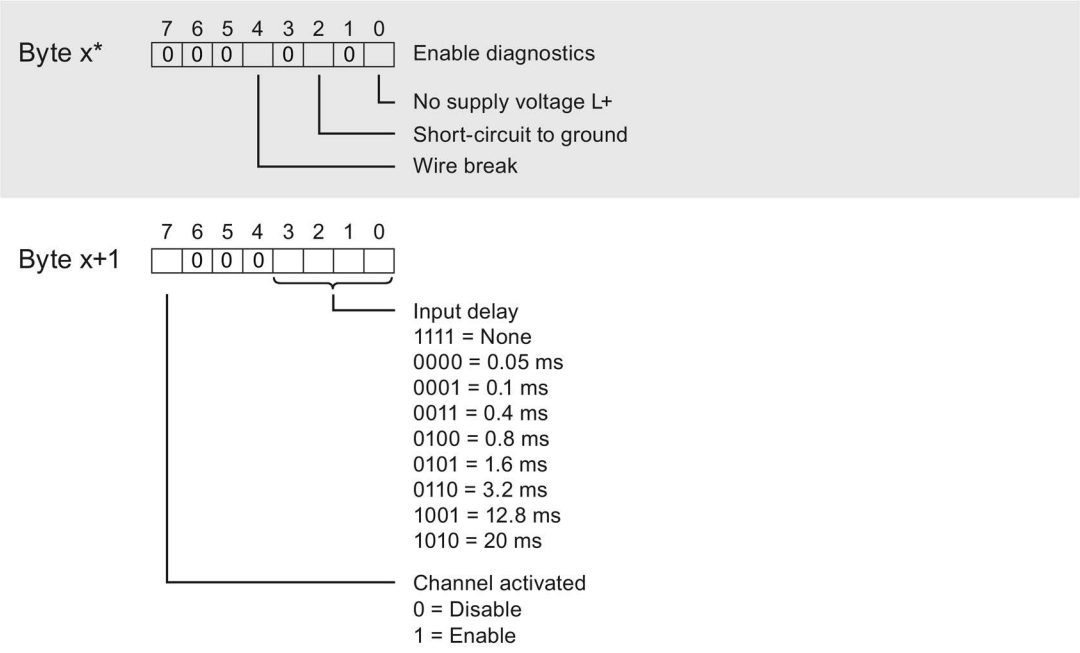

* x = 2 + (channel number × 2); channel number = 0 to 7

Figure A-3 Structure byte x to x+1 for the channels 0 to 7

Error transferring the data record

The module always checks all the values of the transferred data record. Only if all the values were transferred without errors does the module apply the values from the data record.

The WRREC instruction for writing data records returns corresponding error codes when errors occur in the STATUS parameter, see also the description of the "STATUS" parameter in the STEP 7 online help).

The following table shows the module-specific error codes and their meaning for the parameter data record 128.

Error code in STATUS parameter (hexadecimal)				Meaning	Solution
Byte 0	Byte 1	Byte 2	Byte 3		
DF	80	B0	xx	Number of the data record unknown.	Enter a valid number for the data record.
DF	80	B1	xx	Length of the data record incorrect.	Enter a valid value for the data record length.
DF	80	B2	xx	Slot invalid or cannot be accessed.	• Check the station whether the module is plugged or drawn. • Check the assigned values for the parameters of the WRREC instruction.
DF	80	E0	xx	Wrong version or error in the header information.	Correct the version, length and number of parameter blocks.
DF	80	E1	07	Invalid coding for input filter time.	Check the parameters of the module.

SIEMENS

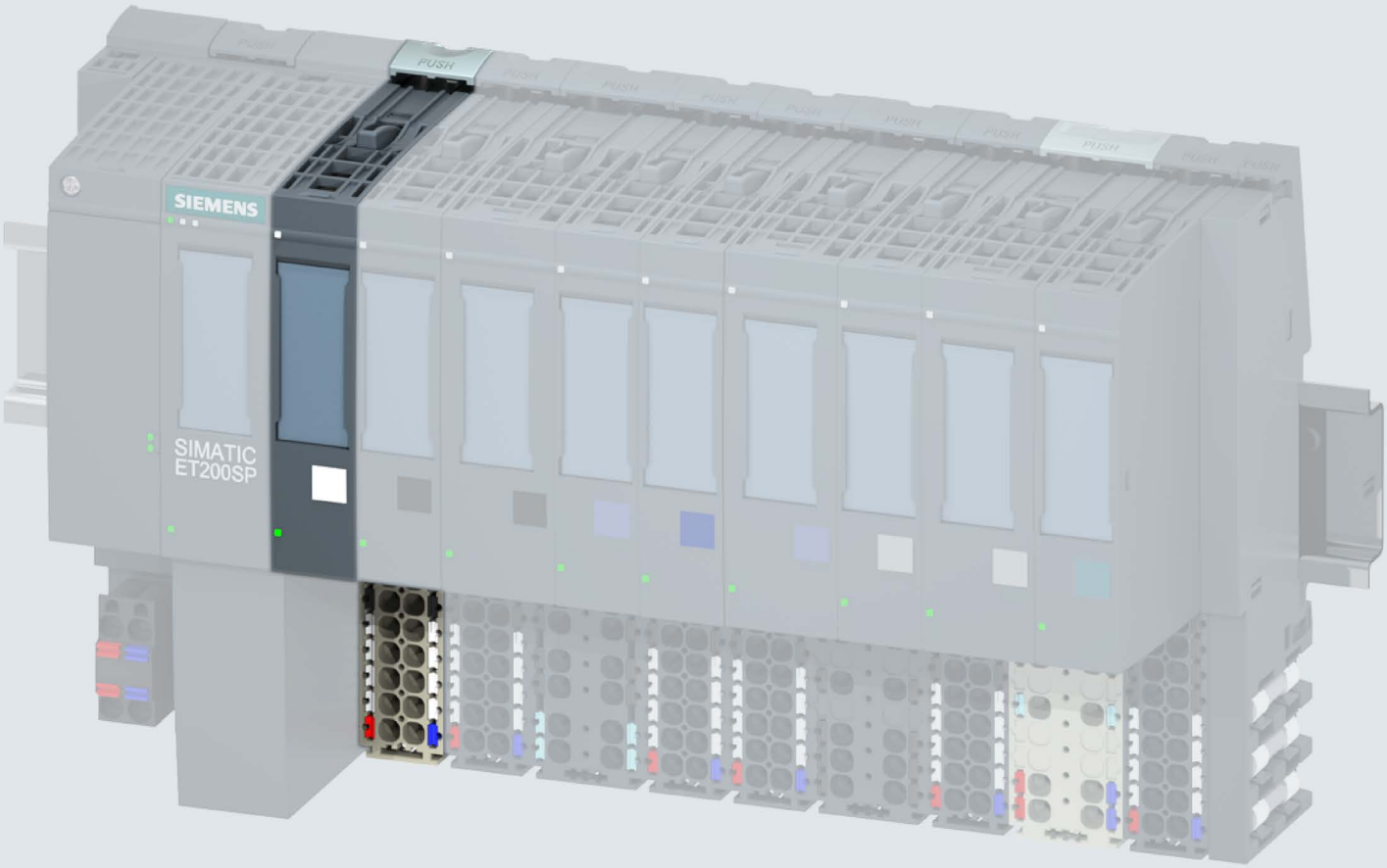

Manual

SIMATIC

ET 200SP

Digital input module
DI 16x24VDC ST (6ES7131-6BH01-0BA0)

Edition 09/2017

support.industry.siemens.com

SIEMENS

SIMATIC

ET 200SP
Digital input module
DI 16x24VDC ST
(6ES7131-6BH01-0BA0)

Manual

Preface

Documentation guide 1

Product overview 2

Connecting 3

Parameters/address space 4

Interrupts/diagnostic alarms 5

Technical specifications 6

Parameter data record A

09/2017

A5E03573442-AF

Legal information

Warning notice system

This manual contains notices you have to observe in order to ensure your personal safety, as well as to prevent damage to property. The notices referring to your personal safety are highlighted in the manual by a safety alert symbol, notices referring only to property damage have no safety alert symbol. These notices shown below are graded according to the degree of danger.

⚠ DANGER

indicates that death or severe personal injury **will** result if proper precautions are not taken.

⚠ WARNING

indicates that death or severe personal injury **may** result if proper precautions are not taken.

⚠ CAUTION

indicates that minor personal injury can result if proper precautions are not taken.

NOTICE

indicates that property damage can result if proper precautions are not taken.

If more than one degree of danger is present, the warning notice representing the highest degree of danger will be used. A notice warning of injury to persons with a safety alert symbol may also include a warning relating to property damage.

Qualified Personnel

The product/system described in this documentation may be operated only by **personnel qualified** for the specific task in accordance with the relevant documentation, in particular its warning notices and safety instructions. Qualified personnel are those who, based on their training and experience, are capable of identifying risks and avoiding potential hazards when working with these products/systems.

Proper use of Siemens products

Note the following:

⚠ WARNING

Siemens products may only be used for the applications described in the catalog and in the relevant technical documentation. If products and components from other manufacturers are used, these must be recommended or approved by Siemens. Proper transport, storage, installation, assembly, commissioning, operation and maintenance are required to ensure that the products operate safely and without any problems. The permissible ambient conditions must be complied with. The information in the relevant documentation must be observed.

Trademarks

All names identified by ® are registered trademarks of Siemens AG. The remaining trademarks in this publication may be trademarks whose use by third parties for their own purposes could violate the rights of the owner.

Disclaimer of Liability

We have reviewed the contents of this publication to ensure consistency with the hardware and software described. Since variance cannot be precluded entirely, we cannot guarantee full consistency. However, the information in this publication is reviewed regularly and any necessary corrections are included in subsequent editions.

Siemens AG
Division Digital Factory
Postfach 48 48
90026 NÜRNBERG
GERMANY

A5E03573442-AF
℗ 10/2017 Subject to change

Copyright © Siemens AG 2012 - 2017.
All rights reserved

Preface

Purpose of the documentation

This manual supplements the system manual ET 200SP distributed I/O system (http://support.automation.siemens.com/WW/view/en/58649293).

Functions that generally relate to the system are described in this manual.

The information provided in this manual and in the system/function manuals supports you in commissioning the system.

Changes compared to previous version

Compared to the previous version, this manual contains the following change:

Due to the change in hardware, the article number of the module has been changed from 6ES7131-6BH00-0BA0 to 6ES7131-6BH01-0BA0. Both modules are compatible, except for the firmware-update function.

Conventions

CPU: When the term "CPU" is used in this manual, it applies to the CPUs of the S7-1500 automation system as well as to the CPUs/interface modules of the distributed I/O system ET 200SP.

STEP 7: In this documentation, "STEP 7" is used as a synonym for all versions of the configuration and programming software "STEP 7 (TIA Portal)".

Please also observe notes marked as follows:

Note

A note contains important information on the product described in the documentation, on the handling of the product or on the section of the documentation to which particular attention should be paid.

Security information

Siemens provides products and solutions with industrial security functions that support the secure operation of plants, systems, machines and networks.

In order to protect plants, systems, machines and networks against cyber threats, it is necessary to implement – and continuously maintain – a holistic, state-of-the-art industrial security concept. Siemens' products and solutions constitute one element of such a concept.

Customers are responsible for preventing unauthorized access to their plants, systems, machines and networks. Such systems, machines and components should only be connected to an enterprise network or the internet if and to the extent such a connection is necessary and only when appropriate security measures (e.g. firewalls and/or network segmentation) are in place.

For additional information on industrial security measures that may be implemented, please visit (http://www.siemens.com/industrialsecurity).

Siemens' products and solutions undergo continuous development to make them more secure. Siemens strongly recommends that product updates are applied as soon as they are available and that the latest product versions are used. Use of product versions that are no longer supported, and failure to apply the latest updates may increase customers' exposure to cyber threats.

To stay informed about product updates, subscribe to the Siemens Industrial Security RSS Feed under (http://www.siemens.com/industrialsecurity).

Table of contents

Preface 4
1 Documentation guide 7
2 Product overview 12
2.1 Properties 12
3 Connecting 14
3.1 Wiring and block diagram 14
4 Parameters/address space 16
4.1 Parameters 16
4.2 Declaration of parameters 18
4.3 Address space 19
5 Interrupts/diagnostic alarms 21
5.1 Status and error display 21
5.2 Interrupts 23
5.3 Diagnostic messages 23
6 Technical specifications 24
6.1 Technical specifications 24
A Parameter data record 28
A.1 Parameter assignment and structure of parameter data record 28

Documentation guide

1

The documentation for the SIMATIC ET 200SP distributed I/O system is arranged into three areas.
This arrangement enables you to access the specific content you require.

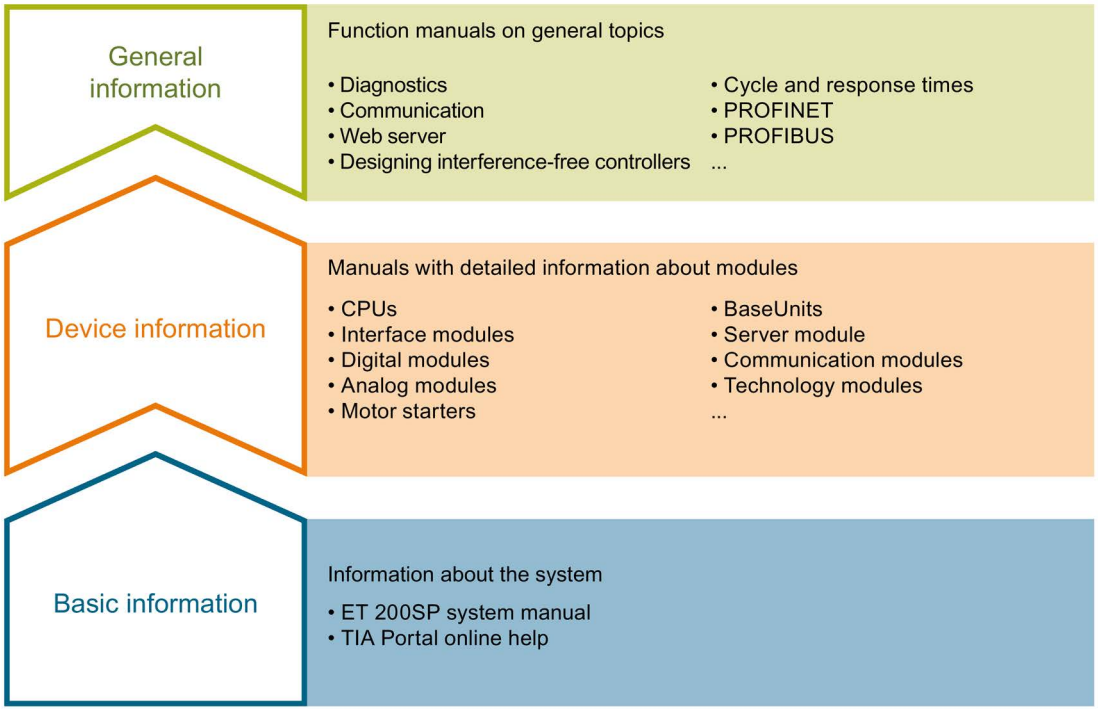

Basic information

The system manual describes in detail the configuration, installation, wiring and commissioning of the SIMATIC ET 200SP. distributed I/O system. The STEP 7 online help supports you in the configuration and programming.

Device information

Product manuals contain a compact description of the module-specific information, such as properties, wiring diagrams, characteristics and technical specifications.

General information

The function manuals contain detailed descriptions on general topics regarding the SIMATIC ET 200SP distributed I/O system, e.g. diagnostics, communication, Web server, motion control and OPC UA.

You can download the documentation free of charge from the Internet (https://support.industry.siemens.com/cs/ww/en/view/109742709).

Changes and supplements to the manuals are documented in a Product Information.

You can download the product information free of charge from the Internet (https://support.industry.siemens.com/cs/us/en/view/73021864).

Manual Collection ET 200SP

The Manual Collection contains the complete documentation on the SIMATIC ET 200SP distributed I/O system gathered together in one file.

You can find the Manual Collection on the Internet (http://support.automation.siemens.com/WW/view/en/84133942).

"mySupport"

With "mySupport", your personal workspace, you make the most of your Industry Online Support.

In "mySupport" you can store filters, favorites and tags, request CAx data and put together your personal library in the Documentation area. Furthermore, your data is automatically filled into support requests and you always have an overview of your current requests.

You need to register once to use the full functionality of "mySupport".

You can find "mySupport" in the Internet (https://support.industry.siemens.com/My/ww/en).

"mySupport" - Documentation

In the Documentation area of "mySupport", you have the possibility to combine complete manuals or parts of them to make your own manual.
You can export the manual in PDF format or in an editable format.

You can find "mySupport" - Documentation in the Internet (http://support.industry.siemens.com/My/ww/en/documentation).

"mySupport" - CAx Data

In the CAx Data area of "mySupport", you can have access the latest product data for your CAx or CAe system.

You configure your own download package with a few clicks.

In doing so you can select:

- Product images, 2D dimension drawings, 3D models, internal circuit diagrams, EPLAN macro files
- Manuals, characteristics, operating manuals, certificates
- Product master data

You can find "mySupport" - CAx Data in the Internet (http://support.industry.siemens.com/my/ww/en/CAxOnline).

Application examples

The application examples support you with various tools and examples for solving your automation tasks. Solutions are shown in interplay with multiple components in the system - separated from the focus in individual products.

You can find the application examples on the Internet (https://support.industry.siemens.com/sc/ww/en/sc/2054).

TIA Selection Tool

With the TIA Selection Tool, you can select, configure and order devices for Totally Integrated Automation (TIA).
This tool is the successor of the SIMATIC Selection Tool and combines the known configurators for automation technology into one tool.
With the TIA Selection Tool, you can generate a complete order list from your product selection or product configuration.

You can find the TIA Selection Tool on the Internet (http://w3.siemens.com/mcms/topics/en/simatic/tia-selection-tool).

SIMATIC Automation Tool

You can use the SIMATIC Automation Tool to run commissioning and maintenance activities simultaneously on various SIMATIC S7 stations as a bulk operation independently of the TIA Portal.

The SIMATIC Automation Tool provides a multitude of functions:

- Scanning of a PROFINET/Ethernet network and identification of all connected CPUs
- Address assignment (IP, subnet, gateway) and station name (PROFINET device) to a CPU
- Transfer of the data and the programming device/PC time converted to UTC time to the module
- Program download to CPU
- Operating mode switchover RUN/STOP
- Localization of the CPU by means of LED flashing
- Reading out CPU error information
- Reading the CPU diagnostic buffer
- Reset to factory settings
- Updating the firmware of the CPU and connected modules

You can find the SIMATIC Automation Tool on the Internet (https://support.industry.siemens.com/cs/ww/en/view/98161300).

PRONETA

With SIEMENS PRONETA (PROFINET network analysis), you analyze the plant network during commissioning. PRONETA features two core functions:

- The topology overview independently scans PROFINET and all connected components.
- The IO check is a fast test of the wiring and the module configuration of a system.

You can find SIEMENS PRONETA on the Internet (https://support.industry.siemens.com/cs/ww/en/view/67460624).

SINETPLAN

SINETPLAN, the Siemens Network Planner, supports you in planning automation systems and networks based on PROFINET. The tool facilitates professional and predictive dimensioning of your PROFINET installation as early as in the planning stage. In addition, SINETPLAN supports you during network optimization and helps you to exploit network resources optimally and to plan reserves. This helps to prevent problems in commissioning or failures during productive operation even in advance of a planned operation. This increases the availability of the production plant and helps improve operational safety.

The advantages at a glance

- Network optimization thanks to port-specific calculation of the network load
- Increased production availability thanks to online scan and verification of existing systems
- Transparency before commissioning through importing and simulation of existing STEP 7 projects
- Efficiency through securing existing investments in the long term and optimal exploitation of resources

You can find SINETPLAN on the Internet (https://www.siemens.com/sinetplan).

Product overview

2

2.1 Properties

Article number

6ES7131-6BH01-0BA0 (number in package unit: 1 unit)

6ES7131-6BH01-2BA0 (number in package unit: 10 units)

View of the module

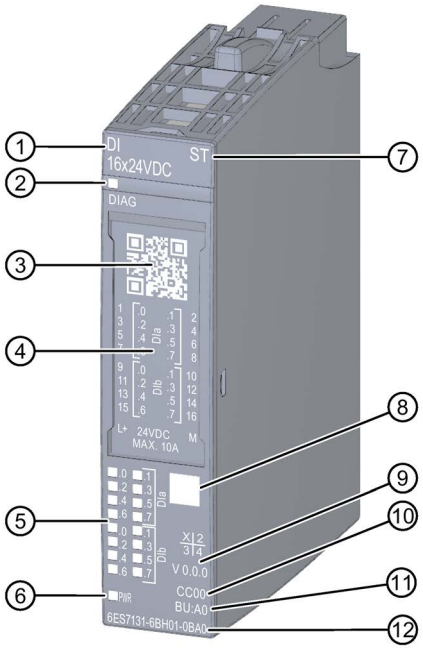

① Module type and name
② LED for diagnostics
③ 2D matrix code
④ Wiring diagram
⑤ LEDs for channel status
⑥ LED for supply voltage
⑦ Function class
⑧ Color coding module type
⑨ Function and firmware version
⑩ Color code for selecting the color identification labels
⑪ BU type
⑫ Article number

Figure 2-1 View of the module DI 16×24VDC ST

Properties

The module has the following technical properties:

- Digital input module with 16 inputs
- Sink input, (PNP, P-reading)
- Supply voltage L+
- Configurable input delay 0.05 to 20 ms (per channel)
- Configurable diagnostics (per module)
- Suitable for connection of switches and 2-wire sensors in accordance with IEC 61131, type 3

The module supports the following functions:

Table 2- 1 Version dependencies of the functions

Function	HW version	FW version	STEP 7		GSD file	
			TIA Portal	V5.x	PROFINET IO	PROFIBUS DP
Identification data I&M0 to I&M3	FS01	V0.0.0 and higher	V14 or higher with HSP 0222	V5.5 SP3 or higher with HSP 0229 V7.0	X	X
Configuration in RUN	FS01	V0.0.0 and higher	V14 or higher with HSP 0222	V5.5 SP3 or higher with HSP 0229 V7.0	X	X
Value status	FS01	V0.0.0 and higher	V14 or higher with HSP 0222	V5.5 SP3 or higher with HSP 0229 V7.0	X	X

Accessories

The following accessories must be ordered separately:

- Labeling strips
- Color identification labels
- Reference identification label
- Shield connector

See also

You can find additional information on the accessories in the system manual ET 200SP distributed I/O system (http://support.automation.siemens.com/WW/view/en/58649293).

Connecting 3

3.1 Wiring and block diagram

This section includes the block diagram of the DI 16x24VDC ST module with the terminal assignments for a 1-wire connection.

Information on wiring the BaseUnit can be found in the system manual ET 200SP distributed I/O system (http://support.automation.siemens.com/WW/view/en/58649293).

Note

The load group of the module must begin with a light-colored BaseUnit. Keep this in mind also during the configuration.

Note

Make sure that you only use digital modules with BaseUnit type A0 during commissioning.

Wiring: 1-wire connection

The following figure shows the block diagram and an example of the terminal assignment of the digital input module DI 16x24VDC ST on the BaseUnit BU type A0 without AUX terminals (1-wire connection).

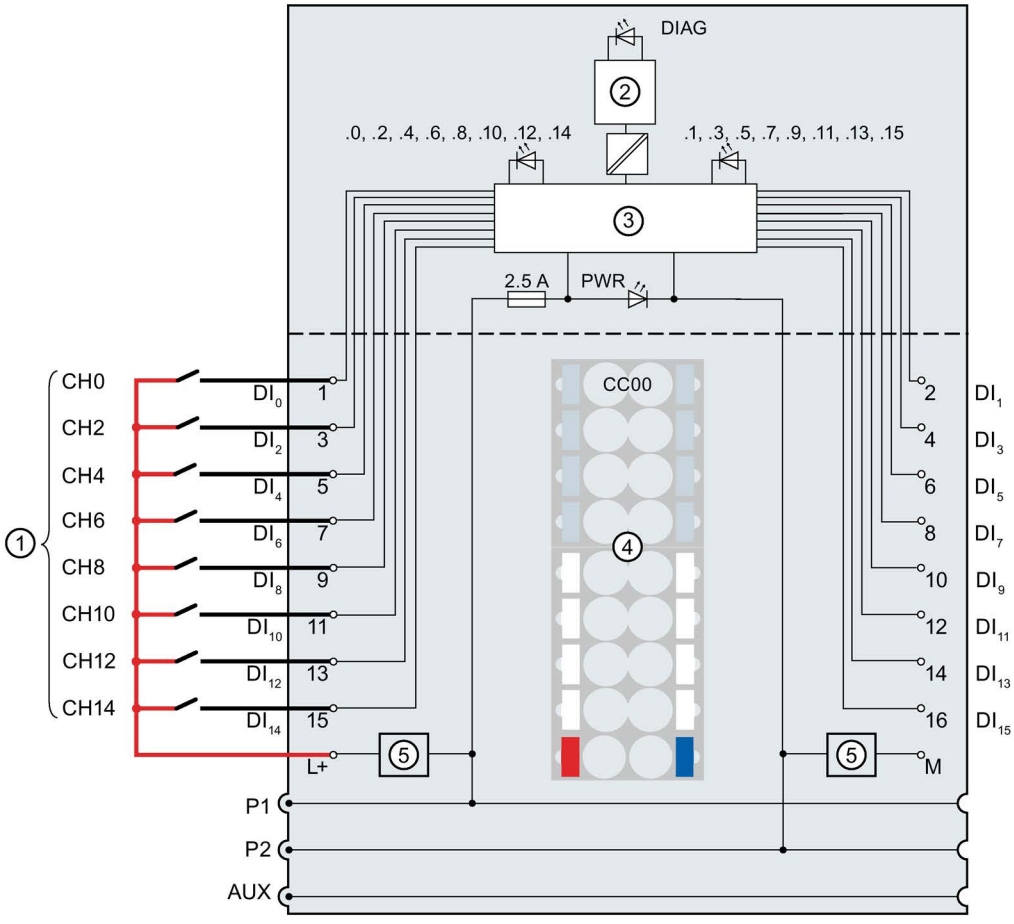

①	1-wire connection	DI_n	Input signal, channel n
②	Backplane bus interface	L+	24 V DC (infeed only with light-colored BaseUnit)
③	Input electronics	M	Ground
④	Color-coded label with color code CC00 (optional)	DIAG	Error or diagnostics LED (green, red)
⑤	Filter connection supply voltage (only when light-colored BaseUnit is present)	.0 to .15	Channel status LED (green)
P1, P2, AUX	Internal self-assembling voltage buses Connection to left (dark-colored BaseUnit) Connection to left interrupted (light-colored BaseUnit)	PWR	Power LED (green)

Figure 3-1 Wiring and block diagram for 1-wire connection of encoders

Parameters/address space 4

4.1 Parameters

Parameters for DI 16x24VDC ST

Specify the module properties with the various parameters in the course of your STEP 7 configuration. The following table lists the configurable parameters. The effective range of the configurable parameters depends on the type of configuration.

The following configurations are possible:

- Central operation with an ET 200SP CPU
- Distributed operation on PROFINET IO in an ET 200SP system
- Distributed operation with PROFIBUS DP in an ET 200SP system

When assigning parameters in the user program, use the "WRREC" instruction to transfer the parameters to the module using the data records; refer to section Parameter assignment and structure of parameter data record (Page 28).

The following parameter settings are possible:

Table 4- 1 Configurable parameters and their defaults (GSD file)

Parameters	Range of values	Default	Parameter reassignment in RUN	Scope with configuration software, e.g. STEP 7 (TIA Portal)	
				GSD file PROFINET IO	GSD file PROFIBUS DP [2]
Diagnostics: No supply voltage L+	• Disable • Enable	Disable	Yes	Module	Module
Diagnostics wire break[1]	• Disable • Enable	Disable	Yes	Module	Module
Channel activated	• Disable • Enable	Enable	Yes	Channel	Channel

Parameters	Range of values	Default	Parameter reassignment in RUN	Scope with configuration software, e.g. STEP 7 (TIA Portal)	
				GSD file PROFINET IO	GSD file PROFIBUS DP [2]
Input delay	• None • 0.05 ms • 0.1 ms • 0.4 ms • 0.8 ms • 1.6 ms • 3.2 ms • 12.8 ms • 20 ms	3.2 ms	Yes	Channel	Module
Potential group	• Use potential group of the left module (module plugged into a dark-colored BaseUnit) • Enable new potential group (module plugged into light-colored BaseUnit)	Use potential group of the left module	No	Module	Module

[1] If you use a floating switch, you need to connect a resistor in parallel so that the wire break diagnostics is enabled in the open state (sensor resistance for the wire break diagnostics: 25 kΩ to 45 kΩ).

[2] Due to the limited number of parameters with a maximum of 244 bytes per ET 200SP station for a PROFIBUS GSD configuration, the configuration options are restricted. If required, you can assign these parameters using data record 128 as described in the "GSD file PROFINET IO" column (see table above). The parameter length of the I/O module is 32 bytes.

4.2 Declaration of parameters

Diagnostics: No supply voltage L+

Enabling of the diagnostics for no or insufficient supply voltage L+.

Diagnostics: Wire break

Enabling diagnostics if the line to the encoder is interrupted.

Channel activated

Determines whether a channel is activated or deactivated.

Input delay

This parameter can be used to suppress signal interference. Changes to the signal are only detected if they are constantly pending longer than the set input delay time.

Potential group

A potential group consists of a group of directly adjacent I/O modules within an ET 200SP station, which are supplied via a common supply voltage.

A potential group begins with a light-colored BaseUnit through which the required voltage is supplied for all modules of the potential group. The light-colored BaseUnit interrupts the three self-assembling voltage buses P1, P2 and AUX to the left neighbor.

All additional I/O modules of this potential group are plugged into dark-colored BaseUnits. You take the potential of the self-assembling voltage buses P1, P2 and AUX from the left neighbor.

A potential group ends with the dark-colored BaseUnit, which follows a light-colored BaseUnit or server module in the station configuration.

See also

ET 200SP manual (https://support.industry.siemens.com/cs/ww/en/view/91696622)

4.3 Address space

The module can be configured differently in STEP 7; see following table. Depending on the configuration, additional/different addresses are assigned in the process image input.

Configuration options of DI 16x24VDC ST

You can configure the module with STEP 7 (TIA Portal) or with a GSD file. If you configure the module by means of a GSD file, the configurations are available under various short designations/module names; see the table below. The following configurations are possible:

Table 4- 2 Configuration options with GSD file

Configuration	Short designation/module name in the GSD file	Configuration software, e.g. with STEP 7 (TIA Portal)		
		Integrated in hardware catalog STEP 7	GSD file PROFINET IO	GSD file PROFIBUS DP
1 x 16-channel without value status	DI 16x24VDC ST V0.0	V14, SP1 or higher with HSP 0222	X	X
1 x 16-channel with value status	DI 16x24VDC ST V0.0, QI	V14, SP1 or higher with HSP 0222	X	---

Evaluating the value status

An additional two bytes are allocated in the input address space if you enable the value status for the digital module. Bits 0 to 15 in these bytes are assigned to a channel. They provide information about the validity of the digital value.

Bit = 1: No fault is present on the channel.

Bit = 0: Channel is deactivated or there is a fault on the module.

If a fault occurs on a channel with this module, the value status for all channels is 0.

Address space

The following figure shows the assignment of the address space for the DI 16x24VDC ST with value status (Quality Information (QI)). The addresses for the value status are only available if the value status is enabled.

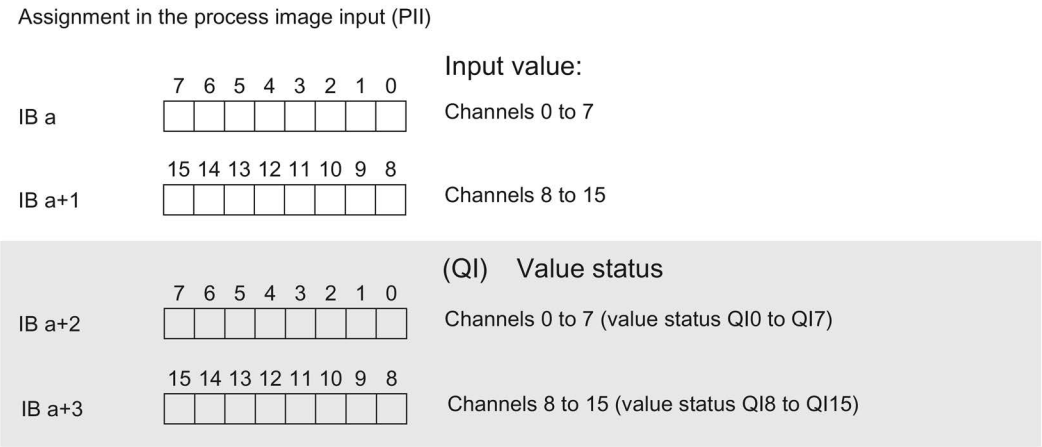

Figure 4-1 Address space of the DI 16×24VDC ST with value status

Interrupts/diagnostic alarms

5

5.1 Status and error display

LED display

The figure below shows the LED displays (status and error displays) of the DI 16x24VDC ST.

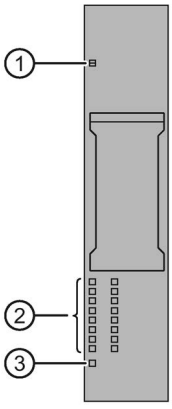

① DIAG (green/red)
② Channel status (green)
③ PWR (green)

Figure 5-1 LED display

Meaning of the LEDs

The following tables show the meaning of the status and error displays. Corrective measures for diagnostics alarms can be found in section Diagnostic messages (Page 23).

DIAG LED

Table 5- 1 Error display of the DIAG LED

DIAG LED	Meaning
Off	Backplane bus supply of the ET 200SP not OK
Flashes	Module parameters not assigned
On	Module parameters assigned
Flashes	Module diagnostics is available

Channel status LED

Table 5- 2 Status display of the channel status LED

Channel status LED	Meaning
Off	Process signal = 0
On	Process signal = 1

PWR LED

Table 5- 3 Status display of the PWR LED

PWR LED	Meaning
Off	Missing supply voltage L+
On	Supply voltage L+ present

5.2 Interrupts

The DI 16×24VDC ST digital input module supports diagnostic interrupts.

Diagnostics interrupts

The module generates a diagnostic interrupt at the following events:

- Wire break
- Parameter assignment error
- Supply voltage missing

5.3 Diagnostic messages

A diagnostics alarm is generated and the DIAG-LED flashes on the module for each diagnostics event. You can read out the diagnostics alarms, for example, in the diagnostics buffer of the CPU. You can evaluate the error codes with the user program.

Table 5- 4 Diagnostics alarms, their meaning and corrective measures

Diagnostics alarm	Error code	Meaning	Solution
Wire break	6_H	Impedance of encoder circuit too high.	Use a different encoder type or modify the wiring, for example, use cables with larger cross-section
		Wire break between the module and sensor	Connect the cable
		Channel not connected (open)	• Disable diagnostics • Connect a resistor of between 25 and 45 kOhms to the encoder contacts
Parameter assignment error	10_H	• The module cannot evaluate parameters for the channel. • Incorrect parameter assignment.	Correct the parameter assignment
Supply voltage missing	11_H	Missing or insufficient supply voltage L+	• Check supply voltage L+ on the BaseUnit • Check BaseUnit type

Technical specifications

6

6.1 Technical specifications

Technical specifications of the DI 16×24VDC ST

Article number	6ES7131-6BH01-0BA0
General information	
Product type designation	DI 16x24 VDC ST
Firmware version	V0.0
• FW update possible	No
usable BaseUnits	BU type A0
Color code for module-specific color identification plate	CC00
Product function	
• I&M data	Yes; I&M0 to I&M3
Engineering with	
• STEP 7 TIA Portal configurable/integrated as of version	V14
• STEP 7 configurable/integrated as of version	V5.5 SP3
• PCS 7 configurable/integrated as of version	V8.1 SP1
• PROFIBUS as of GSD version/GSD revision	One GSD file each, Revision 3 and 5 and higher
• PROFINET as of GSD version/GSD revision	GSDML V2.3
Operating mode	
• DI	Yes
• Counter	No
• Oversampling	No
• MSI	No
Supply voltage	
Rated value (DC)	24 V
permissible range, lower limit (DC)	19.2 V
permissible range, upper limit (DC)	28.8 V
Reverse polarity protection	Yes

Article number	6ES7131-6BH01-0BA0
Input current	
Current consumption, max.	90 mA
24 V encoder supply	
• 24 V	No
Power loss	
Power loss, typ.	1.7 W
Address area	
Address space per module	
• Inputs	2 byte; + 2 bytes for QI information
Hardware configuration	
Automatic encoding	Yes
• Mechanical coding element	Yes
Submodules	
• Number of configurable submodules, max.	4
Selection of BaseUnit for connection variants	
• 1-wire connection	BU type A0
• 2-wire connection	BU type A0 + Potential isolation module
• 3-wire connection	BU type A0 + Potential isolation module
• 4-wire connection	BU type A0 + Potential isolation module
Digital inputs	
Number of digital inputs	16
Digital inputs, parameterizable	Yes
Source/sink input	P-reading
Input characteristic curve in accordance with IEC 61131, type 3	Yes
Input voltage	
• Type of input voltage	DC
• Rated value (DC)	24 V
• for signal "0"	-30 to +5V
• for signal "1"	+11 to +30V
Input current	
• for signal "1", typ.	2.5 mA

Article number	6ES7131-6BH01-0BA0
Input delay (for rated value of input voltage) for standard inputs	
– parameterizable	Yes; 0.05 / 0.1 / 0.4 / 0.8 / 1.6 / 3.2 / 12.8 / 20 ms (in each case + delay of 30 to 500 µs, depending on line length)
– at "0" to "1", min.	0.05 ms
– at "0" to "1", max.	20 ms
– at "1" to "0", min.	0.05 ms
– at "1" to "0", max.	20 ms
Cable length	
• shielded, max.	1 000 m
• unshielded, max.	600 m
Encoder	
Connectable encoders	
• 2-wire sensor	Yes
– permissible quiescent current (2-wire sensor), max.	1.5 mA
Isochronous mode	
Isochronous operation (application synchronized up to terminal)	No
Interrupts/diagnostics/status information	
Diagnostics function	Yes
Alarms	
• Diagnostic alarm	Yes
Diagnostic messages	
• Diagnostic information readable	Yes
• Monitoring the supply voltage	Yes
– parameterizable	Yes
• Monitoring of encoder power supply	No
• Wire-break	Yes; Module-by-module, optional protective circuit for preventing wire-break diagnostics in the case of simple encoder contacts: 25 kOhm to 45 kOhm
• Short-circuit	No
• Group error	Yes

Article number	6ES7131-6BH01-0BA0
Diagnostics indication LED	
• Monitoring of the supply voltage (PWR-LED)	Yes; green PWR LED
• Channel status display	Yes; Green LED
• for channel diagnostics	No
• for module diagnostics	Yes; green/red DIAG LED
Potential separation	
Potential separation channels	
• between the channels	No
• between the channels and backplane bus	Yes
• between the channels and the power supply of the electronics	No
Isolation	
Isolation tested with	707 V DC (type test)
Ambient conditions	
Ambient temperature during operation	
• horizontal installation, min.	0 °C
• horizontal installation, max.	60 °C
• vertical installation, min.	0 °C
• vertical installation, max.	50 °C
Altitude during operation based on sea level	
• Ambient air temperature-barometric pressure-altitude	On request: Ambient temperatures lower than 0 °C (without condensation) and/or installation altitudes greater than 2 000 m
Dimensions	
Width	15 mm
Height	73 mm
Depth	58 mm
Weights	
Weight, approx.	28 g

Dimension drawing

See manual ET 200SP BaseUnits
(http://support.automation.siemens.com/WW/view/en/59753521)

Parameter data record

A

A.1 Parameter assignment and structure of parameter data record

The data record of the module has an identical structure, regardless of whether you configure the module with PROFIBUS DP or PROFINET IO. With data record 128, you can reconfigure the module in your user program regardless of your programming. This means that you can use all the functions of the module even if you configured it via PROFIBUS-GSD.

Parameter assignment in the user program

The module parameters can be re-assigned in RUN (for example, the input delay of selected channels can be edited in RUN without having an effect on the other channels).

Changing parameters in RUN

The "WRREC" instruction is used to transfer the parameters to the module using data record 128. The parameters set in STEP 7 are not changed in the CPU, which means that the parameters set in STEP 7 will be valid again after a restart.

Output parameter STATUS

If errors occur when transferring parameters with the "WRREC" instruction, the module continues operation with the previous parameter assignment. The STATUS output parameter contains a corresponding error code.

You will find a description of the "WRREC" instruction and the error codes in the STEP 7 online help.

Structure of data record 128

Note

Channel 0 includes the diagnostics enable for the entire module.

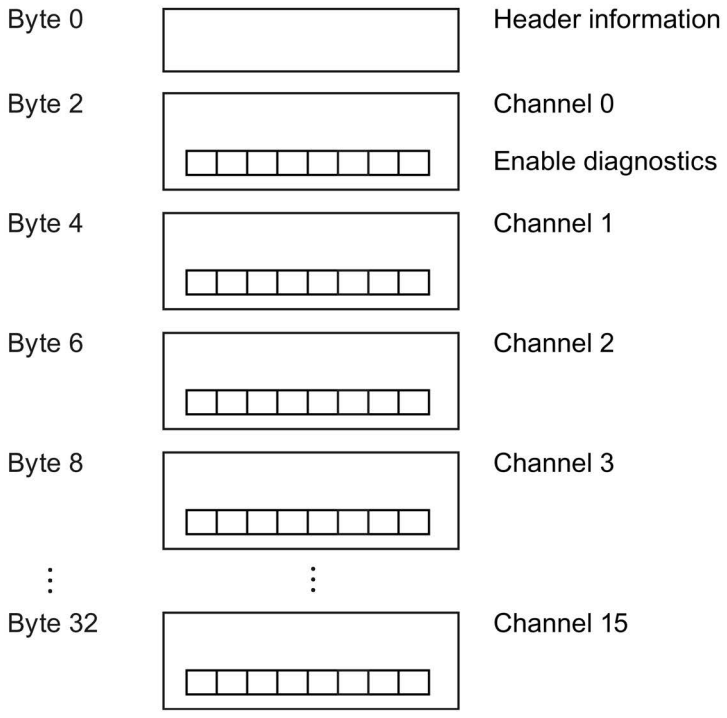

Figure A-1 Structure of data record 128

Header information

The figure below shows the structure of the header information.

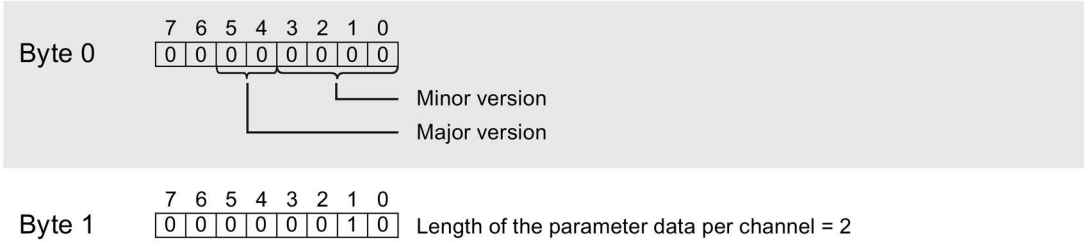

Figure A-2 Header information

Parameters

The figure below shows the structure of the parameters for channels 0 to 15.

You enable a parameter by setting the corresponding bit to "1".

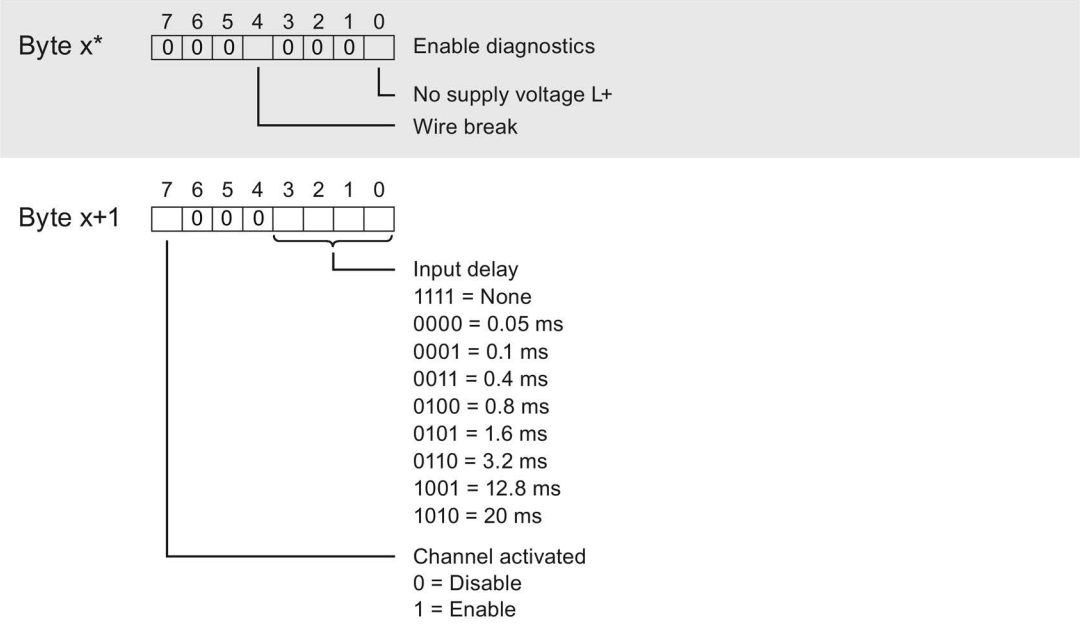

* x = 2 + (channel number × 2); channel number = 0 to 15

Figure A-3 Structure byte x to x+1 for the channels 0 to 15

Error transferring the data record

The module always checks all the values of the transferred data record. Only if all the values were transferred without errors does the module apply the values from the data record.

The WRREC instruction for writing data records returns corresponding error codes when errors occur in the STATUS parameter, see also the description of the "STATUS" parameter in the STEP 7 online help).

The following table shows the module-specific error codes and their meaning for the parameter data record 128.

Error code in STATUS parameter (hexadecimal)				Meaning	Solution
Byte 0	Byte 1	Byte 2	Byte 3		
DF	80	B0	xx	Number of the data record unknown.	Enter a valid number for the data record.
DF	80	B1	xx	Length of the data record incorrect.	Enter a valid value for the data record length.
DF	80	B2	xx	Slot invalid or cannot be accessed.	• Check the station whether the module is plugged or drawn. • Check the assigned values for the parameters of the WRREC instruction.
DF	80	E0	xx	Wrong version or error in the header information.	Correct the version, length and number of parameter blocks.
DF	80	E1	07	Invalid coding for input filter time.	Check the parameters of the module.

SIEMENS

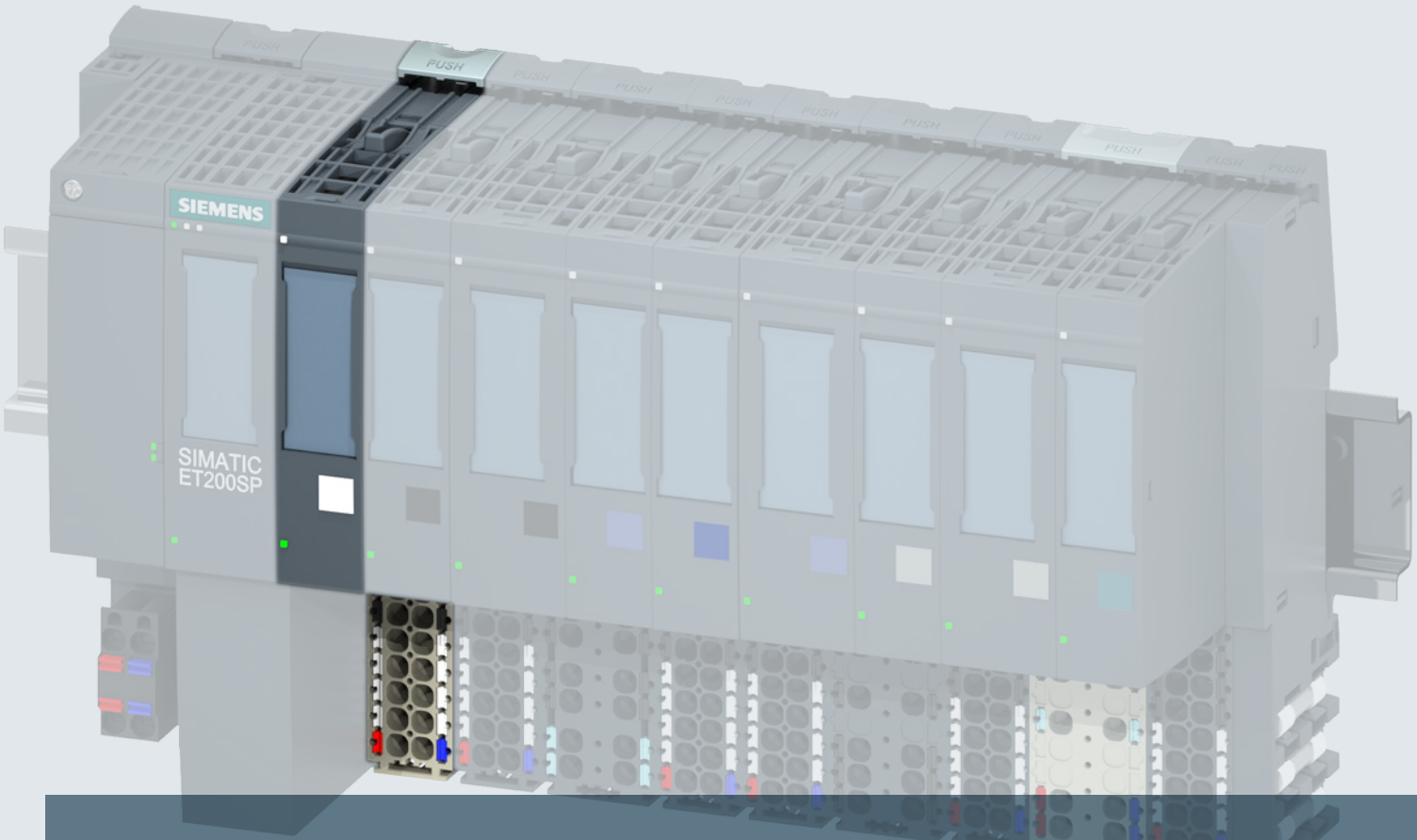

SIMATIC

ET 200SP

Digital input module DI 8xNAMUR (6ES7131-6TF00-0CA0)

Manual

Edition 02/2014

Answers for industry.

SIEMENS

SIMATIC

ET 200SP DI 8xNAMUR HF digital input module (6ES7131-6TF00-0CA0)

Manual

Preface

Guide to documentation 1

Product overview 2

Wiring 3

Parameters/address space 4

Interrupts/diagnostics alarms 5

Technical specifications 6

Parameter data record A

02/2014

A5E03894478-01

Legal information

Warning notice system

This manual contains notices you have to observe in order to ensure your personal safety, as well as to prevent damage to property. The notices referring to your personal safety are highlighted in the manual by a safety alert symbol, notices referring only to property damage have no safety alert symbol. These notices shown below are graded according to the degree of danger.

⚠ DANGER
indicates that death or severe personal injury **will** result if proper precautions are not taken.

⚠ WARNING
indicates that death or severe personal injury **may** result if proper precautions are not taken.

⚠ CAUTION
indicates that minor personal injury can result if proper precautions are not taken.

NOTICE
indicates that property damage can result if proper precautions are not taken.

If more than one degree of danger is present, the warning notice representing the highest degree of danger will be used. A notice warning of injury to persons with a safety alert symbol may also include a warning relating to property damage.

Qualified Personnel

The product/system described in this documentation may be operated only by **personnel qualified** for the specific task in accordance with the relevant documentation, in particular its warning notices and safety instructions. Qualified personnel are those who, based on their training and experience, are capable of identifying risks and avoiding potential hazards when working with these products/systems.

Proper use of Siemens products

Note the following:

⚠ WARNING
Siemens products may only be used for the applications described in the catalog and in the relevant technical documentation. If products and components from other manufacturers are used, these must be recommended or approved by Siemens. Proper transport, storage, installation, assembly, commissioning, operation and maintenance are required to ensure that the products operate safely and without any problems. The permissible ambient conditions must be complied with. The information in the relevant documentation must be observed.

Trademarks

All names identified by ® are registered trademarks of Siemens AG. The remaining trademarks in this publication may be trademarks whose use by third parties for their own purposes could violate the rights of the owner.

Disclaimer of Liability

We have reviewed the contents of this publication to ensure consistency with the hardware and software described. Since variance cannot be precluded entirely, we cannot guarantee full consistency. However, the information in this publication is reviewed regularly and any necessary corrections are included in subsequent editions.

Siemens AG
Industry Sector
Postfach 48 48
90026 NÜRNBERG
GERMANY

A5E03894478-01
Ⓟ 02/2014 Technical data subject to change

Copyright © Siemens AG 2014.
All rights reserved

Preface

Preface

Purpose of the documentation

This device manual complements the system manual ET 200SP distributed I/O system (http://support.automation.siemens.com/WW/view/en/58649293). Functions that generally relate to the system are described in this manual.

The information provided in this manual and in the system/function manuals supports you in commissioning the system.

Conventions

Please also observe notes marked as follows:

Note

A note contains important information on the product described in the documentation, on the handling of the product and on the section of the documentation to which particular attention should be paid.

Security information

Siemens provides products and solutions with industrial security functions that support the secure operation of plants, solutions, machines, equipment and/or networks. They are important components in a holistic industrial security concept. With this in mind, Siemens' products and solutions undergo continuous development. Siemens recommends strongly that you regularly check for product updates.

For the secure operation of Siemens products and solutions, it is necessary to take suitable preventive action (e.g. cell protection concept) and integrate each component into a holistic, state-of-the-art industrial security concept. Third-party products that may be in use should also be considered. You can find more information about industrial security on the Internet (http://www.siemens.com/industrialsecurity).

To stay informed about product updates as they occur, sign up for a product-specific newsletter. You can find more information on the Internet (http://support.automation.siemens.com).

Table of contents

Preface 3
1 Guide to documentation 5
2 Product overview 7
2.1 Properties 7
3 Wiring 9
3.1 Pin assignment 9
3.2 Block diagram 10
4 Parameters/address space 11
4.1 Parameters 11
4.2 Explanation of parameters 13
4.3 Pulse stretching 16
4.4 Address space 18
5 Interrupts/diagnostics alarms 19
5.1 Status and fault displays 19
5.2 Interrupts 22
5.3 Diagnostics alarms 24
5.4 Diagnostics for changeover contact sensor type 25
5.5 Chatter monitoring 26
6 Technical specifications 29
6.1 Technical specifications 29
A Parameter data record 32
A.1 Dependencies when configuring with GSD files 32
A.2 Parameter assignment and structure of parameter data record 33

Guide to documentation

1

Introduction

This modular documentation of the SIMATIC products covers diverse topics concerning your automation system.

The complete documentation for the ET 200SP distributed I/O system consists of a system manual, function manuals and product manuals.

The STEP 7 information system (online help) also supports you during the configuration and programming of your automation system.

Overview of documentation for digital input module DI 8×NAMUR HF

The following table shows additional documentation that you need for using the DI 8×NAMUR HF digital input module.

Table 1- 1 Documentation for the DI 8×NAMUR HF digital input module

Topic	Documentation	Key contents
System description	System manual ET 200SP distributed I/O system (http://support.automation.siemens.com/WW/view/en/58649293)	• Application planning • Installation • Wiring • Commissioning
Designing interference-free controllers	Function manual Designing interference-free controllers (http://support.automation.siemens.com/WW/view/en/59193566)	• Basics • Electromagnetic compatibility • Lightning protection
System diagnostics	Function manual Diagnostics (http://support.automation.siemens.com/WW/view/en/59192926)	• Overview • Diagnostics evaluation of hardware/software
BaseUnits	Manual ET 200SP BaseUnits (http://support.automation.siemens.com/WW/view/en/58532597/133300)	Technical specifications
Amendments and special features of the ET 200SP I/O system	ET 200SP Product information (http://support.automation.siemens.com/WW/view/en/73021864)	Current information not yet documented in the system manuals, function manuals, or product manuals.

SIMATIC manuals

All current manuals for SIMATIC products are available to download free of charge on the Internet (http://www.siemens.com/simatic-tech-doku-portal).

Product overview

2

2.1 Properties

Order number

6ES7131-6TF00-0CA0

View of the module

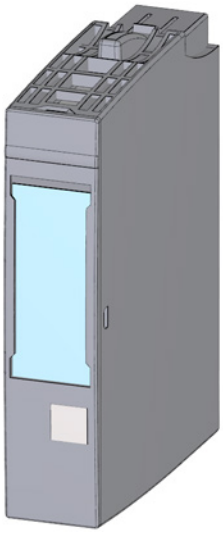

Figure 2-1 View of the DI 8×NAMUR HF module

Properties

The module has the following technical properties:

- 8 digital inputs each with a value status (quality information)
- 8.2 VDC sensor supply for individual connection and disconnection (PROFIenergy)
- Selectable diagnostics (per channel)
- Suitable for connecting NAMUR sensors and connected and unconnected mechanical contacts

The module supports the following technology functions:

- Pulse stretching
- Chatter monitoring
- Diagnostics for changeover contact sensor type

The module supports the following functions:

- Firmware update
- Identification data I&M0 to I&M3
- Reconfiguration in RUN

You can configure the module with STEP 7 (TIA Portal) and with a GSD file.

Accessories

The following accessories can be ordered separately:

- Labeling strips
- Color identification labels
- Reference identification label
- Shield connection

You can find additional information on the accessories in the ET 200SP distributed I/O system (http://support.automation.siemens.com/WW/view/en/58649293) system manual.

See also

ET 200SP Product information
(http://support.automation.siemens.com/WW/view/en/73021864)

Wiring

3

3.1 Pin assignment

General pin assignment

Table 3- 1 Pin assignment for DI 8×NAMUR HF

Pin assignment for DI 8×NAMUR HF (6ES7131-6TF00-0CA0)						
Terminal	**Assign-ment**	**Terminal**	**Assign-ment**	**Description**	**BaseUnit**[1]	**Color identification label (terminals 1 to 16)**
1	DI_0	**2**	DI_1	• DI_n: Input signal, channel n • U_{Sn}: Sensor supply, channel n	A0	 CC01 6ES7193-6CP01-2MA0
3	DI_2	**4**	DI_3			
5	DI_4	**6**	DI_5			
7	DI_6	**8**	DI_7			
9	U_{S0}	**10**	U_{S1}			
11	U_{S2}	**12**	U_{S3}			
13	U_{S4}	**14**	U_{S5}			
15	U_{S6}	**16**	U_{S7}			
L+	24 VDC	**M**	M			
The figures below show the connections for input signal DI_0 for all sensor types.						
NAMUR sensors / IEC 60947-5-6 sensors 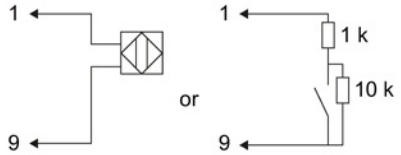	NAMUR changeover contacts / IEC 60947-5-6 changeover contacts 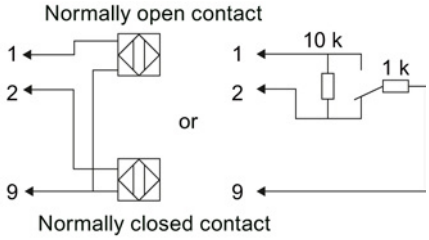	Single contact connected with 10 kΩ (mechanical normally open contact) 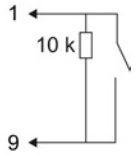			
Changeover contact connected with 10 kΩ (mechanical changeover contact) 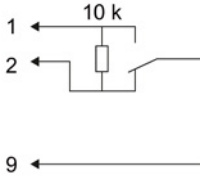	Single contact, unconnected (mechanical normally open contact with single contact) 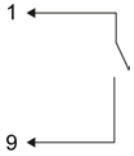	Changeover contact, unconnected (mechanical changeover contact) 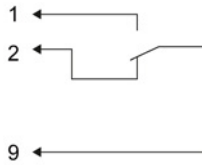			

[1] BaseUnit types that can be used are identified by the last two digits of the order number. See also "ET 200SP distributed I/O system" system manual.

Note

The first BaseUnit of a station must be a light-colored BaseUnit. Keep this in mind also during the configuration.

Firmware update

When updating the firmware, the L+ supply voltage must be applied to the module at the start and during the firmware update.

See also

ET 200SP distributed I/O system
(http://support.automation.siemens.com/WW/view/en/58649293)

3.2 Block diagram

Block diagram

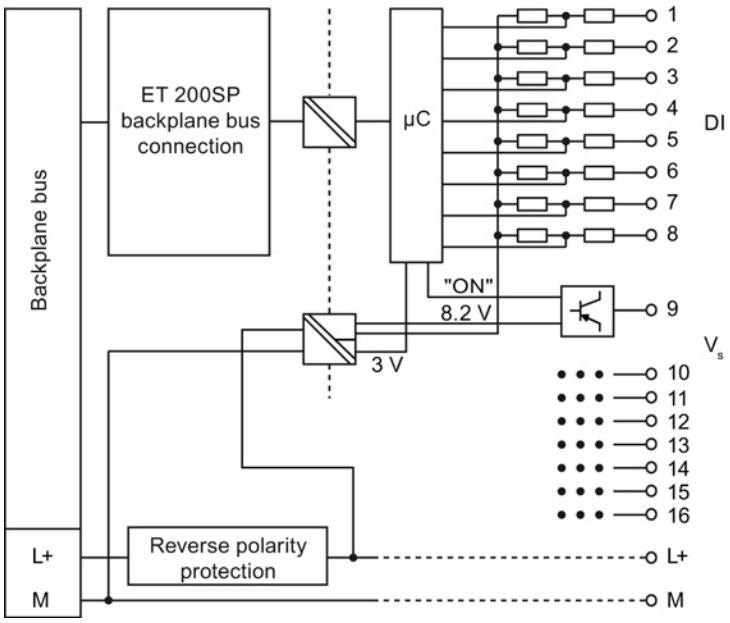

Figure 3-1 Block diagram DI 8×NAMUR HF

Parameters/address space 4

4.1 Parameters

DI 8xNAMUR HF parameters

The following table lists the configurable parameters. The effective range of the configurable parameters depends on the type of configuration. The following configurations are possible:

- Distributed operation on PROFINET IO in an ET 200SP system
- Distributed operation with PROFIBUS DP in an ET 200SP system

When assigning parameters in the user program, use the "WRREC" instruction to transfer the parameters to the module using data records (refer to the section Parameter assignment and structure of parameter data record (Page 33)).

The following parameter settings are possible:

Table 4- 1 Configurable parameters and their defaults (GSD file)

Parameters	Value range	Default	Changing parameter settings in RUN	Effective range with configuration software, e.g. STEP 7 (TIA-Portal)	
				GSD file PROFINET IO	GSD file PROFIBUS DP
Diagnostics: Missing supply voltage L+	• Disable • Enable	Disable	Yes	Channel	Channel
Diagnostics: Short-circuit to ground	• Disable • Enable	Disable	Yes	Channel	Channel
Diagnostics: Wire break	• Disable • Enable	Disable	Yes	Channel	Channel
Diagnostics: Changeover error	• Disable • Enable	Disable	Yes	Channel	Channel
Diagnostics: Chatter error	• Disable • Enable	Disable	Yes	Channel	-
Chatter monitoring: Monitoring window	• 0.5 s • 1 s to 100 s (can be set in 1 s-increments)	0.5 s	Yes	Channel	-
Chatter monitoring: Number of signal changes	• Deactivated • 2 to 32	Deactivated	Yes	Channel	-

Parameters	Value range	Default	Changing parameter settings in RUN	Effective range with configuration software, e.g. STEP 7 (TIA-Portal)	
				GSD file PROFINET IO	GSD file PROFIBUS DP
Hardware interrupts	• Deactivated • Rising edge • Falling edge • Falling and rising edge	Deactivated	Yes	Channel	-
Sensor type	• Channel deactivated • NAMUR sensor • Single contact, unconnected • Single contact, connected with 10 kΩ • NAMUR changeover contact • Changeover contact, unconnected • Changeover contact, connected with 10 kΩ	NAMUR sensor	Yes	Channel	Channel
Pulse stretching	• None • 0.5 s • 1 s • 2 s	None	Yes	Channel	-
Inverted	• Disable • Enable	Disable	Yes	Channel	Channel
Potential group	• Use potential group of the left module • Enable new potential group	Use potential group of the left module	No	Module	Module

Changing parameter settings and effects on the technology functions

Reconfiguring a technology function resets its responses. Reconfiguring one technology function has no effect on other technology functions. Exception: Signal inversion and chatter monitoring, because an additional edge change is generated when signal inversion is disabled/enabled.

Technology functions

All technology functions, such as

- Pulse stretching
- Chatter monitoring
- Changeover errors
- Hardware interrupts

are executed only when there is an error-free signal (QI = 1). In other words, there is no diagnostics information on the channel (see also section Address space (Page 18)).

4.2 Explanation of parameters

Diagnostics: Missing supply voltage L+

The diagnostics alarm is enabled for missing or insufficient supply voltage L+.

Tip: To avoid a diagnostics overload, you should only enable "Diagnostics: Missing supply voltage" for an active channel.

Diagnostics: Short-circuit to ground

The diagnostics alarm is enabled if there is a short-circuit of the sensor supply to ground.

"Short-circuit to ground" diagnostics is available with the following sensor setting:

- NAMUR sensor
- NAMUR changeover contact

Diagnostics: Wire break

The diagnostics alarm is enabled if the line to the sensor is interrupted.

"Wire break" diagnostics is available with the following sensor setting:

- NAMUR sensor
- Single contact with 10 kΩ
- NAMUR changeover contact
- Changeover contact with 10 kΩ

Diagnostics: Changeover error

The diagnostics alarm is enabled when a changeover error occurs.

"Changeover error" diagnostics is available with the following sensor setting:

- NAMUR changeover contact
- Changeover contact, unconnected
- Changeover contact with 10 kΩ

Diagnostics: Chatter error

The diagnostics alarm is enabled when a chatter error occurs.

Chatter monitoring is a process control function for digital input signals. It detects and reports signal changes that are unexpected in process engineering, for example when an input signal fluctuates too often between "0" and "1". If signal characteristics like these occur, it is a sign that the sensors are faulty or that there are instabilities from a process engineering viewpoint.

Chatter monitoring: Monitoring window

Chatter monitoring: Setting of the monitoring window

Each input channel has a configurable monitoring window. The monitoring window is started the first time the input signal changes. If the input signal changes within the monitoring window more often than the configured number of signal changes, this is recognized as a chatter error. If no chatter error is detected within the monitoring window, the window is restarted at the next signal change.

Chatter monitoring: Number of signal changes

Chatter monitoring: Setting of the signal change

Settings for the tolerated number of signal changes during chatter monitoring within the monitoring window.

Number of signal changes = 0 deactivates the chatter monitoring function.

Hardware interrupts

Specifies whether the rising or falling edge or both edges trigger a hardware interrupt.

Sensor type

Specifies which sensor type is connected (see Table 3-1 Pin assignment for DI 8×NAMUR HF (Page 9)).

For the following sensor types

- NAMUR changeover contact
- Changeover contact, unconnected
- Changeover contact with 10 kΩ

the following applies: The normally open contact channel must be set according to the sensor type. The normally closed contact channel must be deactivated.

If "Channel deactivated" is shown, this means that the channel is not activated.

Pulse stretching

Sets whether and for how long pulse stretching is to take place.

Pulse stretching is a function for changing a digital input signal. A pulse at a digital input is extended to at least the configured length. If the input pulse is already longer than the configured length, then the pulse will not be changed.

Inverted

Specifies whether or not the input signal is to be inverted.

Inversion is only possible with the following sensor types:

- NAMUR sensor
- Single contact, unconnected
- Single contact with 10 kΩ

Potential group

Specifies that a BaseUnit with an incoming supply voltage is located in this slot (see ET 200SP distributed I/O system (http://support.automation.siemens.com/WW/view/en/58649293) system manual).

See also

Pin assignment (Page 9)

Pulse stretching (Page 16)

Diagnostics for changeover contact sensor type (Page 25)

4.3 Pulse stretching

Description

Pulse stretching is a function for changing a digital input signal. A pulse at a digital input is extended to at least the configured length. If the input pulse is already longer than the configured length, then the pulse will not be changed.

The pulse-stretched signal is the input signal for the hardware interrupt.

Principle of pulse stretching

The following figure uses examples to show if and how input pulses are changed.

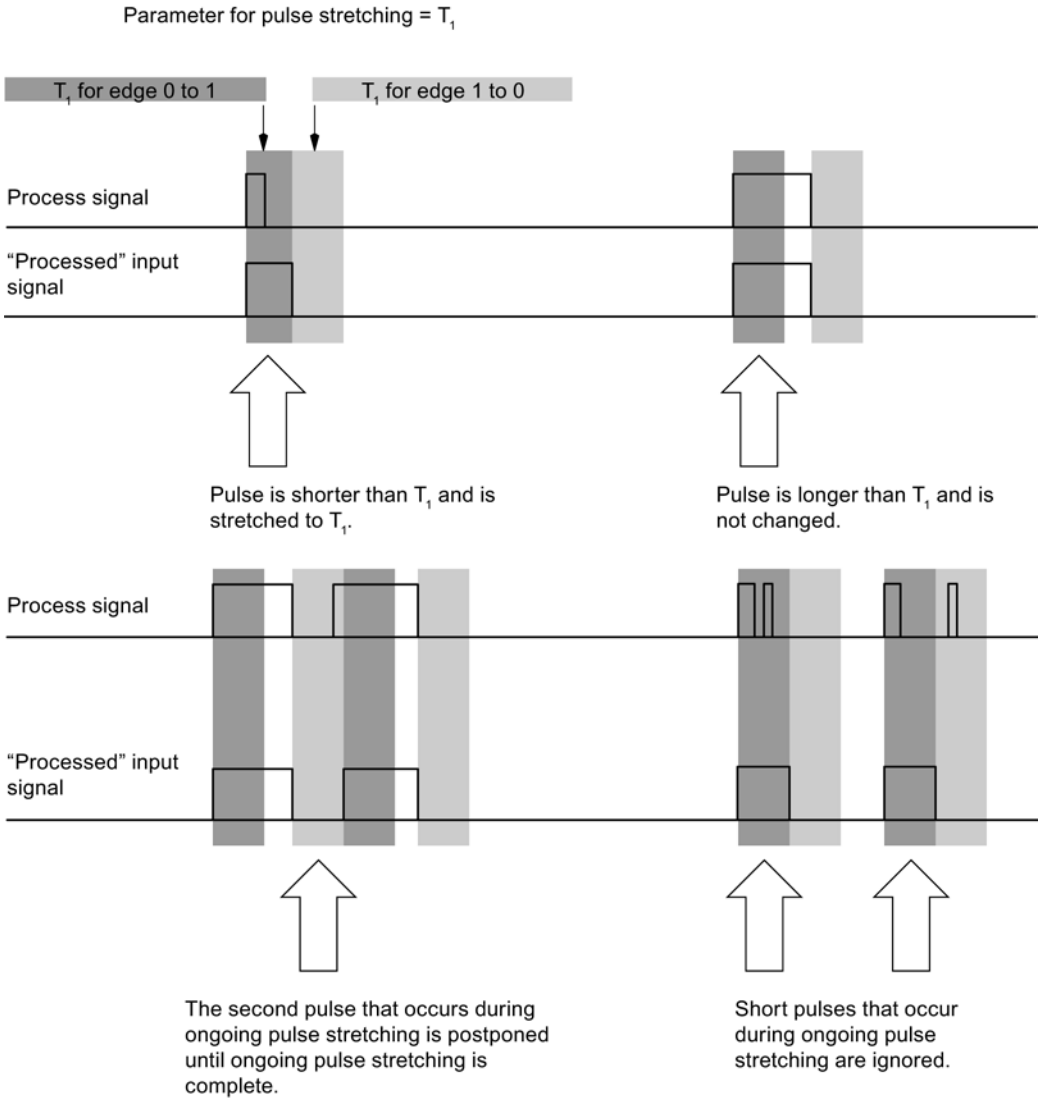

Figure 4-1 Principle of pulse stretching

Note

If you set pulse stretching for an input channel, this will also affect the chatter monitoring that is enabled for this channel. The "pulse-stretched" signal is the input signal for the chatter monitoring. You should therefore match the parameter settings for pulse stretching and chatter monitoring to one another. By selecting the appropriate values for the parameters you can adjust the functions optimally to your process.

Note

Pulse stretching in progress is reset in the event of an error in the value status (QI = 0, e.g. wire break).

4.4 Address space

Configuration options of the DI 8×NAMUR HF

Configuration with value status:

- DI 8×NAMUR HF QI

Evaluating the value status

As a result of configuration with value status (QI), an additional byte is allocated in the input address space. Each bit in this byte is assigned to a channel and returns information about the validity of the digital value.

Deactivated channels or channels that are not operating correctly return a value status of QI = 0.

With changeover contacts, the value status of a normally closed contact channel is always QI = 0. The validity of the signal must be checked on the normally open contact channel.

Address space of the digital input module DI 8×NAMUR HF

The following figure shows the assignment of address space for the DI 8×NAMUR HF with value status (Quality Information (QI)).

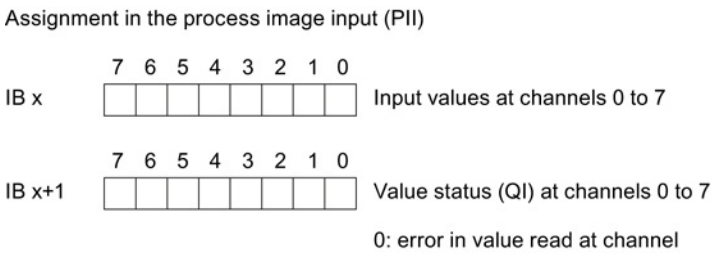

Figure 4-2 Address space of the DI 8×NAMUR HF digital input module with value status

Technology functions

All technology functions, such as

- Pulse stretching
- Chatter monitoring
- Changeover error
- Hardware interrupt

require a valid input signal that returns QI = 1 (no diagnostics detected). Otherwise, they will not run.

Interrupts/diagnostics alarms

5

5.1 Status and fault displays

LED displays

The figure below shows the LED displays (status and fault displays) of the DI 8×NAMUR HF.

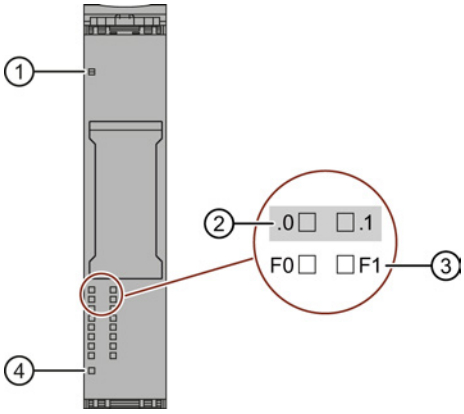

① DIAG (green/red)
② Channel status (green)
③ Channel fault (red)
④ PWR (green)

Figure 5-1 LED display

Meaning of the LEDs

The tables below explain the meaning of the status and fault displays. Corrective measures for diagnostics alarms can be found in chapter Diagnostics alarms (Page 24).

LED DIAG

Table 5- 1 LED DIAG fault display

LED DIAG	Meaning
Off	Supply voltage of the ET 200SP not OK
Flashing	Module not ready for operation (no parameters or invalid parameters assigned)
On	Module configured and no module diagnostics
Flashing	Module configured and module diagnostics

LED channel status/channel fault

The channel status LED shows the signal state of the user data of an input. If inversion is enabled, the channel status LED shows the inverted status of the signal applied to the terminal.

If there is a diagnostics event on the channel, the channel status LED is always off if diagnostics is enabled and therefore does not indicate the signal state of the user data of the input.

Table 5- 2 Channel status/channel fault LED status and fault display

LED		Meaning
Channel status	Channel fault	
Off	Off	Input returns "0" signal and no channel diagnostics or channel deactivated
On	Off	Input returns "1" signal and no channel diagnostics
Off	On	Channel activated and channel diagnostics
On	On	Not permitted (fault)

LED PWR

Table 5- 3 LED PWR status display

LED PWR	Meaning
□ Off	Supply voltage L+ is missing, is too low or polarity reversed
■ On	Supply voltage L+ present

5.2 Interrupts

Digital input module DI 8×NAMUR HF supports the following diagnostics and hardware interrupts.

Diagnostics interrupt

The module generates a diagnostics interrupt at the following events:

- Short-circuit to ground
- Wire break
- Supply voltage missing
- Changeover error
- Chatter error

Evaluating hardware interrupts with IO controller

The module generates a hardware interrupt at the following events:

- Upon a rising edge (signal change from 0 to 1)
- Upon a falling edge (signal change from 1 to 0)

In the event of an interrupt, interrupt OBs run automatically in the CPU of the IO controller.

You will find detailed information on the event in the hardware interrupt organization block with the "RALRM" instruction (read additional interrupt info) and in the STEP 7 online help.

The module channel that triggered the hardware interrupt is entered in the start information of the organization block. The following figure shows the assignment to the bits of double word 8 in local data.

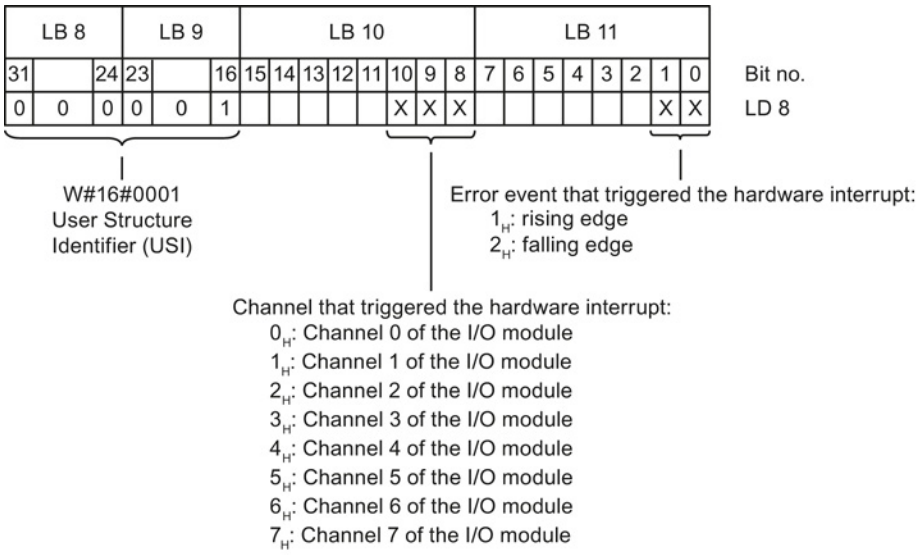

Figure 5-2 Organization block start information

Structure of the additional interrupt information

Table 5- 4 Structure of USI = W#16#0001

Data block name		Contents	Comment	Bytes
USI (User Structure Identifier)		W#16#0001	Additional interrupt information for hardware interrupts of the I/O module	2
The channel that triggered the hardware interrupt follows.				
	Channel	B#16#00 to B#16#07	Channel 0 to 7 of the I/O module	1
The event that triggered the hardware interrupt follows.				
	Event	B#16#01	Rising edge	1
		B#16#02	Falling edge	

5.3 Diagnostics alarms

Diagnostics alarms

A diagnostics alarm is output for each diagnostics event and the LED DIAG flashes on the module. Diagnostics alarms can, for example, be read from the diagnostics buffer of the CPU. You can evaluate the fault codes with the user program.

Table 5- 5 Diagnostics alarms, meaning and corrective measures

Diagnostics alarm	Fault code	Meaning	Remedy
Short-circuit (NAMUR changeover contact and NAMUR sensor only) Tip: Check the normally open and normally closed contact channels of the NAMUR changeover contact.	1_H	Short-circuit in the signal line to the sensor	Correct the process wiring
		Sensor defective	Replace the sensor
		Wrong sensor type configured	Correct the parameter assignment
		Load impedance too low	Use a sensor with a higher impedance
Wire break (only NAMUR changeover contact, NAMUR sensor, sensor connected with 10 kΩ and single contact connected with 10 kΩ) Tip: Check the normally open and normally closed contact channels of the NAMUR changeover contact	6_H	Signal line to a sensor interrupted	Correct the process wiring
		Sensor defective	Replace the sensor
		Wrong sensor type configured	Correct the parameter assignment
		Load impedance too high	Use a different sensor type or modify the wiring, for example, using cables with a larger cross-section
		Channel not connected (open)	Disable diagnostics, connect sensor contacts
Fault	9_H	Sensor supply defective	Replace the module
		Hardware failure	
No load voltage	11_H	Supply voltage L+ missing or too low	Check supply voltage L+ on the BaseUnit Check BaseUnit type
External fault (changeover sensors only)	$1A_H$	Changeover error: Validity check between normally closed and normally open contact channel negative	Check process wiring, change sensor
Fault 1 in actuator/sensor = signal chatters	$1D_H$	Chatter error: Signal chatters: too many signal changes within the monitoring window If no further chattering of the input signal is detected within three monitoring windows, an outgoing diagnostics alarm is triggered. The status of the value of the current signal in the process image is set to "valid".	Verify the chatter monitoring parameters Check process wiring, if necessary change sensor
Channel/component temporarily unavailable	$1F_H$	Firmware update is currently in progress or was canceled while running	Connect the supply voltage Restart the firmware update

5.4 Diagnostics for changeover contact sensor type

Diagnostics for changeover contact sensor type

With the changeover error diagnostics, the switchover between two input channels is checked. If there is a signal change in a changeover contact channel and there is no signal change at the other contact changeover channel after the tolerated switchover time, the diagnostics module returns a changeover error.

The tolerated switchover time between the two channels is set to the fixed value of 300 ms.

Changeover sensors are always assigned to two adjacent channels: The normally open contact channel should be set in accordance with the sensor type to channel 0, 2, 4, 6, and the respective corresponding normally closed contact channel 1, 3, 5, 7 deactivated.

Principle of changeover contact diagnostics

If the digital inputs of a channel group are configured as "changeover contacts", the module for this channel group carries out diagnostics for the changeover contact sensor type.

If the validity check is negative, the following applies:

- The module identifies the value status of the normally open contact channel as "invalid" (QI = "0"),
- The module creates a diagnostics entry for the normally open contact channel and
- A diagnostics interrupt is triggered if changeover error diagnostics is enabled.

The digital input signal and the value status are only updated for the normally open contact channel (channels 0, 2, 4, 6). The digital input signal is 0 and the value status is "invalid (QI = "0") for the normally closed contact channel (channels 1, 3, 5, 7). This channel is only used for a validity check of the sensor.

Please note the following special features for changeover contact diagnostics:

- If the normally open and normally closed contact signals are not plausible after 300 ms, a changeover error is output as diagnostics information.
- If there is already a fault (QI = 0, e.g. a wire break), the module will no longer perform diagnostics for changeover errors.
- There are different diagnostics options depending on the type of changeover contact (Dependencies when configuring with GSD files (Page 32)). Depending on the sensor type, a changeover error can have different causes.
  - In the case of connected changeover contacts, a changeover error may also be the result of a short-circuit (sensor is not defective; there is a short-circuit).
  - In the case of unconnected changeover contacts, a changeover error may also be the result of a wire break.
  - If a wire break or short-circuit can be detected with the particular sensor type but its diagnostics is not enabled, instead of the wire break or short-circuit diagnostics information, the changeover error diagnostics information is displayed if this is enabled.

Tip: Data records 0 to 7 and changeover sensor

Using the data records 1, 3, 5 and 7, you can configure a changeover sensor on an even channel (normally closed contact channel).

The corresponding normally open contact channel can be configured with the data records 0, 2, 4 and 6.

An even changeover contact channel must be followed by an odd, deactivated channel. Otherwise:

- you receive a parameter assignment error or
- the parameter assignment is rejected and the current parameter assignment retained.

Remedy: First, send data records 1, 3, 5 and 7 with deactivated, and then send data records 0, 2, 4 and 6 with changeover contact.

5.5 Chatter monitoring

Description

Chatter monitoring is a process control function for digital input signals. It detects and reports signal changes that are unexpected in process engineering, for example when an input signal fluctuates too often between "0" and "1". This period is known as the "monitoring window". If signal characteristics like these occur, it is a sign that the sensors are faulty or that there are instabilities from a process engineering viewpoint.

Activating chatter monitoring

You activate chatter monitoring by specifying a permitted number of input signal changes between "0" and "1" within the monitoring window. The number 0 deactivates the chatter monitoring function.

A chatter error detected by the chatter monitoring has a direct effect on the value status (QI).

Detecting a chatter error

Each input channel has a monitoring window that has been assigned parameters. The monitoring window is started the first time the input signal changes. If the input signal changes within the monitoring window more often than the configured number of signal changes, this is recognized as a chatter error. If no chatter error is detected within the monitoring window, the window is restarted at the next signal change.

Reporting a chatter error

If a chatter error occurs, the current signal status is entered in the process image and the value status of the signal is set to "invalid" (QI = 0). If "Chatter error" diagnostics is enabled, "Chatter error" is also entered as diagnostic information, triggering an incoming diagnostics interrupt.

You can evaluate and process the value status (QI) and the diagnostics information in the user program.

Resetting a chatter error

If no further chattering of the input signal is detected within three monitoring windows, an outgoing diagnostics interrupt is triggered. The status of the value of the current signal in the process image is set to "valid".

Note

Active chatter monitoring is reset if there is an error in the input signal (value status QI =0).

Principle

The following figure gives you another graphic illustration of the principle of chatter monitoring.

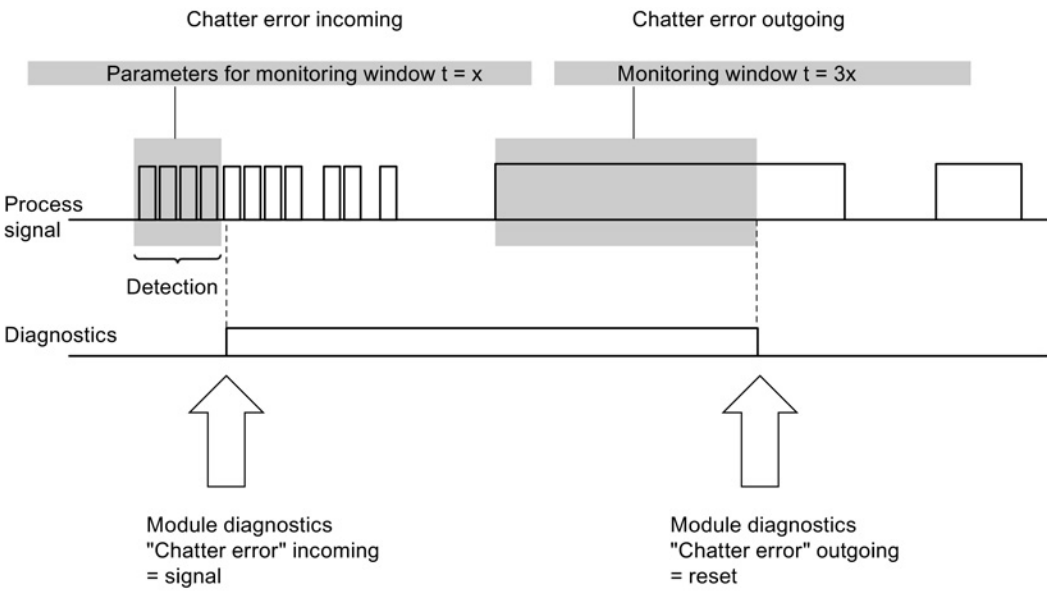

Figure 5-3 The principle of chatter monitoring

Chatter monitoring and "settling time" if a chatter error occurs

Does the monitoring time in the event of a fault restart as three monitoring windows if the signal continues to change?

The signal changes...	Result
once more often than set in the "Number of signal changes".	Monitoring time is restarted.
less often than set in the "Number of signal changes".	The monitoring time is not started again, in other words, the monitoring time runs once after a chatter error is detected. Even a change just before the time is up is tolerated.

Technical specifications

6

6.1 Technical specifications

DI 8×NAMUR HF technical specifications

	6ES7131-6TF00-0CA0
Product type designation	DI 8xNAMUR HF
General information	
Usable BaseUnits	BU type A0
Product function	
I&M data	Yes; I&M0 to I&M3
Engineering with	
STEP 7 TIA Portal can be configured/integrated as of version	V13 / V13
STEP 7 can be configured/integrated as of version	V5.5 SP3 / V5.5 SP4
PROFIBUS as of GSD version/GSD revision	GSD revision 5
PROFINET as of GSD version/GSD revision	V2.3
Supply voltage	
Rated value (DC)	24 V
Valid range, low limit (DC)	20.4 V
Valid range, high limit (DC)	28.8 V
Reverse polarity protection	Yes
Sensor supply	
Number of outputs	8
Output current	
Short-circuit protection	Yes
Power loss	
Power loss, typ.	1.5 W
Address area	
Address space per module	
Address space per module, max.	1 byte; + 1 byte for QI information
Digital inputs	
Number of inputs	8
Digital inputs, configurable	Yes
Type	NAMUR
Pulse stretching	Yes; 0.5 s, 1 s, 2 s
Edge evaluation	Yes, rising edge, falling edge, edge change
Signal change chatter	Yes, 2 to 32 signal changes
Chatter monitoring window	Yes, 0.5 s, 1 s to 100 s in 1 s increments

	6ES7131-6TF00-0CA0
Input voltage	
Type of input voltage	DC
Rated value, DC	8.2 V
Input current	
For 10 k connected contact	
• For signal "0"	0.35 mA to 1.2 mA
• For signal "1"	2.1 to 7 mA
For unconnected contact	
• For signal "0", max. (permissible quiescent current)	0.5 mA
• For signal "1"	typ. 8 mA
For NAMUR sensors	
• For signal "0"	0.35 mA to 1.2 mA
• For signal "1"	2.1 to 7 mA
Input delay (for rated value of input voltage)	
Tolerated switchover time for changeover contacts	300 ms
For NAMUR inputs	
• with "0" to "1", max.	12 ms
• with "1" to "0", max.	12 ms
Cable length	
Cable length shielded, max.	200 m
Sensors	
Connectable sensors	
NAMUR sensor / changeover contact according to EN 60947	Yes
Single contact / changeover contact unconnected	Yes
Single contact / changeover contact connected with 10 kΩ	Yes
Interrupts/diagnostics/status information	
Interrupts	
Diagnostics interrupt	Yes; channel-based
Hardware interrupt	Yes, selectable, channels 0 to 7
Diagnostics alarms	
Diagnostics information can be read	Yes
Monitoring of supply voltage	Yes
Wire break	Yes
Short-circuit	Yes
Group error	Yes

	6ES7131-6TF00-0CA0
Diagnostics indicator LED	
Monitoring of supply voltage	Yes; green PWR LED
Channel status display	Yes; green LED
For channel diagnostics	Yes; red LED
For module diagnostics	Yes; green/red DIAG LED
Electrical isolation	
Electrical isolation of channels	
Between channels	No
Between the channels and the backplane bus	Yes
Between the channels and the supply voltage of the electronics	Yes
Permissible potential difference	
Between different circuits	75 VDC / 60 VAC
Insulation	
Insulation tested with	707 VDC (type test)
Dimensions	
Width	15 mm
Weights	
Weight, approx.	32 g

NAMUR sensors and connected contacts

Monitoring for short-circuit and wire break only for NAMUR sensors and connected contacts. The response ranges of the diagnostics correspond to IEC 60947-5-6.

Dimension drawing

See manual BaseUnits (http://support.automation.siemens.com/WW/view/en/58532597/133300)

Parameter data record

A

A.1 Dependencies when configuring with GSD files

When configuring the module with a GSD file, remember that the settings of some parameters are dependent on each other, see the tables below.

Configuring with a PROFINET GSD file

The table lists the diagnostics information and its dependencies on the sensor types for PROFINET.

Sensor type	Diagnostics information					
	Missing supply voltage L+	Short-circuit to ground	Wire break	Chatter error	Changeover error	Inversion
NAMUR sensor	×	×	×	×	-	×
Single contact, unconnected	×	-	-	×	-	×
Single contact, connected with 10 kΩ	×	-	×	×	-	×
NAMUR changeover contact	×	×	×	×	×	-
Changeover contact, unconnected	×	-	-	×	×	-
Changeover contact, connected with 10 kΩ	×	-	×	×	×	-

Configuring with a PROFIBUS GSD file

The table lists the diagnostics information and its dependencies on the sensor types for PROFIBUS.

Sensor type	Diagnostics information				
	Missing supply voltage L+	Short-circuit to ground	Wire break	Changeover error	Inversion
NAMUR sensor	×	×	×	-	×
Single contact, unconnected	×	-	-	-	×
Single contact, connected with 10 kΩ	×	-	×	-	×
NAMUR changeover contact	×	×	×	×	-
Changeover contact, unconnected	×	-	-	×	-
Changeover contact, connected with 10 kΩ	×	-	×	×	-

A.2 Parameter assignment and structure of parameter data record

The data record 128 of the module has an identical structure, regardless of whether you configure the module with PROFIBUS DP or PROFINET IO. With data record 128, you can change the parameter assignment of the module in your user program regardless of its configuration. This means that you can use all the functions of the module even if you configured it using PROFIBUS GSD.

With data records 0 to 7, you can configure the individual channels.

Parameter assignment in the user program

You can change the parameters of the module in RUN (e.g. switch diagnostics on can be changed in RUN).

Changing parameters in RUN

The "WRREC" instruction is used to transfer the parameters to the module using data record 128 or data records 0 to 7. The parameters set with STEP 7 will not be changed on the CPU, which means that the parameters set in STEP 7 will be valid again after a restart.

If you reconfigure a module and diagnostics are pending prior to the reconfiguration, these diagnostics are not signaled as "outgoing".

Output parameter STATUS

If errors occur when transferring parameters with the "WRREC" instruction, the module continues operation with the previous parameter assignment. However, a corresponding error code is written to the STATUS output parameter.

You will find a description of the "WRREC" instruction and the error codes in the STEP 7 online help.

Structure of data record 128 and data records 0 to 7

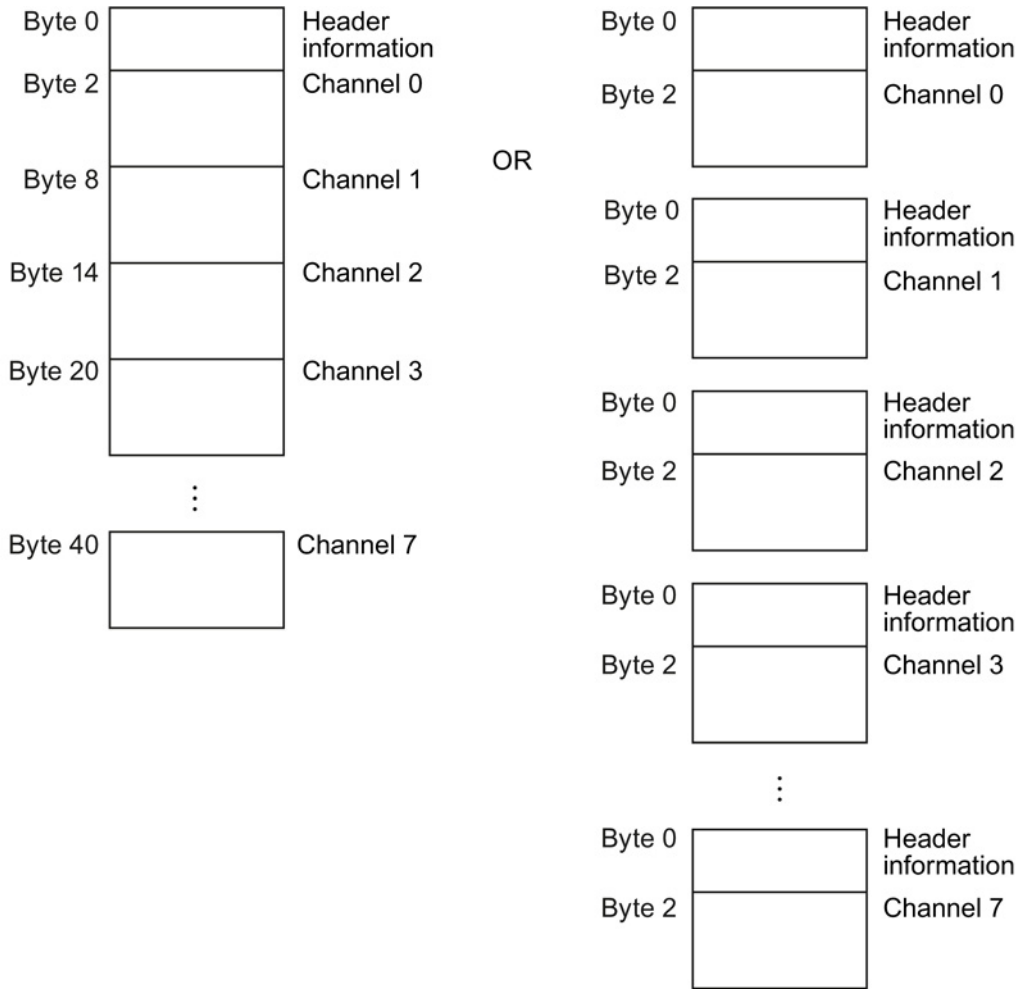

Figure A-1 Structure of data record 128 and data records 0 to 7

Header information

The figure below shows the structure of the header information.

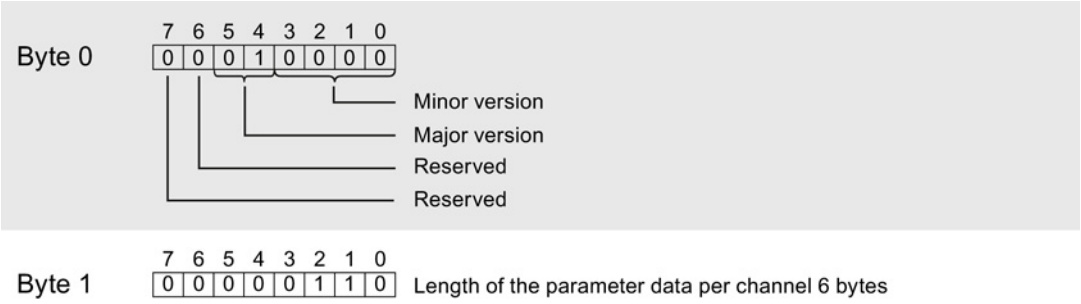

Figure A-2 DR 128 or DR 0 to 7: Bytes 0 and 1; header information

Parameters

The following figure shows the structure of the parameters for a channel. This structure also applies to channels 0 to 7.

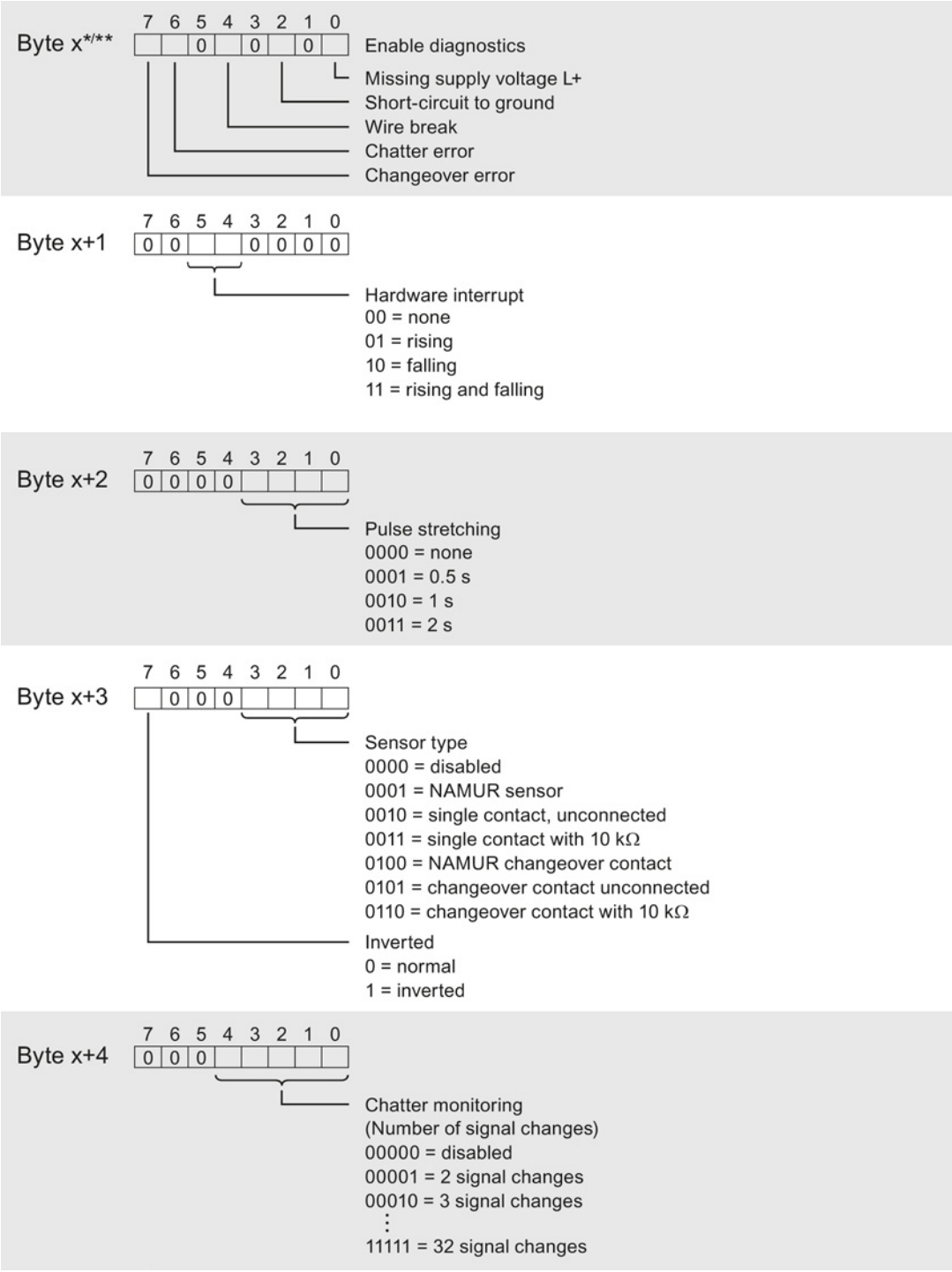

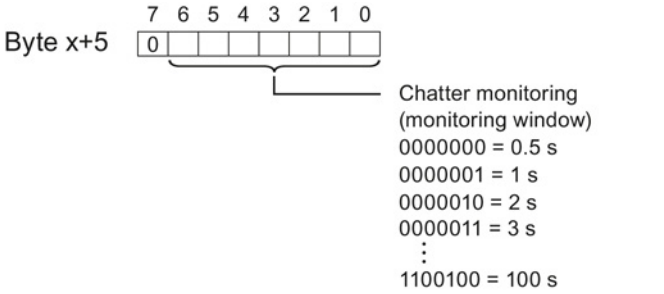

* x = 2 + (channel number × 6); channel number = 0 to 7 for DR 128
** x = 2 for DR 0 to DR 7

Figure A-3 DR 128 or DR 0 to 7: Byte x to x+5: Structure for channels 0 to 7

See also

Parameters (Page 11)

SIEMENS

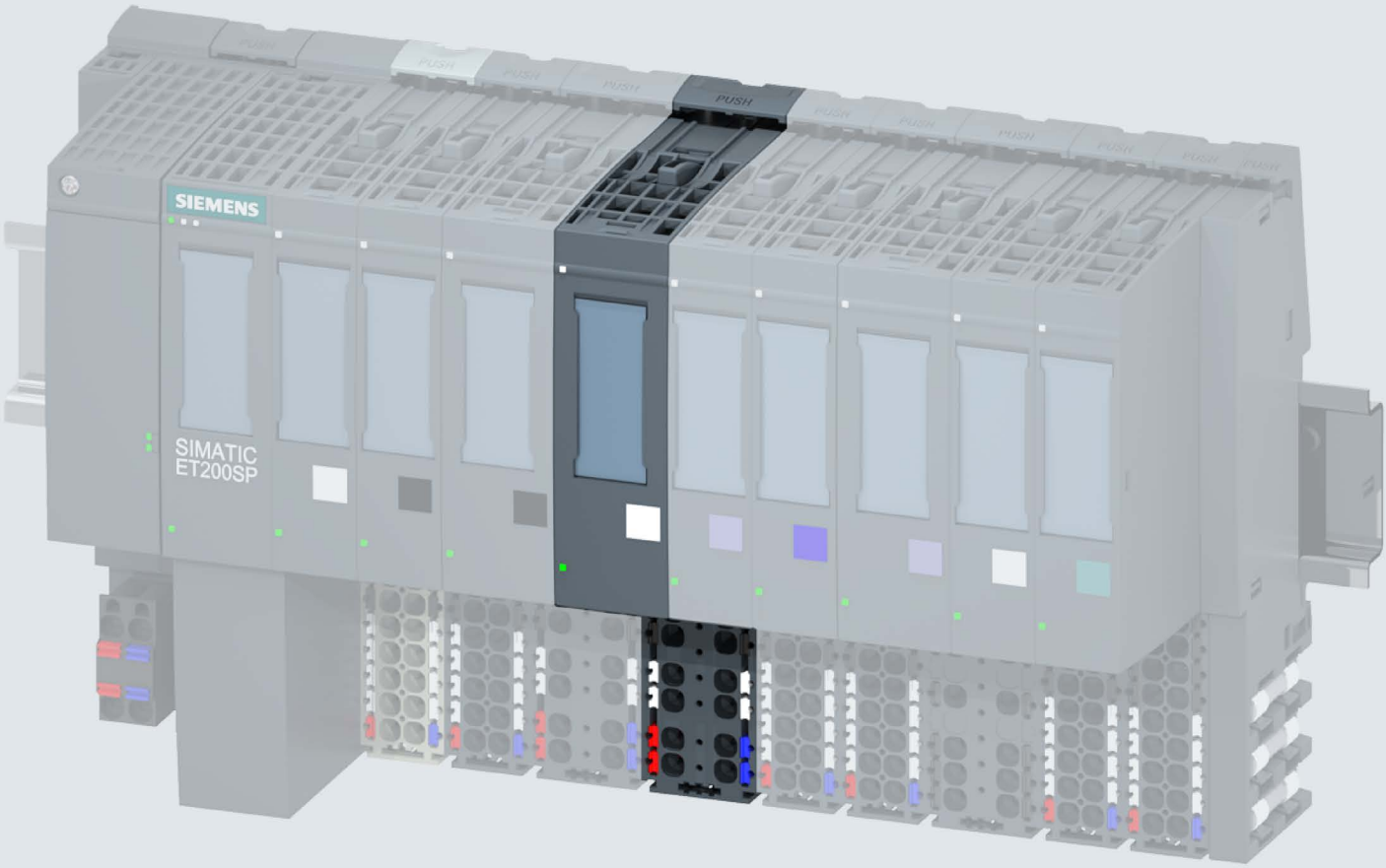

Manual

SIMATIC

ET 200SP

Digital input module
DI 4x120..230VAC ST (6ES7131-6FD01-0BB1)

Edition 09/2017

support.industry.siemens.com

SIEMENS

SIMATIC

ET 200SP
Digital input module
DI 4x120..230VAC ST
(6ES7131-6FD01-0BB1)

Manual

Preface

Guide to documentation 1

Product overview 2

Wiring 3

Parameters/address space 4

Interrupts/diagnostics alarms 5

Technical specifications 6

Parameter data record A

09/2017

A5E32043398-AC

Legal information

Warning notice system

This manual contains notices you have to observe in order to ensure your personal safety, as well as to prevent damage to property. The notices referring to your personal safety are highlighted in the manual by a safety alert symbol, notices referring only to property damage have no safety alert symbol. These notices shown below are graded according to the degree of danger.

⚠ DANGER

indicates that death or severe personal injury **will** result if proper precautions are not taken.

⚠ WARNING

indicates that death or severe personal injury **may** result if proper precautions are not taken.

⚠ CAUTION

indicates that minor personal injury can result if proper precautions are not taken.

NOTICE

indicates that property damage can result if proper precautions are not taken.

If more than one degree of danger is present, the warning notice representing the highest degree of danger will be used. A notice warning of injury to persons with a safety alert symbol may also include a warning relating to property damage.

Qualified Personnel

The product/system described in this documentation may be operated only by **personnel qualified** for the specific task in accordance with the relevant documentation, in particular its warning notices and safety instructions. Qualified personnel are those who, based on their training and experience, are capable of identifying risks and avoiding potential hazards when working with these products/systems.

Proper use of Siemens products

Note the following:

⚠ WARNING

Siemens products may only be used for the applications described in the catalog and in the relevant technical documentation. If products and components from other manufacturers are used, these must be recommended or approved by Siemens. Proper transport, storage, installation, assembly, commissioning, operation and maintenance are required to ensure that the products operate safely and without any problems. The permissible ambient conditions must be complied with. The information in the relevant documentation must be observed.

Trademarks

All names identified by ® are registered trademarks of Siemens AG. The remaining trademarks in this publication may be trademarks whose use by third parties for their own purposes could violate the rights of the owner.

Disclaimer of Liability

We have reviewed the contents of this publication to ensure consistency with the hardware and software described. Since variance cannot be precluded entirely, we cannot guarantee full consistency. However, the information in this publication is reviewed regularly and any necessary corrections are included in subsequent editions.

Siemens AG
Division Digital Factory
Postfach 48 48
90026 NÜRNBERG
GERMANY

A5E32043398-AC
℗ 10/2017 Subject to change

Copyright © Siemens AG 2014 - 2017.
All rights reserved

Preface

Purpose of the documentation

This manual supplements the system manual ET 200SP distributed I/O system (http://support.automation.siemens.com/WW/view/en/58649293).

Functions that generally relate to the system are described in this manual.

The information provided in this manual and in the system/function manuals supports you in commissioning the system.

Changes compared to previous version

Compared to the previous version, this manual contains the following change:

Due to the change in hardware, the article number of the module has been changed from 6ES7131-6FD00-0BB1 to 6ES7131-6FD01-0BB1. Both modules are compatible, except for the firmware-update function.

Conventions

CPU: When the term "CPU" is used in this manual, it applies to the CPUs of the S7-1500 automation system as well as to the CPUs/interface modules of the distributed I/O system ET 200SP.

STEP 7: In this documentation, "STEP 7" is used as a synonym for all versions of the configuration and programming software "STEP 7 (TIA Portal)".

Please also observe notes marked as follows:

Note

A note contains important information on the product described in the documentation, on the handling of the product or on the section of the documentation to which particular attention should be paid.

Security information

Siemens provides products and solutions with industrial security functions that support the secure operation of plants, systems, machines and networks.

In order to protect plants, systems, machines and networks against cyber threats, it is necessary to implement – and continuously maintain – a holistic, state-of-the-art industrial security concept. Siemens' products and solutions constitute one element of such a concept.

Customers are responsible for preventing unauthorized access to their plants, systems, machines and networks. Such systems, machines and components should only be connected to an enterprise network or the internet if and to the extent such a connection is necessary and only when appropriate security measures (e.g. firewalls and/or network segmentation) are in place.

For additional information on industrial security measures that may be implemented, please visit (http://www.siemens.com/industrialsecurity).

Siemens' products and solutions undergo continuous development to make them more secure. Siemens strongly recommends that product updates are applied as soon as they are available and that the latest product versions are used. Use of product versions that are no longer supported, and failure to apply the latest updates may increase customers' exposure to cyber threats.

To stay informed about product updates, subscribe to the Siemens Industrial Security RSS Feed under (http://www.siemens.com/industrialsecurity).

Table of contents

Preface 4
1 Guide to documentation 7
2 Product overview 12
2.1 Properties 12
3 Wiring 14
3.1 Wiring and block diagram 14
4 Parameters/address space 17
4.1 Parameters 17
4.2 Explanation of parameters 17
4.3 Address space 18
5 Interrupts/diagnostics alarms 19
5.1 Status and fault displays 19
5.2 Diagnostics alarms 21
5.3 Load voltage status 21
6 Technical specifications 22
6.1 Technical specifications 22
A Parameter data record 26
A.1 Parameter assignment and structure of parameter data record 26

Guide to documentation

1

The documentation for the SIMATIC S7-1500 automation system and the SIMATIC ET 200MP distributed I/O system is arranged into three areas.
This arrangement enables you to access the specific content you require.

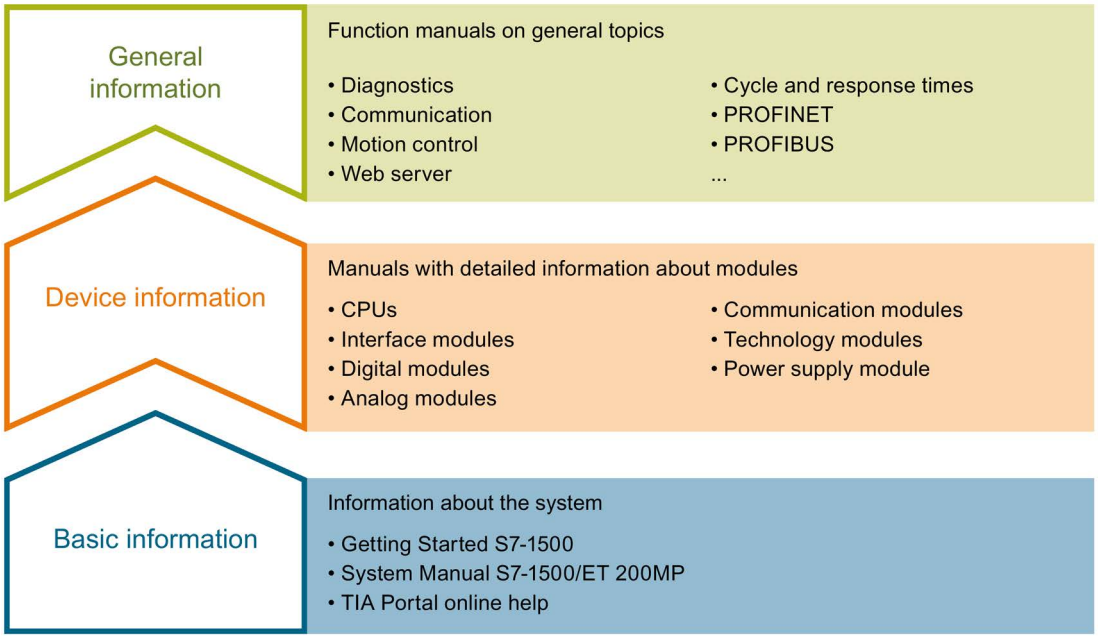

Basic information

The System Manual and Getting Started describe in detail the configuration, installation, wiring and commissioning of the SIMATIC S7-1500 and ET 200MP systems. The STEP 7 online help supports you in the configuration and programming.

Device information

Product manuals contain a compact description of the module-specific information, such as properties, wiring diagrams, characteristics and technical specifications.

General information

The function manuals contain detailed descriptions on general topics regarding the SIMATIC S7-1500 and ET 200MP systems, e.g. diagnostics, communication, motion control, Web server, OPC UA.

You can download the documentation free of charge from the Internet (http://w3.siemens.com/mcms/industrial-automation-systems-simatic/en/manual-overview/Pages/Default.aspx).

Changes and supplements to the manuals are documented in a Product Information.

You can download the product information free of charge from the Internet (https://support.industry.siemens.com/cs/us/en/view/68052815).

Manual Collection S7-1500/ET 200MP

The Manual Collection contains the complete documentation on the SIMATIC S7-1500 automation system and the ET 200MP distributed I/O system gathered together in one file.

You can find the Manual Collection on the Internet (https://support.industry.siemens.com/cs/ww/en/view/86140384).

SIMATIC S7-1500 comparison list for programming languages

The comparison list contains an overview of which instructions and functions you can use for which controller families.

You can find the comparison list on the Internet (https://support.industry.siemens.com/cs/ww/en/view/86630375).

"mySupport"

With "mySupport", your personal workspace, you make the best out of your Industry Online Support.

In "mySupport", you can save filters, favorites and tags, request CAx data and compile your personal library in the Documentation area. In addition, your data is already filled out in support requests and you can get an overview of your current requests at any time.

You must register once to use the full functionality of "mySupport".

You can find "mySupport" on the Internet (https://support.industry.siemens.com/My/ww/en).

"mySupport" - Documentation

In the Documentation area in "mySupport" you can combine entire manuals or only parts of these to your own manual.
You can export the manual as PDF file or in a format that can be edited later.

You can find "mySupport" - Documentation on the Internet (http://support.industry.siemens.com/My/ww/en/documentation).

"mySupport" - CAx data

In the CAx data area in "mySupport", you can access the current product data for your CAx or CAe system.

You configure your own download package with a few clicks.

In doing so you can select:

- Product images, 2D dimension drawings, 3D models, internal circuit diagrams, EPLAN macro files
- Manuals, characteristics, operating manuals, certificates
- Product master data

You can find "mySupport" - CAx data on the Internet (http://support.industry.siemens.com/my/ww/en/CAxOnline).

Application examples

The application examples support you with various tools and examples for solving your automation tasks. Solutions are shown in interplay with multiple components in the system - separated from the focus on individual products.

You will find the application examples on the Internet (https://support.industry.siemens.com/sc/ww/en/sc/2054).

TIA Selection Tool

With the TIA Selection Tool, you can select, configure and order devices for Totally Integrated Automation (TIA).
This tool is the successor of the SIMATIC Selection Tool and combines the known configurators for automation technology into one tool.
With the TIA Selection Tool, you can generate a complete order list from your product selection or product configuration.

You can find the TIA Selection Tool on the Internet (http://w3.siemens.com/mcms/topics/en/simatic/tia-selection-tool).

SIMATIC Automation Tool

You can use the SIMATIC Automation Tool to perform commissioning and maintenance activities simultaneously on various SIMATIC S7 stations as a bulk operation independent of the TIA Portal.

General function overview:

- Network browsing and creation of a table showing the accessible devices in the network.
- Flashing of device LEDs or HMI display to locate a device
- Downloading of addresses (IP, subnet, gateway) to a device
- Downloading the PROFINET name (station name) to a device
- Placing a CPU in RUN or STOP mode
- Setting the time in a CPU to the current time of your PG/PC
- Downloading a new program to a CPU or an HMI device
- Downloading from CPU, downloading to CPU or deleting recipe data from a CPU
- Downloading from CPU or deleting data log data from a CPU
- Backup/restore of data from/to a backup file for CPUs and HMI devices
- Downloading service data from a CPU
- Reading the diagnostics buffer of a CPU
- Performing a CPU memory reset
- Resetting devices to factory settings
- Downloading a firmware update to a device

You can find the SIMATIC Automation Tool on the Internet (https://support.industry.siemens.com/cs/ww/en/view/98161300).

PRONETA

With SIEMENS PRONETA (PROFINET network analysis), you analyze the PROFINET network during commissioning. PRONETA features two core functions:

- The topology overview independently scans PROFINET network and all connected components.
- The IO check is a fast test of the wiring and the module configuration of a system.

You can find SIEMENS PRONETA on the Internet (https://support.industry.siemens.com/cs/ww/en/view/67460624).

SINETPLAN

SINETPLAN, the Siemens Network Planner, supports you in planning automation systems and networks based on PROFINET. The tool facilitates professional and predictive dimensioning of your PROFINET installation as early as in the planning stage. In addition, SINETPLAN supports you during network optimization and helps you to exploit network resources optimally and to plan reserves. This helps to prevent problems in commissioning or failures during productive operation even in advance of a planned operation. This increases the availability of the production plant and helps improve operational safety.

The advantages at a glance

- Network optimization thanks to port-specific calculation of the network load
- Increased production availability thanks to online scan and verification of existing systems
- Transparency before commissioning through importing and simulation of existing STEP 7 projects
- Efficiency through securing existing investments in the long term and optimal exploitation of resources

You can find SINETPLAN on the Internet (https://www.siemens.com/sinetplan).

Product overview

2

2.1 Properties

Order number

6ES7131-6FD01-0BB1

View of the module

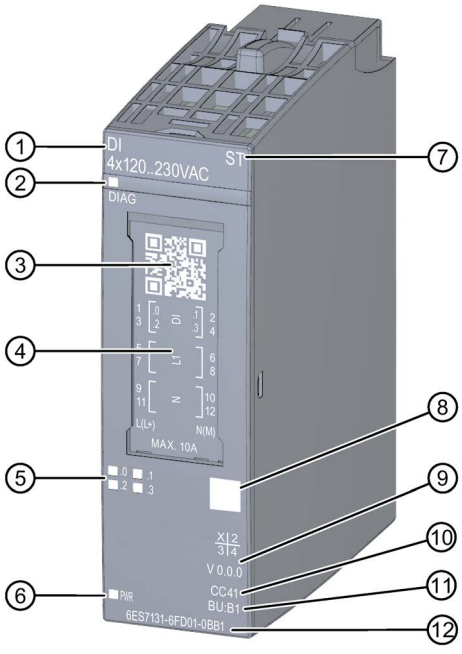

① Module type and name
② LED for diagnostics
③ 2D matrix code
④ Wiring diagram
⑤ LEDs for channel status
⑥ LED for supply voltage
⑦ Function class
⑧ Color coding module type
⑨ Function and firmware version
⑩ Color code for selecting the color identification labels
⑪ BU type
⑫ Article number

Figure 2-1 View of the module DI 4x120..230VAC ST

Properties

The module has the following technical properties:

- 4 digital inputs
- Supply voltage L+
- Suitable for connection of switches and 2-wire sensors in accordance with IEC 61131, type 3

The module supports the following functions:

Table 2- 1 Version dependencies of the functions

Function	HW version	FW version	STEP 7		GSD file	
			TIA Portal	V5.x	PROFINET IO	PROFIBUS DP
Identification data I&M0 to I&M3	FS01	V0.0.0 and higher	V14 or higher with HSP 0222	V5.5 SP3 or higher with HSP 0229 V7.0	X	X
Configuration in RUN	FS01	V0.0.0 and higher	V14 or higher with HSP 0222	V5.5 SP3 or higher with HSP 0229 V7.0	X	X
Value status	FS01	V0.0.0 and higher	V14 or higher with HSP 0222	V5.5 SP3 or higher with HSP 0229 V7.0	X	X

Accessories

The following accessories must be ordered separately:

- Labeling strips
- Color identification labels
- Reference identification label
- Shield connector

See also

You can find additional information on the accessories in the ET 200SP Distributed I/O System (http://support.automation.siemens.com/WW/view/en/58649293) system manual.

Wiring 3

3.1 Wiring and block diagram

This section includes the block diagram of the DI 4x120..230VAC ST module with the terminal assignments for a 2-wire, 3-wire and 4-wire connection.

Information about wiring of the BaseUnit is available in the system manual ET 200SP distributed I/O system (http://support.automation.siemens.com/WW/view/en/58649293).

Note

You may use and combine the different wiring options for all channels.

NOTICE
Hazardous voltage, risk of fatal or serious injury Always disconnect the system and module from the power supply before commencing work.

Note

Limiting overvoltage

You must ensure overvoltage is limited to 1 kV for the encoder supply.

Note

Power limitation

To limit power, each input voltage must have a fuse with a maximum rating of 10 A tripping current. The fuse must be a quick-acting microfuse.

Connection: 2-wire and 3-wire connection

The following figure shows the block diagram and an example of the terminal assignment of the digital input module DI 4x120..230VAC ST on the BaseUnit BU type B1 without AUX terminals (2-wire and 3-wire connection).

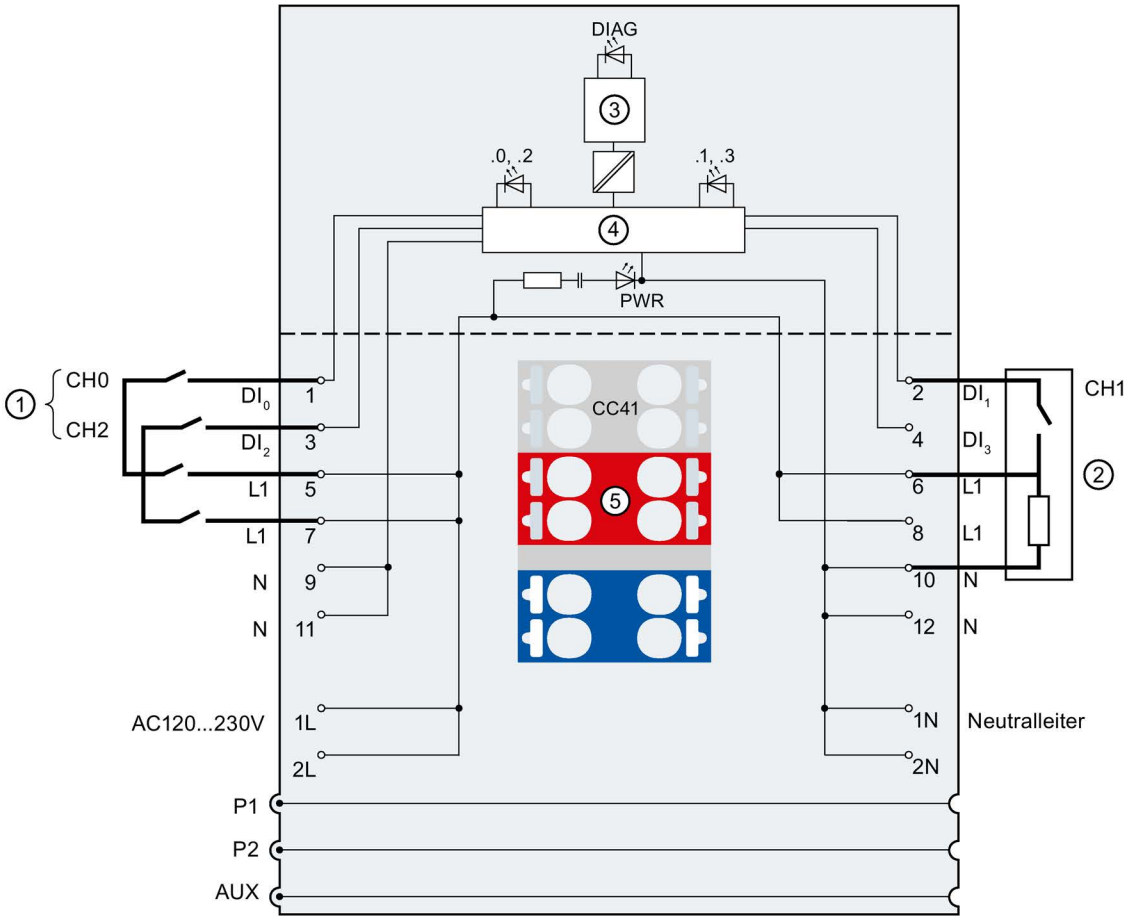

①	2-wire connection	DI_n	Input signal, channel n
②	3-wire connection	L1	Encoder supply, channel n
③	Backplane bus interface	1L / 2L	Infeed 120 ... 230 V AC
④	Input electronics	1N / 2N	N-conductor connection
⑤	Color identification label CCxx (optional)	DIAG	Error or Diagnostics LED (green, red)
P1, P2, AUX	Internal self-assembling voltage buses Connection to left (dark-colored BaseUnit) Connection to left interrupted (light-colored BaseUnit)	PWR	Power LED (green)
.0 to .3	Channel status LED (green)		

Figure 3-1 Wiring and block diagram for 1-wire and 2-wire connection of encoders

Connection: 4-wire connection:

The following figure shows the block diagram and an example of the terminal assignment of the digital input DI 4x120..230VAC ST on the BaseUnit BU type B1 with AUX terminals (4-wire connection).

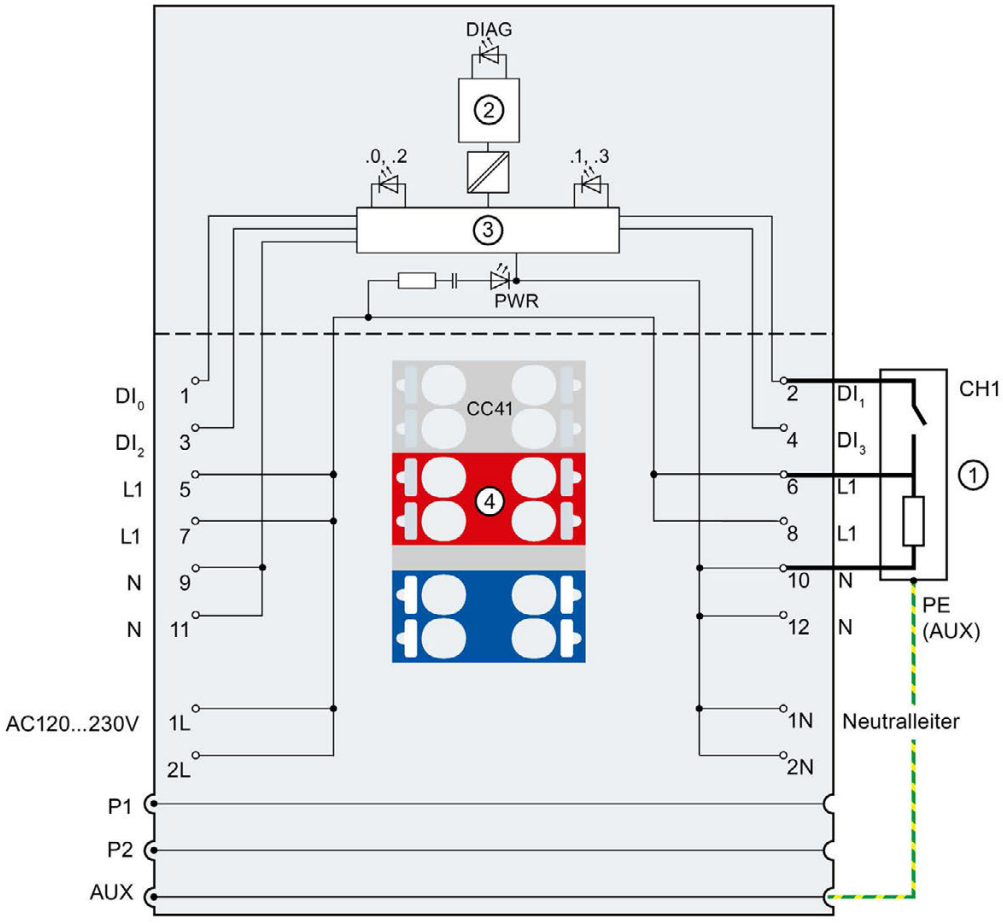

①	4-wire connection	DI_n	Input signal, channel n
②	Backplane bus interface	L1	Encoder supply, channel n
③	Input electronics	1L / 2L	Infeed 120 ... 230 V AC
④	Color identification label CCxx (optional)	1N / 2N	N-conductor connection
P1, P2, AUX	Internal self-assembling voltage buses Connection to left (dark-colored BaseUnit) Connection to left interrupted (light-colored BaseUnit)	DIAG	Error or diagnostics LED (green, red)
.0 to .3	Channel status LED (green)	PWR	Power LED (green)

Figure 3-2 Wiring and block diagram for 4-wire connection of encoders.

Parameters/address space 4

4.1 Parameters

Parameters of the DI 4x120..230VAC ST

Specify the module properties with the various parameters in the course of your STEP 7 configuration. The following table lists the configurable parameters. The effective range of the configurable parameters depends on the type of configuration.

The following configurations are possible:

- Central operation with an ET 200SP CPU
- Distributed operation on PROFINET IO in an ET 200SP system
- Distributed operation with PROFIBUS DP in an ET 200SP system

When performing the configuration in the user program, use the "WRREC" instruction to transfer the parameters to the module using data records (refer to the section Parameter assignment and structure of parameter data record (Page 26)).

The following parameter settings are possible:

Table 4- 1 Configurable parameters and their defaults (GSD file)

Parameters	Value range	Default	Configuration in RUN	Scope with configuration software, e.g. STEP 7 (TIA Portal)	
				GSD file PROFINET IO	GSD file PROFIBUS DP
Channel activated	• Disable • Enable	Enable	Yes	Channel	Channel

4.2 Explanation of parameters

Channel activated

Determines whether a channel is enabled or disabled.

4.3 Address space

The module can be configured differently in STEP 7; see following table. Depending on the configuration, additional/different addresses are assigned in the process image of the inputs.

Configuration options of DI 4x120..230VAC ST

You can configure the module with STEP 7 (TIA Portal) or with a GSD file. If you configure the module using a GSD file, the configurations are available under various short designations/module names; see the table below. The following configurations are possible:

Table 4- 2 Configuration options with GSD file

Configuration	Short designation/module name in the GSD file	Configuration software, e.g. with STEP 7 (TIA Portal)		
		Integrated in hardware catalog STEP 7	GSD file PROFINET IO	GSD file PROFIBUS DP
1 x 4-channel without value status	DI 4x120..230VAC ST V0.0	V14, SP1 or higher with HSP 0222	X	X
1 x 4-channel with value status	DI 4x120..230VAC ST V0.0, QI	V14, SP1 or higher with HSP 0222	X	---

Evaluating the value status

An additional two bytes are allocated in the input address space if you enable the value status for the digital module. Bits 0 to 3 in these bytes are assigned to a channel. They provide information about the validity of the digital value.

Bit = 1: No fault is present on the channel.

Bit = 0: Channel is disabled or there is a fault/error on the module.

If a fault/error occurs on a channel with this module, the value status for all channels is 0.

Address space of the digital input module DI 4x120..230VAC ST

The following figure shows the assignment of the address space for the DI 4x120..230VAC ST with value status (Quality Information (QI)). The addresses for the value status are only available if the value status is enabled.

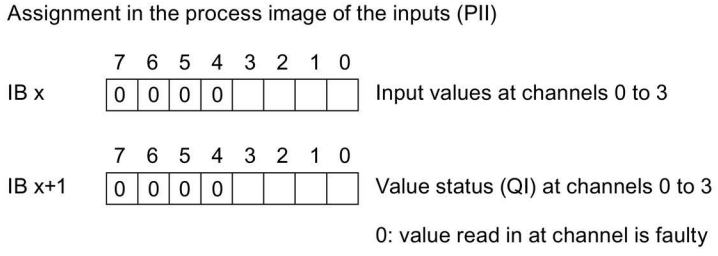

Figure 4-1 Address space of the DI 4x120..230VAC ST digital input module with value status

Note

Value status

The value status is independent of the connected supply voltage 120 ... 230 V AC.

Interrupts/diagnostics alarms

5

5.1 Status and fault displays

LED displays

The figure below shows the LED displays (status and fault displays) of the DI 4x120..230VAC ST.

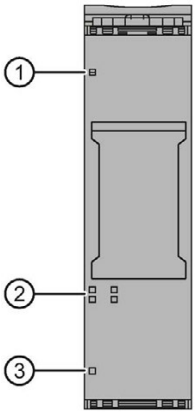

① DIAG (green/red)
② Channel status (green)
③ PWR (green)

Figure 5-1 LED display

Meaning of the LEDs

The tables below explain the meaning of the Status and fault displays.

LED DIAG

Table 5- 1 LED DIAG fault display

LED DIAG	Meaning
Off	Backplane bus supply of the ET 200SP not OK
Flashing	Module parameters not assigned
On	Module parameters assigned
Flashing	Module diagnostics is available

LED channel status

Table 5- 2 Channel status LED status and fault display

LED channel status	Meaning
Off	Process signal = 0
On	Process signal = 1

LED PWR

Table 5- 3 LED PWR status display

LED PWR	Meaning
Off	Supply voltage L+ missing
On	Supply voltage L+ present

5.2 Diagnostics alarms

Diagnostics alarms

A diagnostic alarm is generated and the DIAG-LED flashes on the module for each diagnostics event. You can read out the diagnostic alarm, for example, in the diagnostics buffer of the CPU. You can analyze the error code with the user program.

Table 5- 4 Diagnostic alarm, meaning and corrective measures

Diagnostics alarm	Error code	Meaning	Solution
Parameter assignment error	10_H	• The module cannot evaluate parameters for the channel. • Incorrect parameter assignment.	Correct the parameter assignment

5.3 Load voltage status

Load voltage status

The firmware of the module cannot detect the status of the load voltage.

If the "Load voltage status" function tied to the server module is used, a "1" is always displayed in the status bit for a slot with the DI 4×120..230VAC ST. Even when the load voltage is not applied.

Technical specifications

6

6.1 Technical specifications

DI 4×120..230VAC ST technical specifications

Article number	6ES7131-6FD01-0BB1
General information	
Product type designation	DI 4x120 … 230 V AC ST
Firmware version	V0.0
• FW update possible	No
usable BaseUnits	BU type B1
Color code for module-specific color identification plate	CC41
Product function	
• I&M data	Yes; I&M0 to I&M3
Engineering with	
• STEP 7 TIA Portal configurable/integrated as of version	V14
• STEP 7 configurable/integrated as of version	V5.5 SP3
• PROFIBUS as of GSD version/GSD revision	One GSD file each, Revision 3 and 5 and higher
• PROFINET as of GSD version/GSD revision	GSDML V2.3
Operating mode	
• DI	Yes
• Counter	No
• Oversampling	No
• MSI	No
Supply voltage	
Rated value (AC)	230 V
Reverse polarity protection	No
Input current	
Current consumption (rated value)	10 mA

Article number	6ES7131-6FD01-0BB1
Encoder supply	
Number of outputs	4
Short-circuit protection	No; when using BU type B1, a fuse with 10 A tripping current must be provided
Output current	
• up to 60 °C, max.	10 A
Power loss	
Power loss, typ.	1 W; Active power, load voltage 230 V, all inputs connected with 230 V, 50 Hz
Address area	
Address space per module	
• Inputs	1 byte; + 1 byte for QI information
Hardware configuration	
Automatic encoding	Yes
• Mechanical coding element	Yes
Selection of BaseUnit for connection variants	
• 1-wire connection	BU type B1
• 2-wire connection	BU type B1
• 3-wire connection	BU type B1
• 4-wire connection	BU type B1 + potential distributor module
Digital inputs	
Number of digital inputs	4
Input characteristic curve in accordance with IEC 61131, type 3	Yes
Input voltage	
• Type of input voltage	120/230V AC (47 Hz to 63 Hz)
• Rated value (AC)	230 V
• for signal "0"	0V AC to 40V AC
• for signal "1"	74 V AC to 264 V AC
Input current	
• for signal "1", typ.	10.8 mA
Input delay (for rated value of input voltage) for standard inputs	
– parameterizable	No
– at "0" to "1", min.	1.5 ms
– at "0" to "1", max.	4 ms
– at "1" to "0", min.	10 ms
– at "1" to "0", max.	10 ms

Article number	6ES7131-6FD01-0BB1
Cable length	
• shielded, max.	1 000 m
• unshielded, max.	600 m
Encoder	
Connectable encoders	
• 2-wire sensor	Yes
Isochronous mode	
Isochronous operation (application synchronized up to terminal)	No
Interrupts/diagnostics/status information	
Alarms	
• Diagnostic alarm	No
• Hardware interrupt	No
Diagnostic messages	
• Monitoring the supply voltage	No
• Wire-break	No
• Short-circuit	No
Diagnostics indication LED	
• Monitoring of the supply voltage (PWR-LED)	Yes; green PWR LED
• Channel status display	Yes; Green LED
• for channel diagnostics	No
• for module diagnostics	Yes; green/red DIAG LED
Potential separation	
Potential separation channels	
• between the channels	No
• between the channels and backplane bus	Yes
• between the channels and the power supply of the electronics	No
Isolation	
Isolation tested with	2 545 V DC/2 s (routine test)
Altitude during operation based on sea level	
• Ambient air temperature-barometric pressure-altitude	On request: Ambient temperatures lower than 0 °C (without condensation) and/or installation altitudes greater than 2 000 m

Article number	6ES7131-6FD01-0BB1
Dimensions	
Width	20 mm
Height	73 mm
Depth	58 mm
Weights	
Weight, approx.	36 g

Dimensional drawing

See the manual ET 200SP BaseUnits
(http://support.automation.siemens.com/WW/view/en/59753521)

Parameter data record A

A.1 Parameter assignment and structure of parameter data record

The data record of the module has an identical structure, regardless of whether you configure the module with PROFIBUS DP or PROFINET IO. With data record 128, you can reconfigure the module in your user program regardless of your programming. This means that you can use all the functions of the module even if you configured it via PROFIBUS-GSD.

Parameter assignment in the user program

The module parameters can be reassigned in RUN without affecting the other channels.

Changing parameters in RUN

The "WRREC" instruction is used to transfer the parameters to the module using data record 128. The parameters set with STEP 7 are not changed in the CPU, which means the parameters set in STEP 7 will be valid after a restart.

Output parameter STATUS

The module ignores errors that occur during the transfer of parameters with the "WRREC" instruction and continues operation with the previous parameter assignment. However, a corresponding error code is written to the STATUS output parameter.

The description of the "WRREC" instruction and the error codes is available in the STEP 7 online help.

Structure of data record 128

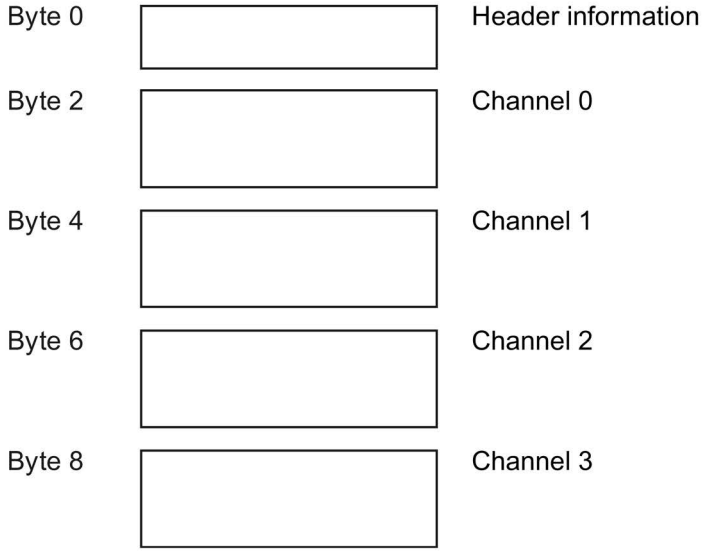

Figure A-1 Structure of data record 128

Header information

The figure below shows the structure of the header information.

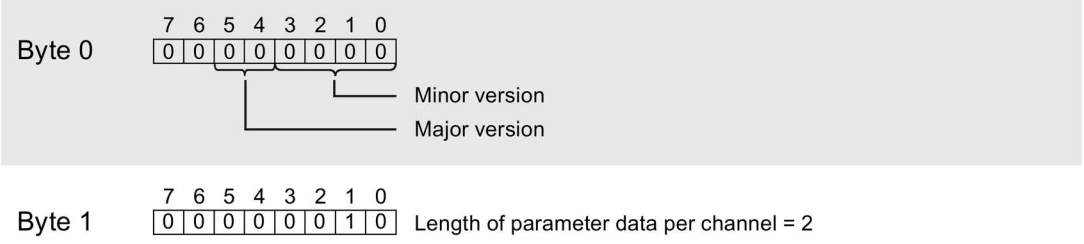

Figure A-2 Header information

Parameters

The figure below shows the structure of the parameters for channels 0 to 3.

You enable a parameter by setting the corresponding bit to "1".

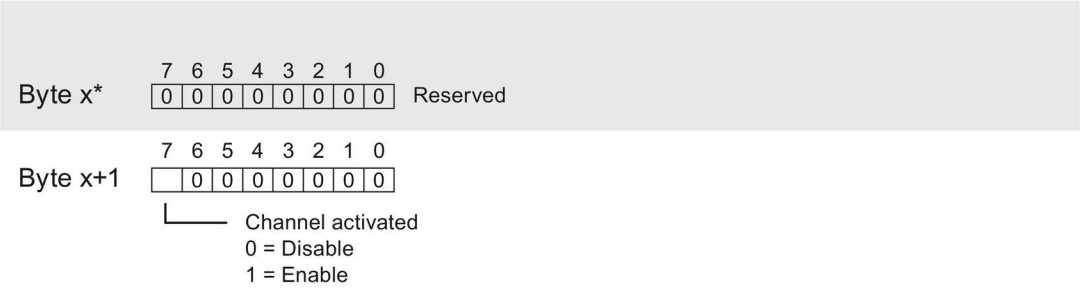

* x = 2 + (channel number × 2); channel number = 0 to 3

Figure A-3 Structure byte x to x+1 for the channels 0 to 3

Error transferring the data record

The module always checks all the values of the transferred data record. Only if all the values were transferred without errors does the module apply the values from the data record.

The WRREC instruction for writing data records returns corresponding error codes when errors occur in the STATUS parameter, see also the description of the "STATUS" parameter in the STEP 7 online help).

The following table shows the module-specific error codes and their meaning for the parameter data record 128.

Error code in STATUS parameter (hexadecimal)				Meaning	Solution
Byte 0	Byte 1	Byte 2	Byte 3		
DF	80	B0	xx	Number of the data record unknown.	Enter a valid number for the data record.
DF	80	B1	xx	Length of the data record incorrect.	Enter a valid value for the data record length.
DF	80	B2	xx	Slot invalid or cannot be accessed.	• Check the station whether the module is plugged or drawn. • Check the assigned values for the parameters of the WRREC instruction.
DF	80	E0	xx	Wrong version or error in the header information.	Correct the version, length and number of parameter blocks.
DF	80	E1	07	Invalid coding for input filter time.	Check the parameters of the module.

SIEMENS

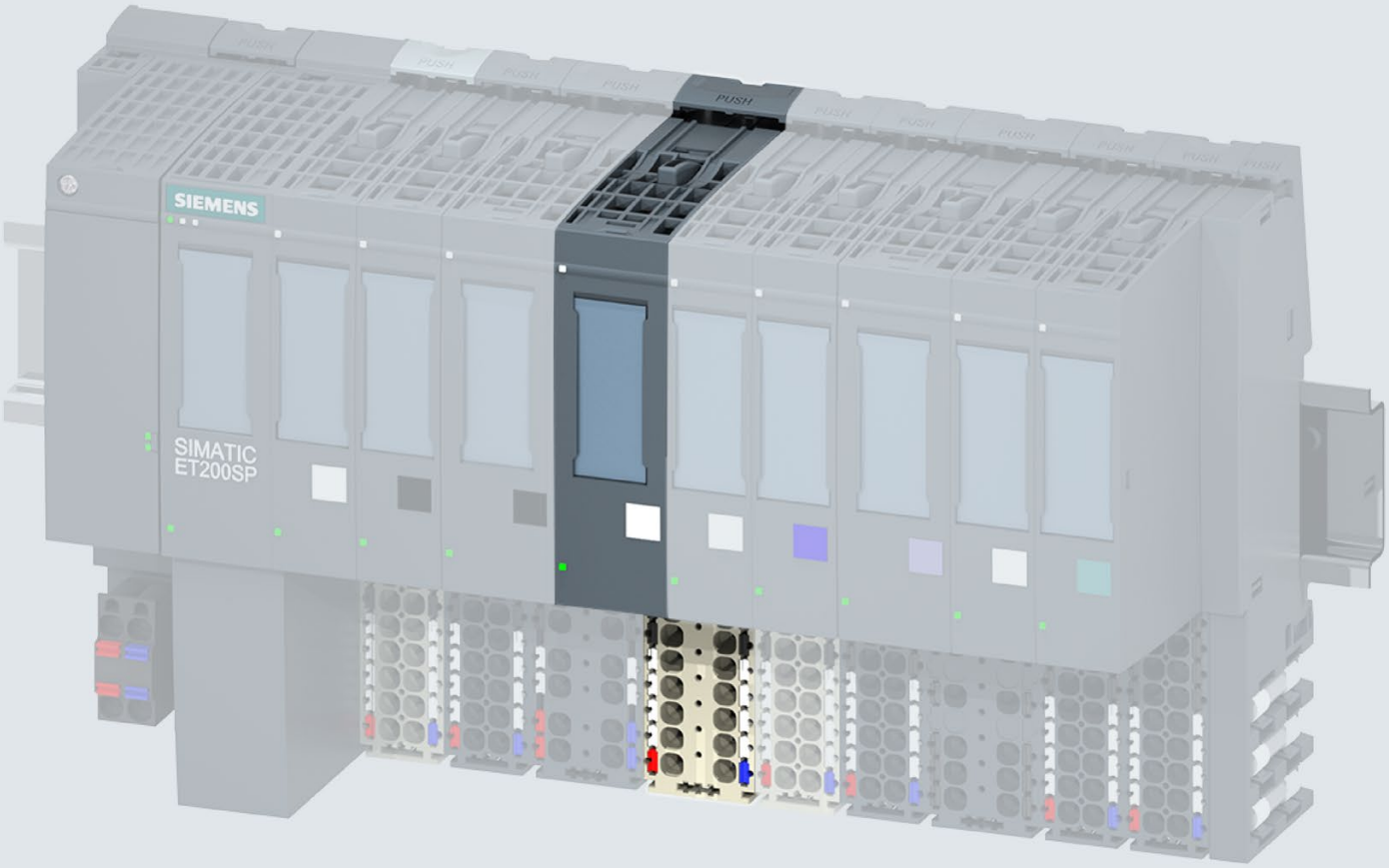

Manual

SIMATIC

ET 200SP

Digital input module
DI 8x24VAC/48VUC BA (6ES7131-6CF00-0AU0)

Edition 07/2018

support.industry.siemens.com

SIEMENS

SIMATIC

ET 200SP
Digital input module
DI 8x24VAC/48VUC BA
(6ES7131-6CF00-0AU0)

Manual

Preface

Guide to documentation 1

Product overview 2

Wiring 3

Parameter assignment/addressing 4

Interrupts/diagnostics alarms 5

Technical specifications 6

Parameter data record A

07/2018

A5E42285997-AA

Legal information

Warning notice system

This manual contains notices you have to observe in order to ensure your personal safety, as well as to prevent damage to property. The notices referring to your personal safety are highlighted in the manual by a safety alert symbol, notices referring only to property damage have no safety alert symbol. These notices shown below are graded according to the degree of danger.

⚠ DANGER

indicates that death or severe personal injury **will** result if proper precautions are not taken.

⚠ WARNING

indicates that death or severe personal injury **may** result if proper precautions are not taken.

⚠ CAUTION

indicates that minor personal injury can result if proper precautions are not taken.

NOTICE

indicates that property damage can result if proper precautions are not taken.

If more than one degree of danger is present, the warning notice representing the highest degree of danger will be used. A notice warning of injury to persons with a safety alert symbol may also include a warning relating to property damage.

Qualified Personnel

The product/system described in this documentation may be operated only by **personnel qualified** for the specific task in accordance with the relevant documentation, in particular its warning notices and safety instructions. Qualified personnel are those who, based on their training and experience, are capable of identifying risks and avoiding potential hazards when working with these products/systems.

Proper use of Siemens products

Note the following:

⚠ WARNING

Siemens products may only be used for the applications described in the catalog and in the relevant technical documentation. If products and components from other manufacturers are used, these must be recommended or approved by Siemens. Proper transport, storage, installation, assembly, commissioning, operation and maintenance are required to ensure that the products operate safely and without any problems. The permissible ambient conditions must be complied with. The information in the relevant documentation must be observed.

Trademarks

All names identified by ® are registered trademarks of Siemens AG. The remaining trademarks in this publication may be trademarks whose use by third parties for their own purposes could violate the rights of the owner.

Disclaimer of Liability

We have reviewed the contents of this publication to ensure consistency with the hardware and software described. Since variance cannot be precluded entirely, we cannot guarantee full consistency. However, the information in this publication is reviewed regularly and any necessary corrections are included in subsequent editions.

Siemens AG
Division Digital Factory
Postfach 48 48
90026 NÜRNBERG
GERMANY

A5E42285997-AA
℗ 06/2018 Subject to change

Copyright © Siemens AG 2018.
All rights reserved

Preface

Purpose of the documentation

This manual supplements the system manual ET 200SP distributed I/O system (http://support.automation.siemens.com/WW/view/en/58649293).

Functions that generally relate to the system are described in this manual.

The information provided in this manual and in the system/function manuals supports you in commissioning the system.

Conventions

CPU: When the term "CPU" is used in this manual, it applies to the CPUs of the S7-1500 automation system as well as to the CPUs/interface modules of the distributed I/O system ET 200SP.

STEP 7: In this documentation, "STEP 7" is used as a synonym for all versions of the configuration and programming software "STEP 7 (TIA Portal)".

Please also observe notes marked as follows:

Note

A note contains important information on the product described in the documentation, on the handling of the product or on the section of the documentation to which particular attention should be paid.

Recycling and disposal

For environmentally friendly recycling and disposal of your old equipment, contact a certified electronic waste disposal company and dispose of the equipment according to the applicable regulations in your country.

Security information

Siemens provides products and solutions with industrial security functions that support the secure operation of plants, systems, machines and networks.

In order to protect plants, systems, machines and networks against cyber threats, it is necessary to implement – and continuously maintain – a holistic, state-of-the-art industrial security concept. Siemens' products and solutions constitute one element of such a concept.

Customers are responsible for preventing unauthorized access to their plants, systems, machines and networks. Such systems, machines and components should only be connected to an enterprise network or the internet if and to the extent such a connection is necessary and only when appropriate security measures (e.g. firewalls and/or network segmentation) are in place.

For additional information on industrial security measures that may be implemented, please visit (https://www.siemens.com/industrialsecurity).

Siemens' products and solutions undergo continuous development to make them more secure. Siemens strongly recommends that product updates are applied as soon as they are available and that the latest product versions are used. Use of product versions that are no longer supported, and failure to apply the latest updates may increase customers' exposure to cyber threats.

To stay informed about product updates, subscribe to the Siemens Industrial Security RSS Feed under (https://www.siemens.com/industrialsecurity).

Table of contents

Preface 3

1 Guide to documentation 6

2 Product overview 11

2.1 Properties 11

3 Wiring 13

3.1 Wiring and block diagram 13

4 Parameter assignment/addressing 15

4.1 Parameters 15

4.2 Explanation of parameters 16

4.3 Address space 17

5 Interrupts/diagnostics alarms 18

5.1 Status and fault displays 18

5.2 Interrupts 20

5.3 Diagnostics alarms 20

6 Technical specifications 21

A Parameter data record 24

A.1 Parameter assignment and structure of parameter data record 24

Guide to documentation

1

The documentation for the SIMATIC ET 200SP distributed I/O system is arranged into three areas.
This arrangement enables you to access the specific content you require.

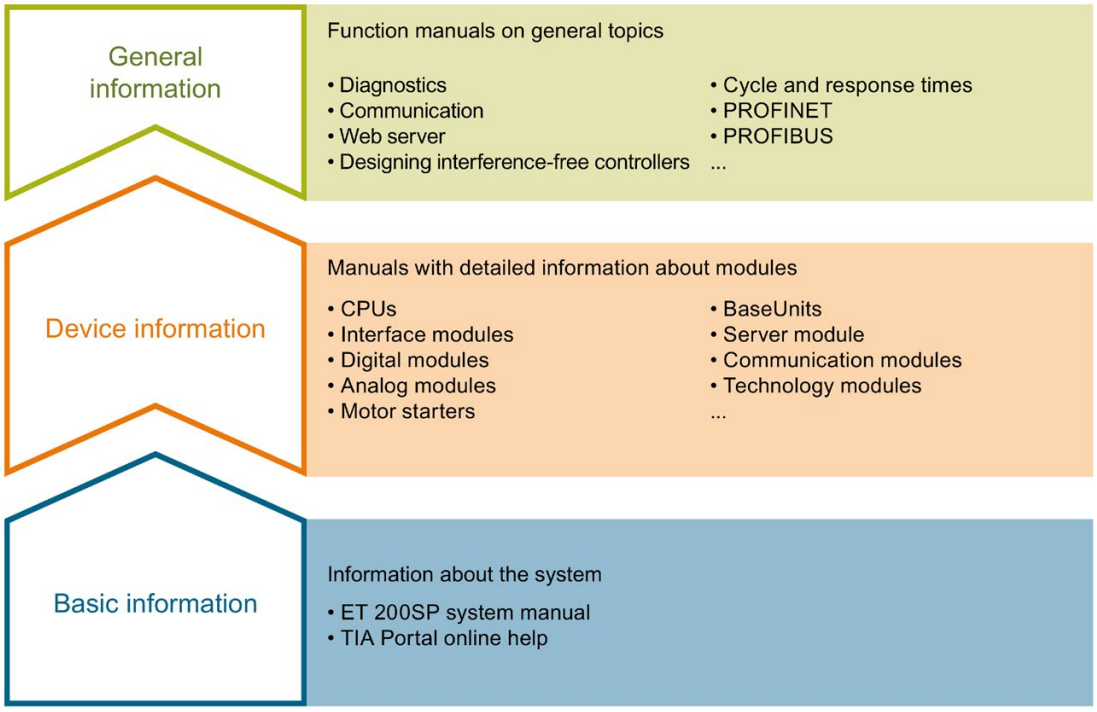

Basic information

The system manual describes in detail the configuration, installation, wiring and commissioning of the SIMATIC ET 200SP. distributed I/O system. The STEP 7 online help supports you in the configuration and programming.

Device information

Product manuals contain a compact description of the module-specific information, such as properties, wiring diagrams, characteristics and technical specifications.

General information

The function manuals contain detailed descriptions on general topics regarding the SIMATIC ET 200SP distributed I/O system, e.g. diagnostics, communication, Web server, motion control and OPC UA.

You can download the documentation free of charge from the Internet (https://support.industry.siemens.com/cs/ww/en/view/109742709).

Changes and supplements to the manuals are documented in a Product Information.

You can download the product information free of charge from the Internet (https://support.industry.siemens.com/cs/us/en/view/73021864).

Manual Collection ET 200SP

The Manual Collection contains the complete documentation on the SIMATIC ET 200SP distributed I/O system gathered together in one file.

You can find the Manual Collection on the Internet (http://support.automation.siemens.com/WW/view/en/84133942).

"mySupport"

With "mySupport", your personal workspace, you make the most of your Industry Online Support.

In "mySupport" you can store filters, favorites and tags, request CAx data and put together your personal library in the Documentation area. Furthermore, your data is automatically filled into support requests and you always have an overview of your current requests.

You need to register once to use the full functionality of "mySupport".

You can find "mySupport" in the Internet (https://support.industry.siemens.com/My/ww/en).

"mySupport" - Documentation

In the Documentation area of "mySupport", you have the possibility to combine complete manuals or parts of them to make your own manual.
You can export the manual in PDF format or in an editable format.

You can find "mySupport" - Documentation in the Internet (http://support.industry.siemens.com/My/ww/en/documentation).

"mySupport" - CAx Data

In the CAx Data area of "mySupport", you can have access the latest product data for your CAx or CAe system.

You configure your own download package with a few clicks.

In doing so you can select:

- Product images, 2D dimension drawings, 3D models, internal circuit diagrams, EPLAN macro files
- Manuals, characteristics, operating manuals, certificates
- Product master data

You can find "mySupport" - CAx Data in the Internet (http://support.industry.siemens.com/my/ww/en/CAxOnline).

Application examples

The application examples support you with various tools and examples for solving your automation tasks. Solutions are shown in interplay with multiple components in the system - separated from the focus in individual products.

You can find the application examples on the Internet (https://support.industry.siemens.com/sc/ww/en/sc/2054).

TIA Selection Tool

With the TIA Selection Tool, you can select, configure and order devices for Totally Integrated Automation (TIA).
This tool is the successor of the SIMATIC Selection Tool and combines the known configurators for automation technology into one tool.
With the TIA Selection Tool, you can generate a complete order list from your product selection or product configuration.

You can find the TIA Selection Tool on the Internet (http://w3.siemens.com/mcms/topics/en/simatic/tia-selection-tool).

SIMATIC Automation Tool

You can use the SIMATIC Automation Tool to run commissioning and maintenance activities simultaneously on various SIMATIC S7 stations as a bulk operation independently of the TIA Portal.

The SIMATIC Automation Tool provides a multitude of functions:

- Scanning of a PROFINET/Ethernet network and identification of all connected CPUs
- Address assignment (IP, subnet, gateway) and station name (PROFINET device) to a CPU
- Transfer of the data and the programming device/PC time converted to UTC time to the module
- Program download to CPU
- Operating mode switchover RUN/STOP
- Localization of the CPU by means of LED flashing
- Reading out CPU error information
- Reading the CPU diagnostic buffer
- Reset to factory settings
- Updating the firmware of the CPU and connected modules

You can find the SIMATIC Automation Tool on the Internet (https://support.industry.siemens.com/cs/ww/en/view/98161300).

PRONETA

With SIEMENS PRONETA (PROFINET network analysis), you analyze the plant network during commissioning. PRONETA features two core functions:

- The topology overview independently scans PROFINET and all connected components.
- The IO check is a fast test of the wiring and the module configuration of a system.

You can find SIEMENS PRONETA on the Internet (https://support.industry.siemens.com/cs/ww/en/view/67460624).

SINETPLAN

SINETPLAN, the Siemens Network Planner, supports you in planning automation systems and networks based on PROFINET. The tool facilitates professional and predictive dimensioning of your PROFINET installation as early as in the planning stage. In addition, SINETPLAN supports you during network optimization and helps you to exploit network resources optimally and to plan reserves. This helps to prevent problems in commissioning or failures during productive operation even in advance of a planned operation. This increases the availability of the production plant and helps improve operational safety.

The advantages at a glance

- Network optimization thanks to port-specific calculation of the network load
- Increased production availability thanks to online scan and verification of existing systems
- Transparency before commissioning through importing and simulation of existing STEP 7 projects
- Efficiency through securing existing investments in the long term and optimal exploitation of resources

You can find SINETPLAN on the Internet (https://www.siemens.com/sinetplan).

Product overview

2

2.1 Properties

Article number

6ES7131-6CF00-0AU0

View of the module

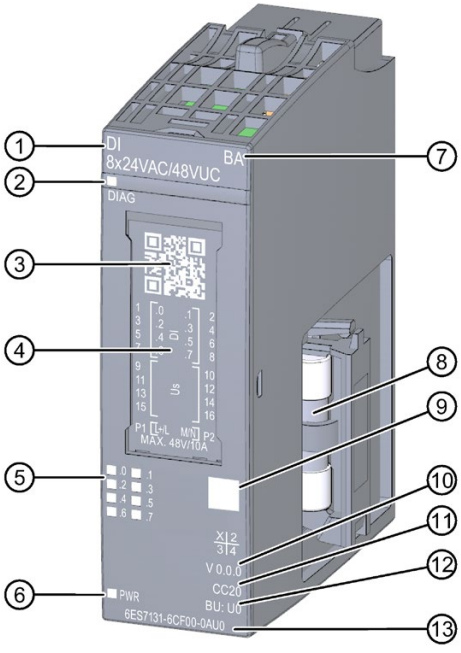

① Module type and name
② LED for diagnostics
③ 2D matrix code
④ Wiring diagram
⑤ LEDs for channel status
⑥ LED for supply voltage
⑦ Function class
⑧ Replaceable fuse
⑨ Color coding module type
⑩ Function and firmware version
⑪ Color code for selecting the color identification labels
⑫ BU type
⑬ Article number

Figure 2-1 View of the module DI 8x24VAC/48VUC BA

Note

Replace the fuse

1. Remove the module from the station.
2. Insert a screwdriver into the slotted top face of the fuse holder.
3. Lift out the fuse holder.
4. Replace the fuse.
5. Slide the fuse holder back into the module.

Properties

The module has the following technical properties:

- 8 digital inputs
- Suitable for connection of switches and 2-wire sensors in accordance with IEC 61131, type 1

The module supports the following functions:

Table 2- 1 Version dependencies of the functions

Function	HW version	FW version	STEP 7		GSD file	
			TIA Portal	V5.x	PROFINET IO	PROFIBUS DP
Identification data I&M0 to I&M3	FS01	V0.0.0 and higher	as of V15 with HSP 0254	as of V5.5 SP3 with HSP 0229 V8.0	X	X
Configuration in RUN	FS01	V0.0.0 and higher	as of V15 with HSP 0254	as of V5.5 SP3 with HSP 0229 V8.0	X	X

Accessories

The following accessories must be ordered separately:

- Labeling strips
- Color identification labels
- Reference identification label
- Shield connector

You can find additional information on the accessories in the ET 200SP Distributed I/O System (https://support.industry.siemens.com/cs/ww/en/view/58649293) system manual.

Wiring 3

3.1 Wiring and block diagram

This section includes the block diagram of the DI 8x24VAC/48VUC BA module with the terminal assignments for a 1-wire and 2-wire connection.

Information about wiring of the BaseUnit is available in the system manual ET 200SP distributed I/O system (http://support.automation.siemens.com/WW/view/en/58649293).

Note

You may use and combine the different wiring options for all channels.

Note

Hazardous voltage, risk of fatal or serious injury

Always disconnect the system and module from the power supply before commencing work.

Note

Limiting overvoltage

You must ensure overvoltage is limited to 1 kV for the encoder supply.

Note

Power limitation

To limit power, each input voltage must have a fuse with a maximum rating of 10 A tripping current. The fuse must be a quick-acting microfuse.

Connection: 1-wire and 2-wire connection

The following figure shows the block diagram and an example of the terminal assignment of the digital output module DI 8x24VAC/48VUC BA on the BaseUnit BU type U0 (1-wire and 2-wire connection).

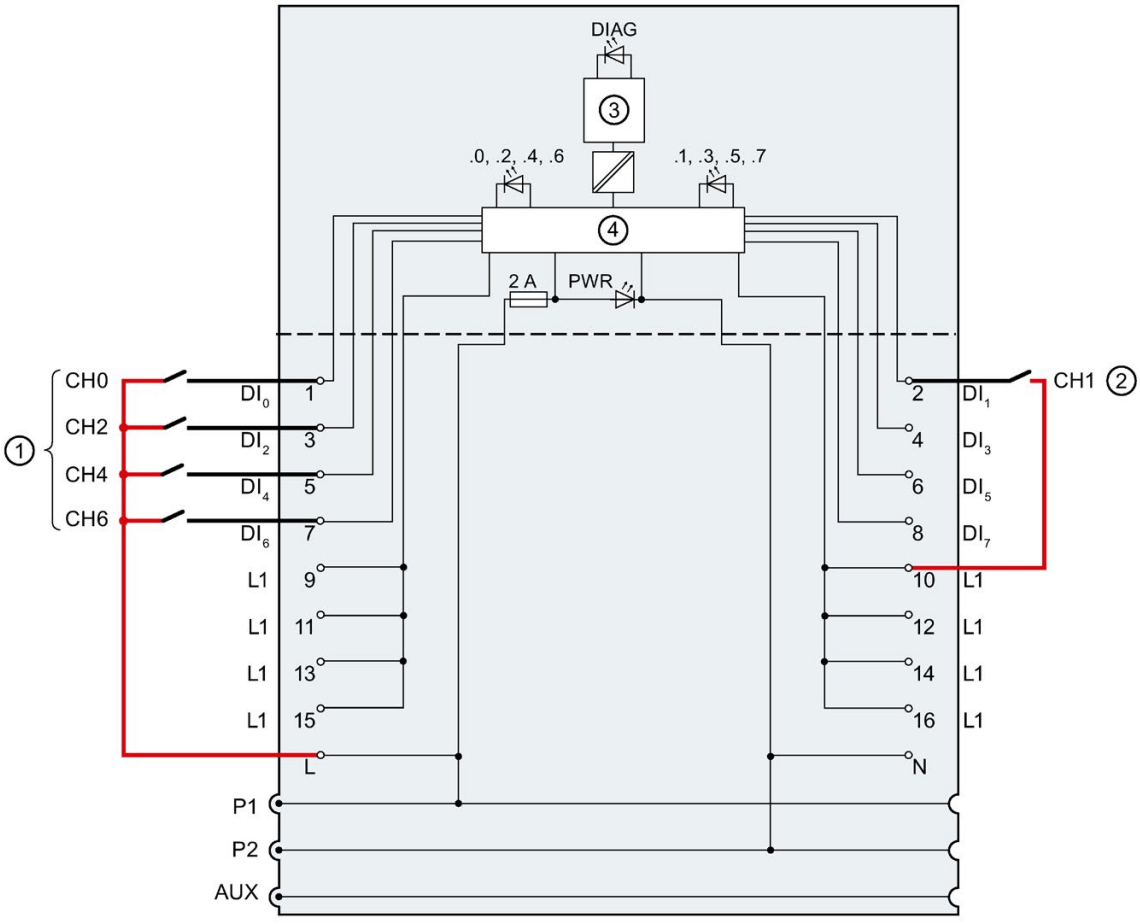

①	1-wire connection	DI_n	Input signal, channel n
②	2-wire connection	L1	Encoder supply, channel n
③	Backplane bus interface	L	Supply 24 V AC / 48 V UC
④	Input electronics	N	N-conductor connection
P1, P2, AUX	Internal self-assembling voltage buses Connection to left (dark-colored BaseUnit) Connection to left interrupted (light-colored BaseUnit)	DIAG	Error or diagnostics LED (green, red)
.0 to .7	Channel status LED (green)	PWR	Power LED (green)

Figure 3-1 Wiring and block diagram for 1-wire and 2-wire connection of encoders

Parameter assignment/addressing 4

4.1 Parameters

Parameters of DI 8x24VAC/48VUC BA

During configuration of the module with STEP 7, define the properties of the module via various parameters. The following table lists the configurable parameters. The effective range of the configurable parameters depends on the type of configuration.

The following configurations are possible:

- Central operation with an ET 200SP CPU
- Distributed operation on PROFINET IO in an ET 200SP system
- Distributed operation with PROFIBUS DP in an ET 200SP system

When performing the configuration in the user program, use the "WRREC" instruction to transfer the parameters to the module using data records (refer to the section Parameter assignment and structure of parameter data record (Page 24)).

The following parameter settings are possible:

Table 4- 1 Configurable parameters and their defaults (GSD file)

Parameters	Value range	Default	Configuration in RUN	Effective range with configuration software, e.g. STEP 7 (TIA Portal)	
				GSD file PROFINET IO	GSD file PROFIBUS DP [1]
Diagnostics, No supply voltage L	• Disable • Enable	Disable	Yes	Module	Module
Channel activated	• Disable • Enable	Enable	Yes	Channel	Channel
Potential group	• Use potential group of the left module (module plugged into a dark-colored BaseUnit) • Enable new potential group (module plugged into light-colored BaseUnit)	Use potential group of the left module	No	Module	Module

[1] The parameter length of the I/O module is 3 bytes.

4.2 Explanation of parameters

Diagnostics No supply voltage L

Enabling of the diagnostics for no or insufficient supply voltage L.

Channel activated

Determines whether a channel is enabled or disabled.

Potential group

A potential group consists of a group of directly adjacent I/O modules within an ET 200SP station, which are supplied via a common supply voltage.

A potential group begins with a light-colored BaseUnit through which the required voltage is supplied for all modules of the potential group. The light-colored BaseUnit interrupts the three self-assembling voltage buses P1, P2 and AUX to the left neighbor.

All additional I/O modules of this potential group are plugged into dark-colored BaseUnits. You take the potential of the self-assembling voltage buses P1, P2 and AUX from the left neighbor.

A potential group ends with the dark-colored BaseUnit, which is followed by a light-colored BaseUnit or server module in the station configuration.

4.3 Address space

The module can be configured differently in STEP 7; see following table. Depending on the configuration, additional/different addresses are assigned in the process image input.

Configuration options of DI 8x24VAC/48VUC BA

You can configure the module with STEP 7 (TIA Portal) or with a GSD file. If you configure the module using a GSD file, the configurations are available under various short designations/module names; see the table below. The following configurations are possible:

Table 4- 2 Configuration options with GSD file

Configuration	Short designation/module name in the GSD file	Configuration software, e.g. with STEP 7 (TIA Portal)		
		Integrated in hardware catalog STEP 7	GSD file PROFINET IO	GSD file PROFIBUS DP
1 x 8-channel without value status	DI 8x24VAC/48VUC BA	as of V15 with HSP 0254	X	X

Address space of the digital input module DI 8x24VAC/48VUC BA

The figure below shows the assignment of the address space for DI 8x24VAC/48VUC BA.

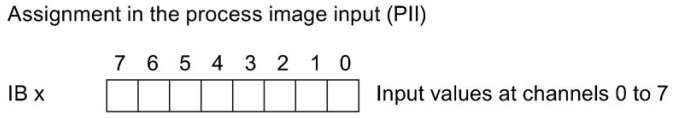

Figure 4-1 Address space of the digital input module DI 8x24VAC/48VUC BA

Interrupts/diagnostics alarms

5

5.1 Status and fault displays

LED displays

The figure below shows the LED displays (status and error displays) of the DI 8x24VAC/48VUC BA.

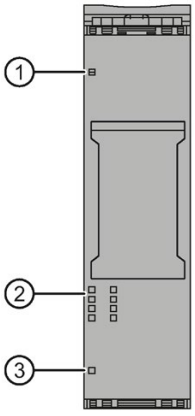

① DIAG (green/red)
② Channel status (green)
③ PWR (green)

Figure 5-1 LED display

Meaning of the LEDs

The tables below explain the meaning of the Status and fault displays.

LED DIAG

Table 5- 1 LED DIAG fault display

LED DIAG	Meaning
Off	Backplane bus supply of the ET 200SP not OK
Flashing	Module parameters not assigned
On	Module parameters assigned
Flashing	Module diagnostics is available

LED channel status

Table 5- 2 Channel status LED status and fault display

LED channel status	Meaning
Off	Process signal = 0
On	Process signal = 1

LED PWR

Table 5- 3 LED PWR status display

LED PWR	Meaning
Off	No supply voltage L
On	Supply voltage L present

5.2 Interrupts

The DI 8x24VAC/48VUC BA digital input module supports diagnostics interrupts.

Diagnostic interrupts

The module generates a diagnostic interrupt at the following events:

- Parameter assignment error
- No supply voltage

5.3 Diagnostics alarms

A diagnostic alarm is generated and the DIAG-LED flashes on the module for each diagnostics event. You can read out the diagnostics alarms, for example, in the diagnostics buffer of the CPU. You can evaluate the error codes with the user program.

Table 5- 4 Diagnostics alarms, their meaning and how to deal with them

Diagnostics alarm	Error code	Meaning	Remedy
Parameter assignment error	10_H	• The module cannot evaluate parameters for the channel. • Incorrect parameter assignment.	Correct the parameter assignment
No supply voltage	11_H	No or insufficient supply voltage L	• Check supply voltage L at the BaseUnit • Check BaseUnit type

Technical specifications

6

Technical specifications of the DI 8x24VAC ... 48VUC BA

Article number	6ES7131-6CF00-0AU0
General information	
Product type designation	DI 8x24VAC/48VUC BA
Firmware version	
• FW update possible	No
usable BaseUnits	BU type U0
Engineering with	
• STEP 7 TIA Portal configurable/integrated as of version	V15
• STEP 7 configurable/integrated as of version	Configurable via GSD file
• PROFIBUS as of GSD version/GSD revision	GSD Revision 5
• PROFINET as of GSD version/GSD revision	GSDML V2.3
Operating mode	
• DI	Yes
• Counter	No
• Oversampling	No
• MSI	No
Supply voltage	
Rated value (DC)	48 V
permissible range, lower limit (DC)	40.8 V
permissible range, upper limit (DC)	57.6 V
Rated value (AC)	48 V; 24 V/48 V; 50 Hz/60 Hz
Reverse polarity protection	Yes
Input current	
Current consumption, max.	70 mA; without sensor supply
Encoder supply	
Number of outputs	8
Short-circuit protection	Yes; Per module, 5x 20 mm fuse, 2 A/250 V, quick-response, replaceable
Output current	
• up to 60 °C, max.	1 A

Article number	6ES7131-6CF00-0AU0
24 V encoder supply	
• 24 V	No
Power loss	
Power loss, typ.	1.5 W
Address area	
Address space per module	
• Address space per module, max.	1 byte
Hardware configuration	
Automatic encoding	
• Mechanical coding element	Yes
Selection of BaseUnit for connection variants	
• 1-wire connection	BU type U0
• 2-wire connection	BU type U0
• 3-wire connection	BU type U0 + Potential isolation module
• 4-wire connection	BU type U0 + Potential isolation module
Digital inputs	
Number of digital inputs	8
Source/sink input	P-reading
Input characteristic curve in accordance with IEC 61131, type 1	Yes
Input characteristic curve in accordance with IEC 61131, type 2	No
Input characteristic curve in accordance with IEC 61131, type 3	No
Pulse extension	No
Input voltage	
• Type of input voltage	AC/DC
• for signal "0"	AC/DC < 10 V
• for signal "1"	AC > 14 V, DC > 34 V
Input current	
• for signal "1", typ.	3.5 mA
Input delay (for rated value of input voltage) for standard inputs	
– parameterizable	No
– at "0" to "1", max.	15 ms
– at "1" to "0", max.	20 ms
Cable length	
• shielded, max.	1 000 m
• unshielded, max.	600 m

Article number	6ES7131-6CF00-0AU0
Encoder	
Connectable encoders	
• 2-wire sensor	Yes
Isochronous mode	
Isochronous operation (application synchronized up to terminal)	No
Interrupts/diagnostics/status information	
Diagnostics function	Yes
Alarms	
• Diagnostic alarm	Yes
Diagnostic messages	
• Diagnostic information readable	Yes
• Monitoring the supply voltage	Yes
• Monitoring of encoder power supply	Yes
• Group error	Yes
Diagnostics indication LED	
• Monitoring of the supply voltage (PWR-LED)	Yes; green PWR LED
• Channel status display	Yes; Green LED
• for channel diagnostics	No
• for module diagnostics	Yes; green/red DIAG LED
Potential separation	
Potential separation channels	
• between the channels	No
• between the channels and backplane bus	Yes
• between the channels and the power supply of the electronics	No
Isolation	
Isolation tested with	1 200 V DC between supply voltage and backplane bus
Dimensions	
Width	20 mm
Height	73 mm
Depth	58 mm
Weights	
Weight, approx.	40 g

Dimensional drawing

See the manual ET 200SP BaseUnits (http://support.automation.siemens.com/WW/view/en/59753521)

Parameter data record A

A.1 Parameter assignment and structure of parameter data record

The data record of the module has an identical structure, regardless of whether you configure the module with PROFIBUS DP or PROFINET IO. With data record 128, you can reconfigure the module in your user program regardless of your programming. This means that you can use all the functions of the module even if you configured it via PROFIBUS-GSD.

Parameter assignment in the user program

The module parameters can be reassigned in RUN without affecting the other channels.

Changing parameters in RUN

The "WRREC" instruction is used to transfer the parameters to the module using data record 128. The parameters set with STEP 7 are not changed in the CPU, which means the parameters set in STEP 7 will be valid after a restart.

Output parameter STATUS

The module ignores errors that occur during the transfer of parameters with the "WRREC" instruction and continues operation with the previous parameter assignment. However, a corresponding error code is written to the STATUS output parameter.

The description of the "WRREC" instruction and the error codes is available in the STEP 7 online help.

Structure of data record 128

Note

Channel 0 includes the diagnostics enable for the entire module.

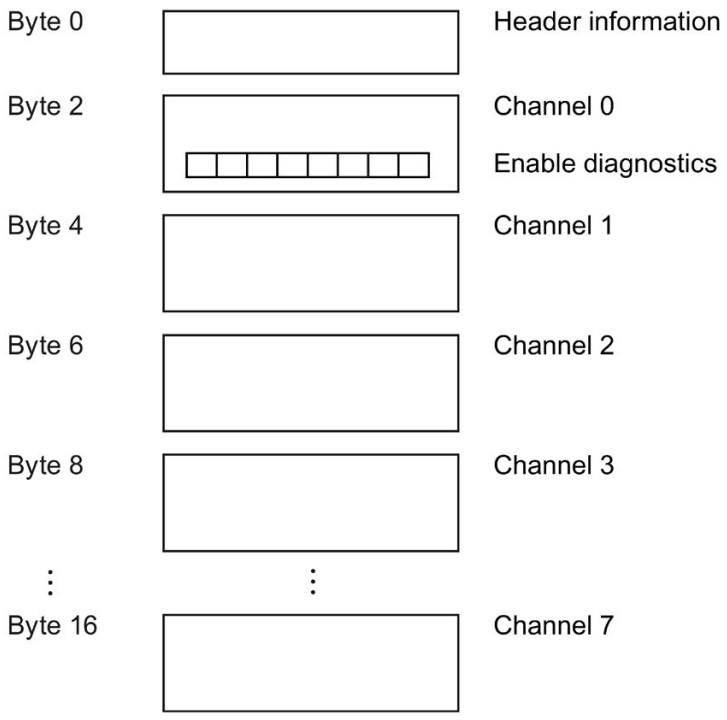

Figure A-1 Structure of data record 128

Header information

The figure below shows the structure of the header information.

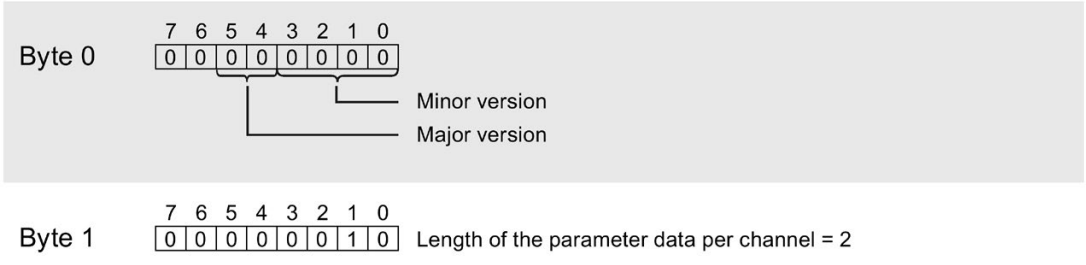

Figure A-2 Header information

Parameters

The figure below shows the structure of the parameters for channels 0 to 7.

You enable a parameter by setting the corresponding bit to "1".

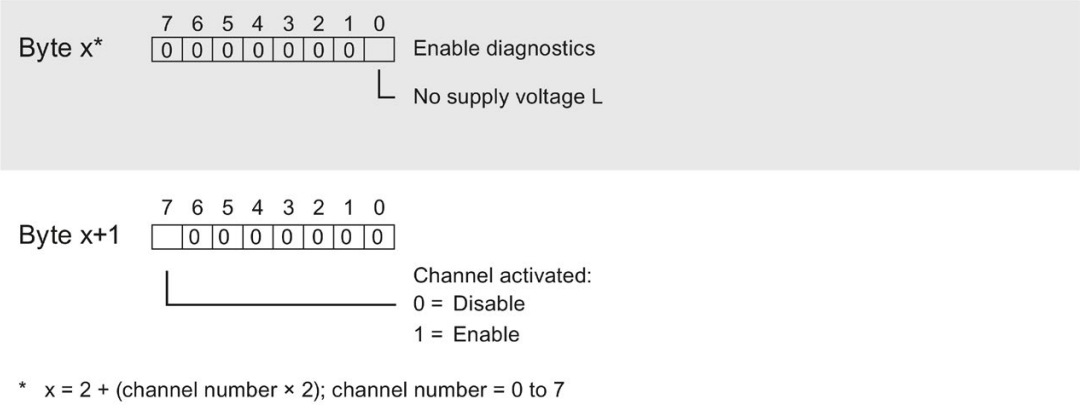

Figure A-3 Structure byte x to x+1 for the channels 0 to 7

Error transferring the data record

The module always checks all the values of the transferred data record. Only if all the values were transferred without errors does the module apply the values from the data record.

The WRREC instruction for writing data records returns corresponding error codes when errors occur in the STATUS parameter, see also the description of the "STATUS" parameter in the STEP 7 online help).

The following table shows the module-specific error codes and their meaning for the parameter data record 128.

Error code in STATUS parameter (hexadecimal)				Meaning	Solution
Byte 0	Byte 1	Byte 2	Byte 3		
DF	80	B0	xx	Number of the data record unknown.	Enter a valid number for the data record.
DF	80	B1	xx	Length of the data record incorrect.	Enter a valid value for the data record length.
DF	80	B2	xx	Slot invalid or cannot be accessed.	• Check the station whether the module is plugged or drawn. • Check the assigned values for the parameters of the WRREC instruction.
DF	80	E0	xx	Wrong version or error in the header information.	Correct the version, length and number of parameter blocks.
DF	80	E1	07	Invalid coding for input filter time.	Check the parameters of the module.

SIEMENS

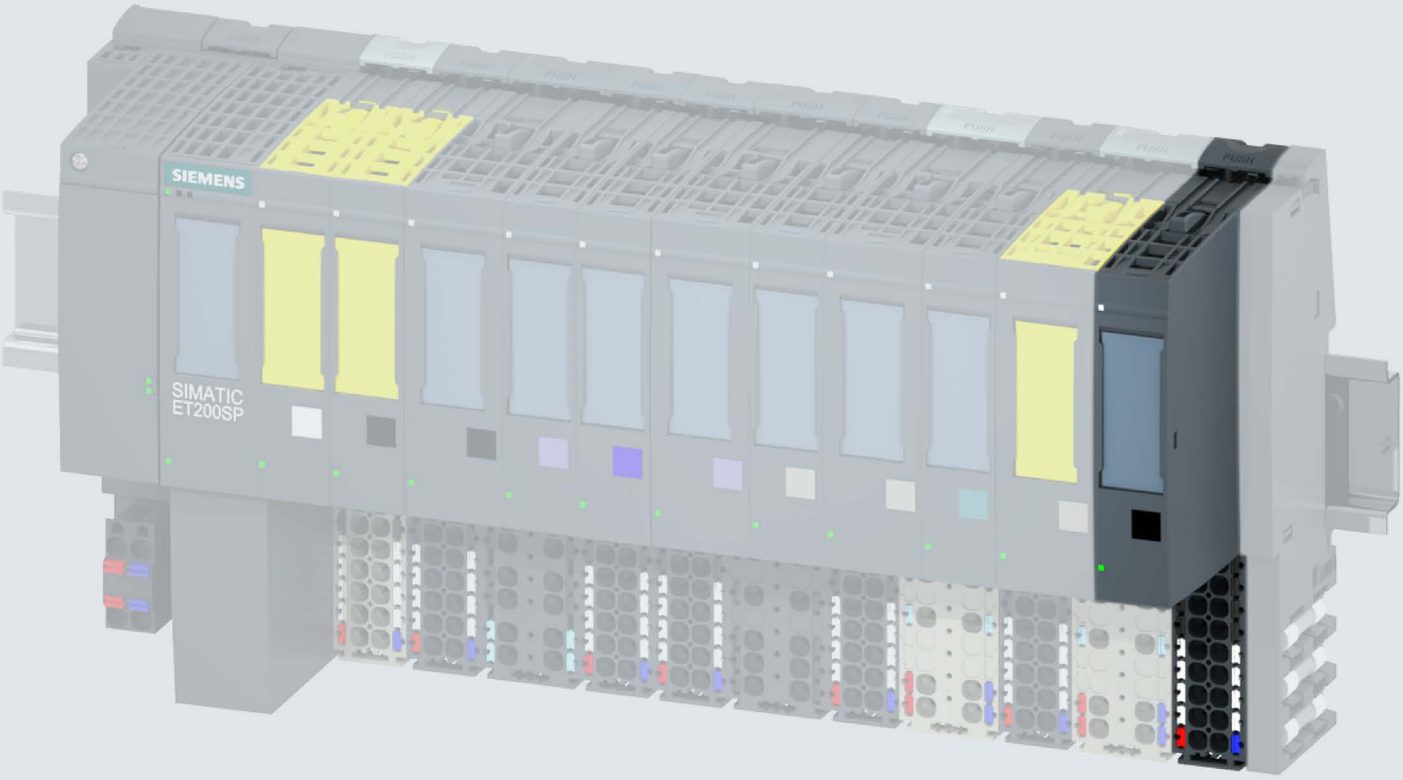

Manual

SIMATIC

ET 200SP

Digital output module
DQ 8x24VDC/0.5A BA (6ES7132-6BF01-0AA0)

Edition 09/2017

support.industry.siemens.com

SIEMENS

SIMATIC

ET 200SP
Digital output module
DQ 8x24VDC/0.5A BA
(6ES7132-6BF01-0AA0)

Manual

Preface

Documentation guide 1

Product overview 2

Wiring 3

Parameters/address space 4

Interrupts/diagnostics alarms 5

Technical specifications 6

Parameter data record A

09/2017

A5E36107249-AC

Legal information

Warning notice system

This manual contains notices you have to observe in order to ensure your personal safety, as well as to prevent damage to property. The notices referring to your personal safety are highlighted in the manual by a safety alert symbol, notices referring only to property damage have no safety alert symbol. These notices shown below are graded according to the degree of danger.

⚠ DANGER

indicates that death or severe personal injury **will** result if proper precautions are not taken.

⚠ WARNING

indicates that death or severe personal injury **may** result if proper precautions are not taken.

⚠ CAUTION

indicates that minor personal injury can result if proper precautions are not taken.

NOTICE

indicates that property damage can result if proper precautions are not taken.

If more than one degree of danger is present, the warning notice representing the highest degree of danger will be used. A notice warning of injury to persons with a safety alert symbol may also include a warning relating to property damage.

Qualified Personnel

The product/system described in this documentation may be operated only by **personnel qualified** for the specific task in accordance with the relevant documentation, in particular its warning notices and safety instructions. Qualified personnel are those who, based on their training and experience, are capable of identifying risks and avoiding potential hazards when working with these products/systems.

Proper use of Siemens products

Note the following:

⚠ WARNING

Siemens products may only be used for the applications described in the catalog and in the relevant technical documentation. If products and components from other manufacturers are used, these must be recommended or approved by Siemens. Proper transport, storage, installation, assembly, commissioning, operation and maintenance are required to ensure that the products operate safely and without any problems. The permissible ambient conditions must be complied with. The information in the relevant documentation must be observed.

Trademarks

All names identified by ® are registered trademarks of Siemens AG. The remaining trademarks in this publication may be trademarks whose use by third parties for their own purposes could violate the rights of the owner.

Disclaimer of Liability

We have reviewed the contents of this publication to ensure consistency with the hardware and software described. Since variance cannot be precluded entirely, we cannot guarantee full consistency. However, the information in this publication is reviewed regularly and any necessary corrections are included in subsequent editions.

Siemens AG
Division Digital Factory
Postfach 48 48
90026 NÜRNBERG
GERMANY

A5E36107249-AC
℗ 10/2017 Subject to change

Copyright © Siemens AG 2015 - 2017.
All rights reserved

Preface

Purpose of the documentation

This manual supplements the system manual ET 200SP distributed I/O system (http://support.automation.siemens.com/WW/view/en/58649293).

Functions that generally relate to the system are described in this manual.

The information provided in this manual and in the system/function manuals supports you in commissioning the system.

Changes compared to previous version

Compared to the previous version, this manual contains the following change:

Due to the change in hardware, the article number of the module has been changed from 6ES7132-6BF00-0AA0 to 6ES7132-6BF01-0AA0. Both modules are compatible, except for the firmware-update function.

Conventions

CPU: When the term "CPU" is used in this manual, it applies to the CPUs of the S7-1500 automation system as well as to the CPUs/interface modules of the distributed I/O system ET 200SP.

STEP 7: In this documentation, "STEP 7" is used as a synonym for all versions of the configuration and programming software "STEP 7 (TIA Portal)".

Please also observe notes marked as follows:

Note

A note contains important information on the product described in the documentation, on the handling of the product or on the section of the documentation to which particular attention should be paid.

Security information

Siemens provides products and solutions with industrial security functions that support the secure operation of plants, systems, machines and networks.

In order to protect plants, systems, machines and networks against cyber threats, it is necessary to implement – and continuously maintain – a holistic, state-of-the-art industrial security concept. Siemens' products and solutions constitute one element of such a concept.

Customers are responsible for preventing unauthorized access to their plants, systems, machines and networks. Such systems, machines and components should only be connected to an enterprise network or the internet if and to the extent such a connection is necessary and only when appropriate security measures (e.g. firewalls and/or network segmentation) are in place.

For additional information on industrial security measures that may be implemented, please visit (http://www.siemens.com/industrialsecurity).

Siemens' products and solutions undergo continuous development to make them more secure. Siemens strongly recommends that product updates are applied as soon as they are available and that the latest product versions are used. Use of product versions that are no longer supported, and failure to apply the latest updates may increase customers' exposure to cyber threats.

To stay informed about product updates, subscribe to the Siemens Industrial Security RSS Feed under (http://www.siemens.com/industrialsecurity).

Table of contents

Preface 4
1 Documentation guide 7
2 Product overview 12
2.1 Properties 12
3 Wiring 14
3.1 Wiring and block diagram 14
4 Parameters/address space 17
4.1 Parameters 17
4.2 Explanation of the parameters 19
4.3 Address space 20
5 Interrupts/diagnostics alarms 21
5.1 Status and error display 21
5.2 Interrupts 23
5.3 Diagnostics alarms 23
6 Technical specifications 24
6.1 Technical specifications 24
A Parameter data record 29
A.1 Parameter assignment and structure of the parameter data record 29

Documentation guide

1

The documentation for the SIMATIC ET 200SP distributed I/O system is arranged into three areas.
This arrangement enables you to access the specific content you require.

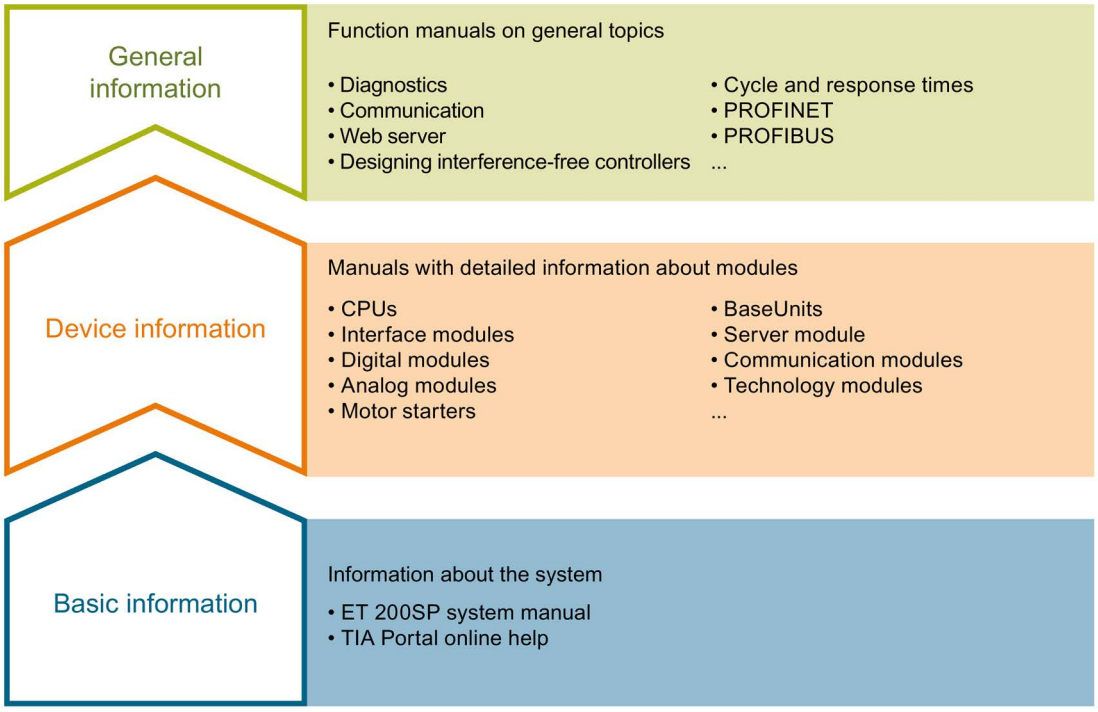

Basic information

The system manual describes in detail the configuration, installation, wiring and commissioning of the SIMATIC ET 200SP. distributed I/O system. The STEP 7 online help supports you in the configuration and programming.

Device information

Product manuals contain a compact description of the module-specific information, such as properties, wiring diagrams, characteristics and technical specifications.

General information

The function manuals contain detailed descriptions on general topics regarding the SIMATIC ET 200SP distributed I/O system, e.g. diagnostics, communication, Web server, motion control and OPC UA.

You can download the documentation free of charge from the Internet (https://support.industry.siemens.com/cs/ww/en/view/109742709).

Changes and supplements to the manuals are documented in a Product Information.

You can download the product information free of charge from the Internet (https://support.industry.siemens.com/cs/us/en/view/73021864).

Manual Collection ET 200SP

The Manual Collection contains the complete documentation on the SIMATIC ET 200SP distributed I/O system gathered together in one file.

You can find the Manual Collection on the Internet (http://support.automation.siemens.com/WW/view/en/84133942).

"mySupport"

With "mySupport", your personal workspace, you make the most of your Industry Online Support.

In "mySupport" you can store filters, favorites and tags, request CAx data and put together your personal library in the Documentation area. Furthermore, your data is automatically filled into support requests and you always have an overview of your current requests.

You need to register once to use the full functionality of "mySupport".

You can find "mySupport" in the Internet (https://support.industry.siemens.com/My/ww/en).

"mySupport" - Documentation

In the Documentation area of "mySupport", you have the possibility to combine complete manuals or parts of them to make your own manual.
You can export the manual in PDF format or in an editable format.

You can find "mySupport" - Documentation in the Internet (http://support.industry.siemens.com/My/ww/en/documentation).

"mySupport" - CAx Data

In the CAx Data area of "mySupport", you can have access the latest product data for your CAx or CAe system.

You configure your own download package with a few clicks.

In doing so you can select:

- Product images, 2D dimension drawings, 3D models, internal circuit diagrams, EPLAN macro files
- Manuals, characteristics, operating manuals, certificates
- Product master data

You can find "mySupport" - CAx Data in the Internet (http://support.industry.siemens.com/my/ww/en/CAxOnline).

Application examples

The application examples support you with various tools and examples for solving your automation tasks. Solutions are shown in interplay with multiple components in the system - separated from the focus in individual products.

You can find the application examples on the Internet (https://support.industry.siemens.com/sc/ww/en/sc/2054).

TIA Selection Tool

With the TIA Selection Tool, you can select, configure and order devices for Totally Integrated Automation (TIA).
This tool is the successor of the SIMATIC Selection Tool and combines the known configurators for automation technology into one tool.
With the TIA Selection Tool, you can generate a complete order list from your product selection or product configuration.

You can find the TIA Selection Tool on the Internet (http://w3.siemens.com/mcms/topics/en/simatic/tia-selection-tool).

SIMATIC Automation Tool

You can use the SIMATIC Automation Tool to run commissioning and maintenance activities simultaneously on various SIMATIC S7 stations as a bulk operation independently of the TIA Portal.

The SIMATIC Automation Tool provides a multitude of functions:

- Scanning of a PROFINET/Ethernet network and identification of all connected CPUs
- Address assignment (IP, subnet, gateway) and station name (PROFINET device) to a CPU
- Transfer of the data and the programming device/PC time converted to UTC time to the module
- Program download to CPU
- Operating mode switchover RUN/STOP
- Localization of the CPU by means of LED flashing
- Reading out CPU error information
- Reading the CPU diagnostic buffer
- Reset to factory settings
- Updating the firmware of the CPU and connected modules

You can find the SIMATIC Automation Tool on the Internet (https://support.industry.siemens.com/cs/ww/en/view/98161300).

PRONETA

With SIEMENS PRONETA (PROFINET network analysis), you analyze the plant network during commissioning. PRONETA features two core functions:

- The topology overview independently scans PROFINET and all connected components.
- The IO check is a fast test of the wiring and the module configuration of a system.

You can find SIEMENS PRONETA on the Internet (https://support.industry.siemens.com/cs/ww/en/view/67460624).

SINETPLAN

SINETPLAN, the Siemens Network Planner, supports you in planning automation systems and networks based on PROFINET. The tool facilitates professional and predictive dimensioning of your PROFINET installation as early as in the planning stage. In addition, SINETPLAN supports you during network optimization and helps you to exploit network resources optimally and to plan reserves. This helps to prevent problems in commissioning or failures during productive operation even in advance of a planned operation. This increases the availability of the production plant and helps improve operational safety.

The advantages at a glance

- Network optimization thanks to port-specific calculation of the network load
- Increased production availability thanks to online scan and verification of existing systems
- Transparency before commissioning through importing and simulation of existing STEP 7 projects
- Efficiency through securing existing investments in the long term and optimal exploitation of resources

You can find SINETPLAN on the Internet (https://www.siemens.com/sinetplan).

Product overview

2

2.1 Properties

Article number

6ES7132-6BF01-0AA0 (number in package unit: 1 unit)

6ES7132-6BF01-2AA0 (number in package unit: 10 units)

View of the module

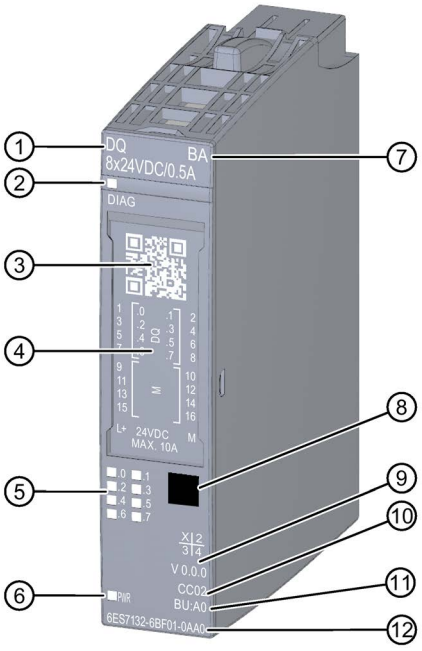

①	Module type and name	⑦	Function class
②	LED for diagnostics	⑧	Color coding module type
③	2D matrix code	⑨	Function and firmware version
④	Wiring diagram	⑩	Color code for selecting the color identification labels
⑤	LEDs for channel status	⑪	BU type
⑥	LED for supply voltage	⑫	Article number

Figure 2-1 View of the module DQ 8×24VDC/0.5A BA

Properties

The module has the following technical properties:

- Digital output module with 8 outputs
- Supply voltage L+
- Output current 0.5 A (per channel)
- Source output (PNP, P-switching)
- Configurable diagnostics (per module)
- Configurable substitute values (per channel)
- Suitable for solenoid valves, DC contactors, and indicator lights
- Safety-related shutdown

The module supports the following functions:

Table 2- 1 Version dependencies of the functions

Function	HW version	FW version	STEP 7		GSD file	
			TIA Portal	V5.x	PROFINET IO	PROFIBUS DP
Identification data I&M0 to I&M3	FS01	V0.0.0 and higher	V14 or higher with HSP 0222	V5.5 SP3 or higher with HSP 0230 V7.0	X	X
Configuration in RUN	FS01	V0.0.0 and higher	V14 or higher with HSP 0222	V5.5 SP3 or higher with HSP 0230 V7.0	X	X

Accessories

The following accessories must be ordered separately:

- Labeling strips
- Color identification labels
- Reference identification label
- Shield connector

See also

You can find additional information on the accessories in the system manual Distributed I/O System ET 200SP (http://support.automation.siemens.com/WW/view/en/58649293).

Wiring 3

3.1 Wiring and block diagram

This section includes the block diagram of the DQ 8x24VDC/0.5A BA module with the terminal assignments for a 1-wire, 2-wire and 3-wire connection.

You can use and combine the different wiring options for all channels.

You can find information on wiring the BaseUnit in the system manual Distributed I/O System ET 200SP (http://support.automation.siemens.com/WW/view/en/58649293).

Note

The load group of the module must begin with a light-colored BaseUnit. Keep this in mind also during the configuration.

Note

Cross circuit at output

Be aware that voltage from a cross-circuit at the output can feed L+ to modules.

Wiring: 1 and 2-wire connection of actuators

The following figure shows an example of the terminal assignment of the digital output module DQ 8×24VDC/0.5A BA on the BaseUnit BU type A0 without AUX terminals (1- and 2-wire connection).

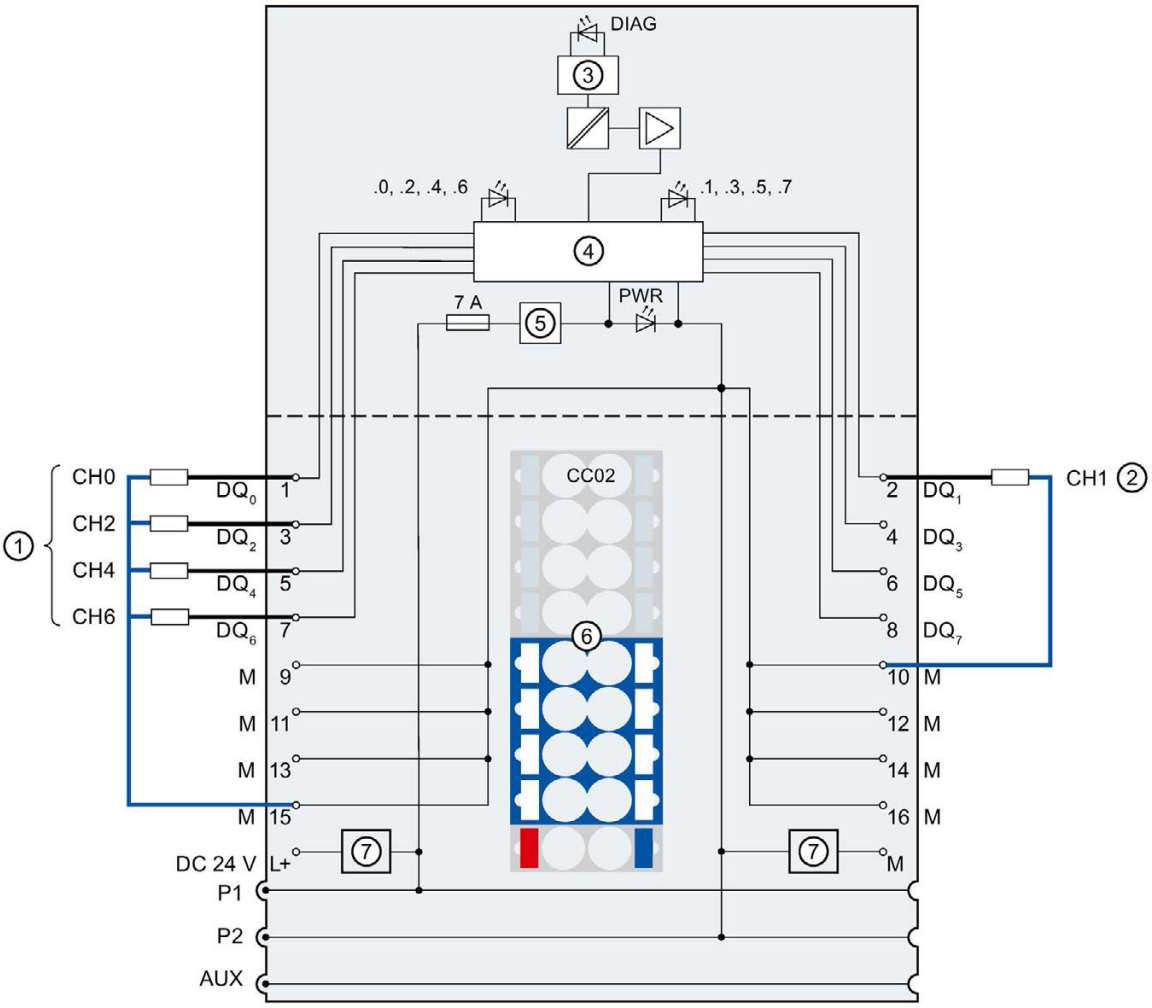

①	1-wire connection	24 V DC	Supply voltage L+ (infeed for light-colored BaseUnit only)
②	2-wire connection	M	Ground
③	Backplane bus interface	P1, P2, AUX	Internal self-assembling voltage buses Connection to left (dark-colored BaseUnit) Connection to left interrupted (light-colored BaseUnit)
④	Output electronics	DQ_n	Output signal, channel n
⑤	Polarity reversal protection	DIAG	Error or diagnostics LED (green, red)
⑥	Color-coded label with color code CC02 (optional)	.0 to .7	Channel status LED (green)
⑦	Filter connection supply voltage (only when light-colored BaseUnit is present)	PWR	Power LED (green)

Figure 3-1 Block diagram and terminal assignment for 1- and 2-wire connection of actuators

Wiring: 3-wire connection of actuators

The following figure shows an example of the terminal assignment of the digital output module DQ 8×24VDC/0.5A BA on the BaseUnit BU type A0 with AUX terminals (3-wire connection).

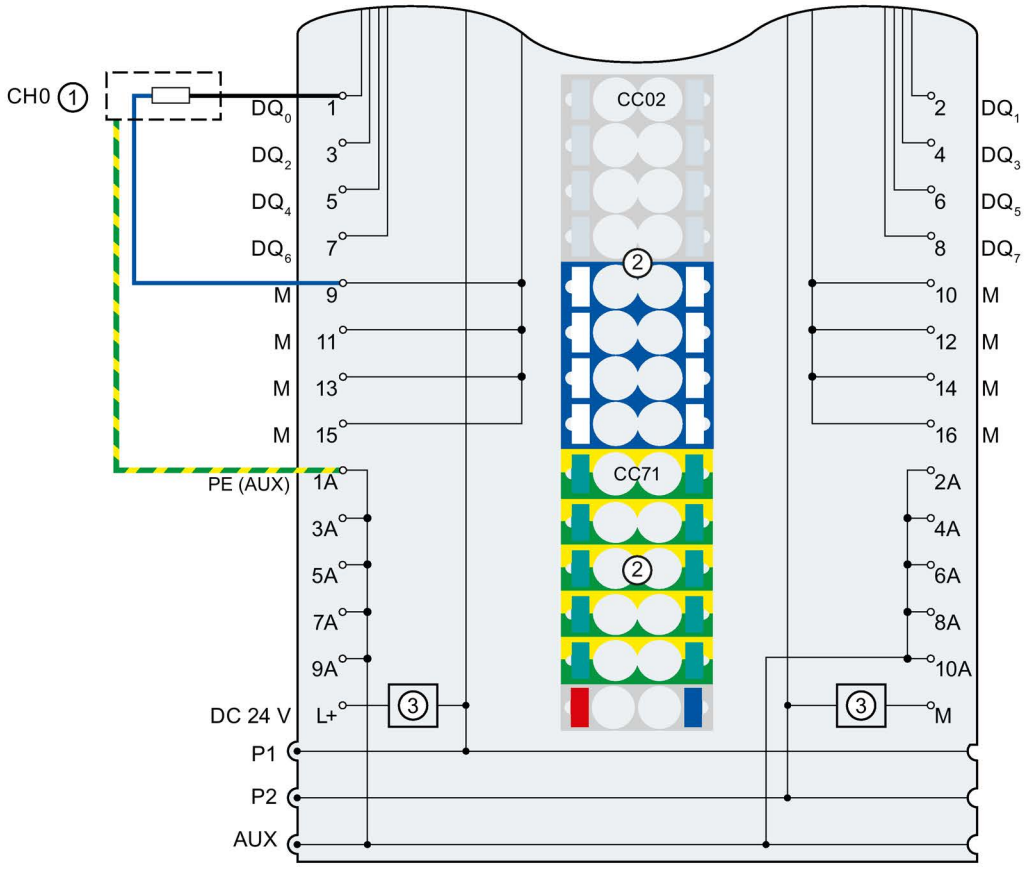

①	3-wire connection	1 A to 10 A	AUX terminals
②	Color-coded labels with color codes CC02 and CC71 (optional)	PE (AUX)	Protective conductor connection
③	Filter connection supply voltage (only when light-colored BaseUnit is present)	24 V DC	Supply voltage L+ (infeed for light-colored BaseUnit only)
DQ_n	Output signal, channel n	M	Ground
		P1, P2, AUX	Internal self-assembling voltage buses Connection to left (dark-colored BaseUnit) Connection to left interrupted (light-colored BaseUnit)

Figure 3-2 Terminal assignment for 3-wire connection of actuators

Parameters/address space 4

4.1 Parameters

Parameters for DQ 8x24VDC/0.5A BA

Specify the module properties with the various parameters in the course of your STEP 7 configuration. The following table lists the configurable parameters. The effective range of the configurable parameters depends on the type of configuration.

The following configurations are possible:

- Central operation with an ET 200SP CPU
- Distributed operation on PROFINET IO in an ET 200SP system
- Distributed operation with PROFIBUS DP in an ET 200SP system

When assigning parameters in the user program, use the "WRREC" instruction to transfer the parameters to the module by means of data records, see section Parameter assignment and structure of parameter data record (Page 29).

The following parameter settings are possible:

Table 4- 1 Configurable parameters and their defaults (GSD file)

Parameters	Range of values	Default	Parameter reassign-ment in RUN	Scope with configuration software, e.g. STEP 7 (TIA Portal)	
				GSD file PROFINET IO	GSD file PROFIBUS DP [1]
Diagnostics: No supply voltage L+	• Disable • Enable	Disable	Yes	Module	Module
Channel activated	• Disable • Enable	Enable	Yes	Channel	Channel

Parameters	Range of values	Default	Parameter reassignment in RUN	Scope with configuration software, e.g. STEP 7 (TIA Portal)	
				GSD file PROFINET IO	GSD file PROFIBUS DP [1]
Reaction to CPU STOP	• Turn off • Keep last value • Output substitute value 1	Turn off	Yes	Channel	Module
Potential group	• Use potential group of the left module (module plugged into a dark-colored BaseUnit) • Enable new potential group (module plugged into light-colored BaseUnit)	Use potential group of the left module	No	Module	Module

[1] Due to the limited number of parameters at a maximum of 244 bytes per ET 200SP station with a PROFIBUS GSD configuration, the configuration options are restricted. If required, you can assign these parameters using data record 128 as described in the "GSD file PROFINET IO" column (see table above). The parameter length of the I/O module is 16 bytes.

4.2 Explanation of the parameters

Diagnostics: No supply voltage L+

Enabling of the diagnostics for no or insufficient supply voltage L+.

Channel activated

Determines whether a channel is activated or deactivated.

Reaction to CPU STOP

Determines the behavior of the module in the event of a CPU STOP.

Potential group

A potential group consists of a group of directly adjacent I/O modules within an ET 200SP station, which are supplied via a common supply voltage.

A potential group begins with a light-colored BaseUnit through which the required voltage is supplied for all modules of the potential group. The light-colored BaseUnit interrupts the three self-assembling voltage buses P1, P2 and AUX to the left neighbor.

All additional I/O modules of this potential group are plugged into dark-colored BaseUnits. You take the potential of the self-assembling voltage buses P1, P2 and AUX from the left neighbor.

A potential group ends with the dark-colored BaseUnit, which follows a light-colored BaseUnit or server module in the station configuration.

See also

ET 200SP distributed I/O system
(http://support.automation.siemens.com/WW/view/en/58649293)

4.3 Address space

The module can be configured differently in STEP 7; see following table. Depending on the configuration, additional/different addresses are assigned in the process image of the inputs.

Configuration options of DQ 8x24VDC 0.5A BA

You can configure the module with STEP 7 (TIA Portal) or with a GSD file. If you configure the module using a GSD file, the configurations are available under various short designations/module names; see the table below. The following configurations are possible:

Table 4- 2 Configuration options with GSD file

Configuration	Short designation/module name in the GSD file	Configuration software, e.g. with STEP 7 (TIA Portal)		
		Integrated in hardware catalog STEP 7	GSD file PROFINET IO	GSD file PROFIBUS DP
1 x 8-channel without value status	DQ 8x24VDC 0.5A BA V0.0	V14, SP1 or higher with HSP 0222	X	X

Address space of the digital output module DQ 8x24VDC 0.5A BA

The figure below shows the assignment of the address space for DQ 8x24VDC/0.5A BA

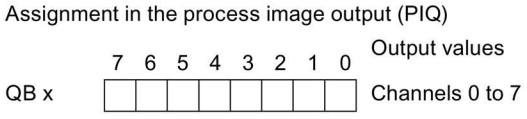

Figure 4-1 Address space of DQ 8x24VDC/0.5A BA

Interrupts/diagnostics alarms

5

5.1 Status and error display

LED display

DQ 8x24VDC/0.5A BA.

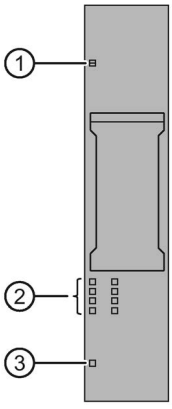

① DIAG (green/red)
② Channel status (green)
③ PWR (green)

Figure 5-1 LED display

Meaning of the LEDs

The following tables show the meaning of the status and error displays. Corrective measures for diagnostics alarms can be found in section Diagnostics alarms (Page 23).

DIAG LED

Table 5- 1 Error display of the DIAG LED

DIAG LED	Meaning
Off	Backplane bus supply of the ET 200SP not OK
Flashes	Module parameters not assigned
On	Module parameters assigned and no module diagnostics
Flashes	Module diagnostics is available

Channel status LED

Table 5- 2 Status display of the channel status LED

Channel status LED	Meaning
Off	Channel deactivated or activated and process signal = 0
On	Channel activated and process signal = 1

PWR LED

Table 5- 3 Status display of the PWR LED

PWR LED	Meaning
Off	Missing supply voltage L+
On	Supply voltage L+ present

5.2 Interrupts

The DQ 8×24VDC/0.5A BA digital output module supports diagnostics interrupts.

Diagnostics interrupts

The module generates a diagnostic interrupt at the following events:

- Parameter assignment error
- Supply voltage missing

5.3 Diagnostics alarms

A diagnostics alarm is generated and the DIAG-LED flashes on the module for each diagnostics event. You can read out the diagnostics alarms, for example, in the diagnostics buffer of the CPU. You can evaluate the error codes with the user program.

Table 5- 4 Diagnostics alarms, their meaning and corrective measures

Diagnostics alarm	Error code	Meaning	Solution
Parameter assignment error	10_H	• The module cannot evaluate parameters for the channel. • Incorrect parameter assignment.	Correct the parameter assignment
Supply voltage missing	11_H	Missing or insufficient supply voltage L+	• Check supply voltage L+ on the BaseUnit • Check BaseUnit type

Technical specifications

6

6.1 Technical specifications

Technical specifications of the DQ 8x24VDC/0.5A BA

Article number	6ES7132-6BF01-0AA0
General information	
Product type designation	DQ 8x24 VDC/0.5 A BA
Firmware version	V0.0
• FW update possible	No
usable BaseUnits	BU type A0
Color code for module-specific color identification plate	CC02
Product function	
• I&M data	Yes; I&M0 to I&M3
Engineering with	
• STEP 7 TIA Portal configurable/integrated as of version	V14
• STEP 7 configurable/integrated as of version	V5.5 SP3
• PROFIBUS as of GSD version/GSD revision	One GSD file each, Revision 3 and 5 and higher
• PROFINET as of GSD version/GSD revision	GSDML V2.3
Operating mode	
• DQ	Yes
• DQ with energy-saving function	No
• PWM	No
• Oversampling	No
• MSO	No
Redundancy	
• Redundancy capability	Yes
Supply voltage	
Rated value (DC)	24 V
permissible range, lower limit (DC)	19.2 V
permissible range, upper limit (DC)	28.8 V
Reverse polarity protection	Yes

Article number	6ES7132-6BF01-0AA0
Input current	
Current consumption, max.	45 mA; without load
Output voltage	
Rated value (DC)	24 V
Power loss	
Power loss, typ.	1 W
Address area	
Address space per module	
• Outputs	1 byte
Hardware configuration	
Automatic encoding	Yes
• Mechanical coding element	Yes
Selection of BaseUnit for connection variants	
• 1-wire connection	BU type A0
• 2-wire connection	BU type A0
• 3-wire connection	BU type A0 with AUX terminals
• 4-wire connection	BU type A0 + Potential isolation module
Digital outputs	
Type of digital output	Source output (PNP, current-sourcing)
Number of digital outputs	8
Current-sourcing	Yes
Short-circuit protection	Yes; per channel, electronic
• Response threshold, typ.	1 A
Limitation of inductive shutdown voltage to	Typ. L+ (-50 V)
Controlling a digital input	Yes
Switching capacity of the outputs	
• with resistive load, max.	0.5 A
• on lamp load, max.	5 W
Load resistance range	
• lower limit	48 Ω
• upper limit	100 kΩ
Output current	
• for signal "1" rated value	0.5 A
• for signal "1" permissible range, max.	0.5 A
• for signal "0" residual current, max.	10 µA
Output delay with resistive load	
• "0" to "1", max.	100 µs; at rated load
• "1" to "0", max.	150 µs; at rated load

Article number	6ES7132-6BF01-0AA0
Parallel switching of two outputs	
• for uprating	No
• for redundant control of a load	Yes
Switching frequency	
• with resistive load, max.	100 Hz
• with inductive load, max.	2 Hz
• on lamp load, max.	10 Hz
Total current of the outputs	
• Current per channel, max.	0.5 A
• Current per module, max.	4 A
Total current of the outputs (per module)	
horizontal installation	
– up to 30 °C, max.	4 A
– up to 40 °C, max.	4 A
– up to 50 °C, max.	4 A
– up to 60 °C, max.	4 A
vertical installation	
– up to 30 °C, max.	4 A; in all other mounting positions
– up to 40 °C, max.	4 A; in all other mounting positions
– up to 50 °C, max.	4 A; in all other mounting positions
Cable length	
• shielded, max.	1 000 m
• unshielded, max.	600 m
Isochronous mode	
Isochronous operation (application synchronized up to terminal)	No
Interrupts/diagnostics/status information	
Diagnostics function	Yes
Substitute values connectable	Yes
Alarms	
• Diagnostic alarm	Yes
Diagnostic messages	
• Monitoring the supply voltage	Yes
• Wire-break	No
• Short-circuit	No

Article number	6ES7132-6BF01-0AA0
Diagnostics indication LED	
• Monitoring of the supply voltage (PWR-LED)	Yes; green PWR LED
• Channel status display	Yes; Green LED
• for channel diagnostics	No
• for module diagnostics	Yes; green/red DIAG LED
Potential separation	
Potential separation channels	
• between the channels	No
• between the channels and backplane bus	Yes
• between the channels and the power supply of the electronics	No
Isolation	
Isolation tested with	707 V DC (type test)
Standards, approvals, certificates	
Suitable for safety-oriented group deactivation	Yes
Ambient conditions	
Ambient temperature during operation	
• horizontal installation, min.	0 °C
• horizontal installation, max.	60 °C
• vertical installation, min.	0 °C; in all other mounting positions
• vertical installation, max.	50 °C; in all other mounting positions
Altitude during operation relating to sea level	
• Ambient air temperature-barometric pressure-altitude	On request: Ambient temperatures lower than 0 °C (without condensation) and/or installation altitudes greater than 2 000 m
Dimensions	
Width	15 mm
Height	73 mm
Depth	58 mm
Weights	
Weight, approx.	30 g

Safety-related shutdown

Note

The digital output module DQ 8x24VDC/0.5A BA supports safety-related shutdown in connection with a fail-safe power module F-PM-E 24VDC/8A PPM ST:

- SIL according to IEC 61508: 2
- Highest attainable safety class in safety mode, performance level according to EN ISO 13849-1: d

Dimension drawing

See manual ET 200SP BaseUnits (http://support.automation.siemens.com/WW/view/en/59753521)

Parameter data record

A

A.1 Parameter assignment and structure of the parameter data record

The data record of the module has an identical structure, regardless of whether you configure the module with PROFIBUS DP or PROFINET IO. With data record 128, you can reconfigure the module in your user program regardless of your programming. This means that you can use all the functions of the module even if you configured it via PROFIBUS-GSD.

Parameter assignment in the user program

You have the option to reconfigure the module in RUN (e.g. the response of selected channels to the CPU-STOP state can be changed in RUN without having an effect on the other channels).

Changing parameters in RUN

The "WRREC" instruction is used to transfer the parameters to the module using data record 128. The parameters set in STEP 7 are not changed in the CPU, which means that the parameters set in STEP 7 will be valid again after a restart.

Output parameter STATUS

If errors occur when transferring parameters with the "WRREC" instruction, the module continues operation with the previous parameter assignment. The STATUS output parameter contains a corresponding error code.

You will find a description of the "WRREC" instruction and the error codes in the STEP 7 online help.

Structure of data record 128

Note

Channel 0 includes the diagnostics enable for the entire module.

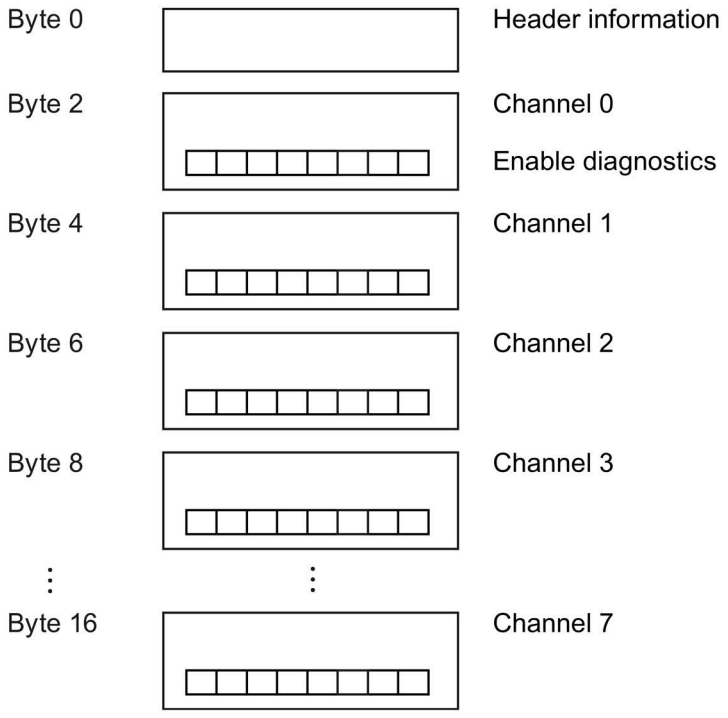

Figure A-1 Structure of data record 128

Header information

The figure below shows the structure of the header information.

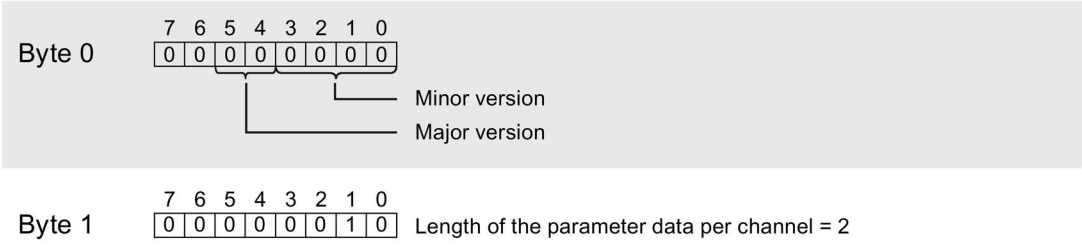

Figure A-2 Header information

Parameters

The figure below shows the structure of the parameters for channels 0 to 7.

You enable a parameter by setting the corresponding bit to "1".

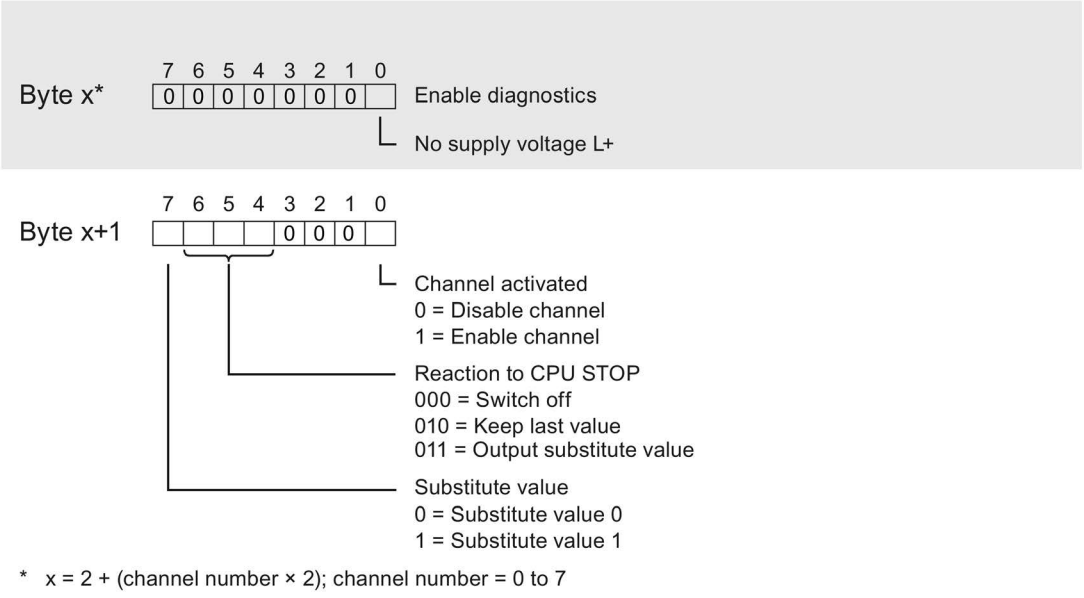

* x = 2 + (channel number × 2); channel number = 0 to 7

Figure A-3 Structure byte x to x+1 for the channels 0 to 7

Error transferring the data record

The module always checks all the values of the transferred data record. Only if all the values were transferred without errors does the module apply the values from the data record.

The WRREC instruction for writing data records returns corresponding error codes when errors occur in the STATUS parameter. (See also the description of the "STATUS" parameter in the STEP 7 online help).

The following table shows the module-specific error codes and their meaning for the parameter data record 128.

Error code in STATUS parameter (hexadecimal)				Meaning	Solution
Byte 0	Byte 1	Byte 2	Byte 3		
DF	80	B0	xx	Number of the data record unknown.	Enter a valid number for the data record.
DF	80	B1	xx	Length of the data record incorrect.	Enter a valid value for the data record length.
DF	80	B2	xx	Slot invalid or cannot be accessed.	• Check the station whether the module is plugged or drawn. • Check the assigned values for the parameters of the WRREC instruction.
DF	80	E0	xx	Wrong version or error in the header information.	Correct the version, length and number of parameter blocks.
DF	80	E1	06	Invalid coding for substitute value behavior.	Check the parameters of the module.

SIEMENS

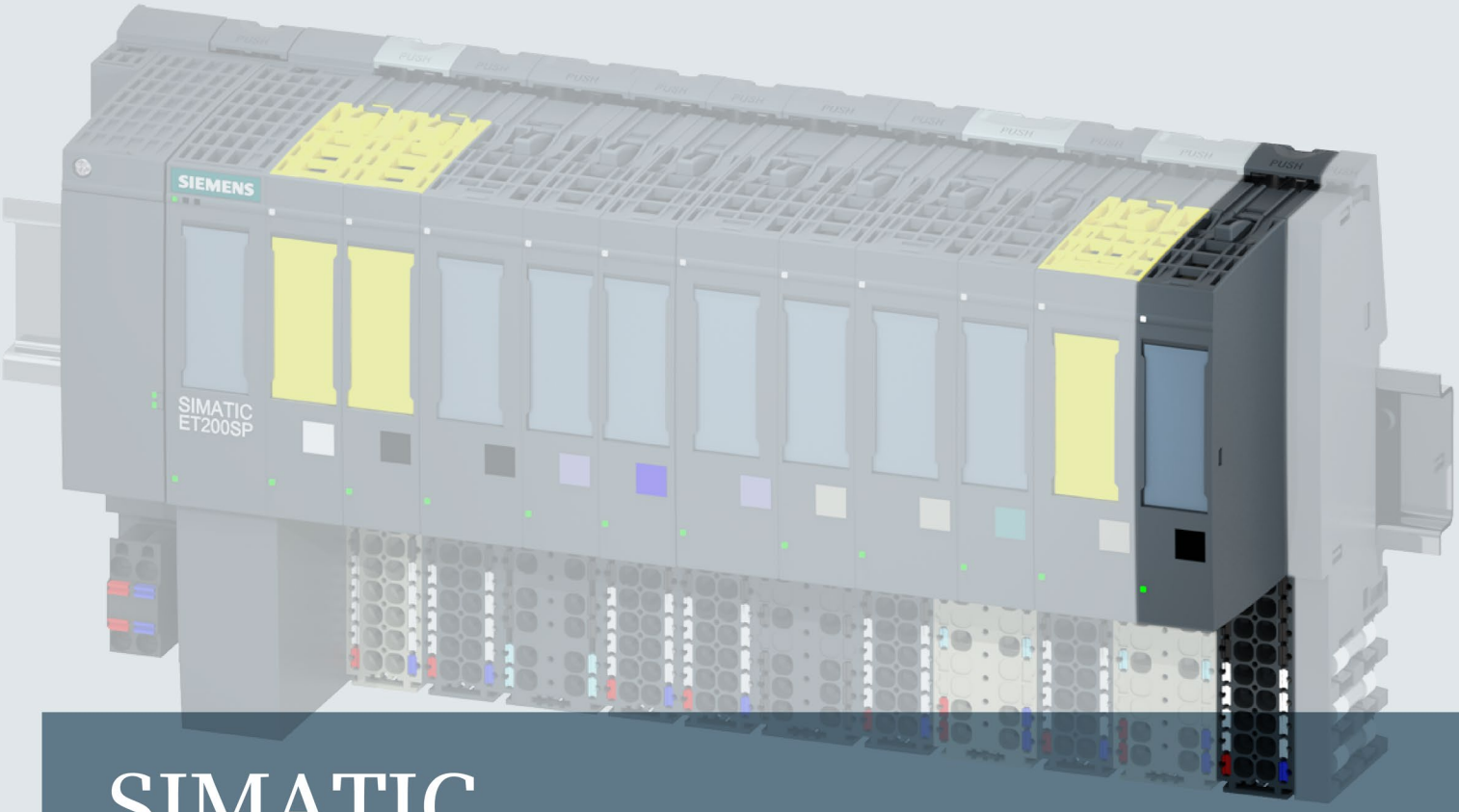

SIMATIC

ET 200SP

Digital output module DQ 4x24VDC/2A ST (6ES7132-6BD20-0BA0)

Manual

Edition 12/2015

Answers for industry.

SIEMENS

SIMATIC

ET 200SP
Digital output module
DQ 4x24VDC/2A ST
(6ES7132-6BD20-0BA0)

Manual

Preface

Documentation guide 1

Product overview 2

Wiring up 3

Parameters/address space 4

Interrupts/diagnostics alarms 5

Technical specifications 6

Parameter data record A

12/2015

A5E03574516-AD

Legal information

Warning notice system

This manual contains notices you have to observe in order to ensure your personal safety, as well as to prevent damage to property. The notices referring to your personal safety are highlighted in the manual by a safety alert symbol, notices referring only to property damage have no safety alert symbol. These notices shown below are graded according to the degree of danger.

⚠ DANGER

indicates that death or severe personal injury **will** result if proper precautions are not taken.

⚠ WARNING

indicates that death or severe personal injury **may** result if proper precautions are not taken.

⚠ CAUTION

indicates that minor personal injury can result if proper precautions are not taken.

NOTICE

indicates that property damage can result if proper precautions are not taken.

If more than one degree of danger is present, the warning notice representing the highest degree of danger will be used. A notice warning of injury to persons with a safety alert symbol may also include a warning relating to property damage.

Qualified Personnel

The product/system described in this documentation may be operated only by **personnel qualified** for the specific task in accordance with the relevant documentation, in particular its warning notices and safety instructions. Qualified personnel are those who, based on their training and experience, are capable of identifying risks and avoiding potential hazards when working with these products/systems.

Proper use of Siemens products

Note the following:

⚠ WARNING

Siemens products may only be used for the applications described in the catalog and in the relevant technical documentation. If products and components from other manufacturers are used, these must be recommended or approved by Siemens. Proper transport, storage, installation, assembly, commissioning, operation and maintenance are required to ensure that the products operate safely and without any problems. The permissible ambient conditions must be complied with. The information in the relevant documentation must be observed.

Trademarks

All names identified by ® are registered trademarks of Siemens AG. The remaining trademarks in this publication may be trademarks whose use by third parties for their own purposes could violate the rights of the owner.

Disclaimer of Liability

We have reviewed the contents of this publication to ensure consistency with the hardware and software described. Since variance cannot be precluded entirely, we cannot guarantee full consistency. However, the information in this publication is reviewed regularly and any necessary corrections are included in subsequent editions.

Siemens AG
Division Digital Factory
Postfach 48 48
90026 NÜRNBERG
GERMANY

A5E03574516-AD
℗ 12/2015 Subject to change

Copyright © Siemens AG 2012 - 2015.
All rights reserved

Preface

Purpose of the documentation

This manual supplements the ET 200SP distributed I/O system (http://support.automation.siemens.com/WW/view/en/58649293) system manual.

Functions that generally relate to the system are described in this system manual.

The information provided in this manual and in the system/function manuals supports you in commissioning the system.

Conventions

CPU: When the term "CPU" is used in this manual, it applies to the CPUs of the S7-1500 automation system as well as to the CPUs/interface modules of the ET 200SP distributed I/O system.

STEP 7: In this documentation, "STEP 7" is used as a synonym for all versions of the configuration and programming software "STEP 7 (TIA Portal)".

Please also observe notes marked as follows:

Note

A note contains important information on the product described in the documentation, on the handling of the product or on the section of the documentation to which particular attention should be paid.

Security information

Siemens provides products and solutions with industrial security functions that support the secure operation of plants, solutions, machines, equipment and/or networks. They are important components in a holistic industrial security concept. With this in mind, Siemens' products and solutions undergo continuous development. Siemens recommends strongly that you regularly check for product updates.

For the secure operation of Siemens products and solutions, it is necessary to take suitable preventive action (e.g. cell protection concept) and integrate each component into a holistic, state-of-the-art industrial security concept. Third-party products that may be in use should also be considered. You can find more information about industrial security on the Internet (http://www.siemens.com/industrialsecurity).

To stay informed about product updates as they occur, sign up for a product-specific newsletter. You can find more information on the Internet (http://support.automation.siemens.com).

Table of contents

Preface 4
1 Documentation guide 6
2 Product overview 9
2.1 Properties 9
3 Wiring up 11
3.1 Wiring and block diagram 11
4 Parameters/address space 14
4.1 Parameters 14
4.2 Explanation of the parameters 16
4.3 Address space 17
5 Interrupts/diagnostics alarms 18
5.1 Status and error display 18
5.2 Interrupts 20
5.3 Diagnostics alarms 20
6 Technical specifications 22
6.1 Technical specifications 22
A Parameter data record 27
A.1 Parameter assignment and structure of the parameter data record 27

Documentation guide

1

The documentation for the SIMATIC ET 200SP distributed I/O system is arranged into three areas.
This arrangement enables you to access the specific content you require.

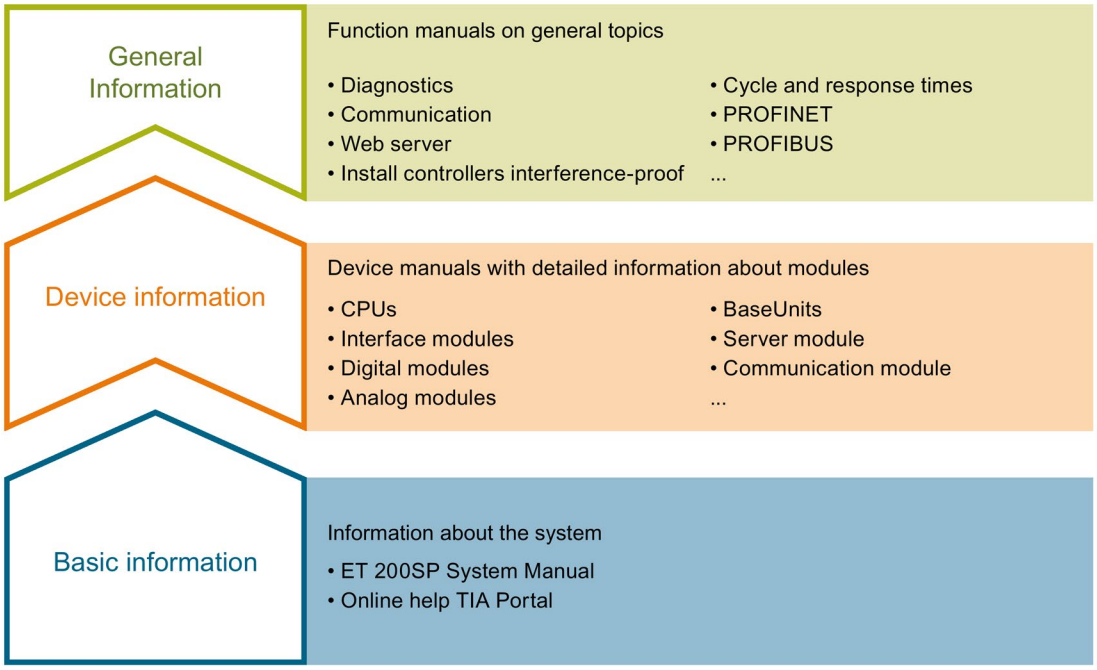

Basic information

The system manual describes in detail the configuration, installation, wiring and commissioning of the SIMATIC ET 200SP. distributed I/O system. The STEP 7 online help supports you in the configuration and programming.

Device information

Product manuals contain a compact description of the module-specific information, such as properties, terminal diagrams, characteristics and technical specifications.

General information

The function manuals contain detailed descriptions on general topics regarding the SIMATIC ET 200SP distributed I/O system, e.g. diagnostics, communication, Web server, designing interference-free controllers.

You can download the documentation free of charge from the Internet (http://w3.siemens.com/mcms/industrial-automation-systems-simatic/en/manual-overview/tech-doc-et200/Pages/Default.aspx).

Changes and supplements to the manuals are documented in a Product Information.

You can download the product information free of charge from the Internet (https://support.industry.siemens.com/cs/us/en/view/73021864).

Manual Collection ET 200SP

The Manual Collection contains the complete documentation on the SIMATIC ET 200SP distributed I/O system gathered together in one file.

You can find the Manual Collection on the Internet (http://support.automation.siemens.com/WW/view/en/84133942).

"mySupport"

With "mySupport", your personal workspace, you make the most of your Industry Online Support.

In "mySupport" you can store filters, favorites and tags, request CAx data and put together your personal library in the Documentation area. Furthermore, your data is automatically filled into support requests and you always have an overview of your current requests.

You need to register once to use the full functionality of "mySupport".

You can find "mySupport" in the Internet (https://support.industry.siemens.com/My/ww/en).

"mySupport" - Documentation

In the Documentation area of "mySupport", you have the possibility to combine complete manuals or parts of them to make your own manual.
You can export the manual in PDF format or in an editable format.

You can find "mySupport" - Documentation in the Internet (http://support.industry.siemens.com/My/ww/en/documentation).

"mySupport" - CAx Data

In the CAx Data area of "mySupport", you can have access the latest product data for your CAx or CAe system.

You configure your own download package with a few clicks.

In doing so you can select:

- Product images, 2D dimension drawings, 3D models, internal circuit diagrams, EPLAN macro files
- Manuals, characteristics, operating manuals, certificates
- Product master data

You can find "mySupport" - CAx Data in the Internet (http://support.industry.siemens.com/my/ww/en/CAxOnline).

Application examples

The application examples support you with various tools and examples for solving your automation tasks. Solutions are shown in interplay with multiple components in the system - separated from the focus in individual products.

You can find the application examples on the Internet (https://support.industry.siemens.com/sc/ww/en/sc/2054).

TIA Selection Tool

With the TIA Selection Tool, you can select, configure and order devices for Totally Integrated Automation (TIA).
This tool is the successor of the SIMATIC Selection Tool and combines the known configurators for automation technology into one tool.
With the TIA Selection Tool, you can generate a complete order list from your product selection or product configuration.

You can find the TIA Selection Tool on the Internet (http://w3.siemens.com/mcms/topics/en/simatic/tia-selection-tool).

Product overview

2

2.1 Properties

Article number

6ES7132-6BD20-0BA0 (packaging unit: 1 unit)

6ES7132-6BD20-2BA0 (packaging unit: 10 units)

View of the module

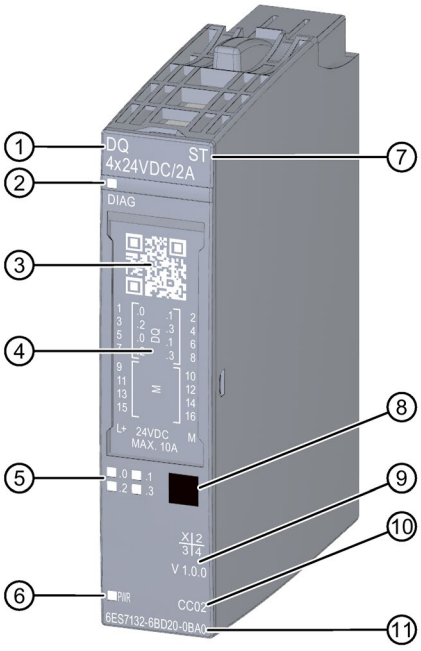

① Module type and name
② LED for diagnostics
③ 2D matrix code
④ Wiring diagram
⑤ LEDs for channel status
⑥ LED for supply voltage
⑦ Function class
⑧ Color coding module type
⑨ Function and firmware version
⑩ Color code for selecting the color identification labels
⑪ Article number

Image 2-1 View of the module DQ 4×24VDC/2A ST

Properties

The module has the following technical properties:

- Digital output module with 4 outputs
- Source output (PNP, P-switching)
- Supply voltage L+
- Output current 2 A (per channel)
- Total current 8 A (per module) (see derating: Technical specifications (Page 22))
- Configurable diagnostics (per module)
- Configurable substitute values (per channel)
- Suitable for solenoid valves, DC contactors, and indicator lights
- Safety-related shutdown

The module supports the following functions:

- Firmware update
- I&M identification data
- Configuration in RUN
- PROFIenergy

Table 2- 1 Version dependencies of other module functions

Function	Product version of the module as of	Firmware version of the module as of
Value status	1	V1.1.0

You can configure the module with STEP 7 (TIA Portal) and with a GSD file.

Accessories

The following accessories must be ordered separately:

- Labeling strips
- Color identification labels
- Reference identification label
- Shield connector

See also

You can find additional information on the accessories in the system manual ET 200SP distributed I/O system (https://support.industry.siemens.com/cs/ww/en/view/91696622).

Wiring up

3

3.1 Wiring and block diagram

This section includes the block diagram of the DQ 4x24VDC/2A ST module with the terminal assignments for a 1-wire, 2-wire and 3-wire connection. You can use and combine the different wiring options for all channels.

You can find information on wiring the BaseUnits in the system manual Distributed I/O System ET 200SP (http://support.automation.siemens.com/WW/view/en/58649293).

Note

- The load group of the module must begin with a light-colored BaseUnit. Keep this in mind also during the configuration.

Note

The fuse integrated in BaseUnit type A1 may be triggered in the digital output module, rendering the terminals unusable.

Note

Cross circuit at output

Be aware that voltage from a cross-circuit at the output can feed L+ to modules.

Wiring: 1 and 2-wire connection of actuators

The following figure shows an example of the terminal assignment of the digital output module DQ 4×24VDC/2A ST on the BaseUnit BU type A0 without AUX terminals (1- and 2-wire connection).

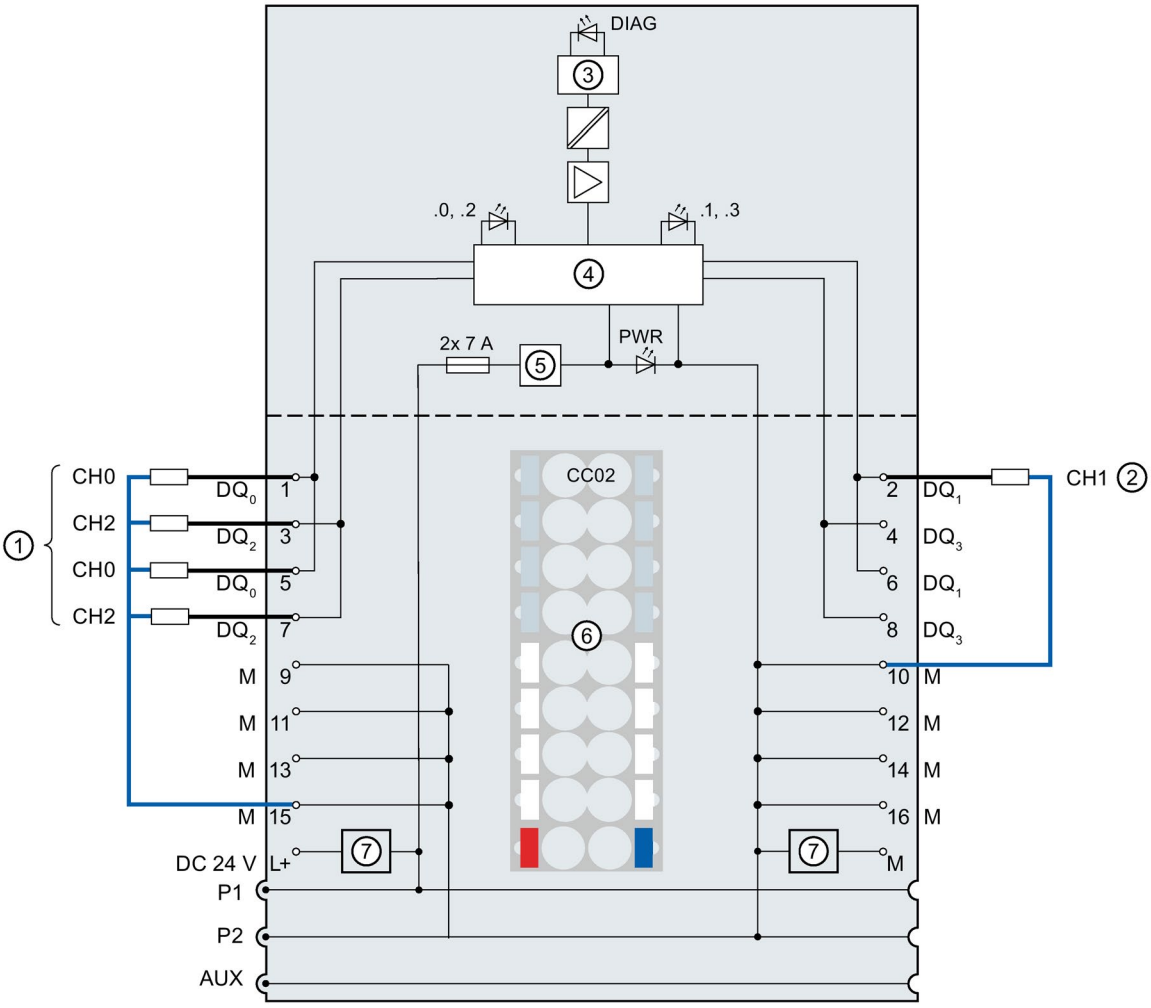

①	1-wire connection	DQ_n	Output signal, channel n
②	2-wire connection	24 V DC	Supply voltage L+ (infeed for light-colored BaseUnit only)
③	Backplane bus interface	M	Ground
④	Output electronics	P1, P2, AUX	Internal self-assembling voltage buses Connection to left (dark-colored BaseUnit) Connection to left interrupted (light-colored BaseUnit)
⑤	Polarity reversal protection	DIAG	Error or diagnostics LED (green, red)
⑥	Color-coded label with color code CC02 (optional)	.0 to .3	Channel status LED (green)
⑦	Filter connection supply voltage (only when light-colored BaseUnit is present)	PWR	Power LED (green)

Image 3-1 Block diagram and terminal assignment for 1- and 2-wire connection of actuators

Wiring: 3-wire connection of actuators

The following figure shows an example of the terminal assignment of the digital output module DQ 4×24VDC/2A ST on the BaseUnit BU type A0 with AUX terminals (3-wire connection).

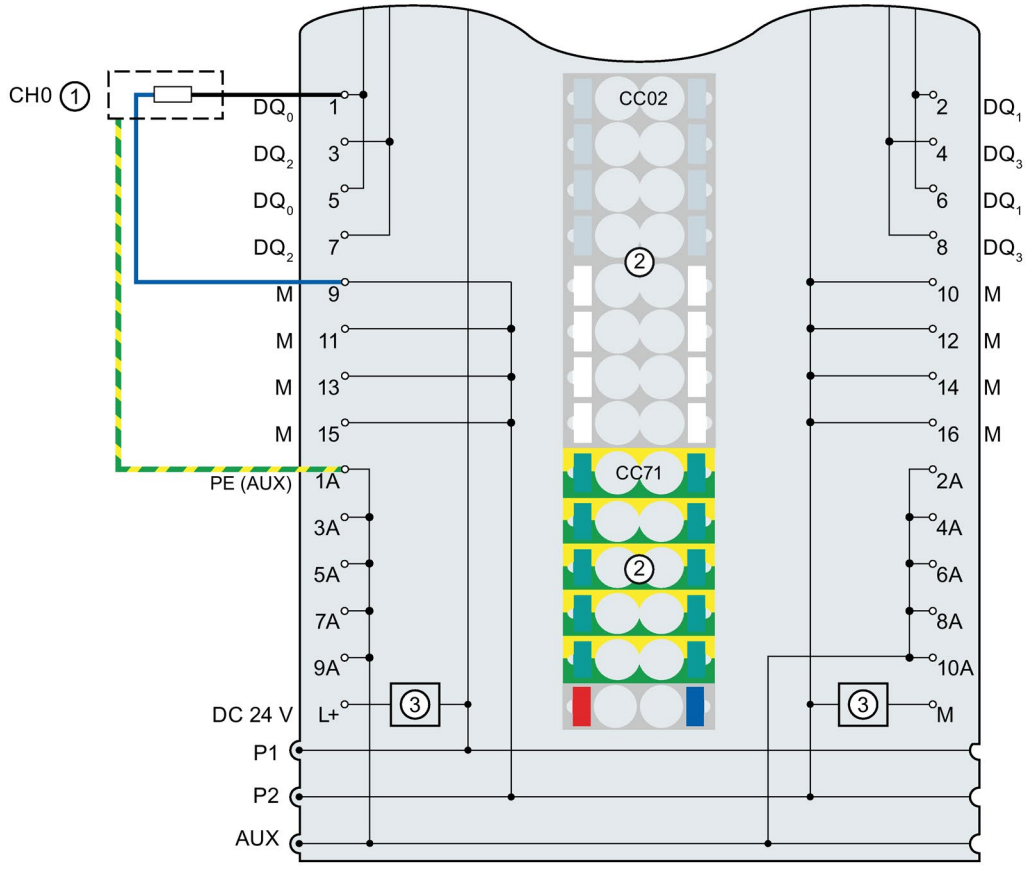

①	3-wire connection	1 A to 10 A	AUX terminals
②	Color-coded labels with color codes CC02 and CC71 (optional)	PE (AUX)	Protective conductor connection
③	Filter connection supply voltage (only when light-colored BaseUnit is present)	24 V DC	Supply voltage L+ (infeed for light-colored BaseUnit only)
DQ_n	Output signal, channel n	M	Ground
		P1, P2, AUX	Internal self-assembling voltage buses Connection to left (dark-colored BaseUnit) Connection to left interrupted (light-colored BaseUnit)

Image 3-2 Terminal assignment for 3-wire connection of actuators

Parameters/address space 4

4.1 Parameters

Parameters for DQ 4x24VDC/2A ST

The effective range of the configurable parameters depends on the type of configuration. The following configurations are possible:

- Central operation with an ET 200SP CPU
- Distributed operation on PROFINET IO in an ET 200SP system
- Distributed operation on PROFIBUS DP in an ET 200SP system

When assigning parameters in the user program, use the "WRREC" instruction to transfer the parameters to the module using the data records; refer to section Parameter assignment and structure of the parameter data record (Page 27).

The following parameter settings are possible:

Table 4- 1 Configurable parameters and their defaults (GSD file)

Parameters	Range of values	Default	Parameter reassignment in RUN	Effective range with configuration software, e.g. STEP 7 (TIA Portal)	
				GSD file PROFINET IO	GSD file PROFIBUS DP [1]
Diagnostics: No supply voltage L+	• Enable • Disable	Disable	Yes	Module	Module
Diagnostics: Short-circuit to ground	• Enable • Disable	Disable	Yes	Module	Module
Diagnostics: Short-circuit to L+	• Enable • Disable	Disable	Yes	Module	Module
Diagnostics: Wire break	• Enable • Disable	Disable	Yes	Module	Module
Channel activated	• Enable • Disable	Enable	Yes	Channel	Channel

Parameters	Range of values	Default	Parameter reassignment in RUN	Effective range with configuration software, e.g. STEP 7 (TIA Portal)	
				GSD file PROFINET IO	GSD file PROFIBUS DP [1]
Reaction to CPU STOP	• Turn off • Keep last value • Output substitute value 1	Turn off	Yes	Channel	Module
Potential group	• Use potential group of the left module (module plugged into a dark-colored BaseUnit) • Enable new potential group (module plugged into light-colored BaseUnit)	Use potential group of the left module	No	Module	Module

[1] Due to the limited number of parameters at a maximum of 244 bytes per ET 200SP station with a PROFIBUS GSD configuration, the configuration options are restricted. If required, you can assign these parameters using data record 128 as described in the "GSD file PROFINET IO" column (see table above). The parameter length of the I/O module is 4 bytes.

Note

If one of the two parameters "Diagnostics: Short-circuit to L+" or "Diagnostics: Wire break" is enabled and one of these diagnostics occurs, the affected channel is switched off to avoid triggering an undefined load. Note that a diagnostic interrupt can only be generated when diagnostics are enabled. [1]

[1] as of module revision 06

4.2 Explanation of the parameters

Diagnostics: No supply voltage L+

Enabling of the diagnostics for no or insufficient supply voltage L+.

Diagnostics: Short-circuit to ground

Enabling of the diagnostics if a short-circuit of the actuator supply to ground occurs.

Diagnostics: Short-circuit to L+

Enabling of the diagnostics if a short-circuit of the actuator supply to L+ occurs.

Diagnostics: Wire break

Enabling of the diagnostics if the line to the actuator is broken.

Channel activated

Determines whether a channel is activated or deactivated.

Reaction to CPU STOP / substitute value

Determines the behavior of the module in the event of a CPU STOP.

Potential group

A potential group consists of a group of directly adjacent I/O modules within an ET 200SP station, which are supplied via a common supply voltage.

A potential group begins with a light-colored BaseUnit through which the required voltage is supplied for all modules of the potential group. The light-colored BaseUnit interrupts the three self-assembling voltage buses P1, P2 and AUX to the left neighbor.

All additional I/O modules of this potential group are plugged into dark-colored BaseUnits. You take the potential of the self-assembling voltage buses P1, P2 and AUX from the left neighbor.

A potential group ends with the dark-colored BaseUnit, which follows a light-colored BaseUnit or server module in the station configuration.

4.3 Address space

The module can be configured differently in STEP 7; see following table. Depending on the configuration, additional/different addresses are assigned in the process image output/input.

Configuration options of DQ 4x24VDC/2A ST

You can configure the module with STEP 7 (TIA Portal) or with a GSD file. If you configure the module by means of a GSD file, the configurations are available under various short designations/module names; see the table below. The following configurations are possible:

Table 4- 2 Configuration options with GSD file

Configuration	Short designation/module name in the GSD file	Configuration software, e.g. with STEP 7 (TIA Portal)		
		Integrated in the hardware catalog STEP 7, as of V13, SP1	GSD file PROFINET IO	GSD file PROFIBUS DP
1 x 4-channel without value status	DQ 4x24VDC/2A ST V1.0	X	X	X
1 x 4-channel without value status	DQ 4x24VDC/2A ST V1.1	X	X	X
1 x 4-channel with value status	DQ 4x24VDC/2A ST V1.1, QI	X	X	---

Evaluating the value status

An additional byte is allocated in the input address space if you enable the value status for the digital module. Bits 0 to 3 in this byte are assigned to a channel. They provide information about the validity of the digital value.

Bit = 1: No fault is present on the channel.

Bit = 0: Channel is deactivated or there is a fault on the module.

If a fault occurs on a channel with this module, the value status for all channels is 0.

Address space

The following figure shows the assignment of the address space for the DQ 4×24VDC/2A ST with value status (Quality Information (QI)). The addresses for the value status are only available if the value status is enabled.

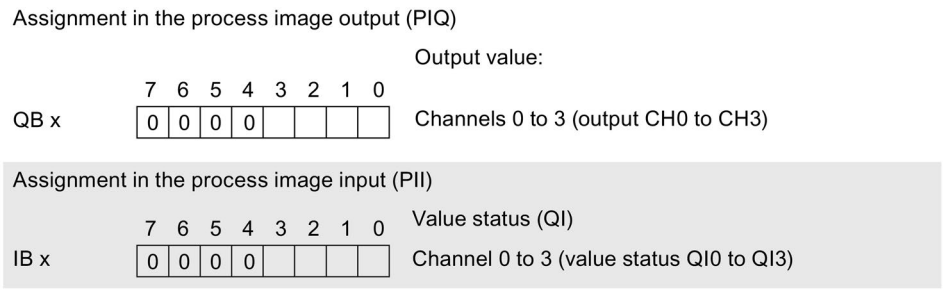

Image 4-1 Address space of the DQ 4×24VDC/2A ST with value status

Interrupts/diagnostics alarms

5

5.1 Status and error display

LED display

The figure below shows the LED displays of the DQ 4x24VDC/2A ST.

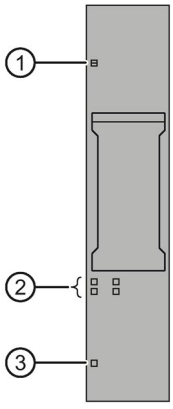

① DIAG (green/red)
② Channel status (green)
③ PWR (green)

Image 5-1 LED display

Meaning of the LED displays

The following tables show the meaning of the status and error displays. Measures for dealing with diagnostics alarms can be found in the section Diagnostics alarms (Page 20).

DIAG LED

Table 5- 1 DIAG LED fault/error display

DIAG LED	Meaning
□ off	Backplane bus supply of the ET 200SP not OK
☼ Flashes	Module parameters not assigned
■ on	Module parameters assigned and no module diagnostics
☼ Flashes	Module parameters assigned and module diagnostics

Channel status LED

Table 5- 2 Status display of the channel status LED

Channel status LED	Meaning
□ off	Channel deactivated or activated and process signal = 0
■ on	Channel activated and process signal = 1

PWR LED

Table 5- 3 Status display of the PWR LED

PWR LED	Meaning
□ off	No supply voltage L+
■ on	Supply voltage L+ present

5.2 Interrupts

The DQ 4×24VDC/2A ST digital output module supports diagnostics interrupts.

Diagnostics interrupts

The module generates a diagnostic interrupt at the following events:

- Short-circuit
- Wire break
- Parameter assignment error
- Supply voltage missing
- Channel temporarily unavailable

5.3 Diagnostics alarms

A diagnostics alarm is generated and the DIAG-LED flashes on the module for each diagnostics event. You can read out the diagnostics alarms, for example, in the diagnostics buffer of the CPU. You can evaluate the error codes with the user program.

Note

You can connect 2 actuators per output.

The diagnostics of the two actuators influenced each other in the case of duplicate wiring.

This means:

- a wire break is only signaled if both actuators are affected
- a single short-circuit affects both actuators

Note

Parallel connection of two outputs

For parallel connection of two outputs for redundant control of a load, the channel diagnostics "Short-circuit to L+" and "Wire break" must be deactivated.

Table 5- 4 Diagnostics alarms, their meaning and corrective measures

Diagnostics alarm	Error code	Meaning	Solution
Short-circuit	1_H	• Short-circuit of actuator supply to ground • Short-circuit of actuator supply to L+	Correct the process wiring
Wire break	6_H	Actuator circuit impedance too high	Use a different actuator type or modify the wiring, e.g. use cables with larger cross-section
		Wire break between the module and actuator	Connect the cable
		Channel not connected (open)	• Disable diagnostics • Connect a resistor to the actuator contacts in the load resistance range
Parameter assignment error	10_H	• The module cannot evaluate parameters for the channel. • Incorrect parameter assignment.	Correct the parameter assignment
Supply voltage missing	11_H	Missing or insufficient supply voltage L+	• Check supply voltage L+ on the BaseUnit • Check BaseUnit type
Channel temporarily unavailable	$1F_H$	Firmware update is currently in progress or has been canceled. The module does not output any process or substitute values in this state.	• Wait for firmware update. • Restart the firmware update.

Technical specifications

6

6.1 Technical specifications

Technical specifications of the DQ 4×24VDC/2A ST

	6ES7132-6BD20-0BA0
General information	
Product type designation	ET 200SP, DQ 4x24VDC/2A ST, PU 1
Firmware version	V1.1
• FW update possible	Yes
Usable BaseUnits	BU type A0
Color code for module-specific color identification label	CC02
Product function	
I&M data	Yes; I&M0 to I&M3
Engineering with	
STEP 7 TIA Portal can be configured/integrated as of version	V11 SP2 / V13
STEP 7 can be configured/integrated as of version	V5.5 SP3 / -
PCS 7 can be configured/integrated as of version	V8.1 SP1
PROFIBUS as of GSD version/GSD revision	GSD revision 5
PROFINET as of GSD version/GSD revision	GSDML V2.3
Operating mode	
DQ	Yes
DQ with energy-saving function	No
PWM	No
Oversampling	No
MSO	No
Supply voltage	
Rated value (DC)	24 V
Valid range, low limit (DC)	19.2 V
Valid range, high limit (DC)	28.8 V
Polarity reversal protection	Yes
Input current	
Current consumption, max.	60 mA; no load
Output voltage	
Rated value (DC)	24 V

	6ES7132-6BD20-0BA0
Power loss	
Power loss, typ.	1 W
Address area	
Address space per module	
Address space per module, max.	1 byte; + 1 byte for QI information
Digital outputs	
Number of outputs	4
Sinking output	No
Sourcing output	Yes
Short-circuit protection	Yes
• Response threshold, typ.	2.8 ... 5.2 A
Limitation of inductive shutdown voltage to	Typ. L+ (-50 V)
Control of a digital input	Yes
Switching capacity of outputs	
With resistive load, max.	2 A
With lamp load, max.	10 W
Load resistance range	
Low limit	12 Ω
High limit	3400 Ω
Output current	
For signal "1" rated value	2 A
For signal "0" residual current, max.	0.1 mA
Output delay with resistive load	
"0" to "1", typ.	50 µs
"0" to "1", max.	50 µs
"1" to "0", typ.	100 µs
"1" to "0", max.	100 µs
Parallel connection of two outputs	
For increased performance	No
For redundant control of a load	Yes
Switching frequency	
With resistive load, max.	100 Hz
With inductive load, max.	2 Hz
With lamp load, max.	10 Hz
Total current of the outputs	
Current per channel, max.	2 A
Current per module, max.	8 A

	6ES7132-6BD20-0BA0
Total current of the outputs (per module)	
Horizontal installation	
• Up to 30 °C, max.	8 A
• Up to 40 °C, max.	8 A
• Up to 50 °C, max.	6 A
• Up to 60 °C, max.	4 A
Vertical installation	
• Up to 30 °C, max.	8 A
• Up to 40 °C, max.	6 A
• Up to 50 °C, max.	4 A
• Up to 60 °C, max.	4 A
Cable length	
Shielded, max.	1000 m
Unshielded, max.	600 m
Isochronous mode	
Isochronous mode (application synchronized up to terminal)	No
Interrupts/diagnostics/status information	
Substitute values can be applied	Yes
Interrupts	
Diagnostics interrupt	Yes
Diagnostics alarms	
Diagnostics	Yes
Monitoring of the supply voltage	Yes
Wire break	Yes; module by module
Short-circuit	Yes; module by module
Group error	Yes
Diagnostics indicator LED	
Monitoring of the supply voltage (PWR LED)	Yes; green PWR LED
Channel status display	Yes; green LED
For channel diagnostics	No
For module diagnostics	Yes; green/red DIAG LED
Electrical isolation	
Electrical isolation of channels	
Between the channels	No
Between the channels and backplane bus	Yes
Permitted potential difference	
Between different circuits	75 V DC / 60 V AC (basic insulation)
Insulation	
Insulation tested with	707 V DC (type test)
Dimensions	
Width	15 mm
Weights	
Weight, approx.	30 g

Safety-related shutdown

Note

The digital output module DQ 4x24VDC/2A ST supports safety-related shutdown in connection with a fail-safe power module F-PM-E 24VDC/8A PPM ST:

- SIL according to IEC 61508: 2
- Highest attainable safety class in safety mode, performance level according to EN ISO 13849-1: d

Residual current for signal state "0"

Note

Residual current for signal state "0"

Due to the Diagnostics: Wire break function, there is a low level of residual current in the "0" signal state at the output, which may cause the display diodes to flicker.

This residual current does not depend on the setting for the Diagnostics: Wire break parameter.

Derating trend

The following figure show the load current derating with horizontal and vertical mounting positions.

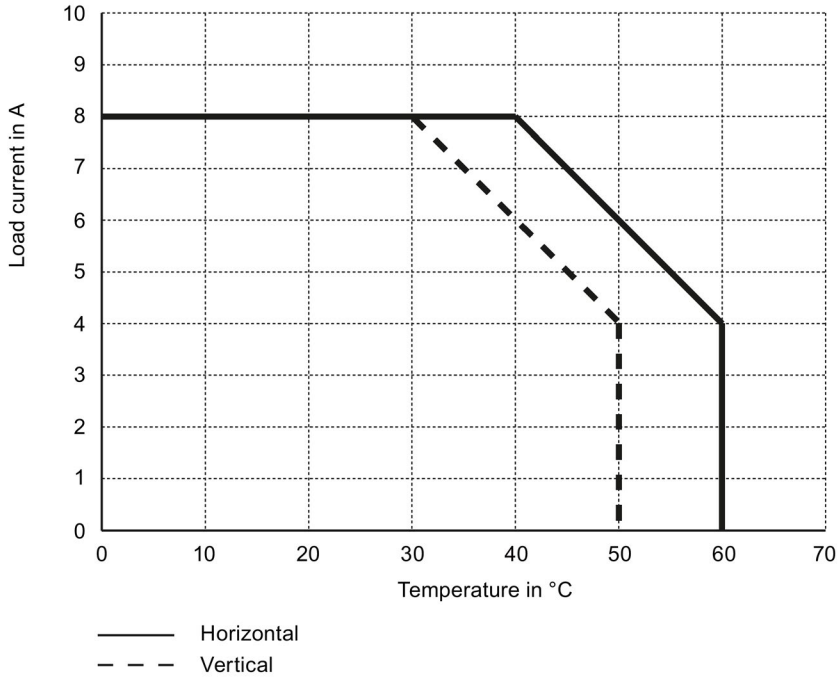

Image 6-1 Load current for mounting position

Dimension drawing

See manual ET 200SP BaseUnits
(http://support.automation.siemens.com/WW/view/en/58532597/133300)

Parameter data record

A

A.1 Parameter assignment and structure of the parameter data record

The data record of the module has an identical structure, regardless of whether you configure the module with PROFIBUS DP or PROFINET IO. With data record 128, you can reconfigure the module in your user program regardless of your programming. This means that you can use all the functions of the module even if you configured it via PROFIBUS-GSD.

Parameter assignment in the user program

You can change the parameters of the module in RUN.

Changing parameters in RUN

The "WRREC" instruction is used to transfer the parameters to the module using data record 128. The parameters set in STEP 7 are not changed in the CPU, which means that the parameters set in STEP 7 will be valid again after a restart.

Output parameter STATUS

If errors occur when transferring parameters with the "WRREC" instruction, the module continues operation with the previous parameter assignment. The STATUS output parameter contains a corresponding error code.

You will find a description of the "WRREC" instruction and the error codes in the STEP 7 online help.

Structure of data record 128

Note

Channel 0 includes the diagnostics enable for the entire module.

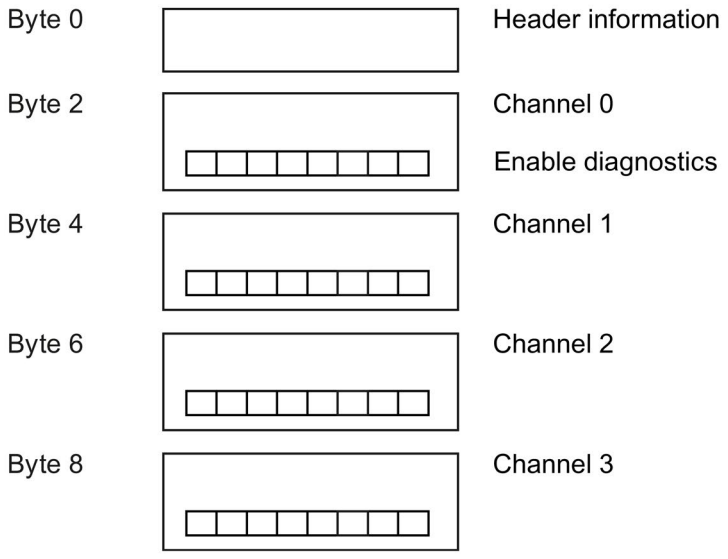

Image A-1 Structure of data record 128

Header information

The figure below shows the structure of the header information.

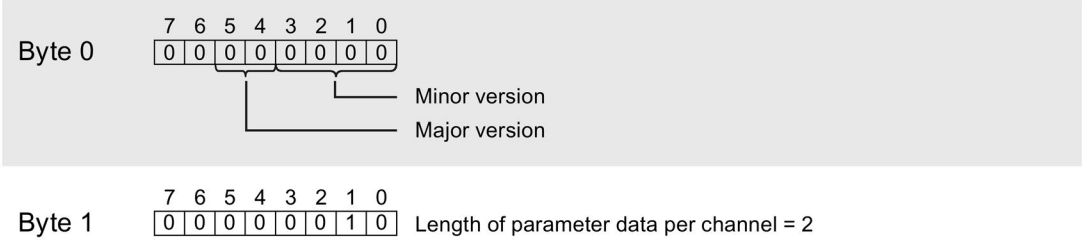

Image A-2 Header information

Parameters

The figure below shows the structure of the parameters for channels 0 to 3.

You enable a parameter by setting the corresponding bit to "1".

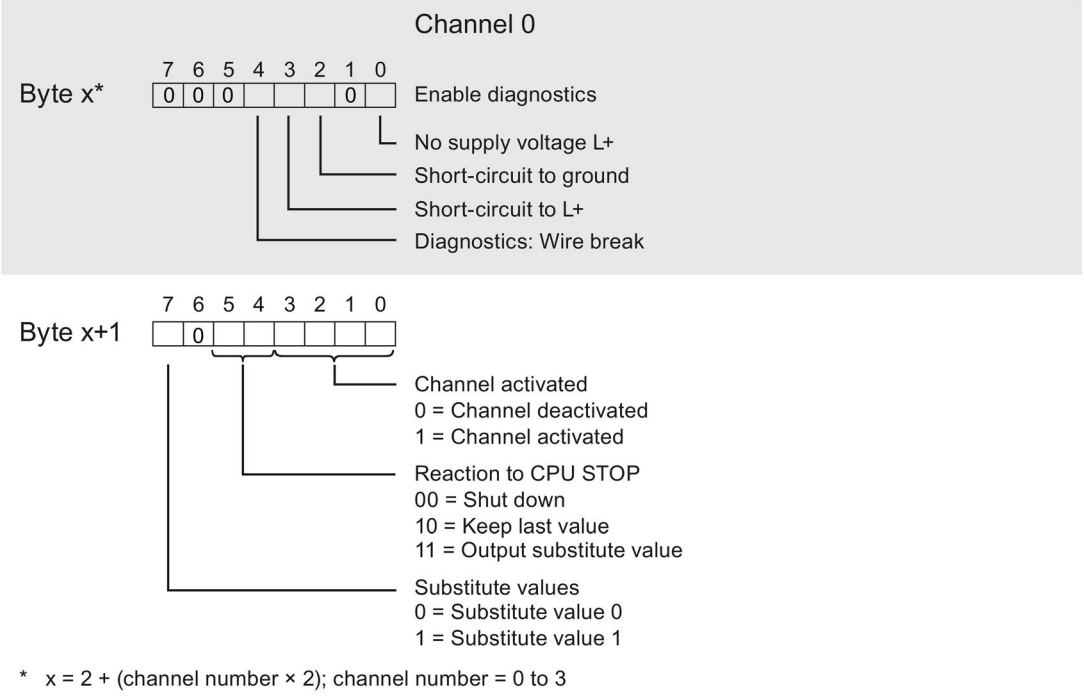

Image A-3 Structure byte x to x+1 for the channels 0 to 3

Error transmitting the data record

The module always checks all values of the data record to be sent. The module applies the values from the data record only when all values have been transmitted without errors.

The WRREC instruction for writing data records returns the appropriate error code if there are errors in the STATUS parameter.

The following table shows the module-specific error codes and their meaning for parameter data record 128.

Error code in the STATUS parameter (hexadecimal)				Meaning	Solution
Byte 0	Byte 1	Byte 2	Byte 3		
DF	80	B0	xx	Number of the data record unknown	Enter valid number for data record.
DF	80	B1	xx	Length of the data record incorrect	Enter valid value for data record length.
DF	80	B2	xx	Slot invalid or unavailable	• Check the station to determine whether the module is plugged in or pulled. • Check assigned values for the parameters of the WREC instruction.
DF	80	E0	xx	Wrong version or error in the header information	Correct the version, length and number of parameter blocks.
DF	80	E1	xx	Parameter error	Check the parameters of the module

SIEMENS

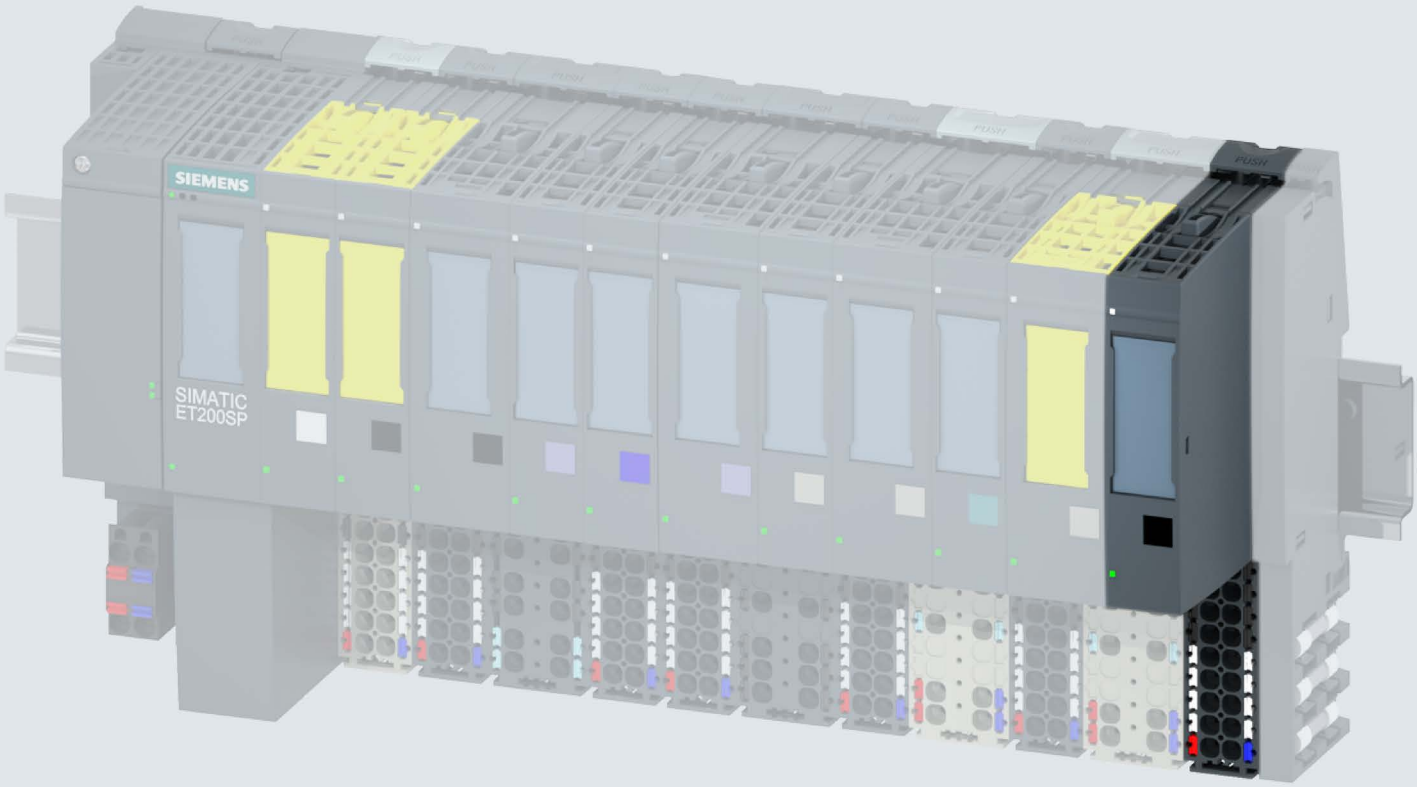

Manual

SIMATIC

ET 200SP

Digital output module
DQ 8x24VDC/0.5A ST (6ES7132-6BF01-0BA0

Edition 09/2017

support.industry.siemens.com

SIEMENS

SIMATIC

ET 200SP
Digital output module
DQ 8x24VDC/0.5A ST
(6ES7132-6BF01-0BA0)

Manual

Preface

Documentation guide 1

Product overview 2

Wiring up 3

Parameters/address space 4

Interrupts/diagnostics alarms 5

Technical specifications 6

Parameter data record A

09/2017

A5E03574575-AE

Legal information

Warning notice system

This manual contains notices you have to observe in order to ensure your personal safety, as well as to prevent damage to property. The notices referring to your personal safety are highlighted in the manual by a safety alert symbol, notices referring only to property damage have no safety alert symbol. These notices shown below are graded according to the degree of danger.

⚠ DANGER

indicates that death or severe personal injury **will** result if proper precautions are not taken.

⚠ WARNING

indicates that death or severe personal injury **may** result if proper precautions are not taken.

⚠ CAUTION

indicates that minor personal injury can result if proper precautions are not taken.

NOTICE

indicates that property damage can result if proper precautions are not taken.

If more than one degree of danger is present, the warning notice representing the highest degree of danger will be used. A notice warning of injury to persons with a safety alert symbol may also include a warning relating to property damage.

Qualified Personnel

The product/system described in this documentation may be operated only by **personnel qualified** for the specific task in accordance with the relevant documentation, in particular its warning notices and safety instructions. Qualified personnel are those who, based on their training and experience, are capable of identifying risks and avoiding potential hazards when working with these products/systems.

Proper use of Siemens products

Note the following:

⚠ WARNING

Siemens products may only be used for the applications described in the catalog and in the relevant technical documentation. If products and components from other manufacturers are used, these must be recommended or approved by Siemens. Proper transport, storage, installation, assembly, commissioning, operation and maintenance are required to ensure that the products operate safely and without any problems. The permissible ambient conditions must be complied with. The information in the relevant documentation must be observed.

Trademarks

All names identified by ® are registered trademarks of Siemens AG. The remaining trademarks in this publication may be trademarks whose use by third parties for their own purposes could violate the rights of the owner.

Disclaimer of Liability

We have reviewed the contents of this publication to ensure consistency with the hardware and software described. Since variance cannot be precluded entirely, we cannot guarantee full consistency. However, the information in this publication is reviewed regularly and any necessary corrections are included in subsequent editions.

Siemens AG
Division Digital Factory
Postfach 48 48
90026 NÜRNBERG
GERMANY

A5E03574575-AE
℗ 10/2017 Subject to change

Copyright © Siemens AG 2012 - 2017.
All rights reserved

Preface

Purpose of the documentation

This manual supplements the system manual ET 200SP distributed I/O system (http://support.automation.siemens.com/WW/view/en/58649293).

Functions that generally relate to the system are described in this manual.

The information provided in this manual and in the system/function manuals supports you in commissioning the system.

Changes compared to previous version

Compared to the previous version, this manual contains the following change:

Due to the change in hardware, the article number of the module has been changed from 6ES7132-6BF00-0BA0 to 6ES7132-6BF01-0BA0. Both modules are compatible, except for the firmware-update function.

Conventions

CPU: When the term "CPU" is used in this manual, it applies to the CPUs of the S7-1500 automation system as well as to the CPUs/interface modules of the distributed I/O system ET 200SP.

STEP 7: In this documentation, "STEP 7" is used as a synonym for all versions of the configuration and programming software "STEP 7 (TIA Portal)".

Please also observe notes marked as follows:

Note

A note contains important information on the product described in the documentation, on the handling of the product or on the section of the documentation to which particular attention should be paid.

Security information

Siemens provides products and solutions with industrial security functions that support the secure operation of plants, systems, machines and networks.

In order to protect plants, systems, machines and networks against cyber threats, it is necessary to implement – and continuously maintain – a holistic, state-of-the-art industrial security concept. Siemens' products and solutions constitute one element of such a concept.

Customers are responsible for preventing unauthorized access to their plants, systems, machines and networks. Such systems, machines and components should only be connected to an enterprise network or the internet if and to the extent such a connection is necessary and only when appropriate security measures (e.g. firewalls and/or network segmentation) are in place.

For additional information on industrial security measures that may be implemented, please visit (http://www.siemens.com/industrialsecurity).

Siemens' products and solutions undergo continuous development to make them more secure. Siemens strongly recommends that product updates are applied as soon as they are available and that the latest product versions are used. Use of product versions that are no longer supported, and failure to apply the latest updates may increase customers' exposure to cyber threats.

To stay informed about product updates, subscribe to the Siemens Industrial Security RSS Feed under (http://www.siemens.com/industrialsecurity).

Table of contents

Preface 4
1 Documentation guide 7
2 Product overview 12
2.1 Properties 12
3 Wiring up 14
3.1 Wiring and block diagram 14
4 Parameters/address space 17
4.1 Parameters 17
4.2 Explanation of the parameters 19
4.3 Address space 20
5 Interrupts/diagnostics alarms 21
5.1 Status and error display 21
5.2 Interrupts 23
5.3 Diagnostics alarms 23
6 Technical specifications 24
6.1 Technical specifications 24
A Parameter data record 29
A.1 Parameter assignment and structure of the parameter data record 29

Documentation guide

1

The documentation for the SIMATIC ET 200SP distributed I/O system is arranged into three areas.
This arrangement enables you to access the specific content you require.

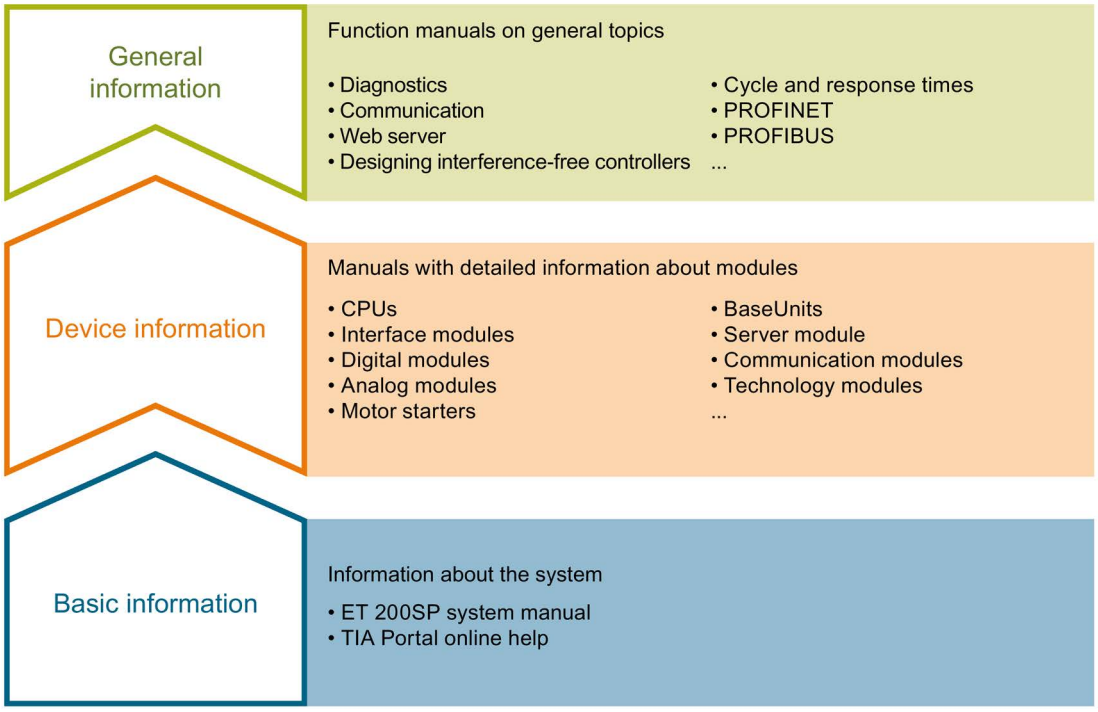

Basic information

The system manual describes in detail the configuration, installation, wiring and commissioning of the SIMATIC ET 200SP. distributed I/O system. The STEP 7 online help supports you in the configuration and programming.

Device information

Product manuals contain a compact description of the module-specific information, such as properties, wiring diagrams, characteristics and technical specifications.

General information

The function manuals contain detailed descriptions on general topics regarding the SIMATIC ET 200SP distributed I/O system, e.g. diagnostics, communication, Web server, motion control and OPC UA.

You can download the documentation free of charge from the Internet (https://support.industry.siemens.com/cs/ww/en/view/109742709).

Changes and supplements to the manuals are documented in a Product Information.

You can download the product information free of charge from the Internet (https://support.industry.siemens.com/cs/us/en/view/73021864).

Manual Collection ET 200SP

The Manual Collection contains the complete documentation on the SIMATIC ET 200SP distributed I/O system gathered together in one file.

You can find the Manual Collection on the Internet (http://support.automation.siemens.com/WW/view/en/84133942).

"mySupport"

With "mySupport", your personal workspace, you make the most of your Industry Online Support.

In "mySupport" you can store filters, favorites and tags, request CAx data and put together your personal library in the Documentation area. Furthermore, your data is automatically filled into support requests and you always have an overview of your current requests.

You need to register once to use the full functionality of "mySupport".

You can find "mySupport" in the Internet (https://support.industry.siemens.com/My/ww/en).

"mySupport" - Documentation

In the Documentation area of "mySupport", you have the possibility to combine complete manuals or parts of them to make your own manual.
You can export the manual in PDF format or in an editable format.

You can find "mySupport" - Documentation in the Internet (http://support.industry.siemens.com/My/ww/en/documentation).

"mySupport" - CAx Data

In the CAx Data area of "mySupport", you can have access the latest product data for your CAx or CAe system.

You configure your own download package with a few clicks.

In doing so you can select:

- Product images, 2D dimension drawings, 3D models, internal circuit diagrams, EPLAN macro files
- Manuals, characteristics, operating manuals, certificates
- Product master data

You can find "mySupport" - CAx Data in the Internet (http://support.industry.siemens.com/my/ww/en/CAxOnline).

Application examples

The application examples support you with various tools and examples for solving your automation tasks. Solutions are shown in interplay with multiple components in the system - separated from the focus in individual products.

You can find the application examples on the Internet (https://support.industry.siemens.com/sc/ww/en/sc/2054).

TIA Selection Tool

With the TIA Selection Tool, you can select, configure and order devices for Totally Integrated Automation (TIA).
This tool is the successor of the SIMATIC Selection Tool and combines the known configurators for automation technology into one tool.
With the TIA Selection Tool, you can generate a complete order list from your product selection or product configuration.

You can find the TIA Selection Tool on the Internet (http://w3.siemens.com/mcms/topics/en/simatic/tia-selection-tool).

SIMATIC Automation Tool

You can use the SIMATIC Automation Tool to run commissioning and maintenance activities simultaneously on various SIMATIC S7 stations as a bulk operation independently of the TIA Portal.

The SIMATIC Automation Tool provides a multitude of functions:

- Scanning of a PROFINET/Ethernet network and identification of all connected CPUs
- Address assignment (IP, subnet, gateway) and station name (PROFINET device) to a CPU
- Transfer of the data and the programming device/PC time converted to UTC time to the module
- Program download to CPU
- Operating mode switchover RUN/STOP
- Localization of the CPU by means of LED flashing
- Reading out CPU error information
- Reading the CPU diagnostic buffer
- Reset to factory settings
- Updating the firmware of the CPU and connected modules

You can find the SIMATIC Automation Tool on the Internet (https://support.industry.siemens.com/cs/ww/en/view/98161300).

PRONETA

With SIEMENS PRONETA (PROFINET network analysis), you analyze the plant network during commissioning. PRONETA features two core functions:

- The topology overview independently scans PROFINET and all connected components.
- The IO check is a fast test of the wiring and the module configuration of a system.

You can find SIEMENS PRONETA on the Internet (https://support.industry.siemens.com/cs/ww/en/view/67460624).

SINETPLAN

SINETPLAN, the Siemens Network Planner, supports you in planning automation systems and networks based on PROFINET. The tool facilitates professional and predictive dimensioning of your PROFINET installation as early as in the planning stage. In addition, SINETPLAN supports you during network optimization and helps you to exploit network resources optimally and to plan reserves. This helps to prevent problems in commissioning or failures during productive operation even in advance of a planned operation. This increases the availability of the production plant and helps improve operational safety.

The advantages at a glance

- Network optimization thanks to port-specific calculation of the network load
- Increased production availability thanks to online scan and verification of existing systems
- Transparency before commissioning through importing and simulation of existing STEP 7 projects
- Efficiency through securing existing investments in the long term and optimal exploitation of resources

You can find SINETPLAN on the Internet (https://www.siemens.com/sinetplan).

Product overview

2

2.1 Properties

Article number

6ES7132-6BF01-0BA0 (number in package unit: 1 unit)

6ES7132-6BF01-2BA0 (number in package unit: 10 units)

View of the module

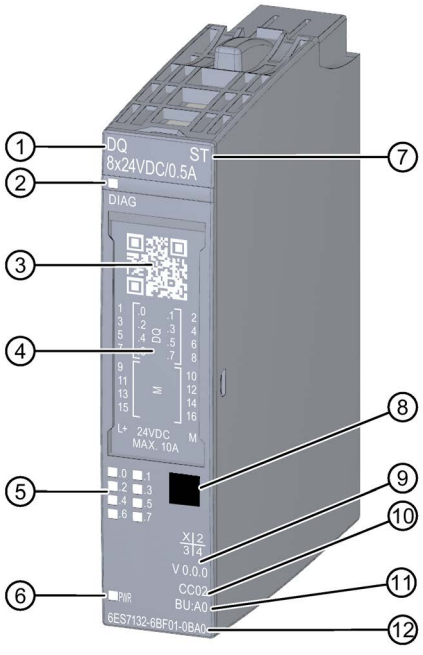

①	Module type and name	⑦	Function class
②	LED for diagnostics	⑧	Color coding module type
③	2D matrix code	⑨	Function and firmware version
④	Wiring diagram	⑩	Color code for selecting the color identification labels
⑤	LEDs for channel status	⑪	BU type
⑥	LED for supply voltage	⑫	Article number

Figure 2-1 View of the module DQ 8×24VDC/0.5A ST

Properties

The module has the following technical properties:

- Digital output module with 8 outputs
- Supply voltage L+
- Output current 0.5 A per channel
- Source output (PNP)
- Configurable diagnostics (per module)
- Configurable substitute values (per channel)
- Suitable for solenoid valves, DC contactors, and indicator lights
- Safety-related shutdown

The module supports the following functions:

Table 2- 1 Version dependencies of the functions

Function	HW version	FW version	STEP 7		GSD file	
			TIA Portal	V5.x	PROFINET IO	PROFIBUS DP
Identification data I&M0 to I&M3	FS01	V0.0.0 and higher	V14 or higher with HSP 0222	V5.5 SP3 or higher with HSP 0230 V7.0	X	X
Configuration in RUN	FS01	V0.0.0 and higher	V14 or higher with HSP 0222	V5.5 SP3 or higher with HSP 0230 V7.0	X	X
PROFIenergy	FS01	V0.0.0 and higher	V14 or higher with HSP 0222	V5.5 SP3 or higher with HSP 0230 V7.0	X	X
Value status	FS01	V0.0.0 and higher	V14 or higher with HSP 0222	V5.5 SP3 or higher with HSP 0230 V7.0	X	X

Accessories

The following accessories must be ordered separately:

- Labeling strips
- Color identification labels
- Reference identification label
- Shield connector

See also

You can find additional information on the accessories in the ET 200SP distributed I/O system (http://support.automation.siemens.com/WW/view/en/58649293) system manual.

Wiring up

3

3.1 Wiring and block diagram

This section includes the block diagram of the DQ 8x24VDC/0.5A ST module with the terminal assignments for a 1-wire, 2-wire and 3-wire connection.

You can use and combine the different wiring options for all channels.

You can find information on wiring the BaseUnit in the system manual Distributed I/O System ET 200SP (http://support.automation.siemens.com/WW/view/en/58649293).

Note

The load group of the module must begin with a light-colored BaseUnit. Keep this in mind also during the configuration.

Note

Cross circuit at output

Be aware that voltage from a cross-circuit at the output can feed L+ to modules.

Wiring: 1 and 2-wire connection of actuators

The following figure shows an example of the terminal assignment of the digital output module DQ 8×24VDC/0.5A ST on the BaseUnit BU type A0 without AUX terminals (1-wire and 2-wire connection).

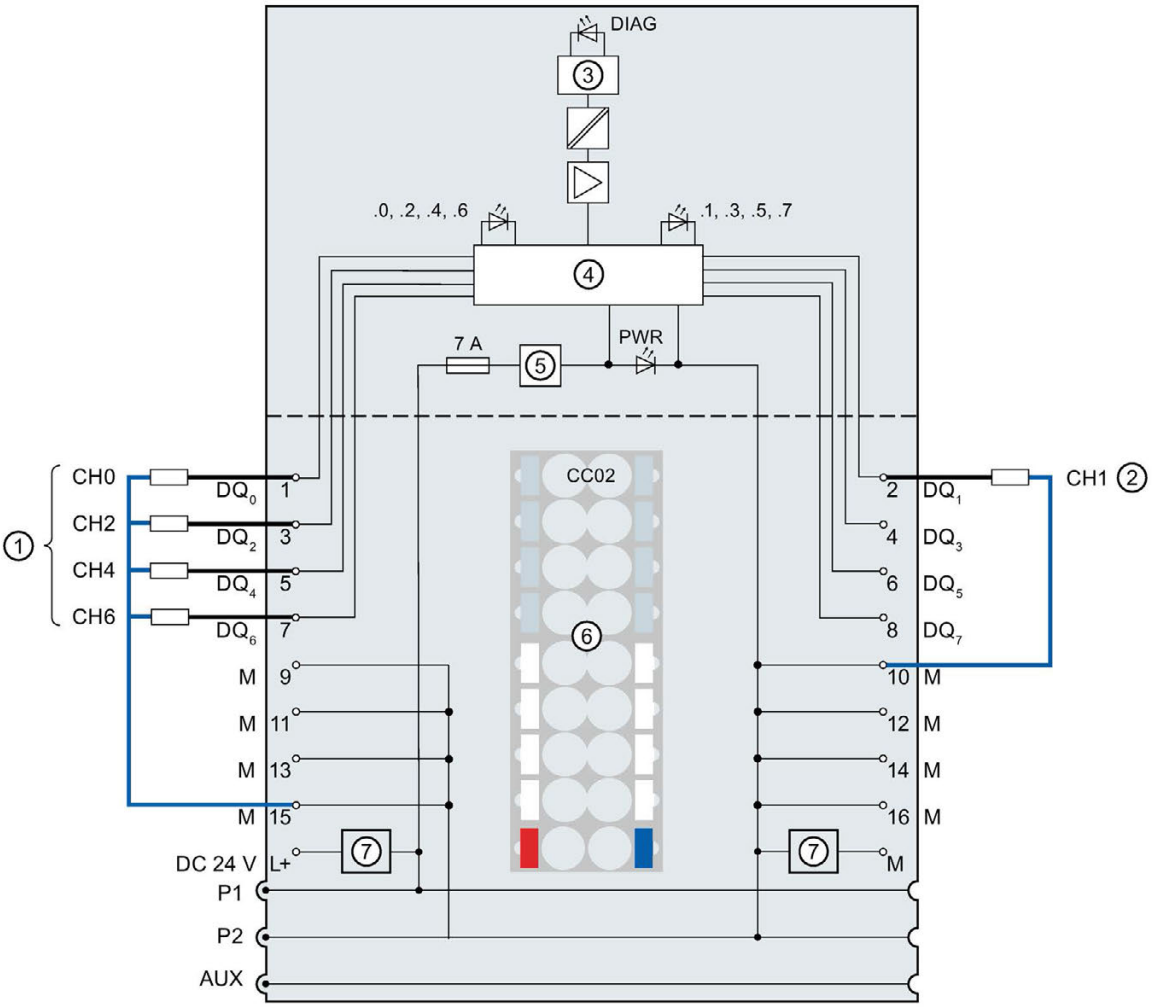

①	1-wire connection	24 V DC	Supply voltage L+ (infeed for light-colored BaseUnit only)
②	2-wire connection	M	Ground
③	Backplane bus interface	P1, P2, AUX	Internal self-assembling voltage buses Connection to left (dark-colored BaseUnit) Connection to left interrupted (light-colored BaseUnit)
④	Output electronics	DQ_n	Output signal, channel n
⑤	Polarity reversal protection	DIAG	Error or diagnostics LED (green, red)
⑥	Color-coded label with color code CC02 (optional)	.0 to .7	Channel status LED (green)
⑦	Filter connection supply voltage (only when light-colored BaseUnit is present)	PWR	Power LED (green)

Figure 3-1 Block diagram and terminal assignment for 1- and 2-wire connection of actuators

Wiring: 3-wire connection of actuators

The following figure shows an example of the terminal assignment of the digital output module DQ 8×24VDC/0.5A ST on the BaseUnit BU type A0 with AUX terminals (3-wire connection).

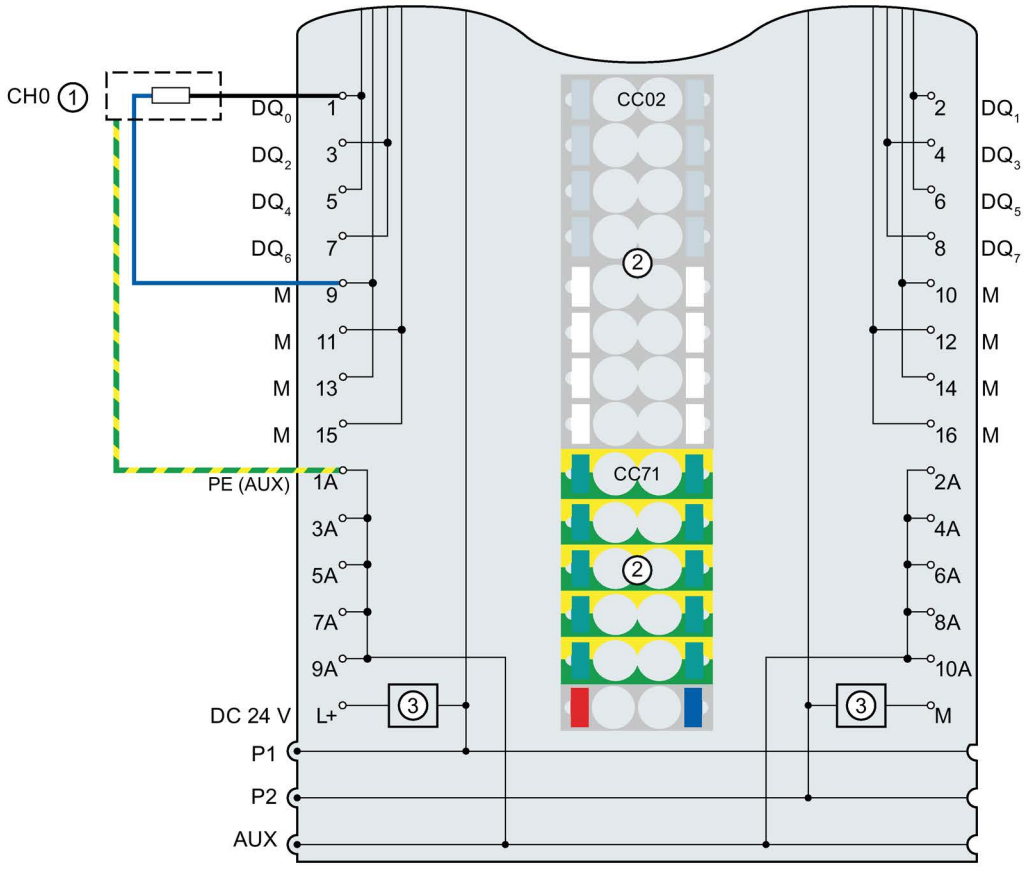

①	3-wire connection	1 A to 10 A	AUX terminals
②	Color-coded labels with color codes CC02 and CC71 (optional)	PE (AUX)	Protective conductor connection
③	Filter connection supply voltage (only when light-colored BaseUnit is present)	24 V DC	Supply voltage L+ (infeed for light-colored BaseUnit only)
DQ_n	Output signal, channel n	M	Ground
		P1, P2, AUX	Internal self-assembling voltage buses Connection to left (dark-colored BaseUnit) Connection to left interrupted (light-colored BaseUnit)

Figure 3-2 Terminal assignment for 3-wire connection of actuators

Parameters/address space 4

4.1 Parameters

Parameters for DQ 8x24VDC/0.5A ST

Specify the module properties with the various parameters in the course of your STEP 7 configuration. The following table lists the configurable parameters. The effective range of the parameters depends on the type of configuration.

The following configurations are possible:

- Central operation with an ET 200SP CPU
- Distributed operation on PROFINET IO in an ET 200SP system
- Distributed operation with PROFIBUS DP in an ET 200SP system

When assigning parameters in the user program, use the "WRREC" instruction to transfer the parameters to the module by means of data records, see section Parameter assignment and structure of parameter data record (Page 29).

The following parameter settings are possible:

Table 4- 1 Settable parameters and their defaults (GSD file)

Parameters	Value range	Default	Configuration in RUN	Scope with configuration software, e.g. STEP 7 (TIA Portal)	
				GSD file PROFINET IO	GSD file PROFIBUS DP [1]
Diagnostics No supply voltage L+	• Disable • Enable	Disable	yes	Module	Module
Diagnostics Short-circuit to ground	• Disable • Enable	Disable	yes	Module	Module
Diagnostics Short-circuit to L+	• Disable • Enable	Disable	yes	Module	Module
Diagnostics Wire break	• Disable • Enable	Disable	yes	Module	Module
Channel activated	• Disable • Enable	Enable	yes	Channel	Channel
Reaction to CPU STOP	• Turn off • Keep last value • Output substitute value 1	Turn off	yes	Channel	Module
Potential group	• Use potential group of the left module (module plugged into a dark-colored BaseUnit) • Enable new potential group (module plugged into light-colored BaseUnit)	Use potential group of the left module	no	Module	Module

[1] Due to the limited number of parameters at a maximum of 244 bytes per ET 200SP station with a PROFIBUS GSD configuration, the configuration options are restricted. If required, you can assign these parameters using data record 128 as described in the "GSD file PROFINET IO" column (see table above). The parameter length of the I/O module is 16 bytes.

Note

If both parameters "Diagnostics: short-circuit to L+" and "Diagnostics: wire break" are enabled and one of these diagnostic events occurs, the affected channel is switched off to avoid triggering an undefined load and the corresponding diagnostic alarm.

If both parameters "Diagnostics: short-circuit to L+" and "Diagnostics: wire break" are enabled and one of these diagnostic events occurs, the affected channel is switched off to avoid triggering an undefined load and the corresponding diagnostic alarm.

If the parameter "Diagnostics: short-circuit to L+" is enabled and "Diagnostics: wire break" is disabled, the signal status is retained at the affected channel when "Diagnostics: short-circuit to L+" occurs. A diagnostic alarm is triggered only for 0 signal.

4.2 Explanation of the parameters

Diagnostics no supply voltage L+

Enabling of the diagnostics for no or insufficient supply voltage L+.

Diagnostics short-circuit to ground

Enabling of the diagnostics if a short-circuit of the actuator supply to ground occurs.

Diagnostics short-circuit to L+

Enabling of the diagnostics if a short-circuit of the actuator supply to L+ occurs.

Diagnostics wire break

Enabling of the diagnostics if the line to the actuator is broken.

Channel activated

Determines whether a channel is enabled or disabled.

Reaction to CPU STOP

Specifies the behavior of the module if the CPU changes to STOP.

Potential group

A potential group consists of a group of directly adjacent I/O modules within an ET 200SP station, which are supplied via a common supply voltage.

A potential group begins with a light-colored BaseUnit through which the required voltage is supplied for all modules of the potential group. The light-colored BaseUnit interrupts the three self-assembling voltage buses P1, P2 and AUX to the left neighbor.

All additional I/O modules of this potential group are plugged into dark-colored BaseUnits. You take the potential of the self-assembling voltage buses P1, P2 and AUX from the left neighbor.

A potential group ends with the dark-colored BaseUnit, which follows a light-colored BaseUnit or server module in the station configuration.

4.3 Address space

The module can be configured differently in STEP 7; see following table. Depending on the configuration, additional/different addresses are assigned in the process image of the inputs.

Configuration options of DQ 8x24VDC 0.5A ST

You can configure the module with STEP 7 (TIA Portal) or with a GSD file. If you configure the module using a GSD file, the configurations are available under various short designations/module names; see the table below. The following configurations are possible:

Table 4- 2 Configuration options with GSD file

Configuration	Short designation/module name in the GSD file	Configuration software, e.g. with STEP 7 (TIA Portal)		
		Integrated in hardware catalog STEP 7	GSD file PROFINET IO	GSD file PROFIBUS DP
1 x 8-channel without value status	DQ 8x24VDC 0.5A ST V0.0	V14, SP1 or higher with HSP 0222	X	X
1 x 8-channel with value status	DQ 8x24VDC 0.5A ST V0.0, QI	V14, SP1 or higher with HSP 0222	X	---

Evaluating the value status

An additional byte is allocated in the input address space if you enable the value status for the digital module. Bits 0 to 7 in this byte are assigned to a channel. They provide information about the validity of the digital value.

Bit = 1: No fault is present on the channel.

Bit = 0: Channel is disabled or there is a fault/error on the module.

If a fault/error occurs on a channel with this module, the value status for all channels is 0.

Address space

The following figure shows the assignment of the address space for the DQ 8×24VDC/0.5A ST with value status (Quality Information (QI)). The addresses for the value status are only available if the value status is enabled.

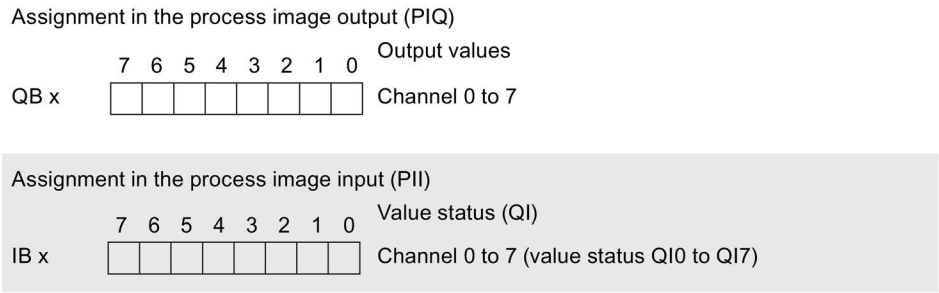

Figure 4-1 Address space of the DQ 8×24VDC/0.5A ST with value status

Interrupts/diagnostics alarms

5

5.1 Status and error display

LED display

DQ 8x24VDC/0.5A ST.

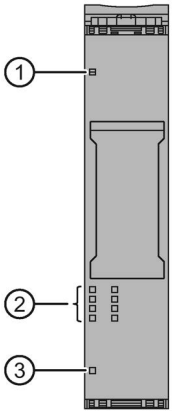

① DIAG (green/red)
② Channel status (green)
③ PWR (green)

Figure 5-1 LED display

Meaning of the LED displays

The following tables show the meaning of the status and error displays. Measures for dealing with diagnostics alarms can be found in the section Diagnostics alarms (Page 23).

DIAG LED

Table 5- 1 DIAG LED fault/error display

DIAG LED	Meaning
□ off	Backplane bus supply of the ET 200SP not OK
☼ Flashes	Module parameters not assigned
■ on	Module parameters assigned
☼ Flashes	Module diagnostics is available

Channel status LED

Table 5- 2 Status display of the channel status LED

Channel status LED	Meaning
□ off	Channel deactivated or activated and process signal = 0
■ on	Channel activated and process signal = 1

PWR LED

Table 5- 3 Status display of the PWR LED

PWR LED	Meaning
□ off	No supply voltage L+
■ on	Supply voltage L+ present

5.2 Interrupts

The digital output module DQ 8x24...24VDC/0.5A ST supports diagnostic interrupts.

Diagnostics interrupt

The module generates a diagnostics interrupt for the following events:

- Short-circuit
- Wire break
- Parameter assignment error
- No supply voltage

5.3 Diagnostics alarms

A diagnostic alarm is generated and the DIAG-LED flashes on the module for each diagnostics event. You can read out the diagnostics alarms, for example, in the diagnostics buffer of the CPU. You can evaluate the error codes with the user program.

Table 5- 4 Diagnostics alarms, their meaning and how to deal with them

Diagnostics alarm	Error code	Meaning	Remedy
Short-circuit	1_H	• Short-circuit of actuator supply to ground • Short-circuit of actuator supply to L+	Correct the process wiring
Wire break	6_H	Actuator circuit impedance too high.	Use a different actuator type or wire differently, e.g. use cables with a larger cross-section
		Wire break between the module and actuator	Connect the cable
		Channel not connected (open)	• Disable diagnostics • Connect a resistor to the actuator contacts in the load resistance range
Parameter assignment error	10_H	• The module cannot evaluate parameters for the channel. • Incorrect parameter assignment.	Correct the parameter assignment
No supply voltage	11_H	No or insufficient supply voltage L+	• Check supply voltage L+ on the BaseUnit • Check BaseUnit type

Technical specifications

6

6.1 Technical specifications

Technical specifications of the DQ 8x24VDC/0.5A ST

Article number	6ES7132-6BF01-0BA0
General information	
Product type designation	DQ 8x24 VDC/0.5 A ST
Firmware version	V0.0
• FW update possible	No
usable BaseUnits	BU type A0
Color code for module-specific color identification plate	CC02
Product function	
• I&M data	Yes; I&M0 to I&M3
Engineering with	
• STEP 7 TIA Portal configurable/integrated as of version	V14
• STEP 7 configurable/integrated as of version	V5.5 SP3 or higher
• PCS 7 configurable/integrated as of version	V8.1 SP1
• PROFIBUS as of GSD version/GSD revision	One GSD file each, Revision 3 and 5 and higher
• PROFINET as of GSD version/GSD revision	GSDML V2.3
Operating mode	
• DQ	Yes
• DQ with energy-saving function	No
• PWM	No
• Oversampling	No
• MSO	No
Redundancy	
• Redundancy capability	Yes

Article number	6ES7132-6BF01-0BA0
Supply voltage	
Rated value (DC)	24 V
permissible range, lower limit (DC)	19.2 V
permissible range, upper limit (DC)	28.8 V
Reverse polarity protection	Yes
Input current	
Current consumption, max.	35 mA; without load
Output voltage	
Rated value (DC)	24 V
Power loss	
Power loss, typ.	1 W
Address area	
Address space per module	
• Inputs	+ 1 byte for QI information
• Outputs	1 byte
Hardware configuration	
Automatic encoding	Yes
• Mechanical coding element	Yes
Submodules	
• Number of configurable submodules, max.	4
Selection of BaseUnit for connection variants	
• 1-wire connection	BU type A0
• 2-wire connection	BU type A0
• 3-wire connection	BU type A0 with AUX terminals
• 4-wire connection	BU type A0 + Potential isolation module
Digital outputs	
Type of digital output	Source output (PNP, current-sourcing)
Number of digital outputs	8
Current-sourcing	Yes
Short-circuit protection	Yes
• Response threshold, typ.	1 A
Limitation of inductive shutdown voltage to	Typ. L+ (-50 V)
Controlling a digital input	Yes
Switching capacity of the outputs	
• with resistive load, max.	0.5 A
• on lamp load, max.	5 W
Load resistance range	
• lower limit	48 Ω
• upper limit	12 kΩ

Article number	6ES7132-6BF01-0BA0
Output voltage	
• for signal "1", min.	L+ (-0.8 V)
Output current	
• for signal "1" rated value	0.5 A
• for signal "1" permissible range, max.	0.5 A
• for signal "0" residual current, max.	0.1 mA
Output delay with resistive load	
• "0" to "1", max.	50 µs; at rated load
• "1" to "0", max.	100 µs; at rated load
Parallel switching of two outputs	
• for uprating	No
• for redundant control of a load	Yes
Switching frequency	
• with resistive load, max.	100 Hz
• with inductive load, max.	2 Hz
• on lamp load, max.	10 Hz
Total current of the outputs	
• Current per channel, max.	0.5 A
• Current per module, max.	4 A
Total current of the outputs (per module)	
horizontal installation	
– up to 30 °C, max.	4 A
– up to 40 °C, max.	4 A
– up to 50 °C, max.	4 A
– up to 60 °C, max.	4 A
vertical installation	
– up to 30 °C, max.	4 A; in all other mounting positions
– up to 40 °C, max.	4 A; in all other mounting positions
– up to 50 °C, max.	4 A; in all other mounting positions
Cable length	
• shielded, max.	1 000 m
• unshielded, max.	600 m
Isochronous mode	
Isochronous operation (application synchronized up to terminal)	No

Article number	6ES7132-6BF01-0BA0
Interrupts/diagnostics/status information	
Diagnostics function	Yes
Substitute values connectable	Yes
Alarms	
• Diagnostic alarm	Yes
Diagnostic messages	
• Monitoring the supply voltage	Yes
• Wire-break	Yes; Module-wise
• Short-circuit to M	Yes; Module-wise
• Short-circuit to L+	Yes; Module-wise
Diagnostics indication LED	
• Monitoring of the supply voltage (PWR-LED)	Yes; green PWR LED
• Channel status display	Yes; Green LED
• for channel diagnostics	No
• for module diagnostics	Yes; green/red DIAG LED
Potential separation	
Potential separation channels	
• between the channels	No
• between the channels and backplane bus	Yes
• between the channels and the power supply of the electronics	No
Isolation	
Isolation tested with	707 V DC (type test)
Standards, approvals, certificates	
Suitable for safety-oriented group deactivation	Yes
Ambient conditions	
Ambient temperature during operation	
• horizontal installation, min.	0 °C
• horizontal installation, max.	60 °C
• vertical installation, min.	0 °C; in all other mounting positions
• vertical installation, max.	50 °C; in all other mounting positions
Altitude during operation based on sea level	
• Ambient air temperature-barometric pressure-altitude	On request: Ambient temperatures lower than 0 °C (without condensation) and/or installation altitudes greater than 2 000 m

Article number	6ES7132-6BF01-0BA0
Dimensions	
Width	15 mm
Height	73 mm
Depth	58 mm
Weights	
Weight, approx.	30 g

Safety-related shutdown

Note

The digital output module DQ 8x24VDC/0.5A ST supports safety-related shutdown in connection with a fail-safe power module F-PM-E 24VDC/8A PPM ST:

- SIL according to IEC 61508: 2
- Highest attainable safety class in safety mode, performance level according to EN ISO 13849-1: d

Residual current for signal state "0"

Note

Residual current for signal state "0"

Due to the Diagnostics: Wire break function, there is a low level of residual current in the "0" signal state at the output, which may cause the display diodes to flicker.

This residual current does not depend on the setting for the Diagnostics: Wire break parameter.

Dimension drawing

See manual ET 200SP BaseUnits (http://support.automation.siemens.com/WW/view/en/58532597/133300)

Parameter data record

A

A.1 Parameter assignment and structure of the parameter data record

The data record of the module has an identical structure, regardless of whether you configure the module with PROFIBUS DP or PROFINET IO. With data record 128, you can reconfigure the module in your user program regardless of your programming. This means that you can use all the functions of the module even if you configured it via PROFIBUS-GSD.

Parameter assignment in the user program

You have the option to reconfigure the module in RUN (e.g. the response of selected channels to the CPU-STOP state can be changed in RUN without having an effect on the other channels).

Changing parameters in RUN

The "WRREC" instruction is used to transfer the parameters to the module using data record 128. The parameters set in STEP 7 are not changed in the CPU, which means that the parameters set in STEP 7 will be valid again after a restart.

Output parameter STATUS

If errors occur when transferring parameters with the "WRREC" instruction, the module continues operation with the previous parameter assignment. The STATUS output parameter contains a corresponding error code.

You will find a description of the "WRREC" instruction and the error codes in the STEP 7 online help.

Structure of data record 128

Note

Channel 0 contains the diagnostics for the entire module.

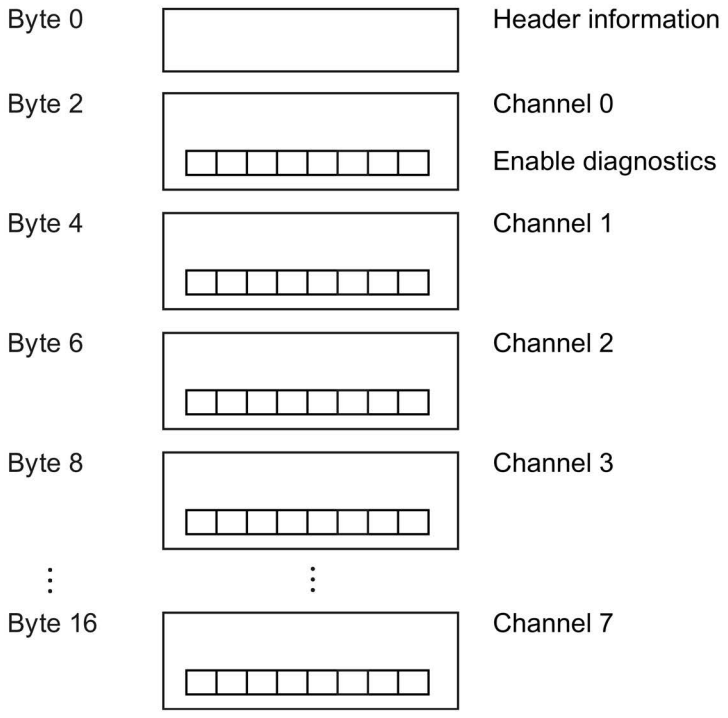

Figure A-1 Structure of data record 128

Header information

The figure below shows the structure of the header information.

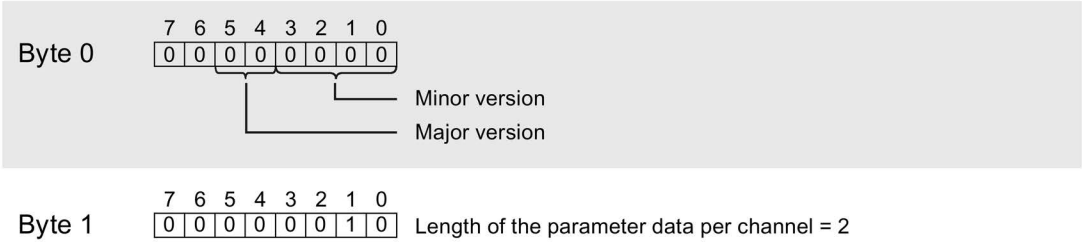

Figure A-2 Header information

Parameters

The figure below shows the structure of the parameters for channels 0 to 7.

You enable a parameter by setting the corresponding bit to "1".

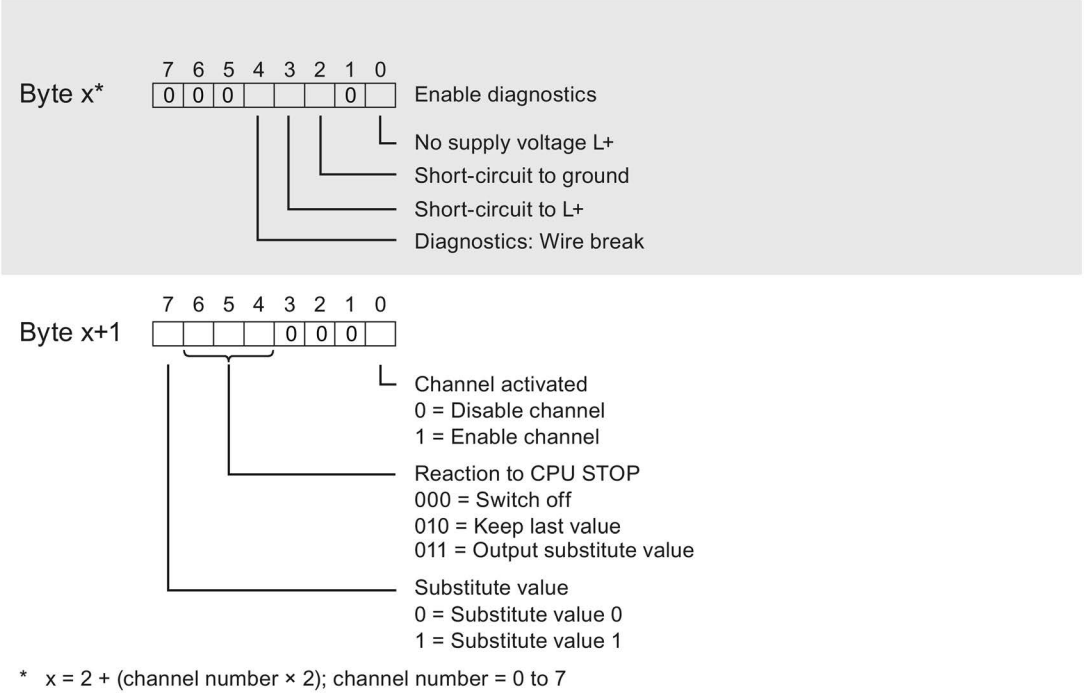

Figure A-3 Structure byte x to x+1 for the channels 0 to 7

Error transferring the data record

The module always checks all the values of the transferred data record. Only if all the values were transferred without errors does the module apply the values from the data record.

The WRREC instruction for writing data records returns corresponding error codes when errors occur in the STATUS parameter. (See also the description of the "STATUS" parameter in the STEP 7 online help).

The following table shows the module-specific error codes and their meaning for the parameter data record 128.

Error code in STATUS parameter (hexadecimal)				Meaning	Solution
Byte 0	Byte 1	Byte 2	Byte 3		
DF	80	B0	xx	Number of the data record unknown.	Enter a valid number for the data record.
DF	80	B1	xx	Length of the data record incorrect.	Enter a valid value for the data record length.
DF	80	B2	xx	Slot invalid or cannot be accessed.	• Check the station whether the module is plugged or drawn. • Check the assigned values for the parameters of the WRREC instruction.
DF	80	E0	xx	Wrong version or error in the header information.	Correct the version, length and number of parameter blocks.
DF	80	E1	06	Invalid coding for substitute value behavior.	Check the parameters of the module.

SIEMENS

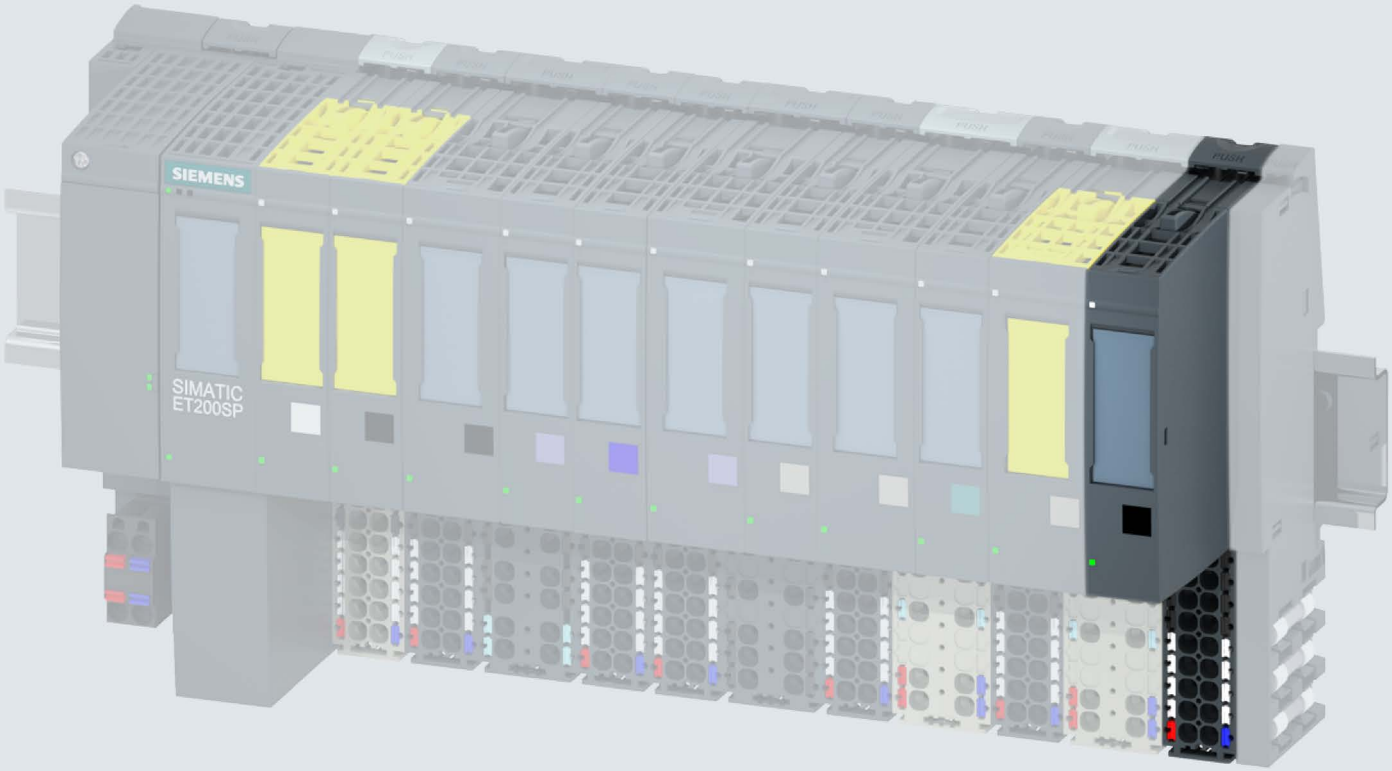

Manual

SIMATIC

ET 200SP

Digital input module
DQ 8x24VDC/0.5A HF (6ES7132-6BF00-0CA0)

Edition 12/2017

support.industry.siemens.com

SIEMENS

SIMATIC

ET 200SP
Digital output module
DQ 8x24VDC/0.5A HF
(6ES7132-6BF00-0CA0)

Manual

Preface

Documentation guide 1

Product overview 2

Wiring 3

Parameters/address space 4

Interrupts/diagnostics alarms 5

Technical specifications 6

Parameter data record A

12/2017

A5E03576680-AE

Legal information

Warning notice system

This manual contains notices you have to observe in order to ensure your personal safety, as well as to prevent damage to property. The notices referring to your personal safety are highlighted in the manual by a safety alert symbol, notices referring only to property damage have no safety alert symbol. These notices shown below are graded according to the degree of danger.

⚠ DANGER

indicates that death or severe personal injury **will** result if proper precautions are not taken.

⚠ WARNING

indicates that death or severe personal injury **may** result if proper precautions are not taken.

⚠ CAUTION

indicates that minor personal injury can result if proper precautions are not taken.

NOTICE

indicates that property damage can result if proper precautions are not taken.

If more than one degree of danger is present, the warning notice representing the highest degree of danger will be used. A notice warning of injury to persons with a safety alert symbol may also include a warning relating to property damage.

Qualified Personnel

The product/system described in this documentation may be operated only by **personnel qualified** for the specific task in accordance with the relevant documentation, in particular its warning notices and safety instructions. Qualified personnel are those who, based on their training and experience, are capable of identifying risks and avoiding potential hazards when working with these products/systems.

Proper use of Siemens products

Note the following:

⚠ WARNING

Siemens products may only be used for the applications described in the catalog and in the relevant technical documentation. If products and components from other manufacturers are used, these must be recommended or approved by Siemens. Proper transport, storage, installation, assembly, commissioning, operation and maintenance are required to ensure that the products operate safely and without any problems. The permissible ambient conditions must be complied with. The information in the relevant documentation must be observed.

Trademarks

All names identified by ® are registered trademarks of Siemens AG. The remaining trademarks in this publication may be trademarks whose use by third parties for their own purposes could violate the rights of the owner.

Disclaimer of Liability

We have reviewed the contents of this publication to ensure consistency with the hardware and software described. Since variance cannot be precluded entirely, we cannot guarantee full consistency. However, the information in this publication is reviewed regularly and any necessary corrections are included in subsequent editions.

Siemens AG
Division Digital Factory
Postfach 48 48
90026 NÜRNBERG
GERMANY

A5E03576680-AE
℗ 12/2017 Subject to change

Copyright © Siemens AG 2013 - 2017.
All rights reserved

Preface

Purpose of the documentation

This manual supplements the system manual ET 200SP distributed I/O system (http://support.automation.siemens.com/WW/view/en/58649293).

Functions that generally relate to the system are described in this manual.

The information provided in this manual and in the system/function manuals supports you in commissioning the system.

Changes compared to previous version

Compared to the previous version, this manual contains the following change:

Number in pack: 10 units (6ES7132-6BF00-2CA0)

Conventions

CPU: When the term "CPU" is used in this manual, it applies to the CPUs of the S7-1500 automation system as well as to the CPUs/interface modules of the distributed I/O system ET 200SP.

STEP 7: In this documentation, "STEP 7" is used as a synonym for all versions of the configuration and programming software "STEP 7 (TIA Portal)".

Please also observe notes marked as follows:

Note

A note contains important information on the product described in the documentation, on the handling of the product or on the section of the documentation to which particular attention should be paid.

Security information

Siemens provides products and solutions with industrial security functions that support the secure operation of plants, systems, machines and networks.

In order to protect plants, systems, machines and networks against cyber threats, it is necessary to implement – and continuously maintain – a holistic, state-of-the-art industrial security concept. Siemens' products and solutions constitute one element of such a concept.

Customers are responsible for preventing unauthorized access to their plants, systems, machines and networks. Such systems, machines and components should only be connected to an enterprise network or the internet if and to the extent such a connection is necessary and only when appropriate security measures (e.g. firewalls and/or network segmentation) are in place.

For additional information on industrial security measures that may be implemented, please visit (https://www.siemens.com/industrialsecurity).

Siemens' products and solutions undergo continuous development to make them more secure. Siemens strongly recommends that product updates are applied as soon as they are available and that the latest product versions are used. Use of product versions that are no longer supported, and failure to apply the latest updates may increase customers' exposure to cyber threats.

To stay informed about product updates, subscribe to the Siemens Industrial Security RSS Feed under (https://www.siemens.com/industrialsecurity).

Table of contents

Preface 3

1 Documentation guide 6

2 Product overview 11

2.1 Properties 11

3 Wiring 14

3.1 Wiring and block diagram 14

4 Parameters/address space 17

4.1 Parameters 17

4.2 Explanation of parameters 19

4.3 Address space 20

5 Interrupts/diagnostics alarms 27

5.1 Status and error displays 27

5.2 Interrupts 29

5.3 Diagnostics alarms 30

6 Technical specifications 31

6.1 Technical specifications 31

A Parameter data record 35

A.1 Parameter assignment and structure of parameter data record 35

Documentation guide

1

The documentation for the SIMATIC ET 200SP distributed I/O system is arranged into three areas.
This arrangement enables you to access the specific content you require.

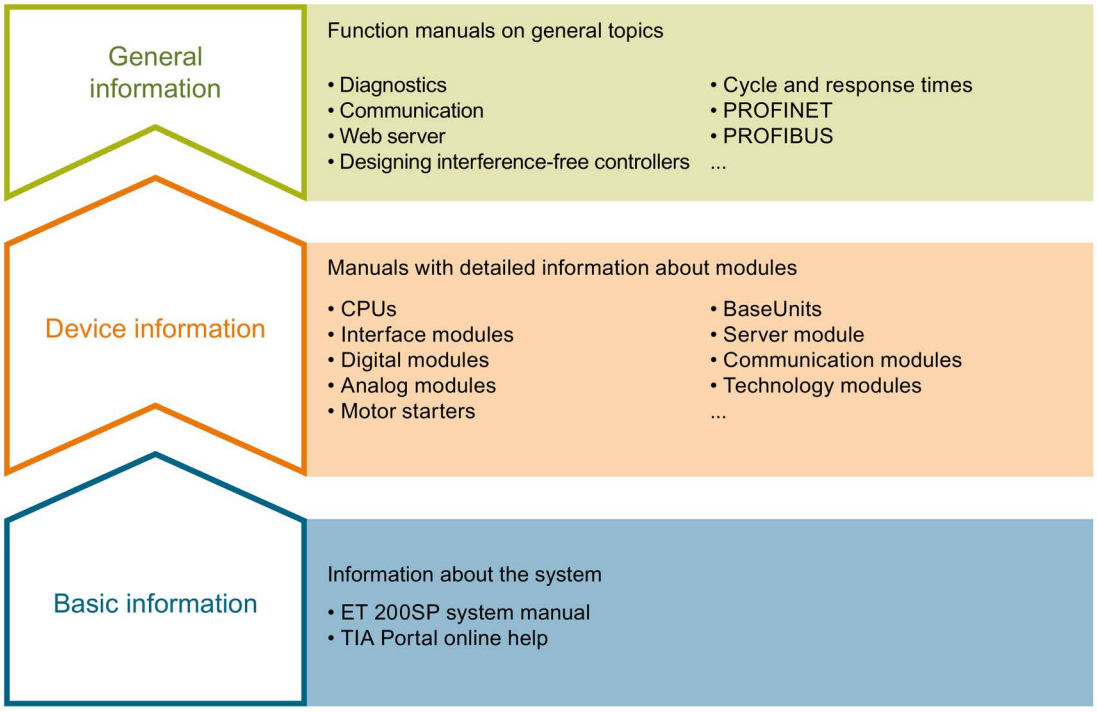

Basic information

The system manual describes in detail the configuration, installation, wiring and commissioning of the SIMATIC ET 200SP. distributed I/O system. The STEP 7 online help supports you in the configuration and programming.

Device information

Product manuals contain a compact description of the module-specific information, such as properties, wiring diagrams, characteristics and technical specifications.

General information

The function manuals contain detailed descriptions on general topics regarding the SIMATIC ET 200SP distributed I/O system, e.g. diagnostics, communication, Web server, motion control and OPC UA.

You can download the documentation free of charge from the Internet (http://w3.siemens.com/mcms/industrial-automation-systems-simatic/en/manual-overview/tech-doc-et200/Pages/Default.aspx).

Changes and supplements to the manuals are documented in a Product Information.

You can download the product information free of charge from the Internet (https://support.industry.siemens.com/cs/us/en/view/73021864).

Manual Collection ET 200SP

The Manual Collection contains the complete documentation on the SIMATIC ET 200SP distributed I/O system gathered together in one file.

You can find the Manual Collection on the Internet (http://support.automation.siemens.com/WW/view/en/84133942).

"mySupport"

With "mySupport", your personal workspace, you make the most of your Industry Online Support.

In "mySupport" you can store filters, favorites and tags, request CAx data and put together your personal library in the Documentation area. Furthermore, your data is automatically filled into support requests and you always have an overview of your current requests.

You need to register once to use the full functionality of "mySupport".

You can find "mySupport" in the Internet (https://support.industry.siemens.com/My/ww/en).

"mySupport" - Documentation

In the Documentation area of "mySupport", you have the possibility to combine complete manuals or parts of them to make your own manual.
You can export the manual in PDF format or in an editable format.

You can find "mySupport" - Documentation in the Internet (http://support.industry.siemens.com/My/ww/en/documentation).

"mySupport" - CAx Data

In the CAx Data area of "mySupport", you can have access the latest product data for your CAx or CAe system.

You configure your own download package with a few clicks.

In doing so you can select:

- Product images, 2D dimension drawings, 3D models, internal circuit diagrams, EPLAN macro files
- Manuals, characteristics, operating manuals, certificates
- Product master data

You can find "mySupport" - CAx Data in the Internet (http://support.industry.siemens.com/my/ww/en/CAxOnline).

Application examples

The application examples support you with various tools and examples for solving your automation tasks. Solutions are shown in interplay with multiple components in the system - separated from the focus in individual products.

You can find the application examples on the Internet (https://support.industry.siemens.com/sc/ww/en/sc/2054).

TIA Selection Tool

With the TIA Selection Tool, you can select, configure and order devices for Totally Integrated Automation (TIA).
This tool is the successor of the SIMATIC Selection Tool and combines the known configurators for automation technology into one tool.
With the TIA Selection Tool, you can generate a complete order list from your product selection or product configuration.

You can find the TIA Selection Tool on the Internet (http://w3.siemens.com/mcms/topics/en/simatic/tia-selection-tool).

SIMATIC Automation Tool

You can use the SIMATIC Automation Tool to run commissioning and maintenance activities simultaneously on various SIMATIC S7 stations as a bulk operation independently of the TIA Portal.

The SIMATIC Automation Tool provides a multitude of functions:

- Scanning of a PROFINET/Ethernet network and identification of all connected CPUs
- Address assignment (IP, subnet, gateway) and station name (PROFINET device) to a CPU
- Transfer of the data and the programming device/PC time converted to UTC time to the module
- Program download to CPU
- Operating mode switchover RUN/STOP
- Localization of the CPU by means of LED flashing
- Reading out CPU error information
- Reading the CPU diagnostic buffer
- Reset to factory settings
- Updating the firmware of the CPU and connected modules

You can find the SIMATIC Automation Tool on the Internet (https://support.industry.siemens.com/cs/ww/en/view/98161300).

PRONETA

With SIEMENS PRONETA (PROFINET network analysis), you analyze the plant network during commissioning. PRONETA features two core functions:

- The topology overview independently scans PROFINET and all connected components.
- The IO check is a fast test of the wiring and the module configuration of a system.

You can find SIEMENS PRONETA on the Internet (https://support.industry.siemens.com/cs/ww/en/view/67460624).

SINETPLAN

SINETPLAN, the Siemens Network Planner, supports you in planning automation systems and networks based on PROFINET. The tool facilitates professional and predictive dimensioning of your PROFINET installation as early as in the planning stage. In addition, SINETPLAN supports you during network optimization and helps you to exploit network resources optimally and to plan reserves. This helps to prevent problems in commissioning or failures during productive operation even in advance of a planned operation. This increases the availability of the production plant and helps improve operational safety.

The advantages at a glance

- Network optimization thanks to port-specific calculation of the network load
- Increased production availability thanks to online scan and verification of existing systems
- Transparency before commissioning through importing and simulation of existing STEP 7 projects
- Efficiency through securing existing investments in the long term and optimal exploitation of resources

You can find SINETPLAN on the Internet (https://www.siemens.com/sinetplan).

Product overview

2

2.1 Properties

Article number

6ES7132-6BF00-0CA0 (Number in pack: 1 unit)

6ES7132-6BF00-2CA0 (Number in pack: 10 units)

View of the module

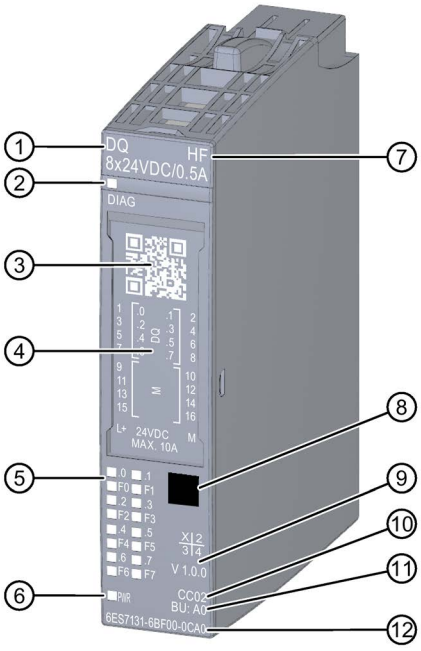

① Module type and name
② LED for diagnostics
③ 2D matrix code
④ Wiring diagram
⑤ LEDs for channel status
⑥ LED for supply voltage
⑦ Function class
⑧ Color coding module type
⑨ Function and firmware version
⑩ Color code for selecting the color identification labels
⑪ BU type
⑫ Article number

Figure 2-1 View of the module DQ 8x24VDC/0,5A HF

Properties

The module has the following technical properties:

- Digital output module with 8 outputs
- Source output (PNP, P-switching)
- Supply voltage L+
- Output current 0.5 A (per channel)
- Configurable diagnostics (per channel)
- Configurable substitute values (per channel)
- Suitable for solenoid valves, DC contactors, and indicator lights
- Safety-related shutdown

The module supports the following functions:

Table 2- 1 Version dependencies of the functions

Function	HW version	FW version	STEP 7		GSD file	
			TIA Portal	V5.x	PROFINET IO	PROFIBUS DP
Firmware update	FS01	V1.0.0 or higher	V14 SP1 or higher	V5.5 SP3 or higher	X	X
Identification data I&M0 to I&M3	FS01	V1.0.0 or higher	V12 or higher	V5.5 SP3 or higher with HSP 0230 V1.0 or higher	X	X
Configuration in RUN	FS01	V1.0.0 or higher	V12 or higher	V5.5 SP3 or higher	X	X
PROFIenergy	FS01	V1.0.0 or higher	V14 SP1 or higher	V5.5 SP3 or higher	X	X
Value status	FS01	V1.1.0 or higher	V14 SP1 or higher	V5.5 SP3 or higher with HSP 0230 V2.0 or higher	X	X
Isochronous mode	FS01	V1.1.0 or higher	V14 SP1 or higher	V5.5 SP3 or higher	X	X
Module-internal shared input (MSI)	FS01	V1.2.0 or higher	V14 SP1 V13 or higher	V5.5 SP3 or higher	X	X
Configurable submodule/submodules for shared device	FS01	V2.0.0 or higher	V14 SP1 or higher	V5.5 SP3 or higher	X	X

Accessories

The following accessories are supplied with the module and can also be ordered separately as spare parts:

- Labeling strips
- Color identification labels
- Reference identification label
- Shield connector

See also

You can find additional information on the accessories in the system manual Distributed I/O System ET 200SP.

See also

ET 200SP distributed I/O system
(https://support.industry.siemens.com/cs/ww/en/view/58649293)

Wiring 3

3.1 Wiring and block diagram

This section includes the block diagram of the DQ 8x24VDC/0.5A HF module with the terminal assignments for a 1-wire, 2-wire and 3-wire connection.

You can use and combine the different wiring options for all channels.

You can find information on wiring the BaseUnit in the system manual Distributed I/O System ET 200SP (http://support.automation.siemens.com/WW/view/en/58649293).

Note

- The load group of the module must begin with a light-colored BaseUnit. Keep this in mind also during the configuration.

Note

Cross circuit at output

Be aware that voltage from a cross-circuit at the output can feed L+ to modules.

Wiring: 1 and 2-wire connection of actuators

The following figure shows an example of the terminal assignment of the digital output module DQ 8×24VDC/0.5A HF on the BaseUnit BU type A0 without AUX terminals (1- and 2-wire connection).

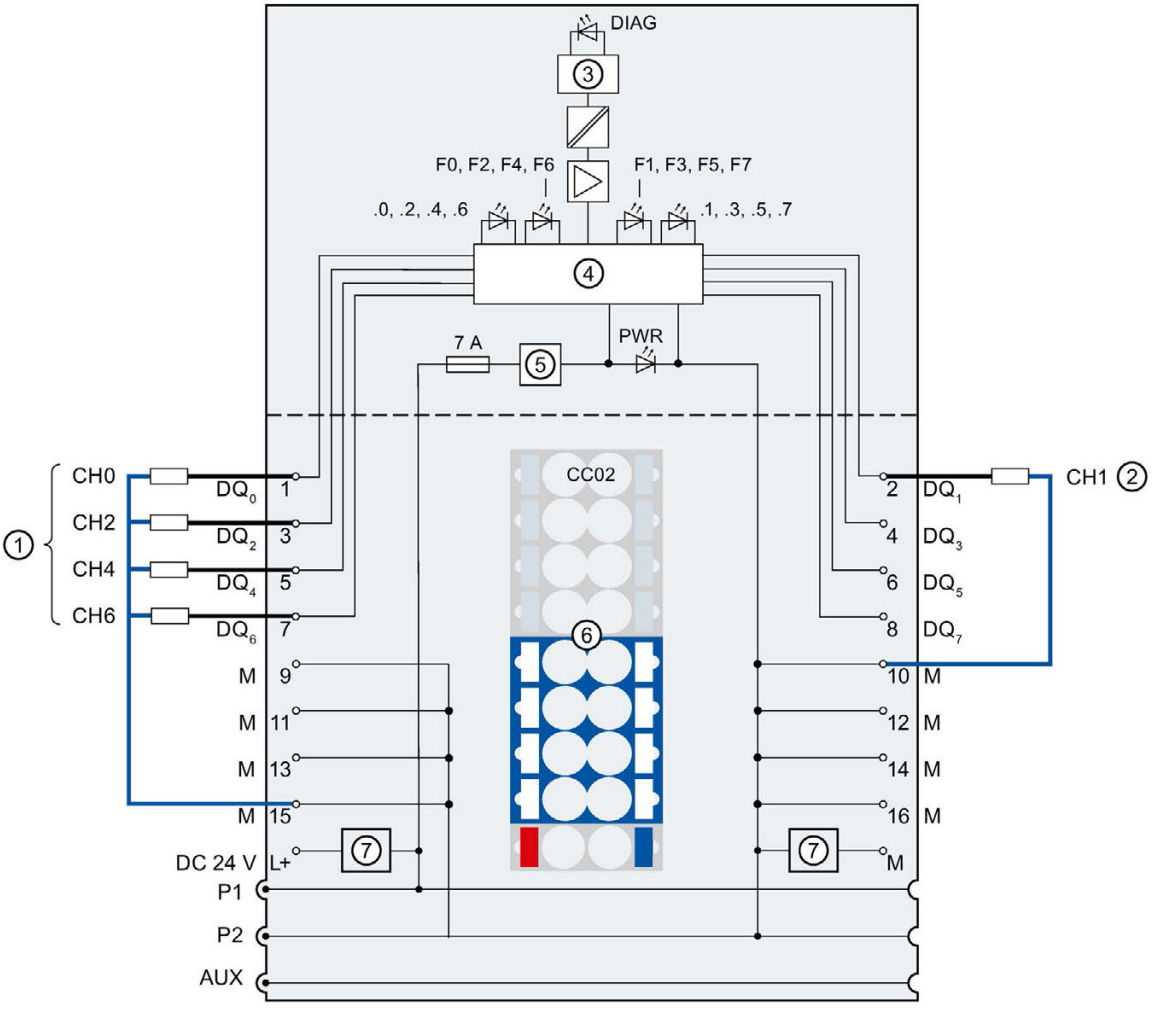

①	1-wire connection	24 V DC	Supply voltage L+ (infeed for light-colored BaseUnit only)
②	2-wire connection	M	Ground
③	Backplane bus interface	P1, P2, AUX	Internal self-assembling voltage buses Connection to left (dark-colored BaseUnit) Connection to left interrupted (light-colored BaseUnit)
④	Output electronics	DQ_n	Output signal, channel n
⑤	Polarity reversal protection	DIAG	Error or diagnostics LED (green, red)
⑥	Color-coded label with color code CC02 (optional)	.0 to .7	Channel status LED (green)
⑦	Filter connection supply voltage (only when light-colored BaseUnit is present)	F0 to F7	Channel fault LED (red)

PWR	Power LED (green)

Figure 3-1 Block diagram and terminal assignment for 1- and 2-wire connection of actuators

Wiring: 3-wire connection of actuators

The following figure shows an example of the terminal assignment of the digital output module DQ 8×24VDC/0.5A HF on the BaseUnit BU type A0 with AUX terminals (3-wire connection).

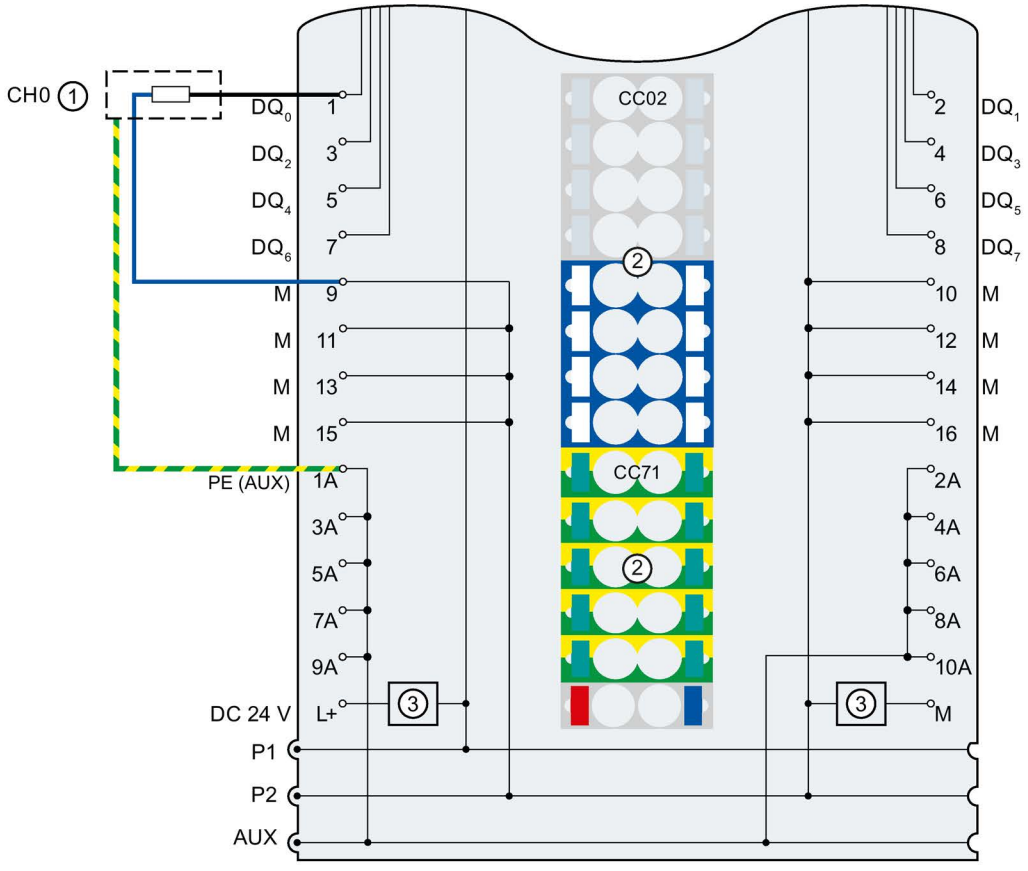

①	3-wire connection	1 A to 10 A	AUX terminals
②	Color-coded labels with color codes CC02 and CC71 (optional)	PE (AUX)	Protective conductor connection
③	Filter connection supply voltage (only when light-colored BaseUnit is present)	24 V DC	Supply voltage L+ (infeed for light-colored BaseUnit only)
DQ_n	Output signal, channel n	M	Ground
		P1, P2, AUX	Internal self-assembling voltage buses Connection to left (dark-colored BaseUnit) Connection to left interrupted (light-colored BaseUnit)

Figure 3-2 Terminal assignment for 3-wire connection of actuators

Parameters/address space 4

4.1 Parameters

Parameters of the DQ 8x24VDC/0.5A HF

Specify the module properties with the various parameters in the course of your STEP 7 configuration. The following table lists the configurable parameters. The effective range of the configurable parameters depends on the type of configuration. The following configurations are possible:

- Central operation with an ET 200SP CPU
- Distributed operation on PROFINET IO in an ET 200SP system
- Distributed operation with PROFIBUS DP in an ET 200SP system

When assigning parameters in the user program, use the "WRREC" instruction to transfer the parameters to the module by means of data records (see chapter Parameter assignment and structure of the parameter data record (Page 35)).

Table 4- 1 Configurable parameters and their defaults (GSD file)

Parameter	Value range	Default	Configuration in RUN	Scope with configuration software, e.g., STEP 7 (TIA Portal)	
				GSD file PROFINET IO	GSD file PROFIBUS DP
Diagnostics No supply voltage L+	• Disable • Enable	Disable	Yes	Channel	Channel
Diagnostics Short-circuit to ground	• Disable • Enable	Disable	Yes	Channel	Channel [1]
Diagnostics: Short-circuit to L	• Disable • Enable	Disable	Yes	Channel	
Diagnostics Wire break	• Disable • Enable	Disable	Yes	Channel	Channel
Channel activated	• Disable • Enable	Enable	Yes	Channel	Channel

Parameter	Value range	Default	Configuration in RUN	Scope with configuration software, e.g., STEP 7 (TIA Portal)	
				GSD file PROFINET IO	GSD file PROFIBUS DP
Reaction to CPU STOP	• Turn off • Keep last value • Output substi-tute value 1	Turn off	Yes	Channel	Module [1]
Potential group	• Use potential group of the left module (module plugged into a dark-colored BaseUnit) • Enable new potential group (module plugged into light-colored BaseUnit)	Use potential group of the left module	No	Module	Module

[1] Due to the limited number of parameters of a maximum of 244 bytes per ET 200SP station with a PROFIBUS GSD configuration, the parameter assignment options are restricted. The parameter length of the I/O module is 7 bytes with PROFIBUS GSD configuration. If necessary, you can set this parameter, however, with data records 64 to 71 or data record 128, see Appendix "Parameter data record".

Note

If one of the two parameters "Diagnostics: Short-circuit to L+" or "Diagnostics: Wire break" is enabled and one of these diagnostics occurs, the affected channel is switched off to avoid triggering an undefined load. Note that a diagnostic interrupt can only be generated when diagnostics are enabled. *

* as of module revision 05

4.2 Explanation of parameters

Diagnostics: No supply voltage L+

Enabling of the diagnostics for no or insufficient supply voltage L+.

Diagnostics: Short-circuit to ground

Enabling of the diagnostics if a short-circuit of the actuator supply to ground occurs.

Diagnostics: Short-circuit to L+

Enabling of the diagnostics if a short-circuit of the actuator supply to L+ occurs.

Diagnostics: Wire break

Enabling of the diagnostics if the line to the actuator is broken.

Channel activated

Determines whether a channel is activated or deactivated.

Reaction to CPU STOP

Determines the behavior of the module in the event of a CPU STOP.

Potential group

A potential group consists of a group of directly adjacent I/O modules within an ET 200SP station, which are supplied via a common supply voltage.

A potential group begins with a light-colored BaseUnit through which the required voltage is supplied for all modules of the potential group. The light-colored BaseUnit interrupts the three self-assembling voltage buses P1, P2 and AUX to the left neighbor.

All additional I/O modules of this potential group are plugged into dark-colored BaseUnits. You take the potential of the self-assembling voltage buses P1, P2 and AUX from the left neighbor.

A potential group ends with the dark-colored BaseUnit, which follows a light-colored BaseUnit or server module in the station configuration.

See also

See system manual ET 200SP distributed I/O system (http://support.automation.siemens.com/WW/view/en/58649293).

4.3 Address space

The module can be configured differently in STEP 7; see following table. Depending on the configuration, additional/different addresses are assigned in the process image output/input.

Configuration options of DQ 8x24VDC/0.5A HF

You can configure the module with STEP 7 (TIA Portal) or with a GSD file. If you configure the module by means of a GSD file, the configurations are available under various short designations/module names; see the table below. The following configurations are possible:

Table 4- 2 Configuration options with GSD file

Configuration	Short designation/module name in the GSD file	Configuration software, e.g. with STEP 7 (TIA Portal)		
		Integrated in the hardware catalog STEP 7, as of V13, SP1	GSD file PROFINET IO	GSD file PROFIBUS DP
1 x 8-channel without value status	DQ 8x24VDC/0.5A HF V1.0	X	X	X
1 x 8-channel without value status	DQ 8x24VDC/0.5A HF V1.1	X	X	X
1 x 8-channel with value status	DQ 8x24VDC/0.5A HF V1.1, QI	X	X	---
1 x 8-channel without value status	DQ 8x24VDC/0.5A HF V1.2	X	X	X
1 x 8-channel with value status	DQ 8x24VDC/0.5A HF V1.2, QI	X	X	---
1 x 8-channel with value status for module-internal Shared Output with up to 4 submodules	DQ 8x24VDC/0.5A HF V1.2, MSO	X	X	---
1 x 8-channel without value status	DQ 8x24VDC/0.5A HF V2.0	---	X	X
1 x 8-channel with value status	DQ 8x24VDC/0.5A HF V2.0, QI	---	X	---
1 x 8-channel with value status for module-internal Shared Output with up to 4 submodules	DQ 8x24VDC/0.5A HF V2.0, MSO	---	X	---
2 x 4-channel without value status	DQ 8x24VDC/0.5A HF V2.0, S.2	---	X	---
2 x 4-channel with value status	DQ 8x24VDC/0.5A HF V2.0, S.2 QI	---	X	---
4 x 2-channel without value status	DQ 8x24VDC/0.5A HF V2.0, S.4	---	X	---
4 x 2-channel with value status	DQ 8x24VDC/0.5A HF V2.0, S.4 QI	---	X	---

Note

The following functions are only fully available when the submodule X.1 is configured and the IO controller to which submodule X.1 is assigned has established a connection to the IO device.

- Firmware update
- I&M identification data
- PROFIenergy

2 x 4- / 4 x 2-channel configuration

For the configuration, the channels of the module are divided into multiple submodules. The submodules can be assigned to different IO controllers when the module is used in a Shared Device.

The number of usable submodules is dependent on the interface module used. Read the information in the manual for the particular interface module.

Value status (Quality Information, QI)

The value status is always activated for the following module names:

- DQ 8x24VDC/0.5A HF QI
- DQ 8x24VDC/0.5A HF MSO

An additional bit is assigned to each channel for the value status. The bit for the value status indicates if the output value specified by the user program is actually pending at the module terminal (0 = value is incorrect).

Address space for configuration as 1 x 8-channel DQ 8x24VDC/0.5A HF

The figure below shows the address space assignment for configuration as a 1 x 8-channel module without value status

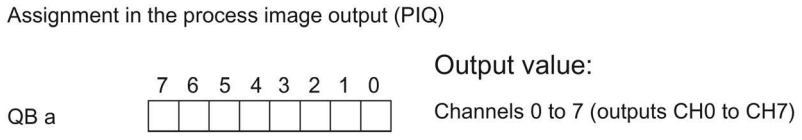

Figure 4-1 Address space for configuration as 8-channel DQ 8x24VDC/0.5A HF, QI without value status

Address space for configuration as 1 x 8-channel DQ 8x24VDC/0.5A HF, QI

The following figure shows the assignment of the address space for the configuration as 1 x 8-channel module with value status. You can freely assign the start address for the module. The addresses of the channels are derived from the start address.

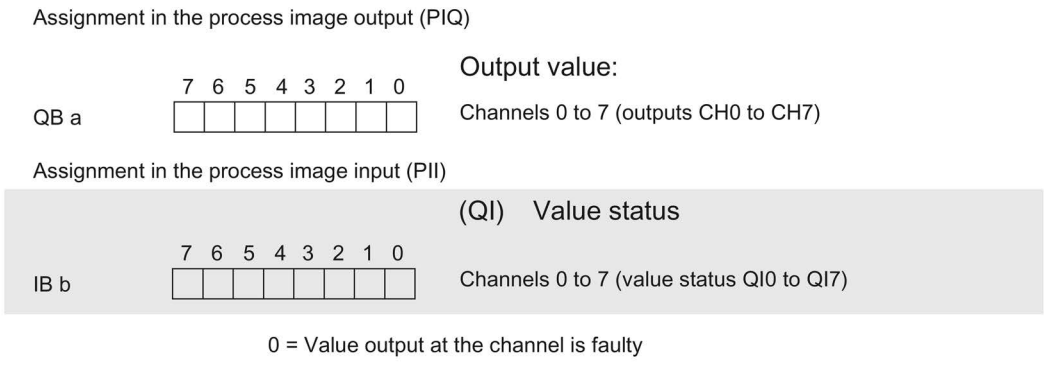

Figure 4-2 Address space for configuration as 8-channel DQ 8x24VDC/0.5A HF, QI with value status

Address space for configuration as 1 x 8-channel DQ 8x24VDC/0.5A HF, MSO

For the configuration as a 1 x 8-channel module (module-internal Shared Output, MSO), channels 0 to 7 of the module are copied to up to four submodules. Channels 0 to 7 are then available with identical values in various submodules. These submodules can be assigned to up to four IO controllers when the module is used in a shared device:

- The IO controller to which submodule 1 is assigned has write access to outputs 0 to 7.
- The IO controllers to which submodule 2, 3, or 4 is assigned have read access to outputs 0 to 7.

Value status (Quality Information,QI)

The meaning of the value status depends on the submodule on which it occurs.

For the 1st submodule (=basic submodule), the value status 0 indicates that the value is incorrect or that the IO controller of the basic submodule is in STOP state.

For the 2nd to 4th submodule (=MSO submodule), the value status 0 indicates that the value is incorrect or one of the following errors has occurred:

- The basic submodule is not yet configured (not ready).
- The connection between the IO controller and the basic submodule has been interrupted.
- The IO controller of the basic submodule is in STOP or POWER OFF state.

The following figure shows the assignment of the address space for submodules 1, 2, 3, and 4 and the value status.

Assignment in the process image output (PIO) for 1st submodule

	7 6 5 4 3 2 1 0	1st submodule (basic submodule):
QB a		Channels 0 to 7 (outputs CH0 to CH7)
IB b	7 6 5 4 3 2 1 0	(QI) Value status
		Channels 0 to 7 (value status QI0 to QI7)

Assignment in the process image input (PII) for 2nd submodule

	7 6 5 4 3 2 1 0	2nd submodule (MSO submodule): Read back output values
IB c		Channels 0 to 7 (outputs CH0 to CH7)
IB c+1	7 6 5 4 3 2 1 0	(QI) Value status
		Channels 0 to 7 (value status QI0 to QI7)

Assignment in the process image input (PII) for 3rd submodule

	7 6 5 4 3 2 1 0	3rd submodule (MSO submodule): Read back output values
IB d		Channels 0 to 7 (outputs CH0 to CH7)
IB d+1	7 6 5 4 3 2 1 0	(QI) Value status
		Channels 0 to 7 (value status QI0 to QI7)

Assignment in the process image input (PII) for 4th submodule

	7 6 5 4 3 2 1 0	4th submodule (MSO submodule): Read back output values
IB e		Channels 0 to 7 (outputs CH0 to CH7)
IB e+1	7 6 5 4 3 2 1 0	(QI) Value status
		Channels 0 to 7 (value status QI0 to QI7)

0 = Value output at the channel is faulty

Figure 4-3 Address space for configuration as 1 x 8-channel DQ 8x24VDC/0.5A HF MSO with value status

Address space for configuration as 2 x 4-channel DQ 8x24VDC/0.5A HF V2.0, S.2

The figure below shows the address space assignment for configuration as a 2 x 4-channel module without value status.

Each of the two submodules has a freely assignable start address.

Assignment in the process image output (PIQ)

	7	6	5	4	3	2	1	0	Output value:	
QB a	0	0	0	0					Channels 0 to 3 (output CH0 to CH3)	1st submodule
QB b	0	0	0	0					Channel 4 to 7 (output CH4 to CH7)	2nd submodule

Figure 4-4 Address space for configuration as 2 x 4-channel DQ 8x24VDC/0.5A HF V2.0, S.2 without value status

Address space for configuration as 2 x 4-channel DQ 8x24VDC/0.5A HF V2.0, S.2 QI

The figure below shows the address space assignment for configuration as a 2 x 4-channel module with value status.

Each of the two submodules has a freely assignable start address.

Assignment in the process image output (PIQ)

	7	6	5	4	3	2	1	0	Output value:	
QB a	0	0	0	0					Channels 0 to 3 (output CH0 to CH3)	1st submodule
QB b	0	0	0	0					Channel 4 to 7 (output CH4 to CH7)	2nd submodule

Assignment in the process image input (PII)

	7	6	5	4	3	2	1	0	(QI) Value status	
IB c	0	0	0	0					Channel 0 to 3 (value status QI0 to QI3)	1st submodule
IB d	0	0	0	0					Channel 4 to 7 (value status QI4 to QI7)	2nd submodule

0 = Value output at the channel is faulty

Figure 4-5 Address space for configuration as 2 x 4-channel DQ 8x24VDC/0.5A HF V2.0, S.2 QI with value status

Address space for configuration as 4 x 2-channel DQ 8x24VDC/0.5A HF V2.0, S.4

The figure below shows the address space assignment for configuration as a 4 x 2-channel module without value status.

Each of the four submodules has a freely assignable start address.

Assignment in the process image output (PIQ)

	7	6	5	4	3	2	1	0	Output value:	
QB a	0	0	0	0	0	0			Channels 0 and 1 (outputs CH0 and CH1)	1st submodule
QB b	0	0	0	0	0	0			Channel 2 and 3 (output CH2 and CH3)	2nd submodule
QB c	0	0	0	0	0	0			Channel 4 and 5 (output CH4 and CH5)	3rd submodule
QB d	0	0	0	0	0	0			Channel 6 and 7 (output CH6 and CH7)	4th submodule

Figure 4-6 Address space for configuration as 4 x 2-channel DQ 8x24VDC/0.5A HF V2.0, S.4 without value status

Address space for configuration as 4 x 2-channel DQ 8x24VDC/0.5A HF V2.0, S.4 QI

The figure below shows the address space assignment for configuration as a 4 x 2-channel module with value status.

Each of the four submodules has a freely assignable start address.

Assignment in the process image output (PIQ)

	7	6	5	4	3	2	1	0	Output value:	
QB a	0	0	0	0	0	0			Channels 0 and 1 (outputs CH0 and CH1)	1st submodule
QB b	0	0	0	0	0	0			Channel 2 and 3 (output CH2 and CH3)	2nd submodule
QB c	0	0	0	0	0	0			Channel 4 and 5 (output CH4 and CH5)	3rd submodule
QB d	0	0	0	0	0	0			Channel 6 and 7 (output CH6 and CH7)	4th submodule

Assignment in the process image input (PII)

	7	6	5	4	3	2	1	0	(QI) Value status	
IB e	0	0	0	0	0	0			Channels 0 and 1 (value status QI0 and QI1)	1st submodule
IB f	0	0	0	0	0	0			Channel 2 and 3 (value status QI2 and QI3)	2nd submodule
IB g	0	0	0	0	0	0			Channel 4 and 5 (value status QI4 and QI5)	3rd submodule
IB h	0	0	0	0	0	0			Channel 6 and 7 (value status QI6 and QI7)	4th submodule

0 = Value output at the channel is faulty

Figure 4-7 Address space for configuration as 4 x 2-channel DQ 8x24VDC/0.5A HF V2.0, S.4 QI with value status

Interrupts/diagnostics alarms

5

5.1 Status and error displays

LED displays

The figure below shows the LED displays (status and error displays) of the DQ 8x24VDC/0.5A HF:

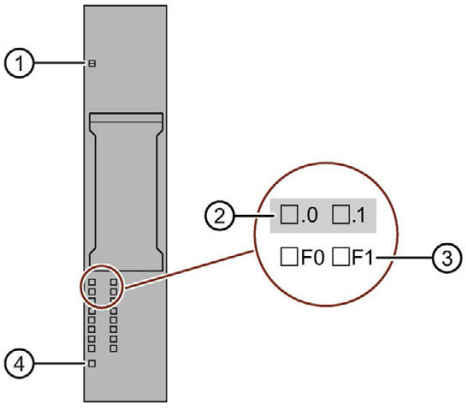

① DIAG (green/red)
② Channel status (green)
③ Channel error (red)
④ PWR (green)

Figure 5-1 LED displays

Meaning of the LEDs

The tables below explain the meaning of the status and error displays. Corrective measures for diagnostics alarms can be found in section Diagnostics alarms (Page 30).

DIAG LED

Table 5- 1 Error display of the DIAG LED

DIAG LED	Meaning
☐ Off	Backplane bus supply of the ET 200SP not OK
☼ Flashes	Module not ready for operation (no parameters assigned)
■ On	Module parameters assigned and no module/channel diagnostics
☼ Flashes	Module parameters assigned and module/channel diagnostics

LED channel status/channel error

Table 5- 2 Status / error display of the LED channel status / channel error

LED channel status	LED channel error	Meaning
☐ Off	☐ Off	Channel deactivated or process signal = 0 and no channel diagnostics
■ On	☐ Off	Channel activated and process signal = 1 and no channel diagnostics
☐ Off	■ On	Channel activated and channel diagnostics

PWR LED

Table 5- 3 Status display of the PWR LED

PWR LED	Meaning
☐ Off	Missing supply voltage L+
■ On	Supply voltage L+ present

5.2 Interrupts

The DQ 8×24VDC/0.5A HF digital output module supports diagnostics interrupts.

Diagnostics interrupts

The module generates a diagnostic interrupt at the following events:

- Short-circuit
- Wire break
- Parameter assignment error
- Supply voltage missing
- Channel temporarily unavailable

Detailed information on the event is available in the STEP 7 online help.

5.3 Diagnostics alarms

Diagnostics alarms

A diagnostics alarm is generated and the DIAG-LED flashes on the module for each diagnostics event. You can read out the diagnostics alarms, for example, in the diagnostics buffer of the CPU. You can evaluate the error codes with the user program.

Note

Parallel connection of two outputs

For parallel connection of two outputs for redundant control of a load, the channel diagnostics "Short-circuit to L+" and "Wire break" must be deactivated.

Table 5- 4 Diagnostics alarms, their meaning and corrective measures

Diagnostics alarm	Error code	Meaning	Solution
Short-circuit	1_H	• Short-circuit of actuator supply to ground [1] • Short-circuit of actuator supply to L+ [2]	Correct the process wiring
Wire break	6_H	Actuator circuit impedance too high	Use a different actuator type or modify the wiring, for example, use cables with larger cross-section
		Wire break between the module and actuator	Connect the cable
		Channel not connected (open)	• Disable diagnostics • Connect a resistor to the actuator contacts in the load resistance range
Parameter assignment error	10_H	• The module cannot evaluate parameters for the channel. • Incorrect parameter assignment.	Correct the parameter assignment
Supply voltage missing	11_H	No or insufficient supply voltage L+	• Check supply voltage L+ on the BaseUnit • Check BaseUnit type
Channel/component temporarily unavailable	$1F_H$	Firmware update is currently in progress or has been canceled. The module does not output any process or substitute values in this state.	• Wait for firmware update. • Restart the firmware update.

[1] only in switched state (output value 1)

[2] only in non-switched state (output value 0)

Note

In case of a short-circuit of the actuator supply to L+ at the activated channel, load distributions can occur which result in wire break diagnostics.

Technical specifications

6

6.1 Technical specifications

Technical specifications of the DQ 8x24VDC/0.5A HF

Article number	6ES7132-6BF00-0CA0
General information	
Product type designation	DQ 8x24 V DC/0.5 A HF
Firmware version	V2.0
• FW update possible	Yes
usable BaseUnits	BU type A0
Color code for module-specific color identification plate	CC02
Product function	
• I&M data	Yes; I&M0 to I&M3
Engineering with	
• STEP 7 TIA Portal configurable/integrated as of version	V13 SP1 / -
• STEP 7 configurable/integrated as of version	V5.5 / -
• PCS 7 configurable/integrated as of version	V8.1 SP1
• PROFIBUS as of GSD version/GSD revision	One GSD file each, Revision 3 and 5 and higher
• PROFINET as of GSD version/GSD revision	GSDML V2.3
Operating mode	
• DQ	Yes
• DQ with energy-saving function	No
• PWM	No
• Oversampling	No
• MSO	Yes
Redundancy	
• Redundancy capability	Yes

Article number	6ES7132-6BF00-0CA0
Supply voltage	
Rated value (DC)	24 V
permissible range, lower limit (DC)	19.2 V
permissible range, upper limit (DC)	28.8 V
Reverse polarity protection	Yes
Output voltage	
Rated value (DC)	24 V
Power loss	
Power loss, typ.	1 W
Address area	
Address space per module	
• Address space per module, max.	8 byte; 2 channels per submodule + QI information
Digital outputs	
Type of digital output	Source output (PNP, current-sourcing)
Number of digital outputs	8
Current-sinking	No
Current-sourcing	Yes
Short-circuit protection	Yes
• Response threshold, typ.	0.7 to 1.3 A
Limitation of inductive shutdown voltage to	Typ. L+ (-50 V)
Controlling a digital input	Yes
Switching capacity of the outputs	
• with resistive load, max.	0.5 A
• on lamp load, max.	5 W
Load resistance range	
• lower limit	48 Ω
• upper limit	12 kΩ
Output current	
• for signal "1" rated value	0.5 A
• for signal "0" residual current, max.	0.1 mA
Output delay with resistive load	
• "0" to "1", typ.	50 µs
• "1" to "0", typ.	100 µs
Parallel switching of two outputs	
• for uprating	No
• for redundant control of a load	Yes

Article number	6ES7132-6BF00-0CA0
Switching frequency	
• with resistive load, max.	100 Hz
• with inductive load, max.	2 Hz
• on lamp load, max.	10 Hz
Total current of the outputs	
• Current per channel, max.	0.5 A
• Current per module, max.	4 A
Total current of the outputs (per module)	
horizontal installation	
– up to 60 °C, max.	4 A
vertical installation	
– up to 50 °C, max.	4 A; in all other mounting positions
Cable length	
• shielded, max.	1 000 m
• unshielded, max.	600 m
Isochronous mode	
Isochronous operation (application synchronized up to terminal)	Yes
Execution and activation time (TCO), min.	48 µs
Bus cycle time (TDP), min.	500 µs
Interrupts/diagnostics/status information	
Diagnostics function	Yes
Substitute values connectable	Yes
Alarms	
• Diagnostic alarm	Yes
Diagnostic messages	
• Monitoring the supply voltage	Yes
• Wire-break	Yes; channel by channel
• Short-circuit	Yes; channel by channel
• Group error	Yes
Diagnostics indication LED	
• Monitoring of the supply voltage (PWR-LED)	Yes; green PWR LED
• Channel status display	Yes; Green LED
• for channel diagnostics	Yes; Red LED
• for module diagnostics	Yes; green/red DIAG LED

Article number	6ES7132-6BF00-0CA0
Potential separation	
Potential separation channels	
• between the channels	No
• between the channels and backplane bus	Yes
Isolation	
Isolation tested with	707 V DC (type test)
Dimensions	
Width	15 mm
Height	73 mm
Depth	58 mm
Weights	
Weight, approx.	30 g

Safety-related shutdown

Note

The digital output module DQ 8x24VDC/0.5A HF supports safety-related shutdown in connection with a fail-safe power module F-PM-E 24VDC/8A PPM ST:

- SIL according to IEC 61508: 2
- Highest attainable safety class in safety mode, performance level according to EN ISO 13849-1: d

Residual current for signal state "0"

Note

Residual current for signal state "0"

Due to the Diagnostics: Wire break function, there is a low level of residual current in the "0" signal state at the output, which may cause the display diodes to flicker.

This residual current does not depend on the setting for the Diagnostics: Wire break parameter.

Dimension drawing

See manual ET 200SP BaseUnits (http://support.automation.siemens.com/WW/view/en/58532597/133300)

Parameter data record

A

A.1 Parameter assignment and structure of parameter data record

The data record of the module has an identical structure, regardless of whether you configure the module with PROFIBUS DP or PROFINET IO. With data record 128, you can reconfigure the module in your user program regardless of your programming. This means that you can use all the functions of the module even if you configured it via PROFIBUS-GSD.

With data records 64 to 71, you can configure individual channels.

Parameter assignment in the user program

You have the option to reconfigure the module in RUN (e.g. the response of selected channels to the CPU-STOP state can be changed in RUN without having an effect on the other channels).

Changing parameters in RUN

The WRREC instruction is used to transfer the parameters to the module using data record 128 or data records 64 to 71. The parameters set in STEP 7 are not changed in the CPU, which means that the parameters set in STEP 7 will be valid again after a restart.

If you reconfigure a module and diagnostics are pending prior to the reconfiguration, these diagnostics are not signaled as "outgoing".

Output parameter STATUS

The module ignores errors that occur during the transfer of parameters with the "WRREC" instruction and continues operation with the previous parameter assignment. However, the STATUS output parameter contains a corresponding error code.

You will find a description of the "WRREC" instruction and the error codes in the STEP 7 online help.

Data record structure

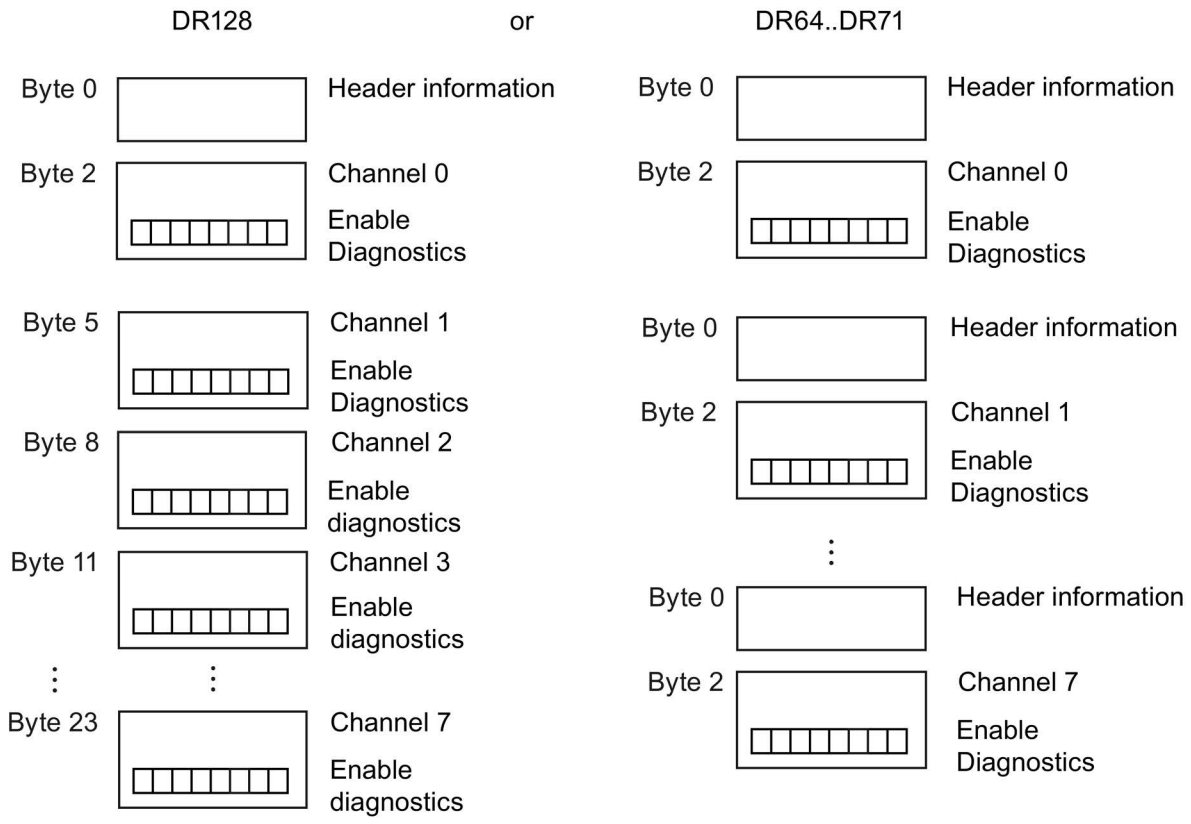

Figure A-1 Structure of data record 128 or data records 64 to 71

Header information

The figure below shows the structure of the header information.

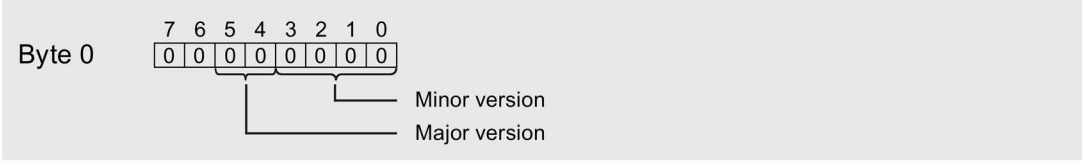

Figure A-2 Header information

Parameter

The figure below shows the structure of the parameters for channels 0 to 7.

You enable a parameter by setting the corresponding bit to "1".

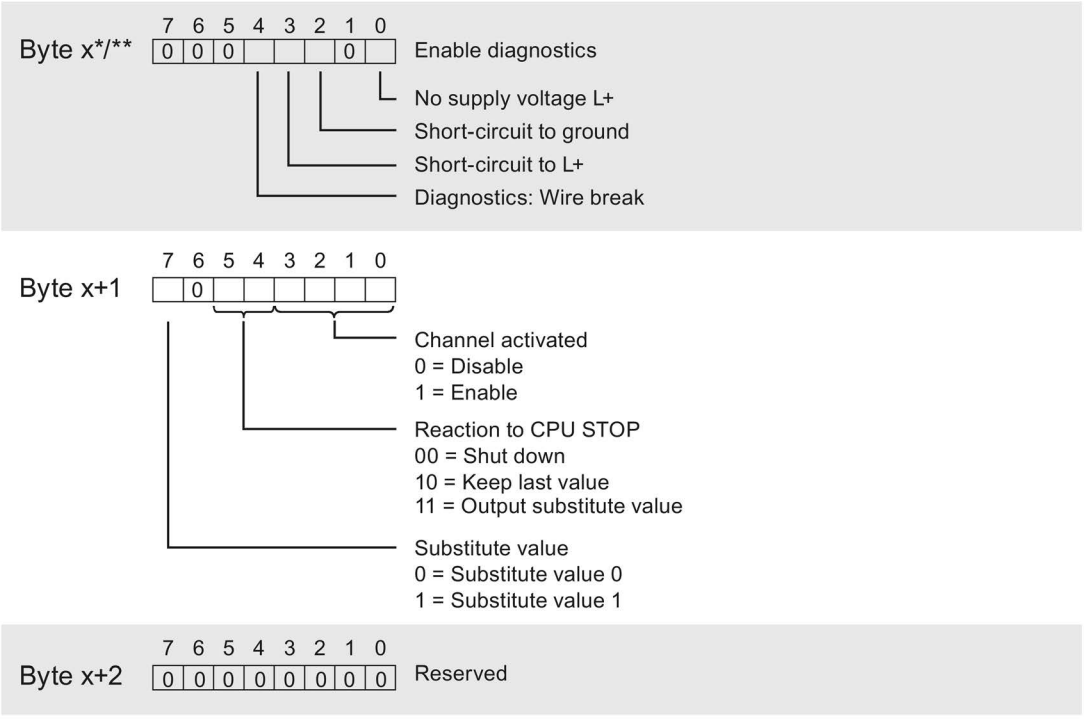

* x = 2 + (channel number × 3); channel number = 0 to 7 for DR 128
** x =2 for DR 64 to DR 71

Figure A-3 Structure of byte x to x+2 for channels 0 to 7

Error transmitting the data record

The module always checks all values of the data record to be sent. The module applies the values from the data record only when all values have been transmitted without errors.

The WRREC instruction for writing data records returns the appropriate error code if there are errors in the STATUS parameter.

The following table shows the module-specific error codes and their meaning for parameter data record 128.

Error code in the STATUS parameter (hexadecimal)				Meaning	Solution
Byte 0	Byte 1	Byte 2	Byte 3		
DF	80	B0	xx	Number of the data record unknown	Enter a valid number for the data record.
DF	80	B1	xx	Length of the data record incorrect	Enter a valid value for the data record length.
DF	80	B2	xx	Slot invalid or unavailable	• Check the station to determine whether the module is plugged or pulled. • Check assigned values for the parameters of the WREC instruction.
DF	80	E0	xx	Wrong version or error in the header information	Correct the version, length and number of parameter blocks.
DF	80	E1	xx	Parameter error	Check the parameters of the module

SIEMENS

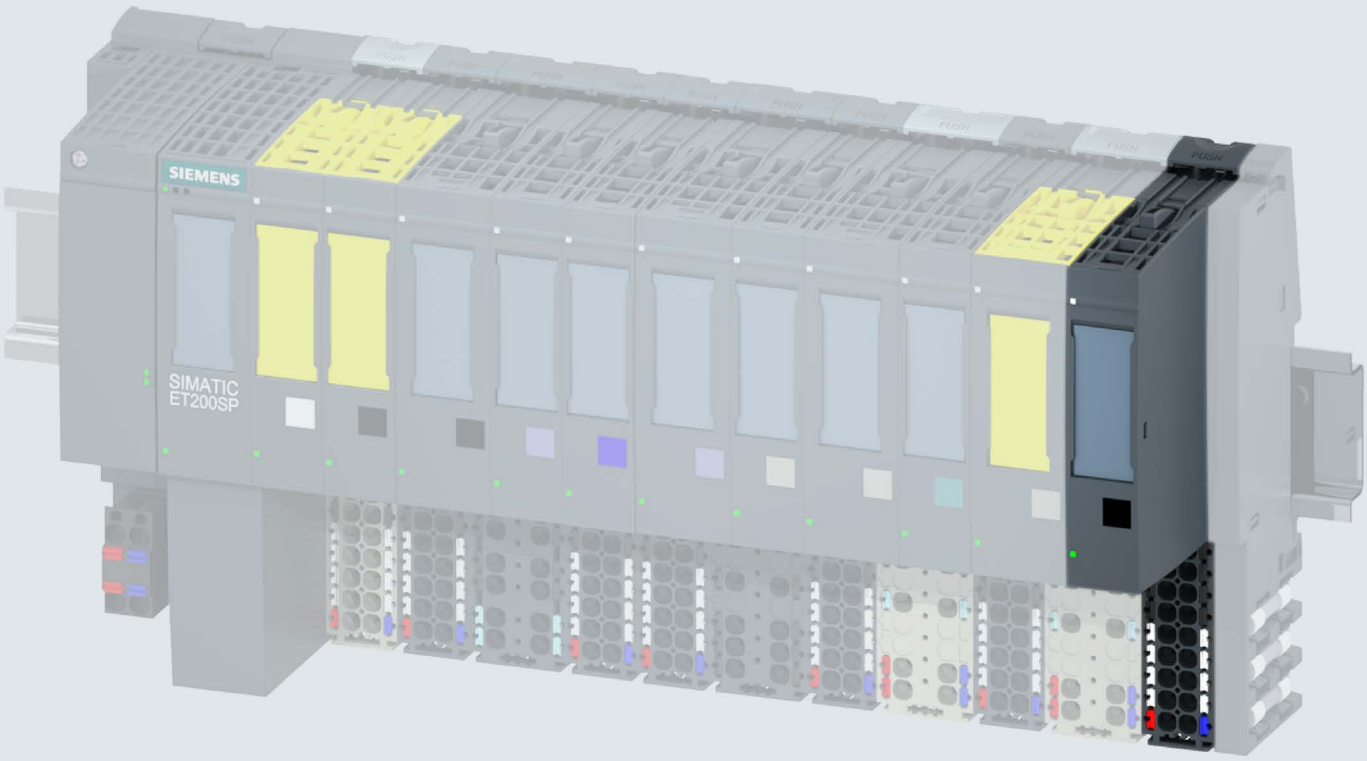

Manual

SIMATIC

ET 200SP

Digital output module
DQ 8x24VDC/0.5A SNK BA (6ES7132-6BF61-0AA0)

Edition 09/2017

support.industry.siemens.com

SIEMENS

SIMATIC

ET 200SP
Digital output module
DQ 8x24VDC/0.5A SNK BA
(6ES7132-6BF61-0AA0)

Manual

Preface

Documentation guide 1

Product overview 2

Wiring 3

Parameters/address space 4

Interrupts/diagnostics alarms 5

Technical specifications 6

Parameter data record A

09/2017

A5E32855878-AC

Legal information

Warning notice system

This manual contains notices you have to observe in order to ensure your personal safety, as well as to prevent damage to property. The notices referring to your personal safety are highlighted in the manual by a safety alert symbol, notices referring only to property damage have no safety alert symbol. These notices shown below are graded according to the degree of danger.

⚠ DANGER

indicates that death or severe personal injury **will** result if proper precautions are not taken.

⚠ WARNING

indicates that death or severe personal injury **may** result if proper precautions are not taken.

⚠ CAUTION

indicates that minor personal injury can result if proper precautions are not taken.

NOTICE

indicates that property damage can result if proper precautions are not taken.

If more than one degree of danger is present, the warning notice representing the highest degree of danger will be used. A notice warning of injury to persons with a safety alert symbol may also include a warning relating to property damage.

Qualified Personnel

The product/system described in this documentation may be operated only by **personnel qualified** for the specific task in accordance with the relevant documentation, in particular its warning notices and safety instructions. Qualified personnel are those who, based on their training and experience, are capable of identifying risks and avoiding potential hazards when working with these products/systems.

Proper use of Siemens products

Note the following:

⚠ WARNING

Siemens products may only be used for the applications described in the catalog and in the relevant technical documentation. If products and components from other manufacturers are used, these must be recommended or approved by Siemens. Proper transport, storage, installation, assembly, commissioning, operation and maintenance are required to ensure that the products operate safely and without any problems. The permissible ambient conditions must be complied with. The information in the relevant documentation must be observed.

Trademarks

All names identified by ® are registered trademarks of Siemens AG. The remaining trademarks in this publication may be trademarks whose use by third parties for their own purposes could violate the rights of the owner.

Disclaimer of Liability

We have reviewed the contents of this publication to ensure consistency with the hardware and software described. Since variance cannot be precluded entirely, we cannot guarantee full consistency. However, the information in this publication is reviewed regularly and any necessary corrections are included in subsequent editions.

Siemens AG
Division Digital Factory
Postfach 48 48
90026 NÜRNBERG
GERMANY

A5E32855878-AC
℗ 10/2017 Subject to change

Copyright © Siemens AG 2014 - 2017.
All rights reserved

Preface

Purpose of the documentation

This manual supplements the system manual ET 200SP distributed I/O system (http://support.automation.siemens.com/WW/view/en/58649293).

Functions that generally relate to the system are described in this manual.

The information provided in this manual and in the system/function manuals supports you in commissioning the system.

Changes compared to previous version

Compared to the previous version, this manual contains the following change:

Due to the change in hardware, the article number of the module has been changed from 6ES7132-6BF60-0AA0 to 6ES7132-6BF61-0AA0. Both modules are compatible, except for the firmware-update function.

Conventions

CPU: When the term "CPU" is used in this manual, it applies to the CPUs of the S7-1500 automation system as well as to the CPUs/interface modules of the distributed I/O system ET 200SP.

STEP 7: In this documentation, "STEP 7" is used as a synonym for all versions of the configuration and programming software "STEP 7 (TIA Portal)".

Please also observe notes marked as follows:

Note

A note contains important information on the product described in the documentation, on the handling of the product or on the section of the documentation to which particular attention should be paid.

Security information

Siemens provides products and solutions with industrial security functions that support the secure operation of plants, systems, machines and networks.

In order to protect plants, systems, machines and networks against cyber threats, it is necessary to implement – and continuously maintain – a holistic, state-of-the-art industrial security concept. Siemens' products and solutions constitute one element of such a concept.

Customers are responsible for preventing unauthorized access to their plants, systems, machines and networks. Such systems, machines and components should only be connected to an enterprise network or the internet if and to the extent such a connection is necessary and only when appropriate security measures (e.g. firewalls and/or network segmentation) are in place.

For additional information on industrial security measures that may be implemented, please visit (http://www.siemens.com/industrialsecurity).

Siemens' products and solutions undergo continuous development to make them more secure. Siemens strongly recommends that product updates are applied as soon as they are available and that the latest product versions are used. Use of product versions that are no longer supported, and failure to apply the latest updates may increase customers' exposure to cyber threats.

To stay informed about product updates, subscribe to the Siemens Industrial Security RSS Feed under (http://www.siemens.com/industrialsecurity).

Table of contents

Preface 4
1 Documentation guide 7
2 Product overview 12
2.1 Properties 12
3 Wiring 14
3.1 Wiring and block diagram 14
4 Parameters/address space 16
4.1 Parameters 16
4.2 Explanation of parameters 18
4.3 Address space 19
5 Interrupts/diagnostics alarms 20
5.1 Status and error displays 20
5.2 Interrupts 22
5.3 Diagnostics alarms 22
6 Technical specifications 23
6.1 Technical specifications 23
A Parameter data record 27
A.1 Parameter assignment and structure of parameter data record 27

Documentation guide

1

The documentation for the SIMATIC ET 200SP distributed I/O system is arranged into three areas.
This arrangement enables you to access the specific content you require.

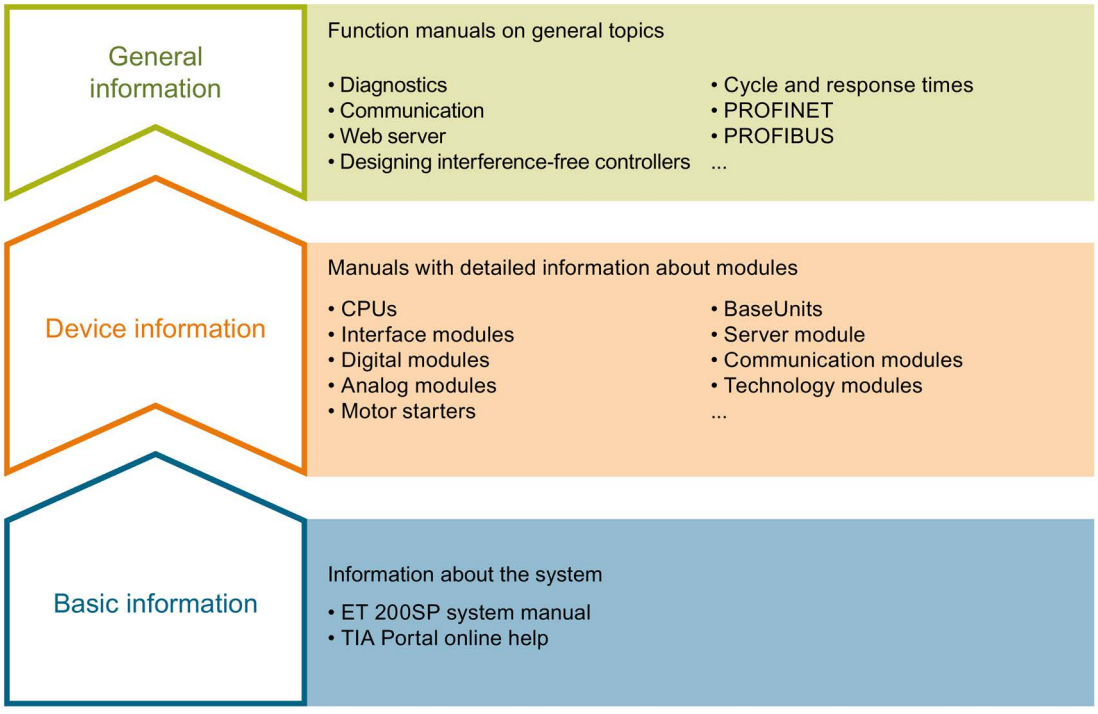

Basic information

The system manual describes in detail the configuration, installation, wiring and commissioning of the SIMATIC ET 200SP. distributed I/O system. The STEP 7 online help supports you in the configuration and programming.

Device information

Product manuals contain a compact description of the module-specific information, such as properties, wiring diagrams, characteristics and technical specifications.

General information

The function manuals contain detailed descriptions on general topics regarding the SIMATIC ET 200SP distributed I/O system, e.g. diagnostics, communication, Web server, motion control and OPC UA.

You can download the documentation free of charge from the Internet (https://support.industry.siemens.com/cs/ww/en/view/109742709).

Changes and supplements to the manuals are documented in a Product Information.

You can download the product information free of charge from the Internet (https://support.industry.siemens.com/cs/us/en/view/73021864).

Manual Collection ET 200SP

The Manual Collection contains the complete documentation on the SIMATIC ET 200SP distributed I/O system gathered together in one file.

You can find the Manual Collection on the Internet (http://support.automation.siemens.com/WW/view/en/84133942).

"mySupport"

With "mySupport", your personal workspace, you make the most of your Industry Online Support.

In "mySupport" you can store filters, favorites and tags, request CAx data and put together your personal library in the Documentation area. Furthermore, your data is automatically filled into support requests and you always have an overview of your current requests.

You need to register once to use the full functionality of "mySupport".

You can find "mySupport" in the Internet (https://support.industry.siemens.com/My/ww/en).

"mySupport" - Documentation

In the Documentation area of "mySupport", you have the possibility to combine complete manuals or parts of them to make your own manual.
You can export the manual in PDF format or in an editable format.

You can find "mySupport" - Documentation in the Internet (http://support.industry.siemens.com/My/ww/en/documentation).

"mySupport" - CAx Data

In the CAx Data area of "mySupport", you can have access the latest product data for your CAx or CAe system.

You configure your own download package with a few clicks.

In doing so you can select:

- Product images, 2D dimension drawings, 3D models, internal circuit diagrams, EPLAN macro files
- Manuals, characteristics, operating manuals, certificates
- Product master data

You can find "mySupport" - CAx Data in the Internet (http://support.industry.siemens.com/my/ww/en/CAxOnline).

Application examples

The application examples support you with various tools and examples for solving your automation tasks. Solutions are shown in interplay with multiple components in the system - separated from the focus in individual products.

You can find the application examples on the Internet (https://support.industry.siemens.com/sc/ww/en/sc/2054).

TIA Selection Tool

With the TIA Selection Tool, you can select, configure and order devices for Totally Integrated Automation (TIA).
This tool is the successor of the SIMATIC Selection Tool and combines the known configurators for automation technology into one tool.
With the TIA Selection Tool, you can generate a complete order list from your product selection or product configuration.

You can find the TIA Selection Tool on the Internet (http://w3.siemens.com/mcms/topics/en/simatic/tia-selection-tool).

SIMATIC Automation Tool

You can use the SIMATIC Automation Tool to run commissioning and maintenance activities simultaneously on various SIMATIC S7 stations as a bulk operation independently of the TIA Portal.

The SIMATIC Automation Tool provides a multitude of functions:

- Scanning of a PROFINET/Ethernet network and identification of all connected CPUs
- Address assignment (IP, subnet, gateway) and station name (PROFINET device) to a CPU
- Transfer of the data and the programming device/PC time converted to UTC time to the module
- Program download to CPU
- Operating mode switchover RUN/STOP
- Localization of the CPU by means of LED flashing
- Reading out CPU error information
- Reading the CPU diagnostic buffer
- Reset to factory settings
- Updating the firmware of the CPU and connected modules

You can find the SIMATIC Automation Tool on the Internet (https://support.industry.siemens.com/cs/ww/en/view/98161300).

PRONETA

With SIEMENS PRONETA (PROFINET network analysis), you analyze the plant network during commissioning. PRONETA features two core functions:

- The topology overview independently scans PROFINET and all connected components.
- The IO check is a fast test of the wiring and the module configuration of a system.

You can find SIEMENS PRONETA on the Internet (https://support.industry.siemens.com/cs/ww/en/view/67460624).

SINETPLAN

SINETPLAN, the Siemens Network Planner, supports you in planning automation systems and networks based on PROFINET. The tool facilitates professional and predictive dimensioning of your PROFINET installation as early as in the planning stage. In addition, SINETPLAN supports you during network optimization and helps you to exploit network resources optimally and to plan reserves. This helps to prevent problems in commissioning or failures during productive operation even in advance of a planned operation. This increases the availability of the production plant and helps improve operational safety.

The advantages at a glance

- Network optimization thanks to port-specific calculation of the network load
- Increased production availability thanks to online scan and verification of existing systems
- Transparency before commissioning through importing and simulation of existing STEP 7 projects
- Efficiency through securing existing investments in the long term and optimal exploitation of resources

You can find SINETPLAN on the Internet (https://www.siemens.com/sinetplan).

Product overview

2

2.1 Properties

Part number

6ES7132-6BF61-0AA0

View of the module

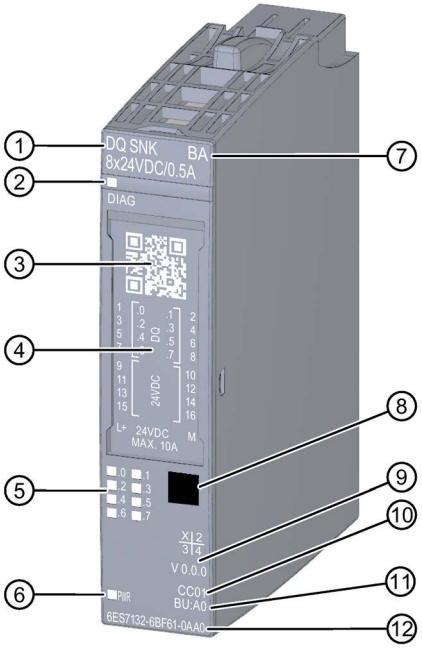

① Module type and name
② LED for diagnostics
③ 2D matrix code
④ Wiring diagram
⑤ LEDs for channel status
⑥ LED for supply voltage
⑦ Function class
⑧ Color coding module type
⑨ Function and firmware version
⑩ Color code for selecting the color identification labels
⑪ BU type
⑫ Article number

Figure 2-1 View of the DQ 8×24VDC/0,5A SNK BA module

Properties

The module has the following technical properties:

- Digital output module with 8 outputs
- Sink output (NPN, M switching)

- Supply voltage L+
- Output current 0.5 A (per channel)
- Configurable diagnostics (per module)
- Configurable substitute values (per channel)
- Suitable for solenoid valves, DC contactors, and indicator lights

The module supports the following functions:

Table 2- 1 Version dependencies of the functions

Function	HW version	FW version	STEP 7		GSD file	
			TIA Portal	V5.x	PROFINET IO	PROFIBUS DP
Identification data I&M0 to I&M3	FS01	V0.0.0 and higher	V14 or higher with HSP 0222	V5.5 SP3 or higher with HSP 0230 V7.0	X	X
Configuration in RUN	FS01	V0.0.0 and higher	V14 or higher with HSP 0222	V5.5 SP3 or higher with HSP 0230 V7.0	X	X

Accessories

The following accessories are supplied with the module and can also be ordered separately as spare parts:

- Labeling strips
- Color identification labels
- Reference identification label
- Shield connector

See also

You can find additional information on the accessories in the ET 200SP Distributed I/O System (http://support.automation.siemens.com/WW/view/en/58649293) system manual.

Wiring 3

3.1 Wiring and block diagram

This section includes the block diagram of the DQ 8x24VDC/0.5A SNK BA module with the terminal assignments for a 1-wire and 2-wire connection.

Information about wiring of the BaseUnit is available in the system manual ET 200SP distributed I/O system (http://support.automation.siemens.com/WW/view/en/58649293).

Note

You may use and combine the different wiring options for all channels.

Note

The load group of the module must begin with a light-colored BaseUnit. Keep this in mind also during the configuration.

Connection: 1-wire and 2-wire connection

The following figure shows the block diagram and an example of the terminal assignment of the digital input module DQ 8x24VDC/0.5A SNK BA on the BaseUnit BU type A0 without AUX terminals (1-wire and 2-wire connection).

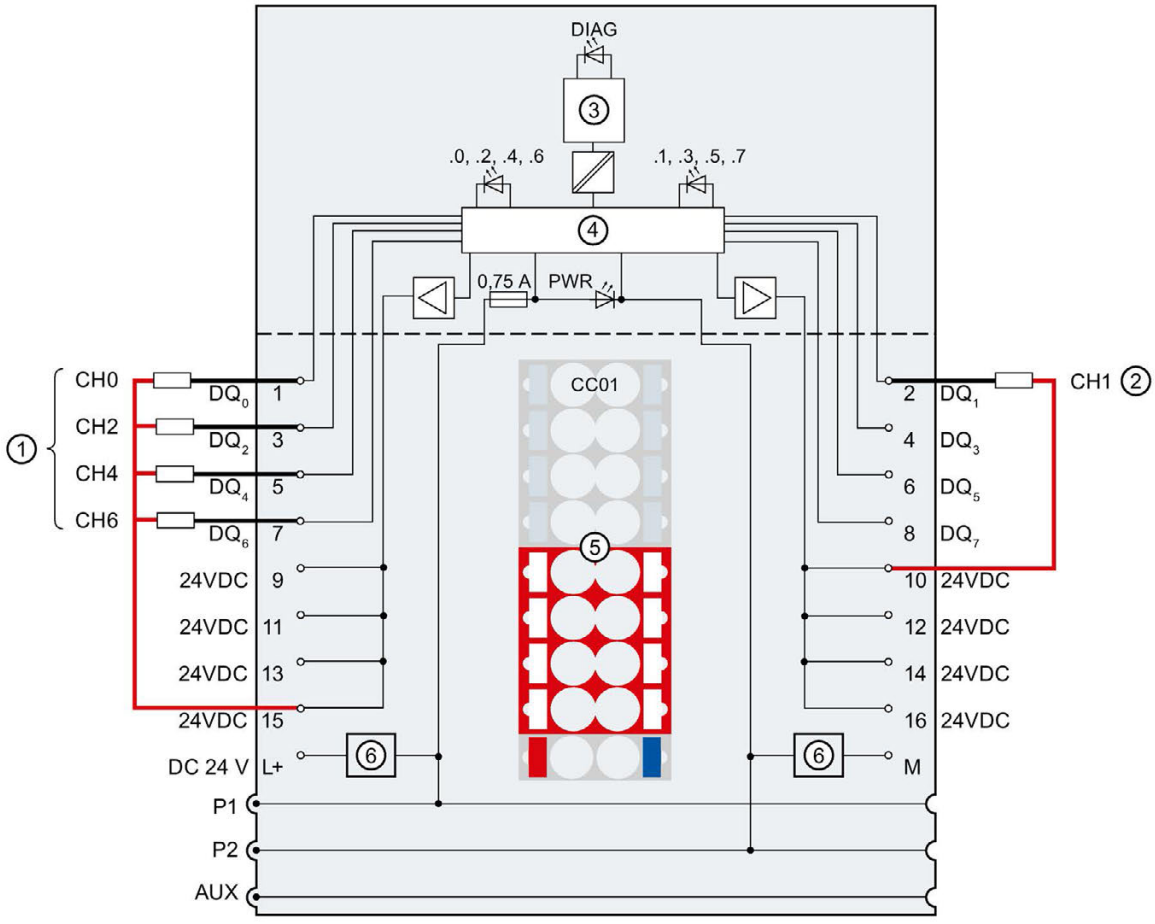

①	1-wire connection	DQ_n	Output signal, channel n
②	2-wire connection	24 V DC	Encoder supply, channel n
③	Backplane bus interface	L+	24 V DC (feed for light-colored BaseUnit only)
④	Output electronics	M	Ground
⑤	Color identification label CCxx (optional)	DIAG	Error or Diagnostics LED (green, red)
⑥	Filter connection supply voltage (only when light-colored BaseUnit is present)	.0 to .7	Channel status LED (green)
P1, P2, AUX	Internal self-assembling voltage buses Connection to left (dark-colored BaseUnit) Connection to left interrupted (light-colored BaseUnit)	PWR	Power LED (green)

Figure 3-1 Wiring and block diagram for 1-wire and 2-wire connection of actuators.

Parameters/address space 4

4.1 Parameters

DQ 8x24VDC/0,5A SNK BA parameters

Specify the module properties with the various parameters in the course of your STEP 7 configuration. The following table lists the configurable parameters. The effective range of the configurable parameters depends on the type of configuration.

The following configurations are possible:

- Central operation with an ET 200SP CPU
- Distributed operation on PROFINET IO in an ET 200SP system
- Distributed operation with PROFIBUS DP in an ET 200SP system

When assigning parameters in the user program, use the "WRREC" instruction to transfer the parameters to the module by means of data records (see chapter Parameter assignment and structure of the parameter data record (Page 27)).

Table 4- 1 Configurable parameters and their defaults (GSD file)

Parameter	Value range	Default	Reconfiguration in RUN	Scope with configuration software, e.g. STEP 7 (TIA Portal)	
				GSD file PROFINET IO	GSD file PROFIBUS DP [1]
Diagnostics No supply voltage L+	• Disable • Enable	Disable	Yes	Module	Module
Channel activated	• Disable • Enable	Enable	Yes	Channel	Channel

Parameter	Value range	Default	Reconfiguration in RUN	Scope with configuration software, e.g. STEP 7 (TIA Portal)	
				GSD file PROFINET IO	GSD file PROFIBUS DP [1]
Reaction to CPU STOP	• Turn off • Keep last value • Output substitute value 1	Turn off	Yes	Channel	Module
Potential group	• Use potential group of the left module (module plugged into a dark-colored BaseUnit) • Enable new potential group (module plugged into light-colored BaseUnit)	Use potential group of the left module	No	Module	Module

[1] Only when configuring using a PROFIBUS GSD file; does not apply to configuration with STEP 7 via HSP. The parameter assignment options are limited because PROFIBUS GSD configuration limits the number of parameters to a maximum of 244 bytes for each ET 200SP station. If required, you can still assign these parameters using the data record 128 as described in the column "GSD file PROFINET IO" (see table above). The parameter length of the I/O module is 16 bytes.

4.2 Explanation of parameters

Diagnostics: No supply voltage L+

Enabling of the diagnostics for no or insufficient supply voltage L+.

Channel activated

Determines whether a channel is activated or deactivated.

Reaction to CPU STOP

Determines the behavior of the module in the event of a CPU STOP.

Potential group

A potential group consists of a group of directly adjacent I/O modules within an ET 200SP station, which are supplied via a common supply voltage.

A potential group begins with a light-colored BaseUnit through which the required voltage is supplied for all modules of the potential group. The light-colored BaseUnit interrupts the three self-assembling voltage buses P1, P2 and AUX to the left neighbor.

All additional I/O modules of this potential group are plugged into dark-colored BaseUnits. You take the potential of the self-assembling voltage buses P1, P2 and AUX from the left neighbor.

A potential group ends with the dark-colored BaseUnit, which follows a light-colored BaseUnit or server module in the station configuration.

See also

ET 200SP distributed I/O system
(http://support.automation.siemens.com/WW/view/en/58649293)

4.3 Address space

The module can be configured differently in STEP 7; see following table. Depending on the configuration, additional/different addresses are assigned in the process image of the inputs.

Configuration options of DQ 8x24VDC 0.5A SNK BA

You can configure the module with STEP 7 (TIA Portal) or with a GSD file. If you configure the module using a GSD file, the configurations are available under various short designations/module names; see the table below. The following configurations are possible:

Table 4- 2 Configuration options with GSD file

Configuration	Short designation/module name in the GSD file	Configuration software, e.g. with STEP 7 (TIA Portal)		
		Integrated in hardware catalog STEP 7	GSD file PROFINET IO	GSD file PROFIBUS DP
1 x 8-channel without value status	DQ 8x24VDC/0,5A SNK BA V0.0	V14, SP1 or higher with HSP 0222	X	X

Address space of the digital output module DQ 8x24VDC/0,5A SNK BA

The figure below shows the assignment of the address space for DQ 8x24VDC/0,5A SNK BA

Assignment in the process image of the outputs (PIQ)

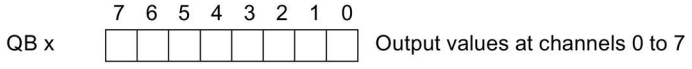

Figure 4-1 Address space of the digital output module DQ 8x24VDC/0,5A SNK BA

Interrupts/diagnostics alarms

5

5.1 Status and error displays

LED displays

The figure below shows the LED displays (status and error displays) of the DQ 8x24VDC/0,5A SNK BA.

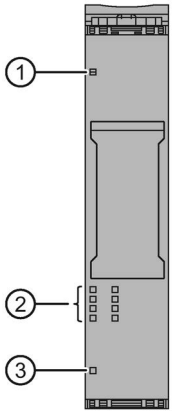

① DIAG (green/red)
② Channel status (green)
③ PWR (green)

Figure 5-1 LED displays

Meaning of the LED displays

The tables below explain the meaning of the Status and error displays. Remedial measures for diagnostics alarms can be found in section Diagnostics alarms (Page 22).

LED DIAG

Table 5- 1 Error display of the LED DIAG

LED DIAG	Meaning
Off	Backplane bus supply of the ET 200SP not OK
Flashes	Module parameters not assigned
On	Module parameters assigned
Flashes	Module diagnostics is available

LED channel status

Table 5- 2 Status display of the LED channel status

LED channel status	Meaning
Off	Channel deactivated or activated and process signal = 0
On	Channel activated and process signal = 1

LED PWR

Table 5- 3 Status display of the LED PWR

LED PWR	Meaning
Off	No supply voltage L+
On	Supply voltage L+ present

5.2 Interrupts

The DQ 8×24VDC/0,5A SNK BA digital output module supports diagnostics alarms.

Diagnostics interrupts

The module generates a diagnostic interrupt at the following event:

- Parameter assignment error
- No supply voltage

Detailed information on the event is available in the STEP 7 online help.

5.3 Diagnostics alarms

Diagnostics alarms

A diagnostic alarm is generated and the DIAG-LED flashes on the module for each diagnostics event. You can read out the diagnostics alarms, for example, in the diagnostics buffer of the CPU. You can evaluate the error codes with the user program.

Table 5- 4 Diagnostics alarms, their meaning and corrective measures

Diagnostics alarm	Error code	Meaning	Remedy
Parameter assignment error	10_H	• The module cannot evaluate parameters for the channel. • Incorrect parameter assignment.	Correct the parameter assignment
No supply voltage	11_H	No or insufficient supply voltage L+	• Check supply voltage L+ on the BaseUnit • Check BaseUnit type

Technical specifications

6

6.1 Technical specifications

Technical specifications of the DQ 8×24VDC/0,5A SNK BA

Article number	6ES7132-6BF61-0AA0
General information	
Product type designation	DQ 8x 24 V DC/0.5 A SNK BA, PU 1
Firmware version	V0.0
• FW update possible	No
usable BaseUnits	BU type A0
Color code for module-specific color identification plate	CC01
Product function	
• I&M data	Yes; I&M0 to I&M3
Engineering with	
• STEP 7 TIA Portal configurable/integrated as of version	V14
• STEP 7 configurable/integrated as of version	V5.5 SP3
• PROFIBUS as of GSD version/GSD revision	One GSD file each, Revision 3 and 5 and higher
• PROFINET as of GSD version/GSD revision	GSDML V2.3
Operating mode	
• DQ	Yes
• DQ with energy-saving function	No
• PWM	No
• Oversampling	No
• MSO	No
Redundancy	
• Redundancy capability	Yes
Supply voltage	
Rated value (DC)	24 V
permissible range, lower limit (DC)	19.2 V
permissible range, upper limit (DC)	28.8 V

Article number	6ES7132-6BF61-0AA0
Output voltage	
Rated value (DC)	24 V
Power loss	
Power loss, typ.	1.5 W
Address area	
Address space per module	
• Outputs	1 byte
Hardware configuration	
Automatic encoding	Yes
• Mechanical coding element	Yes
Digital outputs	
Type of digital output	Source output (PNP, current-sourcing)
Number of digital outputs	8
Current-sinking	Yes
Short-circuit protection	Yes
• Response threshold, typ.	1.5 A
Limitation of inductive shutdown voltage to	Typ. 47 V
Controlling a digital input	Yes
Switching capacity of the outputs	
• with resistive load, max.	0.5 A
• on lamp load, max.	5 W
Load resistance range	
• lower limit	48 Ω
• upper limit	3 400 Ω
Output current	
• for signal "1" rated value	0.5 A
• for signal "1" permissible range, max.	0.5 A
• for signal "0" residual current, max.	5 µA
Output delay with resistive load	
• "0" to "1", max.	300 µs
• "1" to "0", max.	600 µs
Parallel switching of two outputs	
• for uprating	No
• for redundant control of a load	Yes

Article number	6ES7132-6BF61-0AA0
Switching frequency	
• with resistive load, max.	100 Hz
• with inductive load, max.	0.5 Hz
• on lamp load, max.	10 Hz
Total current of the outputs	
• Current per channel, max.	0.5 A
• Current per module, max.	4 A
Total current of the outputs (per module)	
horizontal installation	
– up to 60 °C, max.	4 A
vertical installation	
– up to 50 °C, max.	4 A; in all other mounting positions
Cable length	
• shielded, max.	1 000 m
• unshielded, max.	600 m
Isochronous mode	
Isochronous operation (application synchronized up to terminal)	No
Interrupts/diagnostics/status information	
Diagnostics function	Yes
Substitute values connectable	Yes
Alarms	
• Diagnostic alarm	Yes
Diagnostic messages	
• Monitoring the supply voltage	Yes
• Wire-break	No
• Short-circuit	No
Diagnostics indication LED	
• Monitoring of the supply voltage (PWR-LED)	Yes; green PWR LED
• Channel status display	Yes; Green LED
• for channel diagnostics	No
• for module diagnostics	Yes; green/red DIAG LED
Potential separation	
Potential separation channels	
• between the channels	No
• between the channels and backplane bus	Yes

Article number	6ES7132-6BF61-0AA0
Isolation	
Isolation tested with	707 V DC (type test)
Ambient conditions	
Ambient temperature during operation	
• horizontal installation, min.	0 °C
• horizontal installation, max.	60 °C
• vertical installation, min.	0 °C; in all other mounting positions
• vertical installation, max.	50 °C; in all other mounting positions
Altitude during operation based on sea level	
• Ambient air temperature-barometric pressure-altitude	On request: Ambient temperatures lower than 0 °C (without condensation) and/or installation altitudes greater than 2 000 m
Dimensions	
Width	15 mm
Height	73 mm
Depth	58 mm
Weights	
Weight, approx.	30 g

Dimensional drawing

See the manual ET 200SP BaseUnits (http://support.automation.siemens.com/WW/view/en/58532597/133300)

Parameter data record

A

A.1 Parameter assignment and structure of parameter data record

The data record of the module has an identical structure, regardless of whether you configure the module with PROFIBUS DP or PROFINET IO. With data record 128, you can reconfigure the module in your user program regardless of your programming. This means that you can use all the functions of the module even if you configured it via PROFIBUS-GSD.

Parameter assignment in the user program

You have the option to re-configure the module in RUN (e.g. the response of selected channels to the CPU-STOP state can be changed in RUN without having an effect on the other channels).

Changing parameters in RUN

The "WRREC" instruction is used to transfer the parameters to the module using data record 128. The parameters set in STEP 7 are not changed in the CPU, which means the parameters set in STEP 7 will be valid again after a restart.

Output parameter STATUS

The module ignores errors that occur during the transfer of parameters with the "WRREC" instruction and continues operation with the previous parameter assignment. However, a corresponding error code is written to the STATUS output parameter.

The description of the "WRREC" instruction and the error codes is available in the STEP 7 online help.

Structure of data record 128

Note

Channel 0 includes the diagnostics for the entire module.

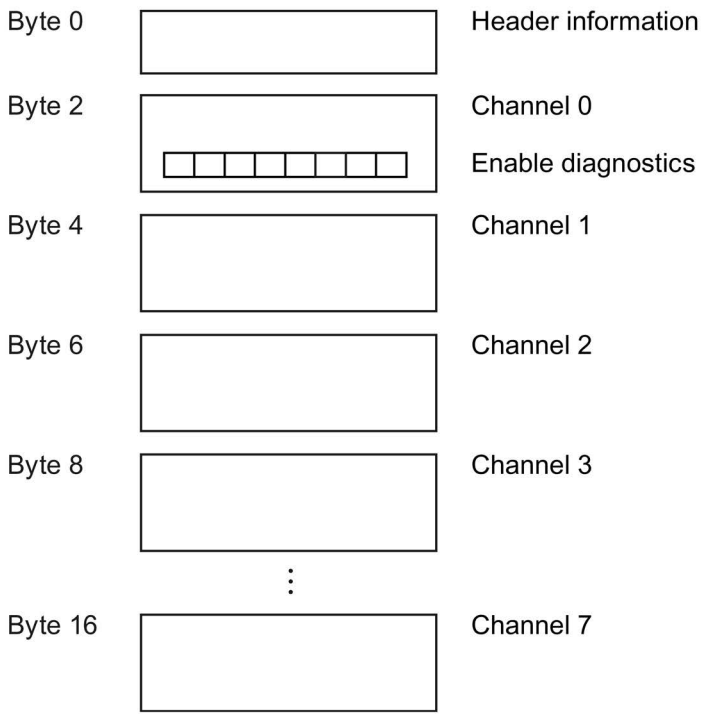

Figure A-1 Structure of data record 128

Header information

The figure below shows the structure of the header information.

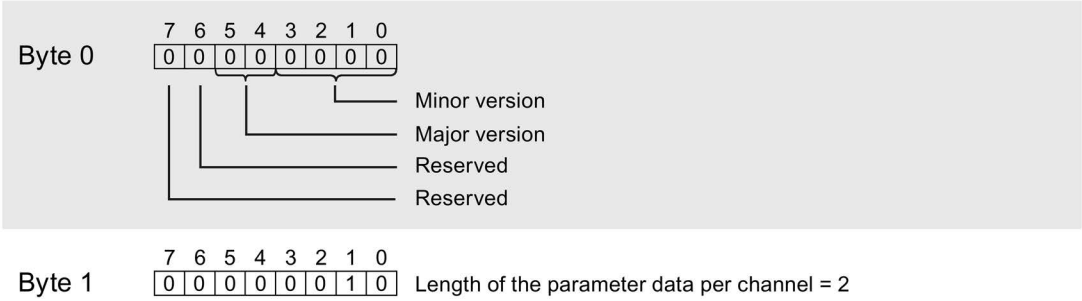

Figure A-2 Header information

Parameters

The figure below shows the structure of the parameters for channels 0 to 7.

Enable a parameter by setting the corresponding bit to "1".

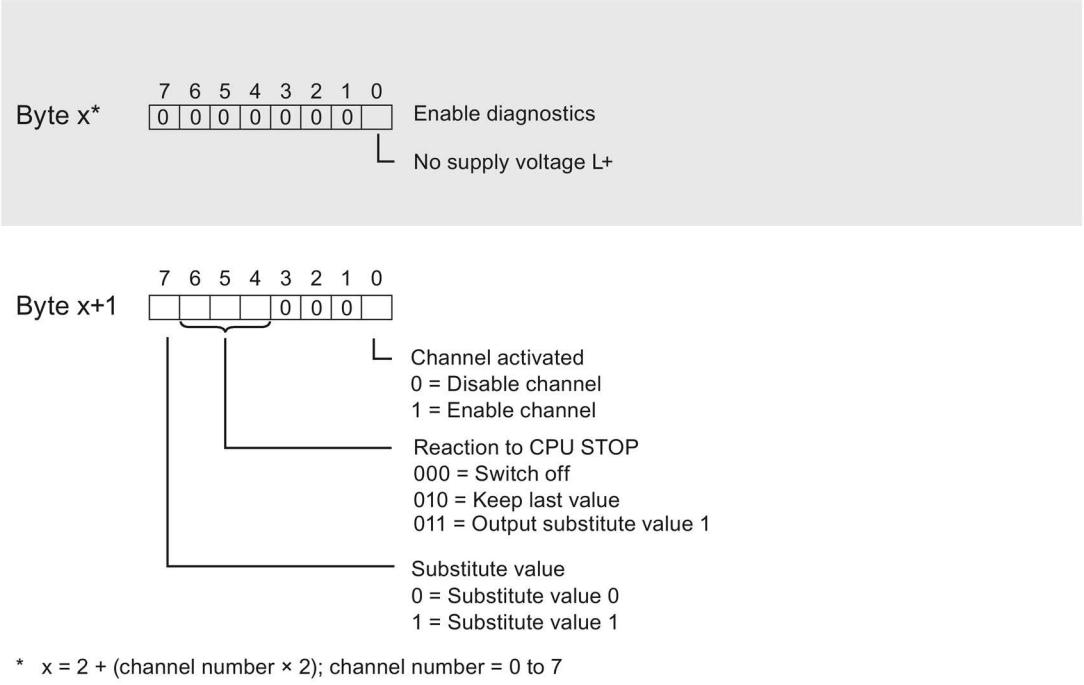

* x = 2 + (channel number × 2); channel number = 0 to 7

Figure A-3 Structure byte x to x+1 for the channels 0 to 7

Error transferring the data record

The module always checks all the values of the transferred data record. Only if all the values were transferred without errors does the module apply the values from the data record.

The WRREC instruction for writing data records returns corresponding error codes when errors occur in the STATUS parameter. (See also the description of the "STATUS" parameter in the STEP 7 online help).

The following table shows the module-specific error codes and their meaning for the parameter data record 128.

Error code in STATUS parameter (hexadecimal)				Meaning	Solution
Byte 0	Byte 1	Byte 2	Byte 3		
DF	80	B0	xx	Number of the data record unknown.	Enter a valid number for the data record.
DF	80	B1	xx	Length of the data record incorrect.	Enter a valid value for the data record length.
DF	80	B2	xx	Slot invalid or cannot be accessed.	• Check the station whether the module is plugged or drawn. • Check the assigned values for the parameters of the WRREC instruction.
DF	80	E0	xx	Wrong version or error in the header information.	Correct the version, length and number of parameter blocks.
DF	80	E1	06	Invalid coding for substitute value behavior.	Check the parameters of the module.

SIEMENS

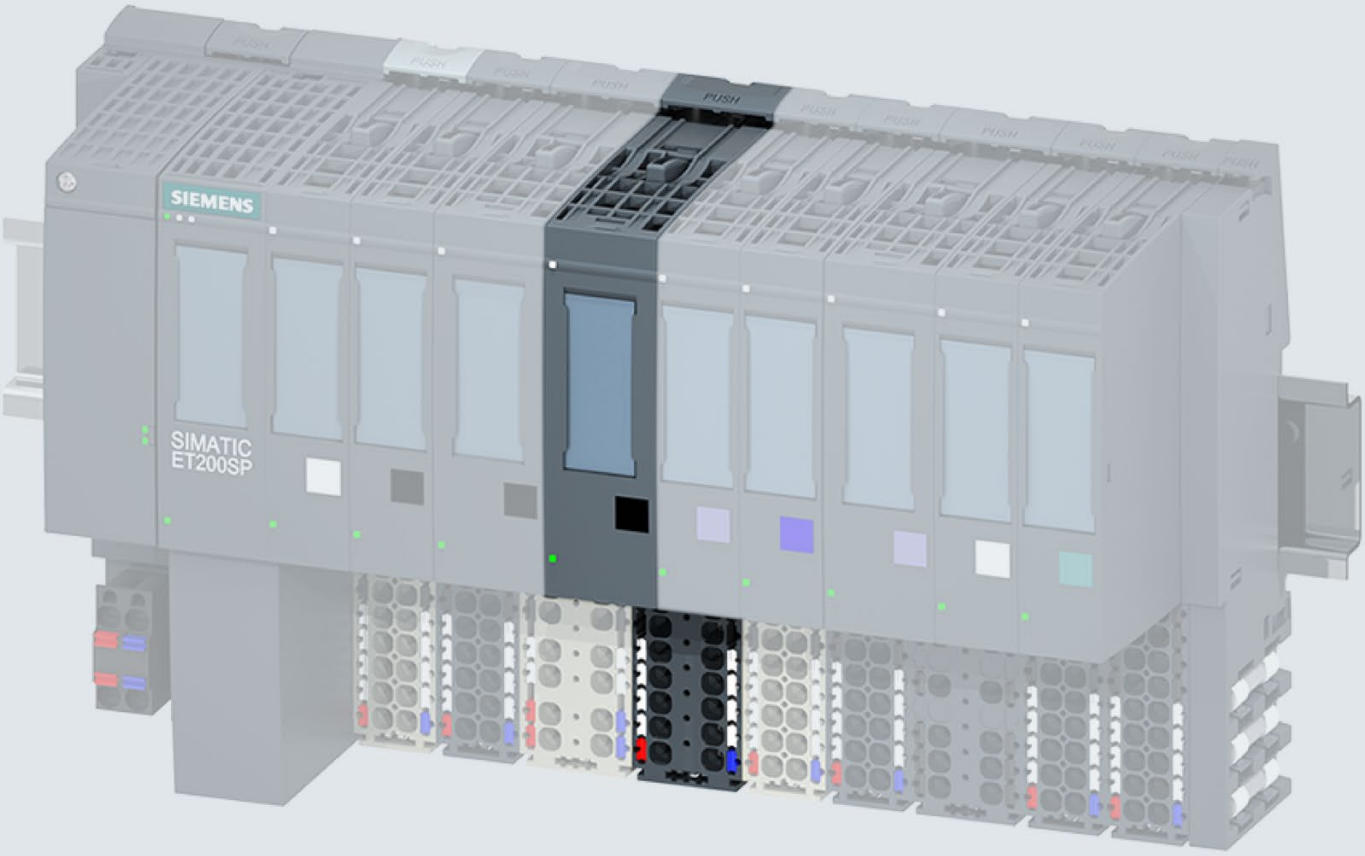

Manual

SIMATIC

ET 200SP

Digital output module
DQ 4x24..230VAC/2A HF (6ES7132-6FD00-0CU0)

Edition 02/2018

support.industry.siemens.com

SIEMENS

SIMATIC

ET 200SP
DQ 4x24..230VAC/2A HF digital output module (6ES7132-6FD00-0CU0)

Manual

Preface

Guide to documentation 1

Product overview 2

DQ mode 3

PC mode 4

Technical specifications 5

Parameter data record A

02/2018

A5E42404845-AA

Legal information

Warning notice system

This manual contains notices you have to observe in order to ensure your personal safety, as well as to prevent damage to property. The notices referring to your personal safety are highlighted in the manual by a safety alert symbol, notices referring only to property damage have no safety alert symbol. These notices shown below are graded according to the degree of danger.

⚠ DANGER

indicates that death or severe personal injury **will** result if proper precautions are not taken.

⚠ WARNING

indicates that death or severe personal injury **may** result if proper precautions are not taken.

⚠ CAUTION

indicates that minor personal injury can result if proper precautions are not taken.

NOTICE

indicates that property damage can result if proper precautions are not taken.

If more than one degree of danger is present, the warning notice representing the highest degree of danger will be used. A notice warning of injury to persons with a safety alert symbol may also include a warning relating to property damage.

Qualified Personnel

The product/system described in this documentation may be operated only by **personnel qualified** for the specific task in accordance with the relevant documentation, in particular its warning notices and safety instructions. Qualified personnel are those who, based on their training and experience, are capable of identifying risks and avoiding potential hazards when working with these products/systems.

Proper use of Siemens products

Note the following:

⚠ WARNING

Siemens products may only be used for the applications described in the catalog and in the relevant technical documentation. If products and components from other manufacturers are used, these must be recommended or approved by Siemens. Proper transport, storage, installation, assembly, commissioning, operation and maintenance are required to ensure that the products operate safely and without any problems. The permissible ambient conditions must be complied with. The information in the relevant documentation must be observed.

Trademarks

All names identified by ® are registered trademarks of Siemens AG. The remaining trademarks in this publication may be trademarks whose use by third parties for their own purposes could violate the rights of the owner.

Disclaimer of Liability

We have reviewed the contents of this publication to ensure consistency with the hardware and software described. Since variance cannot be precluded entirely, we cannot guarantee full consistency. However, the information in this publication is reviewed regularly and any necessary corrections are included in subsequent editions.

Siemens AG
Division Digital Factory
Postfach 48 48
90026 NÜRNBERG
GERMANY

A5E42404845-AA
℗ 02/2018 Subject to change

Copyright © Siemens AG 2018.
All rights reserved

Preface

Preface

Purpose of the documentation

This manual supplements the system manual ET 200SP distributed I/O system (https://support.industry.siemens.com/cs/ww/en/view/58649293).

Functions that generally relate to the system are described in this manual.

The information provided in this manual and in the system/function manuals supports you in commissioning the system.

Conventions

CPU: When the term "CPU" is used in this manual, it applies to the CPUs of the S7-1500 automation system as well as to the CPUs/interface modules of the ET 200SP distributed I/O system.

STEP 7: In this documentation, "STEP 7" is used as a synonym for all versions of the configuration and programming software "STEP 7 (TIA Portal)".

Please also observe notes marked as follows:

Note

A note contains important information on the product described in the documentation, on the handling of the product or on the section of the documentation to which particular attention should be paid.

Security information

Siemens provides products and solutions with industrial security functions that support the secure operation of plants, systems, machines and networks.

In order to protect plants, systems, machines and networks against cyber threats, it is necessary to implement – and continuously maintain – a holistic, state-of-the-art industrial security concept. Siemens' products and solutions constitute one element of such a concept.

Customers are responsible for preventing unauthorized access to their plants, systems, machines and networks. Such systems, machines and components should only be connected to an enterprise network or the internet if and to the extent such a connection is necessary and only when appropriate security measures (e.g. firewalls and/or network segmentation) are in place.

For additional information on industrial security measures that may be implemented, please visit (https://www.siemens.com/industrialsecurity).

Siemens' products and solutions undergo continuous development to make them more secure. Siemens strongly recommends that product updates are applied as soon as they are available and that the latest product versions are used. Use of product versions that are no longer supported, and failure to apply the latest updates may increase customers' exposure to cyber threats.

To stay informed about product updates, subscribe to the Siemens Industrial Security RSS Feed under (https://www.siemens.com/industrialsecurity).

Table of contents

Preface 3

1 Guide to documentation 6

2 Product overview 10

2.1 Properties 10

2.2 Functions 13

3 DQ mode 16

3.1 Wiring 16
3.1.1 Wiring and block diagram 16

3.2 Parameters/address space 18
3.2.1 Parameters 18
3.2.2 Explanation of parameters 21
3.2.3 Address space 24

3.3 Interrupts/diagnostics alarms 26
3.3.1 Status and fault displays 26
3.3.2 Interrupts 27
3.3.3 Diagnostics alarms 28

4 PC mode 29

4.1 Wiring 29
4.1.1 Wiring and block diagram 29

4.2 Parameters/address space 31
4.2.1 Parameters 31
4.2.2 Explanation of parameters 34
4.2.3 Address space 38

4.3 Interrupts/diagnostics alarms 41
4.3.1 Status and fault displays 41
4.3.2 Interrupts 42
4.3.3 Diagnostics alarms 43

5 Technical specifications 44

A Parameter data record 51

A.1 Parameter assignment and structure of parameter data record 51

A.2 Error transferring the data record DQ 55

Guide to documentation

1

The documentation for the SIMATIC ET 200SP distributed I/O system is arranged into three areas.
This arrangement enables you to access the specific content you require.

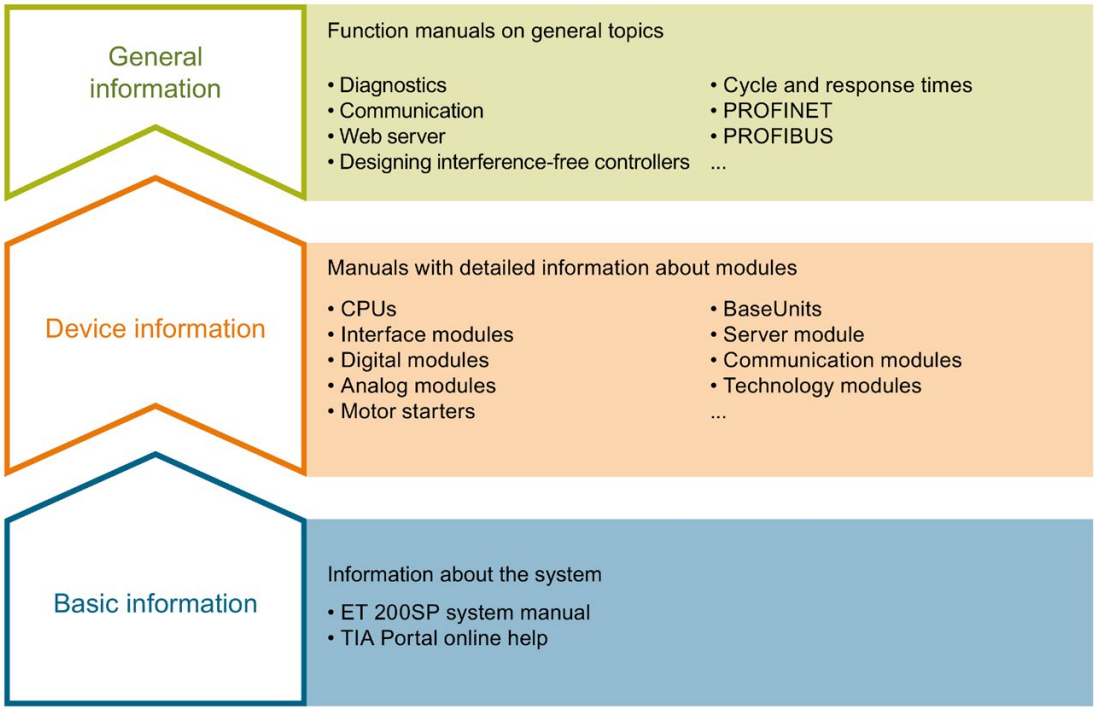

Basic information

The system manual describes in detail the configuration, installation, wiring and commissioning of the SIMATIC ET 200SP. distributed I/O system. The STEP 7 online help supports you in the configuration and programming.

Device information

Product manuals contain a compact description of the module-specific information, such as properties, wiring diagrams, characteristics and technical specifications.

General information

The function manuals contain detailed descriptions on general topics regarding the SIMATIC ET 200SP distributed I/O system, e.g. diagnostics, communication, Web server, motion control and OPC UA.

You can download the documentation free of charge from the Internet (https://support.industry.siemens.com/cs/ww/en/view/109742709).

Changes and supplements to the manuals are documented in a Product Information.

You can download the product information free of charge from the Internet (https://support.industry.siemens.com/cs/us/en/view/73021864).

Manual Collection ET 200SP

The Manual Collection contains the complete documentation on the SIMATIC ET 200SP distributed I/O system gathered together in one file.

You can find the Manual Collection on the Internet (http://support.automation.siemens.com/WW/view/en/84133942).

"mySupport"

With "mySupport", your personal workspace, you make the most of your Industry Online Support.

In "mySupport" you can store filters, favorites and tags, request CAx data and put together your personal library in the Documentation area. Furthermore, your data is automatically filled into support requests and you always have an overview of your current requests.

You need to register once to use the full functionality of "mySupport".

You can find "mySupport" in the Internet (https://support.industry.siemens.com/My/ww/en).

"mySupport" - Documentation

In the Documentation area of "mySupport", you have the possibility to combine complete manuals or parts of them to make your own manual.
You can export the manual in PDF format or in an editable format.

You can find "mySupport" - Documentation in the Internet (http://support.industry.siemens.com/My/ww/en/documentation).

"mySupport" - CAx Data

In the CAx Data area of "mySupport", you can have access the latest product data for your CAx or CAe system.

You configure your own download package with a few clicks.

In doing so you can select:

- Product images, 2D dimension drawings, 3D models, internal circuit diagrams, EPLAN macro files
- Manuals, characteristics, operating manuals, certificates
- Product master data

You can find "mySupport" - CAx Data in the Internet (http://support.industry.siemens.com/my/ww/en/CAxOnline).

Application examples

The application examples support you with various tools and examples for solving your automation tasks. Solutions are shown in interplay with multiple components in the system - separated from the focus in individual products.

You can find the application examples on the Internet (https://support.industry.siemens.com/sc/ww/en/sc/2054).

TIA Selection Tool

With the TIA Selection Tool, you can select, configure and order devices for Totally Integrated Automation (TIA).
This tool is the successor of the SIMATIC Selection Tool and combines the known configurators for automation technology into one tool.
With the TIA Selection Tool, you can generate a complete order list from your product selection or product configuration.

You can find the TIA Selection Tool on the Internet (http://w3.siemens.com/mcms/topics/en/simatic/tia-selection-tool).

SIMATIC Automation Tool

You can use the SIMATIC Automation Tool to run commissioning and maintenance activities simultaneously on various SIMATIC S7 stations as a bulk operation independently of the TIA Portal.

The SIMATIC Automation Tool provides a multitude of functions:

- Scanning of a PROFINET/Ethernet network and identification of all connected CPUs
- Address assignment (IP, subnet, gateway) and station name (PROFINET device) to a CPU
- Transfer of the data and the programming device/PC time converted to UTC time to the module
- Program download to CPU
- Operating mode switchover RUN/STOP
- Localization of the CPU by means of LED flashing
- Reading out CPU error information
- Reading the CPU diagnostic buffer

- Reset to factory settings
- Updating the firmware of the CPU and connected modules

You can find the SIMATIC Automation Tool on the Internet (https://support.industry.siemens.com/cs/ww/en/view/98161300).

PRONETA

With SIEMENS PRONETA (PROFINET network analysis), you analyze the plant network during commissioning. PRONETA features two core functions:

- The topology overview independently scans PROFINET and all connected components.
- The IO check is a fast test of the wiring and the module configuration of a system.

You can find SIEMENS PRONETA on the Internet (https://support.industry.siemens.com/cs/ww/en/view/67460624).

SINETPLAN

SINETPLAN, the Siemens Network Planner, supports you in planning automation systems and networks based on PROFINET. The tool facilitates professional and predictive dimensioning of your PROFINET installation as early as in the planning stage. In addition, SINETPLAN supports you during network optimization and helps you to exploit network resources optimally and to plan reserves. This helps to prevent problems in commissioning or failures during productive operation even in advance of a planned operation. This increases the availability of the production plant and helps improve operational safety.

The advantages at a glance

- Network optimization thanks to port-specific calculation of the network load
- Increased production availability thanks to online scan and verification of existing systems
- Transparency before commissioning through importing and simulation of existing STEP 7 projects
- Efficiency through securing existing investments in the long term and optimal exploitation of resources

You can find SINETPLAN on the Internet (https://www.siemens.com/sinetplan).

Product overview

2

2.1 Properties

Article number

6ES7132-6FD00-0CU0

View of the module

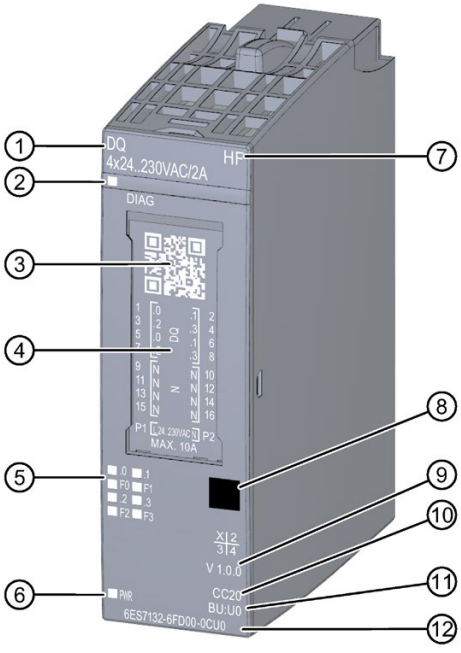

① Module type and name
② LED for diagnostics
③ 2D matrix code
④ Wiring diagram
⑤ LEDs for channel status
⑥ LED for supply voltage
⑦ Function class
⑧ Color coding module type
⑨ Function and firmware version
⑩ Color code for selecting the color identification labels
⑪ BU type
⑫ Article number

Figure 2-1 View of the module DQ 4×24..230VAC/2A HF

Properties

The module has the following technical properties:

- Digital output module with 4 outputs (TRIAC)
- Output current 2 A per channel (max. 4 A), total current max. 8 A
  (see derating: Technical specifications (Page 44))
- Power rating max. 900 W
- Configurable diagnostics (per channel)
- Configurable substitute values (per channel)
- Suitable for power control of heating systems or infrared sources in drying processes
- Wave packet control to prevent harmonic components
- Startup delay per channel to reduce system loads
- Output filter per channel for soft start or soft stop
- Two operating modes:
  - DQ
  - PC (PowerControl)
- with one of four control types each:
  - Phase control - phase-angle proportional (default)
  - Phase control - power-proportional
  - Wave packet control - half waves
  - Wave packet control - full waves

Table 2- 1 Operating modes of the DQ 4×24..230VAC/2A HF

Property		Operating mode			
		DQ		PC (PowerControl)	
		Without value status (QI)	With value status (QI)	Without value status (QI)	With value status (QI)
Number of channels		4			
Control type selection		Yes			
Configurable temperature shutdown		Yes			
Configurable startup delay		0 ms ... 10 s			
Configurable output filter down/up		0 ms ... 60 s			
Data length	Inputs	0 bytes	1 byte	0 bytes	1 byte
	Outputs	1 byte	1 byte	8 bytes	8 bytes

The module supports the following functions:

Table 2- 2 Version dependencies of the functions

Function	HW version	FW version	STEP 7		GSD file	
			TIA Portal	V5.x	PROFINET IO	PROFIBUS DP
Firmware update	FS01	V1.0.0 or higher	V14 or higher with HSP 0240	V5.5 SP3 or higher with HSP 0230 V8.0 or higher	X	X
Identification data I&M0 to I&M3	FS01	V1.0.0 or higher	V14 or higher with HSP 0240	V5.5 SP3 or higher with HSP 0230 V8.0 or higher	X	X
Reconfiguration in RUN	FS01	V1.0.0 or higher	V14 or higher with HSP 0240	V5.5 SP3 or higher with HSP 0230 V8.0 or higher	X	X
PROFIenergy	FS01	V1.0.0 or higher	V14 or higher with HSP 0240	V5.5 SP3 or higher with HSP 0230 V8.0 or higher	X	X
Value status	FS01	V1.0.0 or higher	V14 or higher with HSP 0240	V5.5 SP3 or higher with HSP 0230 V8.0 or higher	X	X

Accessories

The following accessories must be ordered separately:

- Labeling strips
- Color identification labels
- Reference identification label

You can find more information on accessories in the ET 200SP distributed I/O system (https://support.industry.siemens.com/cs/ww/en/view/58649293) system manual.

2.2 Functions

Introduction

Two operating mode are available for the module DQ 4×24..230VAC/2A HF:

- DQ mode
- PC mode (PowerControl)

In PC mode, control of the module outputs is analog. The value range is $0..1000_D$ (= 0.1% increments). The resolution of the process value is 16 bits per channel.

In DQ mode, output control is binary.

You configure the channels with the functions described below.

Control types

In PC mode, you can assign one of four control types to all channels of the module; you use these control types to control different processes in your plant.

The control the power in the control types:

- Phase control - power-proportional
- Wave packet control (half waves)
- Wave packet control (full waves)

You can use these control types, for example, for power control of heating systems or infrared sources in drying processes.

You control the average switch-on duration in the control type:

- Phase control - phase-angle proportional

You can use this control type, for example, to dim lamps that offer this feature.

You also assign the control types in DQ mode. The resolution of the process value here is only 1 bit per channel.

PC mode (PowerControl) operating principles

Phase control

The load voltage is reduced through phase control and raised from the starting voltage up to mains voltage in the zero crossing.
Depending on the application, phase control offers advantages compared to wave packet control, such as even heating or prevention of radiation source flickering in case of low setpoints.

You can configure the following during each half wave:

- For phase control - phase-angle proportional: The switch-on duration in proportion to the process value.
- For phase control - power-proportional: The output power.

The following graphic schematically shows the principle of phase control:

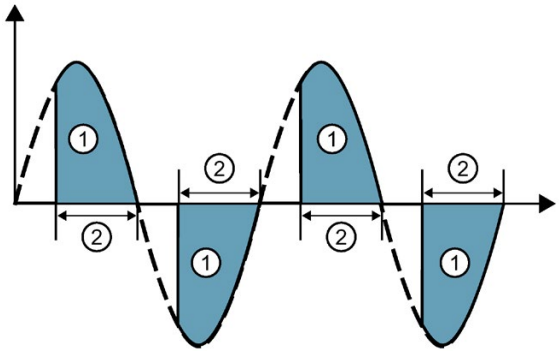

① Average power 80%, corresponds to a process value of 800 (power proportional)

② Average switch-on duration 67%, corresponds to a process value of 670 (phase angle proportional)

Figure 2-2 Principle of phase control

Note

Use of filters

To observe the EMC guidelines, you must filter the faults caused by phase control in the plant. A suitable filter, for example, is EPCOS SIFI-C B84113C.

For additional information about electromagnetic compatibility of the module, see the section Technical specifications (Page 44).

Phase control - power-proportional

This control type enables you to control the output power in the phase control in proportion to the maximum power.
This means, for example, that a 500 W heating element ideally consumes about 50 W of its maximum power at a process value of 10.0%.

Note that infrared sources may consume more power. The deviation from the setpoint is at its lowest in case of a linear and purely ohmic load.

Wave packet control

In case of wave packet control, the module connects the load voltage through to the load for entire half or full waves starting at the zero crossing.
The wave packets to be output are calculated dynamically. Unlike with fixed wave packet patterns, the changes of the output value are taken into consideration faster while ensuring the absence of direct voltage in the output voltage at the same time. This allows for the implementation of controllers with shorter dead times.

The process value hereby refers to the average switch-on duration over multiple alternating voltage periods of the load voltage.
The graphics below show you how basic wave packet control for half waves or full waves works.

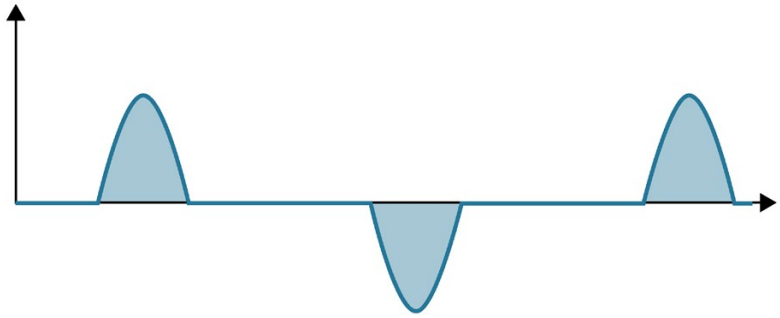

Figure 2-3 Principle of wave packet control - half waves

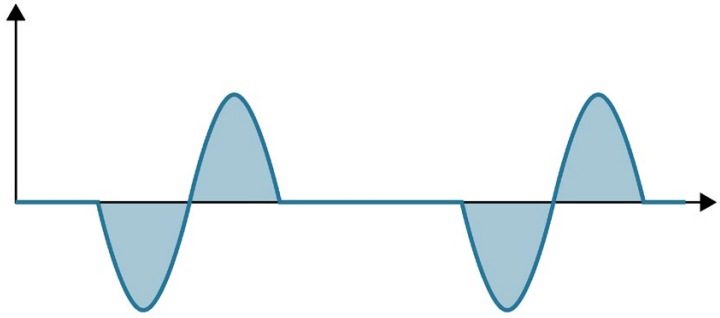

Figure 2-4 Principle of wave packet control - full waves

DQ mode

3

3.1 Wiring

3.1.1 Wiring and block diagram

This section includes the block diagram of the DQ 4x24..230VAC/2A HF module with the terminal assignments for a 1-wire and 2-wire connection.
You can use the different connection options for all channels and combine them at random.

You can find information on wiring the BaseUnit in the ET 200SP distributed I/O system (https://support.industry.siemens.com/cs/ww/en/view/58649293) system manual.

DANGER

Dangerous voltage. Risk of death or serious injury.

You must always disconnect the system and module from the power supply before commencing work.

Note

Limiting overvoltage

You must ensure overvoltage of the encoder supply is limited to 1 kV.

Note

Power limitation

To limit power, each input voltage must have a fuse with a maximum rating of 10 A tripping current. The fuse must be a quick-acting microfuse.

Note

Three-phase loads

Do not connect any three-phase loads to the module. The digital output is not suitable for three-phase loads.

Connection: 1-wire and 2-wire connection of actuators

The following figure shows the block diagram and an example of the terminal assignment of the digital output module DQ 4x24..230VAC/2A HF on the BaseUnit BU type U0.

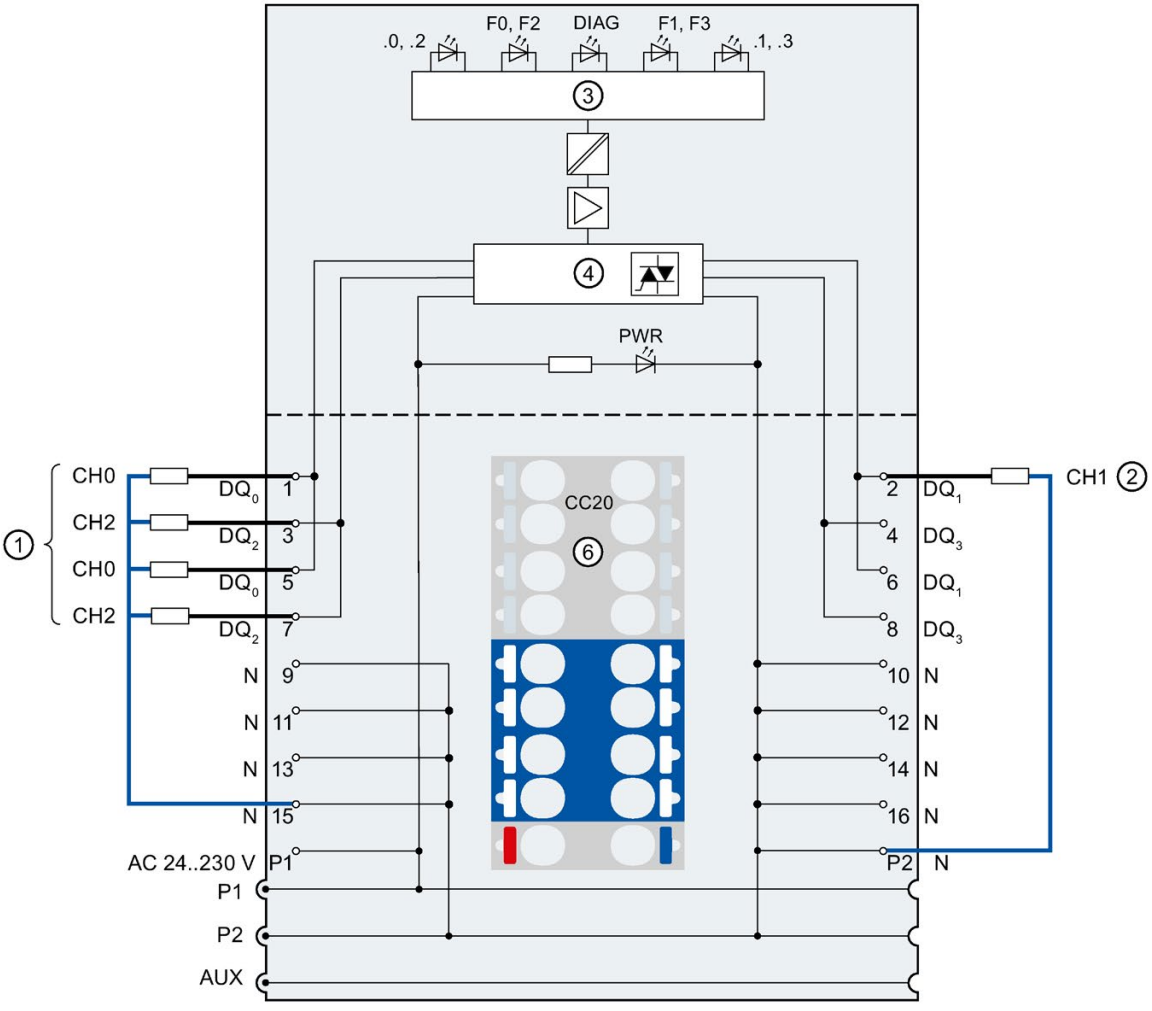

①	1-wire connection	24..230 V AC	Supply voltage L (infeed for light-colored BaseUnit only)
②	2-wire connection	P1, P2, AUX	Internal self-assembling voltage buses Connection to left (dark-colored BaseUnit) Connection to left interrupted (light-colored BaseUnit)
③	Backplane bus interface	N	Neutral
④	Output electronics	DIAG	Error or diagnostics LED (green, red)
⑤	Polarity reversal protection	.0 to .3	Channel status LED (green)
⑥	Color-coded label CC20 (optional)	F0 to F3	Channel fault LED (red)
DQ_n	Output signal, channel n	PWR	Power LED (green)

Figure 3-1 Wiring and block diagram for 1-wire and 2-wire connection of actuators.

3.2 Parameters/address space

3.2.1 Parameters

Parameters of the DQ 4×24..230VAC/2A HF

The following table lists the configurable parameters in DQ mode.

The effective range of the configurable parameters depends on the type of configuration. The following configurations are possible:

- Central operation with an ET 200SP CPU
- Distributed operation on PROFINET IO in an ET 200SP system
- Distributed operation with PROFIBUS DP in an ET 200SP system

When performing the configuration in the user program, use the "WRREC" instruction to transfer the parameters to the module using data records (refer to the section Parameter assignment and structure of parameter data record (Page 51)).

The following parameter settings are possible:

Table 3- 1 Configurable parameters and their defaults (GSD file)

Parameter	Range of values	Default	Reconfiguration in RUN	Effective range with configuration software, e.g. STEP 7 (TIA Portal)	
				GSD file PROFINET IO	GSD file PROFIBUS DP[1]
Module parameters					
Control type	• Phase control - phase-angle proportional • Phase control - power-proportional • Wave packet control - half waves • Wave packet control - full waves	Phase control - phase-angle proportional	Yes	Module	Module

Parameter	Range of values	Default	Reconfiguration in RUN	Effective range with configuration software, e.g. STEP 7 (TIA Portal)	
				GSD file PROFINET IO	GSD file PROFIBUS DP[1]
Channel parameters					
Diagnostics No supply voltage L	• Disable • Enable	Disable	Yes	Channel	Module
Diagnostics Overtemperature	• Disable • Enable	Disable	Yes	Channel	Module
Diagnostics Wire break[2]	• Disable • Enable	Disable	Yes	Channel	Module
Channel activated	• Disable • Enable	Enable	Yes	Channel	Channel
Temperature shut-down	• Output active even under overtempera-ture conditions • Output disabled under overtempera-ture conditions	Output active even under overtempera-ture conditions	Yes	Channel	Module
Reaction to CPU STOP	• Turn off • Keep last value • Output substitute value 1	Turn off	Yes	Channel	Module
Channel startup delay	• No delay • 100 ms • 1 s • 2 s • 3 s • 4 s • 5 s • 10 s	No delay	Yes	Channel	-
Channel output filter down	• No filter • 500 ms • 1 s • 5 s • 10 s • 30 s • 60 s	No filter	Yes	Channel	-

Parameter	Range of values	Default	Reconfiguration in RUN	Effective range with configuration software, e.g. STEP 7 (TIA Portal)	
				GSD file PROFINET IO	GSD file PROFIBUS DP[1]
Channel output filter up	• No filter • 500 ms • 1 s • 5 s • 10 s • 30 s • 60 s	No filter	Yes	Channel	-
Potential group					
Potential group	• Use potential group of the left module (module plugged into a dark BaseUnit) • Enable new potential group (module plugged into light-colored BaseUnit)	Use potential group of the left module	No	Module	Module

1 Due to the limited number of parameters of a maximum of 244 bytes per ET 200SP station with a PROFIBUS GSD configuration, the parameter assignment options are restricted. The parameter length of the I/O module is 7 bytes with PROFIBUS GSD configuration. If necessary, you can set this parameter by using the data record 128, see the appendix "Parameter data set".

2 For physical reasons, a wire break cannot be detected for actuators with two inputs and shared reference point. In this case, deactivate the diagnostics.

3.2.2 Explanation of parameters

Control type

At the module level, specifies the control type in which the module's channels are operated.

- Phase control - phase-angle proportional (default)
- Phase control - power-proportional
- Wave packet control - half waves
- Wave packet control - full waves

Diagnostics No supply voltage L

Enabling of the diagnostics for no or insufficient supply voltage L.

Diagnostics Overtemperature

Diagnostics enabled when overtemperature occurs in the module.

When you enable the Overtemperature diagnostics and the module detects that the maximum permissible module temperature is exceeded, the Overtemperature diagnostics is output.

Diagnostics Wire break

Enabling of the diagnostics if the line to the actuator is broken.

Channel activated

Determines whether a channel is enabled or disabled.

Temperature shutdown

Determines whether a channel remains activate or is deactivated in case of overtemperature.

When the module has detected that the maximum permissible module temperature has been exceeded, the channel is either deactivated or remains active depending on the configuration.
To prevent damage to the module, the channel is automatically deactivated when temperature shutdown is configured.

You cannot control the channel until the temperature is once again in the valid range.

Reaction to CPU STOP

Determines the behavior of the module in the event of a CPU STOP.

Channel startup delay

Specifies the duration of the startup delay of a channel.

You can set startup delays with values ranging from 100 ms to 10 s. This means the channels cannot be controlled before the set startup delay has expired.
Configure different startup delays for each channel to decouple the starting currents and thus reduce the network load.
Startup delays are also in effect when the module is to output substitute values. The startup delay starts after the module was started and when the load voltage returns.
This means that depending on your process, the initial switch on of lamps is always delayed by the configured time.

Channel output filter down/up

Specifies the down or up output filter of a channel.

For smooth operation or to increase the interference immunity of your application, use down or up output filters with values from 500 ms to 60 s.
Quick changes of the filter input values are converted into smoother signal changes at the filter output. This means, for example, that extreme currents in the heating phase of infrared sources are limited.

In addition, you can also use output filters to reduce shifts in the zero crossings of the power supply that can occur in isolating transformers.
This increases the accuracy of the module.

When you have configured a startup delay, the output filter is held at the reset state during this delay.
Once the startup delay has expired, the output filter starts its linear ramp directly at the value that was held during the startup delay.

Note that the configured filter times always refer to the process value jumps from 0% to 100% or from 100% to 0%.
This means the settling time of the filter is shorter for smaller jumps.

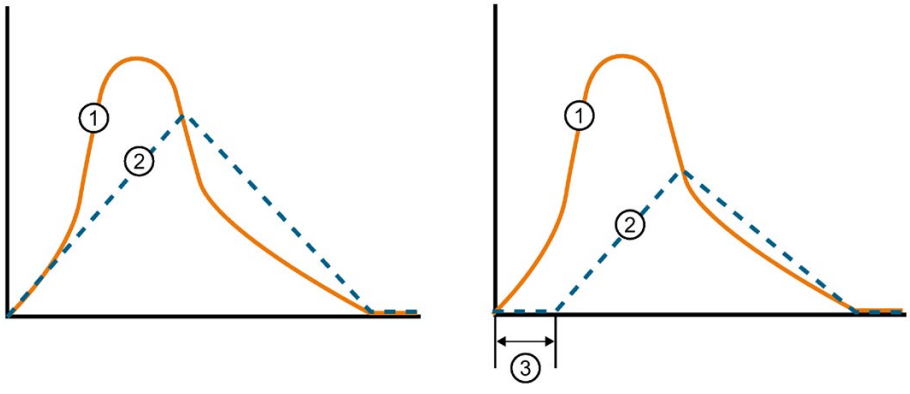

① Power without output filter
② Power with output filter (max. slope according to Output filters parameter)
③ Startup delay

Figure 3-2 Power trend or average switch-on duration in case of phase control phase-angle proportional with and without output filter

Each channel has its own output filters. These output filters always work with maximum resolution.

Output filters are also in effect when the module is to output substitute values, for example, after CPU STOP or in case of a communication failure.
This means all transitions are still smooth and infrared sources for hot gluing spots do not fail immediately, for example, but are shut down slowly to ensure that the surface of the gluing spots does not tear due to sudden cooling.

If you do not want to use output filters, use the parameter setting "No filter".

Potential group

A potential group consists of a group of directly adjacent I/O modules within an ET 200SP station, which are supplied via a common supply voltage.

A potential group begins with a light-colored BaseUnit through which the required voltage is supplied for all modules of the potential group. The light-colored BaseUnit interrupts the three self-assembling voltage buses P1, P2 and AUX to the left neighbor.

All additional I/O modules of this potential group are plugged into dark-colored BaseUnits. You take the potential of the self-assembling voltage buses P1, P2 and AUX from the left neighbor.

A potential group ends with the dark-colored BaseUnit, which follows a light-colored BaseUnit or server module in the station configuration.

3.2.3 Address space

The module can be configured differently in STEP 7; see following table. Depending on the configuration, additional/different addresses are assigned in the process image output/input.

Configuration options of the DQ 4×24..230VAC/2A HF in DQ mode

You can configure the module with STEP 7 (TIA Portal) or with a GSD file. When you configure the module by means of the GSD file, the configuration is available under different short designations/module names. The following configurations are possible:

Table 3- 2 Configuration options with GSD file

Configuration	Short designation/module name in the GSD file	Configuration software, e.g. STEP 7 (TIA Portal)		
		Integrated in the hardware catalog STEP 7, V14 or higher	GSD file PROFINET IO	GSD file PROFIBUS DP
1 x 4-channel without value status	DQ 4×24..230VAC/2A HF V1.0	X	X	X
1 x 4-channel with value status	DQ 4×24..230VAC/2A HF V1.0, QI	X	X	---

Note

The following functions are only fully available when the submodule X.1 is configured and the IO controller to which submodule X.1 is assigned has established a connection to the IO device.

- Firmware update
- I&M identification data
- PROFIenergy

Value status (quality information, QI)

The value status is always activated for the following module names:

- DQ 4×24..230VAC/2A HF V1.0, QI

An additional bit is assigned to each channel for the value status. The bit for the value status indicates if the output value specified by the user program is actually pending at the module terminal (0 = value is incorrect).

Address space for configuration as 1 x 4-channel DQ 4×24..230VAC/2A HF V1.0

The figure below shows the address space allocation for the configuration **without** value status in DQ mode (DQ 4×24..230VAC/2A HF V1.0).

Assignment in the process image of the outputs (PIQ)

	7	6	5	4	3	2	1	0	
QB x	0	0	0	0					Output values at channels 0 to 3

Figure 3-3 Address space for configuration as 1 x 4-channel DQ 4×24..230VAC/2A HF V1.0 without value status

Address space for configuration as 1 x 4-channel DQ 4×24..230VAC/2A HF V1.0, QI

The figure below shows the address space allocation for the configuration **with** value status in DQ mode (DQ 4×24..230VAC/2A HF V1.0, QI).

Assignment in the process image of the outputs (PIQ)

	7	6	5	4	3	2	1	0	
QB x	0	0	0	0					Output values at channels 0 to 3

Assignment in the process image input (PII)

	7	6	5	4	3	2	1	0	
IB x	0	0	0	0					Value status (QI) at channels 0 to 3
									0: Value output at channel is incorrect

Figure 3-4 Address space for configuration as 1 x 4-channel DQ 4×24..230VAC/2A HF V1.0 with value status

3.3 Interrupts/diagnostics alarms

3.3.1 Status and fault displays

LED display

The following figure shows you the LED display of the DQ 4×24..230VAC/2A HF.

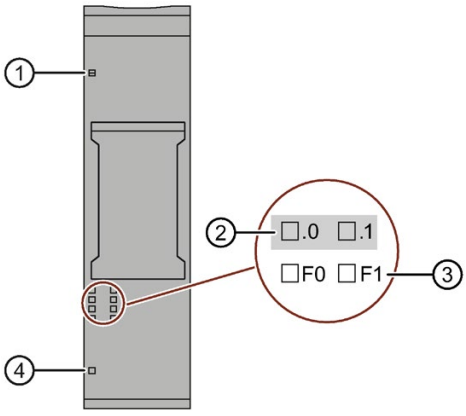

① DIAG (green/red)
② Channel status (green)
③ Channel error (red)
④ PWR (green)

Figure 3-5 LED displays

Meaning of the LEDs

The following tables explain the meaning of the status and error displays.

DIAG LED

Table 3- 3 Error display of the DIAG LED

DIAG LED	Meaning
Off	Backplane bus supply of the ET 200SP not OK
Flashes	Module parameters not assigned
On	Module parameters assigned and no module/channel diagnostics
Flashes	Module parameters assigned and module/channel diagnostics

LED channel status/channel error

Table 3- 4 Status / error display of the LED channel status / channel error

Channel status LED	LED channel error	Meaning
□ Off	□ Off	Channel deactivated or process signal = 0 and no channel diagnostics
■ On	□ Off	Channel activated and process signal = 1 and no channel diagnostics
□ Off	■ On	Channel activated and channel diagnostics

PWR LED

Table 3- 5 Status display of the PWR LED

PWR LED	Meaning
□ Off	No supply voltage L
■ On	Supply voltage L present

3.3.2 Interrupts

The digital output module DQ 4x24...230VAC/2A HF supports diagnostic interrupts.

Diagnostics interrupts

In DQ mode, the module generates a diagnostics interrupt for the following events:

- Overtemperature
- Wire break
- Parameter assignment error
- Supply voltage missing
- Channel/component temporarily unavailable

Detailed information on the event is available in the STEP 7 online help.

3.3.3 Diagnostics alarms

Diagnostics alarms

A diagnostics alarm is generated and the DIAG-LED flashes on the module for each diagnostics event. You can read out the diagnostics alarms, for example, in the diagnostics buffer of the CPU. You can evaluate the error codes with the user program.
In DQ mode, the module outputs the following diagnostic alarms:

Table 3- 6 Diagnostics alarms, their meaning and corrective measures

Diagnostics alarms	Error code	Meaning	Solution
Overtemperature	5_H	Possible causes: • Short-circuit or overload at the digital outputs • Ambient temperature outside the specification	• Correct the process wiring • Improve cooling • Check controlled loads
Wire break	6_H	Actuator circuit impedance too high	Use a different actuator type or modify the wiring, for example, use cables with larger cross-section
		Wirebreak between the module and actuator	Connect the cable
		Channel not connected (open)	Disable diagnostics
Parameter assignment error	10_H	• The module cannot evaluate parameters for the channel. • Incorrect parameter assignment.	Correct the parameter assignment
Supply voltage missing	11_H	No or insufficient supply voltage L	• Check supply voltage L at the BaseUnit • Check BaseUnit type
Channel/component temporarily unavailable	$1F_H$	Firmware update is currently in progress or has been canceled. The module does not output any process or substitute values in this state.	• Wait for firmware update. • Restart the firmware update.

PC mode

4

4.1 Wiring

4.1.1 Wiring and block diagram

This section includes the block diagram of the DQ 4x24..230VAC/2A HF module with the terminal assignments for a 1-wire and 2-wire connection.
You can use the different connection options for all channels and combine them at random.

You can find information on wiring the BaseUnit in the ET 200SP distributed I/O system (https://support.industry.siemens.com/cs/ww/en/view/58649293) system manual.

DANGER

Dangerous voltage. Risk of death or serious injury.

You must always disconnect the system and module from the power supply before commencing work.

Note

Limiting overvoltage

You must ensure overvoltage of the encoder supply is limited to 1 kV.

Note

Power limitation

To limit power, each input voltage must have a fuse with a maximum rating of 10 A tripping current. The fuse must be a quick-acting microfuse.

Note

Three-phase loads

Do not connect any three-phase loads to the module. The digital output is not suitable for three-phase loads.

Connection: 1-wire and 2-wire connection of actuators

The following figure shows the block diagram and an example of the terminal assignment of the digital output module DQ 4x24..230VAC/2A HF on the BaseUnit BU type U0.

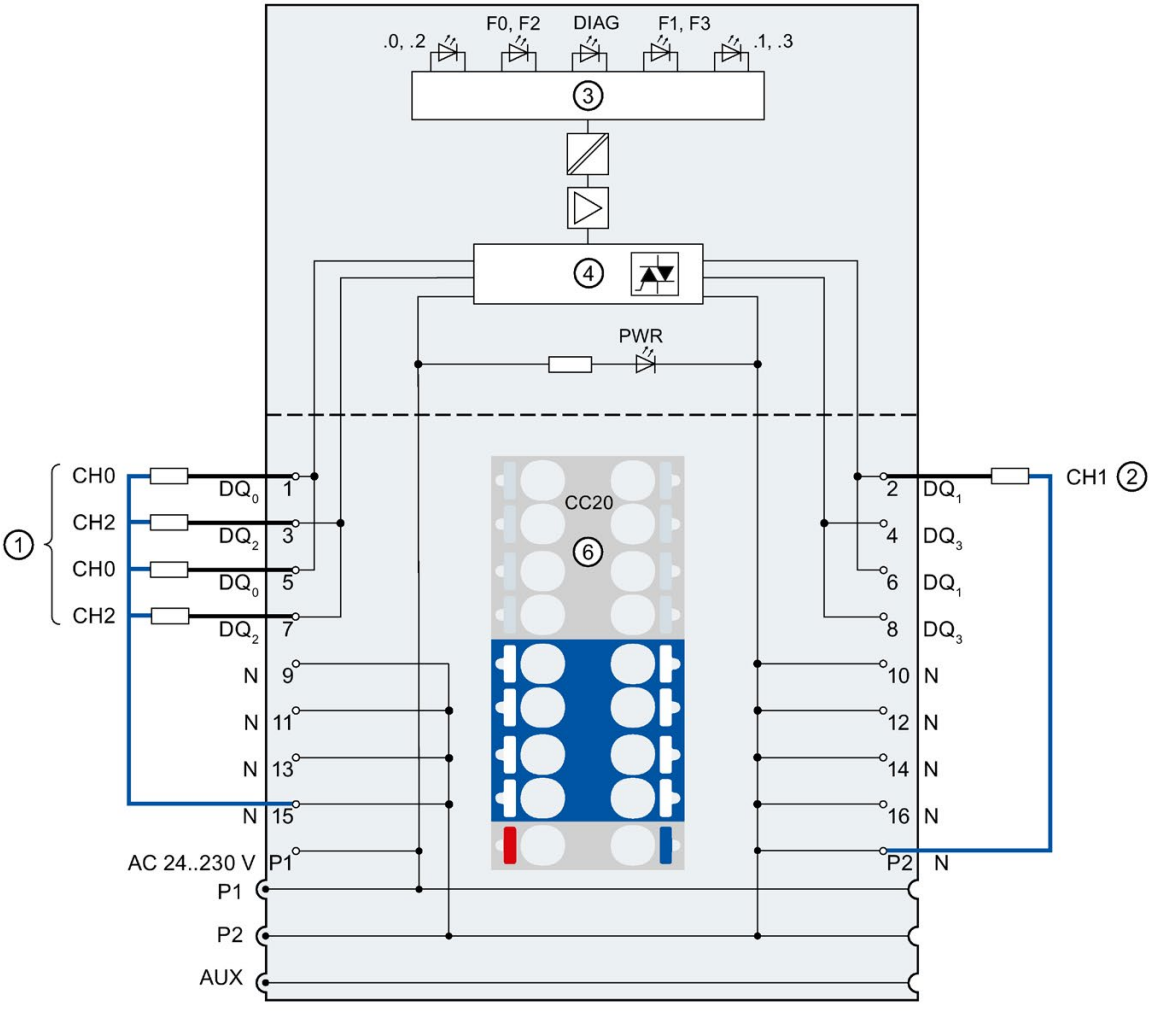

①	1-wire connection	24..230 V AC	Supply voltage L (infeed for light-colored BaseUnit only)
②	2-wire connection	P1, P2, AUX	Internal self-assembling voltage buses Connection to left (dark-colored BaseUnit) Connection to left interrupted (light-colored BaseUnit)
③	Backplane bus interface	N	Neutral
④	Output electronics	DIAG	Error or diagnostics LED (green, red)
⑤	Polarity reversal protection	.0 to .3	Channel status LED (green)
⑥	Color-coded label CC20 (optional)	F0 to F3	Channel fault LED (red)
DQ_n	Output signal, channel n	PWR	Power LED (green)

Figure 4-1 Wiring and block diagram for 1-wire and 2-wire connection of actuators.

4.2 Parameters/address space

4.2.1 Parameters

Parameters of the DQ 4×24..230VAC/2A HF

The following table lists the configurable parameters in PC mode.

The effective range of the configurable parameters depends on the type of configuration. The following configurations are possible:

- Central operation with an ET 200SP CPU
- Distributed operation on PROFINET IO in an ET 200SP system
- Distributed operation with PROFIBUS DP in an ET 200SP system

When performing the configuration in the user program, use the "WRREC" instruction to transfer the parameters to the module using data records (refer to the section Parameter assignment and structure of parameter data record (Page 51)).

The following parameter settings are possible:

Table 4- 1 Configurable parameters and their defaults (GSD file)

Parameter	Range of values	Default	Reconfiguration in RUN	Effective range with configuration software, e.g. STEP 7 (TIA Portal)	
				GSD file PROFINET IO	GSD file PROFIBUS DP[1]
Module parameters					
Control type	• Phase control - phase-angle proportional • Phase control - power-proportional • Wave packet control - half waves • Wave packet control - full waves	Phase control - phase-angle proportional	Yes	Module	Module

Parameter	Range of values	Default	Reconfiguration in RUN	Effective range with configuration software, e.g. STEP 7 (TIA Portal)	
				GSD file PROFINET IO	GSD file PROFIBUS DP[1]
Channel parameters					
Diagnostics No supply voltage L	• Disable • Enable	Disable	Yes	Channel	Module
Diagnostics Overtemperature	• Disable • Enable	Disable	Yes	Channel	Module
Diagnostics Wire break[2]	• Disable • Enable	Disable	Yes	Channel	Module
Diagnostics Overflow [3]	• Disable • Enable	Disable	Yes	Channel	Module
Channel activated	• Disable • Enable	Enable	Yes	Channel	Channel
Temperature shut-down	• Output active even under overtempera-ture conditions • Output disabled under overtempera-ture conditions	Output active even under overtempera-ture conditions	Yes	Channel	Module
Reaction to CPU STOP	• Turn off • Keep last value • Output substitute value	Turn off	Yes	Channel	Module
Channel startup delay	• No delay • 100 ms • 1 s • 2 s • 3 s • 4 s • 5 s • 10 s	No delay	Yes	Channel	-
Channel output filter down	• No filter • 500 ms • 1 s • 5 s • 10 s • 30 s • 60 s	No filter	Yes	Channel	-

Parameter	Range of values	Default	Reconfiguration in RUN	Effective range with configuration software, e.g. STEP 7 (TIA Portal)	
				GSD file PROFINET IO	GSD file PROFIBUS DP[1]
Channel output filter up	• No filter • 500 ms • 1 s • 5 s • 10 s • 30 s • 60 s	No filter	Yes	Channel	-
Channel substitute value [0.1%] [2]	0...1000	0	Yes	Channel	Channel
Potential group					
Potential group	• Use potential group of the left module (module plugged into a dark BaseUnit) • Enable new potential group (module plugged into light-colored BaseUnit)	Use potential group of the left module	No	Module	Module

1 Due to the limited number of parameters of a maximum of 244 bytes per ET 200SP station with a PROFIBUS GSD configuration, the parameter assignment options are restricted. The parameter length of the I/O module is 7 bytes with PROFIBUS GSD configuration. If necessary, you can set this parameter by using the data record 128, see the appendix "Parameter data set".

2 For physical reasons, a wire break cannot be detected for actuators with two inputs and shared reference point. In this case, deactivate the diagnostics.

3 The Overflow and Channel substitute value [0.1%] diagnostics are only available if you configured the module in PC mode.

4.2.2 Explanation of parameters

Control type

At the module level, specifies the control type in which the module's channels are operated.

- Phase control - phase-angle proportional (default)
- Phase control - power-proportional
- Wave packet control - half waves
- Wave packet control - full waves

Diagnostics No supply voltage L

Enabling of the diagnostics for no or insufficient supply voltage L.

Diagnostics Overtemperature

Diagnostics enabled when overtemperature occurs in the module.

When you enable the Overtemperature diagnostics and the module detects that the maximum permissible module temperature is exceeded, the Overtemperature diagnostics is output.

Diagnostics Wire break

Enabling of the diagnostics if the line to the actuator is broken.

Diagnostics overflow

Enabling of the diagnostics when the permitted value range of the process value is exceeded.

Channel activated

Determines whether a channel is enabled or disabled.

Temperature shutdown

Determines whether a channel remains activate or is deactivated in case of overtemperature.

When the module has detected that the maximum permissible module temperature has been exceeded, the channel is either deactivated or remains active depending on the configuration.
To prevent damage to the module, the channel is automatically deactivated when temperature shutdown is configured.

You cannot control the channel until the temperature is once again in the valid range.

Reaction to CPU STOP

Determines the behavior of the module in the event of a CPU STOP.

Channel startup delay

Specifies the duration of the startup delay of a channel.

You can set startup delays with values ranging from 100 ms to 10 s. This means the channels cannot be controlled before the set startup delay has expired.
Configure different startup delays for each channel to decouple the starting currents and thus reduce the network load.
Startup delays are also in effect when the module is to output substitute values. The startup delay starts after the module was started and when the load voltage returns.
This means that depending on your process, the initial switch on of lamps is always delayed by the configured time.

Channel output filter down/up

Specifies the down or up output filter of a channel.

To increase the interference immunity of your application, use down or up output filters with values from 500 ms to 60 s.
Quick changes of the filter input values are converted into smoother signal changes at the filter output. This means, for example, that extreme currents in the heating phase of infrared sources are limited.

In addition, you can also use output filters to reduce shifts in the zero crossings of the power supply that can occur in isolating transformers.
This increases the accuracy of the module.

When you have configured a startup delay, the output filter is held at the reset state during this delay.
Once the startup delay has expired, the output filter starts its linear ramp directly at the value that was held during the startup delay.

Note that the configured filter times always refer to the process value jumps from 0% to 100% or from 100% to 0%.
This means the settling time of the filter is shorter for smaller jumps.

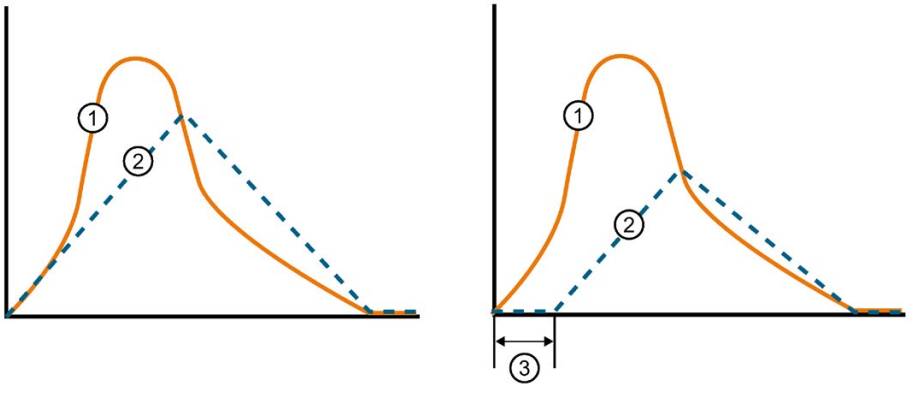

① Power without output filter
② Power with output filter (max. slope according to Output filters parameter)
③ Startup delay

Figure 4-2 Power trend or average switch-on duration in case of phase control phase-angle proportional with and without output filter

Each channel has its own output filters. These output filters always work with maximum resolution.

Output filters are also in effect when the module is to output substitute values, for example, after CPU STOP or in case of a communication failure.
This means all transitions are still smooth and infrared sources for hot gluing spots do not fail immediately, for example, but are shut down slowly to ensure that the surface of the gluing spots does not tear due to sudden cooling.

If you do not want to use output filters, use the parameter setting "No filter".

Channel substitute value [0.1%]

Defines the substitute value that is output when a CPU STOP occurs and the setting "Output substitute value" is selected in the "Reaction to CPU STOP" parameter.

Potential group

A potential group consists of a group of directly adjacent I/O modules within an ET 200SP station, which are supplied via a common supply voltage.

A potential group begins with a light-colored BaseUnit through which the required voltage is supplied for all modules of the potential group. The light-colored BaseUnit interrupts the three self-assembling voltage buses P1, P2 and AUX to the left neighbor.

All additional I/O modules of this potential group are plugged into dark-colored BaseUnits. You take the potential of the self-assembling voltage buses P1, P2 and AUX from the left neighbor.

A potential group ends with the dark-colored BaseUnit, which follows a light-colored BaseUnit or server module in the station configuration.

4.2.3 Address space

The module can be configured differently in STEP 7; see following table. Depending on the configuration, additional/different addresses are assigned in the process image output/input.

Configuration options of the DQ 4×24..230VAC/2A HF in PC mode

You can configure the module with STEP 7 (TIA Portal) or with a GSD file. When you configure the module by means of the GSD file, the configuration is available under different short designations/module names. The following configurations are possible:

Table 4- 2 Configuration options with GSD file

Configuration	Short designation/module name in the GSD file	Configuration software, e.g. STEP 7 (TIA Portal)		
		Integrated in the hardware catalog STEP 7, V14 or higher	GSD file PROFINET IO	GSD file PROFIBUS DP
1 x 4-channel without value status	DQ 4×24..230VAC/2A HF PC V1.0	X	X	X
1 x 4-channel with value status	DQ 4×24..230VAC/2A HF PC V1.0, QI	X	X	---

Note

The following functions are only fully available when the submodule X.1 is configured and the IO controller to which submodule X.1 is assigned has established a connection to the IO device.

- Firmware update
- I&M identification data
- PROFIenergy

Value status (quality information, QI)

The value status is always activated for the following module names:

- DQ 4×24..230VAC/2A HF PC V1.0, QI

An additional bit is assigned to each channel for the value status. The bit for the value status indicates if the output value specified by the user program is actually pending at the module terminal (0 = value is incorrect).

Address space for configuration as 1 x 4-channel DQ 4×24..230VAC/2A HF PC V1.0

The figure below shows the address space allocation for the configuration **without** value status in PC mode (DQ 4×24..230VAC/2A HF PC V1.0).

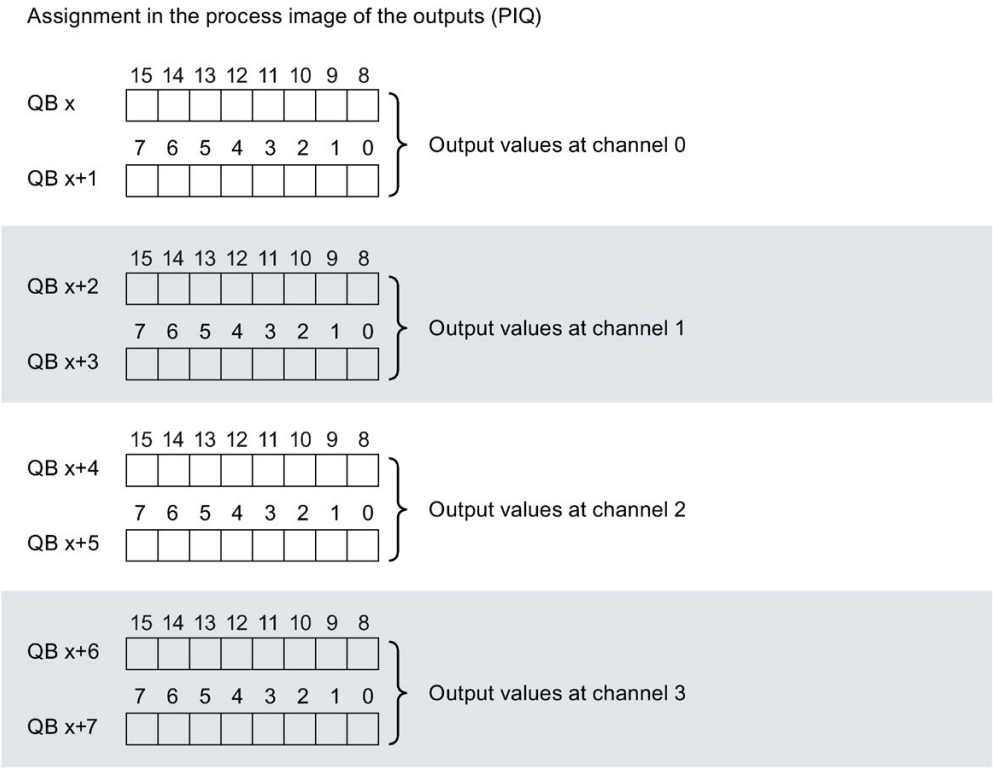

Figure 4-3 Address space for configuration as 1 x 4-channel DQ 4×24..230VAC/2A HF PC V1.0 without value status

Address space for configuration as 1 x 4-channel DQ 4×24..230VAC/2A HF PC V1.0, QI

The figure below shows the address space allocation for the configuration **with** value status in PC mode (DQ 4×24..230VAC/2A HF PC V1.0, QI).

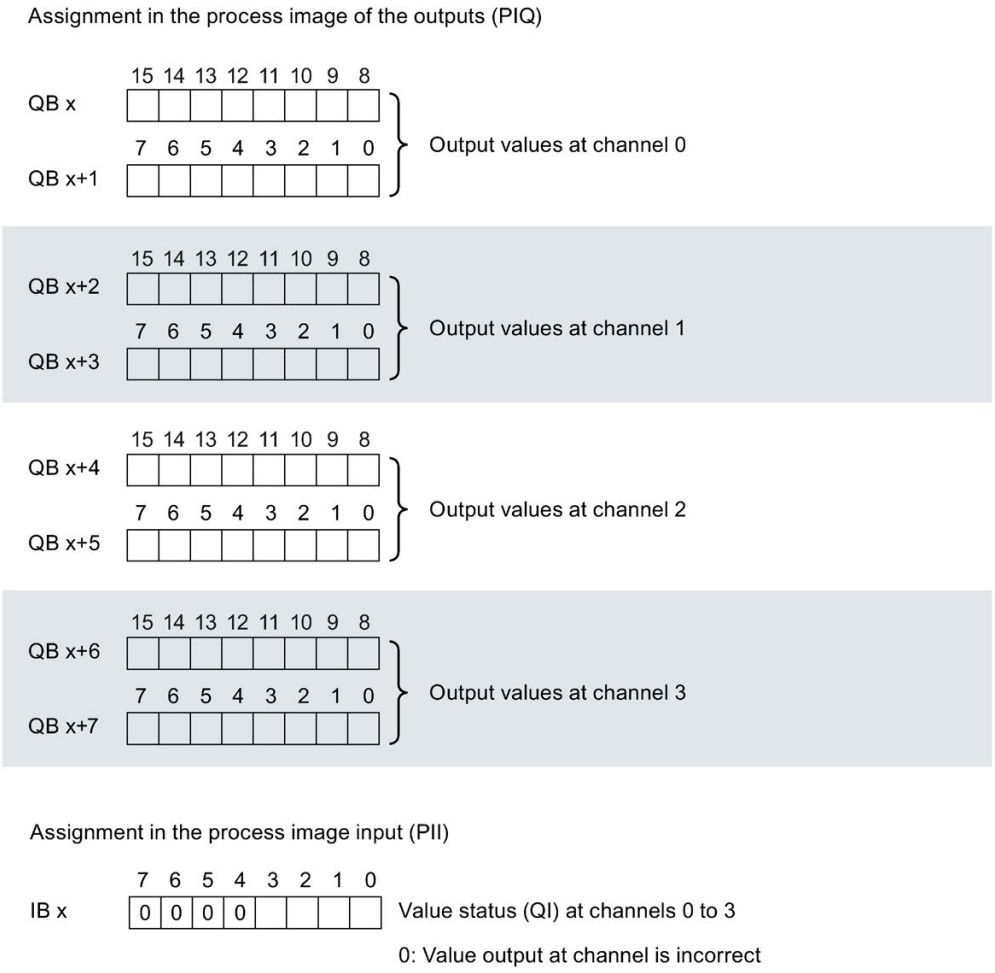

Figure 4-4 Address space for configuration as 1 x 4-channel DQ 4×24..230VAC/2A HF PC V1.0 with value status

4.3 Interrupts/diagnostics alarms

4.3.1 Status and fault displays

LED display

The following figure shows you the LED display of the DQ 4×24..230VAC/2A HF.

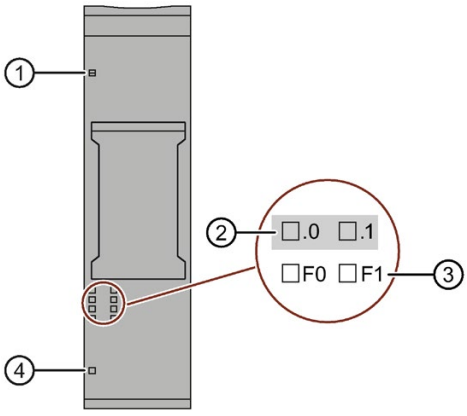

① DIAG (green/red)
② Channel status (green)
③ Channel error (red)
④ PWR (green)

Figure 4-5 LED displays

Meaning of the LEDs

The following tables explain the meaning of the status and error displays.

DIAG LED

Table 4- 3 Error display of the DIAG LED

DIAG LED	Meaning
Off	Backplane bus supply of the ET 200SP not OK
Flashes	Module parameters not assigned
On	Module parameters assigned and no module/channel diagnostics
Flashes	Module parameters assigned and module/channel diagnostics

LED channel status/channel error

Table 4- 4 Status / error display of the LED channel status / channel error

Channel status LED	LED channel error	Meaning
□ Off	□ Off	Channel deactivated or process signal = 0 and no channel diagnostics
■ On	□ Off	Channel activated and process signal = 1 and no channel diagnostics
□ Off	■ On	Channel activated and channel diagnostics

PWR LED

Table 4- 5 Status display of the PWR LED

PWR LED	Meaning
□ Off	No supply voltage L
■ On	Supply voltage L present

4.3.2 Interrupts

The digital output module DQ 4x24...230VAC/2A HF supports diagnostic interrupts.

Diagnostics interrupts

In PC mode, the module generates a diagnostic interrupt for the following events:

- Overtemperature
- Wire break
- High limit violated
- Parameter assignment error
- Supply voltage missing
- Channel/component temporarily unavailable

Detailed information on the event is available in the STEP 7 online help.

4.3.3 Diagnostics alarms

Diagnostics alarms

A diagnostics alarm is generated and the DIAG-LED flashes on the module for each diagnostics event. You can read out the diagnostics alarms, for example, in the diagnostics buffer of the CPU. You can evaluate the error codes with the user program.
In PC mode, the module outputs the following diagnostic alarms:

Table 4- 6 Diagnostics alarms, their meaning and corrective measures

Diagnostics alarms	Error code	Meaning	Solution
Overtemperature	5_H	• Short-circuit or overload at the digital outputs • Ambient temperature outside the specification	• Correct the process wiring • Improve cooling • Check controlled loads
Wire break	6_H	Actuator circuit impedance too high	Use a different actuator type or modify the wiring, for example, use cables with larger cross-section
		Wirebreak between the module and actuator	Connect the cable
		Channel not connected (open)	Disable diagnostics
High limit violated	7_H	The permitted value range of the process value is exceeded.	Correct the output value (0 to 1000)
Parameter assignment error	10_H	• The module cannot evaluate parameters for the channel. • Incorrect parameter assignment.	Correct the parameter assignment
Supply voltage missing	11_H	No or insufficient supply voltage L	• Check supply voltage L at the BaseUnit • Check BaseUnit type
Channel/component temporarily unavailable	$1F_H$	Firmware update is currently in progress or has been canceled. The module does not output any process or substitute values in this state.	• Wait for firmware update. • Restart the firmware update.

Technical specifications

5

Technical specifications of the DQ 4×24...230VAC/2A HF

Article number	6ES7132-6FD00-0CU0
General information	
Product type designation	DQ 4x24 ... 230 V AC/2 A HF, PU 1
Firmware version	V1.0
• FW update possible	Yes
usable BaseUnits	BU type U0
Color code for module-specific color identification plate	CC20
Product function	
• I&M data	Yes; I&M0 to I&M3
Engineering with	
• STEP 7 TIA Portal configurable/integrated as of version	V14
• STEP 7 configurable/integrated as of version	STEP 7 V5.5 or higher
• PROFIBUS as of GSD version/GSD revision	GSD as of Revision 5
• PROFINET as of GSD version/GSD revision	GSDML V2.3
Operating mode	
• DQ	Yes
• DQ with energy-saving function	Yes
• PWM	No
• Oversampling	No
• MSO	No
• Phase control	Yes; Control area: 8.5 ... 100% of the phase angle
• Trailing-edge phase	No
• Half-wave	Yes
• Full-wave	Yes
Supply voltage	
Rated value (AC)	230 V; 47 ... 63 Hz, max. rate of change of frequency 1 mHz/s

Article number	6ES7132-6FD00-0CU0
Input current	
Current consumption (rated value)	8 mA; without load
Output voltage	
Rated value (AC)	230 V; 24V AC to 230V AC
Power loss	
Power loss, typ.	9 W; Active power, load voltage 230 V, all outputs loaded with 2 A, 50 Hz
Address area	
Address space per module	
• Inputs	+ 1 byte for QI information
• Outputs	8 byte
Hardware configuration	
Automatic encoding	Yes
• Mechanical coding element	Yes
Selection of BaseUnit for connection variants	
• 1-wire connection	BU type U0
• 2-wire connection	BU type U0
• 3-wire connection	BU type U0 + Potential isolation module
Digital outputs	
Number of digital outputs	4
Current-sinking	No
Current-sourcing	Yes
Short-circuit protection	No; external fusing necessary
Open-circuit detection	Yes; channel by channel
• Response threshold, typ.	1 mA; 40 V AC or more
Overload protection	No; A miniature fuse with 10 tripping current and tripping characteristic "quick response" must be provided in the module supply
Controlling a digital input	Yes
Switching capacity of the outputs	
• with resistive load, max.	2 A; Max. 4 A, see additional description in manual
• with inductive load, max.	2 A
• on lamp load, max.	100 W; Tungsten rating in accordance with UL; for thermistors with higher power ratings, see the notes in the manual
Output voltage	
• for signal "1", min.	20.4 V
Output current	
• for signal "1" rated value	2 A
• for signal "1" permissible range, min.	10 mA

Article number	6ES7132-6FD00-0CU0
• for signal "1" permissible range, max.	4 A; Note derating data in the manual
• for signal "0" residual current, max.	3 mA
Output delay with resistive load	
• "0" to "1", max.	40 ms; 2 AC cycles
• "1" to "0", max.	20 ms; 1 AC cycle
Parallel switching of two outputs	
• for logic links	No
• for uprating	No
• for redundant control of a load	Yes
Switching frequency	
• with resistive load, max.	10 Hz; Applies to DQ mode; limited by line frequency in PC mode
• with inductive load (acc. to IEC 60947-5-1, AC15), max.	10 Hz; Applies to DQ mode; limited by line frequency in PC mode
• on lamp load, max.	1 Hz; Applies to DQ mode; limited by line frequency in PC mode
Total current of the outputs	
• Current per channel, max.	2 A; Max. 4 A, see additional description in manual
• Current per module, max.	8 A
Total current of the outputs (per module)	
horizontal installation	
– up to 40 °C, max.	8 A; Applicable for current channels up to 2 A. For current channels between 2 A and 4 A, note derating data in the manual
– up to 50 °C, max.	8 A; Applicable for current channels up to 2 A. For current channels between 2 A and 4 A, note derating data in the manual
– up to 60 °C, max.	8 A; Applicable for current channels up to 2 A. For current channels between 2 A and 4 A, note derating data in the manual
vertical installation	
– up to 30 °C, max.	8 A; Applicable for current channels up to 2 A. For current channels between 2 A and 4 A, note derating data in the manual
– up to 40 °C, max.	8 A; Applicable for current channels up to 2 A. For current channels between 2 A and 4 A, note derating data in the manual
– up to 50 °C, max.	8 A; Applicable for current channels up to 2 A. For current channels between 2 A and 4 A, note derating data in the manual
Cable length	
• shielded, max.	1 000 m
• unshielded, max.	600 m

Article number	6ES7132-6FD00-0CU0
Isochronous mode	
Isochronous operation (application synchronized up to terminal)	No
Interrupts/diagnostics/status information	
Diagnostics function	Yes
Substitute values connectable	Yes
Alarms	
• Diagnostic alarm	Yes
Diagnostic messages	
• Diagnostic information readable	Yes
• Monitoring the supply voltage	Yes
• Wire-break	Yes; channel by channel
• Short-circuit	No
• Group error	Yes
Diagnostics indication LED	
• Monitoring of the supply voltage (PWR-LED)	Yes; green PWR LED
• Channel status display	Yes; Green LED
• for channel diagnostics	Yes; red Fn LED
• for module diagnostics	Yes; green/red DIAG LED
Potential separation	
Potential separation channels	
• between the channels	No
• between the channels and backplane bus	Yes
• between the channels and the power supply of the electronics	No
Isolation	
Isolation tested with	2 545 V DC/2 s (routine test)
Dimensions	
Width	20 mm
Height	73 mm
Depth	58 mm
Weights	
Weight, approx.	50 g

Derating

The figures below show the maximum permissible total current for the derating, depending on the ambient temperature for horizontal and vertical mounting position, with channel currents of 2 A or 4 A.
The following values apply to channel currents up to 2 A for the utilization category AC-15 (IEC 60947-5-1).

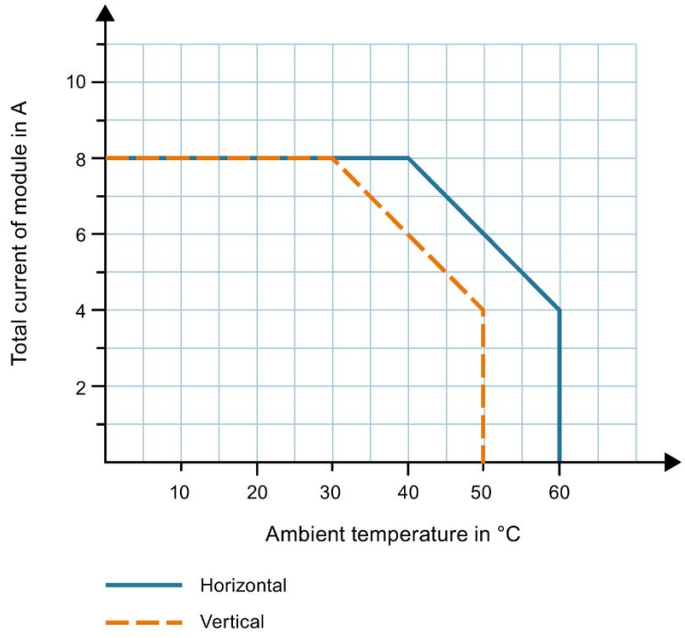

Figure 5-1 Derating depending on ambient temperature - channel current 2 A

The following values apply to channel currents of 2 A to 4 A for the utilization category AC-12 (IEC 60947-5-1):

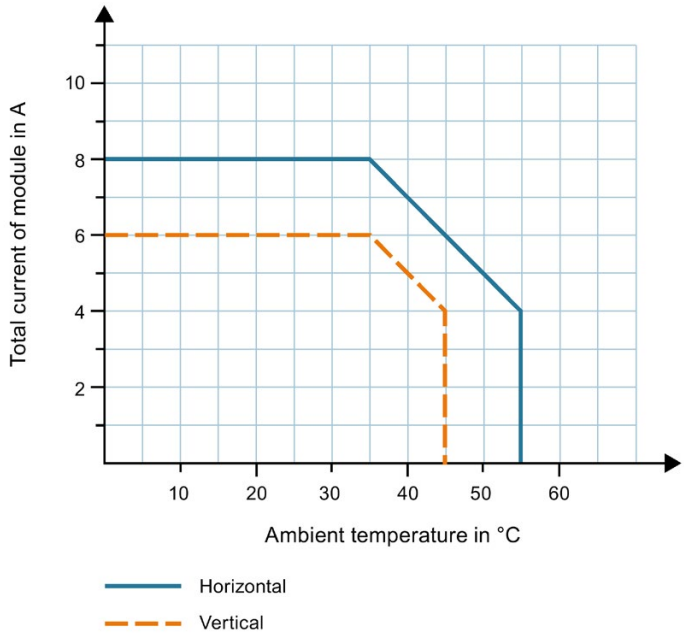

Figure 5-2 Derating depending on ambient temperature - channel current 4 A

Note that the rms values are in effect for the channel and total currents.

Note

Loads with PTC thermistor properties

For PTC thermistors up to 4 A continuous current and power ratings above 100 W (e.g. infrared sources), you must observe the significantly higher inrush current.

Ensure that the switch-on peak current does not exceed 15 A.

To reduce the inrush current, preheat the load or use the function "Output filter with phase control".
This slowly increases the switch-on duration of the load and the inrush current of the load being heated is limited.
Use an output filter time of 5 s or a preheating with 25 ° phase control, for example, for a PTC thermistor with a power rating of 900 W and an estimated factor 10 of the inrush current overshoot.

If you want to connect multiple PTC thermistors per module at the same time, use the "Startup delay" function.
By doing so, you connect the channels at different times so that the inrush current overshoots do not overlap and the fuse is not overloaded.

Electromagnetic compatibility

The control of loads in the control types phase control power-proportional or phase-angle proportional results in strong electromagnetic effects on the power supply network.
To observe the limits in accordance with EMC Directives, you must filter the load supply of the module with phase control in PC mode or when using the function "Output filter with phase control" in DQ mode.
Conformity was measured with filters of the type "EPCOS SIFI-C B84113C". Use this type of filter or a filter with the same characteristic curve or with a characteristic curve with greater damping.
You must ensure conformity with the values in the tables below.

Interference emission in accordance with EN 61000-6-4:2007 + A1:2011 and IEC 61131-2:

Table 5- 1 Interference emission of electromagnetic fields

Frequency	Interference emission
Test environment OATS or SAC (measured at a distance of 10 m) • 30 MHz to 230 MHz • 230 MHz to 1000 MHz	• <40 dB (µV/m) Q • <47 dB (µV/m) Q
Test environment FAR (measured at a distance of 3 m) • 30 MHz to 230 MHz • 230 MHz to 1000 MHz	• 45 to 52 dB (µV/m) Q • <52 dB (µV/m) Q
Test environment OATS, SAC or FAR (measured at a distance of 3 m) • 1 GHz to 3 GHz • 3 GHz to 6 GHz	• <76 dB (µV/m) P / <56 dB (µV/m) M • <80 dB (µV/m) P / <60 dB (µV/m) M

Table 5- 2 Interference emission via the AC power supply

Frequency	Interference emission
0.15 MHz to 0.5 MHz	<79 dB (µV/m) Q <66 dB (µV/m) M
0.5 MHz to 30 MHz	<73 dB (µV/m) Q <60 dB (µV/m) M

Dimension drawing

See the manual ET 200SP BaseUnits
(http://support.automation.siemens.com/WW/view/en/59753521)

Parameter data record

A

A.1 Parameter assignment and structure of parameter data record

The data records of the module have an identical structure, regardless of whether you configure the module with PROFIBUS DP or PROFINET IO. With data record 128, you can reconfigure the module in your user program regardless of your programming. This means that you can use all the functions of the module even if you configured it via PROFIBUS-GSD.

Parameter assignment in the user program

You have the option to re-configure the module in RUN (e.g. the response of selected channels to the CPU STOP state can be changed in RUN without having an effect on the other channels).

Changing parameters in RUN

The "WRREC" instruction is used to transfer the parameters to the module using data record 128. The parameters set with STEP 7 are not changed in the CPU, which means the parameters set in STEP 7 will be valid after a restart.

Output parameter STATUS

The module ignores errors that occur during the transfer of parameters with the "WRREC" instruction and continues operation with the previous parameter assignment. However, a corresponding error code is written to the STATUS output parameter.

The description of the "WRREC" instruction and the error codes is available in the STEP 7 online help.

Structure of data record 128

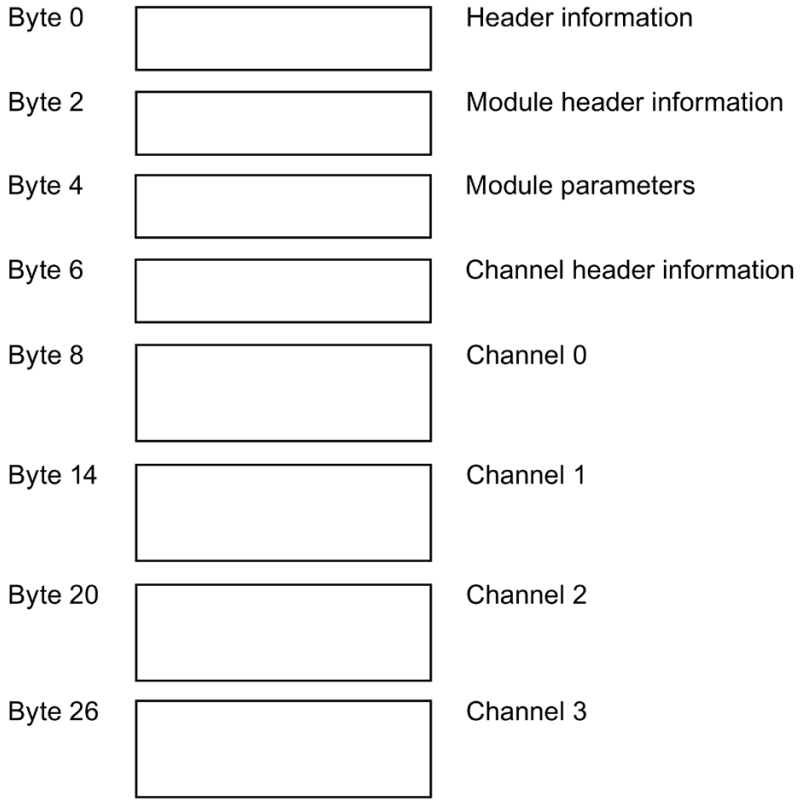

Figure A-1 Structure of data record 128

Header information

The figure below shows the structure of the header information.

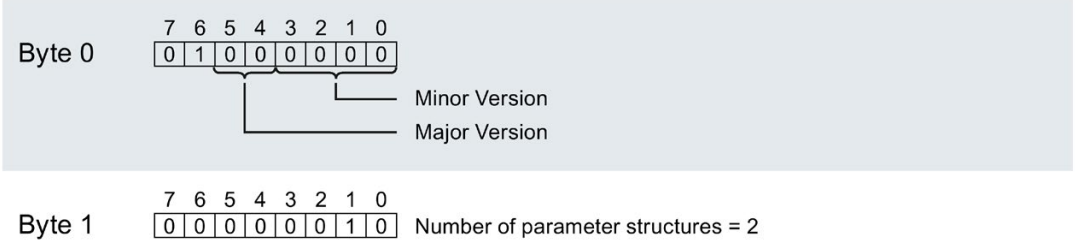

Figure A-2 Header information

Module header information

The figure below shows the structure of the module header information.

	7	6	5	4	3	2	1	0	
Byte 2	0	0	0	0	0	0	0	1	Number of module parameter blocks = 1
Byte 3	0	0	0	0	0	0	1	0	Length of the module parameter block = 2

Figure A-3 Module header information

Module parameter block

The figure below shows the structure of the module parameter block for channels 0 to 7. You enable a parameter by setting the corresponding bit to "1".

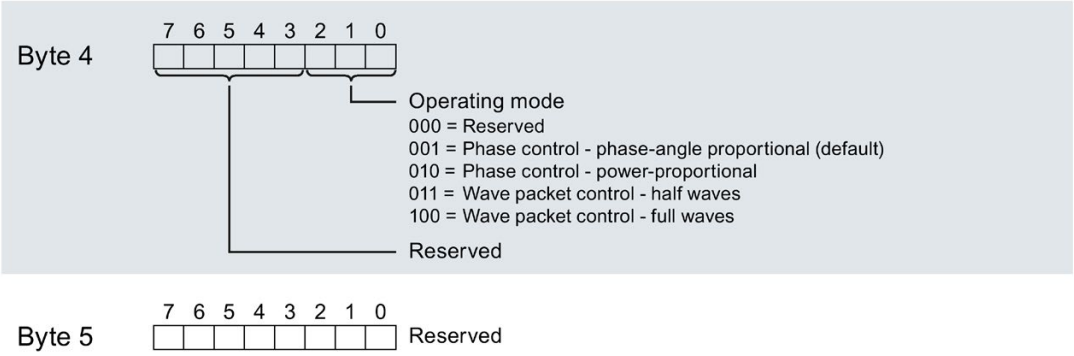

Figure A-4 Module parameter block

Channel header information

The figure below shows the structure of the channel header information.

	7	6	5	4	3	2	1	0	
Byte 6	0	0	0	0	0	1	0	0	Number of channel parameter blocks = 4
Byte 7	0	0	0	0	0	1	1	0	Length of the channel parameter block = 6

Figure A-5 Channel header information

Parameters

The figure below shows the structure of the parameters for channels 0 to 3.
You enable a parameter by setting the corresponding bit to "1".

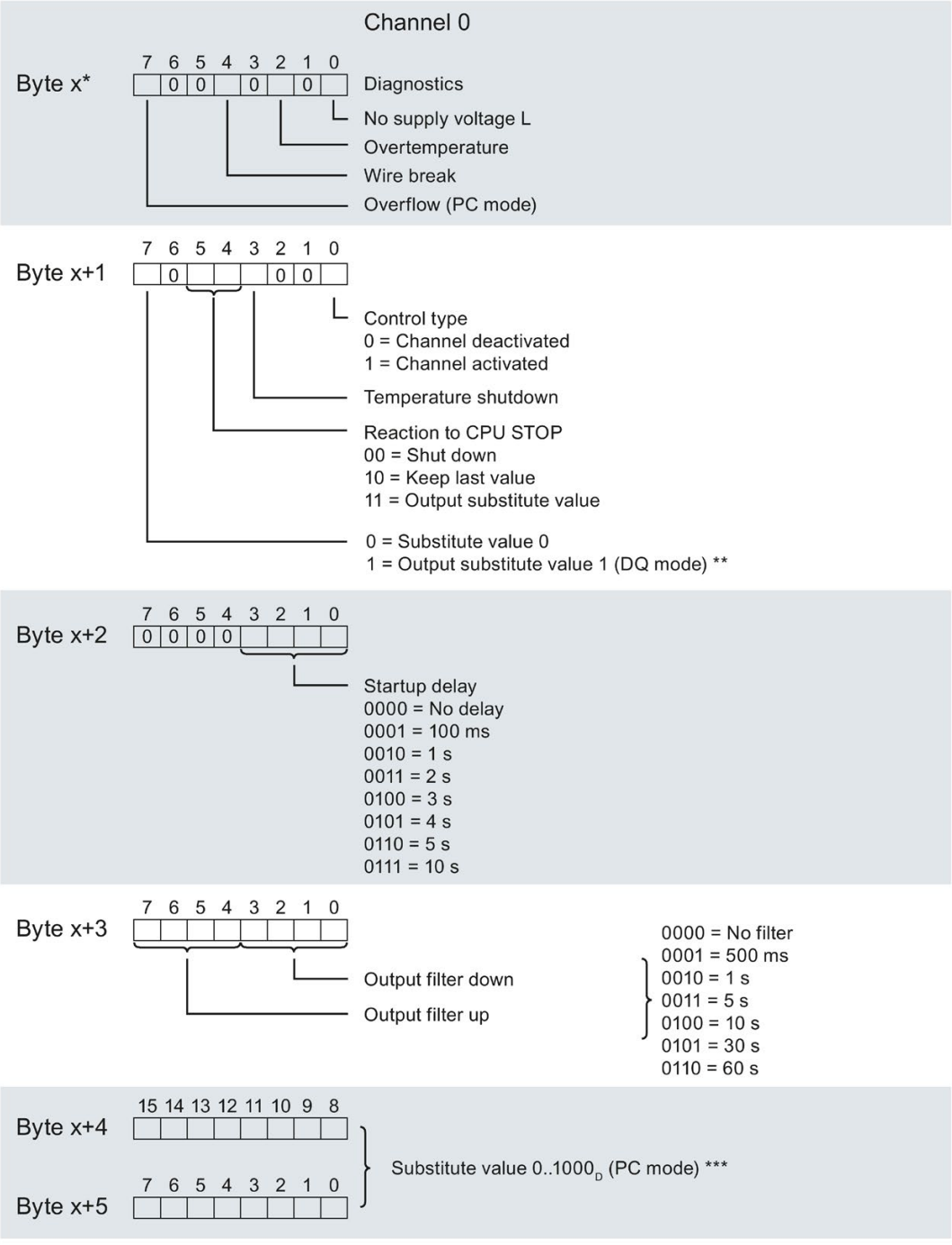

* x = 8 + (channel number × 6); channel number = 0 to 3
** is ignored in PC mode
*** is ignored in DQ mode

Figure A-6 Structure byte x up to x+5 for the channel 0 to 3

A.2 Error transferring the data record DQ

Error transferring the data record

The module always checks all the values of the transferred data record. Only if all the values were transferred without errors does the module apply the values from the data record.

The WRREC instruction for writing data records returns corresponding error codes when errors occur in the STATUS parameter. (See also the description of the "STATUS" parameter in the STEP 7 online help).

The following table shows the module-specific error codes and their meaning for the parameter data record 128.

Error code in STATUS parameter (hexadecimal)				Meaning	Solution
Byte 0	Byte 1	Byte 2	Byte 3		
DF	80	B0	xx	Number of the data record unknown.	Enter a valid number for the data record.
DF	80	B1	xx	Length of the data record incorrect.	Enter a valid value for the data record length.
DF	80	B2	xx	Slot invalid or cannot be accessed.	• Check the station whether the module is plugged or drawn. • Check the assigned values for the parameters of the WRREC instruction.
DF	80	E0	xx	Wrong version or error in the header information.	Correct the version, length and number of parameter blocks.
DF	80	E1	01	At least one reserved bit is set to "1".	Set all reserved bits to "0".
DF	80	E1	02	Overflow diagnostics is enabled even though DQ mode is active.	Block all Overflow diagnostics or switch to PC mode.
DF	80	E1	05	Invalid coding for operating mode.	Check module parameters.
DF	80	E1	06	Invalid coding for substitute value behavior.	Check all channel parameters.
DF	80	E1	20	Invalid coding for startup delay.	Check all channel parameters.
DF	80	E1	21	Invalid coding for output filter up or down.	Check all channel parameters.

SIEMENS

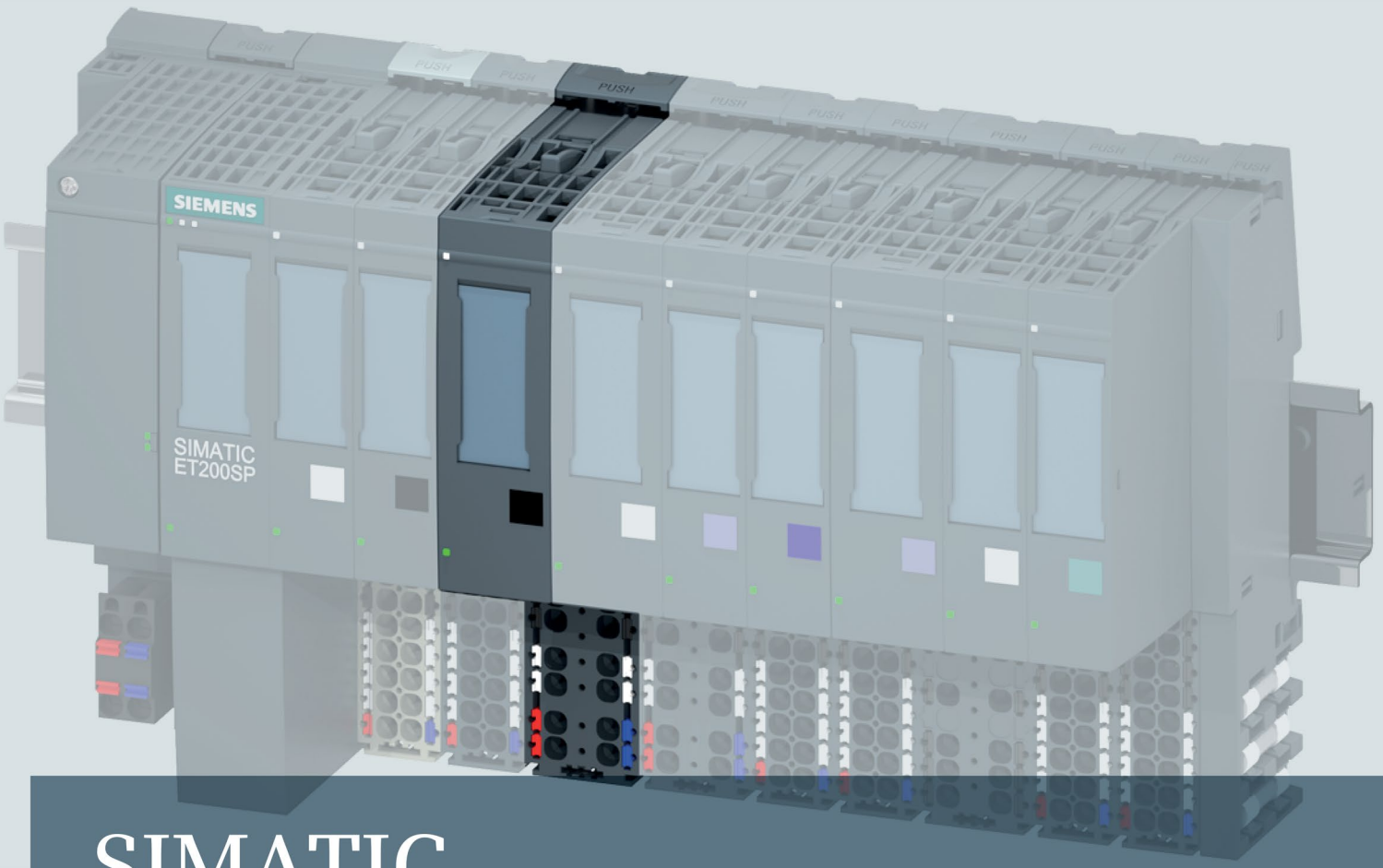

SIMATIC

ET 200SP

Digital output module DQ 4x24..230VAC/2A ST (6ES7132-6FD00-0BB1)

Manual

Edition 03/2015

Answers for industry.

SIEMENS

SIMATIC

ET 200SP DQ 4x24..230VAC/2A ST digital output module (6ES7132-6FD00-0BB1)

Manual

Preface

Guide to documentation 1

Product overview 2

Wiring 3

Parameter assignment/addressing 4

Interrupts/diagnostics alarms 5

Technical specifications 6

Parameter data record A

03/2015

A5E32043575-AB

Legal information

Warning notice system

This manual contains notices you have to observe in order to ensure your personal safety, as well as to prevent damage to property. The notices referring to your personal safety are highlighted in the manual by a safety alert symbol, notices referring only to property damage have no safety alert symbol. These notices shown below are graded according to the degree of danger.

⚠ DANGER

indicates that death or severe personal injury **will** result if proper precautions are not taken.

⚠ WARNING

indicates that death or severe personal injury **may** result if proper precautions are not taken.

⚠ CAUTION

indicates that minor personal injury can result if proper precautions are not taken.

NOTICE

indicates that property damage can result if proper precautions are not taken.

If more than one degree of danger is present, the warning notice representing the highest degree of danger will be used. A notice warning of injury to persons with a safety alert symbol may also include a warning relating to property damage.

Qualified Personnel

The product/system described in this documentation may be operated only by **personnel qualified** for the specific task in accordance with the relevant documentation, in particular its warning notices and safety instructions. Qualified personnel are those who, based on their training and experience, are capable of identifying risks and avoiding potential hazards when working with these products/systems.

Proper use of Siemens products

Note the following:

⚠ WARNING

Siemens products may only be used for the applications described in the catalog and in the relevant technical documentation. If products and components from other manufacturers are used, these must be recommended or approved by Siemens. Proper transport, storage, installation, assembly, commissioning, operation and maintenance are required to ensure that the products operate safely and without any problems. The permissible ambient conditions must be complied with. The information in the relevant documentation must be observed.

Trademarks

All names identified by ® are registered trademarks of Siemens AG. The remaining trademarks in this publication may be trademarks whose use by third parties for their own purposes could violate the rights of the owner.

Disclaimer of Liability

We have reviewed the contents of this publication to ensure consistency with the hardware and software described. Since variance cannot be precluded entirely, we cannot guarantee full consistency. However, the information in this publication is reviewed regularly and any necessary corrections are included in subsequent editions.

Siemens AG
Division Digital Factory
Postfach 48 48
90026 NÜRNBERG
GERMANY

A5E32043575-AB
℗ 12/2016 Subject to change

Copyright © Siemens AG 2014 - 2015.
All rights reserved

Preface

Purpose of the documentation

This manual supplements the system manual ET 200SP distributed I/O system (http://support.automation.siemens.com/WW/view/en/58649293).

Functions that generally relate to the system are described in this manual.

The information provided in this manual and in the system/function manuals supports you in commissioning the system.

Conventions

CPU: When the term "CPU" is used in this manual, it applies to the CPUs of the S7-1500 automation system as well as to the CPUs/interface modules of the ET 200SP distributed I/O system.

STEP 7: In this documentation, "STEP 7" is used as a synonym for all versions of the configuration and programming software "STEP 7 (TIA Portal)".

Please also observe notes marked as follows:

Note

A note contains important information on the product described in the documentation, on the handling of the product or on the section of the documentation to which particular attention should be paid.

Security information

Siemens provides products and solutions with industrial security functions that support the secure operation of plants, solutions, machines, equipment and/or networks. They are important components in a holistic industrial security concept. With this in mind, Siemens' products and solutions undergo continuous development. Siemens recommends strongly that you regularly check for product updates.

For the secure operation of Siemens products and solutions, it is necessary to take suitable preventive action (e.g. cell protection concept) and integrate each component into a holistic, state-of-the-art industrial security concept. Third-party products that may be in use should also be considered. You can find more information about industrial security on the Internet (http://www.siemens.com/industrialsecurity).

To stay informed about product updates as they occur, sign up for a product-specific newsletter. You can find more information on the Internet (http://support.automation.siemens.com).

Table of contents

Preface 4

1 Guide to documentation 6

2 Product overview 8

2.1 Properties 8

3 Wiring 10

3.1 Wiring and block diagram 10

4 Parameter assignment/addressing 12

4.1 Parameters 12

4.2 Explanation of parameters 13

4.3 Address space 14

5 Interrupts/diagnostics alarms 15

5.1 Status and fault displays 15

5.2 Load voltage status 17

5.3 Interrupts 17

5.4 Diagnostics alarms 17

6 Technical specifications 18

6.1 Technical specifications 18

A Parameter data record 21

A.1 Parameter assignment and structure of parameter data record 21

Guide to documentation

1

The documentation for the SIMATIC ET 200SP distributed I/O system is arranged into three areas.
This arrangement enables you to access the specific content you require.

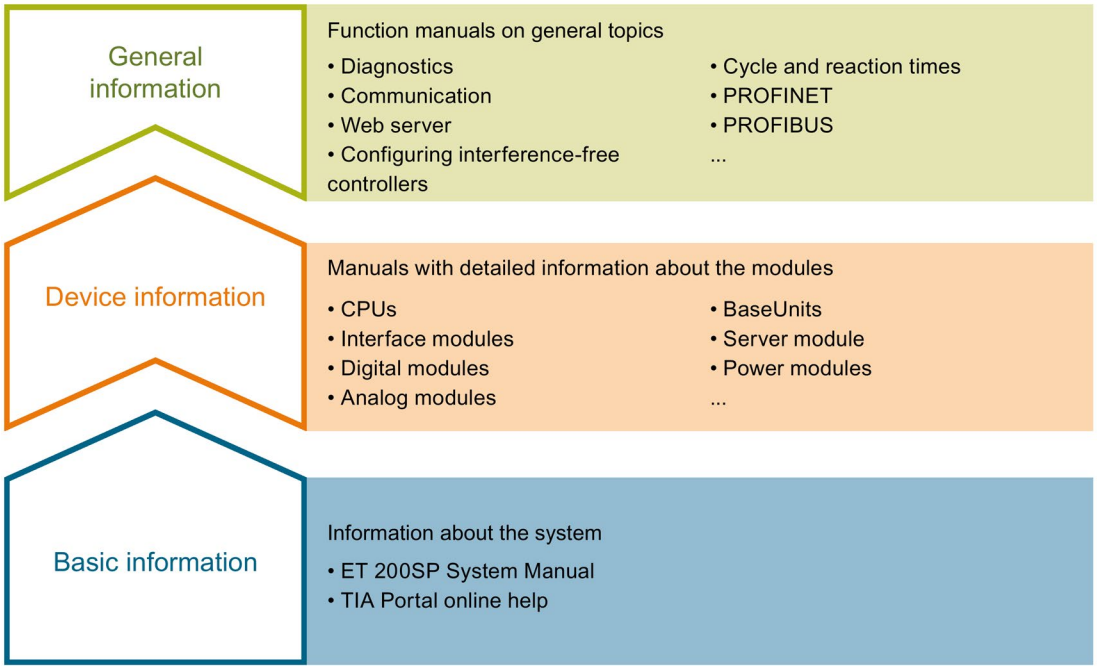

Basic information

The system manual describes in detail the configuration, installation, wiring and commissioning of the SIMATIC ET 200SP. distributed I/O system. The STEP 7 online help supports you in the configuration and programming.

Device information

Product manuals contain a compact description of the module-specific information, such as properties, terminal diagrams, characteristics and technical specifications.

General information

The function manuals contain detailed descriptions on general topics regarding the SIMATIC ET 200SP distributed I/O system, e.g. diagnostics, communication, Web server, designing interference-free controllers.

You can download the documentation free of charge from the Internet (http://w3.siemens.com/mcms/industrial-automation-systems-simatic/en/manual-overview/tech-doc-et200/Pages/Default.aspx).

Changes and supplements to the manuals are documented in a Product Information.

Manual Collection ET 200SP

The Manual Collection contains the complete documentation on the SIMATIC ET 200SP distributed I/O system gathered together in one file.

You can find the Manual Collection on the Internet (http://support.automation.siemens.com/WW/view/en/84133942).

My Documentation Manager

The My Documentation Manager is used to combine entire manuals or only parts of these to your own manual.
You can export the manual as PDF file or in a format that can be edited later.

You can find the My Documentation Manager on the Internet (http://support.industry.siemens.com/My/ww/en/documentation).

Application examples

Applications examples support you with various tools and examples for solving your automation tasks. Solutions are shown in interplay with multiple components in the system - separated from the focus in individual products.

You can find application examples on the Internet (http://support.industry.siemens.com/cs/ww/en/ps/ae).

CAx Download Manager

The CAx Download Manager is used to access the current product data for your CAx or CAe systems.

You configure your own download package with a few clicks.

In doing so you can select:

- Product images, 2D dimension drawings, 3D models, internal circuit diagrams, EPLAN macro files
- Manuals, characteristics, operating manuals, certificates
- Product master data

You can find the CAx Download Manager on the Internet (http://support.industry.siemens.com/my/ww/en/CAxOnline).

TIA Selection Tool

With the TIA Selection Tool, you can select, configure and order devices for Totally Integrated Automation (TIA).
This tool is the successor of the SIMATIC Selection Tool and combines the known configurators for automation technology into one tool.
With the TIA Selection Tool, you can generate a complete order list from your product selection or product configuration.

You can find the TIA Selection Tool on the Internet (http://w3.siemens.com/mcms/topics/en/simatic/tia-selection-tool).

Product overview

2

2.1 Properties

Article number

6ES7132-6FD00-0BB1

View of the module

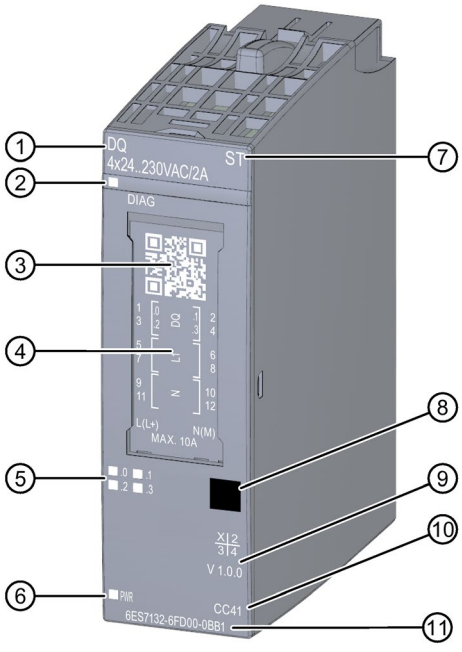

① Module type and name
② LED for diagnostics
③ 2D matrix code
④ Wiring diagram
⑤ LEDs for channel status
⑥ LED for supply voltage
⑦ Function class
⑧ Color coding module type
⑨ Function and firmware version
⑩ Color code for selecting the color identification labels
⑪ Article number

Figure 2-1 View of the DQ 4×24..230VAC/2A ST module

Properties

The module has the following technical properties:

- 4 digital outputs each with a value status (quality information)
- Supply voltage L+
- Switches in zero point
- Output current 2 A per channel
- Total current 8 A (per module)
- Configurable substitute values (per channel)
- Suitable for solenoid valves, AC contactors, and indicator lights

The module supports the following functions:

- Firmware update
- Identification data I&M0 to I&M3
- Reconfiguration in RUN
- PROFIenergy

You can configure the module with STEP 7 (TIA Portal) and with a GSD file.

Accessories

The following accessories must be ordered separately:

- Labeling strips
- Color identification labels
- Reference identification label

You can find more information on accessories in the ET 200SP distributed I/O system (http://support.automation.siemens.com/WW/view/en/58649293) system manual.

Wiring 3

3.1 Wiring and block diagram

This section includes the block diagram of the DQ 4x24..230VAC/2A ST module with the terminal assignments for 2-wire and 3-wire connection.

You can find information on wiring the BaseUnit in the ET 200SP distributed I/O system system manual.

NOTICE
Dangerous voltage. Risk of death or serious injury. Always disconnect the system and module from the power supply before commencing work.

Note

Limiting overvoltage

You must ensure overvoltage is limited to 1 kV for the encoder supply.

Note

Power limitation

To limit power, each input voltage must have a fuse with a maximum rating of 10 A tripping current. The fuse must be a quick-acting microfuse.

Note

You may use and combine the different wiring options for all channels.

Connection: 2-wire and 3-wire connection of actuators

The following figure shows the block diagram and an example for the terminal assignment of the digital input module DQ 4x24..230VAC/2A ST on the BaseUnit BU type B1.

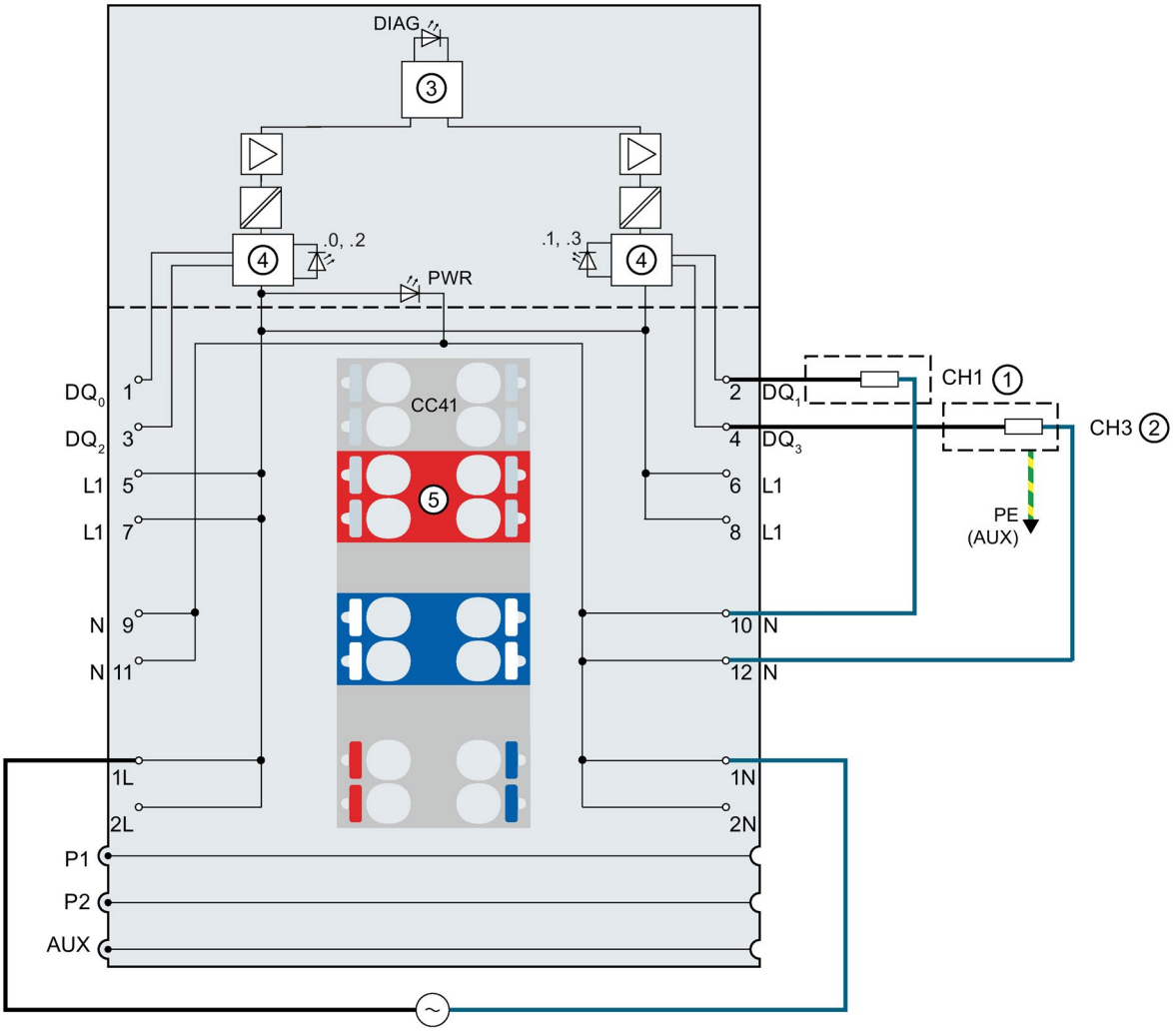

①	2-wire connection	N	Neutral
②	3-wire connection	1L, 2L	Supply voltage 120 V AC to 230 V AC
③	Backplane bus interface	1N, 2N	Neutral conductor supply voltage
④	Output electronics	PE (AUX)	Protective conductor connection
⑤	Color identification label CCxx (optional)	DIAG	Diagnostics LED (red/green)
DQ_n	Output signal, channel n	.0, .1, .2, .3	Channel status LED (green)
L1	Encoder supply	PWR	Power LED (green)
P1, P2, AUX	Internal self-assembling voltage buses Connection to left (dark-colored BaseUnit)		

Figure 3-1 Wiring and block diagram for 2-wire and 3-wire connection of actuators

No connection for three-phase loads

The digital output is not suitable for three-phase loads.

Parameter assignment/addressing 4

4.1 Parameters

DQ 4×24..230VAC/2A ST parameters

The table below lists the parameters that can be set. The effective range of the configurable parameters depends on the type of configuration. The following configurations are possible:

- Central operation with an ET 200SP CPU
- Distributed operation on PROFINET IO in an ET 200SP system
- Distributed operation with PROFIBUS DP in an ET 200SP system

When performing the configuration in the user program, use the "WRREC" instruction to transfer the parameters to the module using data records (refer to the section Parameter assignment and structure of parameter data record (Page 21)).

The following parameter settings are possible:

Table 4- 1 Configurable parameters and their defaults (GSD file)

Parameter	Range of values	Default	Recon-figuration in RUN	Effective range with configuration software, e.g. STEP 7 (TIA Portal)	
				GSD file PROFINET IO	GSD file PROFIBUS DP[1]
Operating mode	• Channel activated • Channel deactivated	Channel activated	Yes	Channel	Channel
Reaction to CPU STOP	• Turn off • Keep last value • Output substitute value 1	Turn off	Yes	Channel	Module

[1] Only for configuration using the PROFIBUS GSD file; does not affect configuration with STEP 7 using HSP: As the number of parameters with PROFIBUS GSD configuration is limited to a maximum of 244 bytes per ET 200SP station, the configuration options are limited. If required, however, you can still set this parameter using data record 128 as described in the column "GSD file PROFINET IO" (see the table above). The parameter length of the I/O module is 3 bytes.

4.2 Explanation of parameters

Operating mode

Determines whether a channel is enabled or disabled.

Reaction to CPU STOP

Determines the behavior of the module in the event of a CPU STOP.

See also

ET 200SP distributed I/O system
(http://support.automation.siemens.com/WW/view/en/58649293)

4.3 Address space

Configuration options of DQ 4×24..230VAC/2A ST

The following configurations are possible:

- Configuration 1: Without value status
- Configuration 2: With value status

Evaluating the value status

An additional byte is allocated in the input address space if you enable the value status for the digital module. Bits 0 to 3 in this byte are assigned to a channel. They provide information about the validity of the digital value.

Bit =1: No fault is present on the channel.

Bit =0: Channel is deactivated or there is an error on the module.

If an error on a channel occurs with this module, the value status for all channels is 0.

Address space of the digital output module DQ 4×24..230VAC/2A ST

The following figure shows the assignment of the address space for the DQ 4×24..230VAC/2A ST with value status (Quality Information (QI)). The addresses for the value status are only available if the value status is enabled.

Assignment in the process image of the outputs (PIQ)

	7	6	5	4	3	2	1	0	
QB x	0	0	0	0					Output values at channels 0 to 3

Assignment in the process image of the inputs (PII)

	7	6	5	4	3	2	1	0	
IB x	0	0	0	0					Value status (QI) at channels 0 to 3 0: value output at channel is faulty

Figure 4-1 Address space of the DQ 4×24..230VAC/2A ST digital output module with value status

Interrupts/diagnostics alarms

5

5.1 Status and fault displays

LED display

The figure below shows the LED displays of the DQ 4×24..230VAC/2A ST.

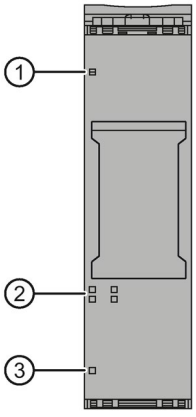

① DIAG (green/red)
② Channel status (green)
③ PWR (green)

Figure 5-1 LED displays

Meaning of the LEDs

The following tables explain the meaning of the status and error displays.

DIAG LED

Table 5- 1 Error display of the DIAG LED

DIAG LED	Meaning
☐ Off	Backplane bus supply of the ET 200SP not OK
☼ Flashes	Module parameters not assigned
■ On	Module parameters assigned and no module diagnostics
☼ Flashes	Module parameters assigned and module diagnostics

Channel status LED

Table 5- 2 Status display of the channel status LED

Channel status LED	Meaning
☐ Off	Channel deactivated or activated and process signal = 0
■ On	Channel activated and process signal = 1

PWR LED

Table 5- 3 Status display of the PWR LED

PWR LED	Meaning
☐ Off	No supply voltage L+
■ On	Supply voltage L+ present

5.2 Load voltage status

Load voltage status

The firmware of the module cannot detect the status of the load voltage.

If the "Load voltage status" function tied to the server module is used, a "1" is always displayed in the status bit for a slot with the DQ 4×24..230VAC/2A ST. Even when the load voltage is not applied.

The state of the load voltage at the terminal does not impact the PROFIenegy behavior.

5.3 Interrupts

The DQ 4x24...230VAC/2A ST digital output module supports diagnostics interrupts.

Diagnostics interrupts

The module generates a diagnostic interrupt at the following events:

- Channel temporarily unavailable
- Parameter assignment error

5.4 Diagnostics alarms

Diagnostics alarms

A diagnostics alarm is output for each diagnostics event and the DIAG LED flashes on the module. The diagnostics alarms can, for example, be read from the diagnostics buffer of the CPU. You can evaluate the error codes with the user program.

Table 5- 4 Diagnostics alarms, their meaning and corrective measures

Diagnostics alarm	Error code	Meaning	Solution
Parameter assignment error	10_H	• The module cannot evaluate parameters for the channel. • Incorrect parameter assignment.	Correct the parameter assignment
Channel/component temporarily unavailable	$1F_H$	Firmware update is currently in progress or has been canceled. The module does not read in process values in this state.	• Wait for firmware update • Restart the firmware update

Technical specifications

6

6.1 Technical specifications

Technical specifications of the DQ 4×24...230VAC/2A ST

	6ES7132-6FD00-0BB1
Product type designation	DQ 4x24 ... 230VAC/2A
General information	
Firmware version	V1.0
• FW update possible	Yes
Usable BaseUnits	BU type B1
Color code for module-specific color identification label	CC41
Product function	
I&M data	Yes; I&M0 to I&M3
Engineering with	
STEP 7 TIA Portal can be configured/integrated as of version	V13 / V13
STEP 7 can be configured/integrated as of version	V5.5 SP3 / -
PROFIBUS as of GSD version/GSD revision	GSD as of revision 5
PROFINET as of GSD version/GSD revision	GSDML V2.3
Operating mode	
DQ	Yes
DQ with energy-saving function	No
PWM	No
Oversampling	No
MSO	No
Supply voltage	
Rated value (AC)	230 V
Input current	
Current consumption (rated value)	11.5 mA
Power loss	
Power loss, typ.	9 W; active power, load voltage 230 V, all outputs loaded with 2 A, 50 Hz
Address area	
Address space per module	
Address space per module, max.	1 byte; + 1 byte for QI information
Input	1 byte; with QI
Output	1 bytes

	6ES7132-6FD00-0BB1
Digital outputs	
Number of outputs	4
Sinking output	No
Sourcing output	Yes
Short-circuit protection	No; install a fuse with 10A trigger current when using a type B1 BU
Switching capacity of outputs	
With resistive load, max.	2 A
With lamp load, max.	100 W
Output voltage	
For signal "1", min.	20.4 V
Output current	
For signal "1" rated value	2 A
For signal "1" permitted range, min.	10 mA
For signal "1" permitted range, max.	2 A
For signal "0" residual current, max.	460 µA
Output delay with resistive load	
"0" to "1", max.	10 ms
"1" to "0", max.	10 ms
Parallel switching of 2 outputs	
For logic operations	No
For increased performance	No
For redundant control of a load	Yes
Switching frequency	
With resistive load, max.	10 Hz
With inductive load, max.	0.5 Hz
With lamp load, max.	1 Hz
Total current of outputs	
Current per channel, max.	2 A
Current per module, max.	8 A
Total current of outputs (per module)	
Horizontal installation	
• up to 40 °C, max.	8 A
• up to 50 °C, max.	6 A
• up to 60 °C, max.	4 A
Vertical installation	
• up to 30 °C, max.	8 A
• up to 40 °C, max.	6 A
• up to 50 °C, max.	4 A
Output current per channel	
Horizontal installation	
• up to 60 °C, max.	2 A
Vertical installation	
• up to 50 °C, max.	2 A

	6ES7132-6FD00-0BB1
Triac outputs	
Size of motor starter according to NEMA, max.	5
Cable length	
Shielded, max.	1000 m
Unshielded, max.	600 m
Isochronous mode	
Isochronous mode (application synchronized up to terminal)	No
Interrupts/diagnostics/status information	
Substitute values can be applied	Yes
Interrupts	
Diagnostics interrupt	No
Diagnostics alarms	
Diagnostics	No
Monitoring of supply voltage	No
Diagnostics indicator LED	
Monitoring of the supply voltage (PWR LED)	Yes; green PWR LED
Channel status display	Yes; green LED
For module diagnostics	Yes; green/red DIAG LED
Electrical isolation	
Electrical isolation of channels	
Between the channels	No
Between the channels and the backplane bus	Yes
Between the channels and the supply voltage of the electronics	No
Insulation	
Insulation tested with	DC 2545 V 2 s (routine test)
Dimensions	
Width	20 mm
Weights	
Weight, approx.	50 g

Dimension drawing

See the manual ET 200SP BaseUnits (http://support.automation.siemens.com/WW/view/en/59753521)

Parameter data record

A

A.1 Parameter assignment and structure of parameter data record

The data records of the module have an identical structure, regardless of whether you configure the module with PROFIBUS DP or PROFINET IO.

Parameter assignment in the user program

You can change the parameters of the module in RUN.

Changing parameters in RUN

The "WRREC" instruction is used to transfer the parameters to the module using data record 128. The parameters set with STEP 7 are not changed in the CPU, which means the parameters set in STEP 7 will be valid after a restart.

Output parameter STATUS

The module ignores errors that occur during the transfer of parameters with the "WRREC" instruction and continues operation with the previous parameter assignment. However, a corresponding error code is written to the STATUS output parameter.

The description of the "WRREC" instruction and the error codes is available in the STEP 7 online help.

Structure of data record 128

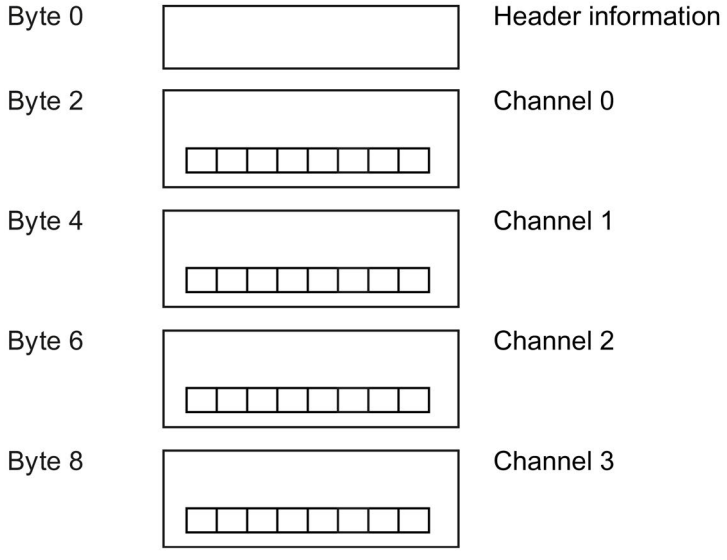

Figure A-1 Structure of data record 128

Header information

The figure below shows the structure of the header information.

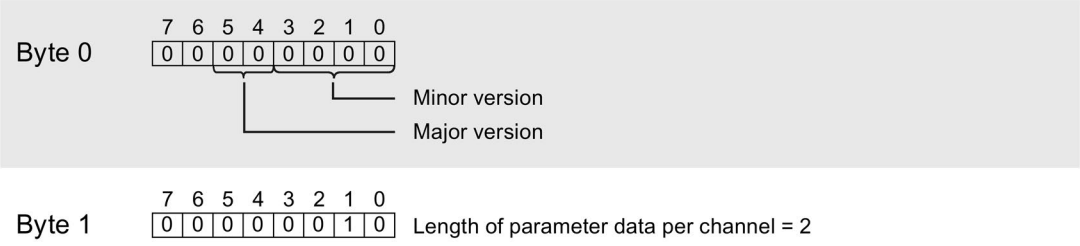

Figure A-2 Header information

Parameters

The figure below shows the structure of the parameters for channels 0 to 3.

You enable a parameter by setting the corresponding bit to "1".

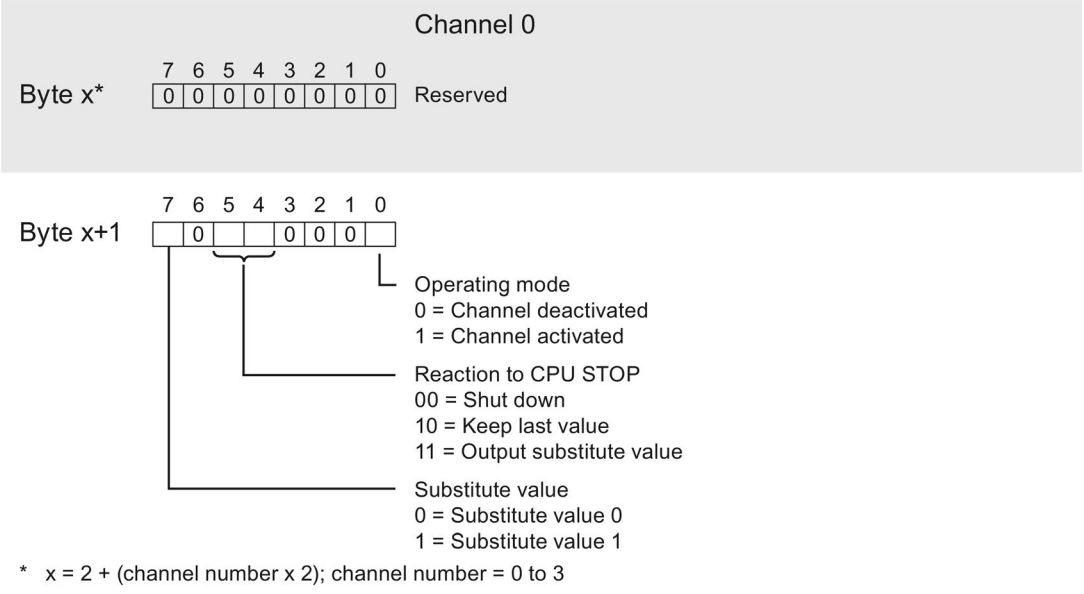

* x = 2 + (channel number x 2); channel number = 0 to 3

Figure A-3 Structure byte x to x+1 for the channels 0 to 3

SIEMENS

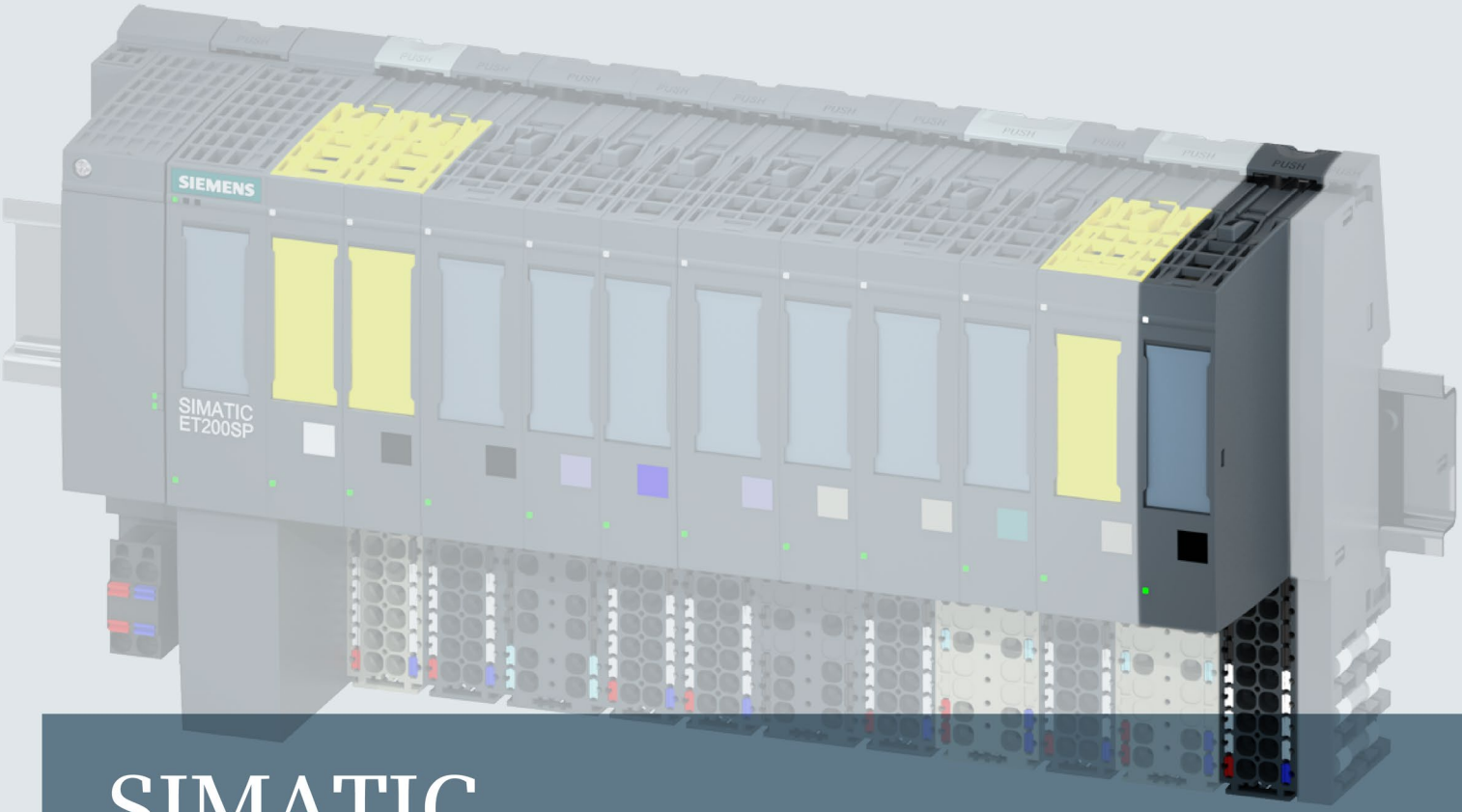

SIMATIC

ET 200SP

Digital output module DQ 4x24VDC/2A HF (6ES7132-6BD20-0CA0)

Manual

Edition 12/2015

Answers for industry.

SIEMENS

SIMATIC

ET 200SP
Digital output module
DQ 4x24VDC/2A HF
(6ES7132-6BF20-0CA0)

Manual

Preface

Documentation guide 1

Product overview 2

Wiring 3

Parameters/address space 4

Interrupts/diagnostics alarms 5

Technical specifications 6

Parameter data record A

12/2015

A5E32855695-AC

Legal information

Warning notice system

This manual contains notices you have to observe in order to ensure your personal safety, as well as to prevent damage to property. The notices referring to your personal safety are highlighted in the manual by a safety alert symbol, notices referring only to property damage have no safety alert symbol. These notices shown below are graded according to the degree of danger.

⚠ DANGER

indicates that death or severe personal injury **will** result if proper precautions are not taken.

⚠ WARNING

indicates that death or severe personal injury **may** result if proper precautions are not taken.

⚠ CAUTION

indicates that minor personal injury can result if proper precautions are not taken.

NOTICE

indicates that property damage can result if proper precautions are not taken.

If more than one degree of danger is present, the warning notice representing the highest degree of danger will be used. A notice warning of injury to persons with a safety alert symbol may also include a warning relating to property damage.

Qualified Personnel

The product/system described in this documentation may be operated only by **personnel qualified** for the specific task in accordance with the relevant documentation, in particular its warning notices and safety instructions. Qualified personnel are those who, based on their training and experience, are capable of identifying risks and avoiding potential hazards when working with these products/systems.

Proper use of Siemens products

Note the following:

⚠ WARNING

Siemens products may only be used for the applications described in the catalog and in the relevant technical documentation. If products and components from other manufacturers are used, these must be recommended or approved by Siemens. Proper transport, storage, installation, assembly, commissioning, operation and maintenance are required to ensure that the products operate safely and without any problems. The permissible ambient conditions must be complied with. The information in the relevant documentation must be observed.

Trademarks

All names identified by ® are registered trademarks of Siemens AG. The remaining trademarks in this publication may be trademarks whose use by third parties for their own purposes could violate the rights of the owner.

Disclaimer of Liability

We have reviewed the contents of this publication to ensure consistency with the hardware and software described. Since variance cannot be precluded entirely, we cannot guarantee full consistency. However, the information in this publication is reviewed regularly and any necessary corrections are included in subsequent editions.

Siemens AG
Division Digital Factory
Postfach 48 48
90026 NÜRNBERG
GERMANY

A5E32855695-AC
℗ 12/2015 Subject to change

Copyright © Siemens AG 2014 - 2015.
All rights reserved

Preface

Purpose of the documentation

This manual supplements the ET 200SP distributed I/O system (https://support.industry.siemens.com/cs/ww/en/view/91696622) system manual.

Functions that generally relate to the system are described in this system manual.

The information provided in this manual and in the system/function manuals supports you in commissioning the system.

Conventions

CPU: When the term "CPU" is used in this manual, it applies to the CPUs of the S7-1500 automation system as well as to the CPUs/interface modules of the ET 200SP distributed I/O system.

STEP 7: In this documentation, "STEP 7" is used as a synonym for all versions of the configuration and programming software "STEP 7 (TIA Portal)".

Please also observe notes marked as follows:

Note

A note contains important information on the product described in the documentation, on the handling of the product or on the section of the documentation to which particular attention should be paid.

Security information

Siemens provides products and solutions with industrial security functions that support the secure operation of plants, solutions, machines, equipment and/or networks. They are important components in a holistic industrial security concept. With this in mind, Siemens' products and solutions undergo continuous development. Siemens recommends strongly that you regularly check for product updates.

For the secure operation of Siemens products and solutions, it is necessary to take suitable preventive action (e.g. cell protection concept) and integrate each component into a holistic, state-of-the-art industrial security concept. Third-party products that may be in use should also be considered. You can find more information about industrial security on the Internet (http://www.siemens.com/industrialsecurity).

To stay informed about product updates as they occur, sign up for a product-specific newsletter. You can find more information on the Internet (http://support.automation.siemens.com).

Table of contents

Preface 4

1 Documentation guide 6

2 Product overview 9

2.1 Properties 9

3 Wiring 11

3.1 Wiring and block diagram 11

4 Parameters/address space 14

4.1 Parameters 14

4.2 Explanation of parameters 16

4.3 Address space 17

5 Interrupts/diagnostics alarms 22

5.1 Status and error displays 22

5.2 Interrupts 24

5.3 Diagnostics alarms 24

6 Technical specifications 26

6.1 Technical specifications 26

A Parameter data record 31

A.1 Parameter assignment and structure of parameter data record 31

Documentation guide

1

The documentation for the SIMATIC ET 200SP distributed I/O system is arranged into three areas.
This arrangement enables you to access the specific content you require.

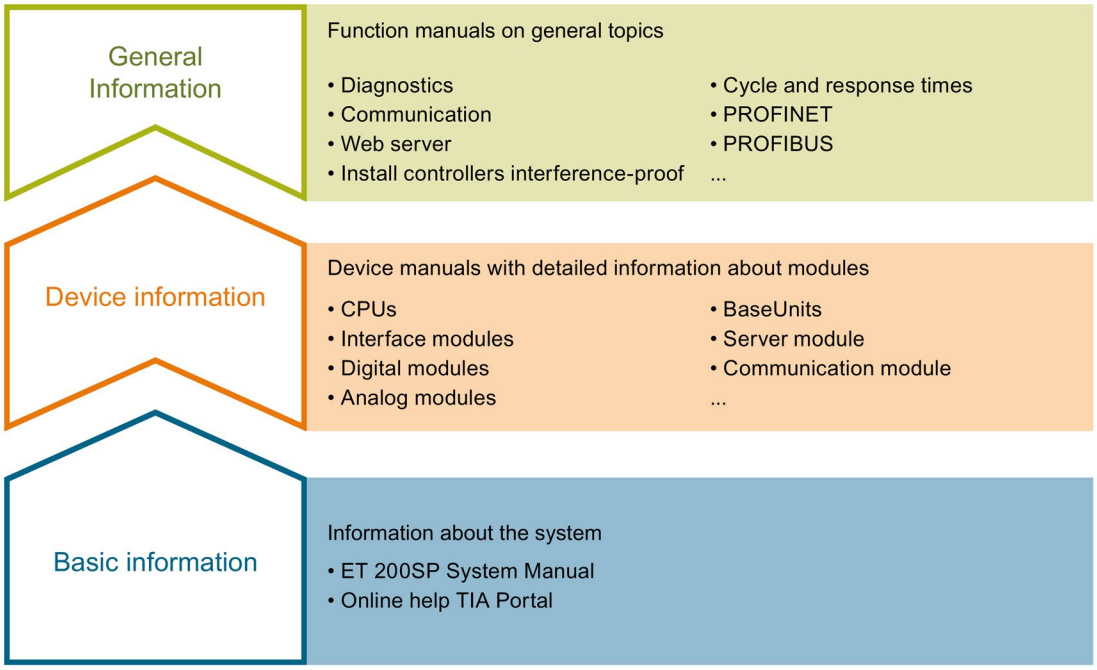

Basic information

The system manual describes in detail the configuration, installation, wiring and commissioning of the SIMATIC ET 200SP. distributed I/O system. The STEP 7 online help supports you in the configuration and programming.

Device information

Product manuals contain a compact description of the module-specific information, such as properties, terminal diagrams, characteristics and technical specifications.

General information

The function manuals contain detailed descriptions on general topics regarding the SIMATIC ET 200SP distributed I/O system, e.g. diagnostics, communication, Web server, designing interference-free controllers.

You can download the documentation free of charge from the Internet (http://w3.siemens.com/mcms/industrial-automation-systems-simatic/en/manual-overview/tech-doc-et200/Pages/Default.aspx).

Changes and supplements to the manuals are documented in a Product Information.

You can download the product information free of charge from the Internet (https://support.industry.siemens.com/cs/us/en/view/73021864).

Manual Collection ET 200SP

The Manual Collection contains the complete documentation on the SIMATIC ET 200SP distributed I/O system gathered together in one file.

You can find the Manual Collection on the Internet (http://support.automation.siemens.com/WW/view/en/84133942).

"mySupport"

With "mySupport", your personal workspace, you make the most of your Industry Online Support.

In "mySupport" you can store filters, favorites and tags, request CAx data and put together your personal library in the Documentation area. Furthermore, your data is automatically filled into support requests and you always have an overview of your current requests.

You need to register once to use the full functionality of "mySupport".

You can find "mySupport" in the Internet (https://support.industry.siemens.com/My/ww/en).

"mySupport" - Documentation

In the Documentation area of "mySupport", you have the possibility to combine complete manuals or parts of them to make your own manual.
You can export the manual in PDF format or in an editable format.

You can find "mySupport" - Documentation in the Internet (http://support.industry.siemens.com/My/ww/en/documentation).

"mySupport" - CAx Data

In the CAx Data area of "mySupport", you can have access the latest product data for your CAx or CAe system.

You configure your own download package with a few clicks.

In doing so you can select:

- Product images, 2D dimension drawings, 3D models, internal circuit diagrams, EPLAN macro files
- Manuals, characteristics, operating manuals, certificates
- Product master data

You can find "mySupport" - CAx Data in the Internet (http://support.industry.siemens.com/my/ww/en/CAxOnline).

Application examples

The application examples support you with various tools and examples for solving your automation tasks. Solutions are shown in interplay with multiple components in the system - separated from the focus in individual products.

You can find the application examples on the Internet (https://support.industry.siemens.com/sc/ww/en/sc/2054).

TIA Selection Tool

With the TIA Selection Tool, you can select, configure and order devices for Totally Integrated Automation (TIA).
This tool is the successor of the SIMATIC Selection Tool and combines the known configurators for automation technology into one tool.
With the TIA Selection Tool, you can generate a complete order list from your product selection or product configuration.

You can find the TIA Selection Tool on the Internet (http://w3.siemens.com/mcms/topics/en/simatic/tia-selection-tool).

Product overview

2

2.1 Properties

Article number

6ES7132-6BD20-0CA0

View of the module

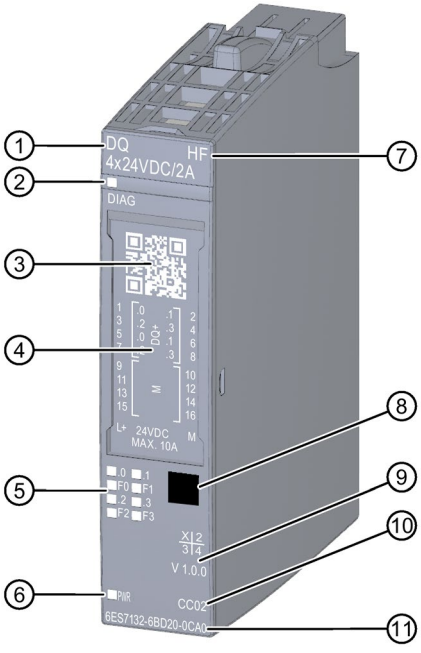

① Module type and name
② LED for diagnostics
③ 2D matrix code
④ Wiring diagram
⑤ LEDs for channel status/channel fault
⑥ LED for supply voltage
⑦ Function class
⑧ Color coding module type
⑨ Function and firmware version
⑩ Color code for selecting the color identification labels
⑪ Article number

Image 2-1 View of the module DQ 4×24VDC/2A HF

Properties

The module has the following technical properties:

- Digital output module with 4 outputs
- Source output (PNP, P-switching)
- Supply voltage L+
- Output current 2 A (per channel)
- Configurable diagnostics (per channel)
- Configurable substitute values (per channel)
- Suitable for solenoid valves, DC contactors, and indicator lights
- Safety-related shutdown

The module supports the following functions:

- Firmware update
- I&M identification data
- Configuration in RUN
- PROFIenergy
- Value status
- Isochronous mode
- Module-internal Shared Output (MSO)

Table 2- 1 Version dependencies of other module functions

Function	Product version of the module as of	Firmware version of the module as of
Configurable submodules/ submodules for shared device	1	V2.0.0

You can configure the module with STEP 7 (TIA Portal) and with a GSD file.

Accessories

The following accessories are supplied with the module and can also be ordered separately as spare parts:

- Labeling strips
- Color identification labels
- Reference identification label
- Shield connector

See also

You can find additional information on the accessories in the system manualET 200SP distributed I/O system (https://support.industry.siemens.com/cs/ww/en/view/91696622).

Wiring 3

3.1 Wiring and block diagram

This section includes the block diagram of the DQ 4x24VDC/2A HF module with the terminal assignments for a 1-wire, 2-wire and 3-wire connection. You can use and combine the different wiring options for all channels.

You can find information on wiring the BaseUnits in the system manual Distributed I/O System ET 200SP (http://support.automation.siemens.com/WW/view/en/58649293).

Note

- The load group of the module must begin with a light-colored BaseUnit. Keep this in mind also during the configuration.

Note

Cross circuit at output

Be aware that voltage from a cross-circuit at the output can feed L+ to modules.

Wiring: 1 and 2-wire connection of actuators

The following figure shows an example of the terminal assignment of the digital output module DQ 4×24VDC/2A HF on the BaseUnit BU type A0 without AUX terminals (1- and 2-wire connection).

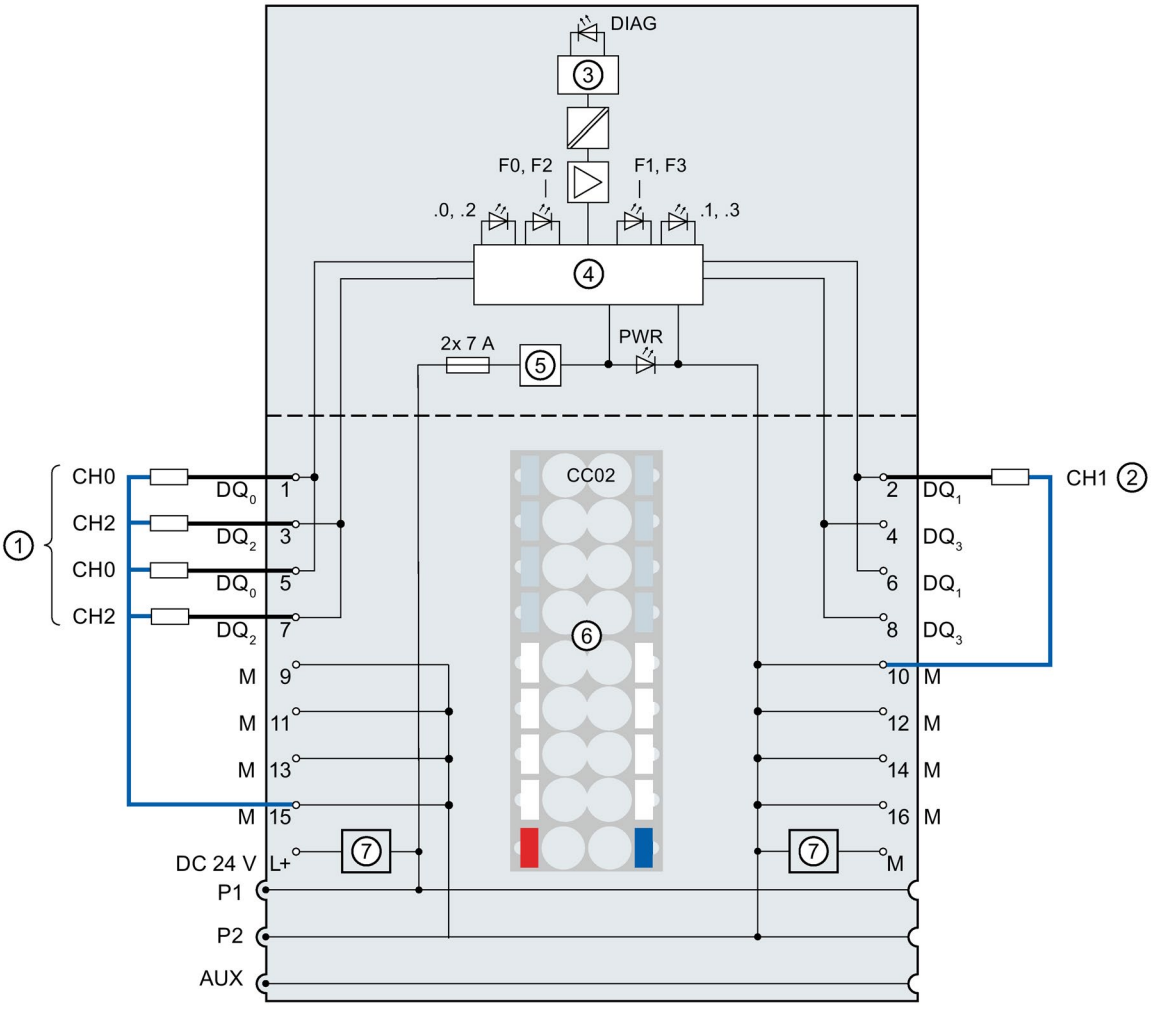

①	1-wire connection	24 V DC	Supply voltage L+ (infeed for light-colored BaseUnit only)
②	2-wire connection	M	Ground
③	Backplane bus interface	P1, P2, AUX	Internal self-assembling voltage buses Connection to left (dark-colored BaseUnit) Connection to left interrupted (light-colored BaseUnit)
④	Output electronics	DIAG	Error or diagnostics LED (green, red)
⑤	Polarity reversal protection	.0 to .3	Channel status LED (green)
⑥	Color-coded label with color code CC02 (optional)	F0 to F3	Channel fault LED (red)
⑦	Filter connection supply voltage (only when light-colored BaseUnit is present)	PWR	Power LED (green)
DQ_n	Output signal, channel n		

Image 3-1 Block diagram and terminal assignment for 1- and 2-wire connection of actuators

Wiring: 3-wire connection of actuators

The following figure shows an example of the terminal assignment of the digital output module DQ 4×24VDC/2A HF on the BaseUnit BU type A0 with AUX terminals (3-wire connection).

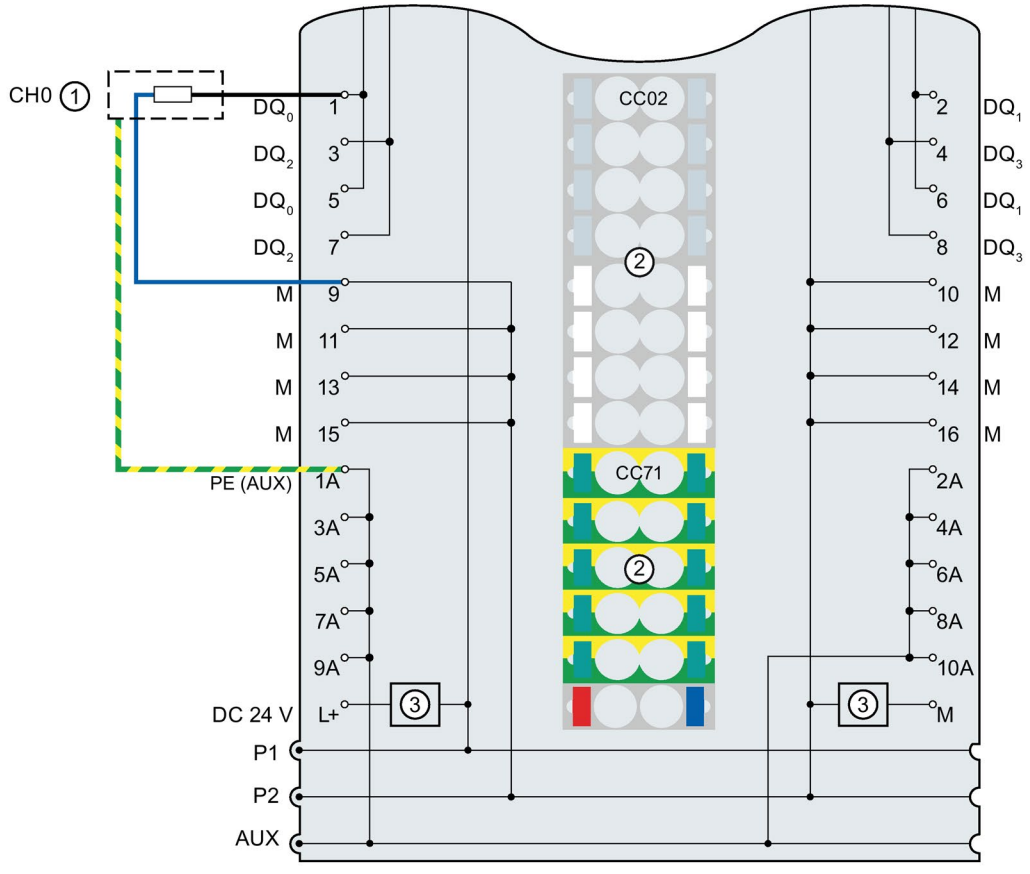

①	3-wire connection	1 A to 10 A	AUX terminals
②	Color-coded labels with color codes CC02 and CC71 (optional)	PE (AUX)	Protective conductor connection
③	Filter connection supply voltage (only when light-colored BaseUnit is present)	24 V DC	Supply voltage L+ (infeed for light-colored BaseUnit only)
DQ_n	Output signal, channel n	M	Ground
		P1, P2, AUX	Internal self-assembling voltage buses Connection to left (dark-colored BaseUnit) Connection to left interrupted (light-colored BaseUnit)

Image 3-2 Terminal assignment for 3-wire connection of actuators

Parameters/address space 4

4.1 Parameters

Parameters of the DQ 4x24VDC/2A HF

Specify the module properties with the various parameters in the course of your STEP 7 configuration. The following table lists the configurable parameters. The effective range of the configurable parameters depends on the type of configuration. The following configurations are possible:

- Central operation with an ET 200SP CPU
- Distributed operation on PROFINET IO in an ET 200SP system
- Distributed operation with PROFIBUS DP in an ET 200SP system

When assigning parameters in the user program, use the "WRREC" instruction to transfer the parameters to the module by means of data records (see chapter Parameter assignment and structure of the parameter data record (Page 31)).

Table 4- 1 Configurable parameters and their defaults (GSD file)

Parameter	Range of values	Default	Parameter reassignment in RUN	Scope with configuration software, e.g., STEP 7 (TIA Portal)	
				GSD file PROFINET IO	GSD file PROFIBUS DP [1]
Diagnostics No supply voltage L+	• Disable • Enable	Disable	Yes	Channel	Channel
Diagnostics: Short-circuit to ground	• Disable • Enable	Disable	Yes	Channel	Channel
Diagnostics: Short-circuit to L+	• Disable • Enable	Disable	Yes	Channel	
Diagnostics: Wire break	• Disable • Enable	Disable	Yes	Channel	Channel
Channel activated	• Disable • Enable	Enable	Yes	Channel	Channel

Parameter	Range of values	Default	Parameter reassignment in RUN	Scope with configuration software, e.g., STEP 7 (TIA Portal)	
				GSD file PROFINET IO	GSD file PROFIBUS DP [1]
Reaction to CPU STOP	• Turn off • Keep last value • Output substitute value 1	Turn off	Yes	Channel	Module
Potential group	• Use potential group of the left module (module plugged into a dark BaseUnit) • Enable new potential group (module plugged into light-colored BaseUnit)	Use potential group of the left module	No	Module	Module

[1] Only when configuring using a PROFIBUS GSD file; does not apply to configuration with STEP 7 via HSP. The parameter assignment options are limited because PROFIBUS GSD configuration limits the number of parameters to a maximum of 244 bytes for each ET 200SP station. If required, you can still assign the parameters using data records 64 to 67 as described in the column "GSD file PROFINET IO" (see table above). The parameter length of the I/O module is 7 bytes.

Note

If one of the two parameters "Diagnostics: Short-circuit to L+" or "Diagnostics: Wire break" is enabled and one of these diagnostics occurs, the affected channel is switched off to avoid triggering an undefined load. Note that a diagnostic interrupt can only be generated when diagnostics are enabled. [1]

[1] as of module revision 04

4.2 Explanation of parameters

Diagnostics: No supply voltage L+

Enabling of the diagnostics for no or insufficient supply voltage L+.

Diagnostics: Short-circuit to ground

Enabling of the diagnostics if a short-circuit of the actuator supply to ground occurs.

Diagnostics: Short-circuit to L+

Enabling of the diagnostics if a short-circuit of the actuator supply to L+ occurs.

Diagnostics: Wire break

Enabling of the diagnostics if the line to the actuator is broken.

Channel activated

Determines whether a channel is activated or deactivated.

Reaction to CPU STOP

Determines the behavior of the module in the event of a CPU STOP.

Potential group

A potential group consists of a group of directly adjacent I/O modules within an ET 200SP station, which are supplied via a common supply voltage.

A potential group begins with a light-colored BaseUnit through which the required voltage is supplied for all modules of the potential group. The light-colored BaseUnit interrupts the three self-assembling voltage buses P1, P2 and AUX to the left neighbor.

All additional I/O modules of this potential group are plugged into dark-colored BaseUnits. You take the potential of the self-assembling voltage buses P1, P2 and AUX from the left neighbor.

A potential group ends with the dark-colored BaseUnit, which follows a light-colored BaseUnit or server module in the station configuration.

4.3 Address space

The module can be configured differently in STEP 7; see following table. Depending on the configuration, additional/different addresses are assigned in the process image output/input.

Configuration options of DQ 4×24VDC/2A HF

You can configure the module with STEP 7 (TIA Portal) or with a GSD file. When you configure the module by means of the GSD file, the configuration is available under different abbreviations/module names. The following configurations are possible:

Table 4- 2 Configuration options with GSD file

Configuration	Abbreviation/module name in the GSD file	Configuration software, e.g. STEP 7 (TIA Portal)		
		Integrated in the hardware catalog STEP 7, as of V13, SP1	GSD file PROFINET IO	GSD file PROFIBUS DP
1 x 4-channel without value status	DQ 4×24VDC/2A HF V1.0	X	X	X
1 x 4-channel with value status	DQ 4×24VDC/2A HF V1.0, QI	X	X	---
1 x 4-channel with value status for module-internal Shared Output with up to 4 submodules	DQ 4×24VDC/2A HF V1.0, MSO	X	X	---
1 x 4-channel without value status	DQ 4×24VDC/2A HF V2.0	---	X	---
1 x 4-channel with value status	DQ 4×24VDC/2A HF V2.0, QI	---	X	X
1 x 4-channel with value status for module-internal Shared Output with up to 4 submodules	DQ 4×24VDC/2A HF V2. 0, MSO	---	X	---
2 x 2-channel without value status	DQ 4×24VDC/2A HF V2.0, S.2	---	X	---
2 x 2-channel with value status	DQ 4×24VDC/2A HF V2.0, S.2 QI	---	X	---

Note

The following functions are only fully available when the submodule X.1 is configured and the IO controller to which submodule X.1 is assigned has established a connection to the IO device.

- Firmware update
- I&M identification data
- PROFIenergy

2 x 2-channel configuration

For the configuration, the channels of the module are divided into multiple submodules. The submodules can be assigned to different IO controllers when the module is used in a Shared Device.

The number of usable submodules is dependent on the interface module used. Read the information in the manual for the particular interface module.

Value status (quality information, QI)

The value status is always activated for the following module names:

- DQ 4×24VDC/2A HF QI
- DQ 4×24VDC/2A HF MSO

An additional bit is assigned to each channel for the value status. The bit for the value status indicates if the output value specified by the user program is actually pending at the module terminal (0 = value is incorrect).

Address space for configuration as 1 x 4-channel DQ 4×24VDC/2A HF V1.0

The figure below shows the address space assignment for configuration as a 4-channel module without value status.

Assignment in the process image output (PIQ)

	7	6	5	4	3	2	1	0	Output value:
QB a	0	0	0	0					Channel 0 to 3 (input CH0 to CH3)

Image 4-1 Address space for configuration as 1 x 4-channel DQ 4×24VDC/2A HF, QI without value status

Address space for configuration as 1 x 4-channel DQ 4×24VDC/2A HF V1.0, QI

The following figure shows the assignment of the address space for the configuration as a 4-channel module with value status. You can freely assign the start address for the module. The addresses of the channels are derived from the start address.

Assignment in the process image output (PIQ)

	7	6	5	4	3	2	1	0	Output value:
QB a	0	0	0	0					Channels 0 to 3 (output CH0 to CH3)

Assignment in the process image input (PII)

	7	6	5	4	3	2	1	0	(QI) Value status:
IB a	0	0	0	0					Channel 0 to 3 (value status QI0 to QI3)

0 = Value output at the channel is faulty

Image 4-2 Address space for configuration as 1 x 4-channel DQ 4×24VDC/2A HF, QI with value status

Address space for configuration as 1 x 4-channel DQ 4×24VDC/2A HF V1.0, MSO

For the configuration as a 1 x 4-channel module (module-internal shared output, MSO), channels 0 to 3 of the module are copied to up to four submodules. Channels 0 to 3 are then available with identical values in various submodules. These submodules can be assigned to up to four IO controllers when the module is used in a shared device:

- The IO controller to which submodule 1 is assigned has write access to outputs 0 to 3.
- The IO controller to which submodule 2, 3, or 4 is assigned has read access to outputs 0 to 3.

Value status (Quality Information,QI)

The meaning of the value status depends on the submodule on which it occurs.

For the 1st submodule (= basic submodule), the value status 0 indicates that the value is incorrect or that the IO controller of the basic submodule is in STOP state.

For the 2nd to 4th submodule (= MSO submodule), the value status 0 indicates that the value is incorrect or one of the following errors has occurred:

- The basic submodule is not yet configured (not ready).
- The connection between the IO controller and the basic submodule has been interrupted.
- The IO controller of the basic submodule is in STOP or POWER OFF state.

The following figure shows the assignment of the address space for submodules 1, 2, 3, and 4 and the value status.

Assignment in the process image output (PIO) for 1st submodule

	7	6	5	4	3	2	1	0	
									1st submodule (basic submodule):
QB a	0	0	0	0					Channels 0 to 3 (output CH0 to CH3)
									(QI) Value status
IB b	0	0	0	0					Channel 0 to 3 (value status QI0 to QI3)

Assignment in the process image input (PII) for 2nd submodule

	7	6	5	4	3	2	1	0	
									2nd submodule (MSO submodule): Read back output values
IB c	0	0	0	0					Channels 0 to 3 (output CH0 to CH3)
									(QI) Value status
IB c+1	0	0	0	0					Channel 0 to 3 (value status QI0 to QI3)

Assignment in the process image input (PII) for 3rd submodule

	7	6	5	4	3	2	1	0	
									3rd submodule (MSO submodule): Read back output values
IB d	0	0	0	0					Channels 0 to 3 (output CH0 to CH3)
									(QI) Value status
IB d+1	0	0	0	0					Channel 0 to 3 (value status QI0 to QI3)

Assignment in the process image input (PII) for 4th submodule

	7	6	5	4	3	2	1	0	
									4th submodule (MSO submodule): Read back output values
IB e	0	0	0	0					Channels 0 to 3 (output CH0 to CH3)
									(QI) Value status
IB e+1	0	0	0	0					Channel 0 to 3 (value status QI0 to QI3)

0 = Value output at the channel is faulty

Image 4-3 Address space for configuration as 1 x 4-channel DQ 4×24VDC/2A HF, MSO with value status

Address space for configuration as 2 x 2-channel DQ 4×24VDC/2A HF, S.2

The figure below shows the address space assignment for configuration as a 2 x 2-channel module without value status.

Each of the two submodules has a freely assignable start address.

Assignment in the process image output (PIQ)

	7	6	5	4	3	2	1	0	Output value:	
QB a	0	0	0	0	0	0			Channels 0 and 1 (outputs CH0 and CH1)	1st submodule
QB b	0	0	0	0	0	0			Channel 2 and 3 (output CH2 and CH3)	2nd submodule

Image 4-4 Address space for configuration as 2 x 2-channel DQ 4×24VDC/2A HF, S.2 without value status

Address space for configuration as 2 x 2-channel DQ 4×24VDC/2A HF, S.2 QI

The figure below shows the address space assignment for configuration as a 2 x 2-channel module with value status.

Each of the two submodules has a freely assignable start address.

Assignment in the process image output (PIQ)

	7	6	5	4	3	2	1	0	Output value:	
QB a	0	0	0	0	0	0			Channels 0 and 1 (outputs CH0 and CH1)	1st submodule
QB b	0	0	0	0	0	0			Channel 2 and 3 (output CH2 and CH3)	2nd submodule

Assignment in the process image input (PII)

	7	6	5	4	3	2	1	0	(QI) Value status	
IB a	0	0	0	0	0	0			Channels 0 and 1 (value status QI0 and QI1)	1st submodule
IB b	0	0	0	0	0	0			Channel 2 and 3 (value status QI2 and QI3)	2nd submodule

0 = Value output at the channel is faulty

Image 4-5 Address space for configuration as 2 x 2-channel DQ 4×24VDC/2A HF V2.0, S.2 QI with value status

Interrupts/diagnostics alarms

5

5.1 Status and error displays

LED displays

The figure below shows the LED displays (status and error displays) of the DQ 4x24VDC/2A HF.

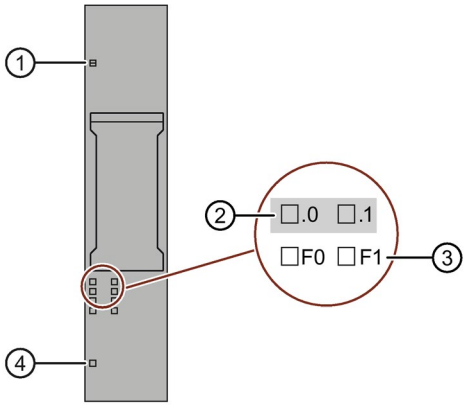

① DIAG (green/red)
② Channel status (green)
③ Channel error (red)
④ PWR (green)

Image 5-1 LED display

Meaning of the LEDs

The tables below explain the meaning of the Status and error displays. Remedial measures for diagnostics alarms can be found in section Diagnostics alarms (Page 24).

DIAG LED

Table 5- 1 Error display of the DIAG LED

DIAG LED	Meaning
□ Off	Backplane bus supply of the ET 200SP not OK
☼ Flashes	Module parameters not assigned
■ On	Module parameters assigned and no module/channel diagnostics
☼ Flashes	Module parameters assigned and module/channel diagnostics

LED channel status/channel error

Table 5- 2 Status / error display of the LED channel status / channel error

Channel status LED	LED channel error	Meaning
□ Off	□ Off	Channel deactivated or process signal = 0
■ On	□ Off	Channel activated and no channel diagnostics
□ Off	■ On	Channel activated and channel diagnostics

PWR LED

Table 5- 3 Status display of the PWR LED

PWR LED	Meaning
□ Off	Missing supply voltage L+
■ On	Supply voltage L+ present

5.2 Interrupts

The DQ 4×24VDC/2A HF digital output module supports diagnostics interrupts.

Diagnostics interrupts

The module generates a diagnostic interrupt at the following events:

- Short-circuit
- Wire break
- Parameter assignment error
- Supply voltage missing
- Channel temporarily unavailable

Detailed information on the event is available in the STEP 7 online help.

5.3 Diagnostics alarms

Diagnostics alarms

A diagnostics alarm is generated and the DIAG-LED flashes on the module for each diagnostics event. You can read out the diagnostics alarms, for example, in the diagnostics buffer of the CPU. You can evaluate the error codes with the user program.

Note

You can connect 2 actuators per output.

The diagnostics of the two actuators influenced each other in the case of duplicate wiring.

This means:

- a wire break is only signaled if both actuators are affected
- a single short-circuit affects both actuators

Note

Parallel connection of two outputs

For parallel connection of two outputs for redundant control of a load, the channel diagnostics "Short-circuit to L+" and "Wire break" must be deactivated.

Table 5- 4 Diagnostics alarms, their meaning and corrective measures

Diagnostics alarms	Error code	Meaning	Solution
Short-circuit	1_H	• Short-circuit of actuator supply to ground [1] • Short-circuit of actuator supply to L+ [2]	Correct the process wiring
Wire break	6_H	Actuator circuit impedance too high	Use a different actuator type or modify the wiring, for example, use cables with larger cross-section
		Wire break between the module and actuator	Connect the cable
		Channel not connected (open)	• Disable diagnostics • Connect a resistor to the actuator contacts in the load resistance range
Parameter assignment error	10_H	• The module cannot evaluate parameters for the channel. • Incorrect parameter assignment.	Correct the parameter assignment
Supply voltage missing	11_H	No or insufficient supply voltage L+	• Check supply voltage L+ on the BaseUnit • Check BaseUnit type
Channel/component temporarily unavailable	$1F_H$	Firmware update is currently in progress or has been canceled. The module does not output any process or substitute values in this state.	• Wait for firmware update. • Restart the firmware update.

[1] only in switched state (output value 1)

[2] only in non-switched state (output value 0)

Note

In case of a short-circuit of the actuator supply to L+ at the activated channel, load distributions can occur which result in wire break diagnostics.

Technical specifications

6

6.1 Technical specifications

Technical specifications of the DQ 4×24VDC/2A HF

	6ES7132-6BD20-0CA0
General information	
Product type designation	ET 200SP, DQ 4x24VDC/2A HF, PU 1
Firmware version	V2.0
• FW update possible	Yes
Usable BaseUnits	BU type A0
Color code for module-specific color identification label	CC02
Product function	
I&M data	Yes; I&M0 to I&M3
Engineering with	
STEP 7 TIA Portal can be configured/integrated as of version	V13 SP1 / -
STEP 7 can be configured/integrated as of version	V5.5 / -
PROFIBUS as of GSD version/GSD revision	GSD revision 5
PROFINET as of GSD version/GSD revision	GSDML V2.3
Operating mode	
DQ	Yes
DQ with energy-saving function	No
PWM	No
Oversampling	No
MSO	Yes
Supply voltage	
Rated value (DC)	24 V
Valid range, low limit (DC)	19.2 V
Valid range, high limit (DC)	28.8 V
Polarity reversal protection	Yes
Output voltage	
Rated value (DC)	24 V
Power loss	
Power loss, typ.	1 W

	6ES7132-6BD20-0CA0
Address area	
Address space per module	
Address space per module, max.	4 bytes; 2 channels per submodule + QI information
Digital outputs	
Number of outputs	4
Sinking output	No
Sourcing output	Yes
Short-circuit protection	Yes
• Response threshold, typ.	2.8 ... 5.2 A
Limitation of inductive shutdown voltage to	L+ -(37 to 41V)
Control of a digital input	Yes; minimum current consumption 7 mA
Switching capacity of outputs	
With resistive load, max.	2 A
With lamp load, max.	10 W
Load resistance range	
Low limit	12 Ω
High limit	3400 Ω
Output current	
For signal "1" rated value	2 A
For signal "0" residual current, max.	0.1 mA
Output delay with resistive load	
"0" to "1", typ.	50 µs
"1" to "0", typ.	100 µs
Parallel connection of two outputs	
For increased performance	No
Switching frequency	
With resistive load, max.	100 Hz
With inductive load, max.	2 Hz
With lamp load, max.	10 Hz
Total current of the outputs	
Current per channel, max.	2 A
Current per module, max.	8 A
Total current of the outputs (per module)	
Horizontal installation	
• Up to 40 °C, max.	8 A
• Up to 50 °C, max.	6 A
• Up to 60 °C, max.	4 A
Vertical installation	
• Up to 30 °C, max.	8 A
• Up to 40 °C, max.	6 A
• Up to 50 °C, max.	4 A

	6ES7132-6BD20-0CA0
Cable length	
Shielded, max.	1000 m
Unshielded, max.	600 m
Isochronous mode	
Isochronous mode (application synchronized up to terminal)	Yes
Bus cycle time (TDP), min.	500 µs
Jitter, max.	8 µs
Interrupts/diagnostics/status information	
Substitute values can be applied	Yes
Interrupts	
Diagnostics interrupt	Yes
Diagnostics alarms	
Diagnostics	Yes
Monitoring of the supply voltage	Yes
Wire break	Yes; channel-based
Short-circuit	Yes; channel-based
Group error	Yes
Diagnostics indicator LED	
Monitoring of the supply voltage (PWR LED)	Yes; green PWR LED
Channel status display	Yes; green LED
For channel diagnostics	Yes; red LED
For module diagnostics	Yes; green/red DIAG LED
Electrical isolation	
Electrical isolation of channels	
Between the channels	No
Between the channels and backplane bus	Yes
Permitted potential difference	
Between different circuits	75 V DC / 60 V AC (basic insulation)
Insulation	
Insulation tested with	707 V DC (type test)
Dimensions	
Width	15 mm
Weights	
Weight, approx.	30 g

Safety-related shutdown

Note

The digital output module DQ 4x24VDC/2A HF supports safety-related shutdown in connection with a fail-safe power module F-PM-E 24VDC/8A PPM ST:

- SIL according to IEC 61508: 2
- Highest attainable safety class in safety mode, performance level according to EN ISO 13849-1: d

Residual current for signal state "0"

Note

Residual current for signal state "0"

Due to the Diagnostics: Wire break function, there is a low level of residual current in the "0" signal state at the output, which may cause the display diodes to flicker.

This residual current does not depend on the setting for the Diagnostics: Wire break parameter.

Derating trend

The following figure show the load current derating with horizontal and vertical mounting positions.

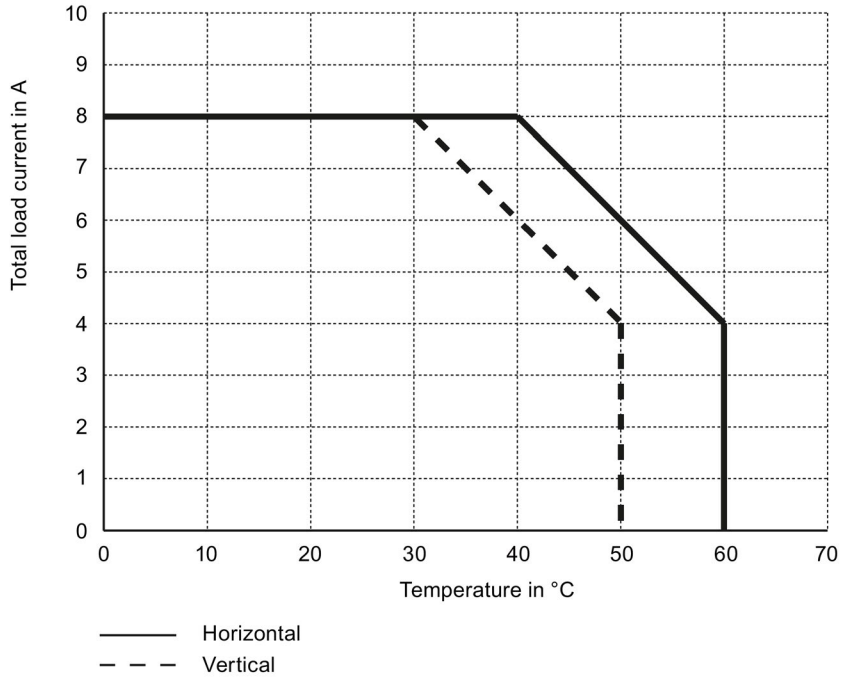

Image 6-1 Load current for mounting position

Dimension drawing

See manual ET 200SP BaseUnits
(http://support.automation.siemens.com/WW/view/en/58532597/133300)

Parameter data record

A

A.1 Parameter assignment and structure of parameter data record

The data record of the module has an identical structure, regardless of whether you configure the module with PROFIBUS DP or PROFINET IO. With data record 128, you can reconfigure the module in your user program regardless of your programming. This means that you can use all the functions of the module even if you configured it via PROFIBUS-GSD.

You can configure the individual channels with data records 64 to 67.

Parameter assignment in the user program

You can reassign the module parameters in RUN (e.g. "Switch on diagnostics" can be changed in RUN).

Changing parameters in RUN

The WRREC instruction is used to transfer the parameters to the module using data record 128 or data records 64 to 67. The parameters set in STEP 7 are not changed in the CPU, which means that the parameters set in STEP 7 will be valid again after a restart.

If you reconfigure a module and diagnostics are pending prior to the reconfiguration, these diagnostics are not signaled as "outgoing".

Output parameter STATUS

The module ignores errors that occur during the transfer of parameters with the "WRREC" instruction and continues operation with the previous parameter assignment. However, the STATUS output parameter contains a corresponding error code.

You will find a description of the "WRREC" instruction and the error codes in the STEP 7 online help.

Data record structure

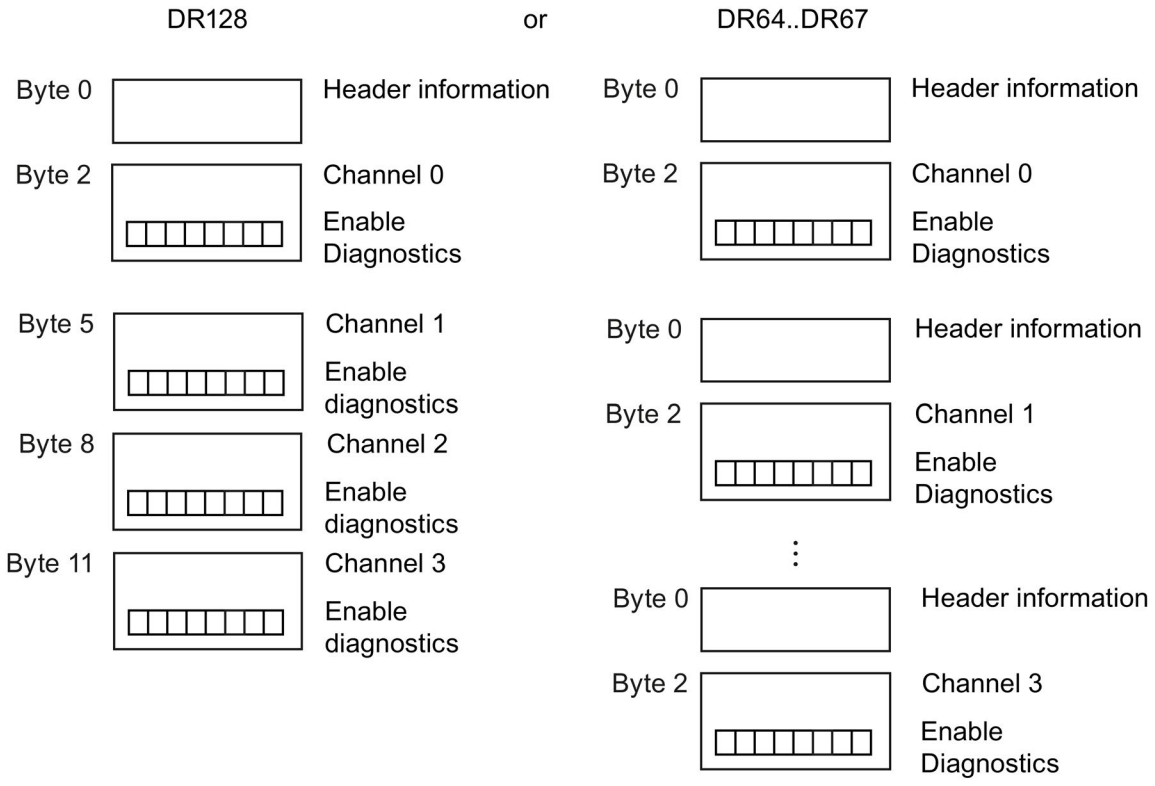

Image A-1 Structure of data record 128 or data records 64 to 67

Header information

The figure below shows the structure of the header information.

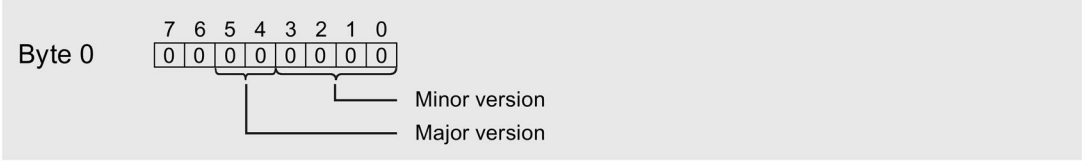

Byte 1	7	6	5	4	3	2	1	0
0	0	0	0	0	0	1	1

Length of parameter data per channel = 3

Image A-2 Header information

Parameters

The figure below shows the structure of the parameters for channels 0 to 3.

You enable a parameter by setting the corresponding bit to "1".

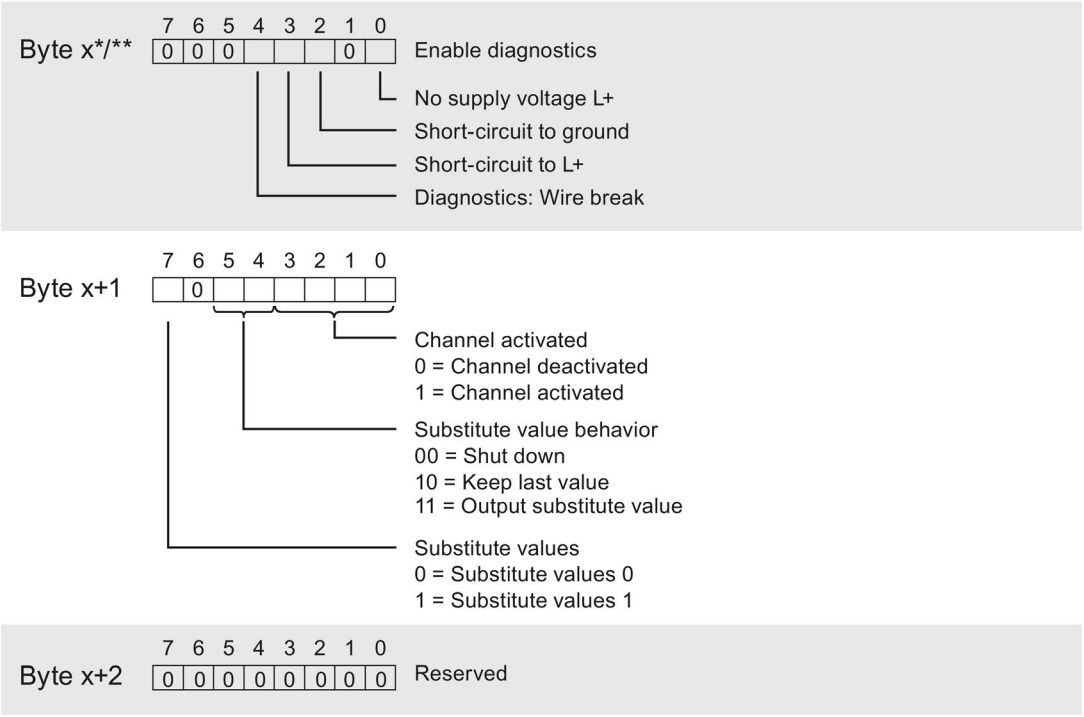

* x = 2 + (channel number × 3); channel number = 0 to 3 for DR 128
** x =2 for DR 64 to DR 67

Image A-3 Structure of byte x to x+2 for channels 0 to 3

Error transmitting the data record

The module always checks all values of the data record to be sent. The module applies the values from the data record only when all values have been transmitted without errors.

The WRREC instruction for writing data records returns the appropriate error code if there are errors in the STATUS parameter.

The following table shows the module-specific error codes and their meaning for parameter data record 128.

Error code in the STATUS parameter (hexadecimal)				Meaning	Solution
Byte 0	Byte 1	Byte 2	Byte 3		
DF	80	B0	xx	Number of the data record unknown	Enter valid number for data record.
DF	80	B1	xx	Length of the data record incorrect	Enter valid value for data record length.
DF	80	B2	xx	Slot invalid or unavailable	• Check the station to determine whether the module is plugged in or pulled. • Check assigned values for the parameters of the WREC instruction.
DF	80	E0	xx	Wrong version or error in the header information	Correct the version, length and number of parameter blocks.
DF	80	E1	xx	Parameter error	Check the parameters of the module

SIEMENS

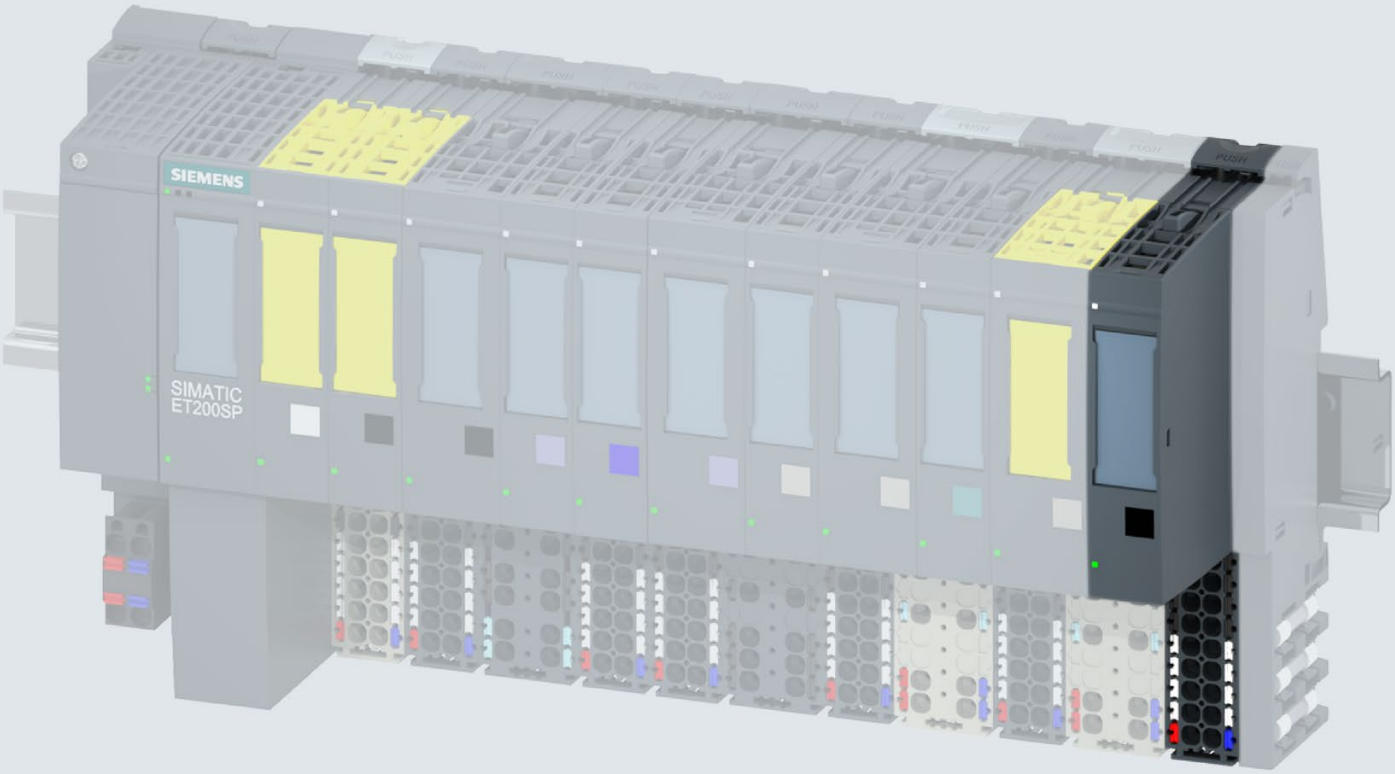

Manual

SIMATIC

ET 200SP

Digital output module
DQ 4x24VDC/2A HS (6ES7132-6BD20-0DA0)

Edition 06/2018

support.industry.siemens.com

SIEMENS

SIMATIC

ET 200SP
Digital output module
DQ 4x24VDC/2A HS
(6ES7132-6BD20-0DA0)

Manual

Preface

Documentation guide 1

Product overview 2

DQ operating mode DQ (valve control) 3

Oversampling operating mode 4

Pulse width modulation operating mode 5

Cam control operating mode 6

Technical specifications 7

Parameter data records A

06/2018

A5E32855695-AC

Legal information

Warning notice system

This manual contains notices you have to observe in order to ensure your personal safety, as well as to prevent damage to property. The notices referring to your personal safety are highlighted in the manual by a safety alert symbol, notices referring only to property damage have no safety alert symbol. These notices shown below are graded according to the degree of danger.

⚠ DANGER

indicates that death or severe personal injury **will** result if proper precautions are not taken.

⚠ WARNING

indicates that death or severe personal injury **may** result if proper precautions are not taken.

⚠ CAUTION

indicates that minor personal injury can result if proper precautions are not taken.

NOTICE

indicates that property damage can result if proper precautions are not taken.

If more than one degree of danger is present, the warning notice representing the highest degree of danger will be used. A notice warning of injury to persons with a safety alert symbol may also include a warning relating to property damage.

Qualified Personnel

The product/system described in this documentation may be operated only by **personnel qualified** for the specific task in accordance with the relevant documentation, in particular its warning notices and safety instructions. Qualified personnel are those who, based on their training and experience, are capable of identifying risks and avoiding potential hazards when working with these products/systems.

Proper use of Siemens products

Note the following:

⚠ WARNING

Siemens products may only be used for the applications described in the catalog and in the relevant technical documentation. If products and components from other manufacturers are used, these must be recommended or approved by Siemens. Proper transport, storage, installation, assembly, commissioning, operation and maintenance are required to ensure that the products operate safely and without any problems. The permissible ambient conditions must be complied with. The information in the relevant documentation must be observed.

Trademarks

All names identified by ® are registered trademarks of Siemens AG. The remaining trademarks in this publication may be trademarks whose use by third parties for their own purposes could violate the rights of the owner.

Disclaimer of Liability

We have reviewed the contents of this publication to ensure consistency with the hardware and software described. Since variance cannot be precluded entirely, we cannot guarantee full consistency. However, the information in this publication is reviewed regularly and any necessary corrections are included in subsequent editions.

Siemens AG
Division Digital Factory
Postfach 48 48
90026 NÜRNBERG
GERMANY

A5E32855695-AC
℗ 08/2018 Subject to change

Copyright © Siemens AG 2015 - 2018.
All rights reserved

Preface

Purpose of the documentation

This manual complements the system manual ET 200SP distributed I/O system (http://support.automation.siemens.com/WW/view/en/58649293).

Functions that generally relate to the system are described in the system manual.

The information provided in this manual and in the system/function manuals supports you in commissioning the system.

Conventions

CPU: When the term "CPU" is used in the following, it applies to the central processing units of the S7-1500 automation system as well as to the CPUs/interface modules of the ET 200SP distributed I/O system.

STEP 7: To designate the configuring and programming software, we use "STEP 7" in this documentation as a synonym for all versions of "STEP 7 (TIA Portal)".

Please also observe notes marked as follows:

Note

A note contains important information on the product described in the documentation, on the handling of the product or on the section of the documentation to which particular attention should be paid.

Recycling and disposal

For ecologically sustainable recycling and disposal of your old device, contact a certified disposal service for electronic scrap and dispose of the device in accordance with the regulations in your country.

Security information

Siemens provides products and solutions with industrial security functions that support the secure operation of plants, systems, machines and networks.

In order to protect plants, systems, machines and networks against cyber threats, it is necessary to implement – and continuously maintain – a holistic, state-of-the-art industrial security concept. Siemens' products and solutions constitute one element of such a concept.

Customers are responsible for preventing unauthorized access to their plants, systems, machines and networks. Such systems, machines and components should only be connected to an enterprise network or the internet if and to the extent such a connection is necessary and only when appropriate security measures (e.g. firewalls and/or network segmentation) are in place.

For additional information on industrial security measures that may be implemented, please visit (https://www.siemens.com/industrialsecurity).

Siemens' products and solutions undergo continuous development to make them more secure. Siemens strongly recommends that product updates are applied as soon as they are available and that the latest product versions are used. Use of product versions that are no longer supported, and failure to apply the latest updates may increase customers' exposure to cyber threats.

To stay informed about product updates, subscribe to the Siemens Industrial Security RSS Feed under (https://www.siemens.com/industrialsecurity).

Table of contents

Preface 3

1 Documentation guide 7

2 Product overview 12

2.1 Properties 12

3 DQ operating mode DQ (valve control) 18

3.1 Wiring 18
3.1.1 Wiring and block diagram 18

3.2 Parameters/address space 21
3.2.1 Normal operation/Valve control 21
3.2.2 Parameters 23
3.2.3 Explanation of parameters 25
3.2.4 Address space 26

3.3 Interrupts/diagnostics alarms 27
3.3.1 Status and error displays 27
3.3.2 Interrupts 29
3.3.3 Diagnostics alarms 29

4 Oversampling operating mode 31

4.1 Connecting 31
4.1.1 Wiring and block diagram 31

4.2 Parameters/address space 34
4.2.1 Oversampling 34
4.2.2 Parameters 35
4.2.3 Explanation of parameters 37
4.2.4 Address space 38

4.3 Interrupts/diagnostics alarms 39
4.3.1 Status and error displays 39
4.3.2 Interrupts 41
4.3.3 Diagnostics alarms 41

5 Pulse width modulation operating mode 43

5.1 Connecting 43
5.1.1 Wiring and block diagram 43

5.2 Parameters/address space 46
5.2.1 Pulse width modulation 46
5.2.2 Parameters 49
5.2.3 Explanation of parameters 52
5.2.4 Address space 54

5.3 Interrupts/diagnostics alarms ... 55
5.3.1 Status and error displays ... 55
5.3.2 Interrupts ... 57
5.3.3 Diagnostics alarms ... 57

6 Cam control operating mode ... 59

6.1 Connecting ... 59
6.1.1 Wiring and block diagram ... 59

6.2 Parameters/address space ... 62
6.2.1 Cam control ... 62
6.2.2 Parameters ... 70
6.2.3 Explanation of parameters ... 74
6.2.3.1 Parameters in cam control operating mode ... 74
6.2.3.2 Parameters for module to module communication (MtM) ... 78
6.2.4 Address space ... 79
6.2.4.1 Assignment of the control interface ... 79
6.2.4.2 Notes on the control interface ... 80
6.2.4.3 Assignment of the feedback interface ... 82
6.2.4.4 Notes on the feedback interface ... 84

6.3 Interrupts/diagnostics alarms ... 86
6.3.1 Status and error displays ... 86
6.3.2 Interrupts ... 88
6.3.3 Diagnostics alarms ... 89

7 Technical specifications ... 90

7.1 Technical specifications ... 90

7.2 Derating of the DQ 4x24VDC/2A HS ... 95

A Parameter data records ... 98

A.1 Parameter assignment and structure of the parameter data record for DQ operating mode ... 98

A.2 Parameter assignment and structure of the parameter data record for oversampling operating mode ... 104

A.3 Parameter assignment and structure of the parameter data record for pulse width modulation operating mode ... 110

A.4 Parameter assignment and structure of the parameter data record for cam control operating mode ... 116

Documentation guide

1

The documentation for the SIMATIC ET 200SP distributed I/O system is arranged into three areas.
This arrangement enables you to access the specific content you require.

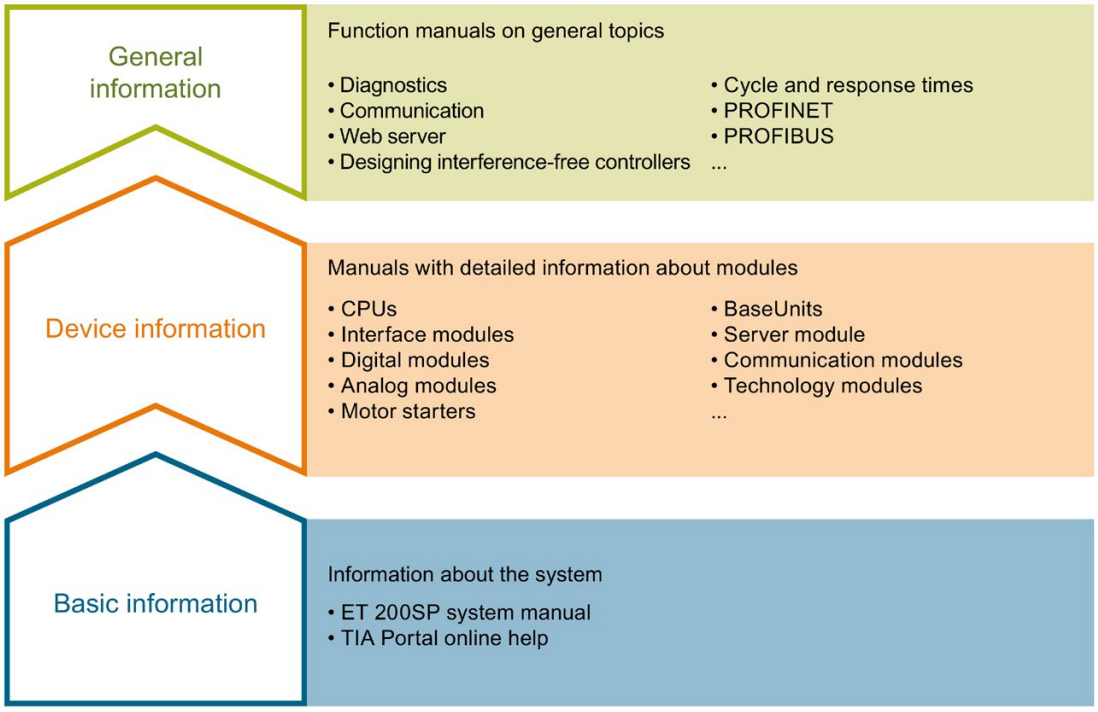

Basic information

The system manual describes in detail the configuration, installation, wiring and commissioning of the SIMATIC ET 200SP. distributed I/O system. The STEP 7 online help supports you in the configuration and programming.

Device information

Product manuals contain a compact description of the module-specific information, such as properties, wiring diagrams, characteristics and technical specifications.

General information

The function manuals contain detailed descriptions on general topics regarding the SIMATIC ET 200SP distributed I/O system, e.g. diagnostics, communication, Web server, motion control and OPC UA.

You can download the documentation free of charge from the Internet (https://support.industry.siemens.com/cs/ww/en/view/109742709).

Changes and supplements to the manuals are documented in a Product Information.

You can download the product information free of charge from the Internet (https://support.industry.siemens.com/cs/us/en/view/73021864).

Manual Collection ET 200SP

The Manual Collection contains the complete documentation on the SIMATIC ET 200SP distributed I/O system gathered together in one file.

You can find the Manual Collection on the Internet (http://support.automation.siemens.com/WW/view/en/84133942).

"mySupport"

With "mySupport", your personal workspace, you make the most of your Industry Online Support.

In "mySupport" you can store filters, favorites and tags, request CAx data and put together your personal library in the Documentation area. Furthermore, your data is automatically filled into support requests and you always have an overview of your current requests.

You need to register once to use the full functionality of "mySupport".

You can find "mySupport" in the Internet (https://support.industry.siemens.com/My/ww/en).

"mySupport" - Documentation

In the Documentation area of "mySupport", you have the possibility to combine complete manuals or parts of them to make your own manual.
You can export the manual in PDF format or in an editable format.

You can find "mySupport" - Documentation in the Internet (http://support.industry.siemens.com/My/ww/en/documentation).

"mySupport" - CAx Data

In the CAx Data area of "mySupport", you can have access the latest product data for your CAx or CAe system.

You configure your own download package with a few clicks.

In doing so you can select:

- Product images, 2D dimension drawings, 3D models, internal circuit diagrams, EPLAN macro files
- Manuals, characteristics, operating manuals, certificates
- Product master data

You can find "mySupport" - CAx Data in the Internet (http://support.industry.siemens.com/my/ww/en/CAxOnline).

Application examples

The application examples support you with various tools and examples for solving your automation tasks. Solutions are shown in interplay with multiple components in the system - separated from the focus in individual products.

You can find the application examples on the Internet (https://support.industry.siemens.com/sc/ww/en/sc/2054).

TIA Selection Tool

With the TIA Selection Tool, you can select, configure and order devices for Totally Integrated Automation (TIA).
This tool is the successor of the SIMATIC Selection Tool and combines the known configurators for automation technology into one tool.
With the TIA Selection Tool, you can generate a complete order list from your product selection or product configuration.

You can find the TIA Selection Tool on the Internet (http://w3.siemens.com/mcms/topics/en/simatic/tia-selection-tool).

SIMATIC Automation Tool

You can use the SIMATIC Automation Tool to run commissioning and maintenance activities simultaneously on various SIMATIC S7 stations as a bulk operation independently of the TIA Portal.

The SIMATIC Automation Tool provides a multitude of functions:

- Scanning of a PROFINET/Ethernet network and identification of all connected CPUs
- Address assignment (IP, subnet, gateway) and station name (PROFINET device) to a CPU
- Transfer of the data and the programming device/PC time converted to UTC time to the module
- Program download to CPU
- Operating mode switchover RUN/STOP
- Localization of the CPU by means of LED flashing
- Reading out CPU error information
- Reading the CPU diagnostic buffer
- Reset to factory settings
- Updating the firmware of the CPU and connected modules

You can find the SIMATIC Automation Tool on the Internet (https://support.industry.siemens.com/cs/ww/en/view/98161300).

PRONETA

With SIEMENS PRONETA (PROFINET network analysis), you analyze the plant network during commissioning. PRONETA features two core functions:

- The topology overview independently scans PROFINET and all connected components.
- The IO check is a fast test of the wiring and the module configuration of a system.

You can find SIEMENS PRONETA on the Internet (https://support.industry.siemens.com/cs/ww/en/view/67460624).

SINETPLAN

SINETPLAN, the Siemens Network Planner, supports you in planning automation systems and networks based on PROFINET. The tool facilitates professional and predictive dimensioning of your PROFINET installation as early as in the planning stage. In addition, SINETPLAN supports you during network optimization and helps you to exploit network resources optimally and to plan reserves. This helps to prevent problems in commissioning or failures during productive operation even in advance of a planned operation. This increases the availability of the production plant and helps improve operational safety.

The advantages at a glance

- Network optimization thanks to port-specific calculation of the network load
- Increased production availability thanks to online scan and verification of existing systems
- Transparency before commissioning through importing and simulation of existing STEP 7 projects
- Efficiency through securing existing investments in the long term and optimal exploitation of resources

You can find SINETPLAN on the Internet (https://www.siemens.com/sinetplan).

Product overview

2

2.1 Properties

Article number

6ES7132-6BD20-0DA0

View of the module

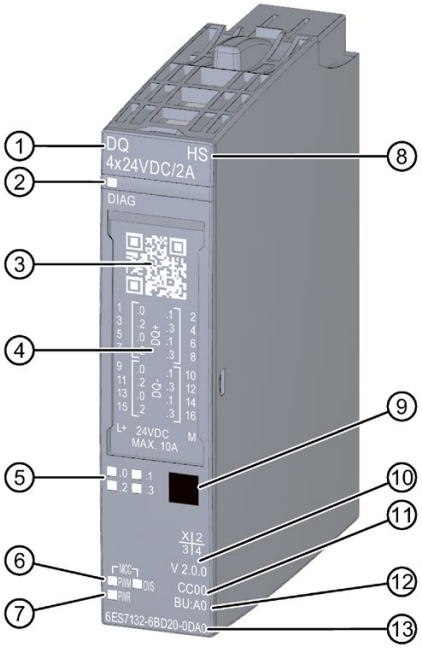

① Module type and name
② LED for diagnostics
③ 2D matrix code
④ Terminal diagram
⑤ LEDs for channel status
⑥ LEDs for operating mode
⑦ LED for supply voltage
⑧ Function class
⑨ Color coding of module type
⑩ Function and firmware version
⑪ Color code for selection of the color coding labels
⑫ BU type
⑬ Article number

Figure 2-1 View of the DQ 4×24VDC/2A HS module

Properties

The module has the following technical properties:

- Digital output module with 4 outputs (push-pull)
- Source output (PNP, sourcing output)
- Supply voltage L+
- Output current 2 A (per channel)
- Configurable substitute values (per channel)
- Configurable diagnostics (per module)
- Suitable for solenoid valves, DC contactors, and indicator lights

The module supports the following functions:

Table 2- 1 Version dependencies of the functions

Function	HW version	FW version	STEP 7		GSD file	
			TIA Portal	V5.x	PROFINET IO	PROFIBUS DP
Firmware update	FS01 or higher	V1.0.0 or higher	V13 SP1 or higher with HSP 0127	V5.5 SP3 or higher with HSP 0230 V5.0	X	X
Identification data I&M	FS01 or higher	V1.0.0 or higher	V13 SP1 or higher with HSP 0127	V5.5 SP3 or higher with HSP 0230 V5.0	X	X
Configuration in RUN	FS01 or higher	V1.0.0 or higher	V13 SP1 or higher with HSP 0127	V5.5 SP3 or higher with HSP 0230 V5.0	X	X
PROFIenergy	FS01 or higher	V1.0.0 or higher	V13 SP1 or higher with HSP 0127	V5.5 SP3 or higher with HSP 0230 V5.0	X	-
Value status	FS01 or higher	V1.0.0 or higher	V13 SP1 or higher with HSP 0127	V5.5 SP3 or higher with HSP 0230 V5.0	X	-
Isochronous mode	FS01 or higher	V1.0.0 or higher	V13 SP1 or higher with HSP 0127	V5.5 SP3 or higher with HSP 0230 V5.0	-	-
Oversampling	FS01 or higher	V1.0.0 or higher	V13 SP1 or higher with HSP 0127	V5.5 SP3 or higher with HSP 0230 V5.0	-	-
Valve control	FS01 or higher	V1.0.0 or higher	V13 SP1 or higher with HSP 0127	V5.5 SP3 or higher with HSP 0230 V5.0	X	X
Pulse width modulation (PWM)	FS01 or higher	V1.0.0 or higher	V13 SP1 or higher with HSP 0127	V5.5 SP3 or higher with HSP 0230 V5.0	X	X

Function	HW version	FW version	STEP 7		GSD file	
			TIA Portal	V5.x	PROFINET IO	PROFIBUS DP
Cam control (MCC - Modular CAM Controller)	FS01 or higher	V2.0.0 or higher	-	-	V5.6 HF4 or higher	-
Module to module communication (MtM)	FS01 or higher	V2.0.0 or higher	-	-	V5.6 HF4 or higher	-

Overview of operating modes, functions and parameters

The table below provides an overview of:

- The dependencies between the operating modes of the module and associated technical functions
- The required parameter assignment for the respective operating mode

Table 2- 2 Operating modes, functions and parameters of the DQ 4×24VDC/2A HS

Function/Parameter assignment	Operating mode				
	Normal operation	Valve control in normal operation	Pulse width modulation	Oversampling	Cam control
Function					
Isochronous mode [1]	Yes, optional	Yes, optional	No	Yes, required	Yes
• Shortest send clock	125 µs	125 µs	-	250 µs	-
Oversampling	No	No	No	Yes	No
• Number of oversampling levels (output rate)	-	-	-	2 to 32	-
• Shortest sub-cycle (= shortest sample time)	-	-	-	100 µs	-
Cam control	-	-	-	-	Yes
• Maximum number of cam tracks	-	-	-	-	4
• Maximum number of cams per track	-	-	-	-	16
Value status (QI)	x	x	-	-	x
Data length	1 byte	1 byte	8 bytes	16 bytes	14 bytes input data 7 bytes output data

Function/Parameter assignment	Operating mode				
	Normal operation	Valve control in normal operation	Pulse width modulation	Oversampling	Cam control
Parameter assignment					
Holding time valve control	-	x	-	-	-
Pulse width modulation duty cycle	-	x	-	-	-
Pulse width modulation time period	-	x	x	-	-
Substitute value duty cycle	-	-	x	-	-
Pulsed cam output duty cycle	-	-	-	-	x
Pulsed cam output period	-	-	-	-	x
Modulo activated	-	-	-	-	x
Hysteresis	-	-	-	-	x
Axis reference position	-	-	-	-	x
Encoder value minimum/maximum	-	-	-	-	x
Cam start position/end position	-	-	-	-	x
Cam effective direction	-	-	-	-	x
Cam channel assignment	-	-	-	-	x

[1] Isochronous mode is not configurable using a GSD file.

Configuration options

You can configure the module with STEP 7 or with a GSD file. When you configure the module using a GSD file, you can find the configuration under various short designations/module names. Depending on the configuration, additional/different addresses are assigned in the process image output/input.

The following configurations are possible:

Table 2- 3 Configuration options with GSD file of the DQ 4×24VDC/2A HS

Configuration	Short designation/module name in the GSD file	Configuration software, e.g. STEP 7		
		Can be integrated in the hardware catalog of STEP 7 (TIA Portal) V13 SP1 or higher	GSD file PROFINET IO	GSD file PROFIBUS DP
1 x 4-channel normal operation without value status	DQ 4×24VDC/2A HS	x	x	x
1 x 4-channel normal operation with value status	DQ 4×24VDC/2A HS QI	x	x	-
1 x 4-channel with pulse width modulation	DQ 4×24VDC/2A HS PWM	x	x	x
1 x 4-channel with oversampling	-	x	-	-
1 x 4-channel with cam control and MtM	DQ 4×24VDC/2A HS MCC MtM	-	x	-
	DQ 4×24VDC/2A HS MCC (16 Byte) MtM	-	x	-
	DQ 4×24VDC/2A HS MCC (6 Byte) MtM	-	x	-

Value status (quality information, QI)

The value status is always activated for the following module names in the GSD file:

- DQ 4×24VDC/2A HS **QI** (...)
- DQ 4×24VDC/2A HS MCC MtM (...)

Evaluating the value status

If you enable the value status function for the digital module, a byte in the input address space is additionally assigned. Bits 0 to 3 of this byte are each assigned to one channel. They provide information about the validity of the digital value.

- Bit = 1: No error is present on the channel.
- Bit = 0: Channel is disabled or there is an error in the module.

If an error occurs on a channel of this module, the value status for all channels is 0.

Accessories

The following accessories must be ordered separately:

- Labeling strips
- Color identification labels
- Reference identification label
- Shield connector

See also

You can find more information on accessories in the ET 200SP distributed I/O system (https://support.industry.siemens.com/cs/ww/en/view/58649293) system manual.

See also

Technical specifications (Page 90)

DQ operating mode DQ (valve control) 3

3.1 Wiring

3.1.1 Wiring and block diagram

In this section, you can find the block diagram of the DQ 4x24VDC/2A HS module showing the terminal assignments for a 2-wire and 3-wire connection in DQ operating mode.

You can find information on wiring the BaseUnit in the ET 200SP distributed I/O system (https://support.industry.siemens.com/cs/ww/en/view/58649293) system manual.

Note

You can connect 2 actuators per output.

Note

Cross circuit at output

Be aware that voltage from a cross circuit at the output can feed L+ to modules.

Note

- The load group of the module must begin with a light BaseUnit. Keep this in mind also during the configuration.
- The connection of actuators with 1-wire connection is not permitted.

Note

You may use and combine the different wiring options for all channels.

Note

Outputs DQ_n- must not be connected with ground.

Connection: 2-wire connection of actuators

The figure below shows an example for the terminal assignment of the digital output module DQ 4×24VDC/2A HS on the BaseUnit BU type A0 without AUX terminals (2-wire connection).

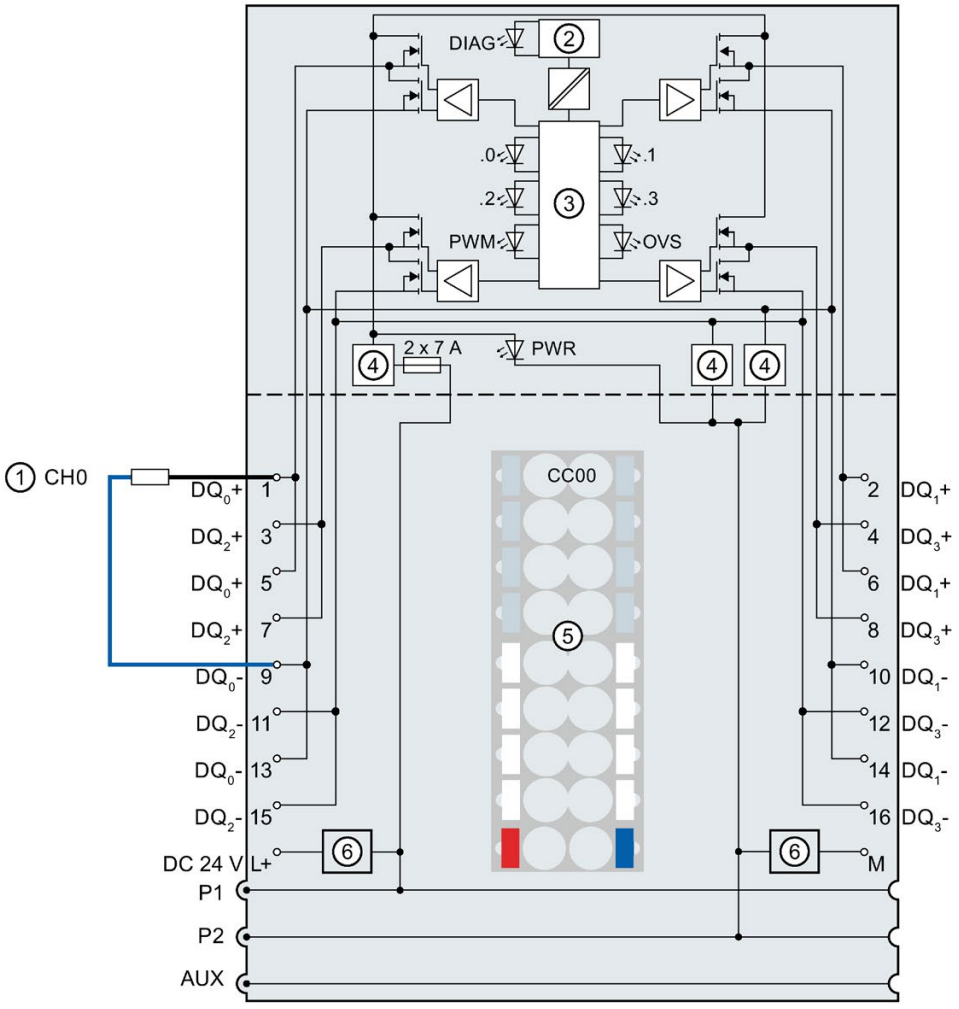

①	2-wire connection	24 V DC	Supply voltage L+ (infeed for light BaseUnit only)
②	Backplane bus interface	M	Ground
③	Control unit	P1, P2, AUX	Internal self-configuring voltage buses Connection to left (dark BaseUnit) Connection to left interrupted (light BaseUnit)
④	Polarity reversal protection	DIAG	Error or Diagnostics LED (green, red)
⑤	Color-coded label CCxx (optional)	.0, .1, .2, .3	Channel status LED (green)
⑥	Supply voltage filter circuit (only when light BaseUnit is present)	PWM	Pulse width modulation LED (green)
DQ_n+	Output signal, channel n	OVS	Oversampling LED (green)
DQ_n-	Reference output signal, channel n	PWR	Power LED (green)

Figure 3-1 Block diagram and terminal assignment for 2-wire connection of actuators

Connection: 3-wire connection of actuators

The figure below shows an example for the terminal assignment of the digital output module DQ 4×24VDC/2A HS on the BaseUnit BU type A0 with AUX terminals (3-wire connection).

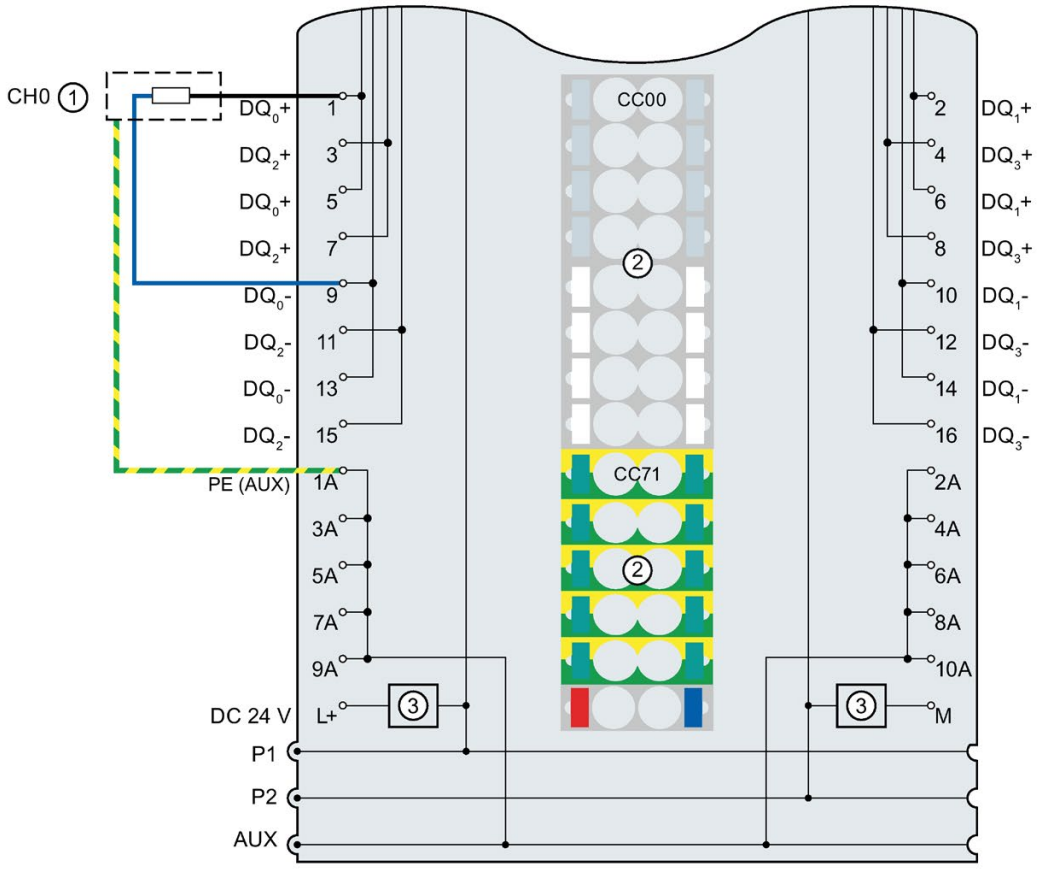

①	3-wire connection	1 A ... 10 A	AUX terminals
②	Color-coded labels CCxx (optional)	PE (AUX)	Protective conductor connection
③	Supply voltage filter circuit (only when light BaseUnit is present)	24 V DC	Supply voltage L+ (infeed for light BaseUnit only)
DQ_n+	Output signal, channel n	M	Ground
DQ_n-	Reference output signal, channel n	P1, P2, AUX	Internal self-configuring voltage buses Connection to left (dark BaseUnit) Connection to left interrupted (light BaseUnit)

Figure 3-2 Terminal assignment for 3-wire connection of actuators

3.2 Parameters/address space

3.2.1 Normal operation/Valve control

Normal operation

"Normal operation" refers to the function of the DQ 4×24VDC/2A HS as digital output module.

Valve control is a special function of normal operation.

Valve control function

You can use the valve control function to switch to a lower "holding current" after operating the valve (inrush current). You do this by activating a pulse width modulation (see section Pulse width modulation (Page 46)).

At a 0 → 1 change of the digital channel, the configured hold time is started. After the hold time elapses, the pulse duty cycle becomes "modulated upon" in the form of a pulse width modulation. The actuating signal is output digitally as a pulse train of on and off pulses.

Configuration

You configure valve control with the following parameters:

- "Normal operation" operating mode
- Holding time valve control
- Pulse width modulation duty cycle
- Pulse width modulation time period

Chronological sequence

The figure below shows the chronological sequence for valve control. The pulse width modulation is activated in the next possible data cycle.

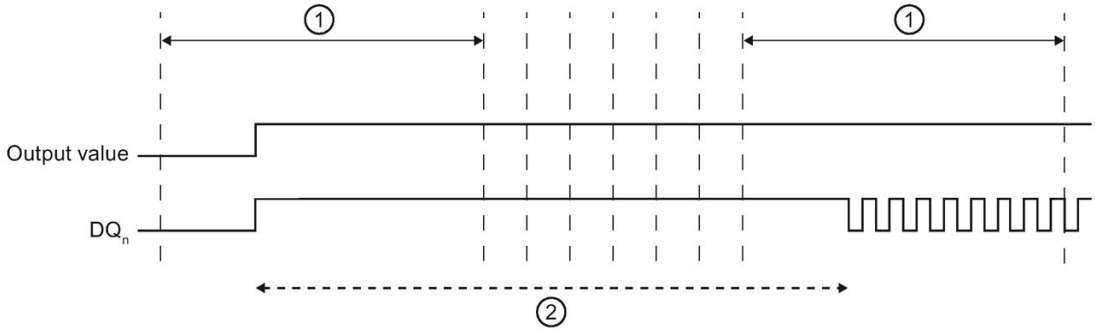

① Data cycle

② Holding time valve control

Figure 3-3 Valve control

"Pulse width modulation time period" parameter

You use the "Pulse width modulation time period" parameter to specify the frequency of the pulse width modulation "modulated upon" for the valve control (see section Pulse width modulation (Page 46)).

Note: When this is parameter is set to "Off", the DQ 4×24VDC/2A HS is in normal operation without valve control.

"Pulse width modulation duty cycle" parameter

You use the "Pulse width modulation duty cycle" parameter (0 ... 1000) to specify the pulse duty cycle of the "modulated upon" pulse width modulation within the configured period.

Note: Unlike in the "Pulse width modulation" operating mode, the duty factor cannot be updated cyclically as a function of an output value from the user program in normal operation with valve control.

Derating

Read the information on derating of the module in section Derating of the DQ 4x24VDC/2A HS (Page 95).

3.2.2 Parameters

DQ 4×24VDC/2A HS parameters

The effective range of the assignable parameters depends on the type of configuration.

The following configurations are possible:

- Central operation on an ET 200SP CPU or on an ET 200SP Open Controller
- Distributed operation on PROFINET IO in an ET 200SP system
- Distributed operation with PROFIBUS DP in an ET 200SP system

In addition to assigning parameters with the configuration software, you can also set the parameters in RUN mode (dynamically) using the user program. When assigning the parameters in the user program, the "WRREC" instruction transfers the parameters to the module using data records; see section Parameter assignment and structure of the parameter data record for DQ operating mode (Page 98).

The following parameter settings are possible:

Table 3- 1 Assignable parameters in DQ operating mode (valve control) (GSD file) [3]

Parameter	Value range	Default	Configuration in RUN	Effective range with configuration software	
				HSP0127 for STEP 7 (TIA Portal); HSP0230 for STEP 7; GSD file PROFINET IO	GSD file PROFIBUS DP [1]
Operating mode [4]	• Normal operation DQ (valve control) [2] • Oversampling • Pulse width modulation • Cam control		No	Module	Module [1]
Output rate	• 1 value/cycle	1 value/cycle	No	Module	Module[1]
Diagnostics No supply voltage L+	• Disable • Enable	Disable	Yes	Module	Module [1]
Diagnostics Short circuit to L+/G	• Disable • Enable	Disable	Yes	Module	Module [1]
Channel activated	• Disable • Enable	Enable	Yes	Channel	Channel [1]
Reaction to CPU STOP	• Shutdown • Keep last value • Output substitute value 1	Shutdown	Yes	Channel	Module [1]

Parameter	Value range	Default	Configuration in RUN	Effective range with configuration software	
				HSP0127 for STEP 7 (TIA Portal); HSP0230 for STEP 7; GSD file PROFINET IO	GSD file PROFIBUS DP [1]
Holding time valve control	• 10 ms • 20 ms • ... • 10 s	500 ms	Yes	Channel	Channel [1]
Pulse width modulation duty cycle	• 0% • 0.1% • 0.2% • ... • 100%	50%	Yes	Channel	Channel [1]
Pulse width modulation time period	• Off • 0.20 ms • 0.40 ms • 0.93 ms • 1.33 ms • 4.27 ms • 10.67 ms • 21.33 ms • 34.13 ms • 59.73 ms	Off	Yes	Channel	Channel [1]
Potential group	• Use potential group of the left module (dark BaseUnit) • Enable new potential group (light BaseUnit)	Use potential group of the left module	No	Module	Module [1]

[1] Because the number of parameters is limited to a maximum of 244 bytes per ET 200SP station when configuring with a PROFIBUS GSD, the possible parameter assignments are restricted. If required, you can still assign these parameters using the data record 128 as described in the column "GSD file PROFINET IO" (see table above). The parameter length of the I/O module is 15 bytes.

[2] Valve control is a special function of normal operation.

[3] Oversampling is not supported with GSD files.

[4] When configuring with HSP0230 for STEP 7 or with a GSD file, you determine the operating mode when you select the module name.

3.2.3 Explanation of parameters

Operating mode

At the module level, specifies the operating mode in which the module's channels are operated. When configuring with HSP0230 for STEP 7 or with a GSD file, you determine the operating mode when you select the module name.

- Normal operation as digital output module
  - Valve control is a special function of normal operation, see section Normal operation/Valve control (Page 21).
- Pulse width modulation, see section Pulse width modulation (Page 46)
- Oversampling, see section Oversampling (Page 34)
- Cam control, see section Cam control (Page 62)

Output rate

Specifies the number of subcycles per isochronous data cycle.
See section Oversampling (Page 34).

Diagnostics No supply voltage L+

Enabling of the diagnostics for no or insufficient supply voltage L+.

Diagnostics Short circuit to L+/G

Enabling of the diagnostics when a short-circuit of the actuator supply occurs.

Channel activated

Specifies whether a channel is activated or deactivated.

Reaction to CPU STOP

Determines the behavior of the module in the event of a CPU STOP.

Holding time valve control

Specifies the time which must expire before the pulse width modulated output signal is output in the next possible data cycle.
See section Normal operation/Valve control (Page 21).

Pulse width modulation duty cycle

Specifies the pulse duty cycle for the "modulated upon" pulse width modulation for the valve control.
See section Normal operation/Valve control (Page 21).

Pulse width modulation time period

Specifies the frequency of the pulse width modulation.
See section Normal operation/Valve control (Page 21) and section Pulse width modulation (Page 46).

Potential group

With the "Potential group" parameter, you specify whether the module is plugged into a light or dark BaseUnit.

A potential group always begins with an I/O module that is plugged into a light BaseUnit. All modules inserted to the right of this that are plugged into dark BaseUnits belong to the same potential group, because the dark BaseUnits are supplied via the light BaseUnits.

The potential group ends at a new light BaseUnit or the end of the station.

See also

ET 200SP distributed I/O system
(http://support.automation.siemens.com/WW/view/en/58649293)

3.2.4 Address space

Address space for configuration as a 4-channel DQ 4×24VDC/2A HS

The figure below shows the assignment of the address space for the configuration as a 4-channel module with value status (normal operation without/with valve control). The addresses for the value status are only available if the value status was enabled.

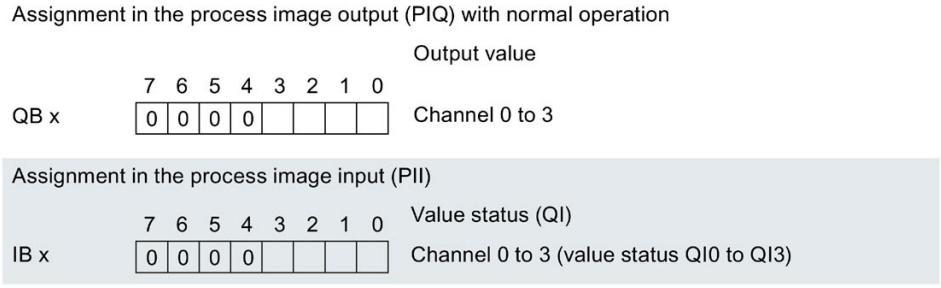

Figure 3-4 Address space for configuration as a 4-channel DQ 4×24VDC/2A HS with value status

Evaluating the value status

If you enable the value status for the digital module, a byte in the input address space is additionally assigned. Bits 0 to 3 of this byte are each assigned to one channel. They provide information about the validity of the digital value.

Bit = 1: No error is present on the channel.

Bit = 0: Channel is disabled or there is an error in the module.

If an error occurs on a channel of this module, the value status for all channels is 0.

3.3 Interrupts/diagnostics alarms

3.3.1 Status and error displays

LED displays

The figure below shows the location of the LED displays of the DQ 4×24VDC/2A HS.

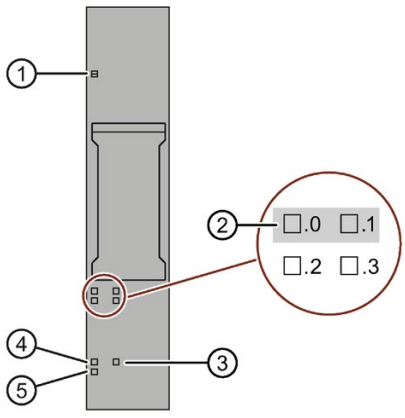

① DIAG (green/red)
② Channel status (green)
③ OVS (green)
④ PWM (green)
⑤ PWR (green)

Figure 3-5 LED displays

Meaning of the LEDs

The following tables contain the meaning of the Status and error displays. Corrective measures for diagnostics alarms can be found in the section Diagnostics alarms.

DIAG LED

Table 3- 2 Error display of the DIAG LED

DIAG LED	Meaning
□ Off	Backplane bus supply of the ET 200SP not OK
☼ Flashes	Module parameters not assigned
■ On	Module parameters assigned and no module diagnostics
☼ Flashes	Module parameters assigned and module diagnostics

Channel status LED

Table 3- 3 Status display of the channel status LED

Channel status LED	Meaning
□ Off	Channel deactivated or process signal = 0
■ On	Channel activated and process signal = 1

OVS LED and PWM LED

Table 3- 4 Status display of the oversampling LED

OVS LED	PWM LED	Meaning
□ Off	□ Off	DQ operating mode (valve control) active
■ On	□ Off	Oversampling operating mode active
□ Off	■ On	Pulse width modulation operating mode active
■ On	■ On	Cam control (MCC) operating mode active

PWR LED

Table 3- 5 Status display of the PWR LED

PWR LED	Meaning
□ Off	No supply voltage L+
■ On	Supply voltage L+ present

3.3.2 Interrupts

The DQ 4×24VDC/2A HS digital output module supports diagnostic interrupts.

Diagnostic interrupts

The module generates a diagnostic interrupt at the following events:

- Short circuit
- Excess temperature
- Parameter assignment error
- No supply voltage
- Communication error
- Channel temporarily not available

Detailed information on the event is available in the STEP 7 online help.

3.3.3 Diagnostics alarms

Diagnostics alarms

A diagnostics alarm is output and the DIAG LED flashes on the module for each diagnostics event. You can read out the diagnostics alarms, for example, in the diagnostics buffer of the CPU. You can evaluate the error codes with the user program.

Note

You can connect 2 actuators per output.

The diagnostics of the two actuators influence each other in the case of duplicate wiring. This means that a single short-circuit affects both actuators.

Table 3- 6 Diagnostics alarms, their meaning and corrective measures

Diagnostics alarms	Error code	Meaning	Solution
Short circuit [1] [2]	1_H	Short-circuit of the actuator supply	Correct the process wiring
Excess temperature	5_H	The module has detected that the maximum permitted module temperature has been exceeded. All channels of the module are switched to high resistance. The module is then restarted.	Correct the process wiring
Parameter assignment error	10_H	• The module cannot evaluate parameters for the channel. • Incorrect parameter assignment.	Correct the parameter assignment
No supply voltage	11_H	No or insufficient supply voltage L+	• Check supply voltage L+ on the BaseUnit • Check BaseUnit type
Communication error	13_H	Module is defective.	Replace the module.
Channel temporarily not available	$1F_H$	Firmware update is currently in progress or was canceled. The module does not output any process values or substitute values in this state.	• Wait for firmware update. • Restart the firmware update.

[1] The channels 0 and 1 or 2 and 3 each form a load group. Within a load group, a short-circuit can have an effect on the adjacent channel. The load groups do not have an effect on each other in the case of a short-circuit.

[2] If the short-circuit persists, the module heats up. This may trigger temperature monitoring with excess temperature diagnostic interrupt.

Oversampling operating mode 4

4.1 Connecting

4.1.1 Wiring and block diagram

In this section, you can find the block diagram of the DQ 4x24VDC/2A HS module showing the terminal assignments for a 2-wire and 3-wire connection in oversampling operating mode.

You can find information on wiring the BaseUnit in the ET 200SP distributed I/O system (https://support.industry.siemens.com/cs/ww/en/view/58649293) system manual.

Note

You can connect 2 actuators per output.

Note

Cross circuit at output

Be aware that voltage from a cross circuit at the output can feed L+ to modules.

Note

- The load group of the module must begin with a light BaseUnit. Keep this in mind also during the configuration.
- The connection of actuators with 1-wire connection is not permitted.

Note

You may use and combine the different wiring options for all channels.

Note

Outputs DQ_n- must not be connected with ground.

Connection: 2-wire connection of actuators

The figure below shows an example for the terminal assignment of the digital output module DQ 4×24VDC/2A HS on the BaseUnit BU type A0 without AUX terminals (2-wire connection).

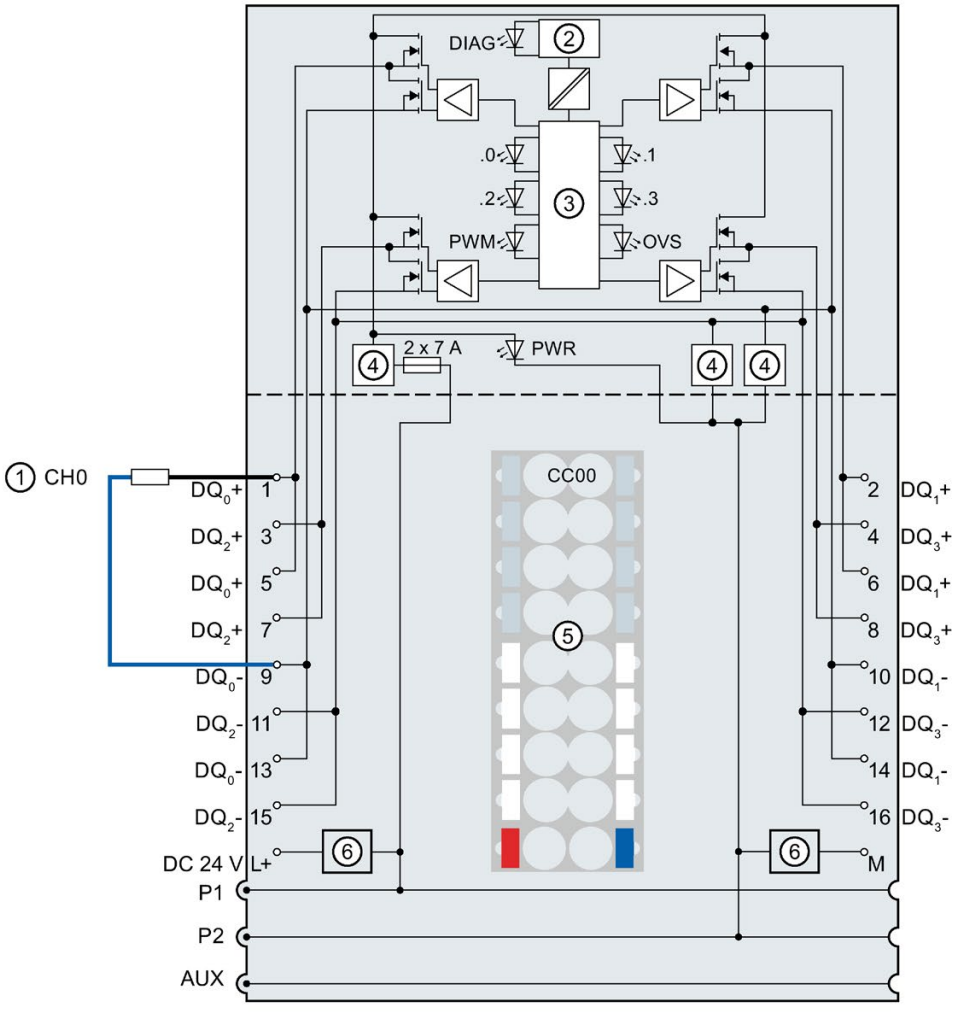

①	2-wire connection	24 V DC	Supply voltage L+ (infeed for light BaseUnit only)
②	Backplane bus interface	M	Ground
③	Control unit	P1, P2, AUX	Internal self-configuring voltage buses Connection to left (dark BaseUnit) Connection to left interrupted (light BaseUnit)
④	Polarity reversal protection	DIAG	Error or Diagnostics LED (green, red)
⑤	Color-coded label CCxx (optional)	.0, .1, .2, .3	Channel status LED (green)
⑥	Supply voltage filter circuit (only when light BaseUnit is present)	PWM	Pulse width modulation LED (green)
DQ_n+	Output signal oversampling, channel n	OVS	Oversampling LED (green)
DQ_n-	Reference output signal, channel n	PWR	Power LED (green)

Figure 4-1 Block diagram and terminal assignment for 2-wire connection of actuators

Connection: 3-wire connection of actuators

The figure below shows an example for the terminal assignment of the digital output module DQ 4×24VDC/2A HS on the BaseUnit BU type A0 with AUX terminals (3-wire connection).

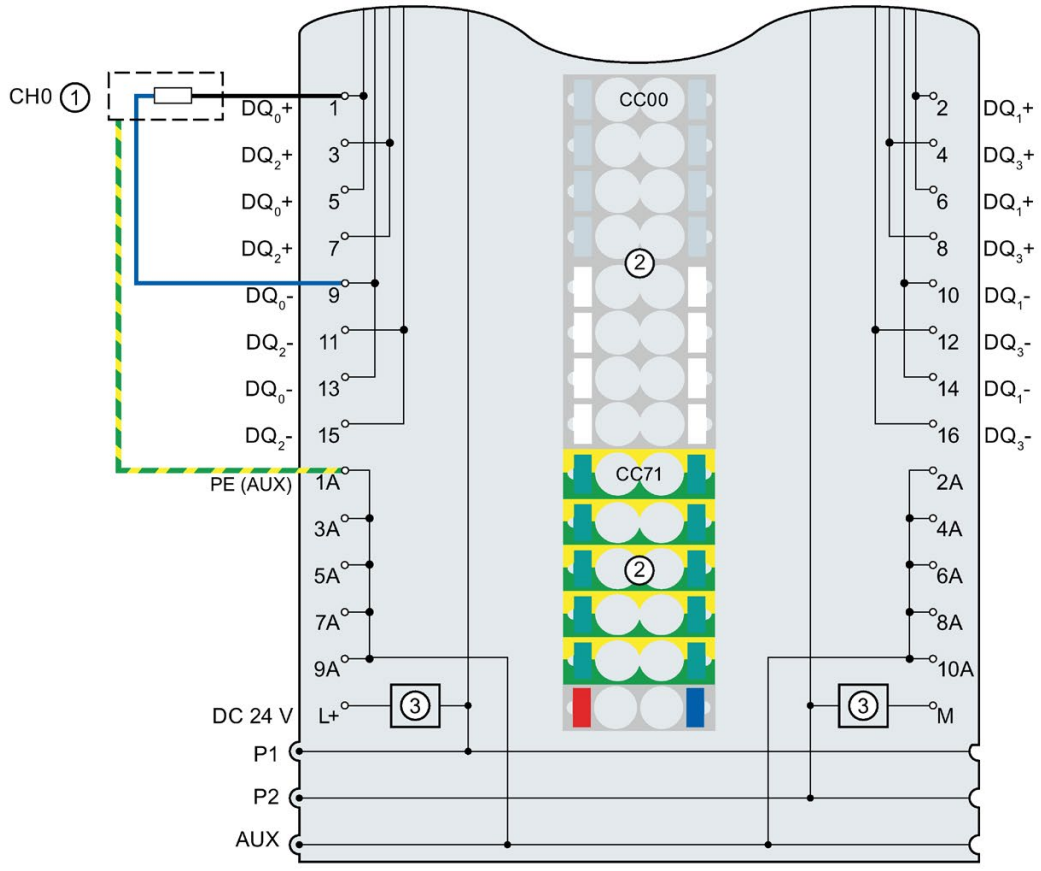

①	3-wire connection	1 A ... 10 A	AUX terminals
②	Color-coded labels CCxx (optional)	PE (AUX)	Protective conductor connection
③	Supply voltage filter circuit (only when light BaseUnit is present)	24 V DC	Supply voltage L+ (infeed for light BaseUnit only)
DQ_n+	Output signal oversampling, channel n	M	Ground
DQ_n-	Reference output signal, channel n	P1, P2, AUX	Internal self-configuring voltage buses Connection to left (dark BaseUnit) Connection to left interrupted (light BaseUnit)

Figure 4-2 Terminal assignment for 3-wire connection of actuators

4.2 Parameters/address space

4.2.1 Oversampling

Function

Oversampling is the output of data in constant bus cycle segments (sub-cycles), whereby n sub-cycles correspond to one PROFINET bus cycle. A data packet is transmitted from the controller to the module, which outputs the packet in n constant bus sub-cycles.

Oversampling is useful whenever you require output of data with high time resolution but without using an extremely short PROFINET bus cycle and thus fast CPU cycles.

With oversampling, a PROFINET bus cycle is divided into constant bus sub-cycles:

- Each sub-cycle returns a 4-bit output value.
- A sub-cycle is at least 100 µs long.
- Sub-cycles are possible in increments of 2 to 32 (only even numbers). The following applies here: Isochronous data cycle / number of sub-cycles ≥ permitted sub-cycle duration (100 µs).

Requirement

Oversampling is only possible when isochronous mode is set.

Configuration

You configure oversampling with the following parameters:

- "Oversampling" operating mode
- Output rate

Note

When oversampling is configured, do not use any reduction ratio of blocks in the runtime groups of your user program. Make sure that the output of data in the module is synchronized with the user program of the CPU.

Chronological sequence

The figure below shows the chronological sequence for oversampling. The output data present in the CPU is output in the data cycle after the next one, distributed across the sub-cycles which are generated on the actual module.

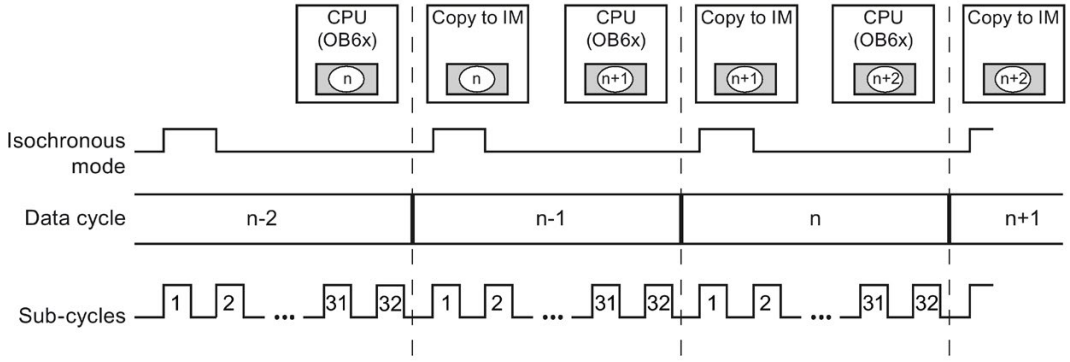

n	Output values from bus cycle n
Sub-cycle	4 bit x 32 (max) each = max. 16 bytes output data per data cycle

Figure 4-3 Oversampling

Derating

Read the information on derating of the module in section Derating of the DQ 4x24VDC/2A HS (Page 95).

4.2.2 Parameters

DQ 4×24VDC/2A HS parameters

The effective range of the assignable parameters depends on the type of configuration.

The following configurations are possible:

- Central operation on an ET 200SP CPU or on an ET 200SP Open Controller
- Distributed operation on PROFINET IO in an ET 200SP system

In addition to assigning parameters with the configuration software, you can also set the parameters in RUN mode (dynamically) using the user program. When assigning the parameters in the user program, the "WRREC" instruction transfers the parameters to the module using data records; see section Parameter assignment and structure of the parameter data record for oversampling operating mode (Page 104).

The following parameter settings are possible:

Table 4- 1 Assignable parameters in oversampling operating mode

Parameter	Value range	Default	Configuration in RUN	Effective range with configuration software
				HSP0127 for STEP 7 (TIA Portal); HSP0230 for STEP 7
Operating mode [1]	• Normal operation DQ (valve control) [2] • Oversampling • Pulse width modulation • Cam control		No	Module
Output rate	• 2 values/cycle • 4 values/cycle • ... • 32 values/cycle		No	Module
Diagnostics No supply voltage L+	• Disable • Enable	Disable	Yes	Module
Diagnostics Short circuit to L+/G	• Disable • Enable	Disable	Yes	Module
Channel activated	• Disable • Enable	Enable	Yes	Channel
Reaction to CPU STOP	• Shutdown • Keep last value • Output substitute value 1	Shutdown	Yes	Channel
Potential group	• Use potential group of the left module (dark BaseUnit) • Enable new potential group (light BaseUnit)	Use potential group of the left module	No	Module

1 When configuring with HSP0230 for STEP 7, you determine the operating mode when you select the module name.

2 Valve control is a special function of normal operation.

4.2.3 Explanation of parameters

Operating mode

At the module level, specifies the operating mode in which the module's channels are operated. When configuring with HSP0230 for STEP 7, you determine the operating mode when you select the module name.

- Normal operation as digital output module
  - Valve control is a special function of normal operation, see section Normal operation/Valve control (Page 21).
- Pulse width modulation, see section Pulse width modulation (Page 46)
- Oversampling, see section Oversampling (Page 34)
- Cam control, see section Cam control (Page 62)

Output rate

Specifies the number of subcycles per isochronous data cycle.
See section Oversampling (Page 34).

Diagnostics No supply voltage L+

Enabling of the diagnostics for no or insufficient supply voltage L+.

Diagnostics Short circuit to L+/G

Enabling of the diagnostics when a short-circuit of the actuator supply occurs.

Channel activated

Specifies whether a channel is activated or deactivated.

Reaction to CPU STOP

Determines the behavior of the module in the event of a CPU STOP.

Potential group

With the "Potential group" parameter, you specify whether the module is plugged into a light or dark BaseUnit.

A potential group always begins with an I/O module that is plugged into a light BaseUnit. All modules inserted to the right of this that are plugged into dark BaseUnits belong to the same potential group, because the dark BaseUnits are supplied via the light BaseUnits.

The potential group ends at a new light BaseUnit or the end of the station.

See also

Distributed I/O System ET 200SP
(https://support.industry.siemens.com/cs/ww/en/view/58649293)

4.2.4 Address space

Address space for configuration with oversampling

The figure below shows the address space allocation for the configuration with oversampling.

Assignment in the process image output (PIQ) with oversampling

	7	6	5	4	3	2	1	0	Output value (left-justified)
QB x									Channel 0, sub-cycles 1 to 8
QB x + 1									Channel 0, sub-cycles 9 to 16
QB x + 2									Channel 0, sub-cycles 17 to 24
QB x + 3									Channel 0, sub-cycles 25 to 32
					⋮				
QB x + 12									Channel 3, sub-cycles 1 to 8
QB x + 13									Channel 3, sub-cycles 9 to 16
QB x + 14									Channel 3, sub-cycles 17 to 24
QB x + 15									Channel 3, sub-cycles 25 to 32

Figure 4-4 Address space of the DQ 4×24VDC/2A HS with oversampling

4.3 Interrupts/diagnostics alarms

4.3.1 Status and error displays

LED displays

The figure below shows the location of the LED displays of the DQ 4×24VDC/2A HS.

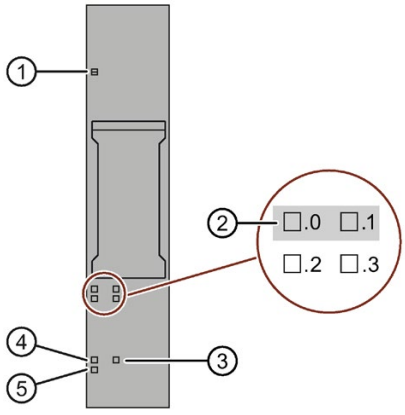

① DIAG (green/red)
② Channel status (green)
③ OVS (green)
④ PWM (green)
⑤ PWR (green)

Figure 4-5 LED displays

Meaning of the LEDs

The following tables contain the meaning of the Status and error displays. Corrective measures for diagnostics alarms can be found in the section Diagnostics alarms.

DIAG LED

Table 4- 2 Error display of the DIAG LED

DIAG LED	Meaning
□ Off	Backplane bus supply of the ET 200SP not OK
☼ Flashes	Module parameters not assigned
■ On	Module parameters assigned and no module diagnostics
☼ Flashes	Module parameters assigned and module diagnostics

Channel status LED

Table 4- 3 Status display of the channel status LED

Channel status LED	Meaning
□ Off	Channel deactivated or process signal = 0
■ On	Channel activated and process signal = 1

OVS LED and PWM LED

Table 4- 4 Status display of the oversampling LED

OVS LED	PWM LED	Meaning
□ Off	□ Off	DQ operating mode (valve control) active
■ On	□ Off	Oversampling operating mode active
□ Off	■ On	Pulse width modulation operating mode active
■ On	■ On	Cam control (MCC) operating mode active

PWR LED

Table 4- 5 Status display of the PWR LED

PWR LED	Meaning
□ Off	No supply voltage L+
■ On	Supply voltage L+ present

4.3.2 Interrupts

The DQ 4×24VDC/2A HS digital output module supports diagnostic interrupts.

Diagnostic interrupts

The module generates a diagnostic interrupt at the following events:

- Short circuit
- Excess temperature
- Parameter assignment error
- No supply voltage
- Communication error
- Channel temporarily not available

Detailed information on the event is available in the STEP 7 online help.

4.3.3 Diagnostics alarms

Diagnostics alarms

A diagnostics alarm is output and the DIAG LED flashes on the module for each diagnostics event. You can read out the diagnostics alarms, for example, in the diagnostics buffer of the CPU. You can evaluate the error codes with the user program.

Note

You can connect 2 actuators per output.

The diagnostics of the two actuators influence each other in the case of duplicate wiring. This means that a single short-circuit affects both actuators.

Table 4- 6 Diagnostics alarms, their meaning and corrective measures

Diagnostics alarms	Error code	Meaning	Solution
Short circuit [1] [2]	1_H	Short-circuit of the actuator supply	Correct the process wiring
Excess temperature	5_H	The module has detected that the maximum permitted module temperature has been exceeded. All channels of the module are switched to high resistance. The module is then restarted.	Correct the process wiring
Parameter assignment error	10_H	• The module cannot evaluate parameters for the channel. • Incorrect parameter assignment.	Correct the parameter assignment
No supply voltage	11_H	No or insufficient supply voltage L+	• Check supply voltage L+ on the BaseUnit • Check BaseUnit type
Communication error	13_H	Module is defective.	Replace the module.
Channel temporarily not available	$1F_H$	Firmware update is currently in progress or was canceled. The module does not output any process values or substitute values in this state.	• Wait for firmware update. • Restart the firmware update.

[1] The channels 0 and 1 or 2 and 3 each form a load group. Within a load group, a short-circuit can have an effect on the adjacent channel. The load groups do not have an effect on each other in the case of a short-circuit.

[2] If the short-circuit persists, the module heats up. This may trigger temperature monitoring with excess temperature diagnostic interrupt.

Pulse width modulation operating mode 5

5.1 Connecting

5.1.1 Wiring and block diagram

In this section, you can find the block diagram of the DQ 4x24VDC/2A HS module showing the terminal assignments for a 2-wire and 3-wire connection in pulse width modulation operating mode.

You can find information on wiring the BaseUnit in the ET 200SP distributed I/O system (https://support.industry.siemens.com/cs/ww/en/view/58649293) system manual.

Note

You can connect 2 actuators per output.

Note

Cross circuit at output

Be aware that voltage from a cross circuit at the output can feed L+ to modules.

Note

- The load group of the module must begin with a light BaseUnit. Keep this in mind also during the configuration.
- The connection of actuators with 1-wire connection is not permitted.

Note

You may use and combine the different wiring options for all channels.

Note

Outputs DQ_n- must not be connected with ground.

Connection: 2-wire connection of actuators

The figure below shows an example for the terminal assignment of the digital output module DQ 4×24VDC/2A HS on the BaseUnit BU type A0 without AUX terminals (2-wire connection).

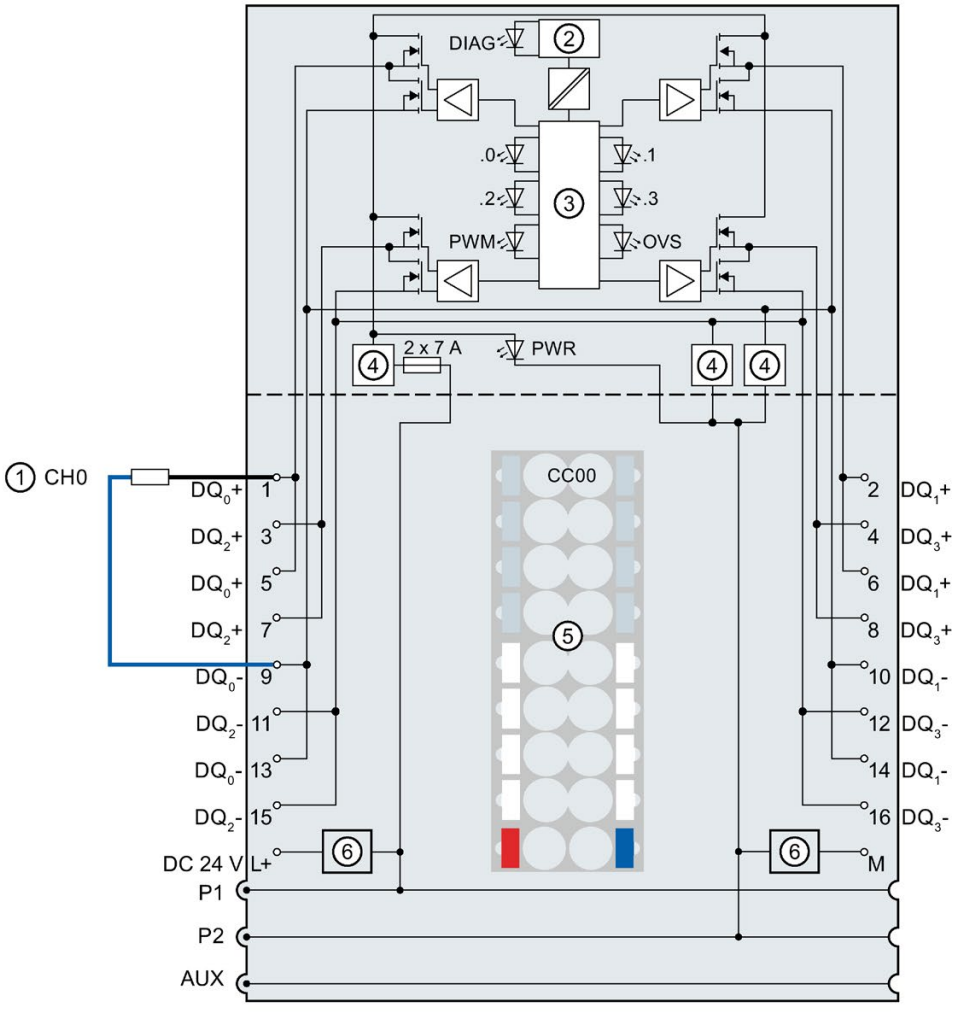

①	2-wire connection	24 V DC	Supply voltage L+ (infeed for light BaseUnit only)
②	Backplane bus interface	M	Ground
③	Control unit	P1, P2, AUX	Internal self-configuring voltage buses Connection to left (dark BaseUnit) Connection to left interrupted (light BaseUnit)
④	Polarity reversal protection	DIAG	Error or Diagnostics LED (green, red)
⑤	Color-coded label CCxx (optional)	.0, .1, .2, .3	Channel status LED (green)
⑥	Supply voltage filter circuit (only when light BaseUnit is present)	PWM	Pulse width modulation LED (green)
DQ_n+	Output signal pulse width modulation, channel n	OVS	Oversampling LED (green)
DQ_n-	Reference output signal, channel n	PWR	Power LED (green)

Figure 5-1 Block diagram and terminal assignment for 2-wire connection of actuators

Connection: 3-wire connection of actuators

The figure below shows an example for the terminal assignment of the digital output module DQ 4×24VDC/2A HS on the BaseUnit BU type A0 with AUX terminals (3-wire connection).

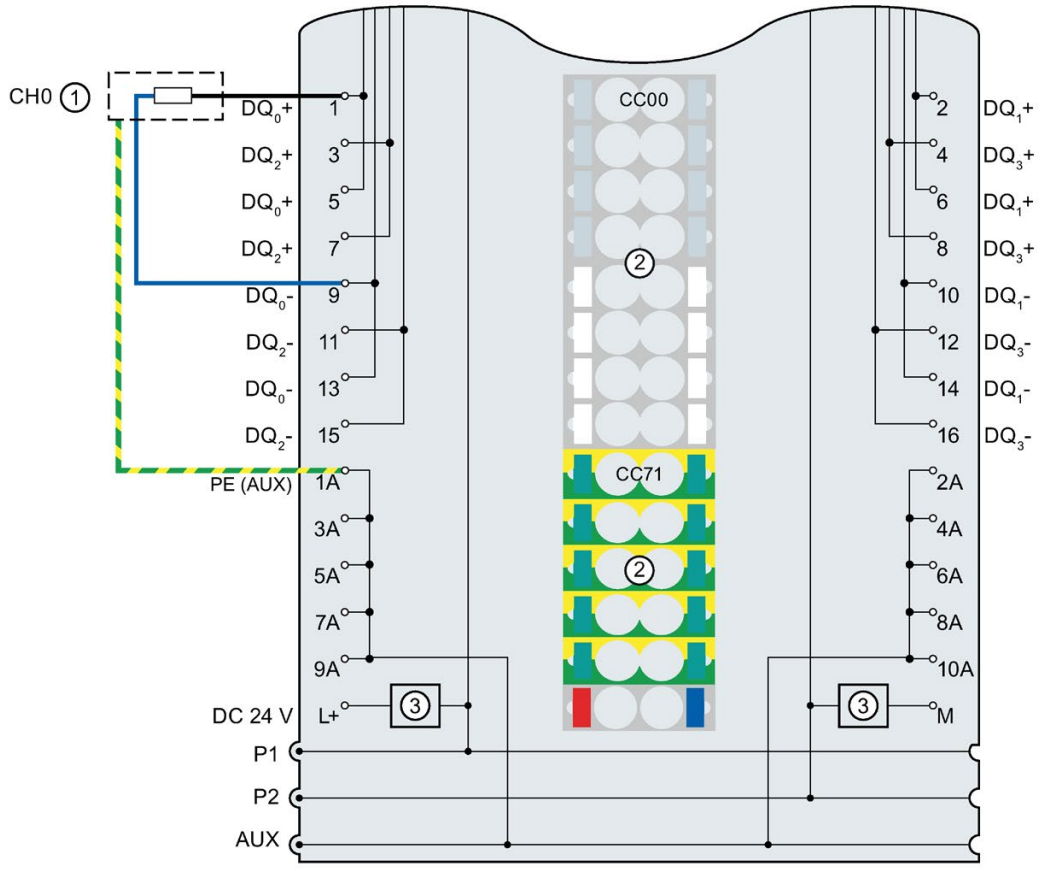

①	3-wire connection	1 A ... 10 A	AUX terminals
②	Color-coded labels CCxx (optional)	PE (AUX)	Protective conductor connection
③	Supply voltage filter circuit (only when light BaseUnit is present)	24 V DC	Supply voltage L+ (infeed for light BaseUnit only)
DQ_n+	Output signal pulse width modulation, channel n	M	Ground
DQ_n-	Reference output signal, channel n	P1, P2, AUX	Internal self-configuring voltage buses Connection to left (dark BaseUnit) Connection to left interrupted (light BaseUnit)

Figure 5-2 Terminal assignment for 3-wire connection of actuators

5.2 Parameters/address space

5.2.1 Pulse width modulation

Function

In the "pulse width modulation" operating mode, the four outputs only provide a pulse width modulated output signal.

The digital channel is activated with a pulse duty cycle that is updated cyclically as a function of the output value from the user program. The actuating signal is output digitally as a pulse train of on and off pulses.

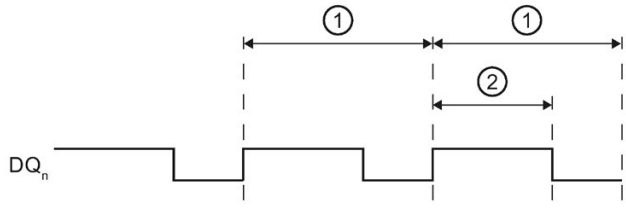

① Time period T; frequency of the pulse width modulation: f = 1/T

② Pulse duration (duty factor)

Figure 5-3 Pulse width modulation

Configuration

You configure the pulse width modulation with the following parameters:

- "Pulse width modulation" operating mode
- Pulse width modulation time period
- Substitute value duty cycle

Chronological sequence

The output value (0 ... 1000) is written from the user program to the output word of the channel. The module maps this value by means of the output characteristic and the values for minimum pulse duration and minimum pulse pause to the configured time period and thus determines the pulse duty cycle (the pulse duration) of the pulse width modulation.

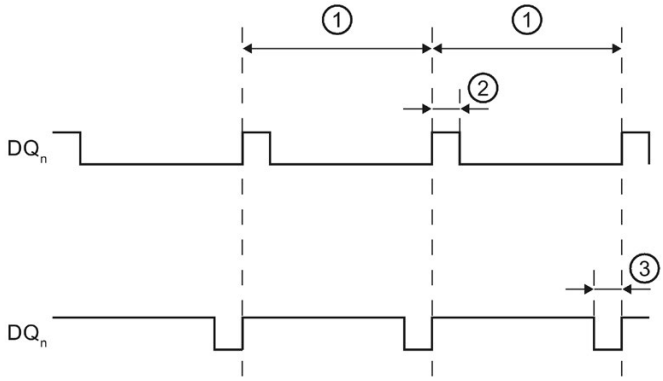

① Time period T
② Minimum pulse duration
③ Minimum pulse pause

Figure 5-4 Minimum pulse duration and minimum pulse pause

The minimum pulse duration and the minimum pulse pause are at least 2 µs each, which means:

- Any pulse duration that is shorter than the minimum pulse duration will be suppressed
- Any pulse duration that is longer than the time period minus minimum pulse duration is reduced to 100% (≙ output value 1000)

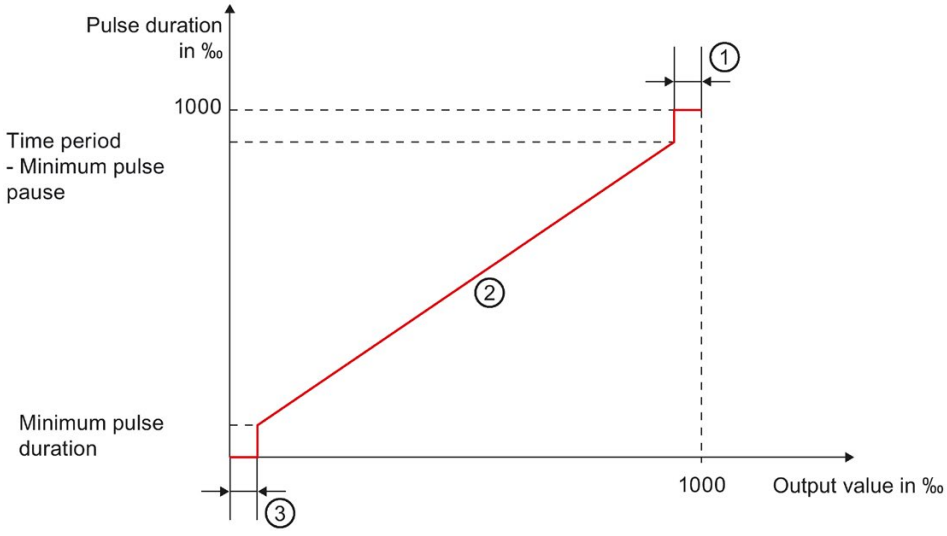

① Minimum pulse pause
② Output characteristic
③ Minimum pulse duration

Figure 5-5 Output characteristic of the pulse duration

The following values apply when determining the pulse duty cycle of the pulse width modulation:

Table 5- 1 Determining the pulse duty cycle of the pulse width modulation

Time period parameter	Frequency	Output value in the user program (‰)	Pulse duty cycle at output terminal DQ_n (‰)
0.20 ms	5000 Hz	0...9	0
		10...990	10...990
		991...1000	1000
0.40 ms	2500 Hz	0...4	0
		5...995	5...995
		996...1000	1000
0.93 ms	1071 Hz	0...2	0
		3...997	3...997
		998...1000	1000
1.33 ms	750 Hz	0, 1	0
		2...998	2...998
		999, 1000	1000
4.27 ms	234 Hz	0...1000	0...1000

Time period parameter	Frequency	Output value in the user program (‰)	Pulse duty cycle at output terminal DQ_n (‰)
10.67 ms	94 Hz	0...1000	0...1000
21.33 ms	47 Hz	0...1000	0...1000
34.13 ms	29 Hz	0...1000	0...1000
59.73 ms	17 Hz	0...1000	0...1000

Example

When you configure a channel with 5000 Hz (≙ 200 µs) and the user program writes the value 3 to the output word of the channel, this value is converted to 0 by the module: The channel is permanently 0.

"Diagnostics Overflow" parameter

You use the "Diagnostics Overflow" parameter to enable the diagnostics for the case that the permitted value range of the duty factor is exceeded, i.e. an output value > 1000 from the user program is written to the output word of the channel.

"Substitute value duty cycle" parameter

You use the "Substitute value duty cycle" parameter (0 ... 1000) to specify the pulse duty cycle of the pulse width modulation in the case of a CPU STOP.

Derating

Read the information on derating of the module in section Derating of the DQ 4x24VDC/2A HS (Page 95).

5.2.2 Parameters

Parameters

The effective range of the assignable parameters depends on the type of configuration.

The following configurations are possible:

- Central operation on an ET 200SP CPU or on an ET 200SP Open Controller
- Distributed operation on PROFINET IO in an ET 200SP system
- Distributed operation with PROFIBUS DP in an ET 200SP system

In addition to assigning parameters with the configuration software, you can also set the parameters in RUN mode (dynamically) using the user program. When assigning the parameters in the user program, the "WRREC" instruction transfers the parameters to the module using data records; see section Parameter assignment and structure of the parameter data record for pulse width modulation operating mode (Page 110).

The following parameter settings are possible for the respective operating mode:

Table 5- 2 Assignable parameters in pulse width modulation operating mode (GSD file) [3]

Parameter	Value range	Default	Configuration in RUN	Effective range with configuration software	
				HSP0127 for STEP 7 (TIA Portal); HSP0230 for STEP 7; GSD file PROFINET IO	GSD file PROFIBUS DP [1]
Operating mode [4]	• Normal operation DQ (valve control) [2] • Oversampling • Pulse width modulation • Cam control		No	Module	Module [1]
Output rate	• 1 value/cycle	1 value/cycle	No	Module	Module[1]
Diagnostics No supply voltage L+	• Disable • Enable	Disable	Yes	Module	Module [1]
Diagnostics Short circuit to L+/G	• Disable • Enable	Disable	Yes	Module	Module [1]
Diagnostics Overflow	• Disable • Enable	Disable	Yes	Module	Module [1]
Channel activated	• Disable • Enable	Enable	Yes	Channel	Channel [1]
Reaction to CPU STOP	• Shutdown • Keep last value • Output substitute value	Shutdown	Yes	Channel	Module [1]
Substitute value duty cycle	• 0% • 0.1% • 0.2% • ... • 100%	0%	Yes	Channel	Channel [1]

Parameter	Value range	Default	Configuration in RUN	Effective range with configuration software	
				HSP0127 for STEP 7 (TIA Portal); HSP0230 for STEP 7; GSD file PROFINET IO	GSD file PROFIBUS DP [1]
Pulse width modulation time period	• Off • 0.20 ms • 0.40 ms • 0.93 ms • 1.33 ms • 4.27 ms • 10.67 ms • 21.33 ms • 34.13 ms • 59.73 ms	0.93 ms	Yes	Channel	Channel [1]
Potential group	• Use potential group of the left module (dark BaseUnit) • Enable new potential group (light BaseUnit)	Use potential group of the left module	No	Module	Module [1]

[1] Because the number of parameters is limited to a maximum of 244 bytes per ET 200SP station when configuring with a PROFIBUS GSD, the possible parameter assignments are restricted. If required, you can still assign these parameters using the data record 128 as described in the column "GSD file PROFINET IO" (see table above). The parameter length of the I/O module is 15 bytes.

[2] Valve control is a special function of normal operation.

[3] Oversampling is not supported with GSD files.

[4] When configuring with HSP0230 for STEP 7 or with a GSD file, you determine the operating mode when you select the module name.

5.2.3 Explanation of parameters

Operating mode

At the module level, specifies the operating mode in which the module's channels are operated. When configuring with HSP0230 for STEP 7 or with a GSD file, you determine the operating mode when you select the module name.

- Normal operation as digital output module
  - Valve control is a special function of normal operation, see section Normal operation/Valve control (Page 21).
- Pulse width modulation, see section Pulse width modulation (Page 46)
- Oversampling, see section Oversampling (Page 34)
- Cam control, see section Cam control (Page 62)

Output rate

Specifies the number of subcycles per isochronous data cycle.
See section Oversampling (Page 34).

Diagnostics No supply voltage L+

Enabling of the diagnostics for no or insufficient supply voltage L+.

Diagnostics Short circuit to L+/G

Enabling of the diagnostics when a short-circuit of the actuator supply occurs.

Diagnostics Overflow

You use the "Diagnostics Overflow" parameter to enable the diagnostics for the case that the permitted value range of the duty factor is exceeded, i.e. an output value > 1000 from the user program is written to the output word of the channel. See section Pulse width modulation (Page 46).

Channel activated

Specifies whether a channel is activated or deactivated.

Reaction to CPU STOP

Determines the behavior of the module in the event of a CPU STOP.

Substitute value duty cycle

You use the "Substitute value duty cycle" parameter (0 ... 1000) to specify the pulse duty cycle of the pulse width modulation in the case of a CPU STOP. See section Pulse width modulation (Page 46).

Pulse width modulation time period

Specifies the frequency of the pulse width modulation.
See section Normal operation/Valve control (Page 21) and section Pulse width modulation (Page 46).

Potential group

With the "Potential group" parameter, you specify whether the module is plugged into a light or dark BaseUnit.

A potential group always begins with an I/O module that is plugged into a light BaseUnit. All modules inserted to the right of this that are plugged into dark BaseUnits belong to the same potential group, because the dark BaseUnits are supplied via the light BaseUnits.

The potential group ends at a new light BaseUnit or the end of the station.

Derating

Read the information on derating of the module in section Derating of the DQ 4x24VDC/2A HS (Page 95).

See also

Distributed I/O System ET 200SP
(https://support.industry.siemens.com/cs/ww/en/view/58649293)

5.2.4 Address space

Address space for configuration with pulse width modulation

The figure below shows the address space allocation for the configuration with pulse width modulation.

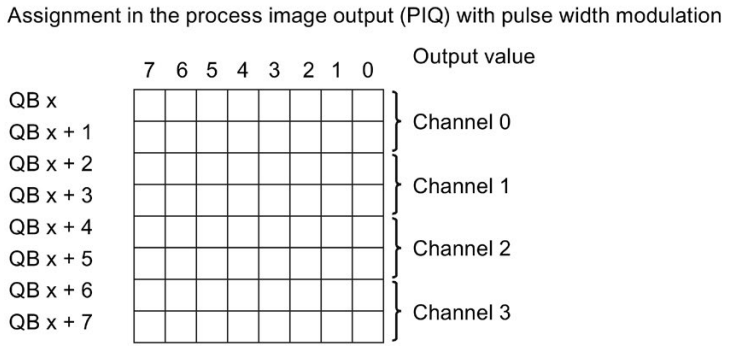

Figure 5-6 Address space of the DQ 4×24VDC/2A HS with pulse width modulation

5.3 Interrupts/diagnostics alarms

5.3.1 Status and error displays

LED displays

The figure below shows the location of the LED displays of the DQ 4×24VDC/2A HS.

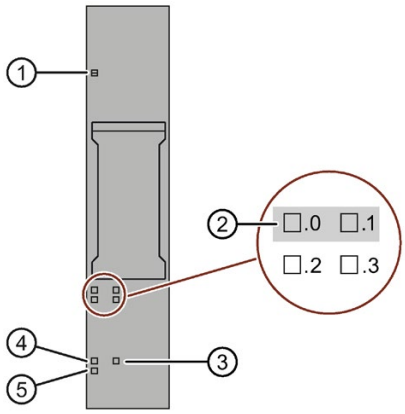

① DIAG (green/red)
② Channel status (green)
③ OVS (green)
④ PWM (green)
⑤ PWR (green)

Figure 5-7 LED displays

Meaning of the LEDs

The following tables contain the meaning of the Status and error displays. Corrective measures for diagnostics alarms can be found in the section Diagnostics alarms.

DIAG LED

Table 5- 3 Error display of the DIAG LED

DIAG LED	Meaning
□ Off	Backplane bus supply of the ET 200SP not OK
☼ Flashes	Module parameters not assigned
■ On	Module parameters assigned and no module diagnostics
☼ Flashes	Module parameters assigned and module diagnostics

Channel status LED

Table 5- 4 Status display of the channel status LED

Channel status LED	Meaning
□ Off	Channel deactivated or process signal = 0
■ On	Channel activated and process signal = 1

OVS LED and PWM LED

Table 5- 5 Status display of the oversampling LED

OVS LED	PWM LED	Meaning
□ Off	□ Off	DQ operating mode (valve control) active
■ On	□ Off	Oversampling operating mode active
□ Off	■ On	Pulse width modulation operating mode active
■ On	■ On	Cam control (MCC) operating mode active

PWR LED

Table 5- 6 Status display of the PWR LED

PWR LED	Meaning
□ Off	No supply voltage L+
■ On	Supply voltage L+ present

5.3.2 Interrupts

The DQ 4×24VDC/2A HS digital output module supports diagnostic interrupts.

Diagnostic interrupts

The module generates a diagnostic interrupt at the following events:

- Short circuit
- Excess temperature
- High limit violated
- Parameter assignment error
- No supply voltage
- Communication error
- Channel temporarily not available

Detailed information on the event is available in the STEP 7 online help.

5.3.3 Diagnostics alarms

Diagnostics alarms

A diagnostics alarm is output and the DIAG LED flashes on the module for each diagnostics event. You can read out the diagnostics alarms, for example, in the diagnostics buffer of the CPU. You can evaluate the error codes with the user program.

Note

You can connect 2 actuators per output.

The diagnostics of the two actuators influence each other in the case of duplicate wiring. This means that a single short-circuit affects both actuators.

Table 5- 7 Diagnostics alarms, their meaning and corrective measures

Diagnostics alarms	Error code	Meaning	Solution
Short circuit [1] [2]	1_H	Short-circuit of the actuator supply	Correct the process wiring
Excess temperature	5_H	The module has detected that the maximum permitted module temperature has been exceeded. All channels of the module are switched to high resistance. The module is then restarted.	Correct the process wiring
High limit violated	7_H	The permitted value range of the duty factor has been exceeded.	Correct the output value (0 to 1000)
Parameter assignment error	10_H	• The module cannot evaluate parameters for the channel. • Incorrect parameter assignment.	Correct the parameter assignment
No supply voltage	11_H	No or insufficient supply voltage L+	• Check supply voltage L+ on the BaseUnit • Check BaseUnit type
Communication error	13_H	Module is defective.	Replace the module.
Channel temporarily not available	$1F_H$	Firmware update is currently in progress or was canceled. The module does not output any process values or substitute values in this state.	• Wait for firmware update. • Restart the firmware update.

[1] The channels 0 and 1 or 2 and 3 each form a load group. Within a load group, a short-circuit can have an effect on the adjacent channel. The load groups do not have an effect on each other in the case of a short-circuit.

[2] If the short-circuit persists, the module heats up. This may trigger temperature monitoring with excess temperature diagnostic interrupt.

Cam control operating mode 6

6.1 Connecting

6.1.1 Wiring and block diagram

In this section, you can find the block diagram of the DQ 4x24VDC/2A HS module showing the terminal assignments for a 2-wire and 3-wire connection in cam control operating mode.

You can find information on wiring the BaseUnit in the ET 200SP distributed I/O system (https://support.industry.siemens.com/cs/ww/en/view/58649293) system manual.

Note

You can connect 2 actuators per output.

Note

Cross circuit at output

Be aware that voltage from a cross circuit at the output can feed L+ to modules.

Note

- The load group of the module must begin with a light BaseUnit. Keep this in mind also during the configuration.
- The connection of actuators with 1-wire connection is not permitted.

Note

You may use and combine the different wiring options for all channels.

Note

Outputs DQ_n- must not be connected with ground.

Connection: 2-wire connection of actuators

The figure below shows an example for the terminal assignment of the digital output module DQ 4×24VDC/2A HS on the BaseUnit BU type A0 without AUX terminals (2-wire connection).

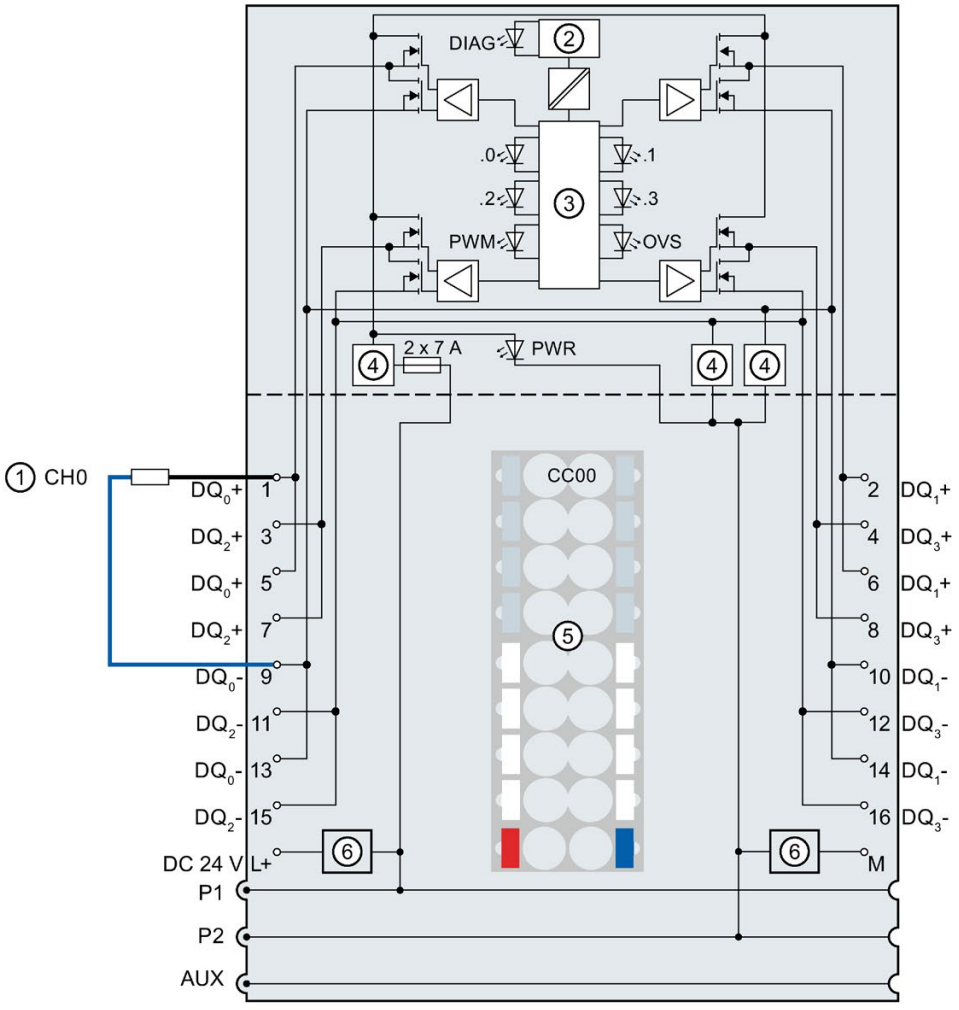

①	2-wire connection	24 V DC	Supply voltage L+ (infeed for light BaseUnit only)
②	Backplane bus interface	M	Ground
③	Control unit	P1, P2, AUX	Internal self-configuring voltage buses Connection to left (dark BaseUnit) Connection to left interrupted (light BaseUnit)
④	Polarity reversal protection	DIAG	Error or Diagnostics LED (green, red)
⑤	Color-coded label CCxx (optional)	.0, .1, .2, .3	Channel status LED (green)
⑥	Supply voltage filter circuit (only when light BaseUnit is present)	PWM	Pulse width modulation LED (green)
DQ_n+	Output signal cam control, channel n	OVS	Oversampling LED (green)
DQ_n-	Reference output signal, channel n	PWR	Power LED (green)
		MCC	Oversampling LED (green) and Power LED (green)

Figure 6-1 Block diagram and terminal assignment for 2-wire connection of actuators

Connection: 3-wire connection of actuators

The figure below shows an example for the terminal assignment of the digital output module DQ 4×24VDC/2A HS on the BaseUnit BU type A0 with AUX terminals (3-wire connection).

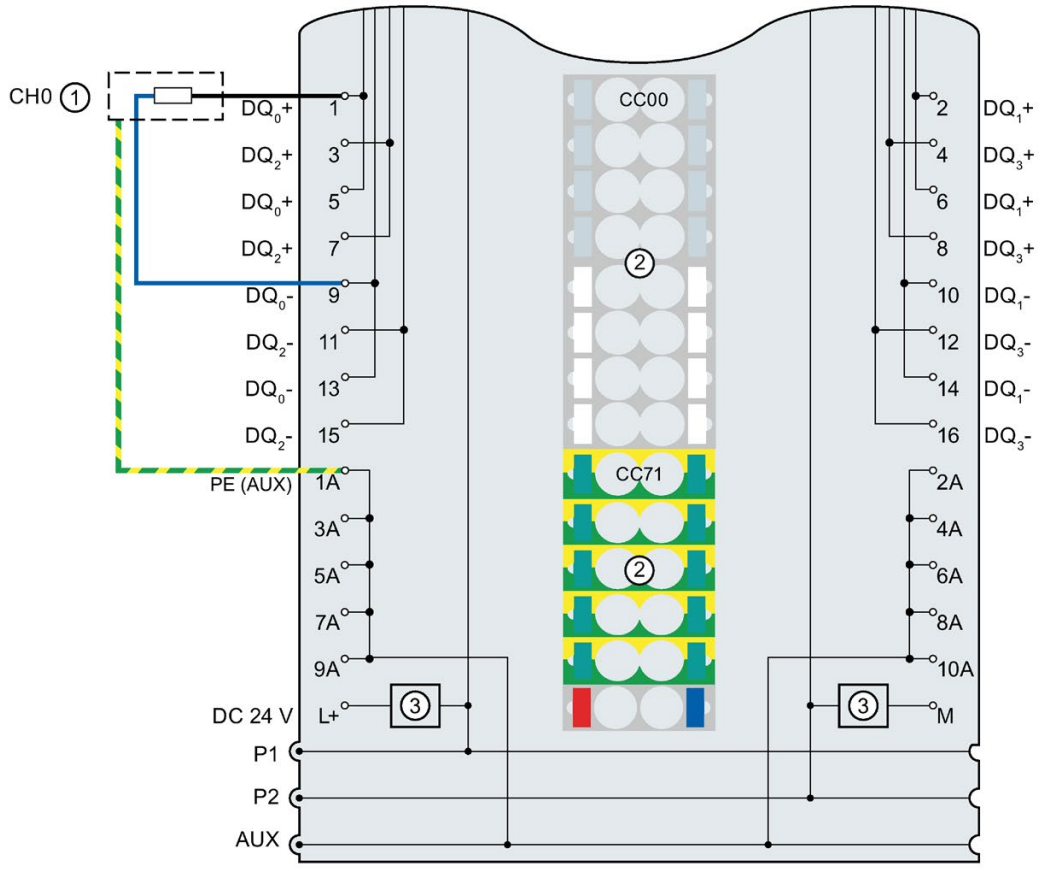

①	3-wire connection	1 A ... 10 A	AUX terminals
②	Color-coded labels CCxx (optional)	PE (AUX)	Protective conductor connection
③	Supply voltage filter circuit (only when light BaseUnit is present)	24 V DC	Supply voltage L+ (infeed for light BaseUnit only)
DQ_n+	Output signal cam control, channel n	M	Ground
DQ_n-	Reference output signal, channel n	P1, P2, AUX	Internal self-configuring voltage buses Connection to left (dark BaseUnit) Connection to left interrupted (light BaseUnit)

Figure 6-2 Terminal assignment for 3-wire connection of actuators

6.2 Parameters/address space

6.2.1 Cam control

Function

In "Cam control" operating mode, switching signals are generated dependent on an encoder value.

The axis can be executed as:

- Linear axis
- Rotary axis with modulo function

The ET 200SP distributed I/O system determines the current actual position value of the axis using an encoder that is connected to an encoder module, e.g. I/O module or TM Count 1x24V/TM PosInput 1 technology module. In doing so, the encoder signals are evaluated, e.g. the pulses, which are proportional to the distance covered, are counted. The digital outputs (cams) switch on or off depending on the actual position value. However, the output value can be overruled by the control interface, PROFIenergy or CPU STOP.

A maximum of 16 cams can be configured for each DQ4HS module. These 16 cams can be distributed among the 4 outputs of the module as desired.

You realize a cam control with more than 4 cam tracks with the help of several DQ4HS modules, whereby each DQ4HS module can represent up to 4 cam tracks. All the DQ4HS modules of this cam control unit are supplied from a single encoder source but have their own input/output area. Each DQ4HS module has its own control/feedback interface and can operate independent of the other DQ4HS module in the multi-track cam control unit.

The DQ4HS module can also be used in mixed operation. In mixed operation, a portion of the outputs can be used as cam track and the rest of the outputs can be controlled directly by the CPU.

Requirement

The cam control function can only be used in combination with an interface module that supports module to module communication (MtM). For example, interface module IM 155-6 PN/2 HF V4.1 or higher.

Configuration

You configure the cam control with the following parameters:

- "Cam control" operating mode
- Modulo activated
- Encoder module
- Hysteresis
- Axis reference position
- Minimum encoder value/Maximum encoder value
- Cam start position and end position
- Cam effective direction
- Cam channel assignment
- Pulsed cam output duty cycle
- Pulsed cam output period

Note

Pulsed cam output

You can activate/deactivate the pulsed cam output via the control interface.

Encoder data

"Cam control" operating mode requires an external encoder that is connected to a separate encoder module. The encoder module must be in the same station. The interface module uses module to module communication (MtM) to transfer the encoder data from the encoder module to the DQ4HS module where the encoder data is processed. The module to module communication (MtM) must be appropriately configured in the configuration.

The encoder value contains the axis position within the encoder data. Multiple electronic cams (switching points as a function of the encoder value) can be configured in the DQ4HS module. Through these cams, the digital outputs exhibit a defined switching behavior in relation to the encoder value. In "Cam control" operating mode, the digital output is the cam track. Mechanical vibrations of the encoder can be compensated using a configurable hysteresis.

The configured range of the cam (cam start and end positions and effective direction) is compared with the encoder value, and the switching state (0/1) of the digital output (cam track) is generated based on the result of the comparison.

Note

Incorrect switching operation due to increment jumps

Increment jumps can occur if, due to the system, an encoder value is not transferred to the digital output module at each increment of the sensor, e.g. a value is transferred at only every fourth increment. As a result, the output can be switched on and off incorrectly.

If increment jumps are possible in your system, ensure that the maximum increment jump is less than 1/2 x (maximum encoder value - minimum encoder value).

Note

Direction detection

If no direction information is included with the supplied encoder data, two valid different encoder values are needed for the direction detection (SYNC = 1). The two values allow a subtraction to be performed and the direction to be derived from the result.

Cam start position and end position

The switch-on range of cams is basically defined by a start position and end position.

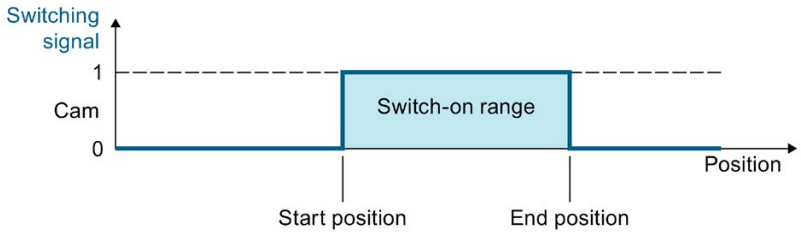

Figure 6-3 Cam start position and end position

Effective direction

A cam can be switched as a function of the motion direction.

The following effective directions are possible for the cams:

None:

The cam is not evaluated.

Positive:

Switching behavior for effective direction "Positive"

- The cam switches on when the start position is reached in the positive motion direction ①.
- The cam switches off when the end position is crossed in the positive motion direction ②.
- At a direction reversal within the switch-on range from the positive to negative effective direction, the cam is switched off ③.
- At a direction reversal within the switch-on range from the negative to positive effective direction, the cam is switched on ④.

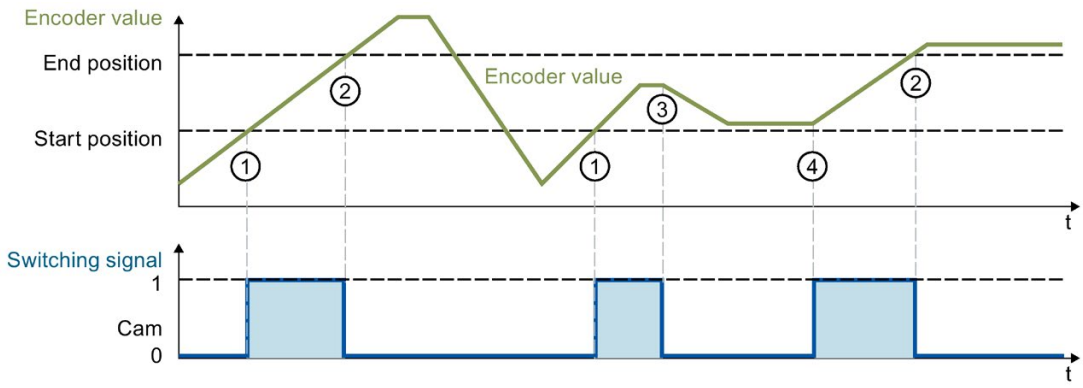

Figure 6-4 Cam with effective direction "Positive"

Negative:

Switching behavior for effective direction "Negative":

- The cam switches on when the end position is reached in the negative motion direction ①.
- The cam switches off when the start position is crossed in the negative motion direction ②.
- At a direction reversal within the switch-on range from the negative to positive effective direction, the cam is switched off ③.
- At a direction reversal within the switch-on range from the positive to negative effective direction, the cam is switched on ④.

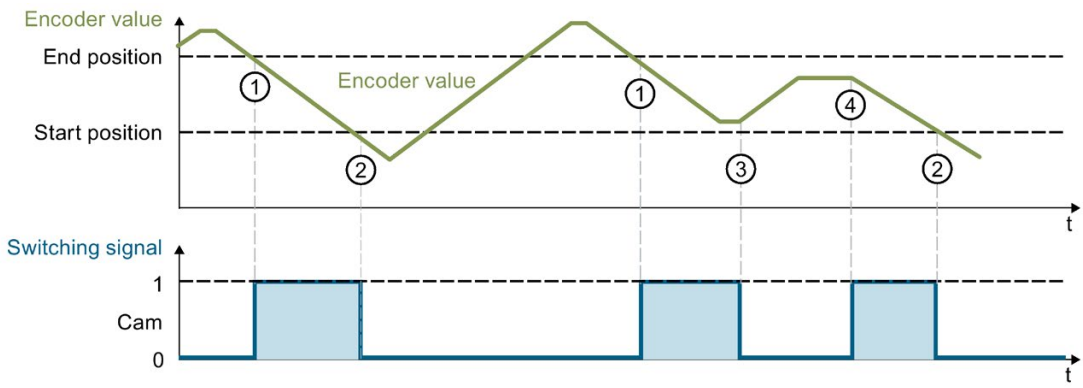

Figure 6-5 Cam with effective direction "Negative"

Both:

Switching behavior for effective direction "Both":

- The cam switches on when the encoder value is within the switch-on range ①.

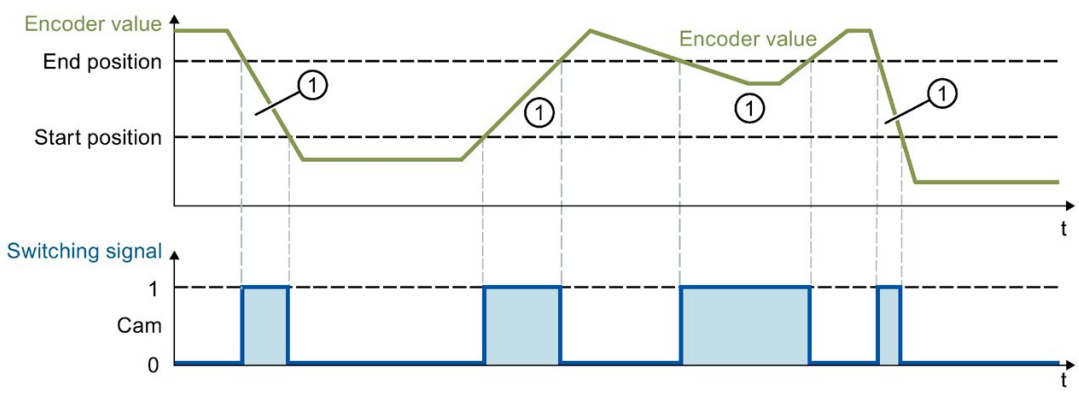

Figure 6-6 Cam with effective direction "Both"

Hysteresis

Fluctuations of the position value of an axis can cause unwanted switching on and off in the cam control. Such unwanted switching states can be suppressed by configuring a hysteresis (> 0).

The hysteresis is a position tolerance within which the position values may vary without changing the switching state of the cam. Changes of direction detected within the hysteresis are ignored.

Behavior when hysteresis is activated:

- The status of the hysteresis is indicated in the feedback interface (HYS).
- The configured hysteresis width is in effect for all cams.
- The hysteresis boundary points can be read out on the HYS-START and HYS-END registers. They represent the hysteresis range spanned by the firmware.
- The hysteresis is always reevaluated by the firmware if no hysteresis range is currently activated on the cam (HYS=0) at the time of a direction reversal.
- The hysteresis range extends in the positive and negative directions around the detected direction reversal point. The hysteresis range thus extends over double the configured hysteresis.
- The following applies within the hysteresis:
  - The switching state of the cam is not changed.
- After the hysteresis range is exited, the output is set according to the cam settings.

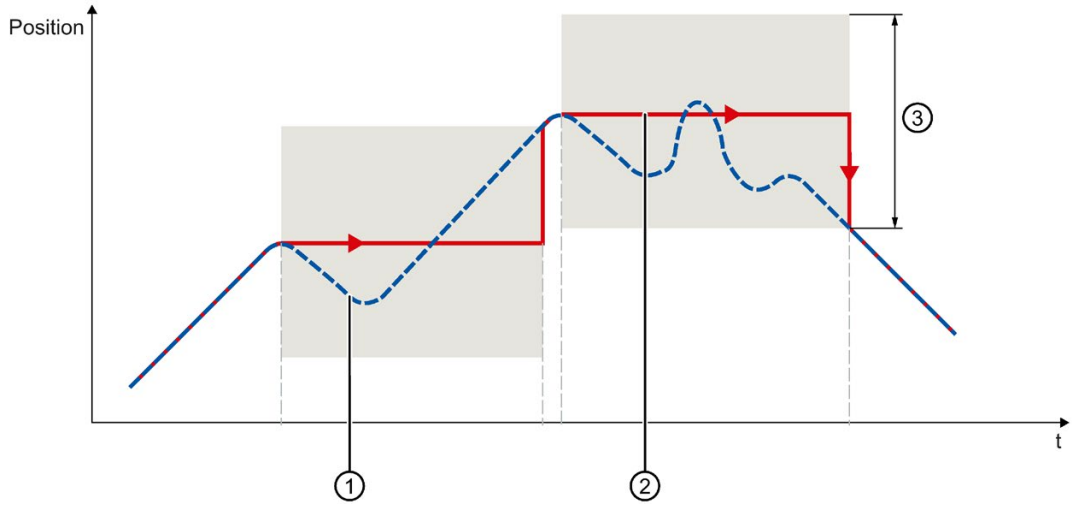

① Actual position
② Effective position
③ Effective hysteresis

Figure 6-7 Hysteresis range - Detail

The following example shows the effects of the hysteresis on the switching behavior of the cam with positive effective direction. The hysteresis keeps the output stable when the encoder value signals a small direction reversal. For better orientation, lines are shown for the signal changes.

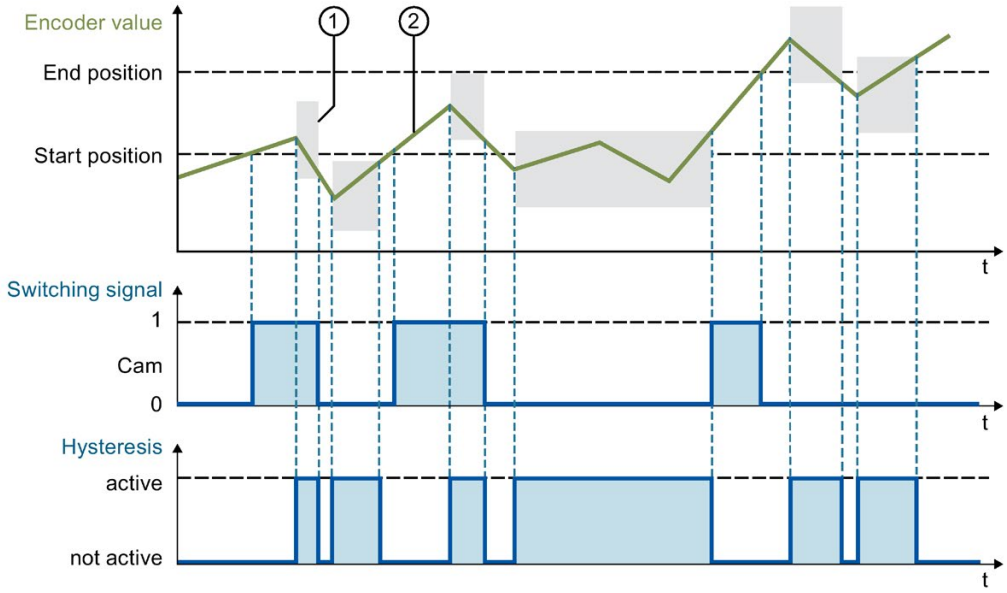

① Hysteresis range
② Encoder value

Figure 6-8 Cam with hysteresis

Channel assignment

You use the channel assignment to specify the assignment of output channel to cam. You can assign an output channel to each cam. All cams that are assigned to the same output channel must not overlap.

Note

Effective direction

Cams with configured effective direction "None" are disabled.

Pulsed cam output

It is possible to pulse the cams. This function can be activated via a control interface and is active while a cam has state 1. You configure the pulsed cam output with the "Pulsed cam output duty cycle" and "Pulsed cam output period" parameters.

You use the "Pulsed cam output duty cycle" parameter (0 ... 1000) to specify the pulse duty cycle of the "modulated upon" pulse within the configured period.

Note

In contrast to the "Pulse width modulation" operating mode, the duty cycle cannot be updated cyclically as a function of an output value from the user program.

You use the "Pulsed cam output period" parameter to specify the frequency of the pulse "modulated upon" for the cam control.

Note

The edges of the pulsed output cam are not synchronized with the cam start or end.

If the interpulse period is currently active, the first rising edge can come later at the cam start and the last falling edge can come earlier at the cam end.

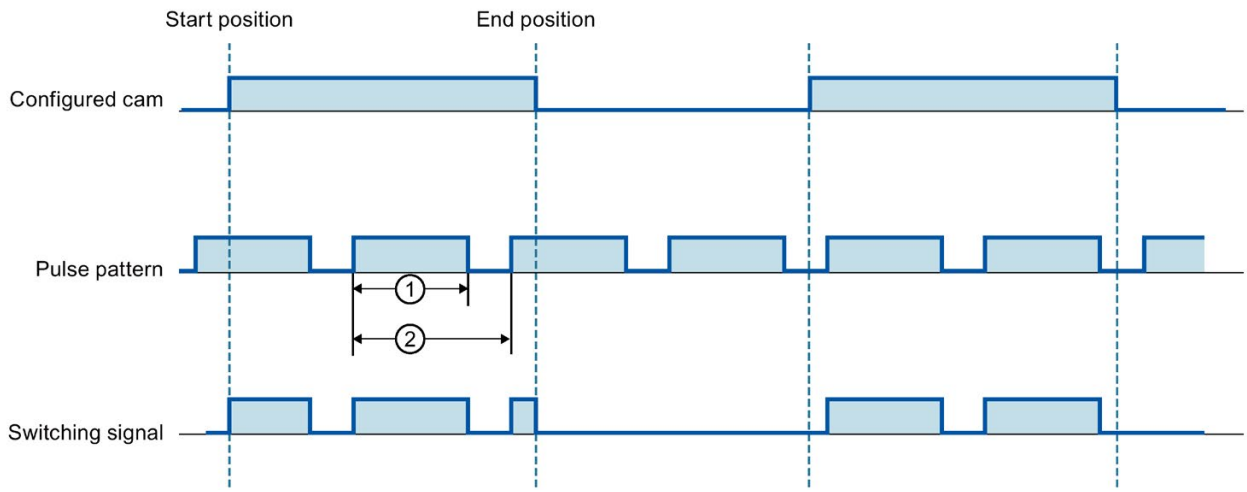

① T_{ON}
② Period
Duty cycle = T_{ON} / Period * 100%

Figure 6-9 Pulsed cam output

Example of the application of the pulsed cam output:
A glue trace is to be applied to a box for adhesion. To save glue, glue dots will be placed instead of a continuous trace in the switch-on range (cam).

See also

Pulse width modulation (Page 46)

6.2.2 Parameters

Parameters

The effective range of the assignable parameters depends on the type of configuration.

The following configurations are possible:

- Distributed operation on PROFINET IO in an ET 200SP system

In addition to assigning parameters with the configuration software, you can also set the parameters in RUN mode (dynamically) using the user program. When assigning the parameters in the user program, the "WRREC" instruction transfers the parameters to the module using data records; see section Parameter assignment and structure of the parameter data record for cam control operating mode (Page 116).

The module to module communication (MtM) must also be configured for the cam control operating mode. You can find additional information regarding module to module communication (MtM), e.g. in manual Interface Module IM 155-6 PN/2 HF.

The following parameter settings are possible:

Table 6- 1 Assignable parameters in cam control operating mode (GSD file) [2]

Parameter	Value range	Default	Configuration in RUN	Effective range with configuration software
				GSD file PROFINET IO
Operating mode [3]	• Normal operation DQ (valve control) [1] • Oversampling • Pulse width modulation • Cam control		No	Module
Diagnostics No supply voltage L+	• Disable • Enable	Disable	Yes	Module
Diagnostics Short circuit to L+/G	• Disable • Enable	Disable	Yes	Module
Encoder source diagnostics	• Disable • Enable	Disable	Yes	Module
Modulo activated	• Disable • Enable	Disable	Yes	Module

Parameter	Value range	Default	Configuration in RUN	Effective range with configuration software
				GSD file PROFINET IO
Encoder module	• DI 8x24VDC HS, Count, Ch.0 • DI 8x24VDC HS, Count, Ch.1 • DI 8x24VDC HS, Count, Ch.2 • DI 8x24VDC HS, Count, Ch.3 • AI 2xU/I 2-/4-wire HS, Ch.0 • AI 2xU/I 2-/4-wire HS, Ch.1 • AI 2xU/I 2-/4-wire HS, QI, Ch.0 • AI 2xU/I 2-/4-wire HS, QI, Ch.1 • TM Count 1x24VDC, Ch.0 [4] • TM Count 1x24VDC Fastmode, Ch.0 • TM PosInput 1, Ch.0 [4] • TM PosInput 1 Fastmode, Ch.0 • AI 2xSG 4-/6-wire HS, Ch.0 [4] • AI 2xSG 4-/6-wire HS, Ch.1 [4]	DI 8x24VDC HS, Count, Ch.0	No	Module
Hysteresis	• 0 = Not activated • 1 to 65535	0 = Not activated	Yes	Module
Axis reference position	• -2,147,483,648 to 2,147,483,647	0	Yes	Module
Minimum encoder value	• -2,147,483,648 to 2,147,483,647	0	Yes	Module
Maximum encoder value	• -2,147,483,648 to 2,147,483,647	2,147,483,646	Yes	Module
Cam 0 start position to Cam 15 start position	• -2,147,483,648 to 2,147,483,647	0	Yes	Module
Cam 0 end position to Cam 15 end position	• -2,147,483,648 to 2,147,483,647	0	Yes	Module
Cam 0 effective direction to Cam 15 effective direction	• None • Positive • Negative • Both	None	Yes	Module
Cam 0 channel assignment to Cam 15 channel assignment	• Channel 0 • Channel 1 • Channel 2 • Channel 3	Channel 0	Yes	Module

Parameter	Value range	Default	Configuration in RUN	Effective range with configuration software
				GSD file PROFINET IO
Channel activated	• Disable • Enable	Enable	Yes	Channel
Reaction to CPU STOP	• Shutdown • Keep last value • Output substitute value 1	Shutdown	Yes	Channel
Pulsed cam output duty cycle	• 0% • 0.1% • 0.2% • ... • 100%	50%	Yes	Channel
Pulsed cam output period	• Off • 0.20 ms • 0.40 ms • 0.93 ms • 1.33 ms • 4.27 ms • 10.67 ms • 21.33 ms • 34.13 ms • 59.73 ms	0.93 ms	Yes	Channel
Potential group	• Use potential group of the left module (dark BaseUnit) • Enable new potential group (light BaseUnit)	Use potential group of the left module	No	Module

[1] Valve control is a special function of normal operation.

[2] Oversampling is not supported with GSD files.

[3] When configuring with a GSD file, you determine the operating mode when you select the module name.

[4] Only available in the configuration variant "DQ 4x24VDC/2A HS V2.0, MCC (16 Byte) MtM".

The following parameters are possible for the module to module communication (MtM)

Table 6- 2 Assignable parameters for module to module communication (MtM)

Parameters	Value range	Default	Configuration in RUN	Effective range with configuration software
				GSD file PROFINET IO
Slot of encoder module	1 to 64	1	No	Module
Subslot of encoder module	1	1	No	Module
Encoder module [1]	• DI 8x24VDC HS, Count, Ch.0 • DI 8x24VDC HS, Count, Ch.1 • DI 8x24VDC HS, Count, Ch.2 • DI 8x24VDC HS, Count, Ch.3 • AI 2xU/I 2-/4-wire HS, Ch.0 • AI 2xU/I 2-/4-wire HS, Ch.1 • AI 2xU/I 2-/4-wire HS, QI, Ch.0 • AI 2xU/I 2-/4-wire HS, QI, Ch.1 • TM Count 1x24VDC, Ch.0 [2] • TM Count 1x24VDC Fastmode, Ch.0 • TM PosInput 1, Ch.0 [2] • TM PosInput 1 Fastmode, Ch.0 • AI 2xSG 4-/6-wire HS, Ch.0 [2] • AI 2xSG 4-/6-wire HS, Ch.1 [2]	DI 8x24VDC HS, Count, Ch.0	No	Module

[1] The parameter must be assigned identical with the "Encoder module" parameter under "Parameters in cam control operating mode".

[2] Only available in the configuration variant "DQ 4x24VDC/2A HS V2.0, MCC (16 Byte) MtM".

6.2.3 Explanation of parameters

6.2.3.1 Parameters in cam control operating mode

Operating mode

At the module level, specifies the operating mode in which the module's channels are operated. When configuring using a GSD file, you determine the operating mode when you select the module name.

- Normal operation as digital output module
  - Valve control is a special function of normal operation, see section Normal operation/Valve control (Page 21).
- Pulse width modulation, see section Pulse width modulation (Page 46)
- Oversampling, see section Oversampling (Page 34)
- Cam control, see section Cam control (Page 62)

Diagnostics No supply voltage L+

Enabling of the diagnostics for no or insufficient supply voltage L+.

Diagnostics Short circuit to L+/G

Enabling of the diagnostics when a short-circuit of the actuator supply occurs.

Encoder source diagnostics

Enabling of the diagnostics for the following events:

- Invalid encoder value when modulo is deactivated (outside minimum encoder value/maximum encoder value)
- Value status of the encoder module = 0
- Encoder module removed

Modulo activated

When "Modulo" is activated (value = 1), the encoder value is mapped onto a recurring modulo range. The modulo range is defined by the start value and the length. The start value corresponds to the "Minimum encoder value" parameter.

The length is calculated using the following formula:

Length = ABS (maximum encoder value - minimum encoder value) +1

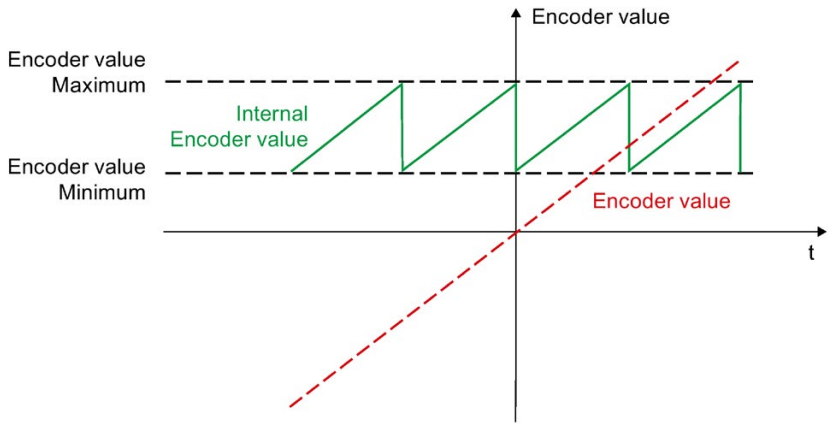

Figure 6-10 Modulo calculation

Encoder module

With the help of the "Encoder module" parameter, you specify how the encoder data that is transferred to the DQ4HS module via module to module communication (MtM) is interpreted. The selected encoder module/encoder channel must be identical with the configured encoder module that supplies the encoder data.

Depending on which encoder module is being used, not only the encoder value but also the value status of the encoder module and/or the direction of the encoder is included in the supplied encoder data and processed in the cam control.

The following table shows the availability of value status and direction of the encoder module:

Table 6- 3 Availability of value status and direction of the encoder module:

Encoder module	Value status	Direction
DI 8x24VDC HS	-	-
AI 2xU/I 2-/4-wire HS	x [1]	-
TM Count 1x24VDC	x	x
TM PosInput 1	x	x
AI 2xSG 4-/6-wire HS	x	-

[1] In the configuration variant with QI.

The value status of the encoder module affects the value status of the DQ4HS module. If the value status of the encoder module is invalid, the value status of the DQ4HS module is set to 0.

For encoder modules that do not provide a direction in the encoder data, it must be kept in mind that only 2 valid different encoder values have to be available in the cam control before the internal direction detection can evaluate the encoder value and the associated configured cam. With the first valid encoder value, INP_OK = 1 is set, and with the second valid value, SYNC = 1 is additionally set.

Hysteresis

With the help of a hysteresis, fluctuations (minimal direction reversal in the encoder value) that affect the encoder value can be compensated.

The hysteresis setting must satisfy the following conditions:

- Hysteresis < ABS ((maximum encoder value - minimum encoder value) / 4)
- Hysteresis < Cam_i end position - Cam_i start position [i = 0 to 15]

Axis reference position

With the help of the axis reference position, the encoder value can be adapted or corrected, e.g. for taking the zero position of the sensor into account. The axis reference position is subtracted from the encoder value before further processing of the encoder value.

Encoder value minimum/maximum

- "Minimum encoder value" is the low value of the valid encoder range. When "Modulo" is activated, this value is the start value for the modulo operation.
- "Maximum encoder value" is the high value of the valid encoder range. When "Modulo" is activated, this value is used for calculating the length for the modulo operation.

The difference of "Maximum encoder value" and "Minimum encoder value" must be at least 2.

When "Modulo" is deactivated, a check is made to determine whether the encoder value is less than "Minimum encoder value" and greater than "Maximum encoder value".

When "Modulo" is activated, the result of "Maximum encoder value" - "Maximum encoder value" must not exceed the value 2,147,483,646.

Cam 0 start position/end position to Cam 15 start position/end position

The position values are used to specify the switching range of the cam that, in combination with the effective direction and channel assignment, leads to the switching action at the output.

When modulo is deactivated, the following applies:

- Minimum encoder value <= Cam start position < Cam end position <= Maximum encoder value

When modulo is activated, the following applies:

- Minimum encoder value < Maximum encoder value
- Minimum encoder value <= Cam start position <= Maximum encoder value
- Minimum encoder value <= Cam end position <= Maximum encoder value
- Cam start position <> Cam end position

See section Cam control (Page 62).

Cam 0 effective direction to Cam 15 effective direction

With this parameter, you specify the effective direction of the cam.

See section Cam control (Page 62).

Cam 0 channel assignment to Cam 15 channel assignment

With this parameter, you specify the assignment of the output channel for a cam. You can assign an output channel to each cam.

Channel activated

Specifies whether a channel is activated or deactivated.

Reaction to CPU STOP

Specifies the behavior of the module in the event of a CPU STOP and for all channels in the cam control in the event of invalid encoder values.

Note

With "Output substitute value 1" or "Keep last value", a pulsed cam output continues to act.

Pulsed cam output duty cycle

This parameter indicates the percentage of switching state "1" for the time specified in the "Pulsed cam output period" parameter.

Pulsed cam output period

This parameter specifies the period of the pulsed cam output.

Potential group

With the "Potential group" parameter, you specify whether the module is plugged into a light or dark BaseUnit.

A potential group always begins with an I/O module that is plugged into a light BaseUnit. All modules inserted to the right of this that are plugged into dark BaseUnits belong to the same potential group, because the dark BaseUnits are supplied via the light BaseUnits.

The potential group ends at a new light BaseUnit or the end of the station.

See also

Distributed I/O System ET 200SP
(https://support.industry.siemens.com/cs/ww/en/view/58649293)

6.2.3.2 Parameters for module to module communication (MtM)

Slot of encoder module

Specifies the slot of the encoder module for the module to module communication (MtM)

Subslot of encoder module

This value is permanently preset to 1.

Encoder module

Specifies the module that is used as an encoder module for the module to module communication (MtM)

Note

Parameter assignment of the encoder module

The parameter must be assigned identical with the "Encoder module" parameter under Parameters in cam control operating mode (Page 74).

6.2.4 Address space

6.2.4.1 Assignment of the control interface

Control interface

The user program uses the control interface to influence the behavior of the cam control. The figure below shows the address space allocation for the control interface in the process image output.

"QB x" represents the start address of output byte x.

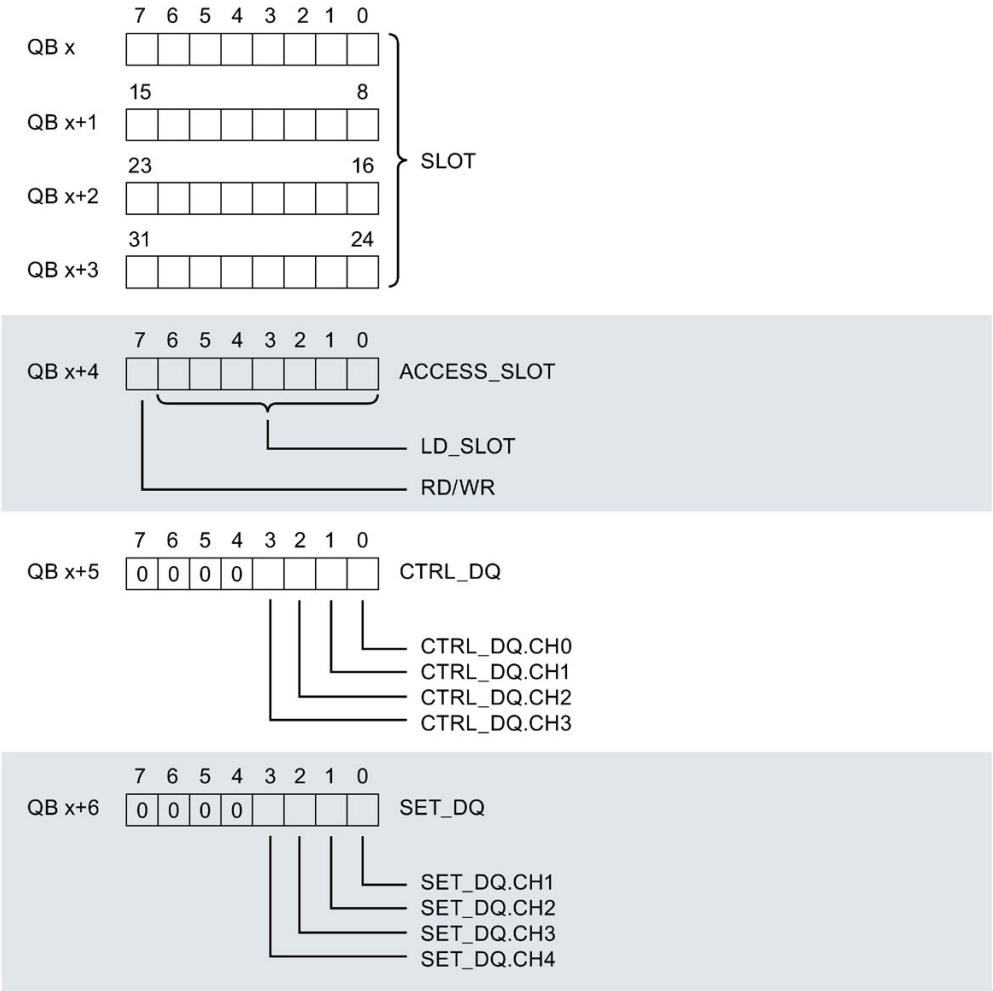

Figure 6-11 Assignment of the control interface

6.2.4.2 Notes on the control interface

Notes on the control bits

Table 6- 4 Details for the control interface

Control bit	Notes
SLOT	You use this value to specify the write accesses for the registers addressable with LD_SLOT.
ACCESS_SLOT	• RD/WR = 0: Read access to the addressed register. • RD/WR = 0 --> 1: Writing is enabled at a transition from "0" to "1". Note: After a successful write operation, the addressed register is read. • LD_SLOT You use this value to select the register, see Notes on the control interface (Page 80).
CTRL_DQ.CHx	You use this bit to specify how channel X is controlled. • 0 = Direct channel writing by the CPU. • 1 = Take channel value from the cam track.
SET_DQ.CHx	Values for the direct channel writing by the CPU. The bit is processed in combination with bit CTRL_DQ.x = 0. • 0 = Channel X outputs the value 0. • 1 = Channel X outputs the value 1.

Table 6- 5 Addressable register in LD_SLOT

Value of LD_SLOT	Register	Notes
0x00	CAM_Ctrl-Version	Version of the software module and the user ID • Bits 0 to 7: Version-Low of SW module CAM_Ctrl • Bits 8 to 15: Version-High of SW module CAM_Ctrl • Bits 16 to 31: User ID
0x01	CAM_Ctrl-Config	Static module configuration • Bits 0 to 7: Number of channels • Bits 8 to 15: Number of cams • Bits 16 to 23: Number of internal registers • Bits 24 to 31: Reserved
0x02	ENC_RAW	Raw copied encoder value
0x03	HYS_START	When hysteresis is active (STS_REG.HYS = 1), the HYS_START and HYS_END registers contain the boundary points of the hysteresis.
0x04	HYS_END	
0x05	ENC_ERRORS	Read: Number of detected errors in the encoder data (change from 1 to 0 of bit INP_OK in byte STS_REG of the feedback interface). Write: Resetting the counter

Value of LD_SLOT	Register	Notes
0x06	DIFF_MEDIAN [1]	Read: Averaged difference value of the incoming encoder values (indicator for update rate) The evaluation is directly coupled to the raw value (encoder data). • Only the differences between the encoder values as a moving average are evaluated. Write: Resetting the counter
0x07	PWM_WRITE	Read: Status of the currently activated pulsed cam output Write: Activation/deactivation of the pulsed cam output • Deactivate pulsed cam output for channel X: SLOT.Bitx = 0 • Activate pulsed cam output for channel X: SLOT.Bitx = 1
0x08	CAM_ON-INFO	Bit string with the switching state of the 16 cams of the cam pool

[1] You can use the DIFF_MEDIAN value, for example, to evaluate the increment jumps occurring in the application during the commissioning phase.

6.2.4.3 Assignment of the feedback interface

Feedback interface

The user program receives current values and status information from the module via the feedback interface. The figure below shows the address space allocation for the feedback interface in the process image input.

"IB x" represents the start address of input byte x.

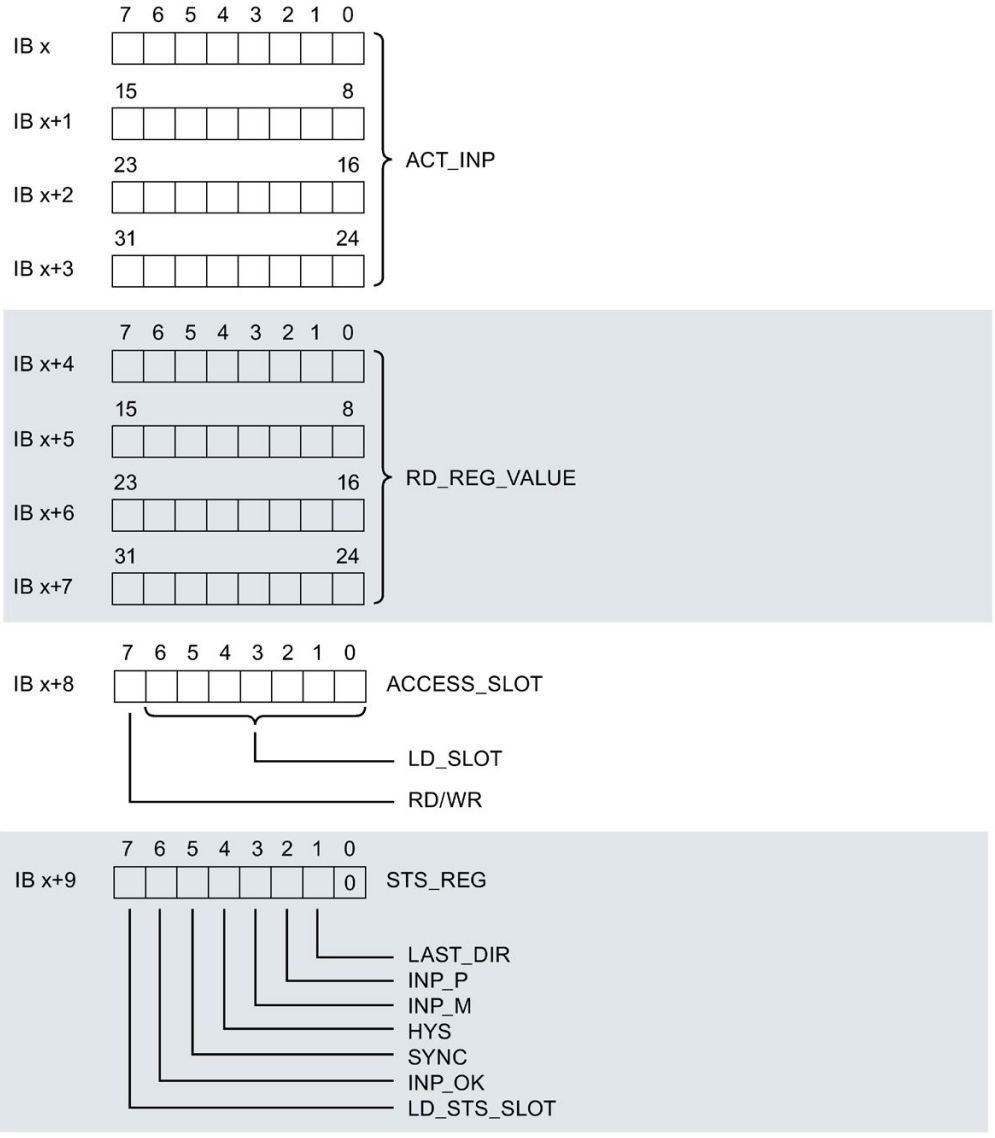

Figure 6-12 Assignment of the feedback interface, part 1

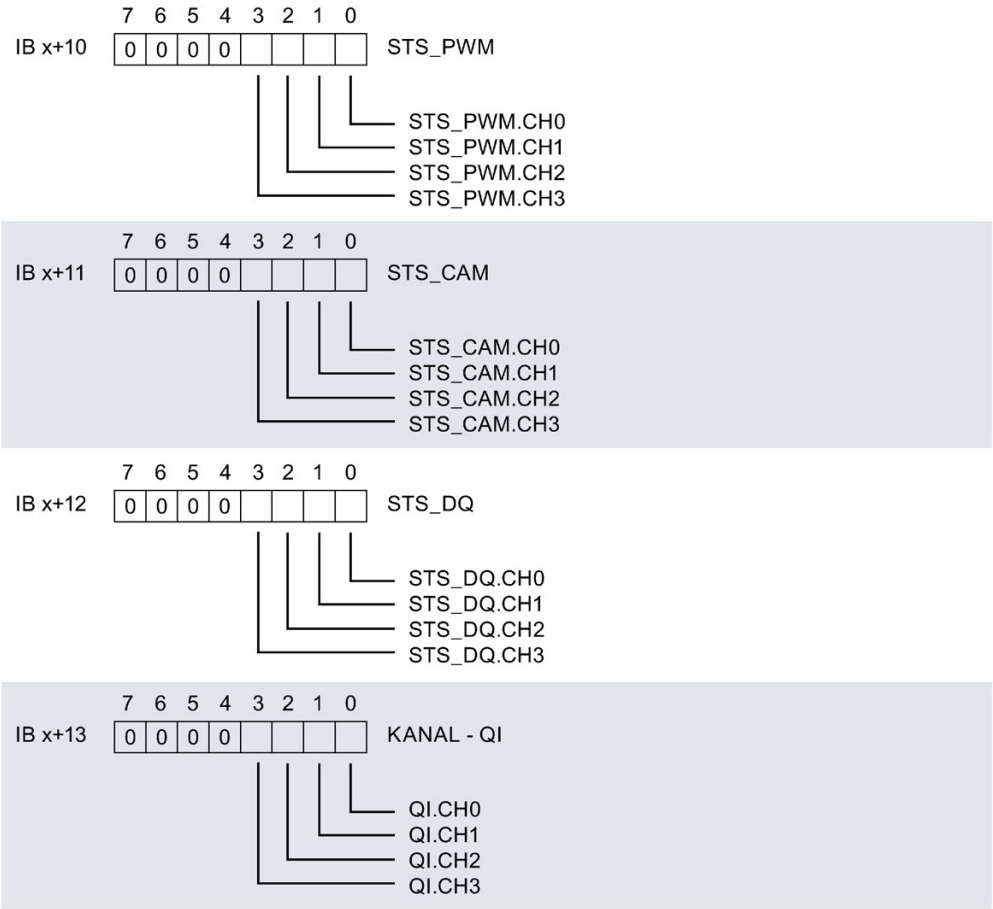

Figure 6-13 Assignment of the feedback interface, part 2

6.2.4.4 Notes on the feedback interface

Notes on the feedback bits

Table 6- 6 Details for the feedback interface

Feedback bit	Notes
ACT_INP	Internal encoder value This value is used by the cam control unit of the digital output module for evaluating the configured cams.
RD_REG_VALUE	Register value that was requested via the control interface, see table "Addressable registers in LD_SLOT".
ACCESS_SLOT	Feedback in response to the SLOT request via the control interface.
LAST_DIR	• 0 = Backward motion of last motion • 1 = Forward motion of last motion
INP_P	• 0 = No forward motion • 1 = Forward motion (current encoder value)
INP_M	• 0 = No backward motion • 1 = Backward motion (current encoder value)
HYS	• 0 = Hysteresis is not active • 1 = Hysteresis is active
SYNC	• 0 = No encoder direction available Note: If no encoder direction is available, the configured substitute values are output for all channels that operate as a cam track (CTRL_DQ.CHx = 1). • 1 = Encoder data can be used for cam output
INP_OK	• 0 = Encoder data is invalid Note: When the encoder data is invalid, the value status is set to 0. • 1 = Encoder data detected as invalid
LD_STS_SLOT	This bit changes its value following a successful write operation.
STS_PWM	Status for pulsed cam output of channels 0 to 3 • Bit 0 for channel 0: 0 = No pulsed cam output, 1 = Pulsed cam output activated • Bit 1 for channel 1: 0 = No pulsed cam output, 1 = Pulsed cam output activated • Bit 2 for channel 2: 0 = No pulsed cam output, 1 = Pulsed cam output activated • Bit 3 for channel 3: 0 = No pulsed cam output, 1 = Pulsed cam output activated • Bits 4 to 7: Reserved

Feedback bit	Notes
STS_CAM	Signal status of the cam tracks • Bit 0 for channel 0: 0 = Cam track off, 1 = Cam track on • Bit 1 for channel 1: 0 = Cam track off, 1 = Cam track on • Bit 2 for channel 2: 0 = Cam track off, 1 = Cam track on • Bit 3 for channel 3: 0 = Cam track off, 1 = Cam track on • Bits 4 to 7: Reserved
STS_DQ	Signal status of the digital outputs • Bit 0 for channel 0: 0 = DQ channel off, 1 = DQ channel on (pulse output is possible) • Bit 1 for channel 1: 0 = DQ channel off, 1 = DQ channel on (pulse output is possible) • Bit 2 for channel 2: 0 = DQ channel off, 1 = DQ channel on (pulse output is possible) • Bit 3 for channel 3: 0 = DQ channel off, 1 = DQ channel on (pulse output is possible) • Bits 4 to 7: Reserved

6.3 Interrupts/diagnostics alarms

6.3.1 Status and error displays

LED displays

The figure below shows the location of the LED displays of the DQ 4×24VDC/2A HS.

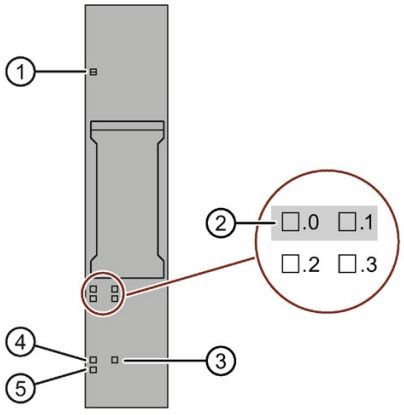

① DIAG (green/red)
② Channel status (green)
③ OVS (green)
④ PWM (green)
⑤ PWR (green)

Figure 6-14 LED displays

Meaning of the LEDs

The following tables contain the meaning of the Status and error displays. Corrective measures for diagnostics alarms can be found in the section Diagnostics alarms.

DIAG LED

Table 6- 7 Error display of the DIAG LED

DIAG LED	Meaning
□ Off	Backplane bus supply of the ET 200SP not OK
☼ Flashes	Module parameters not assigned
■ On	Module parameters assigned and no module diagnostics
☼ Flashes	Module parameters assigned and module diagnostics

Channel status LED

Table 6- 8 Status display of the channel status LED

Channel status LED	Meaning
□ Off	Channel deactivated or process signal = 0
■ On	Channel activated and process signal = 1

OVS LED and PWM LED

Table 6- 9 Status display of the oversampling LED

OVS LED	PWM LED	Meaning
□ Off	□ Off	DQ operating mode (valve control) active
■ On	□ Off	Oversampling operating mode active
□ Off	■ On	Pulse width modulation operating mode active
■ On	■ On	Cam control (MCC) operating mode active

PWR LED

Table 6- 10 Status display of the PWR LED

PWR LED	Meaning
□ Off	No supply voltage L+
■ On	Supply voltage L+ present

6.3.2 Interrupts

The DQ 4×24VDC/2A HS digital output module supports diagnostic interrupts.

Diagnostic interrupts

The module generates a diagnostic interrupt at the following events:

- Short circuit
- Excess temperature
- Parameter assignment error
- No supply voltage
- Communication error
- Invalid encoder data
- Encoder module removed or not ready to operate
- Channel temporarily not available

Detailed information on the event is available in the STEP 7 online help.

6.3.3 Diagnostics alarms

Diagnostics alarms

A diagnostics alarm is output and the DIAG LED flashes on the module for each diagnostics event. You can read out the diagnostics alarms, for example, in the diagnostics buffer of the CPU. You can evaluate the error codes with the user program.

Note

You can connect 2 actuators per output.

The diagnostics of the two actuators influence each other in the case of duplicate wiring. This means that a single short-circuit affects both actuators.

Table 6- 11 Diagnostics alarms, their meaning and corrective measures

Diagnostics alarms	Error code	Meaning	Solution
Short circuit [1] [2]	1_H	Short-circuit of the actuator supply	Correct the process wiring
Excess temperature	5_H	The module has detected that the maximum permitted module temperature has been exceeded. All channels of the module are switched to high resistance. The module is then restarted.	Correct the process wiring
Parameter assignment error	10_H	• The module cannot evaluate parameters for the channel. • Incorrect parameter assignment.	Correct the parameter assignment
No supply voltage	11_H	No or insufficient supply voltage L+	• Check supply voltage L+ on the BaseUnit • Check BaseUnit type
Communication error	13_H	Module is defective.	Replace the module.
Error 1 in actuator/sensor	$1D_H$	The encoder data is invalid.	• Check encoder module and connected sensor. • Check messages about encoder modules and eliminate any errors.
Error 2 in actuator/sensor	$1E_H$	The encoder module is removed or not ready to operate	• Insert encoder module • Insert server module • Check connection to the controller
Channel temporarily not available	$1F_H$	Firmware update is currently in progress or was canceled. The module does not output any process values or substitute values in this state.	• Wait for firmware update. • Restart the firmware update.

[1] The channels 0 and 1 or 2 and 3 each form a load group. Within a load group, a short-circuit can have an effect on the adjacent channel. The load groups do not have an effect on each other in the case of a short-circuit.

[2] If the short-circuit persists, the module heats up. This may trigger temperature monitoring with excess temperature diagnostic interrupt.

Technical specifications

7

7.1 Technical specifications

Technical specifications of the DQ 4×24VDC/2A HS

Article number	6ES7132-6BD20-0DA0
General information	
Product type designation	DQ 4x24 V DC/2 A HS
Firmware version	V2.0
• FW update possible	Yes
usable BaseUnits	BU type A0
Color code for module-specific color identification plate	CC00
Product function	
• I&M data	Yes; I&M0 to I&M3
Engineering with	
• STEP 7 TIA Portal configurable/integrated as of version	STEP 7 V15.1 or higher
• STEP 7 configurable/integrated as of version	Via GSD as of V5.6 HF4
• PROFIBUS as of GSD version/GSD revision	One GSD file each, Revision 3 and 5 and higher
• PROFINET as of GSD version/GSD revision	GSDML V2.33
Operating mode	
• DQ	Yes
• DQ with energy-saving function	Yes; Valve control
• PWM	Yes
• Cam control (switching at comparison values)	Yes; Via MtM (module-to-module communication)
• Oversampling	Yes
• MSO	No
Supply voltage	
Rated value (DC)	24 V
permissible range, lower limit (DC)	19.2 V
permissible range, upper limit (DC)	28.8 V
Reverse polarity protection	Yes

Article number	6ES7132-6BD20-0DA0
Input current	
Current consumption, max.	50 mA; without load
Output voltage	
Rated value (DC)	24 V
Power loss	
Power loss, typ.	2.5 W; at 24 V, 25 °C, DQ mode, 2 A per channel
Address area	
Address space per module	
• Inputs	1 byte; Max. 14 bytes in the cam control operating mode
• Outputs	1 byte; Max. 16 bytes in the oversampling operating mode
Hardware configuration	
Automatic encoding	
• Mechanical coding element	Yes
Selection of BaseUnit for connection variants	
• 1-wire connection	BU type A0
• 2-wire connection	BU type A0
• 3-wire connection	BU type A0 with AUX terminals or potential distributor module
• 4-wire connection	BU type A0 + Potential isolation module
Digital outputs	
Type of digital output	Source output (PNP, current-sourcing)
Number of digital outputs	4
Current-sinking	No
Current-sourcing	Yes; Push-pull output
Short-circuit protection	Yes
• Response threshold, typ.	6 A
Limitation of inductive shutdown voltage to	M (-1 V)
Controlling a digital input	No

Article number	6ES7132-6BD20-0DA0
Digital output functions, parameterizable	
• Switching tripped by comparison values	Yes
– Number of cam tracks, max.	4
– Number of cams per module, max.	16
– Number of cams per track, max.	16
– Supported axis types	Linear axes and rotary axes with modulo function
– Hysteresis	Yes
– Pulsed cam output	Yes
– Range of values for comparison values, max.	-2,147,483,648 to 2,147,483,647 (user-specific within this range)
• Freely usable digital output	Yes
• PWM output	Yes
– Number, max.	4
– Cycle duration, parameterizable	Yes; 0 ms, 0.2 ms, 0.4 ms, 0.93 ms, 1.33 ms, 4.27 ms, 10.67 ms, 21.33 ms, 34.13 ms, 59.73 ms
– Resolution of the duty cycle	0.1 %
• Digital output with oversampling	Yes
– Number, max.	4
– Values per cycle, max.	32
– Resolution, min.	100 µs
Switching capacity of the outputs	
• with resistive load, max.	2 A
• on lamp load, max.	10 W
Load resistance range	
• lower limit	12 Ω
• upper limit	3 400 Ω
Output current	
• for signal "1" rated value	2 A
• for signal "0" residual current, max.	0.1 mA
Output delay with resistive load	
• "0" to "1", max.	1 µs
• "1" to "0", max.	1 µs
Parallel switching of two outputs	
• for uprating	No

Article number	6ES7132-6BD20-0DA0
Switching frequency	
• with resistive load, max.	5 kHz
• with inductive load, max.	5 kHz
• on lamp load, max.	5 kHz
Total current of the outputs	
• Current per channel, max.	2 A
• Current per module, max.	8 A
Total current of the outputs (per module)	
horizontal installation	
– up to 30 °C, max.	8 A; DQ mode
– up to 40 °C, max.	6.9 A; DQ mode
– up to 50 °C, max.	4.7 A; DQ mode
– up to 60 °C, max.	2.5 A; DQ mode
vertical installation	
– up to 30 °C, max.	7.2 A; DQ mode
– up to 40 °C, max.	5.6 A; DQ mode
– up to 50 °C, max.	4 A; DQ mode
Cable length	
• shielded, max.	50 m
• unshielded, max.	50 m
Isochronous mode	
Isochronous operation (application synchronized up to terminal)	Yes; Operating modes DQ and OVS only
Execution and activation time (TCO), min.	40 µs
Bus cycle time (TDP), min.	125 µs
Jitter, max.	1 µs
Interrupts/diagnostics/status information	
Diagnostic functions	Yes
Substitute values connectable	Yes
Alarms	
• Diagnostic alarm	Yes
Diagnostic messages	
• Diagnostic information readable	Yes
• Monitoring the supply voltage	Yes
• Wire-break	No
• Short-circuit	Yes; Module-wise
• Group error	Yes

Article number	6ES7132-6BD20-0DA0
Diagnostics indication LED	
• Monitoring of the supply voltage (PWR-LED)	Yes; green PWR LED
• Channel status display	Yes; Green LED
• for channel diagnostics	No
• for module diagnostics	Yes; green/red DIAG LED
Potential separation	
Potential separation channels	
• between the channels	No
• between the channels and backplane bus	Yes
Isolation	
Isolation tested with	707 V DC (type test)
Standards, approvals, certificates	
Suitable for safety-related tripping of standard modules	No
Ambient conditions	
Ambient temperature during operation	
• horizontal installation, min.	0 °C; On request: Ambient temperatures lower than 0 °C (without condensation)
• horizontal installation, max.	60 °C
• vertical installation, min.	0 °C; On request: Ambient temperatures lower than 0 °C (without condensation)
• vertical installation, max.	50 °C
Dimensions	
Width	15 mm
Height	73 mm
Depth	58 mm
Weights	
Weight, approx.	31 g

Dimension drawing

See manual ET 200SP BaseUnits (http://support.automation.siemens.com/WW/view/en/58532597/133300)

7.2 Derating of the DQ 4x24VDC/2A HS

Maximum permitted output current depending on the frequency

The figure below shows the maximum permitted output current per channel depending on the frequency.

You must take this characteristic into consideration for all operating modes of the module.

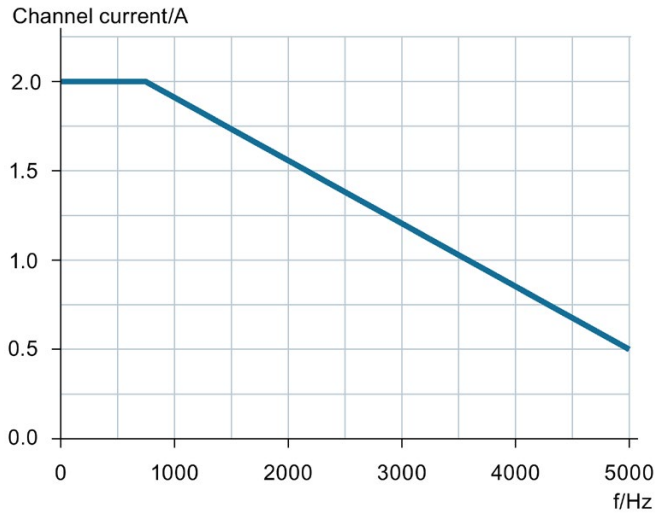

Figure 7-1 Derating of the DQ 4×24VDC/2A HS depending on the frequency

Maximum permitted output current depending on the ambient temperature

In addition to the dependency of the maximum permitted output current on the frequency, you also have to take into consideration the dependency on the ambient temperature. Depending on the configured operating mode, there is an additional "DQ" or "PWM" derating. The table below shows the dependencies of derating version and module operating mode:

Table 7- 1 Additional derating versions of the DQ 4×24VDC/2A HS

Derating version	Operating mode				
	Normal operation	Valve control in normal operation	Pulse width modulation	Oversampling	Cam control
DQ derating	x	-	-	x	-
PWM derating	-	x	x	-	x

DQ derating

The figure below shows the maximum permitted total current depending on the ambient temperature for the DQ derating.

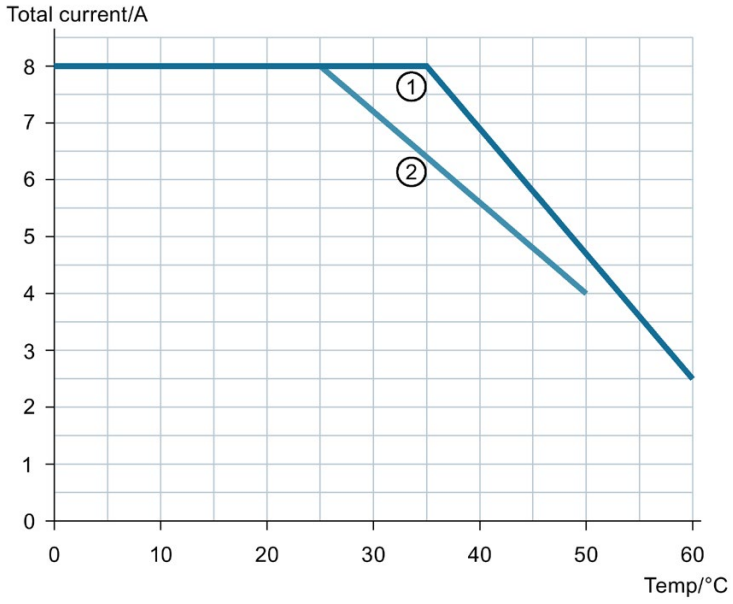

① Horizontal installation position

② Vertical installation position

Figure 7-2 Additional DQ derating depending on the ambient temperature

PWM derating

The figure below shows the maximum permitted total current depending on the ambient temperature for the PWM derating.

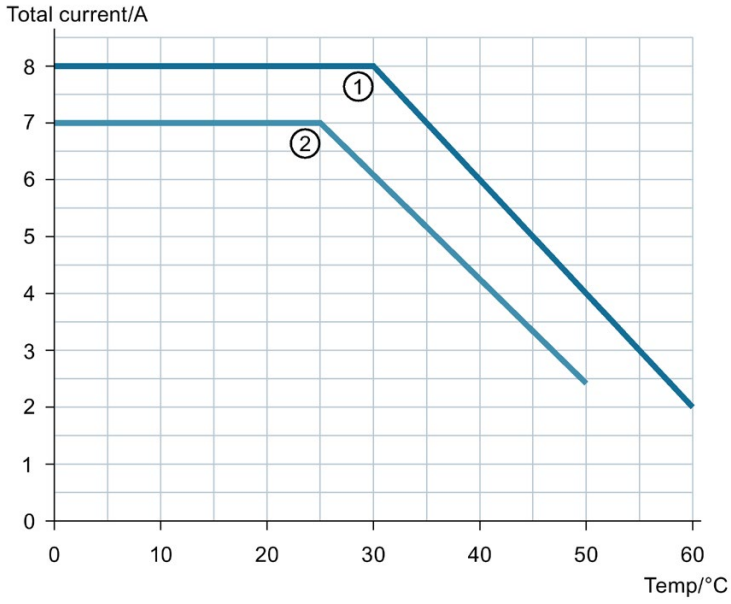

① Horizontal installation position

② Vertical installation position

Figure 7-3 Additional PWM derating depending on the ambient temperature

Parameter data records A

A.1 Parameter assignment and structure of the parameter data record for DQ operating mode

Parameter assignment in the user program

You can reassign the parameters of the module in RUN. For example, the reaction to CPU STOP of individual channels can be changed in RUN without this having an effect on the other channels.

Changing parameters in RUN

The "WRREC" instruction is used to transfer the parameters to the module using data record 128. The parameters set in STEP 7 are not changed in the CPU, which means the parameters set in STEP 7 are valid again after a restart.

Note

Changing parameters in RUN

A parameter data record that has content different from the startup parameter assignment can result in a brief exit from clocked mode and renewed synchronization with the fieldbus cycle.

Note

Changing parameters in RUN

When parameters are reassigned in RUN, a brief signal failure can occur at the output. For this reason, reassignment of parameters in RUN should be done when a 0 is being output at the output.

STATUS output parameter

The module ignores errors that occur during the transfer of parameters with the "WRREC" instruction and continues operation with the previous parameter assignment. The STATUS output parameter contains a corresponding error code.

The description of the "WRREC" instruction and the error codes is available in the STEP 7 online help.

Structure of data record 128 for entire module

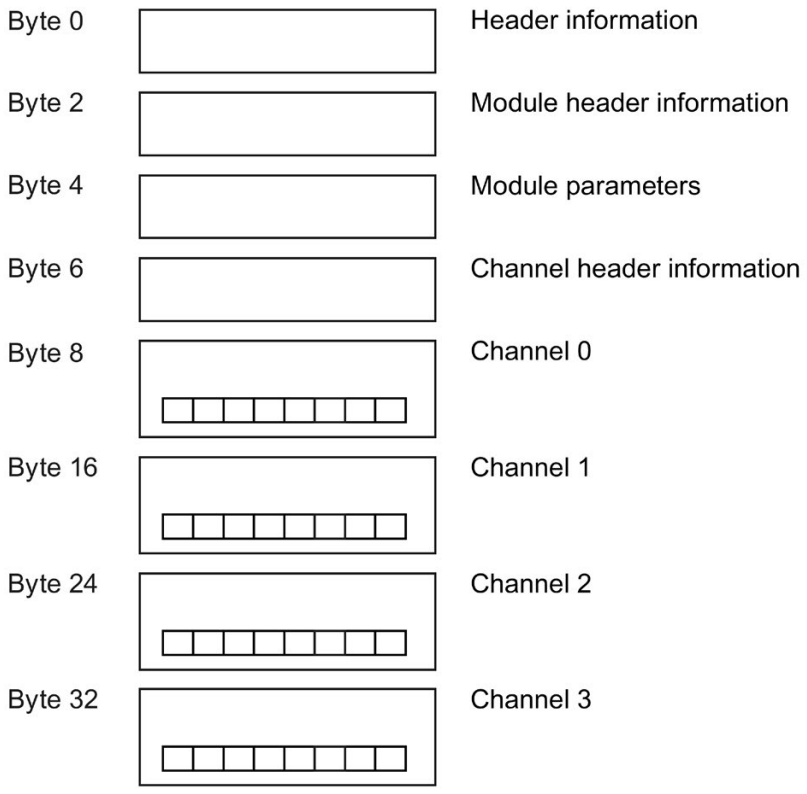

Figure A-1 Structure of data record 128 for entire module

Header information

The figure below shows the structure of the header information.

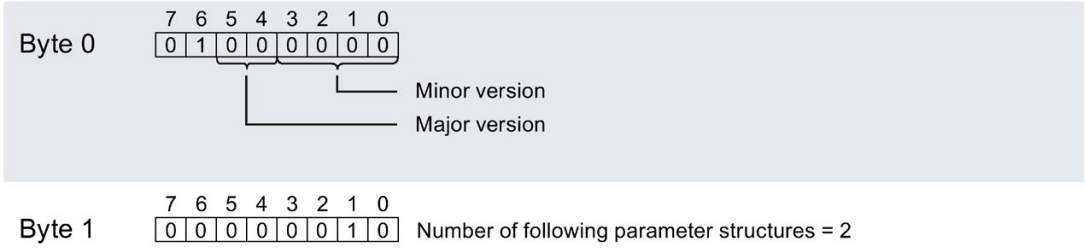

Figure A-2 Header information

Module header information

The figure below shows the structure of the module header information.

	7	6	5	4	3	2	1	0	
Byte 2	0	0	0	0	0	0	0	1	Number of the following module parameter blocks = 1
Byte 3	0	0	0	0	0	0	1	0	Length of the following module parameter block = 2

Figure A-3 Module header information

Module parameter block

The figure below shows the structure of the module parameter block for channels 0 to 3.

Enable a parameter by setting the corresponding bit to "1".

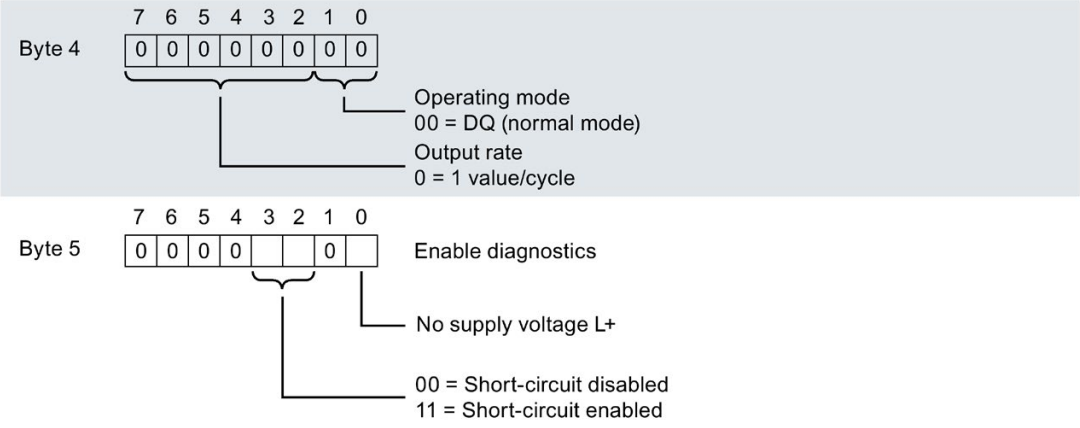

Figure A-4 Module parameter block

Channel header information

The figure below shows the structure of the channel header information.

	7	6	5	4	3	2	1	0	
Byte 6	0	0	0	0	0	1	0	0	Number of the following channel parameter blocks = 4
Byte 7	0	0	0	0	1	0	0	0	Length of the following channel parameter block = 8

Figure A-5 Channel header information

Channel parameter block

The figure below shows the structure of the channel parameter block.

Enable a parameter by setting the corresponding bit to "1".

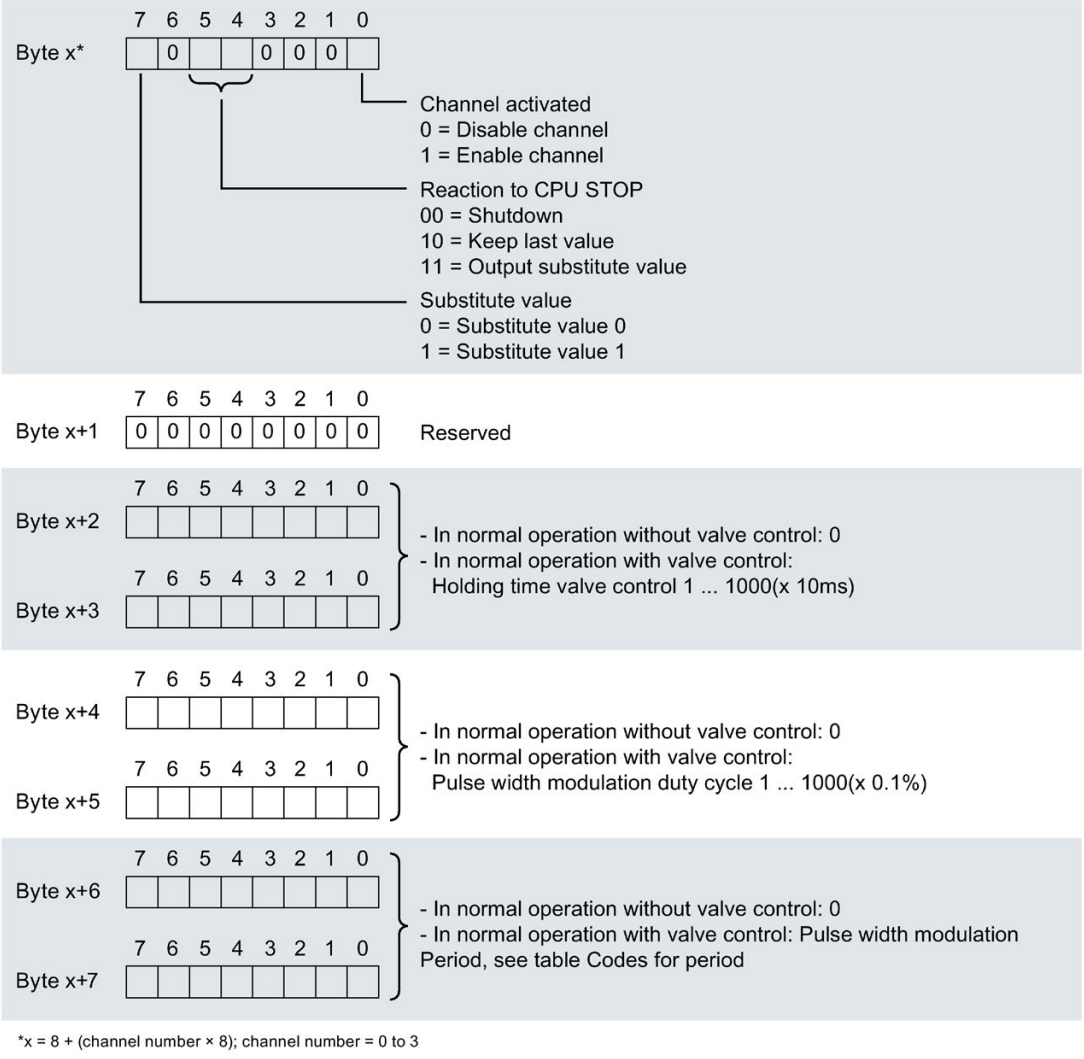

Figure A-6 Structure of byte x to x+7 for channels 0 to 3

Codes for time period of the pulse width modulation

The following table contains the codes for the time period of the pulse width modulation of the digital output module. You must enter these codes in bytes x+6 and x+7 of the channel parameter block of data record 128 (see previous figure).

Table A- 1 Codes for the period

Value	Time period	Code
0	Off	0000 0000
4	0.20 ms	0000 0100
7	0.40 ms	0000 0111
12	0.93 ms	0000 1100
14	1.33 ms	0000 1110
21	4.27 ms	0001 0101
26	10.67 ms	0001 1010
30	21.33 ms	0001 1110
33	34.13 ms	0010 0001
36	59.73 ms	0010 0100

Errors when transferring the data record

The module always checks all the values of the transferred data record. Only if all the values were transferred without errors does the module take over the values from the data record.

In case of errors, the WRREC instruction for writing data records returns corresponding error codes in the STATUS parameter, see also the description of the "STATUS" parameter in the STEP 7 online help.

The following table shows the module-specific error codes and their meaning for data record 128. The error codes are supported starting from firmware version V2.0.0.

Table A- 2 Error messages, their meaning and corrective measures

Error code in the STATUS parameter (hexadecimal)				Meaning	Solution
Byte 0	Byte 1	Byte 2	Byte 3		
DF_H	80_H	$B0_H$	00_H	Number of the data record unknown	Enter a valid number for the data record.
DF_H	80_H	$B1_H$	01_H	Length of the data record incorrect	Enter a valid value for the data record length.
DF_H	80_H	$B2_H$	00_H	Module not accessible	• Check station. • Plug the module in correctly. • Check parameters of the WRREC block.
DF_H	80_H	$E0_H$	01_H	Incorrect version in header	Correct the version number of the parameter block, see Figure A-2 Header information (Page 99).

Error code in the STATUS parameter (hexadecimal)				Meaning	Solution
Byte 0	Byte 1	Byte 2	Byte 3		
DF_H	80_H	$E0_H$	02_H	Error in the header, length or number of parameter blocks	Correct the length and number of parameter blocks, see Figure A-2 Header information (Page 99) and Figure A-3 Module header information (Page 100).
DF_H	80_H	$E1_H$	01_H	Reserved bit set	Write 0 to all reserved bits.
DF_H	80_H	$E1_H$	02_H	Invalid diagnostics enable bit set for operating mode	Correct the diagnostics enables according to the operating mode, see Figure A-4 Module parameter block (Page 100).
DF_H	80_H	$E1_H$	06_H	Code for behavior with substitute value invalid	Use valid code for reaction to CPU STOP, see Figure A-6 Structure of byte x to x+7 for channels 0 to 3 (Page 101).
DF_H	80_H	$E1_H$	$0D_H$	Code for output rate invalid	Use valid code for output rate, see Figure A-4 Module parameter block (Page 100).
DF_H	80_H	$E1_H$	21_H	Set operating mode invalid	Adapt operating mode according to the configuration, see Figure A-4 Module parameter block (Page 100).
DF_H	80_H	$E1_H$	22_H	Value for holding time valve control invalid	Adapt holding time valve control to valid value, see Figure A-6 Structure of byte x to x+7 for channels 0 to 3 (Page 101).
DF_H	80_H	$E1_H$	23_H	Value for pulse width modulation duty cycle invalid	Adapt pulse width modulation duty cycle to valid value, see Figure A-6 Structure of byte x to x+7 for channels 0 to 3 (Page 101).
DF_H	80_H	$E1_H$	24_H	Code for pulse width modulation time period invalid	Use valid code for pulse width modulation time period, see Figure A-6 Structure of byte x to x+7 for channels 0 to 3 (Page 101).

A.2 Parameter assignment and structure of the parameter data record for oversampling operating mode

Parameter assignment in the user program

You can reassign the parameters of the module in RUN. For example, the reaction to CPU STOP of individual channels can be changed in RUN without this having an effect on the other channels.

Changing parameters in RUN

The "WRREC" instruction is used to transfer the parameters to the module using data record 128. The parameters set in STEP 7 are not changed in the CPU, which means the parameters set in STEP 7 are valid again after a restart.

Note

Changing parameters in RUN

A parameter data record that has content different from the startup parameter assignment can result in a brief exit from clocked mode and renewed synchronization with the fieldbus cycle.

STATUS output parameter

The module ignores errors that occur during the transfer of parameters with the "WRREC" instruction and continues operation with the previous parameter assignment. The STATUS output parameter contains a corresponding error code.

The description of the "WRREC" instruction and the error codes is available in the STEP 7 online help.

Structure of data record 128 for entire module

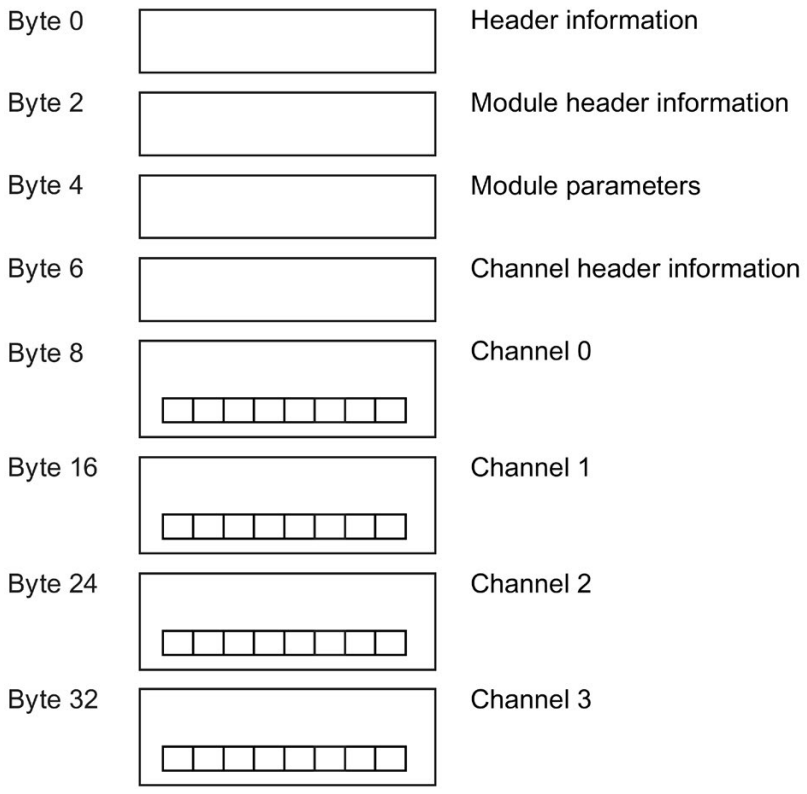

Figure A-7 Structure of data record 128 for entire module

Header information

The figure below shows the structure of the header information.

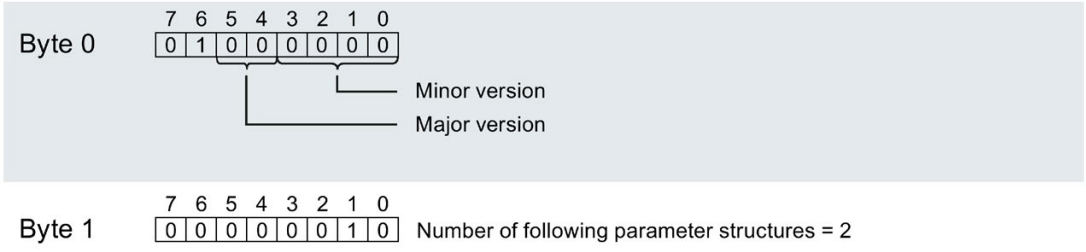

Figure A-8 Header information

Module header information

The figure below shows the structure of the module header information.

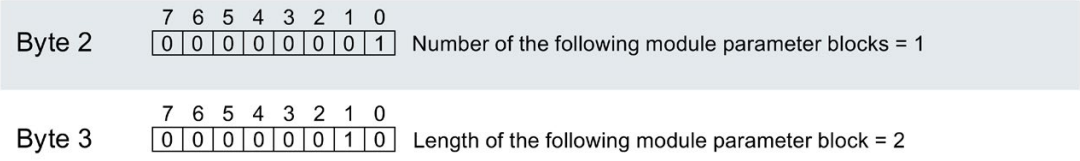

Figure A-9 Module header information

Module parameter block

The figure below shows the structure of the module parameter block for channels 0 to 3.

Enable a parameter by setting the corresponding bit to "1".

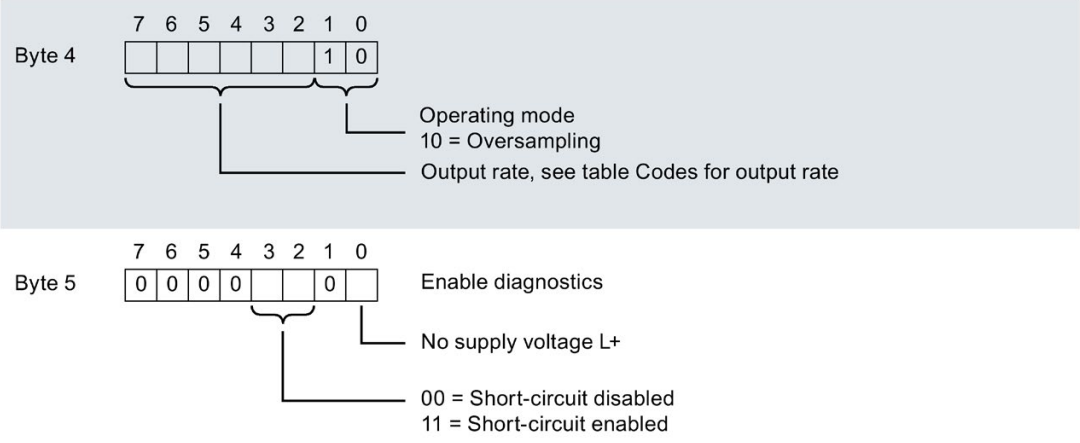

Figure A-10 Module parameter block

Channel header information

The figure below shows the structure of the channel header information.

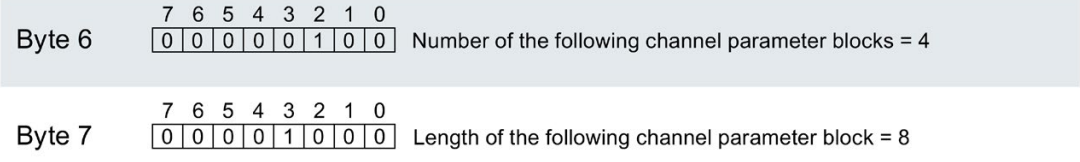

Figure A-11 Channel header information

Channel parameter block

The figure below shows the structure of the channel parameter block.

Enable a parameter by setting the corresponding bit to "1".

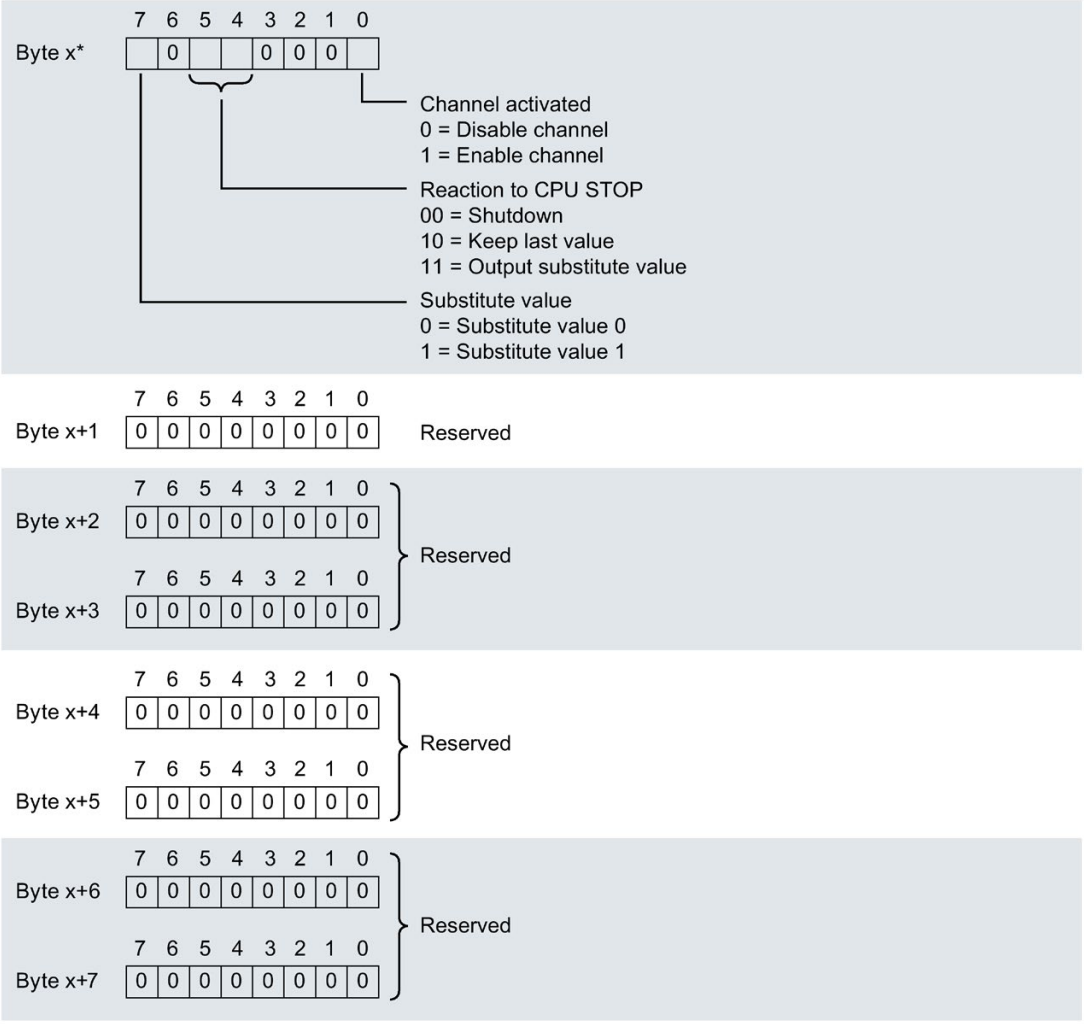

Figure A-12 Structure of byte x to x+7 for channels 0 to 3

Codes for the output rate

The table below contains the codes for the output rate of the digital output module. You must enter these codes in byte 4 of the module parameter block of data record 128 (see figure).

Table A- 3 Codes for the output rate

Value	Output rate	Code
1	2 values/cycle	000001
3	4 values/cycle	000011
5	6 values/cycle	000101
7	8 values/cycle	000111
9	10 values/cycle	001001
11	12 values/cycle	001011
13	14 values/cycle	001101
15	16 values/cycle	001111
17	18 values/cycle	010001
19	20 values/cycle	010011
21	22 values/cycle	010101
23	24 values/cycle	010111
25	26 values/cycle	011001
27	28 values/cycle	011011
29	30 values/cycle	011101
31	32 values/cycle	011111

Errors when transferring the data record

The module always checks all the values of the transferred data record. Only if all the values were transferred without errors does the module take over the values from the data record.

In case of errors, the WRREC instruction for writing data records returns corresponding error codes in the STATUS parameter, see also the description of the "STATUS" parameter in the STEP 7 online help.

The following table shows the module-specific error codes and their meaning for data record 128. The error codes are supported starting from firmware version V2.0.0.

Table A- 4 Error messages, their meaning and corrective measures

Error code in the STATUS parameter (hexadecimal)				Meaning	Solution
Byte 0	Byte 1	Byte 2	Byte 3		
DF_H	80_H	$B0_H$	00_H	Number of the data record unknown	Enter a valid number for the data record.
DF_H	80_H	$B1_H$	01_H	Length of the data record incorrect	Enter a valid value for the data record length.
DF_H	80_H	$B2_H$	00_H	Module not accessible	• Check station. • Plug the module in correctly. • Check parameters of the WRREC block.
DF_H	80_H	$E0_H$	01_H	Incorrect version in header	Correct the version number of the parameter block, see Figure A-8 Header information (Page 105).
DF_H	80_H	$E0_H$	02_H	Error in the header, length or number of parameter blocks	Correct the length and number of parameter blocks, see Figure A-8 Header information (Page 105), figure Figure A-9 Module header information (Page 106) and Figure A-11 Channel header information (Page 106).
DF_H	80_H	$E1_H$	01_H	Reserved bit set	Write 0 to all reserved bits.
DF_H	80_H	$E1_H$	02_H	Invalid diagnostics enable bit set for operating mode	Correct the diagnostics enables according to the operating mode, see Figure A-10 Module parameter block (Page 106).
DF_H	80_H	$E1_H$	06_H	Code for behavior with substitute value invalid	Use valid code for reaction to CPU STOP, see Figure A-12 Structure of byte x to x+7 for channels 0 to 3 (Page 107).
DF_H	80_H	$E1_H$	$0D_H$	Code for output rate invalid	Use valid code for output rate, see Figure A-10 Module parameter block (Page 106).
DF_H	80_H	$E1_H$	21_H	Set operating mode invalid	Adapt operating mode according to the configuration, see Figure A-10 Module parameter block (Page 106).

See also

Parameter assignment and structure of the parameter data record for oversampling operating mode (Page 104)

A.3 Parameter assignment and structure of the parameter data record for pulse width modulation operating mode

Parameter assignment in the user program

You can reassign the parameters of the module in RUN. For example, you can change the period of individual channels in "Pulse width modulation" operating mode in RUN without this having an effect on the other channels.

Changing parameters in RUN

The "WRREC" instruction is used to transfer the parameters to the module using data record 128. The parameters set in STEP 7 are not changed in the CPU, which means the parameters set in STEP 7 are valid again after a restart.

Note

Changing parameters in RUN

A parameter data record that has content different from the startup parameter assignment can result in a brief exit from clocked mode and renewed synchronization with the fieldbus cycle.

STATUS output parameter

The module ignores errors that occur during the transfer of parameters with the "WRREC" instruction and continues operation with the previous parameter assignment. The STATUS output parameter contains a corresponding error code.

The description of the "WRREC" instruction and the error codes is available in the STEP 7 online help.

Structure of data record 128 for entire module

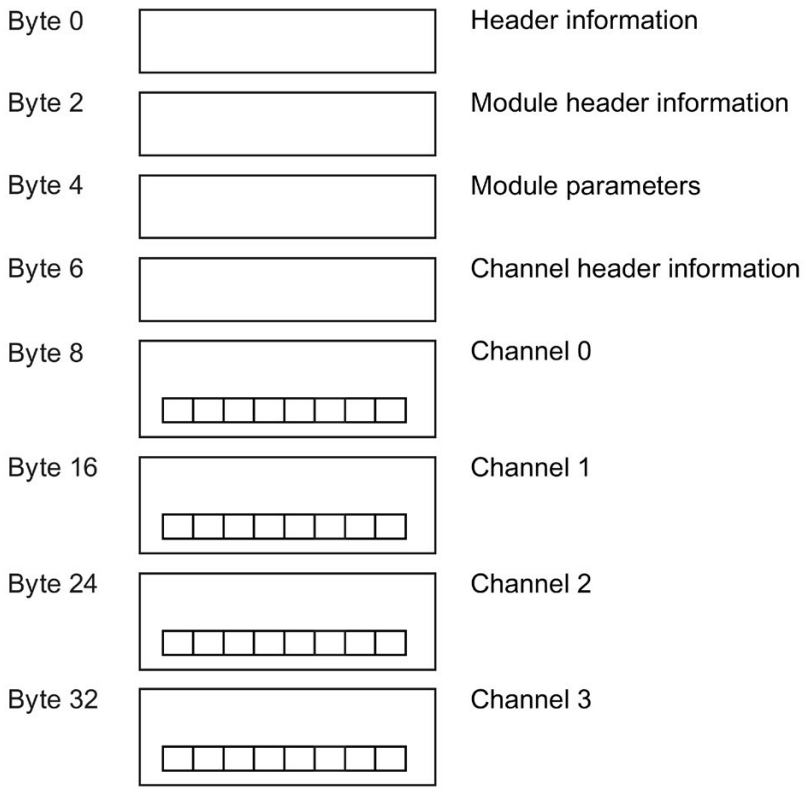

Figure A-13 Structure of data record 128 for entire module

Header information

The figure below shows the structure of the header information.

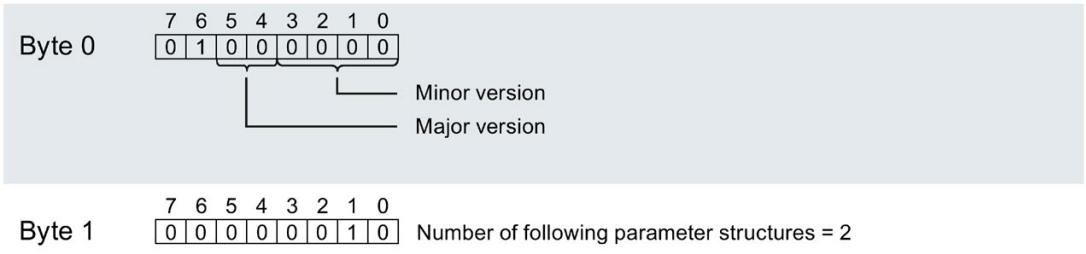

Figure A-14 Header information

Module header information

The figure below shows the structure of the module header information.

	7	6	5	4	3	2	1	0	
Byte 2	0	0	0	0	0	0	0	1	Number of the following module parameter blocks = 1
Byte 3	0	0	0	0	0	0	1	0	Length of the following module parameter block = 2

Figure A-15 Module header information

Module parameter block

The figure below shows the structure of the module parameter block for channels 0 to 3.

Enable a parameter by setting the corresponding bit to "1".

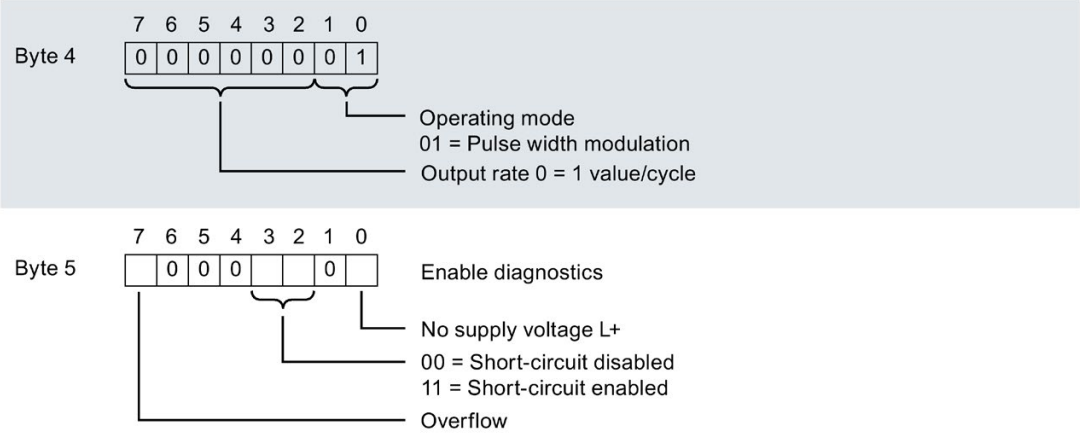

Figure A-16 Module parameter block

Channel header information

The figure below shows the structure of the channel header information.

	7	6	5	4	3	2	1	0	
Byte 6	0	0	0	0	0	1	0	0	Number of the following channel parameter blocks = 4
Byte 7	0	0	0	0	1	0	0	0	Length of the following channel parameter block = 8

Figure A-17 Channel header information

Channel parameter block

The figure below shows the structure of the channel parameter block.

Enable a parameter by setting the corresponding bit to "1".

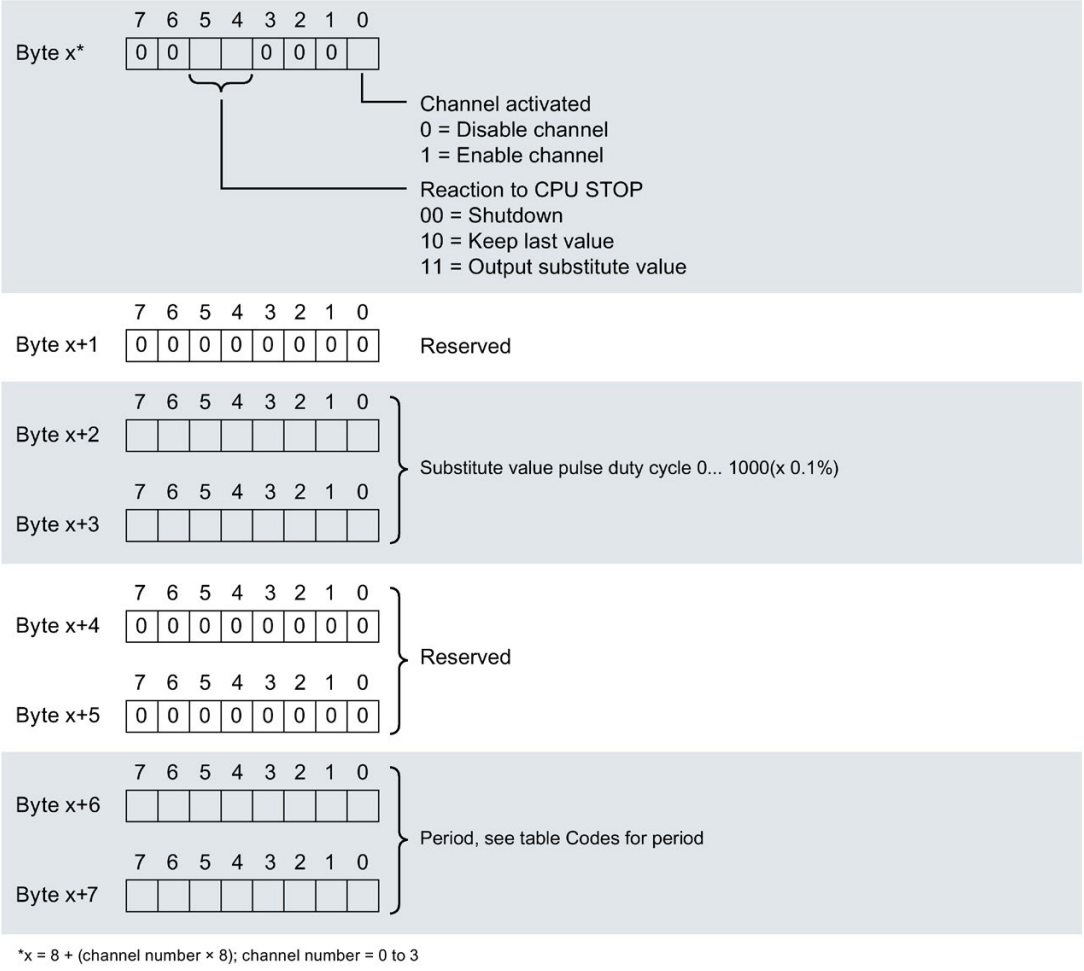

Figure A-18 Structure of byte x to x+7 for channels 0 to 3

Codes for time period of the pulse width modulation

The following table contains the codes for the time period of the pulse width modulation of the digital output module. You must enter these codes in bytes x+6 and x+7 of the channel parameter block of data record 128 (see previous figure).

Table A- 5 Codes for the period

Value	Time period	Code
0	Off	0000 0000
4	0.20 ms	0000 0100
7	0.40 ms	0000 0111
12	0.93 ms	0000 1100
14	1.33 ms	0000 1110
21	4.27 ms	0001 0101
26	10.67 ms	0001 1010
30	21.33 ms	0001 1110
33	34.13 ms	0010 0001
36	59.73 ms	0010 0100

Errors when transferring the data record

The module always checks all the values of the transferred data record. Only if all the values were transferred without errors does the module take over the values from the data record.

In case of errors, the WRREC instruction for writing data records returns corresponding error codes in the STATUS parameter, see also the description of the "STATUS" parameter in the STEP 7 online help.

The following table shows the module-specific error codes and their meaning for data record 128. The error codes are supported starting from firmware version V2.0.0.

Table A- 6 Error messages, their meaning and corrective measures

Error code in the STATUS parameter (hexadecimal)				Meaning	Solution
Byte 0	Byte 1	Byte 2	Byte 3		
DF_H	80_H	$B0_H$	00_H	Number of the data record unknown	Enter a valid number for the data record.
DF_H	80_H	$B1_H$	01_H	Length of the data record incorrect	Enter a valid value for the data record length.
DF_H	80_H	$B2_H$	00_H	Module not accessible	• Check station. • Plug the module in correctly. • Check parameters of the WRREC block.
DF_H	80_H	$E0_H$	01_H	Incorrect version in header	Correct the version number of the parameter block, see Figure A-14 Header information (Page 111).

Error code in the STATUS parameter (hexadecimal)				Meaning	Solution
Byte 0	Byte 1	Byte 2	Byte 3		
DF_H	80_H	$E0_H$	02_H	Error in the header, length or number of parameter blocks	Correct the length and number of parameter blocks, see Figure A-14 Header information (Page 111) and Figure A-17 Channel header information (Page 112).
DF_H	80_H	$E1_H$	01_H	Reserved bit set	Write 0 to all reserved bits.
DF_H	80_H	$E1_H$	02_H	Invalid diagnostics enable bit set for operating mode	Correct the diagnostics enables according to the operating mode, see Figure A-16 Module parameter block (Page 112).
DF_H	80_H	$E1_H$	06_H	Code for behavior with substitute value invalid	Use valid code for reaction to CPU STOP, see Figure A-18 Structure of byte x to x+7 for channels 0 to 3 (Page 113).
DF_H	80_H	$E1_H$	$0A_H$	Value for substitute value invalid	Adapt substitute value to valid value, see Figure A-18 Structure of byte x to x+7 for channels 0 to 3 (Page 113).
DF_H	80_H	$E1_H$	$0D_H$	Code for output rate invalid	Use valid code for output rate, see Figure A-16 Module parameter block (Page 112).
DF_H	80_H	$E1_H$	21_H	Set operating mode invalid	Adapt operating mode according to the configuration, see Figure A-16 Module parameter block (Page 112).
DF_H	80_H	$E1_H$	24_H	Code for pulse width modulation time period invalid	Use valid code for pulse width modulation time period, see Figure A-18 Structure of byte x to x+7 for channels 0 to 3 (Page 113).

See also

Parameter assignment and structure of the parameter data record for pulse width modulation operating mode (Page 110)

A.4 Parameter assignment and structure of the parameter data record for cam control operating mode

Parameter assignment in the user program

You can reassign the parameters of the module in RUN. For example, you can change the period of individual channels in RUN without this having an effect on the other channels.

Changing parameters in RUN

The "WRREC" instruction is used to transfer the parameters to the module using data record 128. The parameters set in STEP 7 are not changed in the CPU, which means the parameters set in STEP 7 are valid again after a restart.

If a parameter is changed in the module parameter block or in the internal cam control block, the direction information is nullified (SYNC = 0) until it can be detected again. As long as no direction information is available, the configured substitute values are output for the cam control channels.

Note

Direction detection

If no direction information is included with the supplied encoder data, two valid different encoder values are needed for the direction detection (SYNC = 1). The two values allow a subtraction to be performed and the direction to be derived from the result.

STATUS output parameter

The module ignores errors that occur during the transfer of parameters with the "WRREC" instruction and continues operation with the previous parameter assignment. The STATUS output parameter contains a corresponding error code.

The description of the "WRREC" instruction and the error codes is available in the STEP 7 online help.

Structure of data record 128 for entire module

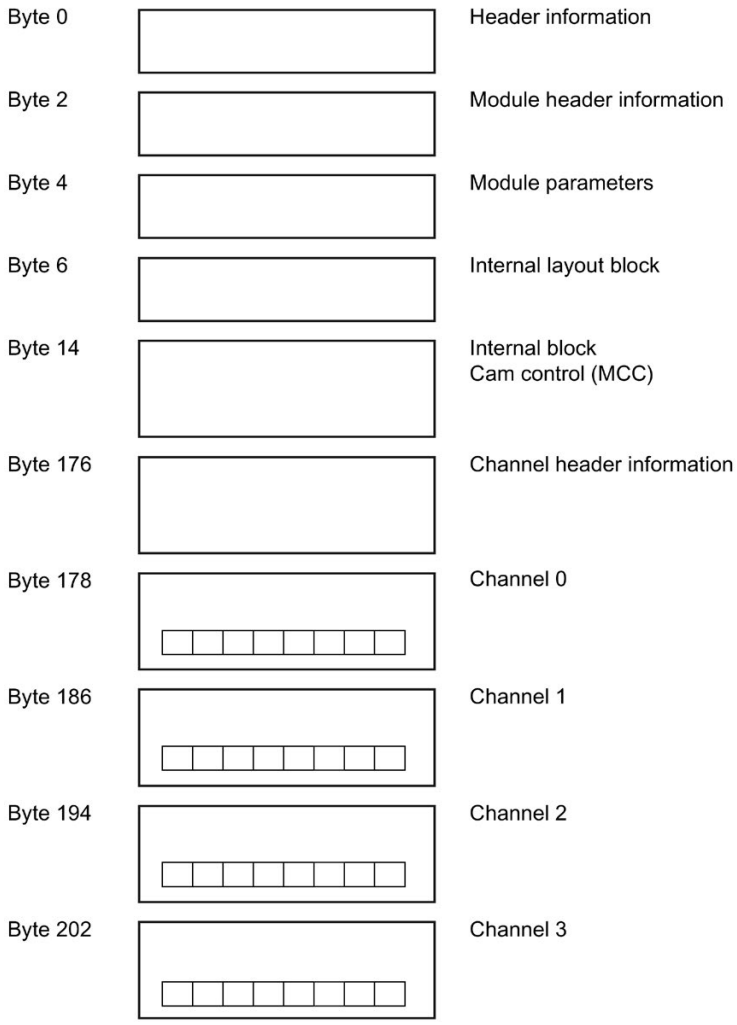

Figure A-19 Structure of data record 128 for entire module with cam control operating mode

Header information

The figure below shows the structure of the header information.

Figure A-20 Header information

Module header information

The figure below shows the structure of the module header information.

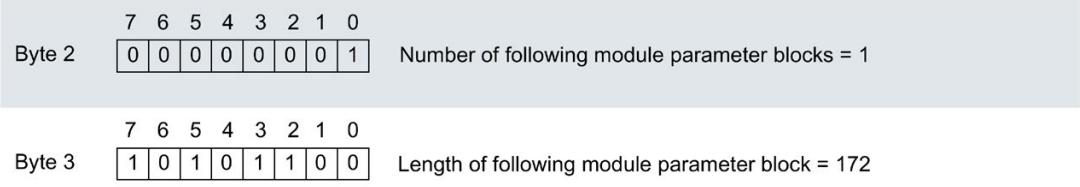

Figure A-21 Module header information in cam control operating mode

Module parameter block

The figure below shows the structure of the module parameter block for channels 0 to 3.

Enable a parameter by setting the corresponding bit to "1".

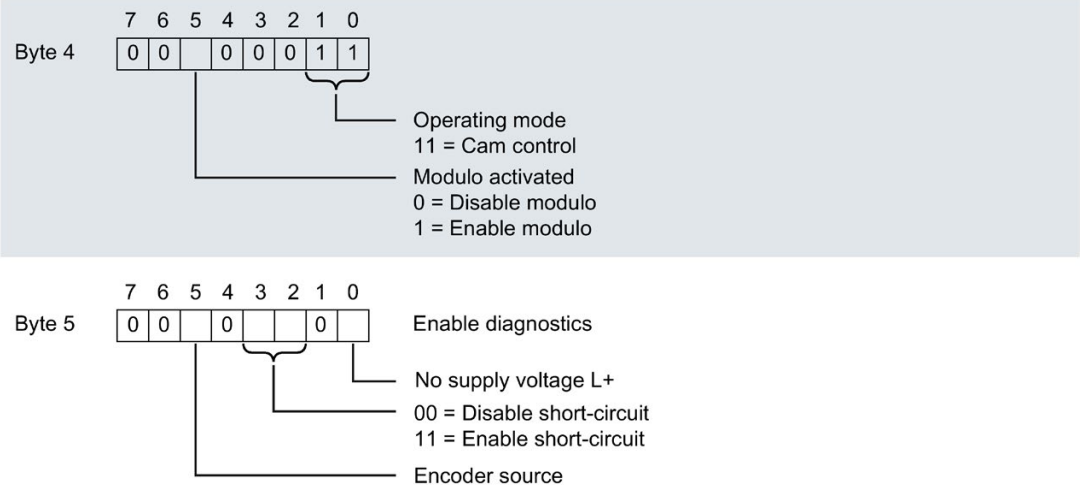

Figure A-22 Module parameter block in cam control operating mode

Internal layout block

The figure below shows the structure of the internal layout block.

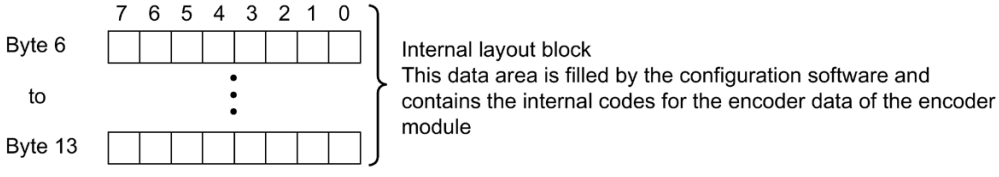

Figure A-23 Internal layout block in cam control operating mode

Internal block cam control (Modular CAM Controller)

The figure below shows the structure of the internal block cam control (Modular CAM Controller).

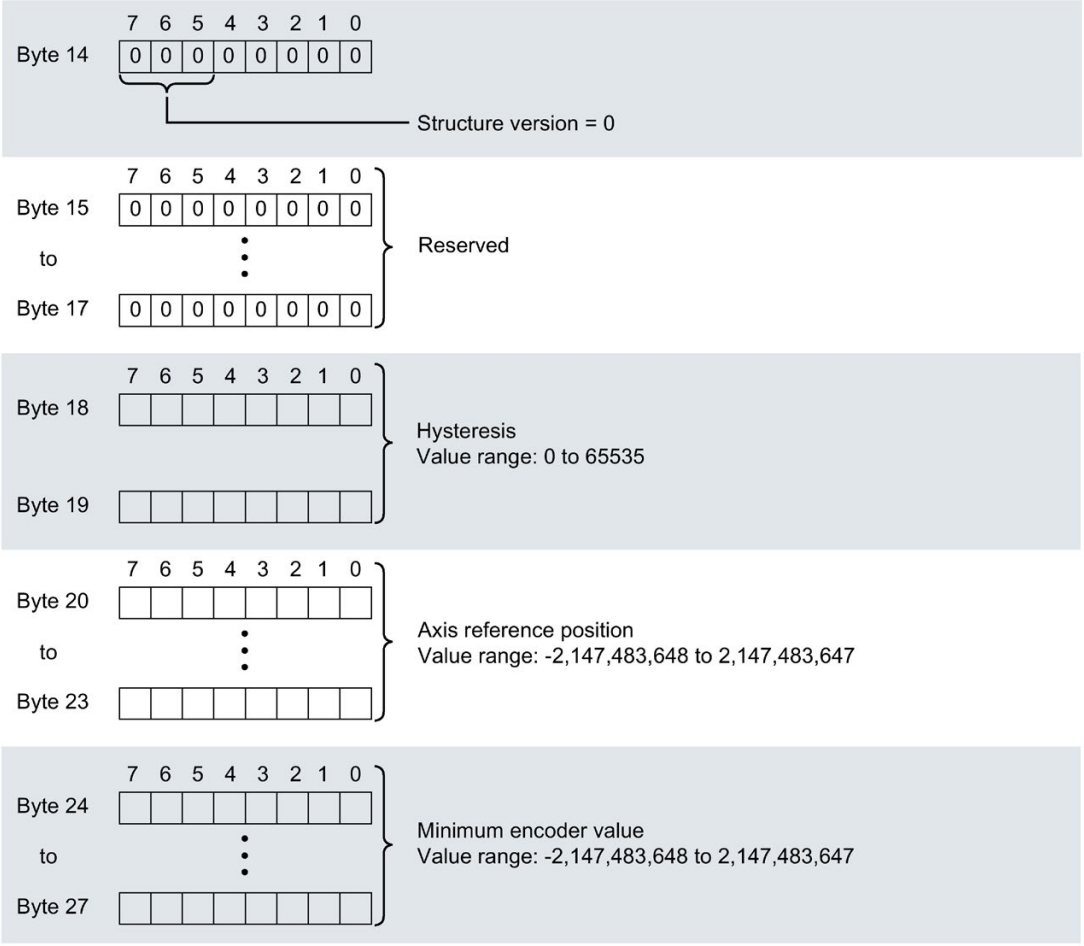

Figure A-24 Internal block cam control (Modular CAM Controller), part 1

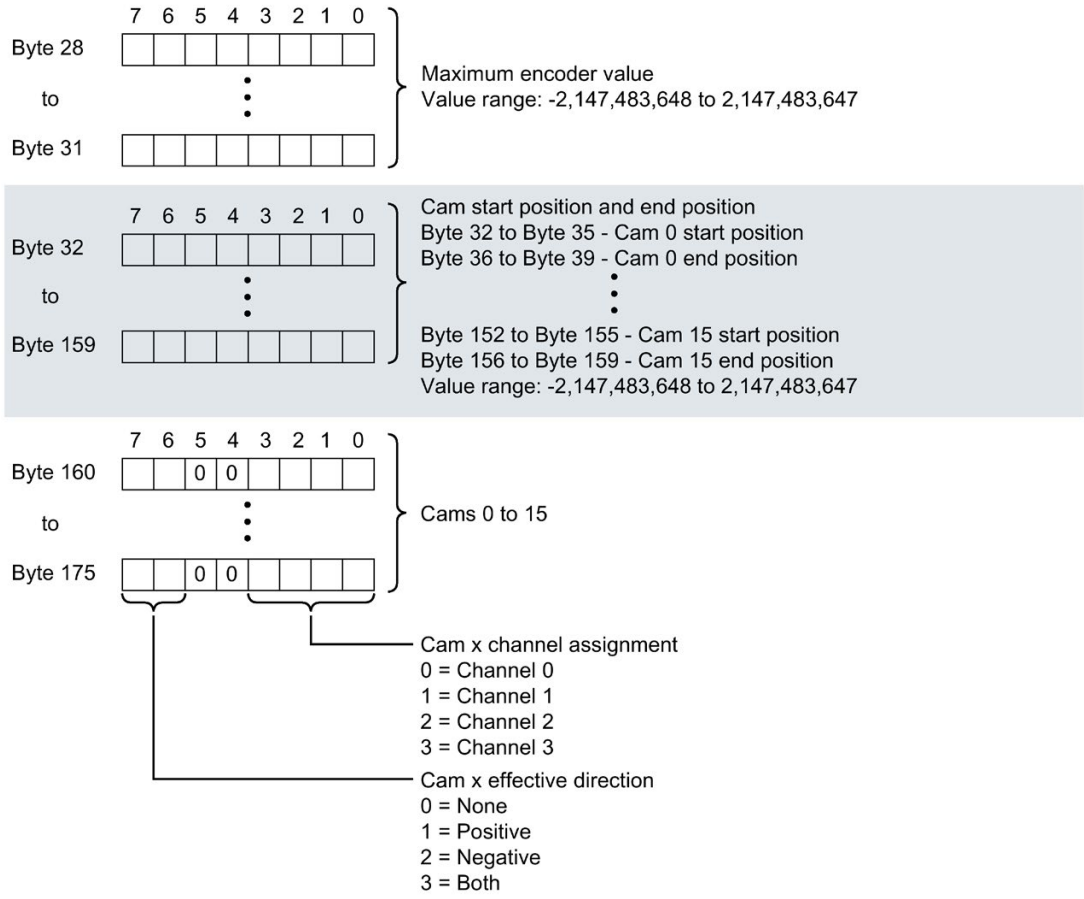

Figure A-25 Internal block cam control (Modular CAM Controller), part 2

Channel header information

The figure below shows the structure of the channel header information.

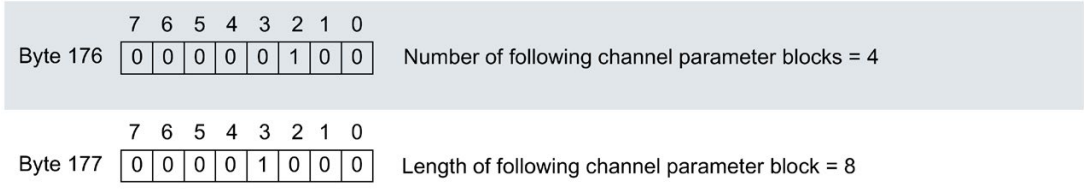

Figure A-26 Channel header information in cam control operating mode

Channel parameter block

The figure below shows the structure of the channel parameter block.

Enable a parameter by setting the corresponding bit to "1".

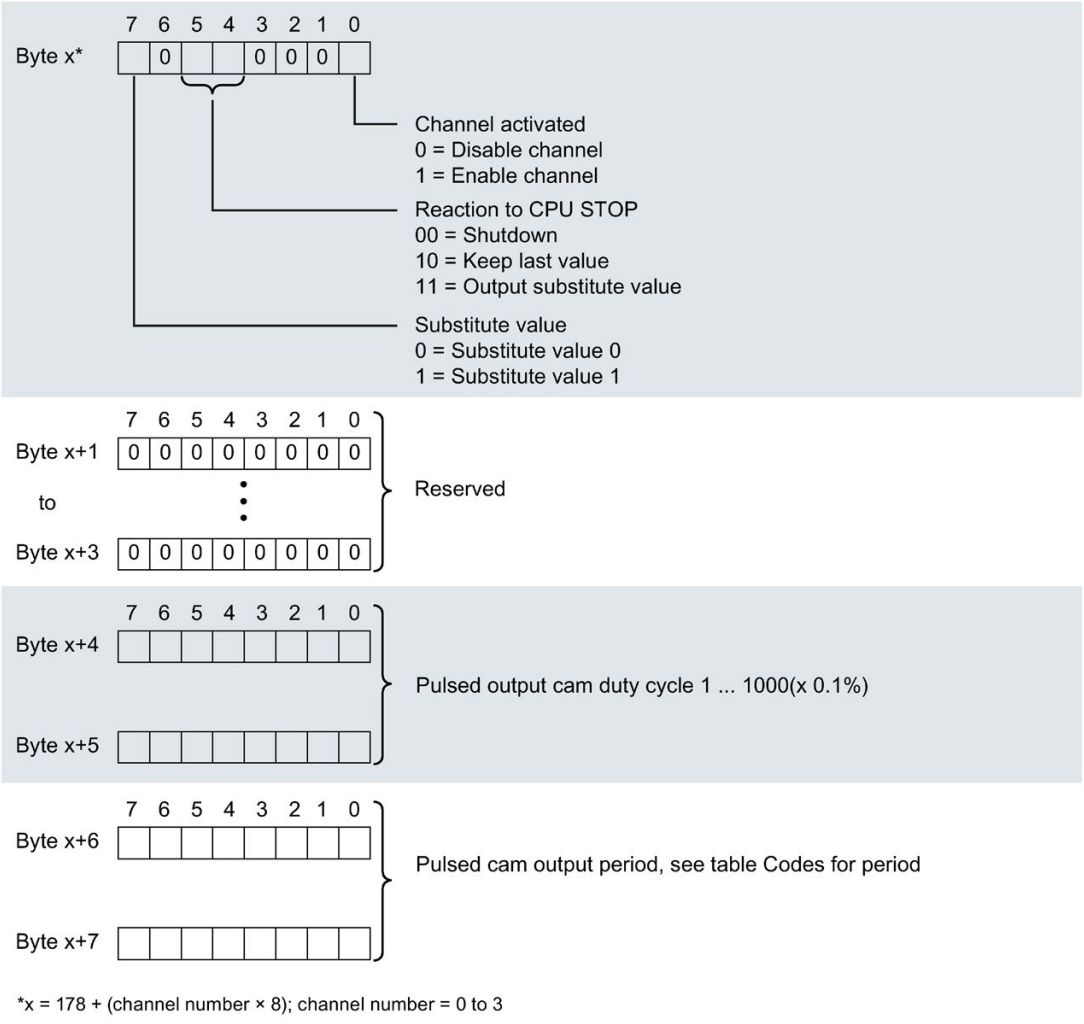

Figure A-27 Structure of byte x to x+7 for channels 0 to 3 in cam control operating mode

Codes for pulsed cam output period

The table below contains the codes for the pulsed cam output period of the digital output module. You must enter these codes in bytes x+6 and x+7 of the channel parameter block of data record 128 (see previous figure).

Table A- 7 Codes for the period

Value	Time period	Code
0	Off	0000 0000
4	0.20 ms	0000 0100
7	0.40 ms	0000 0111
12	0.93 ms	0000 1100
14	1.33 ms	0000 1110
21	4.27 ms	0001 0101
26	10.67 ms	0001 1010
30	21.33 ms	0001 1110
33	34.13 ms	0010 0001
36	59.73 ms	0010 0100

Errors when transferring the data record

The module always checks all the values of the transferred data record. Only if all the values were transferred without errors does the module take over the values from the data record.

In case of errors, the WRREC instruction for writing data records returns corresponding error codes in the STATUS parameter, see also the description of the "STATUS" parameter in the STEP 7 online help.

The following table shows the module-specific error codes and their meaning for data record 128. The error codes are supported starting from firmware version V2.0.0.

Table A- 8 Error messages, their meaning and corrective measures

Error code in the STATUS parameter (hexadecimal)				Meaning	Solution
Byte 0	Byte 1	Byte 2	Byte 3		
DF_H	80_H	$B0_H$	00_H	Number of the data record unknown	Enter a valid number for the data record.
DF_H	80_H	$B1_H$	01_H	Length of the data record incorrect	Enter a valid value for the data record length.
DF_H	80_H	$B2_H$	00_H	Module not accessible	• Check station. • Plug the module in correctly. • Check parameters of the WRREC block.
DF_H	80_H	$E0_H$	01_H	Incorrect version in header	Correct the version number of the parameter block, see Figure A-20 Header information (Page 117).

Error code in the STATUS parameter (hexadecimal)				Meaning	Solution
Byte 0	Byte 1	Byte 2	Byte 3		
DF_H	80_H	$E0_H$	02_H	Error in the header, length or number of parameter blocks	Correct the length and number of parameter blocks, see Figure A-20 Header information (Page 117) and Figure A-21 Module header information in cam control operating mode (Page 118).
DF_H	80_H	$E1_H$	01_H	Reserved bit set	Write 0 to all reserved bits.
DF_H	80_H	$E1_H$	02_H	Invalid diagnostics enable bit set for operating mode	Correct the diagnostics enables according to the operating mode, see Figure A-22 Module parameter block in cam control operating mode (Page 118).
DF_H	80_H	$E1_H$	06_H	Code for behavior with substitute value invalid	Use valid code for reaction to CPU STOP, see Figure A-27 Structure of byte x to x+7 for channels 0 to 3 in cam control operating mode (Page 121).
DF_H	80_H	$E1_H$	21_H	Set operating mode invalid	Adapt operating mode according to the configuration, see Figure A-22 Module parameter block in cam control operating mode (Page 118).
DF_H	80_H	$E1_H$	23_H	Value for pulsed cam output duty cycle invalid	Adapt pulsed cam output duty cycle to valid value, see Figure A-27 Structure of byte x to x+7 for channels 0 to 3 in cam control operating mode (Page 121).
DF_H	80_H	$E1_H$	24_H	Code for pulsed cam output period invalid	Use valid code for pulsed cam output period, see Figure A-27 Structure of byte x to x+7 for channels 0 to 3 in cam control operating mode (Page 121).
DF_H	80_H	$E1_H$	42_H	Difference of maximum encoder value and minimum encoder value invalid	Difference of maximum encoder value and minimum encoder value invalid must not exceed 2,147,483,646.
DF_H	80_H	$E1_H$	43_H	Format of encoder value invalid	Read back data record 128 and apply the values/codes of the internal layout block unchanged.
DF_H	80_H	$E1_H$	44_H	Difference of maximum encoder value and minimum encoder value invalid	The difference of maximum encoder value and minimum encoder value must be at least 2.
DF_H	80_H	$E1_H$	45_H	Specifications in the layout of encoder data invalid	Read back data record 128 and apply the values/codes of the internal layout block unchanged.
DF_H	80_H	$E1_H$	46_H	Value of hysteresis invalid	The hysteresis setting must satisfy the following conditions: • Hysteresis < ABS ((maximum encoder value - minimum encoder value) / 4)
DF_H	80_H	$E1_H$	47_H	Value for channel assignment of a cam invalid	For the channel assignment of a cam, only values 0 to 3 may be used, see Figure A-24 Internal block cam control (Modular CAM Controller), part 1 (Page 119).

Error code in the STATUS parameter (hexadecimal)				Meaning	Solution
Byte 0	Byte 1	Byte 2	Byte 3		
DF_H	80_H	$E1_H$	48_H	Difference of cam end position and cam start position invalid	The hysteresis setting must satisfy the following conditions: • Hysteresis < Cam_i end position - Cam_i start position [i = 0 to 15] or Cam end position and cam start position must satisfy the following conditions: When modulo is deactivated: • Cam end position > Cam start position When modulo is activated: • Cam end position <> Cam start position
DF_H	80_H	$E1_H$	49_H	Overlapping of cams	The switch-on range of all cams that are assigned to a cam track must not overlap.
DF_H	80_H	$E1_H$	$4A_H$	Cam start position or cam end position invalid or outside of encoder range	Cam end position and cam start position must satisfy the following conditions: When modulo is deactivated: • Minimum encoder value <= Cam start position < Cam end position <= Maximum encoder value When modulo is activated: • Minimum encoder value <= Cam start position <= Maximum encoder value • Minimum encoder value <= Cam end position <= Maximum encoder value
DF_H	80_H	$E1_H$	$4B_H$	Structure version invalid	Write 0 to structure version, see Figure A-24 Internal block cam control (Modular CAM Controller), part 1 (Page 119).

SIEMENS

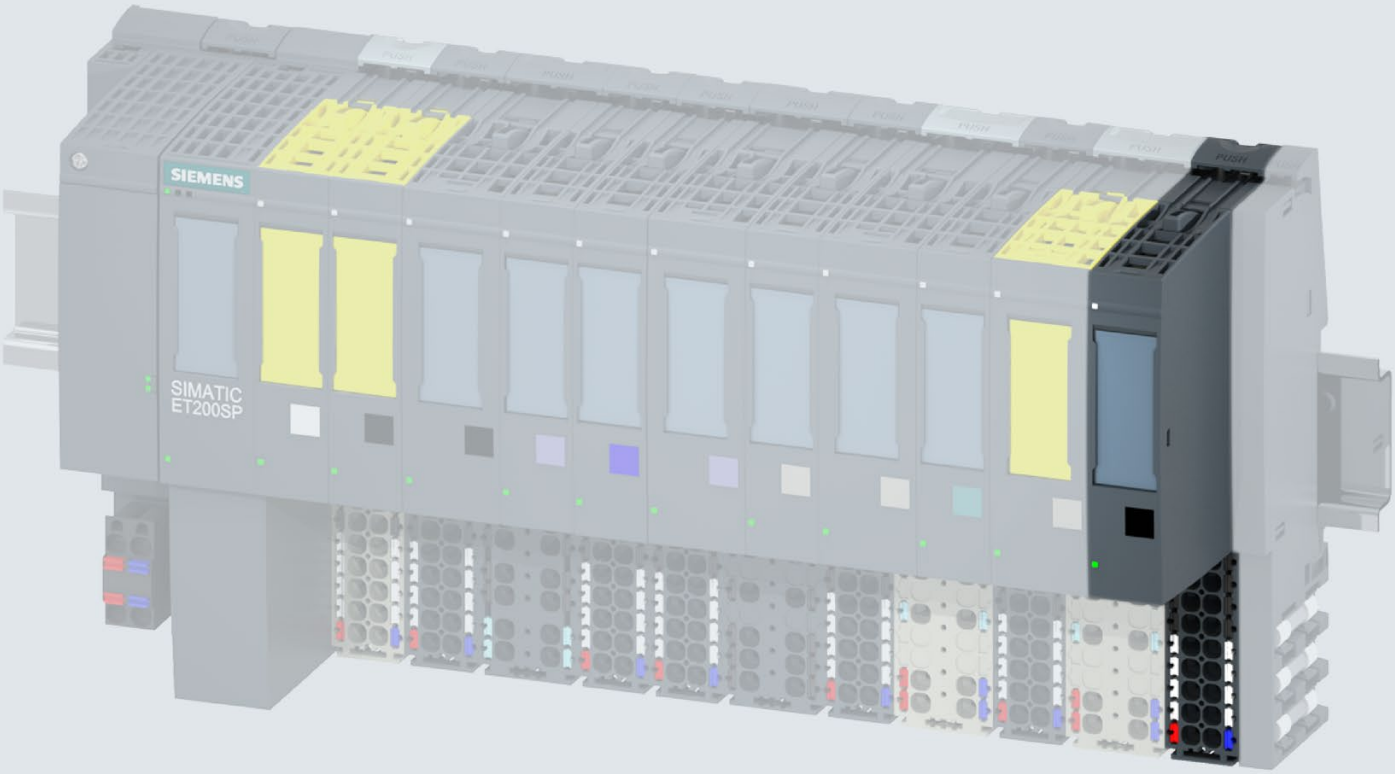

Manual

SIMATIC

ET 200SP

Digital output module
DQ 16x24VDC/0.5A BA (6ES7132-6BH00-0AA0)

Edition 02/2018

support.industry.siemens.com

SIEMENS

SIMATIC

ET 200SP DQ 16x24VDC/0.5A BA digital output module (6ES7132-6BH00-0AA0)

Manual

Preface

Documentation guide 1

Product overview 2

Connecting 3

Parameters/address space 4

Interrupts/diagnostic alarms 5

Technical specifications 6

Parameter data record A

02/2018

A5E42404662-AA

Legal information

Warning notice system

This manual contains notices you have to observe in order to ensure your personal safety, as well as to prevent damage to property. The notices referring to your personal safety are highlighted in the manual by a safety alert symbol, notices referring only to property damage have no safety alert symbol. These notices shown below are graded according to the degree of danger.

⚠ DANGER

indicates that death or severe personal injury **will** result if proper precautions are not taken.

⚠ WARNING

indicates that death or severe personal injury **may** result if proper precautions are not taken.

⚠ CAUTION

indicates that minor personal injury can result if proper precautions are not taken.

NOTICE

indicates that property damage can result if proper precautions are not taken.

If more than one degree of danger is present, the warning notice representing the highest degree of danger will be used. A notice warning of injury to persons with a safety alert symbol may also include a warning relating to property damage.

Qualified Personnel

The product/system described in this documentation may be operated only by **personnel qualified** for the specific task in accordance with the relevant documentation, in particular its warning notices and safety instructions. Qualified personnel are those who, based on their training and experience, are capable of identifying risks and avoiding potential hazards when working with these products/systems.

Proper use of Siemens products

Note the following:

⚠ WARNING

Siemens products may only be used for the applications described in the catalog and in the relevant technical documentation. If products and components from other manufacturers are used, these must be recommended or approved by Siemens. Proper transport, storage, installation, assembly, commissioning, operation and maintenance are required to ensure that the products operate safely and without any problems. The permissible ambient conditions must be complied with. The information in the relevant documentation must be observed.

Trademarks

All names identified by ® are registered trademarks of Siemens AG. The remaining trademarks in this publication may be trademarks whose use by third parties for their own purposes could violate the rights of the owner.

Disclaimer of Liability

We have reviewed the contents of this publication to ensure consistency with the hardware and software described. Since variance cannot be precluded entirely, we cannot guarantee full consistency. However, the information in this publication is reviewed regularly and any necessary corrections are included in subsequent editions.

Siemens AG
Division Digital Factory
Postfach 48 48
90026 NÜRNBERG
GERMANY

A5E42404662-AA
℗ 02/2018 Subject to change

Copyright © Siemens AG 2018.
All rights reserved

Preface

Purpose of the documentation

This manual supplements the system manual ET 200SP distributed I/O system (http://support.automation.siemens.com/WW/view/en/58649293).

Functions that generally relate to the system are described in this manual.

The information provided in this manual and in the system/function manuals supports you in commissioning the system.

Conventions

CPU: When the term "CPU" is used in this manual, it applies to the CPUs of the S7-1500 automation system as well as to the CPUs/interface modules of the distributed I/O system ET 200SP.

STEP 7: In this documentation, "STEP 7" is used as a synonym for all versions of the configuration and programming software "STEP 7 (TIA Portal)".

Please also observe notes marked as follows:

Note

A note contains important information on the product described in the documentation, on the handling of the product or on the section of the documentation to which particular attention should be paid.

Recycling and disposal

For ecologically sustainable recycling and disposal of your old device, contact a certified disposal service for electronic scrap and dispose of the device in accordance with the regulations in your country.

Security information

Siemens provides products and solutions with industrial security functions that support the secure operation of plants, systems, machines and networks.

In order to protect plants, systems, machines and networks against cyber threats, it is necessary to implement – and continuously maintain – a holistic, state-of-the-art industrial security concept. Siemens' products and solutions constitute one element of such a concept.

Customers are responsible for preventing unauthorized access to their plants, systems, machines and networks. Such systems, machines and components should only be connected to an enterprise network or the internet if and to the extent such a connection is necessary and only when appropriate security measures (e.g. firewalls and/or network segmentation) are in place.

For additional information on industrial security measures that may be implemented, please visit (https://www.siemens.com/industrialsecurity).

Siemens' products and solutions undergo continuous development to make them more secure. Siemens strongly recommends that product updates are applied as soon as they are available and that the latest product versions are used. Use of product versions that are no longer supported, and failure to apply the latest updates may increase customers' exposure to cyber threats.

To stay informed about product updates, subscribe to the Siemens Industrial Security RSS Feed under (https://www.siemens.com/industrialsecurity).

Table of contents

Preface 3
1 Documentation guide 6
2 Product overview 10
2.1 Properties 10
3 Connecting 12
3.1 Wiring and block diagram 12
4 Parameters/address space 15
4.1 Parameters 15
4.2 Declaration of parameters 17
4.3 Address space 18
5 Interrupts/diagnostic alarms 19
5.1 Status and error display 19
5.2 Interrupts 21
5.3 Diagnostic messages 21
6 Technical specifications 22
A Parameter data record 26
A.1 Parameter assignment and structure of parameter data record 26

Documentation guide 1

The documentation for the SIMATIC ET 200SP distributed I/O system is arranged into three areas.
This arrangement enables you to access the specific content you require.

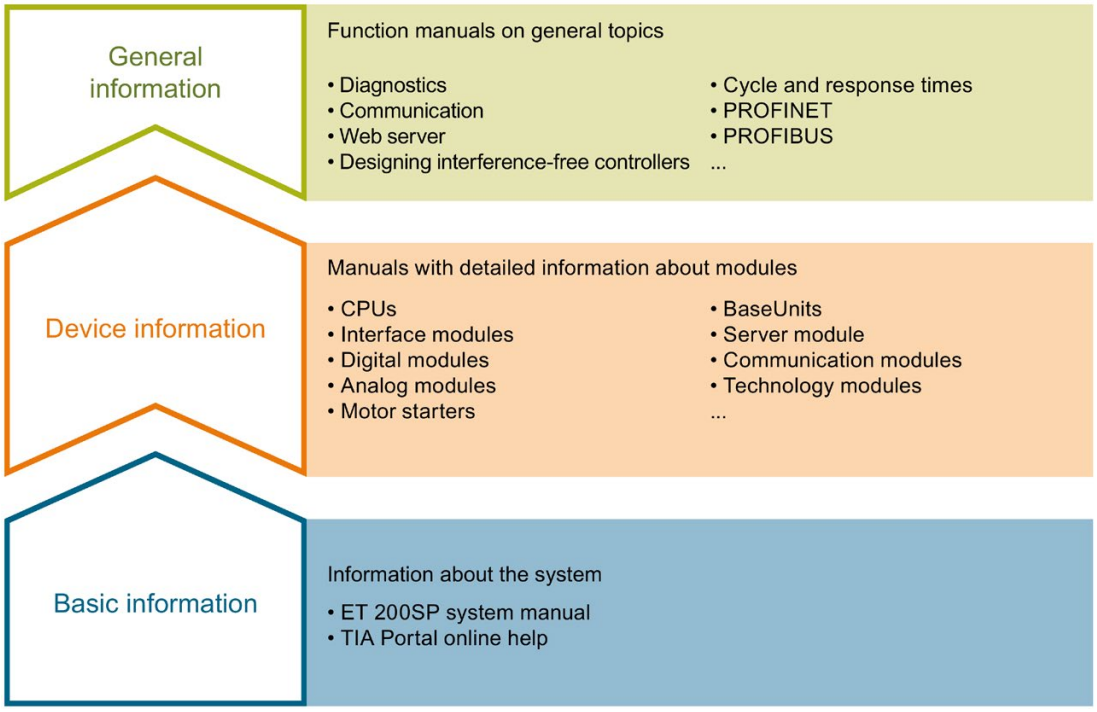

Basic information

The system manual describes in detail the configuration, installation, wiring and commissioning of the SIMATIC ET 200SP. distributed I/O system. The STEP 7 online help supports you in the configuration and programming.

Device information

Product manuals contain a compact description of the module-specific information, such as properties, wiring diagrams, characteristics and technical specifications.

General information

The function manuals contain detailed descriptions on general topics regarding the SIMATIC ET 200SP distributed I/O system, e.g. diagnostics, communication, Web server, motion control and OPC UA.

You can download the documentation free of charge from the Internet (https://support.industry.siemens.com/cs/ww/en/view/109742709).

Changes and supplements to the manuals are documented in a Product Information.

You can download the product information free of charge from the Internet (https://support.industry.siemens.com/cs/us/en/view/73021864).

Manual Collection ET 200SP

The Manual Collection contains the complete documentation on the SIMATIC ET 200SP distributed I/O system gathered together in one file.

You can find the Manual Collection on the Internet (http://support.automation.siemens.com/WW/view/en/84133942).

"mySupport"

With "mySupport", your personal workspace, you make the most of your Industry Online Support.

In "mySupport" you can store filters, favorites and tags, request CAx data and put together your personal library in the Documentation area. Furthermore, your data is automatically filled into support requests and you always have an overview of your current requests.

You need to register once to use the full functionality of "mySupport".

You can find "mySupport" in the Internet (https://support.industry.siemens.com/My/ww/en).

"mySupport" - Documentation

In the Documentation area of "mySupport", you have the possibility to combine complete manuals or parts of them to make your own manual.
You can export the manual in PDF format or in an editable format.

You can find "mySupport" - Documentation in the Internet (http://support.industry.siemens.com/My/ww/en/documentation).

"mySupport" - CAx Data

In the CAx Data area of "mySupport", you can have access the latest product data for your CAx or CAe system.

You configure your own download package with a few clicks.

In doing so you can select:

- Product images, 2D dimension drawings, 3D models, internal circuit diagrams, EPLAN macro files
- Manuals, characteristics, operating manuals, certificates
- Product master data

You can find "mySupport" - CAx Data in the Internet (http://support.industry.siemens.com/my/ww/en/CAxOnline).

Application examples

The application examples support you with various tools and examples for solving your automation tasks. Solutions are shown in interplay with multiple components in the system - separated from the focus in individual products.

You can find the application examples on the Internet (https://support.industry.siemens.com/sc/ww/en/sc/2054).

TIA Selection Tool

With the TIA Selection Tool, you can select, configure and order devices for Totally Integrated Automation (TIA).
This tool is the successor of the SIMATIC Selection Tool and combines the known configurators for automation technology into one tool.
With the TIA Selection Tool, you can generate a complete order list from your product selection or product configuration.

You can find the TIA Selection Tool on the Internet (http://w3.siemens.com/mcms/topics/en/simatic/tia-selection-tool).

SIMATIC Automation Tool

You can use the SIMATIC Automation Tool to run commissioning and maintenance activities simultaneously on various SIMATIC S7 stations as a bulk operation independently of the TIA Portal.

The SIMATIC Automation Tool provides a multitude of functions:

- Scanning of a PROFINET/Ethernet network and identification of all connected CPUs
- Address assignment (IP, subnet, gateway) and station name (PROFINET device) to a CPU
- Transfer of the data and the programming device/PC time converted to UTC time to the module
- Program download to CPU
- Operating mode switchover RUN/STOP
- Localization of the CPU by means of LED flashing
- Reading out CPU error information
- Reading the CPU diagnostic buffer
- Reset to factory settings
- Updating the firmware of the CPU and connected modules

You can find the SIMATIC Automation Tool on the Internet (https://support.industry.siemens.com/cs/ww/en/view/98161300).

PRONETA

With SIEMENS PRONETA (PROFINET network analysis), you analyze the plant network during commissioning. PRONETA features two core functions:

- The topology overview independently scans PROFINET and all connected components.
- The IO check is a fast test of the wiring and the module configuration of a system.

You can find SIEMENS PRONETA on the Internet (https://support.industry.siemens.com/cs/ww/en/view/67460624).

SINETPLAN

SINETPLAN, the Siemens Network Planner, supports you in planning automation systems and networks based on PROFINET. The tool facilitates professional and predictive dimensioning of your PROFINET installation as early as in the planning stage. In addition, SINETPLAN supports you during network optimization and helps you to exploit network resources optimally and to plan reserves. This helps to prevent problems in commissioning or failures during productive operation even in advance of a planned operation. This increases the availability of the production plant and helps improve operational safety.

The advantages at a glance

- Network optimization thanks to port-specific calculation of the network load
- Increased production availability thanks to online scan and verification of existing systems
- Transparency before commissioning through importing and simulation of existing STEP 7 projects
- Efficiency through securing existing investments in the long term and optimal exploitation of resources

You can find SINETPLAN on the Internet (https://www.siemens.com/sinetplan).

Product overview

2

2.1 Properties

Article number

6ES7132-6BH00-0AA0

View of the module

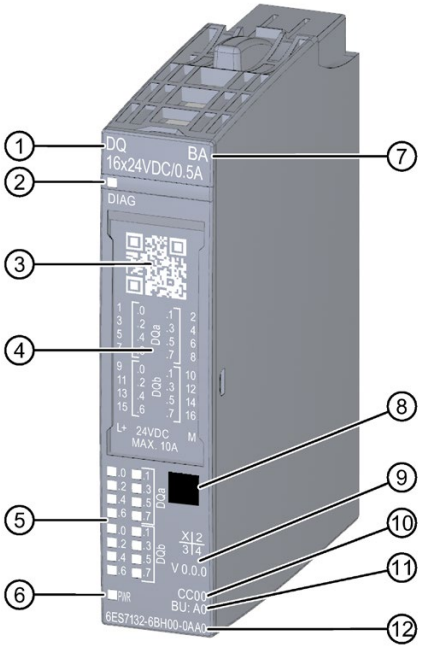

① Module type and name
② LED for diagnostics
③ 2D matrix code
④ Wiring diagram
⑤ LEDs for channel status
⑥ LED for supply voltage
⑦ Function class
⑧ Color coding module type
⑨ Function and firmware version
⑩ Color code for selecting the color identification labels
⑪ BU type
⑫ Article number

Figure 2-1 View of the module DQ 16×24VDC/0.5A BA

Properties

The module has the following technical properties:

- Digital output module with 16 outputs
- Supply voltage L+
- Output current 0.5 A (per channel), total current max. 8 A
- Source output (PNP, P-switching)
- Configurable diagnostics (per module)
- Configurable substitute values (per channel)
- Suitable for solenoid valves, DC contactors, and indicator lights

The module supports the following functions:

Table 2- 1 Version dependencies of the functions

Function	HW version	FW version	STEP 7		GSD file	
			TIA Portal	V5.x	PROFINET IO	PROFIBUS DP
Identification data I&M0 to I&M3	FS01	V0.0.0 and higher	V14 or higher with HSP 0240	V5.5 SP3 or higher with HSP 0230 V8.0 or higher	X	X
Configuration in RUN	FS01	V0.0.0 and higher	V14 or higher with HSP 0240	V5.5 SP3 or higher with HSP 0230 V8.0 or higher	X	X

Accessories

The following accessories must be ordered separately:

- Labeling strips
- Color identification labels
- Reference identification label
- Shield connector

See also

You can find additional information on the accessories in the system manualET 200SP distributed I/O system (http://support.automation.siemens.com/WW/view/en/58649293).

Connecting 3

3.1 Wiring and block diagram

This section includes the block diagram of the DQ 16×24VDC/0.5A BA module with the terminal assignments for a 1-wire and 2-wire connection.

You can find information on wiring the BaseUnit as well as information on wiring your system with potential distribution modules in the system manual Distributed I/O System ET 200SP (https://support.industry.siemens.com/cs/ww/en/view/58649293).

Note

The load group of the module must begin with a light-colored BaseUnit. Keep this in mind also during the configuration.

Note

The fuse integrated in BaseUnit type A1 may be triggered in the digital output module, rendering the terminals unusable.
Make sure that you only use digital output modules with BaseUnit type A0 during commissioning.

Wiring: 1-wire connection of actuators

The following figure shows the block diagram and an example for the terminal assignment of the digital output module DQ 16×24VDC/0.5A BA on the BaseUnit BU type A0 (1-wire connection).

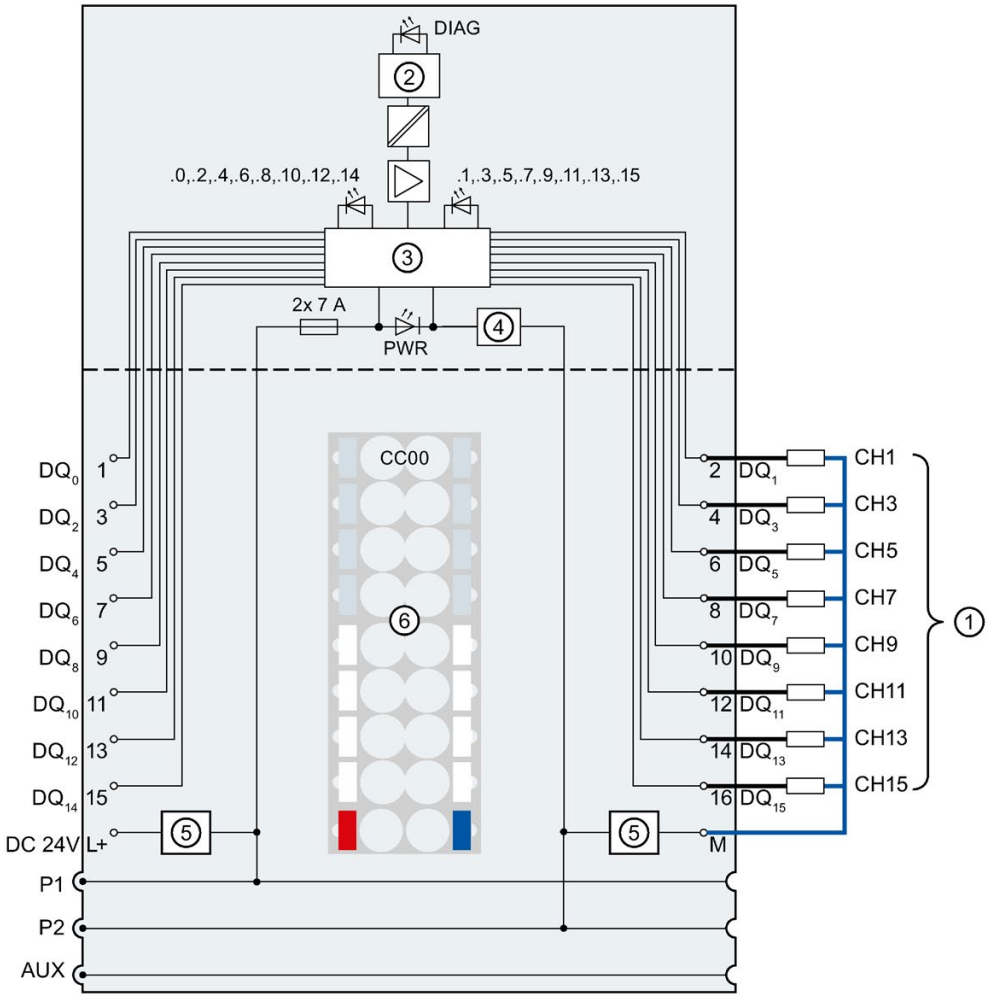

①	1-wire connection	DQ_n	Output signal, channel n
②	Backplane bus interface	24 V DC	Supply voltage L+ (infeed for light-colored BaseUnit only)
③	Output electronics	M	Ground
④	Polarity reversal protection	P1, P2, AUX	Internal self-assembling voltage buses Connection to left (dark-colored BaseUnit) Connection to left interrupted (light-colored BaseUnit)
⑤	Supply voltage filter circuit (only available with light BaseUnit)	DIAG	Diagnostics LED (green, red)
⑥	Color-coded label with color code CC00 (optional)	.0 to .15	Channel status LED (green)
		PWR	Power LED (green)

Figure 3-1 Wiring and block diagram for 1-wire connection of actuators

Example: 2-wire connection of actuators with potential distribution module

The following figure shows an example for the terminal assignment of the digital output module DQ 16×24VDC/0.5A BA on the BaseUnit BU type A0 (2-wire connection) in combination with a potential distribution module.

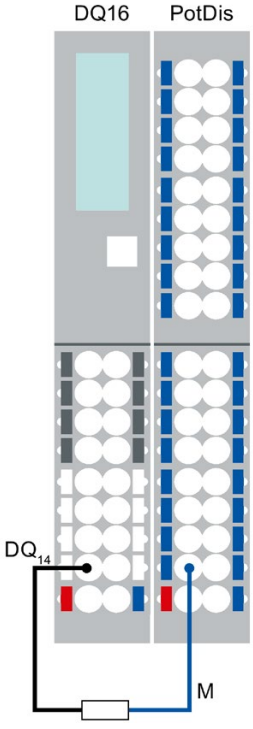

Figure 3-2 Example: 2-wire connection of actuators with potential distribution module

Parameters/address space 4

4.1 Parameters

Parameters for DQ 16x24VDC/0.5A BA

Specify the module properties with the various parameters in the course of your STEP 7 configuration. The following table lists the configurable parameters. The effective range of the configurable parameters depends on the type of configuration.

The following configurations are possible:

- Central operation with an ET 200SP CPU
- Distributed operation on PROFINET IO in an ET 200SP system
- Distributed operation with PROFIBUS DP in an ET 200SP system

When assigning parameters in the user program, use the "WRREC" instruction to transfer the parameters to the module using the data records; refer to section Parameter assignment and structure of parameter data record (Page 26).

The following parameter settings are possible:

Table 4- 1 Configurable parameters and their defaults (GSD file)

Parameters	Range of values	Default	Parameter reassignment in RUN	Scope with configuration software, e.g. STEP 7 (TIA Portal)	
				GSD file PROFINET IO	GSD file PROFIBUS DP [1]
Diagnostics: No supply voltage L+	• Disable • Enable	Disable	Yes	Module	Module
Channel activated	• Disable • Enable	Enable	Yes	Channel	Channel
Reaction to CPU STOP	• Turn off • Keep last value • Output substitute value 1	Turn off	Yes	Channel	Module
Potential group	• Use potential group of the left module (module plugged into a dark-colored BaseUnit) • Enable new potential group (module plugged into light-colored BaseUnit)	Use potential group of the left module	No	Module	Module

[1] Due to the limited number of parameters at a maximum of 244 bytes per ET 200SP station with a PROFIBUS GSD configuration, the configuration options are restricted. If required, you can assign these parameters using data record 128 as described in the "GSD file PROFINET IO" column (see table above). The parameter length of the I/O module is 6 bytes.

4.2 Declaration of parameters

Diagnostics: No supply voltage L+

Enabling of the diagnostics for no or insufficient supply voltage L+.

Channel activated

Determines whether a channel is activated or deactivated.

Reaction to CPU STOP

Determines the behavior of the module in the event of a CPU STOP.

Potential group

A potential group consists of a group of directly adjacent I/O modules within an ET 200SP station, which are supplied via a common supply voltage.

A potential group begins with a light-colored BaseUnit through which the required voltage is supplied for all modules of the potential group. The light-colored BaseUnit interrupts the three self-assembling voltage buses P1, P2 and AUX to the left neighbor.

All additional I/O modules of this potential group are plugged into dark-colored BaseUnits. You take the potential of the self-assembling voltage buses P1, P2 and AUX from the left neighbor.

A potential group ends with the dark-colored BaseUnit, which follows a light-colored BaseUnit or server module in the station configuration.

See also

ET 200SP distributed I/O system
(http://support.automation.siemens.com/WW/view/en/58649293)

4.3 Address space

The module can be configured differently in STEP 7; see following table. Depending on the configuration, additional/different addresses are assigned in the process image output/input.

Configuration options of DQ 16x24VDC/0.5A BA

You can configure the module with STEP 7 (TIA Portal) or with a GSD file. If you configure the module by means of a GSD file, the configurations are available under various short designations/module names; see the table below. The following configurations are possible:

Table 4- 2 Configuration options with GSD file

Configuration	Short designation/module name in the GSD file	Configuration software, e.g., with STEP 7 (TIA Portal)		
		Integrated in hard-ware catalog STEP 7	GSD file PROFINET IO	GSD file PROFIBUS DP
1 x 16-channel without value status	DQ 16x24VDC/0.5A BA V0.0	V14 or higher with HSP 0230	X	X

Address space

The figure below shows the assignment of the address space for DQ 16x24VDC/0.5A BA.

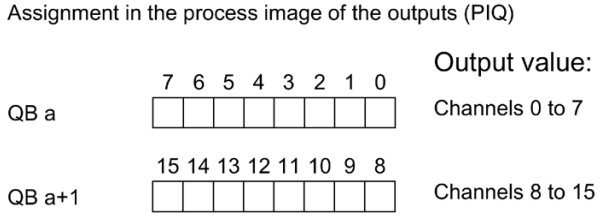

Figure 4-1 Address space DQ 16×24VDC/0.5A BA

Interrupts/diagnostic alarms

5

5.1 Status and error display

LED display

DQ 16x24VDC/0.5A BA

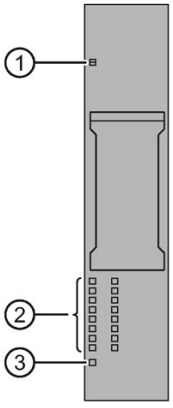

① DIAG (green/red)
② Channel status (green)
③ PWR (green)

Figure 5-1 LED display

Meaning of the LEDs

The following tables contain the meaning of the status and error displays. Remedial measures for diagnostic alarms can be found in chapter Diagnostic messages (Page 21).

DIAG LED

Table 5- 1 DIAG LED fault display

DIAG LED	Meaning
☐ Off	Backplane bus supply of the ET 200SP not OK
☼ Flashing	Module not configured
■ On	Module parameters assigned
☼ Flashing	Module diagnostics is available

LED channel status

Table 5- 2 LED channel status display

LED channel status	Meaning
☐ Off	Channel deactivated or activated and process signal = 0
■ On	Channel activated and process signal = 1

PWR LED

Table 5- 3 Status display of the PWR LED

PWR LED	Meaning
☐ Off	Supply voltage L+ missing
■ On	Supply voltage L+ present

5.2 Interrupts

The DQ 16×24VDC/0.5A BA digital output module supports diagnostic interrupts.

Diagnostic interrupts

The module generates a diagnostic interrupt at the following events:

- Parameter assignment error
- Supply voltage missing

5.3 Diagnostic messages

A diagnostics alarm is generated and the DIAG-LED flashes on the module for each diagnostics event. You can read out the diagnostics alarms, for example, in the diagnostics buffer of the CPU. You can evaluate the error codes with the user program.

Table 5- 4 Diagnostics alarms, their meaning and corrective measures

Diagnostics alarm	Error code	Meaning	Solution
Parameter assignment error	10_H	• The module cannot evaluate parameters for the channel. • Incorrect parameter assignment.	• Correct the parameter assignment
Supply voltage missing	11_H	Missing or insufficient supply voltage L+	• Check supply voltage L+ on the BaseUnit • Check BaseUnit type

Technical specifications

6

Technical specifications of the DQ 16×24VDC/0.5A BA

Article number	6ES7132-6BH00-0AA0
General information	
Product type designation	DQ 16x 24 V DC/0.5 A BA, PU 1
Firmware version	V0.0
• FW update possible	No
usable BaseUnits	BU type A0
Color code for module-specific color identification plate	CC00
Product function	
• I&M data	Yes; I&M0 to I&M3
Engineering with	
• STEP 7 TIA Portal configurable/integrated as of version	V14
• STEP 7 configurable/integrated as of version	STEP 7 V5.5 or higher
• PROFIBUS as of GSD version/GSD revision	One GSD file each, Revision 3 and 5 and higher
• PROFINET as of GSD version/GSD revision	GSDML V2.3
Operating mode	
• DQ	Yes
• DQ with energy-saving function	No
• PWM	No
• Oversampling	No
• MSO	No
Supply voltage	
Rated value (DC)	24 V
permissible range, lower limit (DC)	19.2 V
permissible range, upper limit (DC)	28.8 V
Reverse polarity protection	Yes
Input current	
Current consumption, max.	55 mA; without load
Output voltage	
Rated value (DC)	24 V

Article number	6ES7132-6BH00-0AA0
Power loss	
Power loss, typ.	1 W
Address area	
Address space per module	
• Outputs	2 byte
Hardware configuration	
Automatic encoding	Yes
• Mechanical coding element	Yes
Selection of BaseUnit for connection variants	
• 1-wire connection	BU type A0
• 2-wire connection	BU type A0 + Potential isolation module
• 3-wire connection	BU type A0 + Potential isolation module
• 4-wire connection	BU type A0 + Potential isolation module
Digital outputs	
Type of digital output	Source output (PNP, current-sourcing)
Number of digital outputs	16
Current-sinking	No
Current-sourcing	Yes
Short-circuit protection	Yes
• Response threshold, typ.	1.4 A; 0.7 to 1.9 A
Open-circuit detection	No
Limitation of inductive shutdown voltage to	Typ. L+ (-53 V)
Controlling a digital input	Yes
Switching capacity of the outputs	
• with resistive load, max.	0.5 A
• on lamp load, max.	5 W
Load resistance range	
• lower limit	48 Ω
• upper limit	100 kΩ
Output current	
• for signal "1" rated value	0.5 A
• for signal "0" residual current, max.	30 µA
Output delay with resistive load	
• "0" to "1", typ.	80 µs; at rated load
• "0" to "1", max.	150 µs; at rated load
• "1" to "0", typ.	100 µs; at rated load
• "1" to "0", max.	200 µs; at rated load

Article number	6ES7132-6BH00-0AA0
Parallel switching of two outputs	
• for uprating	No
• for redundant control of a load	Yes
Switching frequency	
• with resistive load, max.	100 Hz
• with inductive load, max.	2 Hz
• on lamp load, max.	10 Hz
Total current of the outputs	
• Current per channel, max.	0.5 A
• Current per module, max.	8 A
Total current of the outputs (per module)	
horizontal installation	
– up to 60 °C, max.	8 A
vertical installation	
– up to 50 °C, max.	8 A
Cable length	
• shielded, max.	1 000 m
• unshielded, max.	600 m
Isochronous mode	
Isochronous operation (application synchronized up to terminal)	No
Interrupts/diagnostics/status information	
Diagnostics function	Yes
Substitute values connectable	Yes
Alarms	
• Diagnostic alarm	Yes
Diagnostic messages	
• Monitoring the supply voltage	Yes
• Wire-break	No
• Short-circuit	No
• Group error	Yes
Diagnostics indication LED	
• Monitoring of the supply voltage (PWR-LED)	Yes; green PWR LED
• Channel status display	Yes; Green LED
• for channel diagnostics	No
• for module diagnostics	Yes; green/red DIAG LED
Potential separation	

Article number	6ES7132-6BH00-0AA0
Potential separation channels	
• between the channels	No
• between the channels and backplane bus	Yes
Isolation	
Isolation tested with	707 V DC (type test)
Ambient conditions	
Ambient temperature during operation	
• horizontal installation, min.	0 °C
• horizontal installation, max.	60 °C
• vertical installation, min.	0 °C
• vertical installation, max.	50 °C
Altitude during operation relating to sea level	
• Ambient air temperature-barometric pressure-altitude	On request: Ambient temperatures lower than 0 °C (without condensation) and/or installation altitudes greater than 2 000 m
Dimensions	
Width	15 mm
Height	73 mm
Depth	58 mm
Weights	
Weight, approx.	30 g

Dimension drawing

See manual ET 200SP BaseUnits (http://support.automation.siemens.com/WW/view/en/58532597/133300)

Parameter data record

A

A.1 Parameter assignment and structure of parameter data record

The data record of the module has an identical structure, regardless of whether you configure the module with PROFIBUS DP or PROFINET IO. With data record 128, you can reconfigure the module in your user program regardless of your programming. This means that you can use all the functions of the module even if you configured it via PROFIBUS-GSD.

Parameter assignment in the user program

You have the option to reconfigure the module in RUN (e.g. the response of selected channels to the CPU-STOP state can be changed in RUN without having an effect on the other channels).

Changing parameters in RUN

The "WRREC" instruction is used to transfer the parameters to the module using data record 128. The parameters set in STEP 7 are not changed in the CPU, which means that the parameters set in STEP 7 will be valid again after a restart.

Output parameter STATUS

If errors occur when transferring parameters with the "WRREC" instruction, the module continues operation with the previous parameter assignment. The STATUS output parameter contains a corresponding error code.

You will find a description of the "WRREC" instruction and the error codes in the STEP 7 online help.

Structure of data record 128

Note

Channel 0 includes the diagnostics enable for the entire module.

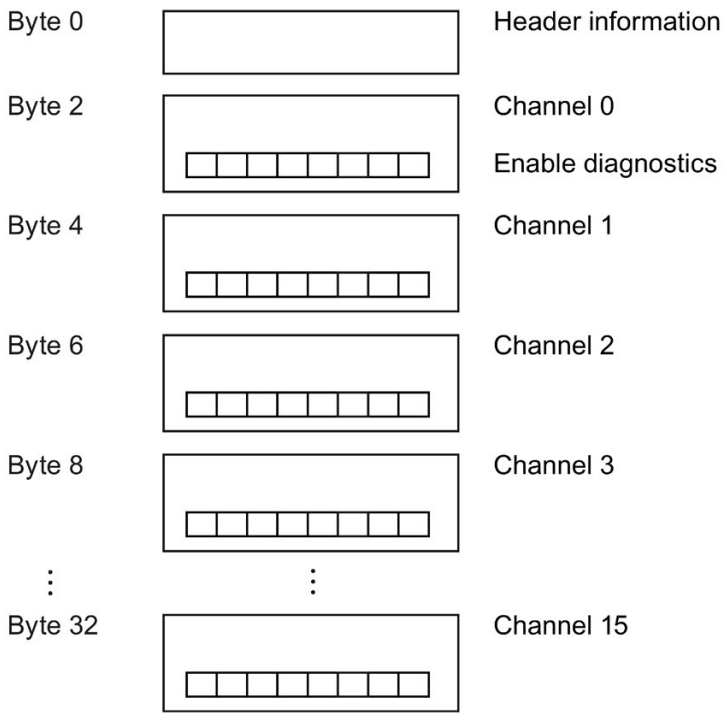

Figure A-1 Structure of data record 128

Header information

The figure below shows the structure of the header information.

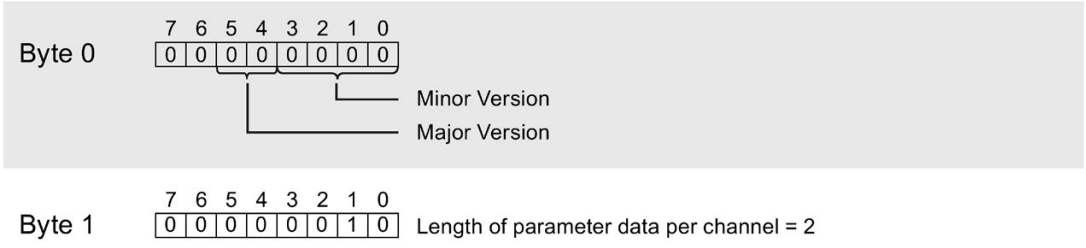

Figure A-2 Header information

Parameters

The figure below shows the structure of the parameters for channels 0 to 15.

You enable a parameter by setting the corresponding bit to "1".

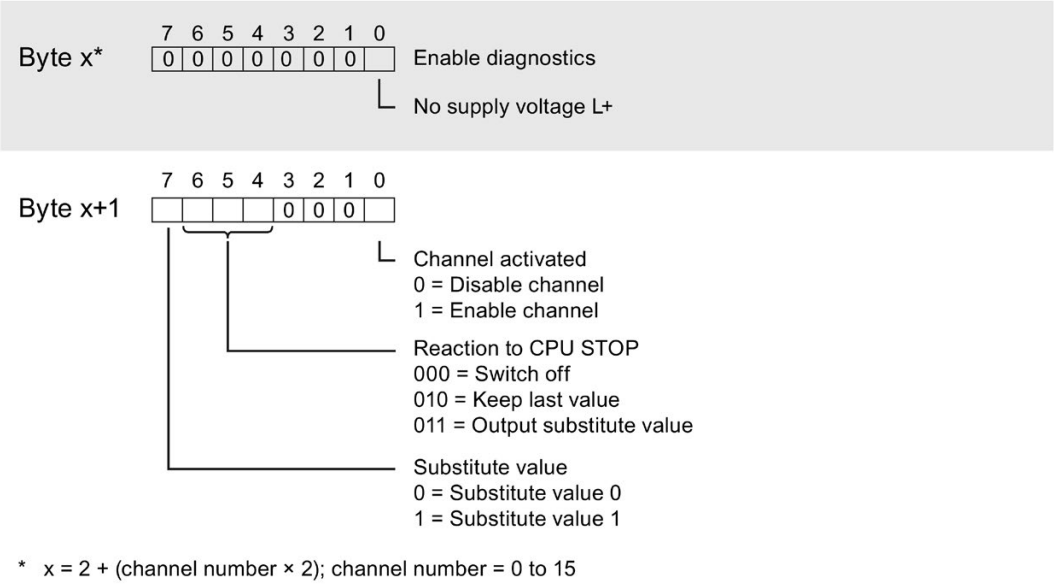

* x = 2 + (channel number × 2); channel number = 0 to 15

Figure A-3 Structure byte x to x+1 for the channels 0 to 15

Error transferring the data record

The module always checks all the values of the transferred data record. Only if all the values were transferred without errors does the module apply the values from the data record.

The WRREC instruction for writing data records returns corresponding error codes when errors occur in the STATUS parameter. (See also the description of the "STATUS" parameter in the STEP 7 online help).

The following table shows the module-specific error codes and their meaning for the parameter data record 128.

Error code in STATUS parameter (hexadecimal)				Meaning	Solution
Byte 0	Byte 1	Byte 2	Byte 3		
DF	80	B0	xx	Number of the data record unknown.	Enter a valid number for the data record.
DF	80	B1	xx	Length of the data record incorrect.	Enter a valid value for the data record length.
DF	80	B2	xx	Slot invalid or cannot be accessed.	• Check the station whether the module is plugged or drawn. • Check the assigned values for the parameters of the WRREC instruction.
DF	80	E0	xx	Wrong version or error in the header information.	Correct the version, length and number of parameter blocks.
DF	80	E0	06	Invalid coding for substitute value behavior.	Check the parameters of the module.

SIEMENS

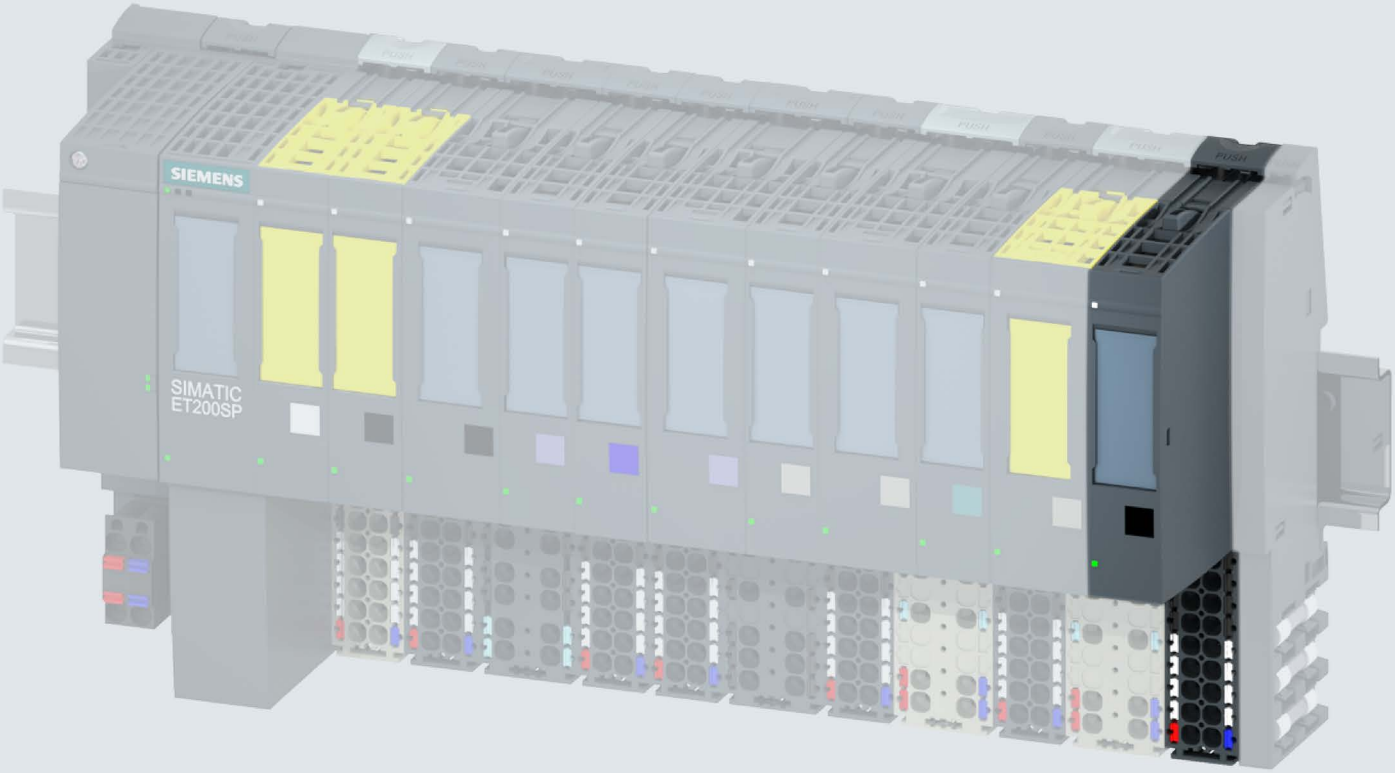

Manual

SIMATIC

ET 200SP

Digital output module
DQ 16x24VDC/0.5A ST (6ES7132-6BH01-0BA0)

Edition 09/2017

support.industry.siemens.com

SIEMENS

SIMATIC

ET 200SP
Digital output module
DQ 16x24VDC/0.5A ST
(6ES7132-6BH01-0BA0)

Manual

Preface

Documentation guide 1

Product overview 2

Connecting 3

Parameters/address space 4

Interrupts/diagnostic alarms 5

Technical specifications 6

Parameter data record A

09/2017

A5E03574420-AE

Legal information

Warning notice system

This manual contains notices you have to observe in order to ensure your personal safety, as well as to prevent damage to property. The notices referring to your personal safety are highlighted in the manual by a safety alert symbol, notices referring only to property damage have no safety alert symbol. These notices shown below are graded according to the degree of danger.

⚠ DANGER

indicates that death or severe personal injury **will** result if proper precautions are not taken.

⚠ WARNING

indicates that death or severe personal injury **may** result if proper precautions are not taken.

⚠ CAUTION

indicates that minor personal injury can result if proper precautions are not taken.

NOTICE

indicates that property damage can result if proper precautions are not taken.

If more than one degree of danger is present, the warning notice representing the highest degree of danger will be used. A notice warning of injury to persons with a safety alert symbol may also include a warning relating to property damage.

Qualified Personnel

The product/system described in this documentation may be operated only by **personnel qualified** for the specific task in accordance with the relevant documentation, in particular its warning notices and safety instructions. Qualified personnel are those who, based on their training and experience, are capable of identifying risks and avoiding potential hazards when working with these products/systems.

Proper use of Siemens products

Note the following:

⚠ WARNING

Siemens products may only be used for the applications described in the catalog and in the relevant technical documentation. If products and components from other manufacturers are used, these must be recommended or approved by Siemens. Proper transport, storage, installation, assembly, commissioning, operation and maintenance are required to ensure that the products operate safely and without any problems. The permissible ambient conditions must be complied with. The information in the relevant documentation must be observed.

Trademarks

All names identified by ® are registered trademarks of Siemens AG. The remaining trademarks in this publication may be trademarks whose use by third parties for their own purposes could violate the rights of the owner.

Disclaimer of Liability

We have reviewed the contents of this publication to ensure consistency with the hardware and software described. Since variance cannot be precluded entirely, we cannot guarantee full consistency. However, the information in this publication is reviewed regularly and any necessary corrections are included in subsequent editions.

Siemens AG
Division Digital Factory
Postfach 48 48
90026 NÜRNBERG
GERMANY

A5E03574420-AE
℗ 10/2017 Subject to change

Copyright © Siemens AG 2012 - 2017.
All rights reserved

Preface

Purpose of the documentation

This manual supplements the system manual ET 200SP distributed I/O system (http://support.automation.siemens.com/WW/view/en/58649293).

Functions that generally relate to the system are described in this manual.

The information provided in this manual and in the system/function manuals supports you in commissioning the system.

Changes compared to previous version

Compared to the previous version, this manual contains the following change:

Due to the change in hardware, the article number of the module has been changed from 6ES7132-6BH00-0BA0 to 6ES7132-6BH01-0BA0. Both modules are compatible, except for the firmware-update function.

Conventions

CPU: When the term "CPU" is used in this manual, it applies to the CPUs of the S7-1500 automation system as well as to the CPUs/interface modules of the distributed I/O system ET 200SP.

STEP 7: In this documentation, "STEP 7" is used as a synonym for all versions of the configuration and programming software "STEP 7 (TIA Portal)".

Please also observe notes marked as follows:

Note

A note contains important information on the product described in the documentation, on the handling of the product or on the section of the documentation to which particular attention should be paid.

Security information

Siemens provides products and solutions with industrial security functions that support the secure operation of plants, systems, machines and networks.

In order to protect plants, systems, machines and networks against cyber threats, it is necessary to implement – and continuously maintain – a holistic, state-of-the-art industrial security concept. Siemens' products and solutions constitute one element of such a concept.

Customers are responsible for preventing unauthorized access to their plants, systems, machines and networks. Such systems, machines and components should only be connected to an enterprise network or the internet if and to the extent such a connection is necessary and only when appropriate security measures (e.g. firewalls and/or network segmentation) are in place.

For additional information on industrial security measures that may be implemented, please visit (http://www.siemens.com/industrialsecurity).

Siemens' products and solutions undergo continuous development to make them more secure. Siemens strongly recommends that product updates are applied as soon as they are available and that the latest product versions are used. Use of product versions that are no longer supported, and failure to apply the latest updates may increase customers' exposure to cyber threats.

To stay informed about product updates, subscribe to the Siemens Industrial Security RSS Feed under (http://www.siemens.com/industrialsecurity).

Table of contents

Preface 4
1 Documentation guide 7
2 Product overview 12
2.1 Properties 12
3 Connecting 14
3.1 Wiring and block diagram 14
4 Parameters/address space 16
4.1 Parameters 16
4.2 Declaration of parameters 18
4.3 Address space 19
5 Interrupts/diagnostic alarms 21
5.1 Status and error display 21
5.2 Interrupts 23
5.3 Diagnostic messages 24
6 Technical specifications 25
6.1 Technical specifications 25
A Parameter data record 31
A.1 Parameter assignment and structure of parameter data record 31

Documentation guide

1

The documentation for the SIMATIC ET 200SP distributed I/O system is arranged into three areas.
This arrangement enables you to access the specific content you require.

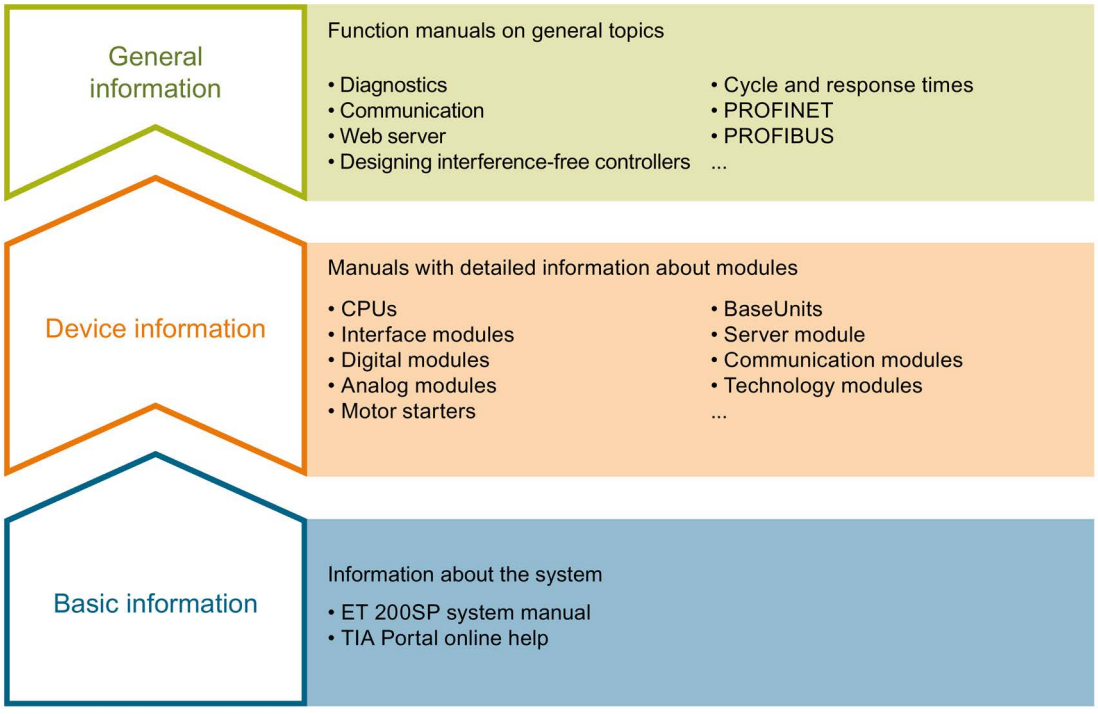

Basic information

The system manual describes in detail the configuration, installation, wiring and commissioning of the SIMATIC ET 200SP. distributed I/O system. The STEP 7 online help supports you in the configuration and programming.

Device information

Product manuals contain a compact description of the module-specific information, such as properties, wiring diagrams, characteristics and technical specifications.

General information

The function manuals contain detailed descriptions on general topics regarding the SIMATIC ET 200SP distributed I/O system, e.g. diagnostics, communication, Web server, motion control and OPC UA.

You can download the documentation free of charge from the Internet (https://support.industry.siemens.com/cs/ww/en/view/109742709).

Changes and supplements to the manuals are documented in a Product Information.

You can download the product information free of charge from the Internet (https://support.industry.siemens.com/cs/us/en/view/73021864).

Manual Collection ET 200SP

The Manual Collection contains the complete documentation on the SIMATIC ET 200SP distributed I/O system gathered together in one file.

You can find the Manual Collection on the Internet (http://support.automation.siemens.com/WW/view/en/84133942).

"mySupport"

With "mySupport", your personal workspace, you make the most of your Industry Online Support.

In "mySupport" you can store filters, favorites and tags, request CAx data and put together your personal library in the Documentation area. Furthermore, your data is automatically filled into support requests and you always have an overview of your current requests.

You need to register once to use the full functionality of "mySupport".

You can find "mySupport" in the Internet (https://support.industry.siemens.com/My/ww/en).

"mySupport" - Documentation

In the Documentation area of "mySupport", you have the possibility to combine complete manuals or parts of them to make your own manual.
You can export the manual in PDF format or in an editable format.

You can find "mySupport" - Documentation in the Internet (http://support.industry.siemens.com/My/ww/en/documentation).

"mySupport" - CAx Data

In the CAx Data area of "mySupport", you can have access the latest product data for your CAx or CAe system.

You configure your own download package with a few clicks.

In doing so you can select:

- Product images, 2D dimension drawings, 3D models, internal circuit diagrams, EPLAN macro files
- Manuals, characteristics, operating manuals, certificates
- Product master data

You can find "mySupport" - CAx Data in the Internet (http://support.industry.siemens.com/my/ww/en/CAxOnline).

Application examples

The application examples support you with various tools and examples for solving your automation tasks. Solutions are shown in interplay with multiple components in the system - separated from the focus in individual products.

You can find the application examples on the Internet (https://support.industry.siemens.com/sc/ww/en/sc/2054).

TIA Selection Tool

With the TIA Selection Tool, you can select, configure and order devices for Totally Integrated Automation (TIA).
This tool is the successor of the SIMATIC Selection Tool and combines the known configurators for automation technology into one tool.
With the TIA Selection Tool, you can generate a complete order list from your product selection or product configuration.

You can find the TIA Selection Tool on the Internet (http://w3.siemens.com/mcms/topics/en/simatic/tia-selection-tool).

SIMATIC Automation Tool

You can use the SIMATIC Automation Tool to run commissioning and maintenance activities simultaneously on various SIMATIC S7 stations as a bulk operation independently of the TIA Portal.

The SIMATIC Automation Tool provides a multitude of functions:

- Scanning of a PROFINET/Ethernet network and identification of all connected CPUs
- Address assignment (IP, subnet, gateway) and station name (PROFINET device) to a CPU
- Transfer of the data and the programming device/PC time converted to UTC time to the module
- Program download to CPU
- Operating mode switchover RUN/STOP
- Localization of the CPU by means of LED flashing
- Reading out CPU error information
- Reading the CPU diagnostic buffer
- Reset to factory settings
- Updating the firmware of the CPU and connected modules

You can find the SIMATIC Automation Tool on the Internet (https://support.industry.siemens.com/cs/ww/en/view/98161300).

PRONETA

With SIEMENS PRONETA (PROFINET network analysis), you analyze the plant network during commissioning. PRONETA features two core functions:

- The topology overview independently scans PROFINET and all connected components.
- The IO check is a fast test of the wiring and the module configuration of a system.

You can find SIEMENS PRONETA on the Internet (https://support.industry.siemens.com/cs/ww/en/view/67460624).

SINETPLAN

SINETPLAN, the Siemens Network Planner, supports you in planning automation systems and networks based on PROFINET. The tool facilitates professional and predictive dimensioning of your PROFINET installation as early as in the planning stage. In addition, SINETPLAN supports you during network optimization and helps you to exploit network resources optimally and to plan reserves. This helps to prevent problems in commissioning or failures during productive operation even in advance of a planned operation. This increases the availability of the production plant and helps improve operational safety.

The advantages at a glance

- Network optimization thanks to port-specific calculation of the network load
- Increased production availability thanks to online scan and verification of existing systems
- Transparency before commissioning through importing and simulation of existing STEP 7 projects
- Efficiency through securing existing investments in the long term and optimal exploitation of resources

You can find SINETPLAN on the Internet (https://www.siemens.com/sinetplan).

Product overview

2

2.1 Properties

Article number

6ES7132-6BH01-0BA0 (number in package unit: 1 unit)

6ES7132-6BH01-2BA0 (number in package unit: 10 units)

View of the module

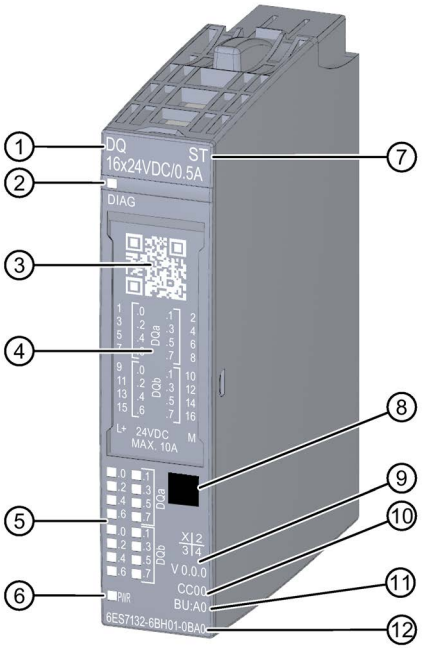

① Module type and name
② LED for diagnostics
③ 2D matrix code
④ Wiring diagram
⑤ LEDs for channel status
⑥ LED for supply voltage
⑦ Function class
⑧ Color coding module type
⑨ Function and firmware version
⑩ Color code for selecting the color identification labels
⑪ BU type
⑫ Article number

Figure 2-1 View of the module DQ 16×24VDC/0.5A ST

Properties

The module has the following technical properties:

- Digital output module with 16 outputs
- Source output (PNP, P-switching)
- Supply voltage L+
- Output current 0.5 A (per channel), total current max. 8 A (see derating: Technical specifications (Page 25))
- Configurable diagnostics (per module)
- Configurable substitute values (per channel)
- Suitable for solenoid valves, DC contactors, and indicator lights
- Safety-related shutdown

The module supports the following functions:

Table 2- 1 Version dependencies of the functions

Function	HW version	FW version	STEP 7		GSD file	
			TIA Portal	V5.x	PROFINET IO	PROFIBUS DP
Identification data I&M0 to I&M3	FS01	V0.0.0 and higher	V14 or higher with HSP 0222	V5.5 SP3 or higher with HSP 0230 V7.0	X	X
Configuration in RUN	FS01	V0.0.0 and higher	V14 or higher with HSP 0222	V5.5 SP3 or higher with HSP 0230 V7.0	X	X
PROFIenergy	FS01	V0.0.0 and higher	V14 or higher with HSP 0222	V5.5 SP3 or higher with HSP 0230 V7.0	X	X
Value status	FS01	V0.0.0 and higher	V14 or higher with HSP 0222	V5.5 SP3 or higher with HSP 0230 V7.0	X	X

Accessories

The following accessories must be ordered separately:

- Labeling strips
- Color identification labels
- Reference identification label
- Shield connector

See also

You can find additional information on the accessories in the system manualET 200SP distributed I/O system. (http://support.automation.siemens.com/WW/view/en/58649293)

Connecting 3

3.1 Wiring and block diagram

This section includes the block diagram of the DQ 16×24VDC/0.5A ST module with the terminal assignments for a 1-wire connection.

You can find information on wiring the BaseUnit in the system manual Distributed I/O System ET 200SP (http://support.automation.siemens.com/WW/view/en/58649293).

Note

The load group of the module must begin with a light-colored BaseUnit. Keep this in mind also during the configuration.

Note

The fuse integrated in BaseUnit type A1 may be triggered in the digital output module, rendering the terminals unusable.
Make sure that you only use digital output modules with BaseUnit type A0 during commissioning.

Wiring: 1-wire connection of actuators

The following figure shows the block diagram and an example for the terminal assignment of the digital output module DQ 16×24VDC/0.5A ST on the BaseUnit BU type A0 (1-wire connection).

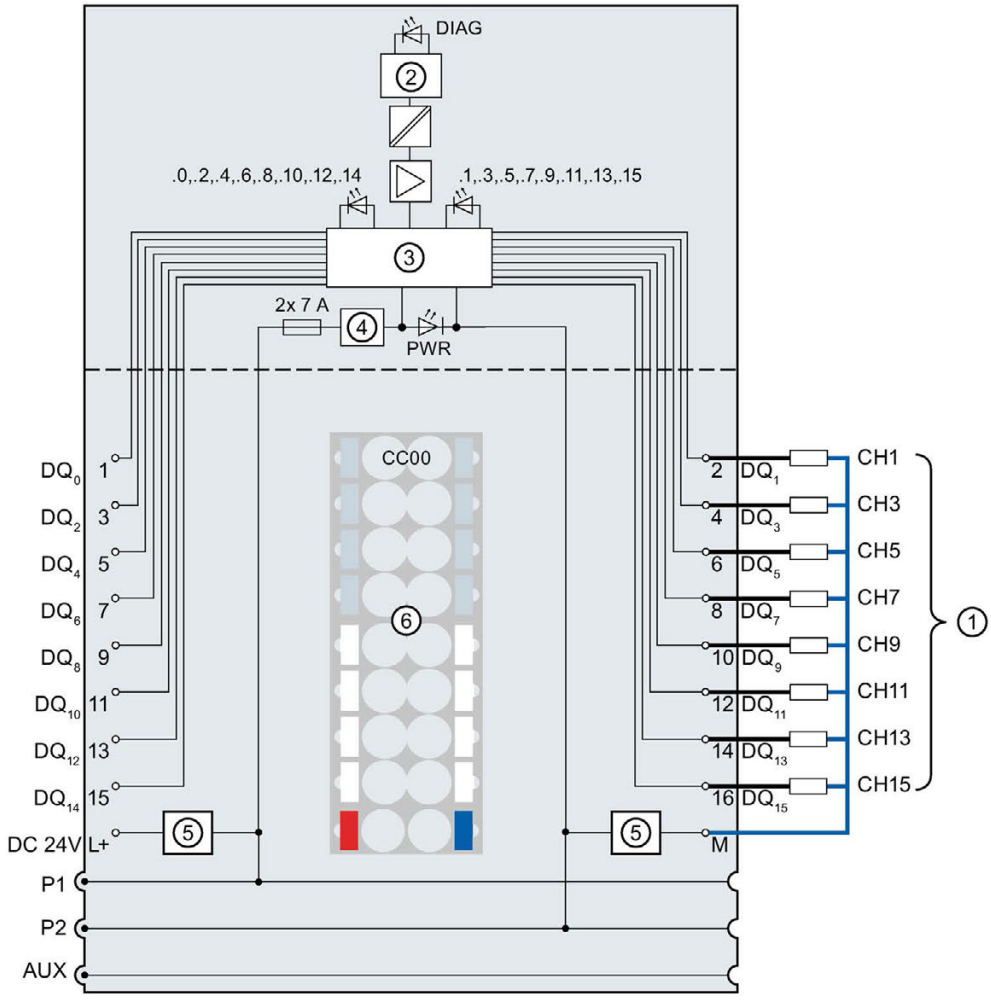

①	1-wire connection	DQ_n	Output signal, channel n
②	Backplane bus interface	24 V DC	Supply voltage L+ (infeed for light-colored BaseUnit only)
③	Output electronics	M	Ground
④	Polarity reversal protection	P1, P2, AUX	Internal self-assembling voltage buses Connection to left (dark-colored BaseUnit) Connection to left interrupted (light-colored BaseUnit)
⑤	Supply voltage filter circuit (only available with light BaseUnit)	DIAG	Diagnostics LED (green, red)
⑥	Color-coded label with color code CC00 (optional)	.0 to .15	Channel status LED (green)
		PWR	Power LED (green)

Figure 3-1 Wiring and block diagram for 1-wire connection of actuators

Parameters/address space 4

4.1 Parameters

Parameters for DQ 16x24VDC/0.5A ST

Specify the module properties with the various parameters in the course of your STEP 7 configuration. The following table lists the configurable parameters. The effective range of the configurable parameters depends on the type of configuration.

The following configurations are possible:

- Central operation with an ET 200SP CPU
- Distributed operation on PROFINET IO in an ET 200SP system
- Distributed operation with PROFIBUS DP in an ET 200SP system

When assigning parameters in the user program, use the "WRREC" instruction to transfer the parameters to the module using the data records; refer to section Parameter assignment and structure of parameter data record (Page 31).

The following parameter settings are possible:

Table 4- 1 Configurable parameters and their defaults (GSD file)

Parameters	Range of values	Default	Parameter reassign-ment in RUN	Scope with configuration software, e.g. STEP 7 (TIA Portal)	
				GSD file PROFINET IO	GSD file PROFIBUS DP [1]
Diagnostics: No supply voltage L+	• Disable • Enable	Disable	Yes	Module	Module
Diagnostics: Short-circuit to ground	• Disable • Enable	Disable	Yes	Module	Module
Diagnostics: Short-circuit to L+	• Disable • Enable	Disable	Yes	Module	Module
Diagnostics: Wire break	• Disable • Enable	Disable	Yes	Module	Module
Channel activated	• Disable • Enable	Enable	Yes	Channel	Channel

Parameters	Range of values	Default	Parameter reassignment in RUN	Scope with configuration software, e.g. STEP 7 (TIA Portal)	
				GSD file PROFINET IO	GSD file PROFIBUS DP [1]
Reaction to CPU STOP	• Turn off • Keep last value • Output substitute value 1	Turn off	Yes	Channel	Module
Potential group	• Use potential group of the left module (module plugged into a dark-colored BaseUnit) • Enable new potential group (module plugged into light-colored BaseUnit)	Use potential group of the left module	No	Module	Module

[1] Due to the limited number of parameters at a maximum of 244 bytes per ET 200SP station with a PROFIBUS GSD configuration, the configuration options are restricted. If required, you can assign these parameters using data record 128 as described in the "GSD file PROFINET IO" column (see table above). The parameter length of the I/O module is 32 bytes.

Note

- If both parameters "Diagnostics: short-circuit to L+" and "Diagnostics: wire break" are enabled and one of these diagnostic events occurs, the affected channel is switched off. This prevents undefined load switching and the corresponding diagnostic alarm is triggered.
- If both parameters "Diagnostics: short-circuit to L+" and "Diagnostics: wire break" are enabled and one of these diagnostic events occurs, the affected channel is switched off. This prevents undefined load switching and the corresponding diagnostic alarm is triggered.
- If the parameter "Diagnostics: short-circuit to L+" is enabled and "Diagnostics: wire break" is disabled, the signal status is retained at the affected channel when "Diagnostics: short-circuit to L+" occurs. A diagnostic alarm is triggered only for 0 signal.

4.2 Declaration of parameters

Diagnostics: No supply voltage L+

Enabling of the diagnostics for no or insufficient supply voltage L+.

Diagnostics: Short-circuit to ground

Enabling of the diagnostics if a short-circuit of the actuator supply to ground occurs.

Diagnostics: Short-circuit to L+

Enabling of the diagnostics if a short-circuit of the actuator supply to L+ occurs.

Diagnostics: Wire break

Enabling of the diagnostics if the line to the actuator is broken.

Channel activated

Determines whether a channel is activated or deactivated.

Reaction to CPU STOP

Determines the behavior of the module in the event of a CPU STOP.

Potential group

A potential group consists of a group of directly adjacent I/O modules within an ET 200SP station, which are supplied via a common supply voltage.

A potential group begins with a light-colored BaseUnit through which the required voltage is supplied for all modules of the potential group. The light-colored BaseUnit interrupts the three self-assembling voltage buses P1, P2 and AUX to the left neighbor.

All additional I/O modules of this potential group are plugged into dark-colored BaseUnits. You take the potential of the self-assembling voltage buses P1, P2 and AUX from the left neighbor.

A potential group ends with the dark-colored BaseUnit, which follows a light-colored BaseUnit or server module in the station configuration.

See also

ET 200SP distributed I/O system
(http://support.automation.siemens.com/WW/view/en/58649293)

4.3 Address space

The module can be configured differently in STEP 7; see following table. Depending on the configuration, additional/different addresses are assigned in the process image output/input.

Configuration options of DQ 16x24VDC/0.5A ST

You can configure the module with STEP 7 (TIA Portal) or with a GSD file. If you configure the module by means of a GSD file, the configurations are available under various short designations/module names; see the table below. The following configurations are possible:

Table 4- 2 Configuration options with GSD file

Configuration	Short designation/module name in the GSD file	Configuration software, e.g. with STEP 7 (TIA Portal)		
		Integrated in hard-ware catalog STEP 7	GSD file PROFINET IO	GSD file PROFIBUS DP
1 x 16-channel without value status	DQ 16x24VDC/0.5A ST V0.0	V14, SP1 or higher with HSP 0222	X	X
1 x 16-channel with value status	DQ 16x24VDC/0.5A ST V0.0, QI	V14, SP1 or higher with HSP 0222	X	---

Evaluating the value status

An additional two bytes are allocated in the input address space if you enable the value status for the digital module. Bits 0 to 15 in these bytes are assigned to a channel. They provide information about the validity of the digital value.

Bit = 1: No fault is present on the channel.

Bit = 0: Channel is deactivated or there is a fault on the module.

If a fault occurs on a channel with this module, the value status for all channels is 0.

Address space

The following figure shows the assignment of the address space for the DQ 16x24VDC/0.5A ST with value status (Quality Information (QI)). The addresses for the value status are only available if the value status is enabled.

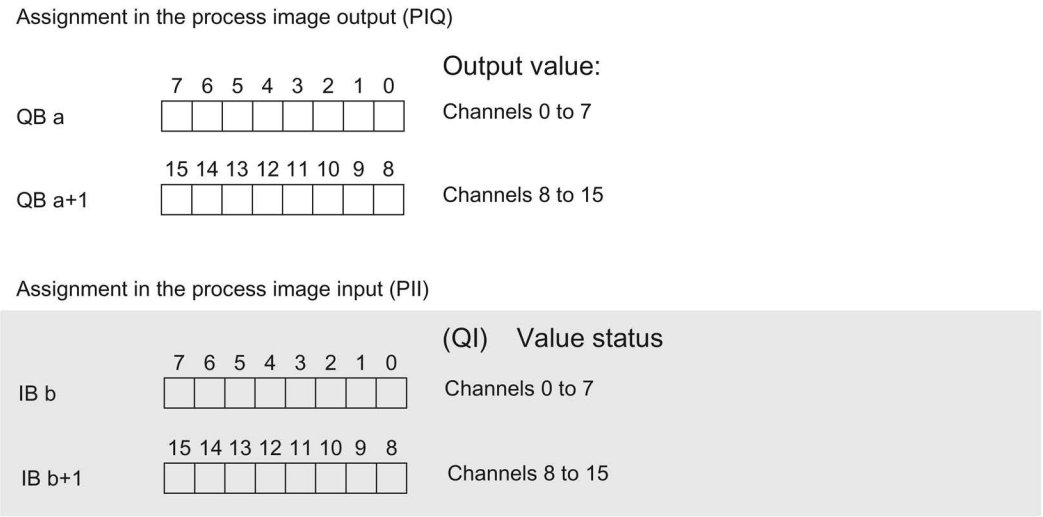

Figure 4-1 Address space of DQ 16×24VDC/0.5A ST with value status

Interrupts/diagnostic alarms

5

5.1 Status and error display

LED display

DQ 16x24VDC/0.5A ST.

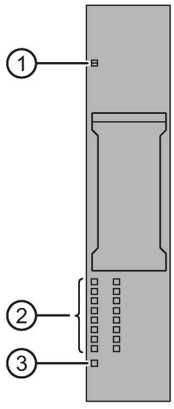

① DIAG (green/red)
② Channel status (green)
③ PWR (green)

Figure 5-1 LED display

Meaning of the LEDs

The following tables contain the meaning of the status and error displays. Remedial measures for diagnostic alarms can be found in chapter Diagnostic messages (Page 24).

DIAG LED

Table 5- 1 DIAG LED fault display

DIAG LED	Meaning
Off	Backplane bus supply of the ET 200SP not OK
Flashing	Module not configured
On	Module parameters assigned
Flashing	Module diagnostics is available

LED channel status

Table 5- 2 LED channel status display

LED channel status	Meaning
Off	Channel deactivated or activated and process signal = 0
On	Channel activated and process signal = 1

PWR LED

Table 5- 3 Status display of the PWR LED

PWR LED	Meaning
Off	Supply voltage L+ missing
On	Supply voltage L+ present

5.2 Interrupts

The digital output module DQ 16×24VDC/0.5A ST supports diagnostic interrupts.

Diagnostics interrupts

The module generates a diagnostic interrupt at the following events:

- Short-circuit
- Wire break
- Parameter assignment error
- Supply voltage missing

5.3 Diagnostic messages

A diagnostics alarm is generated and the DIAG-LED flashes on the module for each diagnostics event. You can read out the diagnostics alarms, for example, in the diagnostics buffer of the CPU. You can evaluate the error codes with the user program.

Note

Parallel connection of two outputs

For parallel connection of two outputs for redundant control of a load, the channel diagnostics "Short-circuit to L+" and "Wire break" must be deactivated.

Table 5- 4 Diagnostics alarms, their meaning and corrective measures

Diagnostics alarm	Error code	Meaning	Solution
Short-circuit	1_H	• Short-circuit of actuator supply to ground • Short-circuit of actuator supply to L+	Correct the process wiring
Wire break	6_H	Actuator circuit impedance too high	Use a different actuator type or modify the wiring, e.g. use cables with larger cross-section
		Wire break between the module and actuator	Connect the cable
		Channel not connected (open)	• Disable diagnostics • Connect a resistor to the actuator contacts in the load resistance range
Parameter assignment error	10_H	• The module cannot evaluate parameters for the channel. • Incorrect parameter assignment.	• Correct the parameter assignment
Supply voltage missing	11_H	Missing or insufficient supply voltage L+	• Check supply voltage L+ on the BaseUnit • Check BaseUnit type

Technical specifications

6

6.1 Technical specifications

Technical specifications of the DQ 16×24VDC/0.5A ST

Article number	6ES7132-6BH01-0BA0
General information	
Product type designation	DQ 16x24 VDC/0.5 A ST
Firmware version	V0.0
• FW update possible	No
usable BaseUnits	BU type A0
Color code for module-specific color identification plate	CC00
Product function	
• I&M data	Yes; I&M0 to I&M3
Engineering with	
• STEP 7 TIA Portal configurable/integrated as of version	V14
• STEP 7 configurable/integrated as of version	V5.5 SP3
• PCS 7 configurable/integrated as of version	V8.1 SP1
• PROFIBUS as of GSD version/GSD revision	One GSD file each, Revision 3 and 5 and higher
• PROFINET as of GSD version/GSD revision	GSDML V2.3
Operating mode	
• DQ	Yes
• DQ with energy-saving function	No
• PWM	No
• Oversampling	No
• MSO	No
Redundancy	
• Redundancy capability	Yes

Article number	6ES7132-6BH01-0BA0
Supply voltage	
Rated value (DC)	24 V
permissible range, lower limit (DC)	19.2 V
permissible range, upper limit (DC)	28.8 V
Reverse polarity protection	Yes
Input current	
Current consumption, max.	60 mA; without load
Output voltage	
Rated value (DC)	24 V
Power loss	
Power loss, typ.	1 W
Address area	
Address space per module	
• Inputs	+ 2 bytes for QI information
• Outputs	2 byte
Hardware configuration	
Automatic encoding	Yes
• Mechanical coding element	Yes
Selection of BaseUnit for connection variants	
• 1-wire connection	BU type A0
• 2-wire connection	BU type A0 + Potential isolation module
• 3-wire connection	BU type A0 + Potential isolation module
• 4-wire connection	BU type A0 + Potential isolation module
Digital outputs	
Type of digital output	Source output (PNP, current-sourcing)
Number of digital outputs	16
Current-sinking	No
Current-sourcing	Yes
Short-circuit protection	Yes
• Response threshold, typ.	1 A
Open-circuit detection	Yes
Limitation of inductive shutdown voltage to	Typ. L+ (-50 V)
Controlling a digital input	Yes
Switching capacity of the outputs	
• with resistive load, max.	0.5 A
• on lamp load, max.	5 W
Load resistance range	
• lower limit	48 Ω
• upper limit	12 kΩ

Article number	6ES7132-6BH01-0BA0
Output current	
• for signal "1" rated value	0.5 A
• for signal "0" residual current, max.	0.1 mA
Output delay with resistive load	
• "0" to "1", typ.	50 µs
• "1" to "0", typ.	100 µs
Parallel switching of two outputs	
• for uprating	No
• for redundant control of a load	Yes
Switching frequency	
• with resistive load, max.	100 Hz
• with inductive load, max.	2 Hz
• on lamp load, max.	10 Hz
Total current of the outputs	
• Current per channel, max.	0.5 A
• Current per module, max.	8 A
Total current of the outputs (per module)	
horizontal installation	
– up to 30 °C, max.	8 A
– up to 40 °C, max.	8 A
– up to 50 °C, max.	6 A
– up to 60 °C, max.	4 A
vertical installation	
– up to 30 °C, max.	8 A; in all other mounting positions
– up to 40 °C, max.	6 A; in all other mounting positions
– up to 50 °C, max.	4 A; in all other mounting positions
Cable length	
• shielded, max.	1 000 m
• unshielded, max.	600 m
Isochronous mode	
Isochronous operation (application synchronized up to terminal)	No

Article number	6ES7132-6BH01-0BA0
Interrupts/diagnostics/status information	
Diagnostics function	Yes
Substitute values connectable	Yes
Alarms	
• Diagnostic alarm	Yes
Diagnostic messages	
• Monitoring the supply voltage	Yes
• Wire-break	Yes; Module-wise
• Short-circuit to M	Yes; Module-wise
• Short-circuit to L+	Yes; Module-wise
Diagnostics indication LED	
• Monitoring of the supply voltage (PWR-LED)	Yes; green PWR LED
• Channel status display	Yes; Green LED
• for channel diagnostics	No
• for module diagnostics	Yes; green/red DIAG LED
Potential separation	
Potential separation channels	
• between the channels	No
• between the channels and backplane bus	Yes
Isolation	
Isolation tested with	707 V DC (type test)
Standards, approvals, certificates	
Suitable for safety-oriented group deactivation	Yes
Ambient conditions	
Ambient temperature during operation	
• horizontal installation, min.	0 °C
• horizontal installation, max.	60 °C
• vertical installation, min.	0 °C; in all other mounting positions
• vertical installation, max.	50 °C; in all other mounting positions
Altitude during operation based on sea level	
• Ambient air temperature-barometric pressure-altitude	On request: Ambient temperatures lower than 0 °C (without condensation) and/or installation altitudes greater than 2 000 m

Article number	6ES7132-6BH01-0BA0
Dimensions	
Width	15 mm
Height	73 mm
Depth	58 mm
Weights	
Weight, approx.	30 g

Safety-related shutdown

Note

The digital output module DQ 16x24VDC/0.5A ST supports safety-related shutdown in connection with a fail-safe power module F-PM-E 24VDC/8A PPM ST:

- SIL according to IEC 61508: 2
- Highest attainable safety class in safety mode, performance level according to EN ISO 13849-1: d

Residual current for signal state "0"

Note

Residual current for signal state "0"

Due to the Diagnostics: Wire break function, there is a low level of residual current in the "0" signal state at the output, which may cause the display diodes to flicker.

This residual current does not depend on the setting for the Diagnostics: Wire break parameter.

Derating trend

The following figure show the load current derating with horizontal and vertical mounting positions.

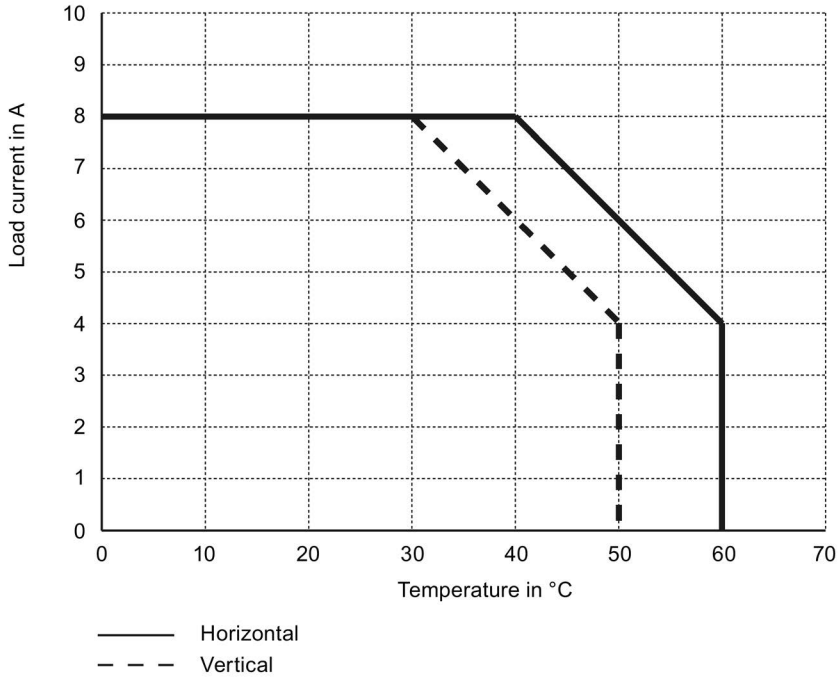

Figure 6-1 Load current for mounting position

Dimension drawing

See manual ET 200SP BaseUnits
(http://support.automation.siemens.com/WW/view/en/58532597/133300)

Parameter data record

A

A.1 Parameter assignment and structure of parameter data record

The data record of the module has an identical structure, regardless of whether you configure the module with PROFIBUS DP or PROFINET IO. With data record 128, you can reconfigure the module in your user program regardless of your programming. This means that you can use all the functions of the module even if you configured it via PROFIBUS-GSD.

Parameter assignment in the user program

You have the option to reconfigure the module in RUN (e.g. the response of selected channels to the CPU-STOP state can be changed in RUN without having an effect on the other channels).

Changing parameters in RUN

The "WRREC" instruction is used to transfer the parameters to the module using data record 128. The parameters set in STEP 7 are not changed in the CPU, which means that the parameters set in STEP 7 will be valid again after a restart.

Output parameter STATUS

If errors occur when transferring parameters with the "WRREC" instruction, the module continues operation with the previous parameter assignment. The STATUS output parameter contains a corresponding error code.

You will find a description of the "WRREC" instruction and the error codes in the STEP 7 online help.

Structure of data record 128

Note

Channel 0 includes the diagnostics enable for the entire module.

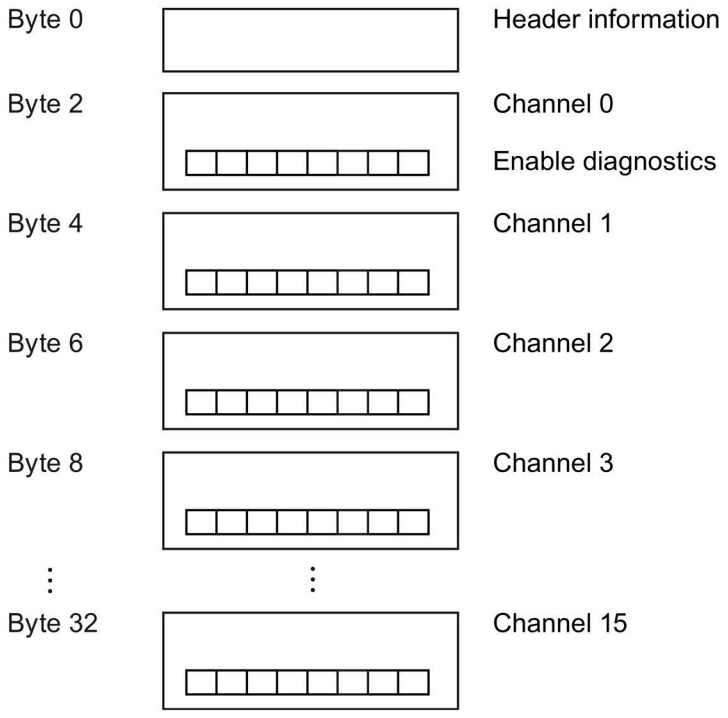

Figure A-1 Structure of data record 128

Header information

The figure below shows the structure of the header information.

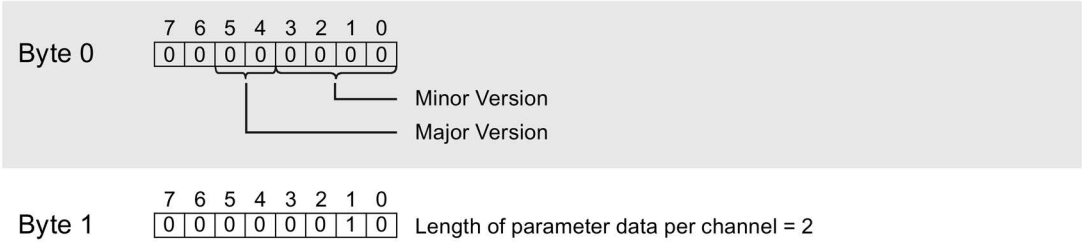

Figure A-2 Header information

Parameters

The figure below shows the structure of the parameters for channels 0 to 15.

You enable a parameter by setting the corresponding bit to "1".

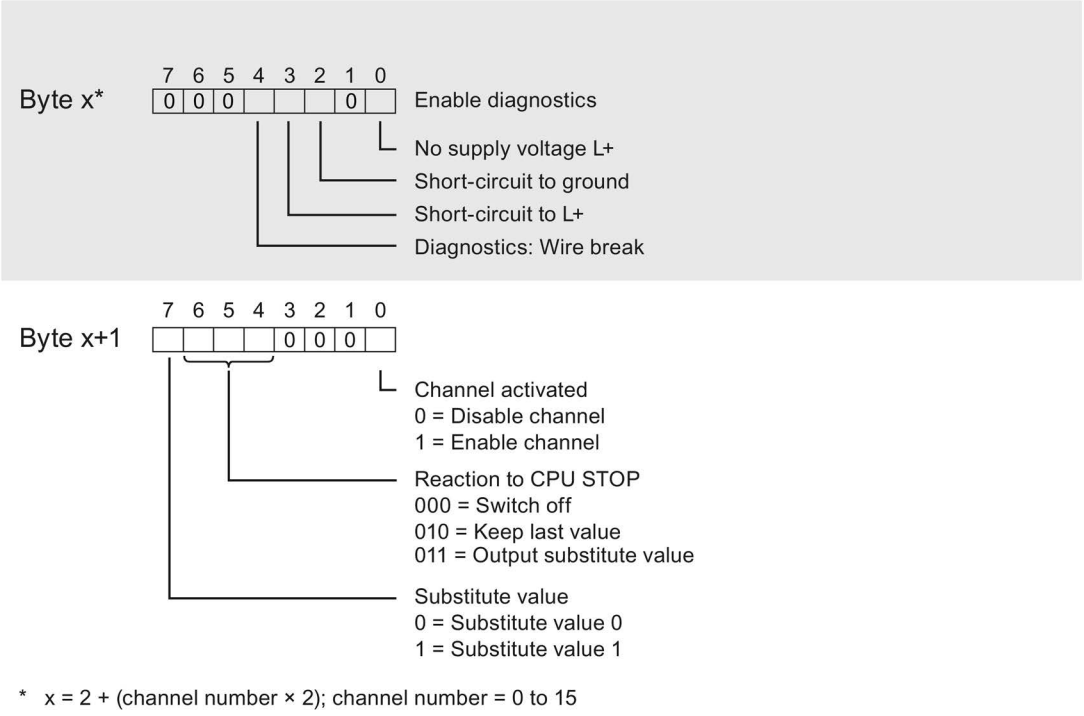

* x = 2 + (channel number × 2); channel number = 0 to 15

Figure A-3 Structure byte x to x+1 for the channels 0 to 15

Error transferring the data record

The module always checks all the values of the transferred data record. Only if all the values were transferred without errors does the module apply the values from the data record.

The WRREC instruction for writing data records returns corresponding error codes when errors occur in the STATUS parameter. (See also the description of the "STATUS" parameter in the STEP 7 online help).

The following table shows the module-specific error codes and their meaning for the parameter data record 128.

Error code in STATUS parameter (hexadecimal)				Meaning	Solution
Byte 0	Byte 1	Byte 2	Byte 3		
DF	80	B0	xx	Number of the data record unknown.	Enter a valid number for the data record.
DF	80	B1	xx	Length of the data record incorrect.	Enter a valid value for the data record length.
DF	80	B2	xx	Slot invalid or cannot be accessed.	• Check the station whether the module is plugged or drawn. • Check the assigned values for the parameters of the WRREC instruction.
DF	80	E0	xx	Wrong version or error in the header information.	Correct the version, length and number of parameter blocks.
DF	80	E1	06	Invalid coding for substitute value behavior.	Check the parameters of the module.

SIEMENS

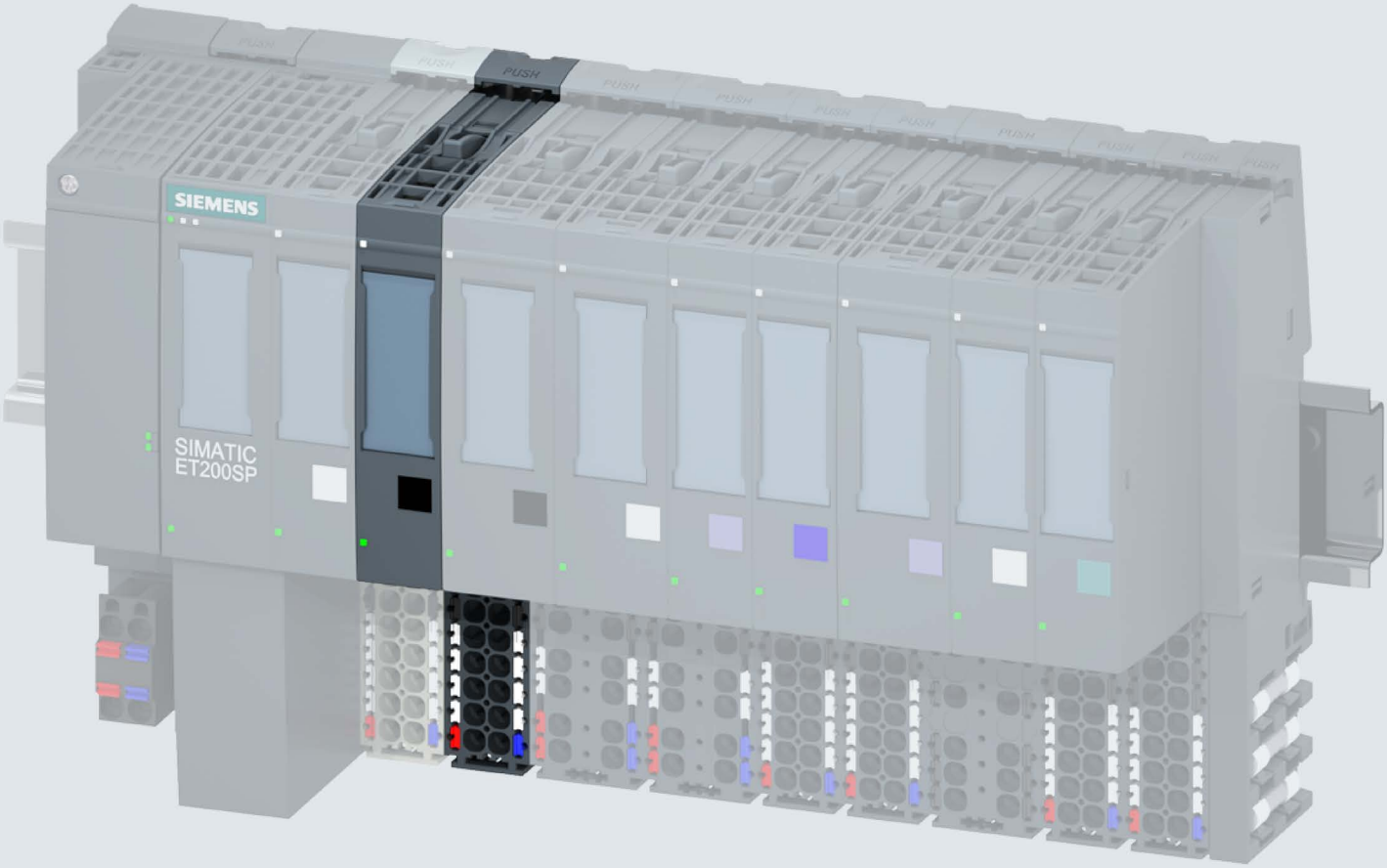

Manual

SIMATIC

ET 200SP

Digital output module
RQ 4x24VUC/2A CO ST (6ES7132-6GD51-0BA0)

Edition 09/2017

support.industry.siemens.com

SIEMENS

SIMATIC

ET 200SP
Digital output module
RQ 4x24VUC/2A CO ST
(6ES7132-6GD51-0BA0)

Manual

Preface

Documentation guide 1

Product overview 2

Wiring 3

Parameters/address space 4

Interrupts/diagnostics alarms 5

Technical specifications 6

Parameter data record A

09/2017

A5E32855952-AC

Legal information

Warning notice system

This manual contains notices you have to observe in order to ensure your personal safety, as well as to prevent damage to property. The notices referring to your personal safety are highlighted in the manual by a safety alert symbol, notices referring only to property damage have no safety alert symbol. These notices shown below are graded according to the degree of danger.

⚠ DANGER

indicates that death or severe personal injury **will** result if proper precautions are not taken.

⚠ WARNING

indicates that death or severe personal injury **may** result if proper precautions are not taken.

⚠ CAUTION

indicates that minor personal injury can result if proper precautions are not taken.

NOTICE

indicates that property damage can result if proper precautions are not taken.

If more than one degree of danger is present, the warning notice representing the highest degree of danger will be used. A notice warning of injury to persons with a safety alert symbol may also include a warning relating to property damage.

Qualified Personnel

The product/system described in this documentation may be operated only by **personnel qualified** for the specific task in accordance with the relevant documentation, in particular its warning notices and safety instructions. Qualified personnel are those who, based on their training and experience, are capable of identifying risks and avoiding potential hazards when working with these products/systems.

Proper use of Siemens products

Note the following:

⚠ WARNING

Siemens products may only be used for the applications described in the catalog and in the relevant technical documentation. If products and components from other manufacturers are used, these must be recommended or approved by Siemens. Proper transport, storage, installation, assembly, commissioning, operation and maintenance are required to ensure that the products operate safely and without any problems. The permissible ambient conditions must be complied with. The information in the relevant documentation must be observed.

Trademarks

All names identified by ® are registered trademarks of Siemens AG. The remaining trademarks in this publication may be trademarks whose use by third parties for their own purposes could violate the rights of the owner.

Disclaimer of Liability

We have reviewed the contents of this publication to ensure consistency with the hardware and software described. Since variance cannot be precluded entirely, we cannot guarantee full consistency. However, the information in this publication is reviewed regularly and any necessary corrections are included in subsequent editions.

Siemens AG
Division Digital Factory
Postfach 48 48
90026 NÜRNBERG
GERMANY

A5E32855952-AC
℗ 10/2017 Subject to change

Copyright © Siemens AG 2014 - 2017.
All rights reserved

Preface

Purpose of the documentation

This manual supplements the system manual ET 200SP distributed I/O system (http://support.automation.siemens.com/WW/view/en/58649293).

Functions that generally relate to the system are described in this manual.

The information provided in this manual and in the system/function manuals supports you in commissioning the system.

Changes compared to previous version

Compared to the previous version, this manual contains the following change:

Due to the change in hardware, the article number of the module has been changed from 6ES7132-6GD50-0BA0 to 6ES7132-6GD51-0BA0. Both modules are compatible, except for the firmware-update function.

Conventions

CPU: When the term "CPU" is used in this manual, it applies to the CPUs of the S7-1500 automation system as well as to the CPUs/interface modules of the distributed I/O system ET 200SP.

STEP 7: In this documentation, "STEP 7" is used as a synonym for all versions of the configuration and programming software "STEP 7 (TIA Portal)".

Please also observe notes marked as follows:

Note

A note contains important information on the product described in the documentation, on the handling of the product or on the section of the documentation to which particular attention should be paid.

Security information

Siemens provides products and solutions with industrial security functions that support the secure operation of plants, systems, machines and networks.

In order to protect plants, systems, machines and networks against cyber threats, it is necessary to implement – and continuously maintain – a holistic, state-of-the-art industrial security concept. Siemens' products and solutions constitute one element of such a concept.

Customers are responsible for preventing unauthorized access to their plants, systems, machines and networks. Such systems, machines and components should only be connected to an enterprise network or the internet if and to the extent such a connection is necessary and only when appropriate security measures (e.g. firewalls and/or network segmentation) are in place.

For additional information on industrial security measures that may be implemented, please visit (http://www.siemens.com/industrialsecurity).

Siemens' products and solutions undergo continuous development to make them more secure. Siemens strongly recommends that product updates are applied as soon as they are available and that the latest product versions are used. Use of product versions that are no longer supported, and failure to apply the latest updates may increase customers' exposure to cyber threats.

To stay informed about product updates, subscribe to the Siemens Industrial Security RSS Feed under (http://www.siemens.com/industrialsecurity).

Table of contents

Preface 4
1 Documentation guide 7
2 Product overview 12
2.1 Properties 12
3 Wiring 14
3.1 Wiring and block diagram 14
4 Parameters/address space 16
4.1 Parameters 16
4.2 Explanation of parameters 18
4.3 Address space 19
5 Interrupts/diagnostics alarms 20
5.1 Status and error displays 20
5.2 Interrupts 22
5.3 Diagnostics alarms 22
6 Technical specifications 23
6.1 Technical specifications 23
A Parameter data record 27
A.1 Parameter assignment and structure of parameter data record 27

Documentation guide

1

The documentation for the SIMATIC ET 200SP distributed I/O system is arranged into three areas.
This arrangement enables you to access the specific content you require.

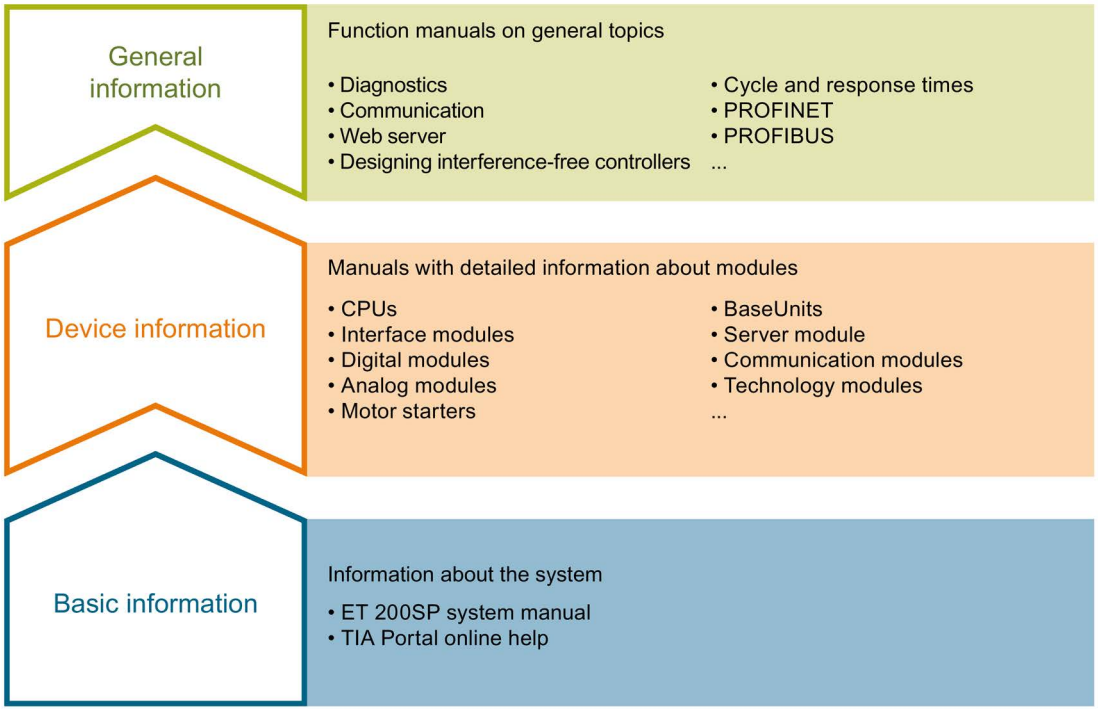

Basic information

The system manual describes in detail the configuration, installation, wiring and commissioning of the SIMATIC ET 200SP. distributed I/O system. The STEP 7 online help supports you in the configuration and programming.

Device information

Product manuals contain a compact description of the module-specific information, such as properties, wiring diagrams, characteristics and technical specifications.

General information

The function manuals contain detailed descriptions on general topics regarding the SIMATIC ET 200SP distributed I/O system, e.g. diagnostics, communication, Web server, motion control and OPC UA.

You can download the documentation free of charge from the Internet (https://support.industry.siemens.com/cs/ww/en/view/109742709).

Changes and supplements to the manuals are documented in a Product Information.

You can download the product information free of charge from the Internet (https://support.industry.siemens.com/cs/us/en/view/73021864).

Manual Collection ET 200SP

The Manual Collection contains the complete documentation on the SIMATIC ET 200SP distributed I/O system gathered together in one file.

You can find the Manual Collection on the Internet (http://support.automation.siemens.com/WW/view/en/84133942).

"mySupport"

With "mySupport", your personal workspace, you make the most of your Industry Online Support.

In "mySupport" you can store filters, favorites and tags, request CAx data and put together your personal library in the Documentation area. Furthermore, your data is automatically filled into support requests and you always have an overview of your current requests.

You need to register once to use the full functionality of "mySupport".

You can find "mySupport" in the Internet (https://support.industry.siemens.com/My/ww/en).

"mySupport" - Documentation

In the Documentation area of "mySupport", you have the possibility to combine complete manuals or parts of them to make your own manual.
You can export the manual in PDF format or in an editable format.

You can find "mySupport" - Documentation in the Internet (http://support.industry.siemens.com/My/ww/en/documentation).

"mySupport" - CAx Data

In the CAx Data area of "mySupport", you can have access the latest product data for your CAx or CAe system.

You configure your own download package with a few clicks.

In doing so you can select:

- Product images, 2D dimension drawings, 3D models, internal circuit diagrams, EPLAN macro files
- Manuals, characteristics, operating manuals, certificates
- Product master data

You can find "mySupport" - CAx Data in the Internet (http://support.industry.siemens.com/my/ww/en/CAxOnline).

Application examples

The application examples support you with various tools and examples for solving your automation tasks. Solutions are shown in interplay with multiple components in the system - separated from the focus in individual products.

You can find the application examples on the Internet (https://support.industry.siemens.com/sc/ww/en/sc/2054).

TIA Selection Tool

With the TIA Selection Tool, you can select, configure and order devices for Totally Integrated Automation (TIA).
This tool is the successor of the SIMATIC Selection Tool and combines the known configurators for automation technology into one tool.
With the TIA Selection Tool, you can generate a complete order list from your product selection or product configuration.

You can find the TIA Selection Tool on the Internet (http://w3.siemens.com/mcms/topics/en/simatic/tia-selection-tool).

SIMATIC Automation Tool

You can use the SIMATIC Automation Tool to run commissioning and maintenance activities simultaneously on various SIMATIC S7 stations as a bulk operation independently of the TIA Portal.

The SIMATIC Automation Tool provides a multitude of functions:

- Scanning of a PROFINET/Ethernet network and identification of all connected CPUs
- Address assignment (IP, subnet, gateway) and station name (PROFINET device) to a CPU
- Transfer of the data and the programming device/PC time converted to UTC time to the module
- Program download to CPU
- Operating mode switchover RUN/STOP
- Localization of the CPU by means of LED flashing
- Reading out CPU error information
- Reading the CPU diagnostic buffer
- Reset to factory settings
- Updating the firmware of the CPU and connected modules

You can find the SIMATIC Automation Tool on the Internet (https://support.industry.siemens.com/cs/ww/en/view/98161300).

PRONETA

With SIEMENS PRONETA (PROFINET network analysis), you analyze the plant network during commissioning. PRONETA features two core functions:

- The topology overview independently scans PROFINET and all connected components.
- The IO check is a fast test of the wiring and the module configuration of a system.

You can find SIEMENS PRONETA on the Internet (https://support.industry.siemens.com/cs/ww/en/view/67460624).

SINETPLAN

SINETPLAN, the Siemens Network Planner, supports you in planning automation systems and networks based on PROFINET. The tool facilitates professional and predictive dimensioning of your PROFINET installation as early as in the planning stage. In addition, SINETPLAN supports you during network optimization and helps you to exploit network resources optimally and to plan reserves. This helps to prevent problems in commissioning or failures during productive operation even in advance of a planned operation. This increases the availability of the production plant and helps improve operational safety.

The advantages at a glance

- Network optimization thanks to port-specific calculation of the network load
- Increased production availability thanks to online scan and verification of existing systems
- Transparency before commissioning through importing and simulation of existing STEP 7 projects
- Efficiency through securing existing investments in the long term and optimal exploitation of resources

You can find SINETPLAN on the Internet (https://www.siemens.com/sinetplan).

Product overview

2

2.1 Properties

Part number

6ES7132-6GD51-0BA0

View of the module

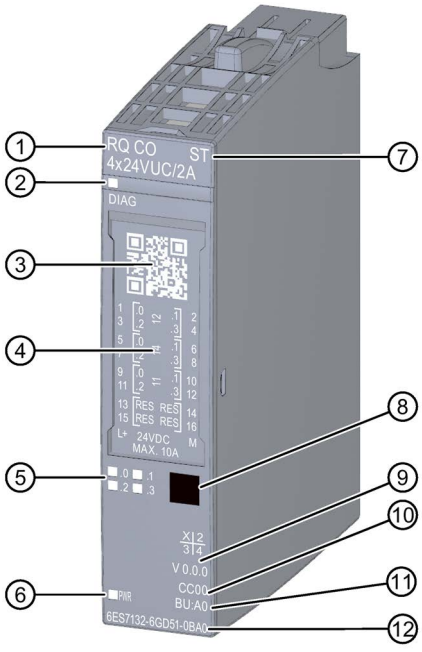

① Module type and name
② LED for diagnostics
③ 2D matrix code
④ Wiring diagram
⑤ LEDs for channel status
⑥ LED for supply voltage
⑦ Function class
⑧ Color coding module type
⑨ Function and firmware version
⑩ Color code for selecting the color identification labels
⑪ BU type
⑫ Article number

Figure 2-1 View of the RQ 4×24VUC/2A CO ST module

Properties

The module has the following technical properties:

- 4 digital outputs with floating relay changeover contacts
- Supply voltage L+
- Output current per output 2 A
- Normally open contact (NO: normally open) and normally closed contact (NC: normally closed)
- Assignable substitute values (per channel)
- Configurable diagnostics (per module)
- Suitable for resistive load

The module supports the following functions:

Table 2- 1 Version dependencies of the functions

Function	HW version	FW version	STEP 7		GSD file	
			TIA Portal	V5.x	PROFINET IO	PROFIBUS DP
Identification data I&M0 to I&M3	FS01	V0.0.0 and higher	V14 or higher with HSP 0222	V5.5 SP3 or higher with HSP 0232 V7.0	X	X
Configuration in RUN	FS01	V0.0.0 and higher	V14 or higher with HSP 0222	V5.5 SP3 or higher with HSP 0232 V7.0	X	X
PROFIenergy	FS01	V0.0.0 and higher	V14 or higher with HSP 0222	V5.5 SP3 or higher with HSP 0232 V7.0	X	X
Value status	FS01	V0.0.0 and higher	V14 or higher with HSP 0222	V5.5 SP3 or higher with HSP 0232 V7.0	X	X

Accessories

The following accessories are supplied with the module and can also be ordered separately as spare parts:

- Labeling strips
- Color identification labels
- Reference identification label
- Shield connector

See also

You can find additional information on the accessories in the ET 200SP Distributed I/O System (http://support.automation.siemens.com/WW/view/en/58649293) system manual.

Wiring 3

3.1 Wiring and block diagram

This section includes the block diagram of the RQ 4x24VUC/2A CO ST module with the terminal assignments for a 3-wire connection.

You can find information on wiring the BaseUnit in the ET 200SP distributed I/O system (http://support.automation.siemens.com/WW/view/en/58649293) system manual.

Note

You may use and combine the different wiring options for all channels.

Note

The relay contacts of the module can only switch identical voltage potential. The AUX terminals can only be used with an associated identical voltage or PE.

Connection: 2-wire connection of actuators

The following figure shows the block diagram and an example of the terminal assignment of the digital output module RQ 4x24VUC/2A CO ST on the BaseUnit BU type A0.

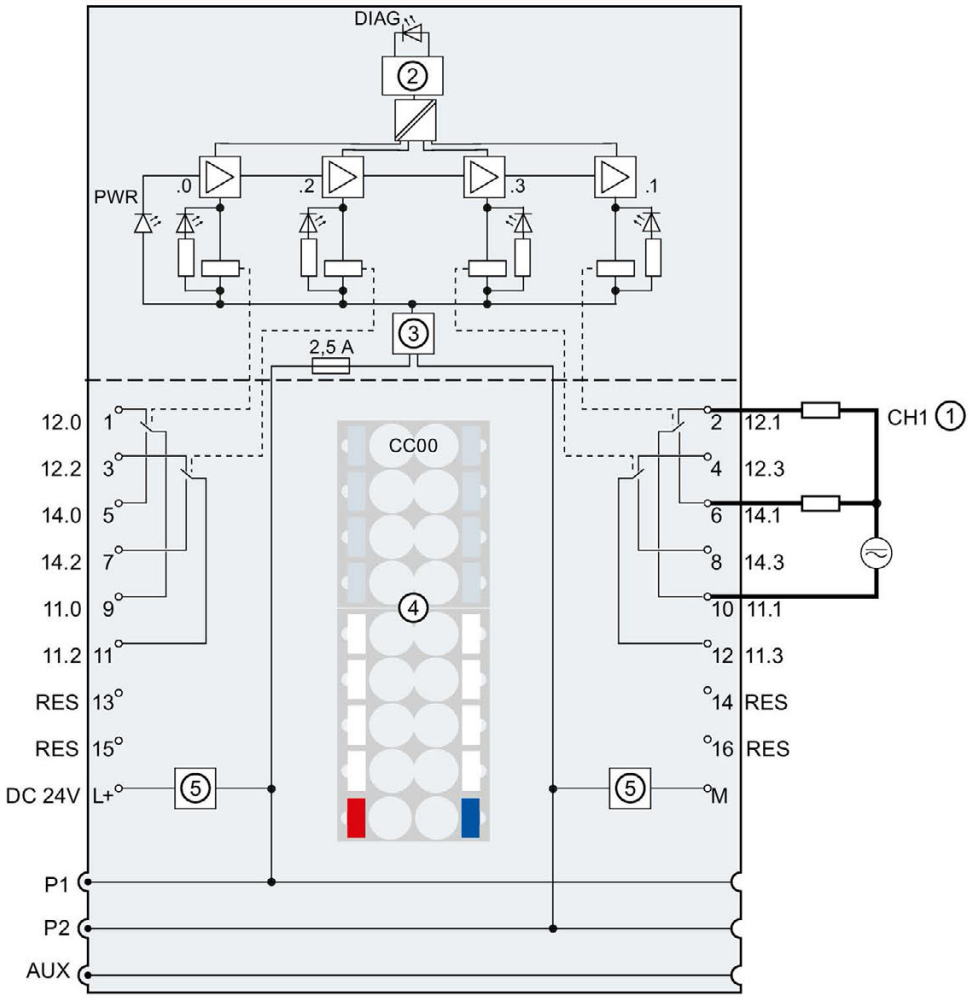

①	2-wire connection	11.n	Common contact
②	Backplane bus interface	12.n	Normally closed contact
③	Polarity reversal protection	14.n	Normally open contact
④	Color identification label CCxx (optional)	n	Channel
⑤	Filter connection supply voltage (only when light-colored BaseUnit is present)	DIAG	Diagnostics LED (green, red)
P1, P2, AUX	Internal self-assembling voltage buses Connection to left (dark-colored BaseUnit)	L+	24 V DC (infeed only with light-colored BaseUnit)
.0, .1, .2, .3	Channel status LED (green)	PWR	Power LED (green)
		M	Ground

Figure 3-1 Wiring and block diagram for 2-wire connection of actuators

Parameters/address space 4

4.1 Parameters

RQ 4x24VUC/2A CO ST parameters

Specify the module properties with the various parameters in the course of your STEP 7 configuration. The following table lists the configurable parameters. The effective range of the configurable parameters depends on the type of configuration.

The following configurations are possible:

- Central operation with an ET 200SP CPU
- Distributed operation on PROFINET IO in an ET 200SP system
- Distributed operation with PROFIBUS DP in an ET 200SP system

When assigning parameters in the user program, use the "WRREC" instruction to transfer the parameters to the module by means of data records (see chapter Parameter assignment and structure of the parameter data record (Page 27)).

Table 4- 1 Configurable parameters and their defaults (GSD file)

Parameter	Value range	Default	Reconfig-uration in RUN	Scope with configuration software, e.g. STEP 7 (TIA Portal)	
				GSD file PROFINET IO	GSD file PROFIBUS DP [1]
Diagnostics No supply voltage L+	• Disable • Enable	Disable	Yes	Module	Module
Channel activated	• Disable • Enable	Enable	Yes	Channel	Channel

Parameter	Value range	Default	Reconfig-uration in RUN	Scope with configuration software, e.g. STEP 7 (TIA Portal)	
				GSD file PROFINET IO	GSD file PROFIBUS DP [1]
Reaction to CPU STOP	• Turn off • Keep last value • Output substitute value 1	Turn off	Yes	Channel	Module
Potential group	• Use potential group of the left module (module plugged into a dark-colored BaseUnit) • Enable new potential group (module plugged in-to light-colored BaseUnit)	Use potential group of the left module	No	Module	Module

[1] Only when configuring using a PROFIBUS GSD file; does not apply to configuration with STEP 7 via HSP. The parameter assignment options are limited because PROFIBUS GSD configuration limits the number of parameters to a maximum of 244 bytes for each ET 200SP station. If required, you can still assign these parameters using the data record 128 as described in the column "GSD file PROFINET IO" (see table above). The parameter length of the I/O module is 8 bytes.

4.2 Explanation of parameters

Diagnostics: No supply voltage L+

Enabling of the diagnostics for no or insufficient supply voltage L+.

Channel activated

Determines whether a channel is activated or deactivated.

Reaction to CPU STOP

Determines the behavior of the module in the event of a CPU STOP.

Potential group

A potential group consists of a group of directly adjacent I/O modules within an ET 200SP station, which are supplied via a common supply voltage.

A potential group begins with a light-colored BaseUnit through which the required voltage is supplied for all modules of the potential group. The light-colored BaseUnit interrupts the three self-assembling voltage buses P1, P2 and AUX to the left neighbor.

All additional I/O modules of this potential group are plugged into dark-colored BaseUnits. You take the potential of the self-assembling voltage buses P1, P2 and AUX from the left neighbor.

A potential group ends with the dark-colored BaseUnit, which follows a light-colored BaseUnit or server module in the station configuration.

4.3 Address space

The module can be configured differently in STEP 7; see following table. Depending on the configuration, additional/different addresses are assigned in the process image of the inputs.

Configuration options of RQ 4x24VUC/2A CO ST

You can configure the module with STEP 7 (TIA Portal) or with a GSD file. If you configure the module using a GSD file, the configurations are available under various short designations/module names; see the table below. The following configurations are possible:

Table 4- 2 Configuration options with GSD file

Configuration	Short designation/module name in the GSD file	Configuration software, e.g. with STEP 7 (TIA Portal)		
		Integrated in hard-ware catalog STEP 7	GSD file PROFINET IO	GSD file PROFIBUS DP
1 x 4-channel without value status	RQ 4x24VUC/2A CO ST V0.0	V14, SP1 or higher with HSP 0222	X	X
1 x 4-channel with value status	RQ 4x24VUC/2A CO ST V0. 0, QI	V14, SP1 or higher with HSP 0222	X	---

Evaluating the value status

An additional two bytes are allocated in the input address space if you enable the value status for the digital module. Bits 0 to 3 in these bytes are assigned to a channel. They provide information about the validity of the digital value.

Bit = 1: No fault is present on the channel.

Bit = 0: Channel is disabled or there is a fault/error on the module.

If a fault/error occurs on a channel with this module, the value status for all channels is 0.

Address space

The following figure shows the assignment of the address space for the RQ 4x24VUC/2A CO ST with value status (Quality Information (QI)). The addresses for the value status are only available if the value status is enabled.

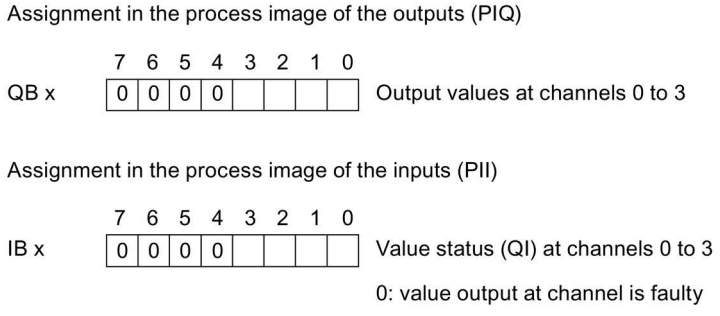

Figure 4-1 Address space of the digital output module RQ 4x24VUC/2A CO ST

Interrupts/diagnostics alarms

5

5.1 Status and error displays

LED displays

The figure below shows the LED displays (status and error displays) of the RQ 4x24VUC/2A CO ST.

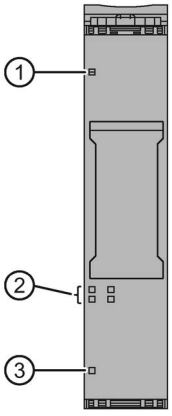

① DIAG (green/red)
② Channel status (green)
③ PWR (green)

Figure 5-1 LED display

Meaning of the LED displays

The tables below explain the meaning of the status and error displays. Remedial measures for diagnostics alarms can be found in section Diagnostics alarms (Page 22).

LED DIAG

Table 5- 1 Error display of the LED DIAG

LED DIAG	Meaning
□ Off	Backplane bus supply of the ET 200SP not OK
☼ Flashes	Module not ready for operation (no parameters assigned)
■ On	Module parameters assigned
☼ Flashes	Module diagnostics is available

LED channel status

Table 5- 2 Status display of the LED channel status

LED channel status	Meaning
□ Off	Channel deactivated or activated and process signal = 0
■ On	Channel activated

LED PWR

Table 5- 3 Status display of the LED PWR

LED PWR	Meaning
□ Off	No supply voltage L+
■ On	Supply voltage L+ present

5.2 Interrupts

The RQ 4×24VUC/2A CO ST digital output module supports diagnostics alarms.

Diagnostics interrupts

The module generates a diagnostic interrupt at the following event:

- Parameter assignment error
- No supply voltage

Detailed information on the event is available in the STEP 7 online help.

5.3 Diagnostics alarms

Diagnostics alarms

A diagnostic alarm is generated and the DIAG-LED flashes on the module for each diagnostics event. You can read out the diagnostics alarms, for example, in the diagnostics buffer of the CPU. You can evaluate the error codes with the user program.

Table 5- 4 Diagnostics alarms, their meaning and corrective measures

Diagnostics alarm	Error code	Meaning	Remedy
Parameter assignment error	10_H	The module cannot evaluate parameters for the channel	• Incorrect parameter assignment • Correct the parameter assignment
No supply voltage	11_H	No or insufficient supply voltage L+	• Check supply voltage L+ on the potential group • Check BaseUnit

Technical specifications

6

6.1 Technical specifications

Technical specifications of the RQ 4×24VUC/2A CO ST

Article number	6ES7132-6GD51-0BA0
General information	
Product type designation	RQ CO 4x 24 V DC/2 A ST, PU 1
Firmware version	V0.0
• FW update possible	No
usable BaseUnits	BU type A0
Color code for module-specific color identification plate	CC00
Product function	
• I&M data	Yes; I&M0 to I&M3
Engineering with	
• STEP 7 TIA Portal configurable/integrated as of version	V14
• STEP 7 configurable/integrated as of version	V5.5 SP3
• PROFIBUS as of GSD version/GSD revision	One GSD file each, Revision 3 and 5 and higher
• PROFINET as of GSD version/GSD revision	GSDML V2.3
Operating mode	
• DQ	Yes
• DQ with energy-saving function	No
• PWM	No
• Oversampling	No
• MSO	No
Redundancy	
• Redundancy capability	Yes
Supply voltage	
Rated value (DC)	24 V
permissible range, lower limit (DC)	19.2 V
permissible range, upper limit (DC)	28.8 V
Reverse polarity protection	Yes

Article number	6ES7132-6GD51-0BA0
Input current	
Current consumption (rated value)	50 mA
Power loss	
Power loss, typ.	1.2 W
Address area	
Address space per module	
• Inputs	+ 1 byte for QI information
• Outputs	1 byte
Hardware configuration	
Automatic encoding	Yes
• Mechanical coding element	Yes
Digital outputs	
Type of digital output	Relays
Number of digital outputs	4
Current-sinking	Yes
Current-sourcing	Yes
Short-circuit protection	No
Parallel switching of two outputs	
• for logic links	Yes
• for uprating	No
• for redundant control of a load	Yes
Switching frequency	
• with resistive load, max.	2 Hz
Total current of the outputs	
• Current per channel, max.	2 A
• Current per module, max.	8 A
Total current of the outputs (per module)	
horizontal installation	
– up to 40 °C, max.	8 A
– up to 50 °C, max.	6 A
– up to 60 °C, max.	4 A
vertical installation	
– up to 30 °C, max.	8 A
– up to 40 °C, max.	6 A
– up to 50 °C, max.	4 A; in all other mounting positions

Article number	6ES7132-6GD51-0BA0
Relay outputs	
• Number of relay outputs	4
• Rated supply voltage of relay coil L+ (DC)	24 V
• Current consumption of relays (coil current of all relays), max.	40 mA
Switching capacity of contacts	
– with resistive load, max.	2 A
– Thermal continuous current, max.	2 A
– Switching current, min.	1 mA; 5 V DC
– Rated switching voltage (DC)	24 V
– Rated switching voltage (AC)	24 V
Cable length	
• shielded, max.	1 000 m
• unshielded, max.	200 m
Isochronous mode	
Isochronous operation (application synchronized up to terminal)	No
Interrupts/diagnostics/status information	
Diagnostics function	Yes
Substitute values connectable	Yes
Alarms	
• Diagnostic alarm	Yes
Diagnostic messages	
• Monitoring the supply voltage	Yes
• Wire-break	No
• Short-circuit	No
Diagnostics indication LED	
• Monitoring of the supply voltage (PWR-LED)	Yes; green PWR LED
• Channel status display	Yes; Green LED
• for channel diagnostics	No
• for module diagnostics	Yes; green/red DIAG LED
Potential separation	
Potential separation channels	
• between the channels	Yes
• between the channels and backplane bus	Yes
• between the channels and the power supply of the electronics	Yes

Article number	6ES7132-6GD51-0BA0
Isolation	
Isolation tested with	707 V DC (type test)
Altitude during operation based on sea level	
• Ambient air temperature-barometric pressure-altitude	On request: Ambient temperatures lower than 0 °C (without condensation) and/or installation altitudes greater than 2 000 m
Dimensions	
Width	15 mm
Height	73 mm
Depth	58 mm
Weights	
Weight, approx.	30 g

Derating trend

The following figure show the load current derating with horizontal and vertical mounting positions.

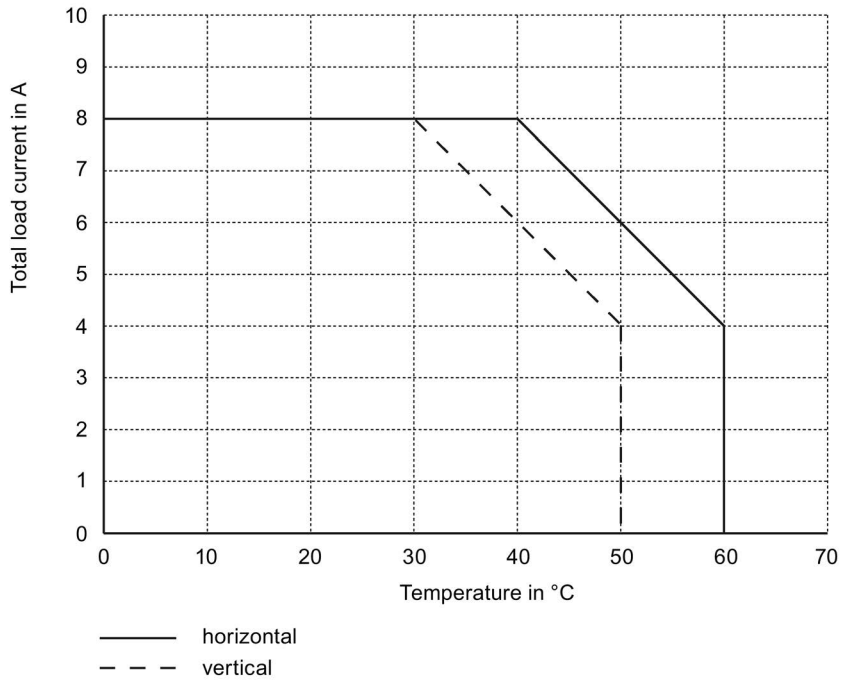

Figure 6-1 Load current for mounting position

Dimensional drawing

See the manual ET 200SP BaseUnits (http://support.automation.siemens.com/WW/view/en/58532597/133300)

Parameter data record

A

A.1 Parameter assignment and structure of parameter data record

The data record of the module has an identical structure, regardless of whether you configure the module with PROFIBUS DP or PROFINET IO. With data record 128, you can reconfigure the module in your user program regardless of your programming. This means that you can use all the functions of the module even if you configured it via PROFIBUS-GSD.

Parameter assignment in the user program

You have the option to re-configure the module in RUN (e.g. the response of selected channels to the CPU-STOP state can be changed in RUN without having an effect on the other channels).

Changing parameters in RUN

The "WRREC" instruction is used to transfer the parameters to the module using data record 128. The parameters set in STEP 7 are not changed in the CPU, which means the parameters set in STEP 7 will be valid again after a restart.

Output parameter STATUS

The module ignores errors that occur during the transfer of parameters with the "WRREC" instruction and continues operation with the previous parameter assignment. However, a corresponding error code is written to the STATUS output parameter.

The description of the "WRREC" instruction and the error codes is available in the STEP 7 online help.

Structure of data record 128

Note

Channel 0 includes the diagnostics enable for the entire module.

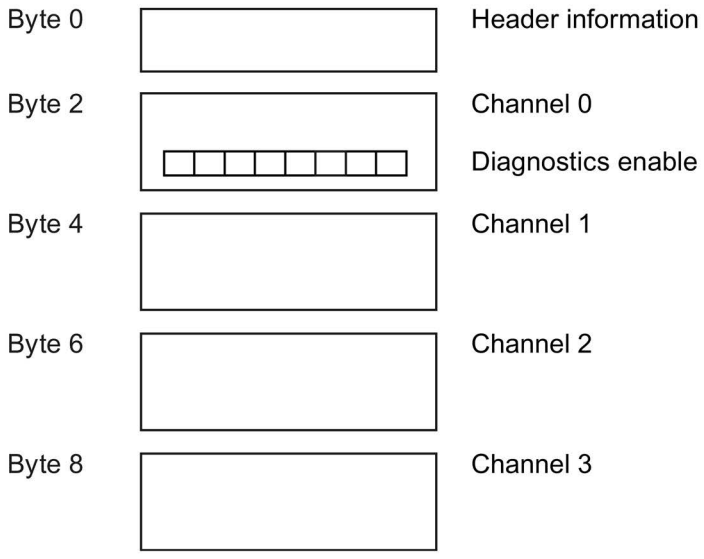

Figure A-1 Structure of data record 128

Header information

The figure below shows the structure of the header information.

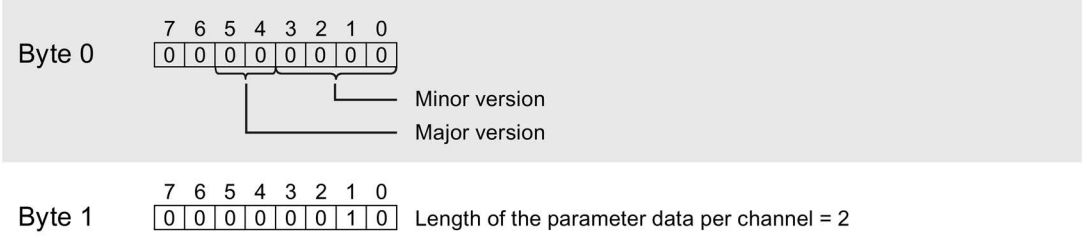

Figure A-2 Header information

Parameters

The figure below shows the structure of the parameters in data record 128.

Enable a parameter by setting the corresponding bit to "1".

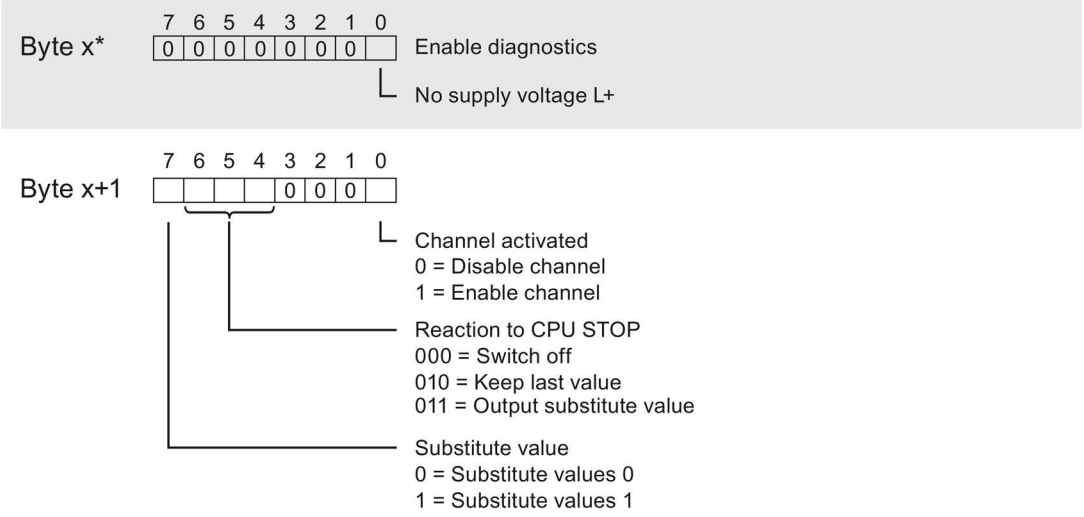

* x = 2 + (channel number × 2); channel number = 0 to 3

Figure A-3 Structure byte x to x+1 for the channels 0 to 3

Error transferring the data record

The module always checks all the values of the transferred data record. Only if all the values were transferred without errors does the module apply the values from the data record.

The WRREC instruction for writing data records returns corresponding error codes when errors occur in the STATUS parameter. (See also the description of the "STATUS" parameter in the STEP 7 online help).

The following table shows the module-specific error codes and their meaning for the parameter data record 128.

Error code in STATUS parameter (hexadecimal)				Meaning	Solution
Byte 0	Byte 1	Byte 2	Byte 3		
DF	80	B0	xx	Number of the data record unknown.	Enter a valid number for the data record.
DF	80	B1	xx	Length of the data record incorrect.	Enter a valid value for the data record length.
DF	80	B2	xx	Slot invalid or cannot be accessed.	• Check the station whether the module is plugged or drawn. • Check the assigned values for the parameters of the WRREC instruction.
DF	80	E0	xx	Wrong version or error in the header information.	Correct the version, length and number of parameter blocks.
DF	80	E1	06	Invalid coding for substitute value behavior.	Check the parameters of the module.

SIEMENS

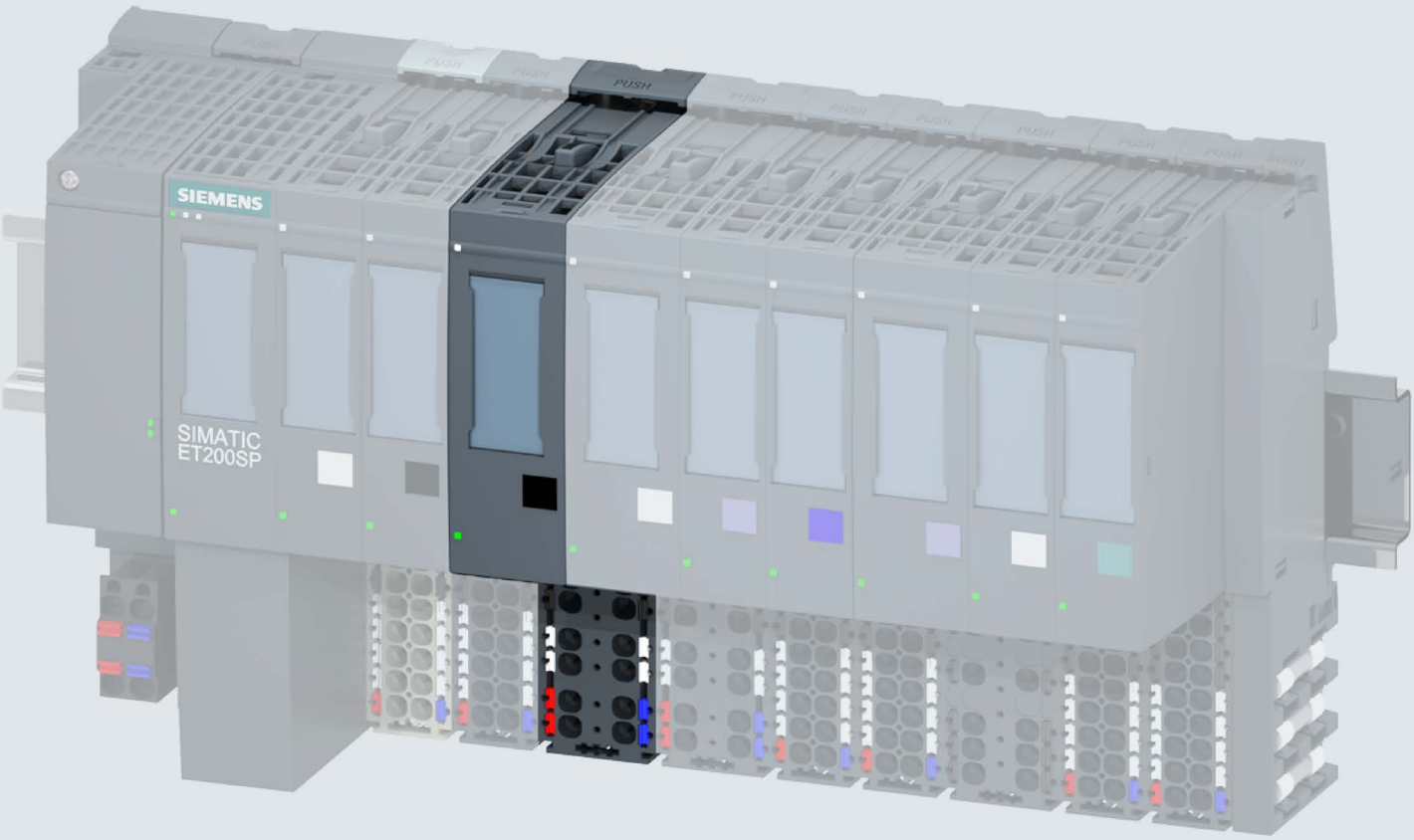

Manual

SIMATIC

ET 200SP

Digital output module
RQ 4x120VDC-230VAC/5A NO ST
(6ES7132-6HD01-0BB1)

Edition 09/2017

support.industry.siemens.com

SIEMENS

SIMATIC

ET 200SP
Digital output module
RQ 4x120VDC-230VAC/5A NO ST
(6ES7132-6HD01-0BB1)

Manual

Preface

Documentation guide 1

Product overview 2

Wiring up 3

Parameters/address space 4

Interrupts/diagnostics alarms 5

Technical specifications 6

Parameter data record A

09/2017

A5E03576775-AE

Legal information

Warning notice system

This manual contains notices you have to observe in order to ensure your personal safety, as well as to prevent damage to property. The notices referring to your personal safety are highlighted in the manual by a safety alert symbol, notices referring only to property damage have no safety alert symbol. These notices shown below are graded according to the degree of danger.

⚠ DANGER

indicates that death or severe personal injury **will** result if proper precautions are not taken.

⚠ WARNING

indicates that death or severe personal injury **may** result if proper precautions are not taken.

⚠ CAUTION

indicates that minor personal injury can result if proper precautions are not taken.

NOTICE

indicates that property damage can result if proper precautions are not taken.

If more than one degree of danger is present, the warning notice representing the highest degree of danger will be used. A notice warning of injury to persons with a safety alert symbol may also include a warning relating to property damage.

Qualified Personnel

The product/system described in this documentation may be operated only by **personnel qualified** for the specific task in accordance with the relevant documentation, in particular its warning notices and safety instructions. Qualified personnel are those who, based on their training and experience, are capable of identifying risks and avoiding potential hazards when working with these products/systems.

Proper use of Siemens products

Note the following:

⚠ WARNING

Siemens products may only be used for the applications described in the catalog and in the relevant technical documentation. If products and components from other manufacturers are used, these must be recommended or approved by Siemens. Proper transport, storage, installation, assembly, commissioning, operation and maintenance are required to ensure that the products operate safely and without any problems. The permissible ambient conditions must be complied with. The information in the relevant documentation must be observed.

Trademarks

All names identified by ® are registered trademarks of Siemens AG. The remaining trademarks in this publication may be trademarks whose use by third parties for their own purposes could violate the rights of the owner.

Disclaimer of Liability

We have reviewed the contents of this publication to ensure consistency with the hardware and software described. Since variance cannot be precluded entirely, we cannot guarantee full consistency. However, the information in this publication is reviewed regularly and any necessary corrections are included in subsequent editions.

Siemens AG
Division Digital Factory
Postfach 48 48
90026 NÜRNBERG
GERMANY

A5E03576775-AE
℗ 10/2017 Subject to change

Copyright © Siemens AG 2012 - 2017.
All rights reserved

Preface

Purpose of the documentation

This manual supplements the system manual ET 200SP distributed I/O system (http://support.automation.siemens.com/WW/view/en/58649293).

Functions that generally relate to the system are described in this manual.

The information provided in this manual and in the system/function manuals supports you in commissioning the system.

Changes compared to previous version

Compared to the previous version, this manual contains the following change:

Due to the change in hardware, the article number of the module has been changed from 6ES7132-6HD00-0BB1 to 6ES7132-6HD01-0BB1. Both modules are compatible, except for the firmware-update function.

Conventions

CPU: When the term "CPU" is used in this manual, it applies to the CPUs of the S7-1500 automation system as well as to the CPUs/interface modules of the distributed I/O system ET 200SP.

STEP 7: In this documentation, "STEP 7" is used as a synonym for all versions of the configuration and programming software "STEP 7 (TIA Portal)".

Please also observe notes marked as follows:

Note

A note contains important information on the product described in the documentation, on the handling of the product or on the section of the documentation to which particular attention should be paid.

Security information

Siemens provides products and solutions with industrial security functions that support the secure operation of plants, systems, machines and networks.

In order to protect plants, systems, machines and networks against cyber threats, it is necessary to implement – and continuously maintain – a holistic, state-of-the-art industrial security concept. Siemens' products and solutions constitute one element of such a concept.

Customers are responsible for preventing unauthorized access to their plants, systems, machines and networks. Such systems, machines and components should only be connected to an enterprise network or the internet if and to the extent such a connection is necessary and only when appropriate security measures (e.g. firewalls and/or network segmentation) are in place.

For additional information on industrial security measures that may be implemented, please visit (http://www.siemens.com/industrialsecurity).

Siemens' products and solutions undergo continuous development to make them more secure. Siemens strongly recommends that product updates are applied as soon as they are available and that the latest product versions are used. Use of product versions that are no longer supported, and failure to apply the latest updates may increase customers' exposure to cyber threats.

To stay informed about product updates, subscribe to the Siemens Industrial Security RSS Feed under (http://www.siemens.com/industrialsecurity).

Table of contents

Preface 4
1 Documentation guide 7
2 Product overview 12
2.1 Properties 12
3 Wiring up 14
3.1 Wiring and block diagram 14
4 Parameters/address space 17
4.1 Parameters 17
4.2 Explanation of the parameters 18
4.3 Address space 19
5 Interrupts/diagnostics alarms 20
5.1 Status and error display 20
5.2 Interrupts 22
5.3 Diagnostics alarms 22
6 Technical specifications 23
6.1 Technical specifications 23
6.2 Switching cycles 28
A Parameter data record 29
A.1 Parameter assignment and structure of the parameter data record 29

Documentation guide

1

The documentation for the SIMATIC ET 200SP distributed I/O system is arranged into three areas.
This arrangement enables you to access the specific content you require.

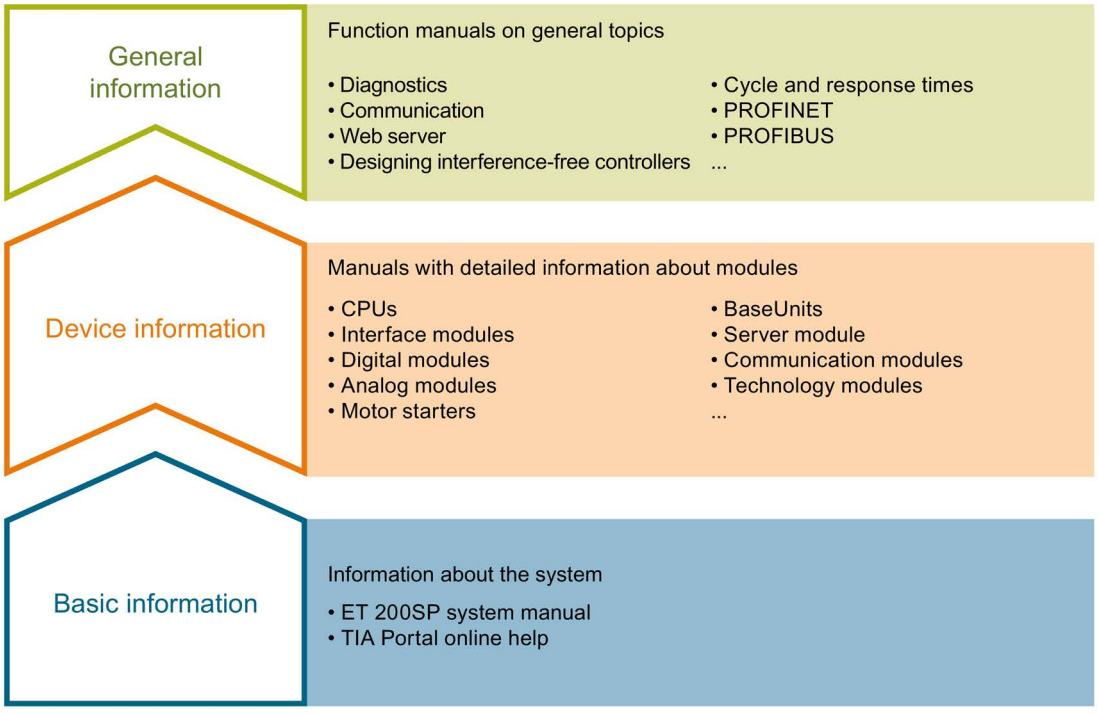

Basic information

The system manual describes in detail the configuration, installation, wiring and commissioning of the SIMATIC ET 200SP. distributed I/O system. The STEP 7 online help supports you in the configuration and programming.

Device information

Product manuals contain a compact description of the module-specific information, such as properties, wiring diagrams, characteristics and technical specifications.

General information

The function manuals contain detailed descriptions on general topics regarding the SIMATIC ET 200SP distributed I/O system, e.g. diagnostics, communication, Web server, motion control and OPC UA.

You can download the documentation free of charge from the Internet (http://w3.siemens.com/mcms/industrial-automation-systems-simatic/en/manual-overview/tech-doc-et200/Pages/Default.aspx).

Changes and supplements to the manuals are documented in a Product Information.

You can download the product information free of charge from the Internet (https://support.industry.siemens.com/cs/us/en/view/73021864).

Manual Collection ET 200SP

The Manual Collection contains the complete documentation on the SIMATIC ET 200SP distributed I/O system gathered together in one file.

You can find the Manual Collection on the Internet (http://support.automation.siemens.com/WW/view/en/84133942).

"mySupport"

With "mySupport", your personal workspace, you make the most of your Industry Online Support.

In "mySupport" you can store filters, favorites and tags, request CAx data and put together your personal library in the Documentation area. Furthermore, your data is automatically filled into support requests and you always have an overview of your current requests.

You need to register once to use the full functionality of "mySupport".

You can find "mySupport" in the Internet (https://support.industry.siemens.com/My/ww/en).

"mySupport" - Documentation

In the Documentation area of "mySupport", you have the possibility to combine complete manuals or parts of them to make your own manual.
You can export the manual in PDF format or in an editable format.

You can find "mySupport" - Documentation in the Internet (http://support.industry.siemens.com/My/ww/en/documentation).

"mySupport" - CAx Data

In the CAx Data area of "mySupport", you can have access the latest product data for your CAx or CAe system.

You configure your own download package with a few clicks.

In doing so you can select:

- Product images, 2D dimension drawings, 3D models, internal circuit diagrams, EPLAN macro files
- Manuals, characteristics, operating manuals, certificates
- Product master data

You can find "mySupport" - CAx Data in the Internet (http://support.industry.siemens.com/my/ww/en/CAxOnline).

Application examples

The application examples support you with various tools and examples for solving your automation tasks. Solutions are shown in interplay with multiple components in the system - separated from the focus in individual products.

You can find the application examples on the Internet (https://support.industry.siemens.com/sc/ww/en/sc/2054).

TIA Selection Tool

With the TIA Selection Tool, you can select, configure and order devices for Totally Integrated Automation (TIA).
This tool is the successor of the SIMATIC Selection Tool and combines the known configurators for automation technology into one tool.
With the TIA Selection Tool, you can generate a complete order list from your product selection or product configuration.

You can find the TIA Selection Tool on the Internet (http://w3.siemens.com/mcms/topics/en/simatic/tia-selection-tool).

SIMATIC Automation Tool

You can use the SIMATIC Automation Tool to run commissioning and maintenance activities simultaneously on various SIMATIC S7 stations as a bulk operation independently of the TIA Portal.

The SIMATIC Automation Tool provides a multitude of functions:

- Scanning of a PROFINET/Ethernet network and identification of all connected CPUs
- Address assignment (IP, subnet, gateway) and station name (PROFINET device) to a CPU
- Transfer of the data and the programming device/PC time converted to UTC time to the module
- Program download to CPU
- Operating mode switchover RUN/STOP
- Localization of the CPU by means of LED flashing
- Reading out CPU error information
- Reading the CPU diagnostic buffer
- Reset to factory settings
- Updating the firmware of the CPU and connected modules

You can find the SIMATIC Automation Tool on the Internet (https://support.industry.siemens.com/cs/ww/en/view/98161300).

PRONETA

With SIEMENS PRONETA (PROFINET network analysis), you analyze the plant network during commissioning. PRONETA features two core functions:

- The topology overview independently scans PROFINET and all connected components.
- The IO check is a fast test of the wiring and the module configuration of a system.

You can find SIEMENS PRONETA on the Internet (https://support.industry.siemens.com/cs/ww/en/view/67460624).

SINETPLAN

SINETPLAN, the Siemens Network Planner, supports you in planning automation systems and networks based on PROFINET. The tool facilitates professional and predictive dimensioning of your PROFINET installation as early as in the planning stage. In addition, SINETPLAN supports you during network optimization and helps you to exploit network resources optimally and to plan reserves. This helps to prevent problems in commissioning or failures during productive operation even in advance of a planned operation. This increases the availability of the production plant and helps improve operational safety.

The advantages at a glance

- Network optimization thanks to port-specific calculation of the network load
- Increased production availability thanks to online scan and verification of existing systems
- Transparency before commissioning through importing and simulation of existing STEP 7 projects
- Efficiency through securing existing investments in the long term and optimal exploitation of resources

You can find SINETPLAN on the Internet (https://www.siemens.com/sinetplan).

Product overview

2

2.1 Properties

Article number

6ES7132-6HD01-0BB1 (number in package unit: 1 unit)

6ES7132-6HD01-2BB1 (number in package unit: 10 units)

View of the module

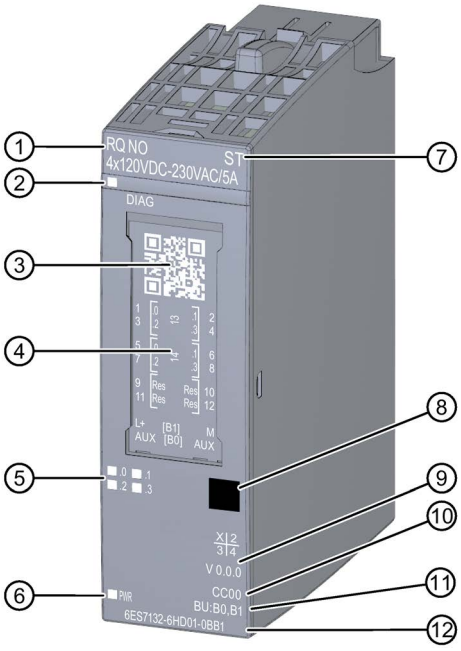

①	Module type and name	⑦	Function class
②	LED for diagnostics	⑧	Color coding module type
③	2D matrix code	⑨	Function and firmware version
④	Wiring diagram	⑩	Color code for selecting the color identification labels
⑤	LEDs for channel status	⑪	BU type
⑥	LED for supply voltage	⑫	Article number

Figure 2-1 View of the RQ 4×120VDC-230VAC/5A NO ST module

Properties

The module has the following technical properties:

- Digital output module with 4 floating relay outputs
- Supply voltage L+
- Output current per output 5 A
- Normally open contact (NO: normally open)
- Configurable diagnostics (per module)
- Configurable substitute values (per channel)
- Suitable for solenoid valves, DC contactors, and indicator lights

The module supports the following functions:

Table 2- 1 Version dependencies of the functions

Function	HW version	FW version	STEP 7		GSD file	
			TIA Portal	V5.x	PROFINET IO	PROFIBUS DP
Identification data I&M0 to I&M3	FS01	V0.0.0 and higher	V14 or higher with HSP 0222	V5.5 SP3 or higher with HSP 0232 V7.0	X	X
Configuration in RUN	FS01	V0.0.0 and higher	V14 or higher with HSP 0222	V5.5 SP3 or higher with HSP 0232 V7.0	X	X
PROFIenergy	FS01	V0.0.0 and higher	V14 or higher with HSP 0222	V5.5 SP3 or higher with HSP 0232 V7.0	X	X
Value status	FS01	V0.0.0 and higher	V14 or higher with HSP 0222	V5.5 SP3 or higher with HSP 0232 V7.0	X	X

Accessories

The following accessories must be ordered separately:

- Labeling strips
- Color identification labels
- Reference identification label
- Shield connector

See also

You can find more information on accessories in the ET 200SP distributed I/O system (http://support.automation.siemens.com/WW/view/en/58649293) system manual.

Wiring up 3

3.1 Wiring and block diagram

This section includes the block diagram of the RQ 4x120VDC-230VAC/5A NO ST module with the terminal assignments for 2-wire and 3-wire connection.

You can find information on wiring the BaseUnit in the ET 200SP distributed I/O system (http://support.automation.siemens.com/WW/view/en/58649293) system manual.

Note

You may use and combine the different wiring options for all channels.

Note

The relay contacts of the module can only switch identical voltage potential. The AUX terminals can only be used with an associated identical voltage or PE.

Connection: 3-wire connection of actuators

The following figure shows the block diagram and an example for the terminal assignment of the digital output module RQ 4x120VDC-230VAC/5A NO ST on the BaseUnit BU type B0.

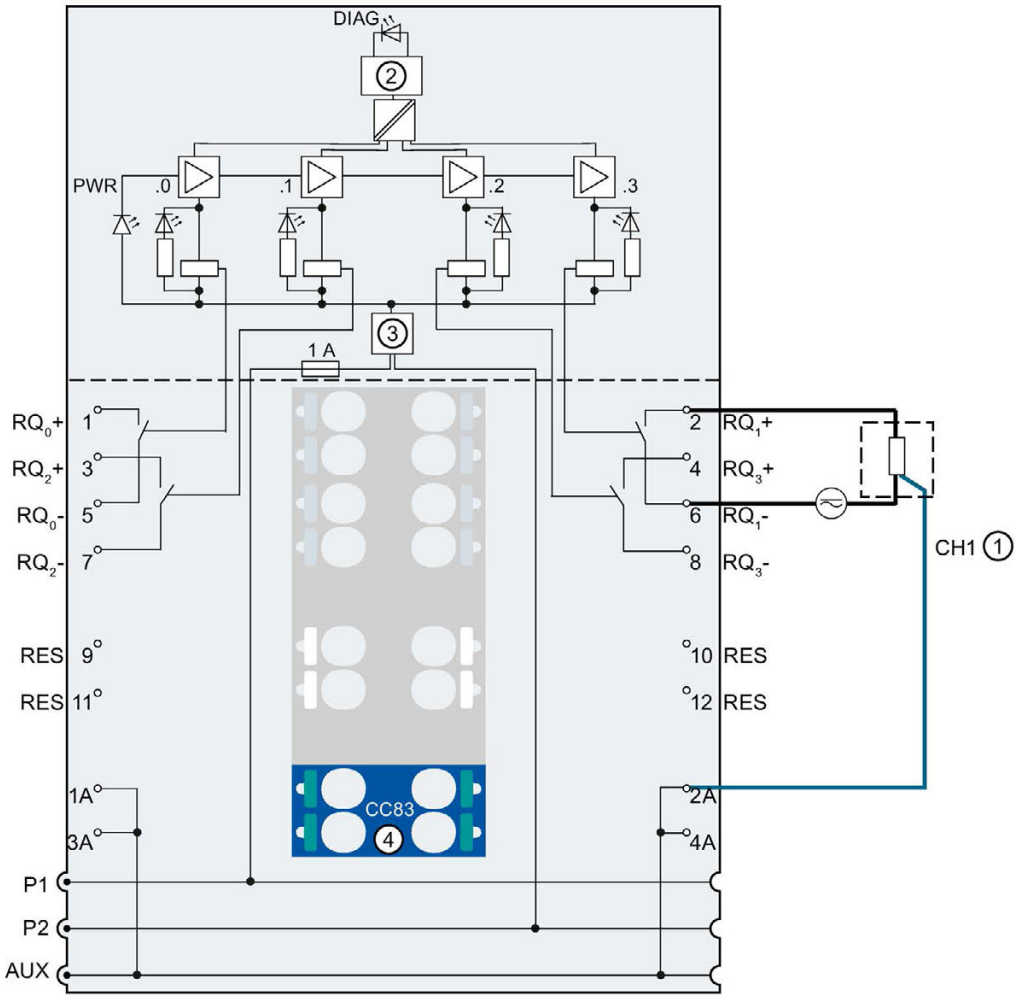

①	3-wire connection	RES	Reserve, must remain unused for future function extensions
②	Backplane bus interface	1A to 4A	AUX terminals (freely usable up to 230 V AC)
③	Polarity reversal protection	DIAG	Diagnostics LED (green, red)
④	Color identification label CCxx (optional)	.0, .1, .2, .3	Channel status LED (green)
RQ_n+, RQ_n-	Channel n	PWR	Power LED (green)
P1, P2, AUX	Internal self-assembling voltage buses Connection to left (dark-colored BaseUnit)		

Figure 3-1 Wiring and block diagram for 3-wire connection of actuators

Connection: 2-wire connection of actuators

The following figure shows the block diagram and an example for the terminal assignment of the digital output module RQ 4x120VDC-230VAC/5A NO ST on the BaseUnit BU type B1.

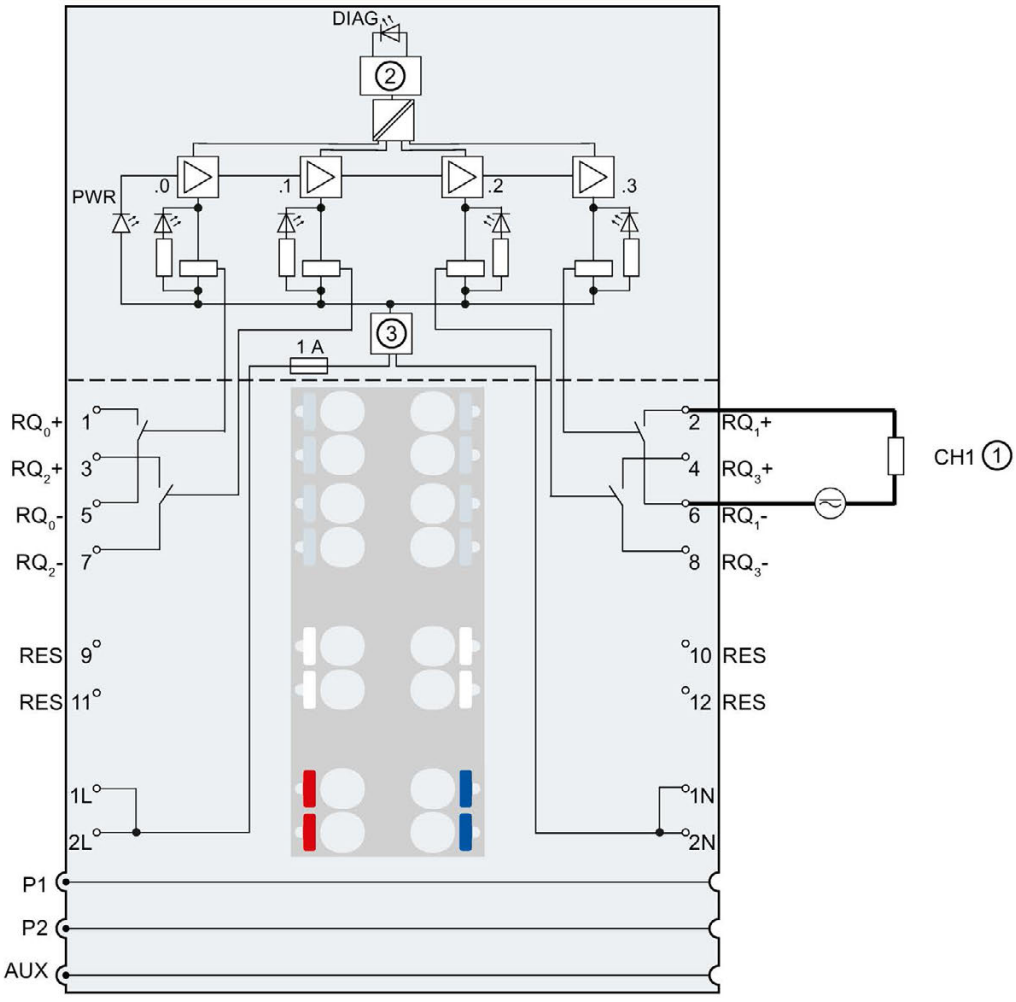

①	2-wire connection	1L, 2L	Supply voltage 24 V DC
②	Backplane bus interface	1N, 2N	Neutral conductor supply voltage
③	Polarity reversal protection	DIAG	Diagnostics LED (green, red)
RQ_n+, RQ_n-	Channel n	.0, .1, .2, .3	Channel status LED (green)
RES	Reserve, must remain unused for future function extensions	PWR	Power LED (green)
		P1, P2, AUX	Internal self-assembling voltage buses Connection to left (dark-colored BaseUnit)

Figure 3-2 Wiring and block diagram for 2-wire connection of actuators

Parameters/address space 4

4.1 Parameters

Parameters for RQ 4x120VDC-230VAC/5A NO ST

Specify the module properties with the various parameters in the course of your STEP 7 configuration. The following table lists the configurable parameters. The effective range of the parameters depends on the type of configuration.

The following configurations are possible:

- Central operation with an ET 200SP CPU
- Distributed operation on PROFINET IO in an ET 200SP system
- Distributed operation with PROFIBUS DP in an ET 200SP system

When assigning parameters in the user program, use the "WRREC" instruction to transfer the parameters to the module using the data records; refer to the section Parameter assignment and structure of the parameter data record (Page 29).

The following parameter settings are possible:

Table 4- 1 Settable parameters and their defaults (GSD file)

Parameter	Value range	Default	Configuration in RUN	Scope with configuration software, e.g. STEP 7 (TIA Portal)	
				GSD file PROFINET IO	GSD file PROFIBUS DP [1]
Diagnostics No supply voltage L+	• Disable • Enable	Disable	yes	Module	Module
Channel enabled	• Disable • Enable	Enable	yes	Channel	Channel
Reaction to CPU STOP	• Turn off • Keep last value • Output substitute value 1	Turn off	yes	Channel	Module

[1] Due to the limited number of parameters at a maximum of 244 bytes per ET 200SP station with a PROFIBUS GSD configuration, the configuration options are restricted. If required, you can assign these parameters using data record 128 as described in the "GSD file PROFINET IO" column (see table above). The parameter length of the I/O module is 8 bytes.

4.2 Explanation of the parameters

Diagnostics no supply voltage L+

Enabling of the diagnostics for no or insufficient supply voltage L+.

Channel activated

Determines whether a channel is enabled or disabled.

Reaction to CPU STOP

Specifies the behavior of the module if the CPU changes to STOP.

See also

ET 200SP distributed I/O system
(http://support.automation.siemens.com/WW/view/en/58649293)

4.3 Address space

The module can be configured differently in STEP 7; see following table. Depending on the configuration, additional/different addresses are assigned in the process image of the inputs.

Configuration options of RQ 4x120VDC-230VAC/5A NO ST

You can configure the module with STEP 7 (TIA Portal) or with a GSD file. If you configure the module using a GSD file, the configurations are available under various short designations/module names; see the table below. The following configurations are possible:

Table 4- 2 Configuration options with GSD file

Configuration	Short designation/module name in the GSD file	Configuration software, e.g. with STEP 7 (TIA Portal)		
		Integrated in hardware catalog STEP 7	GSD file PROFINET IO	GSD file PROFIBUS DP
1 x 4-channel without value status	RQ 4x120VDC-230VAC/5A NO ST V0.0	V14, SP1 or higher with HSP 0222	X	X
1 x 4-channel with value status	RQ 4x120VDC-230VAC/5A NO ST V0.0, QI	V14, SP1 or higher with HSP 0222	X	---

Evaluating the value status

An additional byte is allocated in the input address space if you enable the value status for the digital module. Bits 0 to 3 in this byte are assigned to a channel. They provide information about the validity of the digital value.

Bit = 1: No fault is present on the channel.

Bit = 0: Channel is disabled or there is a fault/error on the module.

If a fault/error occurs on a channel with this module, the value status for all channels is 0.

Address space

The following figure shows the assignment of the address space for the RQ 4x120VDC-230VAC/5A NO ST with value status (Quality Information (QI)). The addresses for the value status are only available if the value status is enabled.

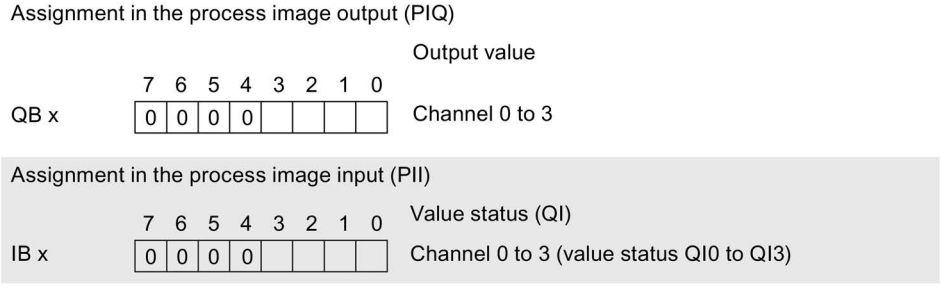

Figure 4-1 Address space of RQ 4×120VDC-230VAC/5A NO ST with value status

Interrupts/diagnostics alarms 5

5.1 Status and error display

LED display

The figure below shows the LED displays (status and error displays) of the RQ 4x120VDC-230VAC/5A NO ST.

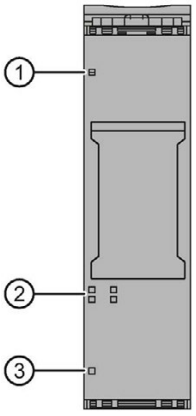

① DIAG (green/red)
② Channel status (green)
③ PWR (green)

Figure 5-1 LED display

Meaning of the LED displays

The following tables show the meaning of the status and error displays. Measures for dealing with diagnostics alarms can be found in the section Diagnostics alarms (Page 22).

DIAG LED

Table 5- 1 DIAG LED fault/error display

DIAG LED	Meaning
□ off	Backplane bus supply of the ET 200SP not OK
☼ Flashes	Module not ready for operation (no parameters assigned)
■ on	Module parameters assigned
☼ Flashes	Module diagnostics is available

Channel status LED

Table 5- 2 Status display of the channel status LED

Channel status LED	Meaning
□ off	Channel deactivated or activated and process signal = 0
■ on	Channel activated and process signal = 1

PWR LED

Table 5- 3 Status display of the PWR LED

PWR LED	Meaning
□ off	No supply voltage L+
■ on	Supply voltage L+ present

5.2 Interrupts

The RQ 4×120VDC-230VAC/5A NO ST digital output module supports diagnostic interrupts.

Diagnostics interrupt

The module generates a diagnostics interrupt for the following events:

- Parameter assignment error
- No supply voltage

5.3 Diagnostics alarms

A diagnostic alarm is generated and the DIAG-LED flashes on the module for each diagnostics event. You can read out the diagnostics alarms, for example, in the diagnostics buffer of the CPU. You can evaluate the error codes with the user program.

Table 5- 4 Diagnostics alarms, their meanings and corrective measures

Diagnostics alarm	Error code	Meaning	Solution
Parameter assignment error	10_H	• The module cannot evaluate parameters for the channel. • Incorrect parameter assignment.	Correct the parameter assignment
No supply voltage	11_H	No or insufficient supply voltage L+	• Check supply voltage L+ on the BaseUnit • Check BaseUnit type

Technical specifications

6

6.1 Technical specifications

Technical specifications of the RQ 4×120VDC-230VAC/5A NO ST

Article number	6ES7132-6HD01-0BB1
General information	
Product type designation	RQ 4x120 VDC … 230 VAC/5 A NO ST
Firmware version	V0.0
• FW update possible	No
usable BaseUnits	BU type B0, B1
Color code for module-specific color identification plate	CC40
Product function	
• I&M data	Yes; I&M0 to I&M3
Engineering with	
• STEP 7 TIA Portal configurable/integrated as of version	V14
• STEP 7 configurable/integrated as of version	V5.5 SP3
• PCS 7 configurable/integrated as of version	V8.1 SP1
• PROFIBUS as of GSD version/GSD revision	One GSD file each, Revision 3 and 5 and higher
• PROFINET as of GSD version/GSD revision	GSDML V2.3
Operating mode	
• DQ	Yes
• DQ with energy-saving function	No
• PWM	No
• Oversampling	No
• MSO	No
Redundancy	
• Redundancy capability	Yes
Supply voltage	
Rated value (DC)	24 V
permissible range, lower limit (DC)	19.2 V
permissible range, upper limit (DC)	28.8 V
Reverse polarity protection	Yes

Article number	6ES7132-6HD01-0BB1
Input current	
Current consumption (rated value)	55 mA; without load
Output voltage	
Rated value (AC)	230 V
Power loss	
Power loss, typ.	1.5 W
Address area	
Address space per module	
• Inputs	+ 1 byte for QI information
• Outputs	1 byte
Hardware configuration	
Automatic encoding	Yes
• Mechanical coding element	Yes
Digital outputs	
Type of digital output	Relays
Number of digital outputs	4
Current-sinking	Yes
Current-sourcing	Yes
Short-circuit protection	No
Parallel switching of two outputs	
• for logic links	Yes
• for uprating	No
• for redundant control of a load	Yes
Switching frequency	
• with resistive load, max.	2 Hz
• with inductive load, max.	0.5 Hz
• on lamp load, max.	2 Hz
Total current of the outputs	
• Current per channel, max.	5 A
• Current per module, max.	20 A
Total current of the outputs (per module)	
horizontal installation	
– up to 50 °C, max.	20 A
– up to 60 °C, max.	16 A
vertical installation	
– up to 40 °C, max.	20 A
– up to 50 °C, max.	16 A; in all other mounting positions

Article number	6ES7132-6HD01-0BB1
Relay outputs	
• Number of relay outputs	4
• Rated supply voltage of relay coil L+ (DC)	24 V
• Current consumption of relays (coil current of all relays), max.	40 mA
• external protection for relay outputs	Yes, with 6A
• Number of operating cycles, max.	7 000 000; see additional description in the manual
Switching capacity of contacts	
– with inductive load, max.	2 A; see additional description in the manual
– with resistive load, max.	5 A; see additional description in the manual
– Thermal continuous current, max.	5 A; Max. 1 385 VA, 150 W
– Switching current, min.	100 mA; 5 V DC
– Rated switching voltage (DC)	24 V DC to 120 V DC
– Rated switching voltage (AC)	24V AC to 230V AC
Cable length	
• shielded, max.	1 000 m
• unshielded, max.	200 m
Isochronous mode	
Isochronous operation (application synchronized up to terminal)	No
Interrupts/diagnostics/status information	
Diagnostics function	Yes
Substitute values connectable	Yes
Alarms	
• Diagnostic alarm	Yes
Diagnostic messages	
• Monitoring the supply voltage	Yes
• Wire-break	No
• Short-circuit	No
Diagnostics indication LED	
• Monitoring of the supply voltage (PWR-LED)	Yes; green PWR LED
• Channel status display	Yes; Green LED
• for channel diagnostics	No
• for module diagnostics	Yes; green/red DIAG LED

Article number	6ES7132-6HD01-0BB1
Potential separation	
Potential separation channels	
• between the channels	Yes
• between the channels and backplane bus	Yes
• between the channels and the power supply of the electronics	Yes
Permissible potential difference	
between channels and backplane bus/supply voltage	240 V AC
Isolation	
Isolation tested with	2 500 V DC (type test)
tested with	
• between channels and backplane bus/supply voltage	2500 V DC
• between backplane bus and supply voltage	707 V DC (type test)
Ambient conditions	
Ambient temperature during operation	
• horizontal installation, min.	0 °C
• horizontal installation, max.	60 °C
• vertical installation, min.	0 °C; in all other mounting positions
• vertical installation, max.	50 °C; in all other mounting positions
Altitude during operation based on sea level	
• Ambient air temperature-barometric pressure-altitude	On request: Ambient temperatures lower than 0 °C (without condensation) and/or installation altitudes greater than 2 000 m
Dimensions	
Width	20 mm
Height	73 mm
Depth	58 mm
Weights	
Weight, approx.	40 g

Derating trend

The following figure show the load current derating with horizontal and vertical mounting positions.

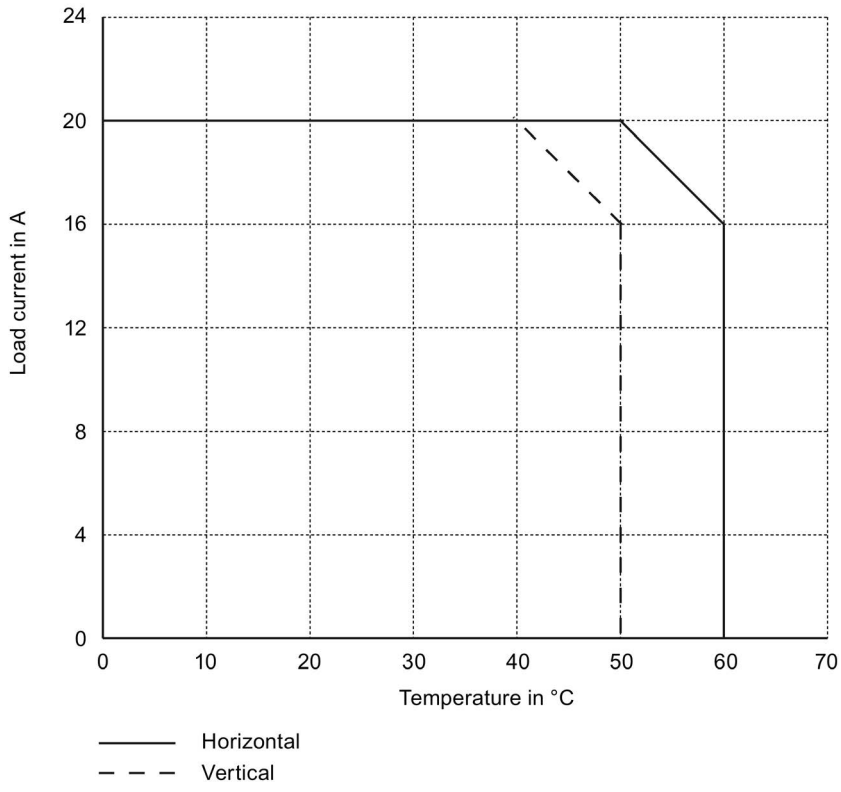

Figure 6-1 Load current and mounting position

Dimension drawing

See the manual ET 200SP BaseUnits (http://support.automation.siemens.com/WW/view/en/58532597/133300)

6.2 Switching cycles

Switching capacity and lifetime of the contacts

With an external protective circuit, the contacts will last longer than specified in the table. This table shows the switching capacity and lifetime of the relay contacts:

Table 6- 1 Switching capacity and lifetime of the relay contacts

Resistive load	Voltage	Current	Switching cycles (typical)
For resistive load	24 VDC	5.0 A	0.1 million
		4.0 A	0.2 million
		2.0 A	0.5 million
		1.0 A	1.6 million
		0.5 A	4 million
		0.1 A	7 million
	60 VDC	0.5 A	1.6 million
	120 VDC	0.2 A	1.6 million
	48 VAC	2.0 A	1.6 million
	60 VAC	2.0 A	1.2 million
	120 VAC	5.0 A	0.1 million
		3.0 A	0.2 million
		2.0 A	0.4 million
		1.0 A	0.8 million
		0.5 A	1.5 million
	230 VAC	5.0 A	0.1 million
		3.0 A	0.2 million
		2.0 A	0.4 million
		1.0 A	0.8 million
		0.5 A	1.5 million
For inductive load in accordance with IEC 947-5-1 DC 13/ AC15	24 VDC	2.0 A	0.1 million
		1.0 A	0.2 million
		0.5 A	0.5 million
	60 VDC	0.5 A	0.2 million
	120 VDC	0.2 A	0.5 million
	48 VAC	1.0 A	0.7 million
	60 VAC	1.0 A	0.5 million
	120 VAC	2.0 A	0.1 million
		1.0 A	0.3 million
		0.5 A	1 million
		0.1 A	2 million
For inductive load in accordance with IEC 947-5-1 DC 13/ AC15	230 VAC	2.0 A	0.1 million
		1.0 A	0.3 million
		0.5 A	1 million

Parameter data record

A

A.1 Parameter assignment and structure of the parameter data record

The data record of the module has an identical structure, regardless of whether you configure the module with PROFIBUS DP or PROFINET IO. With data record 128, you can reconfigure the module in your user program regardless of your programming. This means that you can use all the functions of the module even if you configured it via PROFIBUS-GSD.

Parameter assignment in the user program

You have the option to reconfigure the module in RUN (e.g. the response of selected channels to the CPU-STOP state can be changed in RUN without having an effect on the other channels).

Changing parameters in RUN

The "WRREC" instruction is used to transfer the parameters to the module using data record 128. The parameters set in STEP 7 are not changed in the CPU, which means that the parameters set in STEP 7 will be valid again after a restart.

Output parameter STATUS

If errors occur when transferring parameters with the "WRREC" instruction, the module continues operation with the previous parameter assignment. The STATUS output parameter contains a corresponding error code.

You will find a description of the "WRREC" instruction and the error codes in the STEP 7 online help.

Structure of data record 128

Note

Channel 0 includes the diagnostics enable for the entire module.

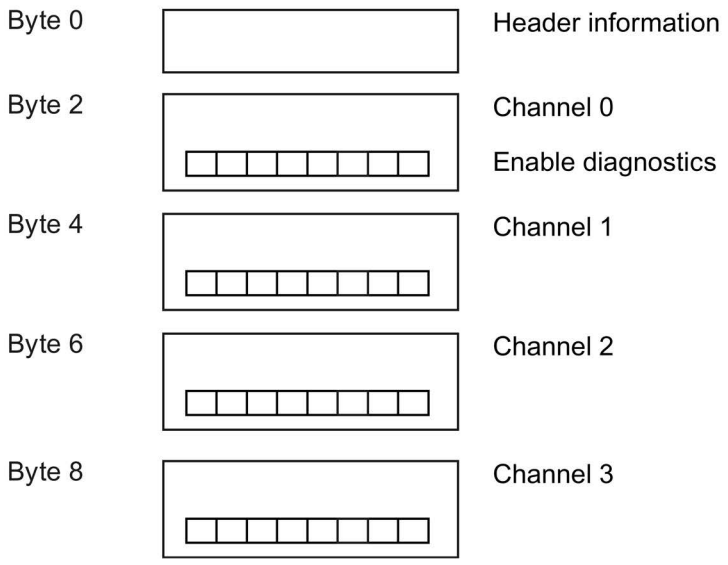

Figure A-1 Structure of data record 128

Header information

The figure below shows the structure of the header information.

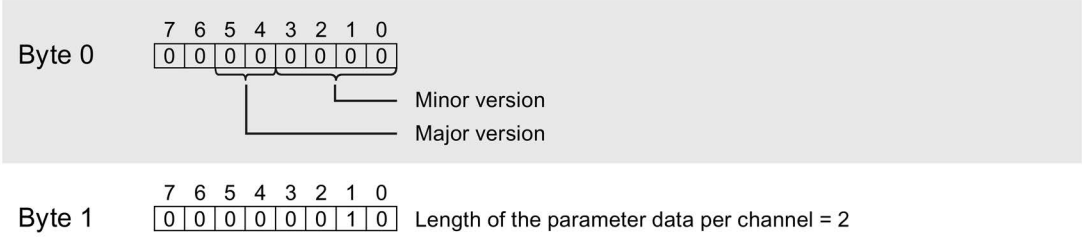

Figure A-2 Header information

Parameters

The figure below shows the structure of the parameters in data record 128.

You enable a parameter by setting the corresponding bit to "1".

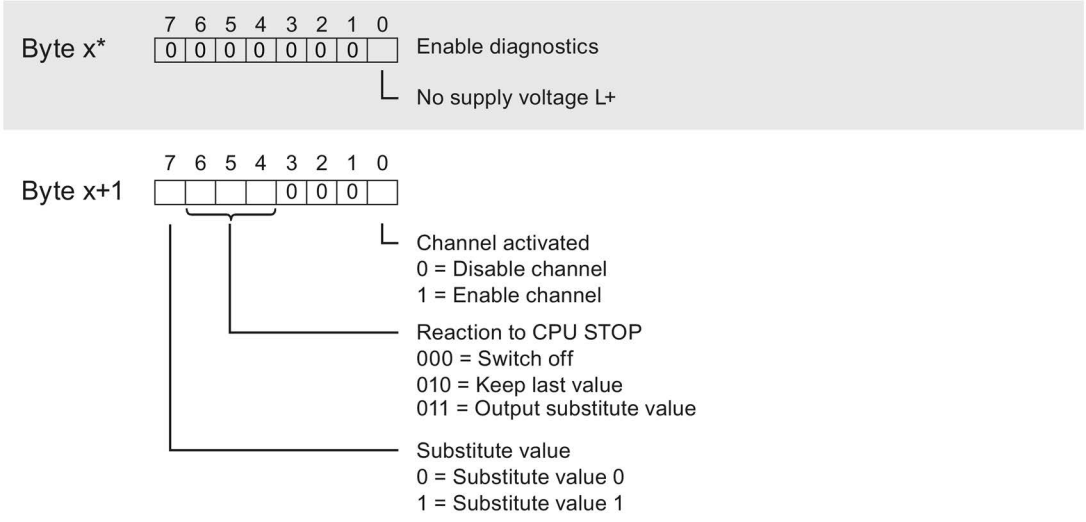

* x = 2 + (channel number × 2); channel number = 0 to 3

Figure A-3 Structure byte x to x+1 for the channels 0 to 3

Error transferring the data record

The module always checks all the values of the transferred data record. Only if all the values were transferred without errors does the module apply the values from the data record.

The WRREC instruction for writing data records returns corresponding error codes when errors occur in the STATUS parameter. (See also the description of the "STATUS" parameter in the STEP 7 online help).

The following table shows the module-specific error codes and their meaning for the parameter data record 128.

Error code in STATUS parameter (hexadecimal)				Meaning	Solution
Byte 0	Byte 1	Byte 2	Byte 3		
DF	80	B0	xx	Number of the data record unknown.	Enter a valid number for the data record.
DF	80	B1	xx	Length of the data record incorrect.	Enter a valid value for the data record length.
DF	80	B2	xx	Slot invalid or cannot be accessed.	• Check the station whether the module is plugged or drawn. • Check the assigned values for the parameters of the WRREC instruction.
DF	80	E0	xx	Wrong version or error in the header information.	Correct the version, length and number of parameter blocks.
DF	80	E1	06	Invalid coding for substitute value behavior.	Check the parameters of the module.

SIEMENS

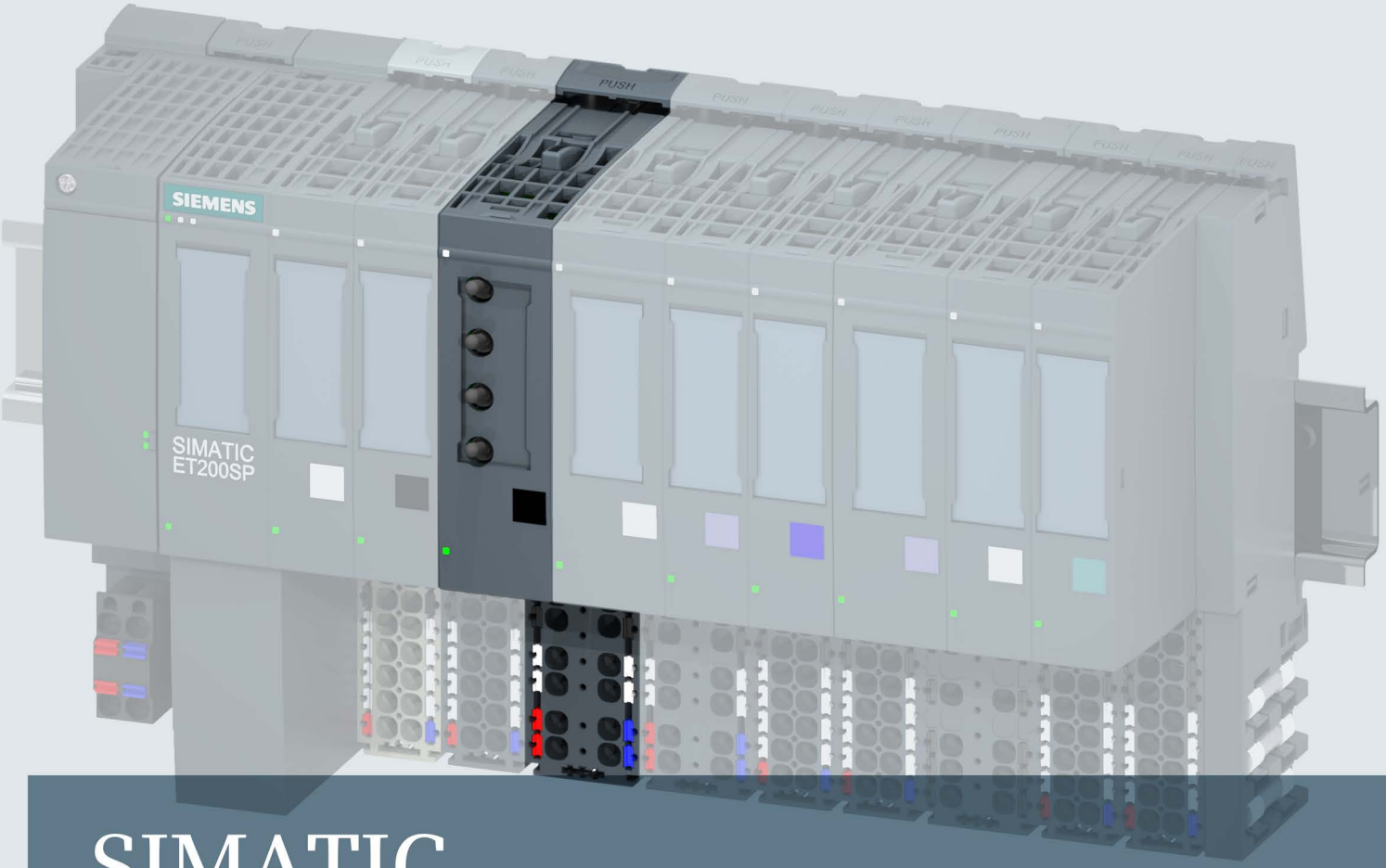

SIMATIC

ET 200SP

Digital output module RQ 4x120VDC-230VAC/5A NO MA ST (6ES7132-6MD00-0BB1)

Manual

Edition 12/2015

Answers for industry.

SIEMENS

SIMATIC

ET 200SP
Digital output module
RQ 4x120VDC-230VAC/5A NO MA ST
(6ES7132-6MD00-0BB1)

Manual

Preface

Documentation guide 1

Product overview 2

Wiring 3

Parameters/address space 4

Interrupts/diagnostics alarms 5

Technical specifications 6

Parameter data record A

12/2015

A5E36107692-AA

Legal information

Warning notice system

This manual contains notices you have to observe in order to ensure your personal safety, as well as to prevent damage to property. The notices referring to your personal safety are highlighted in the manual by a safety alert symbol, notices referring only to property damage have no safety alert symbol. These notices shown below are graded according to the degree of danger.

⚠ DANGER

indicates that death or severe personal injury **will** result if proper precautions are not taken.

⚠ WARNING

indicates that death or severe personal injury **may** result if proper precautions are not taken.

⚠ CAUTION

indicates that minor personal injury can result if proper precautions are not taken.

NOTICE

indicates that property damage can result if proper precautions are not taken.

If more than one degree of danger is present, the warning notice representing the highest degree of danger will be used. A notice warning of injury to persons with a safety alert symbol may also include a warning relating to property damage.

Qualified Personnel

The product/system described in this documentation may be operated only by **personnel qualified** for the specific task in accordance with the relevant documentation, in particular its warning notices and safety instructions. Qualified personnel are those who, based on their training and experience, are capable of identifying risks and avoiding potential hazards when working with these products/systems.

Proper use of Siemens products

Note the following:

⚠ WARNING

Siemens products may only be used for the applications described in the catalog and in the relevant technical documentation. If products and components from other manufacturers are used, these must be recommended or approved by Siemens. Proper transport, storage, installation, assembly, commissioning, operation and maintenance are required to ensure that the products operate safely and without any problems. The permissible ambient conditions must be complied with. The information in the relevant documentation must be observed.

Trademarks

All names identified by ® are registered trademarks of Siemens AG. The remaining trademarks in this publication may be trademarks whose use by third parties for their own purposes could violate the rights of the owner.

Disclaimer of Liability

We have reviewed the contents of this publication to ensure consistency with the hardware and software described. Since variance cannot be precluded entirely, we cannot guarantee full consistency. However, the information in this publication is reviewed regularly and any necessary corrections are included in subsequent editions.

Siemens AG
Division Digital Factory
Postfach 48 48
90026 NÜRNBERG
GERMANY

A5E36107692-AA
℗ 12/2015 Subject to change

Copyright © Siemens AG 2015.
All rights reserved

Preface

Purpose of the documentation

This manual supplements the ET 200SP distributed I/O system (http://support.automation.siemens.com/WW/view/en/58649293) system manual.

Functions that generally relate to the system are described in this system manual.

The information provided in this manual and in the system/function manuals supports you in commissioning the system.

Conventions

CPU: When the term "CPU" is used in this manual, it applies to the CPUs of the S7-1500 automation system as well as to the CPUs/interface modules of the ET 200SP distributed I/O system.

STEP 7: In this documentation, "STEP 7" is used as a synonym for all versions of the configuration and programming software "STEP 7 (TIA Portal)".

Please also observe notes marked as follows:

Note

A note contains important information on the product described in the documentation, on the handling of the product or on the section of the documentation to which particular attention should be paid.

Security information

Siemens provides products and solutions with industrial security functions that support the secure operation of plants, solutions, machines, equipment and/or networks. They are important components in a holistic industrial security concept. With this in mind, Siemens' products and solutions undergo continuous development. Siemens recommends strongly that you regularly check for product updates.

For the secure operation of Siemens products and solutions, it is necessary to take suitable preventive action (e.g. cell protection concept) and integrate each component into a holistic, state-of-the-art industrial security concept. Third-party products that may be in use should also be considered. You can find more information about industrial security on the Internet (http://www.siemens.com/industrialsecurity).

To stay informed about product updates as they occur, sign up for a product-specific newsletter. You can find more information on the Internet (http://support.automation.siemens.com).

Table of contents

Preface 4
1 Documentation guide 6
2 Product overview 9
2.1 Properties 9
3 Wiring 11
3.1 Wiring and block diagram 11
4 Parameters/address space 15
4.1 Parameters 15
4.2 Explanation of the parameters 16
4.3 Address space 17
5 Interrupts/diagnostics alarms 19
5.1 Status and error display 19
5.2 Interrupts 21
5.3 Diagnostics alarms 21
6 Technical specifications 22
6.1 Technical specifications 22
6.2 Switching cycles 26
A Parameter data record 28
A.1 Parameter assignment and structure of the parameter data record 28

Documentation guide

1

The documentation for the SIMATIC ET 200SP distributed I/O system is arranged into three areas.
This arrangement enables you to access the specific content you require.

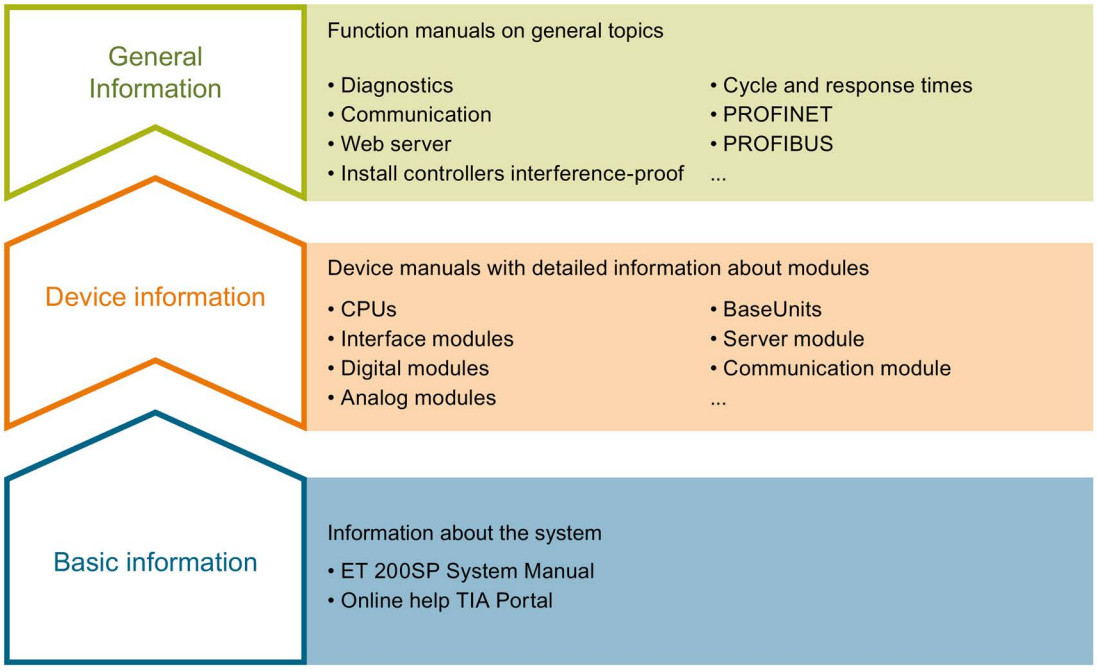

Basic information

The system manual describes in detail the configuration, installation, wiring and commissioning of the SIMATIC ET 200SP. distributed I/O system. The STEP 7 online help supports you in the configuration and programming.

Device information

Product manuals contain a compact description of the module-specific information, such as properties, terminal diagrams, characteristics and technical specifications.

General information

The function manuals contain detailed descriptions on general topics regarding the SIMATIC ET 200SP distributed I/O system, e.g. diagnostics, communication, Web server, designing interference-free controllers.

You can download the documentation free of charge from the Internet (http://w3.siemens.com/mcms/industrial-automation-systems-simatic/en/manual-overview/tech-doc-et200/Pages/Default.aspx).

Changes and supplements to the manuals are documented in a Product Information.

You can download the product information free of charge from the Internet (https://support.industry.siemens.com/cs/us/en/view/73021864).

Manual Collection ET 200SP

The Manual Collection contains the complete documentation on the SIMATIC ET 200SP distributed I/O system gathered together in one file.

You can find the Manual Collection on the Internet (http://support.automation.siemens.com/WW/view/en/84133942).

"mySupport"

With "mySupport", your personal workspace, you make the most of your Industry Online Support.

In "mySupport" you can store filters, favorites and tags, request CAx data and put together your personal library in the Documentation area. Furthermore, your data is automatically filled into support requests and you always have an overview of your current requests.

You need to register once to use the full functionality of "mySupport".

You can find "mySupport" in the Internet (https://support.industry.siemens.com/My/ww/en).

"mySupport" - Documentation

In the Documentation area of "mySupport", you have the possibility to combine complete manuals or parts of them to make your own manual.
You can export the manual in PDF format or in an editable format.

You can find "mySupport" - Documentation in the Internet (http://support.industry.siemens.com/My/ww/en/documentation).

"mySupport" - CAx Data

In the CAx Data area of "mySupport", you can have access the latest product data for your CAx or CAe system.

You configure your own download package with a few clicks.

In doing so you can select:

- Product images, 2D dimension drawings, 3D models, internal circuit diagrams, EPLAN macro files
- Manuals, characteristics, operating manuals, certificates
- Product master data

You can find "mySupport" - CAx Data in the Internet (http://support.industry.siemens.com/my/ww/en/CAxOnline).

Application examples

The application examples support you with various tools and examples for solving your automation tasks. Solutions are shown in interplay with multiple components in the system - separated from the focus in individual products.

You can find the application examples on the Internet (https://support.industry.siemens.com/sc/ww/en/sc/2054).

TIA Selection Tool

With the TIA Selection Tool, you can select, configure and order devices for Totally Integrated Automation (TIA).
This tool is the successor of the SIMATIC Selection Tool and combines the known configurators for automation technology into one tool.
With the TIA Selection Tool, you can generate a complete order list from your product selection or product configuration.

You can find the TIA Selection Tool on the Internet (http://w3.siemens.com/mcms/topics/en/simatic/tia-selection-tool).

Product overview

2

2.1 Properties

Article number

6ES7132-6MD00-0BB1

View of the module

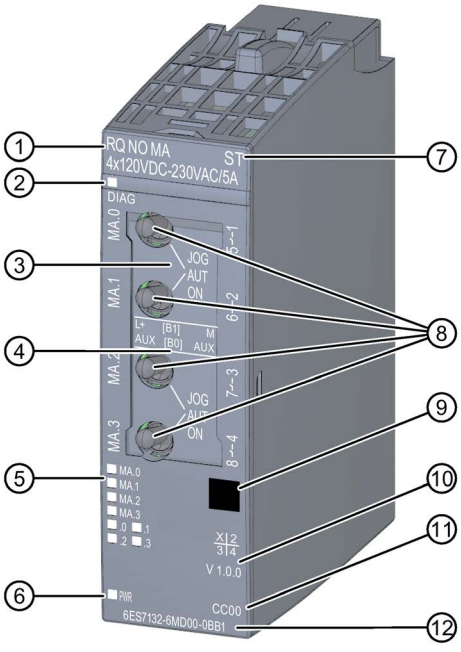

① Module type and name

② LED for diagnostics

③ JOG (switch position up: jog)
AUT (switch position "middle": Automatic mode
ON (switch position down: Manual mode (MANUAL ON))

④ Wiring diagram

⑤ LEDs for channel status and manual mode

⑥ LED for supply voltage

⑦ Function class

⑧ Toggle/jog switch for manually controlling the relay

⑨ Color coding module type

⑩ Function and firmware version

⑪ Color code for selecting the color identification labels

⑫ Article number

Image 2-1 View of the module RQ 4×120VDC-230VAC/5A NO MA ST

Properties

The module has the following technical properties:

- Digital output module with 4 floating relay outputs
- Supply voltage L+
- Output current 5 A (per output)
- Normally open contact (NO: normally open)
- Configurable diagnostics (per module)
- Configurable substitute values (per channel)
- 4 toggle/jog switches (jog, automatic or manual mode (MANUAL ON)) for controlling the relay
- Suitable for solenoid valves, DC contactors, and indicator lights

The module supports the following functions:

- Firmware update
- I&M identification data
- Configuration in RUN
- PROFIenergy
- Value status

You can configure the module with STEP 7 (TIA Portal) and with a GSD file.

Note

When load voltage is present, the relays of the RQ 4x120VDC-230VAC/5A NO MA ST can also be activated via a manual switch even when they are in a non-configured state.

When an output is set to manual control, the relay remains active during a firmware update.

Accessories

The following accessories must be ordered separately:

- Color identification labels
- Reference identification label
- Shield connector

See also

You can find additional information on the accessories in the system manual ET 200SP distributed I/O system (http://support.automation.siemens.com/WW/view/en/58649293).

Wiring 3

3.1 Wiring and block diagram

This section includes the block diagram of the RQ 4x120VDC-230VAC/5A NO MA ST module with the terminal assignments for a 2-wire and 3-wire connection.

You can find information on wiring the BaseUnit in the system manual ET 200SP distributed I/O system (http://support.automation.siemens.com/WW/view/en/58649293).

Note

You can use and combine the different wiring options for all channels.

Note

The relay contacts of the module can only switch identical voltage potential. The AUX terminals can only be used with an associated identical voltage or PE.

Note

The switch position of the toggle/jog switch is stored in the process image input (PII) and can be read there.

Wiring: 3-wire connection of actuators

The following figure shows the block diagram and an example of the terminal assignment of the digital output module RQ 4x120VDC-230VAC/5A NO MA ST on the BaseUnit BU type B0.

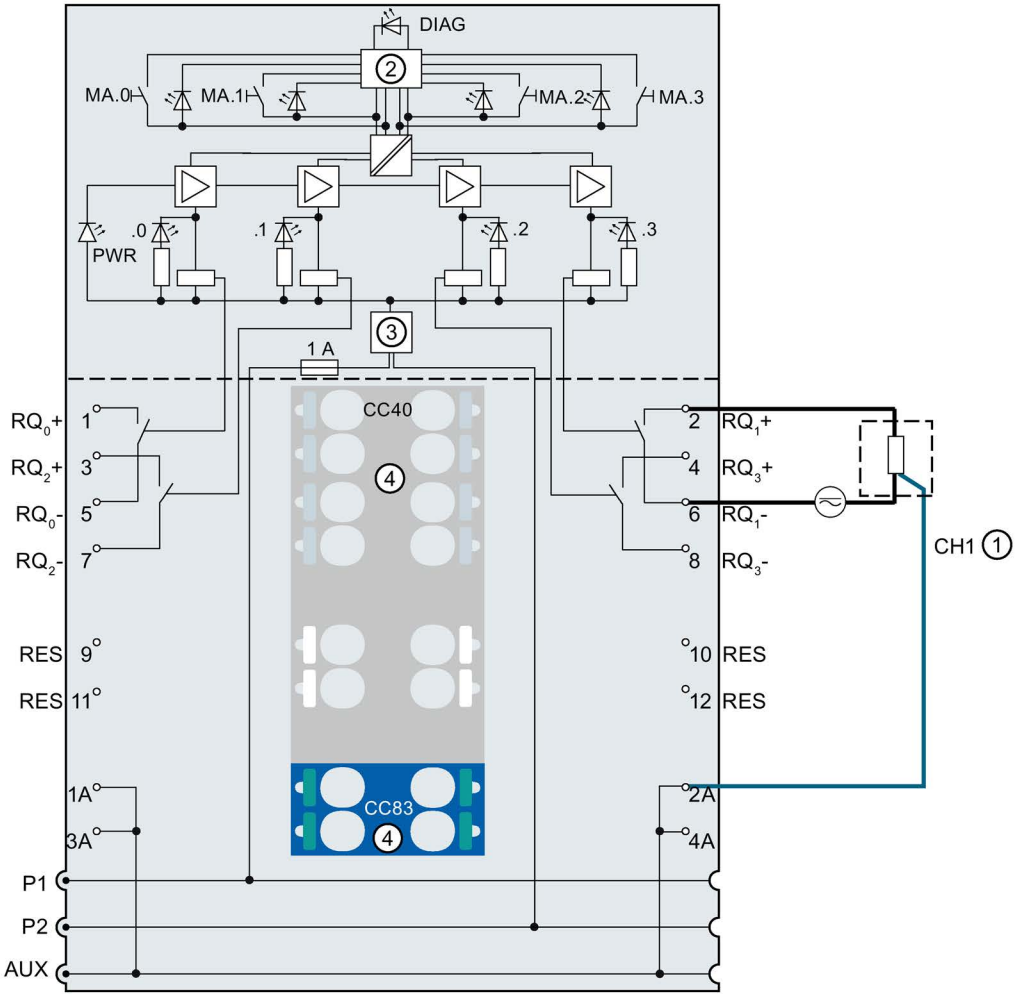

①	3-wire connection	RES	Reserve, must remain unused for future function extensions
②	Backplane bus interface	1A to 4A	AUX terminals (freely usable up to 230 V AC)
③	Polarity reversal protection	DIAG	Diagnostics LED (green, red)
④	Color-coded label with color codes CC40 and CC83 (optional)	MA .0 .. .3	LED MANUAL ON and automatic
RQ_n+, RQ_n-	Channel n	.0, .1, .2, .3	Channel status LED (green)
P1, P2, AUX	Internal self-assembling voltage buses Connection to left (dark-colored BaseUnit)	PWR	Power LED (green)

Image 3-1 Wiring and block diagram for 3-wire connection of actuators

Wiring: 2-wire connection of actuators

The following figure shows the block diagram and an example of the terminal assignment of the digital output module RQ 4x120VDC-230VAC/5A NO MA ST on the BaseUnit BU type B1.

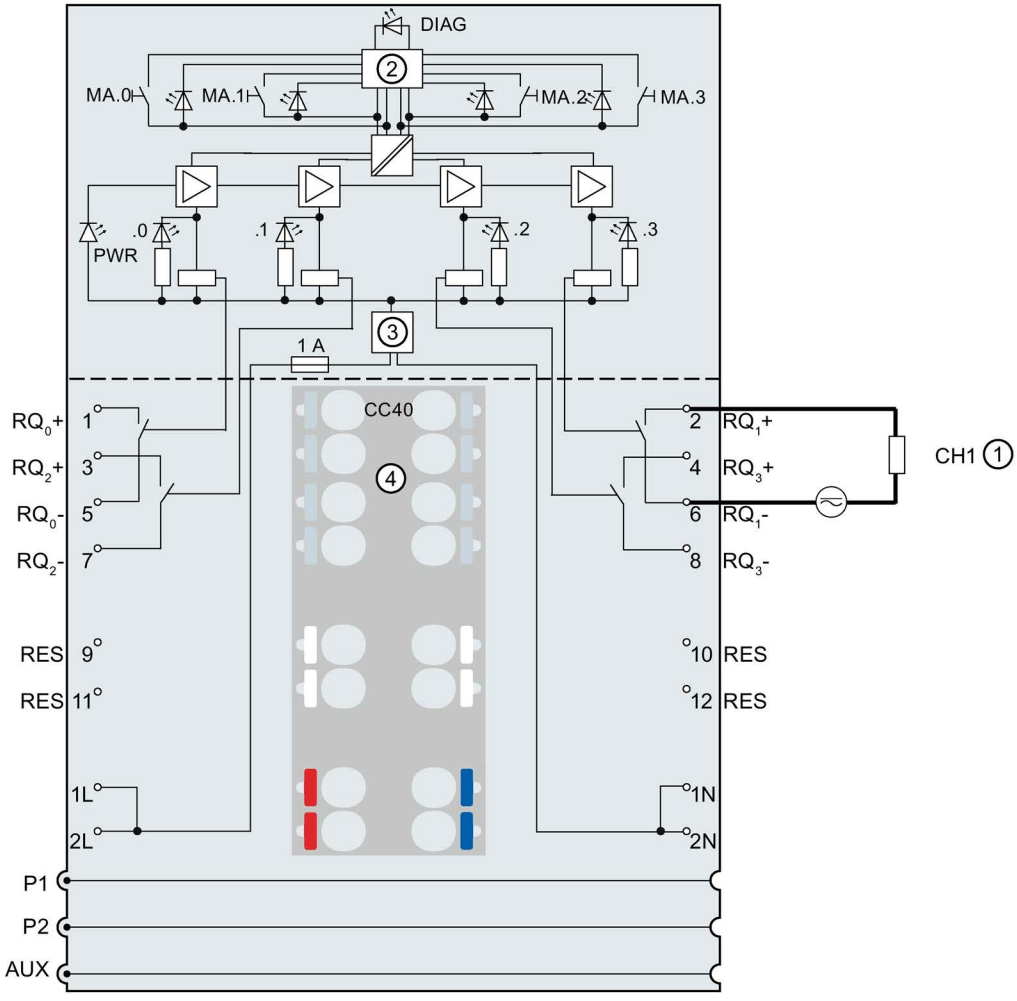

①	2-wire connection	1N, 2N	Neutral conductor supply voltage
②	Backplane bus interface	DIAG	Diagnostics LED (green, red)
③	Polarity reversal protection	MA .0 .. .3	LED MANUAL ON and automatic
④	Color-coded label with color code CC40 (optional)	.0, .1, .2, .3	Channel status LED (green)
RQ_n+, RQ_n-	Channel n	PWR	Power LED (green)
RES	Reserve, must remain unused for future function extensions	P1, P2, AUX	Internal self-assembling voltage buses Connection to left (dark-colored BaseUnit)
1L, 2L	Supply voltage 24 V DC		

Image 3-2 Wiring and block diagram for 2-wire connection of actuators

Toggle/jog switch for controlling the relay

You can switch the relay using the toggle/jog switch to jog, MANUAL ON (manual mode) or automatic mode for each channel. In manual mode, the state set by the output data is ignored.

The 4 toggle/jog switches are located on the front of the electronic module.

- JOG (switch position "up": job mode): Short-term manual operation (MANUAL ON), while jogged.
- AUT (switch position "middle" or "not activated": Automatic mode): Each channel is activated via the user program (normal operation).
- ON (switch position "down": Manual mode (MANUAL ON) permanently): Each channel is switched on ("1" signal) independent of the activation of the user program (and substitute values).

Parameters/address space 4

4.1 Parameters

Parameters for RQ 4x120VDC-230VAC/5A NO MA ST

The effective range of the configurable parameters depends on the type of configuration. The following configurations are possible:

- Central operation with an ET 200SP CPU
- Distributed operation on PROFINET IO in an ET 200SP system
- Distributed operation on PROFIBUS DP in an ET 200SP system

When assigning parameters in the user program, use the "WRREC" instruction to transfer the parameters to the module using the data records; refer to section Parameter assignment and structure of the parameter data record (Page 28).

The following parameter settings are possible:

Table 4- 1 Configurable parameters and their defaults (GSD file)

Parameter	Range of values	Default	Parameter reassign-ment in RUN	Effective range with configuration software, e.g. STEP 7 (TIA Portal)	
				GSD file PROFINET IO	GSD file PROFIBUS DP [1]
Diagnostics: No supply voltage L+	• Enable • Disable	Disable	Yes	Module	Module
Channel activated	• Enable • Disable	Enable	Yes	Channel	Channel
Reaction to CPU STOP	• Turn off • Keep last value • Output substitute value 1	Turn off	Yes	Channel	Module
Potential group	• Use potential group of the left module (module plugged into a dark-colored BaseUnit) • Enable new potential group (module plugged in-to light-colored BaseUnit)	Use potential group of the left module	No	Module	Module

[1] Due to the limited number of parameters at a maximum of 244 bytes per ET 200SP station with a PROFIBUS GSD configuration, the configuration options are restricted. If required, you can assign these parameters using data record 128 as described in the "GSD file PROFINET IO" column (see table above). The parameter length of the I/O module is 4 bytes.

4.2 Explanation of the parameters

Diagnostics: No supply voltage L+

Enabling of the diagnostics for no or insufficient supply voltage L+.

Channel activated

Determines whether a channel is activated or deactivated.

Reaction to CPU STOP

Determines the behavior of the module in the event of a CPU STOP.

Potential group

The load or supply voltage is fed module by module. The voltage buses P1, P2 and AUX are looped through the module from the left to the right neighboring module without tap.

See also

You can find additional information in the system manual ET 200SP distributed I/O system (http://support.automation.siemens.com/WW/view/en/58649293).

4.3 Address space

The module can be configured differently in STEP 7; see following table. Depending on the configuration, additional/different addresses are assigned in the process image output/input.

Configuration options of RQ 4×120VDC-230VAC/5A NO MA ST

You can configure the module with STEP 7 (TIA Portal) or with a GSD file. If you configure the module by means of a GSD file, the configurations are available under various short designations/module names; see the table below. The following configurations are possible:

Table 4- 2 Configuration options with GSD file

Configuration	Short designation/module name in the GSD file	Configuration software, e.g. with STEP 7 (TIA Portal)		
		Integrated in the hardware catalog STEP 7, as of V13, SP1	GSD file PROFINET IO	GSD file PROFIBUS DP
1 x 4-channel without value status	RQ 4×120VDC-230VAC/5A NO MA ST	X	X	X
1 x 4-channel with value status	RQ 4×120VDC-230VAC/5A NO MA ST, QI	X	X	-

Evaluating the value status

An additional byte is allocated in the input address space if you enable the value status for the digital module. Bits 0 to 3 in this byte are assigned to a channel. They provide information about the validity of the digital value.

Bit = 1: No fault is present on the channel.

Bit = 0: Channel is deactivated or there is a fault on the module.

If a fault occurs on a channel with this module, the value status for all channels is 0.

Address space

The following figure shows the assignment of the address space for the RQ 4×120VDC-230VAC/5A NO MA ST with value status (Quality Information (QI)). The addresses for the value status are only available if the value status is enabled.

Assignment in the process image output (PIQ)

	7	6	5	4	3	2	1	0	Output value
QB x	0	0	0	0					Channels 0 to 3

Assignment in the process image input (PII)

	7	6	5	4	3	2	1	0	Toggle/jog switch
IB x	0	0	0	0					Channels 0 to 3 (manual ON)

	7	6	5	4	3	2	1	0	Value status (QI)
IB x+1	0	0	0	0					Channel 0 to 3 (value status QI0 to QI3)

Image 4-1 Address space of RQ 4×120VDC-230VAC/5A NO MA ST with value status

Interrupts/diagnostics alarms

5

5.1 Status and error display

LED display

The following figure shows you the LED display of the RQ 4x120VDC-230VAC/5A NO MA ST.

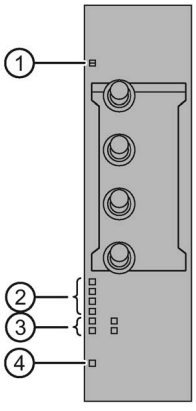

① DIAG (green/red)
② MA .0 .. .3 (yellow)
③ Channel status (green)
④ PWR (green)

Image 5-1 LED display

Meaning of the LEDs

The following tables show the meaning of the status and error displays. Corrective measures for diagnostics alarms can be found in section Diagnostics alarms (Page 21).

DIAG LED

Table 5- 1 Error display of the DIAG LED

DIAG LED	Meaning
Off	Backplane bus supply of the ET 200SP not OK
Flashes	Module not ready for operation (no parameters assigned)
On	Module parameters assigned and no module diagnostics
Flashes	Module parameters assigned and module diagnostics

LED MA 1..4

Table 5- 2 Status display of the LED MA .0 .. .3 (manual mode)

Channel status LED	Meaning
Off	Automatic
On	Manual ON (toggle/jog switch) = Manual mode Output enabled at specific channel

Channel status LED

Table 5- 3 Status display of the channel status LED

Channel status LED	Meaning
Off	Channel deactivated or activated and process signal = 0
On	Channel activated and process signal = 1

PWR LED

Table 5- 4 Status display of the PWR LED

PWR LED	Meaning
□ Off	Missing supply voltage L+
■ On	Supply voltage L+ present

5.2 Interrupts

The digital output module RQ 4×120VDC-230VAC/5A NO MA ST supports diagnostics interrupts.

Diagnostics interrupts

The module generates a diagnostic interrupt at the following events:

- Parameter assignment error
- Supply voltage missing
- Channel temporarily unavailable

5.3 Diagnostics alarms

A diagnostics alarm is generated and the DIAG-LED flashes on the module for each diagnostics event. You can read out the diagnostics alarms, for example, in the diagnostics buffer of the CPU. You can evaluate the error codes with the user program.

Table 5- 5 Diagnostics alarms, their meaning and corrective measures

Diagnostics alarm	Error code	Meaning	Solution
Parameter assignment error	10_H	• The module cannot evaluate parameters for the channel. • Incorrect parameter assignment.	Correct the parameter assignment
Supply voltage missing	11_H	Missing or insufficient supply voltage L+	• Check supply voltage L+ on the BaseUnit • Check BaseUnit type
Channel temporarily unavailable	$1F_H$	Firmware update is currently in progress or has been canceled. The module does not output any process or substitute values in this state.	• Wait for firmware update • Restart the firmware update

Technical specifications

6

6.1 Technical specifications

Technical specifications of the RQ 4×120VDC-230VAC/5A NO MA ST

	6ES7132-6MD00-0BB1
General information	
Product type designation	ET 200SP, RQ 4x120VDC-230VAC/5A NO MA ST
Firmware version	V1.0
• FW update possible	Yes
Usable BaseUnits	BU type B0, B1
Color code for module-specific color identification label	CC00
Product function	
I&M data	Yes; I&M0 to I&M3
Engineering with	
STEP 7 TIA Portal can be configured/integrated as of version	V13 SP1
STEP 7 can be configured/integrated as of version	V5.5 SP3 / -
PROFIBUS as of GSD version/GSD revision	GSD revision 5
PROFINET as of GSD version/GSD revision	GSDML V2.3
Operating mode	
DQ	Yes
DQ with energy-saving function	No
PWM	No
Oversampling	No
MSO	No
Supply voltage	
Rated value (DC)	24 V
Valid range, low limit (DC)	19.2 V
Valid range, high limit (DC)	28.8 V
Polarity reversal protection	Yes
Input current	
Current consumption, max.	100 mA; no load
Power loss	
Power loss, typ.	1.5 W

	6ES7132-6MD00-0BB1
Address area	
Address space per module	
Address space per module, max.	1 byte; + 1 byte for QI information
Inputs	1 byte; with QI
Outputs	1 byte
Digital outputs	
Number of outputs	4
Short-circuit protection	No
Switching frequency	
With resistive load, max.	2 Hz
With inductive load, max.	0.5 Hz
With lamp load, max.	2 Hz
Total current of the outputs	
Current per channel, max.	5 A
Current per module, max.	20 A
Total current of the outputs (per module)	
Horizontal installation	
• Up to 50 °C, max.	20 A
• Up to 60 °C, max.	16 A
Vertical installation	
• Up to 40 °C, max.	20 A
• Up to 50 °C, max.	16 A
Relay outputs	
Number of relay outputs	4
Rated input voltage of relay coil L+ (DC)	24 V
Current consumption of relays (coil current of all relays), max.	40 mA
External fuse for relay outputs	Yes, with 6 A
Number of switching cycles, max.	7000000; see additional description in the manual
Switching capacity of the contacts	
• With inductive load, max.	2 A; see additional description in the manual
• With resistive load, max.	5 A; see additional description in the manual
• Thermal continuous current, max.	5 A
• Switched current, min.	100 mA; 5 V DC
• Rated switching voltage (DC)	24 V DC to 120 V DC
• Rated switching voltage (AC)	24 V AC to 230 V AC
Cable length	
Shielded, max.	1000 m
Unshielded, max.	200 m

	6ES7132-6MD00-0BB1
Isochronous mode	
Isochronous mode (application synchronized up to terminal)	No
Interrupts/diagnostics/status information	
Substitute values can be applied	Yes
Interrupts	
Diagnostics interrupt	Yes
Diagnostics alarms	
Diagnostics	Yes
Monitoring of the supply voltage	Yes
Wire break	No
Short-circuit	No
Group error	Yes
Diagnostics indicator LED	
Monitoring of the supply voltage (PWR LED)	Yes; green PWR LED
Channel status display	Yes; green LED
For channel diagnostics	No
For module diagnostics	Yes; green/red DIAG LED
Electrical isolation	
Electrical isolation of channels	
Between the channels	Yes
Between the channels and backplane bus	Yes
Between the channels and voltage supply of the electronics	Yes
Permitted potential difference	
Between channels and backplane bus/supply voltage	240 V AC
Insulation	
Insulation tested with	2 500 V DC (type test)
Tested with	
Between channels and backplane bus/supply voltage	2500 V DC
Between backplane bus and supply voltage	707 V DC (type test)
Dimensions	
Width	20 mm
Weights	
Weight, approx.	45 g

Note

External fuse for relay outputs

The outputs have to be protected by an external fuse.

When installed in a danger area according to the National Electric Code (NEC), the fuse must only be removed with the correct tool when the module is not in an explosion-proof zone.

Derating trend

The following figure show the load current derating with horizontal and vertical mounting positions.

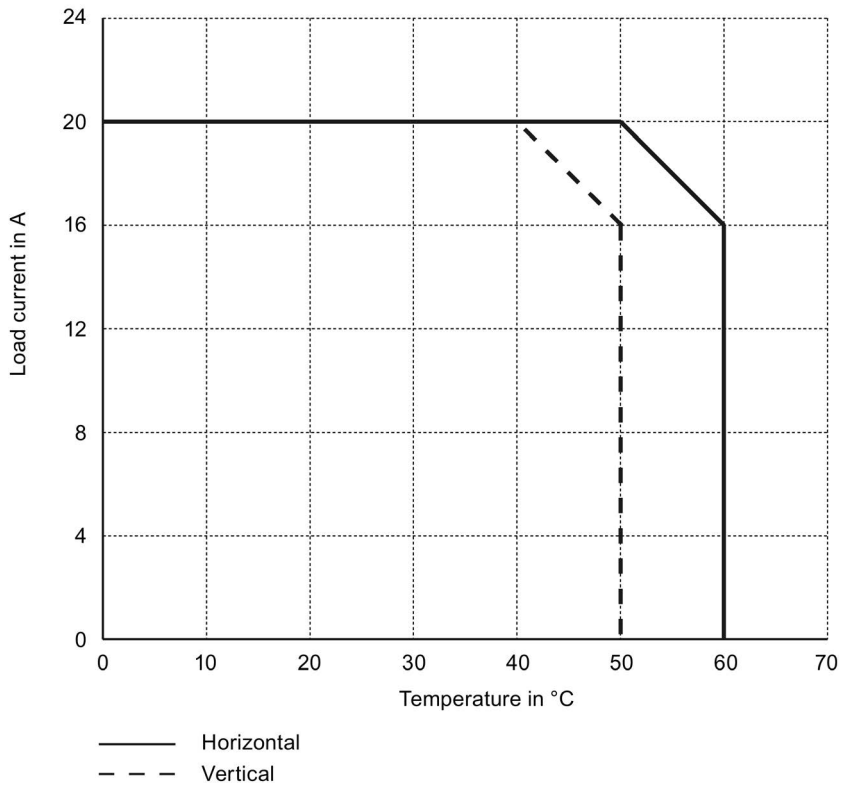

Image 6-1 Load current for mounting position

Dimension drawing

See manual ET 200SP BaseUnits
(http://support.automation.siemens.com/WW/view/en/59753521)

6.2 Switching cycles

Switching capacity and lifetime of the contacts

With an external protective circuit, the contacts will last longer than specified in the table. This table shows the switching capacity and lifetime of the relay contacts:

Table 6- 1 Switching capacity and lifetime of the relay contacts

Resistive load	Voltage	Current	Switching cycles (typical)
For resistive load	24 V DC	5.0 A	0.1 million
		4.0 A	0.2 million
		2.0 A	0.5 million
		1.0 A	1.6 million
		0.5 A	4 million
		0.1 A	7 million
	60 VDC	0.5 A	1.6 million
	120 VDC	0.2 A	1.6 million
	48 VAC	2.0 A	1.6 million
	60 VAC	2.0 A	1.2 million
	120 VAC	5.0 A	0.1 million
		3.0 A	0.2 million
		2.0 A	0.4 million
		1.0 A	0.8 million
		0.5 A	1.5 million
	230 VAC	5.0 A	0.1 million
		3.0 A	0.2 million
		2.0 A	0.4 million
		1.0 A	0.8 million
		0.5 A	1.5 million
For inductive load in accordance with IEC 947-5-1 DC 13/ AC15	24 V DC	2.0 A	0.1 million
		1.0 A	0.2 million
		0.5 A	0.5 million
	60 VDC	0.5 A	0.2 million
	120 VDC	0.2 A	0.5 million
	48 VAC	1.0 A	0.7 million
	60 VAC	1.0 A	0.5 million
	120 VAC	2.0 A	0.1 million
		1.0 A	0.3 million
		0.5 A	1 million
		0.1 A	2 million

Resistive load	Voltage	Current	Switching cycles (typical)
For inductive load in accordance with IEC 947-5-1 DC 13/ AC15	230 VAC	2.0 A	0.1 million
		1.0 A	0.3 million
		0.5 A	1 million

Note

Tests of mechanical environmental conditions

Shock tested according to IEC 60068-2-27. Shock intensity: 100 m/s^2 peak value, 11 ms duration

Parameter data record

A

A.1 Parameter assignment and structure of the parameter data record

The data record of the module has an identical structure, regardless of whether you configure the module with PROFIBUS DP or PROFINET IO. With data record 128, you can reconfigure the module in your user program regardless of your programming. This means that you can use all the functions of the module even if you configured it via PROFIBUS-GSD.

Parameter assignment in the user program

You can change the parameters of the module in RUN.

Changing parameters in RUN

The "WRREC" instruction is used to transfer the parameters to the module using data record 128. The parameters set in STEP 7 are not changed in the CPU, which means that the parameters set in STEP 7 will be valid again after a restart.

Output parameter STATUS

If errors occur when transferring parameters with the "WRREC" instruction, the module continues operation with the previous parameter assignment. The STATUS output parameter contains a corresponding error code.

You will find a description of the "WRREC" instruction and the error codes in the STEP 7 online help.

Structure of data record 128

Note

Channel 0 includes the diagnostics enable for the entire module.

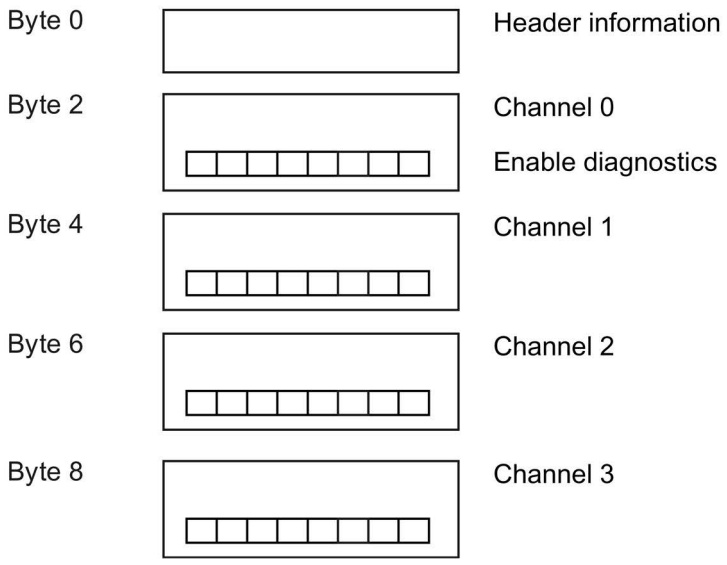

Image A-1 Structure of data record 128

Header information

The figure below shows the structure of the header information.

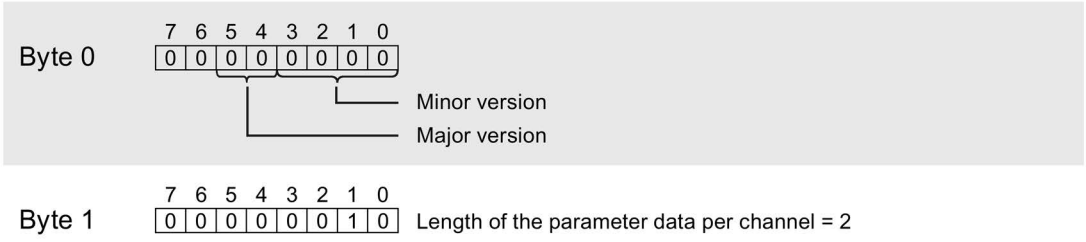

Image A-2 Header information

Parameters

The figure below shows the structure of the parameters in data record 128.

You enable a parameter by setting the corresponding bit to "1".

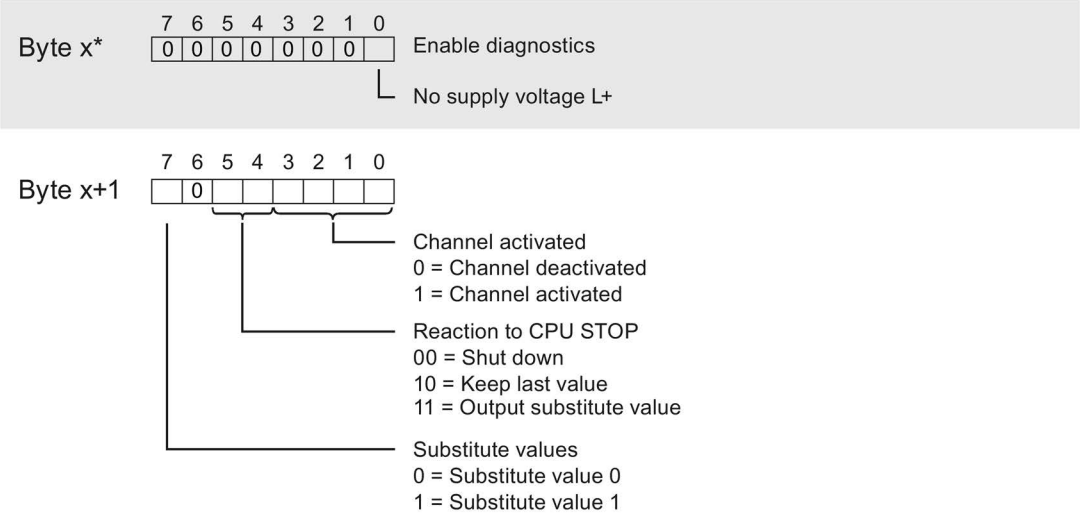

* x = 2 + (channel number × 2); channel number = 0 to 3

Image A-3 Structure byte x to x+1 for the channels 0 to 3

Error transmitting the data record

The module always checks all values of the data record to be sent. The module applies the values from the data record only when all values have been transmitted without errors.

The WRREC instruction for writing data records returns the appropriate error code if there are errors in the STATUS parameter.

The following table shows the module-specific error codes and their meaning for parameter data record 128.

Error code in the STATUS parameter (hexadecimal)				Meaning	Solution
Byte 0	Byte 1	Byte 2	Byte 3		
DF	80	B0	xx	Number of the data record unknown	Enter valid number for data record.
DF	80	B1	xx	Length of the data record incorrect	Enter valid value for data record length.
DF	80	B2	xx	Slot invalid or unavailable	• Check the station to determine whether the module is plugged in or pulled. • Check assigned values for the parameters of the WREC instruction.
DF	80	E0	xx	Wrong version or error in the header information	Correct the version, length and number of parameter blocks.
DF	80	E1	xx	Parameter error	Check the parameters of the module

SIEMENS

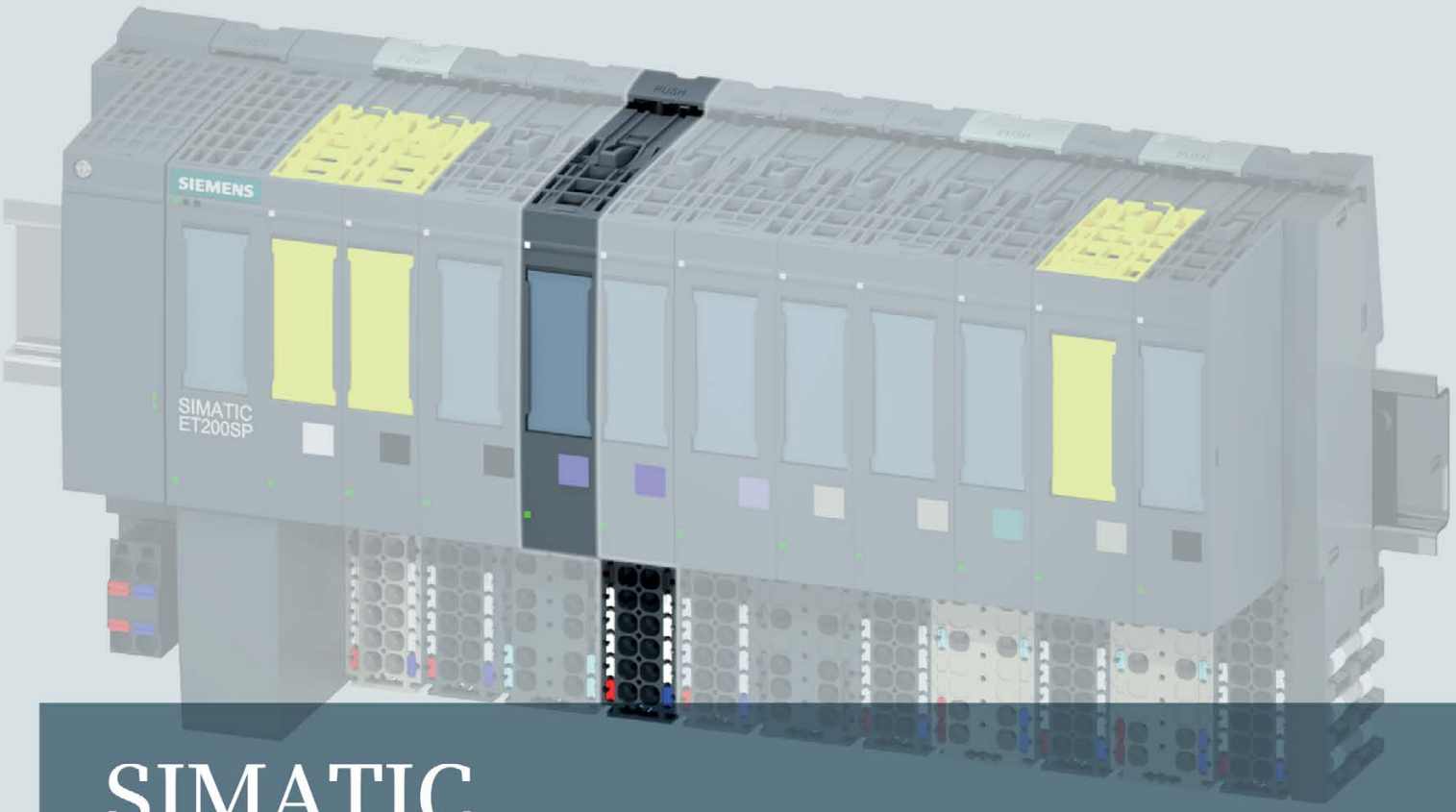

SIMATIC

ET 200SP

Analog input module AI 8xU BA (6ES7134-6FF00-0AA1)

Manual

Edition 03/2015

Answers for industry.

SIEMENS

SIMATIC

ET 200SP
Analog input module AI 8xU BA
(6ES7134-6FF00-0AA1)

Manual

Preface

Documentation guide 1

Product overview 2

Wiring up 3

Parameters/address space 4

Interrupts/diagnostics alarms 5

Technical specifications 6

Parameter data record A

Representation of analog values B

03/2015

A5E34941660-AA

Legal information

Warning notice system

This manual contains notices you have to observe in order to ensure your personal safety, as well as to prevent damage to property. The notices referring to your personal safety are highlighted in the manual by a safety alert symbol, notices referring only to property damage have no safety alert symbol. These notices shown below are graded according to the degree of danger.

⚠ DANGER

indicates that death or severe personal injury **will** result if proper precautions are not taken.

⚠ WARNING

indicates that death or severe personal injury **may** result if proper precautions are not taken.

⚠ CAUTION

indicates that minor personal injury can result if proper precautions are not taken.

NOTICE

indicates that property damage can result if proper precautions are not taken.

If more than one degree of danger is present, the warning notice representing the highest degree of danger will be used. A notice warning of injury to persons with a safety alert symbol may also include a warning relating to property damage.

Qualified Personnel

The product/system described in this documentation may be operated only by **personnel qualified** for the specific task in accordance with the relevant documentation, in particular its warning notices and safety instructions. Qualified personnel are those who, based on their training and experience, are capable of identifying risks and avoiding potential hazards when working with these products/systems.

Proper use of Siemens products

Note the following:

⚠ WARNING

Siemens products may only be used for the applications described in the catalog and in the relevant technical documentation. If products and components from other manufacturers are used, these must be recommended or approved by Siemens. Proper transport, storage, installation, assembly, commissioning, operation and maintenance are required to ensure that the products operate safely and without any problems. The permissible ambient conditions must be complied with. The information in the relevant documentation must be observed.

Trademarks

All names identified by ® are registered trademarks of Siemens AG. The remaining trademarks in this publication may be trademarks whose use by third parties for their own purposes could violate the rights of the owner.

Disclaimer of Liability

We have reviewed the contents of this publication to ensure consistency with the hardware and software described. Since variance cannot be precluded entirely, we cannot guarantee full consistency. However, the information in this publication is reviewed regularly and any necessary corrections are included in subsequent editions.

Siemens AG
Division Digital Factory
Postfach 48 48
90026 NÜRNBERG
GERMANY

A5E34941660-AA
℗ 03/2015 Subject to change

Copyright © Siemens AG 2015.
All rights reserved

Preface

Purpose of the documentation

This device manual complements the system manual ET 200SP distributed I/O system (http://support.automation.siemens.com/WW/view/en/58649293).

Functions that generally relate to the system are described in this system manual.

The information provided in this manual and in the system/function manuals supports you in commissioning the system.

Conventions

CPU: When the term "CPU" is used in this manual, it applies to the CPUs of the S7-1500 automation system as well as to the CPUs/interface modules of the ET 200SP distributed I/O system.

STEP 7: In this documentation, "STEP 7" is used as a synonym for all versions of the configuration and programming software "STEP 7 (TIA Portal)".

Please also observe notes marked as follows:

Note

A note contains important information on the product described in the documentation, on the handling of the product or on the section of the documentation to which particular attention should be paid.

Security information

Siemens provides products and solutions with industrial security functions that support the secure operation of plants, solutions, machines, equipment and/or networks. They are important components in a holistic industrial security concept. With this in mind, Siemens' products and solutions undergo continuous development. Siemens recommends strongly that you regularly check for product updates.

For the secure operation of Siemens products and solutions, it is necessary to take suitable preventive action (e.g. cell protection concept) and integrate each component into a holistic, state-of-the-art industrial security concept. Third-party products that may be in use should also be considered. You can find more information about industrial security on the Internet (http://www.siemens.com/industrialsecurity).

To stay informed about product updates as they occur, sign up for a product-specific newsletter. You can find more information on the Internet (http://support.automation.siemens.com).

Table of contents

Preface 4

1 Documentation guide 6

2 Product overview 8

2.1 Properties 8

3 Wiring up 10

3.1 Wiring and block diagram 10

4 Parameters/address space 12

4.1 Measuring types and ranges 12

4.2 Parameters 13

4.3 Explanation of the parameters 15

4.4 Address space 17

5 Interrupts/diagnostics alarms 18

5.1 Status and error displays 18

5.2 Interrupts 20

5.3 Diagnostics alarms 20

6 Technical specifications 21

6.1 Technical specifications 21

A Parameter data record 24

A.1 Dependencies when configuring with GSD file 24

A.2 Parameter assignment and structure of the parameter data record 25

B Representation of analog values 29

B.1 Representation of input ranges 30

B.2 Representation of analog values in voltage measuring ranges 31

Documentation guide

1

The documentation for the SIMATIC ET 200SP distributed I/O system is arranged into three areas.
This arrangement enables you to access the specific content you require.

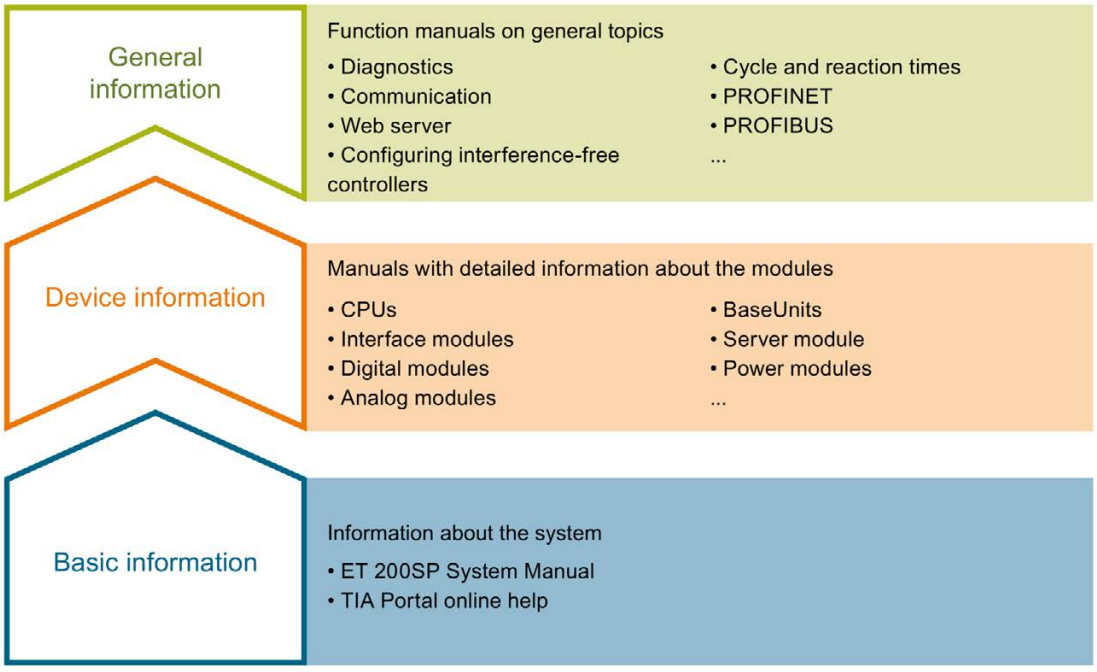

Basic information

The system manual describes in detail the configuration, installation, wiring and commissioning of the SIMATIC ET 200SP. distributed I/O system. The STEP 7 online help supports you in the configuration and programming.

Device information

Product manuals contain a compact description of the module-specific information, such as properties, terminal diagrams, characteristics and technical specifications.

General information

The function manuals contain detailed descriptions on general topics regarding the SIMATIC ET 200SP distributed I/O system, e.g. diagnostics, communication, Web server, designing interference-free controllers.

You can download the documentation free of charge from the Internet (http://w3.siemens.com/mcms/industrial-automation-systems-simatic/en/manual-overview/tech-doc-et200/Pages/Default.aspx).

Changes and supplements to the manuals are documented in a Product Information.

Manual Collection ET 200SP

The Manual Collection contains the complete documentation on the SIMATIC ET 200SP distributed I/O system gathered together in one file.

You can find the Manual Collection on the Internet (http://support.automation.siemens.com/WW/view/en/84133942).

My Documentation Manager

The My Documentation Manager is used to combine entire manuals or only parts of these to your own manual.
You can export the manual as PDF file or in a format that can be edited later.

You can find the My Documentation Manager on the Internet (http://support.industry.siemens.com/My/ww/en/documentation).

Application examples

Applications examples support you with various tools and examples for solving your automation tasks. Solutions are shown in interplay with multiple components in the system - separated from the focus in individual products.

You can find application examples on the Internet (http://support.industry.siemens.com/cs/ww/en/ps/ae).

CAx Download Manager

The CAx Download Manager is used to access the current product data for your CAx or CAe systems.

You configure your own download package with a few clicks.

In doing so you can select:

- Product images, 2D dimension drawings, 3D models, internal circuit diagrams, EPLAN macro files
- Manuals, characteristics, operating manuals, certificates
- Product master data

You can find the CAx Download Manager on the Internet (http://support.industry.siemens.com/my/ww/en/CAxOnline).

TIA Selection Tool

With the TIA Selection Tool, you can select, configure and order devices for Totally Integrated Automation (TIA).
This tool is the successor of the SIMATIC Selection Tool and combines the known configurators for automation technology into one tool.
With the TIA Selection Tool, you can generate a complete order list from your product selection or product configuration.

You can find the TIA Selection Tool on the Internet (http://w3.siemens.com/mcms/topics/en/simatic/tia-selection-tool).

Product overview

2

2.1 Properties

Article number

6ES7134-6FF00-0AA1

View of the module

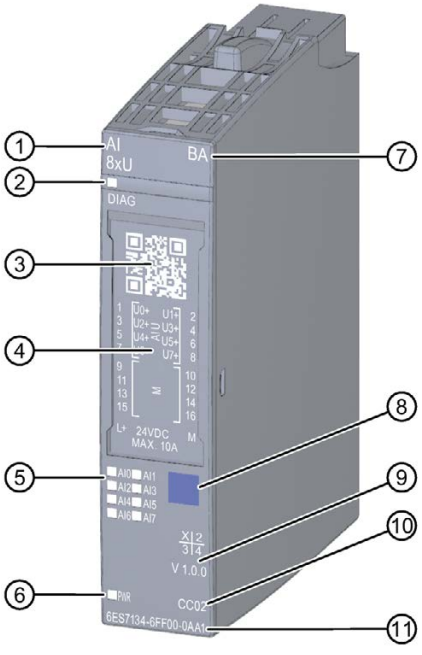

① Module type and name
② LED for diagnostics
③ 2D matrix code
④ Wiring diagram
⑤ LEDs for channel status
⑥ LED for supply voltage
⑦ Function class
⑧ Color coding module type
⑨ Function and firmware version
⑩ Color code for selecting the color identification labels
⑪ Article number

Figure 2-1 View of the AI 8×U BA module

Properties

The module has the following technical properties:

- Analog input module with 8 inputs (single-ended)
- Input ranges for voltage measurement:
  - ±10 V, resolution 16 bits including sign
  - 0 to 10 V, resolution 15 bits
- Cycle time of the module (all channels) 10 ms
- Configurable diagnostics (per module)

The module supports the following functions:

- Firmware update
- I&M identification data
- Reconfiguration in RUN

You can configure the module with STEP 7 (TIA Portal) and with a GSD file.

Accessories

The following accessories must be ordered separately:

- Labeling strips
- Color identification labels
- Reference identification label
- Shield connector

See also

You can find more information on accessories in the ET 200SP distributed I/O system (http://support.automation.siemens.com/WW/view/en/58649293) system manual.

Wiring up

3

3.1 Wiring and block diagram

This section includes the block diagram of the AI 8xU BA module with the terminal assignments for a 2-wire connection.

You can find information on wiring the BaseUnit in the ET 200SP distributed I/O system (http://support.automation.siemens.com/WW/view/en/58649293) system manual.

Note

The load group of the module must begin with a light-colored BaseUnit. Keep this in mind also during the configuration.

Connection: Voltage measurement 2-wire connection

The following figure shows the block diagram and an example for the terminal assignment of the analog input module AI 8xU BA on the BaseUnit BU type A0/A1.

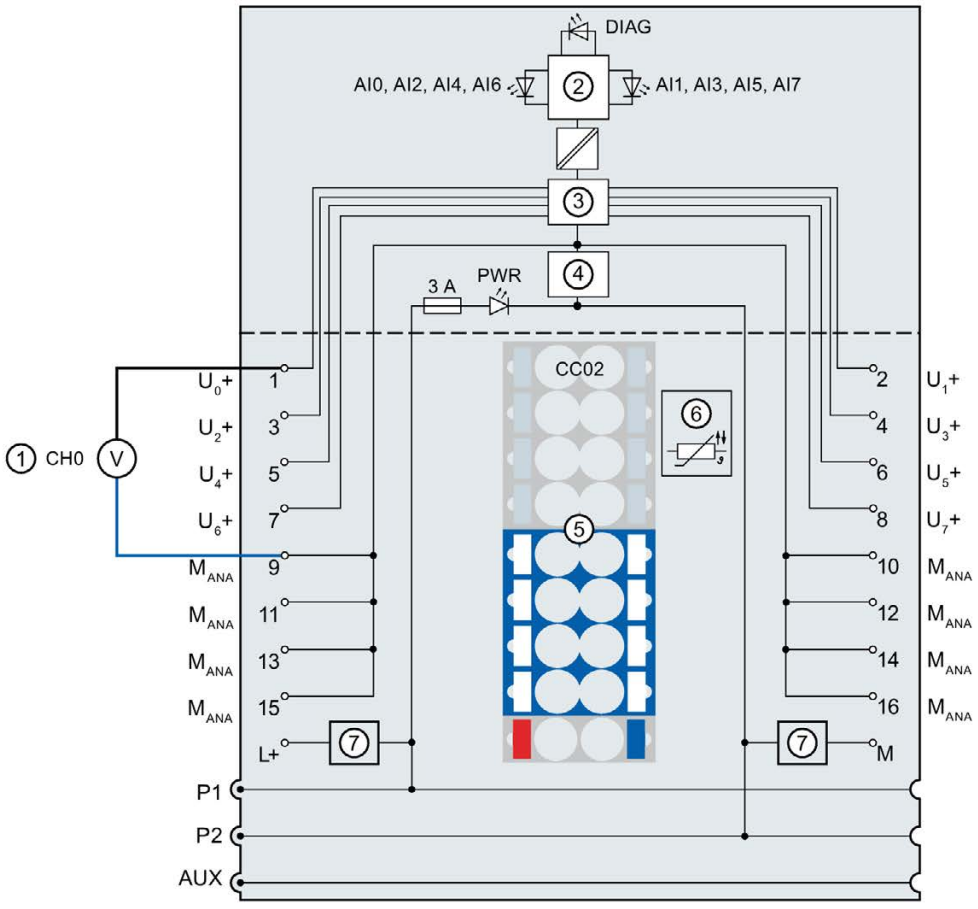

①	2-wire connection for voltage measurement	U_n+	Voltage input positive, channel n
②	Backplane bus interface	M_{ANA}	Ground of the analog inputs
③	Analog-to-digital converter (ADC)	L+	24 V DC (infeed only with light-colored BaseUnit)
④	Current limitation	M	Ground
⑤	Color identification label CCxx (optional)	P1, P2, AUX	Internal self-assembling voltage buses Connection to left (dark-colored BaseUnit) Connection to left interrupted (light-colored BaseUnit)
⑥	Temperature recording for BU type A1 only (function cannot be used for this module)	DIAG	Diagnostics LED (green, red)
⑦	Filter connection supply voltage (only when light-colored BaseUnit is present)	AI0 to AI7	Channel status LED (green)
		PWR	Power LED (green)

Figure 3-1 Wiring and block diagram for voltage measurement 2-wire connection

Parameters/address space

4

4.1 Measuring types and ranges

The analog input module AI 8xU BA has the following measuring ranges:

Table 4- 1 Measuring ranges

Measurement type	Measuring range	Resolution
Voltage	0 to 10 V ±10 V	15 bits 16 bits including sign

You will find the tables of the measuring ranges as well as overflow, overrange, etc., in the section Representation of analog values (Page 29).

4.2 Parameters

AI 8xU BA parameters

The effective range of the configurable parameters depends on the type of configuration. The following configurations are possible:

- Central operation with an ET 200SP CPU
- Distributed operation on PROFINET IO in an ET 200SP system
- Distributed operation on PROFIBUS DP in an ET 200SP system

When assigning the parameters in the user program, the "WRREC" instruction transfers the parameters to the module using data records, see section Parameter assignment and structure of the parameter data record (Page 25)).

The following parameter settings are possible:

Table 4- 2 Configurable parameters and their defaults (GSD file)

Parameter	Range of values	Default	Reconfiguration in RUN	Effective range with configuration software, e.g. STEP 7 (TIA Portal)	
				GSD file PROFINET IO	GSD file PROFIBUS DP
Diagnostics: No supply voltage L+	• Disable • Enable	Disable	Yes	Module	Module
Diagnostics: Overflow	• Disable • Enable	Disable	Yes	Module	Module [1]
Diagnostics: Underflow	• Disable • Enable	Disable	Yes	Module	
Type/range of measurement	• Deactivated • Voltage +/- 10 V • Voltage 0 to 10 V	Voltage (+/- 10 V)	Yes	Channel	Channel
Smoothing	• None • Weak • Medium • Strong	None	Yes	Channel	Channel

Parameter	Range of values	Default	Reconfiguration in RUN	Effective range with configuration software, e.g. STEP 7 (TIA Portal)	
				GSD file PROFINET IO	GSD file PROFIBUS DP
Interference frequency suppression	• 60 Hz (50 ms) • 50 Hz (60 ms) [2] • 16.6 Hz (180 ms) • 4800 Hz (0.625 ms) • 60 Hz (18.75 ms) [3] • 50 Hz (22.5 ms) [2 3] • 16.6 Hz (67.5 ms) [3]	50 Hz (60 ms)	Yes	Channel	Module
Potential group	• Use potential group of the left module (dark-colored BaseUnit) • Enable new potential group (light-colored BaseUnit)	Use potential group of the left module	No	Module	Module

1 Only when configuring using a PROFIBUS GSD file; does not apply to configuration with STEP 7 via HSP: The parameter assignment options are limited because PROFIBUS GSD configuration limits the number of parameters to a maximum of 244 bytes for each ET 200SP station. If required, you can still assign this parameter using the data record 128 as described in the column "GSD file PROFINET IO" (see table above). The parameter length of the I/O module is 8 bytes.

2 Interference frequency suppression: Noise at 400 Hz is automatically included in the filtering at 50 Hz.

3 By selecting this interference frequency suppression with shorter integration time, the attenuation of the interference frequency that can be achieved is reduced (see Technical specifications).

Note

Unused channels

Disable unused channels in the parameter assignment to improve the cycle time of the module.

A deactivated channel always returns the value $7FFF_H$.

4.3 Explanation of the parameters

Diagnostics: No supply voltage L+

Enabling of the diagnostics for no or insufficient supply voltage L+.

Diagnostics: Overflow

Enabling of the diagnostics when the measured value exceeds the overrange.

Diagnostics: Underflow

Enabling of the diagnostics when the measured value falls below the underrange.

Type/range of measurement

See the section Measurement types and measuring ranges (Page 12).

Smoothing

The individual measured values are smoothed by filtering. The smoothing can be set in 4 levels.

Smoothing time = number of module cycles (k) × cycle time of the module.

The following figure shows how many module cycles it takes for the smoothed analog value to approach 100%, depending on the configured smoothing. This is valid for all signal changes at the analog input.

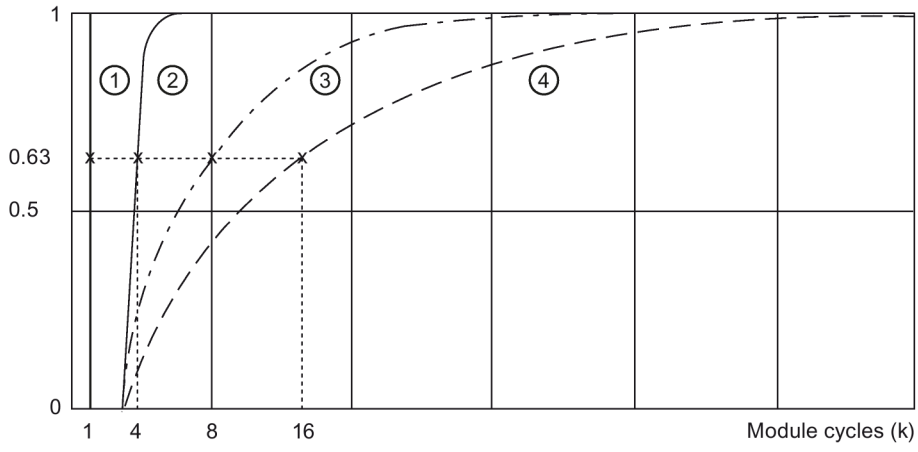

① No smoothing (k = 1)
② Weak (k = 4)
③ Medium (k = 8)
④ Strong (k = 16)

Figure 4-1 Smoothing for AI 8xU BA

Interference frequency suppression

Suppresses the interference affecting analog input modules that is caused by the frequency of the AC voltage network used.

The frequency of the alternating voltage network may negatively affect the measured value, in particular when measuring in the low voltage range. With this parameter, the user specifies the line frequency that is predominant in the plant.

Potential group

You can use the "Potential group" parameter to specify whether the module is inserted in a light-colored or dark-colored BaseUnit.

A potential group always starts with an I/O module that is inserted on a light-colored BaseUnit. All modules inserted to the right of this on dark-colored BaseUnits belong to the same potential group, because the dark-colored BaseUnits are supplied via the light-colored BaseUnits.

The potential group ends with a new light-colored BaseUnit or the end of the station.

See also

ET 200SP Distributed I/O System
(http://support.automation.siemens.com/WW/view/en/58649293)

4.4 Address space

Address space

The figure below shows the assignment of the address space for AI 8×U BA.

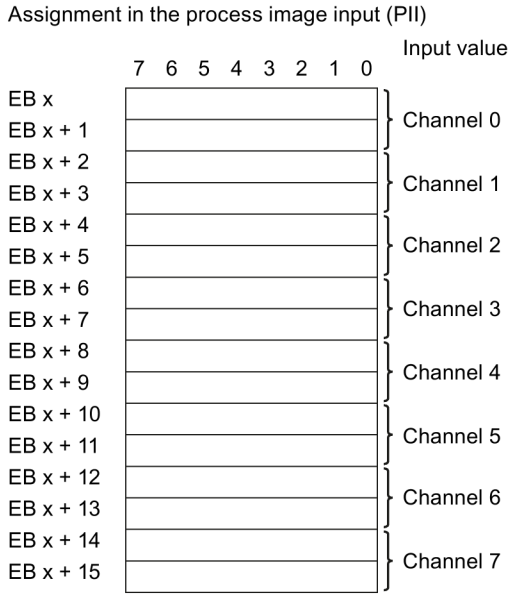

Figure 4-2 Address space of AI 8×U BA

Interrupts/diagnostics alarms

5

5.1 Status and error displays

LED displays

The figure below shows the LED displays of the AI 8xU BA.

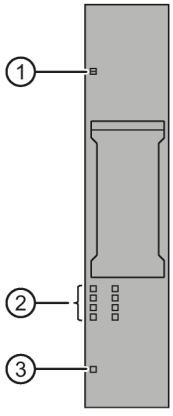

① DIAG (green/red)
② Channel status (green)
③ PWR (green)

Figure 5-1 LED displays

Meaning of the LEDs

The following tables contain the meaning of the status and error displays. Corrective measures for diagnostics alarms can be found in section Diagnostics alarms (Page 20).

DIAG LED

Table 5- 1 Error display of the DIAG LED

DIAG LED	Meaning
☐ Off	Backplane bus supply of the ET 200SP not OK
☼ Flashes	Module parameters not assigned
■ On	Module parameters assigned and no module diagnostics
☼ Flashes	Module parameters assigned and module diagnostics

Channel status LED

Table 5- 2 Status display of the channel status LED

Channel status LED	Meaning
☐ Off	Channel deactivated
■ On	Channel activated

PWR LED

Table 5- 3 Status display of the PWR LED

PWR LED	Meaning
☐ Off	No supply voltage L+
■ On	Supply voltage L+ present

5.2 Interrupts

The analog input module AI 8×U BA supports diagnostics interrupts.

Diagnostic interrupt

The module generates a diagnostic interrupt at the following events:

- Channel temporarily unavailable
- Low limit violated
- High limit violated
- Error
- Parameter assignment error
- No load voltage

5.3 Diagnostics alarms

A diagnostics alarm is output for each diagnostics event and the DIAG LED flashes on the module. The diagnostics alarms can, for example, be read from the diagnostics buffer of the CPU. You can evaluate the error codes with the user program.

Table 5- 4 Diagnostics alarms, their meanings and corrective measures

Diagnostics alarm	Error code	Meaning	Solution
High limit violated	7_H	Value is above overrange.	Correct interplay between module and encoder
Low limit violated	8_H	Value is below underrange.	Correct interplay between module and encoder
Error	9_H	Internal module error occurred.	Replace module
Parameter assignment error	10_H	• The module cannot evaluate parameters for the channel. • Incorrect parameter assignment.	Correct the parameter assignment
No load voltage	11_H	No or insufficient supply voltage L+	• Check supply voltage L+ on the BaseUnit • Check BaseUnit type
Channel temporarily unavailable	$1F_H$	Firmware update in progress or update has been canceled. The module does not read any process values in this state.	• Wait for firmware update • Restart the firmware update

Technical specifications

6

6.1 Technical specifications

Technical specifications of the AI 8×U BA

	6ES7134-6FF00-0AA1
Product type designation	ET 200SP, 8xU Basic
General information	
Firmware version	V1.0
• FW update possible	Yes
Usable BaseUnits	BU type A0, A1
Color code for module-specific color identification label	CC02
Product function	
I&M data	Yes; I&M0 to I&M3
Scalable measuring range	No
Engineering with	
STEP 7 TIA Portal can be configured/integrated as of version	V13 SP1
STEP 7 can be configured/integrated as of version	V5.5 SP3 / -
PROFIBUS as of GSD version/GSD revision	GSD revision 5
PROFINET as of GSD version/GSD revision	V2.3 / -
Operating mode	
Oversampling	No
MSI	No
CiR Configuration in RUN	
Reconfiguration in RUN possible	Yes
Calibration in RUN possible	No
Supply voltage	
Rated value (DC)	24 V
Valid range, low limit (DC)	19.2 V
Valid range, high limit (DC)	28.8 V
Polarity reversal protection	Yes
Input current	
Current consumption, max.	25 mA
Power loss	
Power loss, typ.	0.7 W

	6ES7134-6FF00-0AA1
Address area	
Address space per module	
Address space per module, max.	16 bytes
Analog inputs	
Number of analog inputs	8; single-ended
Maximum permitted input voltage for voltage input (destruction limit)	30 V
Cycle time (all channels), min.	1 ms; per channel
Input ranges (rated values), voltages	
0 to +10 V	Yes; 15 bits
Input resistance (0 to 10 V)	100 kΩ
-10 V to +10 V	Yes; 16 bits including sign
Input resistance (-10 V to +10 V)	100 kΩ
Cable length	
Shielded, max.	200 m
Formation of analog values for the inputs	
Integration and conversion time/resolution per channel	
Resolution with overrange (bit including sign), max.	16 bits
Integration time configurable	Yes
Interference voltage suppression for interference frequency f1 in Hz	16.67 / 50 / 60 / 4 800 (16.67 / 50 / 60)
Conversion time (per channel)	ms; 180 / 60 / 50 / 0.625 (67.5 / 22.5 / 18.75)
Measured value smoothing	
Number of steps	4; none; 4/8/16 times
Configurable	Yes
Encoders	
Connection of the signal transmitters	
For voltage measurement	Yes
For current measurement as 4-wire transducer	No
Errors/accuracies	
Linearity error (in relation to input range), (+/-)	± 0.01%
Temperature error (in relation to input range), (+/-)	± 0.005%
Crosstalk between inputs, min.	50 dB
Repeat accuracy in settled state at 25 °C (in relation to input range), (+/-)	± 0.05%
Operational limit in the entire temperature range	
Voltage in relation to input range, (+/-)	± 0.5%
Basic error limit (operational limit at 25 °C)	
Voltage in relation to input range, (+/-)	± 0.3%
Interference voltage suppression for f = n x (f1 +/- 1%), f1 = interference frequency	
Series-mode interference (peak of the interference < rated value of the input range), min.	70 dB; with conversion time 67.5 / 22.5 / 18.75 ms: 40 dB

	6ES7134-6FF00-0AA1
Isochronous mode	
Isochronous mode (application synchronized up to terminal)	No
Interrupts/diagnostics/status information	
Interrupts	
Diagnostic interrupt	Yes
Limit interrupt	No
Diagnostics alarms	
Diagnostics	Yes
Monitoring of supply voltage	Yes
Wire break	No
Short-circuit	No
Group error	Yes
Overflow/underflow	Yes
Diagnostics indicator LED	
Monitoring of the supply voltage (PWR LED)	Yes, green PWR LED
Channel status display	Yes; green LED
For channel diagnostics	No
For module diagnostics	Yes; green / red DIAG LED
Electrical isolation	
Electrical isolation of channels	
Between the channels	No
Between the channels and the backplane bus	Yes
Between the channels and the supply voltage of the electronics	No
Permitted potential difference	
Between different circuits	75 V DC/60 V AC (basic insulation)
Insulation	
Insulation tested with	707 V DC (type test)
Dimensions	
Width	15 mm
Weights	
Weight, approx.	31 g

Dimension drawing

See the manual ET 200SP BaseUnits (http://support.automation.siemens.com/WW/view/en/59753521)

Parameter data record

A

A.1 Dependencies when configuring with GSD file

When configuring the module with a GSD file, remember that the settings of some parameters are dependent on each other.

Configuring with a PROFINET GSD file

The table lists the properties and their dependencies on the measurement type and measuring range for PROFINET.

Measurement type	Measuring range	Diagnostics		
		No supply voltage L+	Overflow	Underflow
Deactivated		*	*	*
Voltage	±10 V	x	x	x
	0 to 10 V	x	x	x

x = Property is allowed, - = Property is **not allowed**, * = Property is not relevant

Configuring with a PROFIBUS GSD file

The table lists the properties and their dependencies on the measurement type and measuring range for PROFIBUS.

Measurement type	Measuring range	Diagnostics	
		No supply voltage L+	Overflow/underflow
Deactivated		*	*
Voltage	±10 V	x	x
	0 to 10 V	x	x

x = Property is allowed, - = Property is **not allowed**, * = Property is not relevant

A.2 Parameter assignment and structure of the parameter data record

Parameter assignment in the user program

The module can be re-configured in RUN (for example, the voltage or current values of selected channels can be changed in RUN without having an effect on the other channels).

Changing parameters in RUN

The "WRREC" instruction is used to transfer the parameters to the module using data record 128. The parameters set in STEP 7 are not changed in the CPU, which means the parameters set in STEP 7 are valid again after a restart.

STATUS output parameter

If errors occur when transferring parameters with the "WRREC" instruction, the module continues operation with the previous parameter assignment. The STATUS output parameter contains a corresponding error code.

You will find a description of the "WRREC" instruction and the error codes in the STEP 7 online help.

Structure of data record 128

Note

Channel 0 contains the diagnostics for the entire module.

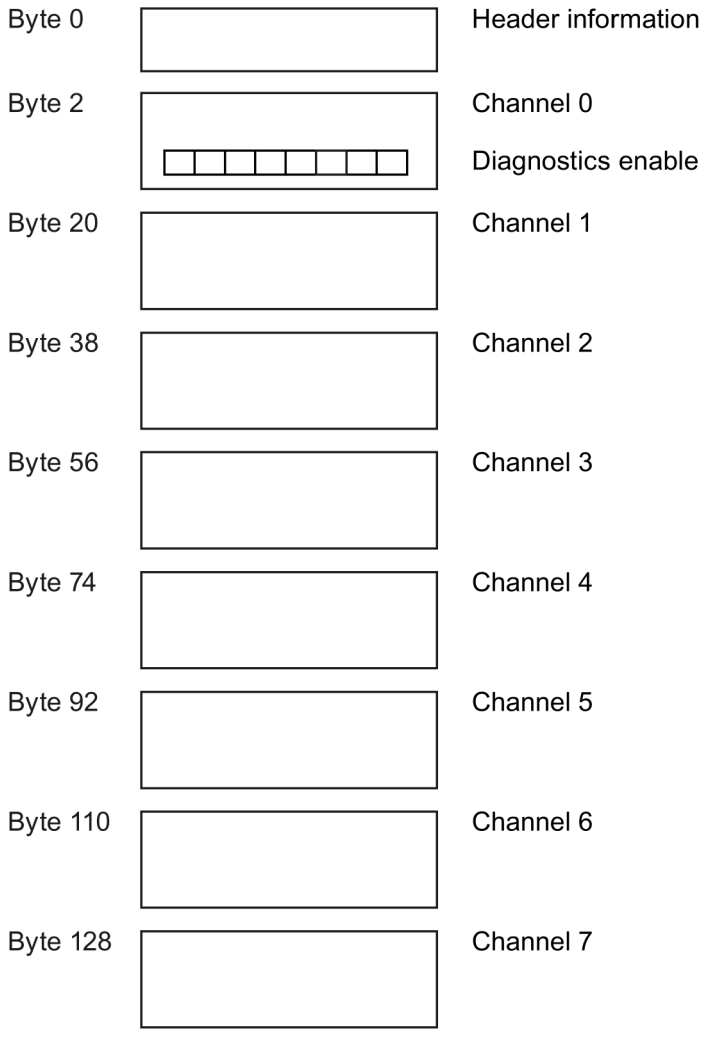

Figure A-1 Structure of data record 128

Header information

The figure below shows the structure of the header information.

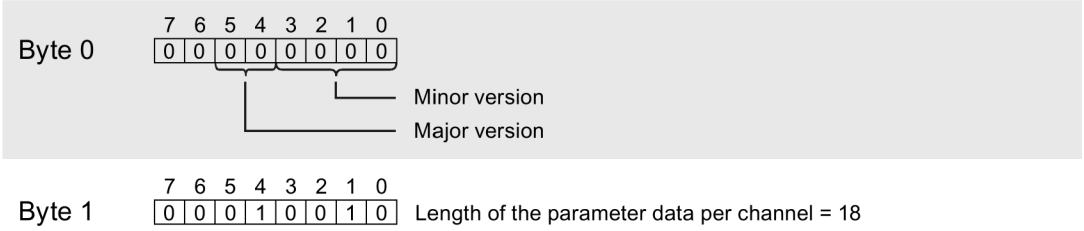

Figure A-2 Header information

Parameters

The figure below shows the structure of the parameters for channels 0 to 7.

Enable a parameter by setting the corresponding bit to "1".

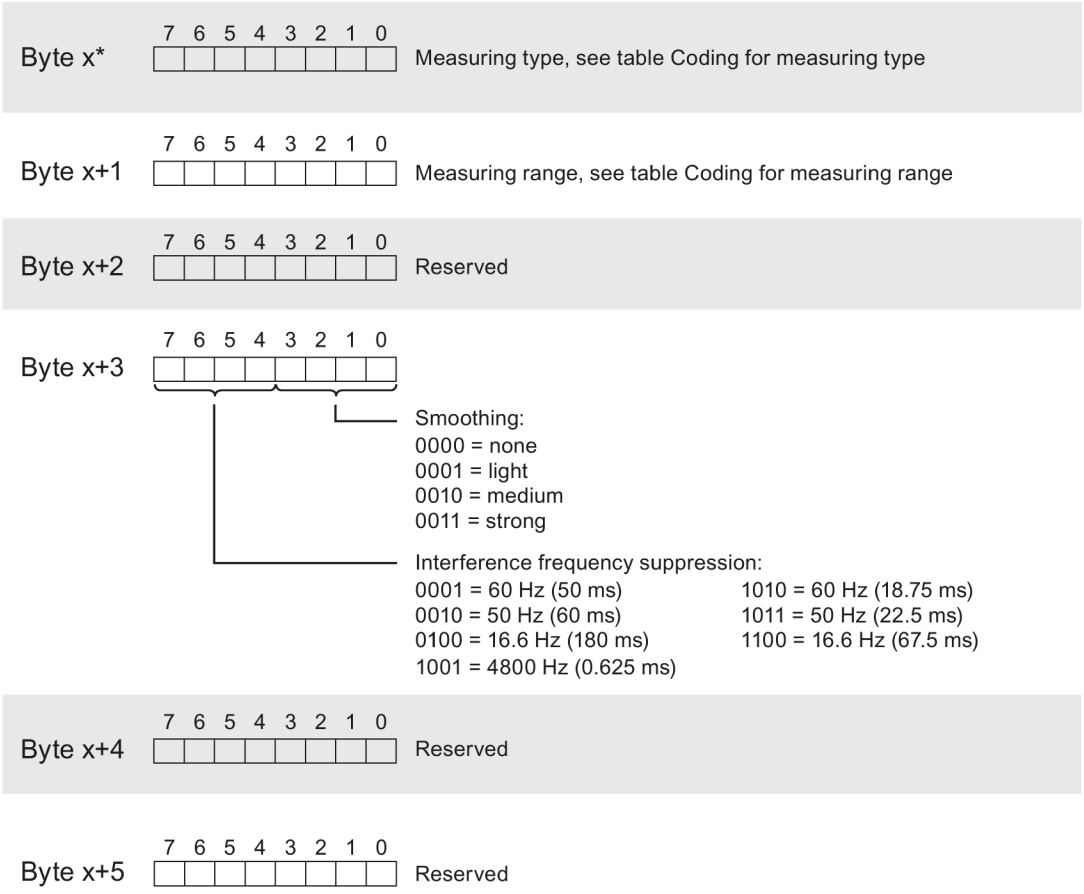

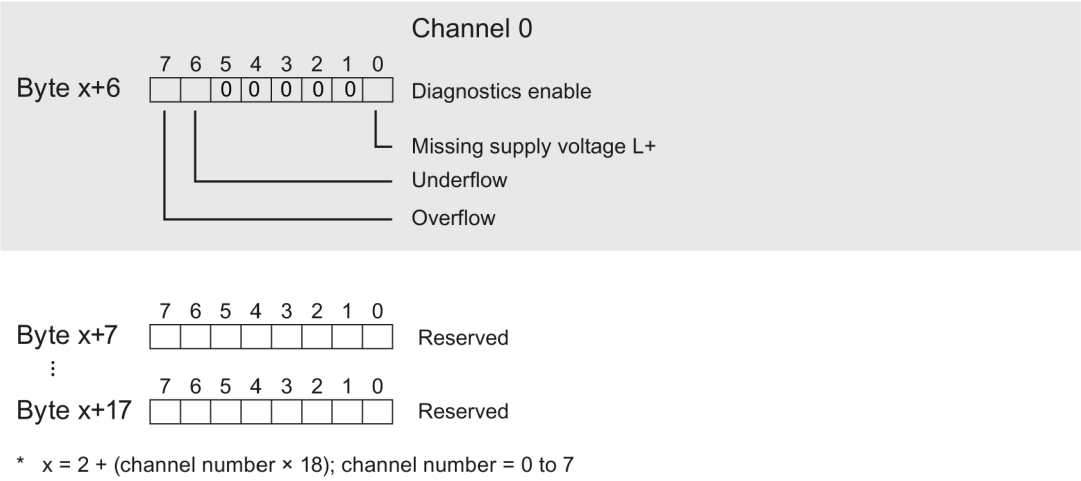

Figure A-3 Structure of byte x to x+17 for channels 0 to 7

Codes for measurement types

The following table contains the codes for the measurement types of the analog input module. You must enter these codes at byte x (see previous figure).

Table A- 1 Codes for measurement types

Measurement type	Code
Deactivated	0000 0000
Voltage	0000 0001

Codes for measuring ranges

The following table contains the codes for the measuring ranges of the analog input module. You enter these codes at byte x+1 (see previous figure).

Table A- 2 Codes for measuring ranges

Measuring range	Code
±10 V	0000 1001
0 to 10 V	0000 1011

Representation of analog values

B

Measured value resolution

The resolution of the analog values differs depending on the analog module and its parameter assignment.

Each analog value is written left aligned to the tags. The bits marked with "x" are set to "0".

Table B- 1 Resolution of the analog values

Resolution in bits including sign	Values		Analog value	
	Decimal	Hexadecimal	High byte	Low byte
16	1	1_H	Sign 0 0 0 0 0 0 0	0 0 0 0 0 0 0 1

B.1 Representation of input ranges

In the following tables, you can find the digitized representation of the bipolar and unipolar input ranges. The resolution is 16 bits.

Table B- 2 Bipolar input ranges

Dec. value	Measured value in %	Data word																Range
		2^{15}	2^{14}	2^{13}	2^{12}	2^{11}	2^{10}	2^{9}	2^{8}	2^{7}	2^{6}	2^{5}	2^{4}	2^{3}	2^{2}	2^{1}	2^{0}	
32767	>117.589	0	1	1	1	1	1	1	1	1	1	1	1	1	1	1	1	Overflow
32511	117.589	0	1	1	1	1	1	1	0	1	1	1	1	1	1	1	1	Overrange
27649	100.004	0	1	1	0	1	1	0	0	0	0	0	0	0	0	0	1	
27648	100.000	0	1	1	0	1	1	0	0	0	0	0	0	0	0	0	0	Nominal range
1	0.003617	0	0	0	0	0	0	0	0	0	0	0	0	0	0	0	1	
0	0.000	0	0	0	0	0	0	0	0	0	0	0	0	0	0	0	0	
-1	-0.003617	1	1	1	1	1	1	1	1	1	1	1	1	1	1	1	1	
-27648	-100.000	1	0	0	1	0	1	0	0	0	0	0	0	0	0	0	0	
-27649	-100.004	1	0	0	1	0	0	1	1	1	1	1	1	1	1	1	1	Underrange
-32512	-117.593	1	0	0	0	0	0	0	1	0	0	0	0	0	0	0	0	
-32768	<-117.593	1	0	0	0	0	0	0	0	0	0	0	0	0	0	0	0	Underflow

Table B- 3 Unipolar input ranges

Dec. value	Measured value in %	Data word																Range
		2^{15}	2^{14}	2^{13}	2^{12}	2^{11}	2^{10}	2^{9}	2^{8}	2^{7}	2^{6}	2^{5}	2^{4}	2^{3}	2^{2}	2^{1}	2^{0}	
32767	>117.589	0	1	1	1	1	1	1	1	1	1	1	1	1	1	1	1	Overflow
32511	117.589	0	1	1	1	1	1	1	0	1	1	1	1	1	1	1	1	Overrange
27649	100.004	0	1	1	0	1	1	0	0	0	0	0	0	0	0	0	1	
27648	100.000	0	1	1	0	1	1	0	0	0	0	0	0	0	0	0	0	Nominal range
1	0.003617	0	0	0	0	0	0	0	0	0	0	0	0	0	0	0	1	
0	0.000	0	0	0	0	0	0	0	0	0	0	0	0	0	0	0	0	
-1	-0.003617	1	1	1	1	1	1	1	1	1	1	1	1	1	1	1	1	Underrange
-4864	-17.593	1	1	1	0	1	1	0	1	0	0	0	0	0	0	0	0	
-32768	<-17.593	1	0	0	0	0	0	0	0	0	0	0	0	0	0	0	0	Underflow

B.2 Representation of analog values in voltage measuring ranges

The following tables list the decimal and hexadecimal values (codes) of the possible voltage measuring ranges.

Table B- 4 Voltage measuring range ±10 V

Values		Voltage measuring range	Range
Dec.	Hex.	±10 V	
32767	7FFF	>11.759 V	Overflow
32511	7EFF	11.759 V	Overrange
27649	6C01		
27648	6C00	10 V	Nominal range
20736	5100	7.5 V	
1	1	361.7 µV	
0	0	0 V	
-1	FFFF		
-20736	AF00	-7.5 V	
-27648	9400	-10 V	
-27649	93FF		Underrange
-32512	8100	-11.759 V	
-32768	8000	<-11.759 V	Underflow

Table B- 5 Voltage measuring range 0 to 10 V

Values		Voltage measuring range	Range
Dec.	Hex.	0 to 10 V	
32767	7FFF	>11.759 V	Overflow
32511	7EFF	11.759 V	Overrange
27649	6C01		
27648	6C00	10 V	Nominal range
20736	5100	7.5 V	
1	1	0 V + 361.7 µV	
0	0	0 V	
-1	FFFF		Underrange
-4864	ED00	-1.759 V	
-32768	8000	< -1.759 V	Underflow

SIEMENS

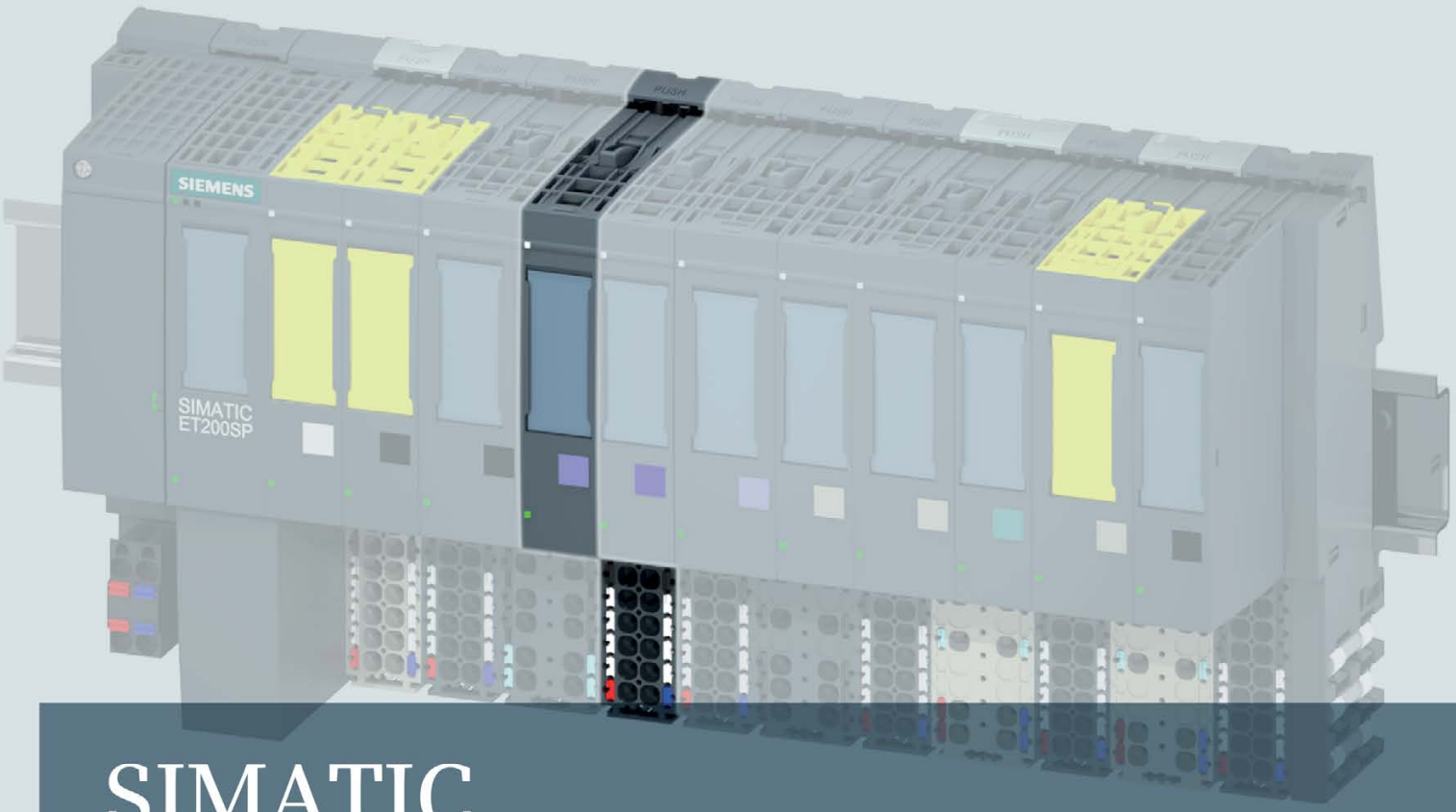

SIMATIC

ET 200SP

Analog input module AI 8xI 2-/4-wire BA (6ES7134-6GF00-0AA1)

Manual

Edition 03/2015

Answers for industry.

SIEMENS

SIMATIC

ET 200SP
Analog input module
AI 8xI 2-/4-wire BA
(6ES7134-6GF00-0AA1)

Manual

Preface

Documentation guide 1

Product overview 2

Wiring up 3

Parameters/address space 4

Interrupts/diagnostics alarms 5

Technical specifications 6

Parameter data record A

Representation of analog values B

03/2015

A5E34941201-AA

Legal information

Warning notice system

This manual contains notices you have to observe in order to ensure your personal safety, as well as to prevent damage to property. The notices referring to your personal safety are highlighted in the manual by a safety alert symbol, notices referring only to property damage have no safety alert symbol. These notices shown below are graded according to the degree of danger.

⚠ DANGER

indicates that death or severe personal injury **will** result if proper precautions are not taken.

⚠ WARNING

indicates that death or severe personal injury **may** result if proper precautions are not taken.

⚠ CAUTION

indicates that minor personal injury can result if proper precautions are not taken.

NOTICE

indicates that property damage can result if proper precautions are not taken.

If more than one degree of danger is present, the warning notice representing the highest degree of danger will be used. A notice warning of injury to persons with a safety alert symbol may also include a warning relating to property damage.

Qualified Personnel

The product/system described in this documentation may be operated only by **personnel qualified** for the specific task in accordance with the relevant documentation, in particular its warning notices and safety instructions. Qualified personnel are those who, based on their training and experience, are capable of identifying risks and avoiding potential hazards when working with these products/systems.

Proper use of Siemens products

Note the following:

⚠ WARNING

Siemens products may only be used for the applications described in the catalog and in the relevant technical documentation. If products and components from other manufacturers are used, these must be recommended or approved by Siemens. Proper transport, storage, installation, assembly, commissioning, operation and maintenance are required to ensure that the products operate safely and without any problems. The permissible ambient conditions must be complied with. The information in the relevant documentation must be observed.

Trademarks

All names identified by ® are registered trademarks of Siemens AG. The remaining trademarks in this publication may be trademarks whose use by third parties for their own purposes could violate the rights of the owner.

Disclaimer of Liability

We have reviewed the contents of this publication to ensure consistency with the hardware and software described. Since variance cannot be precluded entirely, we cannot guarantee full consistency. However, the information in this publication is reviewed regularly and any necessary corrections are included in subsequent editions.

Siemens AG
Division Digital Factory
Postfach 48 48
90026 NÜRNBERG
GERMANY

A5E34941201-AA
℗ 03/2015 Subject to change

Copyright © Siemens AG 2015.
All rights reserved

Preface

Purpose of the documentation

This manual complements the system manual ET 200SP distributed I/O system (http://support.automation.siemens.com/WW/view/en/58649293).

Functions that generally relate to the system are described in this manual.

The information provided in this manual and in the system/function manuals supports you in commissioning the system.

Conventions

CPU: When the term "CPU" is used in this manual, it applies to the CPUs of the S7-1500 automation system as well as to the CPUs/interface modules of the ET 200SP distributed I/O system.

STEP 7: In this documentation, "STEP 7" is used as a synonym for all versions of the configuration and programming software "STEP 7 (TIA Portal)".

Please also observe notes marked as follows:

Note

A note contains important information on the product described in the documentation, on the handling of the product or on the section of the documentation to which particular attention should be paid.

Security information

Siemens provides products and solutions with industrial security functions that support the secure operation of plants, solutions, machines, equipment and/or networks. They are important components in a holistic industrial security concept. With this in mind, Siemens' products and solutions undergo continuous development. Siemens recommends strongly that you regularly check for product updates.

For the secure operation of Siemens products and solutions, it is necessary to take suitable preventive action (e.g. cell protection concept) and integrate each component into a holistic, state-of-the-art industrial security concept. Third-party products that may be in use should also be considered. You can find more information about industrial security on the Internet (http://www.siemens.com/industrialsecurity).

To stay informed about product updates as they occur, sign up for a product-specific newsletter. You can find more information on the Internet (http://support.automation.siemens.com).

Table of contents

Preface 4

1 Documentation guide 6

2 Product overview 8

2.1 Properties 8

3 Wiring up 10

3.1 Wiring and block diagram 10

4 Parameters/address space 13

4.1 Measuring types and ranges 13

4.2 Parameters 13

4.3 Explanation of the parameters 16

4.4 Address space 18

5 Interrupts/diagnostics alarms 19

5.1 Status and error displays 19

5.2 Interrupts 21

5.3 Diagnostics alarms 22

6 Technical specifications 23

6.1 Technical specifications 23

A Parameter data record 27

A.1 Dependencies when configuring with GSD file 27

A.2 Parameter assignment and structure of the parameter data record 28

B Representation of analog values 32

B.1 Representation of input ranges 33

B.2 Representation of analog values in the current measuring ranges 34

Documentation guide

1

The documentation for the SIMATIC ET 200SP distributed I/O system is arranged into three areas.
This arrangement enables you to access the specific content you require.

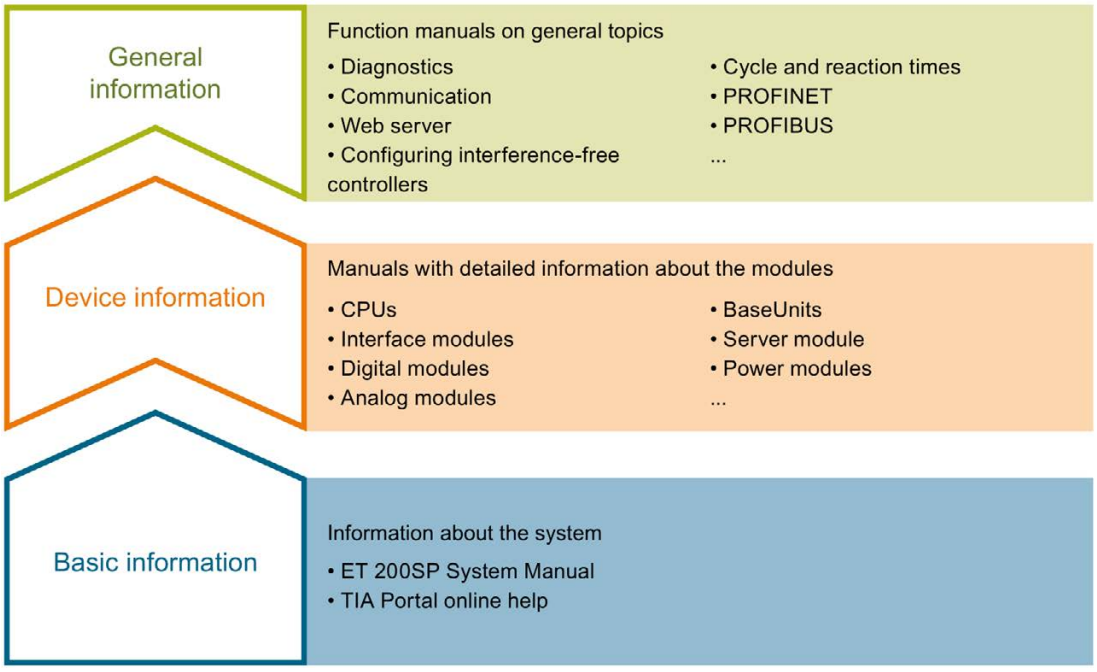

Basic information

The system manual describes in detail the configuration, installation, wiring and commissioning of the SIMATIC ET 200SP. distributed I/O system. The STEP 7 online help supports you in the configuration and programming.

Device information

Product manuals contain a compact description of the module-specific information, such as properties, terminal diagrams, characteristics and technical specifications.

General information

The function manuals contain detailed descriptions on general topics regarding the SIMATIC ET 200SP distributed I/O system, e.g. diagnostics, communication, Web server, designing interference-free controllers.

You can download the documentation free of charge from the Internet (http://w3.siemens.com/mcms/industrial-automation-systems-simatic/en/manual-overview/tech-doc-et200/Pages/Default.aspx).

Changes and supplements to the manuals are documented in a Product Information.

Manual Collection ET 200SP

The Manual Collection contains the complete documentation on the SIMATIC ET 200SP distributed I/O system gathered together in one file.

You can find the Manual Collection on the Internet (http://support.automation.siemens.com/WW/view/en/84133942).

My Documentation Manager

The My Documentation Manager is used to combine entire manuals or only parts of these to your own manual.
You can export the manual as PDF file or in a format that can be edited later.

You can find the My Documentation Manager on the Internet (http://support.industry.siemens.com/My/ww/en/documentation).

Application examples

Applications examples support you with various tools and examples for solving your automation tasks. Solutions are shown in interplay with multiple components in the system - separated from the focus in individual products.

You can find application examples on the Internet (https://support.industry.siemens.com/sc/ww/en/sc/2054).

CAx Download Manager

The CAx Download Manager is used to access the current product data for your CAx or CAe systems.

You configure your own download package with a few clicks.

In doing so you can select:

- Product images, 2D dimension drawings, 3D models, internal circuit diagrams, EPLAN macro files
- Manuals, characteristics, operating manuals, certificates
- Product master data

You can find the CAx Download Manager on the Internet (http://support.industry.siemens.com/my/ww/en/CAxOnline).

TIA Selection Tool

With the TIA Selection Tool, you can select, configure and order devices for Totally Integrated Automation (TIA).
This tool is the successor of the SIMATIC Selection Tool and combines the known configurators for automation technology into one tool.
With the TIA Selection Tool, you can generate a complete order list from your product selection or product configuration.

You can find the TIA Selection Tool on the Internet (http://w3.siemens.com/mcms/topics/en/simatic/tia-selection-tool).

Product overview

2

2.1 Properties

Article number

6ES7134-6GF00-0AA1

View of the module

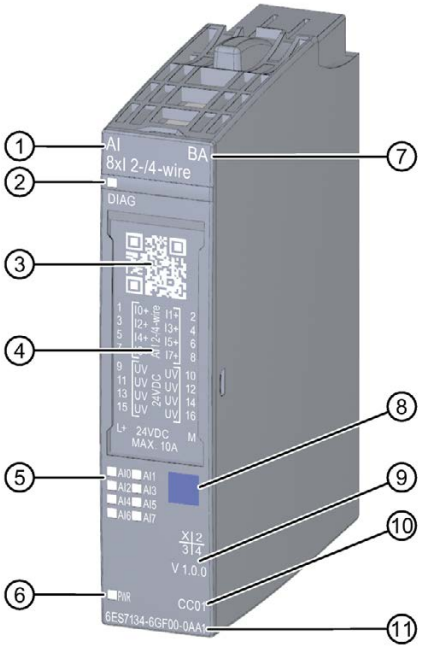

① Module type and name
② LED for diagnostics
③ 2D matrix code
④ Wiring diagram
⑤ LEDs for channel status
⑥ LED for supply voltage
⑦ Function class
⑧ Color coding module type
⑨ Function and firmware version
⑩ Color code for selecting the color identification labels
⑪ Article number

Figure 2-1 View of the AI 8×I 2-/4-wire BA module

Properties

The module has the following technical properties:

- Analog input module with 8 inputs (single-ended)
- For 2-wire and 4-wire transducers
- Input ranges for current measurement:
  - 4 to 20 mA, resolution 15 bits
  - 0 to 20 mA, resolution 15 bits
  - ±20 mA, resolution 16 bits including sign
- Cycle time of the module (all channels) 10 ms
- Configurable diagnostics (per module)

The module supports the following functions:

- Firmware update
- I&M identification data
- Reconfiguration in RUN

You can configure the module with STEP 7 (TIA Portal) and with a GSD file.

Accessories

The following accessories must be ordered separately:

- Labeling strips
- Color identification labels
- Reference identification label
- Shield connector

See also

You can find more information on accessories in the ET 200SP distributed I/O system (http://support.automation.siemens.com/WW/view/en/58649293) system manual.

Wiring up

3

3.1 Wiring and block diagram

This section includes the block diagram of the AI 8xI 2-/4-wire BA module with the terminal assignments for 2-wire and 4-wire connection.

You can find information on wiring the BaseUnit in the ET 200SP distributed I/O system (http://support.automation.siemens.com/WW/view/en/58649293) system manual.

Note

You may use and combine the different wiring options for all channels.

Note

The load group of the module must begin with a light-colored BaseUnit. Keep this in mind also during the configuration.

Connection: Current measurement 2-wire connection

The following figure shows the block diagram and an example for the terminal assignment of the analog input module AI 8xI 2-/4-wire BA on the BaseUnit BU type A0/A1.

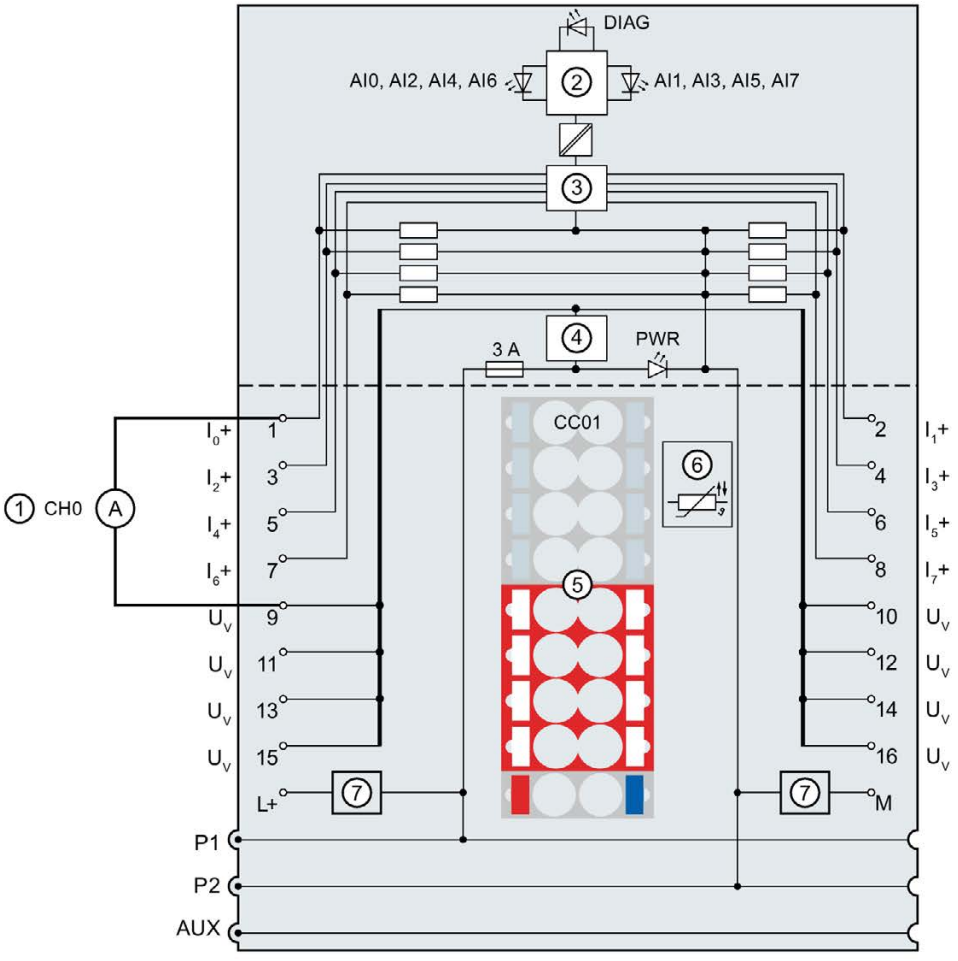

①	2-wire connection for current measurement	I_n+	Input signal, channel n
②	Backplane bus interface	U_V	Infeed voltage
③	Analog-to-digital converter (ADC)	L+	24 V DC (infeed only with light-colored BaseUnit)
④	Current limitation	M	Ground
⑤	Color identification label CCxx (optional)	P1, P2, AUX	Internal self-assembling voltage buses Connection to left (dark-colored BaseUnit) Connection to left interrupted (light-colored BaseUnit)
⑥	Temperature recording for BU type A1 only (function cannot be used for this module)	DIAG	Diagnostics LED (green, red)
⑦	Filter connection supply voltage (only when light-colored BaseUnit is present)	AI0 to AI7	Channel status LED (green)
		PWR	Power LED (green)

Figure 3-1 Wiring and block diagram for voltage measurement 2-wire connection

Connection: Current measurement 4-wire connection

The following figure shows the block diagram and an example for the terminal assignment of the analog input module AI 8xI 2-/4-wire BA on the BaseUnit BU type A0 with AUX terminals.

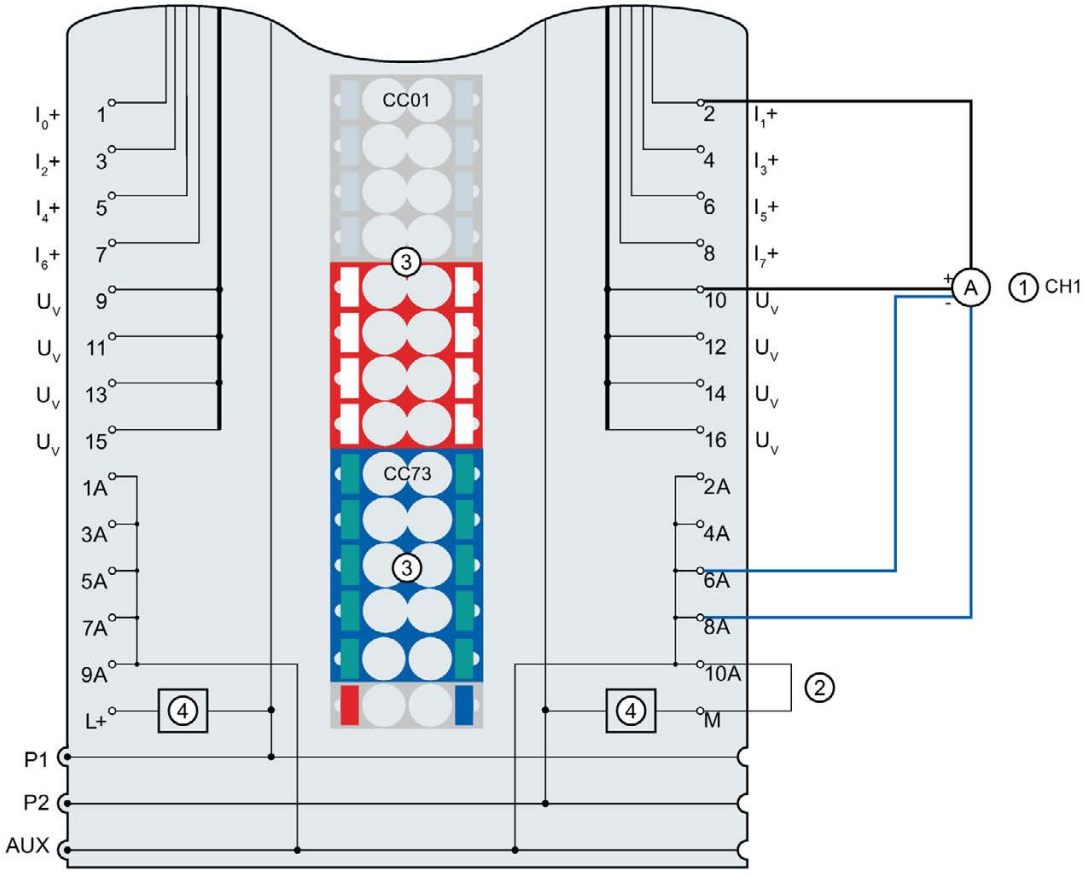

①	4-wire connection for current measurement
②	Connection AUX terminals to ground
③	Color identification labels CCxx (optional)
④	Filter connection supply voltage (only when light-colored BaseUnit is present)
I_n+	Input signal, channel n
U_V	Infeed voltage
L+	24 V DC (infeed only with light-colored BaseUnit)
M	Ground
1 A to 10 A	AUX terminals
P1, P2, AUX	Internal self-assembling voltage buses Connection to left (dark-colored BaseUnit) Connection to left interrupted (light-colored BaseUnit)

Figure 3-2 Wiring and block diagram for voltage measurement 4-wire connection

Parameters/address space 4

4.1 Measuring types and ranges

The analog input module AI 8xI 2-/4-wire BA has the following measuring ranges:

Table 4- 1 Measuring ranges

Measurement type	Measuring range	Resolution
Current (2-wire or 4-wire connection)	0 to 20 mA 4 to 20 mA	15 bits 15 bits
Current (4-wire connection)	± 20 mA	16 bits including sign

You will find the tables of the measuring ranges as well as overflow, overrange, etc., in the section Representation of analog values (Page 32).

4.2 Parameters

AI 8xI 2-/4-wire BA parameters

The effective range of the configurable parameters depends on the type of configuration. The following configurations are possible:

- Central operation with an ET 200SP CPU
- Distributed operation on PROFINET IO in an ET 200SP system
- Distributed operation on PROFIBUS DP in an ET 200SP system

When assigning parameters in the user program, use the "WRREC" instruction to transfer the parameters to the module using the data records; refer to the section Parameter assignment and structure of the parameter data record (Page 28).

The following parameter settings are possible:

Table 4- 2 Configurable parameters and their defaults (GSD file)

Parameter	Range of values	Default	Reconfiguration in RUN	Effective range with configuration software, e.g. STEP 7 (TIA Portal)	
				GSD file PROFINET IO	GSD file PROFIBUS DP
Diagnostics: No supply voltage L+	• Disable • Enable	Disable	Yes	Module	Module
Diagnostics: Short-circuit to ground	• Disable • Enable	Disable	Yes	Module	Module
Diagnostics: Overflow	• Disable • Enable	Disable	Yes	Module	Module [1]
Diagnostics: Underflow	• Disable • Enable	Disable	Yes	Module	
Diagnostics: Wire break	• Disable • Enable	Disable	Yes	Module	Module
Type/range of measurement	• Deactivated • Current (4-wire connection) 0 to 20 mA • Current (4-wire connection) 4 to 20 mA • Current (4-wire connection) +/-20 mA • Current (2-wire connection) 0 to 20 mA • Current (2-wire connection) 4 to 20 mA	Current (4-wire connection) 4 to 20 mA	Yes	Channel	Channel
Smoothing	• None • Weak • Medium • Strong	None	Yes	Channel	Channel

Parameter	Range of values	Default	Reconfiguration in RUN	Effective range with configuration software, e.g. STEP 7 (TIA Portal)	
				GSD file PROFINET IO	GSD file PROFIBUS DP
Interference frequency suppression	• 60 Hz (50 ms) • 50 Hz (60 ms) [2] • 16.6 Hz (180 ms) • 4800 Hz (0.625 ms) • 60 Hz (18.75 ms) [3] • 50 Hz (22.5 ms) [2 3] • 16.6 Hz (67.5 ms) [3]	50 Hz (60 ms)	Yes	Channel	Module
Potential group	• Use potential group of the left module (dark-colored BaseUnit) • Enable new potential group (light-colored BaseUnit)	Use potential group of the left module	No	Module	Module

[1] Only when configuring using a PROFIBUS GSD file; does not apply to configuration with STEP 7 via HSP: The parameter assignment options are limited because PROFIBUS GSD configuration limits the number of parameters to a maximum of 244 bytes for each ET 200SP station. If required, you can still assign this parameter using the data record 128 as described in the column "GSD file PROFINET IO" (see table above). The parameter length of the I/O module is 8 bytes.

[2] Interference frequency suppression: Noise at 400 Hz is automatically included in the filtering at 50 Hz.

[3] By selecting this interference frequency suppression with shorter integration time, the attenuation of the interference frequency that can be achieved is reduced (see Technical specifications).

Note

Unused channels

"Deactivate" unused channels in the parameter assignment to improve the cycle time of the module.

A deactivated channel always returns the value $7FFF_H$.

4.3 Explanation of the parameters

Diagnostics: No supply voltage L+

Enabling of the diagnostics for no or insufficient supply voltage L+.

Diagnostics: Short-circuit to ground

Enabling of the diagnostics if a short-circuit of the encoder supply to ground occurs.

Diagnostics: Overflow

Enabling of the diagnostics when the measured value exceeds the overrange.

Diagnostics: Underflow

Enabling of the diagnostics when the measured value falls below the underrange.

Diagnostics: Wire break

Enabling of the diagnostics if the module has no current flow or the current is too weak to be measured at the relevant input.

The wire break and underflow diagnostics can be activated simultaneously. If both diagnostics events occur simultaneously, the Diagnostics: Wire break is output.

Measurement type/measuring ranges

See the section Measurement types and measuring ranges (Page 13).

Smoothing

The individual measured values are smoothed by filtering. The smoothing can be set in 4 levels.

Smoothing time = number of module cycles (k) × cycle time of the module.

The following figure shows how many module cycles it takes for the smoothed analog value to approach 100%, depending on the configured smoothing. This is valid for all signal changes at the analog input.

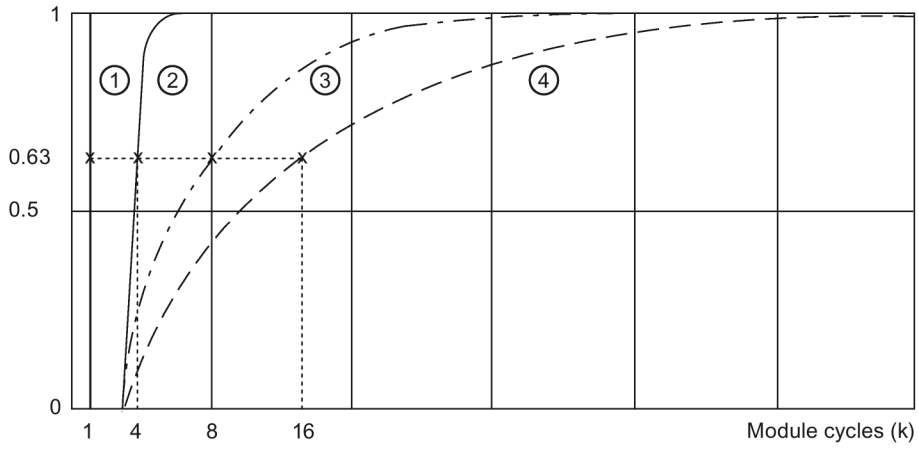

① No smoothing (k = 1)
② Weak (k = 4)
③ Medium (k = 8)
④ Strong (k = 16)

Figure 4-1 Smoothing with AI 8xI 2-/4-wire BA

Interference frequency suppression

Suppresses the interference affecting analog input modules that is caused by the frequency of the AC voltage network used.

The frequency of the alternating voltage network may negatively affect the measured value, in particular when measuring in the low voltage range and with thermocouples. With this parameter, the user specifies the line frequency that is predominant in the plant.

Potential group

You can use the "Potential group" parameter to specify whether the module is inserted in a light-colored or dark-colored BaseUnit.

A potential group always starts with an I/O module that is inserted on a light-colored BaseUnit. All modules inserted to the right of this on dark-colored BaseUnits belong to the same potential group, because the dark-colored BaseUnits are supplied via the light-colored BaseUnits.

The potential group ends with a new light-colored BaseUnit or the end of the station.

See also

ET 200SP Distributed I/O System
(http://support.automation.siemens.com/WW/view/en/58649293)

4.4 Address space

Address space

The figure below shows the assignment of the address space for AI 8×I 2-/4-wire BA.

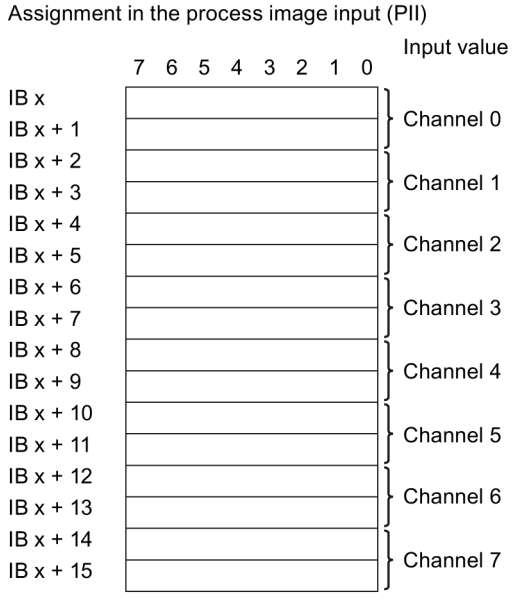

Figure 4-2 Address space of AI 8×I 2-/4-wire BA

Interrupts/diagnostics alarms

5

5.1 Status and error displays

LED displays

The figure below shows the LED displays of the AI 8xU/I 2-/4-wire BA.

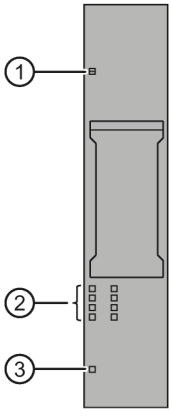

① DIAG (green/red)
② Channel status (green)
③ PWR (green)

Figure 5-1 LED displays

Meaning of the LEDs

The following tables contain the meaning of the status and error displays. Corrective measures for diagnostics alarms can be found in section Diagnostics alarms (Page 22).

DIAG LED

Table 5- 1 Error display of the DIAG LED

DIAG LED	Meaning
□ Off	Backplane bus supply of the ET 200SP not OK
☼ Flashes	Module parameters not assigned
■ On	Module parameters assigned and no module diagnostics
☼ Flashes	Module parameters assigned and module diagnostics

Channel status LED

Table 5- 2 Status display of the channel status LED

Channel status LED	Meaning
□ Off	Channel deactivated
■ On	Channel activated

PWR LED

Table 5- 3 Status display of the PWR LED

PWR LED	Meaning
□ Off	No supply voltage L+
■ On	Supply voltage L+ present

5.2 Interrupts

The analog input module AI 8×I 2-/4-wire BA supports diagnostics interrupts.

Diagnostic interrupt

The module generates a diagnostic interrupt at the following events:

- Channel temporarily unavailable
- Short-circuit (2-wire and 4-wire connection, current)
- Wire break (current 4 to 20 mA)
- Low limit violated
- High limit violated
- Error
- Parameter assignment error
- No load voltage

5.3 Diagnostics alarms

A diagnostics alarm is output for each diagnostics event and the DIAG LED flashes on the module. The diagnostics alarms can, for example, be read from the diagnostics buffer of the CPU. You can evaluate the error codes with the user program.

Table 5- 4 Diagnostics alarms, their meanings and corrective measures

Diagnostics alarm	Error code	Meaning	Solution
Short-circuit *	1_H	Encoder supply to ground	Correct interplay between module and encoder
Wire break	6_H	Impedance of encoder circuit too high	Use a different encoder type or modify the wiring, for example, using cables with a larger cross-section
		Wire break between the module and sensor	Connect the cable
		Channel not connected (open)	• Deactivate channel • Connect the encoder contacts
High limit violated	7_H	Value is above overrange.	Correct interplay between module and encoder
Low limit violated	8_H	Value is below underrange.	Correct interplay between module and encoder
Error	9_H	Internal module error occurred.	Replace module
Parameter assignment error	10_H	• The module cannot evaluate parameters for the channel. • Incorrect parameter assignment.	Correct the parameter assignment (diagnostics wire break set only with the permitted measuring ranges).
No load voltage	11_H	No or insufficient supply voltage L+	• Check supply voltage L+ on the BaseUnit • Check BaseUnit type
Channel temporarily unavailable	$1F_H$	Firmware update in progress or update has been canceled. The module does not read any process values in this state.	• Wait for firmware update • Restart the firmware update

* Short-circuit of the encoder supply to ground has an effect on all channels.

Technical specifications

6

6.1 Technical specifications

Technical specifications of the AI 8×I 2-/4-wire BA

	6ES7134-6GF00-0AA1
Product type designation	ET 200SP, AI 8xI 2-/4-wire Basic
General information	
Firmware version	V1.0
• FW update possible	Yes
Usable BaseUnits	BU type A0, A1
Color code for module-specific color identification label	CC01
Product function	
I&M data	Yes; I&M0 to I&M3
Scalable measuring range	No
Engineering with	
STEP 7 TIA Portal can be configured/integrated as of version	V13 SP1
STEP 7 can be configured/integrated as of version	V5.5 SP3 / -
PROFIBUS as of GSD version/GSD revision	GSD revision 5
PROFINET as of GSD version/GSD revision	V2.3 / -
Operating mode	
Oversampling	No
MSI	No
CiR Configuration in RUN	
Reconfiguration in RUN possible	Yes
Calibration in RUN possible	No
Supply voltage	
Rated value (DC)	24 V
Valid range, low limit (DC)	19.2 V
Valid range, high limit (DC)	28.8 V
Polarity reversal protection	Yes
Input current	
Current consumption, max.	25 mA; without encoder supply

	6ES7134-6GF00-0AA1
Encoder supply	
24 V encoder supply	
24 V	Yes
Short-circuit protection	Yes
Output current, max.	0.7 A; total current of all encoders/channels
Power loss	
Power loss, typ.	0.7 W; without encoder supply voltage
Address area	
Address space per module	
Address space per module, max.	16 bytes
Analog inputs	
Number of analog inputs	8; single-ended
Maximum permitted input current for current input (destruction limit)	50 mA
Cycle time (all channels), min.	1 ms; per channel
Input ranges (rated values), currents	
0 to 20 mA	Yes
Input resistance (0 to 20 mA)	100 Ω; 15 bits
-20 mA to +20 mA	Yes
Input resistance (-20 mA to +20 mA)	100 Ω; 16 bits including sign
4 mA to 20 mA	Yes
Input resistance (4 mA to 20 mA)	100 Ω; 15 bits
Cable length	
Shielded, max.	200 m
Formation of analog values for the inputs	
Integration and conversion time/resolution per channel	
Resolution with overrange (bit including sign), max.	16 bits
Integration time configurable	Yes
Interference voltage suppression for interference frequency f1 in Hz	16.67 / 50 / 60 / 4 800 (16.67 / 50 / 60)
Conversion time (per channel)	ms; 180 / 60 / 50 / 0.625 (67.5 / 22.5 / 18.75)
Measured value smoothing	
Number of steps	4; none; 4/8/16 times
Configurable	Yes
Encoders	
Connection of the signal transmitters	
For voltage measurement	No
For current measurement as 2-wire transducer	Yes
• Load of 2-wire transducer, max.	650 Ω
For current measurement as 4-wire transducer	Yes

	6ES7134-6GF00-0AA1
Errors/accuracies	
Linearity error (in relation to input range), (+/-)	± 0.01%
Temperature error (in relation to input range), (+/-)	0.005%/K
Crosstalk between inputs, min.	50 dB
Repeat accuracy in settled state at 25 °C (in relation to input range), (+/-)	± 0.05%
Operational limit in the entire temperature range	
Current in relation to input range, (+/-)	± 0.5%
Basic error limit (operational limit at 25 °C)	
Current in relation to input range, (+/-)	± 0.3%
Interference voltage suppression for f = n x (f1 +/- 1%), f1 = interference frequency	
Series-mode interference (peak of the interference < rated value of the input range), min.	70 dB; with conversion time 67.5 / 22.5 / 18.75 ms: 40 dB
Isochronous mode	
Isochronous mode (application synchronized up to terminal)	No
Interrupts/diagnostics/status information	
Interrupts	
Diagnostic interrupt	Yes
Limit interrupt	No
Diagnostics alarms	
Diagnostics	Yes
Monitoring of supply voltage	Yes
Wire break	Yes; for 4 to 20 mA
Short-circuit	Yes; encoder supply to ground; module-based
Group error	Yes
Overflow/underflow	Yes
Diagnostics indicator LED	
Monitoring of the supply voltage (PWR LED)	Yes; green LED
Channel status display	Yes; green LED
For channel diagnostics	No
For module diagnostics	Yes; green / red DIAG LED
Electrical isolation	
Electrical isolation of channels	
Between the channels	No
Between the channels and the backplane bus	Yes
Between the channels and the supply voltage of the electronics	No

	6ES7134-6GF00-0AA1
Permitted potential difference	
Between different circuits	75 V DC/60 V AC (basic insulation)
Insulation	
Insulation tested with	707 V DC (type test)
Dimensions	
Width	15 mm
Weights	
Weight, approx.	31 g

Dimension drawing

See the manual ET 200SP BaseUnits
(http://support.automation.siemens.com/WW/view/en/59753521)

Parameter data record

A

A.1 Dependencies when configuring with GSD file

When configuring the module with a GSD file, remember that the settings of some parameters are dependent on each other.

Configuring with a PROFINET GSD file

The table lists the properties and their dependencies on the measurement type and measuring range with PROFINET.

Measurement type	Measuring range	Diagnostics				
		No supply voltage L+	Short-circuit to ground	Overflow	Underflow	Wire break
Deactivated		*	*	*	*	*
Current (4-wire connection)	0 to 20 mA	x	x	x	x	-
	4 to 20 mA	x	x	x	x	x
	±20 mA	x	x	x	x	-
Current (2-wire connection)	0 to 20 mA	x	x	x	-	-
	4 to 20 mA	x	x	x	x	x

x = Property is allowed, - = Property is **not allowed**, * = Property is not relevant

Configuring with a PROFIBUS GSD file

The table lists the properties and their dependencies on the measurement type and measuring range with PROFIBUS.

Measurement type	Measuring range	Diagnostics			
		No supply voltage L+	Short-circuit to ground	Overflow/underflow	Wire break
Deactivated		*	*	*	*
Current (4-wire connection)	0 to 20 mA	x	x	x	-
	4 to 20 mA	x	x	x	x
	±20 mA	x	x	x	-
Current (2-wire connection)	0 to 20 mA	x	x	x	-
	4 to 20 mA	x	x	x	x

x = Property is allowed, - = Property is **not allowed**, * = Property is not relevant

A.2 Parameter assignment and structure of the parameter data record

Parameter assignment in the user program

The module can be re-configured in RUN (for example, the voltage or current values of selected channels can be changed in RUN without having an effect on the other channels).

Changing parameters in RUN

The "WRREC" instruction is used to transfer the parameters to the module using data record 128. The parameters set in STEP 7 are not changed in the CPU, which means the parameters set in STEP 7 are valid again after a restart.

STATUS output parameter

If errors occur when transferring parameters with the "WRREC" instruction, the module continues operation with the previous parameter assignment. The STATUS output parameter contains a corresponding error code.

You will find a description of the "WRREC" instruction and the error codes in the STEP 7 online help.

Structure of data record 128

Note

Channel 0 contains the diagnostics for the entire module.

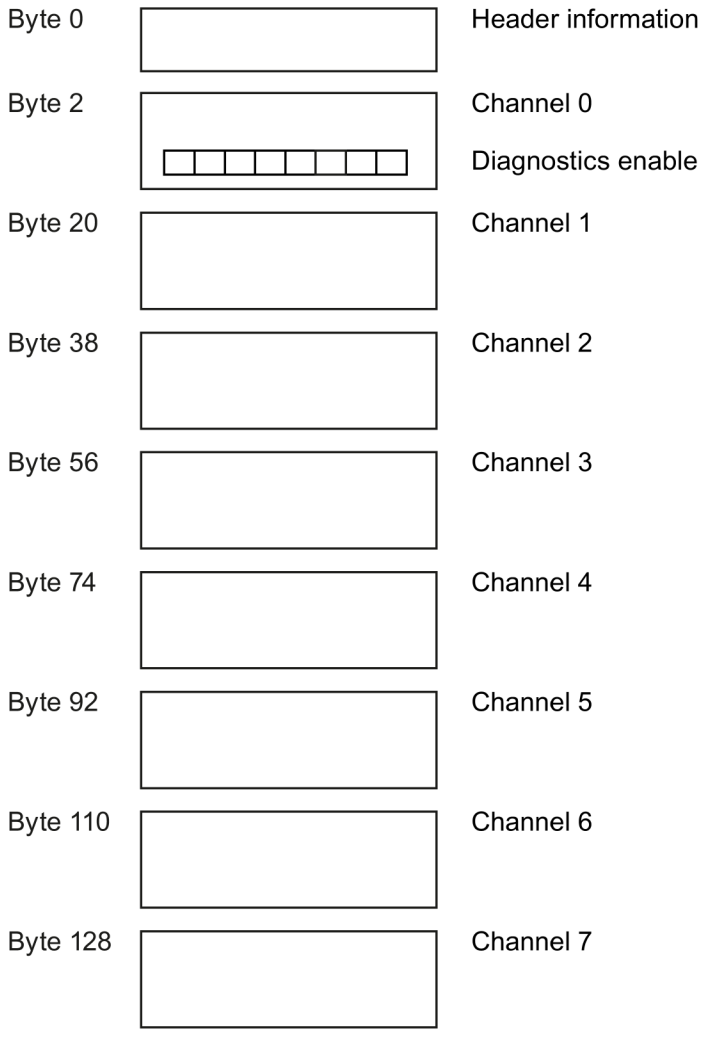

Figure A-1 Structure of data record 128

Header information

The figure below shows the structure of the header information.

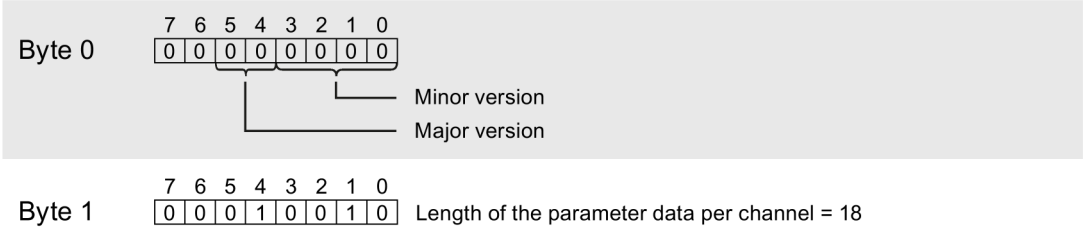

Figure A-2 Header information

Parameters

The figure below shows the structure of the parameters for channels 0 to 7.

Enable a parameter by setting the corresponding bit to "1".

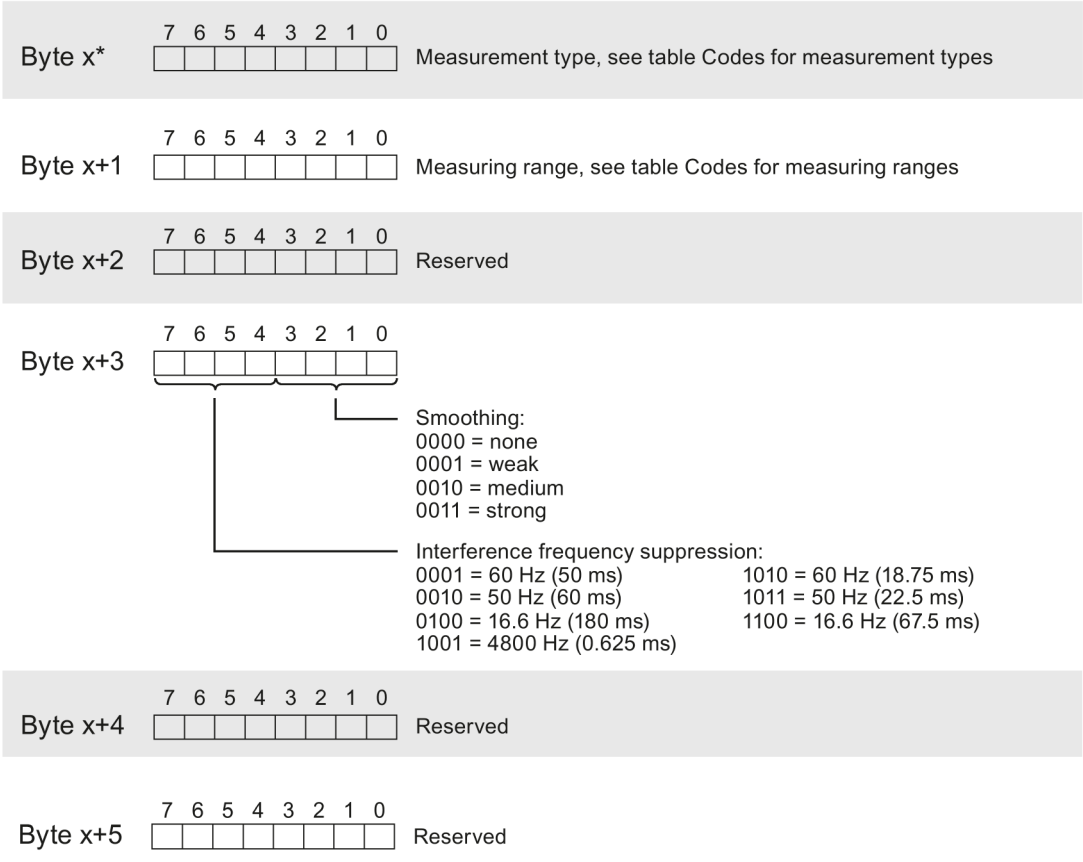

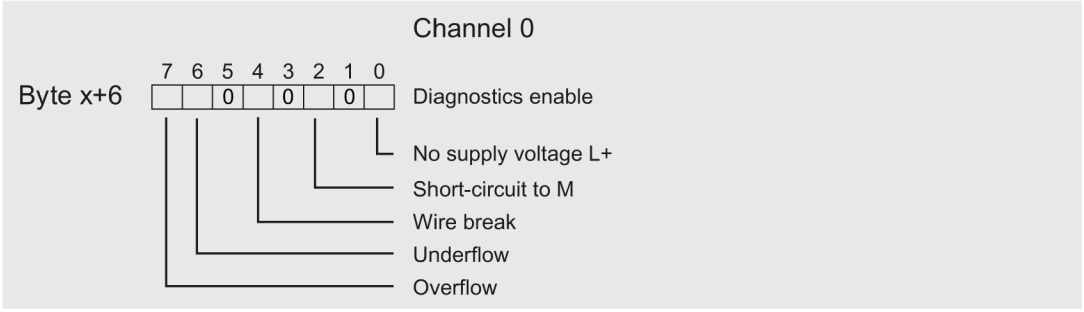

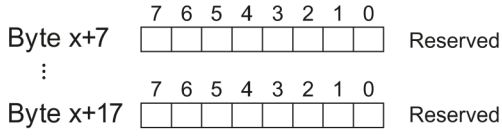

* x = 2 + (channel number × 18); channel number = 0 to 7

Figure A-3 Structure of byte x to x+17 for channels 0 to 7

Codes for measurement types

The following table contains the codes for the measurement types of the analog input module. You must enter these codes at byte x (see previous figure).

Table A- 1 Codes for measurement types

Measurement type	Code
Deactivated	0000 0000
Current, 4-wire connection	0000 0010
Current, 2-wire connection	0000 0011

Codes for measuring ranges

The following table contains the codes for the measuring ranges of the analog input module. You enter these codes at byte x+1 (see previous figure).

Table A- 2 Codes for measuring ranges

Measuring range	Code
0 to 20 mA	0000 0010
4 to 20 mA	0000 0011
±20 mA	0000 0100

Representation of analog values

B

Measured value resolution

The resolution of the analog values differs depending on the analog module and its parameter assignment.

Each analog value is written left aligned to the tags. The bits marked with "x" are set to "0".

Table B- 1 Resolution of the analog values

Resolution in bits including sign	Values		Analog value	
	Decimal	Hexadecimal	High byte	Low byte
16	1	1_H	Sign 0 0 0 0 0 0 0	0 0 0 0 0 0 0 1

B.1 Representation of input ranges

In the following tables, you can find the digitized representation of the bipolar and unipolar input ranges. The resolution is 16 bits.

Table B- 2 Bipolar input ranges

Dec. value	Measured value in %	Data word																Range
		2^{15}	2^{14}	2^{13}	2^{12}	2^{11}	2^{10}	2^{9}	2^{8}	2^{7}	2^{6}	2^{5}	2^{4}	2^{3}	2^{2}	2^{1}	2^{0}	
32767	>117.589	0	1	1	1	1	1	1	1	1	1	1	1	1	1	1	1	Overflow
32511	117.589	0	1	1	1	1	1	1	0	1	1	1	1	1	1	1	1	Overrange
27649	100.004	0	1	1	0	1	1	0	0	0	0	0	0	0	0	0	1	
27648	100.000	0	1	1	0	1	1	0	0	0	0	0	0	0	0	0	0	Nominal range
1	0.003617	0	0	0	0	0	0	0	0	0	0	0	0	0	0	0	1	
0	0.000	0	0	0	0	0	0	0	0	0	0	0	0	0	0	0	0	
-1	-0.003617	1	1	1	1	1	1	1	1	1	1	1	1	1	1	1	1	
-27648	-100.000	1	0	0	1	0	1	0	0	0	0	0	0	0	0	0	0	
-27649	-100.004	1	0	0	1	0	0	1	1	1	1	1	1	1	1	1	1	Underrange
-32512	-117.593	1	0	0	0	0	0	0	1	0	0	0	0	0	0	0	0	
-32768	<-117.593	1	0	0	0	0	0	0	0	0	0	0	0	0	0	0	0	Underflow

Table B- 3 Unipolar input ranges

Dec. value	Measured value in %	Data word																Range
		2^{15}	2^{14}	2^{13}	2^{12}	2^{11}	2^{10}	2^{9}	2^{8}	2^{7}	2^{6}	2^{5}	2^{4}	2^{3}	2^{2}	2^{1}	2^{0}	
32767	>117.589	0	1	1	1	1	1	1	1	1	1	1	1	1	1	1	1	Overflow
32511	117.589	0	1	1	1	1	1	1	0	1	1	1	1	1	1	1	1	Overrange
27649	100.004	0	1	1	0	1	1	0	0	0	0	0	0	0	0	0	1	
27648	100.000	0	1	1	0	1	1	0	0	0	0	0	0	0	0	0	0	Nominal range
1	0.003617	0	0	0	0	0	0	0	0	0	0	0	0	0	0	0	1	
0	0.000	0	0	0	0	0	0	0	0	0	0	0	0	0	0	0	0	
-1	-0.003617	1	1	1	1	1	1	1	1	1	1	1	1	1	1	1	1	Underrange
-4864	-17.593	1	1	1	0	1	1	0	1	0	0	0	0	0	0	0	0	
-32768	<-17.593	1	0	0	0	0	0	0	0	0	0	0	0	0	0	0	0	Underflow

B.2 Representation of analog values in the current measuring ranges

The following tables list the decimal and hexadecimal values (codes) of the possible current measuring ranges.

Table B- 4 Current measuring range ±20 mA

Values		Current measuring range	Range
Dec.	Hex.	±20 mA	
32767	7FFF	>23.52 mA	Overflow
32511	7EFF	23.52 mA	Overrange
27649	6C01		
27648	6C00	20 mA	Nominal range
20736	5100	15 mA	
1	1	723.4 nA	
0	0	0 mA	
-1	FFFF		
-20736	AF00	-15 mA	
-27648	9400	-20 mA	
-27649	93FF		Underrange
-32512	8100	-23.52 mA	
-32768	8000	<-23.52 mA	Underflow

Table B- 5 Current measuring ranges 0 to 20 mA and 4 to 20 mA

Values		Current measuring range		Range
Dec.	Hex.	0 to 20 mA *	4 to 20 mA	
32767	7FFF	>23.52 mA	>22.81 mA	Overflow
32511	7EFF	23.52 mA	22.81 mA	Overrange
27649	6C01			
27648	6C00	20 mA	20 mA	Nominal range
20736	5100	15 mA	16 mA	
1	1	723.4 nA	4 mA + 578.7 nA	
0	0	0 mA	4 mA	
-1	FFFF			Underrange
-4864	ED00	-3.52 mA	1.185 mA	
-32768	8000	<-3.52 mA	<1.185 mA	Underflow

* For measurement type "2-wire connection", negative values are not possible for the range "0 to 20 mA". Therefore, no underrange or underflow exists here.

SIEMENS

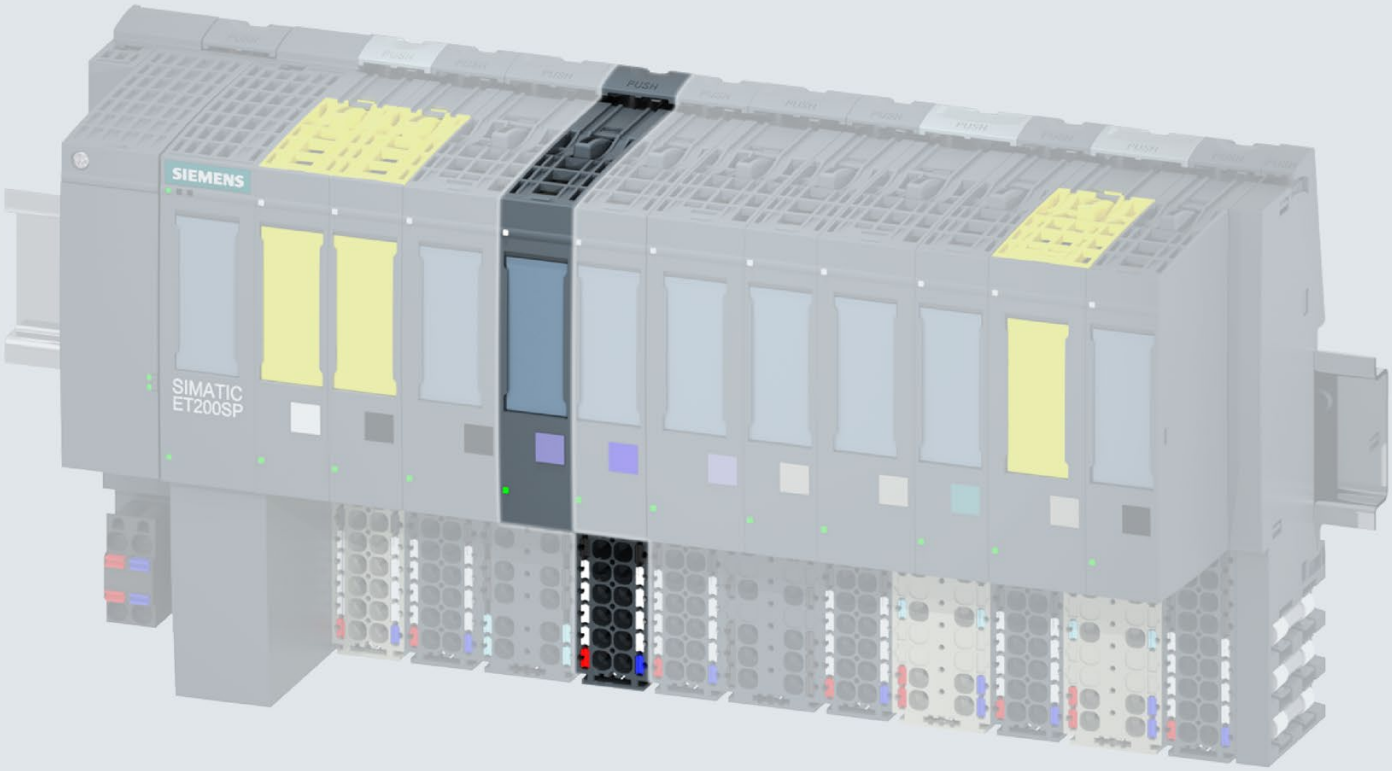

Manual

SIMATIC

ET 200SP

Analog input module
AI 4xU/I 2-wire ST (6ES7134-6HD01-0BA1)

Edition 09/2018

support.industry.siemens.com

SIEMENS

SIMATIC

ET 200SP
Analog Input Module
AI 4xU/I 2-wire ST
(6ES7134-6HD01-0BA1)

Manual

Preface

Documentation guide 1

Product overview 2

Wiring up 3

Parameters/address space 4

Interrupts/diagnostics alarms 5

Technical specifications 6

Parameter data record A

Representation of analog values B

09/2018

A5E03572832-AE

Legal information

Warning notice system

This manual contains notices you have to observe in order to ensure your personal safety, as well as to prevent damage to property. The notices referring to your personal safety are highlighted in the manual by a safety alert symbol, notices referring only to property damage have no safety alert symbol. These notices shown below are graded according to the degree of danger.

⚠ DANGER

indicates that death or severe personal injury **will** result if proper precautions are not taken.

⚠ WARNING

indicates that death or severe personal injury **may** result if proper precautions are not taken.

⚠ CAUTION

indicates that minor personal injury can result if proper precautions are not taken.

NOTICE

indicates that property damage can result if proper precautions are not taken.

If more than one degree of danger is present, the warning notice representing the highest degree of danger will be used. A notice warning of injury to persons with a safety alert symbol may also include a warning relating to property damage.

Qualified Personnel

The product/system described in this documentation may be operated only by **personnel qualified** for the specific task in accordance with the relevant documentation, in particular its warning notices and safety instructions. Qualified personnel are those who, based on their training and experience, are capable of identifying risks and avoiding potential hazards when working with these products/systems.

Proper use of Siemens products

Note the following:

⚠ WARNING

Siemens products may only be used for the applications described in the catalog and in the relevant technical documentation. If products and components from other manufacturers are used, these must be recommended or approved by Siemens. Proper transport, storage, installation, assembly, commissioning, operation and maintenance are required to ensure that the products operate safely and without any problems. The permissible ambient conditions must be complied with. The information in the relevant documentation must be observed.

Trademarks

All names identified by ® are registered trademarks of Siemens AG. The remaining trademarks in this publication may be trademarks whose use by third parties for their own purposes could violate the rights of the owner.

Disclaimer of Liability

We have reviewed the contents of this publication to ensure consistency with the hardware and software described. Since variance cannot be precluded entirely, we cannot guarantee full consistency. However, the information in this publication is reviewed regularly and any necessary corrections are included in subsequent editions.

Siemens AG
Division Digital Factory
Postfach 48 48
90026 NÜRNBERG
GERMANY

A5E03572832-AE
℗ 09/2018 Subject to change

Copyright © Siemens AG 2012 - 2018.
All rights reserved

Preface

Purpose of the documentation

This manual supplements the system manual ET 200SP distributed I/O system (http://support.automation.siemens.com/WW/view/en/58649293).

Functions that generally relate to the system are described in this manual.

The information provided in this manual and in the system/function manuals supports you in commissioning the system.

Changes compared to previous version

Compared to the previous version, this manual contains the following change:

Wiring and block diagram has been modified.

Conventions

CPU: When the term "CPU" is used in the following, it applies to the CPUs of the S7-1500 automation system as well as to the CPUs/interface modules of the ET 200SP distributed I/O system.

STEP 7: In this documentation, "STEP 7" is used as a synonym for all versions of the configuration and programming software "STEP 7 (TIA Portal)".

Please also observe notes marked as follows:

Note

A note contains important information on the product described in the documentation, on the handling of the product or on the section of the documentation to which particular attention should be paid.

Security information

Siemens provides products and solutions with industrial security functions that support the secure operation of plants, systems, machines and networks.

In order to protect plants, systems, machines and networks against cyber threats, it is necessary to implement – and continuously maintain – a holistic, state-of-the-art industrial security concept. Siemens' products and solutions constitute one element of such a concept.

Customers are responsible for preventing unauthorized access to their plants, systems, machines and networks. Such systems, machines and components should only be connected to an enterprise network or the internet if and to the extent such a connection is necessary and only when appropriate security measures (e.g. firewalls and/or network segmentation) are in place.

For additional information on industrial security measures that may be implemented, please visit (https://www.siemens.com/industrialsecurity).

Siemens' products and solutions undergo continuous development to make them more secure. Siemens strongly recommends that product updates are applied as soon as they are available and that the latest product versions are used. Use of product versions that are no longer supported, and failure to apply the latest updates may increase customers' exposure to cyber threats.

To stay informed about product updates, subscribe to the Siemens Industrial Security RSS Feed under (https://www.siemens.com/industrialsecurity).

Table of contents

Preface 3

1 Documentation guide 6

2 Product overview 11

2.1 Properties 11

3 Wiring up 14

3.1 Wiring and block diagram 14

4 Parameters/address space 16

4.1 Measuring types and ranges 16

4.2 Parameters 16

4.3 Explanation of the parameters 19

4.4 Address space 21

5 Interrupts/diagnostics alarms 22

5.1 Status and error display 22

5.2 Interrupts 24

5.3 Diagnostics alarms 25

6 Technical specifications 26

6.1 Technical specifications 26

A Parameter data record 31

A.1 Dependencies when configuring with GSD file 31

A.2 Parameter assignment and structure of the parameter data record 32

A.3 Error in transferring the data record analog input 36

B Representation of analog values 37

B.1 Representation of input ranges 38

B.2 Representation of analog values in voltage measuring ranges 39

B.3 Representation of analog values in the current measuring ranges 40

Documentation guide

1

The documentation for the SIMATIC ET 200SP distributed I/O system is arranged into three areas.
This arrangement enables you to access the specific content you require.

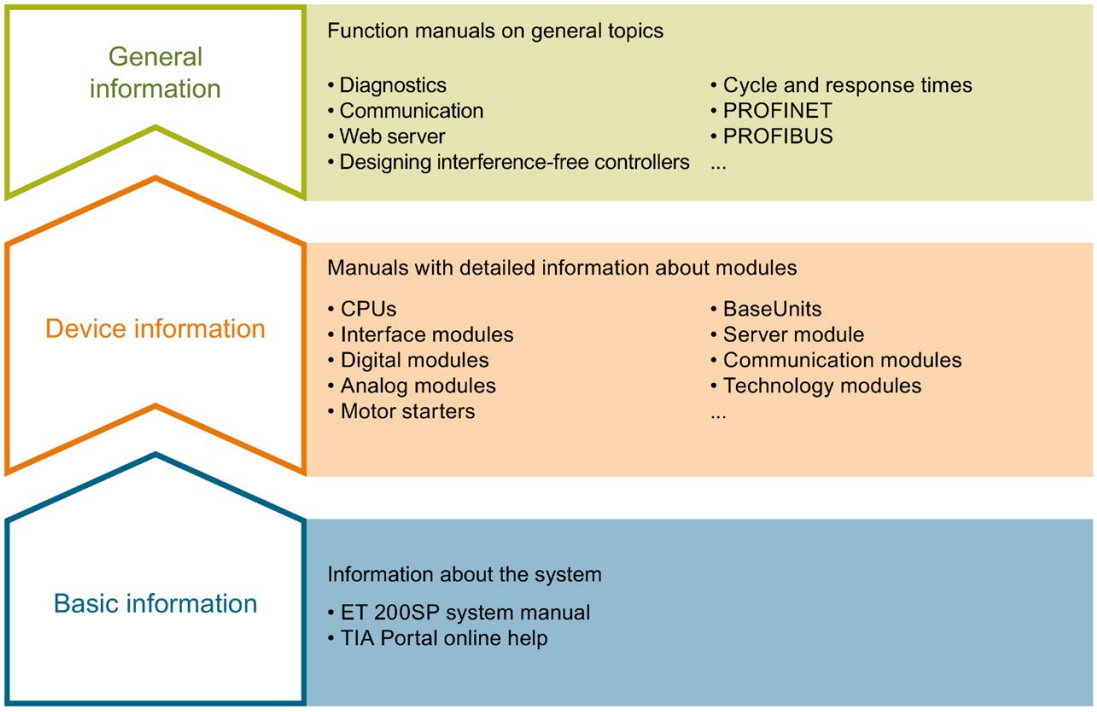

Basic information

The system manual describes in detail the configuration, installation, wiring and commissioning of the SIMATIC ET 200SP. distributed I/O system. The STEP 7 online help supports you in the configuration and programming.

Device information

Product manuals contain a compact description of the module-specific information, such as properties, wiring diagrams, characteristics and technical specifications.

General information

The function manuals contain detailed descriptions on general topics regarding the SIMATIC ET 200SP distributed I/O system, e.g. diagnostics, communication, Web server, motion control and OPC UA.

You can download the documentation free of charge from the Internet (http://w3.siemens.com/mcms/industrial-automation-systems-simatic/en/manual-overview/tech-doc-et200/Pages/Default.aspx).

Changes and supplements to the manuals are documented in a Product Information.

You can download the product information free of charge from the Internet (https://support.industry.siemens.com/cs/us/en/view/73021864).

Manual Collection ET 200SP

The Manual Collection contains the complete documentation on the SIMATIC ET 200SP distributed I/O system gathered together in one file.

You can find the Manual Collection on the Internet (http://support.automation.siemens.com/WW/view/en/84133942).

"mySupport"

With "mySupport", your personal workspace, you make the most of your Industry Online Support.

In "mySupport" you can store filters, favorites and tags, request CAx data and put together your personal library in the Documentation area. Furthermore, your data is automatically filled into support requests and you always have an overview of your current requests.

You need to register once to use the full functionality of "mySupport".

You can find "mySupport" in the Internet (https://support.industry.siemens.com/My/ww/en).

"mySupport" - Documentation

In the Documentation area of "mySupport", you have the possibility to combine complete manuals or parts of them to make your own manual.
You can export the manual in PDF format or in an editable format.

You can find "mySupport" - Documentation in the Internet (http://support.industry.siemens.com/My/ww/en/documentation).

"mySupport" - CAx Data

In the CAx Data area of "mySupport", you can have access the latest product data for your CAx or CAe system.

You configure your own download package with a few clicks.

In doing so you can select:

- Product images, 2D dimension drawings, 3D models, internal circuit diagrams, EPLAN macro files
- Manuals, characteristics, operating manuals, certificates
- Product master data

You can find "mySupport" - CAx Data in the Internet (http://support.industry.siemens.com/my/ww/en/CAxOnline).

Application examples

The application examples support you with various tools and examples for solving your automation tasks. Solutions are shown in interplay with multiple components in the system - separated from the focus in individual products.

You can find the application examples on the Internet (https://support.industry.siemens.com/sc/ww/en/sc/2054).

TIA Selection Tool

With the TIA Selection Tool, you can select, configure and order devices for Totally Integrated Automation (TIA).
This tool is the successor of the SIMATIC Selection Tool and combines the known configurators for automation technology into one tool.
With the TIA Selection Tool, you can generate a complete order list from your product selection or product configuration.

You can find the TIA Selection Tool on the Internet (http://w3.siemens.com/mcms/topics/en/simatic/tia-selection-tool).

SIMATIC Automation Tool

You can use the SIMATIC Automation Tool to run commissioning and maintenance activities simultaneously on various SIMATIC S7 stations as a bulk operation independently of the TIA Portal.

The SIMATIC Automation Tool provides a multitude of functions:

- Scanning of a PROFINET/Ethernet network and identification of all connected CPUs
- Address assignment (IP, subnet, gateway) and station name (PROFINET device) to a CPU
- Transfer of the data and the programming device/PC time converted to UTC time to the module
- Program download to CPU
- Operating mode switchover RUN/STOP
- Localization of the CPU by means of LED flashing
- Reading out CPU error information
- Reading the CPU diagnostic buffer
- Reset to factory settings
- Updating the firmware of the CPU and connected modules

You can find the SIMATIC Automation Tool on the Internet (https://support.industry.siemens.com/cs/ww/en/view/98161300).

PRONETA

With SIEMENS PRONETA (PROFINET network analysis), you analyze the plant network during commissioning. PRONETA features two core functions:

- The topology overview independently scans PROFINET and all connected components.
- The IO check is a fast test of the wiring and the module configuration of a system.

You can find SIEMENS PRONETA on the Internet (https://support.industry.siemens.com/cs/ww/en/view/67460624).

SINETPLAN

SINETPLAN, the Siemens Network Planner, supports you in planning automation systems and networks based on PROFINET. The tool facilitates professional and predictive dimensioning of your PROFINET installation as early as in the planning stage. In addition, SINETPLAN supports you during network optimization and helps you to exploit network resources optimally and to plan reserves. This helps to prevent problems in commissioning or failures during productive operation even in advance of a planned operation. This increases the availability of the production plant and helps improve operational safety.

The advantages at a glance

- Network optimization thanks to port-specific calculation of the network load
- Increased production availability thanks to online scan and verification of existing systems
- Transparency before commissioning through importing and simulation of existing STEP 7 projects
- Efficiency through securing existing investments in the long term and optimal exploitation of resources

You can find SINETPLAN on the Internet (https://www.siemens.com/sinetplan).

Product overview

2

2.1 Properties

Article number

6ES7134-6HD01-0BA1 (number in pack: 1 unit)

6ES7134-6HD01-2BA1 (number in pack: 10 units)

View of the module

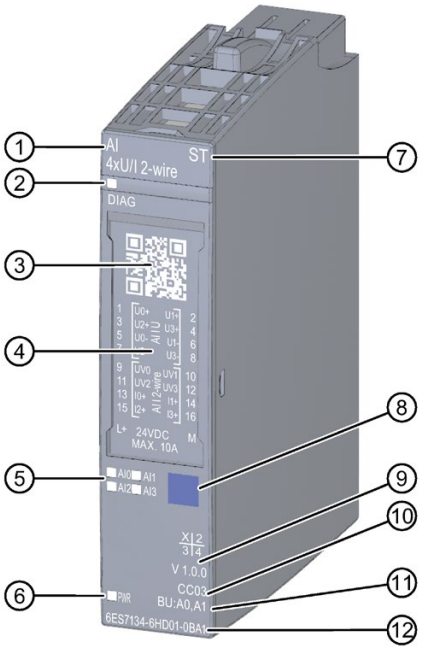

① Module type and name
② LED for diagnostics
③ 2D matrix code
④ Wiring diagram
⑤ LEDs for channel status
⑥ LED for supply voltage
⑦ Function class
⑧ Color coding module type
⑨ Function and firmware version
⑩ Color code for selecting the color identification labels
⑪ BU type
⑫ Article number

Figure 2-1 View of the module AI 4×U/I 2-wire ST

Properties

The module has the following technical properties:

- Analog input module with 4 inputs
- Measuring type voltage and current for 2-wire transducer (can be set for each channel)
- Input ranges for voltage measurement:
  - ±10 V, resolution 16 bits including sign
  - ±5 V, resolution 16 bits including sign
  - 1 to 5 V, resolution 15 bits
  - 0 to 10 V, resolution 15 bits
- Input ranges for current measurement:
  - 4 to 20 mA, resolution 15 bits
  - 0 to 20 mA, resolution 15 bits
- Electrically isolated from the supply voltage L+ (only for voltage measuring type)
- Permitted common mode voltage: 10 V_{ss}
- Configurable diagnostics per module

The module supports the following functions:

Table 2- 1 Version dependencies of the functions

Function	HW version	FW version	STEP 7		GSD file	
			TIA Portal	V5.x	PROFINET IO	PROFIBUS DP
Firmware update	FS01	V2.0.0 or higher	V14 or higher with HSP 0239	V5.5 SP3 or higher with HSP 0227 V7.0 or higher	X	X
Identification data I&M0 to I&M3	FS01	V2.0.0 or higher	V14 or higher with HSP 0239	V5.5 SP3 or higher with HSP 0227 V7.0 or higher	X	X
Reconfiguration in RUN	FS01	V2.0.0 or higher	V14 or higher with HSP 0239	V5.5 SP3 or higher with HSP 0227 V7.0 or higher	X	X
PROFIenergy	FS01	V2.0.0 or higher	V14 or higher with HSP 0239	V5.5 SP3 or higher with HSP 0227 V7.0 or higher	X	X
Value status	FS01	V2.0.0 or higher	V14 or higher with HSP 0239	V5.5 SP3 or higher with HSP 0227 V7.0 or higher	X	X

Accessories

The following accessories must be ordered separately:

- Labeling strips
- Color identification labels
- Reference identification label
- Shield connector

See also

You will find additional information on the accessories in the ET 200SP distributed I/O system (https://support.industry.siemens.com/cs/ww/en/view/58649293) system manual.

Wiring up

3

3.1 Wiring and block diagram

This section includes the block diagram of the AI 4xU/I 2-wire ST module with the terminal assignments.

You can find information on wiring the BaseUnit in the ET 200SP distributed I/O system (http://support.automation.siemens.com/WW/view/en/58649293) system manual.

Note

You can use and combine the different wiring options for all channels.

Note

The load group of the module must begin with a light BaseUnit. Keep this in mind also during the configuration.

Wiring: Voltage and current measurement 2-wire connection

The following figure shows the block diagram and an example of the terminal assignment of the analog input module AI 4xU/I 2-wire ST on the BaseUnit BU type A0/A1.

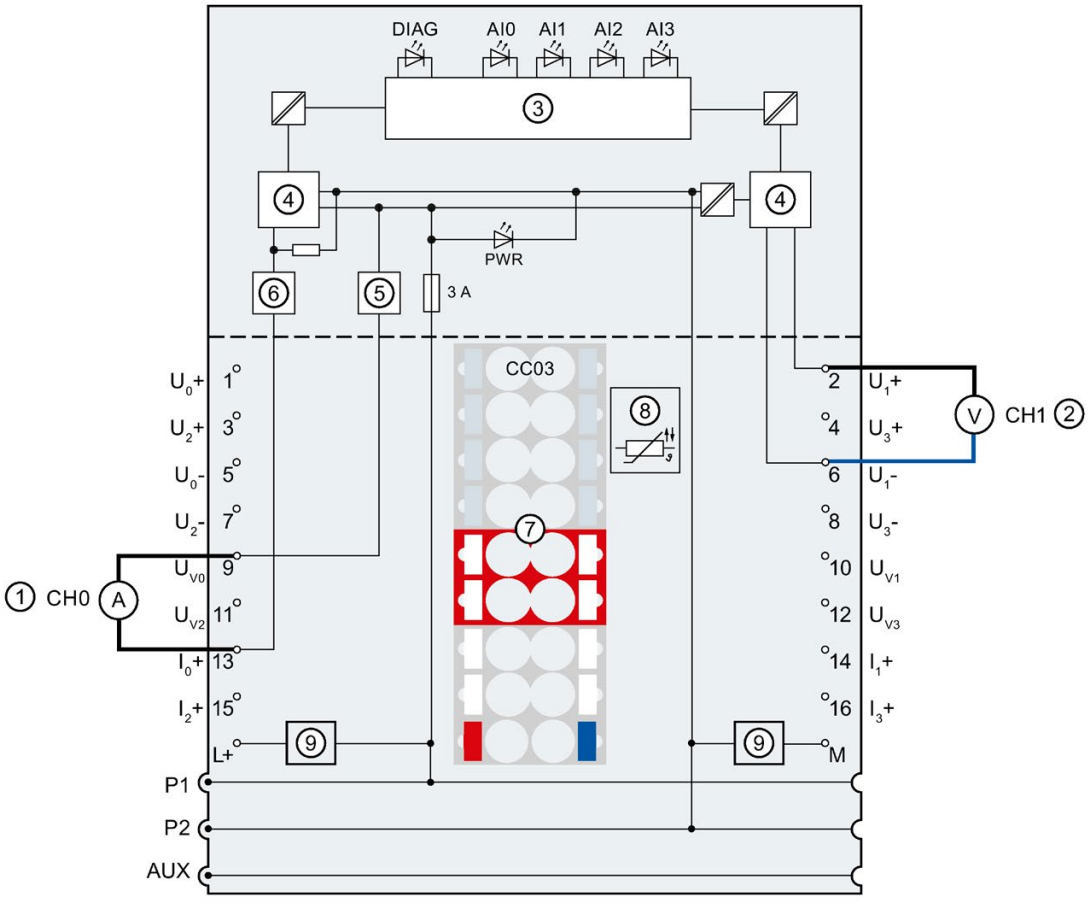

①	2-wire connection for current measurement (2-wire transducer)	U_n+	Voltage input positive, channel n
②	2-wire connection for voltage measurement	U_n-	Voltage input negative, channel n
③	Backplane bus interface	U_{vn}	Supply voltage, channel n
④	Analog-to-digital converter (ADC)	I_n+	Current input positive, channel n
⑤	Short-circuit protection	L+	24 V DC (infeed only with light BaseUnit)
⑥	Current limitation	M	Ground
⑦	Color-coded label with color code CC03 (optional)	P1, P2, AUX	Internal self-assembling voltage buses Connection to left (dark BaseUnit) Connection to left interrupted (light BaseUnit)
⑧	Temperature recording for BU type A1 only (function cannot be used for this module)	DIAG	Diagnostics LED (green, red)
⑨	Supply voltage filter circuit (only when light BaseUnit is present)	AI0, AI1, AI2, AI3	Channel status LED (green)
		PWR	Power LED (green)

Figure 3-1 Wiring and block diagram for voltage and current measurement

Parameters/address space 4

4.1 Measuring types and ranges

The analog input module AI 4×U/I 2-wire ST has the following measuring ranges:

Table 4- 1 Measuring ranges

Measuring type	Measuring range	Resolution
Voltage	± 5 V	16 bits including sign
	±10 V	16 bits including sign
	1 to 5 V	15 bits
	0 to 10 V	15 bits
Current (2-wire transducer)	0 mA to 20 mA	15 bits
	4 to 20 mA	15 bits

You will find the tables of the measuring ranges as well as overflow, overrange, etc., in the section Representation of analog values (Page 37).

4.2 Parameters

Parameters of the AI 4xU/I 2-wire ST

Specify the module properties with the various parameters in the course of your STEP 7 configuration. The following table lists the configurable parameters. The effective range of the configurable parameters depends on the type of configuration. The following configurations are possible:

- Central operation with an ET 200SP CPU
- Distributed operation on PROFINET IO in an ET 200SP system
- Distributed operation on PROFIBUS DP in an ET 200SP system

When assigning parameters in the user program, use the "WRREC" instruction to transfer the parameters to the module using the data records; refer to the section Parameter assignment and structure of the parameter data record (Page 32).

The following parameter settings are possible:

Table 4- 2 Configurable parameters and their defaults (GSD file)

Parameter	Value range	Default	Configuration in RUN	Effective range with configuration software, e.g. STEP 7 (TIA Portal)	
				GSD file PROFINET IO	GSD file PROFIBUS DP
Diagnostics No supply voltage L+	• Disable • Enable	Disable	Yes	Module	Module
Diagnostics Short-circuit to ground	• Disable • Enable	Disable	Yes	Module	Module
Diagnostics Overflow	• Disable • Enable	Disable	Yes	Module	Module
Diagnostics Underflow	• Disable • Enable	Disable	Yes	Module	Module
Diagnostics Wire break	• Disable • Enable	Disable	Yes	Module	Module
Measuring type/range	• deactivated • Voltage +/- 5 V • Voltage +/- 10 V • Voltage 1..5 V • Voltage 0..10 V • Current (2-wire transducer) 0..20 mA • Current (2-wire transducer) 4..20 mA	Current (2-wire transducer) 4..20 mA	Yes	Channel	Channel
Smoothing	• None • weak • medium • strong	None	Yes	Channel	Channel

Parameter	Value range	Default	Configuration in RUN	Effective range with configuration software, e.g. STEP 7 (TIA Portal)	
				GSD file PROFINET IO	GSD file PROFIBUS DP
Interference frequency suppression [2]	• 60 Hz • 50 Hz[1] • 16.6 Hz	50 Hz	Yes	Channel	Module [3]
Potential group	• Use potential group of the left module (module plugged into a dark BaseUnit) • Enable new potential group (module plugged into light BaseUnit)	Use potential group of the left module	No	Module	Module

[1] ...Interference frequency suppression: Noise at 400 Hz is automatically included in the filtering at 50 Hz.

[2] The settings in the "Interference frequency suppression" parameter have a direct effect on the conversion time of the channel. The analog value is therefore also affected by additionally set filtering via the "Smoothing" parameter.

[2] Due to the limited number of parameters of a maximum of 244 bytes per ET 200SP station with a PROFIBUS GSD configuration, the parameter assignment options are restricted. The parameter length of the I/O module is 5 bytes with PROFIBUS GSD configuration. If necessary, you can set this parameter by using the data record 128, see the appendix "Parameter data set".

Note

Unused channels

Disable unused channels in the parameter assignment to improve the cycle time of the module.

A disabled channel always returns the value $7FFF_H$.

4.3 Explanation of the parameters

Diagnostics no supply voltage L+

Enabling of the diagnostics for no or insufficient supply voltage L+.

Diagnostics Short-circuit to ground

Enabling of the diagnostics in the event of a short-circuit of the encoder supply to ground or of an input to the encoder supply. Short-circuit is also detected in the range 1 to 5 V, when both input signals are short-circuited.

The short-circuit and underflow diagnostics can be activated simultaneously. If both diagnostics events occur simultaneously, however, the short-circuit diagnostics suppresses the underflow diagnostics. Short-circuit is output as the diagnostics event.

Diagnostics overflow

Enabling of the diagnostics when the measured value exceeds the overrange.

Diagnostics underflow

Enabling of the diagnostics when the measured value falls below the underrange.

Diagnostics Wire break

Enabling of the diagnostics if the module has no current flow or the current is too weak to be measured at the relevant input.

The wire break and underflow diagnostics can be activated simultaneously. If both diagnostics events occur simultaneously, the wire break diagnostics info is output.

Type/range of measurement

Refer to the section Measuring types and ranges (Page 16).

Smoothing

The individual measured values are smoothed by filtering. The smoothing can be set in 4 levels.

Smoothing time = number of module cycles (k) x cycle time of the module.

The following figure shows how many module cycles it takes for the smoothed analog value to approach 100%, depending on the configured smoothing. This applies to every signal change at the analog input.

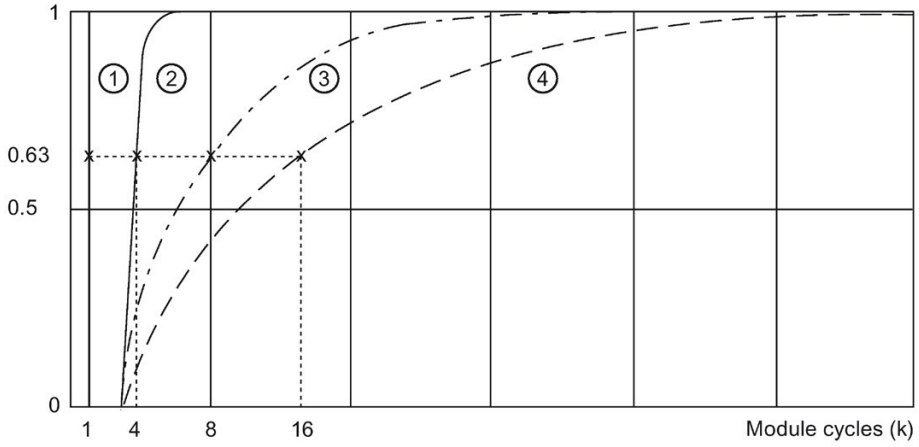

① No smoothing (k = 1)
② Weak (k = 4)
③ Medium (k = 8)
④ Strong (k = 16)

Figure 4-1 Smoothing with AI 4xU/I 2-wire ST

Interference frequency suppression

Suppresses the interference affecting analog input modules that is caused by the frequency of the AC voltage network used.

The frequency of the AC voltage network can negatively affect the measured value, in particular when measuring in the low voltage range and with thermocouples. With this parameter, the user specifies the supply frequency that is predominant in the plant.

Potential group

A potential group consists of a group of directly adjacent I/O modules within an ET 200SP station, which are supplied via a common supply voltage.

A potential group begins with a light-colored BaseUnit through which the required voltage is supplied for all modules of the potential group. The light-colored BaseUnit interrupts the three self-assembling voltage buses P1, P2 and AUX to the left neighbor.

All additional I/O modules of this potential group are plugged into dark-colored BaseUnits. You take the potential of the self-assembling voltage buses P1, P2 and AUX from the left neighbor.

A potential group ends with the dark-colored BaseUnit, which follows a light-colored BaseUnit or server module in the station configuration.

4.4 Address space

Configuration options

The following configurations are possible:

- Configuration 1: Without value status
- Configuration 2: With value status

Evaluating the value status

If you enable the value status for the analog module, an additional byte is occupied in the input address space. Bits 0 to 3 in this byte are assigned to a channel. They provide information about the validity of the analog value.

Bit = 1: No fault is present on the channel.

Bit = 0: Channel is disabled or there is a fault/error on the module.

If a fault/error occurs on a channel with this module, the value status for all channels is 0.

Address space

The following figure shows the assignment of the address space for the AI 4×U/I 2-wire ST with value status (Quality Information (QI)). The addresses for the value status are only available if the value status is enabled.

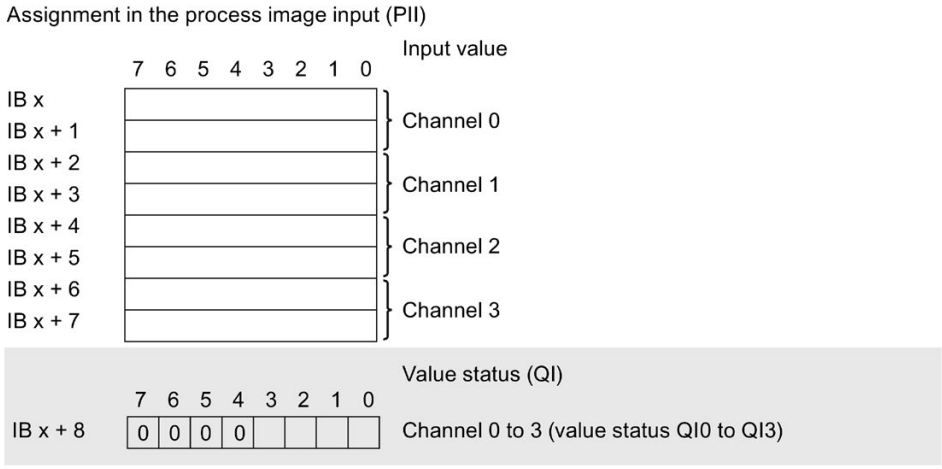

Figure 4-2 Address space of the AI 4×U/I 2-wire ST with value status

Interrupts/diagnostics alarms

5

5.1 Status and error display

LED display

The figure below shows the LED displays (status and error displays) of the AI 4xU/I 2-wire ST.

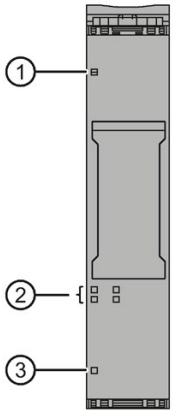

① DIAG (green/red)
② Channel status (green)
③ PWR (green)

Figure 5-1 LED display

Meaning of the LED displays

The following tables show the meaning of the status and error displays. Measures for dealing with diagnostics alarms can be found in the section Diagnostics alarms (Page 25).

DIAG LED

Table 5- 1 DIAG LED fault/error display

DIAG LED	Meaning
Off	Backplane bus supply of the ET 200SP not OK
Flashes	Module parameters not assigned
On	Module parameters assigned and no module diagnostics
Flashes	Module parameters assigned and module diagnostics

Channel status LED

Table 5- 2 Status display of the channel status LED

Channel status LED	Meaning
Off	Channel disabled
On	Channel activated

PWR LED

Table 5- 3 Status display of the PWR LED

PWR LED	Meaning
Off	No supply voltage L+
On	Supply voltage L+ present

5.2 Interrupts

The analog input module AI 4×U/I 2-wire ST supports diagnostics interrupts.

Diagnostics interrupt

The module generates a diagnostics interrupt for the following events:

- Channel temporarily unavailable
- Short-circuit (current, voltage 1..5 V)
- Wire break (current 4 to 20 mA)
- Low limit violated
- High limit violated
- Error
- Parameter assignment error
- Supply voltage missing

5.3 Diagnostics alarms

A diagnostics alarm is generated and the DIAG-LED flashes on the module for each diagnostics event. You can read out the diagnostics alarms, for example, in the diagnostics buffer of the CPU. You can evaluate the error codes with the user program.

Table 5- 4 Diagnostics alarms, their meaning and how to deal with them

Diagnostics alarm	Error code	Meaning	Solution
Short-circuit (current)*	1_H	Sensor supply to ground	Correct the module/encoder tuning
		Input to sensor supply	
Short-circuit (1 to 5 V) **	1_H	Short-circuit of input signal	Correct the module/encoder tuning
		Open input	Connect input
Wire break (current) **	6_H	Impedance of encoder circuit too high.	Use a different encoder type or modify the wiring, for example, using cables with a larger cross-section
		Wire break between the module and sensor	Connect the cable
		Channel not connected (open)	• Disable diagnostics • Connect the sensor contacts
High limit violated	7_H	Value is above the overrange.	Correct the module/encoder tuning
Low limit violated	8_H	Value is below the underrange.	Correct the module/encoder tuning
Error	9_H	Internal module error occurred.	Replace module
Parameter assignment error	10_H	• The module cannot evaluate parameters for the channel. • Incorrect parameter assignment.	Correct the parameter assignment
Supply voltage missing	11_H	No or insufficient supply voltage L+	• Check supply voltage L+ on the BaseUnit • Check BaseUnit type
Channel temporarily unavailable	$1F_H$	Firmware update in progress or update has been canceled. The module does not read any process values in this state.	• Wait for firmware update. • Restart the firmware update.

* Short-circuit of the encoder supply to ground and/or of the input signal to the encoder supply of a channel can have a temporary effect on other channels (duration < 0.5 s). This means the short-circuit diagnostics can also be reported for unaffected channels and/or the measured value can be affected temporarily.

** In case of activated smoothing the module calculates the measured values across several module cycles. The module only generates the short circuit or wire break diagnosis if the smoothed measured value is stable. After the short-circuit or wire break has been eliminated, the module supplies stable measured values again depending on the set smoothing level.

Technical specifications

6

6.1 Technical specifications

Technical specifications of the AI 4×U/I 2-wire ST

The following table shows the technical specifications as of 09/2018. You will find a data sheet including daily updated technical specifications on the Internet (https://support.industry.siemens.com/cs/ww/en/pv/6ES7134-6HD01-0BA1/td?dl=en).

Article number	6ES7134-6HD01-0BA1
General information	
Product type designation	ET 200SP, AI 4x U/I 2-wire, P. unit 1
Firmware version	V2.0
• FW update possible	Yes
usable BaseUnits	BU type A0, A1
Color code for module-specific color identification plate	CC03
Product function	
• I&M data	Yes; I&M0 to I&M3
• Measuring range scalable	No
Engineering with	
• STEP 7 TIA Portal configurable/integrated as of version	V14 / -
• STEP 7 configurable/integrated as of version	V5.6 and higher
• PCS 7 configurable/integrated as of version	V8.1 SP1
• PROFIBUS as of GSD version/GSD revision	One GSD file each, Revision 3 and 5 and higher
• PROFINET as of GSD version/GSD revision	GSDML V2.3
Operating mode	
• Oversampling	No
• MSI	No
CiR – Configuration in RUN	
Reparameterization possible in RUN	Yes
Calibration possible in RUN	No

Article number	6ES7134-6HD01-0BA1
Supply voltage	
Rated value (DC)	24 V
permissible range, lower limit (DC)	19.2 V
permissible range, upper limit (DC)	28.8 V
Reverse polarity protection	Yes
Input current	
Current consumption, max.	37 mA; without sensor supply
24 V encoder supply	
• 24 V	Yes
• Short-circuit protection	Yes
• Output current, max.	20 mA; max. 50 mA per channel for a duration < 10 s
Power loss	
Power loss, typ.	0.85 W; Without encoder supply voltage
Address area	
Address space per module	
• Address space per module, max.	8 byte; + 1 byte for QI information
Hardware configuration	
Automatic encoding	
• Mechanical coding element	Yes
Selection of BaseUnit for connection variants	
• 2-wire connection	BU type A0, A1
Analog inputs	
Number of analog inputs	4; Differential inputs
permissible input voltage for voltage input (destruction limit), max.	30 V
permissible input current for current input (destruction limit), max.	50 mA
Cycle time (all channels), min.	Sum of the basic conversion times and additional processing times (depending on the parameterization of the active channels)
Input ranges (rated values), voltages	
• 0 to +10 V	Yes; 15 bit
• Input resistance (0 to 10 V)	120 kΩ
• 1 V to 5 V	Yes; 15 bit
• Input resistance (1 V to 5 V)	120 kΩ
• -10 V to +10 V	Yes; 16 bit incl. sign
• Input resistance (-10 V to +10 V)	120 kΩ
• -5 V to +5 V	Yes; 16 bit incl. sign
• Input resistance (-5 V to +5 V)	120 kΩ

Article number	6ES7134-6HD01-0BA1
Input ranges (rated values), currents	
• 0 to 20 mA	Yes; 15 bit
• Input resistance (0 to 20 mA)	100 Ω; + approx. 0.7 V diode forward voltage
• 4 mA to 20 mA	Yes; 15 bit
• Input resistance (4 mA to 20 mA)	100 Ω; + approx. 0.7 V diode forward voltage
Cable length	
• shielded, max.	1 000 m; 200 m for voltage measurement
Analog value generation for the inputs	
Measurement principle	integrating (Sigma-Delta)
Integration and conversion time/resolution per channel	
• Resolution with overrange (bit including sign), max.	16 bit
• Integration time, parameterizable	Yes
• Interference voltage suppression for interference frequency f1 in Hz	16.6 / 50 / 60 Hz
• Conversion time (per channel)	180 / 60 / 50 ms
Smoothing of measured values	
• Number of smoothing levels	4; None; 4/8/16 times
• parameterizable	Yes
Encoder	
Connection of signal encoders	
• for voltage measurement	Yes
• for current measurement as 2-wire transducer	Yes
– Burden of 2-wire transmitter, max.	650 Ω
• for current measurement as 4-wire transducer	No
Errors/accuracies	
Linearity error (relative to input range), (+/-)	0.01 %
Temperature error (relative to input range), (+/-)	0.005 %/K
Crosstalk between the inputs, min.	50 dB
Repeat accuracy in steady state at 25 °C (relative to input range), (+/-)	0.05 %
Operational error limit in overall temperature range	
• Voltage, relative to input range, (+/-)	0.5 %
• Current, relative to input range, (+/-)	0.5 %

Article number	6ES7134-6HD01-0BA1
Basic error limit (operational limit at 25 °C)	
• Voltage, relative to input range, (+/-)	0.3 %
• Current, relative to input range, (+/-)	0.3 %
Interference voltage suppression for f = n x (f1 +/- 1 %), f1 = interference frequency	
• Series mode interference (peak value of interference < rated value of input range), min.	70 dB
• Common mode voltage, max.	10 V
• Common mode interference, min.	90 dB
Isochronous mode	
Isochronous operation (application synchronized up to terminal)	No
Interrupts/diagnostics/status information	
Diagnostics function	Yes
Alarms	
• Diagnostic alarm	Yes
• Limit value alarm	No
Diagnostic messages	
• Monitoring the supply voltage	Yes
• Wire-break	Yes; at 4 to 20 mA
• Short-circuit	Yes; with 1 to 5 V or 2-wire mode: Short-circuit of the encoder supply to ground or of an input to the encoder supply
• Group error	Yes
• Overflow/underflow	Yes
Diagnostics indication LED	
• Monitoring of the supply voltage (PWR-LED)	Yes; Green LED
• Channel status display	Yes; Green LED
• for channel diagnostics	No
• for module diagnostics	Yes; Green/red LED
Potential separation	
Potential separation channels	
• between the channels	Yes; channel group-specific between 2-wire current input group and voltage input group
• between the channels and backplane bus	Yes
• between the channels and the power supply of the electronics	Yes; only for voltage inputs

Article number	6ES7134-6HD01-0BA1
Permissible potential difference	
between the inputs (UCM)	10 V DC
Isolation	
Isolation tested with	707 V DC (type test)
Ambient conditions	
Ambient temperature during operation	
• horizontal installation, min.	-30 °C; No condensation
• horizontal installation, max.	60 °C
• vertical installation, min.	-30 °C; No condensation
• vertical installation, max.	50 °C
• Vertical installation, min.	-30 °C; No condensation
• Vertical installation, max.	50 °C
• Horizontal installation, min.	-30 °C; No condensation
• Horizontal installation, max.	50 °C
Altitude during operation relating to sea level	
• Ambient air temperature-barometric pressure-altitude	Up to max. 5 000 m, at installation height > 2 000 m additional restrictions, see manual for details
Dimensions	
Width	15 mm
Height	73 mm
Depth	58 mm
Weights	
Weight, approx.	32 g

Dimension drawing

See manual ET 200SP BaseUnits
(http://support.automation.siemens.com/WW/view/en/59753521)

Parameter data record

A

A.1 Dependencies when configuring with GSD file

When configuring the module with a GSD file, remember that the settings of some parameters are dependent on each other.

Configuring with a PROFINET GSD file

The table lists the properties and their dependencies on the measuring type and measuring range for PROFINET.

Measuring type	Measuring range	Diagnostics				
		No supply voltage L+	Short-circuit to M	Overflow	Underflow	Wire break
deactivated		*	*	*	*	*
Voltage	±5 V	x	-	x	x	-
	±10 V	x	-	x	x	-
	1..5 V	x	x	x	x	-
	0..10 V	x	-	x	x	-
Current (2-wire transducer)	0..20 mA	x	x	x	x	-
	4..20 mA	x	x	x	x	x

x = Property is allowed, - = Property is **not allowed**, * = Property is not relevant

Configuring with a PROFIBUS GSD file

The table lists the properties and their dependencies on the measuring type and measuring range for PROFIBUS.

Measuring type	Measuring range	Diagnostics			
		No supply voltage L+	Short-circuit to M	Overflow/ Underflow	Wire break
deactivated		*	*	*	*
Voltage	±5 V	x	-	x	-
	±10 V	x	-	x	-
	1..5 V	x	x	x	-
	0..10 V	x	-	x	-
Current (2-wire transducer)	0..20 mA	x	x	x	-
	4..20 mA	x	x	x	x

x = Property is allowed, - = Property is **not allowed**, * = Property is not relevant

A.2 Parameter assignment and structure of the parameter data record

The data record of the module has an identical structure, regardless of whether you configure the module with PROFIBUS DP or PROFINET IO. With data record 128, you can reconfigure the module in your user program regardless of your programming. This means that you can use all the functions of the module even if you configured it via PROFIBUS-GSD.

Parameter assignment in the user program

You can reassign the parameters of the module in RUN. For example, the voltage or current values of selected channels can be changed in RUN without having an effect on the other channels.

Changing parameters in RUN

The "WRREC" instruction is used to transfer the parameters to the module using data record 128. The parameters set in STEP 7 are not changed in the CPU, which means that the parameters set in STEP 7 will be valid again after a restart.

Output parameter STATUS

If errors occur when transferring parameters with the "WRREC" instruction, the module continues operation with the previous parameter assignment. The STATUS output parameter contains a corresponding error code.

You will find a description of the "WRREC" instruction and the error codes in the STEP 7 online help.

Structure of data record 128

Note

Channel 0 contains the diagnostics for the entire module.

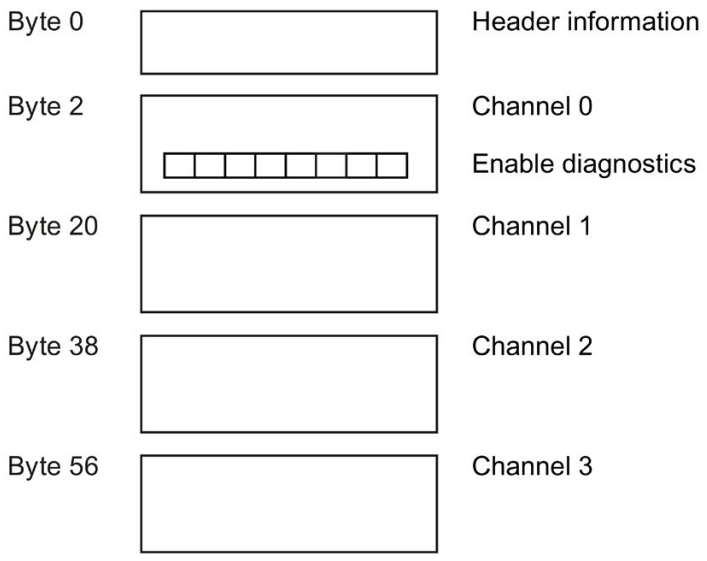

Figure A-1 Structure of data record 128

Header information

The figure below shows the structure of the header information.

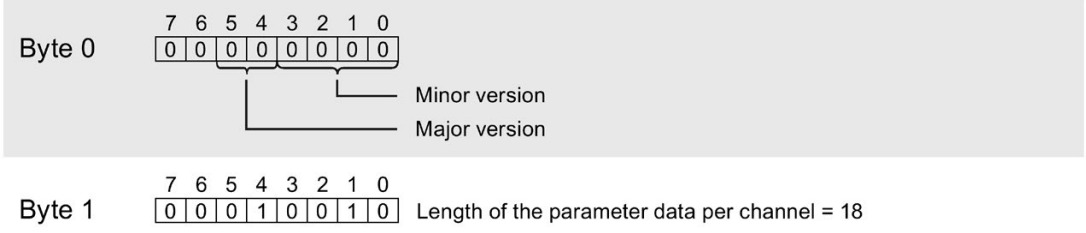

Figure A-2 Header information

Parameter

The figure below shows the structure of the parameters for channels 0 to 3.

You enable a parameter by setting the corresponding bit to "1".

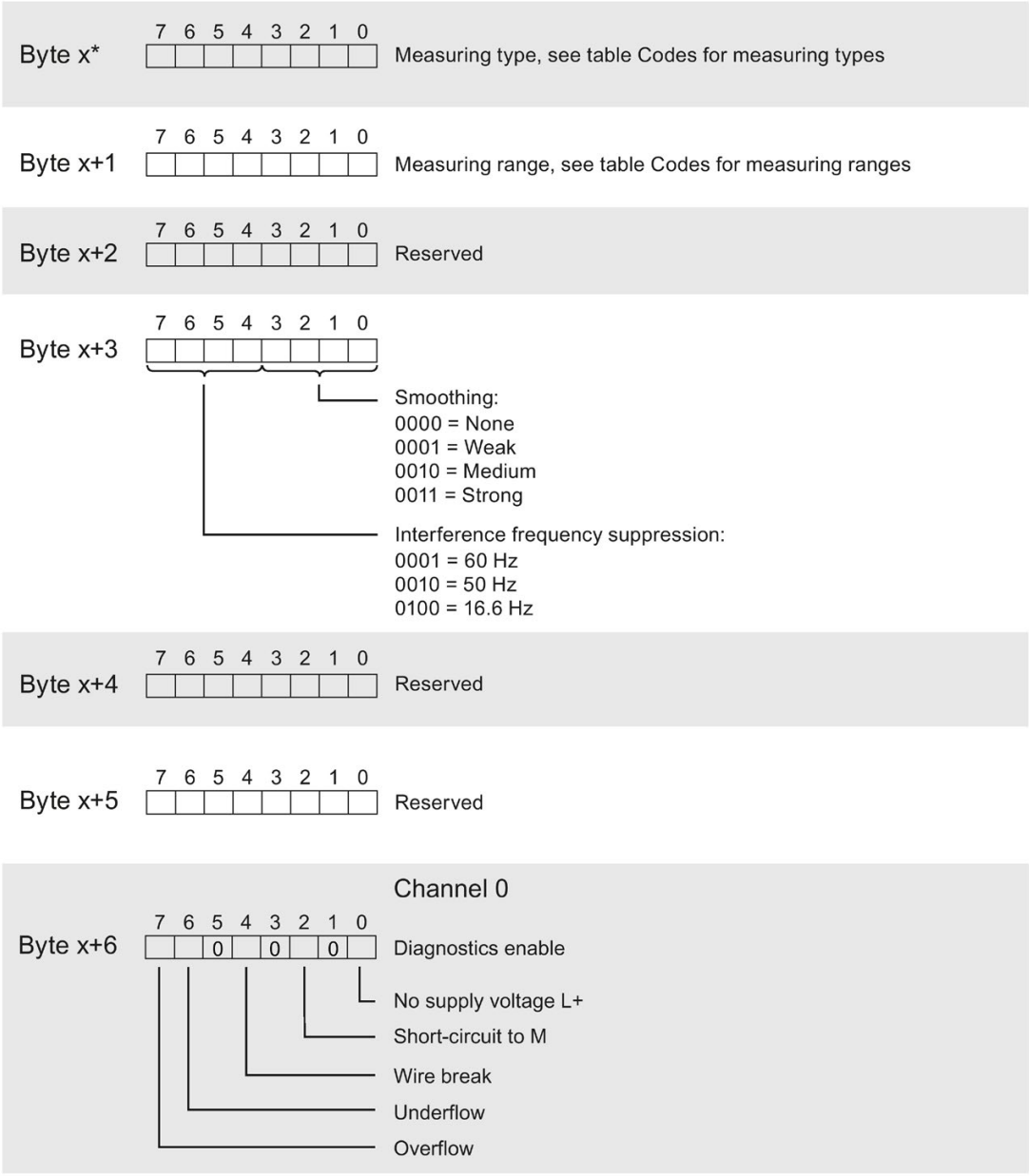

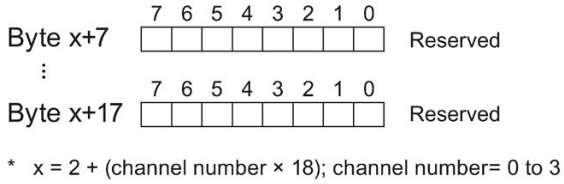

Figure A-3 Structure of byte x to x+17 for channels 0 to 3

Codes for the measuring type

The following table contains the codes for the measuring types of the analog input module. You must enter these codes at byte x (see previous figure).

Table A- 1 Codes for the measuring type

Measuring type	Coding
Deactivated	0000 0000
Voltage	0000 0001
Current, 2-wire transducer	0000 0011

Codes for the measuring range

The following table contains the codes for the measuring ranges of the analog input module. You enter these codes at byte x+1 (see previous figure).

Table A- 2 Codes for the measuring range

Measuring type	Coding
Voltage	
±5 V	0000 1000
±10 V	0000 1001
1 to 5 V	0000 1010
0 to 10 V	0000 1011
Current	
0 to 20 mA	0000 0010
4 to 20 mA	0000 0011

A.3 Error in transferring the data record analog input

Error transferring the data record

The module always checks all values of the data record to be sent. The module applies the values from the data record only when all values have been transmitted without errors.

The WRREC instruction for writing data records returns corresponding error codes when errors occur in the STATUS parameter, see also the description of the "STATUS" parameter in the STEP 7 online help).

The following table shows the module-specific error codes and their meaning for parameter data record 128.

Error code in STATUS parameter (hexadecimal)				Meaning	Solution
Byte 0	Byte 1	Byte 2	Byte 3		
DF	80	B0	xx	Number of the data record unknown.	Enter a valid number for the data record.
DF	80	B1	xx	Length of the data record incorrect.	Enter a valid value for the data record length.
DF	80	B2	xx	Slot invalid or cannot be accessed.	• Check the station to determine whether the module is plugged or pulled. • Check the assigned values for the parameters of the WRREC instruction.
DF	80	E0	xx	Wrong version or error in the header information.	Correct the version, length and number of parameter blocks.
DF	80	E1	01	Reserved bit set	Check the parameters of the module.
DF	80	E1	02	Invalid diagnostics enable bit set for operating mode.	Check the parameters of the module.
DF	80	E1	05	Invalid coding set for measuring range / measurement type.	Check the parameters of the module.
DF	80	E1	08	Invalid coding set for interference frequency suppression / integration time.	Check the parameters of the module.
DF	80	E1	09	Invalid coding for smoothing.	Check the parameters of the module.

Representation of analog values

B

This appendix shows the analog values for all measuring ranges that you can use with the analog module.

Measured value resolution

The resolution of the analog values differs depending on the analog module and its assigned parameters.

The table below shows the representation of binary analog values and of the associated decimal and hexadecimal units of the analog values.

Each analog value is written left aligned to the tags. The bits marked with "x" are set to "0".

Table B- 1 Resolution of the analog values

Resolution in bits including sign	Values		Analog value	
	Decimal	Hexadecimal	High byte	Low byte
14	4	4_H	Sign 0 0 0 0 0 0 0	0 0 0 0 0 1 x x
15	2	2_H	Sign 0 0 0 0 0 0 0	0 0 0 0 0 0 1 x
16	1	1_H	Sign 0 0 0 0 0 0 0	0 0 0 0 0 0 0 1

B.1 Representation of input ranges

In the following tables, you can find the digitized representation of the bipolar and unipolar input ranges. The resolution is 16 bits.

Table B- 2 Bipolar input ranges

Dec. value	Measured value in %	Data word																Range
		2^{15}	2^{14}	2^{13}	2^{12}	2^{11}	2^{10}	2^{9}	2^{8}	2^{7}	2^{6}	2^{5}	2^{4}	2^{3}	2^{2}	2^{1}	2^{0}	
32767	>117.589	0	1	1	1	1	1	1	1	1	1	1	1	1	1	1	1	Overflow
32511	117.589	0	1	1	1	1	1	1	0	1	1	1	1	1	1	1	1	Overrange
27649	100.004	0	1	1	0	1	1	0	0	0	0	0	0	0	0	0	1	
27648	100.000	0	1	1	0	1	1	0	0	0	0	0	0	0	0	0	0	Nominal range
1	0.003617	0	0	0	0	0	0	0	0	0	0	0	0	0	0	0	1	
0	0.000	0	0	0	0	0	0	0	0	0	0	0	0	0	0	0	0	
-1	-0.003617	1	1	1	1	1	1	1	1	1	1	1	1	1	1	1	1	
-27648	-100.000	1	0	0	1	0	1	0	0	0	0	0	0	0	0	0	0	
-27649	-100.004	1	0	0	1	0	0	1	1	1	1	1	1	1	1	1	1	Underrange
-32512	-117.593	1	0	0	0	0	0	0	1	0	0	0	0	0	0	0	0	
-32768	<-117.593	1	0	0	0	0	0	0	0	0	0	0	0	0	0	0	0	Underflow

Table B- 3 Unipolar input ranges

Dec. value	Measured value in %	Data word																Range
		2^{15}	2^{14}	2^{13}	2^{12}	2^{11}	2^{10}	2^{9}	2^{8}	2^{7}	2^{6}	2^{5}	2^{4}	2^{3}	2^{2}	2^{1}	2^{0}	
32767	>117.589	0	1	1	1	1	1	1	1	1	1	1	1	1	1	1	1	Overflow
32511	117.589	0	1	1	1	1	1	1	0	1	1	1	1	1	1	1	1	Overrange
27649	100.004	0	1	1	0	1	1	0	0	0	0	0	0	0	0	0	1	
27648	100.000	0	1	1	0	1	1	0	0	0	0	0	0	0	0	0	0	Nominal range
1	0.003617	0	0	0	0	0	0	0	0	0	0	0	0	0	0	0	1	
0	0.000	0	0	0	0	0	0	0	0	0	0	0	0	0	0	0	0	
-1	-0.003617	1	1	1	1	1	1	1	1	1	1	1	1	1	1	1	1	Underrange
-4864	-17.593	1	1	1	0	1	1	0	1	0	0	0	0	0	0	0	0	
-32768	<-17.593	1	0	0	0	0	0	0	0	0	0	0	0	0	0	0	0	Underflow

B.2 Representation of analog values in voltage measuring ranges

The following tables list the decimal and hexadecimal values (codes) of the possible voltage measuring ranges.

Table B- 4 Voltage measuring range ±10 V and ±5 V

Values		Voltage measuring range		Range
Dec.	Hex.	±10 V	±5 V	
32767	7FFF	>11.759 V	>5.879 V	Overflow
32511	7EFF	11.759 V	5.879 V	Overrange
27649	6C01			
27648	6C00	10 V	5 V	Nominal range
20736	5100	7.5 V	3.75 V	
1	1	361.7 µV	180.8 µV	
0	0	0 V	0 V	
-1	FFFF			
-20736	AF00	-7.5 V	-3.75 V	
-27648	9400	-10 V	-5 V	
-27649	93FF			Underrange
-32512	8100	-11.759 V	-5.879 V	
-32768	8000	<-11.759 V	<-5.879 V	Underflow

Table B- 5 Voltage measuring range 1 to 5 V and 0 to 10 V

Values		Voltage measuring range		Range
Dec.	Hex.	1 to 5 V	0 to 10 V	
32767	7FFF	>5.704 V	>11.759 V	Overflow
32511	7EFF	5.704 V	11.759 V	Overrange
27649	6C01			
27648	6C00	5 V	10 V	Nominal range
20736	5100	4 V	7.5 V	
1	1	1 V + 144.7 µV	0 V + 361.7 µV	
0	0	1 V	0 V	
-1	FFFF			Underrange **
-4864	ED00	0.296 V	-1.759 V *	
-32768	8000	<0.296 V	<-1.759 V *	Underflow **

* negative values are only possible if the module (6ES7134-6GD**01**-0BA1) with FW version V2.0.0 and higher is configured.

** no underrange/underflow if the predecessor module (6ES7134-6GD**00**-0BA1) is configured.

B.3 Representation of analog values in the current measuring ranges

The following tables list the decimal and hexadecimal values (codes) of the possible current measuring ranges.

Table B- 6 Current measuring ranges 0 to 20 mA and 4 to 20 mA

Values		Current measuring range		Range
Dec.	Hex.	0 to 20 mA *	4 to 20 mA	
32767	7FFF	>23.52 mA	>22.81 mA	Overflow
32511	7EFF	23.52 mA	22.81 mA	Overrange
27649	6C01			
27648	6C00	20 mA	20 mA	Nominal range
20736	5100	15 mA	16 mA	
1	1	723.4 nA	4 mA + 578.7 nA	
0	0	0 mA	4 mA	
-1	FFFF			Underrange
-4864	ED00	-3.52 mA	1.185 mA	
-32768	8000	<-3.52 mA	<1.185 mA	Underflow

* For measuring type "2-wire transducer", negative values are not possible for the range "0 to 20 mA". Therefore, no underrange or underflow exists here.

SIEMENS

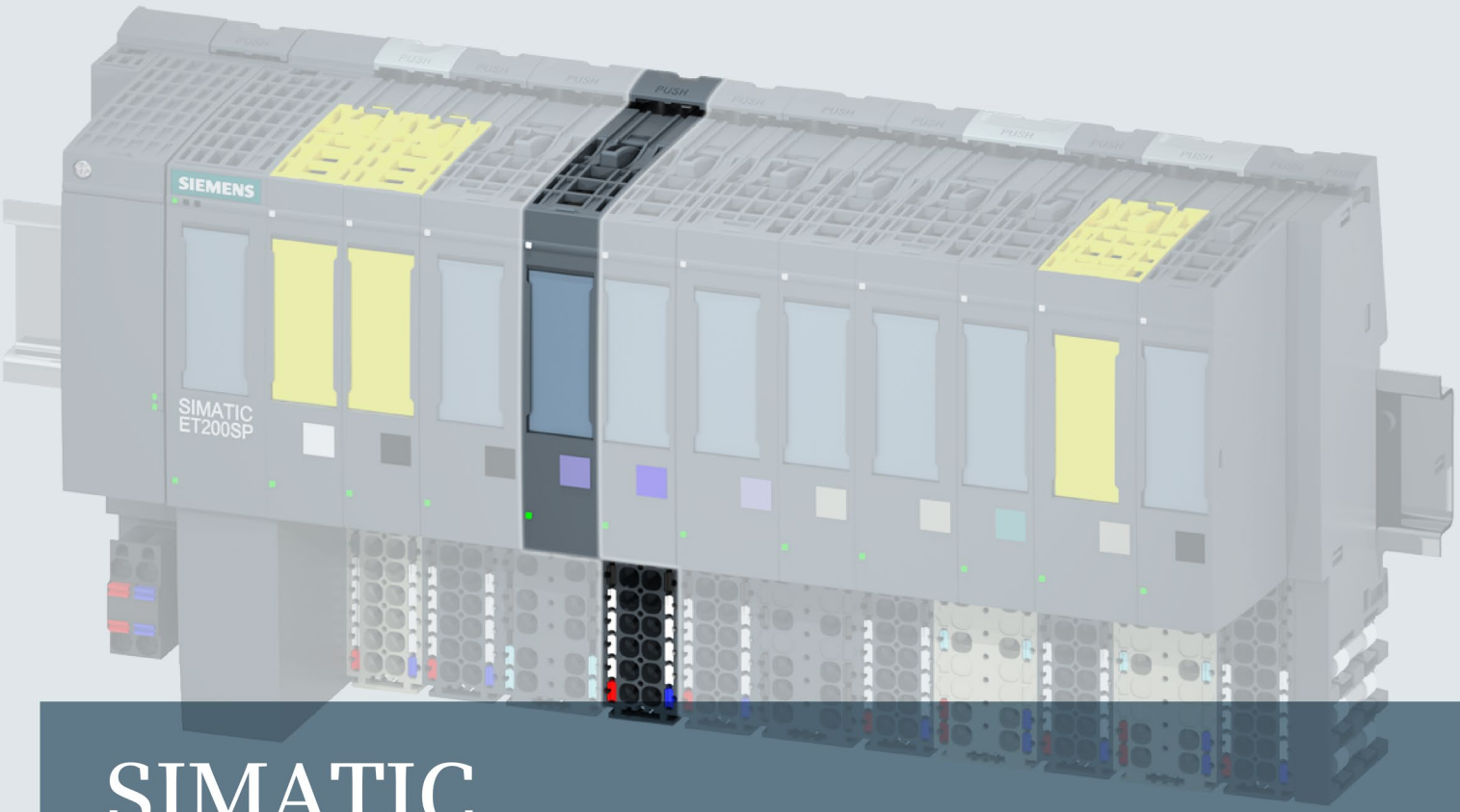

SIMATIC

ET 200SP

Analog input module AI 2xU ST (6ES7134-6FB00-0BA1)

Manual

Edition 12/2015

Answers for industry.

SIEMENS

SIMATIC

ET 200SP
Analog input module AI 2xU ST
(6ES7134-6FB00-0BA1)

Manual

Preface

Documentation guide 1

Product overview 2

Wiring 3

Parameters/address space 4

Interrupts/diagnostics alarms 5

Technical specifications 6

Parameter data record A

Representation of analog values B

12/2015

A5E36104728-AA

Legal information

Warning notice system

This manual contains notices you have to observe in order to ensure your personal safety, as well as to prevent damage to property. The notices referring to your personal safety are highlighted in the manual by a safety alert symbol, notices referring only to property damage have no safety alert symbol. These notices shown below are graded according to the degree of danger.

⚠ DANGER

indicates that death or severe personal injury **will** result if proper precautions are not taken.

⚠ WARNING

indicates that death or severe personal injury **may** result if proper precautions are not taken.

⚠ CAUTION

indicates that minor personal injury can result if proper precautions are not taken.

NOTICE

indicates that property damage can result if proper precautions are not taken.

If more than one degree of danger is present, the warning notice representing the highest degree of danger will be used. A notice warning of injury to persons with a safety alert symbol may also include a warning relating to property damage.

Qualified Personnel

The product/system described in this documentation may be operated only by **personnel qualified** for the specific task in accordance with the relevant documentation, in particular its warning notices and safety instructions. Qualified personnel are those who, based on their training and experience, are capable of identifying risks and avoiding potential hazards when working with these products/systems.

Proper use of Siemens products

Note the following:

⚠ WARNING

Siemens products may only be used for the applications described in the catalog and in the relevant technical documentation. If products and components from other manufacturers are used, these must be recommended or approved by Siemens. Proper transport, storage, installation, assembly, commissioning, operation and maintenance are required to ensure that the products operate safely and without any problems. The permissible ambient conditions must be complied with. The information in the relevant documentation must be observed.

Trademarks

All names identified by ® are registered trademarks of Siemens AG. The remaining trademarks in this publication may be trademarks whose use by third parties for their own purposes could violate the rights of the owner.

Disclaimer of Liability

We have reviewed the contents of this publication to ensure consistency with the hardware and software described. Since variance cannot be precluded entirely, we cannot guarantee full consistency. However, the information in this publication is reviewed regularly and any necessary corrections are included in subsequent editions.

Siemens AG
Division Digital Factory
Postfach 48 48
90026 NÜRNBERG
GERMANY

A5E36104728-AA
℗ 12/2015 Subject to change

Copyright © Siemens AG 2015.
All rights reserved

Preface

Purpose of the documentation

This manual supplements the ET 200SP distributed I/O system (http://support.automation.siemens.com/WW/view/en/58649293) system manual.

Functions that generally relate to the system are described in this system manual.

The information provided in this manual and in the system/function manuals supports you in commissioning the system.

Conventions

CPU: When the term "CPU" is used in this manual, it applies to the CPUs of the S7-1500 automation system as well as to the CPUs/interface modules of the ET 200SP distributed I/O system.

STEP 7: In this documentation, "STEP 7" is used as a synonym for all versions of the configuration and programming software "STEP 7 (TIA Portal)".

Please also observe notes marked as follows:

Note

A note contains important information on the product described in the documentation, on the handling of the product or on the section of the documentation to which particular attention should be paid.

Security information

Siemens provides products and solutions with industrial security functions that support the secure operation of plants, solutions, machines, equipment and/or networks. They are important components in a holistic industrial security concept. With this in mind, Siemens' products and solutions undergo continuous development. Siemens recommends strongly that you regularly check for product updates.

For the secure operation of Siemens products and solutions, it is necessary to take suitable preventive action (e.g. cell protection concept) and integrate each component into a holistic, state-of-the-art industrial security concept. Third-party products that may be in use should also be considered. You can find more information about industrial security on the Internet (http://www.siemens.com/industrialsecurity).

To stay informed about product updates as they occur, sign up for a product-specific newsletter. You can find more information on the Internet (http://support.automation.siemens.com).

Table of contents

Preface 4
1 Documentation guide 6
2 Product overview 9
2.1 Properties 9
3 Wiring 11
3.1 Wiring and block diagram 11
4 Parameters/address space 13
4.1 Measuring types and ranges 13
4.2 Parameters 14
4.3 Explanation of the parameters 16
4.4 Address space 19
5 Interrupts/diagnostics alarms 20
5.1 Status and error display 20
5.2 Interrupts 22
5.3 Diagnostics alarms 22
6 Technical specifications 23
6.1 Technical specifications 23
A Parameter data record 27
A.1 Dependencies when configuring with GSD file 27
A.2 Parameter assignment and structure of the parameter data record 28
B Representation of analog values 32
B.1 Representation of analog values 32
B.2 Representation of input ranges 33
B.3 Representation of analog values in voltage measuring ranges 34

Documentation guide

1

The documentation for the SIMATIC ET 200SP distributed I/O system is arranged into three areas.
This arrangement enables you to access the specific content you require.

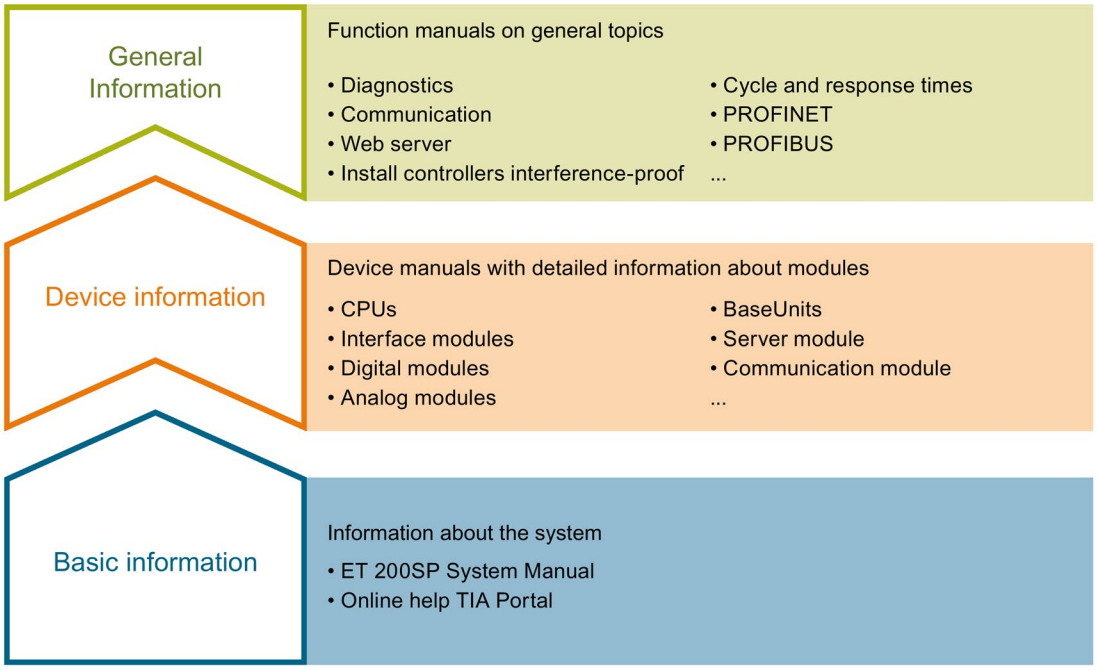

Basic information

The system manual describes in detail the configuration, installation, wiring and commissioning of the SIMATIC ET 200SP. distributed I/O system. The STEP 7 online help supports you in the configuration and programming.

Device information

Product manuals contain a compact description of the module-specific information, such as properties, terminal diagrams, characteristics and technical specifications.

General information

The function manuals contain detailed descriptions on general topics regarding the SIMATIC ET 200SP distributed I/O system, e.g. diagnostics, communication, Web server, designing interference-free controllers.

You can download the documentation free of charge from the Internet (http://w3.siemens.com/mcms/industrial-automation-systems-simatic/en/manual-overview/tech-doc-et200/Pages/Default.aspx).

Changes and supplements to the manuals are documented in a Product Information.

You can download the product information free of charge from the Internet (https://support.industry.siemens.com/cs/us/en/view/73021864).

Manual Collection ET 200SP

The Manual Collection contains the complete documentation on the SIMATIC ET 200SP distributed I/O system gathered together in one file.

You can find the Manual Collection on the Internet (http://support.automation.siemens.com/WW/view/en/84133942).

"mySupport"

With "mySupport", your personal workspace, you make the most of your Industry Online Support.

In "mySupport" you can store filters, favorites and tags, request CAx data and put together your personal library in the Documentation area. Furthermore, your data is automatically filled into support requests and you always have an overview of your current requests.

You need to register once to use the full functionality of "mySupport".

You can find "mySupport" in the Internet (https://support.industry.siemens.com/My/ww/en).

"mySupport" - Documentation

In the Documentation area of "mySupport", you have the possibility to combine complete manuals or parts of them to make your own manual.
You can export the manual in PDF format or in an editable format.

You can find "mySupport" - Documentation in the Internet (http://support.industry.siemens.com/My/ww/en/documentation).

"mySupport" - CAx Data

In the CAx Data area of "mySupport", you can have access the latest product data for your CAx or CAe system.

You configure your own download package with a few clicks.

In doing so you can select:

- Product images, 2D dimension drawings, 3D models, internal circuit diagrams, EPLAN macro files
- Manuals, characteristics, operating manuals, certificates
- Product master data

You can find "mySupport" - CAx Data in the Internet (http://support.industry.siemens.com/my/ww/en/CAxOnline).

Application examples

The application examples support you with various tools and examples for solving your automation tasks. Solutions are shown in interplay with multiple components in the system - separated from the focus in individual products.

You can find the application examples on the Internet (https://support.industry.siemens.com/sc/ww/en/sc/2054).

TIA Selection Tool

With the TIA Selection Tool, you can select, configure and order devices for Totally Integrated Automation (TIA).
This tool is the successor of the SIMATIC Selection Tool and combines the known configurators for automation technology into one tool.
With the TIA Selection Tool, you can generate a complete order list from your product selection or product configuration.

You can find the TIA Selection Tool on the Internet (http://w3.siemens.com/mcms/topics/en/simatic/tia-selection-tool).

Product overview

2

2.1 Properties

Article number

6ES7134-6FB00-0BA1

View of the module

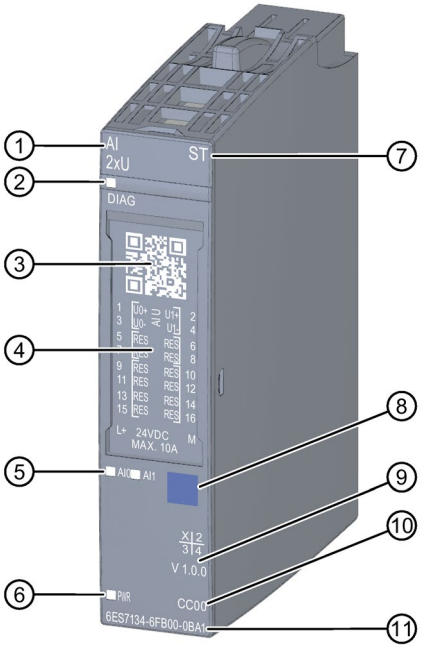

① Module type and name
② LED for diagnostics
③ 2D matrix code
④ Wiring diagram
⑤ LEDs for channel status
⑥ LED for supply voltage
⑦ Function class
⑧ Color coding module type
⑨ Function and firmware version
⑩ Color code for selecting the color identification labels
⑪ Article number

Image 2-1 View of the module AI 2×U ST

Properties

The module has the following technical properties:

- Analog input module with 2 inputs
- Voltage measurement type (can be set per channel)
- Input ranges for voltage measurement:
  - ±5 V, resolution 16 bits including sign
  - ±10 V, resolution 16 bits including sign
  - 1 to 5 V, resolution 15 bits
  - 0 to 10 V, resolution 15 bits
- Electrically isolated from supply voltage L+
- Permitted common mode voltage: 10 V_{ss}
- Configurable diagnostics (per module)

The module supports the following functions:

- Firmware update
- I&M identification data
- Configuration in RUN
- PROFIenergy
- Value status

You can configure the module with STEP 7 (TIA Portal) and with a GSD file.

Accessories

The following accessories must be ordered separately:

- Labeling strips
- Color identification labels
- Reference identification label
- Shield connector

See also

You can find additional information on the accessories in the ET 200SP distributed I/O system (http://support.automation.siemens.com/WW/view/en/58649293) system manual.

Wiring 3

3.1 Wiring and block diagram

This section includes the block diagram of the AI 2xU ST module with the terminal assignments.

You can find information on wiring the BaseUnit in the ET 200SP distributed I/O system (http://support.automation.siemens.com/WW/view/en/58649293) system manual.

Note

The load group of the module must begin with a light-colored BaseUnit. Keep this in mind also during the configuration.

Wiring: Voltage measurement 2-wire connection

The following figure shows the block diagram and an example of the terminal assignment of the analog input module AI 2xU ST on the BaseUnit BU type A0/A1.

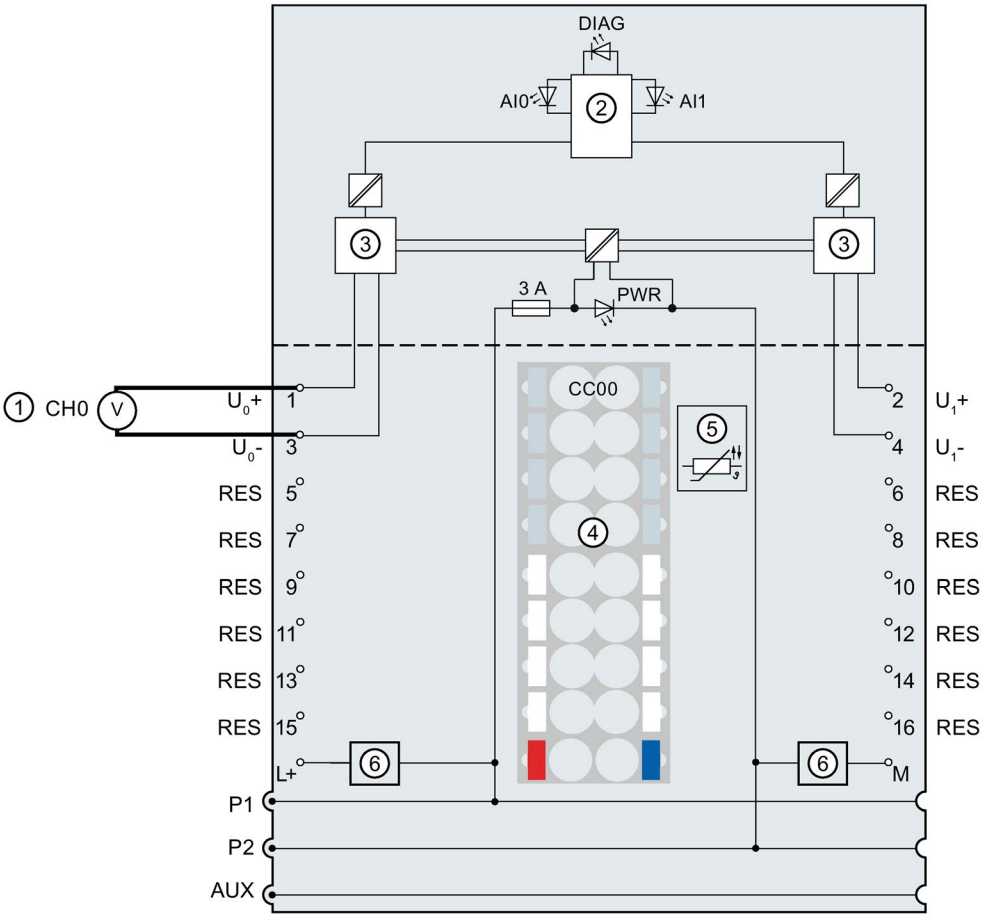

①	2-wire connection for voltage measurement	U_n+	Voltage input positive, channel n
②	Backplane bus interface	U_n-	Voltage input negative, channel n
③	Analog-to-digital converter (ADC)	RES	Reserve, must remain unused for future function extensions
④	Color-coded label with color code CC00 (optional)	L+	24 V DC (infeed only with light-colored BaseUnit)
⑤	Temperature recording for BU type A1 only (function cannot be used for this module)	P1, P2, AUX	Internal self-assembling voltage buses Connection to left (dark-colored BaseUnit) Connection to left interrupted (light-colored BaseUnit)
⑥	Filter connection supply voltage (only when light-colored BaseUnit is present)	DIAG	Diagnostics LED (green, red)
		AI0, AI1	Channel status LED (green)
		PWR	Power LED (green)

Image 3-1 Wiring and block diagram for voltage measurement 2-wire connection

Parameters/address space 4

4.1 Measuring types and ranges

The analog input module AI 2×U ST has the following measuring ranges:

Table 4- 1 Measuring ranges

Measurement type	Measuring range	Resolution
Voltage	± 5 V	16 bits incl. sign
	± 10 V	16 bits incl. sign
	1 to 5 V	15 bits
	0 to 10 V	15 bits

You will find the tables of the measuring ranges as well as overflow, overrange, etc., in the section Representation of analog values (Page 32).

4.2 Parameters

Parameters of the AI 2xU ST

The effective range of the configurable parameters depends on the type of configuration. The following configurations are possible:

- Central operation with an ET 200SP CPU
- Distributed operation on PROFINET IO in an ET 200SP system
- Distributed operation on PROFIBUS DP in an ET 200SP system

When assigning parameters in the user program, use the "WRREC" instruction to transfer the parameters to the module using the data records; refer to section Parameter assignment and structure of the parameter data record (Page 28).

The following parameter settings are possible:

Table 4- 2 Configurable parameters and their defaults (GSD file)

Parameter	Range of values	Default	Parameter reassign-ment in RUN	Effective range with configuration software, e.g. STEP 7 (TIA Portal)	
				GSD file PROFINET IO	GSD file PROFIBUS DP
Diagnostics: No supply voltage L+	• Disable • Enable	Disable	Yes	Module	Module
Diagnostics: Short-circuit to ground	• Disable • Enable	Disable	Yes	Module	Module
Diagnostics: Overflow [1]	• Disable • Enable	Disable	Yes	Module	Module [1]
Diagnostics: Underflow [1]	• Disable • Enable	Disable	Yes	Module	
Measurement type/measuring range	• Deactivated • Voltage +/- 5 V • Voltage +/- 10 V • Voltage 0..10 V • Voltage 1..5 V	Voltage +/- 10 V	Yes	Channel	Channel
Smoothing	• None • Weak • Medium • Strong	None	Yes	Channel	Channel

Parameter	Range of values	Default	Parameter reassignment in RUN	Effective range with configuration software, e.g. STEP 7 (TIA Portal)	
				GSD file PROFINET IO	GSD file PROFIBUS DP
Interference frequency suppression	• 60 Hz (50 ms) • 50 Hz (60 ms) [2] • 16.6 Hz (180 ms) • None	50 Hz (60 ms)	Yes	Channel	Module
Potential group	• Use potential group of the left module (module plugged into a dark BaseUnit) • Enable new potential group (module plugged into light-colored BaseUnit)	Use potential group of the left module	No	Module	Module

[1] Due to the limited number of parameters of a maximum of 244 bytes per ET 200SP station with a PROFIBUS GSD configuration, the parameter assignment options are restricted. If required, you can assign these parameters using data record 128 as described in the "GSD file PROFINET IO" column (see table above). The parameter length of the I/O module is 4 bytes.

[2] Interference frequency suppression: Noise at 400 Hz is automatically included in the filtering at 50 Hz.

Note

Unused channels

Disable the unused channels in the parameter assignment.

A deactivated channel always returns the value $7FFF_H$.

4.3 Explanation of the parameters

Diagnostics: No supply voltage L+

Enabling of the diagnostics for no or insufficient supply voltage L+.

Diagnostics: Short-circuit to ground

Diagnostics are enabled when both input signals are short-circuited in the range 1 to 5 V.

The short-circuit and underflow diagnostics can be activated simultaneously. If both diagnostics events occur simultaneously, however, the short-circuit diagnostics suppresses the underflow diagnostics. Short-circuit is output as the diagnostics event.

Diagnostics: Overflow

Enabling of the diagnostics when the measured value exceeds the overrange.

Diagnostics: Underflow

Enabling of the diagnostics when the measured value falls below the underrange.

Measurement type/measuring range

Refer to the section Measuring types and ranges (Page 13).

Smoothing

The individual measured values are smoothed by filtering. The smoothing can be set in 4 levels.

Smoothing time = number of module cycles (k) × cycle time of the module.

The following figure shows how many module cycles it takes for the smoothed analog value to approach 100%, depending on the configured smoothing. This applies to every signal change at the analog input.

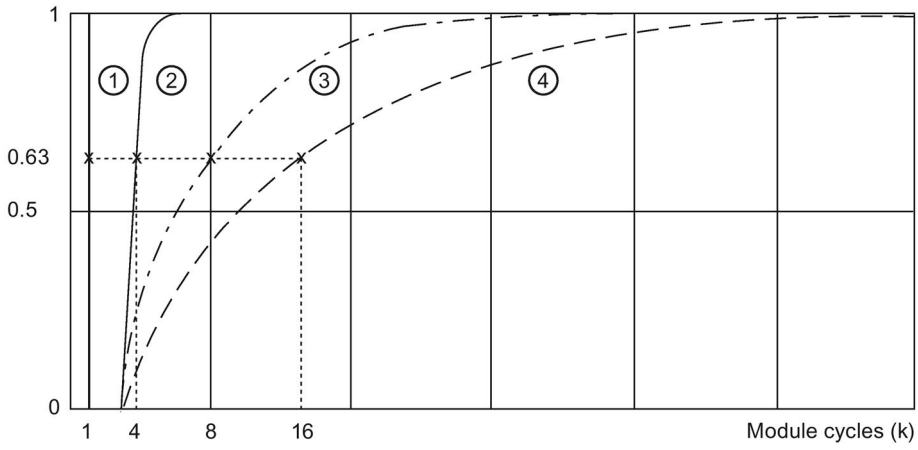

① No smoothing (k = 1)
② Weak (k = 4)
③ Medium (k = 8)
④ Strong (k = 16)

Image 4-1 Smoothing for AI 2xU ST

Interference frequency suppression

Suppresses the interference affecting analog input modules that is caused by the frequency of the AC voltage network used.

The frequency of the AC voltage network can negatively affect the measured value, in particular when measuring in the low voltage range and with thermocouples. With this parameter, the user specifies the line frequency that is predominant in the plant.

Potential group

A potential group consists of a group of directly adjacent I/O modules within an ET 200SP station, which are supplied via a common supply voltage.

A potential group begins with a light-colored BaseUnit through which the required voltage is supplied for all modules of the potential group. The light-colored BaseUnit interrupts the three self-assembling voltage buses P1, P2 and AUX to the left neighbor.

All additional I/O modules of this potential group are plugged into dark-colored BaseUnits. You take the potential of the self-assembling voltage buses P1, P2 and AUX from the left neighbor.

A potential group ends with the dark-colored BaseUnit, which follows a light-colored BaseUnit or server module in the station configuration.

See also

You can find additional information in the system manual ET 200SP distributed I/O system (http://support.automation.siemens.com/WW/view/en/58649293).

4.4 Address space

Configuration options

The following configurations are possible:

- Configuration 1: Without value status
- Configuration 2: With value status

Evaluating the value status

If you enable the value status for the analog module, an additional byte is occupied in the input address space. Bits 0 and 1 in this byte are assigned to a channel. They provide information about the validity of the analog value.

Bit = 1: No fault is present on the channel.

Bit = 0: Channel is deactivated or there is a fault on the module.

If a fault occurs on a channel with this module, the value status for all channels is 0.

Address space

The following figure shows the assignment of the address space for the AI 2×U ST with value status (Quality Information (QI)). The addresses for the value status are only available if the value status is enabled.

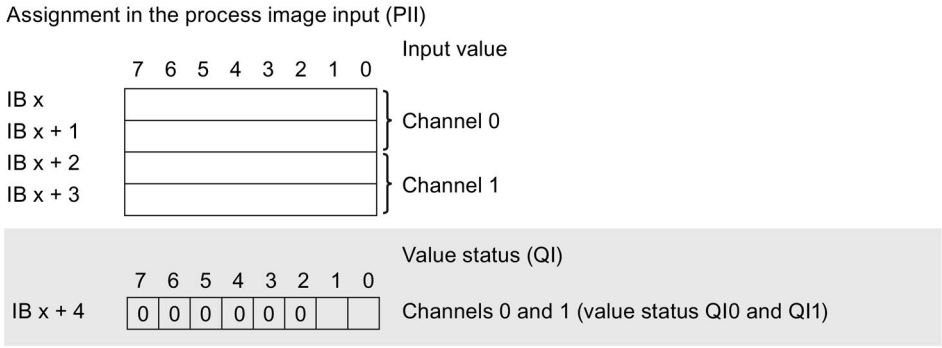

Image 4-2 Address space of the AI 2×U ST with value status

Interrupts/diagnostics alarms 5

5.1 Status and error display

LED display

The following figure shows you the LED display of the AI 2xU ST.

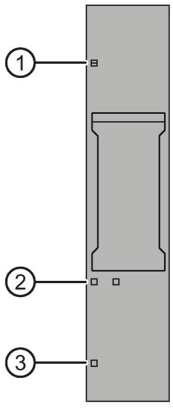

① DIAG (green/red)
② Channel status (green)
③ PWR (green)

Image 5-1 LED display

Meaning of the LEDs

The following tables show the meaning of the status and error displays. Corrective measures for diagnostics alarms can be found in section Diagnostics alarms (Page 22).

DIAG LED

Table 5- 1 Error display of the DIAG LED

DIAG LED	Meaning
Off	Backplane bus supply of the ET 200SP not OK
Flashes	Module parameters not assigned
On	Module parameters assigned and no module diagnostics
Flashes	Module parameters assigned and module diagnostics

Channel status LED

Table 5- 2 Status display of the channel status LED

Channel status LED	Meaning
Off	Channel disabled
On	Channel activated

PWR LED

Table 5- 3 Status display of the PWR LED

PWR LED	Meaning
Off	Missing supply voltage L+
On	Supply voltage L+ present

5.2 Interrupts

The AI 2×U ST analog input module supports diagnostics interrupts.

Diagnostics interrupts

The module generates a diagnostic interrupt at the following events:

- Short-circuit (voltage 1 V to 5 V)
- High limit violated
- Low limit violated
- Error
- Parameter assignment error
- Supply voltage missing
- Channel temporarily unavailable

5.3 Diagnostics alarms

A diagnostics alarm is generated and the DIAG-LED flashes on the module for each diagnostics event. You can read out the diagnostics alarms, for example, in the diagnostics buffer of the CPU. You can evaluate the error codes with the user program.

Table 5- 4 Diagnostics alarms, their meaning and corrective measures

Diagnostics alarm	Error code	Meaning	Solution
Short-circuit (1 to 5 V)	1_H	Short-circuit of input signal	Correct interplay between module and encoder
		Open input	Connect input
High limit violated	7_H	Value is above the overrange.	Correct interplay between module and encoder
Low limit violated	8_H	Value is below the underrange.	Correct interplay between module and encoder
Error	9_H	Internal module error occurred.	Replace module
Parameter assignment error	10_H	• The module cannot evaluate parameters for the channel. • Incorrect parameter assignment.	Correct the parameter assignment
Supply voltage missing	11_H	Missing or insufficient supply voltage L+	• Check supply voltage L+ on the BaseUnit • Check BaseUnit type
Channel temporarily unavailable	$1F_H$	Firmware update is currently in progress or has been canceled. The module does not read process values in this state.	• Wait for firmware update. • Restart the firmware update.

Technical specifications

6

6.1 Technical specifications

Technical specifications of the AI 2×U ST

	6ES7134-6FB00-0BA1
General information	
Product type designation	ET 200SP, AI 2xU Standard
Firmware version	V1.0
• FW update possible	Yes
Usable BaseUnits	BU type A0, A1
Color code for module-specific color identification label	CC00
Product function	
I&M data	Yes; I&M0 to I&M3
Scalable measuring range	No
Engineering with	
STEP 7 TIA Portal can be configured/integrated as of version	V13 SP1
STEP 7 can be configured/integrated as of version	V5.5 SP3 / -
PROFIBUS as of GSD version/GSD revision	GSD revision 5
PROFINET as of GSD version/GSD revision	GSDML V2.3
Operating mode	
Oversampling	No
MSI	No
CiR Configuration in RUN	
Configuration in RUN possible	Yes
Calibration in RUN possible	No
Supply voltage	
Rated value (DC)	24 V
Valid range, low limit (DC)	19.2 V
Valid range, high limit (DC)	28.8 V
Polarity reversal protection	Yes
Input current	
Current consumption, max.	37 mA
Encoder supply	
24 V encoder supply	
24 V	No
Additional 24 V encoder supply	
24 V	No

	6ES7134-6FB00-0BA1
Power loss	
Power loss, typ.	0.9 W
Address area	
Address space per module	
Address space per module, max.	4 bytes; + 1 byte for QI information
Analog inputs	
Number of analog inputs	2
Maximum permissible input voltage for voltage input (destruction limit)	30 V
Cycle time (all channels), min.	500 µs
Input ranges (rated values), voltages	
0 to +10 V	Yes; 15 bits
Input resistance (0 to 10 V)	180 kΩ
1 V to 5 V	Yes; 15 bits
Input resistance (1 V to 5 V)	180 kΩ
-10 V to +10 V	Yes; 16 bits incl. sign
Input resistance (-10 V to +10 V)	180 kΩ
-5 V to +5 V	Yes; 16 bits incl. sign
Input resistance (-5 V to +5 V)	180 kΩ
Cable length	
Shielded, max.	200 m
Formation of analog values for the inputs	
Measuring principle	Sigma Delta
Integration and conversion time/resolution per channel	
Resolution with overrange (bit including sign), max.	16 bits
Integration time configurable	Yes
Interference voltage suppression for interference frequency f1 in Hz	16.6 / 50 / 60 Hz / off
Conversion time (per channel)	50 ms @ 60 Hz, 60 ms @ 50 Hz, 180 ms @ 16.6 Hz, 250 µs without filter
Measured value smoothing	
Number of levels	4
Configurable	Yes
Setting: None	Yes; 1 x cycle time
Setting: Weak	Yes; 4 x cycle time
Setting: Medium	Yes; 8 x cycle time
Setting: Strong	Yes; 16 x cycle time

	6ES7134-6FB00-0BA1
Encoders	
Connection of the signal transmitters	
For voltage measurement	Yes
Errors/accuracies	
Linearity error (in relation to input range), (+/-)	0.01%
Temperature error (in relation to input range), (+/-)	0.005%/K
Crosstalk between inputs, min.	-50 dB
Repeat accuracy in settled state at 25 °C (in relation to input range), (+/-)	0.05%
Operational limit in the entire temperature range	
Voltage in relation to input range, (+/-)	0.5%
Basic error limit (operational limit at 25 °C)	
Voltage in relation to input range, (+/-)	0.3%
Interference voltage suppression for f = n x (f1 +/-1%), f1 = interference frequency	
Series-mode interference (peak of the interference < rated value of the input range), min.	70 dB
Common mode voltage, max.	10 V
Common mode interference, min.	90 dB
Isochronous mode	
Isochronous mode (application synchronized up to terminal)	No
Interrupts/diagnostics/status information	
Interrupts	
Diagnostics interrupt	Yes
Limit interrupt	No
Diagnostics alarms	
Diagnostics	Yes
Monitoring of the supply voltage	Yes
Wire break	No
Short-circuit	Yes; with 1 to 5 V
Group error	Yes
Overflow/underflow	Yes
Diagnostics indicator LED	
Monitoring of the supply voltage (PWR LED)	Yes; green PWR LED
Channel status display	Yes; green LED
For channel diagnostics	No
For module diagnostics	Yes; green/red DIAG LED

	6ES7134-6FB00-0BA1
Electrical isolation	
Electrical isolation of channels	
Between the channels	No
Between the channels and backplane bus	Yes
Between the channels and voltage supply of the electronics	Yes
Permitted potential difference	
Between different circuits	75 V DC / 60 V AC (basic isolation)
Between the inputs (UCM)	10 Vss
Isolation	
Isolation tested with	707 V DC (type test)
Dimensions	
Width	15 mm
Weights	
Weight, approx.	31 g

Dimension drawing

See manual ET 200SP BaseUnits
(http://support.automation.siemens.com/WW/view/en/59753521)

Parameter data record

A

A.1 Dependencies when configuring with GSD file

When configuring the module with a GSD file, remember that the settings of some parameters are dependent on each other.

Configuring with a PROFINET GSD file

The table lists the properties and their dependencies on the measurement type and measuring range for PROFINET.

Measurement type	Measuring range	Diagnostics			
		No supply voltage L+	Short-circuit to ground	Overflow	Underflow
Deactivated		*	*	*	*
Voltage	±5 V	x	-	x	x
	±10 V	x	-	x	x
	1 V to 5 V	x	x	x	x
	0 V to 10 V	x	-	x	x

x = Property is allowed, - = Property is **not allowed**, * = Property is not relevant

Configuring with a PROFIBUS GSD file

The table lists the properties and their dependencies on the measurement type and measuring range for PROFIBUS.

Measurement type	Measuring range	Diagnostics			
		No supply voltage L+	Short-circuit to ground	Overflow	Underflow
Deactivated		*	*	*	*
Voltage	±5 V	x	-	x	x
	±10 V	x	-	x	x
	1 V to 5 V	x	x	x	x
	0 V to 10 V	x	-	x	x

x = Property is allowed, - = Property is **not allowed**, * = Property is not relevant

A.2 Parameter assignment and structure of the parameter data record

Parameter assignment in the user program

You can reassign the module parameters in RUN. For example, the voltage or current values of selected channels can be changed in RUN without having an effect on the other channels.

Changing parameters in RUN

The "WRREC" instruction is used to transfer the parameters to the module using data record 128. The parameters set in STEP 7 are not changed in the CPU, which means that the parameters set in STEP 7 will be valid again after a restart.

Output parameter STATUS

If errors occur when transferring parameters with the "WRREC" instruction, the module continues operation with the previous parameter assignment. The STATUS output parameter contains a corresponding error code.

You will find a description of the "WRREC" instruction and the error codes in the STEP 7 online help.

Structure of data record 128

Note

Channel 0 includes the diagnostics enable for the entire module.

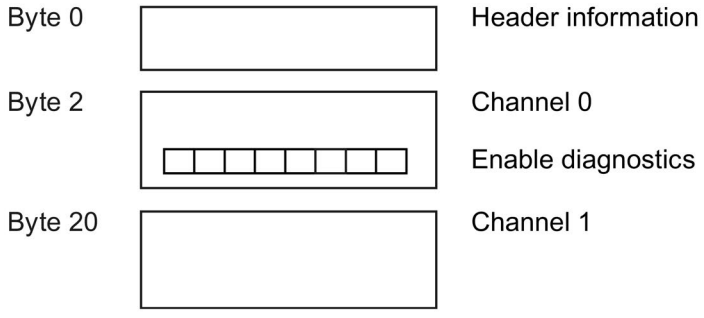

Image A-1 Structure of data record 128

Header information

The figure below shows the structure of the header information.

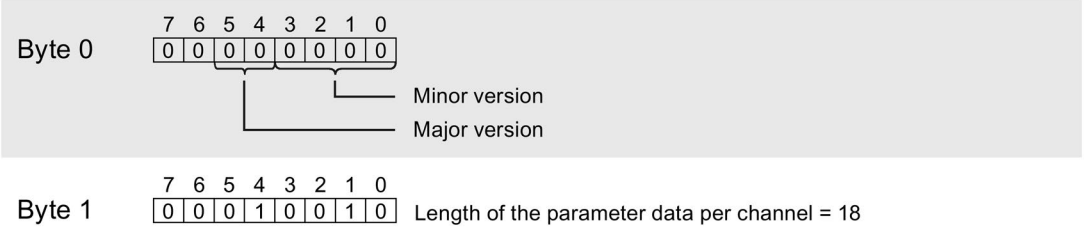

Image A-2 Header information

Parameters

The following figure shows the structure of the parameters for channels 0 and 1.

You enable a parameter by setting the corresponding bit to "1".

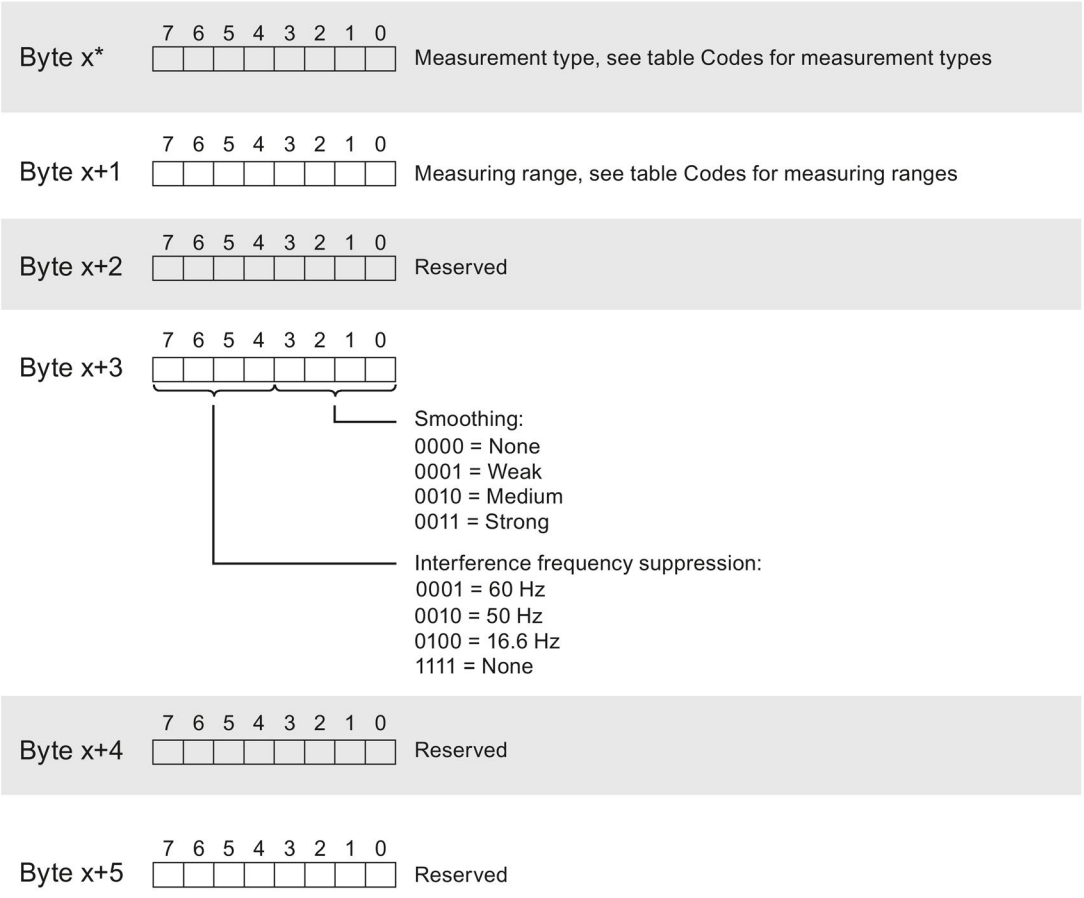

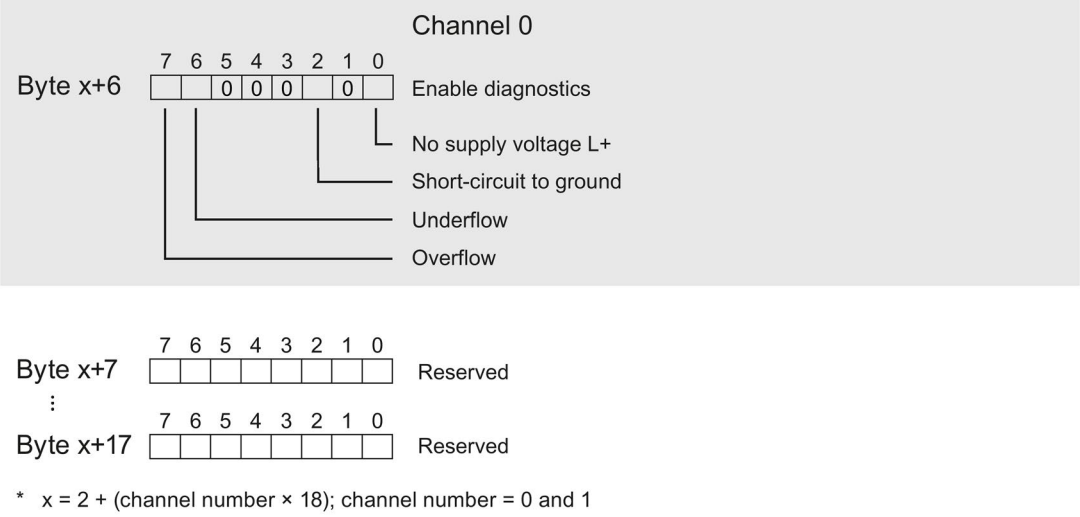

Image A-3 Structure of bytes x to x+17 for channels 0 and 1

Codes for measurement types

The following table contains the codes for the measuring types of the analog input module. You must enter these codes at byte x (see previous figure).

Table A- 1 Codes for measurement types

Measurement type	Code
Deactivated	0000 0000
Voltage	0000 0001

Codes for measuring ranges

The following table contains the codes for the measuring ranges of the analog input module. You enter these codes at byte x+1 (see previous figure).

Table A- 2 Codes for measuring ranges

Measurement type	Code
Voltage	
±5 V	0000 1000
±10 V	0000 1001
1 to 5 V	0000 1010
0 to 10 V	0000 1011

Error transmitting the data record

The module always checks all values of the transmitted data record. The module applies the values from the data record only when all values have been transmitted without errors.

The WRREC instruction for writing data records returns the appropriate error codes if there are errors in the STATUS parameter.

The following table shows the module-specific error codes and their meaning for parameter data record 128.

Error code in the STATUS parameter (hexadecimal)				Meaning	Solution
Byte 0	Byte 1	Byte 2	Byte 3		
DF	80	B0	xx	Number of the data record unknown	Enter valid number for data record.
DF	80	B1	xx	Length of the data record incorrect	Enter valid value for data record length.
DF	80	B2	xx	Slot invalid or unavailable	• Check the station to determine if the module is plugged in or pulled. • Check assigned values for the parameters of the WREC instruction.
DF	80	I0	xx	Incorrect version or error in the header information	Correct the version, length and number of parameter blocks.
DF	80	I1	xx	Parameter error	Check the parameters of the module.

Representation of analog values

B

B.1 Representation of analog values

This appendix shows the analog values for all measuring ranges that you can use with the analog input module.

Measured value resolution

The resolution of the analog values differs depending on the analog module and its assigned parameters.

The table below shows the representation of binary analog values and of the associated decimal and hexadecimal units of the analog values.

Each analog value is written left aligned to the tags. The bits marked with "x" are set to "0".

Table B- 1 Resolution of the analog values

Resolution in bits including sign	Values		Analog value	
	Decimal	Hexadecimal	High byte	Low byte
15	2	2_H	Sign 0 0 0 0 0 0 0	0 0 0 0 0 0 1 x
16	1	1_H	Sign 0 0 0 0 0 0 0	0 0 0 0 0 0 0 1

B.2 Representation of input ranges

In the following tables, you can find the digitized representation of the bipolar and unipolar input ranges. The resolution is 16 bits.

Table B- 2 Bipolar input ranges

Dec. value	Measured value in %	Data word																Range
		2^{15}	2^{14}	2^{13}	2^{12}	2^{11}	2^{10}	2^{9}	2^{8}	2^{7}	2^{6}	2^{5}	2^{4}	2^{3}	2^{2}	2^{1}	2^{0}	
32767	>117.589	0	1	1	1	1	1	1	1	1	1	1	1	1	1	1	1	Overflow
32511	117.589	0	1	1	1	1	1	1	0	1	1	1	1	1	1	1	1	Overrange
27649	100.004	0	1	1	0	1	1	0	0	0	0	0	0	0	0	0	1	
27648	100.000	0	1	1	0	1	1	0	0	0	0	0	0	0	0	0	0	Nominal range
1	0.003617	0	0	0	0	0	0	0	0	0	0	0	0	0	0	0	1	
0	0.000	0	0	0	0	0	0	0	0	0	0	0	0	0	0	0	0	
-1	-0.003617	1	1	1	1	1	1	1	1	1	1	1	1	1	1	1	1	
-27648	-100.000	1	0	0	1	0	1	0	0	0	0	0	0	0	0	0	0	
-27649	-100.004	1	0	0	1	0	0	1	1	1	1	1	1	1	1	1	1	Underrange
-32512	-117.593	1	0	0	0	0	0	0	1	0	0	0	0	0	0	0	0	
-32768	<-117.593	1	0	0	0	0	0	0	0	0	0	0	0	0	0	0	0	Underflow

Table B- 3 Unipolar input ranges

Dec. value	Measured value in %	Data word																Range
		2^{15}	2^{14}	2^{13}	2^{12}	2^{11}	2^{10}	2^{9}	2^{8}	2^{7}	2^{6}	2^{5}	2^{4}	2^{3}	2^{2}	2^{1}	2^{0}	
32767	>117.589	0	1	1	1	1	1	1	1	1	1	1	1	1	1	1	1	Overflow
32511	117.589	0	1	1	1	1	1	1	0	1	1	1	1	1	1	1	1	Overrange
27649	100.004	0	1	1	0	1	1	0	0	0	0	0	0	0	0	0	1	
27648	100.000	0	1	1	0	1	1	0	0	0	0	0	0	0	0	0	0	Nominal range
1	0.003617	0	0	0	0	0	0	0	0	0	0	0	0	0	0	0	1	
0	0.000	0	0	0	0	0	0	0	0	0	0	0	0	0	0	0	0	
-1	-0.003617	1	1	1	1	1	1	1	1	1	1	1	1	1	1	1	1	Underrange
-4864	-17.593	1	1	1	0	1	1	0	1	0	0	0	0	0	0	0	0	
-32768	<-17.593	1	0	0	0	0	0	0	0	0	0	0	0	0	0	0	0	Underflow

B.3 Representation of analog values in voltage measuring ranges

Voltage measuring range ±10 V to ±5 V

Table B- 4 Voltage measuring range ±10 V to ±5 V

System		Voltage measuring range		Range
dec	hex	±10 V	±5 V	
32767	7FFF	>11.759 V	>5.879 V	Overflow
32511	7EFF	11.759 V	5.879 V	Overrange
27649	6C01			
27648	6C00	10 V	5 V	Nominal range
20736	5100	7.5 V	3.75 V	
1	1	361.7 µV	180.8 µV	
0	0	0 V	0 V	
-1	FFFF			
-20736	AF00	-7.5 V	-3.75 V	
-27648	9400	-10 V	-5 V	
-27649	93FF			Underrange
-32512	8100	-11.759 V	-5.879 V	
-32768	8000	<-11.759 V	<-5.879 V	Underflow

Voltage measuring ranges 1 V to 5 V and 0 V to 10 V

Table B- 5 Voltage measuring ranges 1 V to 5 V and 0 V to 10 V

System		Voltage measuring range		Range
dec	hex	1 V to 5 V	0 V to 10 V	
32767	7FFF	>5.704 V	>11.759 V	Overflow
32511	7EFF	5.704 V	11.759 V	Overrange
27649	6C01			
27648	6C00	5 V	10 V	Nominal range
20736	5100	4 V	7.5 V	
1	1	1 V + 144.7 µV	0 V + 361.7 µV	
0	0	1 V	0 V	
-1	FFFF			Underrange
-4864	ED00	0.296 V	-1.759 V	
-32768	8000	<0.296 V	<-1.759 V	Underflow

SIEMENS

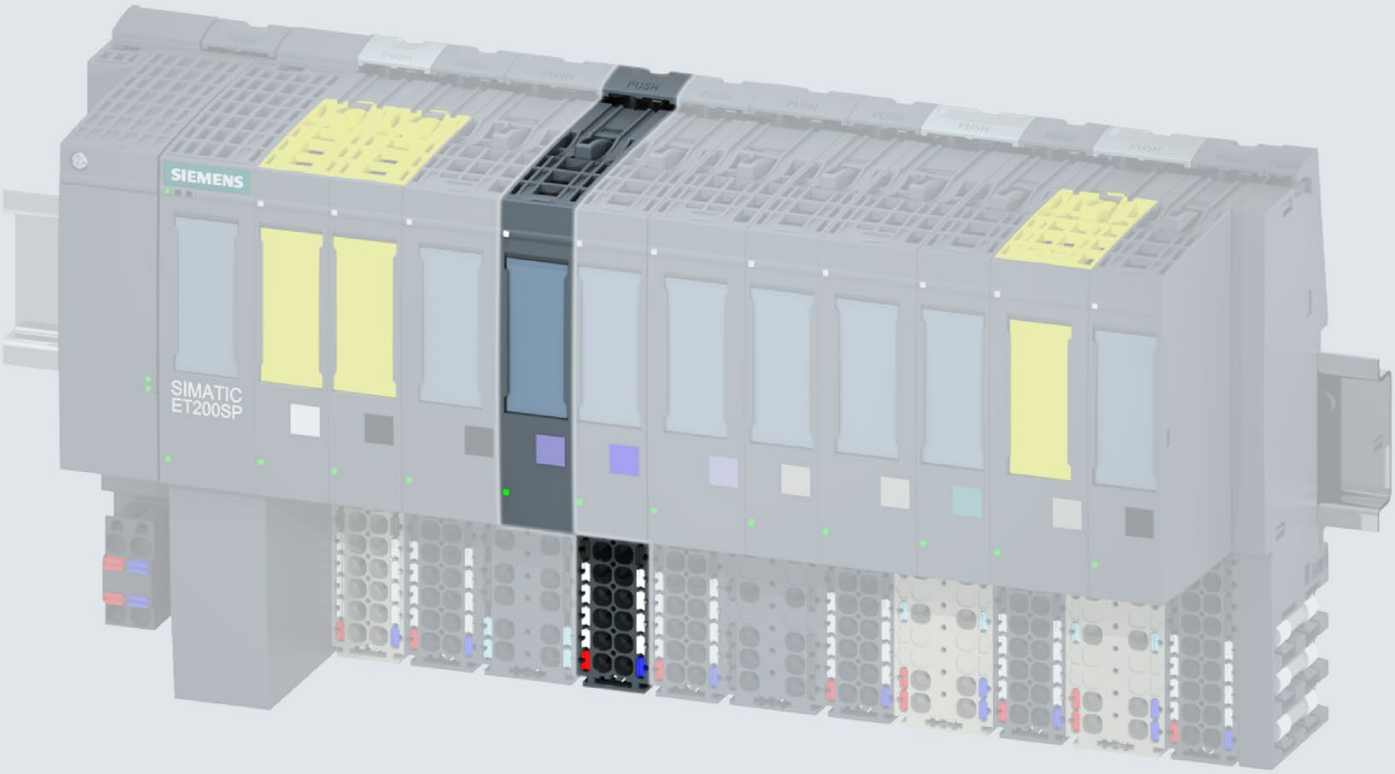

Manual

SIMATIC

ET 200SP

Analog input module AI 2xI 2-/4-wire ST
(6ES7134-6GB00-0BA1)

Edition 04/2018

support.industry.siemens.com

SIEMENS

SIMATIC

ET 200SP
Analog input module
AI 2xI 2/4-wire ST
(6ES7134-6GB00-0BA1)

Manual

Preface

Documentation guide 1

Product overview 2

Wiring 3

Parameters/address space 4

Interrupts/diagnostics alarms 5

Technical specifications 6

Parameter data record A

Representation of analog values B

04/2018

A5E36104399-AB

Legal information

Warning notice system

This manual contains notices you have to observe in order to ensure your personal safety, as well as to prevent damage to property. The notices referring to your personal safety are highlighted in the manual by a safety alert symbol, notices referring only to property damage have no safety alert symbol. These notices shown below are graded according to the degree of danger.

⚠ DANGER

indicates that death or severe personal injury **will** result if proper precautions are not taken.

⚠ WARNING

indicates that death or severe personal injury **may** result if proper precautions are not taken.

⚠ CAUTION

indicates that minor personal injury can result if proper precautions are not taken.

NOTICE

indicates that property damage can result if proper precautions are not taken.

If more than one degree of danger is present, the warning notice representing the highest degree of danger will be used. A notice warning of injury to persons with a safety alert symbol may also include a warning relating to property damage.

Qualified Personnel

The product/system described in this documentation may be operated only by **personnel qualified** for the specific task in accordance with the relevant documentation, in particular its warning notices and safety instructions. Qualified personnel are those who, based on their training and experience, are capable of identifying risks and avoiding potential hazards when working with these products/systems.

Proper use of Siemens products

Note the following:

⚠ WARNING

Siemens products may only be used for the applications described in the catalog and in the relevant technical documentation. If products and components from other manufacturers are used, these must be recommended or approved by Siemens. Proper transport, storage, installation, assembly, commissioning, operation and maintenance are required to ensure that the products operate safely and without any problems. The permissible ambient conditions must be complied with. The information in the relevant documentation must be observed.

Trademarks

All names identified by ® are registered trademarks of Siemens AG. The remaining trademarks in this publication may be trademarks whose use by third parties for their own purposes could violate the rights of the owner.

Disclaimer of Liability

We have reviewed the contents of this publication to ensure consistency with the hardware and software described. Since variance cannot be precluded entirely, we cannot guarantee full consistency. However, the information in this publication is reviewed regularly and any necessary corrections are included in subsequent editions.

Siemens AG
Division Digital Factory
Postfach 48 48
90026 NÜRNBERG
GERMANY

A5E36104399-AB
℗ 05/2018 Subject to change

Copyright © Siemens AG 2015 - 2018.
All rights reserved

Preface

Preface

Purpose of the documentation

This manual supplements the ET 200SP distributed I/O system (http://support.automation.siemens.com/WW/view/en/58649293) system manual.

Functions that generally relate to the system are described in this manual.

The information provided in this manual and in the system/function manuals supports you in commissioning the system.

Changes compared to the previous version

Compared to the previous version, this manual contains the following changes:

- Connection diagram has been updated
- Technical specifications have been updated:
- Comments on the previous version of this manual were included in the current edition.

Conventions

CPU: When the term "CPU" is used in this manual, it applies to the CPUs of the S7-1500 automation system as well as to the CPUs/interface modules of the distributed I/O system ET 200SP.

STEP 7: In this documentation, "STEP 7" is used as a synonym for all versions of the configuration and programming software "STEP 7 (TIA Portal)".

Please also observe notes marked as follows:

Note

A note contains important information on the product described in the documentation, on the handling of the product or on the section of the documentation to which particular attention should be paid.

Recycling and disposal

For environmentally friendly recycling and disposal of your old equipment, contact a certified electronic waste disposal company and dispose of the equipment according to the applicable regulations in your country.

Security information

Siemens provides products and solutions with industrial security functions that support the secure operation of plants, systems, machines and networks.

In order to protect plants, systems, machines and networks against cyber threats, it is necessary to implement – and continuously maintain – a holistic, state-of-the-art industrial security concept. Siemens' products and solutions constitute one element of such a concept.

Customers are responsible for preventing unauthorized access to their plants, systems, machines and networks. Such systems, machines and components should only be connected to an enterprise network or the internet if and to the extent such a connection is necessary and only when appropriate security measures (e.g. firewalls and/or network segmentation) are in place.

For additional information on industrial security measures that may be implemented, please visit (http://www.siemens.com/industrialsecurity).

Siemens' products and solutions undergo continuous development to make them more secure. Siemens strongly recommends that product updates are applied as soon as they are available and that the latest product versions are used. Use of product versions that are no longer supported, and failure to apply the latest updates may increase customers' exposure to cyber threats.

To stay informed about product updates, subscribe to the Siemens Industrial Security RSS Feed under (http://www.siemens.com/industrialsecurity).

Table of contents

Preface 3

1 Documentation guide 6

2 Product overview 11

2.1 Properties 11

3 Wiring 14

3.1 Wiring and block diagram 14

4 Parameters/address space 16

4.1 Measurement types and measuring ranges 16

4.2 Parameters 17

4.3 Description of parameters 19

4.4 Address space 22

5 Interrupts/diagnostics alarms 23

5.1 Status and error displays 23

5.2 Interrupts 25

5.3 Diagnostics alarms 26

6 Technical specifications 27

6.1 Technical specifications 27

A Parameter data record 31

A.1 Dependencies when configuring with GSD file 31

A.2 Parameter assignment and structure of the parameter data record 32

B Representation of analog values 36

B.1 Representation of analog values for analog inputs 36

B.2 Representation of input ranges 37

B.3 Representation of analog values in the current measuring ranges 38

Documentation guide

1

The documentation for the SIMATIC ET 200SP distributed I/O system is arranged into three areas.
This arrangement enables you to access the specific content you require.

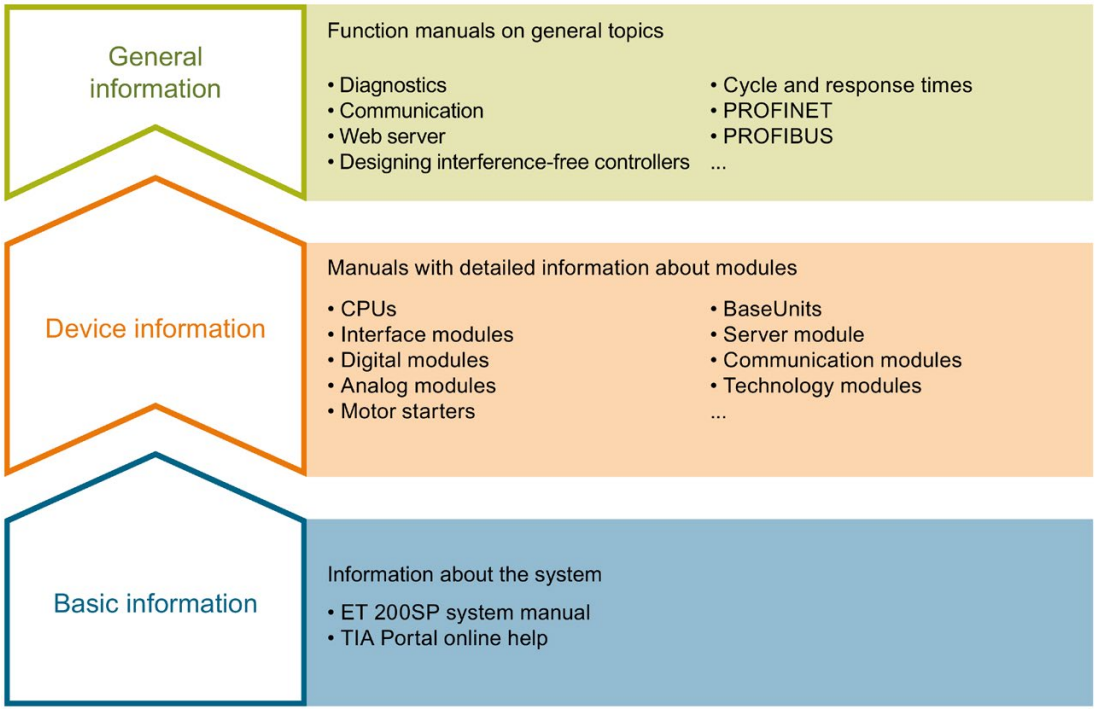

Basic information

The system manual describes in detail the configuration, installation, wiring and commissioning of the SIMATIC ET 200SP. distributed I/O system. The STEP 7 online help supports you in the configuration and programming.

Device information

Product manuals contain a compact description of the module-specific information, such as properties, wiring diagrams, characteristics and technical specifications.

General information

The function manuals contain detailed descriptions on general topics regarding the SIMATIC ET 200SP distributed I/O system, e.g. diagnostics, communication, Web server, motion control and OPC UA.

You can download the documentation free of charge from the Internet (https://support.industry.siemens.com/cs/ww/en/view/109742709).

Changes and supplements to the manuals are documented in a Product Information.

You can download the product information free of charge from the Internet (https://support.industry.siemens.com/cs/us/en/view/73021864).

Manual Collection ET 200SP

The Manual Collection contains the complete documentation on the SIMATIC ET 200SP distributed I/O system gathered together in one file.

You can find the Manual Collection on the Internet (http://support.automation.siemens.com/WW/view/en/84133942).

"mySupport"

With "mySupport", your personal workspace, you make the most of your Industry Online Support.

In "mySupport" you can store filters, favorites and tags, request CAx data and put together your personal library in the Documentation area. Furthermore, your data is automatically filled into support requests and you always have an overview of your current requests.

You need to register once to use the full functionality of "mySupport".

You can find "mySupport" in the Internet (https://support.industry.siemens.com/My/ww/en).

"mySupport" - Documentation

In the Documentation area of "mySupport", you have the possibility to combine complete manuals or parts of them to make your own manual.
You can export the manual in PDF format or in an editable format.

You can find "mySupport" - Documentation in the Internet (http://support.industry.siemens.com/My/ww/en/documentation).

"mySupport" - CAx Data

In the CAx Data area of "mySupport", you can have access the latest product data for your CAx or CAe system.

You configure your own download package with a few clicks.

In doing so you can select:

- Product images, 2D dimension drawings, 3D models, internal circuit diagrams, EPLAN macro files
- Manuals, characteristics, operating manuals, certificates
- Product master data

You can find "mySupport" - CAx Data in the Internet (http://support.industry.siemens.com/my/ww/en/CAxOnline).

Application examples

The application examples support you with various tools and examples for solving your automation tasks. Solutions are shown in interplay with multiple components in the system - separated from the focus in individual products.

You can find the application examples on the Internet (https://support.industry.siemens.com/sc/ww/en/sc/2054).

TIA Selection Tool

With the TIA Selection Tool, you can select, configure and order devices for Totally Integrated Automation (TIA).
This tool is the successor of the SIMATIC Selection Tool and combines the known configurators for automation technology into one tool.
With the TIA Selection Tool, you can generate a complete order list from your product selection or product configuration.

You can find the TIA Selection Tool on the Internet (http://w3.siemens.com/mcms/topics/en/simatic/tia-selection-tool).

SIMATIC Automation Tool

You can use the SIMATIC Automation Tool to run commissioning and maintenance activities simultaneously on various SIMATIC S7 stations as a bulk operation independently of the TIA Portal.

The SIMATIC Automation Tool provides a multitude of functions:

- Scanning of a PROFINET/Ethernet network and identification of all connected CPUs
- Address assignment (IP, subnet, gateway) and station name (PROFINET device) to a CPU
- Transfer of the data and the programming device/PC time converted to UTC time to the module
- Program download to CPU
- Operating mode switchover RUN/STOP
- Localization of the CPU by means of LED flashing
- Reading out CPU error information
- Reading the CPU diagnostic buffer
- Reset to factory settings
- Updating the firmware of the CPU and connected modules

You can find the SIMATIC Automation Tool on the Internet (https://support.industry.siemens.com/cs/ww/en/view/98161300).

PRONETA

With SIEMENS PRONETA (PROFINET network analysis), you analyze the plant network during commissioning. PRONETA features two core functions:

- The topology overview independently scans PROFINET and all connected components.
- The IO check is a fast test of the wiring and the module configuration of a system.

You can find SIEMENS PRONETA on the Internet (https://support.industry.siemens.com/cs/ww/en/view/67460624).

SINETPLAN

SINETPLAN, the Siemens Network Planner, supports you in planning automation systems and networks based on PROFINET. The tool facilitates professional and predictive dimensioning of your PROFINET installation as early as in the planning stage. In addition, SINETPLAN supports you during network optimization and helps you to exploit network resources optimally and to plan reserves. This helps to prevent problems in commissioning or failures during productive operation even in advance of a planned operation. This increases the availability of the production plant and helps improve operational safety.

The advantages at a glance

- Network optimization thanks to port-specific calculation of the network load
- Increased production availability thanks to online scan and verification of existing systems
- Transparency before commissioning through importing and simulation of existing STEP 7 projects
- Efficiency through securing existing investments in the long term and optimal exploitation of resources

You can find SINETPLAN on the Internet (https://www.siemens.com/sinetplan).

Product overview

2

2.1 Properties

Article number

6ES7134-6GB00-0BA1

View of the module

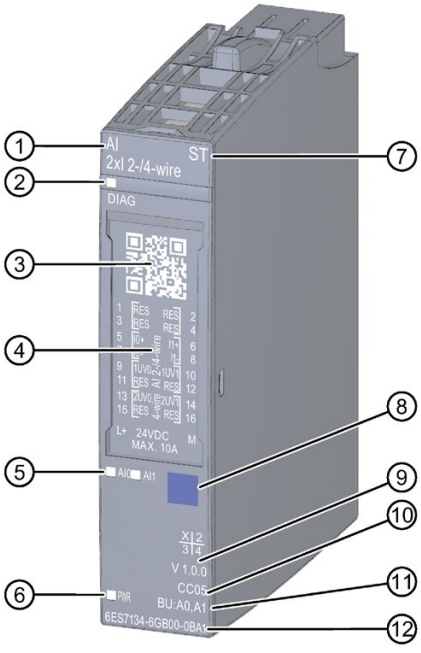

① Module type and name
② LED for diagnostics
③ 2D matrix code
④ Wiring diagram
⑤ LEDs for channel status
⑥ LED for supply voltage
⑦ Function class
⑧ Color coding module type
⑨ Function and firmware version
⑩ Color code for selecting the color identification labels
⑪ BU type
⑫ Article number

Figure 2-1 View of the module AI 2×I 2-/4-wire ST

Properties

The module has the following technical properties:

- Analog input module with 2 inputs
- Measuring type current for 2- and 4-wire transducers
- Input ranges for current measurement:
  - 0 mA to 20 mA, resolution 15 bits
  - 4 to 20 mA, resolution 15 bits
  - ± 20 mA, resolution 16 bit incl. sign
- Electrically isolated from supply voltage L+
- Permitted common mode voltage: 10 V_{pp}/3.5 V_{rms}
- Configurable diagnostics (per module)
- Constant cycle time for processing measured values
  - 500 µs, regardless of the number of channels used and the configuration

The module supports the following functions:

Table 2- 1 Version dependencies of the functions

Function	HW version	FW version	STEP 7		GSD file	
			TIA Portal	V5.x	PROFINET IO	PROFIBUS DP
Firmware update	FS01	V1.0.0 or higher	V13 SP1 or higher	as of V5.5 SP4 with HSP 0227 V6.0 or higher	X	X
Identification data I&M0 to I&M3	FS01	V1.0.0 or higher	V13 SP1 or higher	as of V5.5 SP4 with HSP 0227 V6.0 or higher	X	X
Configuration in RUN	FS01	V1.0.0 or higher	V13 SP1 or higher	as of V5.5 SP4 with HSP 0227 V6.0 or higher	X	X
Value status	FS01	V1.0.0 or higher	V13 SP1 or higher	as of V5.5 SP4 with HSP 0227 V6.0 or higher	X	
PROFIenergy	FS01	V1.0.0 or higher	V13 SP1 or higher	as of V5.5 SP4 with HSP 0227 V6.0 or higher	X	X

You can configure the module with STEP 7 and with GSD file.

Accessories

The following accessories must be ordered separately:

- Labeling strips
- Color identification labels
- Reference identification label
- Shield connector

See also

You can find additional information on the accessories in the ET 200SP distributed I/O system (http://support.automation.siemens.com/WW/view/en/58649293) system manual.

Wiring 3

3.1 Wiring and block diagram

This section includes the block diagram of the AI 2xI 2-/4-wire ST module with the various terminal assignments for a 2- und 4-wire connection.

You can find information on wiring the BaseUnit in the ET 200SP distributed I/O system (http://support.automation.siemens.com/WW/view/en/58649293) system manual.

Note

You can use and combine the different wiring options for all channels.

Note

The load group of the module must begin with a light-colored BaseUnit. Keep this in mind also during the configuration.

Wiring: Current measurement 2-wire and 4-wire connection (2-wire and 4-wire transducer)

The following figure shows the block diagram and an example of the terminal assignment of the analog input module AI 2xI 2-/4-wire ST on the BaseUnit BU type A0/A1.

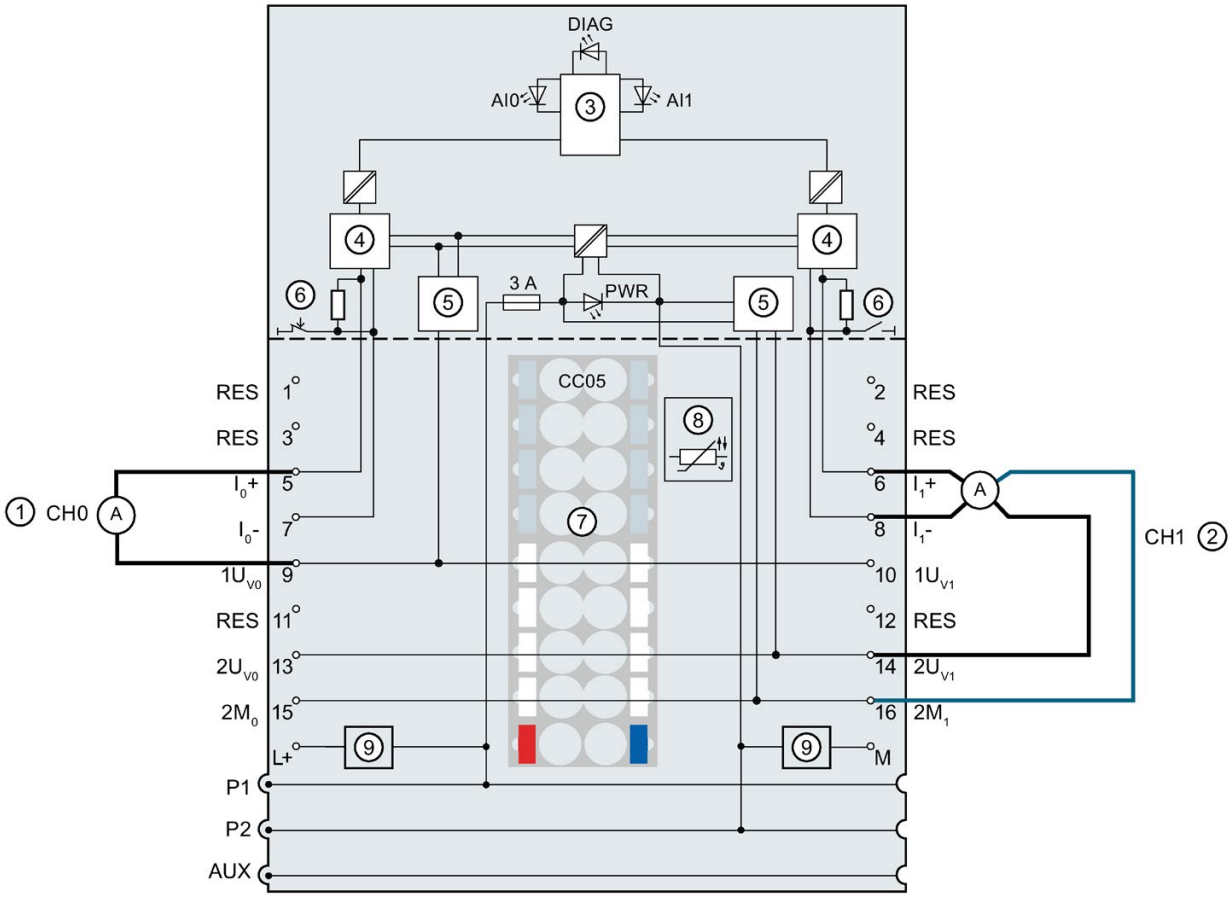

①	2-wire connection for current measurement (2-wire transducer)	I_n+	Current input positive, channel n
②	4-wire connection for current measurement (4-wire transducer)	I_n-	Current input negative, channel n
③	Backplane bus interface	$1U_{Vn}$	Supply voltage (2-wire transducer), channel n
④	Analog-to-digital converter (ADC)	$2U_{Vn}$	Supply voltage (4-wire transducer), channel n
⑤	Current limitation	$2M_n$	Reference potential (4-wire transducer)
⑥	Switchover 2-wire / 4-wire	RES	Reserve, must remain unused for future function extensions
⑦	Color-coded label with color code CC05 (optional)	L+	24 V DC (infeed only with light-colored BaseUnit)
⑧	Temperature recording for BU type A1 only (function cannot be used for this module)	P1, P2, AUX	Internal self-assembling voltage buses Connection to left (dark-colored BaseUnit) Connection to left interrupted (light-colored BaseUnit)
⑨	Filter connection supply voltage (only when light-colored BaseUnit is present)	DIAG	Diagnostics LED (green, red)
		AI0, AI1	Channel status LED (green)
		PWR	Power LED (green)

Figure 3-1 Wiring and block diagram for current measurement 2-wire and 4-wire connection (2-wire and 4-wire transducer)

Parameters/address space 4

4.1 Measurement types and measuring ranges

The analog input module AI 2×I 2-/4-wire ST has the following measuring ranges:

Table 4- 1 Measuring ranges

Measurement type	Measuring range	Resolution
Current (2-wire transducer)	0 to 20 mA 4 mA to 20 mA	15 bits 15 bits
Current (4-wire transducer)	0 mA to 20 mA 4 mA to 20 mA ± 20 mA	15 bit 15 bits 16 bits incl. sign

You can find the tables of measuring ranges and overflow, overrange, etc. in the section Representation of analog values in the current measuring ranges (Page 38) and the "Analog value processing" function manual.

4.2 Parameters

Parameters of AI 2xI 2-/4-wire ST

During configuration of the module with STEP 7, define the properties of the module via various parameters. The following table lists the configurable parameters. The effective range of the configurable parameters depends on the type of configuration. The following configurations are possible:

- Central operation with an ET 200SP CPU
- Distributed operation on PROFINET IO in an ET 200SP system
- Distributed operation on PROFIBUS DP in an ET 200SP system

When assigning parameters in the user program, use the "WRREC" instruction to transfer the parameters to the module using the data records; refer to section Parameter assignment and structure of the parameter data record (Page 32).

The following parameter settings are possible:

Table 4- 2 Configurable parameters and their defaults (GSD file)

Parameter	Range of values	Default	Configuration in RUN	Effective range with configuration software, e.g. STEP 7 (TIA Portal)	
				GSD file PROFINET IO	GSD file PROFIBUS DP
Diagnostics: No supply voltage L+	• Disable • Enable	Disable	Yes	Channel	Channel
Diagnostics: Short-circuit to ground	• Disable • Enable	Disable	Yes	Channel	Channel
Diagnostics: Overflow [1]	• Disable • Enable	Disable	Yes	Channel	Channel [1]
Diagnostics: Underflow [1]	• Disable • Enable	Disable	Yes	Channel	
Diagnostics: Wire break	• Disable • Enable	Disable	Yes	Channel	Channel

Parameter	Range of values	Default	Configuration in RUN	Effective range with configuration software, e.g. STEP 7 (TIA Portal)	
				GSD file PROFINET IO	GSD file PROFIBUS DP
Measurement type/measuring range	• Deactivated • Current (4-wire transducer) 0 to 20 mA • Current (4-wire transducer) 4 to 20 mA • Current (4-wire transducer) +/- 20 mA • Current (2-wire transducer) 0 to 20 mA • Current (2-wire transducer) 4 to 20 mA	Current (4-wire transducer) 4 to 20 mA	Yes	Channel	Channel
Smoothing	• None • Weak • Medium • Strong	None	Yes	Channel	Channel
Interference frequency suppression [2]	• 60 Hz (50 ms) • 50 Hz (60 ms) [3] • 16.6 Hz (180 ms) • None	• 50 Hz (60 ms)	Yes	Channel	Module
Potential group	• Use potential group of the left module (module plugged into a dark-colored BaseUnit) • Enable new potential group (module plugged into light-colored BaseUnit)	Use potential group of the left module	No	Module	Module

[1] Due to the limited number of parameters at a maximum of 244 bytes per ET 200SP station with a PROFIBUS GSD configuration, the configuration options are restricted. The parameter length of the I/O module is 4 bytes for PROFIBUS GSD configuration. If necessary, you can set this parameter by using the data record 128, see the appendix "Parameter data record".

[2] The settings in the "Interference frequency suppression" parameter have a direct effect on the conversion time of the channel. The analog value is therefore also affected by additionally set filtering via the "Smoothing" parameter.

[3] Interference frequency suppression: Noise at 400 Hz is automatically included in the filtering at 50 Hz.

Note

Unused channels

"Deactivate" the unused channels in the parameter assignment.

A deactivated channel always returns the value $7FFF_H$.

4.3 Description of parameters

Diagnostics: No supply voltage L+

Enabling of the diagnostics alarm for no or insufficient supply voltage L+.

Diagnostics: Short-circuit to ground

Enabling of the diagnostics in the event of a short-circuit of the encoder supply to ground or of an input to the encoder supply.

The short-circuit and underflow diagnostics can be activated simultaneously. If both diagnostics events occur simultaneously, the short-circuit diagnostics is output.

Diagnostics: Overflow

Enabling of the diagnostics when the measured value exceeds the overrange.

Diagnostics: Underflow

Enabling of the diagnostics when the measured value falls below the underrange.

Diagnostics: Wire break

Enabling of the diagnostics if the module has no current flow or has too little current for the measurement in the range of 4 mA to 20 mA.

The wire break and underflow diagnostics can be activated simultaneously. If both diagnostics events occur simultaneously, the wire break diagnostics is output.

Measurement type/measuring range

See the section Measurement types and measuring ranges (Page 16).

Smoothing

The individual measured values are smoothed by filtering. The smoothing can be set in 4 levels.

Smoothing time = Number of conversion cycles (k) x conversion time (≙ of the integration time set in the "Interference frequency suppression" parameter) of the channel.

The following figure shows how many conversion cycles it takes for the smoothed analog value to approach 100%, depending on the configured smoothing. This applies to every signal change at the analog input.

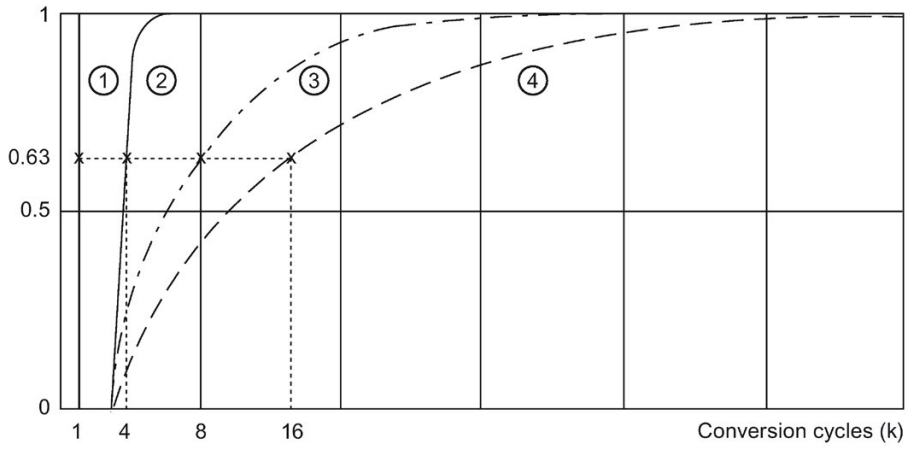

① No smoothing
② Weak (k = 4)
③ Medium (k = 8)
④ Strong (k = 16)

Figure 4-1 Smoothing for AI 2×I 2-/4-wire ST

Interference frequency suppression

Suppresses the interference affecting analog input modules that is caused by the frequency of the AC voltage network used.

The frequency of the AC voltage network can negatively affect the measured value, in particular when measuring in the low voltage range and with thermocouples. With this parameter, the user specifies the line frequency that is predominant in the plant.

Note:

The interference frequency suppression works parallel to the sampling of channels 0 and 1. The cycle time of the module is 500 µs regardless of the number of channels used and the configured interference frequency suppression.

Potential group

A potential group consists of a group of directly adjacent I/O modules within an ET 200SP station, which are supplied via a common supply voltage.

A potential group begins with a light-colored BaseUnit through which the required voltage is supplied for all modules of the potential group. The light-colored BaseUnit interrupts the three self-assembling voltage buses P1, P2 and AUX to the left neighbor.

All additional I/O modules of this potential group are plugged into dark-colored BaseUnits. You take the potential of the self-assembling voltage buses P1, P2 and AUX from the left neighbor.

A potential group ends with the dark-colored BaseUnit, which follows a light-colored BaseUnit or server module in the station configuration.

See also

You can find additional information in the system manual ET 200SP distributed I/O system (http://support.automation.siemens.com/WW/view/en/58649293).

4.4 Address space

Configuration options

The following configurations are possible:

- Configuration 1: Without value status
- Configuration 2: With value status

Evaluating the value status

If you enable the value status for the analog module, an additional byte is occupied in the input address space. Bits 0 to 1 in this byte are assigned to a channel. They provide information about the validity of the analog value.

Bit = 1: There are no errors on the module.

Bit = 0: Channel is deactivated or there is a fault on the module.

If a fault occurs on a channel with this module, the value status for all channels is 0.

Address space

The following figure shows the assignment of the address space for the AI 2xI 2-/4-wire ST with value status (Quality Information (QI)). The addresses for the value status are only available if the value status is enabled.

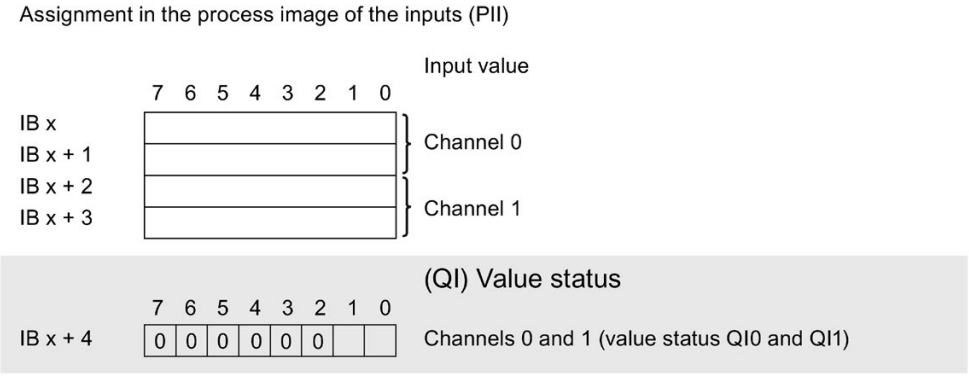

Figure 4-2 Address space of the AI 2xI 2-/4-wire ST with value status

Interrupts/diagnostics alarms

5

5.1 Status and error displays

LED displays

The following figure shows you the LED display of the AI 2×I 2-/4-wire ST.

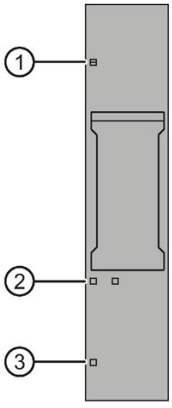

① DIAG (green/red)
② Channel status (green)
③ PWR (green)

Figure 5-1 LED displays

Meaning of the LEDs

The following tables show the meaning of the status and error displays. Corrective measures for diagnostics alarms can be found in section Diagnostics alarms (Page 26).

DIAG LED

Table 5- 1 Error display of the DIAG LED

DIAG	Meaning
□ Off	Backplane bus supply of the ET 200SP not OK
☼ Flashes	Module parameters not assigned
■ On	Module parameters assigned and no module diagnostics
☼ Flashes	Module parameters assigned and module diagnostics

Channel status LED

Table 5- 2 Status display of the channel status LED

Channel status	Meaning
□ Off	Channel disabled
■ On	Channel activated

PWR LED

Table 5- 3 Status display of the PWR LED

PWR	Meaning
□ Off	Missing supply voltage L+
■ On	Supply voltage L+ present

5.2 Interrupts

The AI 2×I 2-/4-wire ST analog input module supports diagnostics interrupts.

Diagnostics interrupts

The module generates a diagnostic interrupt at the following events:

- Short-circuit (encoder supply)
- Wire break (current 4 to 20 mA)
- High limit violated
- Low limit violated
- Error
- Parameter assignment error
- Supply voltage missing
- Channel temporarily unavailable

5.3 Diagnostics alarms

A diagnostics alarm is generated and the DIAG-LED flashes on the module for each diagnostics event. You can read out the diagnostics alarms, for example, in the diagnostics buffer of the CPU. You can evaluate the error codes with the user program.

Table 5- 4 Diagnostics alarms, their meaning and corrective measures

Diagnostics alarm	Error code	Meaning	Solution
Short-circuit (encoder supply) [1]	1_H	Encoder supply to ground	Correct interplay between module and encoder
		Input after encoder supply	
Wire break (current 4 to 20 mA)	6_H	Impedance of encoder circuit too high	Use a different encoder type or modify the wiring, e.g. use cables with larger cross-section
		Wire break between the module and sensor	Connect the cable
		Channel not connected (open)	• Deactivate channel • Connect the encoder contacts
High limit violated	7_H	Value is above the overrange.	Correct interplay between module and encoder
Low limit violated	8_H	Value is below the underrange.	Correct interplay between module and encoder
Error	9_H	Internal module error has occurred (diagnostics alarm on channel 0 applies for the entire module).	Replace the module
Parameter assignment error	10_H	• The module cannot evaluate parameters for the channel. • Incorrect parameter assignment.	Correct the parameter assignment (wire break diagnostics set only with the permitted measuring ranges).
Supply voltage missing	11_H	Missing or insufficient supply voltage L+	• Check supply voltage L+ on the BaseUnit • Check BaseUnit type
Channel temporarily unavailable	$1F_H$	Firmware update in progress or update has been canceled. The module does not read any process values in this state.	• Wait for firmware update. • Restart the firmware update.

[1] Since the module has no encoder supply for separate channels, a short-circuit in a channel has a permanent effect on the other channel.

Technical specifications

6

6.1 Technical specifications

Technical specifications of AI 2xI 2-/4-wire ST

Article number	6ES7134-6GB00-0BA1
General information	
Product type designation	AI 2xI 2-/4-wire ST
Firmware version	V1.0
• FW update possible	Yes
usable BaseUnits	BU type A0, A1
Color code for module-specific color identification plate	CC05
Product function	
• I&M data	Yes; I&M0 to I&M3
• Measuring range scalable	No
Engineering with	
• STEP 7 TIA Portal configurable/integrated as of version	V13 SP1
• STEP 7 configurable/integrated as of version	V5.5 SP3
• PROFIBUS as of GSD version/GSD revision	GSD Revision 5
• PROFINET as of GSD version/GSD revision	V2.3 / -
Operating mode	
• Oversampling	No
• MSI	No
CiR – Configuration in RUN	
Reparameterization possible in RUN	Yes
Calibration possible in RUN	No
Supply voltage	
Rated value (DC)	24 V
permissible range, lower limit (DC)	19.2 V
permissible range, upper limit (DC)	28.8 V
Reverse polarity protection	Yes
Input current	
Current consumption, max.	45 mA; without sensor supply

Article number	6ES7134-6GB00-0BA1
24 V encoder supply	
• 24 V	Yes
• Short-circuit protection	Yes
• Output current, max.	50 mA; Total current for both channels (two-wire)
Additional 24 V encoder supply	
• 24 V	Yes
• Short-circuit protection	Yes; Module-wise
• Output current, max.	200 mA; Total current for both channels (four-wire)
Power loss	
Power loss, typ.	1.1 W
Address area	
Address space per module	
• Address space per module, max.	4 byte; + 1 byte for QI information
Analog inputs	
Number of analog inputs	2
• For current measurement	2
permissible input current for current input (destruction limit), max.	50 mA
Cycle time (all channels), min.	500 µs
Input ranges (rated values), currents	
• 0 to 20 mA	Yes; 15 bit
• Input resistance (0 to 20 mA)	130 Ω; 90 ohms with two wires
• -20 mA to +20 mA	Yes; 16 bit incl. sign
• Input resistance (-20 mA to +20 mA)	130 Ω
• 4 mA to 20 mA	Yes; 15 bit
• Input resistance (4 mA to 20 mA)	130 Ω; 90 ohms with two wires
Cable length	
• shielded, max.	1 000 m
Analog value generation for the inputs	
Measurement principle	Sigma Delta
Integration and conversion time/resolution per channel	
• Resolution with overrange (bit including sign), max.	16 bit
• Integration time, parameterizable	Yes
• Interference voltage suppression for interference frequency f1 in Hz	16.6 / 50 / 60 Hz / off

Article number	6ES7134-6GB00-0BA1
Smoothing of measured values	
• Number of smoothing levels	4
• parameterizable	Yes
• Step: None	Yes; 1x conversion time
• Step: low	Yes; 4x conversion time
• Step: Medium	Yes; 8x conversion time
• Step: High	Yes; 16x conversion time
Encoder	
Connection of signal encoders	
• for current measurement as 2-wire transducer	Yes
– Burden of 2-wire transmitter, max.	650 Ω
• for current measurement as 4-wire transducer	Yes
Errors/accuracies	
Linearity error (relative to input range), (+/-)	0.01 %
Temperature error (relative to input range), (+/-)	0.005 %/K
Crosstalk between the inputs, min.	-50 dB
Repeat accuracy in steady state at 25 °C (relative to input range), (+/-)	0.05 %
Operational error limit in overall temperature range	
• Current, relative to input range, (+/-)	0.5 %
Basic error limit (operational limit at 25 °C)	
• Current, relative to input range, (+/-)	0.3 %
Interference voltage suppression for f = n x (f1 +/- 1 %), f1 = interference frequency	
• Series mode interference (peak value of interference < rated value of input range), min.	70 dB
• Common mode voltage, max.	10 V
• Common mode interference, min.	90 dB
Isochronous mode	
Isochronous operation (application synchronized up to terminal)	No
Interrupts/diagnostics/status information	
Diagnostics function	Yes

Article number	6ES7134-6GB00-0BA1
Alarms	
• Diagnostic alarm	Yes
• Limit value alarm	No
Diagnostic messages	
• Monitoring the supply voltage	Yes
• Wire-break	Yes; at 4 to 20 mA
• Short-circuit	Yes; Short-circuit of the encoder supply
• Group error	Yes
• Overflow/underflow	Yes
Diagnostics indication LED	
• Monitoring of the supply voltage (PWR-LED)	Yes; green PWR LED
• Channel status display	Yes; Green LED
• for channel diagnostics	No
• for module diagnostics	Yes; green/red DIAG LED
Potential separation	
Potential separation channels	
• between the channels	No
• between the channels and backplane bus	Yes
• between the channels and the power supply of the electronics	Yes
Permissible potential difference	
between the inputs (UCM)	10 Vpp
Isolation	
Isolation tested with	707 V DC (type test)
Dimensions	
Width	15 mm
Height	73 mm
Depth	58 mm
Weights	
Weight, approx.	32 g

Dimension drawing

See manual ET 200SP BaseUnits
(http://support.automation.siemens.com/WW/view/en/59753521)

Parameter data record

A

A.1 Dependencies when configuring with GSD file

When configuring the module with a GSD file, remember that the settings of some parameters are dependent on each other.

Configuring with a PROFINET GSD file

The table lists the properties and their dependencies on the measurement type and measuring range for PROFINET.

Measurement type	Measuring range	Diagnostics				
		No supply voltage L+	Short-circuit to ground	Overflow	Underflow	Wire break
Deactivated		*	*	*	*	*
Current (4-wire transducer)	0 mA to 20 mA	x	x	x	x	-
	4 mA to 20 mA	x	x	x	x	x
	±20 mA	x	x	x	x	-
Current (2-wire transducer)	0 mA to 20 mA	x	x	x	-	-
	4 mA to 20 mA	x	x	x	x	x

x = Property is allowed, - = Property is **not allowed**, * = Property is not relevant

Configuring with a PROFIBUS GSD file

The table lists the properties and their dependencies on the measurement type and measuring range for PROFIBUS.

Measurement type	Measuring range	Diagnostics			
		No supply voltage L+	Short-circuit to ground	Overflow/underflow	Wire break
Deactivated		*	*	*	*
Current (4-wire transducer)	0 mA to 20 mA	x	x	x	-
	4 mA to 20 mA	x	x	x	x
	+/- 20 mA	x	x	x	-
Current (2-wire transducer)	0 mA to 20 mA	x	x	x	-
	4 mA to 20 mA	x	x	x	x

x = Property is allowed, - = Property is **not allowed**, * = Property is not relevant

A.2 Parameter assignment and structure of the parameter data record

Parameter assignment in the user program

You can reassign the module parameters in RUN. For example, the voltage or current values of selected channels can be changed in RUN without having an effect on the other channels.

Changing parameters in RUN

The "WRREC" instruction is used to transfer the parameters to the module using data record 128. The parameters set in STEP 7 are not changed in the CPU, which means that the parameters set in STEP 7 will be valid again after a restart.

Output parameter STATUS

The module ignores errors that occur during the transfer of parameters with the "WRREC" instruction and continues operation with the previous parameter assignment. The STATUS output parameter contains a corresponding error code.

You will find a description of the "WRREC" instruction and the error codes in the STEP 7 online help.

Structure of data record 128 for entire module

Note

Channel 0 includes the diagnostics enable for the entire module.

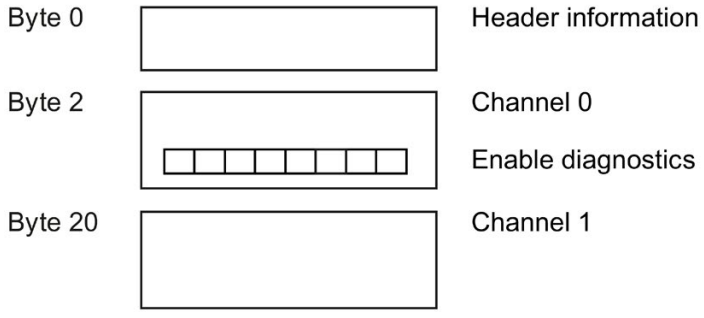

Figure A-1 Structure of data record 128 for entire module

Header information

The figure below shows the structure of the header information.

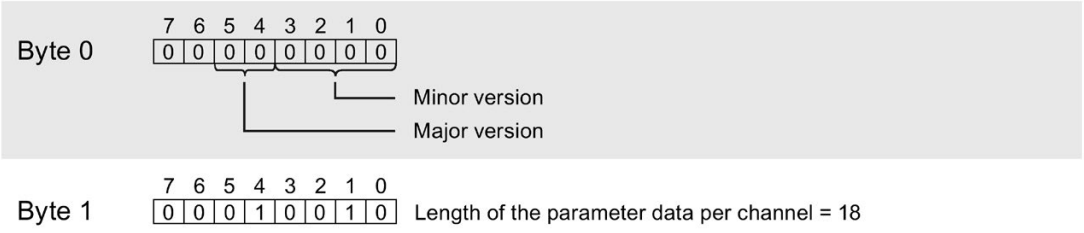

Figure A-2 Header information

Parameters

The following figure shows the structure of the parameters for channels 0 and 1.

You enable a parameter by setting the corresponding bit to "1".

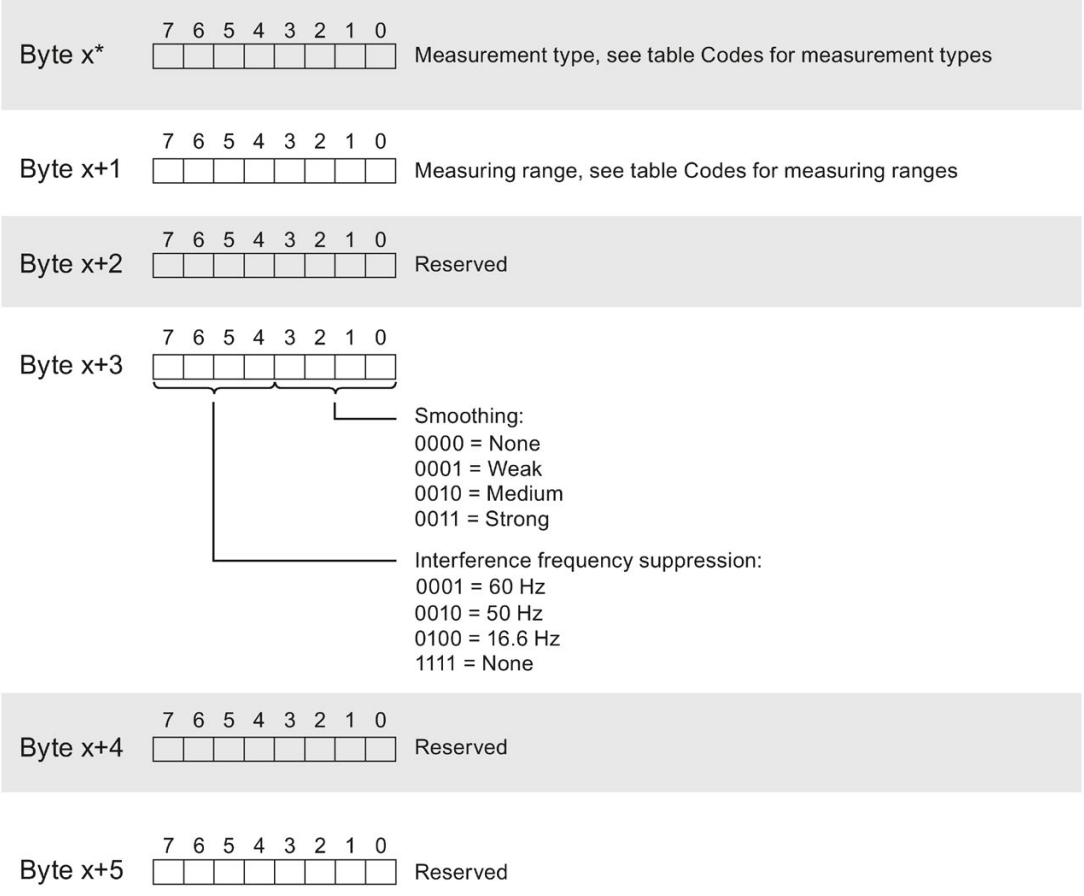

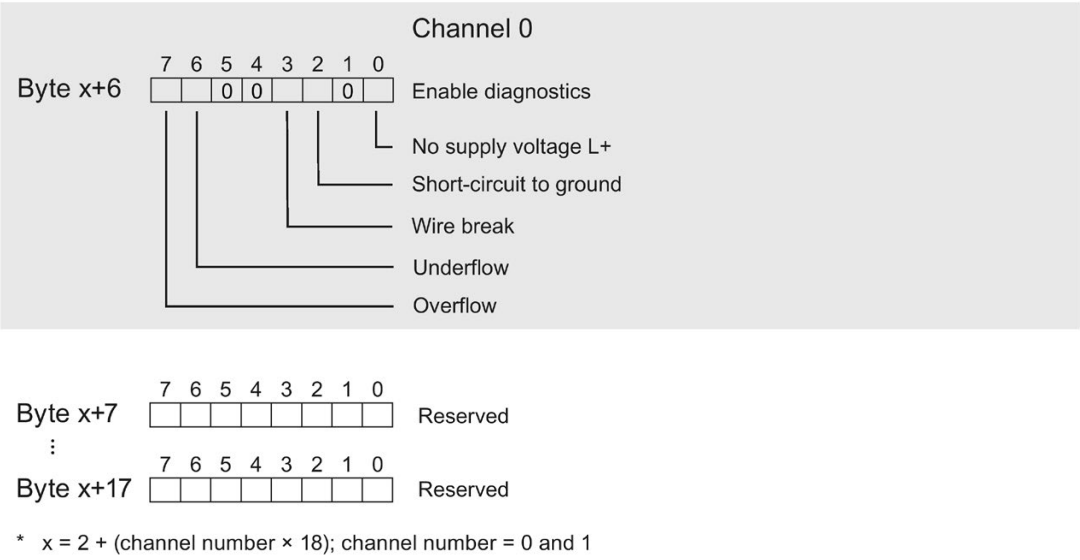

Figure A-3 Structure of bytes x to x+17 for channels 0 and 1

Codes for measurement types

The following table contains the codes for the measuring types of the analog input module. You must enter these codes in byte x (see channel parameter block figure).

Table A- 1 Codes for measurement types

Measurement type	Code
Deactivated	0000 0000
Current, 4-wire transducer	0000 0010
Current, 2-wire transducer	0000 0011

Codes for measuring ranges

The following table contains the codes for the measuring ranges of the analog input module. You must enter these codes in byte x+1 (see channel parameter block figure).

Table A- 2 Codes for measuring ranges

Measuring range	Coding
Current	
0 mA to 20 mA	0000 0010
4 mA to 20 mA	0000 0011
±20 mA	0000 0100

Error transmitting the data record

The module always checks all values of the transmitted data record. The module applies the values from the data record only when all values have been transmitted without errors.

The WRREC instruction for writing data records returns the appropriate error codes if there are errors in the STATUS parameter.

The following table shows the module-specific error codes and their meaning for parameter data record 128.

Error code in the STATUS parameter (hexadecimal)				Meaning	Solution
Byte 0	Byte 1	Byte 2	Byte 3		
DF	80	B0	xx	Number of the data record unknown	Enter valid number for data record.
DF	80	B1	xx	Length of the data record incorrect	Enter valid value for data record length.
DF	80	B2	xx	Slot invalid or unavailable	• Check the station to determine if the module is plugged in or pulled. • Check assigned values for the parameters of the WREC instruction.
DF	80	I0	xx	Incorrect version or error in the header information	Correct the version, length and number of parameter blocks.
DF	80	I1	xx	Parameter error	Check the parameters of the module.

Representation of analog values

B

B.1 Representation of analog values for analog inputs

This appendix shows the analog values for all measuring ranges that you can use with the analog module.

Measured value resolution

The resolution of the analog values differs depending on the analog module and its parameter assignment.

The table below shows the representation of binary analog values and of the associated decimal and hexadecimal units of the analog values.

Each analog value is written left aligned to the tags. The bits marked with "x" are set to "0".

Table B- 1 Resolution of the analog values

Resolution in bits including sign	Values		Analog value	
	Decimal	Hexadecimal	High byte	Low byte
15	2	2_H	Sign 0 0 0 0 0 0 0	0 0 0 0 0 0 1 x
16	1	1_H	Sign 0 0 0 0 0 0 0	0 0 0 0 0 0 0 1

B.2 Representation of input ranges

In the following tables, you can find the digitized representation of the bipolar and unipolar input ranges. The resolution is 16 bits.

Table B- 2 Bipolar input ranges

Dec. value	Measured value in %	Data word																Range
		2^{15}	2^{14}	2^{13}	2^{12}	2^{11}	2^{10}	2^{9}	2^{8}	2^{7}	2^{6}	2^{5}	2^{4}	2^{3}	2^{2}	2^{1}	2^{0}	
32767	>117.589	0	1	1	1	1	1	1	1	1	1	1	1	1	1	1	1	Overflow
32511	117.589	0	1	1	1	1	1	1	0	1	1	1	1	1	1	1	1	Overrange
27649	100.004	0	1	1	0	1	1	0	0	0	0	0	0	0	0	0	1	
27648	100.000	0	1	1	0	1	1	0	0	0	0	0	0	0	0	0	0	Nominal range
1	0.003617	0	0	0	0	0	0	0	0	0	0	0	0	0	0	0	1	
0	0.000	0	0	0	0	0	0	0	0	0	0	0	0	0	0	0	0	
-1	-0.003617	1	1	1	1	1	1	1	1	1	1	1	1	1	1	1	1	
-27648	-100.000	1	0	0	1	0	1	0	0	0	0	0	0	0	0	0	0	
-27649	-100.004	1	0	0	1	0	0	1	1	1	1	1	1	1	1	1	1	Underrange
-32512	-117.593	1	0	0	0	0	0	0	1	0	0	0	0	0	0	0	0	
-32768	<-117.593	1	0	0	0	0	0	0	0	0	0	0	0	0	0	0	0	Underflow

Table B- 3 Unipolar input ranges

Dec. value	Measured value in %	Data word																Range
		2^{15}	2^{14}	2^{13}	2^{12}	2^{11}	2^{10}	2^{9}	2^{8}	2^{7}	2^{6}	2^{5}	2^{4}	2^{3}	2^{2}	2^{1}	2^{0}	
32767	>117.589	0	1	1	1	1	1	1	1	1	1	1	1	1	1	1	1	Overflow
32511	117.589	0	1	1	1	1	1	1	0	1	1	1	1	1	1	1	1	Overrange
27649	100.004	0	1	1	0	1	1	0	0	0	0	0	0	0	0	0	1	
27648	100.000	0	1	1	0	1	1	0	0	0	0	0	0	0	0	0	0	Nominal range
1	0.003617	0	0	0	0	0	0	0	0	0	0	0	0	0	0	0	1	
0	0.000	0	0	0	0	0	0	0	0	0	0	0	0	0	0	0	0	
-1	-0.003617	1	1	1	1	1	1	1	1	1	1	1	1	1	1	1	1	Underrange
-4864	-17.593	1	1	1	0	1	1	0	1	0	0	0	0	0	0	0	0	
-32768	<-17.593	1	0	0	0	0	0	0	0	0	0	0	0	0	0	0	0	Underflow

B.3 Representation of analog values in the current measuring ranges

The following tables list the decimal and hexadecimal values (codes) of the possible current measuring ranges.

Table B- 4 Current measuring range ±20 mA

Values		Current measuring range	Range
Dec.	Hex.	±20 mA	
32767	7FFF	> 23.52 mA	Overflow
32511	7EFF	23.52 mA	Overrange
27649	6C01		
27648	6C00	20 mA	Nominal range
20736	5100	15 mA	
1	1	723.4 nA	
0	0	0 mA	
-1	FFFF		
-20736	AF00	-15 mA	
-27648	9400	-20 mA	
-27649	93FF		Underrange
-32512	8100	-23.52 mA	
-32768	8000	< -23.52 mA	Underflow

Table B- 5 Current measuring ranges 0 to 20 mA and 4 to 20 mA

Values		Current measuring range		Range
Dec.	Hex.	0 to 20 mA*	4 to 20 mA	
32767	7FFF	> 23.52 mA	> 22.81 mA	Overflow
32511	7EFF	23.52 mA	22.81 mA	Overrange
27649	6C01			
27648	6C00	20 mA	20 mA	Nominal range
20736	5100	15 mA	16 mA	
1	1	723.4 nA	4 mA + 578.7 nA	
0	0	0 mA	4 mA	
-1	FFFF			Underrange
-4864	ED00	-3.52 mA	1.185 mA	
-32768	8000	< -3.52 mA	< 1.185 mA	Underflow

* For measurement type "2-wire transducer", negative values are not possible for the range "0 to 20 mA". Therefore, no underrange or underflow exists here.

SIEMENS

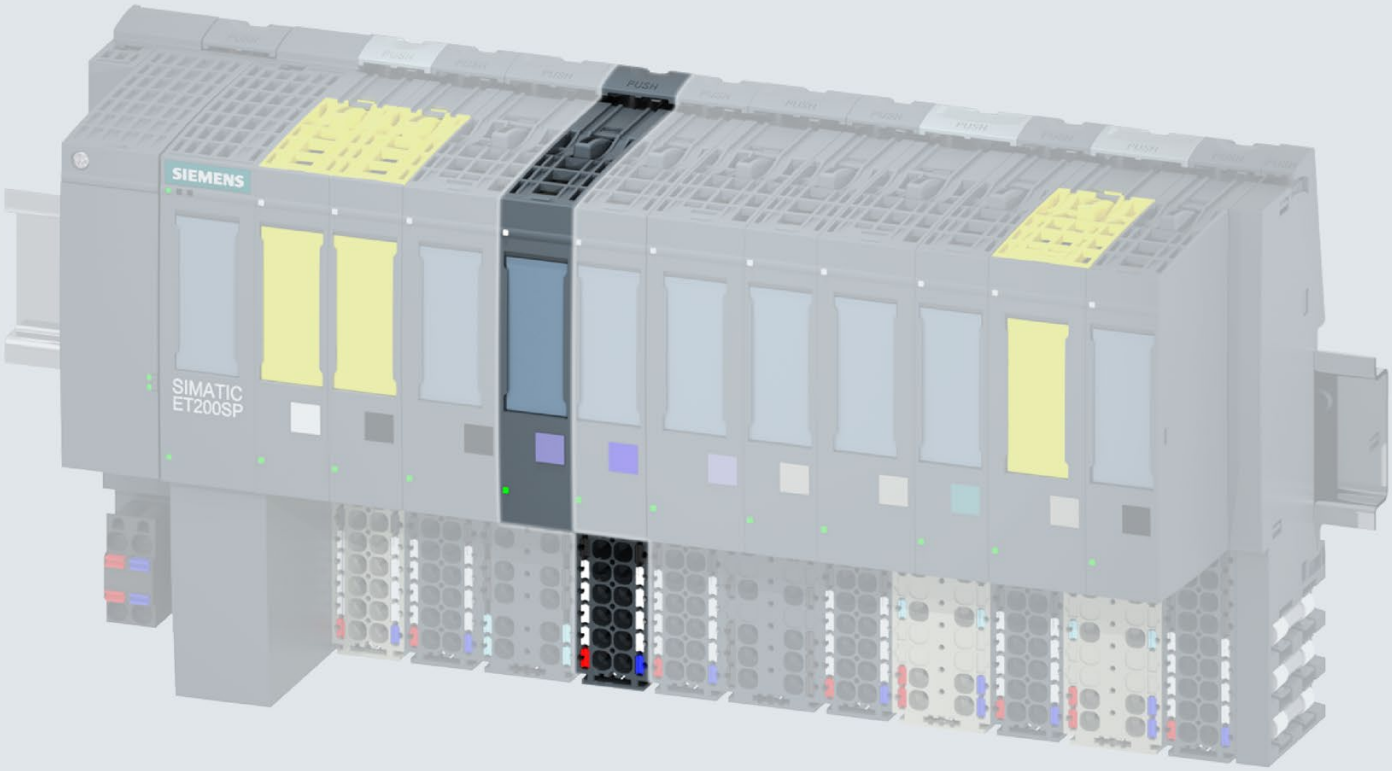

Manual

SIMATIC

ET 200SP

Analog input module
AI 2xU/I 2-/4-wire HS (6ES7134-6HB00-0DA1)

Edition 09/2018

support.industry.siemens.com

SIEMENS

SIMATIC

ET 200SP
Analog input module
AI 2xU/I 2-/4-wire HS
(6ES7134-6HB00-0DA1)

Manual

Preface

Documentation Guide 1

Product overview 2

Connecting 3

Parameters/address space 4

Interrupts/diagnostics interrupts 5

Technical specifications 6

Parameter data record A

Representation of analog values B

09/2018

A5E03576060-AF

Legal information

Warning notice system

This manual contains notices you have to observe in order to ensure your personal safety, as well as to prevent damage to property. The notices referring to your personal safety are highlighted in the manual by a safety alert symbol, notices referring only to property damage have no safety alert symbol. These notices shown below are graded according to the degree of danger.

⚠ DANGER

indicates that death or severe personal injury **will** result if proper precautions are not taken.

⚠ WARNING

indicates that death or severe personal injury **may** result if proper precautions are not taken.

⚠ CAUTION

indicates that minor personal injury can result if proper precautions are not taken.

NOTICE

indicates that property damage can result if proper precautions are not taken.

If more than one degree of danger is present, the warning notice representing the highest degree of danger will be used. A notice warning of injury to persons with a safety alert symbol may also include a warning relating to property damage.

Qualified Personnel

The product/system described in this documentation may be operated only by **personnel qualified** for the specific task in accordance with the relevant documentation, in particular its warning notices and safety instructions. Qualified personnel are those who, based on their training and experience, are capable of identifying risks and avoiding potential hazards when working with these products/systems.

Proper use of Siemens products

Note the following:

⚠ WARNING

Siemens products may only be used for the applications described in the catalog and in the relevant technical documentation. If products and components from other manufacturers are used, these must be recommended or approved by Siemens. Proper transport, storage, installation, assembly, commissioning, operation and maintenance are required to ensure that the products operate safely and without any problems. The permissible ambient conditions must be complied with. The information in the relevant documentation must be observed.

Trademarks

All names identified by ® are registered trademarks of Siemens AG. The remaining trademarks in this publication may be trademarks whose use by third parties for their own purposes could violate the rights of the owner.

Disclaimer of Liability

We have reviewed the contents of this publication to ensure consistency with the hardware and software described. Since variance cannot be precluded entirely, we cannot guarantee full consistency. However, the information in this publication is reviewed regularly and any necessary corrections are included in subsequent editions.

Siemens AG
Division Digital Factory
Postfach 48 48
90026 NÜRNBERG
GERMANY

A5E03576060-AF
℗ 10/2018 Subject to change

Copyright © Siemens AG 2013 - 2018.
All rights reserved

Preface

Purpose of the documentation

This manual supplements the ET 200SP distributed I/O system (http://support.automation.siemens.com/WW/view/en/58649293) system manual.

Functions that generally relate to the system are described in this system manual.

The information provided in this manual and in the system/function manuals supports you in commissioning the system.

Changes compared to previous version

Compared to the previous version, this manual contains the following change:

Wiring and block diagram for current measurement 2-wire and 4-wire connection has been changed.

Conventions

CPU: When the term "CPU" is used in the following, it applies to the CPUs of the S7-1500 automation system as well as to the CPUs/interface modules of the ET 200SP distributed I/O system.

STEP 7: In this documentation, "STEP 7" is used as a synonym for all versions of the configuration and programming software "STEP 7 (TIA Portal)".

Please also observe notes marked as follows:

Note

A note contains important information on the product described in the documentation, on the handling of the product or on the section of the documentation to which particular attention should be paid.

Recycling and disposal

For environmentally friendly recycling and disposal of your old equipment, contact a certified electronic waste disposal company and dispose of the equipment according to the applicable regulations in your country.

Security information

Siemens provides products and solutions with industrial security functions that support the secure operation of plants, systems, machines and networks.

In order to protect plants, systems, machines and networks against cyber threats, it is necessary to implement – and continuously maintain – a holistic, state-of-the-art industrial security concept. Siemens' products and solutions constitute one element of such a concept.

Customers are responsible for preventing unauthorized access to their plants, systems, machines and networks. Such systems, machines and components should only be connected to an enterprise network or the internet if and to the extent such a connection is necessary and only when appropriate security measures (e.g. firewalls and/or network segmentation) are in place.

For additional information on industrial security measures that may be implemented, please visit (https://www.siemens.com/industrialsecurity).

Siemens' products and solutions undergo continuous development to make them more secure. Siemens strongly recommends that product updates are applied as soon as they are available and that the latest product versions are used. Use of product versions that are no longer supported, and failure to apply the latest updates may increase customers' exposure to cyber threats.

To stay informed about product updates, subscribe to the Siemens Industrial Security RSS Feed under (https://www.siemens.com/industrialsecurity).

Table of contents

Preface 3
1 Documentation Guide 6
2 Product overview 10
2.1 Properties 10
3 Connecting 13
3.1 Wiring and block diagram 13
4 Parameters/address space 16
4.1 Measurement types and measuring ranges 16
4.2 Parameters 16
4.3 Description of parameters 19
4.4 Oversampling 21
4.5 Address space 24
5 Interrupts/diagnostics interrupts 26
5.1 Status and error displays 26
5.2 Interrupts 28
5.3 Diagnostics alarms 30
6 Technical specifications 32
6.1 Technical specifications 32
A Parameter data record 37
A.1 Dependencies when configuring with GSD file 37
A.2 Parameter assignment and structure of the parameter data record 39
B Representation of analog values 45
B.1 Representation of input ranges 46
B.2 Representation of analog values in voltage measuring ranges 47
B.3 Representation of analog values in the current measuring ranges 48

Documentation Guide 1

The documentation for the SIMATIC ET 200SP distributed I/O system is arranged into three areas.
This arrangement enables you to access the specific content you require.

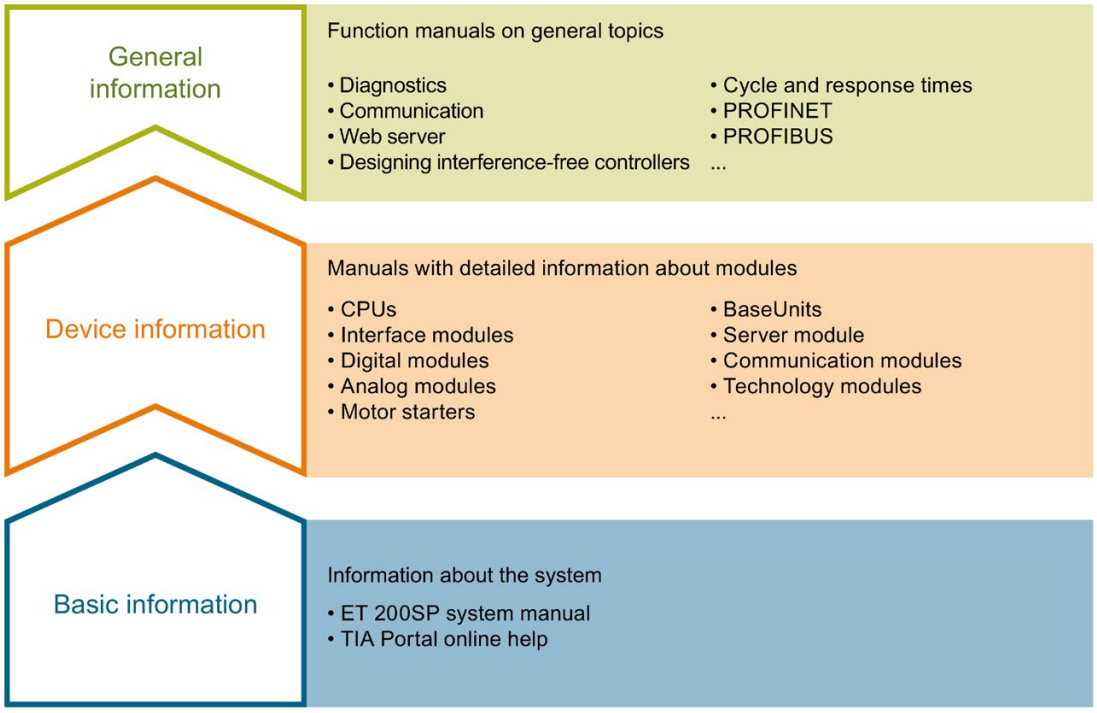

Basic information

The system manual describes in detail the configuration, installation, wiring and commissioning of the SIMATIC ET 200SP. distributed I/O system. The STEP 7 online help supports you in the configuration and programming.

Device information

Product manuals contain a compact description of the module-specific information, such as properties, wiring diagrams, characteristics and technical specifications.

General information

The function manuals contain detailed descriptions on general topics regarding the SIMATIC ET 200SP distributed I/O system, e.g. diagnostics, communication, Web server, motion control and OPC UA.

You can download the documentation free of charge from the Internet (https://support.industry.siemens.com/cs/ww/en/view/109742709).

Changes and supplements to the manuals are documented in a Product Information.

You can download the product information free of charge from the Internet (https://support.industry.siemens.com/cs/us/en/view/73021864).

Manual Collection ET 200SP

The Manual Collection contains the complete documentation on the SIMATIC ET 200SP distributed I/O system gathered together in one file.

You can find the Manual Collection on the Internet (https://support.automation.siemens.com/WW/view/en/84133942).

"mySupport"

With "mySupport", your personal workspace, you make the most of your Industry Online Support.

In "mySupport" you can store filters, favorites and tags, request CAx data and put together your personal library in the Documentation area. Furthermore, your data is automatically filled into support requests and you always have an overview of your current requests.

You need to register once to use the full functionality of "mySupport".

You can find "mySupport" in the Internet (https://support.industry.siemens.com/My/ww/en).

"mySupport" - Documentation

In the Documentation area of "mySupport", you have the possibility to combine complete manuals or parts of them to make your own manual.
You can export the manual in PDF format or in an editable format.

You can find "mySupport" - Documentation in the Internet (https://support.industry.siemens.com/My/ww/en/documentation).

"mySupport" - CAx Data

In the CAx Data area of "mySupport", you can have access the latest product data for your CAx or CAe system.

You configure your own download package with a few clicks.

In doing so you can select:

- Product images, 2D dimension drawings, 3D models, internal circuit diagrams, EPLAN macro files
- Manuals, characteristics, operating manuals, certificates
- Product master data

You can find "mySupport" - CAx Data in the Internet (https://support.industry.siemens.com/my/ww/en/CAxOnline).

Application examples

The application examples support you with various tools and examples for solving your automation tasks. Solutions are shown in interplay with multiple components in the system - separated from the focus in individual products.

You can find the application examples on the Internet (https://support.industry.siemens.com/sc/ww/en/sc/2054).

TIA Selection Tool

With the TIA Selection Tool, you can select, configure and order devices for Totally Integrated Automation (TIA).
This tool is the successor of the SIMATIC Selection Tool and combines the known configurators for automation technology into one tool.
With the TIA Selection Tool, you can generate a complete order list from your product selection or product configuration.

You can find the TIA Selection Tool on the Internet (https://w3.siemens.com/mcms/topics/en/simatic/tia-selection-tool).

SIMATIC Automation Tool

You can use the SIMATIC Automation Tool to run commissioning and maintenance activities simultaneously on various SIMATIC S7 stations as a bulk operation independently of the TIA Portal.

The SIMATIC Automation Tool provides a multitude of functions:

- Scanning of a PROFINET/Ethernet network and identification of all connected CPUs
- Address assignment (IP, subnet, gateway) and station name (PROFINET device) to a CPU
- Transfer of the data and the programming device/PC time converted to UTC time to the module
- Program download to CPU
- Operating mode switchover RUN/STOP
- Localization of the CPU by means of LED flashing
- Reading out CPU error information
- Reading the CPU diagnostic buffer
- Reset to factory settings
- Updating the firmware of the CPU and connected modules

You can find the SIMATIC Automation Tool on the Internet (https://support.industry.siemens.com/cs/ww/en/view/98161300).

PRONETA

With SIEMENS PRONETA (PROFINET network analysis), you analyze the plant network during commissioning. PRONETA features two core functions:

- The topology overview independently scans PROFINET and all connected components.
- The IO check is a fast test of the wiring and the module configuration of a system.

You can find SIEMENS PRONETA on the Internet (https://support.industry.siemens.com/cs/ww/en/view/67460624).

SINETPLAN

SINETPLAN, the Siemens Network Planner, supports you in planning automation systems and networks based on PROFINET. The tool facilitates professional and predictive dimensioning of your PROFINET installation as early as in the planning stage. In addition, SINETPLAN supports you during network optimization and helps you to exploit network resources optimally and to plan reserves. This helps to prevent problems in commissioning or failures during productive operation even in advance of a planned operation. This increases the availability of the production plant and helps improve operational safety.

The advantages at a glance

- Network optimization thanks to port-specific calculation of the network load
- Increased production availability thanks to online scan and verification of existing systems
- Transparency before commissioning through importing and simulation of existing STEP 7 projects
- Efficiency through securing existing investments in the long term and optimal exploitation of resources

You can find SINETPLAN on the Internet (https://www.siemens.com/sinetplan).

Product overview

2

2.1 Properties

Article number

6ES7134-6HB00-0DA1

View of the module

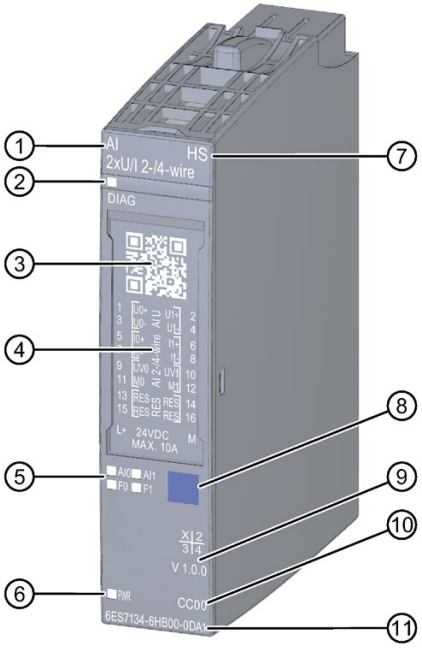

① Module type and name
② LED for diagnostics
③ 2D matrix code
④ Wiring diagram
⑤ LEDs for channel status
⑥ LED for supply voltage
⑦ Function class
⑧ Color coding module type
⑨ Function and firmware version
⑩ Color code for selecting the color identification labels
⑪ Article number

Figure 2-1 View of the AI 2×U/I 2-/4-wire HS module

Properties

The module has the following technical properties:

- Analog input module with 2 inputs
- Measurement types voltage and current for 2-/4-wire transducers
- Input ranges for voltage measurement:
  - ±10 V, resolution 16 bit including sign
  - ±5 V, resolution 15 bit incl. sign
  - 1 to 5 V, resolution 13 bit
  - 0 to 10 V, resolution 15 bit
- Input ranges for current measurement:
  - ±20 mA, resolution 16 bit incl. sign
  - 4 to 20 mA, resolution 14 bit
  - 0 to 20 mA, resolution 15 bit
- Electrically isolated between the channels
- Electrically isolated from supply voltage L+
- Permitted common mode voltage: 100 V_{pp}/35 V_{rms}
- Configurable diagnostics (per channel)
- Hardware interrupt on limit violation can be set per channel (two high and two low limits per channel)

The module supports the following functions:

- Firmware update
- I&M identification data
- Reconfiguration in RUN
- PROFIenergy

Table 2- 1 Version dependencies of other module functions

Function	Product version of the module as of	Firmware version of the module as of
Basic version	1	V1.0.0
Isochronous mode with send clock up to 250 µs	2	V1.1.0
Value status	2	V1.1.0
Oversampling channel 0	2	V1.1.0
Oversampling channel 0 and 1	2	V2.0.0
Isochronous mode with send clock up to 125 µs	2	V2.0.1

Accessories

The following accessories must be ordered separately:

- Labeling strips
- Reference identification label
- Shield connector

See also

You can find more information on accessories in the ET 200SP distributed I/O system (https://support.industry.siemens.com/cs/ww/en/view/58649293) system manual.

Connecting 3

3.1 Wiring and block diagram

This section contains the block diagram of the AI 2xU/I 2-/4-wire HS module with the various terminal assignments for a 2-wire and 4-wire connection.

You can find information on wiring the BaseUnit in the ET 200SP distributed I/O system (http://support.automation.siemens.com/WW/view/en/58649293) system manual.

Note

You can use and combine the different wiring options for all channels.

Note

The load group of the module must begin with a light BaseUnit. Keep this in mind also during the configuration.

Wiring: Voltage measurement 2-wire connection

The following figure shows the block diagram and an example for the terminal assignment of the analog input module AI 2xU/I 2-/4-wire HS on the BaseUnit BU type A0/A1.

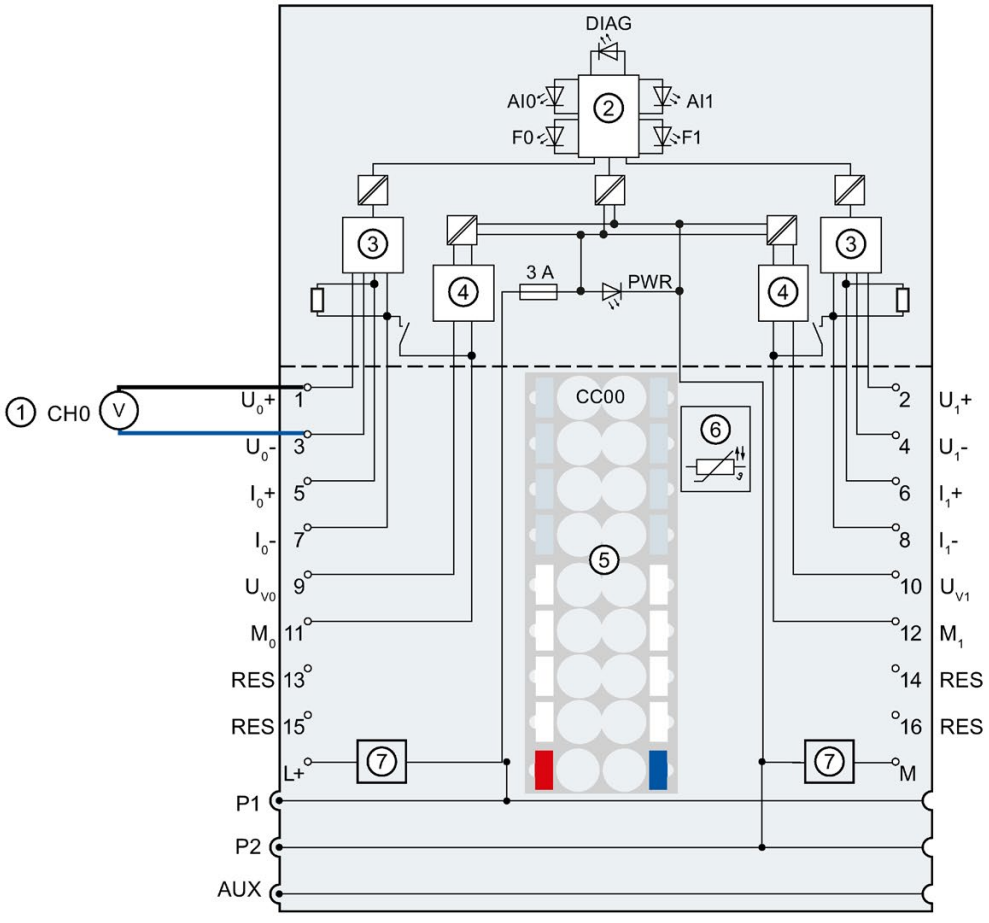

①	2-wire connection for voltage measurement	U_{Vn}	Supply voltage, channel n
②	Backplane bus interface	RES	Reserve, must remain unused for future function extensions
③	Analog-to-digital converter (ADC)	M_n	Reference ground to U_{Vn}, channel n
④	Current limitation	L+	24 V DC (infeed only with light BaseUnit)
⑤	Color identification label CCxx (optional)	M	Ground
⑥	Temperature recording for BU type A1 only (function cannot be used for this module)	P1, P2, AUX	Internal self-assembling voltage buses Connection to left (dark BaseUnit) Connection to left interrupted (light BaseUnit)
⑦	Supply voltage filter circuit (only when light BaseUnit is present)	DIAG	Diagnostics LED (green, red)
U_n+	Voltage input positive, channel n	AI0, AI1	Channel status LED (green)
U_n-	Voltage input negative, channel n	F0, F1	Channel fault LED (red)
I_n+	Current input positive, channel n	PWR	Power LED (green)
I_n-	Current input negative, channel n		

Figure 3-1 Wiring and block diagram for voltage measurement 2-wire connection

Wiring: Current measurement 2-wire and 4-wire connection

The following figure shows the block diagram and an example for the terminal assignment of the analog input module AI 2xU/I 2-/4-wire HS on the BaseUnit BU type A0/A1.

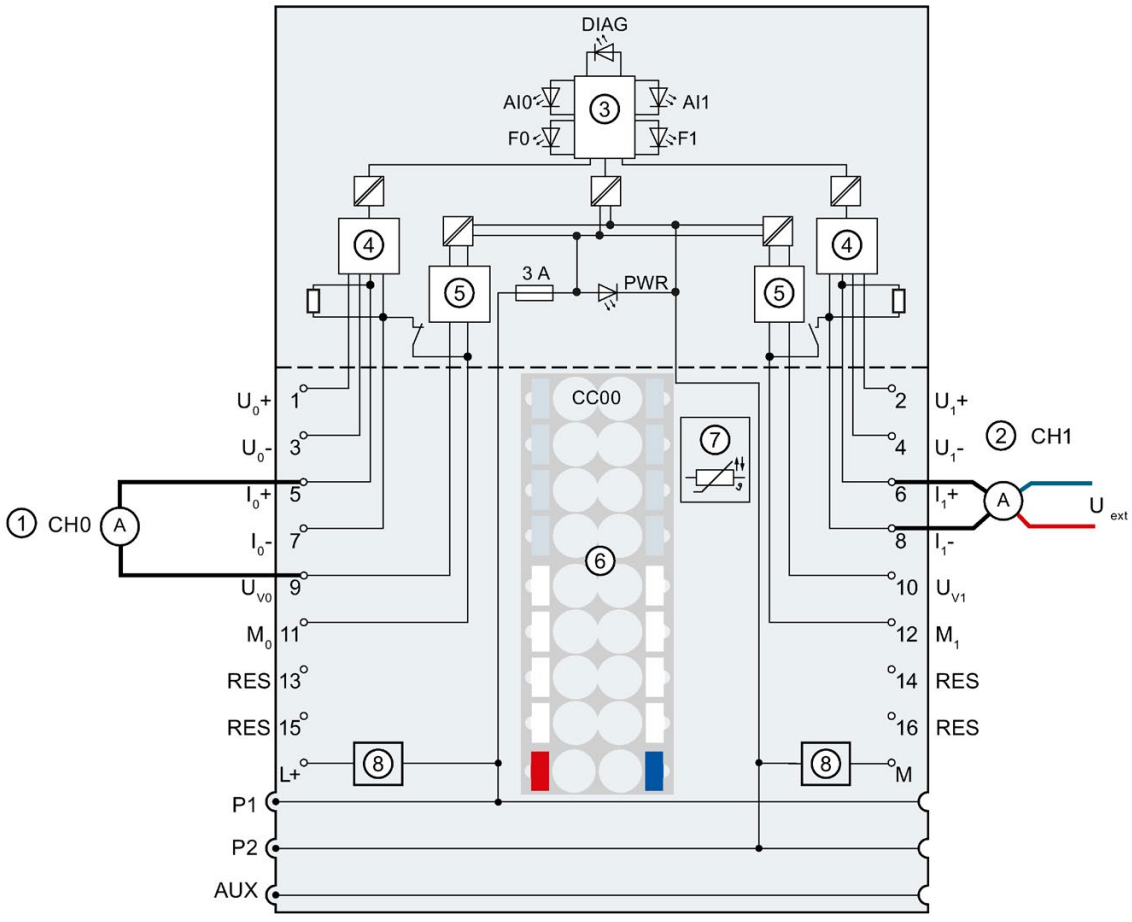

①	2-wire connection for current measurement	U_n+	Voltage input positive, channel n
②	4-wire connection for current measurement	U_n-	Voltage input negative, channel n
③	Backplane bus interface	U_{Vn}	Supply voltage, channel n
④	Analog-to-digital converter (ADC)	RES	Reserve, must remain unused for future function extensions
⑤	Current limitation	M_n	Reference ground to U_{Vn}, channel n
⑥	Color identification label CCxx (optional)	L+	24 V DC (infeed only with light BaseUnit)
⑦	Temperature recording for BU type A1 only (function cannot be used for this module)	P1, P2, AUX	Internal self-assembling voltage buses Connection to left (dark BaseUnit) Connection to left interrupted (light BaseUnit)
⑧	Supply voltage filter circuit (only when light BaseUnit is present)	DIAG	Diagnostics LED (green, red)
U_{ext}	Encoder supply external	AI0, AI1	Channel status LED (green)
I_n+	Current input positive, channel n	F0, F1	Channel fault LED (red)
I_n-	Current input negative, channel n	PWR	Power LED (green)

Figure 3-2 Wiring and block diagram for current measurement 2-wire and 4-wire connection

Parameters/address space 4

4.1 Measurement types and measuring ranges

The analog input module AI 2×U/I 2/4-wire HSF has the following measuring ranges:

Table 4- 1 Measuring ranges

Measurement type	Measuring range	Resolution
Voltage	±10 V	16 bit incl. sign
	±5 V	15 bit incl. sign
	0 to 10 V	15 bit
	1 to 5 V	13 bit
Current (2-/4-wire transducers)	±20 mA [1]	16 bit incl. sign
	0 to 20 mA	15 bit
	4 to 20 mA	14 bit

You can find the tables of measuring ranges and overflow, overrange, etc. in the section Representation of analog values (Page 45) and the "Analog Value Processing" function manual.

[1] Measuring range "+/-20 mA" is only possible with the measurement type "Current (4-wire transducer)".

4.2 Parameters

Parameters of the AI 2xU/I 2/4-wire HS

The effective range of the parameters depends on the type of configuration. The following configurations are possible:

- Central operation on an ET 200SP CPU or on an ET 200SP Open Controller
- Distributed operation on PROFINET IO in an ET 200SP system
- Distributed operation on PROFIBUS DP in an ET 200SP system

In addition to assigning parameters with the configuration software, you can also set the parameters in RUN mode (dynamically) using the user program. When assigning parameters in the user program, use the "WRREC" instruction to transfer the parameters to the module by means of data records; see section Parameter assignment and structure of parameter data record (Page 39).

The following parameter settings are possible:

Table 4- 2 Configurable parameters and their defaults (GSD file)

Parameter	Value range	Default	Reconfiguration in RUN	Effective range with configuration software, e.g. STEP 7 (TIA Portal)	
				GSD file PROFINET IO	GSD file PROFIBUS DP
Sampling rate	1 value/cycle	1 value/cycle	No	Module	Module
Diagnostics: No supply voltage L+	• Disable • Enable	Disable	Yes	Channel	Channel
Diagnostics: Short-circuit to ground	• Disable • Enable	Disable	Yes	Channel	Channel
Diagnostics: Overflow	• Disable • Enable	Disable	Yes	Channel	Channel [1]
Diagnostics: Underflow	• Disable • Enable	Disable	Yes	Channel	
Diagnostics: Wire break	• Disable • Enable	Disable	Yes	Channel	Channel
Type/range of measurement	• Deactivated • Voltage 1 to 5 V • Voltage +/- 5 V • Voltage +/- 10 V • Voltage 0 to 10 V • Current (4-wire transducer) 0 to 20 mA • Current (4-wire transducer) +/- 20 mA • Current (4-wire transducer) 4 to 20 mA • Current (2-wire transducer) 0 to 20 mA • Current (2-wire transducer) 4 to 20 mA	Current (4-wire transducer) 4 to 20 mA	Yes	Channel	Channel
Smoothing	• None • 2 times • 4 times • 8 times • 16 times • 32 times • 64 times	None	Yes	Channel	Channel

Parameter	Value range	Default	Reconfiguration in RUN	Effective range with configuration software, e.g. STEP 7 (TIA Portal)	
				GSD file PROFINET IO	GSD file PROFIBUS DP
Hardware interrupt high limit 1	• Disable • Enable	Disable	Yes	Channel	- [1]
Hardware interrupt low limit 1	• Disable • Enable	Disable	Yes	Channel	
Hardware interrupt high limit 2	• Disable • Enable	Disable	Yes	Channel	
Hardware interrupt low limit 2	• Disable • Enable	Disable	Yes	Channel	
High limit 1	• Value	27648	Yes	Channel	Channel [1]
Low limit 1	• Value	0	Yes	Channel	
High limit 2	• Value	27648	Yes	Channel	
Low limit 2	• Value	0	Yes	Channel	
Potential group	• Use potential group of the left module (dark-colored BaseUnit) • Enable new potential group (light-colored BaseUnit)	Use potential group of the left module	No	Module	Module

[1] Due to the limited number of parameters of a maximum of 244 bytes per ET 200SP station with a PROFIBUS GSD configuration, the parameter assignment options are restricted. If required, you can still assign these parameters using the data record 128 as described in the column "GSD file PROFINET IO" (see table above). The parameter length of the I/O module is 4 bytes.

Note

Unused channels

"Deactivate" the unused channels in the parameter assignment.

A deactivated channel always returns the value $7FFF_H$.

4.3 Description of parameters

Diagnostics: No supply voltage L+

Enabling of the diagnostics alarm for missing or insufficient supply voltage L+.

Diagnostics: Short-circuit to ground

Enabling of the diagnostics in the event of a short-circuit of the encoder supply to ground or of an input to the encoder supply. A short-circuit is also detected in the range of 1 to 5 V if the input signal is short-circuited or the input is not connected.

The short-circuit and underflow diagnostics can be activated simultaneously. If both diagnostics events occur simultaneously, the short-circuit diagnostics is output.

Diagnostics: Overflow

Enabling of the diagnostics when the measured value exceeds the overrange.

Diagnostics: Underflow

Enabling of the diagnostics when the measured value falls below the underrange.

Diagnostics: Wire break

Enabling of the diagnostics if the module has no current flow or has too little current for the measurement in the range of 4 mA to 20 mA.

The wire break and underflow diagnostics can be activated simultaneously. If both diagnostics events occur simultaneously, the wire break diagnostics is output.

Measurement type/measuring range

See the section Measurement types and measuring ranges (Page 16).

Smoothing

The individual measured values are smoothed by filtering. The smoothing can be set in 7 levels.

Smoothing time = number of module cycles (k) × cycle time of the module.

The following figure shows how many module cycles it takes for the smoothed analog value to approach 100%, depending on the configured smoothing. This is valid for all signal changes at the analog input.

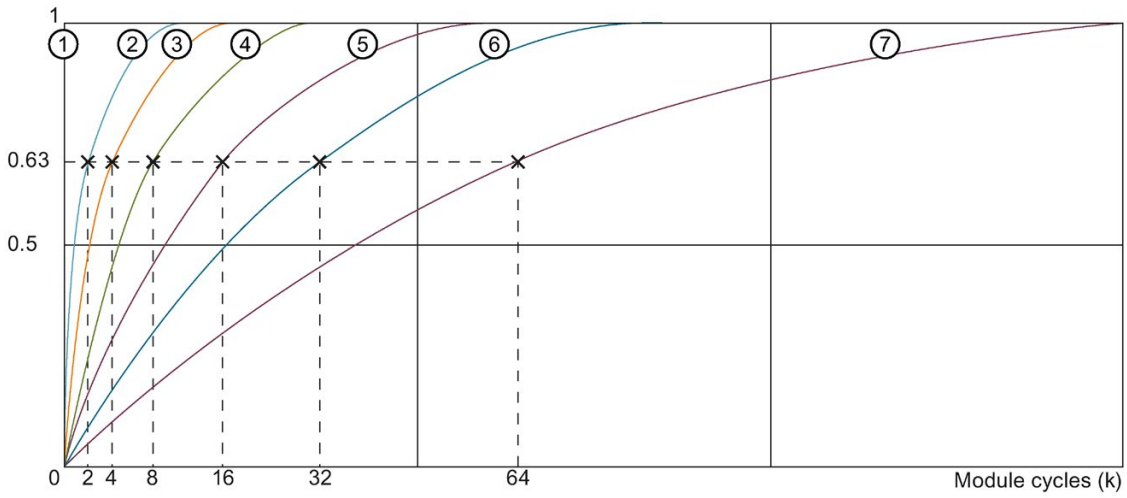

① No smoothing
② 2x smoothing
③ 4x smoothing
④ 8x smoothing
⑤ 16x smoothing
⑥ 32x smoothing
⑦ 64x smoothing

Figure 4-1 Smoothing with AI 2×U/I 2-/4-wire HS

Potential group

You can use the "Potential group" parameter to specify whether the module is inserted in a light-colored or dark-colored BaseUnit.

A potential group always starts with an I/O module that is inserted on a light-colored BaseUnit. All modules inserted to the right of this on dark-colored BaseUnits belong to the same potential group, because the dark-colored BaseUnits are supplied via the light-colored BaseUnits.

The potential group ends with a new light-colored BaseUnit or the end of the station.

See also

ET 200SP Distributed I/O System
(http://support.automation.siemens.com/WW/view/en/58649293)

4.4 Oversampling

Function

Oversampling is the acquisition of data in constant bus cycle segments (sub-cycles). The configured number n of sub-cycles corresponds to one PROFINET bus cycle.

Oversampling is useful whenever you require acquisition of data with high time resolution but without using an extremely short PROFINET bus cycle and thus fast CPU cycles.

With oversampling, a PROFINET bus cycle is divided into constant bus sub-cycles:

- One measured value is acquired in each sub-cycle.
- The minimum PROFINET bus cycle is 250 µs. Only a subset of functions is available for shorter sub-cycles.
- The shortest possible sub-cycle is 50 µs.
- You can configure oversampling:
  - For channel 0 (1-channel operation)
  - For channel 0/1 (2-channel operation)
- The number of sub-cycles can be set as follows:
  - From 2 to 16 for one channel
  - From 2 to 8 for two channels

Requirement

Oversampling is only possible when isochronous mode is set.

Configuration

You configure oversampling with the following parameter:

- Sampling rate

Note

Do not use a reduction ratio for blocks in the case of configuration with oversampling in the runtime groups of your user program. This will ensure that the data processing in the user program of the CPU is synchronized with the acquisition on the module.

Overview of the operating modes

Function	Normal operation	Oversampling in normal operation		Oversampling in high-speed	
		1-channel operation	2-channel operation	1-channel operation	2-channel operation
Isochronous mode	Yes, optional	Yes, required		Yes, required	
• Shortest send clock	125 µs	500 µs		250 µs	
Oversampling	No	Yes		Yes	
• Number of oversampling levels (sampling rate)	-	2 to 16	2 to 8	2 to 16	2 to 8
• Shortest sub-cycle (= shortest sampling time)	-	250 µs		50 µs	
Hardware interrupt	x	-		-	
Smoothing	x	x		-	
±10 V	x	x		x	
0 to 10 V	x	x		-	
±5 V	x	x		-	
1 to 5 V	x	x		-	
±20 mA	x	x		x	
0 to 20 mA	x	x		-	
4 to 20 mA	x	x		-	
Overflow/underflow	x	x		x[1)]	
Wire break 4 to 20 mA	x	x		-	
Short-circuit (1 to 5 V)	x	x		-	
Short-circuit encoder supply with current measuring ranges	x	x		x	
Load voltage diagnostics	x	x		x	
Value status (QI)	x	-		-	
Address space	4 bytes	32 bytes		32 bytes	

1 For product version 1, the result must be present for at least one fieldbus cycle + 250 µs for a reliable detection of the diagnostics (overflow/underflow) as of firmware version 1.x.

Sampling interval

The duration of a subcycle is the sampling interval. The cycle time T (send clock) for isochronous mode is specified in the configuration software. This time, divided by the configured sampling rate n_{Sample}, yields the sampling interval t_{Sample} of the module.

Example calculation:

$$t_{Sample} = \frac{T}{n_{Sample}} = \frac{1\ ms}{16} = 62{,}5\ \mu s$$

Figure 4-2 Example of calculating the sampling interval

Chronological sequence

The figure shows the chronological sequence for oversampling. The acquired measured vales of a data cycle with oversampling are only copied to the interface module in the subsequent bus cycle and are then available to the processing CPU one bus cycle later.

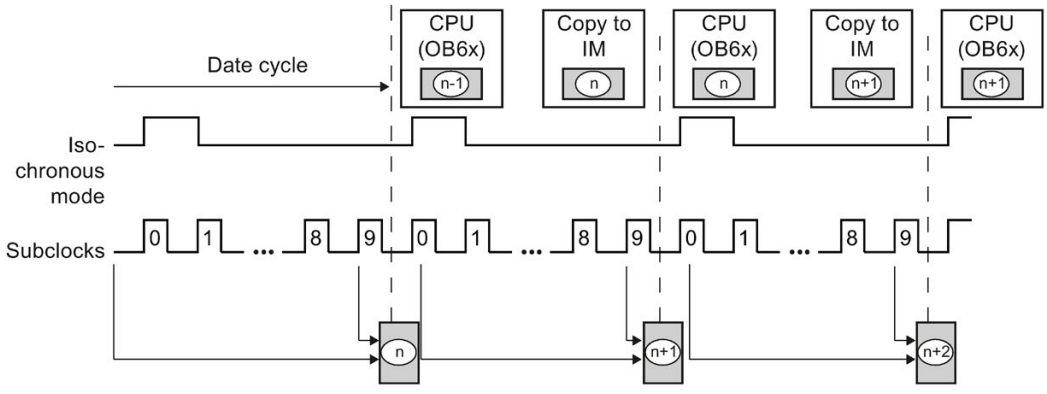

① n = measured values from bus cycle n

Figure 4-3 Oversampling

4.5 Address space

Configuration options

The following configurations are possible:

- Configuration 1: Without value status
- Configuration 2: With value status

Evaluating the value status

An additional byte is occupied in the input address space if you enable the value status for the analog module. Bits 0 to 1 in this byte are assigned to a channel. They provide information about the validity of the analog value.

Bit =1: No fault is present on the channel.

Bit =0: The wiring, the value created on the channel, or similar is incorrect.

Address space

The following figure shows the assignment of the address space for the AI 2xU/I 2-/4-wire HS with value status (Quality Information (QI)). The addresses for the value status are only available if the value status is enabled.

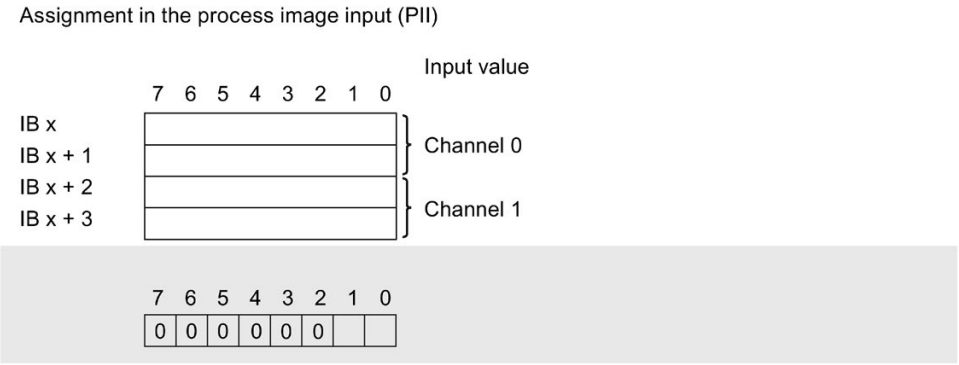

Figure 4-4 Address space of the AI 2xU/I 2-/4-wire HS with value status

Address space of the AI 2×U/I 2-/4-wire HS for oversampling with one channel

The following figure shows the assignment of the address space for oversampling with one channel. Writing always starts from IB x. If fewer than 16 sub-cycles are set, the addresses that are then unused are filled with $7FFF_H$.

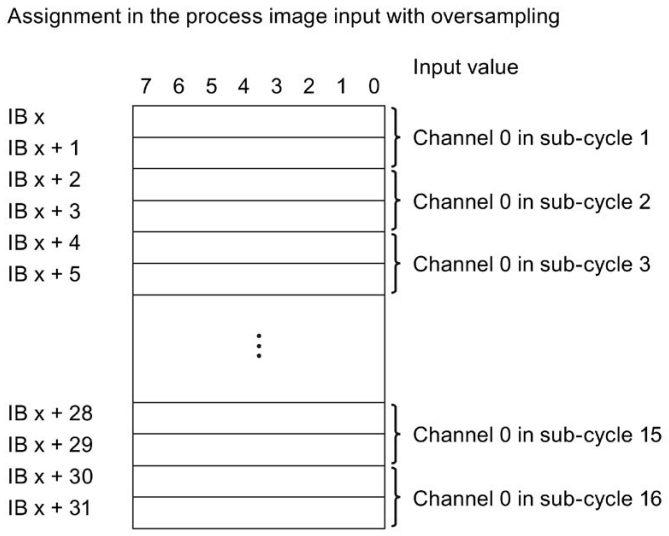

Figure 4-5 Address space of AI 2xU/I 2-/4-wire HS for oversampling with one channel

Address space of the AI 2×U/I 2-/4-wire HS for oversampling with two channels

The following figure shows the assignment of the address space for oversampling with two channels. Writing always starts from IB x. Only a maximum of 8 sub-cycles are possible. If fewer than 8 sub-cycles are set, the addresses that are then unused are filled with $7FFF_H$.

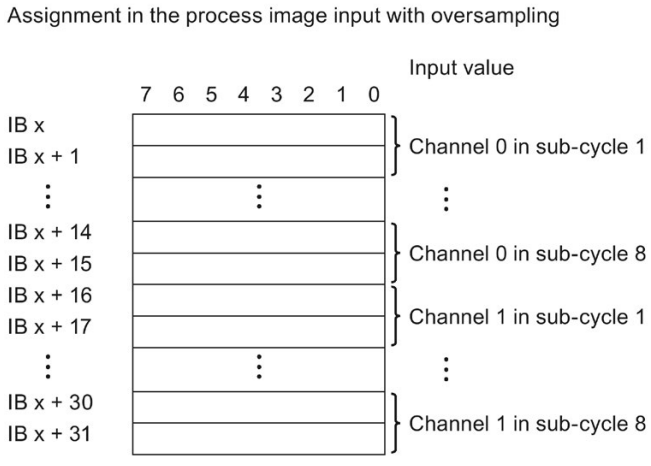

Figure 4-6 Address space of AI 2xU/I 2-/4-wire HS for oversampling with two channels

Interrupts/diagnostics interrupts 5

5.1 Status and error displays

LED displays

The figure below shows the LED displays of the AI 2×U/I 2-/4-wire HS.

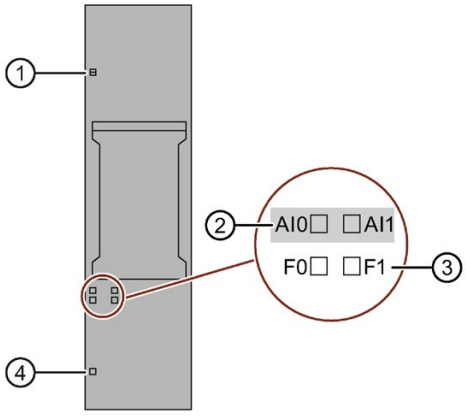

① DIAG (green/red)
② Channel status (green)
③ Channel fault (red)
④ PWR (green)

Figure 5-1 LED displays

Meaning of the LEDs

The following tables contain the meaning of the status and error displays. Corrective measures for diagnostics alarms can be found in section Diagnostics alarms (Page 30).

DIAG LED

Table 5- 1 Error display of the DIAG LED

DIAG	Meaning
□ Off	Backplane bus supply of the ET 200SP not OK
☼ Flashes	Module parameters not assigned
■ On	Module parameters assigned and no module diagnostics
☼ Flashes	Module parameters assigned and module diagnostics

Channel status/channel fault LED

Table 5- 2 Status/error display of the channel status/channel fault LED

Channel status	Channel fault	Meaning
□ Off	□ Off	Channel deactivated or no load voltage L+
■ On	□ Off	Channel activated and no channel diagnostics
□ Off	■ On	Channel activated and channel diagnostics
■ On	■ On	Not permitted (error)

PWR LED

Table 5- 3 Status display of the PWR LED

PWR	Meaning
□ Off	No supply voltage L+
■ On	Supply voltage L+ present

5.2 Interrupts

The analog input module AI 2×U/I 2-/4-wire HS supports hardware and diagnostic interrupts.

Evaluating hardware interrupts with IO controller

The module generates a hardware interrupt at the following events:

- Low limit 1 violated
- High limit 1 violated
- Low limit 2 violated
- High limit 2 violated

If an interrupt occurs, a corresponding interrupt OB is called in the CPU of the IO controller.

S7-1500

Detailed information on the event is available in the STEP 7 online help.

The block interface is shown here with optimized block access, which is set in the TIA Portal by default.

Name	Data type	Comment
LADDR	HW_IO	Hardware identifier of the module triggering the interrupt
USI	WORD	USI (High/Low)
IChannel	USInt	Channel that triggered the hardware interrupt
EventType	Byte	Error event

S7-300/400 or a different CPU

You can obtain detailed information on the event in the hardware interrupt organization block with the instruction "RALARM" (read additional interrupt info) and in the STEP 7 online help.

The channel of the module that triggered the hardware interrupt is entered in the start information of OB4x in the OB4x_POINT_ADDR tag. The following figure shows the assignment to the bits of double word 8 in local data.

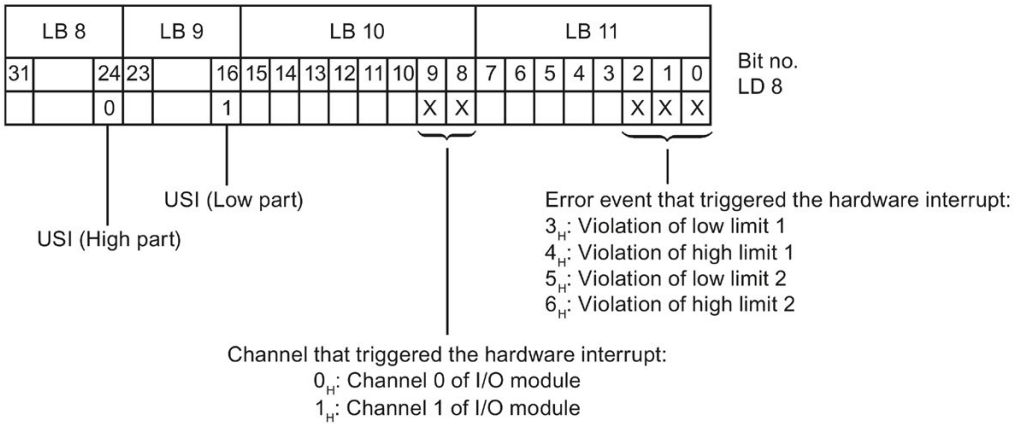

Figure 5-2 OB4x_POINT_ADDR tag

Structure of the additional interrupt information

Table 5- 4 Structure of USI = W#16#0001

Data block name		Content	Comment	Bytes
USI		W#16#0001	User Structure Identifier: Additional interrupt info for hardware interrupts of the I/O module	2
The channel that triggered the hardware interrupt follows.				
	Channel	B#16#00 to B#16#01	Channel 0 and 1 of the I/O module	1
The error event that triggered the hardware interrupt follows.				
	Error event	B#16#03	Low limit 1 violated	1
		B#16#04	High limit 1 violated	
		B#16#05	Low limit 2 violated	
		B#16#06	High limit 2 violated	

Diagnostics interrupt

The module generates a diagnostics interrupt at the following events:

- Short-circuit (current and voltage 1 to 5 V)
- Wire break (current)
- High limit violated
- Low limit violated
- Error
- Parameter assignment error
- No load voltage
- Channel temporarily unavailable

5.3 Diagnostics alarms

A diagnostics alarm is generated and the DIAG-LED flashes on the module for each diagnostics event. You can read out the diagnostics alarms, for example, in the diagnostics buffer of the CPU. You can evaluate the error codes with the user program.

Table 5- 5 Diagnostics alarms, their meanings and corrective measures

Diagnostics alarm	Error code	Meaning	Solution
Short-circuit (current)	1_H	Encoder supply to ground	Correct interplay between module and encoder
		Input after encoder supply	
Short-circuit (1 to 5 V)	1_H	Short circuit of input signal	Correct interplay between module and encoder
		Open input	Connect input
Wire break (current)	6_H	Impedance of encoder circuit too high	Use a different encoder type or modify the wiring, for example, using cables with larger cross-section
		Wire break between the module and sensor	Connect the cable
		Channel not connected (open)	• Deactivate diagnostics • Connect the encoder contacts
High limit violated	7_H	Value is above overrange.	Correct the output value
Low limit violated	8_H	Value is below underrange.	Correct the output value
Error	9_H	Internal module error has occurred (diagnostics alarm on channel 0 applies for the entire module).	Replace the module
Parameter assignment error	10_H	• The module cannot evaluate parameters for the channel. • Incorrect parameter assignment.	Correct the parameter assignment (wire break diagnostics set only with the permitted measuring ranges).

Diagnostics alarm	Error code	Meaning	Solution
No load voltage	11_H	No or insufficient supply voltage L+	• Check supply voltage L+ on the BaseUnit • Check BaseUnit type
Channel temporarily unavailable	$1F_H$	Firmware update in progress or update has been canceled. The module does not read any process values in this state.	• Wait for firmware update • Restart the firmware update

Technical specifications 6

6.1 Technical specifications

Technical specifications of AI 2xU/I 2-/4-wire HS

The following table shows the technical specifications as of 09/2018. You will find a data sheet including daily updated technical specifications on the Internet (https://support.industry.siemens.com/cs/ww/en/pv/6ES7134-6HB00-0DA1/td?dl=en).

Article number	6ES7134-6HB00-0DA1
General information	
Product type designation	AI 2xU/I 2-/4-wire HS
Firmware version	V2.0.1
• FW update possible	Yes
usable BaseUnits	BU type A0, A1
Color code for module-specific color identification plate	CC00
Product function	
• I&M data	Yes; I&M0 to I&M3
• Measuring range scalable	No
• Scalable measured values	No
• Adjustment of measuring range	No
Engineering with	
• STEP 7 TIA Portal configurable/integrated as of version	V13 SP1
• STEP 7 configurable/integrated as of version	V5.5 SP3 / -
• PROFIBUS as of GSD version/GSD revision	GSD Revision 5
• PROFINET as of GSD version/GSD revision	GSDML V2.3
Operating mode	
• Oversampling	Yes; 2 channels per module
• MSI	No
CiR – Configuration in RUN	
Reparameterization possible in RUN	Yes
Calibration possible in RUN	No

Article number	6ES7134-6HB00-0DA1
Supply voltage	
Rated value (DC)	24 V
permissible range, lower limit (DC)	19.2 V
permissible range, upper limit (DC)	28.8 V
Reverse polarity protection	Yes
Input current	
Current consumption (rated value)	39 mA; without sensor supply
24 V encoder supply	
• 24 V	Yes; For current measurement
• Short-circuit protection	Yes
• Output current, max.	20 mA; max. 50 mA per channel for a duration < 10 s
Power loss	
Power loss, typ.	0.95 W; without sensor supply
Address area	
Address space per module	
• Address space per module, max.	4 byte; + 1 byte for QI information (32 bytes in the oversampling operating mode)
Hardware configuration	
Selection of BaseUnit for connection variants	
• 2-wire connection	BU type A0, A1
• 4-wire connection	BU type A0, A1
Analog inputs	
Number of analog inputs	2; Differential inputs
• For current measurement	2
• For voltage measurement	2
permissible input voltage for voltage input (destruction limit), max.	30 V
permissible input current for current input (destruction limit), max.	50 mA
Cycle time (all channels), min.	125 µs
Analog input with oversampling	Yes
• Values per cycle, max.	16
• Resolution, min.	50 µs

Article number	6ES7134-6HB00-0DA1
Input ranges (rated values), voltages	
• 0 to +10 V	Yes; 15 bit
• Input resistance (0 to 10 V)	75 kΩ
• 1 V to 5 V	Yes; 13 bit
• Input resistance (1 V to 5 V)	75 kΩ
• -10 V to +10 V	Yes; 16 bit incl. sign
• Input resistance (-10 V to +10 V)	75 kΩ
• -5 V to +5 V	Yes; 15 bit incl. sign
• Input resistance (-5 V to +5 V)	75 kΩ
Input ranges (rated values), currents	
• 0 to 20 mA	Yes; 15 bit
• Input resistance (0 to 20 mA)	130 Ω
• -20 mA to +20 mA	Yes; 16 bit incl. sign
• Input resistance (-20 mA to +20 mA)	130 Ω
• 4 mA to 20 mA	Yes; 14 bit
• Input resistance (4 mA to 20 mA)	130 Ω
Cable length	
• shielded, max.	1 000 m; 200 m for voltage measurement
Analog value generation for the inputs	
Measurement principle	Actual value encryption (successive approximation)
Integration and conversion time/resolution per channel	
• Resolution with overrange (bit including sign), max.	16 bit
• Interference voltage suppression for interference frequency f1 in Hz	No
• Conversion time (per channel)	10 µs
Smoothing of measured values	
• Number of smoothing levels	7; none; 2-/4-/8-/16-/32-/64-fold
• parameterizable	Yes

Article number	6ES7134-6HB00-0DA1
Encoder	
Connection of signal encoders	
• for voltage measurement	Yes
• for current measurement as 2-wire transducer	Yes
– Burden of 2-wire transmitter, max.	650 Ω
• for current measurement as 4-wire transducer	Yes
Errors/accuracies	
Linearity error (relative to input range), (+/-)	0.03 %
Temperature error (relative to input range), (+/-)	0.01 %/K
Crosstalk between the inputs, min.	-50 dB
Repeat accuracy in steady state at 25 °C (relative to input range), (+/-)	0.1 %
Operational error limit in overall temperature range	
• Voltage, relative to input range, (+/-)	0.3 %
• Current, relative to input range, (+/-)	0.3 %
Basic error limit (operational limit at 25 °C)	
• Voltage, relative to input range, (+/-)	0.2 %
• Current, relative to input range, (+/-)	0.2 %
Interference voltage suppression for f = n x (f1 +/- 1 %), f1 = interference frequency	
• Common mode voltage, max.	35 V
• Common mode interference, min.	90 dB
Isochronous mode	
Isochronous operation (application synchronized up to terminal)	Yes
Filtering and processing time (TCI), min.	80 µs
Bus cycle time (TDP), min.	125 µs; Starting from firmware Version V2.0.1
Interrupts/diagnostics/status information	
Alarms	
• Diagnostic alarm	Yes
• Limit value alarm	Yes; two upper and two lower limit values in each case

Article number	6ES7134-6HB00-0DA1
Diagnostic messages	
• Wire-break	Yes; channel-by-channel, at 4 to 20 mA only
• Short-circuit	Yes; channel-by-channel, at 1 to 5 V or for current measuring ranges short-circuit in encoder supply
• Group error	Yes
• Overflow/underflow	Yes
Diagnostics indication LED	
• Monitoring of the supply voltage (PWR-LED)	Yes; green PWR LED
• Channel status display	Yes; Green LED
• for channel diagnostics	Yes; Red LED
• for module diagnostics	Yes; green/red DIAG LED
Potential separation	
Potential separation channels	
• between the channels	Yes
• between the channels and backplane bus	Yes
• between the channels and the power supply of the electronics	Yes
Permissible potential difference	
between the inputs (UCM)	75 V DC/60 V AC
Isolation	
Isolation tested with	707 V DC (type test)
Dimensions	
Width	15 mm
Height	73 mm
Depth	58 mm
Weights	
Weight, approx.	32 g

Dimension drawing

See manual ET 200SP BaseUnits
(http://support.automation.siemens.com/WW/view/en/59753521)

Parameter data record

A

A.1 Dependencies when configuring with GSD file

When configuring the module with a GSD file, remember that the settings of some parameters are dependent on each other.

Configuring with a PROFINET GSD file

The table lists the properties and their dependencies on the measurement type and measuring range for PROFINET.

Measurement type	Measuring range	Diagnostics					Hardware interrupts
		No supply voltage L+	Short-circuit to ground	Overflow	Underflow	Wire break	
Deactivated		*	*	*	*	*	*
Voltage	1 to 5 V	x	x	x	x	-	x
	±5 V	x	-	x	x	-	x
	±10 V	x	-	x	x	-	x
	0 to 10 V	x	-	x	x	-	x
Current (4-wire transducer)	0 to 20 mA	x	x	x	x	-	x
	±20 mA	x	x	x	x	-	x
	4 to 20 mA	x	x	x	x	x	x
Current (2-wire transducer)	0 to 20 mA	x	x	x	-	-	x
	4 to 20 mA	x	x	x	x	x	x

x = Property is allowed, - = Property is **not allowed**, * = Property is not relevant

Configuring with a PROFIBUS GSD file

The table lists the properties and their dependencies on the measurement type and measuring range for PROFIBUS.

Measurement type	Measuring range	Diagnostics				Hardware interrupts
		No supply voltage L+	Short-circuit to ground	Overflow/underflow	Wire break	
Deactivated		*	*	*	*	*
Voltage	1 to 5 V	x	x	x	-	-
	+/- 5 V	x	-	x	-	-
	+/- 10 V	x	-	x	-	-
	0 to 10 V	x	-	x	-	-
Current (4-wire transducer)	0 to 20 mA	x	x	x	-	-
	+/- 20 mA	x	x	x	-	-
	4 to 20 mA	x	x	x	x	-
Current (2-wire transducer)	0 to 20 mA	x	x	x	-	-
	4 to 20 mA	x	x	x	x	-

x = Property is allowed, - = Property is **not allowed**, * = Property is not relevant

A.2 Parameter assignment and structure of the parameter data record

Parameter assignment in the user program

The module can be re-configured in RUN (for example, the voltage or current values of selected channels can be changed in RUN without having an effect on the other channels).

Note

Following a firmware update, you need to re-configure the I/O module before you can use the new functions.

Changing parameters in RUN

The "WRREC" instruction is used to transfer the parameters to the module using data record 128. The parameters set in STEP 7 are not changed in the CPU, which means the parameters set in STEP 7 are valid again after a restart.

Note

Changing parameters in RUN

A parameter data record that has content different from the startup parameter assignment results in a brief exit from clocked measuring mode and renewed synchronization with the fieldbus cycle. The slowest channel provides the "internal" measuring cycle.

STATUS output parameter

The module ignores errors that occur during the transfer of parameters with the "WRREC" instruction and continues operation with the previous parameter assignment. The STATUS output parameter contains a corresponding error code.

The description of the "WRREC" instruction and the error codes is available in the STEP 7 online help.

Structure of data record 128 for entire module

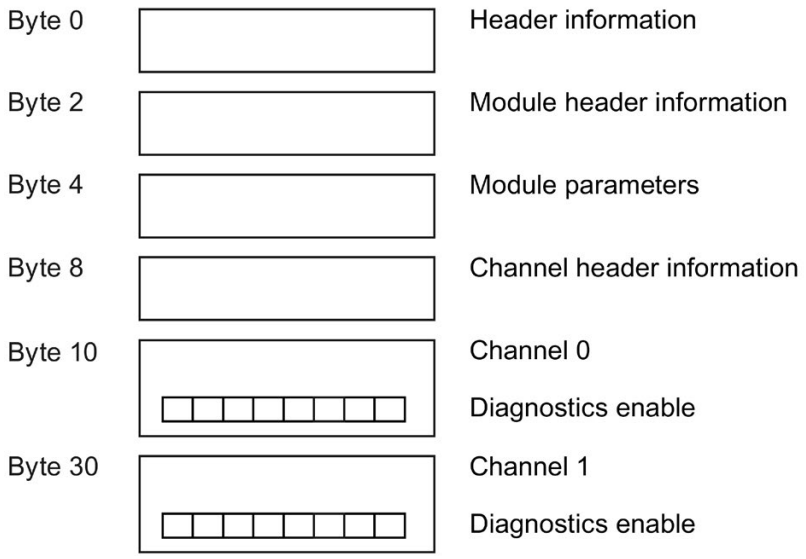

Figure A-1 Structure of data record 128 for entire module

Header information

The figure below shows the structure of the header information.

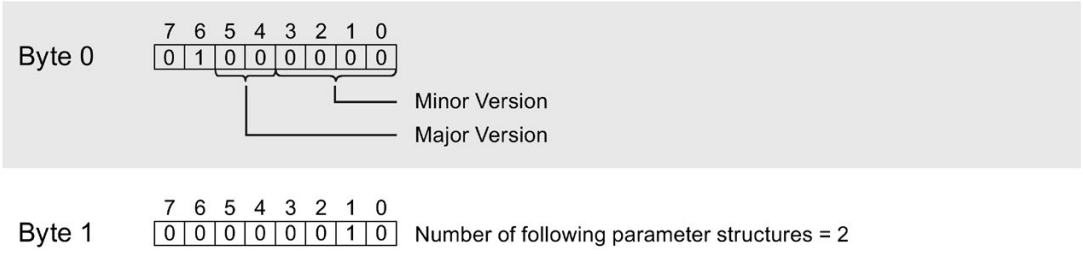

Figure A-2 Header information

Module header information

The figure below shows the structure of the module header information.

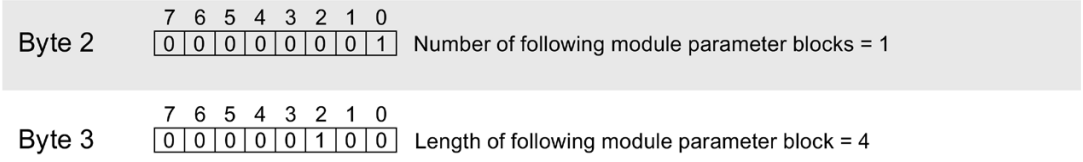

Figure A-3 Module header information

Module parameter block

The figure below shows the structure of the module parameter block.

Enable a parameter by setting the corresponding bit to "1".

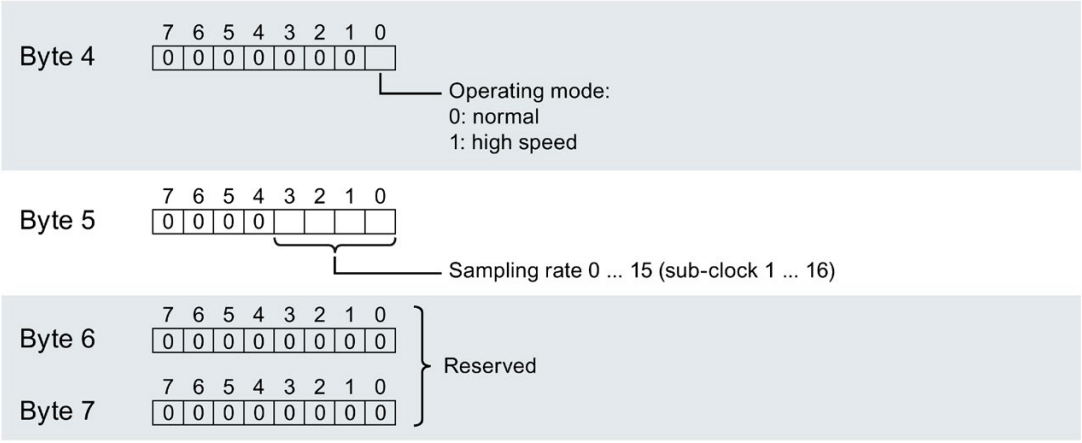

Figure A-4 Module parameter block

Channel header information

The figure below shows the structure of the channel header information.

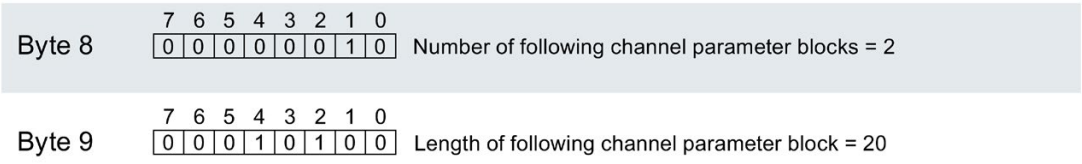

Figure A-5 Channel header information

Channel parameter block

The figure below shows the structure of the channel parameter block.

Enable a parameter by setting the corresponding bit to "1".

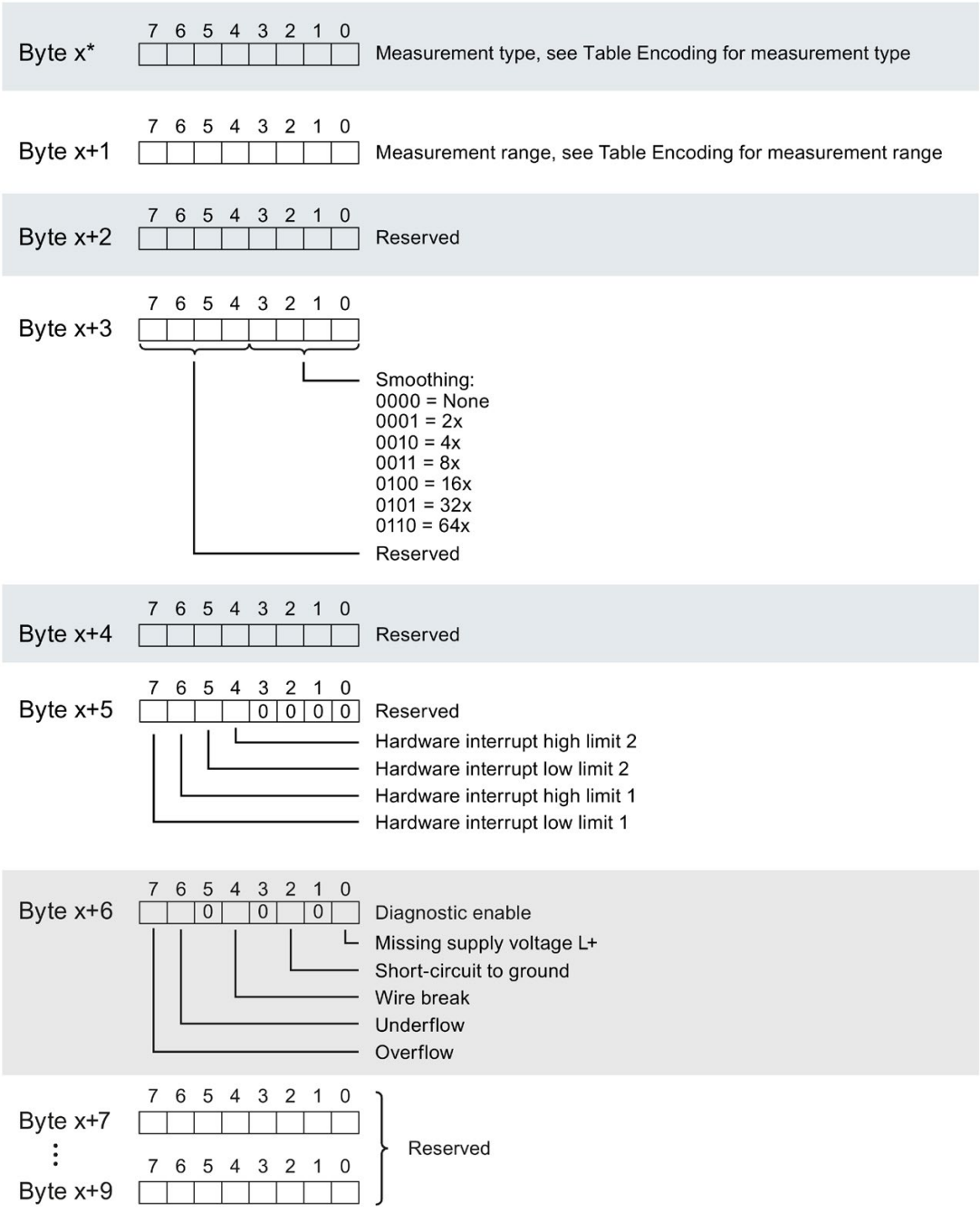

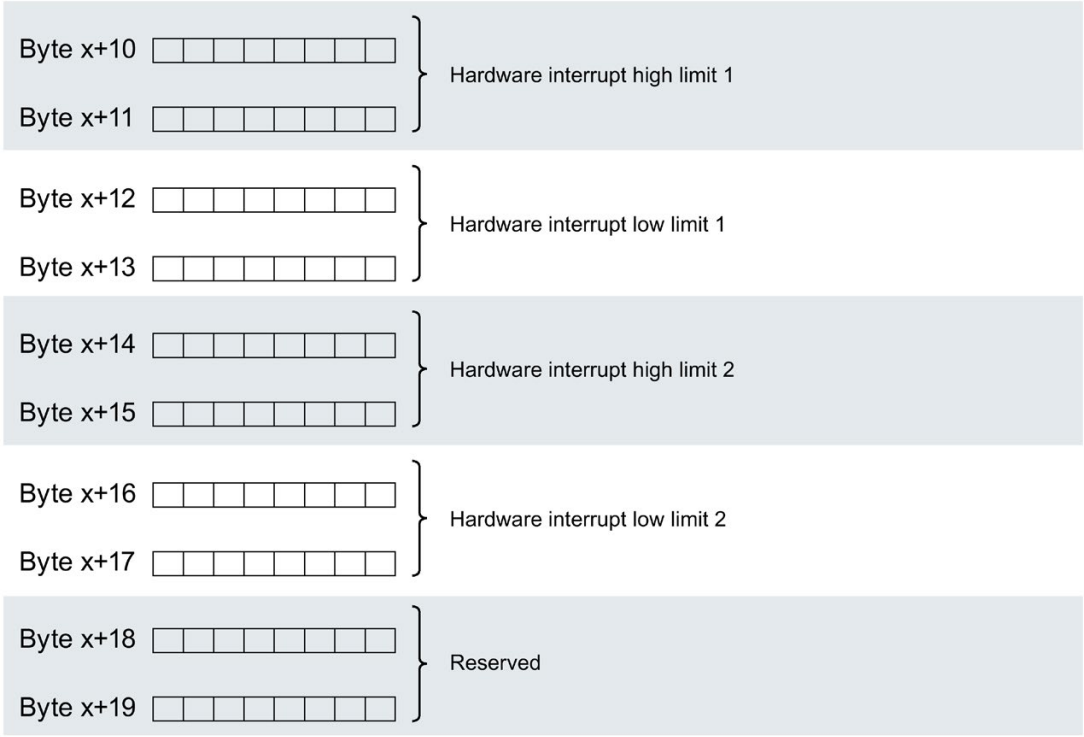

* x = 10 + (channel number × 20); channel number = 0 to 1

Figure A-6 Structure of byte x to x+19 for channels 0 and 1

Codes for measurement types

The following table contains the codes for the measurement types of the analog input module. You must enter these codes in byte x (see channel parameter block figure).

Table A- 1 Codes for measurement types

Measurement type	Code
Deactivated	0000 0000
Voltage	0000 0001
Current, 4-wire transducer	0000 0010
Current, 2-wire transducer	0000 0011

Codes for measuring ranges

The following table contains the codes for the measuring ranges of the analog input module. You must enter these codes in byte x+1 (see channel parameter block figure).

Table A- 2 Codes for measuring ranges

Measuring range	Code
Voltage	
±5 V	0000 1000
±10 V	0000 1001
1 to 5 V	0000 1010
0 to 10 V	0000 1011
Current	
±20 mA	0000 0100
0 to 20 mA	0000 0010
4 to 20 mA	0000 0011

Representation of analog values

B

This appendix shows the analog values for all measuring ranges that you can use with the analog module.

Measured value resolution

The resolution of the analog values differs depending on the analog module and its parameter assignment.

The table below shows the representation of binary analog values and of the associated decimal and hexadecimal units of the analog values.

Each analog value is written left aligned to the tags. The bits marked with "x" are set to "0".

Table B- 1 Resolution of the analog values

Resolution in bits including sign	Values		Analog value	
	Decimal	Hexadecimal	High byte	Low byte
13	8	8_H	Sign 0 0 0 0 0 0 0	0 0 0 0 1 x x x
14	4	4_H	Sign 0 0 0 0 0 0 0	0 0 0 0 0 1 x x
15	2	2_H	Sign 0 0 0 0 0 0 0	0 0 0 0 0 0 1 x
16	1	1_H	Sign 0 0 0 0 0 0 0	0 0 0 0 0 0 0 1

B.1 Representation of input ranges

In the following tables, you can find the digitized representation of the bipolar and unipolar input ranges. The resolution is 16 bits.

Table B- 2 Bipolar input ranges

Dec. value	Measured value in %	Data word																Range
		2^{15}	2^{14}	2^{13}	2^{12}	2^{11}	2^{10}	2^{9}	2^{8}	2^{7}	2^{6}	2^{5}	2^{4}	2^{3}	2^{2}	2^{1}	2^{0}	
32767	>117.589	0	1	1	1	1	1	1	1	1	1	1	1	1	1	1	1	Overflow
32511	117.589	0	1	1	1	1	1	1	0	1	1	1	1	1	1	1	1	Overrange
27649	100.004	0	1	1	0	1	1	0	0	0	0	0	0	0	0	0	1	
27648	100.000	0	1	1	0	1	1	0	0	0	0	0	0	0	0	0	0	Nominal range
1	0.003617	0	0	0	0	0	0	0	0	0	0	0	0	0	0	0	1	
0	0.000	0	0	0	0	0	0	0	0	0	0	0	0	0	0	0	0	
-1	-0.003617	1	1	1	1	1	1	1	1	1	1	1	1	1	1	1	1	
-27648	-100.000	1	0	0	1	0	1	0	0	0	0	0	0	0	0	0	0	
-27649	-100.004	1	0	0	1	0	0	1	1	1	1	1	1	1	1	1	1	Underrange
-32512	-117.593	1	0	0	0	0	0	0	1	0	0	0	0	0	0	0	0	
-32768	<-117.593	1	0	0	0	0	0	0	0	0	0	0	0	0	0	0	0	Underflow

Table B- 3 Unipolar input ranges

Dec. value	Measured value in %	Data word																Range
		2^{15}	2^{14}	2^{13}	2^{12}	2^{11}	2^{10}	2^{9}	2^{8}	2^{7}	2^{6}	2^{5}	2^{4}	2^{3}	2^{2}	2^{1}	2^{0}	
32767	>117.589	0	1	1	1	1	1	1	1	1	1	1	1	1	1	1	1	Overflow
32511	117.589	0	1	1	1	1	1	1	0	1	1	1	1	1	1	1	1	Overrange
27649	100.004	0	1	1	0	1	1	0	0	0	0	0	0	0	0	0	1	
27648	100.000	0	1	1	0	1	1	0	0	0	0	0	0	0	0	0	0	Nominal range
1	0.003617	0	0	0	0	0	0	0	0	0	0	0	0	0	0	0	1	
0	0.000	0	0	0	0	0	0	0	0	0	0	0	0	0	0	0	0	
-1	-0.003617	1	1	1	1	1	1	1	1	1	1	1	1	1	1	1	1	Underrange
-4864	-17.593	1	1	1	0	1	1	0	1	0	0	0	0	0	0	0	0	
-32768	<-17.593	1	0	0	0	0	0	0	0	0	0	0	0	0	0	0	0	Underflow

B.2 Representation of analog values in voltage measuring ranges

The following tables list the decimal and hexadecimal values (codes) of the possible voltage measuring ranges.

Table B- 4 Voltage measuring range ±10 V and ±5 V

Values		Voltage measuring range		Range
Dec.	Hex.	±10 V	±5 V	
32767	7FFF	> 11.759 V	> 5.879 V	Overflow
32511	7EFF	11.759 V	5.879 V	Overrange
27649	6C01			
27648	6C00	10 V	5 V	Nominal range
20736	5100	7.5 V	3.75 V	
1	1	361.7 µV	180.8 µV	
0	0	0 V	0 V	
-1	FFFF			
-20736	AF00	-7.5 V	-3.75 V	
-27648	9400	-10 V	-5 V	
-27649	93FF			Underrange
-32512	8100	-11.759 V	-5.879 V	
-32768	8000	< -11.759 V	< -5.879 V	Underflow

Table B- 5 Voltage measuring range 1 V to 5 V and 0 V to 10 V

Values		Voltage measuring range		Range
Dec.	Hex.	1 to 5 V	0 to 10 V	
32767	7FFF	> 5.704 V	> 11.759 V	Overflow
32511	7EFF	5.704 V	11.759 V	Overrange
27649	6C01			
27648	6C00	5 V	10 V	Nominal range
20736	5100	4 V	7.5 V	
1	1	1 V + 144.7 µV	361.7 µV	
0	0	1 V	0 V	
-1	FFFF			Underrange
-4864	ED00	0.296 V	-1.759 V	
-32768	8000	< 0.296 V	< -1.759 V	Underflow

B.3 Representation of analog values in the current measuring ranges

The following tables list the decimal and hexadecimal values (codes) of the possible current measuring ranges.

Table B- 6 Current measuring range ±20 mA

Values		Current measuring range	Range
Dec.	Hex.	±20 mA	
32767	7FFF	> 23.52 mA	Overflow
32511	7EFF	23.52 mA	Overrange
27649	6C01		
27648	6C00	20 mA	Nominal range
20736	5100	15 mA	
1	1	723.4 nA	
0	0	0 mA	
-1	FFFF		
-20736	AF00	-15 mA	
-27648	9400	-20 mA	
-27649	93FF		Underrange
-32512	8100	-23.52 mA	
-32768	8000	< -23.52 mA	Underflow

Table B- 7 Current measuring ranges 0 to 20 mA and 4 to 20 mA

Values		Current measuring range		Range
Dec.	Hex.	0 to 20 mA*	4 to 20 mA	
32767	7FFF	> 23.52 mA**	> 22.81 mA**	Overflow
32511	7EFF	23.52 mA	22.81 mA	Overrange
27649	6C01			
27648	6C00	20 mA	20 mA	Nominal range
20736	5100	15 mA	16 mA	
1	1	723.4 nA	4 mA + 578.7 nA	
0	0	0 mA	4 mA	
-1	FFFF			Underrange
-4864	ED00	-3.52 mA	1.185 mA	
-32768	8000	< -3.52 mA	< 1.185 mA	Underflow

* For measurement type "2-wire transducer", negative values are not possible for the range "0 to 20 mA". Therefore, no underrange or underflow exists here.

** For measurement type "2-wire transducer", the behavior described here is supported for overflow up to max. 35 mA.

SIEMENS

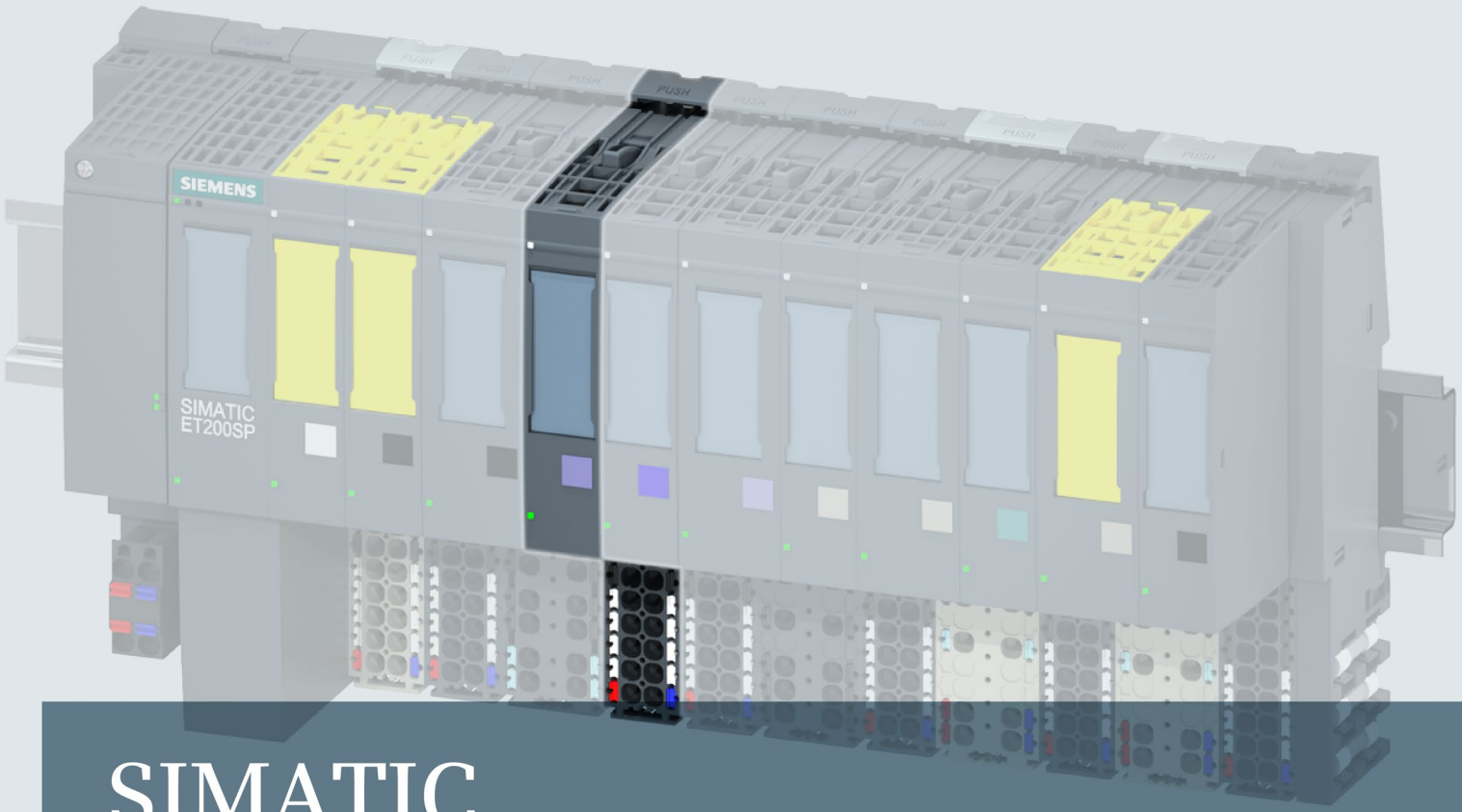

SIMATIC

ET 200SP

Analog input module AI 2xU/I 2-/4-wire HF (6ES7134-6HB00-0CA1)

Manual

Edition 12/2015

Answers for industry.

SIEMENS

SIMATIC

ET 200SP
Analog input module
AI 2xU/I 2-/4-wire HF
(6ES7134-6HB00-0CA1)

Manual

Preface

Guide to documentation 1

Product overview 2

Wiring 3

Parameters/address space 4

Interrupts/diagnostics alarms 5

Technical specifications 6

Parameter data record A

Representation of analog values B

12/2015

A5E33062495-AB

Legal information

Warning notice system

This manual contains notices you have to observe in order to ensure your personal safety, as well as to prevent damage to property. The notices referring to your personal safety are highlighted in the manual by a safety alert symbol, notices referring only to property damage have no safety alert symbol. These notices shown below are graded according to the degree of danger.

⚠ DANGER

indicates that death or severe personal injury **will** result if proper precautions are not taken.

⚠ WARNING

indicates that death or severe personal injury **may** result if proper precautions are not taken.

⚠ CAUTION

indicates that minor personal injury can result if proper precautions are not taken.

NOTICE

indicates that property damage can result if proper precautions are not taken.

If more than one degree of danger is present, the warning notice representing the highest degree of danger will be used. A notice warning of injury to persons with a safety alert symbol may also include a warning relating to property damage.

Qualified Personnel

The product/system described in this documentation may be operated only by **personnel qualified** for the specific task in accordance with the relevant documentation, in particular its warning notices and safety instructions. Qualified personnel are those who, based on their training and experience, are capable of identifying risks and avoiding potential hazards when working with these products/systems.

Proper use of Siemens products

Note the following:

⚠ WARNING

Siemens products may only be used for the applications described in the catalog and in the relevant technical documentation. If products and components from other manufacturers are used, these must be recommended or approved by Siemens. Proper transport, storage, installation, assembly, commissioning, operation and maintenance are required to ensure that the products operate safely and without any problems. The permissible ambient conditions must be complied with. The information in the relevant documentation must be observed.

Trademarks

All names identified by ® are registered trademarks of Siemens AG. The remaining trademarks in this publication may be trademarks whose use by third parties for their own purposes could violate the rights of the owner.

Disclaimer of Liability

We have reviewed the contents of this publication to ensure consistency with the hardware and software described. Since variance cannot be precluded entirely, we cannot guarantee full consistency. However, the information in this publication is reviewed regularly and any necessary corrections are included in subsequent editions.

Siemens AG
Division Digital Factory
Postfach 48 48
90026 NÜRNBERG
GERMANY

A5E33062495-AB
℗ 12/2015 Subject to change

Copyright © Siemens AG 2014 - 2015.
All rights reserved

Preface

Purpose of the documentation

This manual supplements the ET 200SP distributed I/O system (http://support.automation.siemens.com/WW/view/en/58649293) system manual.

Functions that generally relate to the system are described in this system manual.

The information provided in this manual and in the system/function manuals supports you in commissioning the system.

Conventions

CPU: When the term "CPU" is used in this manual, it applies to the CPUs of the S7-1500 automation system as well as to the CPUs/interface modules of the ET 200SP distributed I/O system.

STEP 7: In this documentation, "STEP 7" is used as a synonym for all versions of the configuration and programming software "STEP 7 (TIA Portal)".

Please also observe notes marked as follows:

Note

A note contains important information on the product described in the documentation, on the handling of the product or on the section of the documentation to which particular attention should be paid.

Security information

Siemens provides products and solutions with industrial security functions that support the secure operation of plants, solutions, machines, equipment and/or networks. They are important components in a holistic industrial security concept. With this in mind, Siemens' products and solutions undergo continuous development. Siemens recommends strongly that you regularly check for product updates.

For the secure operation of Siemens products and solutions, it is necessary to take suitable preventive action (e.g. cell protection concept) and integrate each component into a holistic, state-of-the-art industrial security concept. Third-party products that may be in use should also be considered. You can find more information about industrial security on the Internet (http://www.siemens.com/industrialsecurity).

To stay informed about product updates as they occur, sign up for a product-specific newsletter. You can find more information on the Internet (http://support.automation.siemens.com).

Table of contents

Preface 4
1 Guide to documentation 6
2 Product overview 9
2.1 Properties 9
3 Wiring 11
3.1 Wiring and block diagram 11
4 Parameters/address space 14
4.1 Measurement types and measuring ranges 14
4.2 Parameters 15
4.3 Explanation of parameters 18
4.4 Measuring range adjustment 21
4.5 Scaling of measured values 24
4.6 Address space 27
5 Interrupts/diagnostics alarms 31
5.1 Status and error displays 31
5.2 Interrupts 33
5.3 Diagnostics alarms 35
6 Technical specifications 36
A Parameter data record 40
A.1 Dependencies when configuring with GSD file 40
A.2 Parameter assignment and structure of parameter data record 42
B Representation of analog values 52
B.1 Representation of input ranges 52
B.2 Representation of analog values in voltage measuring ranges 53
B.3 Representation of analog values in the current measuring ranges 54

Guide to documentation

1

The documentation for the SIMATIC ET 200SP distributed I/O system is arranged into three areas.
This arrangement enables you to access the specific content you require.

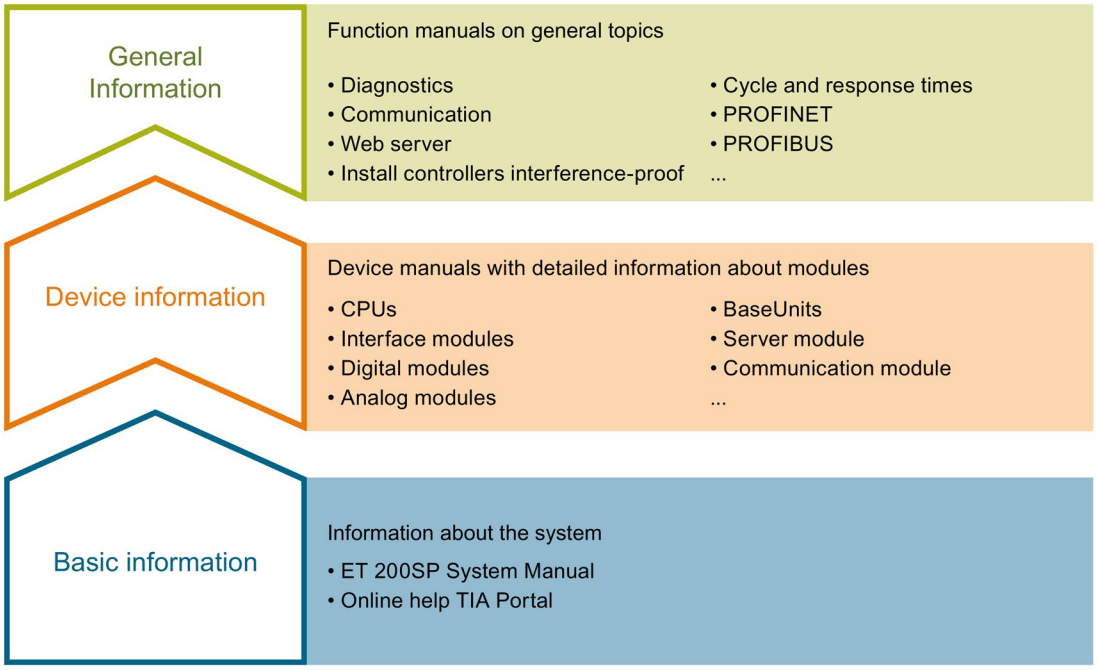

Basic information

The system manual describes in detail the configuration, installation, wiring and commissioning of the SIMATIC ET 200SP. distributed I/O system. The STEP 7 online help supports you in the configuration and programming.

Device information

Product manuals contain a compact description of the module-specific information, such as properties, terminal diagrams, characteristics and technical specifications.

General information

The function manuals contain detailed descriptions on general topics regarding the SIMATIC ET 200SP distributed I/O system, e.g. diagnostics, communication, Web server, designing interference-free controllers.

You can download the documentation free of charge from the Internet (http://w3.siemens.com/mcms/industrial-automation-systems-simatic/en/manual-overview/tech-doc-et200/Pages/Default.aspx).

Changes and supplements to the manuals are documented in a Product Information.

You can download the product information free of charge from the Internet (https://support.industry.siemens.com/cs/us/en/view/73021864).

Manual Collection ET 200SP

The Manual Collection contains the complete documentation on the SIMATIC ET 200SP distributed I/O system gathered together in one file.

You can find the Manual Collection on the Internet (http://support.automation.siemens.com/WW/view/en/84133942).

"mySupport"

With "mySupport", your personal workspace, you make the most of your Industry Online Support.

In "mySupport" you can store filters, favorites and tags, request CAx data and put together your personal library in the Documentation area. Furthermore, your data is automatically filled into support requests and you always have an overview of your current requests.

You need to register once to use the full functionality of "mySupport".

You can find "mySupport" in the Internet (https://support.industry.siemens.com/My/ww/en).

"mySupport" - Documentation

In the Documentation area of "mySupport", you have the possibility to combine complete manuals or parts of them to make your own manual.
You can export the manual in PDF format or in an editable format.

You can find "mySupport" - Documentation in the Internet (http://support.industry.siemens.com/My/ww/en/documentation).

"mySupport" - CAx Data

In the CAx Data area of "mySupport", you can have access the latest product data for your CAx or CAe system.

You configure your own download package with a few clicks.

In doing so you can select:

- Product images, 2D dimension drawings, 3D models, internal circuit diagrams, EPLAN macro files
- Manuals, characteristics, operating manuals, certificates
- Product master data

You can find "mySupport" - CAx Data in the Internet (http://support.industry.siemens.com/my/ww/en/CAxOnline).

Application examples

The application examples support you with various tools and examples for solving your automation tasks. Solutions are shown in interplay with multiple components in the system - separated from the focus in individual products.

You can find the application examples on the Internet (https://support.industry.siemens.com/sc/ww/en/sc/2054).

TIA Selection Tool

With the TIA Selection Tool, you can select, configure and order devices for Totally Integrated Automation (TIA).
This tool is the successor of the SIMATIC Selection Tool and combines the known configurators for automation technology into one tool.
With the TIA Selection Tool, you can generate a complete order list from your product selection or product configuration.

You can find the TIA Selection Tool on the Internet (http://w3.siemens.com/mcms/topics/en/simatic/tia-selection-tool).

Product overview

2

2.1 Properties

Article number

6ES7134-6HB00-0CA1

View of the module

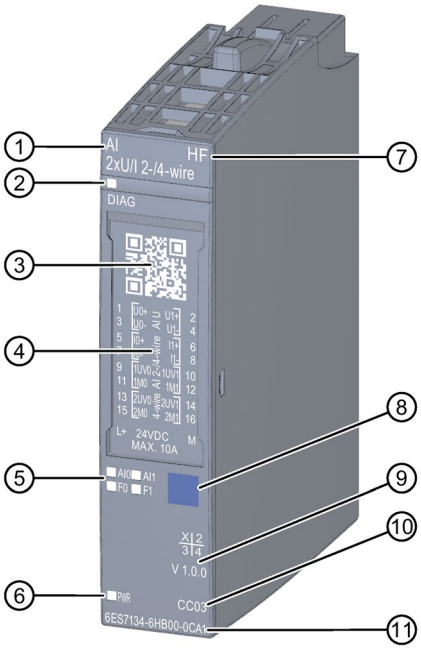

① Module type and name
② LED for diagnostics
③ 2D matrix code
④ Wiring diagram
⑤ LEDs for channel status
⑥ LED for supply voltage
⑦ Function class
⑧ Color coding module type
⑨ Function and firmware version
⑩ Color code for selecting the color identification labels
⑪ Article number

Image 2-1 View of the module AI 2×U/I 2-/4-wire HF

Properties

The module has the following technical properties:

- Analog input module with 2 inputs
- Resolution: Up to 16 bits including sign
- Single channel electrical isolation
- Voltage measurement type can be set per channel
- Current measuring type can be set per channel (for 2-wire or 4-wire transducer)
- Configurable diagnostics (per channel)

The module supports the following functions:

- Firmware update
- I&M identification data
- Configuration in RUN
- PROFIenergy
- Calibration in runtime
- Isochronous mode (PROFINET IO only)
- Value status (PROFINET IO only)

Table 2- 1 Version dependencies of other module functions

Function	Product version of the module as of	Firmware version of the module as of
Measuring range adjustment	1	V2.0.0
Scaling of measured values	1	V2.0.0
Module-internal shared input (MSI)	1	V2.0.0

You can configure the module with STEP 7 (TIA Portal) and with a GSD file [1].

[1] Version required for STEP 7: V5.5 SP4 HF7

Accessories

The following accessories must be ordered separately:

- Labeling strips
- Color identification labels
- Reference identification label
- Shield connector

See also

You can find additional information on the accessories in the ET 200SP distributed I/O system system manual.

Wiring 3

3.1 Wiring and block diagram

This section includes the block diagram of the AI 2xU/I 2-/4-wire HF module with the various terminal assignments for a 2- und 4-wire connection.

You can find information on wiring the BaseUnit in the ET 200SP distributed I/O system (http://support.automation.siemens.com/WW/view/en/58649293) system manual.

Note

You can use and combine the different wiring options for all channels.

Note

The load group of the module must begin with a light-colored BaseUnit. Keep this in mind also during the configuration.

Wiring: Voltage measurement 2-wire and 4-wire connection

The following figure shows the block diagram and an example of the terminal assignment of the analog input module AI 2xU/I 2-/4-wire HF on the BaseUnit BU type A0/A1.

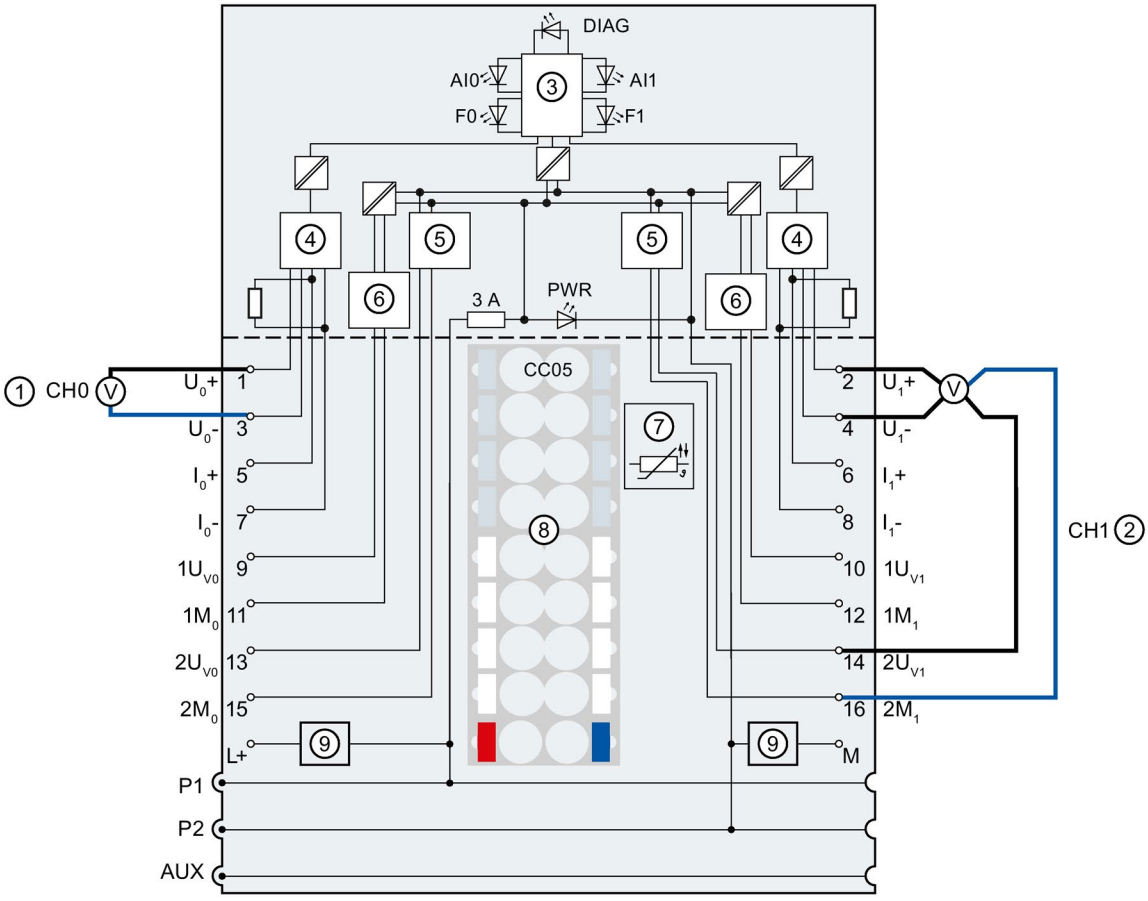

①	2-wire connection for voltage measurement	I_n+	Current input positive, channel n
②	4-wire connection for voltage measurement	I_n-	Current input negative, channel n
③	Backplane bus interface	U_{Vn}	Supply voltage, channel n
④	Analog-to-digital converter (ADC)	M_n	Reference ground to U_{Vn}, channel n
⑤	Current limitation (4-wire)	L+	24 V DC (infeed only with light-colored BaseUnit)
⑥	Current limitation (2-wire)	P1, P2, AUX	Internal self-assembling voltage buses Connection to left (dark-colored BaseUnit) Connection to left interrupted (light-colored BaseUnit)
⑦	Temperature recording for BU type A1 only (function cannot be used for this module)	DIAG	Diagnostics LED (green, red)
⑧	Color-coded label with color code CC05 (optional)	AI0, AI1	Channel status LED (green)
⑨	Filter connection supply voltage (only when light-colored BaseUnit is present)	F0, F1	Channel fault LED (red)
U_n+	Voltage input positive, channel n	PWR	Power LED (green)
Un-	Voltage input negative, channel n		

Image 3-1 Wiring and block diagram for voltage measurement 2-wire and 4-wire connection

Wiring: Current measurement 2-wire and 4-wire connection (2-wire and 4-wire transducer)

The following figure shows the block diagram and an example of the terminal assignment of the analog input module AI 2xU/I 2-/4-wire HF on the BaseUnit BU type A0/A1.

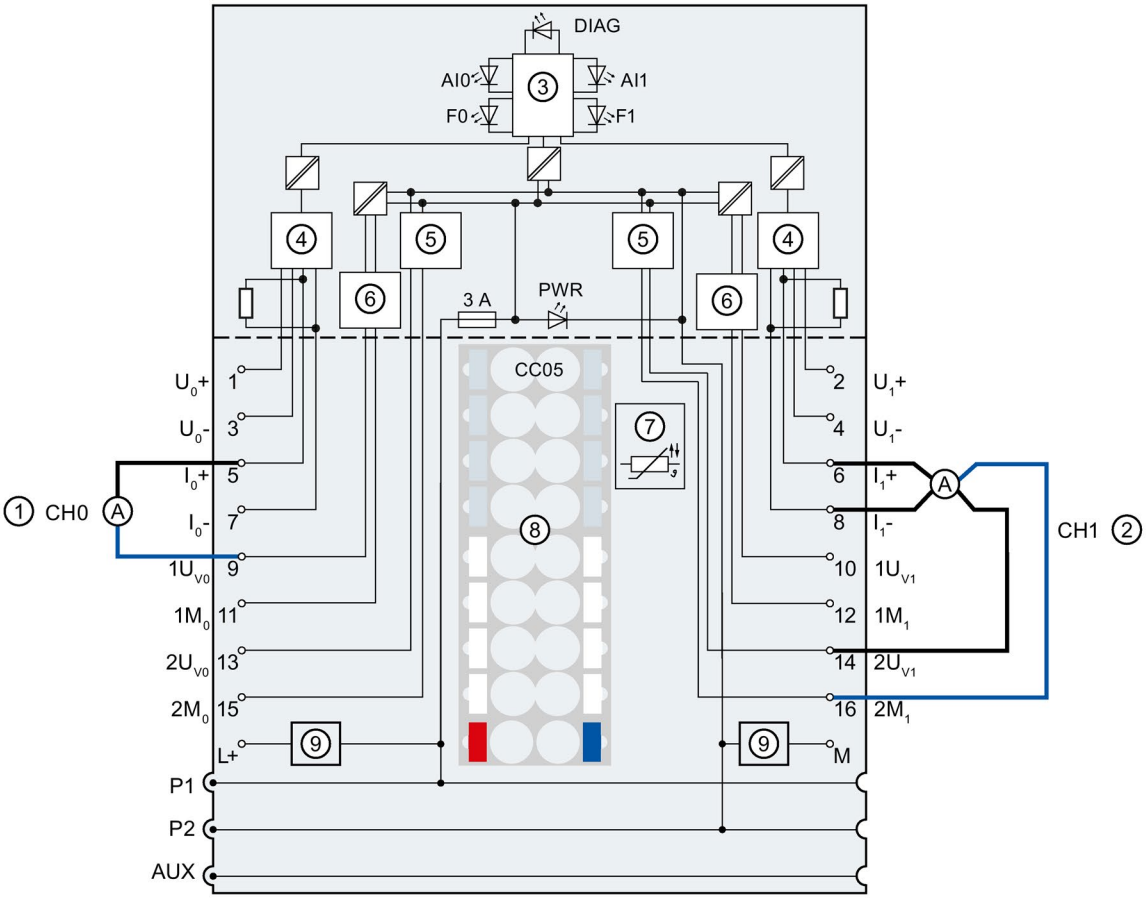

①	2-wire connection for current measurement (2-wire transducer)	U_n+	Voltage input positive, channel n
②	4-wire connection for current measurement (4-wire transducer)	U_n-	Voltage input negative, channel n
③	Backplane bus interface	U_{Vn}	Supply voltage, channel n
④	Analog-to-digital converter (ADC)	M_n	Reference ground to U_{Vn}, channel n
⑤	Current limitation (4-wire)	L+	24 V DC (infeed only with light-colored BaseUnit)
⑥	Current limitation (2-wire)	P1, P2, AUX	Internal self-assembling voltage buses Connection to left (dark-colored BaseUnit) Connection to left interrupted (light-colored BaseUnit)
⑦	Temperature recording for BU type A1 only (function cannot be used for this module)	DIAG	Diagnostics LED (green, red)
⑧	Color-coded label with color code CC05 (optional)	AI0, AI1	Channel status LED (green)
⑨	Filter connection supply voltage (only when light-colored BaseUnit is present)	F0, F1	Channel fault LED (red)
I_n+	Current input positive, channel n	PWR	Power LED (green)
I_n-	Current input negative, channel n		

Image 3-2 Wiring and block diagram for current measurement 2-wire and 4-wire connection (2-wire and 4-wire transducer)

Parameters/address space 4

4.1 Measurement types and measuring ranges

The following table shows the measurement types and the respective measuring range.

Table 4- 1 Measurement types and measuring ranges

Measurement type	Measuring range	Resolution
Voltage	± 5 V ± 10 V 1 to 5 V 0 to 10 V	16 bits incl. sign 16 bits incl. sign 15 bits 15 bits
Current	0 to 20 mA (2-wire and 4-wire transducer) 4 to 20 mA (2-wire and 4-wire transducer) ± 20 mA (only with 4-wire transducer)	15 bits 15 bits 16 bit including sign

You can find the tables of measuring ranges and overflow, overrange, etc. in the appendix Representation of analog values (Page 52) and the "Analog value processing" function manual.

Measuring range adjustment

See Measuring range adjustment (Page 21).

Scaling of measured values

See Scaling of measured values (Page 24).

4.2 Parameters

Parameters of the AI 2xU/I 2-/4-wire HF

The following table lists the configurable parameters. The effective range of the configurable parameters depends on the type of configuration. The following configurations are possible:

- Central operation with an ET 200SP CPU
- Distributed operation on PROFINET IO in an ET 200SP system
- Distributed operation on PROFIBUS DP in an ET 200SP system

When assigning parameters in the user program, use the WRREC instruction to transfer the parameters to the module by means of data records; refer to the section Parameter assignment and structure of parameter data record (Page 42).

The following parameter settings are possible:

Table 4- 2 Configurable parameters and their defaults (GSD file)

Parameter	Range of values	Default	Configuration in RUN	Scope with configuration software, e.g. STEP 7 (TIA Portal)	
				GSD file PROFINET IO	GSD file PROFIBUS DP
Diagnostics: No supply voltage L+	• Disable • Enable	Disable	Yes	Channel	Channel
Diagnostics: Short-circuit to ground	• Disable • Enable	Disable	Yes	Channel	Channel
Diagnostics: Overflow	• Disable • Enable	Disable	Yes	Channel	Channel
Diagnostics: Underflow	• Disable • Enable	Disable	Yes	Channel	Channel
Diagnostics: Wire break	• Disable • Enable	Disable	Yes	Channel	Channel

Parameter	Range of values	Default	Configuration in RUN	Scope with configuration software, e.g. STEP 7 (TIA Portal)	
				GSD file PROFINET IO	GSD file PROFIBUS DP
Measurement type/measuring range	• Deactivated • Voltage – ±5 V – ±10 V – 1 V to 5 V – 0 V to 10 V • Current (4-wire transducer) – 0 to 20 mA – 4 to 20 mA – ±20 mA • Current (2-wire transducer) – 0 to 20 mA – 4 to 20 mA	Current (4-wire transducer) 4..20 mA	Yes	Channel	Channel
Smoothing	• None • 2 times • 4 times • 8 times • 16 times • 32 times	None	Yes	Channel	Channel
Interference frequency suppression [2]	• 16.6 Hz (67.5 ms) • 50 Hz (22.5 ms) • 60 Hz (18.75 ms) • 300 Hz (10 ms) • 600 Hz (5 ms) • 1.2 kHz (2.5 ms) • 2.4 kHz (1.25 ms) • 4.8 kHz (0.625 ms)	50 Hz (22.5 ms)	Yes	Channel	Channel
Measuring range adjustment [1]	• Disable • Enable	Disable	Yes	Channel	-
Measuring range adjustment high limit [1]	Value within the nominal range of the measuring range in mV or µA	0	Yes	Channel	-
Measuring range adjustment low limit [1]	Value within the nominal range of the measuring range in mV or µA	0	Yes	Channel	-
Scaled high nominal range limit [3]	REAL	20.0	Yes	Channel	-
Scaled low nominal range limit [3]	REAL	4.0	Yes	Channel	-

Parameter	Range of values	Default	Configuration in RUN	Scope with configuration software, e.g. STEP 7 (TIA Portal)	
				GSD file PROFINET IO	GSD file PROFIBUS DP
Hardware interrupt high limit 1 [1]	• Disable • Enable	Disable	Yes	Channel	-
Hardware interrupt low limit 1 [1]	• Disable • Enable	Disable	Yes	Channel	-
Hardware interrupt high limit 2 [1]	• Disable • Enable	Disable	Yes	Channel	-
Hardware interrupt low limit 2 [1]	• Disable • Enable	Disable	Yes	Channel	-
Hardware interrupt high limit 1 [1]	• Value (INT) • Value (REAL) [3]	• 27648 • 0.0 [3]	Yes	Channel	-
Hardware interrupt low limit 1 [1]	• Value (INT) • Value (REAL) [3]	• 0 • 0.0 [3]	Yes	Channel	-
Hardware interrupt high limit 2 [1]	• Value (INT) • Value (REAL) [3]	• 27648 • 0.0 [3]	Yes	Channel	-
Hardware interrupt low limit 2 [1]	• Value (INT) • Value (REAL) [3]	• 0 • 0.0 [3]	Yes	Channel	-
Potential group	• Use potential group of the left module (module plugged into a dark-colored BaseUnit) • Enable new potential group (module plugged into light-colored BaseUnit)	Use potential group of the left module	No	Module	Module

1 Due to the limited number of parameters at a maximum of 244 bytes per ET 200SP station with a PROFIBUS GSD configuration, the configuration options are restricted. If required, you can assign these parameters using data record 128 as described in the "GSD file PROFINET IO" column (see table above). The parameter length of the I/O module is 7 bytes.

2 In normal operation, different interference frequency suppression settings can be configured for both channels. These cause different integration times for the analog-to-digital conversion. The module-internal time for updating the user data is now based on the longer integration time for both channels.
In isochronous mode, both channels must be configured with the same interference frequency suppression of 4.8 kHz.

3 Only for configuration SCALE.

Note

Unused channels

Deactivate the unused inputs in the parameter assignment.

A deactivated input always returns the value $7FFF_H$ or $7F800000_H$ with measured value scaling.

Property of the module in isochronous mode

The permitted interference frequency suppression of both channels for isochronous mode of the modules is 4.8 kHz (0.625 ms).

Note that no instantaneous value for the time Ti is returned in isochronous mode. The analog module AI 2xU/I 2-/4-wire HF returns a mean value for the range of 0.625 ms starting at Ti.

4.3 Explanation of parameters

Diagnostics: No supply voltage L+

Enabling of the diagnostics for no or insufficient supply voltage L+.

Diagnostics: Short-circuit to ground

Enabling of the diagnostics if a short-circuit of the actuator supply to ground occurs. A short-circuit is also detected in the range of 1 to 5 V if the input signal is short-circuited or the input is not connected.

The short-circuit and underflow diagnostics can be activated simultaneously. If both diagnostics events occur simultaneously, the short-circuit diagnostics is output.

Diagnostics: Overflow

Enabling of the diagnostics when the measured value exceeds the overrange.

Diagnostics: Underflow

Enabling of the diagnostics when the measured value falls below the underrange.

Diagnostics: Wire break

Enable the diagnostics if the module has no current flow or has too little current for the measurement in the range of 4 to 20 mA.

The wire break and underflow diagnostics can be activated simultaneously. If both diagnostics events occur simultaneously, the wire break diagnostics is output.

Smoothing

The individual measured values are smoothed by filtering. The smoothing can be set in 5 levels.

Smoothing time = number of module cycles (k) x cycle time of the module.

The following figure shows how many module cycles it takes for the smoothed analog value to approach 100%, depending on the configured smoothing. This applies to every signal change at the analog input.

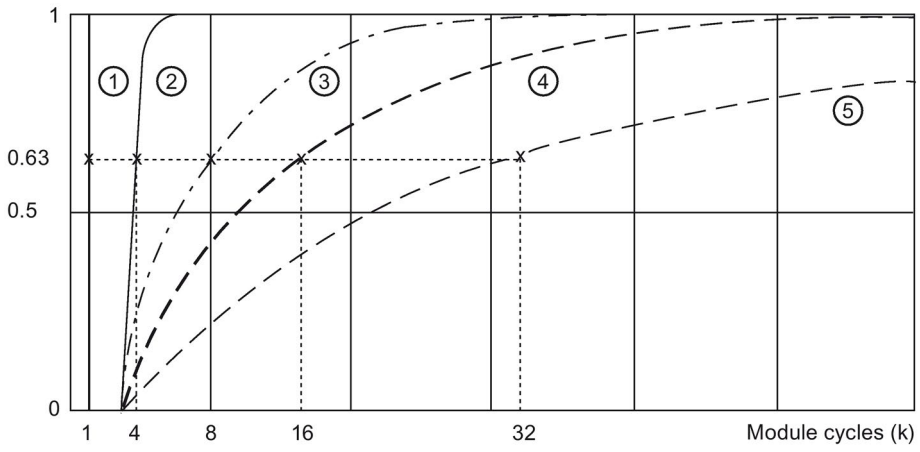

① No smoothing (k = 1)
② Weak (k = 4)
③ Medium (k = 8)
④ Strong (k = 16)
⑤ Very strong (k = 32)

Image 4-1 Smoothing AI 2×U/I 2-/4-wire HF

Interference frequency suppression

Suppresses the interference affecting analog input modules that is caused by the frequency of the AC voltage network used.

The frequency of the AC voltage network can negatively affect the measured value, in particular when measuring in the low voltage range and with thermocouples. With this parameter, the user specifies the line frequency that is predominant in the plant.

Measuring range adjustment

The measuring range adjustment is a limited section of a measuring range supported by the analog input module. It is available for current and voltage measurements.

A limited measuring range in S7 format is shown, which is defined by the high and low limits of the measuring range adjustment.

Scaling of measured values

With measured value scaling, the user data of an analog input module is displayed as REAL (32-bit floating point) instead of S7 format.

The representation of the measuring range is defined by the scaled high and low limits of nominal range limit (as REAL).

The measured value scaling can be combined with the measuring range adjustment. In this case, the measuring range is adjusted first and then the representation of the measuring range is scaled.

BaseUnit with incoming supply voltage

Specifies that a light-colored BaseUnit with incoming supply voltage is located on this slot (see ET 200SP distributed I/O system (http://support.automation.siemens.com/WW/view/en/58649293) system manual).

Potential group

A potential group consists of a group of directly adjacent I/O modules within an ET 200SP station, which are supplied via a common supply voltage.

A potential group begins with a light-colored BaseUnit through which the required voltage is supplied for all modules of the potential group. The light-colored BaseUnit interrupts the three self-assembling voltage buses P1, P2 and AUX to the left neighbor.

All additional I/O modules of this potential group are plugged into dark-colored BaseUnits. You take the potential of the self-assembling voltage buses P1, P2 and AUX from the left neighbor.

A potential group ends with the dark-colored BaseUnit, which follows a light-colored BaseUnit or server module in the station configuration.

See also

You can find additional information in the system manual ET 200SP distributed I/O system (http://support.automation.siemens.com/WW/view/en/58649293).

4.4 Measuring range adjustment

Introduction

The measuring range adjustment is available for current and voltage measuring ranges.

The measuring range adjustment (base measuring range) is valid for the following ranges:

- Nominal range
- Underrange (of the measuring range adjustment)
- Overrange (of the measuring range adjustment)

Note

Live zero measuring ranges are not supported.

Function

The measuring range adjustment is a limited section of a measuring range supported by the module.

It allows you to increase the resolution for a configurable part of the measuring range in S7 format.

- The function is enabled with the "Measuring range adjustment" parameter
- The "Measuring range adjustment high limit" parameter sets the high limit of the measuring range in mV or µA.
- The "Measuring range adjustment low limit" parameter sets the low limit of the measuring range in mV or µA.

Note

The "Measuring range adjustment" function can be used in combination with the "Measured value scaling" function. See also Scaling of measured values (Page 24).

Note

When the "Measuring range adjustment high limit" and "Measuring range adjustment low limit" parameters are too close together, resolution may be lost, which means it may no longer be possible to show every value.

Rules

- The limits of the measuring range adjustment must be selected within the nominal range of the base measuring range. They are specified in integers.
- The measuring range adjustment is resolved depending on the base measuring range from 0_H to $6C00_H$ or 9400_H to $6C00_H$.
- Underranges/overranges apply in accordance with the S7 format and the base measuring range.
  Special consideration: Negative values are not possible for "Current (2-wire transducer) 0..20 mA". With a measuring range adjustment, an underrange is offered when possible and cut off at 0 mA. If the underrange limit ($ED00_H$) is > 0 mA, QI = 0 and the analog value 8000_H are output when it is violated.

Example

The following values result, for example:

Table 4- 3 Example of measuring range adjustment

Measuring range adjustment	Measuring range resolution	
	Bipolar	Unipolar
Base measuring range	±10 V	0 V to 10 V
Adjusted measuring range	+2 V to +5 V	+2 V to +5 V
Measuring range adjustment high limit	5000 mV (S7: +27648)	5000 mV (S7: +27648)
Measuring range adjustment low limit	2000 mV (S7: -27648)	2000 mV (S7: 0)

The following example illustrates the effect of a measuring range adjustment:

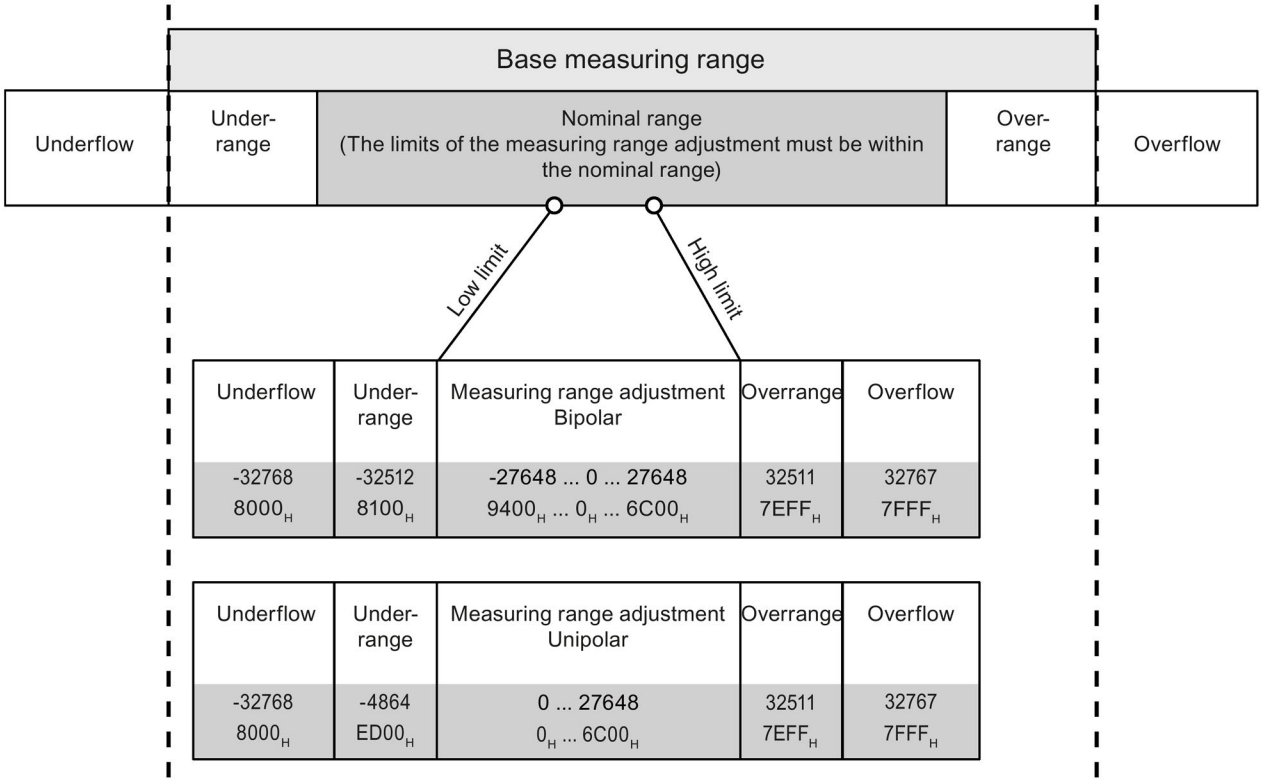

Image 4-2 Example of a measuring range adjustment

Configuration

The following figure shows an example of a configuration:

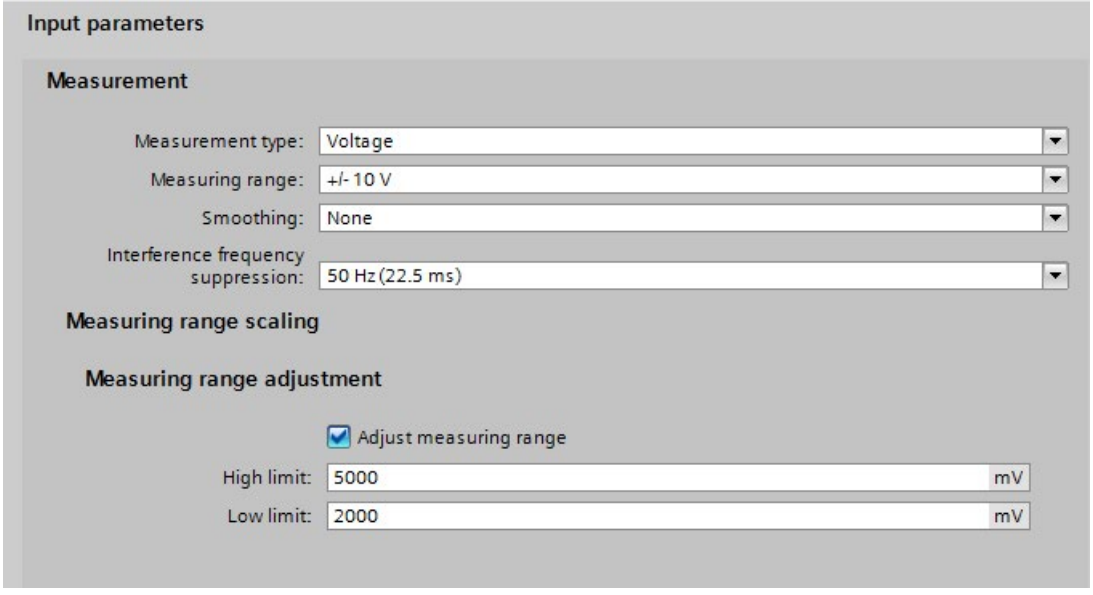

Image 4-3 Example of a configuration

In the configuration example, a measuring range adjustment of 2000 mV to 5000 mV is displayed.

4.5 Scaling of measured values

Introduction

The measured value scaling can be combined with the measuring range adjustment. In this case, the measuring range is adjusted first and then the representation of the measuring range is scaled.

Function

With measured value scaling, the user data of an AI 2xU/I 2-/4-wire HF module is displayed as REAL (32-bit floating point) instead of S7 format.

The representation of the measuring range is defined by the following parameters:

- The "Scaled high nominal range limit" parameter sets the desired display value (in REAL) for the high nominal range limit of the measuring range.
- The "Scaled low nominal range limit" parameter sets the desired display value (in REAL) for the low nominal range limit of the measuring range.

Note

With measured value scaling, the substitute value is minus infinity for underflow (FF800000H) and plus infinity for overflow (7F800000H).

Note

Effects of inversion

It is possible to set the "Scaled high nominal range limit" parameter lower than the "Scaled low nominal range limit" parameter, whereby the representation of the measuring range will be inverted compared to the terminal value (V, mA).

Overflow/underflow and hardware interrupts are always based on representation in REAL. A terminal value of > 11.76 V triggered an underflow for an inverted measured value scaling. Hardware interrupts react similarly.

Note

When the Parameter "Scaled high nominal range limit" and "Scaled low nominal range limit" parameters are too close together, resolution may be lost, which means it may no longer be possible to show every value.

Example

The following values result, for example:

Table 4- 4 Example of measured value scaling

	Low nominal range limit	High nominal range limit
Base measuring range	-10 V	+10 V
S7 format	-27648	+27648
Scaling of measured values	1.00	7.00

As shown in the table, -10 V corresponds to 1.00 and +10 V corresponds to 7.00.

Combination with measuring range adjustment

If the measuring range adjustment is enabled in addition to measured value scaling, first the measuring range is scaled and then the representation of the measuring range. The table below shows an example of the combination of measured value scaling and measuring range adjustment.

Table 4- 5 Example for a combination of measured value scaling and measuring range adjustment

	Low nominal range limit	High nominal range limit
Measuring range adjustment	-4000 mV	8000 mV
S7 format	-27648	+27648
Scaling of measured values	1.00	7.00

As shown in the table, -4 V corresponds to 1.00 and +8 V corresponds to 7.00.

Configuration

The following figures show examples of a configuration in STEP 7:

Configuration of measured value scaling

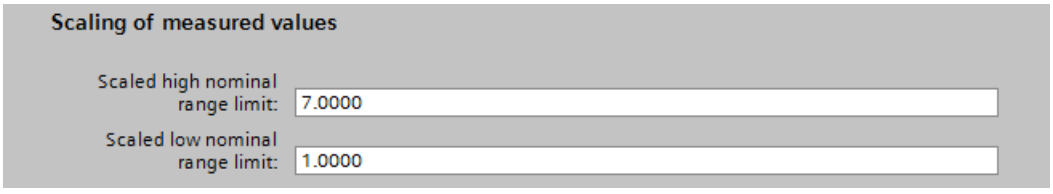

Image 4-4 Configuration of measured value scaling

Configuration with measuring range adjustment and measured value scaling

In the configuration example, a measuring range adjustment of -4000 mV to 8000 mV is displayed and additionally converted to a scaled high and low nominal range limit of 1.00 to 7.00.

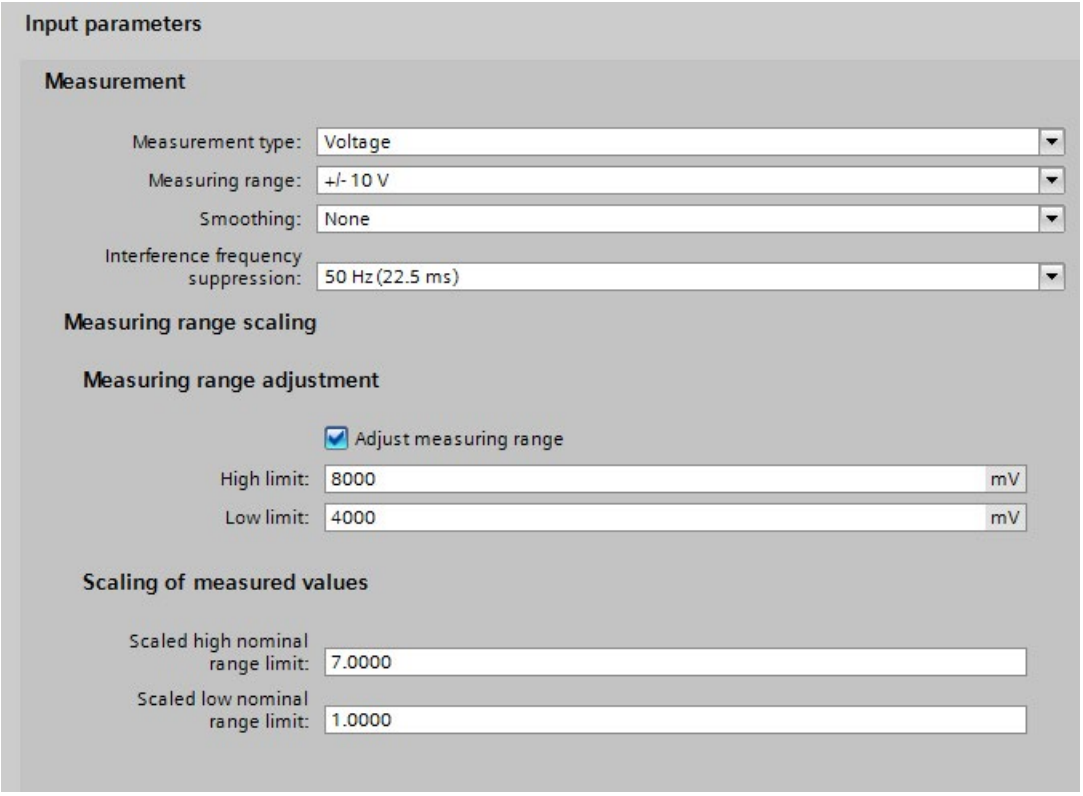

Image 4-5 Configuration with measuring range adjustment and measured value scaling

4.6 Address space

The module can be configured differently in STEP 7; see following table. Depending on the configuration, additional/different addresses are assigned in the process image of the inputs.

Configuration options of AI 2xU/I 2-/4-wire HF

You can configure the module with STEP 7 (TIA Portal) or with a GSD file. If you configure the module by means of a GSD file, the configurations are available under various short designations/module names; see the table below. The following configurations are possible:

Table 4- 6 Configuration options with GSD file

Configuration	Short designation/module name in the GSD file	Configuration software, e.g. with STEP 7 (TIA Portal)		
		Integrated in the hardware catalog STEP 7, as of V13, SP1	GSD file PROFINET IO	GSD file PROFIBUS DP
1 x 2-channel without value status	AI 2xU/I 2-, 4-wire HF V1.0	X	X	X
1 x 2-channel with value status	AI 2xU/I 2-, 4-wire HF V1.0, QI	X	X	---
1 x 2-channel without value status	AI 2xU/I 2-, 4-wire HF V2.0	---	X	X
1 x 2-channel with value status	AI 2xU/I 2-, 4-wire HF V2.0, QI	---	X	---
1 x 2-channel with value status for module-internal Shared Input with up to 4 submodules	AI 2xU/I 2-, 4-wire HF V2.0, MSI	---	X	---
1 x 2-channel with value status and measured value scaling	AI 2xU/I 2-, 4-wire HF V2.0, SCALE	---	X	---

Value status (Quality Information, QI)

The value status is always activated for the following module names:

- AI 2xU/I 2-, 4-wire HF, QI,
- AI 2xU/I 2-, 4-wire HF, MSI
- AI 2xU/I 2-, 4-wire HF, SCALE

An additional bit is assigned to each channel for the value status. The value status bit indicates whether the read in analog value is valid. (0 = value is incorrect).

Evaluating the value status

If you enable the value status for the analog module, an additional byte is occupied in the input address space. Bits 1 and 0 in this byte are assigned to a channel. They provide information about the validity of the analog value.

Bit = 1: No fault is present on the channel.

Bit = 0: The wiring, the value created on the channel, etc. is incorrect.

Address space for configuration as 1 x 2-channel AI 2×U/I 2-/4-wire HF, QI

The following figure shows the assignment of the address space for the AI 2xU/I 2-/4-wire HF, QI with value status (Quality Information (QI)). The addresses for the value status are only available if the value status is enabled.

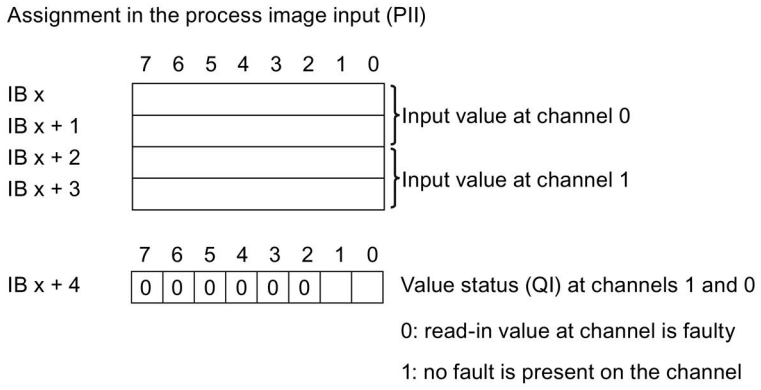

Image 4-6 Address space of the analog input module AI 2xU/I 2-/4-wire HF, QI with value status

Address space for configuration as 1 x 2-channel AI 2×U/I 2-/4-wire HF MSI

For the configuration as a 1 x 2-channel module (module-internal shared input, MSI), channels 0 and 1 of module are copied to up to four submodules. Channels 0 and 1 are then available with identical input values in various submodules. These submodules can be assigned to up to four IO controllers when the module is used in a shared device. Each IO controller has read access to the same channels.

The number of usable submodules is dependent on the interface module used. Please observe the information in the manual for the particular interface module.

Value status (Quality Information, QI)

The meaning of the value status depends on the submodule on which it occurs.

For the 1st submodule (=basic submodule), the value status 0 indicates that the value is incorrect.

For the 2nd to 4th submodule (=MSI submodule), the value status 0 indicates that the value is incorrect or the basic submodule has not yet been configured (not ready).

The following figure shows the assignment of the address space with submodules 1 and 2.

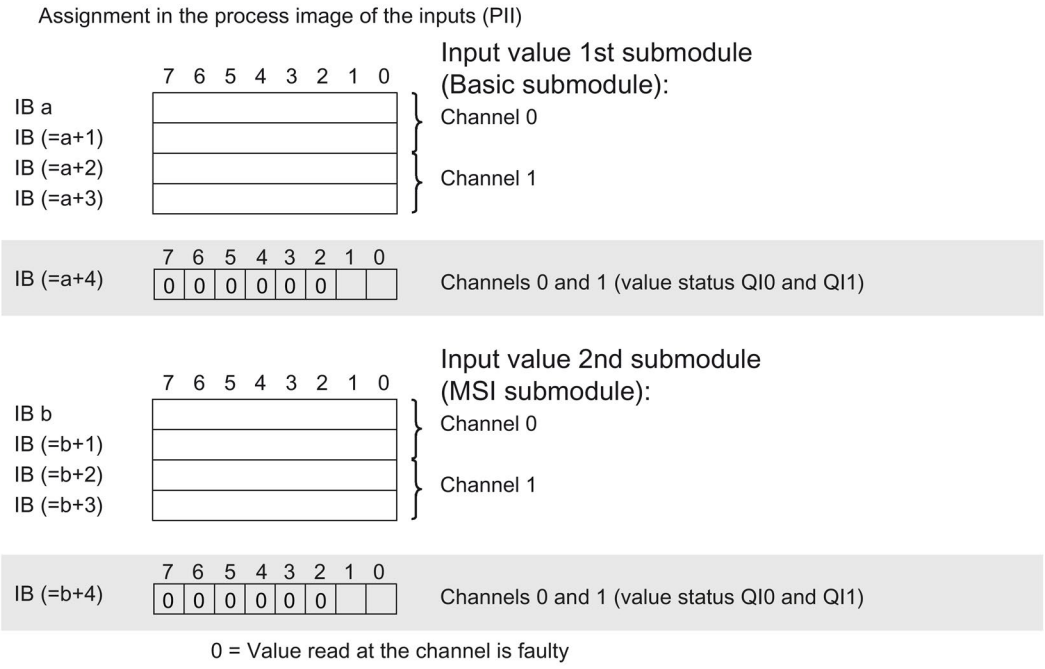

Image 4-7 Address space for configuration as 1x 2-channel AI 2×U/I 2-/4-wire HF MSI with value status

The figure below shows the assignment of the address space with submodules 3 and 4.

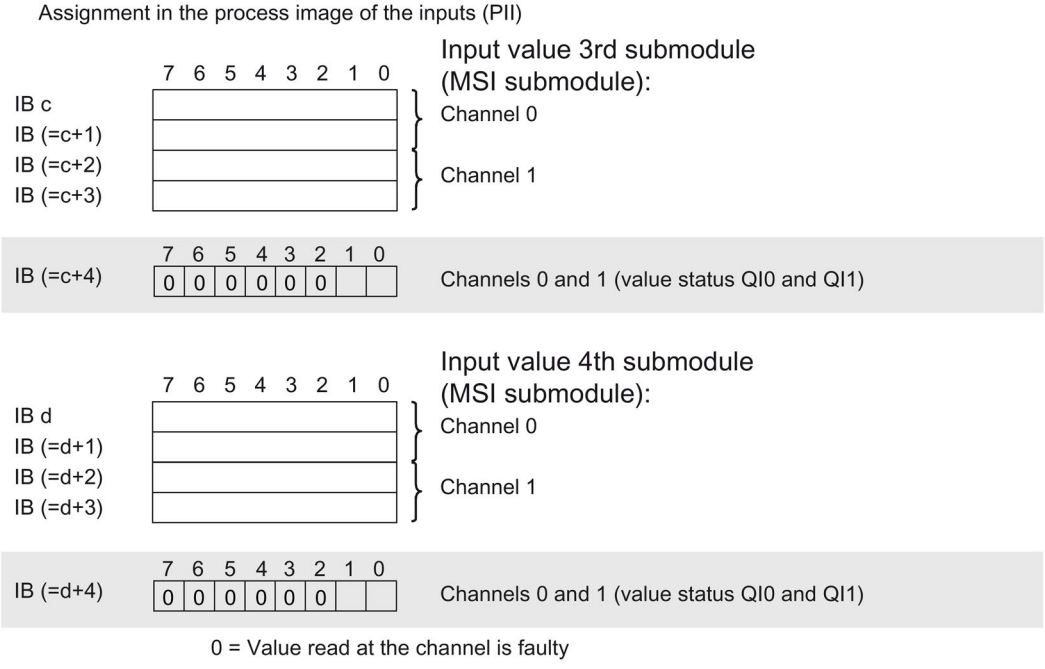

Image 4-8 Address space for configuration as 1x 2-channel AI 2×U/I 2-/4-wire HF MSI with value status

Address space for configuration as 1 x 2-channel AI 2×U/I 2-/4-wire HF SCALE

The following figure shows the assignment of the address space for the AI 2xU/I 2-/4-wire HF, SCALE with value status (Quality Information (QI)). The value status cannot be deselected for this configuration.

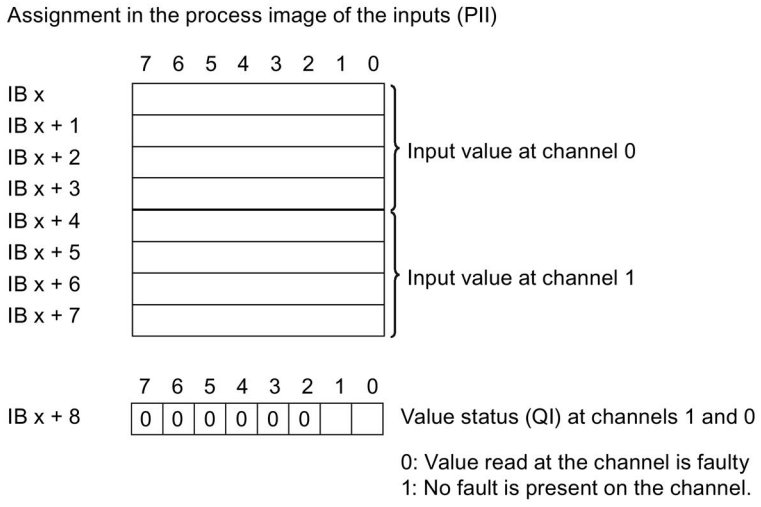

Image 4-9 Address space for configuration as 1 x 2-channel AI 2×U/I 2-/4-wire HF, SCALE with value status

Interrupts/diagnostics alarms

5

5.1 Status and error displays

LED displays

The following figure shows you the LED display of the AI 2xU/I 2-/4-wire HF.

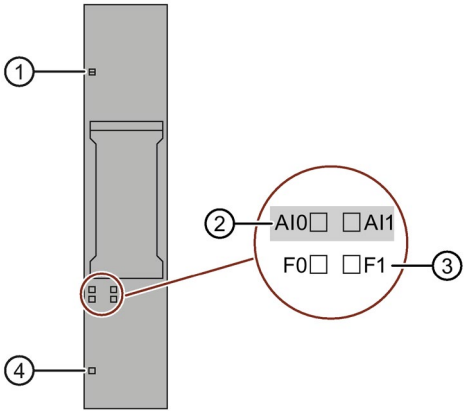

① DIAG (green/red)
② Channel status (green)
③ Channel error (red)
④ PWR (green)

Image 5-1 LED display

Meaning of the LED displays

The following tables contain the meaning of the status and error displays. Remedies for diagnostics alarms can be found in section Diagnostics alarms (Page 35).

Table 5- 1 Error display DIAG LED

DIAG LED	Meaning
□ Off	Backplane bus supply of the ET 200SP not OK
☼ Flashes	Module parameters not assigned
■ On	Module parameters assigned and no module diagnostics
☼ Flashes	Module parameters assigned and module diagnostics

Table 5- 2 Status and error display LED channel status / channel error

LEDs		Meaning
Channel status	Channel error	
□ Off	□ Off	Channel deactivated or load voltage missing
■ On	□ Off	Channel activated and no channel diagnostics
□ Off	■ On	Channel activated and channel diagnostics
■ On	■ On	Not permitted (error)

Table 5- 3 PWR LED status display

PWR LED	Meaning
□ Off	Load voltage missing
■ On	Load voltage present

5.2 Interrupts

The analog input module AI 2×U/I 2-/4-wire HF supports hardware and diagnostic interrupts.

Diagnostics interrupts

The module generates a diagnostic interrupt at the following events:

- Short-circuit (current: sensor supply; voltage: 1 to 5 V, encoder supply)
- Wire break (current: 4 to 20 mA)
- High limit violated
- Low limit violated
- Error
- Parameter assignment error
- Hardware interrupt lost
- Supply voltage missing
- Channel temporarily unavailable

Hardware interrupts

The module generates a hardware interrupt at the following events:

- Violation of low limit 1
- Violation of high limit 1
- Violation of low limit 2
- Violation of high limit 2

S7-1500

Detailed information on the event is available in the STEP 7 online help.

The block interface is represented here with optimized block access, which is set in the TIA Portal by default.

Name	Data type	Comment
LADDR	HW_IO	Hardware identifier of the module triggering the interrupt
USI	WORD	USI (High/Low)
IChannel	USInt	Channel that triggered the hardware interrupt
EventType	Byte	Error event

S7-300/400 or a different CPU

You can obtain detailed information on the event in the hardware interrupt organization block with the "RALARM" (read additional interrupt information) instruction and in the STEP 7 online help.

The module channel that triggered the hardware interrupt is entered in the start information of the organization block. The following figure shows the assignment to the bits of double word 8 in local data.

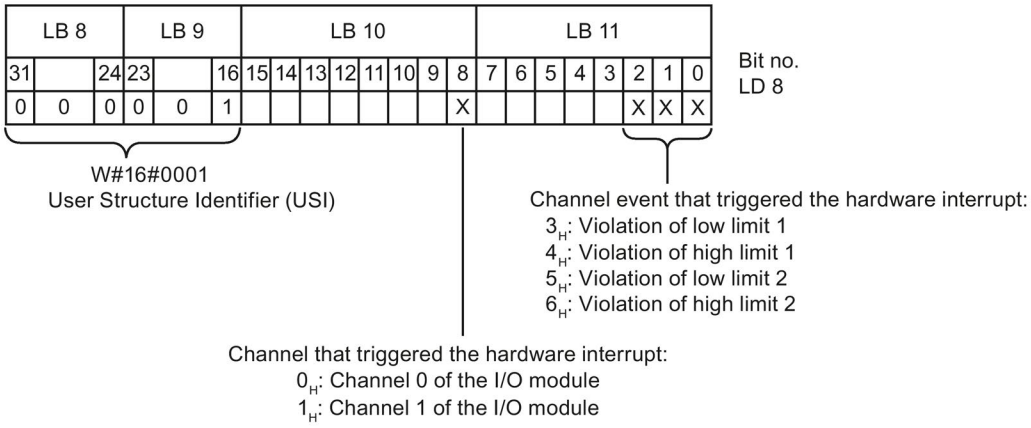

Image 5-2 OB start information

Structure of the additional interrupt information

Table 5- 4 Structure of the additional interrupt information

Data block name		Content	Comment	Bytes
USI (User Structure Identifier)		W#16#0001	Additional interrupt information for hardware interrupts of the I/O module	2
Channel that triggered the hardware interrupt.				
	Channel	B#16#00 to B#16#01	Channel 0 and 1 of the I/O module	1
Event that triggered the hardware interrupt.				
	Error event	B#16#03	Violation of low limit 1	1
		B#16#04	Violation of high limit 1	
		B#16#05	Violation of low limit 2	
		B#16#06	Violation of high limit 2	

5.3 Diagnostics alarms

A diagnostics alarm is generated and the DIAG-LED flashes on the module for each diagnostics event. You can read out the diagnostics alarms, for example, in the diagnostics buffer of the CPU. You can evaluate the error codes with the user program.

Table 5- 5 Diagnostics alarms, their meaning and corrective measures

Diagnostics alarm	Error code	Meaning	Solution
Short-circuit (encoder supply)	1_H	Short-circuit encoder supply to ground	Correct interplay between module and encoder
Short-circuit (1 to 5 V)	1_H	Short-circuit of input signal	Correct interplay between module and encoder
		Open input	Connect input
Wire break (current 4 to 20 mA)	6_H	Impedance of encoder circuit too high	Use a different encoder type or modify the wiring, e.g. use cables with larger cross-section
		Wire break between the module and sensor	Connect the cable
		Channel not connected (open)	• Disable diagnostics • Connect the encoder contacts
High limit violated	7_H	Value is above the overrange.	Correct interplay between module and encoder
Low limit violated	8_H	Value is below the underrange.	Correct interplay between module and encoder
Error	9_H	Internal module error has occurred (diagnostics alarm on channel 0 applies for the entire module).	Replace module
Parameter assignment error	10_H	The module cannot evaluate parameters for the channel: Incorrect parameter assignment.	• Correct the parameter assignment (wire break diagnostics set only with the permitted measuring ranges).
Supply voltage missing	11_H	Missing or insufficient supply voltage L+	• Check supply voltage L+ on the BaseUnit • Check BaseUnit type
Hardware interrupt lost	16_H	Error is reported when a hardware interrupt (high/low limit) could not be reported.	• Limits might be assigned twice. • If necessary, reduce the bus cycle. • If necessary, use higher SFU.
Channel temporarily unavailable	$1F_H$	Firmware update is currently in progress or has been canceled. The module does not read process values in this state.	• Wait for firmware update • Restart the firmware update
		Switch to user calibration	

Technical specifications

6

Technical specifications of the AI 2×U/I 2-/4-wire HF

	6ES7134-6HB00-0CA1
General information	
Product type designation	ET 200SP, AI 2xU/I 2/4-wire High Feature, PU 1
Firmware version	V2.0
• FW update possible	Yes
Usable BaseUnits	BU type A0, A1
Color code for module-specific color identification label	CC03
Product function	
I&M data	Yes; I&M0 to I&M3
Scalable measuring range	No
Engineering with	
STEP 7 TIA Portal can be configured/integrated as of version	V13
STEP 7 can be configured/integrated as of version	V5.5 / -
PCS 7 can be configured/integrated as of version	V8.1 SP1
PROFIBUS as of GSD version/GSD revision	GSD revision 5
PROFINET as of GSD version/GSD revision	GSDML V2.3
Operating mode	
Oversampling	No
MSI	Yes
CiR Configuration in RUN	
Configuration in RUN possible	Yes
Calibration in RUN possible	Yes
Supply voltage	
Rated value (DC)	24 V
Valid range, low limit (DC)	19.2 V
Valid range, high limit (DC)	28.8 V
Polarity reversal protection	Yes
Input current	
Current consumption (rated value)	39 mA; without sensor supply

	6ES7134-6HB00-0CA1
Encoder supply	
24 V encoder supply	
24 V	Yes
Short-circuit protection	Yes
Output current, max.	20 mA; max. 50 mA per channel for a duration < 10 s (two-wire)
Additional 24 V encoder supply	
Short-circuit protection	Yes; channel-based
Output current, max.	100 mA; max. 150 mA per channel for a duration < 10 s (four-wire)
Power loss	
Power loss, typ.	0.95 W; without sensor supply
Address area	
Address space per module	
Address space per module, max.	4 bytes; + 1 byte for QI information
Analog inputs	
Number of analog inputs	2; Differential inputs
Maximum permissible input voltage for voltage input (destruction limit)	30 V
Permissible input current for current input (destruction limit), max.	50 mA
Input ranges (rated values), voltages	
0 to +10 V	Yes; 15 bits
Input resistance (0 to 10 V)	75 kΩ
1 V to 5 V	Yes; 15 bits
Input resistance (1 V to 5 V)	75 kΩ
-10 V to +10 V	Yes; 16 bits incl. sign
Input resistance (-10 V to +10 V)	75 kΩ
-5 V to +5 V	Yes; 16 bits incl. sign
Input resistance (-5 V to +5 V)	75 kΩ
Input ranges (rated values), currents	
0 mA to 20 mA	Yes; 15 bits
Input resistance (0 to 20 mA)	130 Ω
-20 mA to +20 mA	Yes; 16 bits incl. sign
Input resistance (-20 mA to +20 mA)	130 Ω
4 mA to 20 mA	Yes; 15 bits
Input resistance (4 mA to 20 mA)	130 Ω
Cable length	
Shielded, max.	1000 m; 200 m for voltage measurement

	6ES7134-6HB00-0CA1
Formation of analog values for the inputs	
Measuring principle	Sigma Delta
Integration and conversion time/resolution per channel	
Resolution with overrange (bit including sign), max.	16 bits
Integration time configurable	Yes
Interference voltage suppression for interference frequency f1 in Hz	16.6 / 50 / 60 / 300 / 600 / 1 200 / 2 400 / 4 800
Basic execution time of the module (all channels enabled)	1 ms
Measured value smoothing	
Number of levels	6; none; 2/4/8/16/32 times
Configurable	Yes
Encoders	
Connection of the signal transmitters	
For voltage measurement	Yes
For current measurement as 2-wire transducer	Yes
• Load of 2-wire transducer, max.	650 Ω
For current measurement as 4-wire transducer	Yes
Errors/accuracies	
Linearity error (in relation to input range), (+/-)	0.01%
Temperature error (in relation to input range), (+/-)	0.003%/K
Crosstalk between inputs, min.	-50 dB
Repeat accuracy in settled state at 25 °C (in relation to input range), (+/-)	0.01%
Operational limit in the entire temperature range	
Voltage in relation to input range, (+/-)	0.1%
Current in relation to input range, (+/-)	0.1%
Basic error limit (operational limit at 25 °C)	
Voltage in relation to input range, (+/-)	± 0.05%; 0.1% with SFU 4.8 kHz
Current in relation to input range, (+/-)	± 0.05%; 0.1% with SFU 4.8 kHz
Interference voltage suppression for f = n x (f1 +/- 1%), f1 = interference frequency	
Common mode voltage, max.	35 V
Common mode interference, min.	90 dB
Isochronous mode	
Isochronous mode (application synchronized up to terminal)	Yes
Filtering and processing time (TCI), min.	800 µs
Bus cycle time (TDP), min.	1 ms
Jitter, max.	5 µs

	6ES7134-6HB00-0CA1
Interrupts/diagnostics/status information	
Interrupts	
Diagnostics interrupt	Yes
Limit interrupt	Yes; two high limits and two low limits each
Diagnostics alarms	
Diagnostics	Yes
Monitoring of the supply voltage	Yes
Wire break	Yes, measuring range 4 to 20 mA only
Short-circuit	Yes; for 1 to 5 V, and for current measuring ranges for short-circuit in sensor supply
Group error	Yes
Overflow/underflow	Yes
Diagnostics indicator LED	
Monitoring of the supply voltage (PWR LED)	Yes; green PWR LED
Channel status display	Yes; green LED
For channel diagnostics	Yes; red LED
For module diagnostics	Yes; green/red DIAG LED
Electrical isolation	
Electrical isolation of channels	
Between the channels	Yes
Between the channels and backplane bus	Yes
Between the channels and voltage supply of the electronics	Yes
Permitted potential difference	
Between different circuits	75 V DC / 60 V AC (basic isolation)
Between the inputs (UCM)	75 V DC/60 V AC
Isolation	
Isolation tested with	707 V DC (type test)
Dimensions	
Width	15 mm
Weights	
Weight, approx.	32 g

Dimension drawing

See manual ET 200SP BaseUnits (http://support.automation.siemens.com/WW/view/en/59753521)

Parameter data record

A

A.1 Dependencies when configuring with GSD file

When configuring the module with a GSD file, remember that the settings of some parameters are dependent on each other.

Configuring with a PROFINET GSD file

The table lists the properties and their dependencies on the measurement type and measuring range for PROFINET.

Measurement type	Measuring range	Diagnostics					Hardware interrupts
		Underflow	Overflow	Wire break	Short-circuit to ground	Missing supply voltage L+	
Deactivated	*	*	*	*	*	*	*
Voltage	±5 V	x	x	–	x [1]	x	x
	±10 V	x	x	–	x [1]	x	x
	1 V to 5 V	x	x	–	x	x	x
	0 V to 10 V	x	x	–	x [1]	x	x
Current (4-wire transducer)	0 mA to 20 mA	x	x	–	x	x	x
	4 mA to 20 mA	x	x	x	x	x	x
	±20 mA	x	x	-	x	x	x
Current (2-wire transducer)	0 mA to 20 mA	x [1 2]	x	–	x	x	x
	4 mA to 20 mA	x	x	x	x	x	x

x = property is allowed, – = property is **not allowed**, * = property is not relevant

1 only possible as of firmware V2.0

2 The diagnostics Underflow can always be enabled for "Current (2-wire transducer) 0..20 mA", but it is only reported when a complete underflow range is created by the measuring range adjustment.

Configuring with a PROFIBUS GSD file

The table lists the properties and their dependencies on the measurement type and measuring range for PROFIBUS.

Table A- 1 Dependencies of the measurement type and measuring range PB

Measurement type	Measuring range	Diagnostics						Hardware interrupts
		Underflow	Overflow	Wire break	Load voltage L+	Short-circuit to ground	Smoothing / interference frequency suppression	
Deactivated	*	*	*	*	*	*	*	*
Voltage	±5 V	x	x	–	x	x [1]	x	–
	±10 V	x	x	–	x	x [1]	x	–
	1 V to 5 V	x	x	–	x	x	x	–
	0 V to 10 V	x	x	–	x	x [1]	x	–
Current (4-wire transducer)	0 mA to 20 mA	x	x	–	x	x	x	–
	4 mA to 20 mA	x	x	x	x	x	x	–
	±20 mA	x	x	-	x	x	x	–
Current (2-wire transducer)	0 mA to 20 mA	–	x	–	x	x	x	–
	4 mA to 20 mA	x	x	x	x	x	x	–

x = property is allowed, – = property is **not allowed**, * = property is not relevant

[1] only possible as of firmware V2.0

A.2 Parameter assignment and structure of parameter data record

The data records of the module have an identical structure, regardless of whether you configure the module with PROFIBUS DP or PROFINET IO.

Parameter assignment in the user program

You can reassign the module parameters in RUN. For example, the measuring range of selected channels can be changed in RUN without having an effect on the other channels.

Changing parameters in RUN

The "WRREC" instruction is used to transfer the parameters to the module using data record 128. The parameters set in STEP 7 are not changed in the CPU, which means that the parameters set in STEP 7 will be valid again after a restart.

Note

Changing parameters in RUN

A parameter data record that has content different from the startup parameter assignment results in a brief exit from clocked measuring mode and renewed synchronization with the fieldbus cycle. The slowest channel provides the "internal" measuring cycle.

Note

Changing parameter settings in runtime can cause the process values to freeze for the duration of the parameter assignment for the module.

Output parameter STATUS

If errors occur when transferring parameters with the "WRREC" instruction, the module continues operation with the previous parameter assignment. However, the STATUS output parameter contains a corresponding error code.

You will find a description of the "WRREC" instruction and the error codes in the STEP 7 online help.

Structure of data record 128

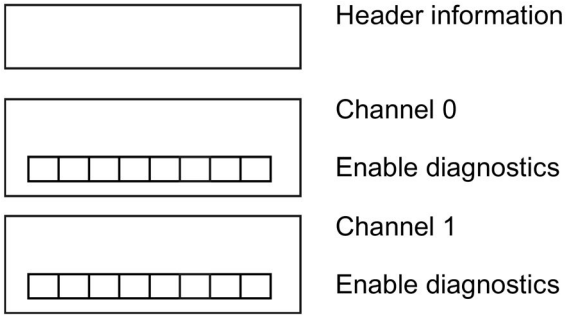

Image A-1 Structure of data record 128

Header information (V1.0)

The figure below shows the structure of the header information (V1.0).

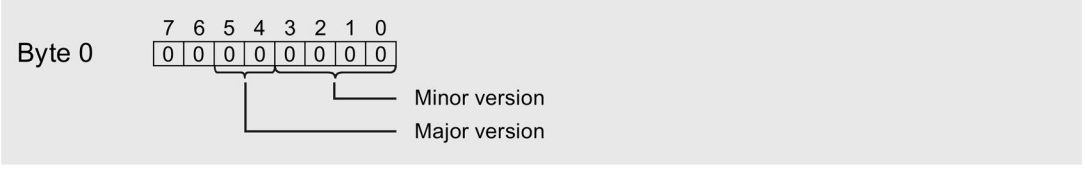

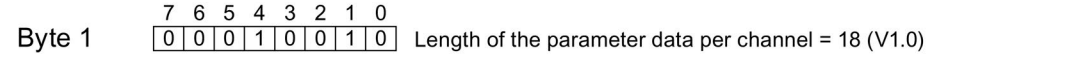

Image A-2 Header information (V1.0)

Header information (V2.0)

The figure below shows the structure of the header information (V2.0).

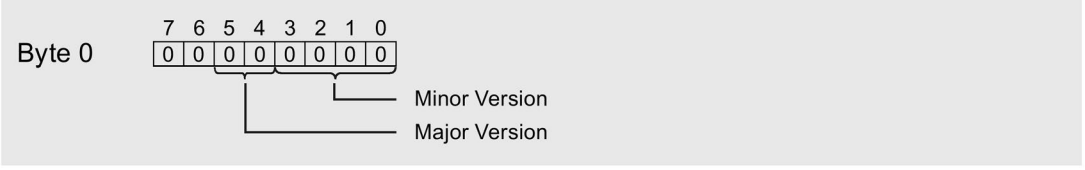

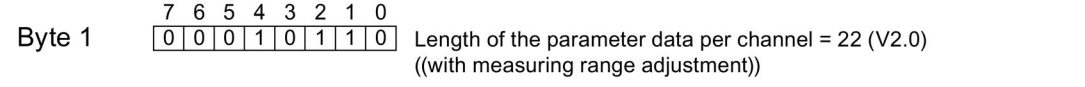

Image A-3 Header information (V2.0)

Header information (V2.0 SCALE)

The figure below shows the structure of the header information.

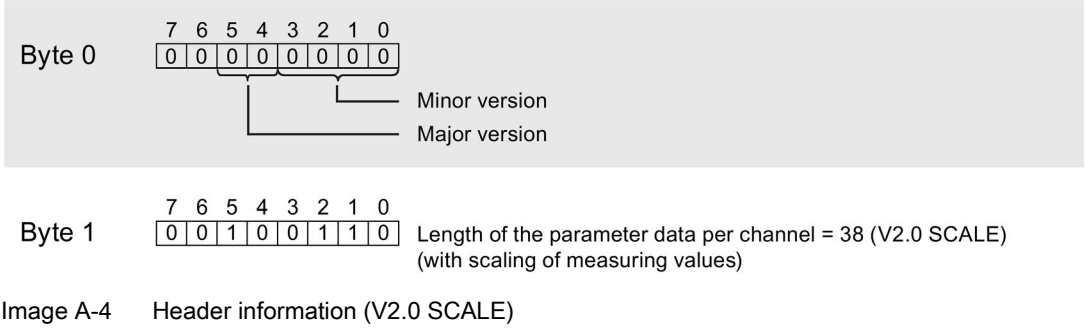

Image A-4 Header information (V2.0 SCALE)

Parameter (V1.0)

The following figure shows the structure of the parameters for channels 0 and 1.

You enable a parameter by setting the corresponding bit to "1".

* x = 2 + (channel number x 18); channel number is 0 or 1

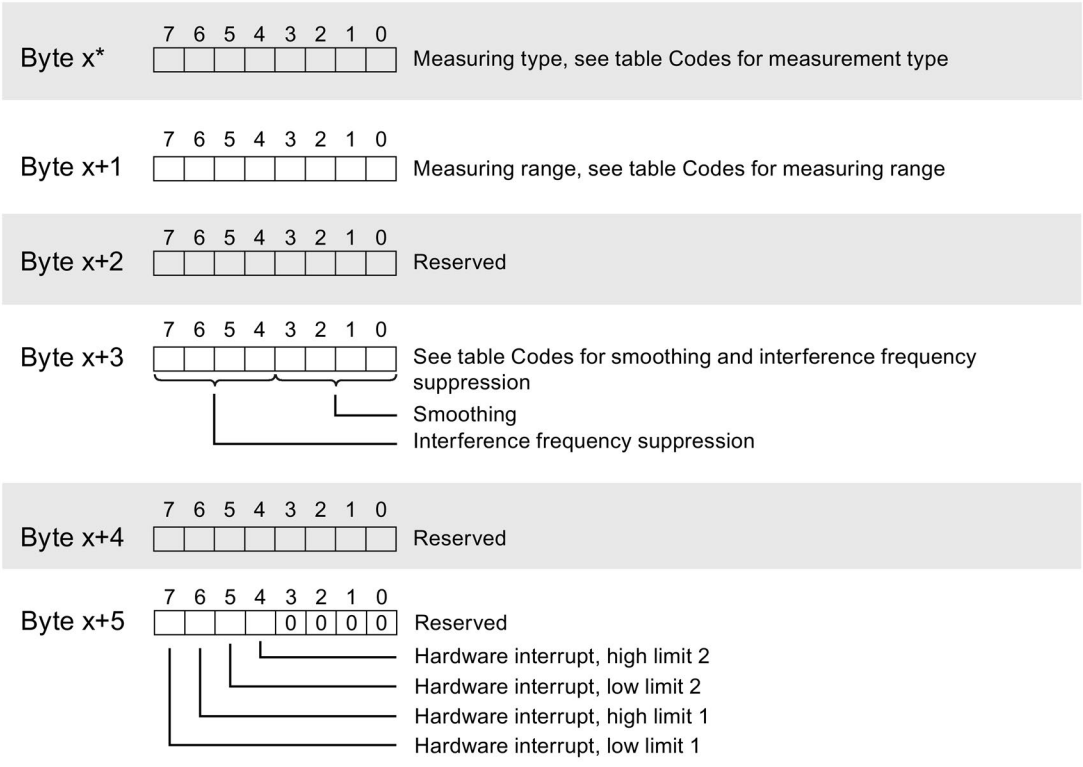

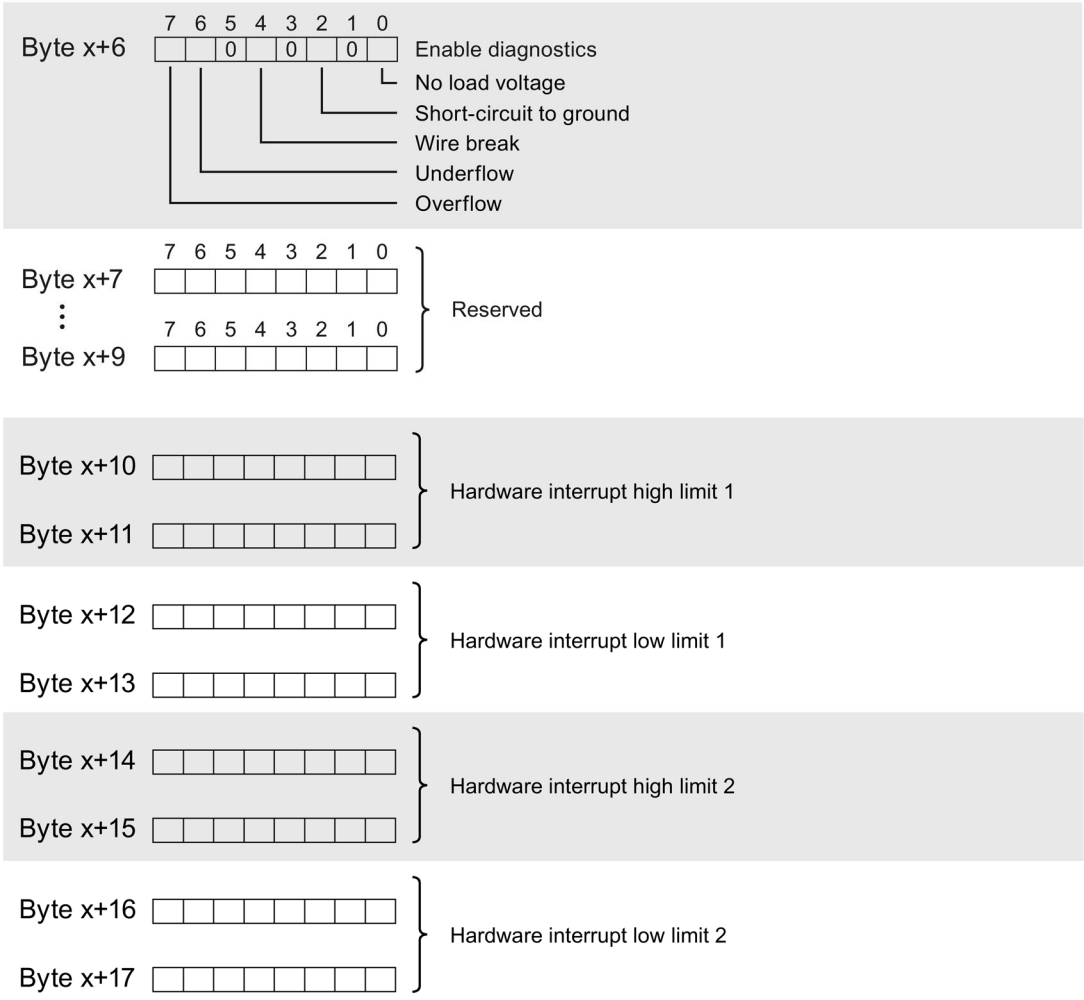

Image A-5 Structure of byte x to x+17 for channel 0 and 1

Parameter (V2.0)

The following figure shows the structure of the parameters for channels 0 and 1.

You enable a parameter by setting the corresponding bit to "1".

* x = 2 + (channel number x 22); channel number is 0 or 1

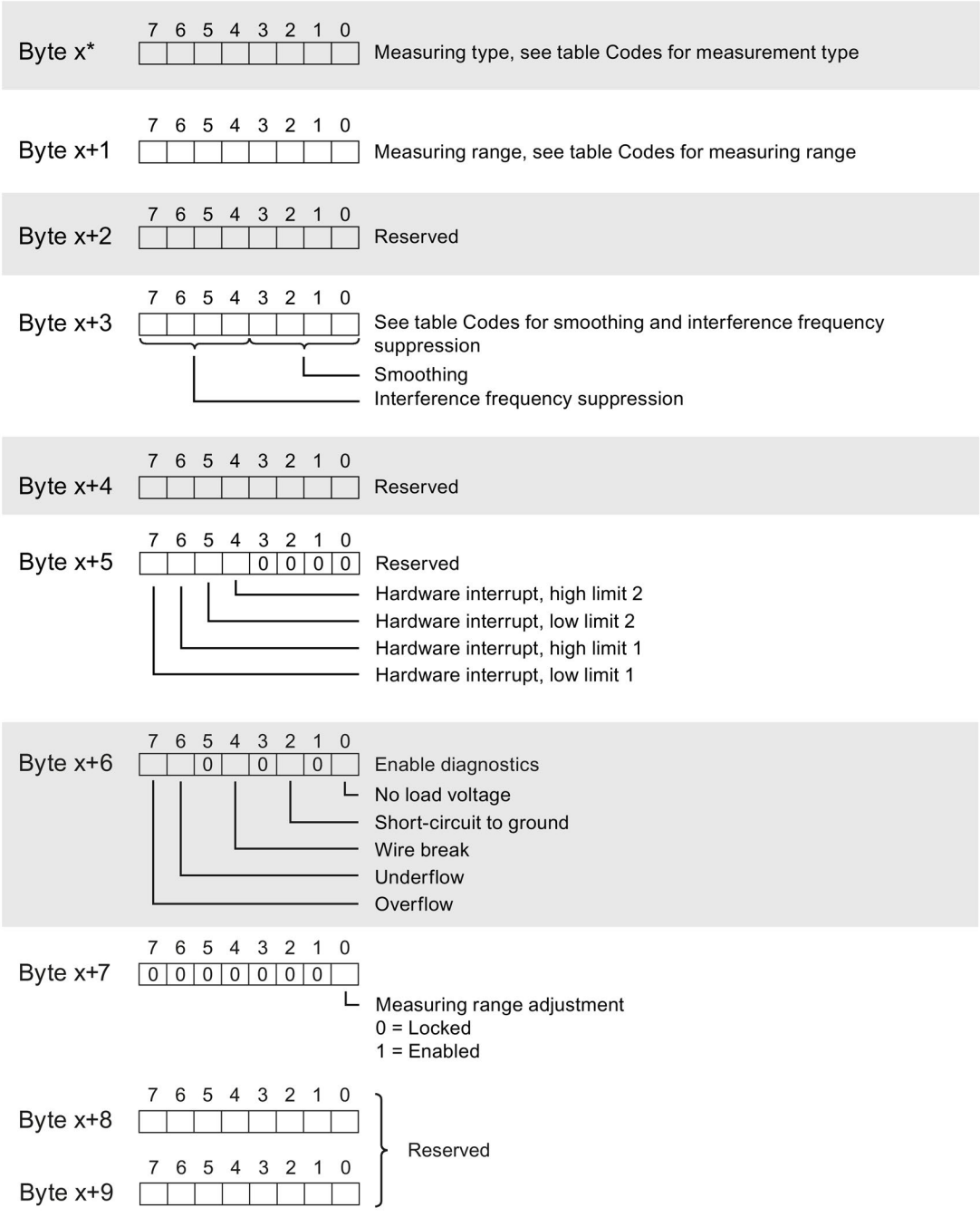

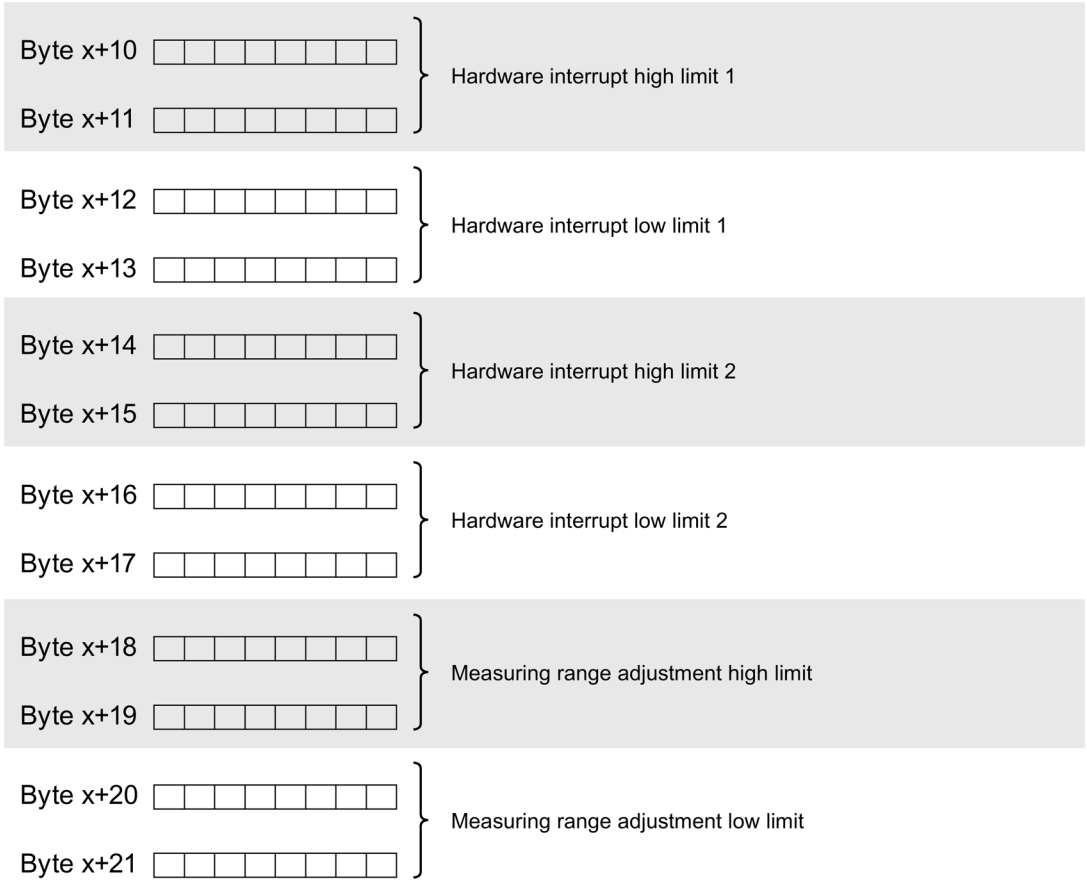

Image A-6 Structure of bytes x to x+21 for channels 0 and 1

Parameter (V2.0 SCALE)

The following figure shows the structure of the parameters for channels 0 and 1.

You enable a parameter by setting the corresponding bit to "1".

* x = 2 + (channel number x 38); channel number is 0 or 1

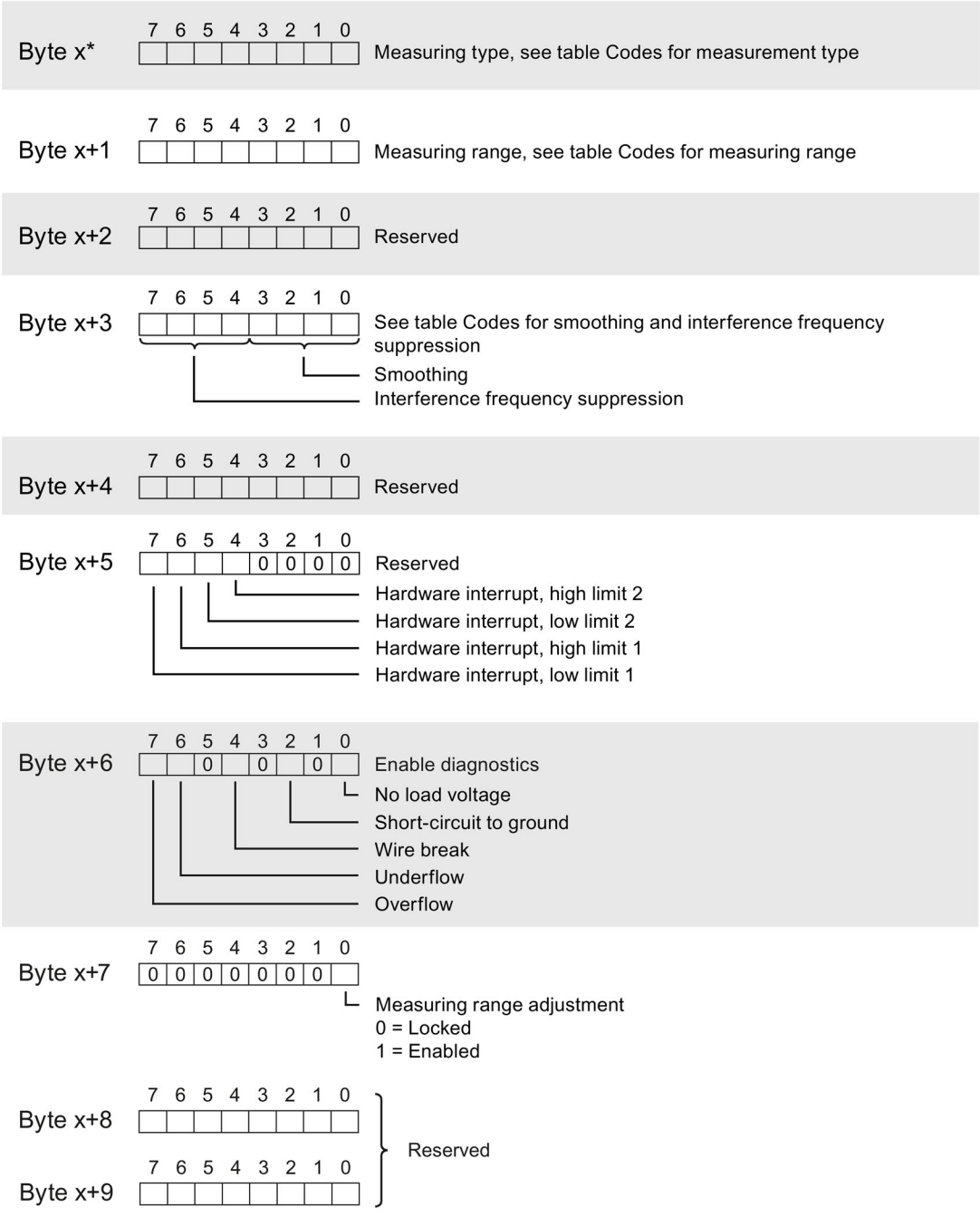

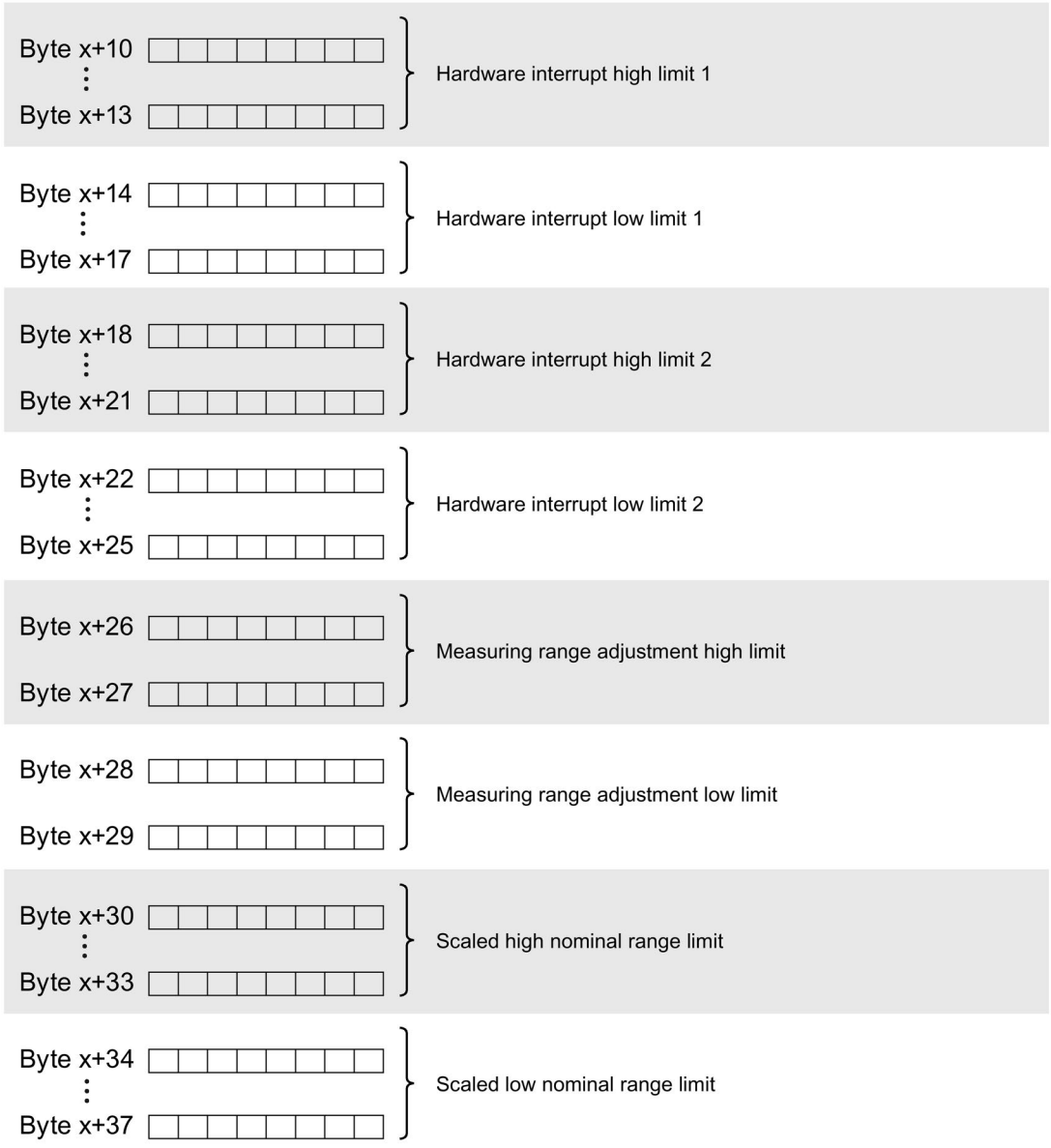

Image A-7 Structure of bytes x to x+37 for channels 0 and 1

Codes for measurement types

The following table contains all the measurement types of the analog input module with its codes. You must enter these codes at byte x (see previous figure).

Table A- 2 Codes for measurement types

Measurement type	Code
Deactivated	0000 0000
Voltage	0000 0001
Current, 4-wire transducer	0000 0010
Current, 2-wire transducer	0000 0011

Codes for measuring ranges

The following table contains all codes for the measuring ranges of the analog input module. You must enter these codes at byte x+1 (see previous figure).

Table A- 3 Codes for measuring ranges

Measuring range	Code
Voltage	
±5 V	0000 1000
±10 V	0000 1001
1 to 5 V	0000 1010
0 to 10 V	0000 1011
Current	
0 mA to 20 mA	0000 0010
4 mA to 20 mA	0000 0011
±20 mA	0000 0100

Codes for smoothing and interference frequency suppression

The following table contains all coding for smoothing and interference frequency suppression. You must enter these codes at byte x (see previous figure).

Table A- 4 Codes for smoothing

Smoothing	Code
None	0000
2 times	0100
4 times	0001
8 times	0101
16 times	0010
32 times	0011

Table A- 5 Codes for interference frequency suppression

Interference frequency suppression	Code
16.6 Hz (67.5 ms)	0100
50 Hz (22.5 ms)	0010
60 Hz (18.75 ms)	0001
300 Hz (10 ms)	0101
600 Hz (5 ms)	0110
1.2 kHz (2.5 ms)	0111
2.4 kHz (1.25 ms)	1000
4.8 kHz (0.625 ms)	1001

Error transmitting the data record

The module always checks all values of the transmitted data record. The module applies the values from the data record only when all values have been transmitted without errors.

The WRREC instruction for writing data records returns the appropriate error codes if there are errors in the STATUS parameter.

The following table shows the module-specific error codes and their meaning for parameter data record 128.

Error code in the STATUS parameter (hexadecimal)				Meaning	Solution
Byte 0	Byte 1	Byte 2	Byte 3		
DF	80	B0	xx	Number of the data record unknown	Enter valid number for data record.
DF	80	B1	xx	Length of the data record incorrect	Enter valid value for data record length.
DF	80	B2	xx	Slot invalid or unavailable	• Check the station to determine if the module is plugged in or pulled. • Check assigned values for the parameters of the WREC instruction.
DF	80	I0	xx	Incorrect version or error in the header information	Correct the version, length and number of parameter blocks.
DF	80	I1	xx	Parameter error	Check the parameters of the module.

Representation of analog values

B

This section shows the analog values for all measuring ranges supported by the analog input module AI 2xU/I 2-/4wire HF.

Measured value resolution

The digitized analog value is the same for input and output values at the same nominal range. The analog values are represented as a fixed point number in the two's complement.

The resolutions 15 and 16 bits including sign are displayed. Each analog value is entered in the ACCU left-justified. The bits marked with "x" are set to "0".

Table B- 1 Resolution of the analog values

Resolution in bits	Values		Analog value	
	Decimal	Hexadecimal	High byte	Low byte
15	2	2_H	Sign 0 0 0 0 0 0 0	0 0 0 0 0 0 1 x
16	1	1_H	Sign 0 0 0 0 0 0 0	0 0 0 0 0 0 0 1

B.1 Representation of input ranges

The tables below set out the digitized representation of the input ranges by bipolar and unipolar input ranges. The resolution is 16 bits.

Table B- 2 Bipolar input ranges

Dec. value	Measured value in %	Data word																Range
		2^{15}	2^{14}	2^{13}	2^{12}	2^{11}	2^{10}	2^9	2^8	2^7	2^6	2^5	2^4	2^3	2^2	2^1	2^0	
32767	> 117.589	0	1	1	1	1	1	1	1	1	1	1	1	1	1	1	1	Overflow
32511	117.589	0	1	1	1	1	1	1	0	1	1	1	1	1	1	1	1	Overrange
27649	100.004	0	1	1	0	1	1	0	0	0	0	0	0	0	0	0	1	
27648	100.000	0	1	1	0	1	1	0	0	0	0	0	0	0	0	0	0	Nominal range
1	0.003617	0	0	0	0	0	0	0	0	0	0	0	0	0	0	0	1	
0	0.000	0	0	0	0	0	0	0	0	0	0	0	0	0	0	0	0	
-1	-0.003617	1	1	1	1	1	1	1	1	1	1	1	1	1	1	1	1	
-27648	-100.000	1	0	0	1	0	1	0	0	0	0	0	0	0	0	0	0	
-27649	-100.004	1	0	0	1	0	0	1	1	1	1	1	1	1	1	1	1	Underrange
-32512	-117.593	1	0	0	0	0	0	0	1	0	0	0	0	0	0	0	0	
-32768	< -117.593	1	0	0	0	0	0	0	0	0	0	0	0	0	0	0	0	Underflow

Table B- 3 Unipolar input ranges

Dec. value	Measured value in %	Data word																Range
		2^{15}	2^{14}	2^{13}	2^{12}	2^{11}	2^{10}	2^{9}	2^{8}	2^{7}	2^{6}	2^{5}	2^{4}	2^{3}	2^{2}	2^{1}	2^{0}	
32767	> 117.589	0	1	1	1	1	1	1	1	1	1	1	1	1	1	1	1	Overflow
32511	117.589	0	1	1	1	1	1	1	0	1	1	1	1	1	1	1	1	Overrange
27649	100.004	0	1	1	0	1	1	0	0	0	0	0	0	0	0	0	1	
27648	100.000	0	1	1	0	1	1	0	0	0	0	0	0	0	0	0	0	Nominal range
1	0.003617	0	0	0	0	0	0	0	0	0	0	0	0	0	0	0	1	
0	0.000	0	0	0	0	0	0	0	0	0	0	0	0	0	0	0	0	
-1	-0.003617	1	1	1	1	1	1	1	1	1	1	1	1	1	1	1	1	Underrange
-4864	-17.593	1	1	1	0	1	1	0	1	0	0	0	0	0	0	0	0	
-32768	< -17.593	1	0	0	0	0	0	0	0	0	0	0	0	0	0	0	0	Underflow

B.2 Representation of analog values in voltage measuring ranges

The following tables list the decimal and hexadecimal values (codes) of the possible voltage measuring ranges.

Table B- 4 Voltage measuring range ±10 V and ±5 V

Values		Voltage measuring range		Range
Dec.	Hex.	±10 V	±5 V	
32767	7FFF	> 11.759 V	> 5.879 V	Overflow
32511	7EFF	11.759 V	5.879 V	Overrange
27649	6C01			
27648	6C00	10 V	5 V	Nominal range
20736	5100	7.5 V	3.75 V	
1	1	361.7 µV	180.8 µV	
0	0	0 V	0 V	
-1	FFFF			
-20736	AF00	-7.5 V	-3.75 V	
-27648	9400	-10 V	-5 V	
-27649	93FF			Underrange
-32512	8100	-11.759 V	-5.879 V	
-32768	8000	< -11.759 V	< -5.879 V	Underflow

Table B- 5 Voltage measuring range 1 V to 5 V and 0 V to 10 V

Values		Voltage measuring range		Range
Dec.	Hex.	1 to 5 V	0 to 10 V	
32767	7FFF	> 5.704 V	> 11.759 V	Overflow
32511	7EFF	5.704 V	11.759 V	Overrange
27649	6C01			
27648	6C00	5 V	10 V	Nominal range
20736	5100	4 V	7.5 V	
1	1	1 V + 144.7 µV	361.7 µV	
0	0	1 V	0 V	
-1	FFFF			Underrange
-4864	ED00	0.296 V	-1.759 V	
-32768	8000	< 0.296 V	< -1.759 V	Underflow

B.3 Representation of analog values in the current measuring ranges

The following tables list the decimal and hexadecimal values (codes) of the possible current measuring ranges.

Table B- 6 Current measuring range ±20 mA

Values		Current measuring range	Range
Dec.	Hex.	±20 mA	
32767	7FFF	> 23.52 mA	Overflow
32511	7EFF	23.52 mA	Overrange
27649	6C01		
27648	6C00	20 mA	Nominal range
20736	5100	15 mA	
1	1	723.4 nA	
0	0	0 mA	
-1	FFFF		
-20736	AF00	-15 mA	
-27648	9400	-20 mA	
-27649	93FF		Underrange
-32512	8100	-23.52 mA	
-32768	8000	< -23.52 mA	Underflow

Table B- 7 Current measuring ranges 0 to 20 mA and 4 to 20 mA

Values		Current measuring range		Range
Dec.	Hex.	0 to 20 mA*	4 to 20 mA	
32767	7FFF	> 23.52 mA	> 22.81 mA	Overflow
32511	7EFF	23.52 mA	22.81 mA	Overrange
27649	6C01			
27648	6C00	20 mA	20 mA	Nominal range
20736	5100	15 mA	16 mA	
1	1	723.4 nA	4 mA + 578.7 nA	
0	0	0 mA	4 mA	
-1	FFFF			Underrange
-4864	ED00	-3.52 mA	1.185 mA	
-32768	8000	< -3.52 mA	< 1.185 mA	Underflow

* For measurement type "2-wire transducer", negative values are not possible for the range "0 to 20 mA". Therefore, no underrange or underflow exists here.

SIEMENS

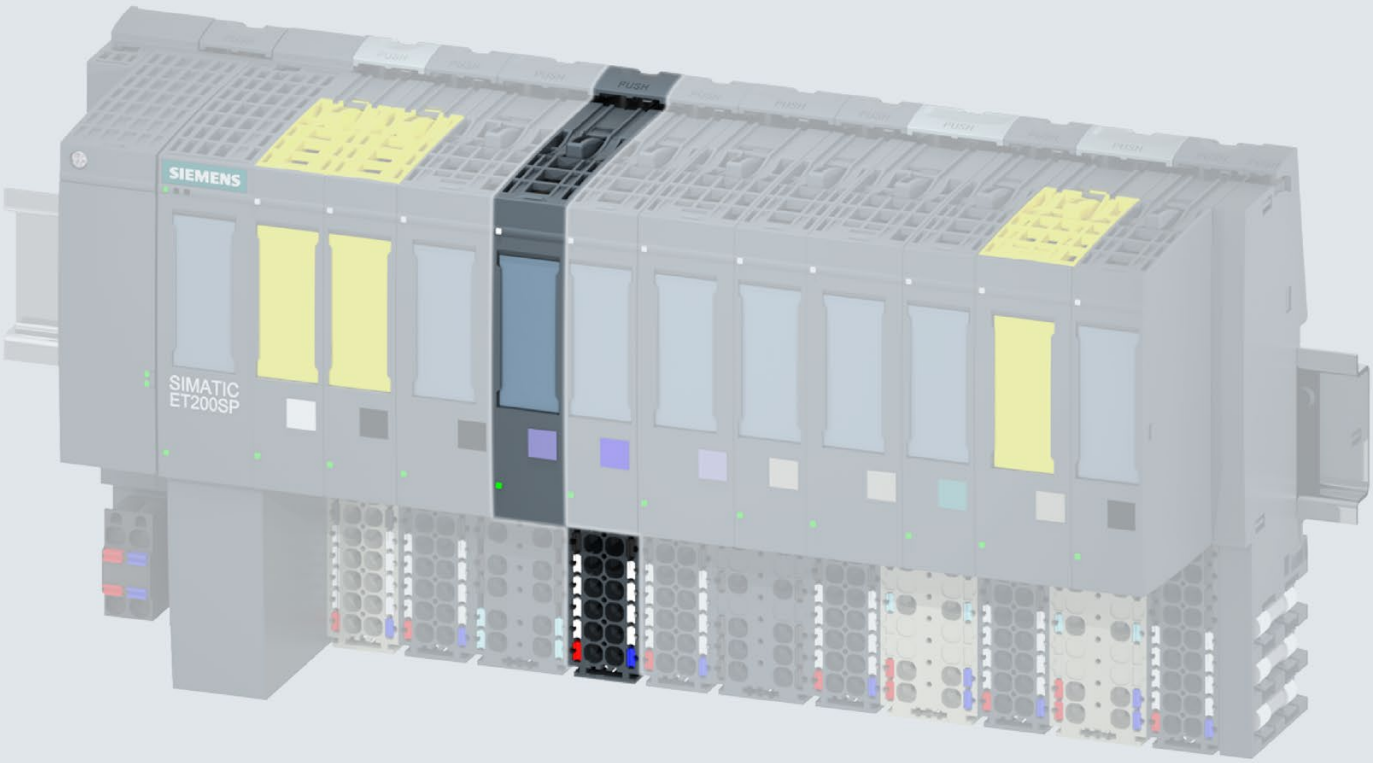

Manual

SIMATIC

ET 200SP

Analog input module
AI 4xI 2-/4-wire ST (6ES7134-6GD01-0BA1)

Edition 09/2018

support.industry.siemens.com

SIEMENS

SIMATIC

ET 200SP
Analog Input Module
AI 4xI 2-/4-wire ST
(6ES7134-6GD01-0BA1)

Manual

Preface

Documentation guide 1

Product overview 2

Wiring up 3

Parameters/address space 4

Interrupts/diagnostics alarms 5

Technical specifications 6

Parameter data record A

Representation of analog values B

09/2018

A5E03551866-AE

Legal information

Warning notice system

This manual contains notices you have to observe in order to ensure your personal safety, as well as to prevent damage to property. The notices referring to your personal safety are highlighted in the manual by a safety alert symbol, notices referring only to property damage have no safety alert symbol. These notices shown below are graded according to the degree of danger.

⚠ DANGER

indicates that death or severe personal injury **will** result if proper precautions are not taken.

⚠ WARNING

indicates that death or severe personal injury **may** result if proper precautions are not taken.

⚠ CAUTION

indicates that minor personal injury can result if proper precautions are not taken.

NOTICE

indicates that property damage can result if proper precautions are not taken.

If more than one degree of danger is present, the warning notice representing the highest degree of danger will be used. A notice warning of injury to persons with a safety alert symbol may also include a warning relating to property damage.

Qualified Personnel

The product/system described in this documentation may be operated only by **personnel qualified** for the specific task in accordance with the relevant documentation, in particular its warning notices and safety instructions. Qualified personnel are those who, based on their training and experience, are capable of identifying risks and avoiding potential hazards when working with these products/systems.

Proper use of Siemens products

Note the following:

⚠ WARNING

Siemens products may only be used for the applications described in the catalog and in the relevant technical documentation. If products and components from other manufacturers are used, these must be recommended or approved by Siemens. Proper transport, storage, installation, assembly, commissioning, operation and maintenance are required to ensure that the products operate safely and without any problems. The permissible ambient conditions must be complied with. The information in the relevant documentation must be observed.

Trademarks

All names identified by ® are registered trademarks of Siemens AG. The remaining trademarks in this publication may be trademarks whose use by third parties for their own purposes could violate the rights of the owner.

Disclaimer of Liability

We have reviewed the contents of this publication to ensure consistency with the hardware and software described. Since variance cannot be precluded entirely, we cannot guarantee full consistency. However, the information in this publication is reviewed regularly and any necessary corrections are included in subsequent editions.

Siemens AG
Division Digital Factory
Postfach 48 48
90026 NÜRNBERG
GERMANY

A5E03551866-AE
℗ 09/2018 Subject to change

Copyright © Siemens AG 2012 - 2018.
All rights reserved

Preface

Purpose of the documentation

This manual supplements the system manual ET 200SP distributed I/O system (http://support.automation.siemens.com/WW/view/en/58649293).

Functions that generally relate to the system are described in this manual.

The information provided in this manual and in the system/function manuals supports you in commissioning the system.

Changes compared to previous version

Compared to the previous version, this manual contains the following change:

Wiring and block diagram has been modified.

Conventions

CPU: When the term "CPU" is used in the following, it applies to the CPUs of the S7-1500 automation system as well as to the CPUs/interface modules of the ET 200SP distributed I/O system.

STEP 7: In this documentation, "STEP 7" is used as a synonym for all versions of the configuration and programming software "STEP 7 (TIA Portal)".

Please also observe notes marked as follows:

Note

A note contains important information on the product described in the documentation, on the handling of the product or on the section of the documentation to which particular attention should be paid.

Security information

Siemens provides products and solutions with industrial security functions that support the secure operation of plants, systems, machines and networks.

In order to protect plants, systems, machines and networks against cyber threats, it is necessary to implement – and continuously maintain – a holistic, state-of-the-art industrial security concept. Siemens' products and solutions constitute one element of such a concept.

Customers are responsible for preventing unauthorized access to their plants, systems, machines and networks. Such systems, machines and components should only be connected to an enterprise network or the internet if and to the extent such a connection is necessary and only when appropriate security measures (e.g. firewalls and/or network segmentation) are in place.

For additional information on industrial security measures that may be implemented, please visit (https://www.siemens.com/industrialsecurity).

Siemens' products and solutions undergo continuous development to make them more secure. Siemens strongly recommends that product updates are applied as soon as they are available and that the latest product versions are used. Use of product versions that are no longer supported, and failure to apply the latest updates may increase customers' exposure to cyber threats.

To stay informed about product updates, subscribe to the Siemens Industrial Security RSS Feed under (https://www.siemens.com/industrialsecurity).

Table of contents

Preface 3

1 Documentation guide 6

2 Product overview 11

2.1 Properties 11

3 Wiring up 13

3.1 Wiring and block diagram 13

4 Parameters/address space 15

4.1 Measuring types and ranges 15

4.2 Parameters 15

4.3 Explanation of the parameters 18

4.4 Address space 20

5 Interrupts/diagnostics alarms 21

5.1 Status and error display 21

5.2 Interrupts 22

5.3 Diagnostics alarms 23

6 Technical specifications 24

6.1 Technical specifications 24

A Parameter data record 29

A.1 Dependencies when configuring with GSD file 29

A.2 Parameter assignment and structure of the parameter data record 30

A.3 Error in transferring the data record analog input 34

B Representation of analog values 35

B.1 Representation of input ranges 36

B.2 Representation of analog values in the current measuring ranges 37

Documentation guide

1

The documentation for the SIMATIC ET 200SP distributed I/O system is arranged into three areas.
This arrangement enables you to access the specific content you require.

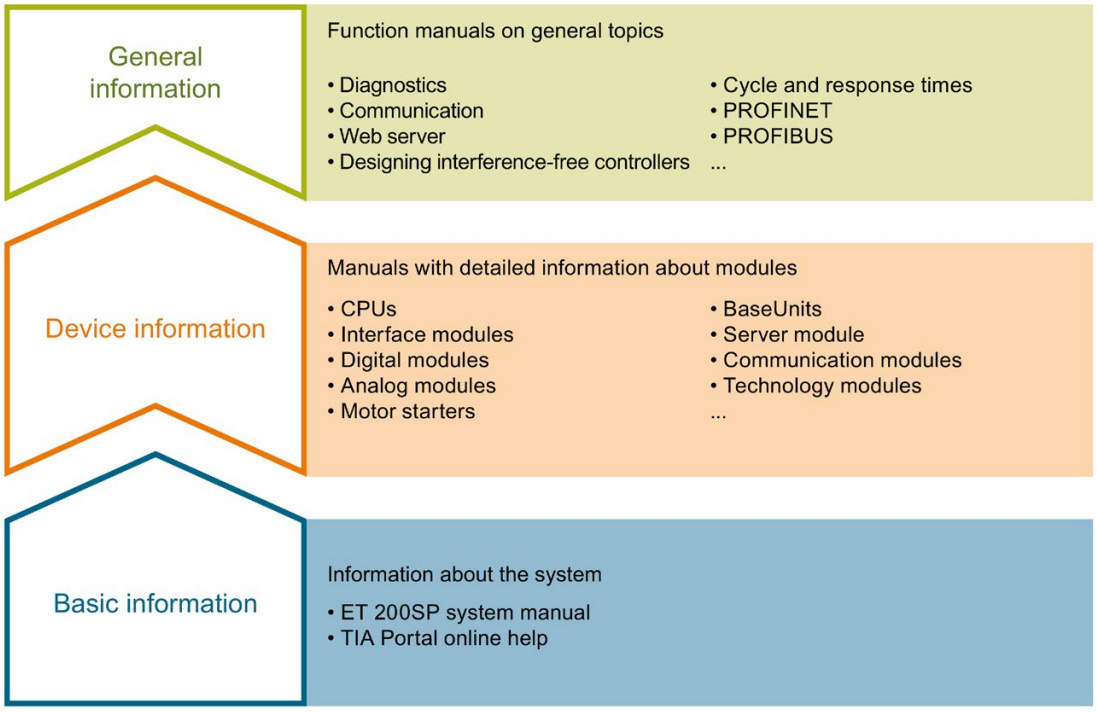

Basic information

The system manual describes in detail the configuration, installation, wiring and commissioning of the SIMATIC ET 200SP. distributed I/O system. The STEP 7 online help supports you in the configuration and programming.

Device information

Product manuals contain a compact description of the module-specific information, such as properties, wiring diagrams, characteristics and technical specifications.

General information

The function manuals contain detailed descriptions on general topics regarding the SIMATIC ET 200SP distributed I/O system, e.g. diagnostics, communication, Web server, motion control and OPC UA.

You can download the documentation free of charge from the Internet (http://w3.siemens.com/mcms/industrial-automation-systems-simatic/en/manual-overview/tech-doc-et200/Pages/Default.aspx).

Changes and supplements to the manuals are documented in a Product Information.

You can download the product information free of charge from the Internet (https://support.industry.siemens.com/cs/us/en/view/73021864).

Manual Collection ET 200SP

The Manual Collection contains the complete documentation on the SIMATIC ET 200SP distributed I/O system gathered together in one file.

You can find the Manual Collection on the Internet (http://support.automation.siemens.com/WW/view/en/84133942).

"mySupport"

With "mySupport", your personal workspace, you make the most of your Industry Online Support.

In "mySupport" you can store filters, favorites and tags, request CAx data and put together your personal library in the Documentation area. Furthermore, your data is automatically filled into support requests and you always have an overview of your current requests.

You need to register once to use the full functionality of "mySupport".

You can find "mySupport" in the Internet (https://support.industry.siemens.com/My/ww/en).

"mySupport" - Documentation

In the Documentation area of "mySupport", you have the possibility to combine complete manuals or parts of them to make your own manual.
You can export the manual in PDF format or in an editable format.

You can find "mySupport" - Documentation in the Internet (http://support.industry.siemens.com/My/ww/en/documentation).

"mySupport" - CAx Data

In the CAx Data area of "mySupport", you can have access the latest product data for your CAx or CAe system.

You configure your own download package with a few clicks.

In doing so you can select:

- Product images, 2D dimension drawings, 3D models, internal circuit diagrams, EPLAN macro files
- Manuals, characteristics, operating manuals, certificates
- Product master data

You can find "mySupport" - CAx Data in the Internet (http://support.industry.siemens.com/my/ww/en/CAxOnline).

Application examples

The application examples support you with various tools and examples for solving your automation tasks. Solutions are shown in interplay with multiple components in the system - separated from the focus in individual products.

You can find the application examples on the Internet (https://support.industry.siemens.com/sc/ww/en/sc/2054).

TIA Selection Tool

With the TIA Selection Tool, you can select, configure and order devices for Totally Integrated Automation (TIA).
This tool is the successor of the SIMATIC Selection Tool and combines the known configurators for automation technology into one tool.
With the TIA Selection Tool, you can generate a complete order list from your product selection or product configuration.

You can find the TIA Selection Tool on the Internet (http://w3.siemens.com/mcms/topics/en/simatic/tia-selection-tool).

SIMATIC Automation Tool

You can use the SIMATIC Automation Tool to run commissioning and maintenance activities simultaneously on various SIMATIC S7 stations as a bulk operation independently of the TIA Portal.

The SIMATIC Automation Tool provides a multitude of functions:

- Scanning of a PROFINET/Ethernet network and identification of all connected CPUs
- Address assignment (IP, subnet, gateway) and station name (PROFINET device) to a CPU
- Transfer of the data and the programming device/PC time converted to UTC time to the module
- Program download to CPU
- Operating mode switchover RUN/STOP
- Localization of the CPU by means of LED flashing
- Reading out CPU error information
- Reading the CPU diagnostic buffer
- Reset to factory settings
- Updating the firmware of the CPU and connected modules

You can find the SIMATIC Automation Tool on the Internet (https://support.industry.siemens.com/cs/ww/en/view/98161300).

PRONETA

With SIEMENS PRONETA (PROFINET network analysis), you analyze the plant network during commissioning. PRONETA features two core functions:

- The topology overview independently scans PROFINET and all connected components.
- The IO check is a fast test of the wiring and the module configuration of a system.

You can find SIEMENS PRONETA on the Internet (https://support.industry.siemens.com/cs/ww/en/view/67460624).

SINETPLAN

SINETPLAN, the Siemens Network Planner, supports you in planning automation systems and networks based on PROFINET. The tool facilitates professional and predictive dimensioning of your PROFINET installation as early as in the planning stage. In addition, SINETPLAN supports you during network optimization and helps you to exploit network resources optimally and to plan reserves. This helps to prevent problems in commissioning or failures during productive operation even in advance of a planned operation. This increases the availability of the production plant and helps improve operational safety.

The advantages at a glance

- Network optimization thanks to port-specific calculation of the network load
- Increased production availability thanks to online scan and verification of existing systems
- Transparency before commissioning through importing and simulation of existing STEP 7 projects
- Efficiency through securing existing investments in the long term and optimal exploitation of resources

You can find SINETPLAN on the Internet (https://www.siemens.com/sinetplan).

Product overview

2

2.1 Properties

Article number

6ES7134-6GD01-0BA1 (number in pack: 1 unit)

6ES7134-6GD01-2BA1 (number in pack: 10 units)

View of the module

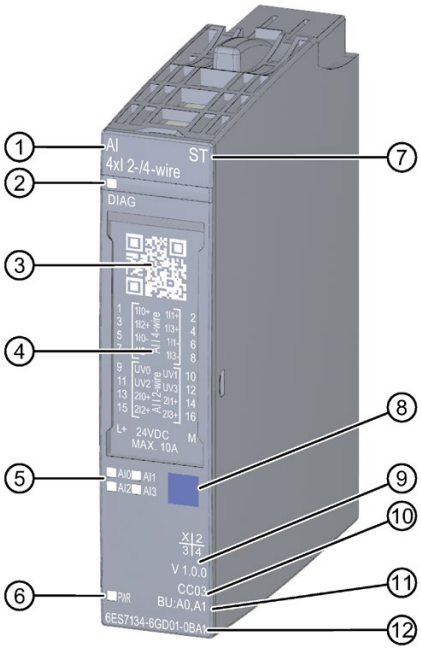

① Module type and name
② LED for diagnostics
③ 2D matrix code
④ Wiring diagram
⑤ LEDs for channel status
⑥ LED for supply voltage
⑦ Function class
⑧ Color coding module type
⑨ Function and firmware version
⑩ Color code for selecting the color identification labels
⑪ BU type
⑫ Article number

Figure 2-1 View of the module AI 4×I 2-/4-wire ST

Properties

The module has the following technical properties:

- Analog input module with 4 inputs
- Current measuring type for 2- and 4-wire transducers adjustable per channel
- Input ranges
  - 4 to 20 mA, resolution 15 bits
  - 0 to 20 mA, resolution 15 bits
  - ±20 mA, resolution 16 bits including sign
- Electrically isolated from the supply voltage L+ (only for input type 4-wire transducer)
- Permitted common mode voltage: 10 V_{SS}
- Configurable diagnostics per module

The module supports the following functions:

Table 2- 1 Version dependencies of the functions

Function	HW version	FW version	STEP 7		GSD file	
			TIA Portal	V5.x	PROFINET IO	PROFIBUS DP
Firmware update	FS01	V2.0.0	V14 or higher with HSP 0239	V5.5 SP3 or higher with HSP 0227 V7.0 or higher	X	X
Identification data I&M0 to I&M3	FS01	V2.0.0	V14 or higher with HSP 0239	V5.5 SP3 or higher with HSP 0227 V7.0 or higher	X	X
Reconfiguration in RUN	FS01	V2.0.0	V14 or higher with HSP 0239	V5.5 SP3 or higher with HSP 0227 V7.0 or higher	X	X
PROFIenergy	FS01	V2.0.0	V14 or higher with HSP 0239	V5.5 SP3 or higher with HSP 0227 V7.0 or higher	X	X
Value status	FS01	V2.0.0	V14 or higher with HSP 0239	V5.5 SP3 or higher with HSP 0227 V7.0 or higher	X	X

Accessories

The following accessories must be ordered separately:

- Labeling strips
- Color identification labels
- Reference identification label
- Shield connector

See also

You will find additional information on the accessories in the ET 200SP distributed I/O system (https://support.industry.siemens.com/cs/ww/en/view/58649293) system manual.

Wiring up

3

3.1 Wiring and block diagram

This section includes the block diagram of the AI 4xI 2-/4-wire ST module with the various terminal assignments for a 2-wire and 4-wire connection.

You can find information on wiring the BaseUnit in the ET 200SP distributed I/O system (http://support.automation.siemens.com/WW/view/en/58649293) system manual.

Note

You can use and combine the different wiring options for all channels.

Note

The load group of the module must begin with a light BaseUnit. Keep this in mind also during the configuration.

Wiring: Current measurement 2-wire and 4-wire connection (2-wire and 4-wire transducer)

The following figure shows the block diagram and an example of the terminal assignment of the analog input module AI 4xI 2-/4-wire ST on the BaseUnit BU type A0/A1.

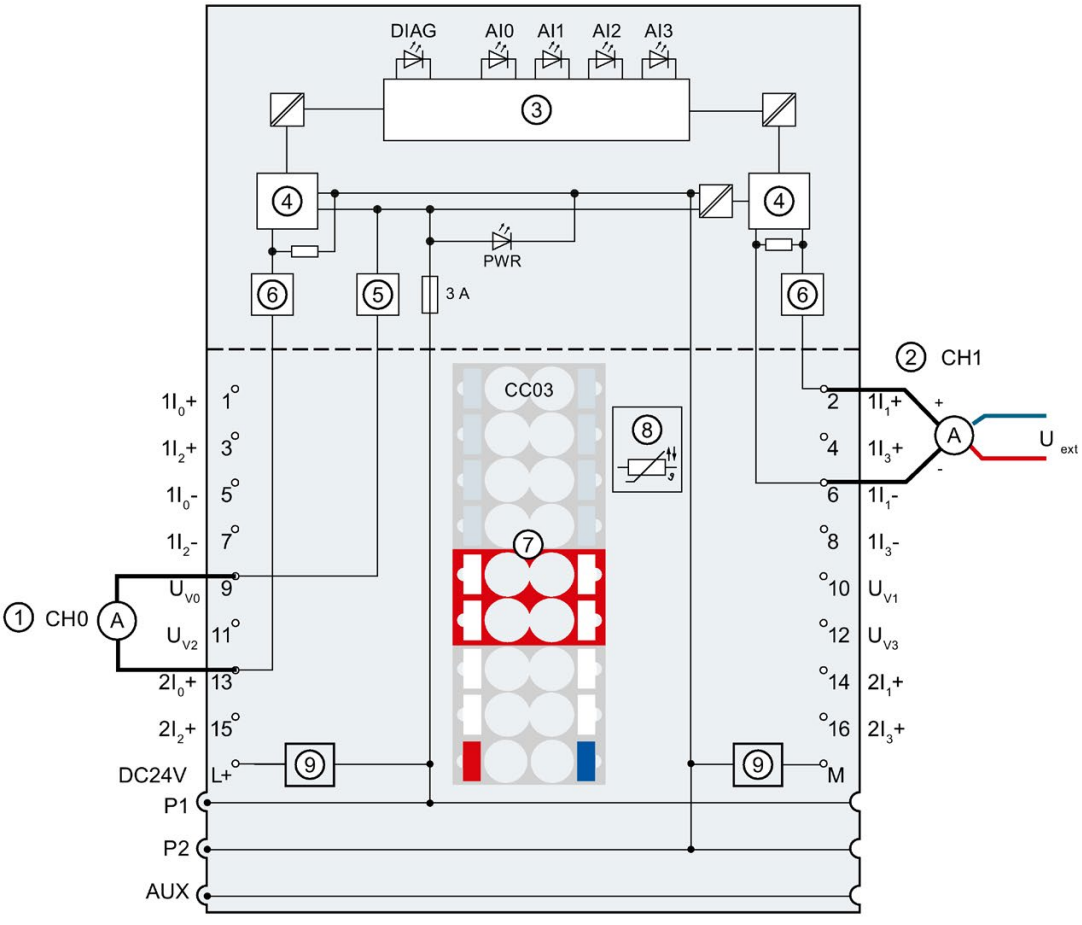

①	2-wire connection for current measurement (2-wire transducer)	$1I_n$+	Current input positive, channel n
②	4-wire connection for current measurement (4-wire transducer)	$1I_n$-	Current input negative, channel n
③	Backplane bus interface	U_{Vn}	Supply voltage, channel n
④	Analog-to-digital converter (ADC)	$2I_n$+	Current input positive, channel n
⑤	Short-circuit protection	L+	24 V DC (infeed only with light BaseUnit)
⑥	Current limitation	M	Ground
⑦	Color-coded label with color code CC03 (optional)	P1, P2, AUX	Internal self-assembling voltage buses Connection to left (dark BaseUnit) Connection to left interrupted (light BaseUnit)
⑧	Temperature recording for BU type A1 only (function cannot be used for this module)	DIAG	Diagnostics LED (green, red)
U_{ext}	Encoder supply external	AI0, AI1, AI2, AI3	Channel status LED (green)
		PWR	Power LED (green)

Figure 3-1 Wiring and block diagram for current measurement 2-wire and 4-wire connection (2- and 4-wire transducer)

Parameters/address space 4

4.1 Measuring types and ranges

The analog input module AI 4xI 2-/4-wire ST has the following measuring ranges:

Table 4- 1 Measuring ranges

Measuring type	Measuring range	Resolution
Current (2-wire transducer)	0 to 20 mA 4 to 20 mA	15 bits 15 bits
Current (4-wire transducer)	0 to 20 mA 4 to 20 mA ± 20 mA	15 bits 15 bits 16 bits including sign

You will find the tables of the measuring ranges as well as overflow, overrange, etc., in the section Representation of analog values (Page 35).

4.2 Parameters

Parameters of the AI 4xI 2-/4-wire ST

Specify the module properties with the various parameters in the course of your STEP 7 configuration. The following table lists the configurable parameters. The effective range of the configurable parameters depends on the type of configuration. The following configurations are possible:

- Central operation with an ET 200SP CPU
- Distributed operation on PROFINET IO in an ET 200SP system
- Distributed operation with PROFIBUS DP in an ET 200SP system

When assigning parameters in the user program, use the "WRREC" instruction to transfer the parameters to the module using the data records; refer to the section Parameter assignment and structure of the parameter data record (Page 30).

The following parameter settings are possible:

Table 4- 2 Configurable parameters and their defaults (GSD file)

Parameter	Value range	Default	Configuration in RUN	Scope with configuration software, e.g. STEP 7 (TIA Portal)	
				GSD file PROFINET IO	GSD file PROFIBUS DP
Diagnostics No supply voltage L+	• Disable • Enable	Disable	Yes	Module	Module
Diagnostics Short-circuit to ground	• Disable • Enable	Disable	Yes	Module	Module
Diagnostics Overflow	• Disable • Enable	Disable	Yes	Module	Module
Diagnostics Underflow	• Disable • Enable	Disable	Yes	Module	Module
Diagnostics Wire break	• Disable • Enable	Disable	Yes	Module	Module
Measuring type/range	• deactivated • Current (4-wire transducer) 0..20 mA • Current (4-wire transducer) 4..20 mA • Current (4-wire transducer) +/-20 mA • Current (2-wire transducer) 0..20 mA • Current (2-wire transducer) 4..20 mA	Current (4-wire transducer) 4..20 mA	Yes	Channel	Channel
Smoothing	• None • weak • medium • strong	None	Yes	Channel	Channel

Parameter	Value range	Default	Configuration in RUN	Scope with configuration software, e.g. STEP 7 (TIA Portal)	
				GSD file PROFINET IO	GSD file PROFIBUS DP
Interference frequency suppression [2]	• 60 Hz • 50 Hz[1] • 16.6 Hz	50 Hz	Yes	Channel	Module [3]
Potential group	• Use potential group of the left module (module plugged into a dark BaseUnit) • Enable new potential group (module plugged into light BaseUnit)	Use potential group of the left module	No	Module	Module

1 Interference frequency suppression: Interfering signals at 400 Hz are automatically included in the filtering at 50 Hz.

2 The settings in the "Interference frequency suppression" parameter have a direct effect on the conversion time of the channel. The analog value is therefore also affected by additionally set filtering via the "Smoothing" parameter.

3 Due to the limited number of parameters of a maximum of 244 bytes per ET 200SP station with a PROFIBUS GSD configuration, the parameter assignment options are restricted. The parameter length of the I/O module is 5 bytes with PROFIBUS GSD configuration. If necessary, you can set this parameter by using the data record 128, see the appendix "Parameter data set".

Note

Unused channels

"Disable" unused channels in the parameter assignment to improve the cycle time of the module.

A disabled channel always returns the value $7FFF_H$.

4.3 Explanation of the parameters

Diagnostics no supply voltage L+

Enabling of the diagnostics for no or insufficient supply voltage L+.

Diagnostics Short-circuit to ground

Enabling of the diagnostics in the event of a short-circuit of the encoder supply to ground or of an input to the encoder supply.

Diagnostics overflow

Enabling of the diagnostics when the measured value exceeds the overrange.

Diagnostics underflow

Enabling of the diagnostics when the measured value falls below the underrange.

Diagnostics Wire break

Enabling of the diagnostics if the module has no current flow or the current is too weak to be measured at the relevant input.

The wire break and underflow diagnostics can be activated simultaneously. If both diagnostics events occur simultaneously, the wire break diagnostics info is output.

Type/range of measurement

See the section Measuring types and measuring ranges (Page 15).

Smoothing

The individual measured values are smoothed by filtering. The smoothing can be set in 4 levels.

Smoothing time = number of module cycles (k) x cycle time of the module.

The following figure shows how many module cycles it takes for the smoothed analog value to approach 100%, depending on the configured smoothing. This applies to every signal change at the analog input.

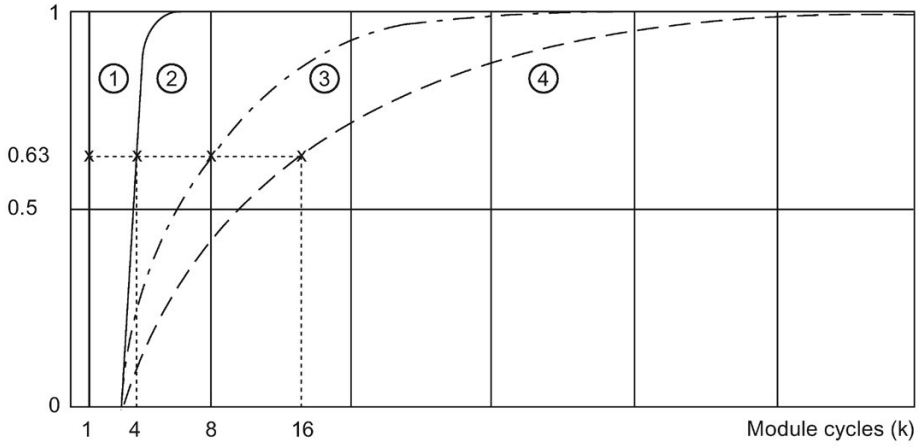

① No smoothing (k = 1)
② Weak (k = 4)
③ Medium (k = 8)
④ Strong (k = 16)

Figure 4-1 Smoothing with AI 4xI 2-/4-wire ST

Interference frequency suppression

Suppresses the interference affecting analog input modules that is caused by the frequency of the AC voltage network used.

The frequency of the AC voltage network can negatively affect the measured value, in particular when measuring in the low voltage range and with thermocouples. With this parameter, the user specifies the supply frequency that is predominant in the plant.

Potential group

A potential group consists of a group of directly adjacent I/O modules within an ET 200SP station, which are supplied via a common supply voltage.

A potential group begins with a light-colored BaseUnit through which the required voltage is supplied for all modules of the potential group. The light-colored BaseUnit interrupts the three self-assembling voltage buses P1, P2 and AUX to the left neighbor.

All additional I/O modules of this potential group are plugged into dark-colored BaseUnits. You take the potential of the self-assembling voltage buses P1, P2 and AUX from the left neighbor.

A potential group ends with the dark-colored BaseUnit, which follows a light-colored BaseUnit or server module in the station configuration.

4.4 Address space

Configuration options

The following configurations are possible:

- Configuration 1: Without value status
- Configuration 2: With value status

Evaluating the value status

If you enable the value status for the analog module, an additional byte is occupied in the input address space. Bits 0 to 3 in this byte are assigned to a channel. They provide information about the validity of the analog value.

Bit = 1: There are no faults/errors on the module.

Bit = 0: Channel is disabled or there is a fault/error on the module.

If a fault/error occurs on a channel with this module, the value status for all channels is 0.

Address space

The following figure shows the assignment of the address space for the AI 4×I 2-/4-wire ST with value status (Quality Information (QI)). The addresses for the value status are only available if the value status is enabled.

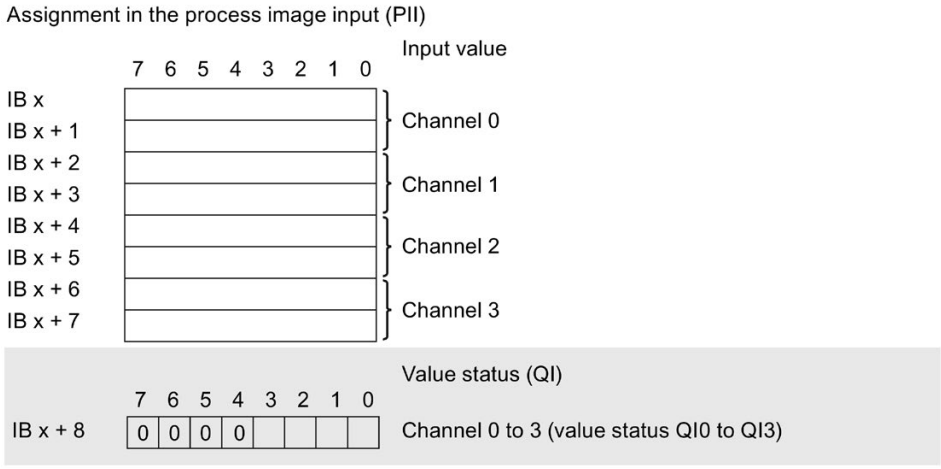

Figure 4-2 Address space of the AI 4×I 2-/4-wire ST with value status

Interrupts/diagnostics alarms

5

5.1 Status and error display

LED display

The figure below shows the LED displays (status and error displays) of the AI 4xI 2-/4-wire ST.

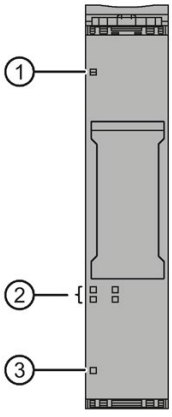

① DIAG (green/red)
② Channel status (green)
③ PWR (green)

Figure 5-1 LED display

Meaning of the LED displays

The following tables show the meaning of the status and error displays. Measures for dealing with diagnostics alarms can be found in the section Diagnostics alarms (Page 23).

DIAG LED

Table 5- 1 DIAG LED fault/error display

DIAG LED	Meaning
Off	Backplane bus supply of the ET 200SP not OK
Flashes	Module parameters not assigned
On	Module parameters assigned and no module diagnostics
Flashes	Module parameters assigned and module diagnostics

Channel status LED

Table 5- 2 Status display of the channel status LED

Channel status LED	Meaning
□ Off	Channel disabled
■ On	Channel activated

PWR LED

Table 5- 3 Status display of the PWR LED

PWR LED	Meaning
□ Off	No supply voltage L+
■ On	Supply voltage L+ present

5.2 Interrupts

The analog input module AI 4xI 2-/4-wire ST supports diagnostics interrupts.

Diagnostics interrupt

The module generates a diagnostics interrupt for the following events:

- Channel temporarily unavailable
- Short-circuit (current, 2-wire transducer)
- Wire break (current 4 to 20 mA)
- Low limit violated
- High limit violated
- Error
- Parameter assignment error
- Supply voltage missing

5.3 Diagnostics alarms

A diagnostics alarm is generated and the DIAG-LED flashes on the module for each diagnostics event. You can read out the diagnostics alarms, for example, in the diagnostics buffer of the CPU. You can evaluate the error codes with the user program.

Table 5- 4 Diagnostics alarms, their meaning and how to deal with them

Diagnostics alarm	Error code	Meaning	Solution
Short-circuit (2-wire transducer, current)*	1_H	Sensor supply to ground	Correct the module/encoder tuning
		Input to sensor supply	
Wire break (current) **	6_H	Impedance of encoder circuit too high.	Use a different encoder type or modify the wiring, for example, using cables with a larger cross-section
		Wire break between the module and sensor	Connect the cable
		Channel not connected (open)	• Disable diagnostics • Connect the sensor contacts
High limit violated	7_H	Value is above the overrange.	Correct the module/encoder tuning
Low limit violated	8_H	Value is below the underrange.	Correct the module/encoder tuning
Error	9_H	Internal module error occurred.	Replace module
Parameter assignment error	10_H	• The module cannot evaluate parameters for the channel. • Incorrect parameter assignment.	Correct the parameter assignment
Supply voltage missing	11_H	No or insufficient supply voltage L+	• Check supply voltage L+ on the BaseUnit • Check BaseUnit type
Channel temporarily unavailable	$1F_H$	Firmware update in progress or update has been canceled. The module does not read any process values in this state.	• Wait for firmware update. • Restart the firmware update.

* Short-circuit of the encoder supply to ground and/or of the input signal to the encoder supply of a channel can have a temporary effect on other channels (duration < 0.5 s). This means the short-circuit diagnostics can also be reported for unaffected channels and/or the measured value can be affected temporarily.

** In case of activated smoothing the module calculates the measured values across several module cycles. The module only generates the wire break diagnosis if the smoothed measured value is stable. After the wire break has been eliminated, the module supplies stable measured values again depending on the set smoothing level.

Technical specifications

6

6.1 Technical specifications

Technical specifications of the AI 4×I 2-/4-wire ST

The following table shows the technical specifications as of 09/2018. You will find a data sheet including daily updated technical specifications on the Internet (https://support.industry.siemens.com/cs/ww/en/pv/6ES7134-6GD01-0BA1/td?dl=en).

Article number	6ES7134-6GD01-0BA1
General information	
Product type designation	ET 200SP, AI 4xI 2-/4-wire ST, PU 1
Firmware version	V2.0
• FW update possible	Yes
usable BaseUnits	BU type A0, A1
Color code for module-specific color identification plate	CC03
Product function	
• I&M data	Yes; I&M0 to I&M3
• Measuring range scalable	No
Engineering with	
• STEP 7 TIA Portal configurable/integrated as of version	V14 / -
• STEP 7 configurable/integrated as of version	V5.6 and higher
• PCS 7 configurable/integrated as of version	V8.1 SP1
• PROFIBUS as of GSD version/GSD revision	One GSD file each, Revision 3 and 5 and higher
• PROFINET as of GSD version/GSD revision	GSDML V2.3
Operating mode	
• Oversampling	No
• MSI	No
CiR – Configuration in RUN	
Reparameterization possible in RUN	Yes
Calibration possible in RUN	No

Article number	6ES7134-6GD01-0BA1
Supply voltage	
Rated value (DC)	24 V
permissible range, lower limit (DC)	19.2 V
permissible range, upper limit (DC)	28.8 V
Reverse polarity protection	Yes
Input current	
Current consumption, max.	37 mA; without sensor supply
24 V encoder supply	
• 24 V	Yes
• Short-circuit protection	Yes
• Output current, max.	20 mA; max. 50 mA per channel for a duration < 10 s
Power loss	
Power loss, typ.	0.85 W; Without encoder supply voltage
Address area	
Address space per module	
• Address space per module, max.	8 byte; + 1 byte for QI information
Hardware configuration	
Automatic encoding	
• Mechanical coding element	Yes
Selection of BaseUnit for connection variants	
• 2-wire connection	BU type A0, A1
• 4-wire connection	BU type A0, A1
Analog inputs	
Number of analog inputs	4; Differential inputs
permissible input current for current input (destruction limit), max.	50 mA
Cycle time (all channels), min.	Sum of the basic conversion times and additional processing times (depending on the parameterization of the active channels)
Input ranges (rated values), currents	
• 0 to 20 mA	Yes; 16 bit incl. sign
• Input resistance (0 to 20 mA)	100 Ω; + approx. 0.7 V diode forward voltage in 2-wire operation
• -20 mA to +20 mA	Yes
• Input resistance (-20 mA to +20 mA)	100 Ω
• 4 mA to 20 mA	Yes; 15 bit
• Input resistance (4 mA to 20 mA)	100 Ω; + approx. 0.7 V diode forward voltage in 2-wire operation

Article number	6ES7134-6GD01-0BA1
Cable length	
• shielded, max.	1 000 m
Analog value generation for the inputs	
Measurement principle	integrating (Sigma-Delta)
Integration and conversion time/resolution per channel	
• Resolution with overrange (bit including sign), max.	16 bit
• Integration time, parameterizable	Yes
• Interference voltage suppression for interference frequency f1 in Hz	16.6 / 50 / 60 Hz
• Conversion time (per channel)	180 / 60 / 50 ms
Smoothing of measured values	
• Number of smoothing levels	4; None; 4/8/16 times
• parameterizable	Yes
Encoder	
Connection of signal encoders	
• for voltage measurement	No
• for current measurement as 2-wire transducer	Yes
– Burden of 2-wire transmitter, max.	650 Ω
• for current measurement as 4-wire transducer	Yes
Errors/accuracies	
Linearity error (relative to input range), (+/-)	0.01 %
Temperature error (relative to input range), (+/-)	0.005 %/K
Crosstalk between the inputs, min.	50 dB; Applies to up to ±5 V overvoltage in other channels
Repeat accuracy in steady state at 25 °C (relative to input range), (+/-)	0.05 %
Operational error limit in overall temperature range	
• Current, relative to input range, (+/-)	0.5 %
Basic error limit (operational limit at 25 °C)	
• Current, relative to input range, (+/-)	0.3 %

Article number	6ES7134-6GD01-0BA1
Interference voltage suppression for f = n x (f1 +/- 1 %), f1 = interference frequency	
• Series mode interference (peak value of interference < rated value of input range), min.	70 dB
• Common mode voltage, max.	10 V
• Common mode interference, min.	90 dB
Isochronous mode	
Isochronous operation (application synchronized up to terminal)	No
Interrupts/diagnostics/status information	
Diagnostics function	Yes
Alarms	
• Diagnostic alarm	Yes
• Limit value alarm	No
Diagnostic messages	
• Monitoring the supply voltage	Yes
• Wire-break	Yes; at 4 to 20 mA
• Short-circuit	Yes; 2-wire mode: Short-circuit of the encoder supply to ground or of an input to the encoder supply
• Group error	Yes
• Overflow/underflow	Yes
Diagnostics indication LED	
• Monitoring of the supply voltage (PWR-LED)	Yes; Green LED
• Channel status display	Yes; Green LED
• for channel diagnostics	No
• for module diagnostics	Yes; Green/red LED
Potential separation	
Potential separation channels	
• between the channels	Yes; channel group-specific between 2-wire current input group and 4-wire voltage input group
• between the channels and backplane bus	Yes
• between the channels and the power supply of the electronics	Yes; only for 4-wire transducer
Permissible potential difference	
between the inputs (UCM)	10 V DC
Isolation	
Isolation tested with	707 V DC (type test)

Article number	6ES7134-6GD01-0BA1
Ambient conditions	
Ambient temperature during operation	
• horizontal installation, min.	-30 °C; No condensation
• horizontal installation, max.	60 °C
• vertical installation, min.	-30 °C; No condensation
• vertical installation, max.	50 °C
• Vertical installation, min.	-30 °C; No condensation
• Vertical installation, max.	50 °C
• Horizontal installation, min.	-30 °C; No condensation
• Horizontal installation, max.	50 °C
Altitude during operation relating to sea level	
• Ambient air temperature-barometric pressure-altitude	Up to max. 5 000 m, at installation height > 2 000 m additional restrictions, see manual for details
Dimensions	
Width	15 mm
Height	73 mm
Depth	58 mm
Weights	
Weight, approx.	31 g

Dimension drawing

See manual ET 200SP BaseUnits
(http://support.automation.siemens.com/WW/view/en/59753521)

Parameter data record

A

A.1 Dependencies when configuring with GSD file

When configuring the module with a GSD file, remember that the settings of some parameters are dependent on each other.

Configuring with a PROFINET GSD file

The table lists the properties and their dependencies on the measuring type and measuring range for PROFINET.

Measuring type	Measuring range	Diagnostics				
		No supply voltage L+	Short-circuit to M	Overflow	Underflow	Wire break
deactivated		*	*	*	*	*
Current (4-wire connection)	0..20 mA	x	-	x	x	-
	4..20 mA	x	-	x	x	x
	±20 mA	x	-	x	x	-
Current (2-wire connection)	0..20 mA	x	x	x	x	-
	4..20 mA	x	x	x	x	x

x = Property is allowed, - = Property is **not allowed**, * = Property is not relevant

Configuring with a PROFIBUS GSD file

The table lists the properties and their dependencies on the measuring type and measuring range for PROFIBUS.

Measuring type	Measuring range	Diagnostics			
		No supply voltage L+	Short-circuit to M	Overflow/ Underflow	Wire break
deactivated		*	*	*	*
Current (4-wire connection)	0..20 mA	x	-	x	-
	4..20 mA	x	-	x	x
	±20 mA	x	-	x	-
Current (2-wire connection)	0..20 mA	x	x	x	-
	4..20 mA	x	x	x	x

x = Property is allowed, - = Property is **not allowed**, * = Property is not relevant

A.2 Parameter assignment and structure of the parameter data record

The data record of the module has an identical structure, regardless of whether you configure the module with PROFIBUS DP or PROFINET IO. With data record 128, you can reconfigure the module in your user program regardless of your programming. This means that you can use all the functions of the module even if you configured it via PROFIBUS-GSD.

Parameter assignment in the user program

You can change the parameters of the module in RUN. For example, the voltage or current values of selected channels can be changed in RUN without having an effect on the other channels.

Changing parameters in RUN

The "WRREC" instruction is used to transfer the parameters to the module using data record 128. The parameters set in STEP 7 are not changed in the CPU, which means that the parameters set in STEP 7 will be valid again after a restart.

Output parameter STATUS

If errors occur when transferring parameters with the "WRREC" instruction, the module continues operation with the previous parameter assignment. The STATUS output parameter contains a corresponding error code.

You will find a description of the "WRREC" instruction and the error codes in the STEP 7 online help.

Structure of data record 128

Note

Channel 0 contains the diagnostics for the entire module.

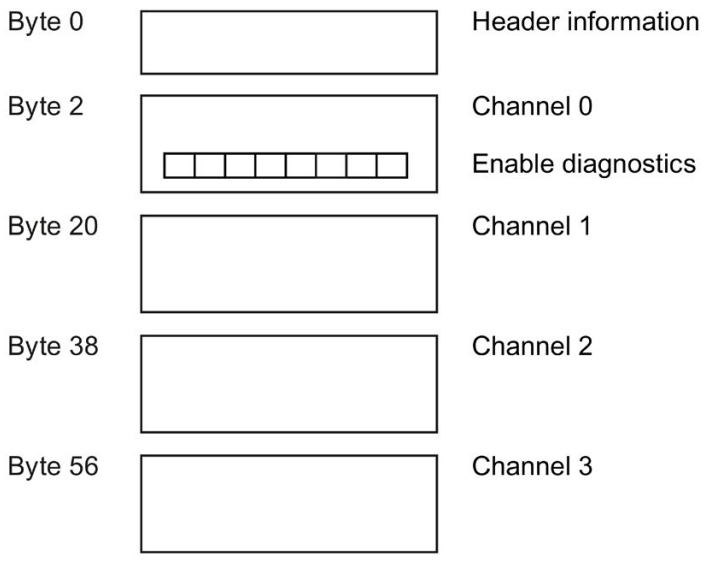

Figure A-1 Structure of data record 128

Header information

The figure below shows the structure of the header information.

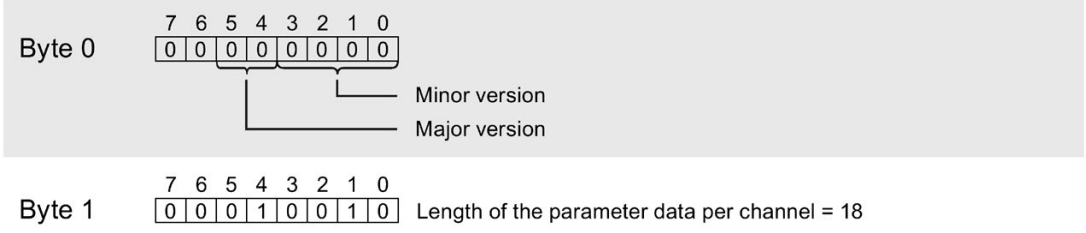

Figure A-2 Header information

Parameters

The figure below shows the structure of the parameters for channels 0 to 3.

You enable a parameter by setting the corresponding bit to "1".

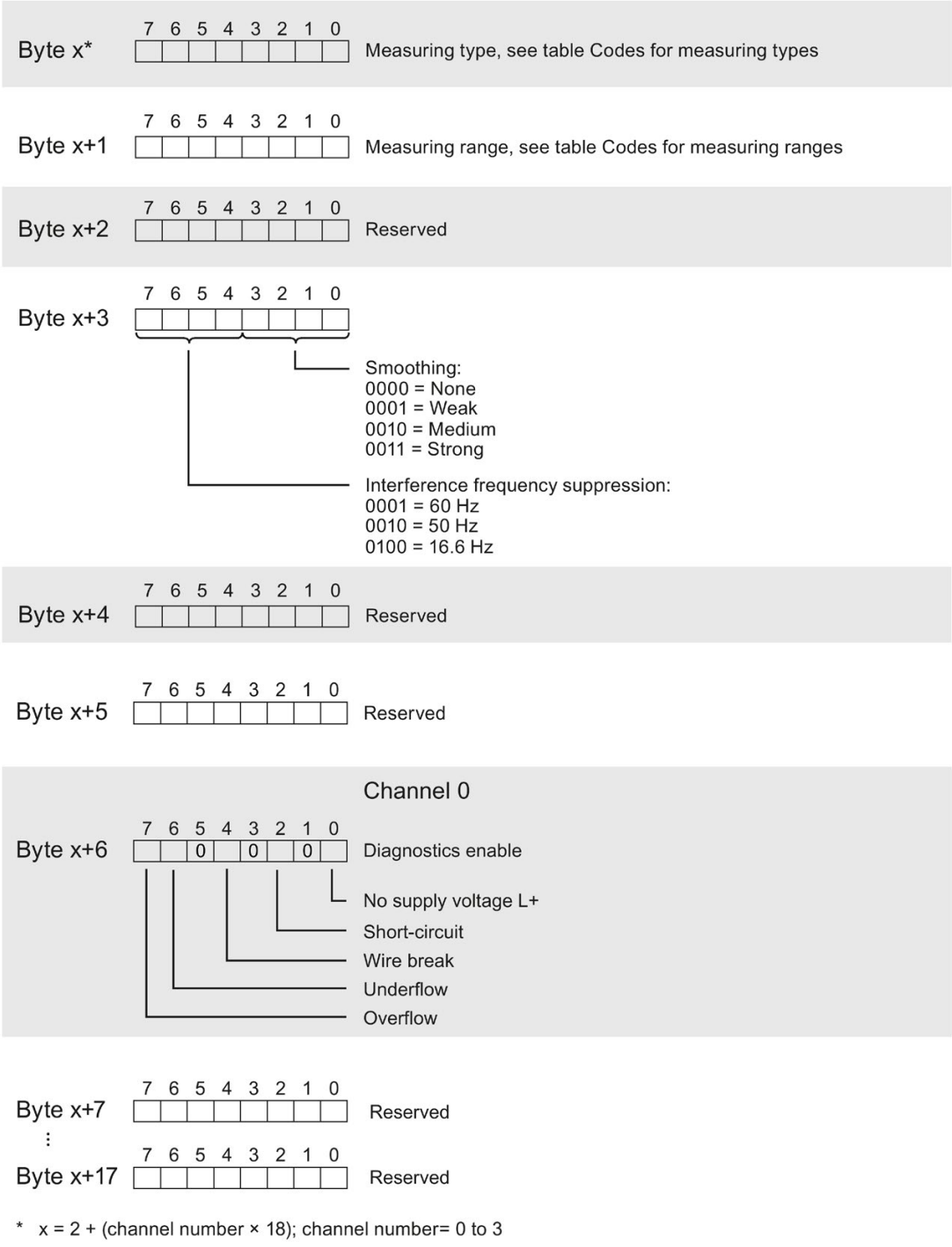

Figure A-3 Structure of byte x to x+17 for channels 0 to 3

Codes for the measuring type

The following table contains the codes for the measuring types of the analog input module. You must enter these codes at byte x (see previous figure).

Table A- 1 Codes for the measuring type

Measuring type	Coding
Deactivated	0000 0000
Current, 4-wire transducer	0000 0010
Current, 2-wire transducer	0000 0011

Codes for the measuring range

The following table contains the codes for the measuring ranges of the analog input module. You enter these codes at byte x+1 (see previous figure).

Table A- 2 Codes for the measuring range

Measuring range	Coding
0 to 20 mA	0000 0010
4 to 20 mA	0000 0011
±20 mA	0000 0100

A.3 Error in transferring the data record analog input

Error transferring the data record

The module always checks all values of the data record to be sent. The module applies the values from the data record only when all values have been transmitted without errors.

The WRREC instruction for writing data records returns corresponding error codes when errors occur in the STATUS parameter, see also the description of the "STATUS" parameter in the STEP 7 online help).

The following table shows the module-specific error codes and their meaning for parameter data record 128.

Error code in STATUS parameter (hexadecimal)				Meaning	Solution
Byte 0	Byte 1	Byte 2	Byte 3		
DF	80	B0	xx	Number of the data record unknown.	Enter a valid number for the data record.
DF	80	B1	xx	Length of the data record incorrect.	Enter a valid value for the data record length.
DF	80	B2	xx	Slot invalid or cannot be accessed.	• Check the station to determine whether the module is plugged or pulled. • Check the assigned values for the parameters of the WRREC instruction.
DF	80	E0	xx	Wrong version or error in the header information.	Correct the version, length and number of parameter blocks.
DF	80	E1	01	Reserved bit set	Check the parameters of the module.
DF	80	E1	02	Invalid diagnostics enable bit set for operating mode.	Check the parameters of the module.
DF	80	E1	05	Invalid coding set for measuring range / measurement type.	Check the parameters of the module.
DF	80	E1	08	Invalid coding set for interference frequency suppression / integration time.	Check the parameters of the module.
DF	80	E1	09	Invalid coding for smoothing.	Check the parameters of the module.

Representation of analog values

B

This appendix shows the analog values for all measuring ranges that you can use with the analog module.

Measured value resolution

The resolution of the analog values differs depending on the analog module and its assigned parameters.

The table below shows the representation of binary analog values and of the associated decimal and hexadecimal units of the analog values.

Each analog value is written left aligned to the tags. The bits marked with "x" are set to "0".

Table B- 1 Resolution of the analog values

Resolution in bits including sign	Values		Analog value	
	Decimal	Hexadecimal	High byte	Low byte
14	4	4_H	Sign 0 0 0 0 0 0 0	0 0 0 0 0 1 x x
15	2	2_H	Sign 0 0 0 0 0 0 0	0 0 0 0 0 0 1 x
16	1	1_H	Sign 0 0 0 0 0 0 0	0 0 0 0 0 0 0 1

B.1 Representation of input ranges

In the following tables, you can find the digitized representation of the bipolar and unipolar input ranges. The resolution is 16 bits.

Table B- 2 Bipolar input ranges

Dec. value	Measured value in %	Data word																Range
		2^{15}	2^{14}	2^{13}	2^{12}	2^{11}	2^{10}	2^{9}	2^{8}	2^{7}	2^{6}	2^{5}	2^{4}	2^{3}	2^{2}	2^{1}	2^{0}	
32767	>117.589	0	1	1	1	1	1	1	1	1	1	1	1	1	1	1	1	Overflow
32511	117.589	0	1	1	1	1	1	1	0	1	1	1	1	1	1	1	1	Overrange
27649	100.004	0	1	1	0	1	1	0	0	0	0	0	0	0	0	0	1	
27648	100.000	0	1	1	0	1	1	0	0	0	0	0	0	0	0	0	0	Nominal range
1	0.003617	0	0	0	0	0	0	0	0	0	0	0	0	0	0	0	1	
0	0.000	0	0	0	0	0	0	0	0	0	0	0	0	0	0	0	0	
-1	-0.003617	1	1	1	1	1	1	1	1	1	1	1	1	1	1	1	1	
-27648	-100.000	1	0	0	1	0	1	0	0	0	0	0	0	0	0	0	0	
-27649	-100.004	1	0	0	1	0	0	1	1	1	1	1	1	1	1	1	1	Underrange
-32512	-117.593	1	0	0	0	0	0	0	1	0	0	0	0	0	0	0	0	
-32768	<-117.593	1	0	0	0	0	0	0	0	0	0	0	0	0	0	0	0	Underflow

Table B- 3 Unipolar input ranges

Dec. value	Measured value in %	Data word																Range
		2^{15}	2^{14}	2^{13}	2^{12}	2^{11}	2^{10}	2^{9}	2^{8}	2^{7}	2^{6}	2^{5}	2^{4}	2^{3}	2^{2}	2^{1}	2^{0}	
32767	>117.589	0	1	1	1	1	1	1	1	1	1	1	1	1	1	1	1	Overflow
32511	117.589	0	1	1	1	1	1	1	0	1	1	1	1	1	1	1	1	Overrange
27649	100.004	0	1	1	0	1	1	0	0	0	0	0	0	0	0	0	1	
27648	100.000	0	1	1	0	1	1	0	0	0	0	0	0	0	0	0	0	Nominal range
1	0.003617	0	0	0	0	0	0	0	0	0	0	0	0	0	0	0	1	
0	0.000	0	0	0	0	0	0	0	0	0	0	0	0	0	0	0	0	
-1	-0.003617	1	1	1	1	1	1	1	1	1	1	1	1	1	1	1	1	Underrange
-4864	-17.593	1	1	1	0	1	1	0	1	0	0	0	0	0	0	0	0	
-32768	<-17.593	1	0	0	0	0	0	0	0	0	0	0	0	0	0	0	0	Underflow

B.2 Representation of analog values in the current measuring ranges

The following tables list the decimal and hexadecimal values (codes) of the possible current measuring ranges.

Table B- 4 Current measuring range ±20 mA

Values		Current measuring range	Range
Dec.	Hex.	±20 mA	
32767	7FFF	>23.52 mA	Overflow
32511	7EFF	23.52 mA	Overrange
27649	6C01		
27648	6C00	20 mA	Nominal range
20736	5100	15 mA	
1	1	723.4 nA	
0	0	0 mA	
-1	FFFF		
-20736	AF00	-15 mA	
-27648	9400	-20 mA	
-27649	93FF		Underrange
-32512	8100	-23.52 mA	
-32768	8000	<-23.52 mA	Underflow

Table B- 5 Current measuring ranges 0 to 20 mA and 4 to 20 mA

Values		Current measuring range		Range
Dec.	Hex.	0 to 20 mA *	4 to 20 mA	
32767	7FFF	>23.52 mA	>22.81 mA	Overflow
32511	7EFF	23.52 mA	22.81 mA	Overrange
27649	6C01			
27648	6C00	20 mA	20 mA	Nominal range
20736	5100	15 mA	16 mA	
1	1	723.4 nA	4 mA + 578.7 nA	
0	0	0 mA	4 mA	
-1	FFFF			Underrange
-4864	ED00	-3.52 mA	1.185 mA	
-32768	8000	<-3.52 mA	<1.185 mA	Underflow

* For measuring type "2-wire transducer", negative values are not possible for the range "0 to 20 mA". Therefore, no underrange or underflow exists here.

SIEMENS

SIMATIC

ET 200SP
Analog Input Module AI 4xI 2-wire 4…20mA HART

Manual

Preface

Documentation guide 1

Product overview 2

Wiring up 3

HART function 4

Parameters 5

Configuring/address space 6

Interrupts/diagnostics alarms 7

Technical specifications 8

Parameter data records 9

HART operating data records 10

Analog value representation 11

02/2018
A5E35098013-AC

Legal information

Warning notice system

This manual contains notices you have to observe in order to ensure your personal safety, as well as to prevent damage to property. The notices referring to your personal safety are highlighted in the manual by a safety alert symbol, notices referring only to property damage have no safety alert symbol. These notices shown below are graded according to the degree of danger.

⚠ DANGER
indicates that death or severe personal injury **will** result if proper precautions are not taken.

⚠ WARNING
indicates that death or severe personal injury **may** result if proper precautions are not taken.

⚠ CAUTION
indicates that minor personal injury can result if proper precautions are not taken.

NOTICE
indicates that property damage can result if proper precautions are not taken.

If more than one degree of danger is present, the warning notice representing the highest degree of danger will be used. A notice warning of injury to persons with a safety alert symbol may also include a warning relating to property damage.

Qualified Personnel

The product/system described in this documentation may be operated only by **personnel qualified** for the specific task in accordance with the relevant documentation, in particular its warning notices and safety instructions. Qualified personnel are those who, based on their training and experience, are capable of identifying risks and avoiding potential hazards when working with these products/systems.

Proper use of Siemens products

Note the following:

⚠ WARNING
Siemens products may only be used for the applications described in the catalog and in the relevant technical documentation. If products and components from other manufacturers are used, these must be recommended or approved by Siemens. Proper transport, storage, installation, assembly, commissioning, operation and maintenance are required to ensure that the products operate safely and without any problems. The permissible ambient conditions must be complied with. The information in the relevant documentation must be observed.

Trademarks

All names identified by ® are registered trademarks of Siemens AG. The remaining trademarks in this publication may be trademarks whose use by third parties for their own purposes could violate the rights of the owner.

Disclaimer of Liability

We have reviewed the contents of this publication to ensure consistency with the hardware and software described. Since variance cannot be precluded entirely, we cannot guarantee full consistency. However, the information in this publication is reviewed regularly and any necessary corrections are included in subsequent editions.

Siemens AG
Division Process Industries and Drives
Postfach 48 48
90026 NÜRNBERG
GERMANY

A5E35098013-AC
℗ 02/2018 Subject to change

Copyright © Siemens AG 2018.
All rights reserved

Preface

Validity of the documentation

This manual describes the analog input module AI 4xI 2-wire 4…20mA HART, article number 6ES7134-6TD00-0CA1.

It supplements the system manual ET 200SP distributed I/O system (http://support.automation.siemens.com/WW/view/en/58649293). Functions that generally relate to the system are described in this manual.

The information provided in this manual and in the system/function manuals supports you in commissioning the system.

Conventions

Please also observe notes marked as follows:

Note

A note contains important information on the product described in the documentation, on the handling of the product and on the section of the documentation to which particular attention should be paid.

Security information

Siemens provides products and solutions with industrial security functions that support the secure operation of plants, systems, machines, and networks.

In order to protect plants, systems, machines and networks against cyber threats, it is necessary to implement – and continuously maintain – a holistic, state-of-the-art industrial security concept. Siemens' products and solutions constitute one element of such a concept.

Customers are responsible for preventing unauthorized access to their plants, systems, machines and networks. Such systems, machines and components should only be connected to an enterprise network or the internet if and to the extent such a connection is necessary and only when appropriate security measures (e.g. firewalls and/or network segmentation) are in place.

For additional information on industrial security measures that may be implemented, please visit:
https://www.siemens.com/industrialsecurity

Siemens' products and solutions undergo continuous development to make them more secure. Siemens strongly recommends that product updates are applied as soon as they are available and that the latest product versions are used. Use of product versions that are no longer supported, and failure to apply the latest updates may increase customer's exposure to cyber threats.

To stay informed about product updates, subscribe to the Siemens Industrial Security RSS Feed under
https://www.siemens.com/industrialsecurity.

Table of contents

Preface....3

1 Documentation guide....7

2 Product overview....9

2.1 Properties....9

3 Wiring up....11

3.1 Connection and block diagram....11

4 HART function....13

4.1 How HART works....14

4.2 Use of HART....18

4.3 HART communication interface....20

4.4 HART variables....22

5 Parameters....25

5.1 Parameters of the AI 4xI 2-wire 4…20mA HART....25

5.1.1 Channel/technology parameters....25

5.1.2 Explanation of the channel/technology parameters....27

5.1.3 HART mapping parameters....30

6 Configuring/address space....33

6.1 Configuring....33

6.2 Address space....34

7 Interrupts/diagnostics alarms....37

7.1 Status and error displays....37

7.2 Interrupts....39

7.3 Diagnostics alarms....40

8 Technical specifications....43

8.1 Technical specifications of the AI 4xI 2-wire 4…20mA HART....43

9 Parameter data records....47

9.1 Parameter assignment and structure of the channel/technology parameters....48

9.2 Parameter assignment and structure of the HART mapping parameters....51

10 HART operating data records....53

10.1 HART directory....54

10.2 HART feature data....55

10.3 HART variable data record....56

10.4 HART-specific settings.....57
10.5 HART request and response data records.....59
11 Analog value representation.....65
11.1 Representation of input ranges.....66
11.2 Representation of analog values in the current measuring ranges.....67
Index.....69

Documentation guide

1

Introduction

The documentation of the SIMATIC products has a modular structure and covers diverse topics relating to your automation system.

The complete documentation for the ET 200SP system consists of the system manual, function manuals, and manuals for the individual devices.

The STEP 7 information system (online help) also supports you in configuring and programming your automation system.

Overview of documentation for analog input module AI 4xI 2-wire 4…20mA HART

The following table lists further documentation that you will need when using analog input module AI 4xI 2-wire 4…20mA HART.

Table 1-1 Documentation

Topic	Documentation	Most important contents
System description	System Manual ET 200SP distributed I/O system (http://support.automation.siemens.com/WW/view/en/58649293)	• Application planning • Installation • Connecting • Commissioning
Analog value processing	Function Manual Analog value processing (http://support.automation.siemens.com/WW/view/en/67989094)	• Basics of analog technology (wiring, processing, assembly system) • Description/explanation of meaning, e.g., conversion and cycle times, basic error limits, operational limits
System diagnostics	Function manual Diagnostics (http://support.automation.siemens.com/WW/view/en/59192926)	• Overview • Hardware/software diagnostic evaluation
BaseUnits	Manual ET 200SP BaseUnits (http://support.automation.siemens.com/WW/view/en/59753521)	Technical specifications

SIMATIC manuals

The latest manuals for SIMATIC products are available for download free of charge from the Internet (http://www.siemens.com/simatic-tech-doku-portal).

Product overview

2

2.1 Properties

Article number

6ES7134-6TD00-0CA1

View of the module

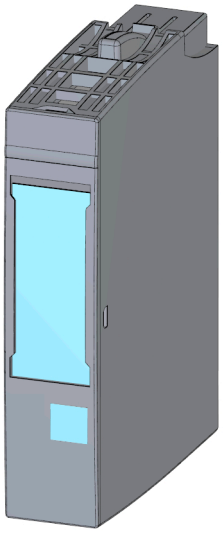

Figure 2-1 View of the AI 4xI 2-wire 4…20mA HART module

Properties

The module has the following technical properties:

- Analog input module with 4 inputs
- Measurement type current for 2-wire HART transducer
- Input range 4 mA to 20 mA
- Resolution 16 bits including sign
- Configurable diagnostics per channel

The module supports the following functions:

- HART communication (Rev. 5 to Rev. 7)
- Firmware update
- I&M identification data

- Configuration in RUN
- Value status (PROFINET IO only)
- Up to four HART variables directly in the input address space

You can configure the module with STEP 7 in the TIA Portal as well as with HW Config and with a GSD file.

Accessories

The following accessories must be ordered separately:

- Labeling strips
- Color identification labels
- Reference identification label
- Shield connector

See also

You will find additional information on the accessories in the ET 200SP distributed I/O system (http://support.automation.siemens.com/WW/view/en/58649293) system manual.

Wiring up 3

3.1 Connection and block diagram

The AI 4xI 2-wire 4…20mA HART analog module can be used with all A0 or A1-type BaseUnits.

You connect the transducers to the BaseUnit of the analog module. The infeed of the supply voltage at the light BaseUnit of the associated potential group supplies the module and the transducers connected to the encoder supply voltages.

A new potential group always begins with a light BaseUnit.

BaseUnit

The BaseUnit is not included in the product package of the module and must be ordered separately.

An overview of the BaseUnits that you can use with the analog module can be found in Product information for documentation of the ET 200SP Distributed I/O System (http://support.automation.siemens.com/WW/view/en/73021864)

Information regarding selection of the suitable BaseUnit can be found in system manual ET 200SP distributed I/O system (http://support.automation.siemens.com/WW/view/en/58649293) and in the manual ET 200SP BaseUnits (http://support.automation.siemens.com/WW/view/en/59753521).

Information regarding wiring of the BaseUnit, creating the cable shield, etc., can be found in system manual ET 200SP distributed I/O system (http://support.automation.siemens.com/WW/view/en/58649293) in the section "Connecting".

Note

The first BaseUnit of a station must be a light BaseUnit. Also keep this in mind during the configuration.

General terminal assignment

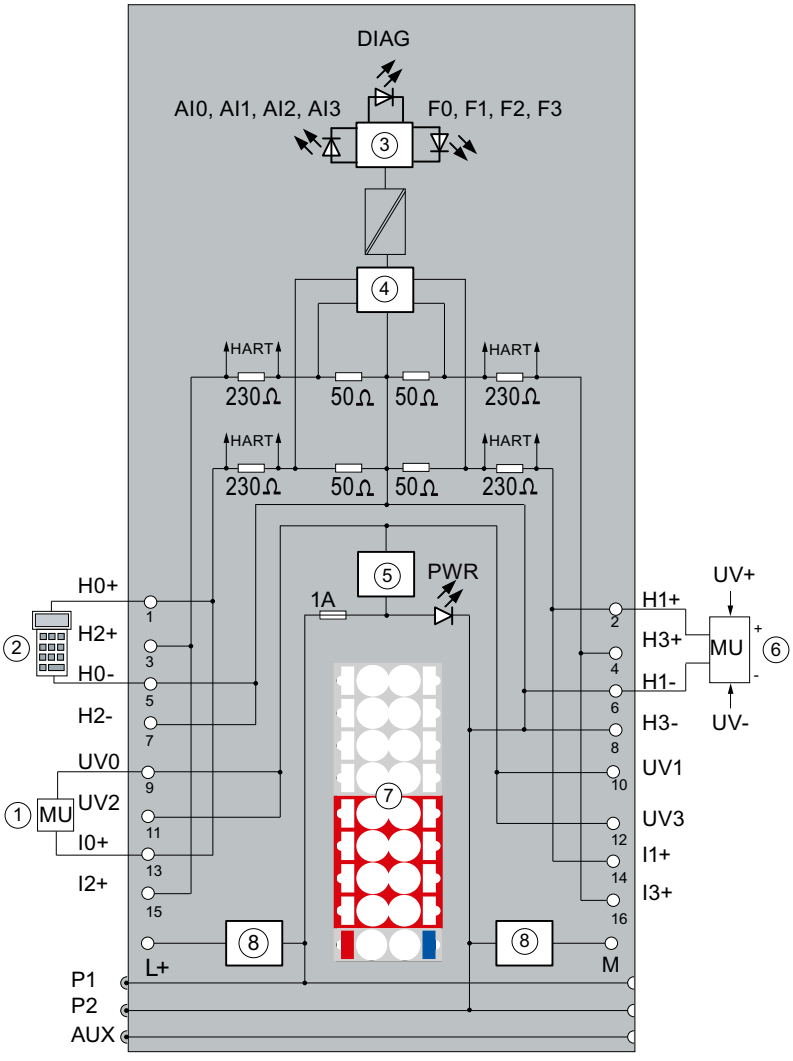

Block diagram AI 4xI 2-wire 4…20mA HART

①	Connection of a 2-wire transducer, at channel 0 in this case
②	Optional connection of an external hand-held (secondary master) to the HART test connection terminal (at channel 0 in this case)
③	Backplane bus connection
④	Analog-digital converter (ADC)
⑤	Current limitation
⑥	Non-isolated 4-wire connection to the HART test connection terminal (at channel 1 in this case)
⑦	Color-coded label CC03 (optional)
⑧	Filter circuit supply voltage (only available on light-colored BaseUnit)
Hn+	HART signal "+", channel n
Hn-	HART signal "-", channel n
UVn	Supply voltage channel n
In+	Input signal "+" channel n
L+	24 V DC (infeed only with light-colored BaseUnit)
M	Ground
P1,P2, AUX	Internal self-assembling voltage buses Connection to the left (dark-colored BaseUnit) Connection to the right interrupted (light-colored BaseUnit)
DIAG	Diagnostics LED (green, red)
AI0 to AI3	Channel status LED (green)
F0 to F3	Channel fault LED (red)
PWR	Power LED (green)

Supply voltage L+/M

Connect supply voltage (24V DC) to terminals L+ and M. An internal protective circuit protects the analog module from reverse polarity. The analog module monitors the connection of the supply voltage.

HART function

4

Definition

"HART" stands for "Highway Addressable Remote Transducer".

The HART functionality also enables you to use the AI 4xI 2-wire 4…20mA HART analog module to exchange data with the connected field devices. The HART protocol is generally accepted as a standard protocol for communication with intelligent field devices: HART is a registered trademark of the HART Communication Foundation (HCF), which owns all the rights to the HART protocol. You can find detailed information about HART in the HART specification.

Advantages of HART

Using the AI 4xI 2-wire 4…20mA HART analog module offers the following advantages:

- Connection compatibility with standard analog modules: Current loop 4 - 20 mA
- Additional digital communication using the HART protocol
- Numerous field devices with HART functions are in use
- The option to use HART is integrated in the S7 system by means of the AI 4xI 2-wire 4…20mA HART analog module.

Use in the system

The AI 4xI 2-wire 4…20mA HART analog module is used in the distributed I/O connected to PROFIBUS DP or PROFINET IO.

You can connect a field device to any channel: The AI 4xI 2-wire 4…20mA HART analog module operates as a HART master, monodrop; the field devices operate as HART devices.

Typical applications

The following applications are typical:

- Commissioning of field devices (centralized parameter assignment)
- Online modification of field device parameters
- Information, maintenance and diagnostic displays for the field devices
- Integration of configuration tools for field devices via the HART interface

4.1 How HART works

Introduction

The HART protocol describes the physical form of the transfer: transfer procedures, message structure, data formats and commands.

HART signal

The figure below shows the analog signal with the modulated HART signal (FSK method), which consists of sine waves of 1200 Hz and 2200 Hz and has a mean value of 0. It can be filtered out using an input filter so that the original analog signal is available again.

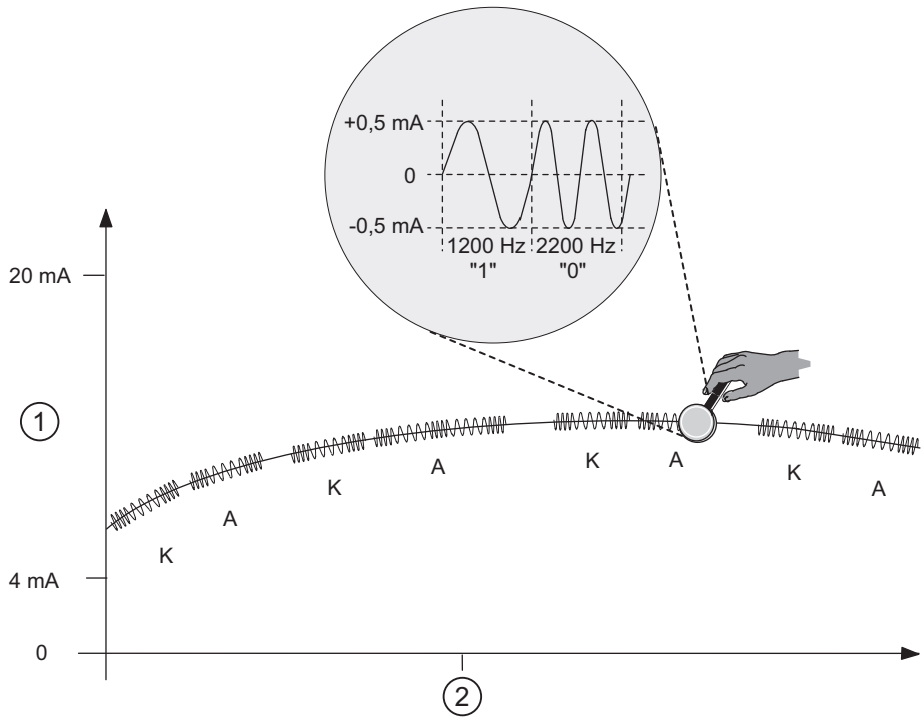

Figure 4-1 The HART signal

①	Analog signal
②	Time (seconds)
K	Command
A	Response

HART communication

The AI 4xI 2-wire 4…20mA HART analog module processes the HART communication in multiplex mode, i.e., consecutively channel-by-channel. As a result, HART commands of the individual channels influence the speed of the HART processing of the other channels.

When HART mode is enabled, the analog module autonomously sends HART commands to the connected field devices. This takes place alternatingly on a channel-specific basis with any

pending external HART commands that arrive via the command interface of the module, see section 4.3 "HART command interface".

Commissioning a HART field device

Only HART field devices that are set to the short frame address 0 can be operated. If a HART field device with a different short frame address is connected or a connected field device is reconfigured to a short frame address other than 0 during operation, the module starts a scan of all possible short frame addresses at the next re-establishment of HART communication (command 0 with short frame addresses 1...63). As soon as the connected field device responds, it is converted to the short frame address 0 (HART command 6) by the module. During the scan, the module reports a HART communication error.

HART commands

The assignable properties of the HART field devices (HART parameters) can be set with HART commands and read by means of HART replies. The HART commands and their parameters are divided into three groups with the following properties:

- Universal
- Common practice
- Device-specific

Universal commands must be supported by all manufacturers of HART field devices and common practice commands should be supported. There are also device-specific commands that apply only to the particular field device.

Examples of HART commands

The following two tables show examples of HART commands:

Table 4-1 Examples of universal commands

Command	Function
0	Read manufacturer and device type - only with this command 0 can field devices be addressed by means of a short frame address
11	Read manufacturer and device type
1	Read primary variable and unit
2	Read current output and percent of range, digitally as floating-point number (IEEE 754)
3	Read up to four pre-defined dynamic variables (primary variables, secondary variables, etc.)
13, 18	Read or write tag, descriptor and date (data included in transmission)

Table 4-2 Examples of common practice commands

Command	Function
36	Set upper range value

37	Set lower range value
41	Perform self-test
43	Set the primary variable to zero
109	Switch burst mode on or off

Structure of the HART protocol

Each HART frame sent from the analog module to the connected field device (request frame) and each HART frame from the field device (response frame) has the following basic structure.

PREAMBLE	STRT	ADDR	COM	BCNT	STATUS	DATA	CHK

PREAMBLE: Bytes (0xFF) for synchronizing.
5 to 20 bytes depending on parameter assignment

STRT: Start character (start delimiter)

ADDR: Address of the field device (1 byte; short address or 5 bytes; long address)

COM: HART command number

BCNT: Byte count, number of bytes to follow without checksum

STATUS: HART device status (1st and 2nd status byte). Only present for a response frame. For structure of HART device status, see below.

DATA: Transferred user data / parameters, quantity depending on command (0…230 bytes)

CHK: Checksum

With the exception of the preamble bytes, this structure is contained in the communication data of the HART command interface. See section HART request and response data records (Page 59).

HART replies always contain data. Status information (HART device status; 1st and 2nd status bytes) is always sent together with a HART response. You should evaluate these to make sure the response is correct.

Structure of HART device status (1st and 2nd status bytes).

Table 4-3 1st status byte

When Bit 7 = 1: "Communication error"	
Bit 6 = 1	Parity error
Bit 5 = 1	Overflow
Bit 4 = 1	Framing error
Bit 3 = 1	Checksum error
Bit 2 = 0	Reserved
Bit 1 = 1	Overflow in the receive buffer
Bit 0 = 0	Reserved
When bit 7 = 0: "Specific in line with response frame"	

Table 4-4 2nd status byte

Bit 7 = 1	Device fault
Bit 6 = 1	Configuration changed
Bit 5 = 1	Startup (cold start)
Bit 4 = 1	Additional status information available
Bit 3 = 1	Fixed analog output current setting
Bit 2 = 1	Analog output current saturated
Bit 1 = 1	Secondary variable outside the limits
Bit 0 = 1	Primary variable outside the range

HART-Fast-Mode

The AI 4xI 2-wire 4…20mA HART analog module supports the processing of HART commands as a SHC sequence ("Successive HART Command").
That is, if the analog module detects a HART command with SHC bit set for a channel, the complete HART command processing on the HART analog module is reserved for this channel for approximately 2 s. For all other channels of the analog module, no HART frame processing occurs during this time, see section HART communication interface (Page 20)

Note

- During the time a HART channel of the AI 4xI 2-wire 4…20mA HART analog module is processing an SHC sequence, and thus the complete HART processing of the module is reserved for this channel, the HART variables of all HART channels are no longer updated. They remain unchanged in terms of value and quality code.
- HART commands for other channels are not processed and are acknowledged correspondingly.

Burst mode

The AI 4xI 2-wire 4…20mA HART analog module does not support burst mode. HART commands with set burst bit are ignored and are not forwarded to the connected field device.

4.2 Use of HART

System environment for the use of HART

To use an intelligent field device with HART functionality, you require the following system environment:

- Current loop 4 - 20 mA
  Connection of the transducers to the AI 4xI 2-wire 4…20mA HART analog module
- HART configuration tool "Client":
  You can assign the HART parameters using an external hand-held operating device (HART Handheld) or a HART configuration tool (PDM). Both assume the function of a "client": The configuration tool goes through the AI 4xI 2-wire 4…20mA HART analog module whereas the HART Handheld is connected directly in parallel with the field device. See terminal assignment "HART test connections (terminals 1 to 8)" in the section 3.1 "Terminal assignment".
  PDM (Process Device Manager) is available as a stand-alone unit or integrated in *STEP 7 HW Config*.
- HART system connection:
  The AI 4xI 2-wire 4…20mA HART analog module assumes the function of a "master" by forwarding the commands received from the HART configuration tool or as programmed commands from an S7 user program, for example, to the intelligent field device and sending back the replies. Data records that are transferred via the ET 200SP I/O bus serve as the interface of the AI 4xI 2-wire 4…20mA HART analog module. The data records must be created and interpreted by the client. .

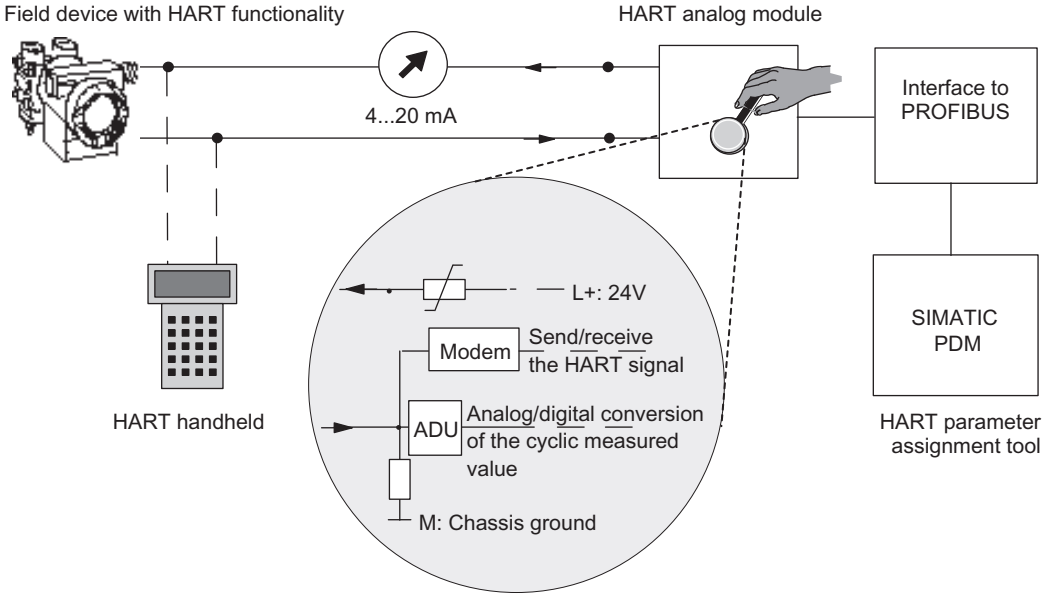

Figure 4-2 System environment for the use of HART

Error management

The two HART status bytes (HART device status) that are transferred with each response of the field device contain error information about the HART communication, HART command, and device status.
This is evaluated by the AI 4xI 2-wire 4…20mA HART analog module and made available in the system via S7 diagnostic messages.

Configuration/commissioning

You configure the AI 4xI 2-wire 4…20mA HART analog module in the SIMATIC system with STEP 7 or the TIA Portal. You assign parameters for the individual channels with respect to the actual analog value acquisition and the use of HART variables in the input address space of the module.
You can configure one field device per channel. By means of this configured field device, the configuration / parameter assignment of the connected field device is then carried out using PDM or the EDD for the ET 200SP.

It is also possible to configure the AI 4xI 2-wire 4…20mA HART analog module using a GSD file for PROFIBUS DP and PROFINET IO. However, in this case, direct configuration / parameter assignment of the connected field devices is not possible.

Parameter reassignment of the field devices

The HART analog module generally accepts parameter reassignments for field devices. Access rights can only be allocated in the configuration tool.

For parameter reassignment of the field devices connected to the HART analog module, proceed as follows:

1. You start the parameter reassignment of a field device using a HART command that you enter using the SIMATIC PDM configuration tool or as a programmed command in the STEP 7 user program.
2. After you have reassigned the parameters of a HART field device, the corresponding bit is set in the device status of the connected field device (in the 2nd status byte).
3. Because of the parameter reassignment of the field device, the HART analog module triggers a diagnostic interrupt "Configuration changed", provided this diagnostic interrupts is enabled. See section 7.3 "Diagnostic alarms". This diagnostic interrupt is to be regarded as information and not as an error and is automatically deleted again by the analog module after approximately 1 minute.

A diagnostic interrupt can also be triggered, if enabled, when parameter reassignment is carried out with the hand-held device.

See also

Connection and block diagram (Page 11)

Diagnostics alarms (Page 40)

4.3 HART communication interface

Data records

The HART commands are sent as so-called external HART requests from the client (e.g., PDM or the STEP 7 user program) to the connected field device via data records. The response of the field device is made available again in the system via data records.

HART communication may only be handled by one client (e.g., PDM) per channel. If a channel is handled by several clients, the response made available by the module cannot be allocated to one client with certainty. The AI 4xI 2-wire 4…20mA HART analog module does not support client management.

Each client/channel is allocated fixed data records:

Table 4-5 Structure of the data records

Channel	Data record number	
	Request to the field device	Response from the field device
0	80	81
1	82	83
2	84	85
3	86	87

The corresponding data records are transferred to the module with the "WRREC" instruction and read by the module with the "RDREC" instruction.

Errors during the transfer are indicated at output parameter STATUS.

Errors during interpretation of the request data record are signaled in the corresponding response data record. The faulty request can be read back again using the request data record.

Rules

- After having written a request data record, a client must read the response data record before it may write another request data record.
- The client can evaluate the "processing status" in the response data record: If the "processing status" indicates "successful" or "error," the response data record contains current response data or error displays.
- The response data record must always be read completely because the analog module may modify the data record after the initial reading with "successful" or "error" status.
  If the processing status in the response data record indicates "successful" or "error", the data record contains current response data or error displays.
- The client may only write a request data record to the module again when it has read the response to the previously written request data record via the corresponding response data record. Otherwise, the response from the module is overwritten.
- The STATUS component in the response frame (HART device status in the response data) provides information on whether errors have occurred and, if so, which errors.

Each request is stored on a channel-specific basis, and the corresponding request data record is disabled. Another writing of the same request data record is thus not possible and is

acknowledged with BUSY.
The disable of the request data record is reset after the termination or completion of the requested HART command.

SHC sequence

If a HART command is sent to the module with a set SHC bit, then this channel is reserved for HART commands for 2 seconds. This means that no more internal HART commands are sent to the field device with this channel.

Each time a HART command with a set SHC bit is sent, the module reserves this channel again for another 2 seconds for HART commands. If a HART command without a set SHC bit is detected for this channel, or if no further command occurs for this channel within 2 seconds after the previous HART command, then command 3 or 9 for reading the HART variables is cyclically sent to the field device for this channel.

4.4 HART variables

Introduction

Numerous HART field devices make available additional measured quantities (e.g. sensor temperature).

A maximum of four HART variables supported by the connected field device can be cyclically read per channel with activated HART functionality. The HART variables are read automatically with HART command 3 (for field devices with HART rev. 5 and 6) or with command 9 (for field devices with HART rev. 7 or later).

These four HART variables per channel are always stored in HART variable data record 121 and can be read at any time. See section HART variable data record (Page 56).

In addition, a maximum of 4 HART variables can be configured directly in the input address space of the AI 4xI 2-wire 4…20mA HART analog module. The HART variables are assigned to a channel in the properties dialog of the module. The parameter assignment uses parameter data record 140, see section AUTOHOTSPOT. This makes it easy for you to process measured values directly from the field device as input data in the automation device.

Address assignment

Provided you map HART variables in the input address space of the module by means of the configuration tool or selection of the appropriate configuration, 20 bytes are always additionally allocated for the HART variables.

Configuration of HART variables

You can configure up to 4 HART variables for each channel

- PV (Primary Variable)
- SV (Secondary Variable)
- TV (Tertiary Variable)
- QV (Quaternary)

When HART mode is enabled, the AI 4xI 2-wire 4…20mA HART analog module autonomously and cyclically reads the variables supplied by the connected field devices and makes them available in the input address space according to the configuration.

Each HART variable consists of a 4-byte value and a quality code byte.

Quality code

The quality code describes the process status of the corresponding HART variable.

Basic structure of the quality code

Bit	7….6	5....2	1…0
	Quality 0 0: Bad 0 1: Uncertain 1 0: Good 1 1: Good	Sub-status Coded according to "PROFIBUS PA Profile for Process Control Devices"	Limits 0 0: OK 0 1: Low limit 1 0: High limit 1 1: Constant

The quality codes generated by the AI 4xI 2-wire 4…20mA HART analog module are based on the HART Revision of the utilized field device.

Field devices with HART Revision 5 and 6

The quality code is formed exclusively from the 1st and 2nd Status byte (HART device status) of the response frames (HART command 3).

Quality code	Meaning (process status)	
80_H	Value is okay	Applies even when the following bits are set in the 2nd status byte of the HART response frame: • Configuration changed • Startup (cold start) • Fixed analog output current setting
78_H	Value is uncertain	Applies even when the following bits are set in the 2nd status byte of the HART response frame: • Additional status information available • Analog output current saturated • Secondary variable outside the limits • Primary variable outside the range
84_H	Response code RC8: Update error	
24_H	Response code RC16: Access restricted	Request from field device refused
23_H	Communication error or HART variable not present in the field device	
37_H	Initialization value from analog module	After module startup
00_H	Initialization value from S7 system	

Field devices with HART Revision 7 or higher

The quality code is formed from the 1st status byte (HART device status) and the "Device variable status" (DVS) of the response frames (HART command 9).

Quality code	Meaning (process status)	
80_H	Value is okay	
89_H	"Good" with "Low limit"	Process status, formed from the "Device variable status" (DVS) of the response frames with corresponding limits (see above).
$8A_H$	"Good" with "High limit"	
$28_{H...}2B_H$	"Bad"	
$68_{H...}6B_H$	"Poor accuracy"	
$78_{H...}7B_H$	"Manual" or "Fixed" (manually controlled or fixed value)	
$88_{H...}8B_H$	"More device variable state available" (additional status information available)	
84_H	Response code RC8: Update error	
24_H	Response code RC16: Access restricted	Request from field device refused
23_H	Communication error or HART variable not present in the field device	
37_H	Initialization value from analog module	After module startup
40_H	Read alternatively via command 3	
00_H	Initialization value from S7 system	

Parameters 5

5.1 Parameters of the AI 4xI 2-wire 4…20mA HART

You specify how the AI 4xI 2-wire 4…20mA HART analog module operates using parameters.

The parameters are subdivided into:

- Channel or technology parameters (data record 128)
  With PROFIBUS DP GSD configuration, there is a reduced configuration via the startup configuration (Prm frame).
- Parameters that define the display of HART variables in the address space of the module; HART mapping parameters (data record 140)

With configuration in the user program, the parameters are transferred to the modules via data records with the "WRREC" instruction; see section Parameter assignment and structure of the channel/technology parameters (Page 48).

5.1.1 Channel/technology parameters

Parameters of the AI 4xI 2-/4-wire ST

The effective range of the parameters depends on the type of configuration. The following configurations are possible:

- Distributed operation on PROFINET IO in an ET 200SP system
- Distributed operation on PROFIBUS DP in an ET 200SP system

Table 5-1 Configurable channel/technology parameters and their default settings

Parameter	Value range	Default	Configuration in RUN	Effective range with configuration software, e.g. STEP 7 (TIA Portal)	
				GSD file PROFINET IO	GSD file PROFIBUS DP
Diagnostics No supply voltage L+	• Disable • Enable	Disable	Yes	Channel	Module [2]
Diagnostics encoder supply	• Disable • Enable	Disable	Yes	Channel	Module [2]
Diagnostics overflow	• Disable • Enable	Disable	Yes	Channel	Module [2]
Diagnostics underflow	• Disable • Enable	Disable	Yes	Channel	Module [2]

Parameter	Value range	Default	Configuration in RUN	Effective range with configuration software, e.g. STEP 7 (TIA Portal)	
				GSD file PROFINET IO	GSD file PROFIBUS DP
Diagnostics wire break	• Disable • Enable	Disable	Yes	Channel	Module [2]
Diagnostics HART	• Disable • Enable	Disable	Yes	Channel	Module [2]
Measuring type/range	• Disabled • Current (2-wire transducer) 4..20 mA • Current (2-wire transducer) 4..20 mA HART	Current (2-wire transducer) 4..20 mA HART	Yes	Channel	Channel
Smoothing	• none • 4-fold (weak) • 16-fold (medium) • 32-fold (strong)	none	Yes	Channel	Channel
Interference frequency suppression	• 60 Hz (integration time 16.6 ms) • 50 Hz [1] (integration time 20 ms) • 10 Hz (integration time 100 ms)	50 Hz	Yes	Channel	Module [2]
Current limit for wire break diagnostics	• 1.185 mA • 3.6 mA	1.185 mA	Yes	Channel	Cannot be changed[2]
Number of HART preamble bytes	5…20	5	Yes	Channel	Cannot be changed[2]
Number of HART repetitions	0…255	5	Yes	Channel	Cannot be changed[2]
Potential group	• Use potential group of the left module • Allow new potential group	Use potential group of the left module	No	Module	Module

[1] Interference frequency suppression: Noise at 400 Hz is automatically included in the filtering at 50 Hz.

[2] Because the PROFIBUS GSD configuration limits the number of parameters to a maximum of 244 bytes per ET 200SP station, the options for parameter assignment are limited. In this case, the parameter assignment uses data record 245. If required, you can assign this parameter using data record 128 as described in the "GSD File PROFINET IO" column (see table above).

Note

Unused channels

"Disable" unused channels in the parameter assignment to improve the cycle time of the module.

A disabled channel always supplies the analog value $7FFF_H$.

See also

Parameter assignment and structure of the channel/technology parameters (Page 48)

5.1.2 Explanation of the channel/technology parameters

Diagnostics no supply voltage L+

Enabling of the diagnostics for no or insufficient supply voltage L+.

Diagnostics encoder supply

Enabling of the diagnostics in the event of a short-circuit of the encoder supply to ground or of an input to the encoder supply.

The short-circuit and underflow diagnostics can be enabled simultaneously. If both diagnostic events occur simultaneously, the short-circuit diagnostics information is output.

Diagnostics overflow

Enabling of the diagnostics when the measured value exceeds the overrange.

Diagnostics underflow

Enabling of the diagnostics when the measured value falls below the underrange.

Diagnostics wire break

Enabling of the diagnostics when the module has no current flow at the input or the current flow at the input is below the configured wire break limit.

The wire break and underflow diagnostics can be activated simultaneously. If both diagnostics events occur simultaneously, the wire break diagnostics information is output.

Diagnostics HART

Enabling of the diagnostics of the HART frame-specific monitoring and the status information supplied by the connected field device in the HART frame (HART device status).

Current limit for wire break diagnostics

You use this to specify the current limit for detecting wire breaks. If the current falls below the configured wire break limit, the measured value is declared invalid and, if wire break diagnostics is enabled, corresponding diagnostics information is generated. When value status is configured, the analog value is marked as invalid.

With a wire break limit of 3.6 mA, the measured value becomes invalid when the current falls below 3.6 mA and is marked as valid again when it rises above 3.8 mA.

There is no hysteresis for a wire break limit of 1.185 mA.

Measuring type/range

The AI 4xI 2-wire 4…20mA HART analog input module has the following measuring ranges:

Table 5-2 Measuring ranges

Measuring type	Measuring range	Resolution
Disabled	-	-
Current (2-wire transducer)	4 to 20 mA	15 bits + sign
Current (2-wire transducer)	4 to 20 mA HART	15 bits + sign

An overview of the measuring range as well as overflow, overrange, etc., can be found in the section Analog value representation (Page 65) and in Analog Value Processing function manual.

Smoothing

The individual measured values are smoothed by filtering. Smoothing can be set in 4 levels.

Smoothing time = number of module cycles (k) x cycle time of the module.

The following figure shows how many module cycles it takes for the smoothed analog value to approach 100%, depending on the configured smoothing. This applies to every signal change at the analog input.

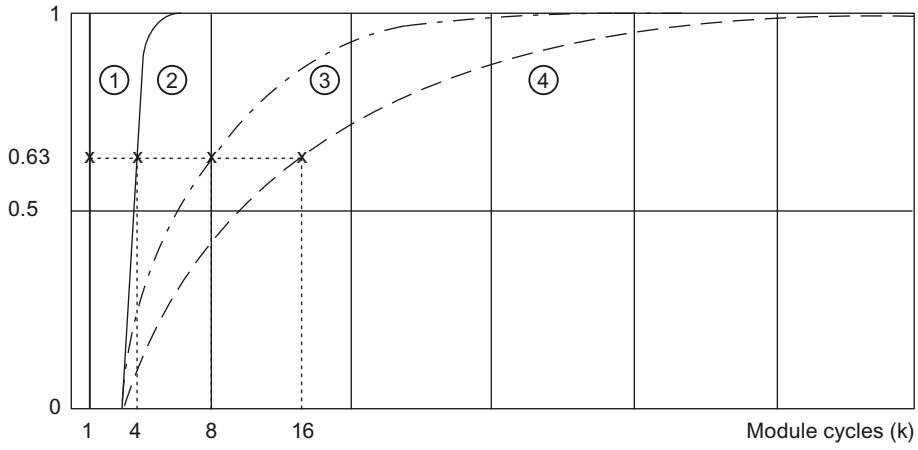

① No smoothing (k = 1)
② Weak (k = 4)
③ Medium (k = 8)
④ Strong (k = 16)

Figure 5-1 Smoothing of the analog value

Interference frequency suppression

Suppresses the interference affecting analog input modules that is caused by the frequency of the AC voltage network used.

The frequency of the AC supply system may interfere with the measured value, in particular in low voltage ranges. .

Number of HART preamble bytes

Specifies the number of preamble bytes that the module prefixes to each HART frame to be sent (FF_H). These bytes are used for synchronizing the frames.

Number of HART repetitions

Specifies the number of HART frame repetitions. If the analog module receives no response or receives a response with error to a HART frame sent to the field device, the frame is accordingly repeated, i.e., resent to the field device.

Because HART communication of the individual channels uses multiplex operation, faulty HART frames affect the other channels when the number of HART repetitions is high. In other words, the other channels are processed less frequently.

Potential group

Specifies that a BaseUnit with supply voltage infeed is located in this slot (see system manual ET 200SP Distributed I/O System (http://support.automation.siemens.com/WW/view/en/58649293)).

See also

Parameters of the AI 4xI 2-wire 4…20mA HART (Page 25)

5.1.3 HART mapping parameters

The HART mapping parameters allow a maximum of 4 HART variables to be configured (mapped) in the address space of the module.

Each HART variable occupies 5 bytes of input data. As soon as you configure (map) at least one HART variable in the input address space, the addresses for all four variables are occupied (20 bytes).

With PROFIBUS DP GSD configuration with HART variables, the HART variables cannot be directly configured. The four secondary variables are supplied in ascending channel order in the address space of the module.
When required, this can be changed using data record 140; see section AUTOHOTSPOT.

Parameters

Table 5-3 Configurable HART mapping parameters

Parameter		Value range	Default	Configuration in RUN	With GSD file PROFIBUS DP
Variable 0	Channel	0…3	0	Yes	0
	Type	• Non / Cir • Primary • Secondary • Tertiary • Quartenary	Non / Cir	Yes	Secondary
Variable 1	Channel	0…3	0	Yes	1
	Type	• Non / Cir • Primary • Secondary • Tertiary • Quartenary	Non / Cir	Yes	Secondary
Variable 2	Channel	0…3	0	Yes	2
	Type	• Non / Cir • Primary • Secondary • Tertiary • Quartenary	Non / Cir	Yes	Secondary

Parameter		Value range	Default	Configuration in RUN	With GSD file PROFIBUS DP
Variable 3	Channel	0…3	0	Yes	3
	Type	• Non / Cir • Primary • Secondary • Tertiary • Quartenary	Non / Cir	Yes	Secondary

Configuring/address space 6

6.1 Configuring

You configure the analog module AI 4xI 2-wire 4…20mA HART

- In the TIA Portal V13.0.1 or higher
- With STEP 7 V5.5 + SP4 or higher (HSP0263)
- Using GSD/GSDML

The GSD files for the ET 200SP Distributed I/O System can be downloaded from the Internet:

- GSDML (http://support.automation.siemens.com/WW/view/en/57138621)
- GSD (http://support.automation.siemens.com/WW/view/en/ 73016883)

Configuration options

The following configurations are possible:

- Without value status and without HART variables ("AI 4xI 2-wire 4…20 mA HART")
- Without value status, with HART variables ("AI 4xI 2-wire 4…20 mA HART, 4 variables")
- With value status and without HART variables ("AI 4xI 2-wire 4…20 mA HART, QI")
- With value status, with HART variables ("AI 4xI 2-wire 4…20 mA HART, 4 variables, QI")

With GSD/GSDML configuration, you must select one of the possible configurations directly.

The configuration for STEP 7 (TIA Portal or HW Config) is made indirectly via the parameters.

Restrictions

- Value status is not available for a PROFIBUS DP station.
- Downstream of a Standard IM (V1.1), the module can be operated only in the "Without value status and without HART variables" configuration.
- TIA Portal:
  - The module behind a standard IM (V1.1) is not available.
  - TIA Portal as of V14.0.1
    The module can be centrally configured on the following CPU:
    - CPU 1510SP-1 (as of V2.1)
    - CPU 1512SP-1 PN (as of V2.1)
  - TIA Portal as of V15.0.0
    The module can be configured as an open controller.
  - The module cannot be used behind fail-safe controllers.

6.2 Address space

The following figure shows the allocation of the address space of the AI 4xI 2-wire 4…20mA HART module for a configuration with value status (Quality Information, QI) and with HART variables.

The addresses for the value status are only available if the value status has been enabled or the corresponding configuration has been configured from the GSDML.

The addresses for the HART variables are only available if configuration/parameter assignment of the HART variables has been carried out or the corresponding configuration has been configured from the GSD/GSDML.

If the HART variables are configured and there is no value status configuration or parameter assignment, the HART variables begin directly after the analog values, thus starting from IB x + 8.

Table 6-1 Address space of analog input module AI 4xI 2-wire 4…20mA HART

Assignment in the process image input (PII)

Input value

	7	6	5	4	3	2	1	0	
IB x									Channel 0
IB x + 1									
IB x + 2									Channel 1
IB x + 3									
IB x + 4									Channel 2
IB x + 5									
IB x + 6									Channel 3
IB x + 7									

Value status (QI)

	7	6	5	4	3	2	1	0	
IB x + 8	0	0	0	0					Channel 0 to 3 (value status QI0 to QI3)

IB x+9 …. IB x+12	Value	Configured HART variable 0
IB x+13	Quality code	
IB x+14 …. IB x+17	Value	Configured HART variable 1
IB x+18	Quality code	
IB x+19 …. IB x+22	Value	Configured HART variable 2
IB x+23	Quality code	
IB x+24 …. IB x+27	Value	Configured HART variable 3
IB x+28	Quality code	

Evaluating the value status

If you enable the value status for the analog module, an additional byte is occupied in the input address space. Bits 0 to 3 in this byte are assigned to the corresponding channel. The provide information about the validity of the analog value, namely irrespective of the diagnostics enables.

Bit = 1: There is no error in the analog value or the analog value acquisition of the channel.

Bit = 0: The analog value of the channel cannot be correctly acquired.
The channel is disabled; there is a fault in the wiring or module.

Evaluating HART variables

If you have configured (mapped) HART variables for the analog module, four HART variables with 5 bytes each are stored in the input address space.

Each HART variable consists of a 4-byte real value and a quality code byte. The quality code describes the validity of the value; see section HART variables (Page 22) .

Interrupts/diagnostics alarms

7

7.1 Status and error displays

LED displays

The figure below shows the status and error displays of the AI 4xI 2-wire 4…20mA HART analog input module.

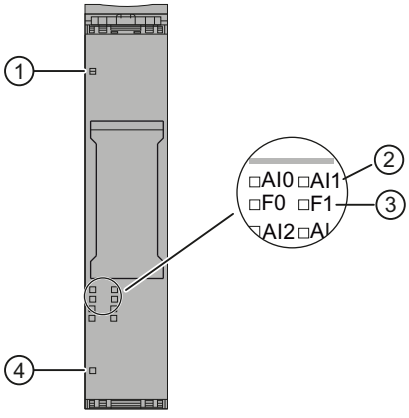

① DIAG (green/red)
② Channel status (green)
③ Channel fault (red)
④ PWR (green)

Figure 7-1 LED displays

Meaning of the LED displays

The following tables show the meaning of the status and error displays. Measures for dealing with diagnostic alarms can be found in the section Diagnostics alarms (Page 40).

Table 7-1 Status display of the channel status/channel fault LEDs

LEDs		Meaning
Channel status	Channel fault	
□ Off	□ Off	Channel disabled or module switched off
■ On	□ Off	Channel enabled and no channel diagnostics present

LEDs		Meaning
Channel status	Channel fault	
□ Off	■ On	Channel enabled and channel diagnostics present
■ On	■ On	Channel enabled and **only** HART channel diagnostics present

Table 7-2 DIAG LED error display

DIAG LED	Meaning
□ Off	Backplane bus supply of the ET 200SP is not OK or switched off
☼ Flashes	Module parameters not assigned
■ On	Module parameters assigned and no module diagnostics
☼ Flashes	Module parameters assigned and module diagnostics, at least one error is currently present

Table 7-3 Status display of the PWR LED

PWR LED	Meaning
□ Off	No supply voltage L+
■ On	Supply voltage L+ present

7.2 Interrupts

The AI 4xI 2-wire 4…20mA HART analog input module supports diagnostic interrupts.

Diagnostic interrupt

The module generates a diagnostic interrupt for the following events:

- Channel/component temporarily unavailable
- Short-circuit / Overload of encoder voltage
- Wire break
- Low limit violated
- High limit violated
- Error
- No supply voltage L+
- HART communication error or HART field device error

7.3 Diagnostics alarms

A diagnostic alarm is generated for each detected diagnostic event. The DIAG LED flashes on the module.

There is additionally a channel-specific display of the diagnostics through the corresponding channel fault/channel status LEDs.

The diagnostic alarms can, for example, be read from the diagnostic buffer of the CPU or be displayed in STEP 7 using the Online and Diagnostics view. You can evaluate the error codes with the user program.

Table 7-4 Diagnostic alarms, their meaning and how to deal with them

Diagnostic alarm	Error code	Meaning	Remedy
Channel/component temporarily unavailable	$1F_H$	• Update of the firmware is being performed or has been canceled. The module does not perform any measurements during this time.	
Short-circuit/overload at external encoder supply *	$10E_H$	• Short-circuit of the encoder supply to M • Short-circuit of the input to the encoder supply • Overload of the encoder supply	• Correct the module/encoder tuning
Wire break	6_H	• Impedance of encoder circuit too high. • Wire break between the module and sensor • Channel not connected (open)	• Use a different encoder type or modify the wiring, for example, using cables with a larger cross-section • Connect the cable • Disable diagnostics • Connect the sensor contacts
High limit violated	7_H	• The analog value is above the overrange.	• Correct the module/encoder tuning
Low limit violated	8_H	• The analog value is below the underrange.	• Correct the module/encoder tuning
Error	9_H	• Internal module error occurred.	• Replace module
No supply voltage	11_H	• No or insufficient supply voltage L+	• Check wiring of the supply voltage L+ on the BaseUnit • Check BaseUnit type
HART communication error	141_H	• HART field device is not responding • Timing error • HART field device has not understood the sent command (1st status byte)	• Check the process wiring • Correct the parameter assignment • Set output current of ≥4 mA • Increase the number of assigned repetitions

Diagnostic alarm	Error code	Meaning	Remedy
HART primary variable outside range	142_H	• Incorrect parameters in the HART field device • HART field device is at "Primary variable outside the limits" in simulation mode • Incorrect measuring point • Primary variable assigned outside the limits	• Check the parameter assignment of the HART device • Correct the simulation • Check whether the correct transducer is connected
HART output current of the field device saturated	143_H	The output current of the HART field device is saturated: • Incorrect parameters in the HART field device • HART field device is set to a measured value that is too high in simulation mode • Incorrect measuring point	
HART output current of the field device specified	144_H	The output current of the HART field device is set to a fixed value: • Incorrect parameters in the HART field device • HART field device is set to a measured value that is too high in simulation mode • Incorrect measuring point	
HART secondary variable outside the limits	149_H	• Incorrect parameters in the HART field device • HART field device is at "Non-primary variable outside the limits" in simulation mode • Incorrect measuring point • Non-primary variable assigned outside the limits	
HART - more status available	145_H	• The identifier for "Additional status information available" of the HART field device was set in the HART device status (in the 2nd status byte).	• Read status using HART command 48 and eliminate error/cause, if necessary
HART configuration changed (reset again automatically by the module after approximately 1 minute)	146_H	• The identifier for "Parameter reassignment" of the HART field device was set in the HART device status (in the 2nd status byte).	• If you do not want a diagnostic interrupt to be triggered for parameter reassignment, the diagnostic interrupt must not be enabled.
HART malfunction in field device	147_H	• The field device signals a malfunction in the HART device status (in the 2nd status byte)	• Read status using HART command 48 and eliminate error/cause, if necessary • Replace the field device

* Short-circuit of the encoder supply to ground and/or of the input signal to the encoder supply of a channel can have a temporary effect on other channels (duration < 0.5 s). This means the short-circuit diagnostic information can also be signaled on unaffected channels and/or the measured value can be affected temporarily.

Technical specifications 8

8.1 Technical specifications of the AI 4xI 2-wire 4…20mA HART

Technical specifications of the AI 4xI 2-wire 4…20mA HART

6ES7134-6TD00-0CA1	
Product type designation	AI 4xI 2-wire 4…20mA HART
General information	
Usable BaseUnits	BU type A0, A1
HART support	Rev. 5 to Rev. 7
Product functions	
I&M data	Yes, I&M0 to I&M3
Firmware update capability	Yes
Engineering with	
STEP 7 TIA Portal can be configured/integrated as of version	V13 + SP1
STEP 7 can be configured/integrated as of version	V5.5 + SP4 + HSP0263
PROFIBUS as of GSD version/GSD revision	GSD V3.0
PROFINET as of GSD version/GSD revision	GSDML V2.31
CiR Configuration in RUN	
Configuration in RUN possible	Yes
Installation type/mounting	
Rack mounting possible	Yes
Front installation possible	Yes
Rail mounting possible	Yes
Wall/direct mounting possible	No
Supply voltage	
Rated value (DC)	24 V / 110 mA
Valid range low limit (DC)	19.2 V
Valid range high limit (DC)	28.8 V
Input current	
Current consumption, max.	25 mA; without encoder supply
Encoder supply	
24 V encoder supply	Yes
Short-circuit protection	Yes
Output current per channel (4 channels), max.	20 mA; max. 50 mA per channel for a duration < 10 s
Load resistance of the encoder	> 750 Ω for L+ = 24 V
Power loss	
Power loss, typ.	0.65 W; without encoder

6ES7134-6TD00-0CA1	
Address space per module	
Without value status and without HART variables	8 bytes
With value status and without HART variables	9 bytes
Without value status, with HART variables	28 bytes
With value status, with HART variables	29 bytes
Analog inputs	
Number of analog inputs	4
Maximum permitted input current for current input (destruction limit)	50 mA
Input ranges (rated values), currents	
Current 4 mA to 20 mA	Yes, 15 bits + sign
Input resistance (4 to 20 mA)	280 Ω; + approx. 0.35 V diode forward voltage
Cable length	
Cable length shielded, max.	800 m
Analog value formation	
Measuring principle	Integrating (sigma-delta)
Integration and conversion time / resolution per channel	
Resolution with overrange (bits including sign), max.	16 bits
Interference suppression for interference frequency f1 in Hz	10 / 50 / 60, channel-by-channel
Basic conversion time	depending on the interference voltage suppression: at 60Hz: 18.75 ms at 50Hz: 22.5 ms at 10Hz: 112.5 ms
Measured value smoothing	
Configurable	Yes (none, weak, medium, strong), channel-by-channel
Errors/accuracies	
Linearity error (in relation to input range), (+/-)	± 0.01 %
Temperature error (in relation to input range), (+/-)	± 0.005 %
Crosstalk between inputs, min.	60 dB
Repeat accuracy in settled state at 25 °C (in relation to input range), (+/-)	± 0.05 %
Operational limit in the entire temperature range	
Current in relation to input range, (+/-)	± 0.5 %
Basic error limit (operational limit at 25 °C)	
Current in relation to input range, (+/-)	± 0.3 %
Influence of a HART signal modulated on the input signal in relation to input range	
Error with integration time 16.6 ms	± 0.05%
Error with integration time 20 ms	± 0.04%
Error with integration time 100 ms	± 0.02%
Interference voltage suppression for f = n x (f1 +/- 1 %), f1 = interference frequency	

6ES7134-6TD00-0CA1	
Series-mode interference (peak of the interference < nominal value of the input range), min.	60 dB
Interrupts/diagnostic/status information	
Diagnostic interrupt	Yes
Diagnostic alarms	
Monitoring of supply voltage	Yes
Wire break	Yes; channel-by-channel
Short-circuit	Yes; channel-by-channel, short-circuit of the encoder supply to ground or short-circuit of an input to the encoder supply
Underflow/overflow	Yes; channel-by-channel
HART	Yes; channel-by-channel
Diagnostic display LED	
Monitoring of supply voltage	Yes; green PWR LED
Channel status display	Yes; green LED
For channel diagnostics	Yes, red LED
For module diagnostics	Yes; green/red DIAG LED
Electrical isolation	
Between the channels	No
Between the channels and the backplane bus	Yes
Between the channels and the supply voltage of the electronics	No
Isolation, designed for basic isolation between channels and backplane bus	60 V AC / 75 V DC
Isolation	
Isolation tested with	500 V AC or 707 V DC (type test)
Operating temperature	
Horizontal mounting position, min.	0°C
Horizontal mounting position, max.	60°C
Vertical mounting position, min.	0°C
Vertical mounting position, max.	50°C
Dimensions	
Width	15 mm
Height	73 mm
Depth	58 mm
Weights	
Weight, approx.	31 g

Dimension drawing

See manual ET 200SP BaseUnits (http://support.automation.siemens.com/WW/view/en/59753521)

Parameter data records

9

Parameter assignment in the user program

You have the option of reassigning parameters for individual channels of the module and for the mapping of HART variables in RUN without affecting the other channels.

Changing parameters in RUN

The "WRREC" instruction is used to transfer the parameters to the module.

- Channel/technology parameters using data record 128
- The HART mapping using data record 140.

The parameters assigned with STEP 7 are not changed permanently in the CPU, which means the parameters assigned with STEP 7 are valid again after a restart.

Output parameter STATUS

If errors occur when transferring parameters with the "WRREC" instruction, the module continues operation with the previous parameter assignment. The STATUS output parameter contains a corresponding error code.

You will find a description of the "WRREC" instruction and the error codes in the STEP 7 online help.

Parameters

Only the values specified in each case in the following are permitted. Values that are not listed are rejected by the analog module.

Each parameter data record is checked by the analog module. If an incorrect parameter is detected, the complete data record is discarded and the parameters of the analog module remain unchanged.

9.1 Parameter assignment and structure of the channel/technology parameters

Structure of data record 128

Data record 128 has a length of 42 bytes and contains the channel/technology parameters of all four channels (10 bytes per channel).

The parameters are divided into parameters that influence the actual analog value acquisition, diagnostic enables, and basic parameters of HART communication.

You can use data records 131 to 134 to assign and change additional parameters and HART-specific settings. See section HART-specific settings (Page 57).

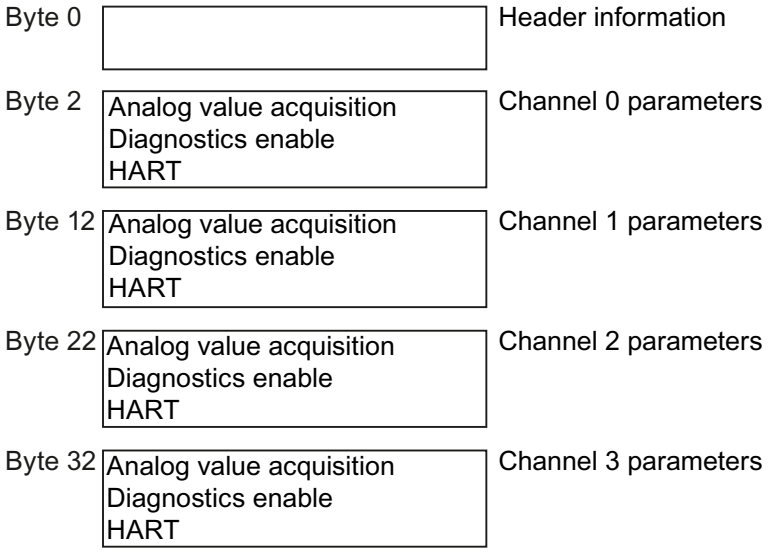

Figure 9-1 Structure of data record 128

Header information

The figure below shows the structure of the header information.

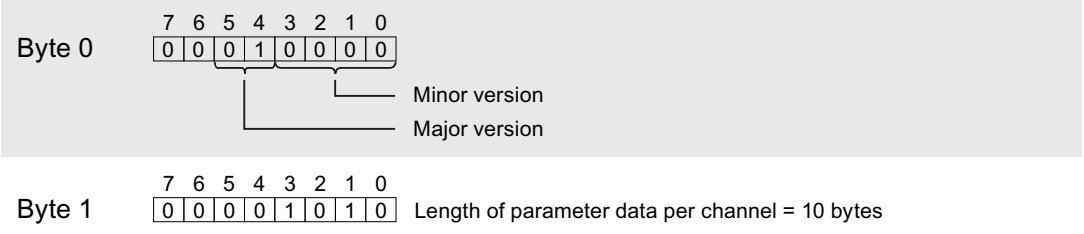

Figure 9-2 Header information

Parameters

The figure below shows the structure of the parameters for channels 0 to 3.

All unused bits and the bits or bytes marked with "reserved" must be set to zero.
You enable a parameter by setting the corresponding bit to "1" or the appropriate value.

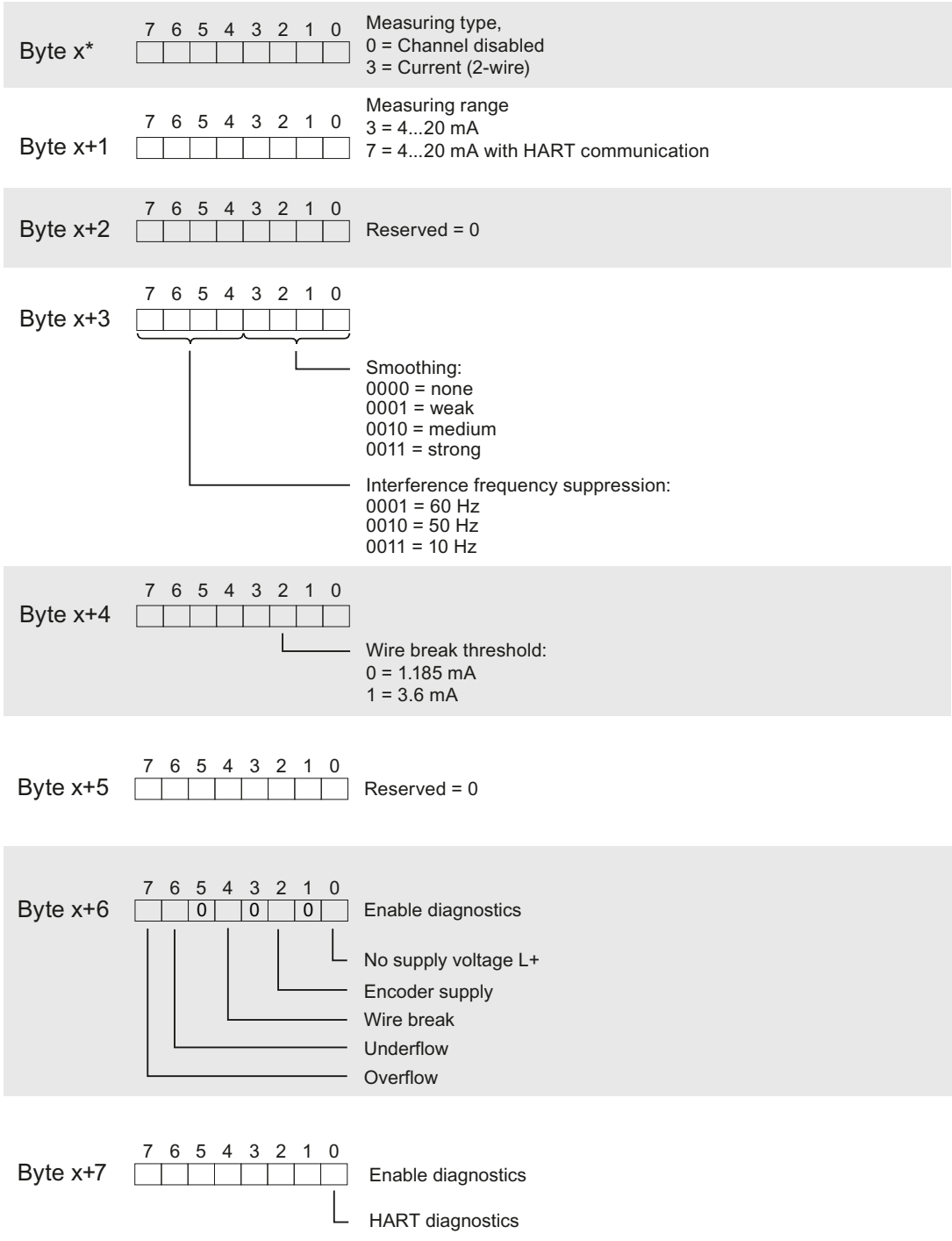

	7	6	5	4	3	2	1	0	
Byte x+8									Number of HART preamble bytes: 5...20 (default = 5)
Byte x+9									Number of HART retries: 0...255, internally limited to maximum 10 (default = 5)

* x = 2 + (channel number * 10); with channel number 0 ….3

Figure 9-3 Structure of bytes x to x+39 for channels 0 to 3

9.2 Parameter assignment and structure of the HART mapping parameters

Structure of data record 140

Data block 140 has a total length of 12 bytes.

Using the parameters of data record 140, you can configure/map up to four HART variables of the individual channels in the input address space of the module if the corresponding configuration is selected, see "Configuring (Page 33)".

Header information

The figure below shows the structure of the header information.

	7 6 5 4 3 2 1 0	
Byte 0		Version = 0
Byte 1		Block length = 11 bytes
Byte 2		Block type = 75
Byte 3		Reserved = 0

Figure 9-4 Header information

Parameters

The following figure shows the parameter assignment of the four HART variables 0...3.

	7 6 5 4 3 2 1 0	
Byte x*		Channel number: 0...3
Byte x+1		Variable marking: 0 = non 1 = Primary 2 = Secondary 3 = Tertiary 4 = Quartenary 15 = CiR

* x = 4 + (HART variable * 2); with HART variable 0….3

Figure 9-5 Parameters

Note

Memory area

Allocation of the memory area based on the configuration of the HART variables:

- All four HART variables are set to 0 = "none":
  No memory area is reserved/allocated for HART variables in the input address range.
- As least one HART variable is set to not equal to 0 = "none":
  The entire memory area always allocated to the four HART variables in the input address space. All remaining HART variables are preset to 15 = "CiR" and 0 = "none" is no longer allowed.

HART operating data records 10

Reading/writing data in RUN

HART operating data records are transferred to the module with the "WRREC" instruction and read from the module with the "RDREC" instruction.

Errors during the transfer are indicated at output parameter STATUS of the "WRREC" or "RDREC".

The following HART operating data records are available:

Data record number	Description	Length (bytes)	Writable	Readable
80	HART request Channel 0	240	Yes	Yes
81	HART response Channel 0	240	No	Yes
80	HART request Channel 1	240	Yes	Yes
81	HART response Channel 1	240	No	Yes
80	HART request Channel 2	240	Yes	Yes
81	HART response Channel 2	240	No	Yes
80	HART request Channel 3	240	Yes	Yes
81	HART response Channel 3	240	No	Yes
121	HART variables	80	No	Yes
131	HART parameters Channel 0	8	Yes	Yes
132	HART parameters Channel 1	8	Yes	Yes
133	HART parameters Channel 2	8	Yes	Yes
134	HART parameters Channel 3	8	Yes	Yes
148	HART directory	17	No	Yes
149	HART feature data	3	No	Yes

10.1 HART directory

Structure of the HART directory

Byte	Meaning	Comment
0	Profile Revision Number	= 2, 0 (Revision 2.0)
1		
2	Index of Client Management	= 255 (not relevant)
3	Number of Clients	= 1
4	Number of Channels	= 4
5	Write Read Index Offset	= 1 (The response to a request data record is made with the data record number of the request data record + 1)
6	Index of HMD Feature Parameter	= 149
7	Index of HMD Module Parameter	= 255 (not relevant)
8	Start Index of Burst Buffer Area	= 255 (not relevant)
9+n	Index of HMD Channel Parameter (Channel n)	= 131+n
9+n+4	Index of HART Client Channel Message Data	= 80+(2*n) The HART request data records cannot be configured. Data records starting from data record number 80 (80, 82, 84, 86) are used.

10.2 HART feature data

Structure of the HART feature data

Byte	Meaning	Comment
0	Byte 0	= 0x62 Bit1 = 1: "Parameter check result is given with a read response" Bit5 = 1: "Compact format is supported"
1	Byte 1	= 0
2	Max Length Data Unit	= 240 (maximum length of the HART request data records)

10.3 HART variable data record

The AI 4xI 2-wire 4…20mA HART analog module supports a maximum of 4 HART variables per channel that are read cyclically, provided this is supported by the connected field device. These 16 HART variables are are made available in a readable manner in HART variable data record 121.

Each HART variable consists of a 4-byte real value and a quality code byte. See section 4.4.1 "Quality code".

Structure of the HART variable data record

Byte	Meaning	
Channel 0		
0…3	Value	Primary Variable (PV)
4	Quality code	
5…8	Value	Secondary Variable (SV)
9	Quality code	
10…13	Value	Tertiary (TV)
14	Quality code	
15…18	Value	Quartenary (QV)
19	Quality code	
Channel 1		
20…39	HART variables same as for Channel 0	
Channel 2		
40…59	HART variables same as for Channel 0	
Channel 3		
60…79	HART variables same as for Channel 0	

If HART is not enabled or the respective HART variable is not supplied from the connected field device, the corresponding variable = 0 and the QC = 0x37 (initialization value from the analog module).

10.4 HART-specific settings

The HART communication is available using standard parameter assignment (see section 9.1 "Parameter assignment and structure of the channel/technology parameters").

Additional HART-specific settings can be specified on a channel-specific basis using data records 131 to 134.

The parameters assigned with STEP 7 are not changed permanently in the CPU, which means the parameters assigned with STEP 7 are valid again after a restart.

Each parameter reassignment of the analog module resets the HART-specific settings back to the initial values from parameter data record 128.

Where there is no supply voltage L+, the module does not assume the HART-specific settings.

Channel	Data record number
0	131
1	132
2	133
3	134

Structure of the HART-specific settings

Byte 0	7 6 5 4 3 2 1 0 Must be 128	Bit 7 is reset after evaluation of data record by module
Byte 1	7 6 5 4 3 2 1 0 Must be 5	Offset for manufacturer-specific parameters according to HART specification
Byte 2	7 6 5 4 3 2 1 0	Number of HART retries (0....255, internally limited to 10) Initial value from parameter data record 128
Byte 3	7 6 5 4 3 2 1 0	Number of HART preamble bytes (0, 5...20, 255) * Initial value from parameter data record 128
Byte 4	7 6 5 4 3 2 1 0 Must be 0	Field device mode according to HART specification
Byte 5	7 6 5 4 3 2 1 0	Client timeout in s (1 ... 255 s) Initial value = 60 s
Byte 6	7 6 5 4 3 2 1 0 0 0 0 0 0 0	1 = Enable HART 0 = Disable HART 1 = Primary master 0 = Secondary master Initial value according to HART activation from parameter data record 128 Always as primary master
Byte 7	7 6 5 4 3 2 1 0 Must be 0	Reserved

Figure 10-1 Settings

* When the number of HART preamble bytes = 0, the number of preamble bytes required by the connected field device are used, but no fewer than 5.
When the number of HART preamble bytes = 255, then 20 preamble bytes are used.

10.5 HART request and response data records

HART commands are processed on a channel-specific basis via a separate command interface with one request data record and one response data record in each case.

Channel	Data record number	
	Request to the field device	Response from the field device
0	80	81
1	82	83
2	84	85
3	86	87

Structure of request data records 80, 82, 84, 86

Byte	Meaning	Comment
0	Request control	
1	Number of preamble bytes	5....20, 255
2…239	Communication data according to HART specification	

Coding "Request control":

Bit 0…1: Reserved = 0
Bit 2: 0 = Parameters are not checked
Bit 3...4: Reserved = 0
Bit 5: 0 = Transparent format *
1 = Compact format
Bit 6: 1 = Enable SHC mode **
Bit 7: 0 = HART Request

* HART commands are processed by the analog module in transparent message format and in compact message format. However, the response data from the module is always made available in transparent message format.

** Processing of a sequence of HART commands as an SHC sequence affects all other channels with HART enabled. See section 4.3 "HART command interface", SHC sequence.

Note

When "Number of Preamble Bytes" = 255, the number of preambles set with the parameters is used. The default setting is five. You can re-configure the number of preamble bytes using the parameters and HART-specific settings (see section HART-specific settings (Page 57)).

Structure of response data records 81, 83, 85, 87

In case of response error

Byte	Meaning	Comment
0	Response control	
1	HART group error display	
2	Protocol error	
3…239	Response data according to HART specification	Only present when "Response result" = 6 = "Error, with data"

In case of response error

Byte	Meaning	Comment
0	Response control	
1	HART group error display	
2…239	Response data according to HART specification	Only present when "Response result" = 4 = "Successful, with data"

Coding "Response control":

Bits 0-2:	Response result (processing status) 0 = Inactive 1 = Inactive (reserved) 2 = Waiting 3 = Waiting, executing 4 = Successful, with data 5 = Successful, without data 6 = Error, with data 7 = Error, without data
Bit 3:	0 = Burst mode not active;
Bit 4:	0 = Response data come directly from the HART device
Bit 5:	0 = Response data in transparent message format
Bit 6:	0 = SHC mode not active 1 = SHC mode active
Bit 7:	0 = HART response

Coding "HART group error display"

Bit number	Meaning	Explanation
0	Additional status information available	(2nd HART status byte) You obtain additional status information, if required, with HART command 48.
1	HART communication error	The field device has detected a communication error when receiving the command. The error information can be found in the 1st HART status byte.
2	Parameter check	0: HMD parameters unchanged 1: Check HMD parameters

Bit number	Meaning	Explanation
3	Reserved	Always 0
4…7	HART protocol error during response	0: Unspecified error 1: HMD error 2: Channel fault 3: Command error 4: Query error 5: Response error 6: Query rejected 7: Profile query rejected 8: Manufacturer-specific query rejected 9 - 15: Not used

Coding "HART protocol error during response"

HART protocol error during response	Meaning	Explanation
0	Unspecified error	Always 0
1	HMD error	0: Not specified 1: Internal communication error 2: Parameter assignment error 3: HW fault 4: Wait time expired 5: HART timer expired 6…127: Reserved 128...255: Manufacturer-specific
2	Channel fault	0: Not specified 1: Line fault 2: Short-circuit 3: Open line 4: Low current output 5: Parameter assignment error 6…127: Reserved 128…255: Manufacturer-specific
3	Command error	0-127: HART protocol, Bit 7 = Always 0
4	Query error	Bit 0 = 0: Reserved Bit 1 = 1: Receive buffer overflow Bit 2 = 0: Reserved Bit 3 = 1: Checksum error Bit 4 = 1: Framing error Bit 5 = 1: Overflow error Bit 6 = 1: Parity error Bit 7 = 1: Reserved

HART protocol error during response	Meaning	Explanation
5	Response error	Bit 0 = 1: GAP timeout Bit 1 = 1: Receive buffer overflow Bit 2 = 1: Timeout Bit 3 = 1: Checksum error Bit 4 = 1: Framing error Bit 5 = 1: Overflow error Bit 6 = 1: Parity error Bit 7 = 1: Reserved
6	Query rejected	0: Unspecified 1: Compact format not supported 2: SHC not supported 3: Impermissible command 4: No resources 5...127: Reserved 128...255: Manufacturer-specific
7	Profile query rejected	0: Not specified (not supported)
8	Manufacturer-specific query rejected	0: Not specified (not supported)

Example of HART programming (HART command interface)

For HART channel 0, the command 01 is to be sent in transparent message format to the HART field device with address "98 CF 38 84 F0".
A positive edge at input 4.0 of a digital input module leads to the writing of the HART command.

The following assumptions are made:

- The module address of the AI 4xI 2-wire 4…20mA HART analog module is 512 (200_H).
- The data record is stored in DB80: starting from address 0.0, length of 11 bytes.
- In this example, DB80 (request data record for channel 0) consists of 11 bytes.

```
STL                                 Explanation
    A I 4.0
    FP M 101.0
    = M 104.0
m2: CALL SFC 58
    REQ :=M104.0                    Write request
    IOID :=B#16#54                  Address range ID
    LADDR :=W#16#200                Module address
    RECNUM :=B#16#50                Data record number 80
    RECORD :=P#DB80.DBX0.0 BYTE     Data record with length of 11 bytes (must corre-
11                                  spond to the exact length that is to be transferred)
```

```
RET_VAL :=MW93                RET_VAL of SFC 58 (OK/error/...)
BUSY :=M51.0                  Write operation not yet completed
A M 51.0
SPB m2
BE
```

Table 10-1 DB80: Transparent message format

Byte	Initial value (hex)	Comment (Hex)
0	00	Req_Control (00 = Transparent message format. 40 = Transparent message format with SHC sequence)
1	05	Number of preamble bytes (05-14)
2	82	Start character (02 = Short Frame with command 0) (82 = Long Frame with other commands)
3	98	Address (with command 0, the address is exactly 1 byte long and has the value 0.)
4	CF	
5	38	
6	84	
7	F0	
8	01	Command (CMD)
9	00	Length in bytes
10	98	Checksum (CHK) (calculated starting from byte 2 "Start character" up to the next to last byte)

A HART command can also be sent in compact message format. In this case, the data that is transferred via DB 80 is reduced to 4 bytes.

Table 10-2 DB80: Compact message format

Byte	Initial value (hex)	Comment (Hex)
0	20	Req_Control (20 = Compact message format. 60 = Compact message format with SHC sequence)
1	05	Number of preamble bytes (05-14)
2	01	Command (CMD)
3	00	Length in bytes

You can learn when the response from the field device was received by cyclically reading data record DS81 for HART channel 0. The response is always supplied in transparent message format.

Table 10-3 FC81: Reading of the response to DB81 with SFC 59

```
STL                           Explanation
m3: CALL SFC 59
```

```
    REQ :=1                       Read request
    IOID :=B#16#54                Address range ID
    LADDR :=W#16#200              Module address of the HART-AI
    RECNUM :=B#16#51              Data record number 81
    RECORD :=P#DB81.DBX0.0 BYTE   Data record
75
    RET_VAL :=MW100               RET_VAL of SFC 59 (OK/error/...)
    BUSY :=M49.1                  Read operation not yet completed
    A M 49.1
    SPB m3
    BE
```

The program part A M 49.1 to SPB m3 is only required if reading is to occur synchronously.

As long as "0x03" is in byte 0 of DB81, the response has not been received from the field device. Positive response data that you can evaluate is available from the field device as soon as bit 2 = 1 in byte 0.
If there are errors in the response data, see the "HART group fault display" tables in byte 1 or "HART protocol error during response" in byte 2 of the field device response.

Analog value representation 11

Table 11-1 Resolution of the analog values

Resolution in bits including sign	Values		Analog value	
	Decimal	Hexadecimal	High byte	Low byte
16	1	1_H	Sign 0 0 0 0 0 0 0	0 0 0 0 0 0 0 1

Representation / Value range

The table below contains the decimal and hexadecimal values (codings) of the possible current measuring ranges.

Table 11-2 Current measuring range 4 to 20 mA / 4…20 mA HART

Values		Current measuring range	Range
Dec.	Hex.	4 to 20 mA	
32767	7FFF	> 22.81 mA	Overflow
32511	7EFF	22.81 mA	Overrange
27649	6C01		
27648	6C00	20 mA	Nominal range
20736	5100	16 mA	
1	1	4 mA + 578.7 nA	
0	0	4 mA	
-1	FFFF		Underrange
-4864	ED00	1.185 mA	
-32768	8000	< 1.185 mA	Underflow

11.1 Representation of input ranges

In the following tables, you can find the digitized representation of the bipolar and unipolar input ranges. The resolution is 16 bits.

Table 11-3 Bipolar input ranges

Dec. value	Measured value in %	Data word																Range
		2^{15}	2^{14}	2^{13}	2^{12}	2^{11}	2^{10}	2^{9}	2^{8}	2^{7}	2^{6}	2^{5}	2^{4}	2^{3}	2^{2}	2^{1}	2^{0}	
32767	>117.589	0	1	1	1	1	1	1	1	1	1	1	1	1	1	1	1	Overflow
32511	117.589	0	1	1	1	1	1	1	0	1	1	1	1	1	1	1	1	Overrange
27649	100.004	0	1	1	0	1	1	0	0	0	0	0	0	0	0	0	1	
27648	100.000	0	1	1	0	1	1	0	0	0	0	0	0	0	0	0	0	Nominal range
1	0.003617	0	0	0	0	0	0	0	0	0	0	0	0	0	0	0	1	
0	0.000	0	0	0	0	0	0	0	0	0	0	0	0	0	0	0	0	
-1	-0.003617	1	1	1	1	1	1	1	1	1	1	1	1	1	1	1	1	
-27648	-100.000	1	0	0	1	0	1	0	0	0	0	0	0	0	0	0	0	
-27649	-100.004	1	0	0	1	0	0	1	1	1	1	1	1	1	1	1	1	Underrange
-32512	-117.593	1	0	0	0	0	0	0	1	0	0	0	0	0	0	0	0	
-32768	<-117.593	1	0	0	0	0	0	0	0	0	0	0	0	0	0	0	0	Underflow

Table 11-4 Unipolar input ranges

Dec. value	Measured value in %	Data word																Range
		2^{15}	2^{14}	2^{13}	2^{12}	2^{11}	2^{10}	2^{9}	2^{8}	2^{7}	2^{6}	2^{5}	2^{4}	2^{3}	2^{2}	2^{1}	2^{0}	
32767	>117.589	0	1	1	1	1	1	1	1	1	1	1	1	1	1	1	1	Overflow
32511	117.589	0	1	1	1	1	1	1	0	1	1	1	1	1	1	1	1	Overrange
27649	100.004	0	1	1	0	1	1	0	0	0	0	0	0	0	0	0	1	
27648	100.000	0	1	1	0	1	1	0	0	0	0	0	0	0	0	0	0	Nominal range
1	0.003617	0	0	0	0	0	0	0	0	0	0	0	0	0	0	0	1	
0	0.000	0	0	0	0	0	0	0	0	0	0	0	0	0	0	0	0	
-1	-0.003617	1	1	1	1	1	1	1	1	1	1	1	1	1	1	1	1	Underrange
-4864	-17.593	1	1	1	0	1	1	0	1	0	0	0	0	0	0	0	0	
-32768	<-17.593	1	0	0	0	0	0	0	0	0	0	0	0	0	0	0	0	Underflow

11.2 Representation of analog values in the current measuring ranges

The following tables list the decimal and hexadecimal values (codes) of the possible current measuring ranges.

Table 11-5 Current measuring range ±20 mA

Values		Current measuring range	Range
Dec.	Hex.	±20 mA	
32767	7FFF	>23.52 mA	Overflow
32511	7EFF	23.52 mA	Overrange
27649	6C01		
27648	6C00	20 mA	Nominal range
20736	5100	15 mA	
1	1	723.4 nA	
0	0	0 mA	
-1	FFFF		
-20736	AF00	-15 mA	
-27648	9400	-20 mA	
-27649	93FF		Underrange
-32512	8100	-23.52 mA	
-32768	8000	<-23.52 mA	Underflow

Table 11-6 Current measuring ranges 0 to 20 mA and 4 to 20 mA

Values		Current measuring range		Range
Dec.	Hex.	0 to 20 mA *	4 to 20 mA	
32767	7FFF	>23.52 mA	>22.81 mA	Overflow
32511	7EFF	23.52 mA	22.81 mA	Overrange
27649	6C01			
27648	6C00	20 mA	20 mA	Nominal range
20736	5100	15 mA	16 mA	
1	1	723.4 nA	4 mA + 578.7 nA	
0	0	0 mA	4 mA	
-1	FFFF			Underrange
-4864	ED00	-3.52 mA	1.185 mA	
-32768	8000	<-3.52 mA	<1.185 mA	Underflow

* For measuring type "2-wire transducer", negative values are not possible for the range "0 to 20 mA". Therefore, no underrange or underflow exists here.

Index

A

Address assignment, 22
Address space, 34
AI 4xI 2-wire 4…20mA HART
    Accessories, 10
    Address space, 34
    Channel parameters, 25
    Commissioning, 19
    Configuration, 19
    Diagnostic alarm, 40
    Diagnostic interrupt, 39
    Functions, 9
    Measuring ranges, 28
    Parameters, 25
    Properties, 9
    Technical specifications, 43
    Technology parameters, 25
    Terminal assignment, 11

B

BaseUnit, 11
Burst mode, 17

C

Channel fault LED, 37
Channel parameters, 25, 48
Channel status LED, 37
Command interface, 20, 59
Commissioning, 19
Communication, 57
Configuration, 19
    HART variable, 22
Conventions, 3

D

Data record 128, 48
    Header information, 48
    Parameters, 48
Data record 140, 51
    Header information, 51
    Parameters, 51
Data records, 20
Device status, 16
DIAG LED, 38
Diagnostic alarm, 40
Diagnostic interrupt, 39
Documentation
    Validity, 3

E

Error displays, 37
Error management, 19

F

Fast mode, 17
Feature data, 55
Field devices
    Parameter reassignment, 19

H

HART
    Applications, 13
    Command, 59
    Command interface, 20, 62
    Commands, 15
    Communication, 14, 57
    Definition, 13
    Device status, 16
    Directory, 54
    Error management, 19
    Evaluating variables, 35
    Fast mode, 17
    Feature data, 55
    Mapping parameters, 30
    Operating data records, 53
    Parameter assignment tool, 18
    Principle of operation, 14
    Programming, 62
    Protocol, 13, 16
    Settings, 57
    Signal, 14
    System environment, 18
    Variable data record, 56
    Variables, 22
HART variables
    Configuring, 22
HCF, 13

I

Interference frequency suppression, 26, 29

L

LED displays, 37

M

Mapping parameters, 30, 51
Measuring range, 28

O

Operating data records, 53

P

Parameter reassignment, 19
Parameters, 25
PWR LED, 38

Q

Quality code, 22
    Revision 5, 23
    Revision 7, 24

R

Request data record, 59
Response data record, 60
Reverse polarity, 12

S

SHC sequence, 21
SIMATIC PDM configuration tool, 18
Smoothing, 26, 28
Status indications, 37
Supply voltage, 12
System environment, 18

T

Technology parameters, 25, 48
Terminal assignment, 11

V

Value status
    Evaluating, 35
Variable data record, 56

SIEMENS

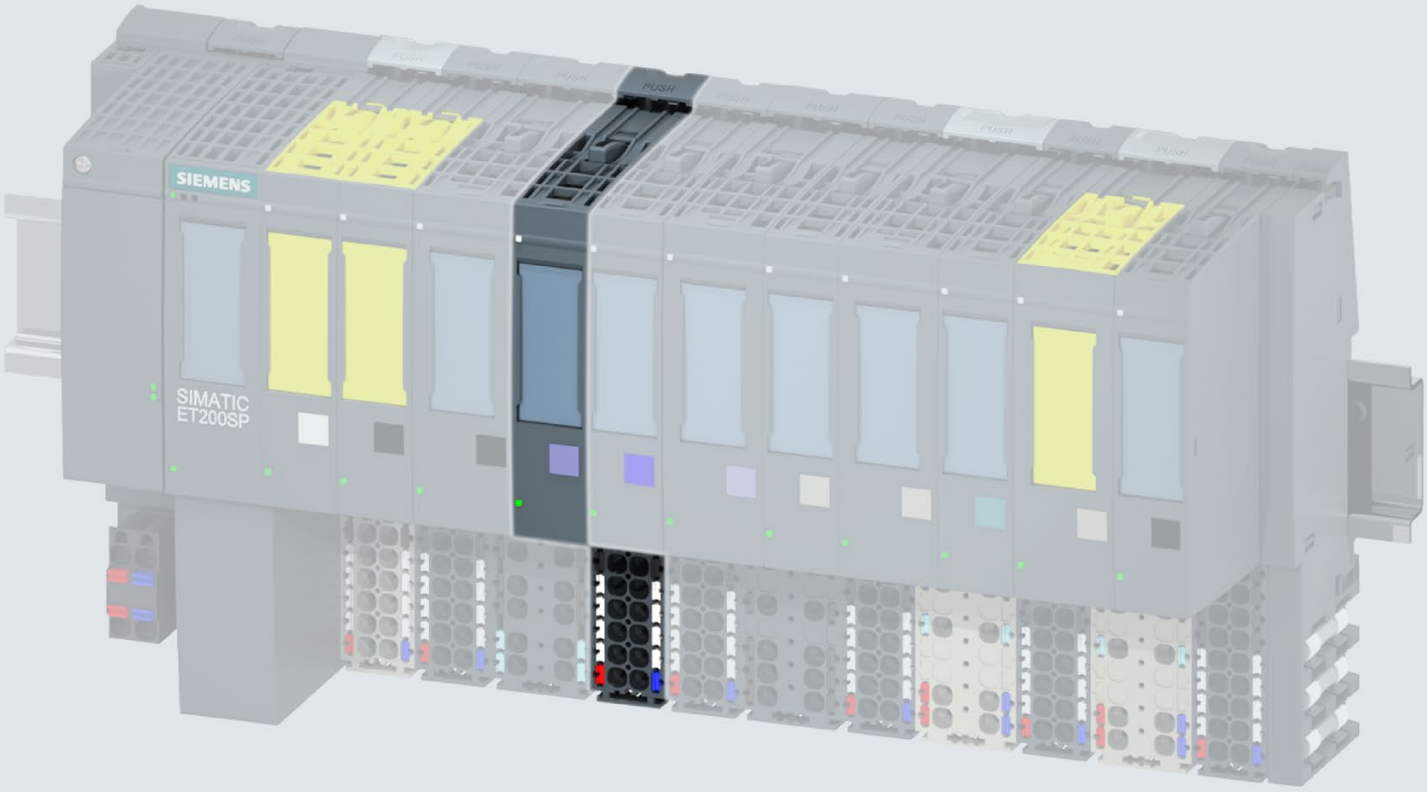

Manual

SIMATIC

ET 200SP

Analog input module
AI 4xRTD/TC 2-/3-/4-wire HF (6ES7134-6JD00-0CA1)

Edition 09/2018

support.industry.siemens.com

SIEMENS

SIMATIC

ET 200SP
Analog input module
AI 4xRTD/TC 2-/3-/4-wire HF
(6ES7134-6JD00-0CA1)

Manual

Preface

Guide to documentation 1

Product overview 2

Wiring 3

Parameters/address space 4

Interrupts/diagnostics alarms 5

Technical specifications 6

Parameter data record A

Representation of analog values B

09/2018

A5E03573289-AE

Legal information

Warning notice system

This manual contains notices you have to observe in order to ensure your personal safety, as well as to prevent damage to property. The notices referring to your personal safety are highlighted in the manual by a safety alert symbol, notices referring only to property damage have no safety alert symbol. These notices shown below are graded according to the degree of danger.

⚠ DANGER

indicates that death or severe personal injury **will** result if proper precautions are not taken.

⚠ WARNING

indicates that death or severe personal injury **may** result if proper precautions are not taken.

⚠ CAUTION

indicates that minor personal injury can result if proper precautions are not taken.

NOTICE

indicates that property damage can result if proper precautions are not taken.

If more than one degree of danger is present, the warning notice representing the highest degree of danger will be used. A notice warning of injury to persons with a safety alert symbol may also include a warning relating to property damage.

Qualified Personnel

The product/system described in this documentation may be operated only by **personnel qualified** for the specific task in accordance with the relevant documentation, in particular its warning notices and safety instructions. Qualified personnel are those who, based on their training and experience, are capable of identifying risks and avoiding potential hazards when working with these products/systems.

Proper use of Siemens products

Note the following:

⚠ WARNING

Siemens products may only be used for the applications described in the catalog and in the relevant technical documentation. If products and components from other manufacturers are used, these must be recommended or approved by Siemens. Proper transport, storage, installation, assembly, commissioning, operation and maintenance are required to ensure that the products operate safely and without any problems. The permissible ambient conditions must be complied with. The information in the relevant documentation must be observed.

Trademarks

All names identified by ® are registered trademarks of Siemens AG. The remaining trademarks in this publication may be trademarks whose use by third parties for their own purposes could violate the rights of the owner.

Disclaimer of Liability

We have reviewed the contents of this publication to ensure consistency with the hardware and software described. Since variance cannot be precluded entirely, we cannot guarantee full consistency. However, the information in this publication is reviewed regularly and any necessary corrections are included in subsequent editions.

Siemens AG
Division Digital Factory
Postfach 48 48
90026 NÜRNBERG
GERMANY

A5E03573289-AE
℗ 09/2018 Subject to change

Copyright © Siemens AG 2014 - 2018.
All rights reserved

Preface

Purpose of the documentation

This manual supplements the system manual ET 200SP distributed I/O system (http://support.automation.siemens.com/WW/view/en/58649293).

Functions that generally relate to the system are described in this manual.

The information provided in this manual and in the system/function manuals supports you in commissioning the system.

Changes compared to previous version

Compared to the previous version, this manual contains the following change:

In the "Technical specifications" section, the operational and basic error limits for thermocouple type C have changed.

Conventions

CPU: When the term "CPU" is used in this manual, it applies to the CPUs of the S7-1500 automation system as well as to the CPUs/interface modules of the distributed I/O system ET 200SP.

STEP 7: In this documentation, "STEP 7" is used as a synonym for all versions of the configuration and programming software "STEP 7 (TIA Portal)".

Please also observe notes marked as follows:

Note

A note contains important information on the product described in the documentation, on the handling of the product or on the section of the documentation to which particular attention should be paid.

Recycling and disposal

For environmentally friendly recycling and disposal of your old equipment, contact a certified electronic waste disposal company and dispose of the equipment according to the applicable regulations in your country.

Security information

Siemens provides products and solutions with industrial security functions that support the secure operation of plants, systems, machines and networks.

In order to protect plants, systems, machines and networks against cyber threats, it is necessary to implement – and continuously maintain – a holistic, state-of-the-art industrial security concept. Siemens' products and solutions constitute one element of such a concept.

Customers are responsible for preventing unauthorized access to their plants, systems, machines and networks. Such systems, machines and components should only be connected to an enterprise network or the internet if and to the extent such a connection is necessary and only when appropriate security measures (e.g. firewalls and/or network segmentation) are in place.

For additional information on industrial security measures that may be implemented, please visit (https://www.siemens.com/industrialsecurity).

Siemens' products and solutions undergo continuous development to make them more secure. Siemens strongly recommends that product updates are applied as soon as they are available and that the latest product versions are used. Use of product versions that are no longer supported, and failure to apply the latest updates may increase customers' exposure to cyber threats.

To stay informed about product updates, subscribe to the Siemens Industrial Security RSS Feed under (https://www.siemens.com/industrialsecurity).

Table of contents

Preface 3

1 Guide to documentation 6

2 Product overview 11

2.1 Properties 11

3 Wiring 14

3.1 Wiring and block diagram 14

4 Parameters/address space 17

4.1 Measurement types and measuring ranges 17

4.2 Parameters 21

4.3 Explanation of parameters 27

4.4 Scalable measuring range 32

4.4.1 Configuration 34

4.4.2 Evaluating data record 235 35

4.5 Address space 38

5 Interrupts/diagnostics alarms 39

5.1 Status and error display 39

5.2 Interrupts 41

5.3 Diagnostics alarms 43

6 Technical specifications 45

6.1 Technical specifications 45

A Parameter data record 53

A.1 Dependencies when configuring with GSD file 53

A.2 Parameter assignment and structure of parameter data record 59

A.3 Errors when transferring the data record 67

A.4 Switchable wire break check 68

B Representation of analog values 69

B.1 Representation of input ranges 70

B.2 Representation of analog values in voltage measuring ranges 71

B.3 Representation of analog values for resistance-type sensors 72

B.4 Representation of analog values for thermal resistors 73

B.5 Representation of analog values for thermocouples 76

Guide to documentation 1

The documentation for the SIMATIC ET 200SP distributed I/O system is arranged into three areas.
This arrangement enables you to access the specific content you require.

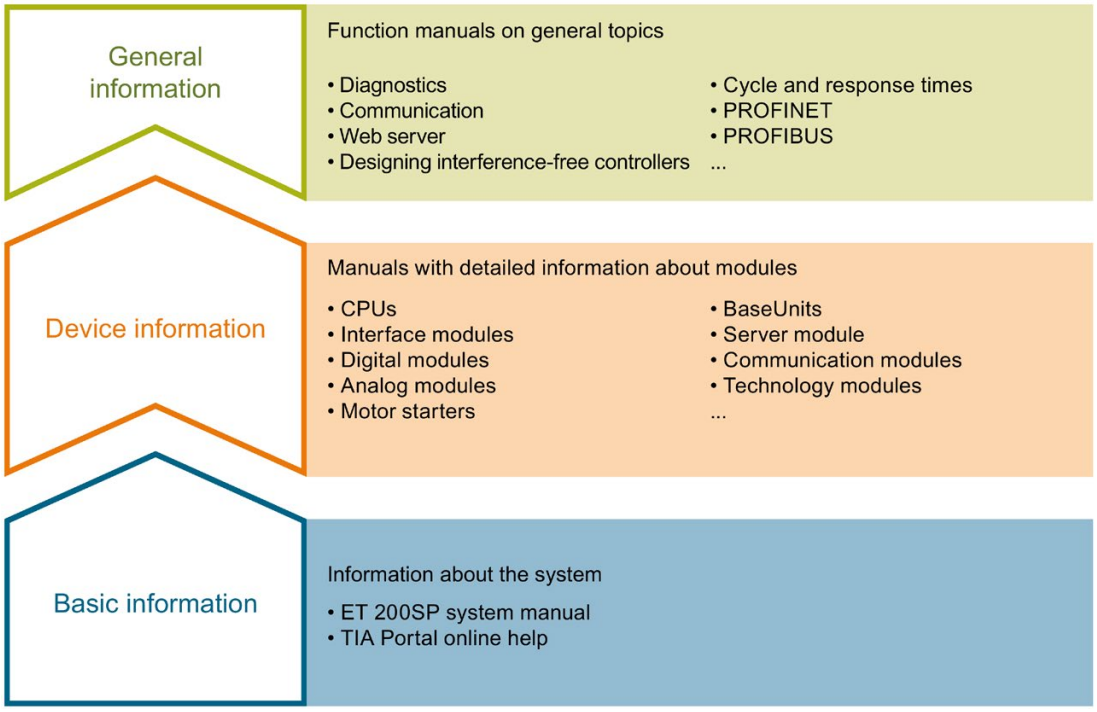

Basic information

The system manual describes in detail the configuration, installation, wiring and commissioning of the SIMATIC ET 200SP. distributed I/O system. The STEP 7 online help supports you in the configuration and programming.

Device information

Product manuals contain a compact description of the module-specific information, such as properties, wiring diagrams, characteristics and technical specifications.

General information

The function manuals contain detailed descriptions on general topics regarding the SIMATIC ET 200SP distributed I/O system, e.g. diagnostics, communication, Web server, motion control and OPC UA.

You can download the documentation free of charge from the Internet (https://support.industry.siemens.com/cs/ww/en/view/109742709).

Changes and supplements to the manuals are documented in a Product Information.

You can download the product information free of charge from the Internet (https://support.industry.siemens.com/cs/us/en/view/73021864).

Manual Collection ET 200SP

The Manual Collection contains the complete documentation on the SIMATIC ET 200SP distributed I/O system gathered together in one file.

You can find the Manual Collection on the Internet (http://support.automation.siemens.com/WW/view/en/84133942).

"mySupport"

With "mySupport", your personal workspace, you make the most of your Industry Online Support.

In "mySupport" you can store filters, favorites and tags, request CAx data and put together your personal library in the Documentation area. Furthermore, your data is automatically filled into support requests and you always have an overview of your current requests.

You need to register once to use the full functionality of "mySupport".

You can find "mySupport" in the Internet (https://support.industry.siemens.com/My/ww/en).

"mySupport" - Documentation

In the Documentation area of "mySupport", you have the possibility to combine complete manuals or parts of them to make your own manual.
You can export the manual in PDF format or in an editable format.

You can find "mySupport" - Documentation in the Internet (http://support.industry.siemens.com/My/ww/en/documentation).

"mySupport" - CAx Data

In the CAx Data area of "mySupport", you can have access the latest product data for your CAx or CAe system.

You configure your own download package with a few clicks.

In doing so you can select:

- Product images, 2D dimension drawings, 3D models, internal circuit diagrams, EPLAN macro files
- Manuals, characteristics, operating manuals, certificates
- Product master data

You can find "mySupport" - CAx Data in the Internet (http://support.industry.siemens.com/my/ww/en/CAxOnline).

Application examples

The application examples support you with various tools and examples for solving your automation tasks. Solutions are shown in interplay with multiple components in the system - separated from the focus in individual products.

You can find the application examples on the Internet (https://support.industry.siemens.com/sc/ww/en/sc/2054).

TIA Selection Tool

With the TIA Selection Tool, you can select, configure and order devices for Totally Integrated Automation (TIA).
This tool is the successor of the SIMATIC Selection Tool and combines the known configurators for automation technology into one tool.
With the TIA Selection Tool, you can generate a complete order list from your product selection or product configuration.

You can find the TIA Selection Tool on the Internet (http://w3.siemens.com/mcms/topics/en/simatic/tia-selection-tool).

SIMATIC Automation Tool

You can use the SIMATIC Automation Tool to run commissioning and maintenance activities simultaneously on various SIMATIC S7 stations as a bulk operation independently of the TIA Portal.

The SIMATIC Automation Tool provides a multitude of functions:

- Scanning of a PROFINET/Ethernet network and identification of all connected CPUs
- Address assignment (IP, subnet, gateway) and station name (PROFINET device) to a CPU
- Transfer of the data and the programming device/PC time converted to UTC time to the module
- Program download to CPU
- Operating mode switchover RUN/STOP
- Localization of the CPU by means of LED flashing
- Reading out CPU error information
- Reading the CPU diagnostic buffer
- Reset to factory settings
- Updating the firmware of the CPU and connected modules

You can find the SIMATIC Automation Tool on the Internet (https://support.industry.siemens.com/cs/ww/en/view/98161300).

PRONETA

With SIEMENS PRONETA (PROFINET network analysis), you analyze the plant network during commissioning. PRONETA features two core functions:

- The topology overview independently scans PROFINET and all connected components.
- The IO check is a fast test of the wiring and the module configuration of a system.

You can find SIEMENS PRONETA on the Internet (https://support.industry.siemens.com/cs/ww/en/view/67460624).

SINETPLAN

SINETPLAN, the Siemens Network Planner, supports you in planning automation systems and networks based on PROFINET. The tool facilitates professional and predictive dimensioning of your PROFINET installation as early as in the planning stage. In addition, SINETPLAN supports you during network optimization and helps you to exploit network resources optimally and to plan reserves. This helps to prevent problems in commissioning or failures during productive operation even in advance of a planned operation. This increases the availability of the production plant and helps improve operational safety.

The advantages at a glance

- Network optimization thanks to port-specific calculation of the network load
- Increased production availability thanks to online scan and verification of existing systems
- Transparency before commissioning through importing and simulation of existing STEP 7 projects
- Efficiency through securing existing investments in the long term and optimal exploitation of resources

You can find SINETPLAN on the Internet (https://www.siemens.com/sinetplan).

Product overview

2

2.1 Properties

Article number

6ES7134-6JD00-0CA1

View of the module

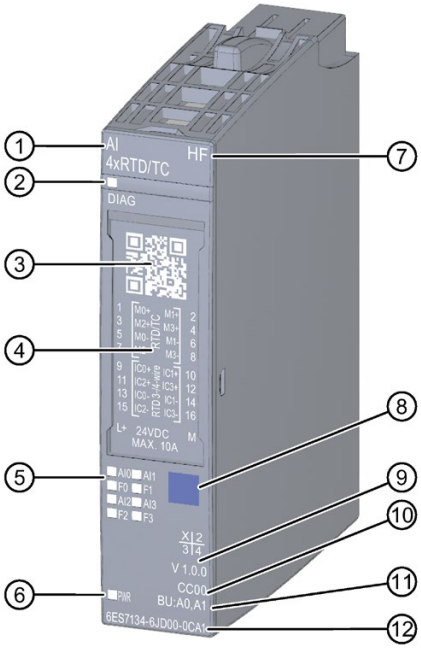

① Module type and name
② LED for diagnostics
③ 2D matrix code
④ Wiring diagram
⑤ LEDs for channel status
⑥ LED for supply voltage
⑦ Function class
⑧ Color coding module type
⑨ Function and firmware version
⑩ Color code for selecting the color identification labels
⑪ BU type
⑫ Article number

Figure 2-1 View of the module AI 4×RTD/TC 2-/3-/4-wire HF

Properties

The module has the following technical properties:

- Analog input module with 4 inputs
- Resolution: Up to 16 bits including sign
- Voltage measurement type can be set per channel
- Resistor measurement type can be set per channel
- Thermal resistor (RTD) measurement type can be set per channel
- Thermocouple (TC) measurement type can be set per channel
- Configurable diagnostics for each channel
- Hardware interrupt on limit violation can be set per channel (two high and two low limits per channel)
- Automatic compensation of the line resistance with 3-wire connection

The module supports the following functions:

Table 2- 1 Version dependencies of the functions

Function	HW version	FW version	STEP 7		GSD file	
			TIA Portal	V5.x	PROFINET IO	PROFIBUS DP
Firmware update	FS01	V1.0.0 or higher	V11, SP2 or higher with HSP 0024	V5.5 SP3 or higher with HSP 0227 V1.0 or higher	X	X
Identification data I&M0 to I&M3	FS01	V1.0.0 or higher	V11, SP2 or higher with HSP 0024	V5.5 SP3 or higher with HSP 0227 V1.0 or higher	X	X
Reconfiguration in RUN	FS01	V1.0.0 or higher	V11, SP2 or higher with HSP 0024	V5.5 SP3 or higher with HSP 0227 V1.0 or higher	X	X
Value status (PROFINET IO only)	FS01	V1.1.0 or higher	V12, SP1 or higher with HSP 0057	V5.5 SP3 or higher with HSP 0227 V2.0 or higher	X	X
Calibration in runtime	FS01	V2.0.0 or higher	V13 or higher	V5.5 SP3 or higher with HSP 0227 V3.0 or higher	X	X
Scalable measuring range	FS01	V2.0.0 or higher	V13 or higher	V5.5 SP3 or higher with HSP 0227 V2.0 or higher	X	X
Selectable conductor resistance for 2-wire connection	FS01	V2.0.0 or higher	V13 or higher	V5.5 SP3 or higher with HSP 0227 V3.0 or higher	X	X
Switchable wire break check	FS01	V2.0.0 or higher	V13 or higher	V5.5 SP3 or higher with HSP 0227 V3.0 or higher	X	X

You can configure the module with STEP 7 and with a GSD file.

Accessories

The following accessories must be ordered separately:

- Labeling strips
- Color identification labels
- Reference identification label
- Shield connection

See also

You can find more information on accessories in the ET 200SP distributed I/O system (https://support.industry.siemens.com/cs/ww/en/view/58649293) system manual.

Wiring 3

3.1 Wiring and block diagram

This section includes the block diagram of the AI 4×RTD/TC 2-/3-/4-wire HF module with the terminal assignments.

You can find information on wiring the BaseUnit in the ET 200SP distributed I/O system (http://support.automation.siemens.com/WW/view/en/58649293) system manual.

Note

- The load group of the module must begin with a light-colored BaseUnit. Keep this in mind also during the configuration.
- When using floating sensors, bridge the m- connections and connect to ground / FE. This increases the immunity of the module.

  Bridging and connecting are not necessary for disabled and disconnected inputs.

Wiring: 2-wire connection for thermocouples and 4-, 3-, 2-wire connection of resistance-type sensors or thermal resistors (RTD)

The following figure shows the block diagram and an example of the terminal assignment of the analog input module AI 4xRTD/TC 2-/3-/4-wire HF on the BaseUnit BU type A0/A1.

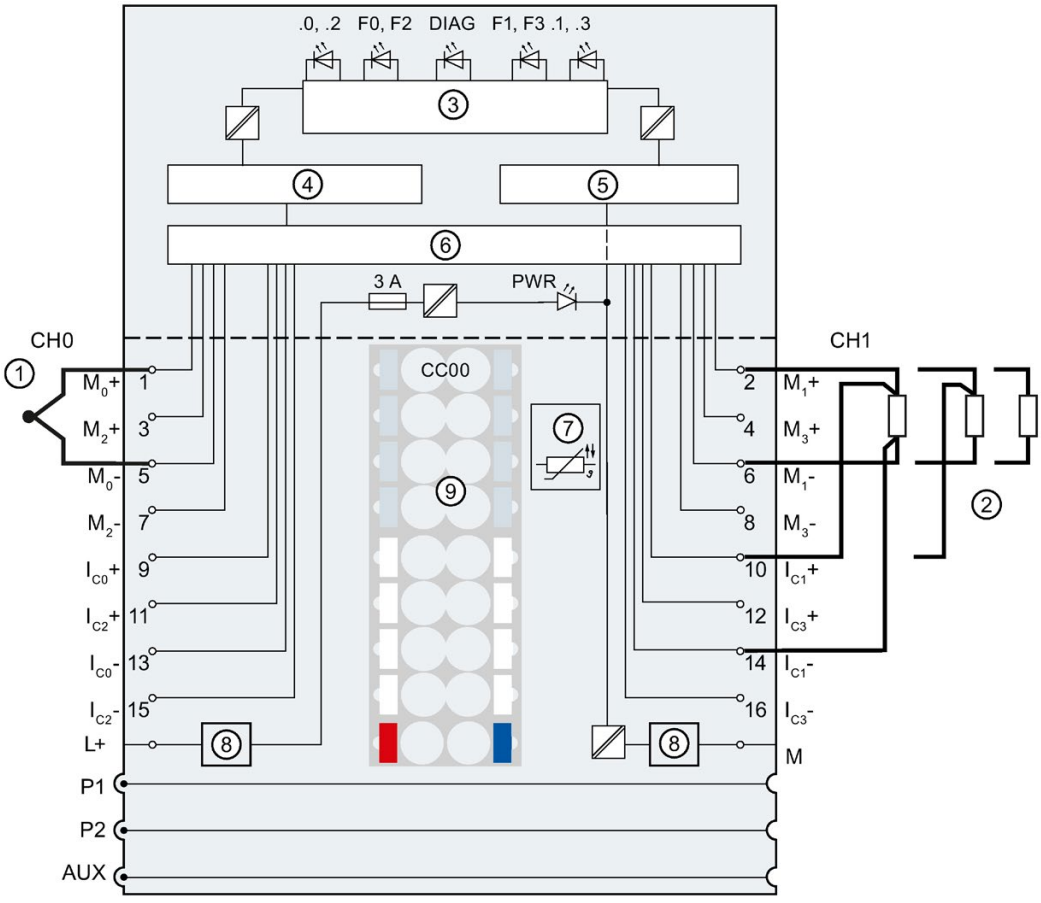

①	2-wire connection of thermocouple / voltage connection	M_n+	Measuring line positive, channel n
		M_n-	Measuring line negative, channel n
②	4-, 3-, 2-wire connection of resistance-type sensors or thermal resistors (RTD)	I_{Cn}+	Constant current line positive, channel n
		I_{Cn}-	Constant current line negative, channel n
③	Backplane bus interface	L+	24 V DC (infeed only with light-colored BaseUnit)
④	Analog-to-digital converter (ADC)	P1, P2, AUX	Internal self-assembling voltage buses Connection to left (dark-colored BaseUnit) Connection to left interrupted (light-colored BaseUnit)
⑤	Constant current power supply	DIAG	Diagnostics LED (green, red)
⑥	Multiplexer	.0 to .3	Channel status LED (green)
⑦	Temperature recording for BU type A1 only	PWR	Power LED (green)
⑧	Filter connection supply voltage (available with light-colored BaseUnit only)	F0 to F3	Channel fault LED (red)
⑨	Color-coded label with color code CC00 (optional)		

Figure 3-1 Connection and block diagram for connection of thermocouples and resistance-type sensors or thermal resistors (RTD)

Parameters/address space 4

4.1 Measurement types and measuring ranges

The following table describes the measuring range and the temperature coefficients you can configure for each measurement type:

Table 4- 1 Measurement types and measuring ranges

Measurement type	Measuring range	Temperature coefficient
Deactivated	–	–
Voltage	±50 mV / ±80 mV / ±250 mV / ±1 V	
Resistor (2-wire connection)	PTC	–
Resistor (2-, 3-, 4-wire connection)	150 Ω / 300 Ω / 600 Ω / 3 kΩ / 6 kΩ	–
Thermal resistor RTD (3-wire connection)	Climatic / Standard Cu 10	Cu 0.00427[1]
Thermal resistor RTD (2, 3, 4-wire connection)	Climatic / Standard Pt 100 Pt 200 Pt 500 Pt 1000	Pt 0.00385 / Pt 0.003916 / Pt 0.003902 / Pt 0.00392 / Pt 0.00385055
	Climatic / Standard Ni 100 Ni 120 Ni 200 Ni 500 Ni 1000	Ni 0.00618 / Ni 0.00672
	Climatic[2] / Standard[2] Ni 1000	Ni 0.005
Thermocouple (TC)	Type E, N, J, K, L, S, R, B, T, C, U, TXK (acc. to GOST)	-

1 The preset temperature coefficients are valid for Europe.

2 For sensors LG-Ni 1000 from Siemens Building Ltd (Landis & Stäfa).

Special features when using Cu10 sensors

- Choose "Thermal resistor (3-wire connection)" and "Cu10" in the parameter assignment.
- Wire the Cu10 sensor into the 3-wire connection technology.
- During operation, automatic, internal compensation of the line resistance of the missing measuring line takes place.

Note

To ensure optimum line compensation with Cu10, please observe the following:

- An accurate measured value is only attained if the cable resistance of the positive constant current line to the Cu10 sensor and the cable resistance of the negative measuring line are identical in value.
- Recommendation: Keep the measuring line as short as possible.
- Different resistance values may also occur due to the connection method used.

Special features when using PTC resistors

PTCs are suitable for monitoring temperature and/or as thermal protection devices of complex drives or transformer windings.

- Choose "Thermal resistor (2-wire)" and "PTC" in the parameter assignment.
- Connect the PTC to the 2-wire connection technology.
- Use the PTC resistors, type A (PTC thermistor) in accordance with DIN/VDE 0660, part 302.
- If "Underflow" diagnostic is enabled, a "Low limit violated" diagnostic is generated for resistance values < 18 Ω, indicating a short-circuit.
- Sensor data for the PTC resistor:

Table 4- 2 Using PTC resistors

Property	Technical specifications	Comment
Switching points	**Behavior with rising temperature**	
	< 550 Ω	**Normal range:** • SIMATIC S7: Bit 0 = "0", Bit 2 = "0" (in the PII)
	550 Ω to 1650 Ω	**Prewarning range:** • SIMATIC S7: Bit 0 = "0", Bit 2 = "1" (in the PII)
	> 1650 Ω	**Response range:** • SIMATIC S7: Bit 0 = "1", Bit 2 = "0" (in the PII)
	Behavior with falling temperature	
	> 750 Ω	**Response range:** • SIMATIC S7: Bit 0 = "1", Bit 2 = "0" (in the PII)
	750 Ω to 540 Ω	**Prewarning range:** • SIMATIC S7: Bit 0 = "0", Bit 2 = "1" (in the PII)
	< 540 Ω	**Normal range:** • SIMATIC S7: Bit 0 = "0", Bit 2 = "0" (in the PII)
	Reaction to short-circuit	
	< 18 Ω	• SIMATIC S7: Bit 7 (IB x+1) = "1", Bit 0 = "0" and Bit 2 = "0"
(RRT-5) °C (RRT+5) °C (RRT+15) °C Measuring voltage/ voltage at the PTC	Max. 550 Ω min. 1330 Ω min. 4000 Ω Max. 7.5 V[1]	TNF = Rated response temperature of the sensor (according to DIN/VDE 0660)

[1] Below 23 kΩ

Assignment in the process image input (PII) with SIMATIC S7

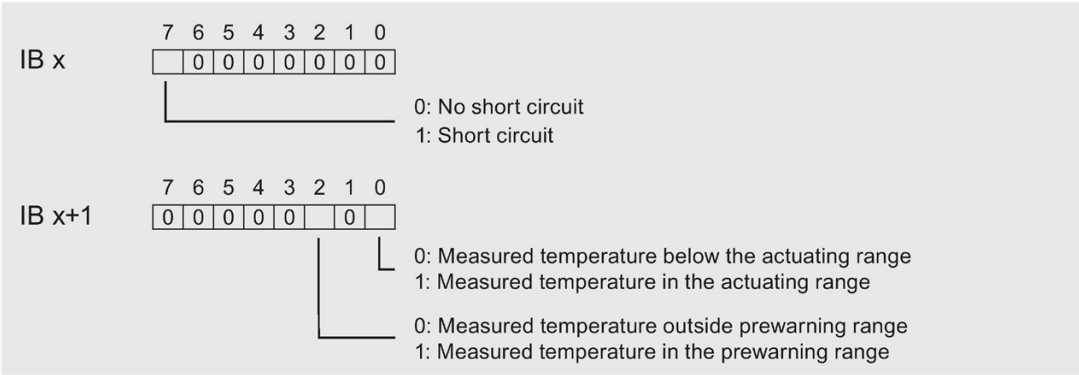

Figure 4-1 Assignment in the process image input (PII)

Notes on programming

- Bits 0+2 are relevant for evaluation in the process image input. You can monitor, for example, the temperature of a motor using bits 0+2.
- Bits 0+2 in the process image input cannot be saved. During parameter assignment, take into consideration that a motor, for example, starts up in a controlled manner (via an acknowledgment).
- Bits 0+2 can never be set at the same time; they are set one after the other.

NOTICE
No measurement is possible in the following cases: • When I/O modules are pulled out • When supply voltage to the I/O module fails • When there is a wire break or short-circuit in the measuring lines Therefore, always evaluate the diagnostics entries of the AI 4×RTD/TC 2-/3-/4-wire HF for safety reasons.

Example

The diagram shows the temperature curve and the associated switching points.

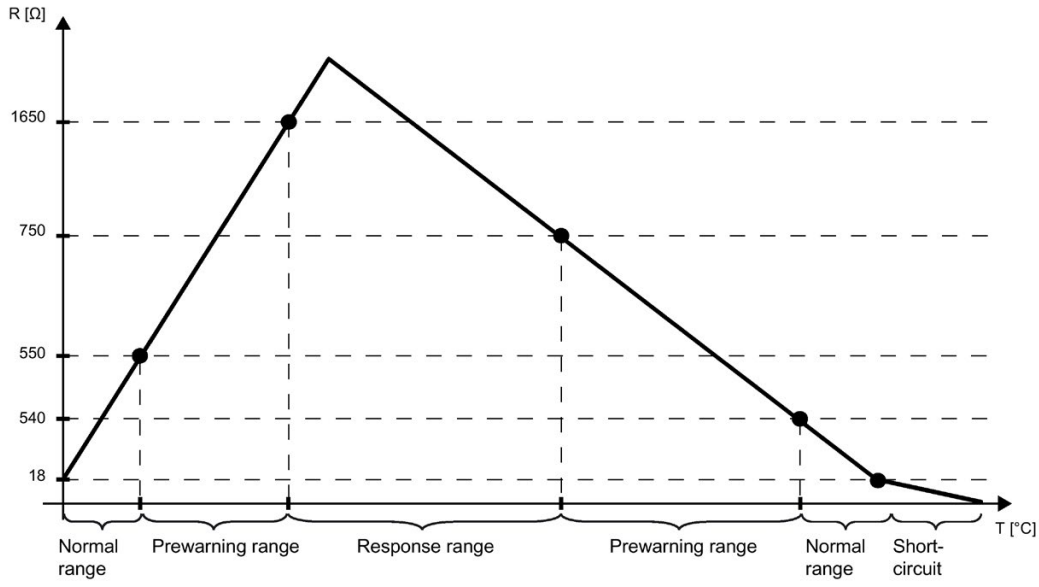

Figure 4-2 Temperature curve with prewarning range

See also

Technical specifications (Page 45)

4.2 Parameters

Parameters of the AI 4xRTD/TC 2-/3-/4-wire HF

Specify the module properties with the various parameters in the course of your STEP 7 configuration. The following table lists the configurable parameters. The effective range of the configurable parameters depends on the type of configuration. The following configurations are possible:

- Central operation with an ET 200SP CPU
- Distributed operation on PROFINET IO in an ET 200SP system
- Distributed operation with PROFIBUS DP in an ET 200SP system

When assigning parameters in the user program, use the WRREC instruction to transfer the parameters to the module by means of data records, see section Parameter assignment and structure of parameter data record (Page 59). The following parameter settings are possible:

Table 4- 3 Configurable parameters and their defaults (GSD file)

Parameter	Value range	Default	Reconfiguration in RUN	Scope with configuration software, e.g., STEP 7 (TIA Portal)	
				GSD file PROFINET IO	GSD file PROFIBUS DP
Diagnostics: Missing supply voltage L+	• Disable • Enable	Disable	Yes	Channel	Channel [1]
Diagnostics: Reference junction	• Disable • Enable	Disable	Yes	Channel	Module
Diagnostics: Overflow	• Disable • Enable	Disable	Yes	Channel	Module
Diagnostics: Underflow	• Disable • Enable	Disable	Yes	Channel	
Diagnostics: Wire break	• Disable • Enable	Disable	Yes	Channel	Channel

Parameter	Value range	Default	Reconfiguration in RUN	Scope with configuration software, e.g., STEP 7 (TIA Portal)	
				GSD file PROFINET IO	GSD file PROFIBUS DP
Type/range of measurement	• Deactivated	Thermal resistor (4-wire connection) Pt 100 standard range	Yes	Channel	Channel
	• Voltage ±50 mV • Voltage ±80 mV • Voltage ±250 mV • Voltage ±1 V				
	Resistor (2-, 3-, 4-wire connection) • 150 Ω • 300 Ω • 600 Ω • 3 kΩ • 6 kΩ				
Type/range of measurement	Resistor (2-wire connection) PTC	Thermal resistor (4-wire connection) Pt 100 standard range	Yes	Channel	Channel
Type/range of measurement	Thermal resistor (2, 3, 4-wire connection) • Pt 100 climatic range • Pt 200 climatic range • Pt 500 climatic range • Pt 1000 climatic range	Thermal resistor (4-wire connection) Pt 100 standard range	Yes	Channel	Channel
	Thermal resistor (2, 3, 4-wire connection) • Pt 100 standard range • Pt 200 standard range • Pt 500 standard range • Pt 1000 standard range				

Parameter	Value range	Default	Reconfiguration in RUN	Scope with configuration software, e.g., STEP 7 (TIA Portal)	
				GSD file PROFINET IO	GSD file PROFIBUS DP
Type/range of measurement	Thermal resistor (2, 3, 4-wire connection) • Ni 100 climatic range • Ni 120 climatic range • Ni 200 climatic range • Ni 500 climatic range • Ni 1000 climatic range	Thermal resistor (4-wire connection) Pt 100 standard range	Yes	Channel	Channel
	Thermal resistor (2, 3, 4-wire connection) • Ni 100 standard range • Ni 120 standard range • Ni 200 standard range • Ni 500 standard range • Ni 1000 standard range				
Type/range of measurement	Thermal resistor (2, 3, 4-wire connection) • LG Ni 1000 climatic range	Thermal resistor (4-wire connection) Pt 100 standard range	Yes	Channel	Channel
	Thermal resistor (2, 3, 4-wire connection) • LG Ni 1000 standard range				
	Thermal resistor (3-wire connection) • Cu 10 climatic range • Cu 10 standard range				

Parameter	Value range	Default	Reconfiguration in RUN	Scope with configuration software, e.g., STEP 7 (TIA Portal)	
				GSD file PROFINET IO	GSD file PROFIBUS DP
Type/range of measurement	Thermocouple • Type B (PtRh-PtRh) • Type N (NiCrSi-NiSi) • Type E (NiCr-CuNi) • Type R (PtRh-Pt) • Type S (PtRh-Pt) • Type J (Fe-CuNi) • Type L (Fe-CuNi) • Type T (Cu-CuNi) • Type K (NiCr-NiAl) • Type U (Cu-CuNi) • Type C (WRe-WRe) • Type TXK	Thermal resistor (4-wire connection) Pt 100 standard range	Yes	Channel	Channel
Temperature coefficient	• Pt 0.00385055 • Pt 0.003916 • Pt 0.003902 • Pt 0.00392 • Pt 0.00385 • Ni 0.00618 • Ni 0.00672 • LG-Ni 0.005 • Cu 0.00427	Pt 0.00385055	Yes	Channel	Channel
Temperature unit	• Degrees Celsius • Degrees Fahrenheit • Kelvin	Degrees Celsius	Yes	Channel	Module
Reference junction [5]	• No reference channel mode • Reference channel of the module • Internal reference junction • Reference channel of group 0 to 3 • Fixed reference temperature	No reference channel mode	Yes	Channel	Channel

Parameter	Value range	Default	Reconfiguration in RUN	Scope with configuration software, e.g., STEP 7 (TIA Portal)	
				GSD file PROFINET IO	GSD file PROFIBUS DP
Smoothing	• None • Weak • Medium • Strong	None	Yes	Channel	Channel
Interference frequency suppression [3) 4)]	• 60 Hz • 50 Hz[2] • 16.6 Hz	50 Hz	Yes	Channel	Channel
Scalable measuring range	• Disable • Enable	Disable	Yes	Channel	-
Measuring range resolution	• 2 decimal places • 3 decimal places	2 decimal places	Yes	Channel	-
Measuring range center	• Value within the nominal range of the measuring range	0	Yes	Channel	-
Conductor resistance [6]	0 to 50000 mΩ	0	Yes	Channel	-
Hardware interrupt high limit 1 [4]	• Disable • Enable	Disable	Yes	Channel	-
High limit [4]	• Value	8500	Yes	Channel	-
Hardware interrupt low limit 1 [4]	• Disable • Enable	Disable	Yes	Channel	-
Low limit 1 [4]	• Value	-2000	Yes	Channel	-
Hardware interrupt high limit 2 [4]	• Disable • Enable	Disable	Yes	Channel	-
High limit 2 [4]	• Value	8500	Yes	Channel	-
Hardware interrupt low limit 2 [4]	• Disable • Enable	Disable	Yes	Channel	-

Parameter	Value range	Default	Reconfiguration in RUN	Scope with configuration software, e.g., STEP 7 (TIA Portal)	
				GSD file PROFINET IO	GSD file PROFIBUS DP
Low limit 2 [4]	• Value	-2000	Yes	Channel	-
Potential group	• Use potential group of the left module (module plugged into a dark-colored BaseUnit) • Enable new potential group (module plugged into light-colored BaseUnit)	Use potential group of the left module	No	Module	Module

1 Diagnostics: Missing supply voltage L+: Detection per module or alarm per channel

2 Interference frequency suppression: Interfering signals at 400 Hz are automatically included in the filtering at 50 Hz.

3 The settings in the "Interference frequency suppression" parameter have a direct effect on the conversion time of the channel. The analog value is therefore also affected by additionally set filtering via the "Smoothing" parameter.

4 Due to the limited number of parameters of a maximum of 244 bytes per ET 200SP station with a PROFIBUS GSD configuration, the parameter assignment options are restricted. The parameter length of the I/O module is 13 bytes with PROFIBUS GSD configuration. If necessary, you can set this parameter with data record 128, see Appendix "Parameter data record".

5 Only for configuration with PROFIBUS GSD file: The set reference junction is used with the additional parameter "Kx Reference junction activated" in the case of "Enable". In the case of "Disable", "No reference channel mode" is used for RTD and "Fixed reference temperature" is used for TC.

6 For 2-wire connection only

Note

Unused channels

"Deactivate" unused channels in the parameter assignment to improve the cycle time of the module.

A deactivated channel always returns the value $7FFF_H$.

4.3 Explanation of parameters

Diagnostics: Missing supply voltage L+

Enabling of the diagnostics for missing or insufficient supply voltage L+.

Diagnostics: Reference junction

Enabling of the reference junction diagnostics if the reference temperature of the reference junction needs to be determined for the TC channel being operated.

Reference junction using the PROFINET GSD file

A BaseUnit with an internal temperature sensor (BU..T), the reference channel of group 0, 1, 2, 3, or channel 0 of the I/O module can be used as reference junction for the TC measurement, if this has the parameter setting "Thermal resistor Pt100 climatic range Degrees Celsius".

A possible parameter assignment is represented below:

Table 4- 4 RTD channel

Setting	Description
No reference channel mode	The temperature value at channel 0 can be used as a reference value for the entire module.
Reference channel of group 0, 1, 2, 3	The channel acts as a **transmitter** for the reference junction temperature of a group. The distribution is performed via the interface module.

Table 4- 5 TC channel

Setting	Description
Reference channel of the module	The corresponding TC channel uses channel 0 of the same module as the reference junction temperature. This must be configured as "Thermal resistor Pt 100 climatic range Degrees Celsius" and "No reference channel mode"; otherwise, Diagnostics: Reference junction is triggered.
Internal reference junction	The reference junction temperature is read by an internal temperature sensor on the BaseUnit. Diagnostics: Reference junction is triggered if there is an incorrect BaseUnit type.
Reference channel of group 0, 1, 2, 3	The channel acts as a **receiver** for the reference junction temperature of a group.
Fixed reference temperature	The reference temperature of the thermocouple is set to 0 °C. As a result, no temperature compensation is performed.

Note

Shared Device and "Reference channel of group 0, 1, 2, 3"

If the transmitter and receiver for the reference junction temperature of a group are assigned to different IO controllers, then both IO controllers must be performing data exchange with the IO device to ensure error-free operation of the temperature compensation.

Reference junction using the PROFIBUS GSD file

A BaseUnit with an internal temperature sensor (BU..T), the reference channel of group 0, 1, 2, 3, or channel 0 of the I/O module can be used as reference junction for the TC measurement, if this has the parameter setting "Thermal resistor Pt100 climatic range Degrees Celsius".

The set temperature unit (e.g. Degrees Celsius) is valid for the entire module with temperature compensation "Reference channel of the module" and "Reference channel of group 0, 1, 2, 3".

Table 4- 6 **RTD channel**

Setting	Description
No reference channel mode	The temperature value at channel 0 can be used as a reference value for the entire module.
Reference channel of group 0, 1, 2, 3	The channel acts as a **transmitter** for the reference junction temperature of a group. The distribution is performed via the interface module.

Setting	Description
Channel x Reference junction activated	• Disable: Channel x is configured with the setting "No reference channel mode". • Enable: Channel x is configured with the setting selected above.

Table 4- 7 **TC channel**

Setting	Description
Reference channel of the module	The corresponding TC channel uses channel 0 of the same module as the reference junction temperature. This must be configured as "Thermal resistor Pt 100 climatic range Degrees Celsius" and "No reference channel mode"; otherwise, Diagnostics: Reference junction is triggered.
Internal reference junction	The reference junction temperature is read by an internal temperature sensor on the BaseUnit. Diagnostics: Reference junction is triggered if there is an incorrect BaseUnit type.
Reference channel of group 0, 1, 2, 3	The channel acts as a **receiver** for the reference junction temperature of a group.
Fixed reference temperature	The reference temperature of the thermocouple is set to 0 °C. As a result, no temperature compensation is performed.

Setting	Description
Channel x Reference junction activated	• Disable: Channel x is configured with the setting "Fixed reference temperature". • Enable: Channel x is configured with the setting selected above.

Diagnostics: Overflow

Enabling of the diagnostics when the measured value exceeds the overrange.

Diagnostics: Underflow

Enabling of the diagnostics if the measured value falls below the underrange.

Diagnostics: Wire break

Enabling of the diagnostics if the module has no current flow or the current is insufficient for measurement at the correspondingly assigned input.

Type/range of measurement

See the section Measurement types and measuring ranges (Page 17).

Temperature coefficient

The temperature coefficient depends on the chemical composition of the material. In Europe, only one value is used per sensor type (default value).

The temperature coefficient (α value) indicates by how much the resistance of a specific material changes relatively if the temperature increases by 1 °C.

The other values facilitate a sensor-specific setting of the temperature coefficient and enhance accuracy.

Temperature unit

Selection between Degrees Celsius, Fahrenheit and Kelvin as the temperature unit for the selected measuring range.

Smoothing

The individual measured values are smoothed using filtering. The smoothing can be set in 4 levels.

Smoothing time = number of module cycles (k) x cycle time of the module.

The following figure shows how many module cycles it takes for the smoothed analog value to approach 100%, depending on the configured smoothing. This specification is valid for all signal changes at the analog input.

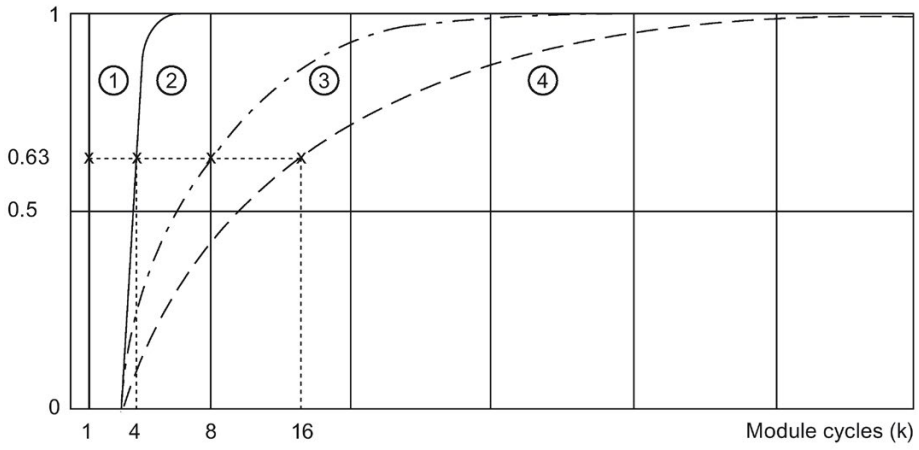

① No smoothing (k = 1)
② Weak (k = 4)
③ Medium (k = 8)
④ Strong (k = 16)

Figure 4-3 Smoothing for AI 4×RTD/TC 2-/3-/4-wire HF

Interference frequency suppression

Suppresses the interferences affecting analog input modules that are caused by the frequency of the AC voltage network used.

The frequency of the AC voltage network is likely to have a negative effect on measured values particularly with measurement in the low voltage range and on thermocouples. With this parameter, the user specifies the line frequency that is predominant in the plant.

Measuring range resolution

Parameters for the measurement type thermal resistor standard and thermocouple.

Allows you to increase the resolution to 2 or 3 decimal places for a configurable section of the measuring range. See the Scalable measuring range (Page 32) section.

Measuring range center

Determines the temperature over which the scalable measuring range is symmetrically spanned. The value must be within the nominal range of the underlying measuring range. It is specified in integers.

Maximum / Minimum

Corresponds to overflow / underflow for the scalable measuring range.

Conductor resistance

Parameters for the measurement types resistor and thermal resistor (2-wire connection).

Used to compensate for the conductor resistance without having to interfere with the sensor wiring.

If the "Conductor resistor" parameter is configured higher than a value 0 mΩ, the module then automatically uses the factory calibration data.

Hardware interrupt enable

Enabling of a hardware interrupt if the high limit 1/2 or the low limit 1/2 is violated.

Low limit 1/2

Specify a threshold which triggers a hardware interrupt when violated.

High limit 1/2

Specify a threshold which triggers a hardware interrupt when violated.

Potential group

A potential group consists of a group of directly adjacent I/O modules within an ET 200SP station, which are supplied via a common supply voltage.

A potential group begins with a light-colored BaseUnit through which the required voltage is supplied for all modules of the potential group. The light-colored BaseUnit interrupts the three self-assembling voltage buses P1, P2 and AUX to the left neighbor.

All additional I/O modules of this potential group are plugged into dark-colored BaseUnits. You take the potential of the self-assembling voltage buses P1, P2 and AUX from the left neighbor.

A potential group ends with the dark-colored BaseUnit, which follows a light-colored BaseUnit or server module in the station configuration.

4.4 Scalable measuring range

Introduction

The scalable measuring range is available for the temperature measuring ranges of thermal resistors (RTD) standard and thermocouples. The measuring ranges for voltage, resistor and thermal resistor climatic are not supported.

The scalable measuring range is valid for the following ranges:

- Nominal range
- Underrange
- Overrange

Function

The scalable measuring range is a limited section of a measuring range supported by the module.

It allows you to increase the resolution for a configurable section.

- The "Measuring range resolution" parameter determines the resolution to 2 or 3 decimal places.
- The "Measuring range center" parameter determines the temperature over which the scalable measuring range is symmetrically spanned.

Value ranges

Table 4- 8 Value ranges

Scalable measuring range	Measuring range resolution		Values hex.
	2 decimal places	3 decimal places	
Overflow	>325.11	>32.511	$7FFF_H$
High limit	325.11	32.511	$7EFF_H$
Measuring range center	0	0	0_H
Low limit	-325.12	-32.512	8100_H
Underflow	<-325.12	<-32.512	8000_H

To obtain an absolute temperature, the measuring range center in the application program (as offset) must be calculated with the value of the user data of the scalable measuring range.

The measuring range center is always output in the user data as the value "0". The user data are correspondingly mapped to the bipolar input ranges in S7 format. Underflow / overflow is also formed in accordance with the limits of S7.

Rules

- The measuring range center must be within the nominal range of the underlying measuring range. It is specified in integers.
- The scalable measuring range is spanned symmetrically over the measuring range center. Depending on the resolution, various value ranges result (①, ②).
- The scalable measuring range is limited by underflow and overflow of the underlying measuring range:
  - It is clipped at the underflow when it falls below the limit.
  - It is clipped at the overflow when it exceeds the limit (③).

Example

The following example illustrates the effect of scalable measuring ranges:

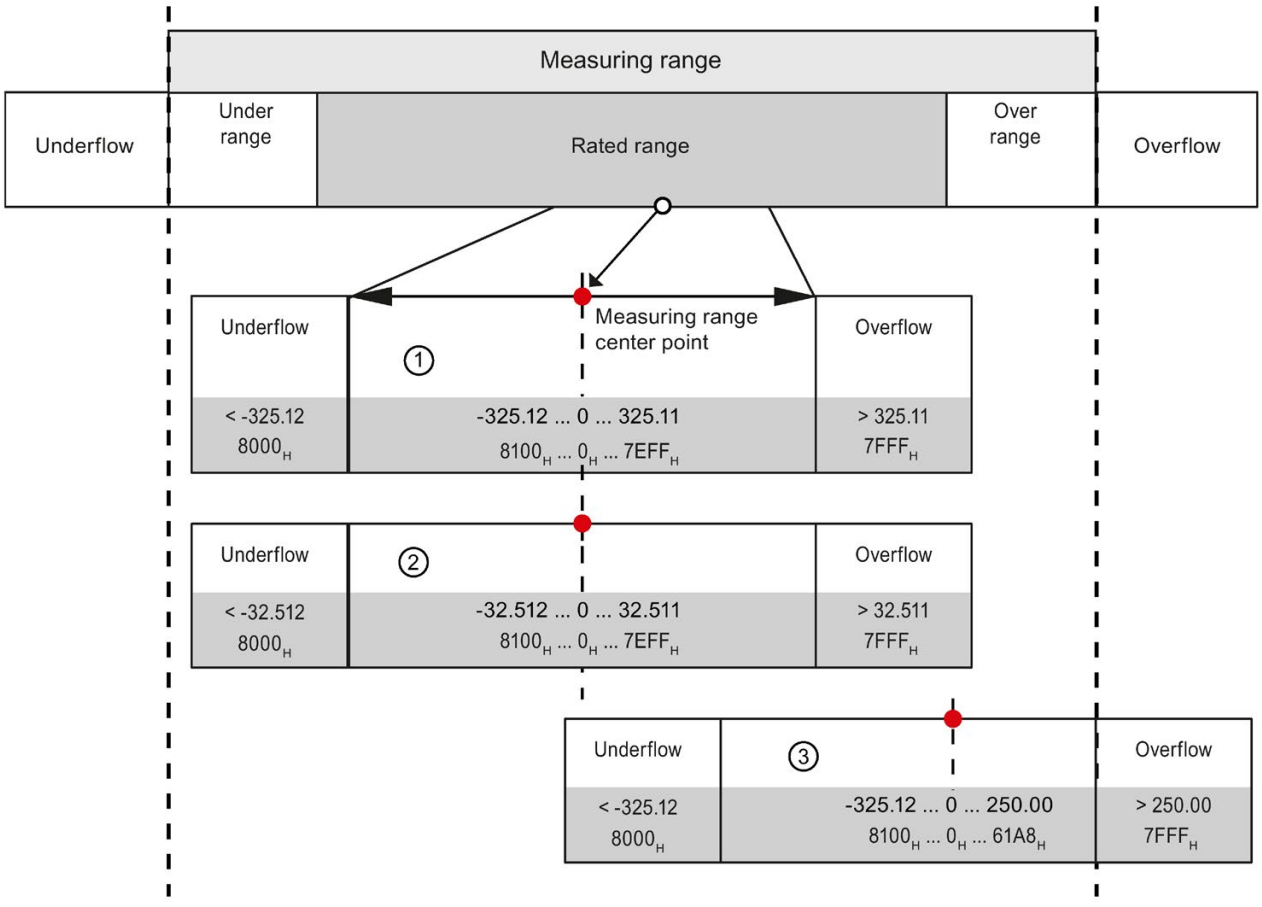

① Scalable measuring range with 2 decimal places in hexadecimal S7 format
② Scalable measuring range with 3 decimal places in hexadecimal S7 format
③ Scalable measuring range which is cut off at the overflow of the underlying measuring range (clipping)

Figure 4-4 Examples of scalable measuring ranges

4.4.1 Configuration

Requirement

You must select a valid temperature measuring range for configuration.

Configuration

The function is activated using the "Scalable measuring range" parameter.

The following figure shows an example of a configuration in STEP 7:

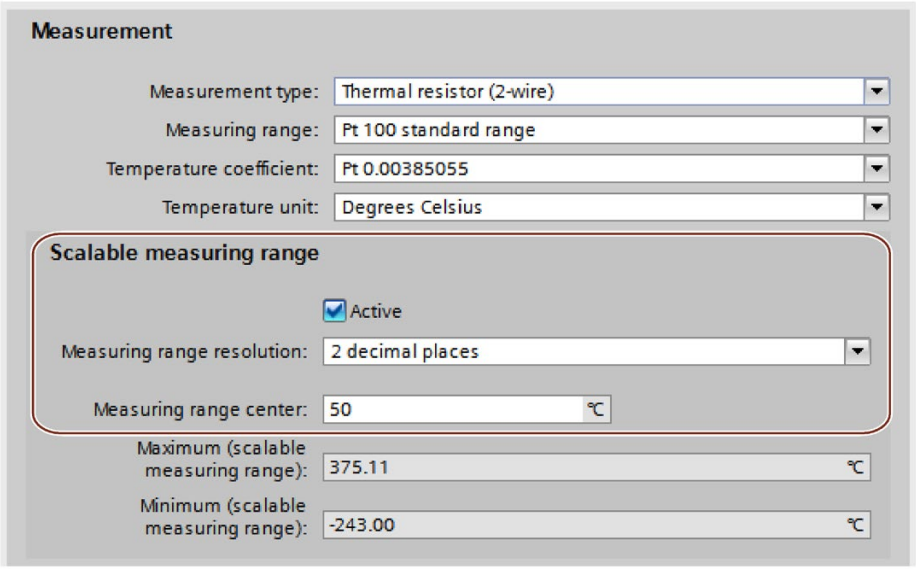

Figure 4-5 Configuration for the scalable measuring range

Reference

You will find more information on the configuration in the STEP 7 online help.

4.4.2 Evaluating data record 235

Evaluation in the user program

In the user program, you can evaluate the status and the limits of the scalable measuring range with data record 235, which may result by reaching underflow/overflow.

Structure of data record 235

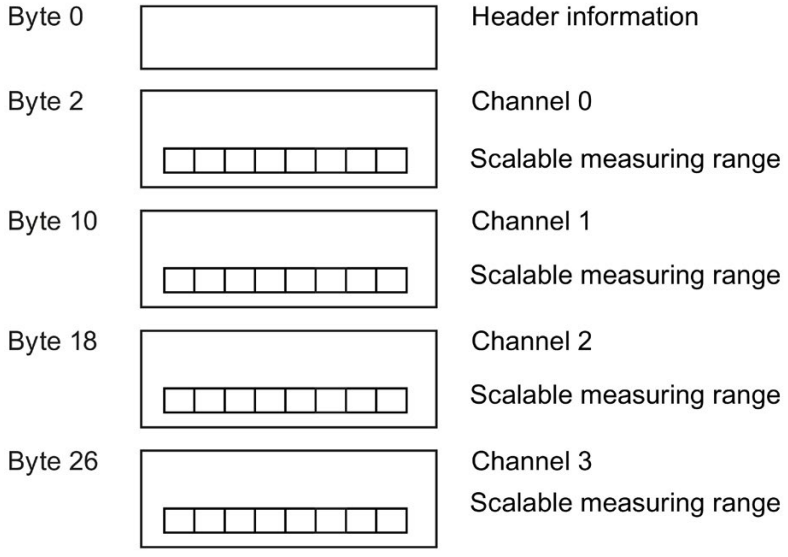

Figure 4-6 Structure of data record 235

Header information

The figure below shows the structure of the header information.

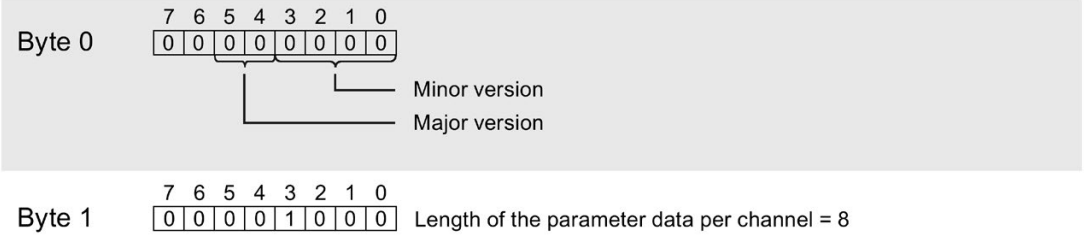

Figure 4-7 Header information of data record 235

Parameters

The figure below shows the structure of the parameter.

If the corresponding bit is set to "1", the parameter is activated.

* x = 2 + (channel number x 8)

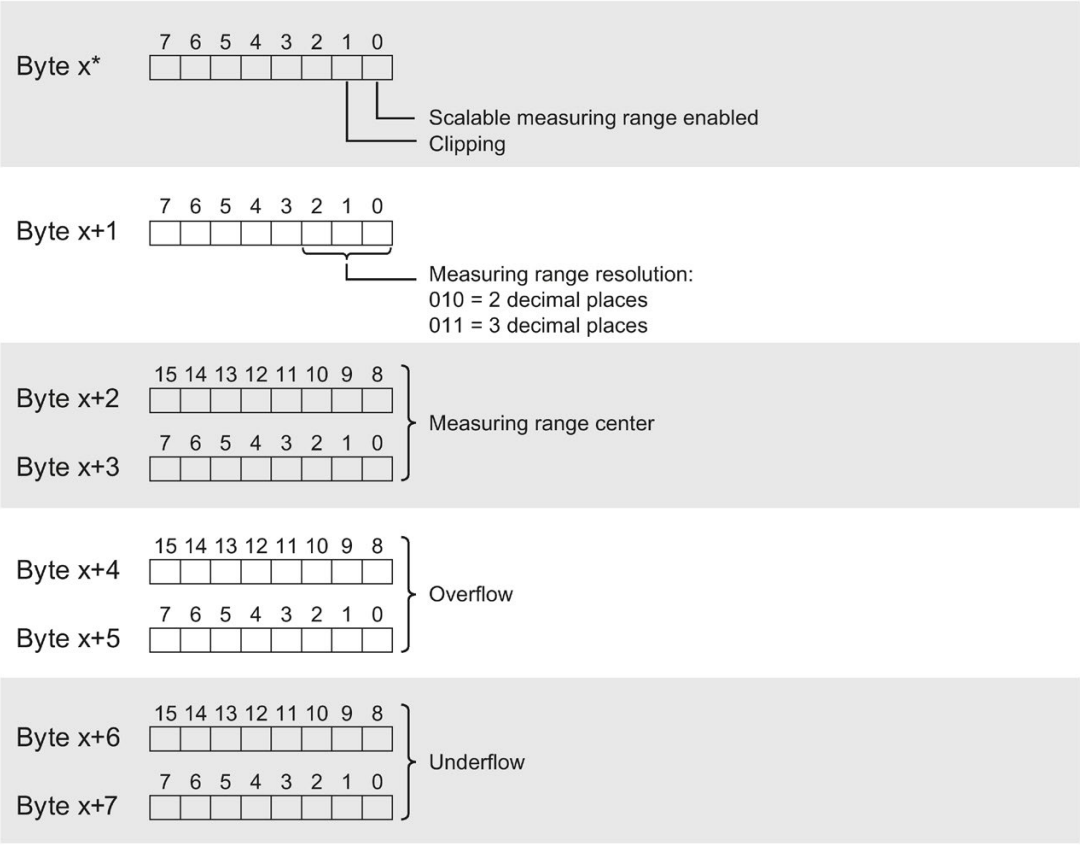

Figure 4-8 Structure of data record 235 - channel parameter byte x to x+7

Description of the parameters

Table 4- 9 Description of the parameters from data record 235

Parameter	Description
Scalable measuring range enabled	1 = Function is active for this channel.
Clipping	1 = Scalable measuring range cut off at the overflow / underflow of the underlying measuring range (see Figure (Page 33)).
Resolution	2 or 3 decimal places
Measuring range center	Temperature in whole °C / °F / K ("working point" for the scaling)
Overflow/underflow	Limits of the scalable measuring range

Example

The following example shows the values for a thermal resistor Pt 100 Standard, °C:

Table 4- 10 Example of a thermal resistor Pt 100 Standard

Hex. value	Dec. value	Evaluation of data record 235
00_H	0	V0.0
08_H	8	8 bytes
03_H	3	Scalable measuring range active and clipped (clipping)
02_H	2	Resolution: 2 decimal places
$02EE_H$	750	Measuring range center: 750 °C
$61A8_H$	25000	Overflow (Maximum): 250.00 + 750 = 1000.00 °C Scalable measuring range is clipped at the overflow.
8100_H	-32512	Underflow (Minimum): -325.12 + 750 = 424.88 °C

4.5 Address space

Address space of the analog input module AI 4×RTD/TC 2-/3-/4-wire HF

The following figure shows the assignment of the address space with value status (Quality Information (QI)). The addresses for the value status are only available if the value status is enabled.

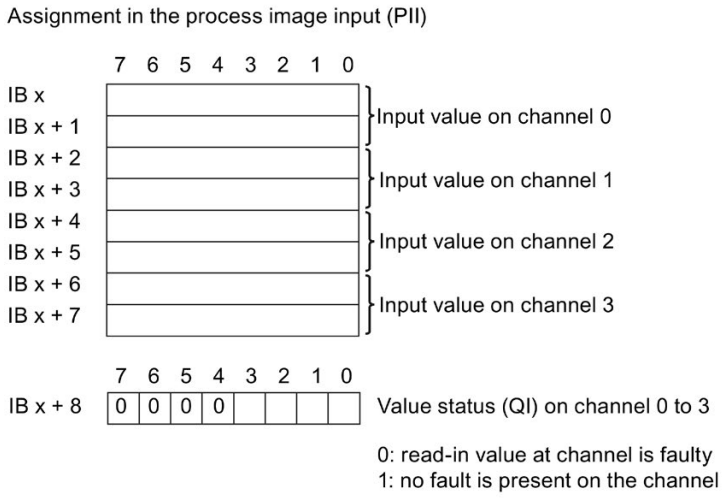

Figure 4-9 Address space AI 4×RTD/TC 2-/3-/4-wire HF with value status

Configuration options of the AI 4xRTD/TC 2-/3-/4-wire HF

The following configurations are possible:

- Configuration 1: Without value status
- Configuration 2: With value status

Evaluating the value status (as of firmware version V1.01)

An additional byte is occupied in the input address space if you enable the value status for the analog module. Bit 0 to 3 in this byte is assigned to one channel and provides information on the validity of the analog value (0 = value is incorrect).

Interrupts/diagnostics alarms

5

5.1 Status and error display

LED display

The figure below shows the LED displays of the AI 4xRTD/TC 2-/3-/4-wire HF:

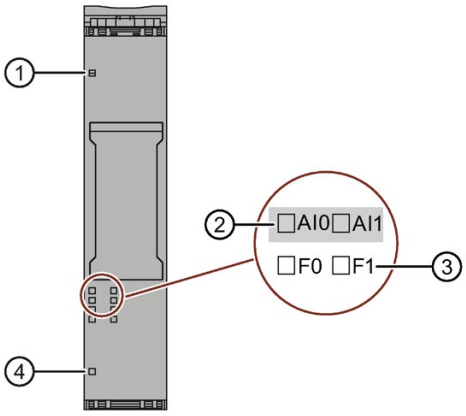

① DIAG (green/red)
② Channel status (green)
③ Channel error (red)
④ PWR (green)

Figure 5-1 LED display

Meaning of the LED displays

The following tables contain the meaning of the status and error displays. Remedies for diagnostics alarms can be found in section Diagnostics alarms (Page 43).

DIAG LED

Table 5- 1 Error display of the DIAG LED

DIAG LED	Meaning
Off	Backplane bus supply of the ET 200SP not OK
Flashes	Module parameters not assigned
On	Module parameters assigned and no module diagnostics
Flashes	Module parameters assigned and module diagnostics

Channel status/channel error LED

Table 5- 2 Status and error display of the LED channel status / channel error

LEDs		Meaning
Channel status	Channel error	
□ Off	□ Off	Channel deactivated
■ On	□ Off	Channel activated and no channel diagnostics
□ Off	■ On	Channel activated and channel diagnostics
■ On	■ On	Not permitted (error)

PWR LED

Table 5- 3 Status display of the PWR LED

PWR LED	Meaning
□ Off	Supply voltage L+ missing
■ On	Supply voltage L+ present

5.2 Interrupts

Evaluating hardware interrupts with IO controller

The module generates a hardware interrupt at the following events:

- Violation of low limit 1
- Violation of high limit 1
- Violation of low limit 2
- Violation of high limit 2

You can obtain detailed information on the event in the hardware interrupt organization block with the "RALARM" (read additional interrupt information) instruction and in the STEP 7 online help.

The module channel that triggered the hardware interrupt is entered in the start information of the organization block. The following figure shows the assignment to the bits of double word 8 in local data.

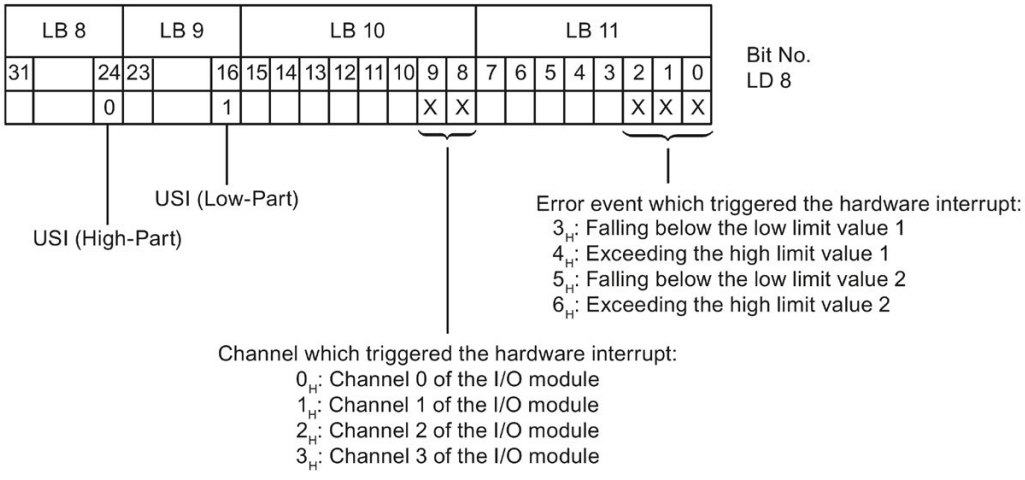

Figure 5-2 OB start information

Structure of the additional interrupt information

Table 5- 4 Structure of the additional interrupt information

Data block name		Content	Comment	Bytes
USI (User Structure Identifier)		W#16#0001	additional interrupt information for hardware interrupts of the I/O module	2
Channel that triggered the hardware interrupt.				
	Channel	B#16#00 to B#16#03	Channel 0 to 3 of the I/O module	1
Event that triggered the hardware interrupt.				
	Event	B#16#03	Violation of low limit 1	1
		B#16#04	Violation of high limit 1	
		B#16#05	Violation of low limit 2	
		B#16#06	Violation of high limit 2	

Diagnostic error interrupt

The module generates a diagnostic error interrupt at the following events:

- Channel temporarily unavailable
- Hardware interrupt lost
- Reference channel error
- Error
- Violation of low limit
- Violation of high limit
- Wire break
- Supply voltage missing
- Parameter assignment error

5.3 Diagnostics alarms

A diagnostics alarm is generated and the DIAG-LED flashes on the module for each diagnostics event. You can read out the diagnostics alarms, for example, in the diagnostics buffer of the CPU. You can evaluate the error codes with the user program.

Table 5- 5 Diagnostics alarms, their meaning and remedies

Diagnostics alarms	Error code	Meaning	Remedy
Wire break	6_H	Resistance of sensor circuit too high	Use a different sensor type or modify the wiring, for example, using cables with larger cross-section
		Wire break between the module and sensor	Connect the cable
		Channel not connected (open)	• Deactivate diagnostics • Connect or deactivate the channel
Violation of high limit[1]	7_H	Value lies above the overrange.	Correct module/sensor interplay
		Wire break[2]	See Wire break
Violation of low limit[1]	8_H	Value lies below the underrange.	Correct module/sensor interplay
Error	9_H	Internal module error has occurred (diagnostics alarm on channel 0 applies to the entire module).	Replace module
Parameter assignment error	10_H	The module cannot evaluate parameters for the channel. Incorrect parameter assignment.	• Correct the configuration (comparison of preset and actual setup). • Correct the parameter assignment (diagnostics wire break set only with the permitted measuring ranges).
Supply voltage missing	11_H	Missing or insufficient supply voltage L+	• Check supply voltage L+ on the BaseUnit • Check BaseUnit type
Reference channel error (reference junction)	15_H	Reference temperature of the reference junction for the TC channel being operated with compensation is invalid.	• Check BaseUnit type • Select correct reference junction through parameter assignment[3] • Check whether the reference junction (reference channel of the group 0, 1, 2, 3) is only assigned once as the sender in the entire setup.

Diagnostics alarms	Error code	Meaning	Remedy
Hardware interrupt lost	16_H	At least one hardware interrupt could not be reported because there were too many pending hardware interrupts.	Correct the program or the process
Channel temporarily unavailable	$1F_H$	• Firmware update in progress or update has been canceled. The module does not read any process values in this state. • The channel is currently being calibrated.	• Wait for firmware update. • Restart the firmware update. • Complete calibration.

[1] The alarm refers to the diagnostics and depends on the configured measuring range.

[2] For resistor and thermal resistor measuring ranges with deactivated diagnostics for "wire break", this is reported by the "Violation of high limit" diagnostic.

[3] Shared Device and diagnostics "Reference temperature": If the sender and receiver of the reference junction temperature of a group are assigned to different IO controllers, you may need to download both configurations again in the case of diagnostics. First download the configuration containing the receiver.

Technical specifications

6

6.1 Technical specifications

Technical specifications of AI 4×RTD/TC 2-/3-/4-wire HF

The following table shows the technical specifications as of 09/2018. You will find a data sheet including daily updated technical specifications on the Internet (https://support.industry.siemens.com/cs/ww/en/pv/6ES7134-6JD00-0CA1/td?dl=en).

Article number	6ES7134-6JD00-0CA1
General information	
Product type designation	AI 4xRTD/TC 2-/3-/4-wire HF
Firmware version	V2.0
• FW update possible	Yes
usable BaseUnits	BU type A0, A1
Color code for module-specific color identification plate	CC00
Product function	
• I&M data	Yes; I&M0 to I&M3
Engineering with	
• STEP 7 TIA Portal configurable/integrated as of version	V12 SP1 / V13
• STEP 7 configurable/integrated as of version	V5.5 SP3 / V5.5 SP4
• PCS 7 configurable/integrated as of version	V8.1 SP1
• PROFIBUS as of GSD version/GSD revision	GSD Revision 5
• PROFINET as of GSD version/GSD revision	GSDML V2.3
Operating mode	
• Oversampling	No
• MSI	No
CiR – Configuration in RUN	
Reparameterization possible in RUN	Yes
Calibration possible in RUN	Yes

Article number	6ES7134-6JD00-0CA1
Supply voltage	
Rated value (DC)	24 V
permissible range, lower limit (DC)	19.2 V
permissible range, upper limit (DC)	28.8 V
Reverse polarity protection	Yes
Input current	
Current consumption, max.	35 mA
Power loss	
Power loss, typ.	0.75 W
Address area	
Address space per module	
• Address space per module, max.	8 byte; + 1 byte for QI information
Analog inputs	
Number of analog inputs	4
• For voltage measurement	4
• For resistance/resistance thermometer measurement	4
• For thermocouple measurement	4
permissible input voltage for voltage input (destruction limit), max.	30 V
Constant measurement current for resistance-type transmitter, typ.	0.7 mA; 1.7 mA for Cu10 sensors
Cycle time (all channels), min.	Sum of the basic conversion times and additional processing times (depending on the parameterization of the active channels); for line compensation in case of a three-wire connection, an additional cycle is necessary
Technical unit for temperature measurement adjustable	Yes; °C/°F/K
Input ranges (rated values), voltages	
• -1 V to +1 V	Yes; 16 bit incl. sign
• Input resistance (-1 V to +1 V)	1 MΩ
• -250 mV to +250 mV	Yes; 16 bit incl. sign
• Input resistance (-250 mV to +250 mV)	1 MΩ
• -50 mV to +50 mV	Yes; 16 bit incl. sign
• Input resistance (-50 mV to +50 mV)	1 MΩ
• -80 mV to +80 mV	Yes; 16 bit incl. sign
• Input resistance (-80 mV to +80 mV)	1 MΩ

Article number	6ES7134-6JD00-0CA1
Input ranges (rated values), thermocouples	
• Type B	Yes; 16 bit incl. sign
• Input resistance (Type B)	1 MΩ
• Type C	Yes; 16 bit incl. sign
• Input resistance (Type C)	1 MΩ
• Type E	Yes; 16 bit incl. sign
• Input resistance (Type E)	1 MΩ
• Type J	Yes; 16 bit incl. sign
• Input resistance (type J)	1 MΩ
• Type K	Yes; 16 bit incl. sign
• Input resistance (Type K)	1 MΩ
• Type L	Yes; 16 bit incl. sign
• Input resistance (Type L)	1 MΩ
• Type N	Yes; 16 bit incl. sign
• Input resistance (Type N)	1 MΩ
• Type R	Yes; 16 bit incl. sign
• Input resistance (Type R)	1 MΩ
• Type S	Yes; 16 bit incl. sign
• Input resistance (Type S)	1 MΩ
• Type T	Yes; 16 bit incl. sign
• Input resistance (Type T)	1 MΩ
• Type U	Yes; 16 bit incl. sign
• Input resistance (Type U)	1 MΩ
• Type TXK/TXK(L) to GOST	Yes; 16 bit incl. sign
• Input resistance (Type TXK/TXK(L) to GOST)	1 MΩ

Article number	6ES7134-6JD00-0CA1
Input ranges (rated values), resistance thermometer	
• Cu 10	Yes; 16 bit incl. sign
• Input resistance (Cu 10)	1 MΩ
• Ni 100	Yes; 16 bit incl. sign
• Input resistance (Ni 100)	1 MΩ
• Ni 1000	Yes; 16 bit incl. sign
• Input resistance (Ni 1000)	1 MΩ
• LG-Ni 1000	Yes; 16 bit incl. sign
• Input resistance (LG-Ni 1000)	1 MΩ
• Ni 120	Yes; 16 bit incl. sign
• Input resistance (Ni 120)	1 MΩ
• Ni 200	Yes; 16 bit incl. sign
• Input resistance (Ni 200)	1 MΩ
• Ni 500	Yes; 16 bit incl. sign
• Input resistance (Ni 500)	1 MΩ
• Pt 100	Yes; 16 bit incl. sign
• Input resistance (Pt 100)	1 MΩ
• Pt 1000	Yes; 16 bit incl. sign
• Input resistance (Pt 1000)	1 MΩ
• Pt 200	Yes; 16 bit incl. sign
• Input resistance (Pt 200)	1 MΩ
• Pt 500	Yes; 16 bit incl. sign
• Input resistance (Pt 500)	1 MΩ

Article number	6ES7134-6JD00-0CA1
Input ranges (rated values), resistors	
• 0 to 150 ohms	Yes; 15 bit
• Input resistance (0 to 150 ohms)	1 MΩ
• 0 to 300 ohms	Yes; 15 bit
• Input resistance (0 to 300 ohms)	1 MΩ
• 0 to 600 ohms	Yes; 15 bit
• Input resistance (0 to 600 ohms)	1 MΩ
• 0 to 3000 ohms	Yes; 15 bit
• Input resistance (0 to 3000 ohms)	1 MΩ
• 0 to 6000 ohms	Yes; 15 bit
• Input resistance (0 to 6000 ohms)	1 MΩ
• PTC	Yes; 15 bit
• Input resistance (PTC)	1 MΩ
Thermocouple (TC)	
Temperature compensation	
– parameterizable	Yes
– Reference channel of the module	Yes
– internal comparison point	Yes; with BaseUnit type A1
– Reference channel of the group	Yes
– Number of reference channel groups	4; Group 0 to 3
– fixed reference temperature	Yes
Cable length	
• shielded, max.	200 m; 50 m with thermocouples
Analog value generation for the inputs	
Measurement principle	integrating (Sigma-Delta)
Integration and conversion time/resolution per channel	
• Resolution with overrange (bit including sign), max.	16 bit
• Integration time, parameterizable	Yes
• Basic conversion time, including integration time (ms)	
– additional processing time for wire-break check	2 ms; In the ranges resistance thermometers, resistors and thermocouples
– additional power line wire-break check	2 ms; for 3/4 wire transducer (resistance thermometer and resistor)
• Interference voltage suppression for interference frequency f1 in Hz	16.6 / 50 / 60 Hz
• Conversion time (per channel)	180 / 60 / 50 ms

Article number	6ES7134-6JD00-0CA1
Smoothing of measured values	
• Number of smoothing levels	4; None; 4/8/16 times
• parameterizable	Yes
Encoder	
Connection of signal encoders	
• for voltage measurement	Yes
• for resistance measurement with two-wire connection	Yes
• for resistance measurement with three-wire connection	Yes
• for resistance measurement with four-wire connection	Yes
Errors/accuracies	
Linearity error (relative to input range), (+/-)	0.01 %; ±0.1 % for resistance thermometers and resistance
Temperature error (relative to input range), (+/-)	0.0009 %/K; ±0.005 % / K at thermocouple
Crosstalk between the inputs, min.	-50 dB
Repeat accuracy in steady state at 25 °C (relative to input range), (+/-)	0.05 %
Operational error limit in overall temperature range	
• Voltage, relative to input range, (+/-)	0.1 %
• Resistance, relative to input range, (+/-)	0.1 %
Basic error limit (operational limit at 25 °C)	
• Voltage, relative to input range, (+/-)	0.05 %
• Resistance, relative to input range, (+/-)	0.05 %
Interference voltage suppression for f = n x (f1 +/- 1 %), f1 = interference frequency	
• Series mode interference (peak value of interference < rated value of input range), min.	70 dB
• Common mode voltage, max.	10 V
• Common mode interference, min.	90 dB
Isochronous mode	
Isochronous operation (application synchronized up to terminal)	No

Article number	6ES7134-6JD00-0CA1
Interrupts/diagnostics/status information	
Diagnostics function	Yes
Alarms	
• Diagnostic alarm	Yes
• Limit value alarm	Yes; two upper and two lower limit values in each case
Diagnostic messages	
• Monitoring the supply voltage	Yes
• Wire-break	Yes; channel by channel
• Group error	Yes
• Overflow/underflow	Yes; channel by channel
Diagnostics indication LED	
• Monitoring of the supply voltage (PWR-LED)	Yes; green PWR LED
• Channel status display	Yes; Green LED
• for channel diagnostics	Yes; Red LED
• for module diagnostics	Yes; green/red DIAG LED
Potential separation	
Potential separation channels	
• between the channels	No
• between the channels and backplane bus	Yes
• between the channels and the power supply of the electronics	Yes
Permissible potential difference	
between the inputs (UCM)	10 V DC
Isolation	
Isolation tested with	707 V DC (type test)
Dimensions	
Width	15 mm
Height	73 mm
Depth	58 mm
Weights	
Weight, approx.	30 g

Operational and basic error limits for resistance thermometers

Error limits for resistance thermometers	
Operational limit (in the entire temperature range, in relation to input range)	
• Pt 100, Pt 200, Pt 500, Pt 1000 standard	±1.0 K
• Pt 100, Pt 200, Pt 500, Pt 1000 climatic	± 0.25 K
• Ni 100, Ni 120, Ni 200, Ni 500, Ni 1000 standard and climatic	± 0.4 K
• Cu 10	±1.5 K
Basic error limit (operational limit at 25 °C, in relation to input range)	
• Pt 100, Pt 200, Pt 500, Pt 1000 standard	± 0.6 K
• Pt 100, Pt 200, Pt 500, Pt 1000 climatic	± 0.13 K
• Ni 100, Ni 120, Ni 200, Ni 500, Ni 1000 standard and climatic	± 0.2 K
• Cu 10	±1.0 K

Operational and basic error limits for thermocouples [1]

Error limits for thermocouples	
Operational limit for thermocouples (in the entire temperature range)	±1.5 K
Basic error limit for thermocouples (operational limit at 25 °C)	±1 K
Overall error limits when using internal compensation	
• Operational limit (in the entire temperature range at static thermal state, ambient temperature change < 0.3 K/min)	± 2.5 K
• Basic error limit (operational limit at 25 °C at static thermal state, ambient temperature change < 0.3 K/min)	±1.5 K

[1] The indicated error limits apply as of the following temperatures:
Thermocouple type T: -200 °C
Thermocouple type K: -100 °C
Thermocouple type B: +700 °C
Thermocouple type N: -150 °C
Thermocouple type E: -150 °C
Thermocouple type R: +200 °C
Thermocouple type S: +100 °C

Dimension drawing

See manual ET 200SP BaseUnits
(http://support.automation.siemens.com/WW/view/en/58532597/133300)

Parameter data record

A

A.1 Dependencies when configuring with GSD file

When configuring the module with a GSD file, remember that the settings of some parameters are dependent on each other.

Configuring with a PROFINET GSD file

The table lists the properties and their dependencies on the measurement type and measuring range for PROFINET.

Table A- 1 Dependencies of the measurement type / measuring range

Measurement type	Measuring range	Temperature coefficient	Reference junction	Temperature unit	Conductor resistance
Deactivated	*	*	*	*	*
Voltage	±50 mV, ±80 mV, ±250 mV, ±1 V	*	*	*	*
Resistor (2, 3, 4-wire connection)	150 Ω, 300 Ω, 600 Ω, 3 kΩ, 6 kΩ	*	*	*	x (with 2-wire connection)
Resistor (2-wire connection)	PTC	*	*	*	*
Thermal resistor (2, 3, 4-wire connection)	Pt100 climatic	Pt 0.00385055 Pt 0.003916 Pt 0.003902 Pt 0.00392 Pt 0.00385	Reference channel of group 0, 1, 2, 3	Degrees Celsius	x (with 2-wire connection)
			No reference channel mode	Degrees Celsius Degrees Fahrenheit	
	Pt200 Pt500 Pt1000 climatic		No reference channel mode	Degrees Celsius Degrees Fahrenheit	
	Ni100 Ni120 Ni200 Ni500 Ni1000 climatic	Ni 0.00618 Ni 0.00672			
	LG-Ni 1000 climatic	LG-Ni 0.005			

Measurement type	Measuring range	Temperature coefficient	Reference junction	Temperature unit	Conductor resistance
(3-wire connection)	Cu 10 climatic	Cu 0.00427			*
Thermal resistor (2, 3, 4-wire connection)	Pt100 Pt200 Pt500 Pt1000 standard	Pt 0.00385055 Pt 0.003916 Pt 0.003902 Pt 0.00392 Pt 0.00385	No reference channel mode	Degrees Celsius Degrees Fahrenheit Kelvin	x (with 2-wire connection)
	Ni100 Ni120 Ni200 Ni500 Ni1000 standard	Ni 0.00618 Ni 0.00672			
	LG-Ni 1000 standard	LG-Ni 0.005			
Thermal resistor (3-wire connection)	Cu 10 standard	Cu 0.00427			*
Thermocouple	Type B, N, E, R, S, J, L, T, K, U, C, TXK	*	Reference channel of the module[1] Internal reference junction Reference channel of group 0, 1, 2, 3[2]	Degrees Celsius Degrees Fahrenheit Kelvin	*
			Fixed reference temperature		

x = property is allowed, – = property is **not allowed**, * = property is not relevant

[1] Use of "Reference channel of the module":
- Channel 0 must be set as "Pt100 climatic" with temperature unit: "Degrees Celsius".
-For each TC channel of this module that is intended to use channel 0 as reference, "Reference junction" must be set to "Reference channel of the module".

[2] Use of "Reference channel of group 0, 1, 2, 3":
- An RTD channel must be set as "Pt100 climatic" with temperature unit: "Degrees Celsius".
- "Reference channel of group 0, 1, 2, 3" must be set as the "Reference junction" of this channel.
- There must only be one RTD channel with "Reference junction" = "Reference channel of group 0, 1, 2, 3" per group 0, 1, 2, 3 and IO device!
- For each TC channel in the IO device that is intended to use this reference, "Reference junction" must be set to "Reference channel of group 0, 1, 2, 3".
- If the reference channel is on channel 0, it can also be used as "Reference channel of the module" at the same time.

Configuring with a PROFINET GSD file

The table lists the properties and their dependencies on the measurement type for PROFINET.

Table A- 2 Dependencies on the measurement type

Measurement type	Scalable measuring range	Measuring range resolution	Diagnostics				
			Underflow	Overflow	Wire break	Missing supply voltage L+	Reference junction
Deactivated	*	*	*	*	*	*	*
Voltage	–	*	x	x	–	x	–
Resistor (2, 3, 4-wire connection)	–	*	x	x	x	x	–
Resistor PTC (2-wire connection)	–	*	x	–	–	x	–
Thermal resistor (2, 3, 4-wire connection)	x	2 and 3 decimal places	x	x	x	x	–
Thermocouple	x	2 and 3 decimal places	x	x	x	x	x[1)]

x = property is allowed, – = property is **not allowed**, * = property is not relevant

1 Property is not relevant if "Fixed reference temperature" is used

Configuring with a PROFIBUS GSD file

The table lists the properties and their dependencies on the measurement type and measuring range for PROFIBUS.

Measurement type	Measuring range	Temperature coefficient	Slot reference junction	Temperature unit	Diagnostics			
					Underflow / overflow	Wire break	Missing supply voltage L+	Reference junction
Deactivated	*	*	*	*	*	*	*	*
Voltage	±50 mV, ±80 mV, ±250 mV, ±1 V	*	*	*	x	–	x	–
Resistor (2, 3, 4-wire connection)	150 Ω, 300 Ω, 600 Ω, 3 kΩ, 6 kΩ	*	*	*	x	x	x	–
Resistor (2-wire connection)	PTC[3]	*	*	*	x	–	x	–
Thermal resistor (2, 3, 4-wire connection)	Pt100 climatic	Pt 0.00385055 Pt 0.003916 Pt 0.003902 Pt 0.00392 Pt 0.00385	Reference channel of group 0, 1, 2, 3	Degrees Celsius	x	x	x	–
			No reference channel mode	Degrees Celsius Degrees Fahrenheit	x	x	x	–
	Pt200 Pt500 Pt1000 climatic	Pt 0.00385055 Pt 0.003916 Pt 0.003902 Pt 0.00392 Pt 0.00385	No reference channel mode	Degrees Celsius Degrees Fahrenheit	x	x	x	–
Thermal resistor (2, 3, 4-wire connection)	Pt100 Pt200 Pt500 Pt1000 standard	Pt 0.00385055 Pt 0.003916 Pt 0.003902 Pt 0.00392 Pt 0.00385	No reference channel mode	Degrees Celsius Degrees Fahrenheit Kelvin	x	x	x	–
	Ni100 Ni120 Ni200 Ni500 Ni1000 climatic	Ni 0.00618 Ni 0.00672	No reference channel mode	Degrees Celsius Degrees Fahrenheit	x	x	x	–
	Ni100 Ni120 Ni200 Ni500 Ni1000 standard	Ni 0.00618 Ni 0.00672	No reference channel mode	Degrees Celsius Degrees Fahrenheit Kelvin	x	x	x	–

Measurement type	Measuring range	Temperature coefficient	Slot reference junction	Temperature unit	Diagnostics			
					Underflow / overflow	Wire break	Missing supply voltage L+	Reference junction
Thermal resistor (2, 3, 4-wire connection)	LG-Ni 1000 climatic	LG-Ni 0.005	No reference channel mode	Degrees Celsius Degrees Fahrenheit	x	x	x	–
	LG-Ni 1000 standard	LG-Ni 0.005	No reference channel mode	Degrees Celsius Degrees Fahrenheit Kelvin	x	x	x	–
Thermal resistor (3-wire connection)	Cu 10 climatic	Cu 0.00427	No reference channel mode	Degrees Celsius Degrees Fahrenheit	x	x	x	–
	Cu 10 standard	Cu 0.00427	No reference channel mode	Degrees Celsius Degrees Fahrenheit Kelvin	x	x	x	–

Measurement type	Measuring range	Temperature coefficient	Slot reference junction	Temperature unit	Diagnostics			
					Underflow / overflow	Wire break	Missing supply voltage L+	Reference junction
Thermocouple	Type B, N, E, R, S, J, L, T, K, U, C, TXK	*	Reference channel of the module[1] Internal reference junction Reference channel of group 0, 1, 2, 3[2]	Degrees Celsius Degrees Fahrenheit Kelvin	x	x	x	x
			Fixed reference temperature	Degrees Celsius Degrees Fahrenheit Kelvin	x	x	x	*

x = property is allowed, – = property is **not allowed**, * = property is not relevant

[1] Use of the "Reference channel of the module":
- Channel 0 must be set to "Pt100 climatic" with the temperature unit "Degrees Celsius".
- For each TC channel of this module that is intended to use channel 0 as reference, "Reference junction" must be set to "Enable".

[2] Use of "Reference channel of group 0":
- An RTD channel must be set as "Pt100 climatic" with temperature unit "Degrees Celsius".
- "Reference channel of group 0, 1, 2, 3" must be set as the "Reference junction" of this channel.
- There may be only one RTD channel with "Reference junction active" = "Enable" per group and row.
- For each TC channel of this row that is intended to use this reference, "Reference junction active" must be set to "Enable".

[3] Underflow = 8000_H; wire break and overflow lead to 01_H (triggered) → (no diagnostics), wire break and overflow are therefore not relevant.

A.2 Parameter assignment and structure of parameter data record

The data record of the module has an identical structure, regardless of whether you configure the module with PROFIBUS DP or PROFINET IO. With data record 128, you can reconfigure the module in your user program regardless of your programming. This means that you can use all the functions of the module even if you configured it via PROFIBUS-GSD.

Parameter assignment in the user program

You can reassign the parameters of the module in RUN. For example, the voltage or current values of selected channels can be changed in RUN without having an effect on the other channels.

Changing parameters in RUN

The "WRREC" instruction is used to transfer the parameters to the module using data record 128. The parameters set with STEP 7 will not be changed on the CPU, which means that the parameters set in STEP 7 will be valid again after a restart.

Output parameter STATUS

If errors occur when transferring parameters with the "WRREC" instruction, the module continues operation with the previous parameter assignment. The STATUS output parameter contains a corresponding error code.

You will find a description of the "WRREC" instruction and the error codes in the STEP 7 online help.

Structure of data record 128

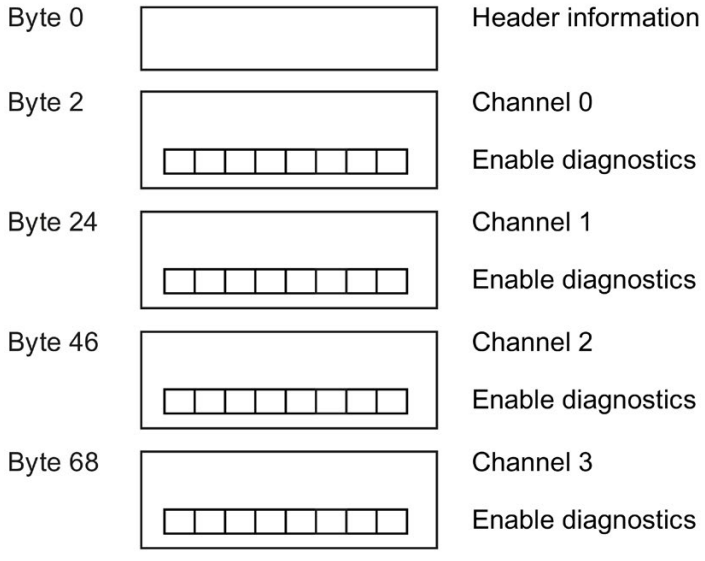

Figure A-1 Structure of data record 128

Header information

The figure below shows the structure of the header information.

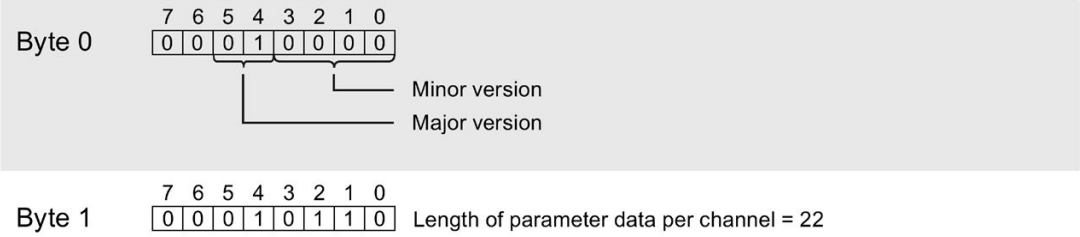

Figure A-2 Header information

Parameters

The figure below shows the structure of the parameters for channels 0 to 3.

You can activate a parameter by setting the corresponding bit to "1".

* x = 2 + (channel number * 22); channel number = 0 to 3

	7	6	5	4	3	2	1	0	
Byte x*									Measurement type, see table Codes for measurement type
Byte x+1									Measuring range, see table Codes for measuring range
Byte x+2									Temperature coefficient, see table Codes for temperature coefficient
Byte x+3									Smoothing: 0000 = None 0001 = Weak 0010 = Medium 0011 = Strong Interference frequency suppression: 0001 = 60 Hz 0010 = 50 Hz 0100 = 16.6 Hz
Byte x+4									Temperature unit: 00 = Degrees Celsius 01 = Degrees Fahrenheit 10 = Kelvin (not for measuring range climate) Reference junction: (for RTD as sender reference channel, for TC as receiver reference channel) 0000 = No reference channel mode 0010 = Reference channel of the module 0011 = Internal reference junction 1000 = Reference channel of group 0 1001 = Reference channel of group 1 1010 = Reference channel of group 2 1011 = Reference channel of group 3 1111 = Fixed reference temperature
Byte x+5									Enable hardware interrupt, high limit 2 Enable hardware interrupt, low limit 2 Enable hardware interrupt, high limit 1 Enable hardware interrupt, low limit 1
Byte x+6									Enable diagnostics Missing supply voltage L+: Wire break Reference junction Underflow Overflow

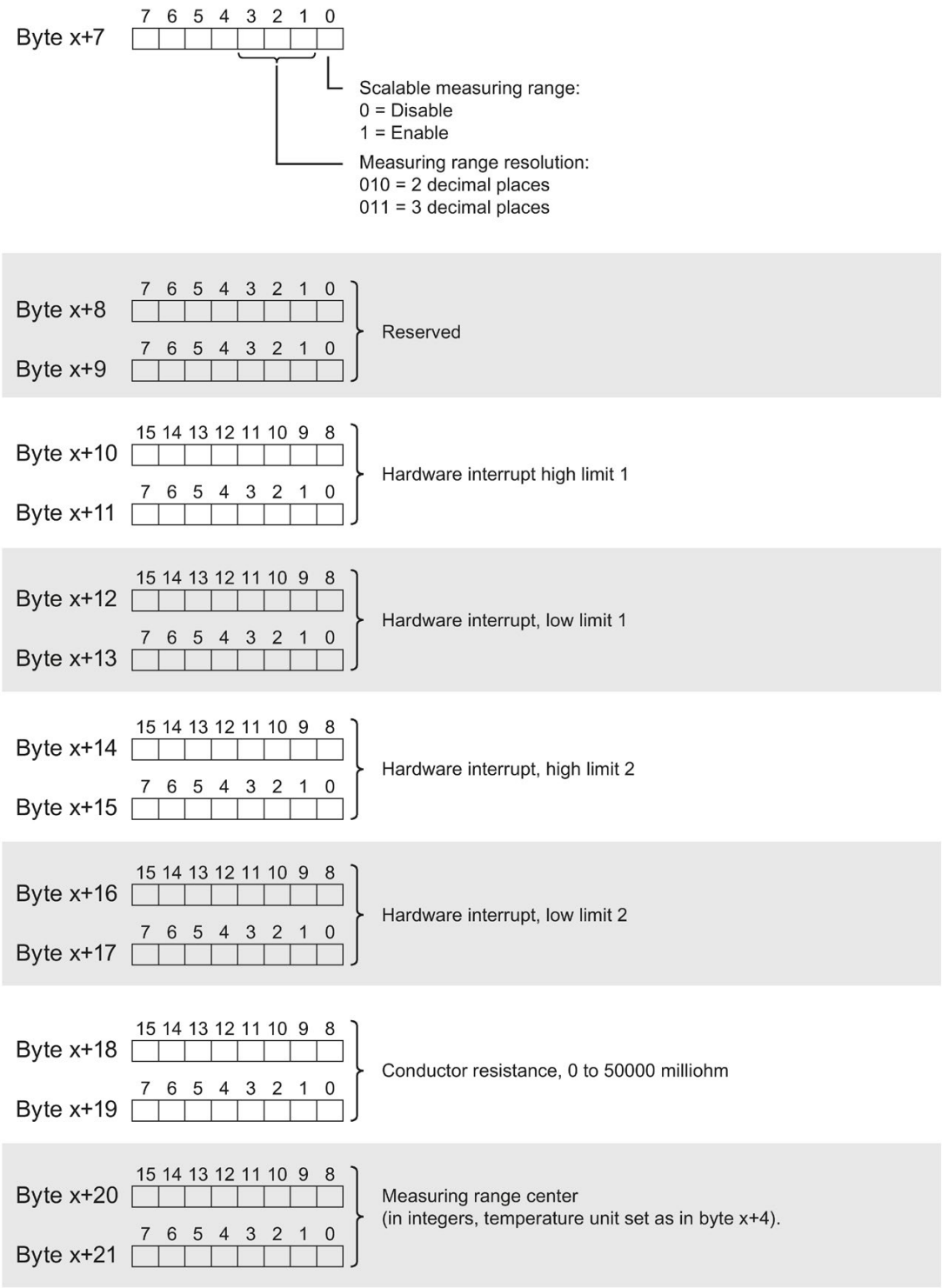

Figure A-3 Structure of byte x to x+21 for channel 0 to 3

Codes for measurement type

The following table contains the codes for the measurement types of the analog input module. You must enter these codes at byte x (see previous figure).

Table A- 3 Codes for measurement type

Measurement type	Code
Deactivated	0000 0000
Voltage	0000 0001
Resistor, 4-wire connection	0000 0100
Resistor, 3-wire connection	0000 0101
Resistor, 2-wire connection	0000 0110
Thermal resistor, 4-wire connection	0000 0111
Thermal resistor, 3-wire connection	0000 1000
Thermal resistor, 2-wire connection	0000 1001
Thermocouple	0000 1010

Codes for measuring range

The following table contains the codes for the measuring ranges of the analog input module. You must enter these codes at byte x+1 (see previous figure).

Table A- 4 Codes for measuring range

Measuring range	Code
Voltage	
50 mV	0000 0001
80 mV	0000 0010
250 mV	0000 0011
1 V	0000 0101
Resistor	
150 Ω	0000 0001
300 Ω	0000 0010
600 Ω	0000 0011
3 kΩ	0000 0100
6 kΩ	0000 0101
PTC	0000 1111
Thermal resistor climatic	
Pt 100	0000 0000
Pt 200	0000 0111
Pt 500	0000 1000
Pt 1000	0000 1001

Measuring range	Code
Thermal resistor standard	
Pt 100	0000 0010
Pt 200	0000 1011
Pt 500	0000 0100
Pt 1000	0000 0101
Thermal resistor climatic	
Ni 100	0000 0001
Ni 120	0000 1101
Ni 200	0001 0001
Ni 500	0001 0011
Ni 1000	0000 1010
LG-Ni 1000	0001 1101
Thermal resistor standard	
Ni 100	0000 0011
Ni 120	0000 1100
Ni 200	0001 0000
Ni 500	0001 0010
Ni 1000	0000 0110
LG-Ni 1000	0001 1100
Thermal resistor	
Cu 10 climatic	0000 1110
Cu 10 standard	0000 1111
Thermocouple	
Type B	0000 0000
Type N	0000 0001
Type E	0000 0010
Type R	0000 0011
Type S	0000 0100
Type J	0000 0101
Type L	0000 0110
Type T	0000 0111
Type K	0000 1000
Type U	0000 1001
Type C	0000 1010
Type TXK	0000 1011

Codes for temperature coefficient for temperature measurement

The following table contains the codes for the temperature coefficients of the analog input module. You must enter these codes at byte x+2 (see previous figure).

Table A- 5 Codes for temperature coefficient for temperature measurement

Temperature coefficient	Code
Pt 0.00385055	0000 0000
Pt 0.003916	0000 0001
Pt 0.003902	0000 0010
Pt 0.00392	0000 0011
Pt 0.00385	0000 0100
Ni 0.00618	0000 1000
Ni 0.00672	0000 1001
LG-Ni 0.005	0000 1010
Cu 0.00427	0000 1100

Limits for hardware interrupts

The following tables contain the permitted limits for hardware interrupts (in each case, the usable value is given). The limits depend on the selected measurement type and the selected measuring range. The value for the overflow must be larger than the value for the underflow. The limits are specified as decimal values. The conversion to the respective temperature unit is (1 digit = 0.1) for the standard range and (1 digit = 0.01) for the climate range, see section Representation of analog values (Page 69).

Table A- 6 Limits for resistor and voltage

Resistor (all possible measuring range settings)	Voltage	
32510	32510	Overflow
1	-32511	Underflow

Table A- 7 Limits for thermocouple types B, C, and E

Thermocouple									
Type B			Type C			Type E			
°C	°F	K	°C	°F	K	°C	°F	K	
20699	32765	23431	24999	32765	27731	11999	21919	14731	Overflow
-1199	-1839	1533	-1199	-1839	1533	-2699	-4539	33	Underflow

Table A- 8 Limits for thermocouple types R, S, J, and L

Thermocouple									
Types R, S			Type J			Type L			
°C	°F	K	°C	°F	K	°C	°F	K	
20189	32765	22921	14499	26419	17231	11499	21019	14231	Overflow
-1699	-2739	1033	-2099	-3459	633	-1999	-3279	733	Underflow

Table A- 9 Limits for thermocouple types T, K, and U

Thermocouple									
Type T			Type K			Type U			
°C	°F	K	°C	°F	K	°C	°F	K	
5399	10039	8131	16219	29515	18951	8499	15619	11231	Overflow
-2699	-4539	33	-2699	-4539	33	-1999	-3279	733	Underflow

Table A- 10 Limits for thermocouple types N and TXK

Thermocouple						
Type N			Type TXK			
°C	°F	K	°C	°F	K	
15499	28219	18231	10499	19219	13231	Overflow
-2699	-4539	33	-1999	-3279	733	Underflow

Table A- 11 Limits for thermal resistor

Thermal resistor						
	Standard			Climatic		
	°C	°F	K	°C	°F	
Cu	3119	5935	5851	17999	32765	Overflow
	-2399	-3999	333	-5999	-7599	Underflow
Pt	9999	18319	12731	15499	31099	Overflow
	-2429	-4053	303	-14499	-22899	Underflow
Ni, Ni-LG	2949	5629	5681	29499	32765	Overflow
	-1049	-1569	1683	-10499	-15699	Underflow

A.3 Errors when transferring the data record

Error transferring the data record

The module always checks all values of the data record to be sent. The module applies the values from the data record only when all values have been transmitted without errors.

The WRREC instruction for writing data records returns corresponding error codes when errors occur in the STATUS parameter, see also the description of the "STATUS" parameter in the STEP 7 online help).

The following table shows the module-specific error codes and their meaning for parameter data record 128.

Error code in STATUS parameter (hexadecimal)				Meaning	Solution
Byte 0	Byte 1	Byte 2	Byte 3		
DF	80	B0	xx	Number of the data record unknown.	Enter a valid number for the data record.
DF	80	B1	xx	Length of the data record incorrect.	Enter a valid value for the data record length.
DF	80	B2	xx	Slot invalid or cannot be accessed.	• Check the station to determine whether the module is plugged or pulled. • Check the assigned values for the parameters of the WRREC instruction.
DF	80	E0	xx	Wrong version or error in the header information.	Correct the version, length and number of parameter blocks.
DF	80	E1	xx	Parameter error	Check the parameters of the module.

A.4 Switchable wire break check

Function

The "Switchable wire break check" is available for thermocouples. It switches off the wire break check for the module.

This is required, for example, to calibrate thermocouples, since the test current necessary for a wire break check leads to measurement errors during calibration.

The function has no effect on channels that are not assigned in the thermocouple mode.

Note

Startup and parameter reassignment

The wire break check is switched on again at each startup and during any parameter reassignment of the module.

Switch-off via the user program

You can deactivate the wire break check using data record 237.

Table A- 12 Structure of data record 237, switchable wire break check

Byte	Function	Format	Value	Description
0	Command	UBYTE	80_H	Wire break check
1	Identifier	UBYTE	00_H	Not relevant
2	Channel number	UBYTE	FF_H	All channels
3	Calibration step	UBYTE	FF_H	First triggering
4	Measurement type	UBYTE	00_H	Not relevant
5	Measuring range	UBYTE	00_H	Not relevant
6	Action	UBYTE	01_H	Deactivate wire break check
			02_H	Activate wire break check
7...17	Reserved	UBYTE	00_H	Not relevant

Representation of analog values

B

This appendix shows the analog values for all measuring ranges supported by the analog input module AI 4xRTD/TC 2-/3-/4-wire HF.

Measured value resolution

The resolution of the analog values differs depending on the analog module and its parameter assignment.

Each analog value is written left aligned to the tags. The bits marked with "x" are set to "0".

Note

Temperature values

The digitized temperature values are the result of a conversion in the analog module. The following resolution therefore does not apply to temperature values.

Table B- 1 Resolution of the analog values

Resolution in bits including sign	Values		Analog value	
	Decimal	Hexadecimal	High byte	Low byte
14	4	4_H	Sign 0 0 0 0 0 0 0	0 0 0 0 0 1 x x
15	2	2_H	Sign 0 0 0 0 0 0 0	0 0 0 0 0 0 1 x
16	1	1_H	Sign 0 0 0 0 0 0 0	0 0 0 0 0 0 0 1

B.1 Representation of input ranges

In the following tables, you can find the digitized representation of the bipolar and unipolar input ranges. The resolution is 16 bits.

Table B- 2 Bipolar input ranges

Dec. value	Measured value in %	Data word																Range
		2^{15}	2^{14}	2^{13}	2^{12}	2^{11}	2^{10}	2^{9}	2^{8}	2^{7}	2^{6}	2^{5}	2^{4}	2^{3}	2^{2}	2^{1}	2^{0}	
32767	>117.589	0	1	1	1	1	1	1	1	1	1	1	1	1	1	1	1	Overflow
32511	117.589	0	1	1	1	1	1	1	0	1	1	1	1	1	1	1	1	Overrange
27649	100.004	0	1	1	0	1	1	0	0	0	0	0	0	0	0	0	1	
27648	100.000	0	1	1	0	1	1	0	0	0	0	0	0	0	0	0	0	Nominal range
1	0.003617	0	0	0	0	0	0	0	0	0	0	0	0	0	0	0	1	
0	0.000	0	0	0	0	0	0	0	0	0	0	0	0	0	0	0	0	
-1	-0.003617	1	1	1	1	1	1	1	1	1	1	1	1	1	1	1	1	
-27648	-100.000	1	0	0	1	0	1	0	0	0	0	0	0	0	0	0	0	
-27649	-100.004	1	0	0	1	0	0	1	1	1	1	1	1	1	1	1	1	Underrange
-32512	-117.593	1	0	0	0	0	0	0	1	0	0	0	0	0	0	0	0	
-32768	<-117.593	1	0	0	0	0	0	0	0	0	0	0	0	0	0	0	0	Underflow

Table B- 3 Unipolar input ranges

Dec. value	Measured value in %	Data word																Range
		2^{15}	2^{14}	2^{13}	2^{12}	2^{11}	2^{10}	2^{9}	2^{8}	2^{7}	2^{6}	2^{5}	2^{4}	2^{3}	2^{2}	2^{1}	2^{0}	
32767	>117.589	0	1	1	1	1	1	1	1	1	1	1	1	1	1	1	1	Overflow
32511	117.589	0	1	1	1	1	1	1	0	1	1	1	1	1	1	1	1	Overrange
27649	100.004	0	1	1	0	1	1	0	0	0	0	0	0	0	0	0	1	
27648	100.000	0	1	1	0	1	1	0	0	0	0	0	0	0	0	0	0	Nominal range
1	0.003617	0	0	0	0	0	0	0	0	0	0	0	0	0	0	0	1	
0	0.000	0	0	0	0	0	0	0	0	0	0	0	0	0	0	0	0	
-1	-0.003617	1	1	1	1	1	1	1	1	1	1	1	1	1	1	1	1	Underrange
-4864	-17.593	1	1	1	0	1	1	0	1	0	0	0	0	0	0	0	0	
-32768	<-17.593	1	0	0	0	0	0	0	0	0	0	0	0	0	0	0	0	Underflow

B.2 Representation of analog values in voltage measuring ranges

The following tables list the decimal and hexadecimal values (codes) of the possible voltage measuring ranges.

Table B- 4 Voltage measuring range ±1 V

Values		Voltage measuring range	Range
Dec.	Hex.	±1 V	
32767	7FFF	> 1.176 V	Overflow
32511	7EFF	1.176 V	Overrange
27649	6C01		
27648	6C00	1 V	Nominal range
20736	5100	0.75 V	
1	1	36.17 µV	
0	0	0 V	
-1	FFFF		
-20736	AF00	-0.75 V	
-27648	9400	-1 V	
-27649	93FF		Underrange
-32512	8100	-1.176 V	
-32768	8000	<-1.176 V	Underflow

Table B- 5 Voltage measuring range ±500 mV to ±50 mV

Values		Voltage measuring range			Range
Dec.	Hex.	±250 mV	±80 mV	±50 mV	
32767	7FFF	> 294.0 mV	> 94.1 mV	> 58.8 mV	Overflow
32511	7EFF	294.0 mV	94.1 mV	58.8 mV	Overrange
27649	6C01				
27648	6C00	250 mV	80 mV	50 mV	Nominal range
20736	5100	187.5 mV	60 mV	37.5 mA	
1	1	9.04 µV	2.89 µV	1.81 µV	
0	0	0 mV	0 mV	0 mV	
-1	FFFF				
-20736	AF00	-187.5 mV	-60 mV	-37.5 mV	
-27648	9400	-250 mV	-80 mV	-50 mV	
-27649	93FF				Underrange
-32512	8100	-294.0 mV	-94.1 mV	-58.8 mV	
-32768	8000	<-294.0 mV	<-94.1 mV	<-58.8 mV	Underflow

B.3 Representation of analog values for resistance-type sensors

The following tables list the decimal and hexadecimal values (codes) of the possible resistance-type sensor ranges.

Table B- 6 Resistance-type sensors from 150 Ω to 6000 Ω

Values		Resistance-type sensor range					Range
Dec.	Hex.	150 Ω	300 Ω	600 Ω	3000 Ω	6000 Ω	
32767	7FFF	> 176.38 Ω	> 352.77 Ω	> 705.53 Ω	> 3527.7 Ω	> 7055.3 Ω	Overflow
32511	7EFF	176.38 Ω	352.77 Ω	705.53 Ω	3527.7 Ω	7055.3 Ω	Overrange
27649	6C01						
27648	6C00	150 Ω	300 Ω	600 Ω	3000 Ω	6000 Ω	Nominal range
20736	5100	112.5 Ω	225 Ω	450 Ω	2250 Ω	4500 Ω	
1	1	5.43 mΩ	10.85 mΩ	21.70 mΩ	108.5 mΩ	217 mΩ	
0	0	0 Ω	0 Ω	0 Ω	0 Ω	0 Ω	
-32768	8000	(negative values are physically impossible)					Underflow[1]

[1] If the resistors are not connected correctly or the conductor resistance is too high

B.4 Representation of analog values for thermal resistors

Note

A higher resolution can be configured for the measuring range for the standard resistance thermometers, see section Scalable measuring range (Page 32).

The tables below list the decimal and hexadecimal values (codes) of the thermal resistors.

Table B- 7 Thermal resistor Pt 100, 200, 500, 1000 standard

Pt x00 Standard in °C (1 digit = 0.1°C)	Values		Pt x00 Standard in °F (1 digit = 0.1 °F)	Values		Pt x00 standard in K (1 digit = 0.1 K)	Values		Range
	Dec.	Hex.		Dec.	Hex.		Dec.	Hex.	
> 1000.0	32767	7FFF	> 1832.0	32767	7FFF	> 1273.2	32767	7FFF	Overflow
1000.0 : 850.1	10000 : 8501	2710 : 2135	1832.0 : 1562.1	18320 : 15621	4790 : 3D05	1273.2 : 1123.3	12732 : 11233	31BC : 2BE1	Overrange
850.0 : -200.0	8500 : -2000	2134 : F830	1562.0 : -328.0	15620 : -3280	3D04 : F330	1123.2 : 73.2	11232 : 732	2BE0 : 2DC	Nominal range
-200.1 : -243.0	-2001 : -2430	F82F : F682	-328.1 : -405.4	-3281 : -4054	F32F : F02A	73.1 : 30.2	731 : 302	2DB : 12E	Underrange
< -243.0	-32768	8000	< -405.4	-32768	8000	< 30.2	32768	8000	Underflow

Table B- 8 Thermal resistor Pt 100, 200, 500, 1000 climatic

Pt x00 climatic in °C (1 digit = 0.01 °C)	Values		Pt x00 climatic in °F (1 digit = 0.01 °F)	Values		Range
	Dec.	Hex.		Dec.	Hex.	
> 155.00	32767	7FFF	> 311.00	32767	7FFF	Overflow
155.00 : 130.01	15500 : 13001	3C8C : 32C9	311.00 : 266.01	31100 : 26601	797C : 67E9	Overrange
130.00 : -120.00	13000 : -12000	32C8 : D120	266.00 : -184.00	26600 : -18400	67E8 : B820	Nominal range
-120.01 : -145.00	-12001 : -14500	D11F : C75C	-184.01 : -229.00	-18401 : -22900	B81F : A68C	Underrange
< -145.00	-32768	8000	< -229.00	-32768	8000	Underflow

Table B- 9 Thermal resistor Ni 100, 120, 200, 500, 1000, LG-Ni 1000 standard

Ni x00 standard in °C (1 digit = 0.1 °C)	Values		Ni x00 standard in °F (1 digit = 0.1 °F)	Values		Ni x00 standard in K (1 digit = 0.1 K)	Values		Range
	Dec.	Hex.		Dec.	Hex.		Dec.	Hex.	
> 295.0	32767	7FFF	> 563.0	32767	7FFF	> 568.2	32767	7FFF	Overflow
295.0 : 250.1	2950 : 2501	B86 : 9C5	563.0 : 482.1	5630 : 4821	15FE : 12D5	568.2 : 523.3	5682 : 5233	1632 : 1471	Overrange
250.0 : -60.0	2500 : -600	9C4 : FDA8	482.0 : -76.0	4820 : -760	12D4 : FD08	523.2 : 213.2	5232 : 2132	1470 : 854	Nominal range
-60.1 : -105.0	-601 : -1050	FDA7 : FBE6	-76.1 : -157.0	-761 : -1570	FD07 : F9DE	213.1 : 168.2	2131 : 1682	853 : 692	Underrange
< -105.0	-32768	8000	< -157.0	-32768	8000	< 168.2	32768	8000	Underflow

Table B- 10 Thermal resistor Ni 100, 120, 200, 500, 1000, LG-Ni 1000 climatic

Ni x00 climatic in °C (1 digit = 0.01 °C)	Values		Ni x00 climatic in °F (1 digit = 0.01 °F)	Values		Range
	Dec.	Hex.		Dec.	Hex.	
> 295.00	32767	7FFF	> 327.66	32767	7FFF	Overflow
295.00 : 250.01	29500 : 25001	733C : 61A9	327.66 : 280.01	32766 : 28001	7FFE : 6D61	Overrange
250.00 : -60.00	25000 : -6000	61A8 : E890	280.00 : -76.00	28000 : -7600	6D60 : E250	Nominal range
-60.01 : -105.00	-6001 : -10500	E88F : D6FC	-76.01 : -157.00	-7601 : -15700	E24F : C2AC	Underrange
< - 105.00	-32768	8000	< - 157.00	-32768	8000	Underflow

Table B- 11 Thermal resistor Cu 10 standard

Cu 10 standard in °C (1 digit = 0.01 °C)	Values		Cu 10 standard in °F (1 digit = 0.01 °F)	Values		Cu 10 standard in K (1 digit = 0.01 K)	Values		Range
	Dec.	Hex.		Dec.	Hex.		Dec.	Hex.	
> 312.0	32767	7FFF	> 593.6	32767	7FFF	> 585.2	32767	7FFF	Overflow
312.0 : 260.1	3120 : 2601	C30 : A29	593.6 : 500.1	5936 : 5001	1730 : 12D5	585.2 : 533.3	5852 : 5333	16DC : 14D5	Overrange
260.0 : -200.0	2600 : -2000	A28 : F830	500.0 : -328.0	5000 : -3280	1389 : F330	533.2 : 73.2	5332 : 732	14D4 : $2DC_H$	Nominal range
-200.1 : -240.0	-2001 : -2400	F82F : F6A0	-328.1 : -400.0	-3281 : -4000	F32F : F060	73.1 : 33.2	731 : 332	2DB : $14C_H$	Underrange
< -240.0	-32768	8000	< -400.0	-32768	8000	< 33.2	32768	8000	Underflow

Table B- 12 Thermal resistor Cu 10 climatic

Cu 10 climatic in °C (1 digit = 0.01 °C)	Values		Cu 10 climatic in °F (1 digit = 0.01 °F)	Values		Range
	Dec.	Hex.		Dec.	Hex.	
> 180.00	32767	7FFF	> 325.11	32767	7FFF	Overflow
180.00 : 150.01	18000 : 15001	4650 : 3A99	327.66 : 280.01	32766 : 28001	7FFE : 6D61A	Overrange
150.00 : -50.00	15000 : -5000	3A98 : EC78	280.00 : - 58.00	28000 : -5800	6D60 : $E958_H$	Nominal range
-50.01 : -60.00	-5001 : -6000	EC77 : E890	-58.01 : -76.00	-5801 : -7600	E957 : E250	Underrange
< - 60.00	-32768	8000	< - 76.00	-32768	8000	Underflow

B.5 Representation of analog values for thermocouples

Note

A higher resolution can be configured for thermocouples, see section Scalable measuring range (Page 32).

The tables below list the decimal and hexadecimal values (codes) of the thermocouples.

Table B- 13 Thermocouple type B

Type B in °C	Values		Type B in °F	Values		Type B in K	Values		Range
	Dec.	Hex.		Dec.	Hex.		Dec.	Hex.	
> 2070.0	32767	7FFF	> 3276.6	32767	7FFF	> 2343.2	32767	7FFF	Overflow
2070.0 : 1820.1	20700 : 18201	50DC : 4719	3276.6 : 2786.6	32766 : 27866	7FFE : 6CDA	2343.2 : 2093.3	23432 : 20933	5B88 : 51C5	Overrange
1820.0 : 0.0	18200 : 0	4718 : 0000	2786.5 : 32.0	27865 : 320	6CD9 : 0140	2093.2 : 273.2	20932 : 2732	51C4 : 0AAC	Nominal range
-0.1 : -120.0	-1 : -1200	FFFF : FB50	31.9 : -184.0	319 : -1840	013F : F8D0	273.1 : 153.2	2731 : 1532	0AAB : 05FC	Underrange
< -120.0	-32768	8000	< -184.0	-32768	8000	< 153.2	-32768	8000	Underflow

Table B- 14 Thermocouple type C

Type C in °C	Values		Type C in °F	Values		Type C in K	Values		Range
	Dec.	Hex.		Dec.	Hex.		Dec.	Hex.	
> 2500.0	32767	7FFF	> 3276.6	32767	7FFF	> 2773.2	32767	7FFF	Overflow
2500.0 : 2315.1	25000 : 23151	61A8 : 5A6F	3276.6 : 2786.6	32766 : 27866	7FFE : 6CDA	2773.2 : 2588.3	27732 : 25883	6C54 : 651B	Overrange
2315.0 : 0.0	23150 : 0	5A6E : 0000	2786.5 : 32.0	27865 : 320	6CD9 : 0140	2588.2 : 273.2	25882 : 2732	651A : 0AAC	Nominal range
-0.1 : -120.0	-1 : -1200	FFFF : FB50	31.9 : -184.0	319 : -1840	013F : F8D0	273.1 : 153.2	2731 : 1532	0AAB : 05FC	Underrange
< -120.0	-32768	8000	< -184.0	-32768	8000	< 153.2	-32768	8000	Underflow

Table B- 15 Thermocouple type E

Type E in °C	Values		Type E in °F	Values		Type E in K	Values		Range
	Dec.	Hex.		Dec.	Hex.		Dec.	Hex.	
> 1200.0	32767	7FFF	> 2192.0	32767	7FFF	> 1473.2	32767	7FFF	Overflow
1200.0 : 1000.1	12000 : 10001	2EE0 : 2711	2192.0 : 1832.1	21920 : 18321	55A0 : 4791	1473.2 : 1273.3	14732 : 12733	398C : 31BD	Overrange
1000.0 : -270.0	10000 : -2700	2710 : F574	1832.0 : -454.0	18320 : -4540	4790 : EE44	1273.2 : 3.2	12732 : 32	31BC : 0020	Nominal range
< -270.0	-32768	8000	< -454.0	-32768	8000	< 3.2	-32768	8000	Underflow

Table B- 16 Thermocouple type J

Type J in °C	Values		Type J in °F	Values		Type J in K	Values		Range
	Dec.	Hex.		Dec.	Hex.		Dec.	Hex.	
> 1450.0	32767	7FFF	> 2642.0	32767	7FFF	> 1723.2	32767	7FFF	Overflow
1450.0 : 1200.1	14500 : 12001	38A4 : 2EE1	2642.0 : 2192.1	26420 : 21921	6734 : 55A1	1723.2 : 1473.3	17232 : 14733	4350 : 398D	Overrange
1200.0 : -210.0	12000 : -2100	2EE0 : F7CC	2192.0 : -346.0	21920 : -3460	55A0 : F27C	1473.2 : 63.2	14732 : 632	398C : 0278	Nominal range
< -210.0	-32768	8000	< -346.0	-32768	8000	< 63.2	-32768	8000	Underflow

Table B- 17 Thermocouple type K

Type K in °C	Values		Type K in °F	Values		Type K in K	Values		Range
	Dec.	Hex.		Dec.	Hex.		Dec.	Hex.	
> 1622.0	32767	7FFF	> 2951.6	32767	7FFF	> 1895.2	32767	7FFF	Overflow
1622.0 : 1372.1	16220 : 13721	3F5C : 3599	2951.6 : 2501.7	29516 : 25017	734C : 61B9	1895.2 : 1645.3	18952 : 16453	4A08 : 4045	Overrange
1372.0 : -270.0	13720 : -2700	3598 : F574	2501.6 : -454.0	25016 : -4540	61B8 : EE44	1645.2 : 3.2	16452 : 32	4044 : 0020	Nominal range
< -270.0	-32768	8000	< -454.0	-32768	8000	< 3.2	-32768	8000	Underflow

Table B- 18 Thermocouple type L

Type L in °C	Values		Type L in °F	Values		Type L in K	Values		Range
	Dec.	Hex.		Dec.	Hex.		Dec.	Hex.	
> 1150.0	32767	7FFF	> 2102.0	32767	7FFF	> 1423.2	32767	7FFF	Overflow
1150.0 : 900.1	11500 : 9001	2CEC : 2329	2102.0 : 1652.1	21020 : 16521	521C : 4089	1423.2 : 1173.3	14232 : 11733	3798 : 2DD5	Overrange
900.0 : -200.0	9000 : -2000	2328 : F830	1652.0 : -328.0	16520 : -3280	4088 : F330	1173.2 : 73.2	11732 : 732	2DD4 : 02DC	Nominal range
< -200.0	-32768	8000	< -328.0	-32768	8000	< 73.2	-32768	8000	Underflow

Table B- 19 Thermocouple type N

Type N in °C	Values		Type N in °F	Values		Type N in K	Values		Range
	Dec.	Hex.		Dec.	Hex.		Dec.	Hex.	
> 1550.0	32767	7FFF	> 2822.0	32767	7FFF	> 1823.2	32767	7FFF	Overflow
1550.0 : 1300.1	15500 : 13001	3C8C : 32C9	2822.0 : 2372.1	28220 : 23721	6E3C : 5CA9	1823.2 : 1573.3	18232 : 15733	4738 : 3D75	Overrange
1300.0 : -270.0	13000 : -2700	32C8 : F574	2372.0 : -454.0	23720 : -4540	5CA8 : EE44	1573.2 : 3.2	15732 : 32	3D74 : 0020	Nominal range
< -270.0	-32768	8000	< -454.0	-32768	8000	< 3.2	-32768	8000	Underflow

Table B- 20 Thermocouples R and S

Types R, S in °C	Values		Types R, S in °F	Values		Types R, S in K	Values		Range
	Dec.	Hex.		Dec.	Hex.		Dec.	Hex.	
> 2019.0	32767	7FFF	> 3276.6	32767	7FFF	> 2292.2	32767	7FFF	Overflow
2019.0 : 1769.1	20190 : 17691	4EDE : 451B	3276.6 : 3216.3	32766 : 32163	7FFE : 7DA3	2292.2 : 2042.3	22922 : 20423	598A : 4FC7	Overrange
1769.0 : -50.0	17690 : -500	451A : FE0C	3216.2 : -58.0	32162 : -580	7DA2 : FDBC	2042.2 : 223.2	20422 : 2232	4FC6 : 08B8	Nominal range
-50.1 : -170.0	-501 : -1700	FE0B : F95C	-58.1 : -274.0	-581 : -2740	FDBB : F54C	223.1 : 103.2	2231 : 1032	08B7 : 0408	Underrange
< -170.0	-32768	8000	< -274.0	-32768	8000	< 103.2	< 1032	8000	Underflow

Table B- 21 Thermocouple type T

Type T in °C	Values		Type T in °F	Values		Type T in K	Values		Range
	Dec.	Hex.		Dec.	Hex.		Dec.	Hex.	
> 540.0	32767	7FFF	> 1004.0	32767	7FFF	> 813.2	32767	7FFF	Overflow
540.0 : 400.1	5400 : 4001	1518 : 0FA1	1004.0 : 752.1	10040 : 7521	2738 : 1D61	813.2 : 673.3	8132 : 6733	1FC4 : 1AAD	Overrange
400.0 : -270.0	4000 : -2700	0FA0 : F574	752.0 : -454.0	7520 : -4540	1D60 : EE44	673.2 : 3.2	6732 : 32	1AAC : 0020	Nominal range
< -270.0	-32768	8000	< -454.0	-32768	8000	< 3.2	-32768	8000	Underflow

Table B- 22 Thermocouple type U

Type U in °C	Values		Type U in °F	Values		Type U in K	Values		Range
	Dec.	Hex.		Dec.	Hex.		Dec.	Hex.	
> 850.0	32767	7FFF	> 1562.0	32767	7FFF	> 1123.2	32767	7FFF	Overflow
850.0 : 600.1	8500 : 6001	2134 : 1771	1562.0 : 1112.1	15620 : 11121	2738.0 : 2B71	1123.2 : 873.3	11232 : 8733	2BE0 : 221D	Overrange
600.0 : -200.0	6000 : -2000	1770 : F830	1112.0 : -328.0	11120 : -3280	2B70 : F330	873.2 : 73.2	8732 : 732	221C : 02DC	Nominal range
< -200.0	-32768	8000	< -328.0	-32768	8000	< 73.2	-32768	8000	Underflow

Table B- 23 Thermocouple type TXK (GOST)

Type TXK in °C	Values		Type TXK in °F	Values		Type TXK in K	Values		Range
	Dec.	Hex.		Dec.	Hex.		Dec.	Hex.	
> 1050.0	32767	7FFF	> 1922.0	32767	7FFF	>1323.2	32767	7FFF	Overflow
1050.0 : 800.1	10500 : 8001	2904 : 1F41	1922.0 : 1472.1	19220 : 14721	4B14 : 3981	1323.2 : 1073.3	13232 : 10733	33B0 : 29ED	Overrange
800.0 : 0.0 : -200.0	8000 : 0 : -2000	1F40 : 0000 : F830	1472.0 : 32.0 : -328.0	14720 : 320 : -3280	3980 : 0140 : F330	1073.2 : 273 : 73.2	10732 : 2730 : 732	29EC : 0AAA : 02DC	Nominal range
< -200.0	-32768	8000	< -328.0	-32768	8000	<73.2	-32768	8000	Underflow

SIEMENS

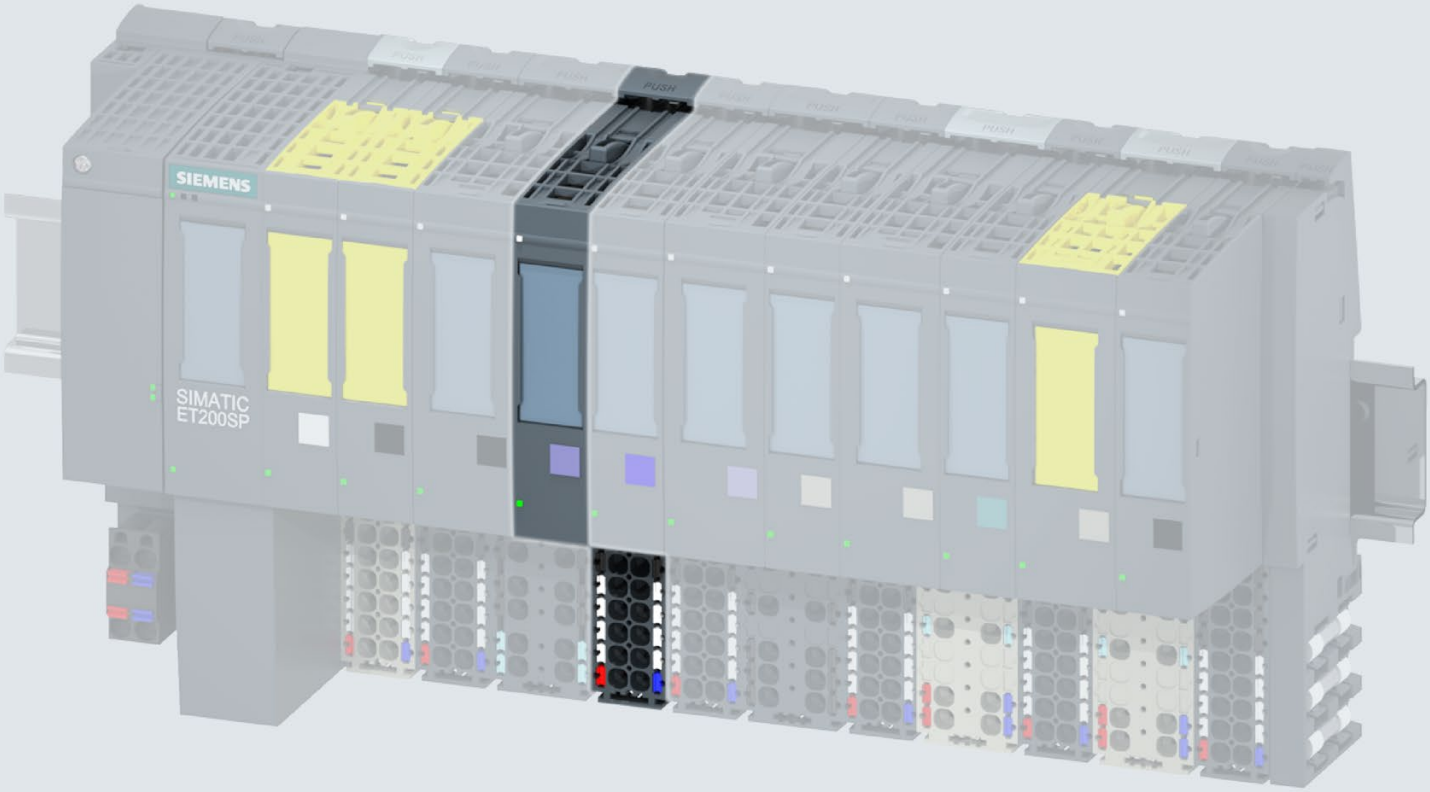

Manual

SIMATIC

ET 200SP

Analog input module
AI 8xRTD/TC 2-wire HF (6ES7134-6JF00-0CA1)

Edition 09/2018

support.industry.siemens.com

SIEMENS

SIMATIC

ET 200SP
Analog input module
AI 8xRTD/TC 2-wire HF
(6ES7134-6JF00-0CA1)

Manual

Preface

Guide to documentation 1

Product overview 2

Wiring 3

Parameters/address space 4

Interrupts/diagnostics alarms 5

Technical specifications 6

Parameter data record A

Representation of analog values B

09/2018

A5E32942580-AB

Legal information

Warning notice system

This manual contains notices you have to observe in order to ensure your personal safety, as well as to prevent damage to property. The notices referring to your personal safety are highlighted in the manual by a safety alert symbol, notices referring only to property damage have no safety alert symbol. These notices shown below are graded according to the degree of danger.

⚠ DANGER

indicates that death or severe personal injury **will** result if proper precautions are not taken.

⚠ WARNING

indicates that death or severe personal injury **may** result if proper precautions are not taken.

⚠ CAUTION

indicates that minor personal injury can result if proper precautions are not taken.

NOTICE

indicates that property damage can result if proper precautions are not taken.

If more than one degree of danger is present, the warning notice representing the highest degree of danger will be used. A notice warning of injury to persons with a safety alert symbol may also include a warning relating to property damage.

Qualified Personnel

The product/system described in this documentation may be operated only by **personnel qualified** for the specific task in accordance with the relevant documentation, in particular its warning notices and safety instructions. Qualified personnel are those who, based on their training and experience, are capable of identifying risks and avoiding potential hazards when working with these products/systems.

Proper use of Siemens products

Note the following:

⚠ WARNING

Siemens products may only be used for the applications described in the catalog and in the relevant technical documentation. If products and components from other manufacturers are used, these must be recommended or approved by Siemens. Proper transport, storage, installation, assembly, commissioning, operation and maintenance are required to ensure that the products operate safely and without any problems. The permissible ambient conditions must be complied with. The information in the relevant documentation must be observed.

Trademarks

All names identified by ® are registered trademarks of Siemens AG. The remaining trademarks in this publication may be trademarks whose use by third parties for their own purposes could violate the rights of the owner.

Disclaimer of Liability

We have reviewed the contents of this publication to ensure consistency with the hardware and software described. Since variance cannot be precluded entirely, we cannot guarantee full consistency. However, the information in this publication is reviewed regularly and any necessary corrections are included in subsequent editions.

Siemens AG
Division Digital Factory
Postfach 48 48
90026 NÜRNBERG
GERMANY

A5E32942580-AB
℗ 09/2018 Subject to change

Copyright © Siemens AG 2014 - 2018.
All rights reserved

Preface

Purpose of the documentation

This manual supplements the system manual ET 200SP distributed I/O system (http://support.automation.siemens.com/WW/view/en/58649293).

Functions that generally relate to the system are described in this manual.

The information provided in this manual and in the system/function manuals supports you in commissioning the system.

Changes compared to previous version

Compared to the previous version, this manual contains the following change:

In the "Technical specifications" section, the operational and basic error limits for thermocouple type C have changed.

Conventions

CPU: When the term "CPU" is used in this manual, it applies to the CPUs of the S7-1500 automation system as well as to the CPUs/interface modules of the distributed I/O system ET 200SP.

STEP 7: In this documentation, "STEP 7" is used as a synonym for all versions of the configuration and programming software "STEP 7 (TIA Portal)".

Please also observe notes marked as follows:

Note

A note contains important information on the product described in the documentation, on the handling of the product or on the section of the documentation to which particular attention should be paid.

Recycling and disposal

For environmentally friendly recycling and disposal of your old equipment, contact a certified electronic waste disposal company and dispose of the equipment according to the applicable regulations in your country.

Security information

Siemens provides products and solutions with industrial security functions that support the secure operation of plants, systems, machines and networks.

In order to protect plants, systems, machines and networks against cyber threats, it is necessary to implement – and continuously maintain – a holistic, state-of-the-art industrial security concept. Siemens' products and solutions constitute one element of such a concept.

Customers are responsible for preventing unauthorized access to their plants, systems, machines and networks. Such systems, machines and components should only be connected to an enterprise network or the internet if and to the extent such a connection is necessary and only when appropriate security measures (e.g. firewalls and/or network segmentation) are in place.

For additional information on industrial security measures that may be implemented, please visit (https://www.siemens.com/industrialsecurity).

Siemens' products and solutions undergo continuous development to make them more secure. Siemens strongly recommends that product updates are applied as soon as they are available and that the latest product versions are used. Use of product versions that are no longer supported, and failure to apply the latest updates may increase customers' exposure to cyber threats.

To stay informed about product updates, subscribe to the Siemens Industrial Security RSS Feed under (https://www.siemens.com/industrialsecurity).

Table of contents

Preface 3
1 Guide to documentation 6
2 Product overview 11
2.1 Properties 11
3 Wiring 14
3.1 Wiring and block diagram 14
4 Parameters/address space 17
4.1 Measurement types and measuring ranges 17
4.2 Parameters 21
4.3 Explanation of parameters 26
4.4 Scalable measuring range 31
4.4.1 Configuration 33
4.4.2 Evaluating data record 235 34
4.5 Address space 37
5 Interrupts/diagnostics alarms 38
5.1 Status and error displays 38
5.2 Interrupts 40
5.3 Diagnostics alarms 42
6 Technical specifications 44
A Parameter data record 52
A.1 Dependencies when configuring with GSD file 52
A.2 Parameter assignment and structure of parameter data record 57
A.3 Errors when transferring the data record 65
A.4 Switchable wire break check 66
B Representation of analog values 67
B.1 Representation of input ranges 68
B.2 Representation of analog values in voltage measuring ranges 69
B.3 Representation of analog values for resistance-type sensors 70
B.4 Representation of analog values for thermal resistors 71
B.5 Representation of analog values for thermocouples 73

Guide to documentation 1

The documentation for the SIMATIC ET 200SP distributed I/O system is arranged into three areas.
This arrangement enables you to access the specific content you require.

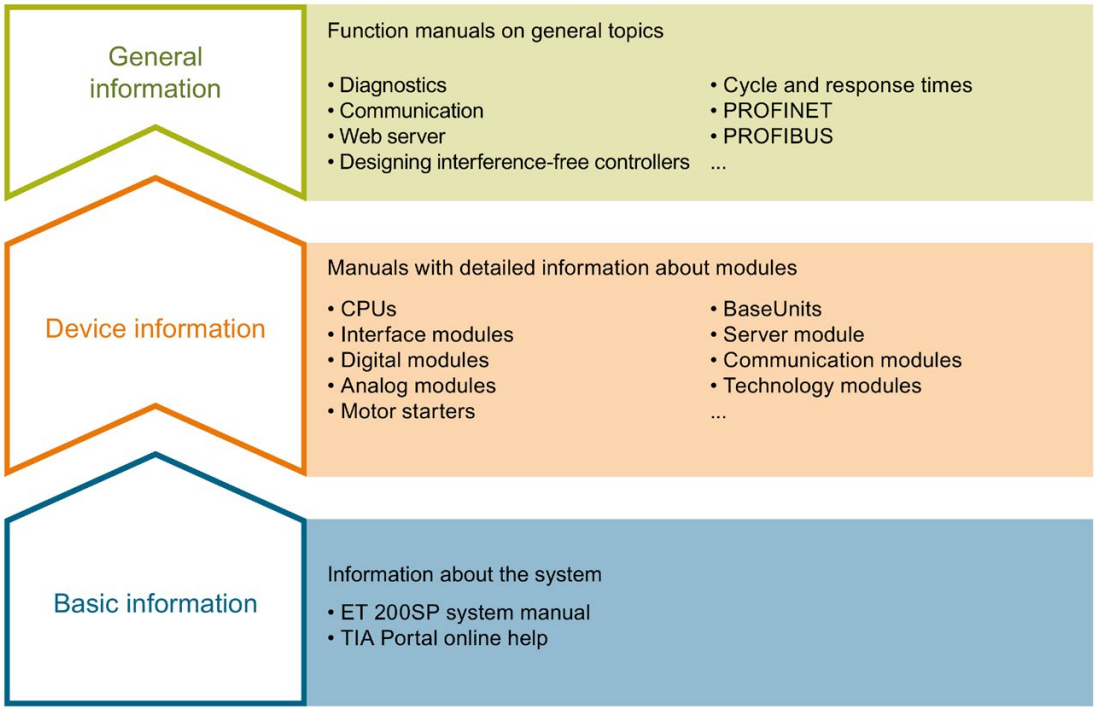

Basic information

The system manual describes in detail the configuration, installation, wiring and commissioning of the SIMATIC ET 200SP. distributed I/O system. The STEP 7 online help supports you in the configuration and programming.

Device information

Product manuals contain a compact description of the module-specific information, such as properties, wiring diagrams, characteristics and technical specifications.

General information

The function manuals contain detailed descriptions on general topics regarding the SIMATIC ET 200SP distributed I/O system, e.g. diagnostics, communication, Web server, motion control and OPC UA.

You can download the documentation free of charge from the Internet (https://support.industry.siemens.com/cs/ww/en/view/109742709).

Changes and supplements to the manuals are documented in a Product Information.

You can download the product information free of charge from the Internet (https://support.industry.siemens.com/cs/us/en/view/73021864).

Manual Collection ET 200SP

The Manual Collection contains the complete documentation on the SIMATIC ET 200SP distributed I/O system gathered together in one file.

You can find the Manual Collection on the Internet (http://support.automation.siemens.com/WW/view/en/84133942).

"mySupport"

With "mySupport", your personal workspace, you make the most of your Industry Online Support.

In "mySupport" you can store filters, favorites and tags, request CAx data and put together your personal library in the Documentation area. Furthermore, your data is automatically filled into support requests and you always have an overview of your current requests.

You need to register once to use the full functionality of "mySupport".

You can find "mySupport" in the Internet (https://support.industry.siemens.com/My/ww/en).

"mySupport" - Documentation

In the Documentation area of "mySupport", you have the possibility to combine complete manuals or parts of them to make your own manual.
You can export the manual in PDF format or in an editable format.

You can find "mySupport" - Documentation in the Internet (http://support.industry.siemens.com/My/ww/en/documentation).

"mySupport" - CAx Data

In the CAx Data area of "mySupport", you can have access the latest product data for your CAx or CAe system.

You configure your own download package with a few clicks.

In doing so you can select:

- Product images, 2D dimension drawings, 3D models, internal circuit diagrams, EPLAN macro files
- Manuals, characteristics, operating manuals, certificates
- Product master data

You can find "mySupport" - CAx Data in the Internet (http://support.industry.siemens.com/my/ww/en/CAxOnline).

Application examples

The application examples support you with various tools and examples for solving your automation tasks. Solutions are shown in interplay with multiple components in the system - separated from the focus in individual products.

You can find the application examples on the Internet (https://support.industry.siemens.com/sc/ww/en/sc/2054).

TIA Selection Tool

With the TIA Selection Tool, you can select, configure and order devices for Totally Integrated Automation (TIA).
This tool is the successor of the SIMATIC Selection Tool and combines the known configurators for automation technology into one tool.
With the TIA Selection Tool, you can generate a complete order list from your product selection or product configuration.

You can find the TIA Selection Tool on the Internet (http://w3.siemens.com/mcms/topics/en/simatic/tia-selection-tool).

SIMATIC Automation Tool

You can use the SIMATIC Automation Tool to run commissioning and maintenance activities simultaneously on various SIMATIC S7 stations as a bulk operation independently of the TIA Portal.

The SIMATIC Automation Tool provides a multitude of functions:

- Scanning of a PROFINET/Ethernet network and identification of all connected CPUs
- Address assignment (IP, subnet, gateway) and station name (PROFINET device) to a CPU
- Transfer of the data and the programming device/PC time converted to UTC time to the module
- Program download to CPU
- Operating mode switchover RUN/STOP
- Localization of the CPU by means of LED flashing
- Reading out CPU error information
- Reading the CPU diagnostic buffer
- Reset to factory settings
- Updating the firmware of the CPU and connected modules

You can find the SIMATIC Automation Tool on the Internet (https://support.industry.siemens.com/cs/ww/en/view/98161300).

PRONETA

With SIEMENS PRONETA (PROFINET network analysis), you analyze the plant network during commissioning. PRONETA features two core functions:

- The topology overview independently scans PROFINET and all connected components.
- The IO check is a fast test of the wiring and the module configuration of a system.

You can find SIEMENS PRONETA on the Internet (https://support.industry.siemens.com/cs/ww/en/view/67460624).

SINETPLAN

SINETPLAN, the Siemens Network Planner, supports you in planning automation systems and networks based on PROFINET. The tool facilitates professional and predictive dimensioning of your PROFINET installation as early as in the planning stage. In addition, SINETPLAN supports you during network optimization and helps you to exploit network resources optimally and to plan reserves. This helps to prevent problems in commissioning or failures during productive operation even in advance of a planned operation. This increases the availability of the production plant and helps improve operational safety.

The advantages at a glance

- Network optimization thanks to port-specific calculation of the network load
- Increased production availability thanks to online scan and verification of existing systems
- Transparency before commissioning through importing and simulation of existing STEP 7 projects
- Efficiency through securing existing investments in the long term and optimal exploitation of resources

You can find SINETPLAN on the Internet (https://www.siemens.com/sinetplan).

Product overview

2

2.1 Properties

Article number

6ES7134-6JF00-0CA1

View of the module

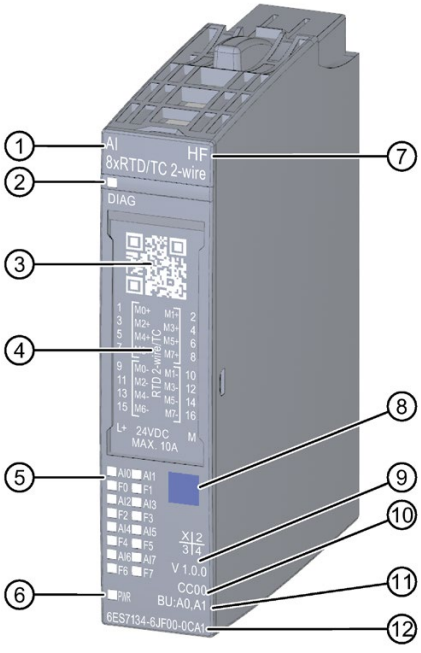

① Module type and name
② LED for diagnostics
③ 2D matrix code
④ Wiring diagram
⑤ LEDs for channel status
⑥ LED for supply voltage
⑦ Function class
⑧ Color coding module type
⑨ Function and firmware version
⑩ Color code for selecting the color identification labels
⑪ BU type
⑫ Article number

Figure 2-1 View of the module AI 8×RTD/TC 2-wire HF

Properties

The module has the following technical properties:

- Analog input module with 8 inputs
- Resolution: Up to 16 bits including sign
- Voltage measurement type can be set per channel
- Resistor measurement type can be set per channel
- Thermal resistor (RTD) measurement type can be set per channel
- Thermocouple (TC) measurement type can be set per channel
- Configurable diagnostics for each channel
- Hardware interrupt on limit violation can be set per channel (two high and two low limits per channel)

The module supports the following functions:

Table 2- 1 Version dependencies of the functions

Function	HW version	FW version	STEP 7		GSD file	
			TIA Portal	V5.x	PROFINET IO	PROFIBUS DP
Firmware update	FS01	V2.0.0 or higher	V13 or higher	V5.5 SP3 or higher with HSP 0227 V3.0 or higher	X	X
Identification data I&M0 to I&M3	FS01	V2.0.0 or higher	V13 or higher	V5.5 SP3 or higher with HSP 0227 V3.0 or higher	X	X
Reconfiguration in RUN	FS01	V2.0.0 or higher	V13 or higher	V5.5 SP3 or higher with HSP 0227 V3.0 or higher	X	X
Calibration in runtime	FS01	V2.0.0 or higher	V13 or higher	V5.5 SP3 or higher with HSP 0227 V3.0 or higher	X	X
Value status (PROFINET IO only)	FS01	V2.0.0 or higher	V13 or higher	V5.5 SP3 or higher with HSP 0227 V3.0 or higher	X	X
Configurable conductor resistance for 2-wire connection	FS01	V2.0.0 or higher	V13 or higher	V5.5 SP3 or higher with HSP 0227 V3.0 or higher	X	X
Switchable wire-break check	FS01	V2.0.0 or higher	V13 or higher	V5.5 SP3 or higher with HSP 0227 V3.0 or higher	X	X

Accessories

The following accessories must be ordered separately:

- Labeling strips
- Color identification labels
- Reference identification label
- Shield connection

See also

You can find additional information on the accessories in the ET 200SP distributed I/O system (http://support.automation.siemens.com/WW/view/en/58649293) system manual.

Wiring 3

3.1 Wiring and block diagram

This section includes the block diagram of the AI 8xRTD/TC 2-wire HF module with the terminal assignments.

You can find information on wiring the BaseUnit in the ET 200SP distributed I/O system (http://support.automation.siemens.com/WW/view/en/58649293) system manual.

Note

- The load group of the module must begin with a light-colored BaseUnit. Keep this in mind also during the configuration.
- When using floating sensors, bridge the m- connections and connect to ground / FE. This increases the immunity of the module.

  Bridging and connecting are not necessary for disabled and disconnected inputs.

Wiring: 2-wire connection for thermocouples, resistance-type sensors or thermal resistors (RTD)

The following figure shows the block diagram and an example of the terminal assignment of the analog input module AI 8×RTD/TC 2-wire HF on the BaseUnit BU type A0/A1.

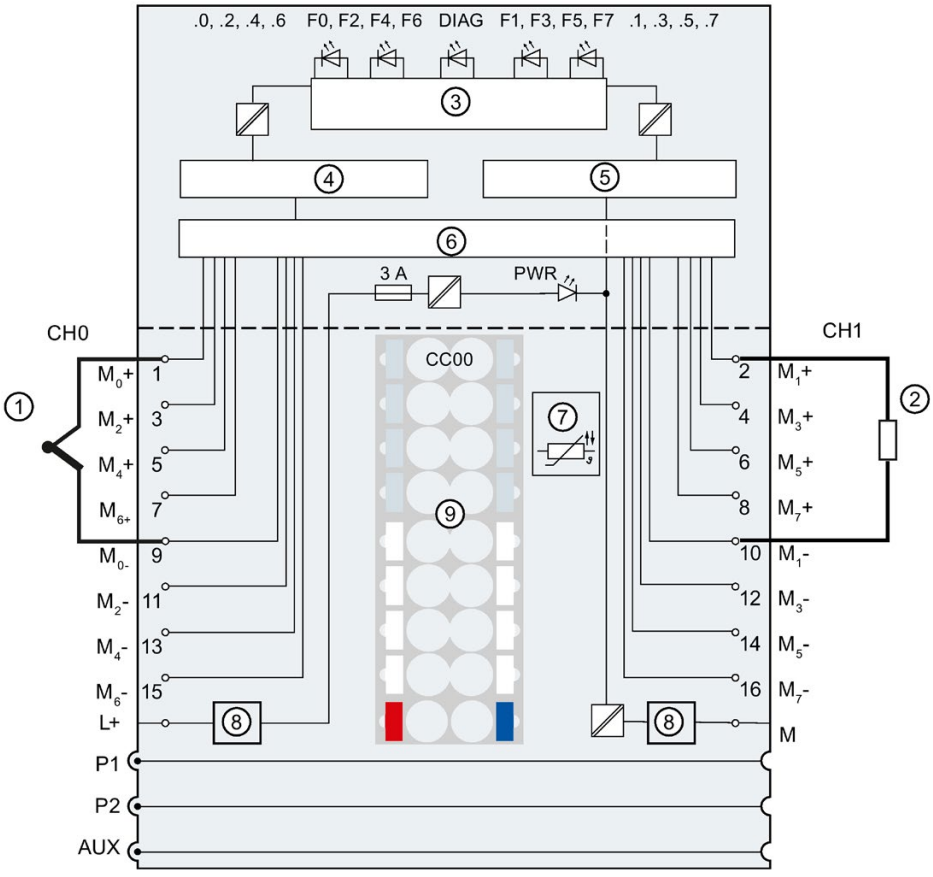

①	2-wire connection of thermocouples	M_n+	Measuring line positive, channel n
		M_n-	Measuring line negative, channel n
②	2-wire connection of resistance-type sensors or thermal resistors (RTD)	L+	24 V DC (infeed only with light-colored BaseUnit)
③	Backplane bus interface	P1, P2, AUX	Internal self-assembling voltage buses Connection to left (dark-colored BaseUnit) Connection to left interrupted (light-colored BaseUnit)
④	Analog-to-digital converter (ADC)	DIAG	Diagnostics LED (green, red)
⑤	Constant current power supply	.0 to .7	Channel status LED (green)
⑥	Multiplexer	PWR	Power LED (green)
⑦	Temperature recording for BU type A1 only	F0 to F7	Channel fault LED (red)
⑧	Filter connection supply voltage (available with light-colored BaseUnit only)		
⑨	Color-coded label with color code CC00 (optional)		

Figure 3-1 Connection- and block diagram for connection of thermocouples, resistance-type sensors or thermal resistors (RTD)

Parameters/address space 4

4.1 Measurement types and measuring ranges

The following table describes the measuring range and the temperature coefficients you can configure for each measurement type:

Table 4- 1 Measurement types and measuring ranges

Measurement type	Measuring range	Temperature coefficient
Deactivated	–	–
Voltage	±50 mV / ±80 mV / ±250 mV / ±1 V	
Resistor (2-wire connection)	150 Ω / 300 Ω / 600 Ω / 3 kΩ / 6 kΩ	–
	PTC	-
Thermal resistor RTD (2-wire connection)	Climatic / Standard Pt 100 Pt 200 Pt 500 Pt 1000	Pt 0.00385 / Pt 0.003916 / Pt 0.003902 / Pt 0.00392 / Pt 0.00385055
	Climatic / Standard Ni 100 Ni 120 Ni 200 Ni 500 Ni 1000	Ni 0.00618 / Ni 0.00672
	Climatic[1] / Standard[1] Ni 1000	Ni 0.005
Thermocouple (TC)	Type E, N, J, K, L, S, R, B, T, C, U, TXK (acc. to GOST)	-

[1] For sensors LG-Ni 1000 from Siemens Building Ltd (Landis & Stäfa).

Special features when using PTC resistors

PTCs are suitable for monitoring temperature and as thermal protection devices for complex drives or transformer windings.

- Choose "Resistor (2-wire)" and "PTC" in the parameter assignment.
- Connect the PTC to the 2-wire connection technology.
- Use the PTC resistors, type A (PTC thermistor) in accordance with DIN/VDE 0660, part 302.
- If "Underflow" diagnostics is enabled, a "Violation of low limit" diagnostics is generated for resistance values < 18 Ω, indicating a short-circuit.
- Sensor data for the PTC resistor:

Table 4- 2 Using PTC resistors

Property	Technical specifications	Comment
Switching points	**Behavior with rising temperature**	
	< 550 Ω	**Normal range:** • SIMATIC S7: Bit 0 = "0", Bit 2 = "0" (in the PII)
	550 Ω to 1650 Ω	**Prewarning range:** • SIMATIC S7: Bit 0 = "0", Bit 2 = "1" (in the PII)
	> 1650 Ω	**Response range:** • SIMATIC S7: Bit 0 = "1", Bit 2 = "0" (in the PII)
	Behavior with falling temperature	
	> 750 Ω	**Response range:** • SIMATIC S7: Bit 0 = "1", Bit 2 = "0" (in the PII)
	750 Ω to 540 Ω	**Prewarning range:** • SIMATIC S7: Bit 0 = "0", Bit 2 = "1" (in the PII)
	< 540 Ω	**Normal range:** • SIMATIC S7: Bit 0 = "0", Bit 2 = "0" (in the PII)
	Reaction to short-circuit	
	< 18 Ω	• SIMATIC S7: Bit 7 (IB x+1) = "1", Bit 0 = "0" and Bit 2 = "0"
(RRT-5) °C (RRT+5) °C (RRT+15) °C Measuring voltage/ voltage at the PTC	Max. 550 Ω min. 1330 Ω min. 4000 Ω Max. 7.5 V[1]	TNF = Rated response temperature of the sensor (according to DIN/VDE 0660)

[1] Below 23 kΩ

Assignment in the process image input (PII) with SIMATIC S7

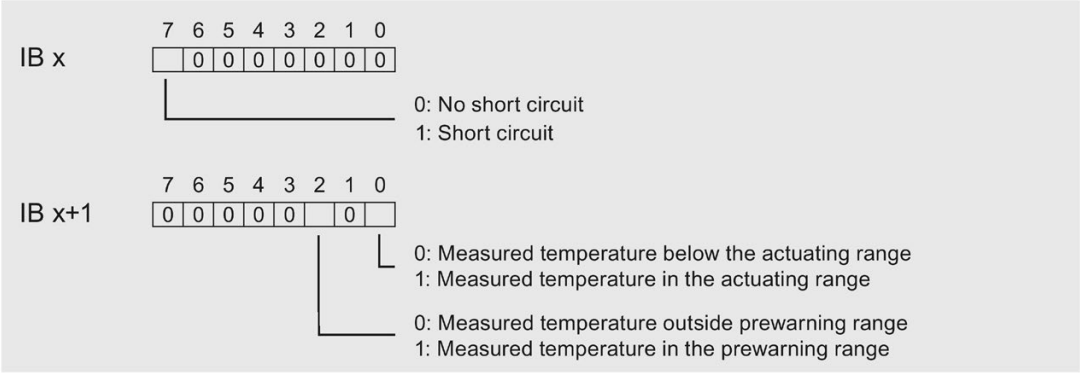

Figure 4-1 Assignment in the process image input (PII)

Notes on programming

- Bits 0+2 are relevant for evaluation in the process image input. You can monitor, for example, the temperature of a motor using bits 0+2.
- Bits 0+2 in the process image input cannot be saved. During parameter assignment, take into consideration that a motor, for example, starts up in a controlled manner (via an acknowledgment).
- Bits 0+2 can never be set at the same time; they are set one after the other.

NOTICE
No measurement is possible in the following cases: • When I/O modules are pulled out • When supply voltage to the I/O module fails • When there is a wire break or short-circuit in the measuring lines You should therefore always evaluate the diagnostic entries of AI 8×RTD/TC 2-wire HF for safety reasons.

Example

The diagram shows the temperature curve and the associated switching points.

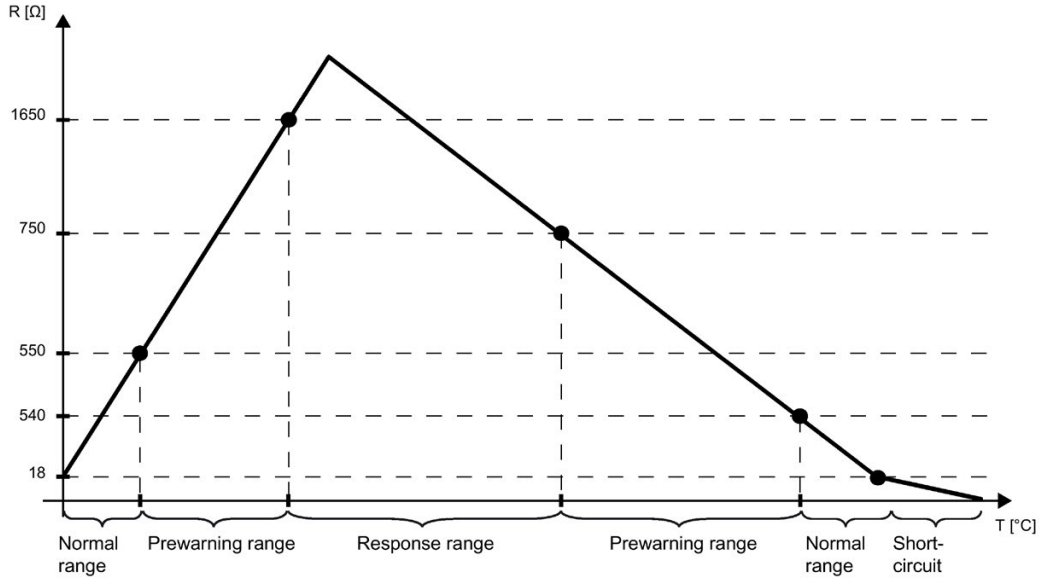

Figure 4-2 Temperature curve with prewarning range

See also

Technical specifications (Page 44)

4.2 Parameters

Parameters of the AI 8xRTD/TC 2-wire HF

Specify the module properties with the various parameters in the course of your STEP 7 configuration. The following table lists the configurable parameters. The effective range of the configurable parameters depends on the type of configuration. The following configurations are possible:

- Central operation with an ET 200SP CPU
- Distributed operation on PROFINET IO in an ET 200SP system
- Distributed operation with PROFIBUS DP in an ET 200SP system

When assigning parameters in the user program, use the WRREC instruction to transfer the parameters to the module by means of data records; see section Parameter assignment and structure of parameter data record (Page 57). The following parameter settings are possible:

Table 4- 3 Configurable parameters and their defaults (GSD file)

Parameters	Value range	Default	Reconfiguration in RUN	Scope with configuration software, e.g., STEP 7 (TIA Portal)	
				GSD file PROFINET IO	GSD file PROFIBUS DP
Diagnostics: Missing supply voltage L+	• Disable • Enable	Disable	Yes	Channel	Channel [1]
Diagnostics: Reference junction	• Disable • Enable	Disable	Yes	Channel	Module
Diagnostics: Overflow	• Disable • Enable	Disable	Yes	Channel	Module
Diagnostics: Underflow	• Disable • Enable	Disable	Yes	Channel	
Diagnostics: Wire break	• Disable • Enable	Disable	Yes	Channel	Channel

Parameters	Value range	Default	Reconfiguration in RUN	Scope with configuration software, e.g., STEP 7 (TIA Portal)	
				GSD file PROFINET IO	GSD file PROFIBUS DP
Type/range of measurement	• Deactivated	Thermal resistor (2-wire connection) Pt 100 standard range	Yes	Channel	Channel
	• Voltage ±50 mV • Voltage ±80 mV • Voltage ±250 mV • Voltage ±1 V				
	Resistor (2-wire connection) • 150 Ω • 300 Ω • 600 Ω • 3 kΩ • 6 kΩ				
Type/range of measurement	Resistor (2-wire connection) PTC	Thermal resistor (2-wire connection) Pt 100 standard range	Yes	Channel	Channel
Type/range of measurement	Thermal resistor (2-wire connection) • Pt 100 climatic range • Pt 200 climatic range • Pt 500 climatic range • Pt 1000 climatic range	Thermal resistor (2-wire connection) Pt 100 standard range	Yes	Channel	Channel
	Thermal resistor (2-wire connection) • Pt 100 standard range • Pt 200 standard range • Pt 500 standard range • Pt 1000 standard range				

Parameters	Value range	Default	Reconfiguration in RUN	Scope with configuration software, e.g., STEP 7 (TIA Portal)	
				GSD file PROFINET IO	GSD file PROFIBUS DP
Type/range of measurement	Thermal resistor (2-wire connection) • Ni 100 climatic range • Ni 120 climatic range • Ni 200 climatic range • Ni 500 climatic range • Ni 1000 climatic range	Thermal resistor (2-wire connection) Pt 100 standard range	Yes	Channel	Channel
	Thermal resistor (2-wire connection) • Ni 100 standard range • Ni 120 standard range • Ni 200 standard range • Ni 500 standard range • Ni 1000 standard range				
Type/range of measurement	Thermocouple • Type B (PtRh-PtRh) • Type N (NiCrSi-NiSi) • Type E (NiCr-CuNi) • Type R (PtRh-Pt) • Type S (PtRh-Pt) • Type J (Fe-CuNi) • Type L (Fe-CuNi) • Type T (Cu-CuNi) • Type K (NiCr-NiAl) • Type U (Cu-CuNi) • Type C (WRe-WRe) • Type TXK	Thermal resistor (2-wire connection) Pt 100 standard range	Yes	Channel	Channel

Parameters	Value range	Default	Reconfiguration in RUN	Scope with configuration software, e.g., STEP 7 (TIA Portal)	
				GSD file PROFINET IO	GSD file PROFIBUS DP
Temperature coefficient	• Pt 0.00385055 • Pt 0.003916 • Pt 0.003902 • Pt 0.00392 • Pt 0.00385 • Ni 0.00618 • Ni 0.00672 • LG-Ni 0.005	Pt 0.00385055	Yes	Channel	Channel
Temperature unit	• Degrees Celsius • Degrees Fahrenheit • Kelvin	Degrees Celsius	Yes	Channel	Module
Reference junction [5]	• No reference channel mode • Reference channel of the module • Internal reference junction • Reference channel of group 0 to 3 • Fixed reference temperature	No reference channel mode	Yes	Channel	Channel
Smoothing	• None • Weak • Medium • Strong	None	Yes	Channel	Channel
Interference frequency suppression [3]	• 60 Hz • 50 Hz[2] • 16.6 Hz	50 Hz	Yes	Channel	Module
Scalable measuring range	• Disable • Enable	Disable	Yes	Channel	-
Measuring range resolution	• 2 decimal places • 3 decimal places	2 decimal places	Yes	Channel	-
Measuring range center	• Value within the nominal range of the measuring range	0	Yes	Channel	-
Conductor resistance	0 to 50000 mΩ	0	Yes	Channel	-
Hardware interrupt high limit 1 [4]	• Disable • Enable	Disable	Yes	Channel	-

Parameters	Value range	Default	Reconfiguration in RUN	Scope with configuration software, e.g., STEP 7 (TIA Portal)	
				GSD file PROFINET IO	GSD file PROFIBUS DP
High limit 1 [4]	• Value	8500	Yes	Channel	-
Hardware interrupt low limit 1 [4]	• Disable • Enable	Disable	Yes	Channel	-
Low limit 1 [4]	• Value	-2000	Yes	Channel	-
Hardware interrupt high limit 2 [4]	• Disable • Enable	Disable	Yes	Channel	-
High limit 2 [4]	• Value	8500	Yes	Channel	-
Hardware interrupt low limit 2 [4]	• Disable • Enable	Disable	Yes	Channel	-
Low limit 2 [4]	• Value	-2000	Yes	Channel	-
Potential group	• Use potential group of the left module (module plugged into a dark-colored BaseUnit) • Enable new potential group (module plugged into light-colored BaseUnit)	Use potential group of the left module	No	Module	Module

1 Diagnostics: Missing supply voltage L+: Detection per module or alarm per channel

2 Interference frequency suppression: Interfering signals at 400 Hz are automatically included in the filtering at 50 Hz.

3 The settings in the "Interference frequency suppression" parameter have a direct effect on the conversion time of the channel. The analog value is therefore also affected by additionally set filtering via the "Smoothing" parameter.

4 Due to the limited number of parameters of a maximum of 244 bytes per ET 200SP station with a PROFIBUS GSD configuration, the parameter assignment options are restricted. The parameter length of the I/O module is 24 bytes with PROFIBUS GSD configuration. If necessary, you can set this parameter with data record 128, see Appendix "Parameter data record".

5 Only for configuration with PROFIBUS GSD file: The set reference junction is used with the additional parameter "Kx Reference junction activated" in the case of "Enable". In the case of "Disable", "No reference channel mode" is used for RTD and "Fixed reference temperature" is used for TC.

Note

Unused channels

"Deactivate" unused inputs in the parameter assignment to shorten the cycle time of the module.

A deactivated input always returns the value $7FFF_H$.

4.3 Explanation of parameters

Diagnostics: Missing supply voltage L+

Enabling of the diagnostics for missing or insufficient supply voltage L+.

Diagnostics: Reference junction

Enabling of the reference junction diagnostics if the reference temperature of the reference junction needs to be determined for the TC channel being operated.

Reference junction using the PROFINET GSD file

A BaseUnit with an internal temperature sensor (BU..T), the reference channel of group 0, 1, 2, 3, or channel 0 of the I/O module can be used as reference junction for the TC measurement, if this has the parameter setting "Thermal resistor Pt100 climatic range Degrees Celsius".

A possible parameter assignment is represented below:

Table 4- 4 RTD channel

Setting	Description
No reference channel mode	The temperature value at channel 0 can be used as a reference value for the entire module.
Reference channel of group 0, 1, 2, 3	The channel acts as a **transmitter** for the reference junction temperature of the group. The distribution is performed via the interface module.

Table 4- 5 TC channel

Setting	Description
Reference channel of the module	The corresponding TC channel uses channel 0 of the same module as the reference junction temperature. This must be configured as "Thermal resistor Pt 100 climatic range Degrees Celsius" and "No reference channel mode"; otherwise, Diagnostics: Reference junction is triggered.
Internal reference junction	The reference junction temperature is read by an internal temperature sensor on the BaseUnit. Diagnostics: Reference junction is triggered if there is an incorrect BaseUnit type.
Reference channel of group 0, 1, 2, 3	The channel acts as a **receiver** for the reference junction temperature of a group.
Fixed reference temperature	The reference temperature of the thermocouple is set to 0 °C. As a result, no temperature compensation is performed.

Note

Shared Device and "Reference channel of group 0, 1, 2, 3"

If the transmitter and receiver for the reference junction temperature of a group are assigned to different IO controllers, then both IO controllers must be performing data exchange with the IO device to ensure error-free operation of the temperature compensation.

Reference junction using the PROFIBUS GSD file

A BaseUnit with an internal temperature sensor (BU..T), the reference channel of group 0, 1, 2, 3, or channel 0 of the I/O module can be used as reference junction for the TC measurement, if this has the parameter setting "Thermal resistor Pt100 climatic range Degrees Celsius".

The set temperature unit (e.g. Degrees Celsius) is valid for the entire module with temperature compensation "Reference channel of the module" and "Reference channel of group 0, 1, 2, 3".

Table 4- 6 **RTD channel**

Setting	Description
No reference channel mode	The temperature value at channel 0 can be used as a reference value for the entire module.
Reference channel of group 0, 1, 2, 3	The channel acts as a **transmitter** for the reference junction temperature of a group. The distribution is performed via the interface module.

Setting	Description
Channel x Reference junction activated	• Disable: Channel x is configured with the setting "No reference channel mode". • Enable: Channel x is configured with the setting selected above.

Table 4- 7 **TC channel**

Setting	Description
Reference channel of the module	The corresponding TC channel uses channel 0 of the same module as the reference junction temperature. This must be configured as "Thermal resistor Pt 100 climatic range Degrees Celsius" and "No reference channel mode"; otherwise, Diagnostics: Reference junction is triggered.
Internal reference junction	The reference junction temperature is read by an internal temperature sensor on the BaseUnit. Diagnostics: Reference junction is triggered if there is an incorrect BaseUnit type.
Reference channel of group 0, 1, 2, 3	The channel acts as a **receiver** for the reference junction temperature of the group.
Fixed reference temperature	The reference temperature of the thermocouple is set to 0 °C. As a result, no temperature compensation is performed.

Setting	Description
Channel x Reference junction activated	• Disable: Channel x is configured with the setting "Fixed reference temperature". • Enable: Channel x is configured with the setting selected above.

Diagnostics: Overflow

Enabling of the diagnostics when the measured value exceeds the overrange.

Diagnostics: Underflow

Enabling of the diagnostics if the measured value falls below the underrange.

Diagnostics: Wire break

Enabling of the diagnostics if the module has no current flow or the current is insufficient for measurement at the correspondingly assigned input.

Type/range of measurement

See the section Measurement types and measuring ranges (Page 17).

Temperature coefficient

The temperature coefficient depends on the chemical composition of the material. In Europe, only one value is used per sensor type (default value).

The temperature coefficient (α value) indicates by how much the resistance of a specific material changes relatively if the temperature increases by 1 °C.

The other values facilitate a sensor-specific setting of the temperature coefficient and enhance accuracy.

Temperature unit

Selection between Degrees Celsius, Fahrenheit and Kelvin as the temperature unit for the selected measuring range.

Smoothing

The individual measured values are smoothed using filtering. The smoothing can be set in 4 levels.

Smoothing time = number of module cycles (k) x cycle time of the module.

The following figure shows how many module cycles it takes for the smoothed analog value to approach 100%, depending on the configured smoothing. This specification is valid for all signal changes at the analog input.

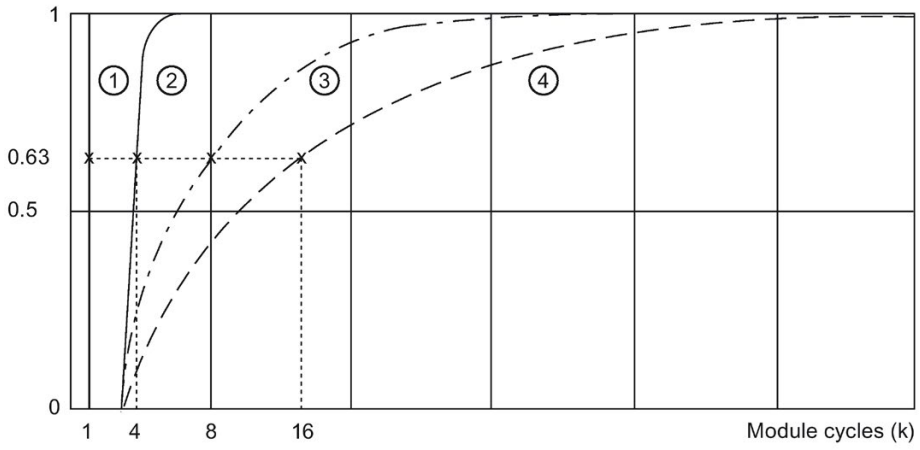

① No smoothing (k = 1)
② Weak (k = 4)
③ Medium (k = 8)
④ Strong (k = 16)

Figure 4-3 Smoothing for AI 8×RTD/TC 2-wire HF

Interference frequency suppression

Suppresses the interferences affecting analog input modules that are caused by the frequency of the AC voltage network used.

The frequency of the AC voltage network is likely to have a negative effect on measured values particularly with measurement in the low voltage range and on thermocouples. With this parameter, the user specifies the line frequency that is predominant in the plant.

Measuring range resolution

Parameters for the measurement type thermal resistor standard and thermocouple.

Allows you to increase the resolution to 2 or 3 decimal places for a configurable section of the measuring range. See the Scalable measuring range (Page 31) section.

Measuring range center

Determines the temperature over which the scalable measuring range is symmetrically spanned. The value must be within the nominal range of the underlying measuring range. It is specified in integers.

Maximum / Minimum

Corresponds to overflow / underflow for the scalable measuring range.

Conductor resistance

Parameters for the measurement types resistor and thermal resistor.

Used to compensate for the conductor resistance without having to interfere with the sensor wiring.

If the "Conductor resistor" parameter is configured higher than a value 0 mΩ, the module then automatically uses the factory calibration data.

Hardware interrupt enable

Enabling of a hardware interrupt if the high limit 1/2 or the low limit 1/2 is violated.

Low limit 1/2

Specify a threshold which triggers a hardware interrupt when violated.

High limit 1/2

Specify a threshold which triggers a hardware interrupt when violated.

Potential group

A potential group consists of a group of directly adjacent I/O modules within an ET 200SP station, which are supplied via a common supply voltage.

A potential group begins with a light-colored BaseUnit through which the required voltage is supplied for all modules of the potential group. The light-colored BaseUnit interrupts the three self-assembling voltage buses P1, P2 and AUX to the left neighbor.

All additional I/O modules of this potential group are plugged into dark-colored BaseUnits. You take the potential of the self-assembling voltage buses P1, P2 and AUX from the left neighbor.

A potential group ends with the dark-colored BaseUnit, which follows a light-colored BaseUnit or server module in the station configuration.

4.4 Scalable measuring range

Introduction

The scalable measuring range is available for the temperature measuring ranges of thermal resistors (RTD) standard and thermocouples. The measuring ranges for voltage, resistor and thermal resistor climatic are not supported.

The scalable measuring range is valid for the following ranges:

- Nominal range
- Underrange
- Overrange

Function

The scalable measuring range is a limited section of a measuring range supported by the module.

It allows you to increase the resolution for a configurable section.

- The "Measuring range resolution" parameter determines the resolution to 2 or 3 decimal places.
- The "Measuring range center" parameter determines the temperature over which the scalable measuring range is symmetrically spanned.

Value ranges

Table 4- 8 Value ranges

Scalable measuring range	Measuring range resolution		Values hex.
	2 decimal places	3 decimal places	
Overflow	>325.11	>32.511	$7FFF_H$
High limit	325.11	32.511	$7EFF_H$
Measuring range center	0	0	0_H
Low limit	-325.12	-32.512	8100_H
Underflow	<-325.12	<-32.512	8000_H

To obtain an absolute temperature, the measuring range center in the application program (as offset) must be calculated with the value of the user data of the scalable measuring range.

The measuring range center is always output in the user data as the value "0". The user data are correspondingly mapped to the bipolar input ranges in S7 format. Underflow / overflow is also formed in accordance with the limits of S7.

Rules

- The measuring range center must be within the nominal range of the underlying measuring range. It is specified in integers.
- The scalable measuring range is spanned symmetrically over the measuring range center. Depending on the resolution, various value ranges result (①, ②).
- The scalable measuring range is limited by underflow and overflow of the underlying measuring range:
  - It is clipped at the underflow when it falls below the limit.
  - It is clipped at the overflow when it exceeds the limit (③).

Example

The following example illustrates the effect of scalable measuring ranges:

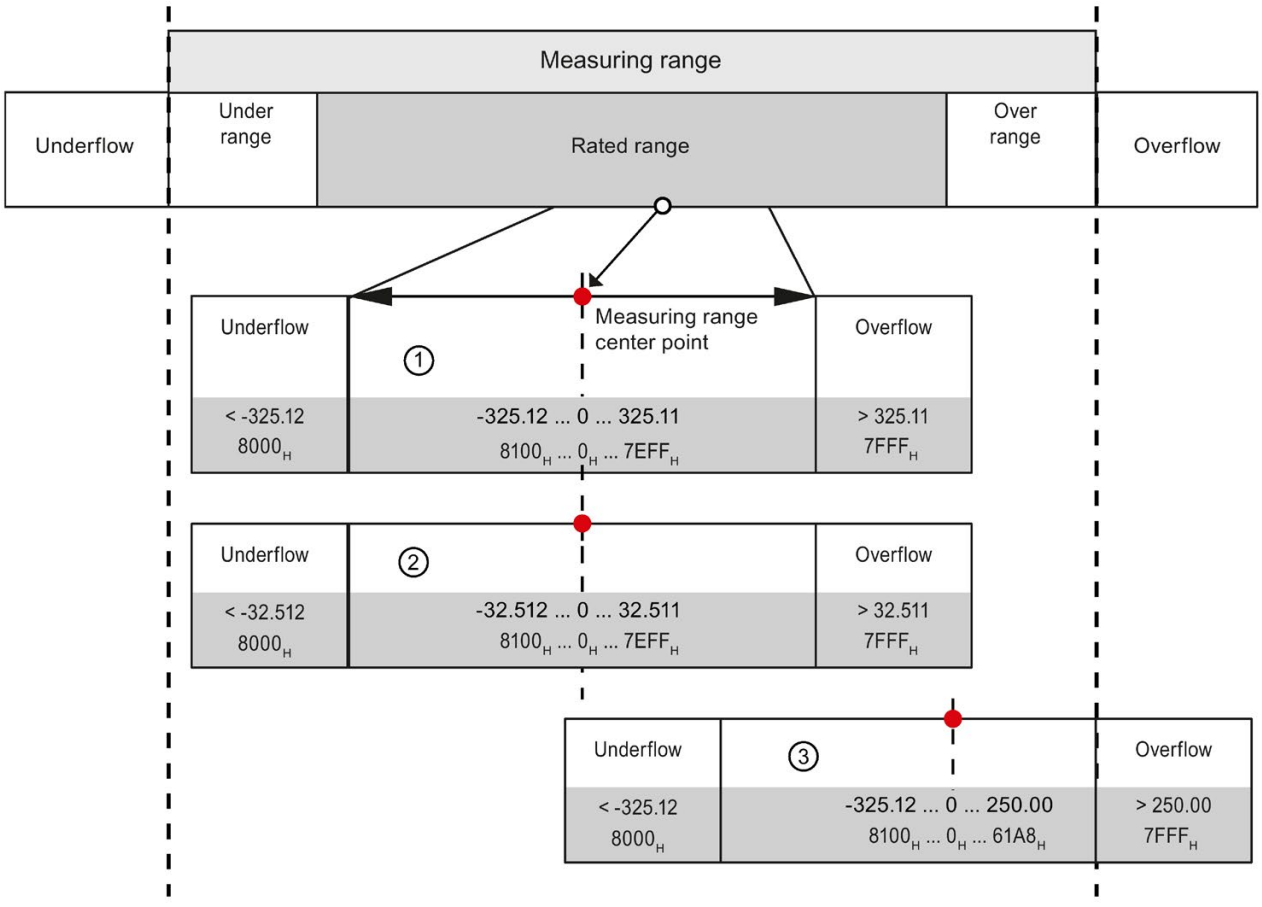

① Scalable measuring range with 2 decimal places in hexadecimal S7 format
② Scalable measuring range with 3 decimal places in hexadecimal S7 format
③ Scalable measuring range which is cut off at the overflow of the underlying measuring range (clipping)

Figure 4-4 Examples of scalable measuring ranges

4.4.1 Configuration

Requirement

You must select a valid temperature measuring range for configuration.

Configuration

The function is activated using the "Scalable measuring range" parameter.

The following figure shows an example of a configuration in STEP 7:

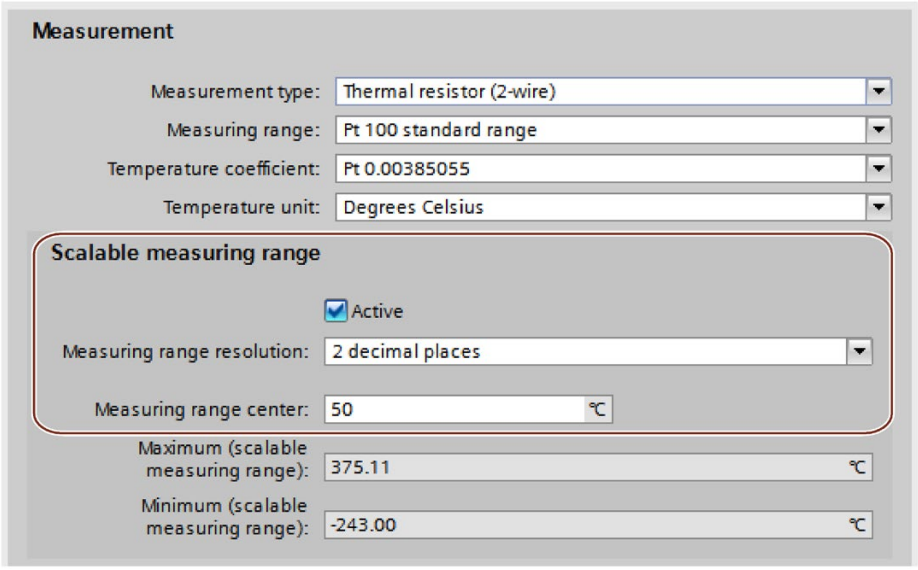

Figure 4-5 Configuration for the scalable measuring range

Reference

You will find more information on the configuration in the STEP 7 online help.

4.4.2 Evaluating data record 235

Evaluation in the user program

In the user program, you can evaluate the status and the limits of the scalable measuring range with data record 235, which may result by reaching underflow/overflow.

Structure of data record 235

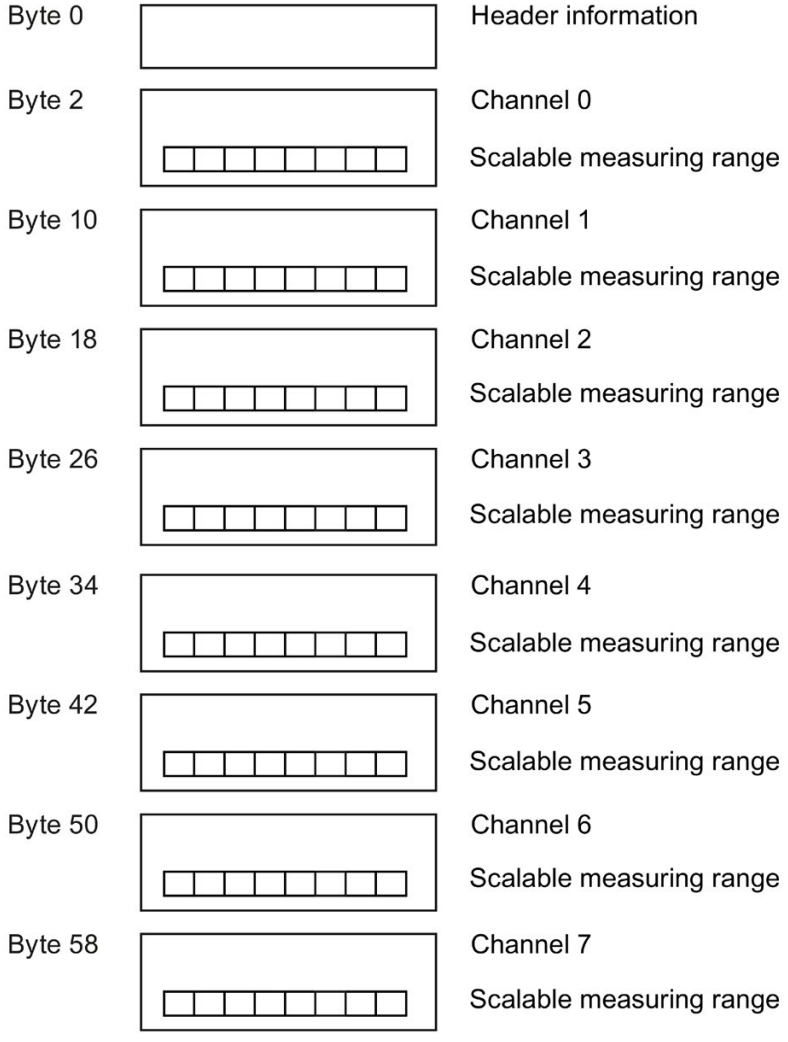

Figure 4-6 Structure of data record 235

Header information

The figure below shows the structure of the header information.

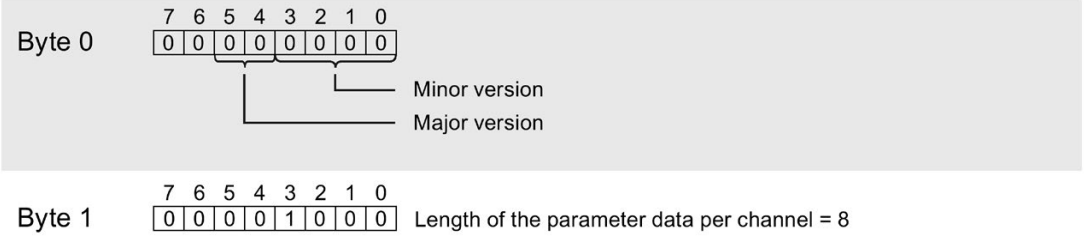

Figure 4-7 Header information of data record 235

Parameters

The figure below shows the structure of the parameter.

If the corresponding bit is set to "1", the parameter is activated.

* x = 2 + (channel number x 8)

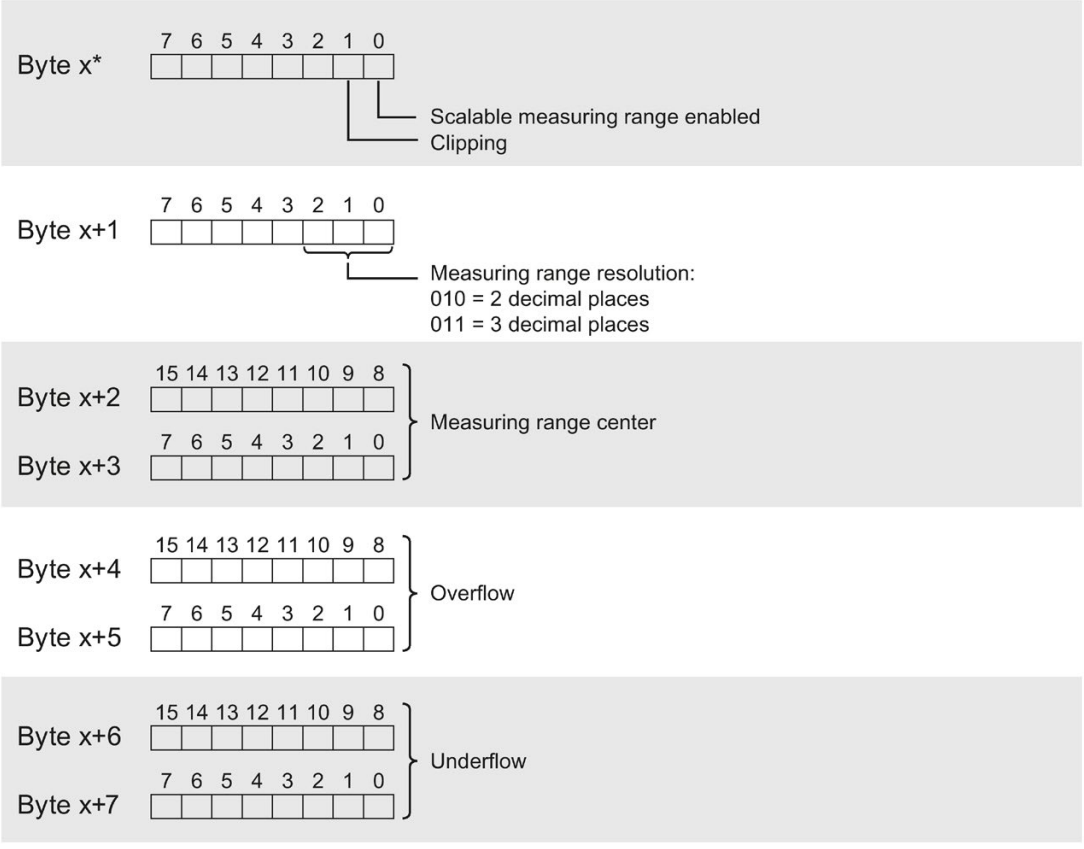

Figure 4-8 Structure of data record 235 - channel parameter byte x to x+7

Description of the parameters

Table 4- 9 Description of the parameters from data record 235

Parameter	Description
Scalable measuring range enabled	1 = Function is active for this channel.
Clipping	1 = Scalable measuring range cut off at the overflow / underflow of the underlying measuring range (see Figure (Page 32)).
Resolution	2 or 3 decimal places
Measuring range center	Temperature in whole °C / °F / K ("working point" for the scaling)
Overflow/underflow	Limits of the scalable measuring range

Example

The following example shows the values for a thermal resistor Pt 100 Standard, °C:

Table 4- 10 Example of a thermal resistor Pt 100 Standard

Hex. value	Dec. value	Evaluation of data record 235
00_H	0	V0.0
08_H	8	8 bytes
03_H	3	Scalable measuring range active and clipped (clipping)
02_H	2	Resolution: 2 decimal places
$02EE_H$	750	Measuring range center: 750 °C
$61A8_H$	25000	Overflow (Maximum): 250.**00** + 750 = 1000.00 °C Scalable measuring range is clipped at the overflow.
8100_H	-32512	Underflow (Minimum): -325.**12** + 750 = 424.88 °C

See also

Scalable measuring range (Page 31)

4.5 Address space

Address space of the analog input module AI 8×RTD/TC 2-wire HF

The following figure shows the assignment of the address space with value status (Quality Information (QI)). The addresses for the value status are only available if the value status is enabled.

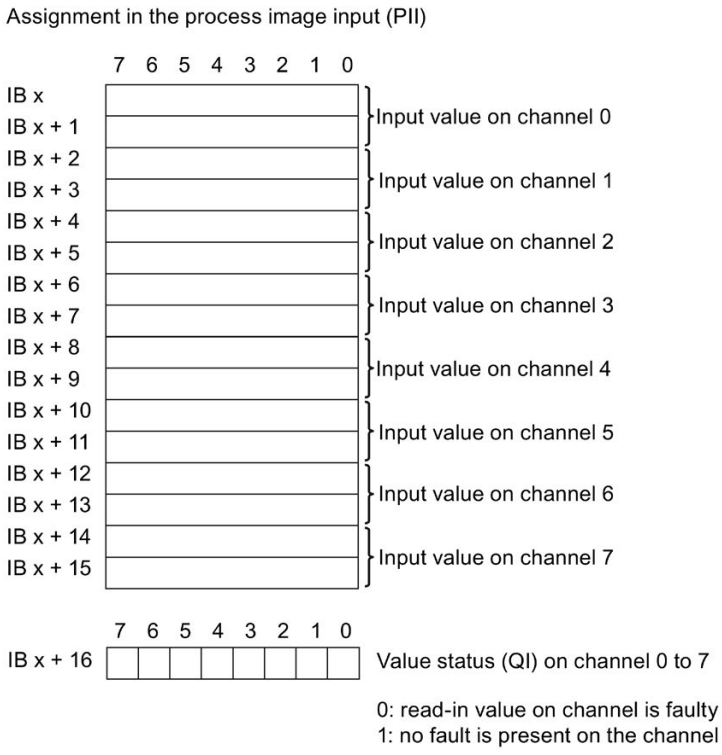

Figure 4-9 Address space of the AI 8×RTD/TC 2-wire HF with value status

Configuration options of the AI 8xRTD/TC 2-wire HF

The following configurations are possible:

- Configuration 1: Without value status
- Configuration 2: With value status

Evaluating the value status

An additional byte is occupied in the input address space if you enable the value status for the analog module. Each bit 0 to 7 in this byte is assigned to one channel and provides information on the validity of the analog value (0 = value is incorrect).

Interrupts/diagnostics alarms

5

5.1 Status and error displays

LED displays

The figure below shows the LED displays of the AI 8xRTD/TC 2-wire HF:

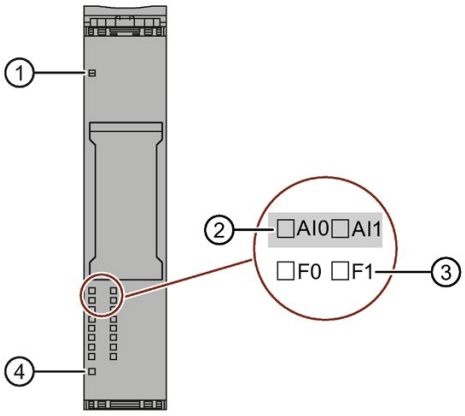

① DIAG (green/red)
② Channel status (green)
③ Channel error (red)
④ PWR (green)

Figure 5-1 LED display

Meaning of the LED displays

The following tables contain the meaning of the status and error displays. Remedies for diagnostics alarms can be found in section Diagnostics alarms (Page 42).

DIAG LED

Table 5- 1 Error display of the DIAG LED

DIAG LED	Meaning
Off	Backplane bus supply of the ET 200SP not OK
Flashes	Module parameters not assigned
On	Module parameters assigned and no module diagnostics
Flashes	Module parameters assigned and module diagnostics

Channel status/channel error LED

Table 5- 2 Status and error display of the LED channel status / channel error

LEDs		Meaning
Channel status	Channel error	
□ Off	□ Off	Channel deactivated
■ On	□ Off	Channel activated and no channel diagnostics
□ Off	■ On	Channel activated and channel diagnostics
■ On	■ On	Not permitted (error)

PWR LED

Table 5- 3 Status display of the PWR LED

PWR LED	Meaning
□ Off	Supply voltage L+ missing
■ On	Supply voltage L+ present

5.2 Interrupts

Evaluating hardware interrupts with IO controller

The module generates a hardware interrupt at the following events:

- Violation of low limit 1
- Violation of high limit 1
- Violation of low limit 2
- Violation of high limit 2

You can obtain detailed information on the event in the hardware interrupt organization block with the "RALARM" (read additional interrupt information) instruction and in the STEP 7 online help.

The module channel that triggered the hardware interrupt is entered in the start information of the organization block. The following figure shows the assignment to the bits of double word 8 in local data.

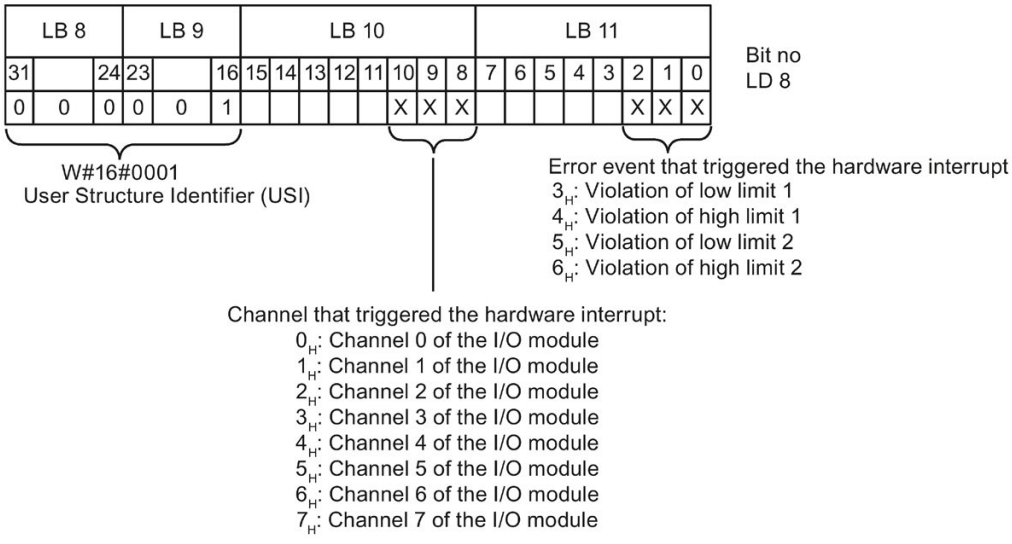

Figure 5-2 OB start information

Structure of the additional interrupt information

Table 5- 4 Structure of the additional interrupt information

Data block name		Content	Comment	Bytes
USI (User Structure Identifier)		W#16#0001	additional interrupt information for hardware interrupts of the I/O module	2
Channel that triggered the hardware interrupt.				
	Channel	B#16#00 to B#16#07	Channel 0 to 7 of the I/O module	1
Event that triggered the hardware interrupt.				
	Event	B#16#03	Violation of low limit 1	1
		B#16#04	Violation of high limit 1	
		B#16#05	Violation of low limit 2	
		B#16#06	Violation of high limit 2	

Diagnostic error interrupt

The module generates a diagnostic error interrupt at the following events:

- Channel temporarily unavailable
- Hardware interrupt lost
- Reference channel error
- Error
- Violation of low limit
- Violation of high limit
- Wire break
- Supply voltage missing
- Parameter assignment error

5.3 Diagnostics alarms

A diagnostics alarm is generated and the DIAG-LED flashes on the module for each diagnostics event. You can read out the diagnostics alarms, for example, in the diagnostics buffer of the CPU. You can evaluate the error codes with the user program.

Table 5- 5 Diagnostics alarms, their meaning and remedies

Diagnostics alarms	Error code	Meaning	Remedy
Wire break	6_H	Resistance of sensor circuit too high	Use a different sensor type or modify the wiring, for example, using cables with larger cross-section
		Wire break between the module and sensor	Connect the cable
		Channel not connected (open)	• Deactivate diagnostics • Connect or deactivate the channel
Violation of high limit[1]	7_H	Value lies above the overrange.	Correct module/sensor interplay
		Wire break[2]	See Wire break
Violation of low limit[1]	8_H	Value lies below the underrange.	Correct module/sensor interplay
Error	9_H	Internal module error has occurred (diagnostics alarm on channel 0 applies to the entire module).	Replace module
Parameter assignment error	10_H	The module cannot evaluate parameters for the channel. Incorrect parameter assignment.	• Correct the parameter assignment (diagnostics wire break set only with the permitted measuring ranges).
Supply voltage missing	11_H	Missing or insufficient supply voltage L+	• Check supply voltage L+ on the BaseUnit • Check BaseUnit type
Reference channel error (reference junction)	15_H	Reference temperature of the reference junction for the TC channel being operated with compensation is invalid.	• Check BaseUnit type • Select correct reference junction through parameter assignment[3] • Check whether the reference junction (reference channel of the group 0, 1, 2, 3) is only assigned once as the sender in the entire setup.

Diagnostics alarms	Error code	Meaning	Remedy
Hardware interrupt lost	16_H	At least one hardware interrupt could not be reported because there were too many pending hardware interrupts.	Correct the program or the process
Channel temporarily unavailable	$1F_H$	• Firmware update in progress or update has been canceled. The module does not read any process values in this state. • The channel is currently being calibrated.	• Wait for firmware update. • Restart the firmware update. • Complete calibration.

[1] The alarm refers to the diagnostics and depends on the configured measuring range.

[2] For resistor and thermal resistor measuring ranges with deactivated diagnostics for "wire break", this is reported by the "Violation of high limit" diagnostic.

[3] Shared Device and diagnostics "Reference temperature": If the sender and receiver of the reference junction temperature of a group are assigned to different IO controllers, you may need to download both configurations again in the case of diagnostics. First download the configuration containing the receiver.

Technical specifications 6

Technical specifications of the AI 8xRTD/TC 2-wire HF

The following table shows the technical specifications as of 09/2018. You will find a data sheet including daily updated technical specifications on the Internet (https://support.industry.siemens.com/cs/ww/en/pv/6ES7134-6JF00-0CA1/td?dl=en).

Article number	6ES7134-6JF00-0CA1
General information	
Product type designation	AI 8xRTD/TC 2-wire HF
Firmware version	V2.0
• FW update possible	Yes
usable BaseUnits	BU type A0, A1
Color code for module-specific color identification plate	CC00
Product function	
• I&M data	Yes; I&M0 to I&M3
Engineering with	
• STEP 7 TIA Portal configurable/integrated as of version	V13
• STEP 7 configurable/integrated as of version	V5.5 / -
• PROFIBUS as of GSD version/GSD revision	GSD Revision 5
• PROFINET as of GSD version/GSD revision	GSDML V2.3
Operating mode	
• Oversampling	No
• MSI	No
CiR – Configuration in RUN	
Reparameterization possible in RUN	Yes
Calibration possible in RUN	Yes
Supply voltage	
Rated value (DC)	24 V
permissible range, lower limit (DC)	19.2 V
permissible range, upper limit (DC)	28.8 V
Reverse polarity protection	Yes
Input current	
Current consumption, max.	35 mA

Article number	6ES7134-6JF00-0CA1
Power loss	
Power loss, typ.	0.75 W
Address area	
Address space per module	
• Address space per module, max.	16 byte; + 1 byte for QI information
Analog inputs	
Number of analog inputs	8
• For voltage measurement	8
• For resistance/resistance thermometer measurement	8
• For thermocouple measurement	8
permissible input voltage for voltage input (destruction limit), max.	30 V
Constant measurement current for resistance-type transmitter, typ.	2 mA
Cycle time (all channels), min.	Sum of the basic conversion times and additional processing times (depending on the parameterization of the active channels)
Technical unit for temperature measurement adjustable	Yes; °C/°F/K
Input ranges (rated values), voltages	
• -1 V to +1 V	Yes; 16 bit incl. sign
• Input resistance (-1 V to +1 V)	1 MΩ
• -250 mV to +250 mV	Yes; 16 bit incl. sign
• Input resistance (-250 mV to +250 mV)	1 MΩ
• -50 mV to +50 mV	Yes; 16 bit incl. sign
• Input resistance (-50 mV to +50 mV)	1 MΩ
• -80 mV to +80 mV	Yes; 16 bit incl. sign
• Input resistance (-80 mV to +80 mV)	1 MΩ

Article number	6ES7134-6JF00-0CA1
Input ranges (rated values), thermocouples	
• Type B	Yes; 16 bit incl. sign
• Input resistance (Type B)	1 MΩ
• Type C	Yes; 16 bit incl. sign
• Input resistance (Type C)	1 MΩ
• Type E	Yes; 16 bit incl. sign
• Input resistance (Type E)	1 MΩ
• Type J	Yes; 16 bit incl. sign
• Input resistance (type J)	1 MΩ
• Type K	Yes; 16 bit incl. sign
• Input resistance (Type K)	1 MΩ
• Type L	Yes; 16 bit incl. sign
• Input resistance (Type L)	1 MΩ
• Type N	Yes; 16 bit incl. sign
• Input resistance (Type N)	1 MΩ
• Type R	Yes; 16 bit incl. sign
• Input resistance (Type R)	1 MΩ
• Type S	Yes; 16 bit incl. sign
• Input resistance (Type S)	1 MΩ
• Type T	Yes; 16 bit incl. sign
• Input resistance (Type T)	1 MΩ
• Type U	Yes; 16 bit incl. sign
• Input resistance (Type U)	1 MΩ
• Type TXK/TXK(L) to GOST	Yes; 16 bit incl. sign
• Input resistance (Type TXK/TXK(L) to GOST)	1 MΩ

Article number	6ES7134-6JF00-0CA1
Input ranges (rated values), resistance thermometer	
• Ni 100	Yes; 16 bit incl. sign
• Input resistance (Ni 100)	1 MΩ
• Ni 1000	Yes; 16 bit incl. sign
• Input resistance (Ni 1000)	1 MΩ
• LG-Ni 1000	Yes; 16 bit incl. sign
• Input resistance (LG-Ni 1000)	1 MΩ
• Ni 120	Yes; 16 bit incl. sign
• Input resistance (Ni 120)	1 MΩ
• Ni 200	Yes; 16 bit incl. sign
• Input resistance (Ni 200)	1 MΩ
• Ni 500	Yes; 16 bit incl. sign
• Input resistance (Ni 500)	1 MΩ
• Pt 100	Yes; 16 bit incl. sign
• Input resistance (Pt 100)	1 MΩ
• Pt 1000	Yes; 16 bit incl. sign
• Input resistance (Pt 1000)	1 MΩ
• Pt 200	Yes; 16 bit incl. sign
• Input resistance (Pt 200)	1 MΩ
• Pt 500	Yes; 16 bit incl. sign
• Input resistance (Pt 500)	1 MΩ
Input ranges (rated values), resistors	
• 0 to 150 ohms	Yes; 15 bit
• Input resistance (0 to 150 ohms)	1 MΩ
• 0 to 300 ohms	Yes; 15 bit
• Input resistance (0 to 300 ohms)	1 MΩ
• 0 to 600 ohms	Yes; 15 bit
• Input resistance (0 to 600 ohms)	1 MΩ
• 0 to 3000 ohms	Yes; 15 bit
• Input resistance (0 to 3000 ohms)	1 MΩ
• 0 to 6000 ohms	Yes; 15 bit
• Input resistance (0 to 6000 ohms)	1 MΩ
• PTC	Yes; 15 bit
• Input resistance (PTC)	1 MΩ

Article number	6ES7134-6JF00-0CA1
Thermocouple (TC)	
Temperature compensation	
– parameterizable	Yes
– Reference channel of the module	Yes
– internal comparison point	Yes; with BaseUnit type A1
– Reference channel of the group	Yes
– Number of reference channel groups	4; Group 0 to 3
– fixed reference temperature	Yes
Cable length	
• shielded, max.	200 m; 50 m with thermocouples
Analog value generation for the inputs	
Measurement principle	integrating (Sigma-Delta)
Integration and conversion time/resolution per channel	
• Resolution with overrange (bit including sign), max.	16 bit
• Integration time, parameterizable	Yes
• Basic conversion time, including integration time (ms)	
– additional processing time for wire-break check	2 ms; In the ranges resistance thermometers, resistors and thermocouples
• Interference voltage suppression for interference frequency f1 in Hz	16.6 / 50 / 60 Hz
• Conversion time (per channel)	180 / 60 / 50 ms
Smoothing of measured values	
• Number of smoothing levels	4; None; 4/8/16 times
• parameterizable	Yes
Encoder	
Connection of signal encoders	
• for voltage measurement	Yes
• for resistance measurement with two-wire connection	Yes
• for resistance measurement with three-wire connection	No
• for resistance measurement with four-wire connection	No

Article number	6ES7134-6JF00-0CA1
Errors/accuracies	
Linearity error (relative to input range), (+/-)	0.01 %; ±0.1 % for resistance thermometers and resistance
Temperature error (relative to input range), (+/-)	0.0009 %/K; ±0.005 % / K at thermocouple
Crosstalk between the inputs, min.	-50 dB
Repeat accuracy in steady state at 25 °C (relative to input range), (+/-)	0.05 %
Operational error limit in overall temperature range	
• Voltage, relative to input range, (+/-)	0.1 %
• Resistance, relative to input range, (+/-)	0.1 %
Basic error limit (operational limit at 25 °C)	
• Voltage, relative to input range, (+/-)	0.05 %
• Resistance, relative to input range, (+/-)	0.05 %
Interference voltage suppression for f = n x (f1 +/- 1 %), f1 = interference frequency	
• Series mode interference (peak value of interference < rated value of input range), min.	70 dB
• Common mode voltage, max.	10 V
• Common mode interference, min.	90 dB
Isochronous mode	
Isochronous operation (application synchronized up to terminal)	No
Interrupts/diagnostics/status information	
Diagnostics function	Yes
Alarms	
• Diagnostic alarm	Yes
• Limit value alarm	Yes; two upper and two lower limit values in each case
Diagnostic messages	
• Monitoring the supply voltage	Yes
• Wire-break	Yes; channel by channel
• Group error	Yes
• Overflow/underflow	Yes; channel by channel

Article number	6ES7134-6JF00-0CA1
Diagnostics indication LED	
• Monitoring of the supply voltage (PWR-LED)	Yes; green PWR LED
• Channel status display	Yes; Green LED
• for channel diagnostics	Yes; Red LED
• for module diagnostics	Yes; green/red DIAG LED
Potential separation	
Potential separation channels	
• between the channels	No
• between the channels and backplane bus	Yes
• between the channels and the power supply of the electronics	Yes
Permissible potential difference	
between the inputs (UCM)	10 V DC
Isolation	
Isolation tested with	707 V DC (type test)
Dimensions	
Width	15 mm
Height	73 mm
Depth	58 mm
Weights	
Weight, approx.	32 g

Operational and basic error limits for thermal resistors

Error limits for thermal resistors	
Operational limit (in the entire temperature range, in relation to input range)	
• Pt 100, Pt 200, Pt 500, Pt 1000 standard	±1.0 K
• Pt 100, Pt 200, Pt 500, Pt 1000 climatic	± 0.25 K
• Ni 100, Ni 120, Ni 200, Ni 500, Ni 1000 standard and climatic	± 0.4 K
Basic error limit (operational limit at 25 °C, in relation to input range)	
• Pt 100, Pt 200, Pt 500, Pt 1000 standard	± 0.6 K
• Pt 100, Pt 200, Pt 500, Pt 1000 climatic	± 0.13 K
• Ni 100, Ni 120, Ni 200, Ni 1000 standard and climatic	± 0.2 K

Operational and basic error limits for thermocouples [1]

Error limits for thermocouples	
Operational limit for thermocouples (in the entire temperature range)	±1.5 K
Basic error limit for thermocouples (operational limit at 25 °C)	±1 K
Overall error limits when using internal compensation	
• Operational limit (in the entire temperature range at static thermal state, ambient temperature change < 0.3 K/min)	± 2.5 K
• Basic error limit (operational limit at 25 °C at static thermal state, ambient temperature change < 0.3 K/min)	±1.5 K

[1] The indicated error limits apply as of the following temperatures:
Thermocouple type T: -200 °C
Thermocouple type K: -100 °C
Thermocouple type B: +700 °C
Thermocouple type N: -150 °C
Thermocouple type E: -150 °C
Thermocouple type R: +200 °C
Thermocouple type S: +100 °C

Dimension drawing

See manual ET 200SP BaseUnits
(http://support.automation.siemens.com/WW/view/en/59753521)

Parameter data record

A

A.1 Dependencies when configuring with GSD file

When configuring the module with a GSD file, remember that the settings of some parameters are dependent on each other.

Configuring with a PROFINET GSD file

The table lists the properties and their dependencies on the measurement type and measuring range for PROFINET.

Table A- 1 Dependencies of the measurement type / measuring range

Measurement type	Measuring range	Temperature coefficient	Reference junction	Temperature unit	Conductor resistance
Deactivated	*	*	*	*	*
Voltage	±50 mV, ±80 mV, ±250 mV, ±1 V	*	*	*	*
Resistor	150 Ω, 300 Ω, 600 Ω, 3 kΩ, 6 kΩ	*	*	*	x
Resistor	PTC	*	*	*	*
Thermal resistor	Pt100 climatic	Pt 0.00385055 Pt 0.003916 Pt 0.003902 Pt 0.00392 Pt 0.00385	Reference channel of group 0, 1, 2, 3	Degrees Celsius	x
			No reference channel mode	Degrees Celsius Degrees Fahrenheit	
	Pt200 Pt500 Pt1000 climatic		No reference channel mode	Degrees Celsius Degrees Fahrenheit	
	Ni100 Ni120 Ni200 Ni500 Ni1000 climatic	Ni 0.00618 Ni 0.00672			
	LG-Ni 1000 climatic	LG-Ni 0.005			

Measurement type	Measuring range	Temperature coefficient	Reference junction	Temperature unit	Conductor resistance
Thermal resistor	Pt100 Pt200 Pt500 Pt1000 standard	Pt 0.00385055 Pt 0.003916 Pt 0.003902 Pt 0.00392 Pt 0.00385	No reference channel mode	Degrees Celsius Degrees Fahrenheit Kelvin	x
	Ni100 Ni120 Ni200 Ni500 Ni1000 standard	Ni 0.00618 Ni 0.00672			
	LG-Ni 1000 standard	LG-Ni 0.005			
Thermocouple	Type B, N, E, R, S, J, L, T, K, U, C, TXK	*	Reference channel of the module[1] Internal reference junction Reference channel of group 0, 1, 2, 3[2]	Degrees Celsius Degrees Fahrenheit Kelvin	*
			Fixed reference temperature		

x = property is allowed, – = property is **not allowed**, * = property is not relevant

[1] Use of "Reference channel of the module":
- Channel 0 must be set as "Pt100 climatic" with temperature unit: "Degrees Celsius".
- For each TC channel of this module that is intended to use channel 0 as reference, "Reference junction" must be set to "Reference channel of the module".

[2] Use of "Reference channel of group 0, 1, 2, 3":
- An RTD channel must be set as "Pt100 climatic" with temperature unit: "Degree Celsius".
- The "Reference junction" of this channel must be configured with "Reference channel of group 0, 1, 2, 3".
- There must only be one RTD channel with "Reference junction" = "Reference channel of group 0, 1, 2, 3" per group 0, 1, 2, 3 and I/O device!
- Each TC channel in the I/O device which is to use this reference must be configured with "Reference channel of group 0, 1, 2, 3" at "Reference junction".
- If the reference channel is on channel 0, it can be used simultaneously as "Reference channel of the module".

Configuring with a PROFINET GSD file

The table lists the properties and their dependencies on the measurement type for PROFINET.

Table A- 2 Dependencies on the measurement type

Measurement type	Scalable measuring range	Measuring range resolution	Diagnostics				
			Underflow	Overflow	Wire break	Missing supply voltage L+	Reference junction
Deactivated	*	*	*	*	*	*	*
Voltage	–	*	x	x	–	x	–
Resistor	–	*	x	x	x	x	–
Resistor	–	*	x	–	–	x	–
Thermal resistor	x	2 and 3 decimal places	x	x	x	x	–
Thermocouple	x	2 and 3 decimal places	x	x	x	x	x[1)]

x = property is allowed, – = property is **not allowed**, * = property is not relevant

1 Property is not relevant if "Fixed reference temperature" is used

Configuring with a PROFIBUS GSD file

The table lists the properties and their dependencies on the measurement type and measuring range for PROFIBUS.

Measurement type	Measuring range	Temperature coefficient	Slot reference junction	Temperature unit	Diagnostics			
					Underflow / overflow	Wire break	Missing supply voltage L+	Reference junction
Deactivated	*	*	*	*	*	*	*	*
Voltage	±50 mV ±80 mV ±250 mV ±1 V	*	*	*	x	–	x	–
Resistor	150 Ω 300 Ω 600 Ω 3 kΩ 6 kΩ	*	*	*	x	x	x	–
Resistor	PTC[3]	*	*	*	x	–	x	–
Thermal resistor	Pt100 climatic	Pt 0.00385055 Pt 0.003916 Pt 0.003902	Reference channel of group 0, 1, 2, 3	Degrees Celsius	x	x	x	–

Measurement type	Measuring range	Temperature coefficient	Slot reference junction	Temperature unit	Diagnostics			
					Underflow / overflow	Wire break	Missing supply voltage L+	Reference junction
		Pt 0.00392 Pt 0.00385	No reference channel mode	Degrees Celsius Degrees Fahrenheit	x	x	x	–
	Pt200 Pt500 Pt1000 climatic	Pt 0.00385055 Pt 0.003916 Pt 0.003902 Pt 0.00392 Pt 0.00385	No reference channel mode	Degrees Celsius Degrees Fahrenheit	x	x	x	–
Thermal resistor	Pt100 Pt200 Pt500 Pt1000 standard	Pt 0.00385055 Pt 0.003916 Pt 0.003902 Pt 0.00392 Pt 0.00385	No reference channel mode	Degrees Celsius Degrees Fahrenheit Kelvin	x	x	x	–
	Ni100 Ni120 Ni200 Ni500 Ni1000 climatic	Ni 0.00618 Ni 0.00672	No reference channel mode	Degrees Celsius Degrees Fahrenheit	x	x	x	–
	Ni100 Ni120 Ni200 Ni500 Ni1000 standard	Ni 0.00618 Ni 0.00672	No reference channel mode	Degrees Celsius Degrees Fahrenheit Kelvin	x	x	x	–
Thermal resistor	LG-Ni 1000 climatic	LG-Ni 0.005	No reference channel mode	Degrees Celsius Degrees Fahrenheit	x	x	x	–
	LG-Ni 1000 standard	LG-Ni 0.005	No reference channel mode	Degrees Celsius Degrees Fahrenheit Kelvin	x	x	x	–

Measurement type	Measuring range	Temperature coefficient	Slot reference junction	Temperature unit	Diagnostics			
					Underflow / overflow	Wire break	Missing supply voltage L+	Reference junction
Thermocouple	Type B, N, E, R, S, J, L, T, K, U, C, TXK	*	Reference channel of the module[1] Internal reference junction Reference channel of group 0, 1, 2, 3[2]	Degrees Celsius Degrees Fahrenheit Kelvin	x	x	x	x
			Fixed reference temperature	Degrees Celsius Degrees Fahrenheit Kelvin	x	x	x	*

x = property is allowed, – = property is **not allowed**, * = property is not relevant

1 Use of the "Reference channel of the module":
- Channel 0 must be set to "Pt100 climatic" with the temperature unit "Degrees Celsius".
- For each TC channel of this module that is intended to use channel 0 as reference, "Reference junction" must be set to "Enable".

2 Use of "Reference channel of group 0":
- An RTD channel must be configured as "Pt100 climatic" with temperature unit "Degree Celsius".
- "Reference channel of group 0, 1, 2, 3" must be configured as the "Reference junction" of this channel.
- There must only be one RTD channel with "Reference junction activated" = "Enabled" per group and line!
- Each TC channel of this line which is to use this reference must be configured with "Enabled" for "Reference junction activated".

3 Underflow = 8000_H; wire break and overflow lead to 01_H (triggered) → (no diagnostics), wire break and overflow are therefore not relevant.

A.2 Parameter assignment and structure of parameter data record

The data record of the module has an identical structure, regardless of whether you configure the module with PROFIBUS DP or PROFINET IO. With data record 128, you can reconfigure the module in your user program regardless of your programming. This means that you can use all the functions of the module even if you configured it via PROFIBUS-GSD.

Parameter assignment in the user program

You can reassign the module parameters in RUN. For example, the measuring range of selected channels can be changed in RUN without having an effect on the other channels.

Changing parameters in RUN

The "WRREC" instruction is used to transfer the parameters to the module using data record 128. The parameters set with STEP 7 will not be changed on the CPU, which means that the parameters set in STEP 7 will be valid again after a restart.

Output parameter STATUS

If errors occur when transferring parameters with the "WRREC" instruction, the module continues operation with the previous parameter assignment. The STATUS output parameter contains a corresponding error code.

You will find a description of the "WRREC" instruction and the error codes in the STEP 7 online help.

Structure of data record 128

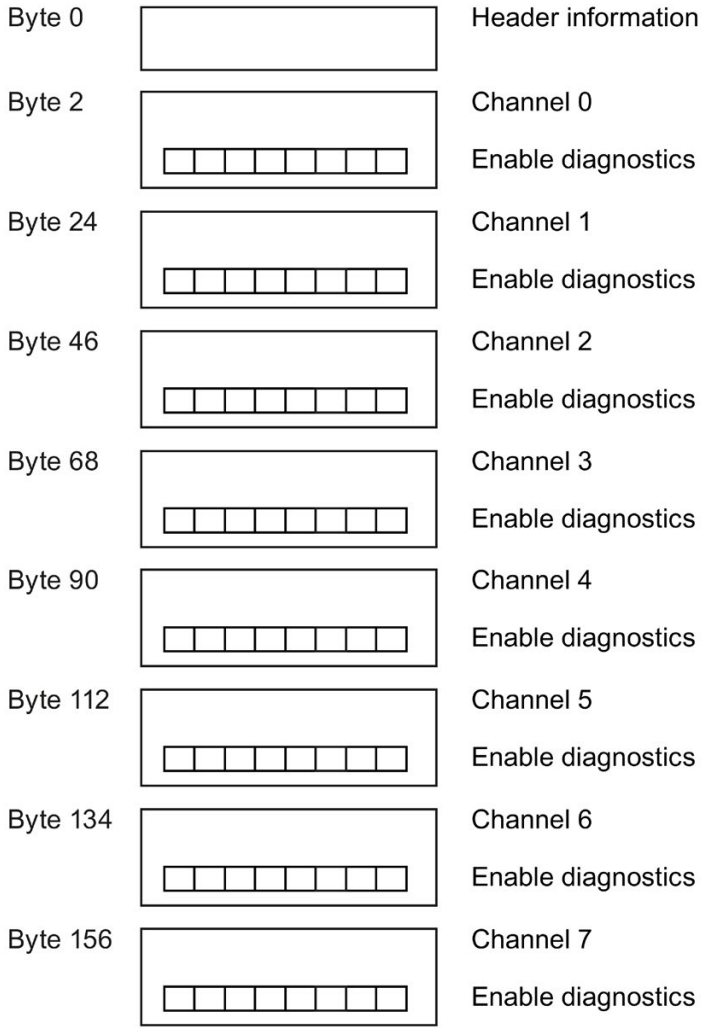

Figure A-1 Structure of data record 128

Header information

The figure below shows the structure of the header information.

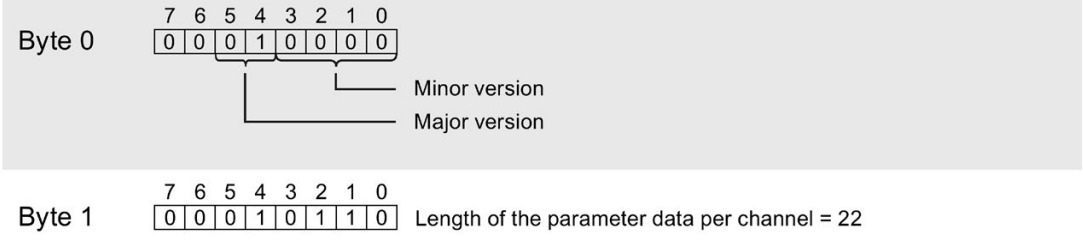

Figure A-2 Header information

Parameters

The figure below shows the structure of the parameters for channels 0 to 7.

You can activate a parameter by setting the corresponding bit to "1".

* x = 2 + (channel number x 22); channel number = 0 to 7

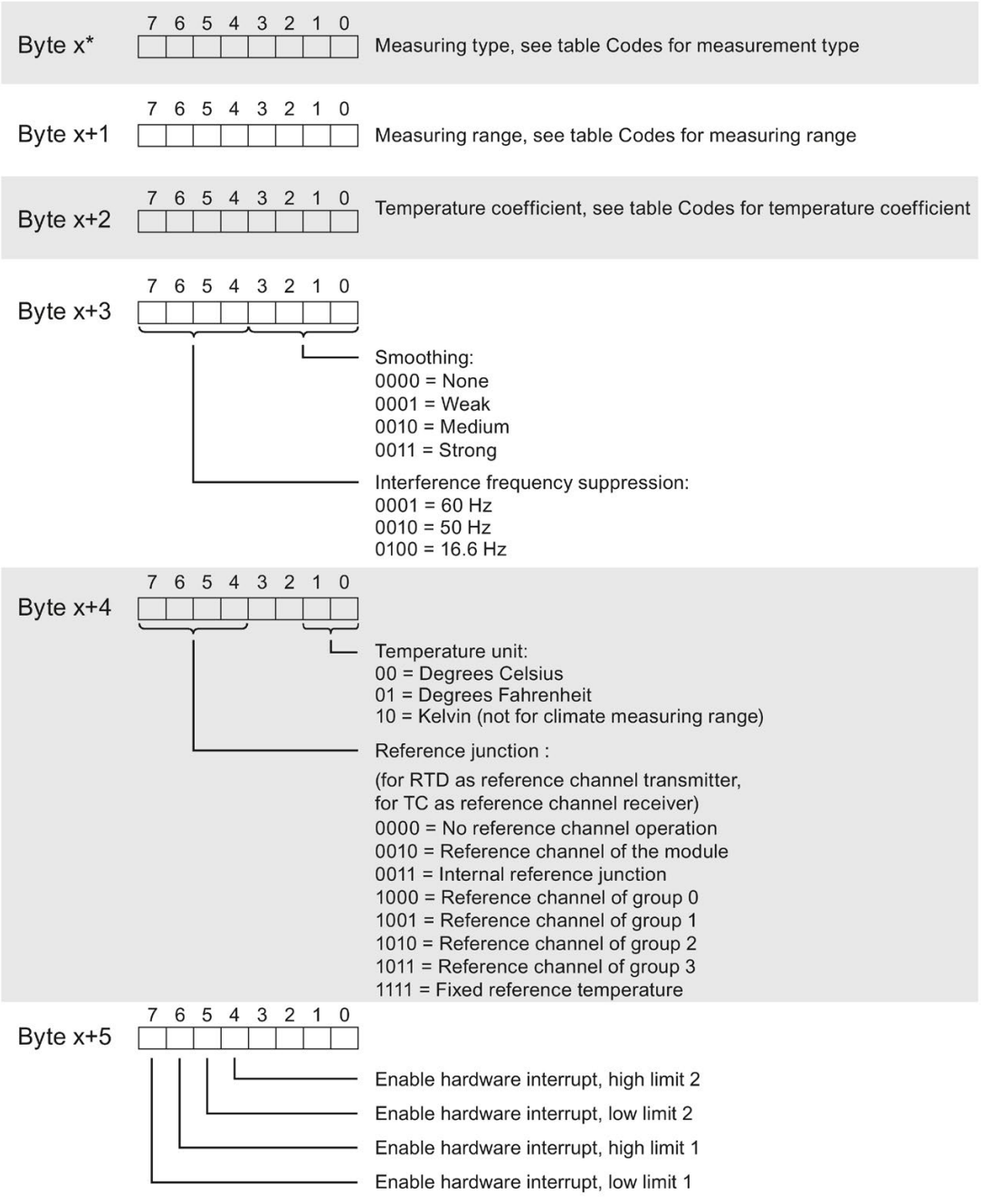

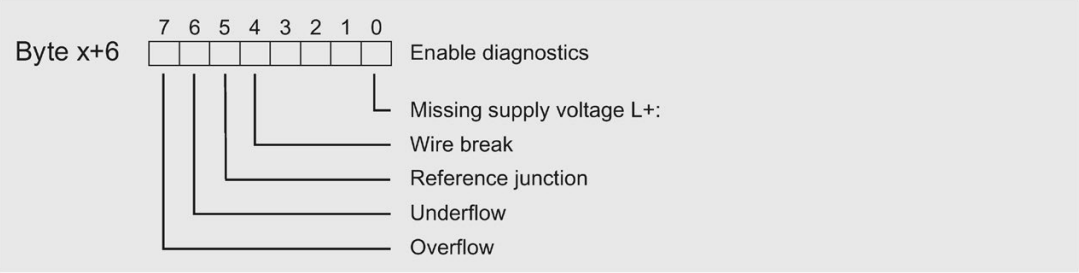
Byte x+6
7 6 5 4 3 2 1 0
Enable diagnostics
Missing supply voltage L+:
Wire break
Reference junction
Underflow
Overflow

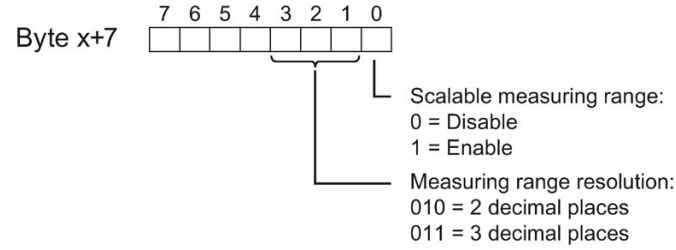
Byte x+7
7 6 5 4 3 2 1 0
Scalable measuring range:
0 = Disable
1 = Enable
Measuring range resolution:
010 = 2 decimal places
011 = 3 decimal places

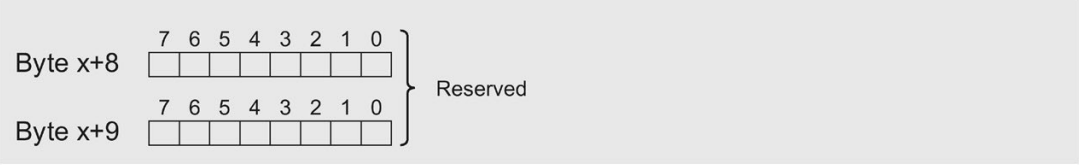
Byte x+8
7 6 5 4 3 2 1 0
Byte x+9
7 6 5 4 3 2 1 0
Reserved

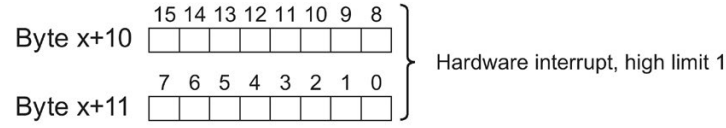
Byte x+10
15 14 13 12 11 10 9 8
Byte x+11
7 6 5 4 3 2 1 0
Hardware interrupt, high limit 1

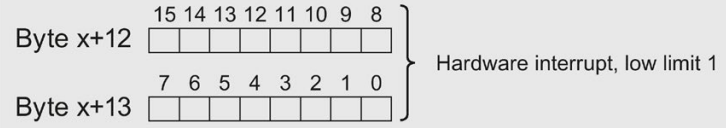
Byte x+12
15 14 13 12 11 10 9 8
Byte x+13
7 6 5 4 3 2 1 0
Hardware interrupt, low limit 1

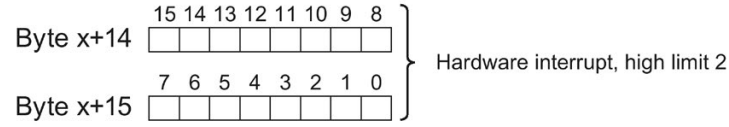
Byte x+14
15 14 13 12 11 10 9 8
Byte x+15
7 6 5 4 3 2 1 0
Hardware interrupt, high limit 2

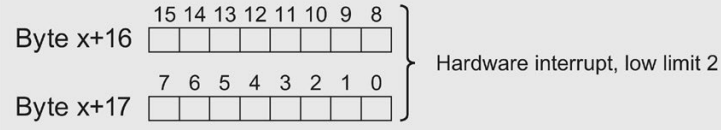
Byte x+16
15 14 13 12 11 10 9 8
Byte x+17
7 6 5 4 3 2 1 0
Hardware interrupt, low limit 2

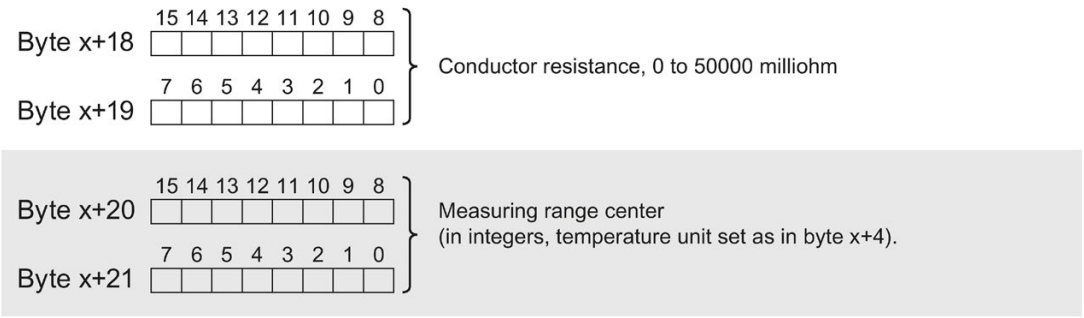

Figure A-3 Structure of byte x to x+21 for channel 0 to 7

Codes for measurement type

The following table contains the codes for the measurement types of the analog input module. You must enter these codes at byte x (see previous figure).

Table A- 3 Codes for measurement type

Measurement type	Code
Deactivated	0000 0000
Voltage	0000 0001
Resistor, 2-wire connection	0000 0110
Thermal resistor, 2-wire connection	0000 1001
Thermocouple	0000 1010

Codes for measuring range

The following table contains the codes for the measuring ranges of the analog input module. You must enter these codes at byte x+1 (see previous figure).

Table A- 4 Codes for measuring range

Measuring range	Code
Voltage	
50 mV	0000 0001
80 mV	0000 0010
250 mV	0000 0011
1 V	0000 0101
Resistor	
150 Ω	0000 0001
300 Ω	0000 0010
600 Ω	0000 0011
3 kΩ	0000 0100
6 kΩ	0000 0101
PTC	0000 1111

Measuring range	Code
Thermal resistor climatic	
Pt 100	0000 0000
Pt 200	0000 0111
Pt 500	0000 1000
Pt 1000	0000 1001
Thermal resistor standard	
Pt 100	0000 0010
Pt 200	0000 1011
Pt 500	0000 0100
Pt 1000	0000 0101
Thermal resistor climatic	
Ni 100	0000 0001
Ni 120	0000 1101
Ni 200	0001 0001
Ni 500	0001 0011
Ni 1000	0000 1010
Thermal resistor standard	
Ni 100	0000 0011
Ni 120	0000 1100
Ni 200	0001 0000
Ni 500	0001 0010
Ni 1000	0000 0110
Thermal resistor	
LG Ni 1000 climatic	0001 1101
LG Ni 1000 standard	0001 1100
Thermocouple	
Type B	0000 0000
Type N	0000 0001
Type E	0000 0010
Type R	0000 0011
Type S	0000 0100
Type J	0000 0101
Type L	0000 0110
Type T	0000 0111
Type K	0000 1000
Type U	0000 1001
Type C	0000 1010
Type TXK	0000 1011

Codes for temperature coefficient

The following table contains the codes for the temperature coefficients of the analog input module. You must enter these codes at byte x+2 (see previous figure).

Table A- 5 Codes for temperature coefficient for temperature measurement

Temperature coefficient	Code
Pt 0.00385055	0000 0000
Pt 0.003916	0000 0001
Pt 0.003902	0000 0010
Pt 0.00392	0000 0011
Pt 0.00385	0000 0100
Ni 0.00618	0000 1000
Ni 0.00672	0000 1001
LG-Ni 0.005	0000 1010

Limits for hardware interrupts

The following tables contain the permitted limits for hardware interrupts (in each case, the usable value is given). The limits depend on the selected measurement type and the selected measuring range. The value for the overflow must be larger than the value for the underflow. The limits are specified as decimal values. The conversion to the respective temperature unit is (1 digit = 0.1) for the standard range and (1 digit = 0.01) for the climate range, see section Representation of analog values (Page 67).

Table A- 6 Limits for resistor and voltage

Resistor (all possible measuring range settings)	Voltage	
32510	32510	Overflow
1	-32511	Underflow

Table A- 7 Limits for thermocouple types B, C, and E

Thermocouple									
Type B			Type C			Type E			
°C	°F	K	°C	°F	K	°C	°F	K	
20699	32765	23431	24999	32765	27731	11999	21919	14731	Overflow
-1199	-1839	1533	-1199	-1839	1533	-2699	-4539	33	Underflow

Table A- 8 Limits for thermocouple types R, S, J, and L

Thermocouple									
Types R, S			Type J			Type L			
°C	°F	K	°C	°F	K	°C	°F	K	
20189	32765	22921	14499	26419	17231	11499	21019	14231	Overflow
-1699	-2739	1033	-2099	-3459	633	-1999	-3279	733	Underflow

Table A- 9 Limits for thermocouple types T, K, and U

Thermocouple									
Type T			Type K			Type U			
°C	°F	K	°C	°F	K	°C	°F	K	
5399	10039	8131	16219	29515	18951	8499	15619	11231	Overflow
-2699	-4539	33	-2699	-4539	33	-1999	-3279	733	Underflow

Table A- 10 Limits for thermocouple types N and TXK

Thermocouple						
Type N			Type TXK			
°C	°F	K	°C	°F	K	
15499	28219	18231	10499	19219	13231	Overflow
-2699	-4539	33	-1999	-3279	733	Underflow

Table A- 11 Limits for thermal resistor

Thermal resistor						
	Standard			Climatic		
	°C	°F	K	°C	°F	
Pt	9999	18319	12731	15499	31099	Overflow
	-2429	-4053	303	-14499	-22899	Underflow
Ni, Ni-LG	2949	5629	5681	29499	32765	Overflow
	-1049	-1569	1683	-10499	-15699	Underflow

A.3 Errors when transferring the data record

Error transferring the data record

The module always checks all values of the data record to be sent. The module applies the values from the data record only when all values have been transmitted without errors.

The WRREC instruction for writing data records returns corresponding error codes when errors occur in the STATUS parameter, see also the description of the "STATUS" parameter in the STEP 7 online help).

The following table shows the module-specific error codes and their meaning for parameter data record 128.

Error code in STATUS parameter (hexadecimal)				Meaning	Solution
Byte 0	Byte 1	Byte 2	Byte 3		
DF	80	B0	xx	Number of the data record unknown.	Enter a valid number for the data record.
DF	80	B1	xx	Length of the data record incorrect.	Enter a valid value for the data record length.
DF	80	B2	xx	Slot invalid or cannot be accessed.	• Check the station to determine whether the module is plugged or pulled. • Check the assigned values for the parameters of the WRREC instruction.
DF	80	E0	xx	Wrong version or error in the header information.	Correct the version, length and number of parameter blocks.
DF	80	E1	xx	Parameter error	Check the parameters of the module.

A.4 Switchable wire break check

Function

The "Switchable wire break check" is available for thermocouples. It switches off the wire break check for the module.

This is required, for example, to calibrate thermocouples, since the test current necessary for a wire break check leads to measurement errors during calibration.

The function has no effect on channels that are not assigned in the thermocouple mode.

Note

Startup and parameter reassignment

The wire break check is switched on again at each startup and during any parameter reassignment of the module.

Switch-off via the user program

You can deactivate the wire break check using data record 237.

Table A- 12 Structure of data record 237, switchable wire break check

Byte	Function	Format	Value	Description
0	Command	UBYTE	80_H	Wire break check
1	Identifier	UBYTE	00_H	Not relevant
2	Channel number	UBYTE	FF_H	All channels
3	Calibration step	UBYTE	FF_H	First triggering
4	Measurement type	UBYTE	00_H	Not relevant
5	Measuring range	UBYTE	00_H	Not relevant
6	Action	UBYTE	01_H	Deactivate wire break check
			02_H	Activate wire break check
7...17	Reserved	UBYTE	00_H	Not relevant

Representation of analog values

B

This appendix shows the analog values for all measuring ranges supported by the analog input module AI 8xRTD/TC 2-wire HF.

Measured value resolution

The resolution of the analog values differs depending on the analog module and its parameter assignment.

Each analog value is written left aligned to the tags. The bits marked with "x" are set to "0".

Note

Temperature values

The digitized temperature values are the result of a conversion in the analog module. The following resolution therefore does not apply to temperature values.

Table B- 1 Resolution of the analog values

Resolution in bits including sign	Values		Analog value	
	Decimal	Hexadecimal	High byte	Low byte
14	4	4_H	Sign 0 0 0 0 0 0 0	0 0 0 0 0 1 x x
15	2	2_H	Sign 0 0 0 0 0 0 0	0 0 0 0 0 0 1 x
16	1	1_H	Sign 0 0 0 0 0 0 0	0 0 0 0 0 0 0 1

B.1 Representation of input ranges

In the following tables, you can find the digitized representation of the bipolar and unipolar input ranges. The resolution is 16 bits.

Table B- 2 Bipolar input ranges

Dec. value	Measured value in %	Data word																Range
		2^{15}	2^{14}	2^{13}	2^{12}	2^{11}	2^{10}	2^{9}	2^{8}	2^{7}	2^{6}	2^{5}	2^{4}	2^{3}	2^{2}	2^{1}	2^{0}	
32767	>117.589	0	1	1	1	1	1	1	1	1	1	1	1	1	1	1	1	Overflow
32511	117.589	0	1	1	1	1	1	1	0	1	1	1	1	1	1	1	1	Overrange
27649	100.004	0	1	1	0	1	1	0	0	0	0	0	0	0	0	0	1	
27648	100.000	0	1	1	0	1	1	0	0	0	0	0	0	0	0	0	0	Nominal range
1	0.003617	0	0	0	0	0	0	0	0	0	0	0	0	0	0	0	1	
0	0.000	0	0	0	0	0	0	0	0	0	0	0	0	0	0	0	0	
-1	-0.003617	1	1	1	1	1	1	1	1	1	1	1	1	1	1	1	1	
-27648	-100.000	1	0	0	1	0	1	0	0	0	0	0	0	0	0	0	0	
-27649	-100.004	1	0	0	1	0	0	1	1	1	1	1	1	1	1	1	1	Underrange
-32512	-117.593	1	0	0	0	0	0	0	1	0	0	0	0	0	0	0	0	
-32768	<-117.593	1	0	0	0	0	0	0	0	0	0	0	0	0	0	0	0	Underflow

Table B- 3 Unipolar input ranges

Dec. value	Measured value in %	Data word																Range
		2^{15}	2^{14}	2^{13}	2^{12}	2^{11}	2^{10}	2^{9}	2^{8}	2^{7}	2^{6}	2^{5}	2^{4}	2^{3}	2^{2}	2^{1}	2^{0}	
32767	>117.589	0	1	1	1	1	1	1	1	1	1	1	1	1	1	1	1	Overflow
32511	117.589	0	1	1	1	1	1	1	0	1	1	1	1	1	1	1	1	Overrange
27649	100.004	0	1	1	0	1	1	0	0	0	0	0	0	0	0	0	1	
27648	100.000	0	1	1	0	1	1	0	0	0	0	0	0	0	0	0	0	Nominal range
1	0.003617	0	0	0	0	0	0	0	0	0	0	0	0	0	0	0	1	
0	0.000	0	0	0	0	0	0	0	0	0	0	0	0	0	0	0	0	
-1	-0.003617	1	1	1	1	1	1	1	1	1	1	1	1	1	1	1	1	Underrange
-4864	-17.593	1	1	1	0	1	1	0	1	0	0	0	0	0	0	0	0	
-32768	<-17.593	1	0	0	0	0	0	0	0	0	0	0	0	0	0	0	0	Underflow

B.2 Representation of analog values in voltage measuring ranges

The following tables list the decimal and hexadecimal values (codes) of the possible voltage measuring ranges.

Table B- 4 Voltage measuring range ±1 V

Values		Voltage measuring range	Range
Dec.	Hex.	±1 V	
32767	7FFF	> 1.176 V	Overflow
32511	7EFF	1.176 V	Overrange
27649	6C01		
27648	6C00	1 V	Nominal range
20736	5100	0.75 V	
1	1	36.17 µV	
0	0	0 V	
-1	FFFF		
-20736	AF00	-0.75 V	
-27648	9400	-1 V	
-27649	93FF		Underrange
-32512	8100	-1.176 V	
-32768	8000	<-1.176 V	Underflow

Table B- 5 Voltage measuring range ±500 mV to ±50 mV

Values		Voltage measuring range			Range
Dec.	Hex.	±250 mV	±80 mV	±50 mV	
32767	7FFF	> 294.0 mV	> 94.1 mV	> 58.8 mV	Overflow
32511	7EFF	294.0 mV	94.1 mV	58.8 mV	Overrange
27649	6C01				
27648	6C00	250 mV	80 mV	50 mV	Nominal range
20736	5100	187.5 mV	60 mV	37.5 mA	
1	1	9.04 µV	2.89 µV	1.81 µV	
0	0	0 mV	0 mV	0 mV	
-1	FFFF				
-20736	AF00	-187.5 mV	-60 mV	-37.5 mV	
-27648	9400	-250 mV	-80 mV	-50 mV	
-27649	93FF				Underrange
-32512	8100	-294.0 mV	-94.1 mV	-58.8 mV	
-32768	8000	<-294.0 mV	<-94.1 mV	<-58.8 mV	Underflow

B.3 Representation of analog values for resistance-type sensors

The following tables list the decimal and hexadecimal values (codes) of the possible resistance-type sensors.

Table B- 6 Resistance-type sensors from 150 Ω to 6000 Ω

Values		Resistance-type sensor range					Range
Dec.	Hex.	150 Ω	300 Ω	600 Ω	3000 Ω	6000 Ω	
32767	7FFF	> 176.38 Ω	> 352.77 Ω	> 705.53 Ω	> 3527.7 Ω	> 7055.3 Ω	Overflow
32511	7EFF	176.38 Ω	352.77 Ω	705.53 Ω	3527.7 Ω	7055.3 Ω	Overrange
27649	6C01						
27648	6C00	150 Ω	300 Ω	600 Ω	3000 Ω	6000 Ω	Nominal range
20736	5100	112.5 Ω	225 Ω	450 Ω	2250 Ω	4500 Ω	
1	1	5.43 mΩ	10.85 mΩ	21.70 mΩ	108.5 mΩ	217 mΩ	
0	0	0 Ω	0 Ω	0 Ω	0 Ω	0 Ω	
-32768	8000	(negative values are physically impossible)					Underflow[1]

[1] If the resistors are not connected correctly or the conductor resistance is too high

B.4 Representation of analog values for thermal resistors

Note

A higher resolution can be configured for the measuring range for the standard thermal resistors, see section Scalable measuring range (Page 31).

The tables below list the decimal and hexadecimal values (codes) of the thermal resistors.

Table B- 7 Thermal resistor Pt 100, 200, 500, 1000 standard

Pt x00 standard in °C (1 digit = 0.1 °C)	Values		Pt x00 standard in °F (1 digit = 0.1 °F)	Values		Pt x00 standard in K (1 digit = 0.1 K)	Values		Range
	Dec.	Hex.		Dec.	Hex.		Dec.	Hex.	
> 1000.0	32767	7FFF	> 1832.0	32767	7FFF	> 1273.2	32767	7FFF	Overflow
1000.0 : 850.1	10000 : 8501	2710 : 2135	1832.0 : 1562.1	18320 : 15621	4790 : 3D05	1273.2 : 1123.3	12732 : 11233	31BC : 2BE1	Overrange
850.0 : -200.0	8500 : -2000	2134 : F830	1562.0 : -328.0	15620 : -3280	3D04 : F330	1123.2 : 73.2	11232 : 732	2BE0 : 2DC	Nominal range
-200.1 : -243.0	-2001 : -2430	F82F : F682	-328.1 : -405.4	-3281 : -4054	F32F : F02A	73.1 : 30.2	731 : 302	2DB : 12E	Underrange
< -243.0	-32768	8000	< -405.4	-32768	8000	< 30.2	32768	8000	Underflow

Table B- 8 Thermal resistor Pt 100, 200, 500, 1000 climatic

Pt x00 climatic in °C (1 digit = 0.01 °C)	Values		Pt x00 climatic in °F (1 digit = 0.01 °F)	Values		Range
	Dec.	Hex.		Dec.	Hex.	
> 155.00	32767	7FFF	> 311.00	32767	7FFF	Overflow
155.00 : 130.01	15500 : 13001	3C8C : 32C9	311.00 : 266.01	31100 : 26601	797C : 67E9	Overrange
130.00 : -120.00	13000 : -12000	32C8 : D120	266.00 : -184.00	26600 : -18400	67E8 : B820	Nominal range
-120.01 : -145.00	-12001 : -14500	D11F : C75C	-184.01 : -229.00	-18401 : -22900	B81F : A68C	Underrange
< -145.00	-32768	8000	< -229.00	-32768	8000	Underflow

Table B- 9 Thermal resistor Ni 100, 120, 200, 500, 1000, LG-Ni 1000 standard

Ni x00 standard in °C (1 digit = 0.1 °C)	Values		Ni x00 standard in °F (1 digit = 0.1 °F)	Values		Ni x00 standard in K (1 digit = 0.1 K)	Values		Range
	Dec.	Hex.		Dec.	Hex.		Dec.	Hex.	
> 295.0	32767	7FFF	> 563.0	32767	7FFF	> 568.2	32767	7FFF	Overflow
295.0 : 250.1	2950 : 2501	B86 : 9C5	563.0 : 482.1	5630 : 4821	15FE : 12D5	568.2 : 523.3	5682 : 5233	1632 : 1471	Overrange
250.0 : -60.0	2500 : -600	9C4 : FDA8	482.0 : -76.0	4820 : -760	12D4 : FD08	523.2 : 213.2	5232 : 2132	1470 : 854	Nominal range
-60.1 : -105.0	-601 : -1050	FDA7 : FBE6	-76.1 : -157.0	-761 : -1570	FD07 : F9DE	213.1 : 168.2	2131 : 1682	853 : 692	Underrange
< -105.0	-32768	8000	< -157.0	-32768	8000	< 168.2	32768	8000	Underflow

Table B- 10 Thermal resistor Ni 100, 120, 200, 500, 1000, LG-Ni 1000 climatic

Ni x00 climatic in °C (1 digit = 0.01 °C)	Values		Ni x00 climatic in °F (1 digit = 0.01 °F)	Values		Range
	Dec.	Hex.		Dec.	Hex.	
> 295.00	32767	7FFF	> 327.66	32767	7FFF	Overflow
295.00 : 250.01	29500 : 25001	733C : 61A9	327.66 : 280.01	32766 : 28001	7FFE : 6D61	Overrange
250.00 : -60.00	25000 : -6000	61A8 : E890	280.00 : -76.00	28000 : -7600	6D60 : E250	Nominal range
-60.01 : -105.00	-6001 : -10500	E88F : D6FC	-76.01 : -157.00	-7601 : -15700	E24F : C2AC	Underrange
< - 105.00	-32768	8000	< - 157.00	-32768	8000	Underflow

B.5 Representation of analog values for thermocouples

Note

A higher resolution can be configured for thermocouples, see section Scalable measuring range (Page 31).

The tables below list the decimal and hexadecimal values (codes) of the thermocouples.

Table B- 11 Thermocouple type B

Type B in °C	Values		Type B in °F	Values		Type B in K	Values		Range
	Dec.	Hex.		Dec.	Hex.		Dec.	Hex.	
> 2070.0	32767	7FFF	> 3276.6	32767	7FFF	> 2343.2	32767	7FFF	Overflow
2070.0 : 1820.1	20700 : 18201	50DC : 4719	3276.6 : 2786.6	32766 : 27866	7FFE : 6CDA	2343.2 : 2093.3	23432 : 20933	5B88 : 51C5	Overrange
1820.0 : 0.0	18200 : 0	4718 : 0000	2786.5 : 32.0	27865 : 320	6CD9 : 0140	2093.2 : 273.2	20932 : 2732	51C4 : 0AAC	Nominal range
-0.1 : -120.0	-1 : -1200	FFFF : FB50	31.9 : -184.0	319 : -1840	013F : F8D0	273.1 : 153.2	2731 : 1532	0AAB : 05FC	Underrange
< -120.0	-32768	8000	< -184.0	-32768	8000	< 153.2	-32768	8000	Underflow

Table B- 12 Thermocouple type C

Type C in °C	Values		Type C in °F	Values		Type C in K	Values		Range
	Dec.	Hex.		Dec.	Hex.		Dec.	Hex.	
> 2500.0	32767	7FFF	> 3276.6	32767	7FFF	> 2773.2	32767	7FFF	Overflow
2500.0 : 2315.1	25000 : 23151	61A8 : 5A6F	3276.6 : 2786.6	32766 : 27866	7FFE : 6CDA	2773.2 : 2588.3	27732 : 25883	6C54 : 651B	Overrange
2315.0 : 0.0	23150 : 0	5A6E : 0000	2786.5 : 32.0	27865 : 320	6CD9 : 0140	2588.2 : 273.2	25882 : 2732	651A : 0AAC	Nominal range
-0.1 : -120.0	-1 : -1200	FFFF : FB50	31.9 : -184.0	319 : -1840	013F : F8D0	273.1 : 153.2	2731 : 1532	0AAB : 05FC	Underrange
< -120.0	-32768	8000	< -184.0	-32768	8000	< 153.2	-32768	8000	Underflow

Table B- 13 Thermocouple type E

Type E in °C	Values		Type E in °F	Values		Type E in K	Values		Range
	Dec.	Hex.		Dec.	Hex.		Dec.	Hex.	
> 1200.0	32767	7FFF	> 2192.0	32767	7FFF	> 1473.2	32767	7FFF	Overflow
1200.0 : 1000.1	12000 : 10001	2EE0 : 2711	2192.0 : 1832.1	21920 : 18321	55A0 : 4791	1473.2 : 1273.3	14732 : 12733	398C : 31BD	Overrange
1000.0 : -270.0	10000 : -2700	2710 : F574	1832.0 : -454.0	18320 : -4540	4790 : EE44	1273.2 : 3.2	12732 : 32	31BC : 0020	Nominal range
< -270.0	-32768	8000	< -454.0	-32768	8000	< 3.2	-32768	8000	Underflow

Table B- 14 Thermocouple type J

Type J in °C	Values		Type J in °F	Values		Type J in K	Values		Range
	Dec.	Hex.		Dec.	Hex.		Dec.	Hex.	
> 1450.0	32767	7FFF	> 2642.0	32767	7FFF	> 1723.2	32767	7FFF	Overflow
1450.0 : 1200.1	14500 : 12001	38A4 : 2EE1	2642.0 : 2192.1	26420 : 21921	6734 : 55A1	1723.2 : 1473.3	17232 : 14733	4350 : 398D	Overrange
1200.0 : -210.0	12000 : -2100	2EE0 : F7CC	2192.0 : -346.0	21920 : -3460	55A0 : F27C	1473.2 : 63.2	14732 : 632	398C : 0278	Nominal range
< -210.0	-32768	8000	< -346.0	-32768	8000	< 63.2	-32768	8000	Underflow

Table B- 15 Thermocouple type K

Type K in °C	Values		Type K in °F	Values		Type K in K	Values		Range
	Dec.	Hex.		Dec.	Hex.		Dec.	Hex.	
> 1622.0	32767	7FFF	> 2951.6	32767	7FFF	> 1895.2	32767	7FFF	Overflow
1622.0 : 1372.1	16220 : 13721	3F5C : 3599	2951.6 : 2501.7	29516 : 25017	734C : 61B9	1895.2 : 1645.3	18952 : 16453	4A08 : 4045	Overrange
1372.0 : -270.0	13720 : -2700	3598 : F574	2501.6 : -454.0	25016 : -4540	61B8 : EE44	1645.2 : 3.2	16452 : 32	4044 : 0020	Nominal range
< -270.0	-32768	8000	< -454.0	-32768	8000	< 3.2	-32768	8000	Underflow

Table B- 16 Thermocouple type L

Type L in °C	Values		Type L in °F	Values		Type L in K	Values		Range
	Dec.	Hex.		Dec.	Hex.		Dec.	Hex.	
> 1150.0	32767	7FFF	> 2102.0	32767	7FFF	> 1423.2	32767	7FFF	Overflow
1150.0 : 900.1	11500 : 9001	2CEC : 2329	2102.0 : 1652.1	21020 : 16521	521C : 4089	1423.2 : 1173.3	14232 : 11733	3798 : 2DD5	Overrange
900.0 : -200.0	9000 : -2000	2328 : F830	1652.0 : -328.0	16520 : -3280	4088 : F330	1173.2 : 73.2	11732 : 732	2DD4 : 02DC	Nominal range
< -200.0	-32768	8000	< -328.0	-32768	8000	< 73.2	-32768	8000	Underflow

Table B- 17 Thermocouple type N

Type N in °C	Values		Type N in °F	Values		Type N in K	Values		Range
	Dec.	Hex.		Dec.	Hex.		Dec.	Hex.	
> 1550.0	32767	7FFF	> 2822.0	32767	7FFF	> 1823.2	32767	7FFF	Overflow
1550.0 : 1300.1	15500 : 13001	3C8C : 32C9	2822.0 : 2372.1	28220 : 23721	6E3C : 5CA9	1823.2 : 1573.3	18232 : 15733	4738 : 3D75	Overrange
1300.0 : -270.0	13000 : -2700	32C8 : F574	2372.0 : -454.0	23720 : -4540	5CA8 : EE44	1573.2 : 3.2	15732 : 32	3D74 : 0020	Nominal range
< -270.0	-32768	8000	< -454.0	-32768	8000	< 3.2	-32768	8000	Underflow

Table B- 18 Thermocouples R and S

Types R, S in °C	Values		Types R, S in °F	Values		Types R, S in K	Values		Range
	Dec.	Hex.		Dec.	Hex.		Dec.	Hex.	
> 2019.0	32767	7FFF	> 3276.6	32767	7FFF	> 2292.2	32767	7FFF	Overflow
2019.0 : 1769.1	20190 : 17691	4EDE : 451B	3276.6 : 3216.3	32766 : 32163	7FFE : 7DA3	2292.2 : 2042.3	22922 : 20423	598A : 4FC7	Overrange
1769.0 : -50.0	17690 : -500	451A : FE0C	3216.2 : -58.0	32162 : -580	7DA2 : FDBC	2042.2 : 223.2	20422 : 2232	4FC6 : 08B8	Nominal range
-50.1 : -170.0	-501 : -1700	FE0B : F95C	-58.1 : -274.0	-581 : -2740	FDBB : F54C	223.1 : 103.2	2231 : 1032	08B7 : 0408	Underrange
< -170.0	-32768	8000	< -274.0	-32768	8000	< 103.2	< 1032	8000	Underflow

Table B- 19 Thermocouple type T

Type T in °C	Values		Type T in °F	Values		Type T in K	Values		Range
	Dec.	Hex.		Dec.	Hex.		Dec.	Hex.	
> 540.0	32767	7FFF	> 1004.0	32767	7FFF	> 813.2	32767	7FFF	Overflow
540.0 : 400.1	5400 : 4001	1518 : 0FA1	1004.0 : 752.1	10040 : 7521	2738 : 1D61	813.2 : 673.3	8132 : 6733	1FC4 : 1AAD	Overrange
400.0 : -270.0	4000 : -2700	0FA0 : F574	752.0 : -454.0	7520 : -4540	1D60 : EE44	673.2 : 3.2	6732 : 32	1AAC : 0020	Nominal range
< -270.0	-32768	8000	< -454.0	-32768	8000	< 3.2	-32768	8000	Underflow

Table B- 20 Thermocouple type U

Type U in °C	Values		Type U in °F	Values		Type U in K	Values		Range
	Dec.	Hex.		Dec.	Hex.		Dec.	Hex.	
> 850.0	32767	7FFF	> 1562.0	32767	7FFF	> 1123.2	32767	7FFF	Overflow
850.0 : 600.1	8500 : 6001	2134 : 1771	1562.0 : 1112.1	15620 : 11121	2738.0 : 2B71	1123.2 : 873.3	11232 : 8733	2BE0 : 221D	Overrange
600.0 : -200.0	6000 : -2000	1770 : F830	1112.0 : -328.0	11120 : -3280	2B70 : F330	873.2 : 73.2	8732 : 732	221C : 02DC	Nominal range
< -200.0	-32768	8000	< -328.0	-32768	8000	< 73.2	-32768	8000	Underflow

Table B- 21 Thermocouple type TXK (GOST)

Type TXK in °C	Values		Type TXK in °F	Values		Type TXK in K	Values		Range
	Dec.	Hex.		Dec.	Hex.		Dec.	Hex.	
> 1050.0	32767	7FFF	> 1922.0	32767	7FFF	>1323.2	32767	7FFF	Overflow
1050.0 : 800.1	10500 : 8001	2904 : 1F41	1922.0 : 1472.1	19220 : 14721	4B14 : 3981	1323.2 : 1073.3	13232 : 10733	33B0 : 29ED	Overrange
800.0 : 0.0 : -200.0	8000 : 0 : -2000	1F40 : 0000 : F830	1472.0 : 32.0 : -328.0	14720 : 320 : -3280	3980 : 0140 : F330	1073.2 : 273 : 73.2	10732 : 2730 : 732	29EC : 0AAA : 02DC	Nominal range
< -200.0	-32768	8000	< -328.0	-32768	8000	<73.2	-32768	8000	Underflow

SIEMENS

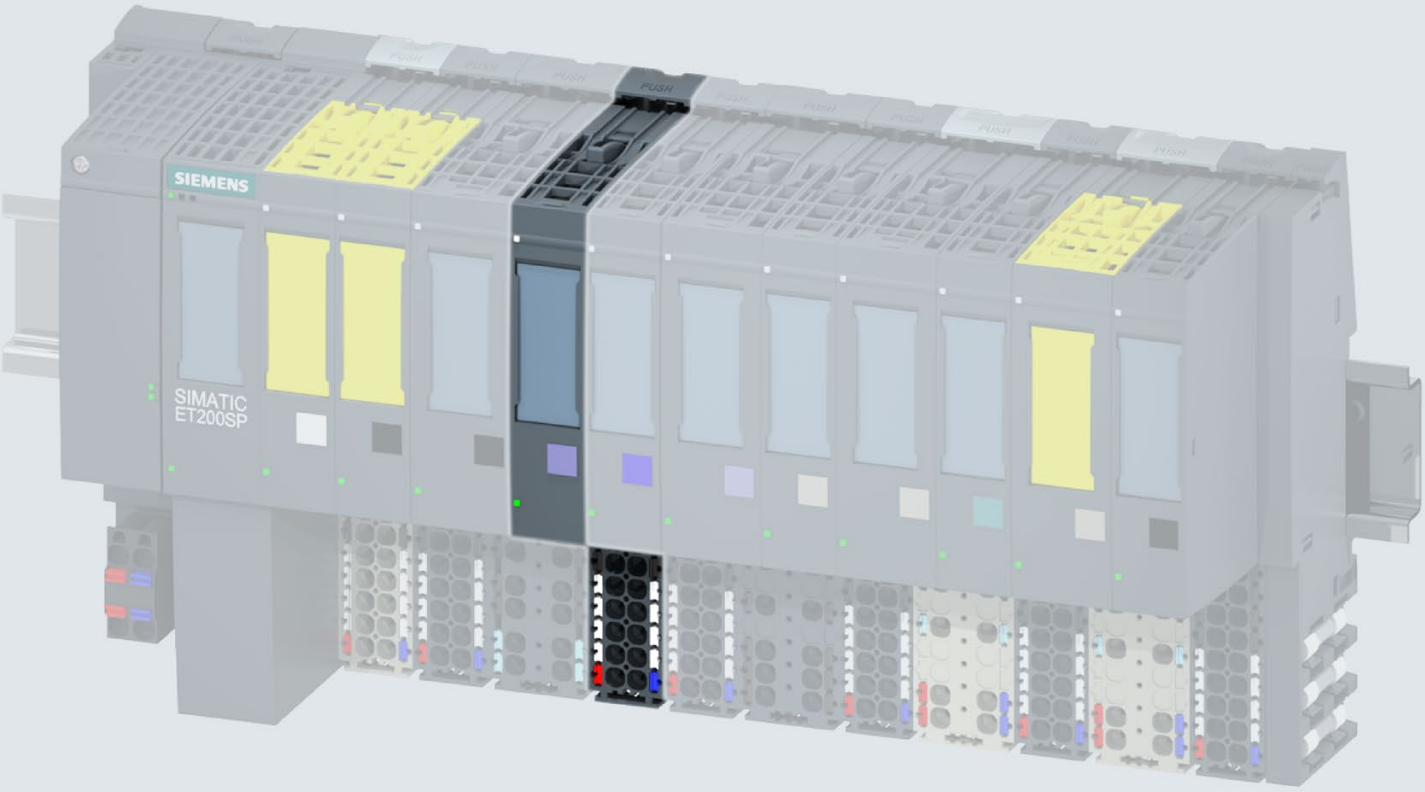

Manual

SIMATIC

ET 200SP

Analog input module
AI 4xTC HS (6ES7134-6JD00-0DA1)

Edition 08/2018

support.industry.siemens.com

SIEMENS

SIMATIC

ET 200SP
Analog input module AI 4xTC HS (6ES7134-6JD00-0DA1)

Manual

Preface

Guide to documentation 1

Product overview 2

Wiring 3

Parameters/address space 4

Interrupts/diagnostics alarms 5

Technical specifications 6

Parameter data records A

Representation of analog values B

08/2018

A5E42405270-AA

Legal information

Warning notice system

This manual contains notices you have to observe in order to ensure your personal safety, as well as to prevent damage to property. The notices referring to your personal safety are highlighted in the manual by a safety alert symbol, notices referring only to property damage have no safety alert symbol. These notices shown below are graded according to the degree of danger.

⚠ DANGER

indicates that death or severe personal injury **will** result if proper precautions are not taken.

⚠ WARNING

indicates that death or severe personal injury **may** result if proper precautions are not taken.

⚠ CAUTION

indicates that minor personal injury can result if proper precautions are not taken.

NOTICE

indicates that property damage can result if proper precautions are not taken.

If more than one degree of danger is present, the warning notice representing the highest degree of danger will be used. A notice warning of injury to persons with a safety alert symbol may also include a warning relating to property damage.

Qualified Personnel

The product/system described in this documentation may be operated only by **personnel qualified** for the specific task in accordance with the relevant documentation, in particular its warning notices and safety instructions. Qualified personnel are those who, based on their training and experience, are capable of identifying risks and avoiding potential hazards when working with these products/systems.

Proper use of Siemens products

Note the following:

⚠ WARNING

Siemens products may only be used for the applications described in the catalog and in the relevant technical documentation. If products and components from other manufacturers are used, these must be recommended or approved by Siemens. Proper transport, storage, installation, assembly, commissioning, operation and maintenance are required to ensure that the products operate safely and without any problems. The permissible ambient conditions must be complied with. The information in the relevant documentation must be observed.

Trademarks

All names identified by ® are registered trademarks of Siemens AG. The remaining trademarks in this publication may be trademarks whose use by third parties for their own purposes could violate the rights of the owner.

Disclaimer of Liability

We have reviewed the contents of this publication to ensure consistency with the hardware and software described. Since variance cannot be precluded entirely, we cannot guarantee full consistency. However, the information in this publication is reviewed regularly and any necessary corrections are included in subsequent editions.

Siemens AG
Division Digital Factory
Postfach 48 48
90026 NÜRNBERG
GERMANY

A5E42405270-AA
℗ 06/2018 Subject to change

Copyright © Siemens AG 2018.
All rights reserved

Preface

Purpose of the documentation

This manual supplements the system manual ET 200SP distributed I/O system (http://support.automation.siemens.com/WW/view/en/58649293).

Functions that generally relate to the system are described in this manual.

The information provided in this manual and in the system/function manuals supports you in commissioning the system.

Conventions

CPU: When the term "CPU" is used in this manual, it applies to the CPUs of the S7-1500 automation system as well as to the CPUs/interface modules of the ET 200SP distributed I/O system.

STEP 7: In this documentation, "STEP 7" is used as a synonym for all versions of the configuration and programming software "STEP 7 (TIA Portal)".

Please also observe notes marked as follows:

Note

A note contains important information on the product described in the documentation, on the handling of the product or on the section of the documentation to which particular attention should be paid.

Recycling and disposal

For environmentally friendly recycling and disposal of your old equipment, contact a certified electronic waste disposal company and dispose of the equipment according to the applicable regulations in your country.

Security information

Siemens provides products and solutions with industrial security functions that support the secure operation of plants, systems, machines and networks.

In order to protect plants, systems, machines and networks against cyber threats, it is necessary to implement – and continuously maintain – a holistic, state-of-the-art industrial security concept. Siemens' products and solutions constitute one element of such a concept.

Customers are responsible for preventing unauthorized access to their plants, systems, machines and networks. Such systems, machines and components should only be connected to an enterprise network or the internet if and to the extent such a connection is necessary and only when appropriate security measures (e.g. firewalls and/or network segmentation) are in place.

For additional information on industrial security measures that may be implemented, please visit (https://www.siemens.com/industrialsecurity).

Siemens' products and solutions undergo continuous development to make them more secure. Siemens strongly recommends that product updates are applied as soon as they are available and that the latest product versions are used. Use of product versions that are no longer supported, and failure to apply the latest updates may increase customers' exposure to cyber threats.

To stay informed about product updates, subscribe to the Siemens Industrial Security RSS Feed under (https://www.siemens.com/industrialsecurity).

Table of contents

Preface 3
1 Guide to documentation 6
2 Product overview 11
2.1 Properties 11
2.2 Spare part compatibility 13
3 Wiring 14
3.1 Wiring and block diagram 14
4 Parameters/address space 16
4.1 Measurement types and measuring ranges 16
4.2 Parameters 17
4.3 Explanation of parameters 21
4.4 Scalable measuring range 25
4.4.1 Configuration 27
4.4.2 Evaluate status and limits of scalable measuring range 28
4.5 REAL representation 31
4.6 Address space 32
5 Interrupts/diagnostics alarms 39
5.1 Status and error display 39
5.2 Interrupts 41
5.3 Diagnostics alarms 43
6 Technical specifications 44
A Parameter data records 51
A.1 Dependencies when configuring with GSD file 51
A.2 Parameter assignment and structure of the parameter data record (S7 representation) 53
A.3 Parameter assignment and structure of channel parameter (REAL representation) 62
B Representation of analog values 70
B.1 Representation of input ranges 71
B.2 Representation of analog values in voltage measuring ranges 72
B.3 Representation of analog values for thermocouples 73

Guide to documentation

1

The documentation for the SIMATIC ET 200SP distributed I/O system is arranged into three areas.
This arrangement enables you to access the specific content you require.

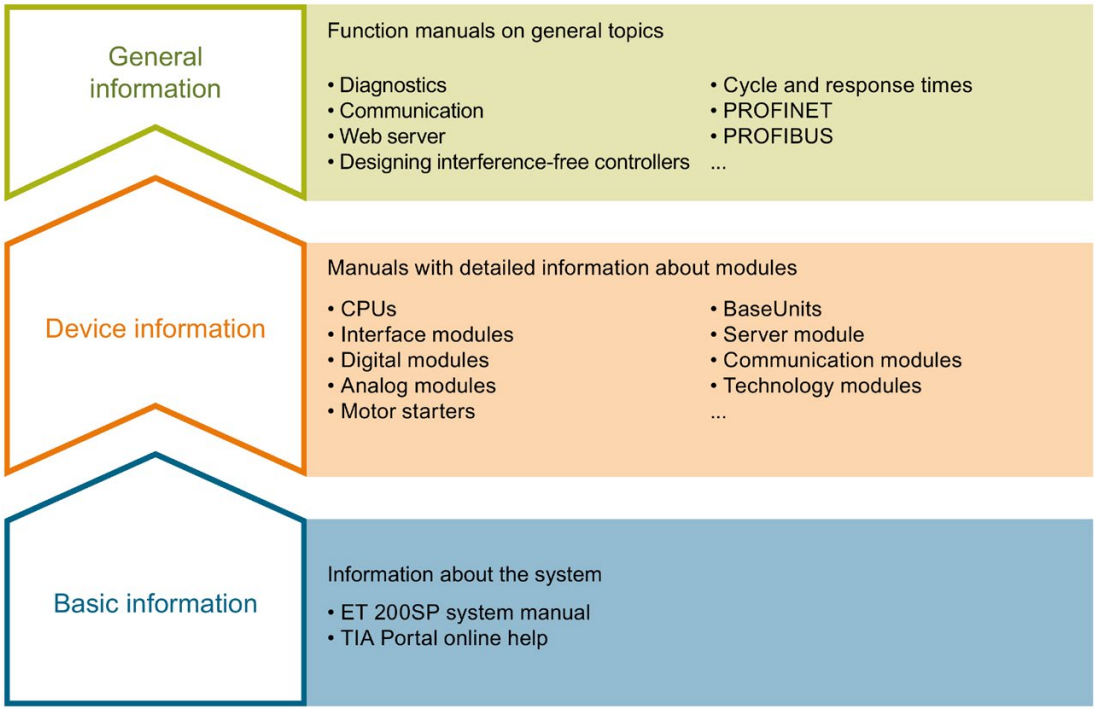

Basic information

The system manual describes in detail the configuration, installation, wiring and commissioning of the SIMATIC ET 200SP. distributed I/O system. The STEP 7 online help supports you in the configuration and programming.

Device information

Product manuals contain a compact description of the module-specific information, such as properties, wiring diagrams, characteristics and technical specifications.

General information

The function manuals contain detailed descriptions on general topics regarding the SIMATIC ET 200SP distributed I/O system, e.g. diagnostics, communication, Web server, motion control and OPC UA.

You can download the documentation free of charge from the Internet (https://support.industry.siemens.com/cs/ww/en/view/109742709).

Changes and supplements to the manuals are documented in a Product Information.

You can download the product information free of charge from the Internet (https://support.industry.siemens.com/cs/us/en/view/73021864).

Manual Collection ET 200SP

The Manual Collection contains the complete documentation on the SIMATIC ET 200SP distributed I/O system gathered together in one file.

You can find the Manual Collection on the Internet (http://support.automation.siemens.com/WW/view/en/84133942).

"mySupport"

With "mySupport", your personal workspace, you make the most of your Industry Online Support.

In "mySupport" you can store filters, favorites and tags, request CAx data and put together your personal library in the Documentation area. Furthermore, your data is automatically filled into support requests and you always have an overview of your current requests.

You need to register once to use the full functionality of "mySupport".

You can find "mySupport" in the Internet (https://support.industry.siemens.com/My/ww/en).

"mySupport" - Documentation

In the Documentation area of "mySupport", you have the possibility to combine complete manuals or parts of them to make your own manual.
You can export the manual in PDF format or in an editable format.

You can find "mySupport" - Documentation in the Internet (http://support.industry.siemens.com/My/ww/en/documentation).

"mySupport" - CAx Data

In the CAx Data area of "mySupport", you can have access the latest product data for your CAx or CAe system.

You configure your own download package with a few clicks.

In doing so you can select:

- Product images, 2D dimension drawings, 3D models, internal circuit diagrams, EPLAN macro files
- Manuals, characteristics, operating manuals, certificates
- Product master data

You can find "mySupport" - CAx Data in the Internet (http://support.industry.siemens.com/my/ww/en/CAxOnline).

Application examples

The application examples support you with various tools and examples for solving your automation tasks. Solutions are shown in interplay with multiple components in the system - separated from the focus in individual products.

You can find the application examples on the Internet (https://support.industry.siemens.com/sc/ww/en/sc/2054).

TIA Selection Tool

With the TIA Selection Tool, you can select, configure and order devices for Totally Integrated Automation (TIA).
This tool is the successor of the SIMATIC Selection Tool and combines the known configurators for automation technology into one tool.
With the TIA Selection Tool, you can generate a complete order list from your product selection or product configuration.

You can find the TIA Selection Tool on the Internet (http://w3.siemens.com/mcms/topics/en/simatic/tia-selection-tool).

SIMATIC Automation Tool

You can use the SIMATIC Automation Tool to run commissioning and maintenance activities simultaneously on various SIMATIC S7 stations as a bulk operation independently of the TIA Portal.

The SIMATIC Automation Tool provides a multitude of functions:

- Scanning of a PROFINET/Ethernet network and identification of all connected CPUs
- Address assignment (IP, subnet, gateway) and station name (PROFINET device) to a CPU
- Transfer of the data and the programming device/PC time converted to UTC time to the module
- Program download to CPU
- Operating mode switchover RUN/STOP
- Localization of the CPU by means of LED flashing
- Reading out CPU error information
- Reading the CPU diagnostic buffer
- Reset to factory settings
- Updating the firmware of the CPU and connected modules

You can find the SIMATIC Automation Tool on the Internet (https://support.industry.siemens.com/cs/ww/en/view/98161300).

PRONETA

With SIEMENS PRONETA (PROFINET network analysis), you analyze the plant network during commissioning. PRONETA features two core functions:

- The topology overview independently scans PROFINET and all connected components.
- The IO check is a fast test of the wiring and the module configuration of a system.

You can find SIEMENS PRONETA on the Internet (https://support.industry.siemens.com/cs/ww/en/view/67460624).

SINETPLAN

SINETPLAN, the Siemens Network Planner, supports you in planning automation systems and networks based on PROFINET. The tool facilitates professional and predictive dimensioning of your PROFINET installation as early as in the planning stage. In addition, SINETPLAN supports you during network optimization and helps you to exploit network resources optimally and to plan reserves. This helps to prevent problems in commissioning or failures during productive operation even in advance of a planned operation. This increases the availability of the production plant and helps improve operational safety.

The advantages at a glance

- Network optimization thanks to port-specific calculation of the network load
- Increased production availability thanks to online scan and verification of existing systems
- Transparency before commissioning through importing and simulation of existing STEP 7 projects
- Efficiency through securing existing investments in the long term and optimal exploitation of resources

You can find SINETPLAN on the Internet (https://www.siemens.com/sinetplan).

Product overview

2

2.1 Properties

Article number

6ES7134-6JD00-0DA1

View of the module

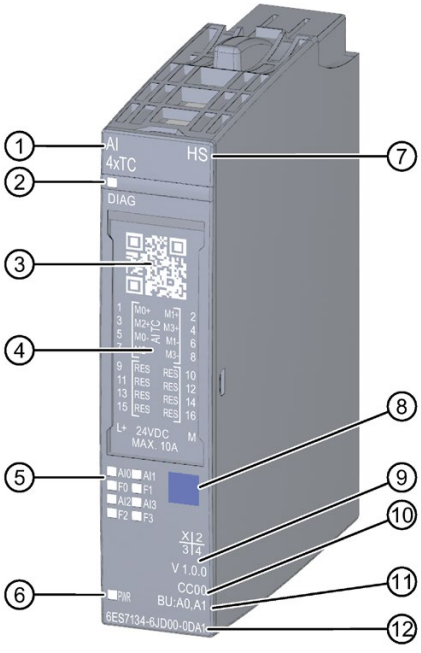

① Module type and name
② LED for diagnostics
③ 2D matrix code
④ Wiring diagram
⑤ LEDs for channel status
⑥ LED for supply voltage
⑦ Function class
⑧ Color coding module type
⑨ Function and firmware version
⑩ Color code for selecting the color identification labels
⑪ BU type
⑫ Article number

Figure 2-1 View of the module AI 4×TC HS

Properties

The module has the following technical properties:

- Analog input module with 4 inputs
- Resolution: Up to 16 bits including sign
- Limited exchange compatibility with analog input module AI 4xRTD/TC 2-/3-/4-wire HF (6ES7134-6JD00-0CA1), see section Spare part compatibility (Page 13)
- Voltage measurement type can be set per channel
- Thermocouple (TC) measurement type can be set per channel
- Configurable diagnostics for each channel
- Configurable wire break check per channel
- Hardware interrupt on limit violation can be set per channel (two high and two low limits per channel)

The module supports the following functions:

Table 2- 1 Version dependencies of the functions

Function	STEP 7	GSD file	
	TIA Portal	PROFINET IO	PROFIBUS DP
Outlier suppression	as of V15 with HSP 0265	X	X[1]
Firmware update	as of V15 with HSP 0265	X	X
Identification data I&M0 to I&M3	as of V15 with HSP 0265	X	X
Calibration in runtime	as of V15 with HSP 0265	X	X
Module-internal shared input (MSI)	as of V15 with HSP 0265	X	-
REAL representation	as of V15 with HSP 0265	X	-
Scalable measuring range	as of V15 with HSP 0265	X	-
Configuration in RUN	as of V15 with HSP 0265	X	X
Value status (PROFINET IO only)	as of V15 with HSP 0265	X	-

[1] Outlier suppression is always enabled for configuration with the PROFIBUS GSD file. You can set this parameter via data record 128.

You can configure the module with STEP 7 and with a GSD file.

Accessories

The following accessories must be ordered separately:

- Labeling strips
- Color identification labels
- Reference identification label
- Shield connection

See also

You can find more information on accessories in the ET 200SP distributed I/O system (http://support.automation.siemens.com/WW/view/en/58649293) system manual.

2.2 Spare part compatibility

Replacement of an AI 4xRTD/TC 2-/3-/4-wire HF (6ES7134-6JD00-0CA1)

With an AI 4xTC HS (6ES7134-6JD00-0DA1), you can replace an AI 4xRTD/TC 2-/3-/4-wire HF (6ES7134-6JD00-0CA1), that is configured for the "Thermocouple" or "Voltage" measuring ranges.
You do not have to perform new configuration or new wiring. The "Outlier suppression" function is enabled. You can find additional information on outlier suppression in the section Explanation of parameters (Page 21), "Outlier suppression" section.

Note

Restricted measuring range functionality

The AI 4xTC HS module (6ES7134-6JD00-0DA1) does not support RTD and resistance measuring ranges. If you have configured these measuring ranges, the parameter assignment is rejected with the diagnostic message "Parameter assignment error".

Wiring 3

3.1 Wiring and block diagram

This section includes the block diagram of the AI 4×TC HS module with the terminal assignments.

You can find information on wiring the BaseUnit in the ET 200SP distributed I/O system (http://support.automation.siemens.com/WW/view/en/58649293) system manual.

Note

The load group of the module must begin with a light-colored BaseUnit. Keep this in mind also during the configuration.

Wiring: 2-wire connection for thermocouples

The following figure shows the block diagram and an example of the terminal assignment of the analog input module AI 4×TC HS on the BaseUnit BU type A0/A1.

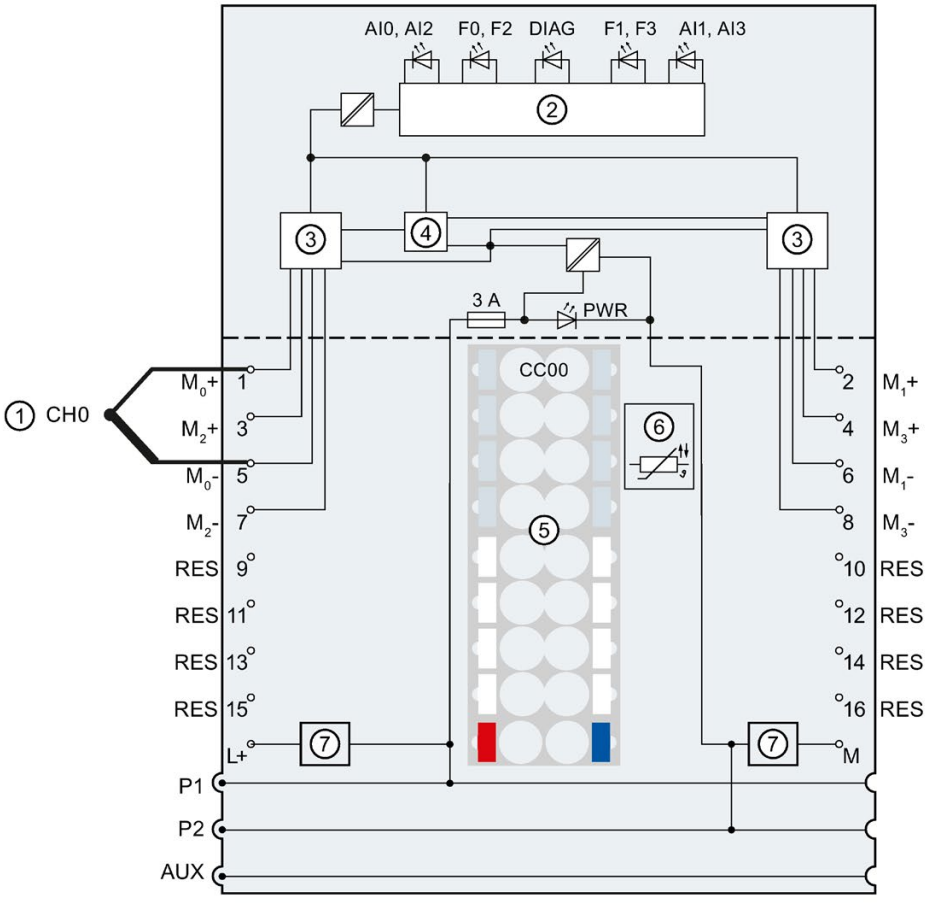

①	2-wire connection of thermocouples	M_n+	Measuring line positive, channel n
		M_n-	Measuring line negative, channel n
②	Backplane bus interface	L+	24 V DC (feed for light-colored BaseUnit only)
③	Multiplexer	P1, P2, AUX	Internal self-assembling voltage buses Connection to left (dark-colored BaseUnit) Connection to left interrupted (light-colored BaseUnit)
④	Analog-to-digital converter (ADC)	DIAG	Diagnostics LED (green, red)
⑤	Color-coded label with color code CC00 (optional)	AI0 to AI3	Channel status LED (green)
⑥	Temperature recording for BU type A1 only	F0 to F3	Channel fault LED (red)
⑦	Filter connection supply voltage (only when light-colored BaseUnit is present)	PWR	Power LED (green)

Figure 3-1 Wiring and block diagram for connection of thermocouples

Parameters/address space

4

4.1 Measurement types and measuring ranges

The following table lists the measuring range you can set for each measuring type:

Table 4- 1 Measurement types and measuring ranges

Measurement type	Measuring range
Deactivated	–
Thermocouple (TC)	Type E, N, J, K, L, S, R, B, T, C, U, TXK (acc. to GOST)
Voltage	±50 mV / ±80 mV / ±250 mV / ±1 V

See also

Technical specifications (Page 44)

4.2 Parameters

Parameters of the AI 4xTC HS

Specify the module properties with the various parameters in the course of your STEP 7 configuration. The following table lists the configurable parameters. The effective range of the configurable parameters depends on the type of configuration. The following configurations are possible:

- Central operation with an ET 200SP CPU
- Distributed operation on PROFINET IO in an ET 200SP system
- Distributed operation with PROFIBUS DP in an ET 200SP system

When assigning parameters in the user program, use the WRREC instruction to transfer the parameters to the module by means of data records, see section Parameter assignment and structure of parameter data record (Page 53). The following parameter settings are possible:

Table 4- 2 Configurable parameters and their defaults (GSD file)

Parameter	Value range	Default	Reconfig-uration in RUN	Scope with configuration software e.g. STEP 7 (TIA Portal)	
				GSD file PROFINET IO	GSD file PROFIBUS DP
Diagnostics: Missing supply voltage L+	• Disable • Enable	Disable	Yes	Channel	Channel
Diagnostics: Reference junction	• Disable • Enable	Disable	Yes	Channel	Module
Diagnostics: Overflow	• Disable • Enable	Disable	Yes	Channel	Module
Diagnostics: Underflow	• Disable • Enable	Disable	Yes	Channel	
Wire break check	• Disable • Enable	Enable	Yes	Channel	Module
Diagnostics: Wire break	• Disable • Enable	Disable	Yes	Channel	Channel

Parameter	Value range	Default	Reconfig-uration in RUN	Scope with configuration software e.g. STEP 7 (TIA Portal)	
				GSD file PROFINET IO	GSD file PROFIBUS DP
Type/range of measurement	• Deactivated • Voltage – ±50 mV – ±80 mV – ±250 mV – ± 1 V • Thermocouple – Type B (PtRh-PtRh) – Type N (NiCrSi-NiSi) – Type E (NiCr-CuNi) – Type R (PtRh-Pt) – Type S (PtRh-Pt) – Type J (Fe-CuNi) – Type L (Fe-CuNi) – Type T (Cu-CuNi) – Type K (NiCr-NiAl) – Type U (Cu-CuNi) – Type C (WRe-WRe) – Type TXK	Type K (NiCr-NiAl)	Yes	Channel	Channel
Outlier suppres-sion [1]	• Disable • Enable	Enable	Yes	Channel	Cannot be changed
Temperature unit	• Degrees Celsius • Degrees Fahrenheit • Kelvin	Degrees Celsius	Yes	Channel	Module
Reference junction [2]	• Internal reference junction • Reference channel of group 0 • Reference channel of group 1 • Reference channel of group 2 • Reference channel of group 3 • Fixed reference temperature	Fixed refer-ence temper-ature	Yes	Channel	Channel
Fixed reference temperature	Temperature	0 °C	Yes	Channel	-
Smoothing	• None • Weak • Medium • Strong	None	Yes	Channel	Channel

Parameter	Value range	Default	Reconfig-uration in RUN	Scope with configuration software e.g. STEP 7 (TIA Portal)	
				GSD file PROFINET IO	GSD file PROFIBUS DP
Interference frequency suppression [1]	• 60 Hz • 50 Hz [3] • 16.6 Hz • None	50 Hz	Yes	Channel	Module
Scalable measuring range [1]	• Disable • Enable	Disable	Yes	Channel	-
Measuring range resolution [1]	• 2 decimal places • 3 decimal places	2 decimal places	Yes	Channel	-
Measuring range center [1]	• Value within the nominal range of the measuring range	0	Yes	Channel	-
Hardware interrupt high limit 1 [1]	• Disable • Enable	Disable	Yes	Channel	-
High limit 1 [1]	• Value (INT) • Value (REAL) [4]	• 13720 • 1372.0 [4]	Yes	Channel	-
Hardware interrupt low limit 1 [1]	• Disable • Enable	Disable	Yes	Channel	-
Low limit 1 [1]	• Value (INT) • Value (REAL) [4]	• -2699 • -269.9 [4]	Yes	Channel	-
Hardware interrupt high limit 2 [1]	• Disable • Enable	Disable	Yes	Channel	-
High limit 2 [1]	• Value (INT) • Value (REAL) [4]	• 13720 • 1372.0 [4]	Yes	Channel	-
Hardware interrupt low limit 2 [1]	• Disable • Enable	Disable	Yes	Channel	-

Parameter	Value range	Default	Reconfig-uration in RUN	Scope with configuration software e.g. STEP 7 (TIA Portal)	
				GSD file PROFINET IO	GSD file PROFIBUS DP
Low limit 2 [1]	• Value (INT) • Value (REAL) [4]	• -2699 • -269.9 [4]	Yes	Channel	-
Potential group	• Use potential group of the left module • Enable new potential group	Use potential group of the left module	No	Module	Module

[1] Due to the limited number of parameters at a maximum of 244 bytes per ET 200SP station with a PROFIBUS GSD configuration, the parameter assignment options are restricted. If required, you can still assign these parameters using data record 128 as described in the "GSD file PROFINET IO" column (see table above). The parameter length of the I/O module is 13 bytes.

[2] Only for configuration with PROFIBUS GSD file: The set reference junction is used with the additional parameter "Kx Reference junction activated" in the case of "Enable". In the case of "Disable", no "fixed reference temperature" is used for TC.

[3] Interference frequency suppression: Noise at 400 Hz is automatically included in the filtering at 50 Hz.

[4] Only for REAL representation.

Note

Unused channels

"Deactivate" unused channels in the parameter assignment to improve the cycle time of the module.

A disabled channel always returns the value $7FFF_H$ (REAL representation: $7F800000_H$).

4.3 Explanation of parameters

Diagnostics: Missing supply voltage L+

Enabling of the diagnostics for missing or insufficient supply voltage L+.

Diagnostics: Reference junction

Enabling of the reference junction diagnostics if the reference temperature of the reference junction needs to be determined for the TC channel being operated.

Reference junction using the PROFINET GSD file

As reference junction for the TC measurement, a BaseUnit with internal temperature sensor (BU..T) or the reference channel of the group 0, 1, 2, 3 can be used.

A possible parameter assignment is represented below:

Table 4- 3 TC channel

Setting	Description
Internal reference junction	The reference junction temperature is read by an internal temperature sensor on the BaseUnit. Diagnostics: Reference junction is triggered if there is an incorrect BaseUnit type.
Reference channel of group 0, 1, 2, 3	The channel acts as a **receiver** for the reference junction temperature of a group.
Fixed reference temperature	The reference temperature of the thermocouple is set to 0 °C. As a result, no temperature compensation is performed.

Note

Shared Device and "Reference channel of group 0, 1, 2, 3"

If the transmitter and receiver for the reference junction temperature of a group are assigned to different IO controllers, then both IO controllers must be performing data exchange with the IO device to ensure error-free operation of the temperature compensation.

Reference junction using the PROFIBUS GSD file

As reference junction for the TC measurement, a BaseUnit with internal temperature sensor (BU..T) or the reference channel of the group 0, 1, 2, 3 can be used.

Table 4- 4 **TC channel**

Setting	Description
Internal reference junction	The reference junction temperature is read by an internal temperature sensor on the BaseUnit. Diagnostics: Reference junction is triggered if there is an incorrect BaseUnit type.
Reference channel of group 0, 1, 2, 3	The channel acts as a **receiver** for the reference junction temperature of a group.
Fixed reference temperature	The reference temperature of the thermocouple is set to 0 °C. As a result, no temperature compensation is performed.

Setting	Description
Channel x Reference junction activated	• Disable: Channel x is configured with the setting "Fixed reference temperature". • Enable: Channel x is configured with the setting selected above.

Diagnostics: Overflow

Enabling of the diagnostics when the measured value exceeds the overrange.

Diagnostics: Underflow

Enabling of the diagnostics if the measured value falls below the underrange.

Wire break check

Enable for wire break check. The module only detects an interruption at the input when the wire break check is activated.

Diagnostics: Wire break

Enabling of the diagnostics, if the module detects interruption at the corresponding configured input.

Type/range of measurement

See section Measurement types and measuring ranges (Page 16).

Outlier suppression

Suppresses interference pulses in analog input modules that can be caused, for example, by switching processes in the system.
The last measured values are statistically analyzed (box plot).
Limits within which a new measured value is expected are derived from the distribution (scatter) of the measured values. These limits are dynamically adjusted when the distribution of the measured values changes. New measured values that lie outside the determined limits are suppressed, i.e. the last value is kept.
Faults are suppressed up to a length of three module cycles. On the other hand, actual jumps in the input signal are delayed by the same time.

Temperature unit

Selection between Degrees Celsius, Fahrenheit and Kelvin as the temperature unit for the selected measuring range.

Smoothing

The individual measured values are smoothed using filtering. The smoothing can be set in 4 levels.

Smoothing time = number of module cycles (k) x cycle time of the module.

The following figure shows how many module cycles it takes for the smoothed analog value to approach 100%, depending on the configured smoothing. This specification is valid for all signal changes at the analog input.

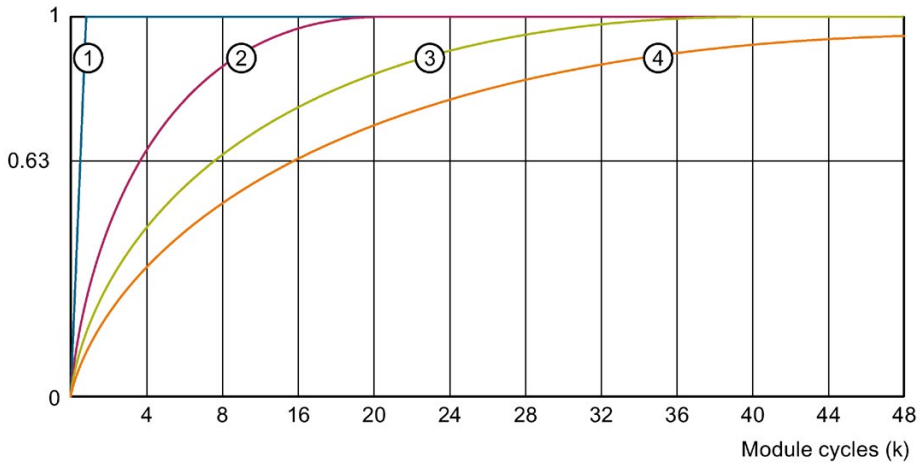

① No smoothing (k = 1)
② Weak (k = 4)
③ Medium (k = 8)
④ Strong (k = 16)

Figure 4-1 Smoothing with AI 4×TC HS

Interference frequency suppression

Suppresses the interferences affecting analog input modules that are caused by the frequency of the AC voltage network used.

The frequency of the AC voltage network is likely to have a negative effect on measured values particularly with measurement in the low voltage range and on thermocouples. With this parameter, the user specifies the line frequency that is predominant in the plant.

Measuring range resolution

Parameters for the thermocouple measurement type.

Allows you to increase the resolution to 2 or 3 decimal places for a configurable section of the measuring range. See section Scalable measuring range (Page 25).

Measuring range center

Determines the temperature over which the scalable measuring range is symmetrically spanned. The value must be within the nominal range of the underlying measuring range. It is specified in integers.

Maximum / Minimum

Corresponds to overflow / underflow for the scalable measuring range.

Hardware interrupt enable

Enabling of a hardware interrupt if the high limit 1/2 or the low limit 1/2 is violated.

Low limit 1/2

Specify a threshold which triggers a hardware interrupt when violated.

High limit 1/2

Specify a threshold which triggers a hardware interrupt when violated.

Potential group

Specifies that a BaseUnit with incoming voltage supply is located on this slot (see system manual ET 200SP distributed I/O system (http://support.automation.siemens.com/WW/view/en/58649293)).

4.4 Scalable measuring range

Introduction

The scalable measuring range is available for the temperature measuring ranges of thermocouples. The measuring ranges for voltage are not supported.

The scalable measuring range is valid for the following ranges:

- Nominal range
- Underrange
- Overrange

Function

The scalable measuring range is a limited section of a measuring range supported by the module.

It allows you to increase the resolution for a configurable section.

- The "Measuring range resolution" parameter determines the resolution to 2 or 3 decimal places.
- The "Measuring range center" parameter determines the temperature over which the scalable measuring range is symmetrically spanned.

Value ranges

Table 4- 5 Value ranges

Scalable measuring range	Measuring range resolution		Values hex.
	2 decimal places	3 decimal places	
Overflow	> 325.11	> 32.511	$7FFF_H$
High limit	325.11	32.511	$7EFF_H$
Measuring range center	0	0	0_H
Low limit	-325.12	-32.512	8100_H
Underflow	<-325.12	<-32.512	8000_H

To obtain an absolute temperature, the measuring range center in the application program (as offset) must be calculated with the value of the user data of the scalable measuring range.

The measuring range center is always output in the user data as the value "0". The user data are correspondingly mapped to the bipolar input ranges in S7 format. Underflow / overflow is also formed in accordance with the limits of S7.

Rules

- The measuring range center must be within the nominal range of the underlying measuring range. It is specified in integers.
- The scalable measuring range is spanned symmetrically over the measuring range center. Depending on the resolution, various value ranges result (①, ②).
- The scalable measuring range is limited by underflow and overflow of the underlying measuring range:
  - It is clipped at the underflow when it falls below the limit.
  - It is clipped at the overflow when it exceeds the limit (③).

Example

The following example illustrates the effect of scalable measuring ranges:

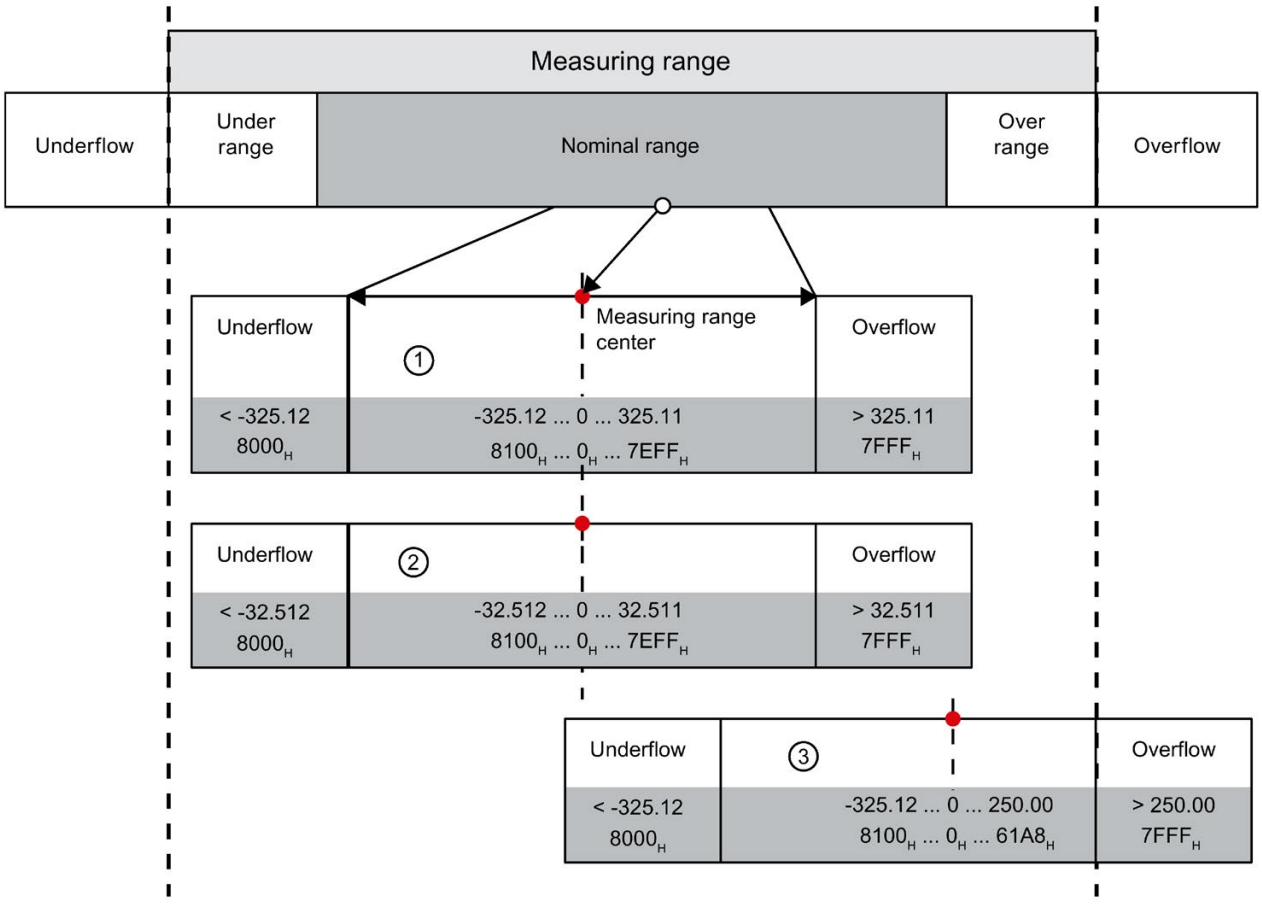

① Scalable measuring range with 2 decimal places in hexadecimal S7 format
② Scalable measuring range with 3 decimal places in hexadecimal S7 format
③ Scalable measuring range which is cut off at the overflow of the underlying measuring range (clipping)

Figure 4-2 Examples of scalable measuring ranges

4.4.1 Configuration

Requirement

You must select a valid temperature measuring range for configuration.

Configuration

The function is activated using the "Scalable measuring range" parameter.

The following figure shows an example of a configuration in STEP 7:

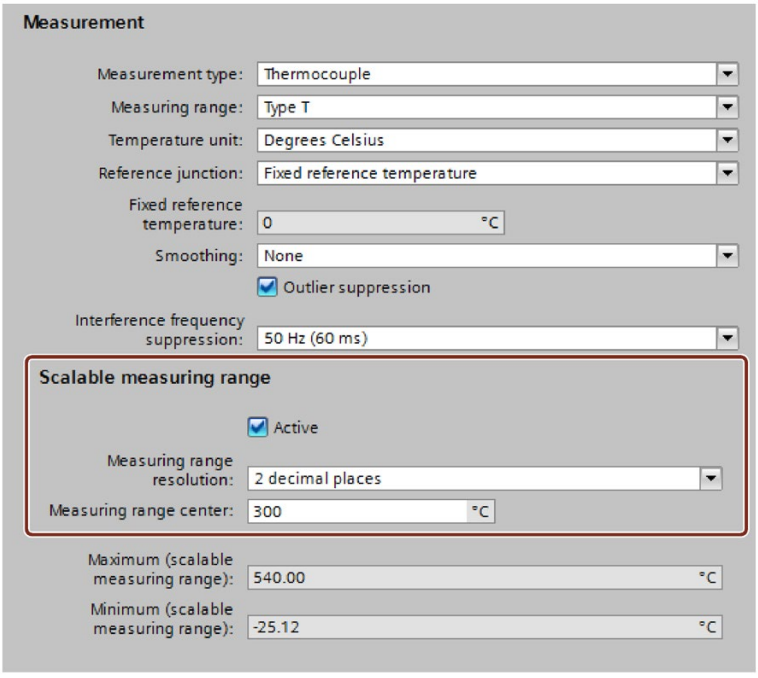

Figure 4-3 Configuration for the scalable measuring range

Reference

You will find more information on the configuration in the STEP 7 online help.

4.4.2 Evaluate status and limits of scalable measuring range

Evaluation in the user program

In the user program, you can evaluate the status and the limits of the scalable measuring range with data record 235, which may result by reaching underflow/overflow.

Structure of data record 235

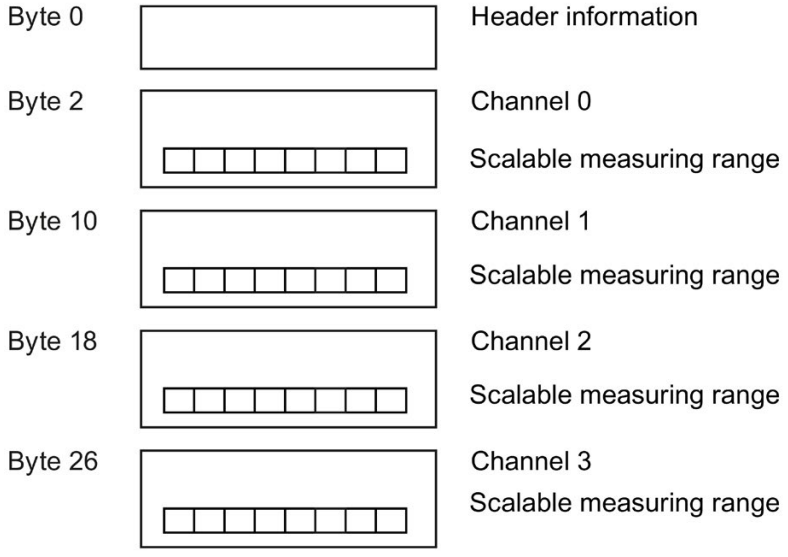

Figure 4-4 Structure of data record 235

Header information

The figure below shows the structure of the header information.

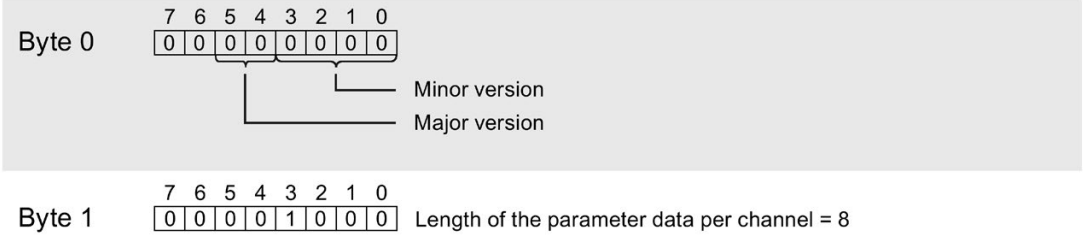

Figure 4-5 Header information of data record 235

Parameters

The figure below shows the structure of the parameter.

If the corresponding bit is set to "1", the parameter is activated.

* x = 2 + (channel number x 8)

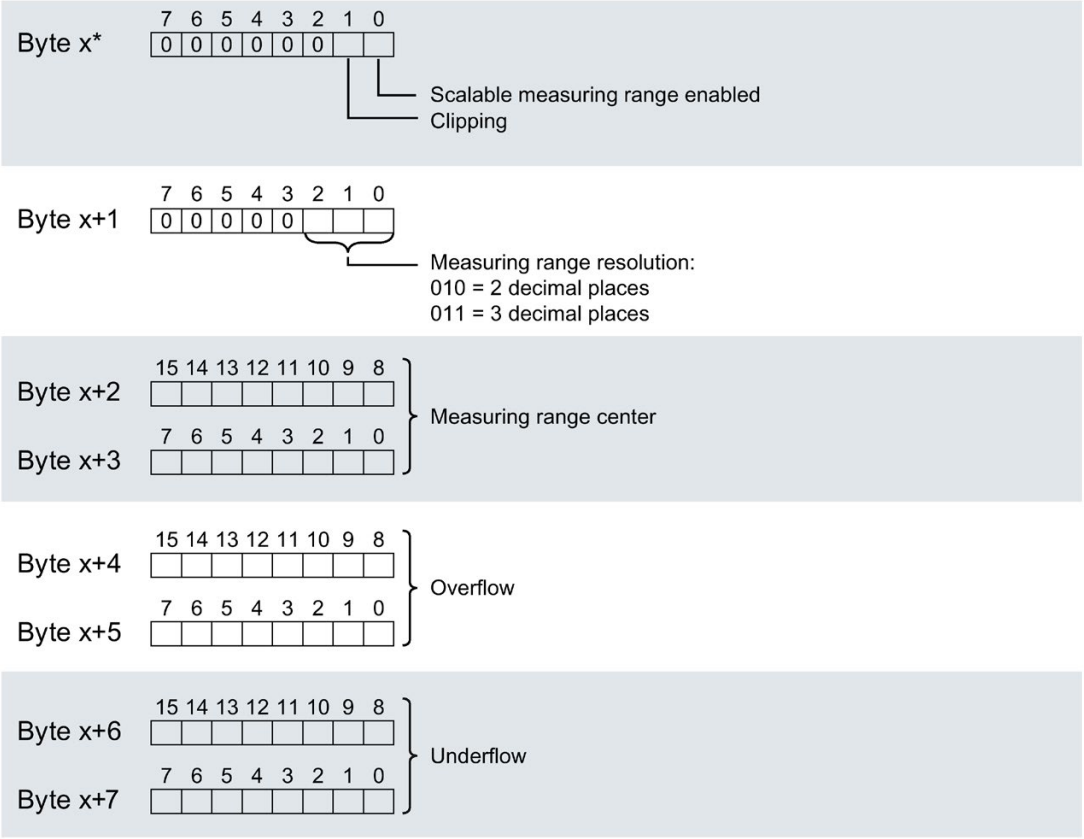

Figure 4-6 Structure of data record 235 - channel parameter byte x to x+7

Description of the parameters

Table 4- 6 Description of the parameters from data record 235

Parameter	Description
Scalable measuring range enabled	1 = Function is active for this channel.
Clipping	1 = Scalable measuring range cut off at the overflow / underflow of the underlying measuring range (see Figure (Page 26)).
Resolution	2 or 3 decimal places
Measuring range center	Temperature in whole °C / °F / K ("working point" for the scaling)
Overflow/underflow	Limits of the scalable measuring range

Example

The following example shows the values for a thermocouple type T:

Table 4- 7 Example of thermocouple type T

Hex. value	Dec. value	Evaluation of data record 235
00_H	0	V0.0
08_H	8	8 bytes
03_H	3	Scalable measuring range active and clipped (clipping)
02_H	2	Resolution: 2 decimal places
$012C_H$	300	Measuring range center: 300 °C
$5DC0_H$	24000	Overflow (Maximum): 240.**00** + 300 = 540.00 °C Scalable measuring range is clipped at the overflow.
8100_H	-32512	Underflow (Minimum): -325.**12** + 300 = -25.12 °C

4.5 REAL representation

Special features of REAL representation

If you have configured the module with REAL representation, the user data and hardware interrupt limits are displayed in REAL data format (32-bit floating point number) instead of S7 format.

The representation of the measured values in the REAL representation is always related to a physical unit, unlike in S7 representation.
This physical unit results from the measuring range you have set. For temperature ranges, the physical unit is determined by the "Temperature unit" parameter.

REAL representation has no influence on the overranges or underranges, the overflow or underflow diagnostics, or the QI characteristics.

Note

Substitute value for REAL representation

With REAL representation, the overflow of the substitute value $7F800000_H$ is output, for underflow it is substitute value $FF800000_H$.

Examples

The following examples show value ranges of different measuring ranges in REAL representation:

Table 4- 8 Value range in REAL representation

Measuring range	Value range	Unit
Voltage ±1 V	- 1.0 V to + 1.0 V	V
Voltage ± 50 mV	- 50.0 mV to + 50.0 mV	mV
Thermocouple type K	- 270.00 °C to +1372.00 °C	Configured temperature unit (°C, °F, K)

4.6 Address space

The module can be configured differently in STEP 7; see following table. Depending on the configuration, additional/different addresses are assigned in the process image input.

Configuration options of AI 4xTC HS

You can configure the module with STEP 7 (TIA Portal) or with a GSD file. If you configure the module by means of a GSD file, the configurations are available under various short designations/module names; see the table below. The following configurations are possible:

Table 4- 9 Configuration options with GSD file

Configuration	Short designation/module name in the GSD file	Configuration software, e.g. with STEP 7 (TIA Portal)		
		Integrated in the hardware catalog STEP 7, as of V15 with HSP0265	GSD file PROFINET IO	GSD file PROFIBUS DP
1 x 4-channel without value status	AI 4xTC HS V1.0	X	X	X
1 x 4-channel with value status	AI 4xTC HS V1.0, QI	X	X	---
1 x 4-channel with value status for module-internal Shared Input with up to 4 submodules	AI 4xTC HS V1.0, MSI [1]	X	X	---
1 x 4-channel with REAL representation	AI 4xTC HS V1.0, REAL	X	X	---
1 x 4-channel with REAL representation and value status	AI 4xTC HS V1.0, REAL, QI	X	X	---
1 x 4-channel with REAL representation, value status for module-internal Shared Input up to 4 submodules	AI 4xTC HS V1.0, REAL, MSI [1]	X	X	---

[1] When using the module in a shared device, ensure that you only configure associated MSI submodules for a basic submodule.

Value status (Quality Information, QI)

The value status is always activated for the following module versions:

- AI 4xTC HS V1.0, QI
- AI 4xTC HS V1.0, MSI
- AI 4xTC HS V1.0, REAL, QI
- AI 4xTC HS V1.0, REAL, MSI

Evaluating the value status

An additional byte is occupied in the input address space if you enable the value status for the analog module. Bits 0 to 3 in this byte are assigned to a channel. They provide information about the validity of the analog value.

Bit =1: No fault is present on the channel.

Bit = 0: The channel is disabled or the wiring, the value created on the channel, etc. is incorrect.

Address space for configuration as 1 x 4-channel AI 4xTC HS V1.0, QI

The following figure shows the assignment of the address space with value status (Quality Information (QI)). The addresses for the value status are only available if the value status is enabled.

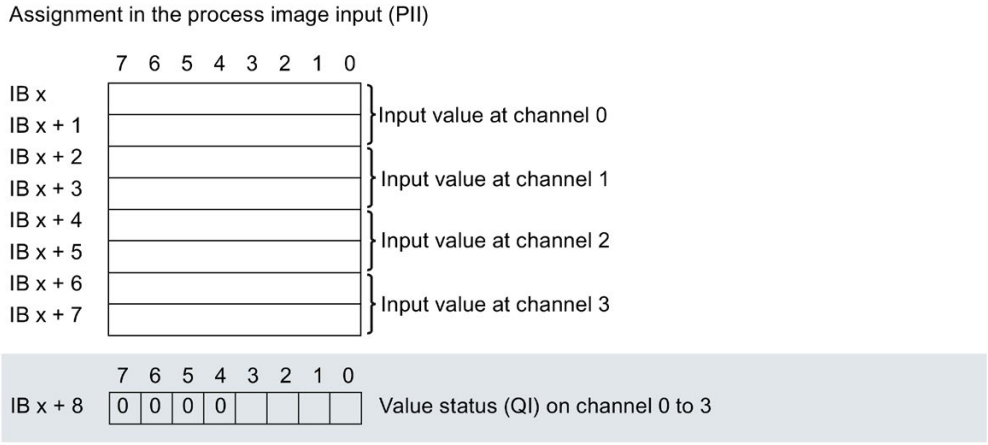

Figure 4-7 Address space for configuration as 1 x 4-channel AI 4xTC HS V1.0, QI with value status

Address space for configuration as 1 x 4-channel AI 4xTC HS V1.0, MSI

The channels 0 to 3 of the module are copied in up to 4 submodules with configuration 1 x 4-channel module (Module-internal shared input, MSI). Channels 0 to 3 are then available with identical input values in different submodules. These submodules can be assigned to up to four IO controllers when the module is used in a shared device. Each IO controller has read access to the same channels.

The number of available submodules depends on the used interface module. Please observe the information in the manual for the particular interface module.

Value status (Quality Information, QI)

The meaning of the value status depends on the submodule on which it occurs.

For the first submodule (=basic submodule), the value status 0 indicates that the value is incorrect.

For the 2nd to 4th submodule (=MSI submodule), the value status 0 indicates that the value is incorrect or the basic submodule has not yet been configured (not ready).

The figure below shows the assignment of the address space with submodules 1 and 2.

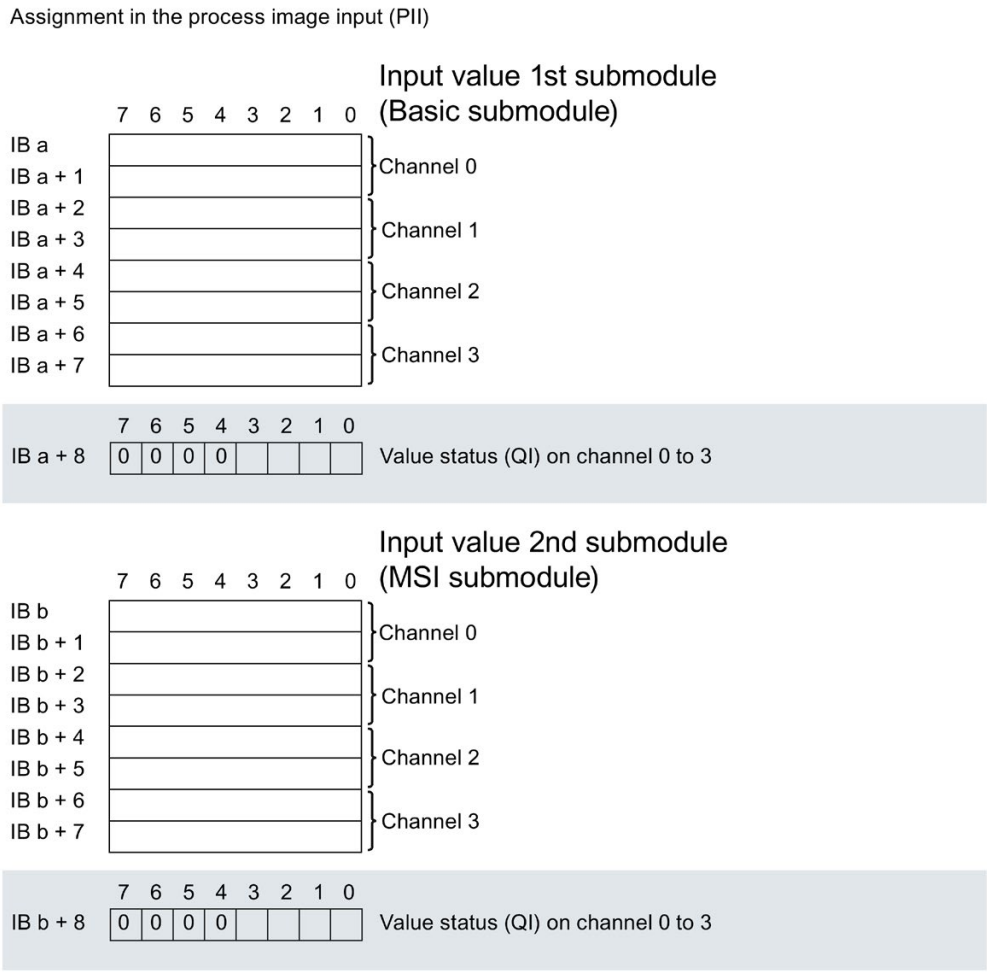

Figure 4-8 Address space for configuration as 1 x 4-channel AI 4xTC HS V1.0, MSI with value status, submodule 1 and 2

The figure below shows the assignment of the address space with submodules 3 and 4.

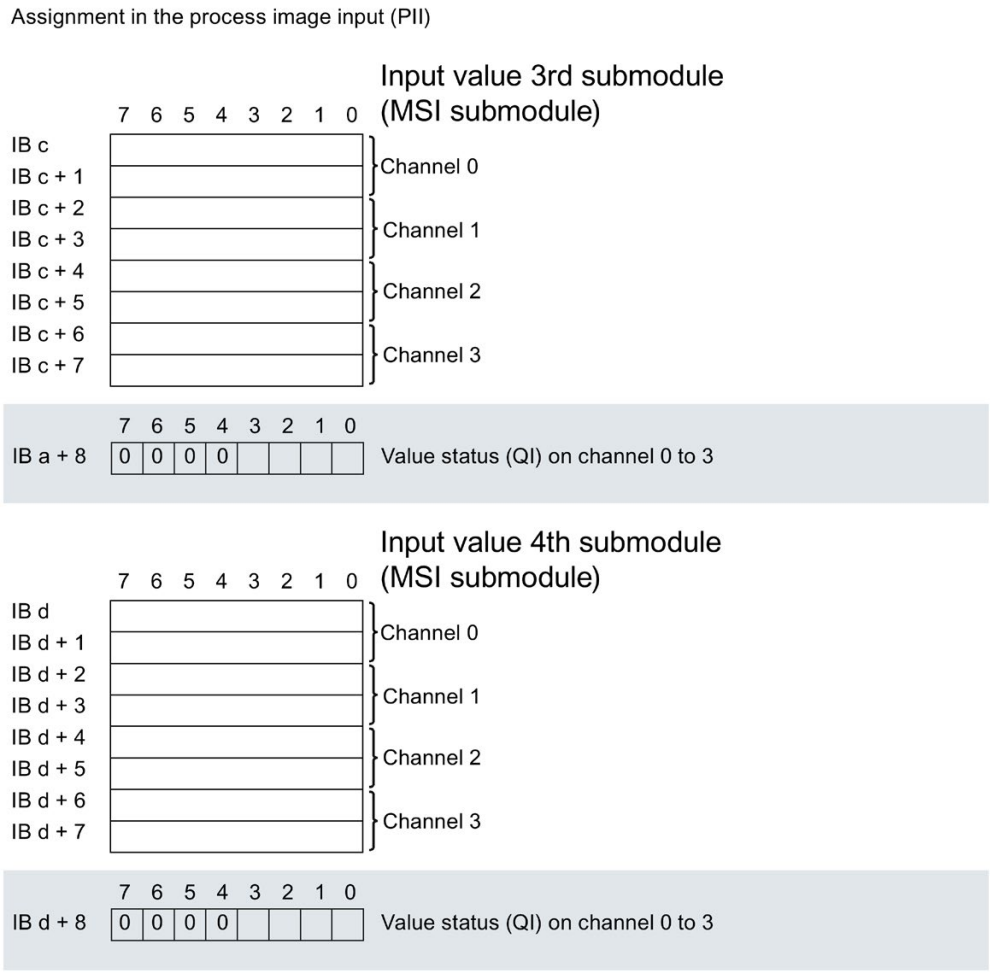

Figure 4-9 Address space for configuration as 1 x 4-channel AI 4xTC HS V1.0, MSI with value status, submodule 3 and 4

Address space for configuration as 1 x 4-channel AI 4xTC HS V1.0, REAL, QI

The following figure shows the assignment of the address space in REAL representation with value status (Quality Information (QI)). In REAL representation, each channel occupies 4 bytes in the process image of the inputs.
The addresses for the value status are only available if the value status is enabled.

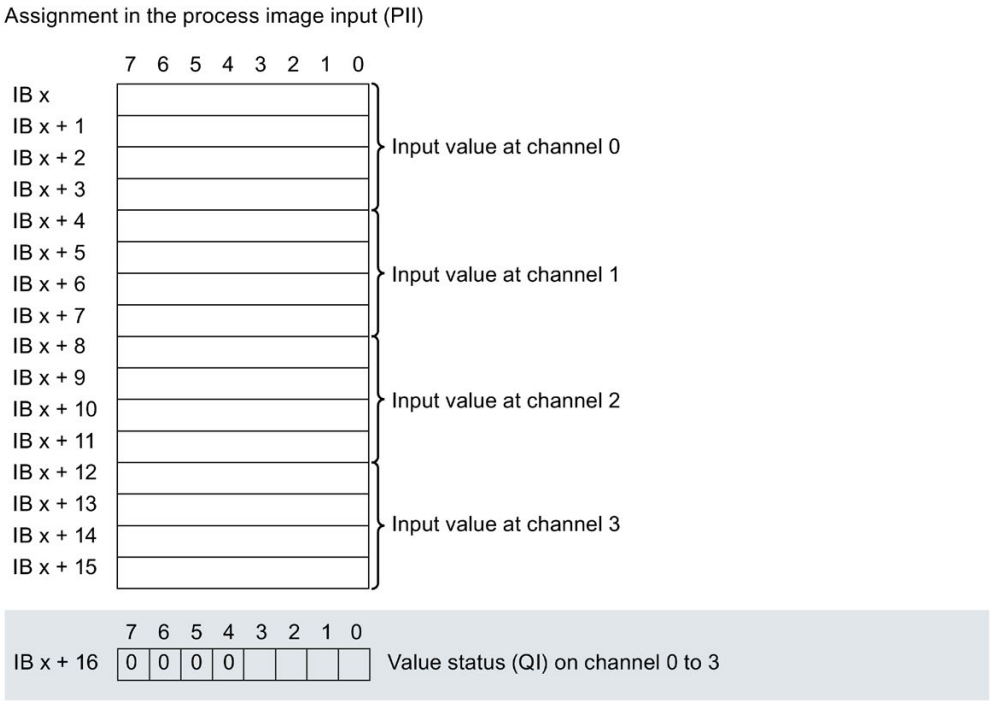

Figure 4-10 Address space for configuration as 1 x 4-channel AI 4xTC HS V1.0, REAL, QI with value status

Address space for configuration as 1 x 4-channel AI 4xTC HS V1.0, REAL, MSI

For the configuration as a 1 x 4-channel module REAL MSI, the channels react as in the 1 x 4-channel AI 4xTC HS V1.0, MSI configuration.
In REAL representation, each channel occupies 4 bytes in the process image of the inputs.

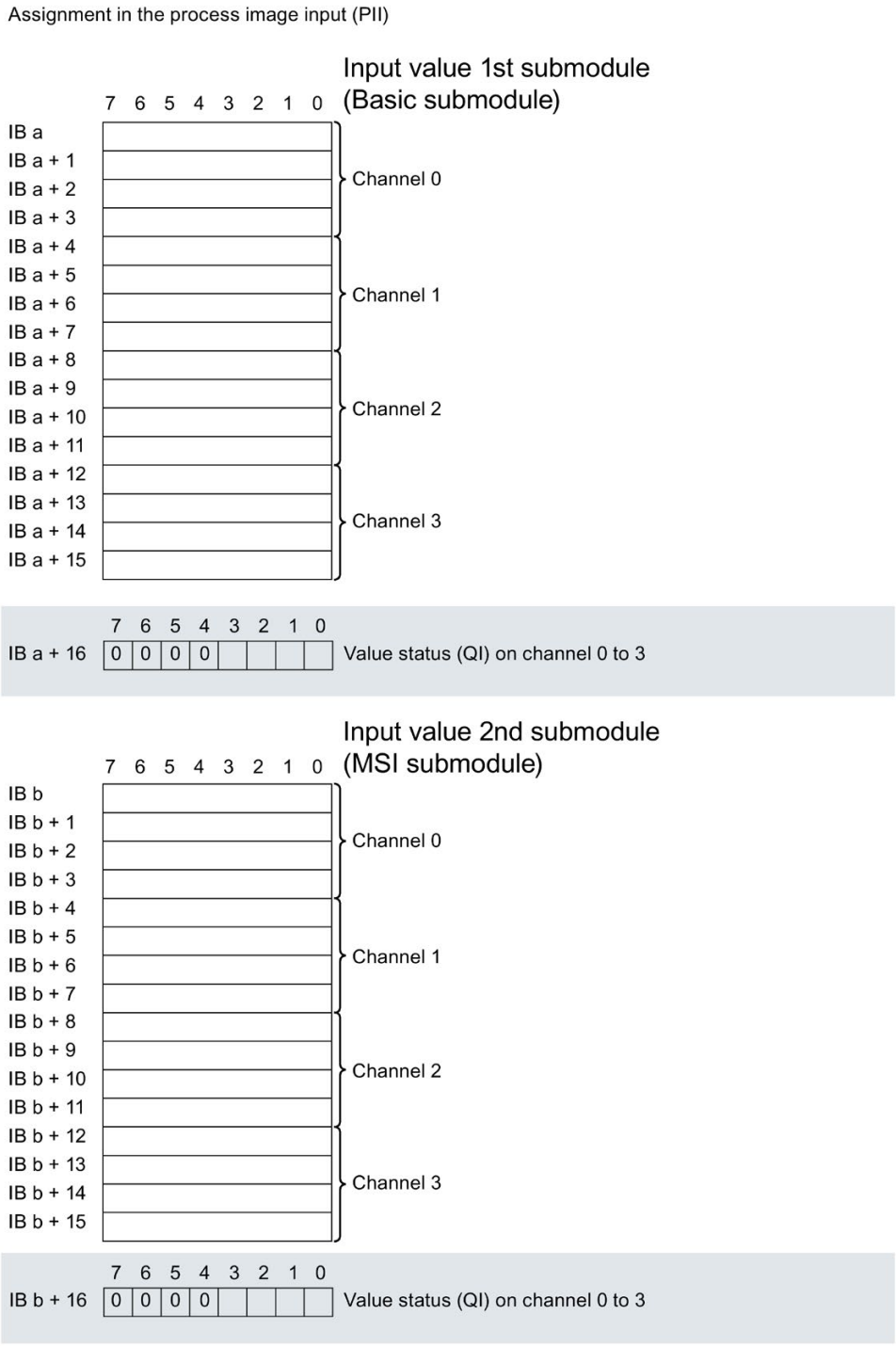

Figure 4-11 Address space for configuration as 1 x 4-channel AI 4xTC HS V1.0, REAL, MSI with value status, submodule 1 and 2

The figure below shows the assignment of the address space with submodules 3 and 4.

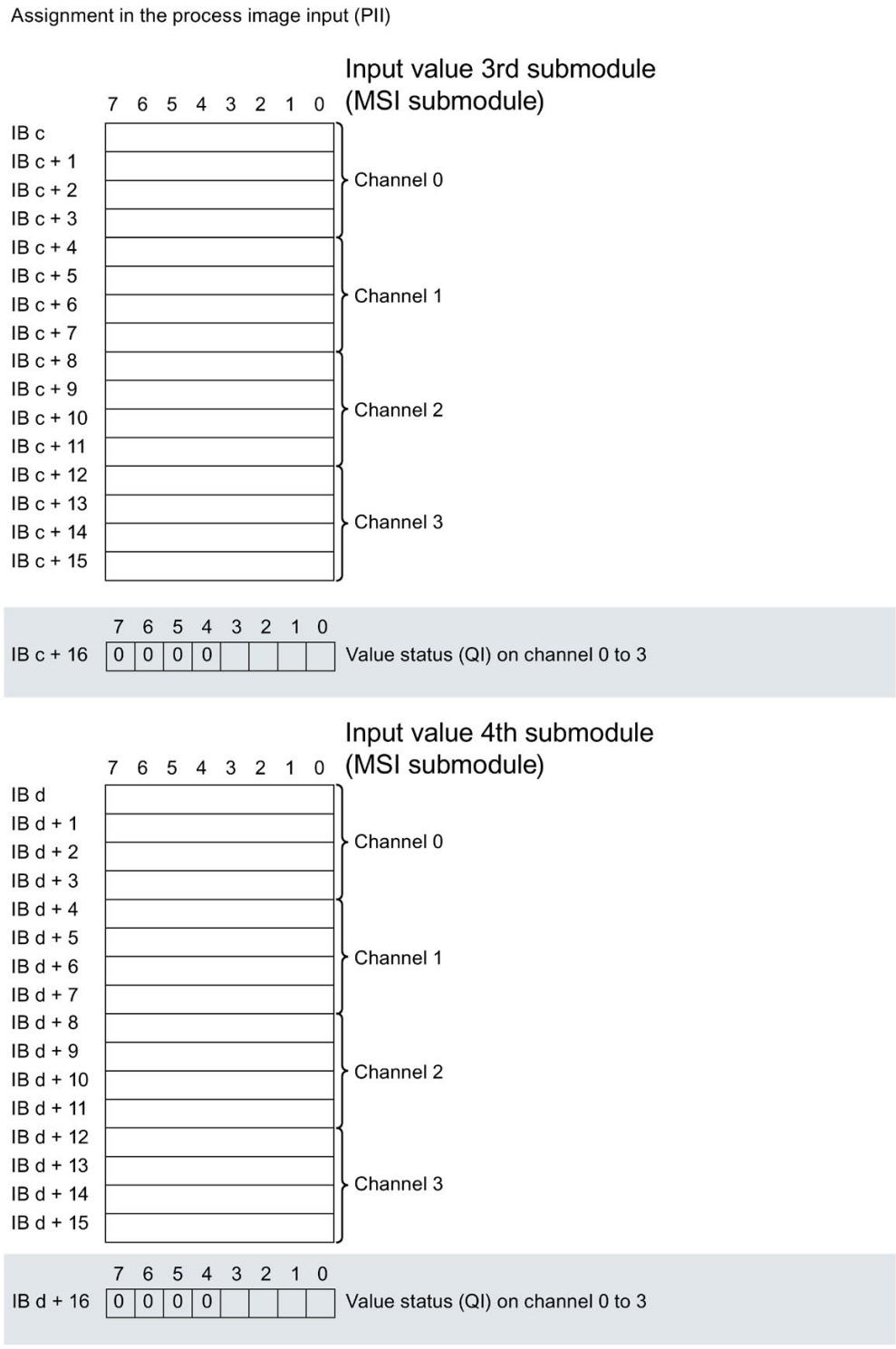

Figure 4-12 Address space for configuration as 1 x 4-channel AI 4xTC HS V1.0, REAL, MSI with value status, submodule 3 and 4

Interrupts/diagnostics alarms

5

5.1 Status and error display

LED display

The following figure shows you the LED display of the AI 4xTC HS:

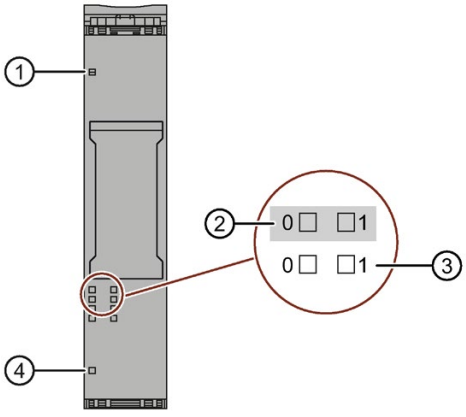

① DIAG (green/red)
② Channel status (green)
③ Channel error (red)
④ PWR (green)

Figure 5-1 LED display

Meaning of the LED displays

The following tables contain the meaning of the status and error displays. Remedies for diagnostics alarms can be found in section Diagnostics alarms (Page 43).

LED DIAG

Table 5- 1 LED DIAG fault display

LED DIAG	Meaning
□ Off	Backplane bus supply of the ET 200SP not OK
☼ Flashes	Module parameters not assigned
■ On	Module parameters assigned and no module diagnostics
☼ Flashes	Module parameters assigned and module diagnostics

Channel status/channel error LED

Table 5- 2 Status and error display of the LED channel status / channel error

LEDs		Meaning
Channel status	Channel error	
□ Off	□ Off	Channel deactivated
■ On	□ Off	Channel activated and no channel diagnostics
□ Off	■ On	Channel activated and channel diagnostics
■ On	■ On	Not permitted (error)

PWR LED

Table 5- 3 Status display of the PWR LED

PWR LED	Meaning
□ Off	Supply voltage L+ missing
■ On	Supply voltage L+ present

5.2 Interrupts

Evaluating hardware interrupts with IO controller

The module generates a hardware interrupt at the following events:

- Violation of low limit 1
- Violation of high limit 1
- Violation of low limit 2
- Violation of high limit 2

You can obtain detailed information on the event in the hardware interrupt organization block with the "RALARM" (read additional interrupt information) instruction and in the STEP 7 online help.

The module channel that triggered the hardware interrupt is entered in the start information of the organization block. The following figure shows the assignment to the bits of double word 8 in local data.

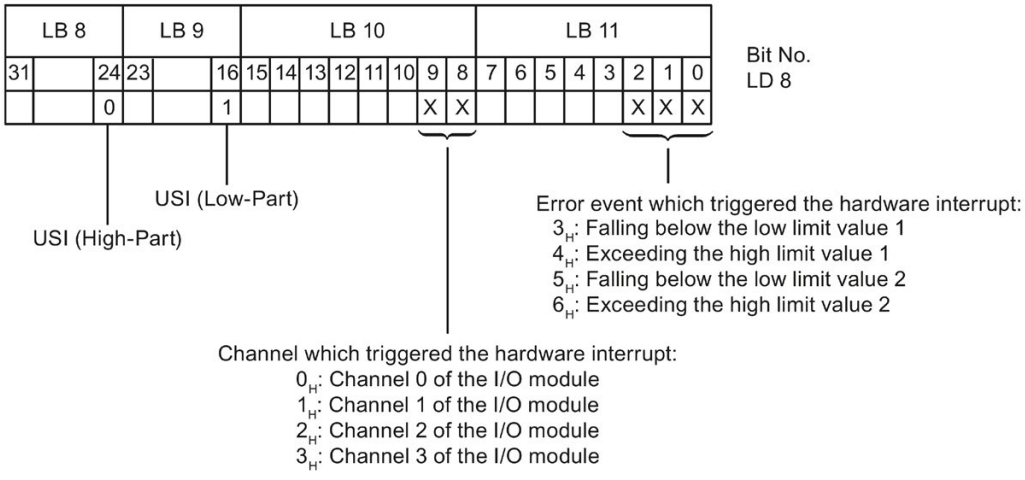

Figure 5-2 OB start information

Structure of the additional interrupt information

Table 5- 4 Structure of the additional interrupt information

Data block name		Content	Comment	Bytes
USI (User Structure Identifier)		W#16#0001	additional interrupt information for hardware interrupts of the I/O module	2
Channel that triggered the hardware interrupt.				
	Channel	B#16#00 to B#16#03	Channel 0 to 3 of the I/O module	1
Event that triggered the hardware interrupt.				
	Event	B#16#03	Violation of low limit 1	1
		B#16#04	Violation of high limit 1	
		B#16#05	Violation of low limit 2	
		B#16#06	Violation of high limit 2	

Diagnostic error interrupt

The module generates a diagnostic error interrupt at the following events:

- Channel temporarily unavailable
- Hardware interrupt lost
- Reference channel error
- Error
- Violation of low limit
- Violation of high limit
- Wire break
- Supply voltage missing
- Parameter assignment error

5.3 Diagnostics alarms

A diagnostics alarm is generated and the DIAG-LED flashes on the module for each diagnostics event. You can read out the diagnostics alarms, for example, in the diagnostics buffer of the CPU. You can evaluate the error codes with the user program.

Table 5- 5 Diagnostics alarms, their meaning and remedies

Diagnostics alarms	Error code	Meaning	Solution
Wire break	6_H	Resistance of sensor circuit too high	Use a different sensor type or modify the wiring, for example, using cables with larger cross-section
		Wire break between the module and sensor	Connect the cable
		Channel not connected (open)	• Deactivate diagnostics • Connect or deactivate the channel
Violation of high limit[1]	7_H	Value lies above the overrange.	Correct module/sensor interplay
Violation of low limit[1]	8_H	Value lies below the underrange.	Correct module/sensor interplay
Error	9_H	Internal module error has occurred (diagnostics alarm on channel 0 applies to the entire module).	Replace module
Parameter assignment error	10_H	The module cannot evaluate parameters for the channel. Incorrect parameter assignment.	Correct the parameter assignment (wire break diagnostics only allowed with the permitted measuring ranges).
Supply voltage missing	11_H	Missing or insufficient supply voltage L+	• Check supply voltage L+ on the BaseUnit • Check BaseUnit type
Reference channel error (reference junction)	15_H	Reference temperature of the reference junction for the TC channel being operated with compensation is invalid.	• Check BaseUnit type • Select correct reference junction through parameter assignment[2] • Check whether the reference junction (reference channel of the group 0, 1, 2, 3) is only assigned once as the sender in the entire setup.
Hardware interrupt lost	16_H	At least one hardware interrupt could not be signaled because too many hardware interrupts are pending.	Correct the program or the process
Channel temporarily unavailable	$1F_H$	• Firmware update is currently in progress or has been canceled. The module does not read in process values in this state. • The channel is currently being calibrated.	• Wait for firmware update. • Restart the firmware update. • Complete calibration.

1 The alarm refers to the diagnostics and depends on the configured measuring range.

2 Shared device and "Reference temperature" diagnostics: If the sender and receiver of the reference junction temperature of a group are assigned to different IO controllers, you may need to download both configurations again in the case of diagnostics. First download the configuration containing the receiver.

Technical specifications

6

Technical specifications of the AI 4×TC HS

Article number	6ES7134-6JD00-0DA1
General information	
Product type designation	AI 4xTC HS
Firmware version	V1.0
• FW update possible	Yes
usable BaseUnits	BU type A0, A1
Color code for module-specific color identification plate	CC00
Product function	
• I&M data	Yes; I&M0 to I&M3
• Measuring range scalable	Yes
Engineering with	
• STEP 7 TIA Portal configurable/integrated as of version	V15 with HSP 265/integrated as of V15.1
• STEP 7 configurable/integrated as of version	Configurable via GSD file
• PROFIBUS as of GSD version/GSD revision	One GSD file each, Revision 3 and 5 and higher
• PROFINET as of GSD version/GSD revision	GSDML V2.3
Operating mode	
• Oversampling	No
• MSI	Yes
CiR – Configuration in RUN	
Reparameterization possible in RUN	Yes
Calibration possible in RUN	Yes
Supply voltage	
Rated value (DC)	24 V
permissible range, lower limit (DC)	19.2 V
permissible range, upper limit (DC)	28.8 V
Reverse polarity protection	Yes
Input current	
Current consumption (rated value)	37 mA
Current consumption, max.	50 mA

Article number	6ES7134-6JD00-0DA1
Power loss	
Power loss, typ.	0.9 W
Address area	
Address space per module	
• Address space per module, max.	16 byte; + 1 byte for QI information
Hardware configuration	
Automatic encoding	
• Mechanical coding element	Yes
Selection of BaseUnit for connection variants	
• 2-wire connection	BU type A0, A1
Analog inputs	
Number of analog inputs	4
permissible input voltage for voltage input (destruction limit), max.	30 V
Cycle time (all channels), min.	Sum of the basic conversion times and additional processing times (depending on the parameterization of the active channels)
Technical unit for temperature measurement adjustable	Yes; °C/°F/K
Input ranges (rated values), voltages	
• -1 V to +1 V	Yes; 16 bit incl. sign
• Input resistance (-1 V to +1 V)	1 MΩ
• -250 mV to +250 mV	Yes; 16 bit incl. sign
• Input resistance (-250 mV to +250 mV)	1 MΩ
• -50 mV to +50 mV	Yes; 16 bit incl. sign
• Input resistance (-50 mV to +50 mV)	1 MΩ
• -80 mV to +80 mV	Yes; 16 bit incl. sign
• Input resistance (-80 mV to +80 mV)	1 MΩ

Article number	6ES7134-6JD00-0DA1
Input ranges (rated values), thermocouples	
• Type B	Yes; 16 bit incl. sign
• Input resistance (Type B)	1 MΩ
• Type C	Yes; 16 bit incl. sign
• Input resistance (Type C)	1 MΩ
• Type E	Yes; 16 bit incl. sign
• Input resistance (Type E)	1 MΩ
• Type J	Yes; 16 bit incl. sign
• Input resistance (type J)	1 MΩ
• Type K	Yes; 16 bit incl. sign
• Input resistance (Type K)	1 MΩ
• Type L	Yes; 16 bit incl. sign
• Input resistance (Type L)	1 MΩ
• Type N	Yes; 16 bit incl. sign
• Input resistance (Type N)	1 MΩ
• Type R	Yes; 16 bit incl. sign
• Input resistance (Type R)	1 MΩ
• Type S	Yes; 16 bit incl. sign
• Input resistance (Type S)	1 MΩ
• Type T	Yes; 16 bit incl. sign
• Input resistance (Type T)	1 MΩ
• Type U	Yes; 16 bit incl. sign
• Input resistance (Type U)	1 MΩ
• Type TXK/TXK(L) to GOST	Yes; 16 bit incl. sign
• Input resistance (Type TXK/TXK(L) to GOST)	1 MΩ
Thermocouple (TC)	
Temperature compensation	
– parameterizable	Yes
– Reference channel of the module	No
– internal comparison point	Yes; with BaseUnit type A1
– Reference channel of the group	Yes
– Number of reference channel groups	4; Group 0 to 3
– fixed reference temperature	Yes

Article number	6ES7134-6JD00-0DA1
Cable length	
• shielded, max.	200 m; 100 m for thermocouples
Analog value generation for the inputs	
Measurement principle	integrating (Sigma-Delta)
Integration and conversion time/resolution per channel	
• Resolution with overrange (bit including sign), max.	16 bit
• Integration time, parameterizable	Yes
• Basic conversion time, including integration time (ms)	
– additional processing time for wire-break check	1 ms
• Interference voltage suppression for interference frequency f1 in Hz	16.6 / 50 / 60 Hz / off
• Conversion time (per channel)	180/60/50/1.25 ms
Smoothing of measured values	
• Number of smoothing levels	4
• parameterizable	Yes
• Step: None	Yes
• Step: low	Yes
• Step: Medium	Yes
• Step: High	Yes
Encoder	
Connection of signal encoders	
• for voltage measurement	Yes
Errors/accuracies	
Linearity error (relative to input range), (+/-)	0.01 %
Temperature error (relative to input range), (+/-)	0.005 %/K
Crosstalk between the inputs, min.	-70 dB
Repeat accuracy in steady state at 25 °C (relative to input range), (+/-)	0.03 %
Operational error limit in overall temperature range	
• Voltage, relative to input range, (+/-)	0.1 %; 0.3 % when SFU OFF
Basic error limit (operational limit at 25 °C)	
• Voltage, relative to input range, (+/-)	0.05 %; 0.2 % when SFU OFF

Article number	6ES7134-6JD00-0DA1
Interference voltage suppression for f = n x (f1 +/- 1 %), f1 = interference frequency	
• Series mode interference (peak value of interference < rated value of input range), min.	70 dB
• Common mode voltage, max.	60 V; DC
• Common mode interference, min.	90 dB
Isochronous mode	
Isochronous operation (application synchronized up to terminal)	No
Interrupts/diagnostics/status information	
Diagnostics function	Yes
Alarms	
• Diagnostic alarm	Yes
• Limit value alarm	Yes; two upper and two lower limit values in each case
Diagnostic messages	
• Monitoring the supply voltage	Yes
• Wire-break	Yes; channel by channel
• Group error	Yes
• Overflow/underflow	Yes; channel by channel
Diagnostics indication LED	
• Monitoring of the supply voltage (PWR-LED)	Yes; green PWR LED
• Channel status display	Yes; Green LED
• for channel diagnostics	Yes; Red LED
• for module diagnostics	Yes; Green/red LED
Potential separation	
Potential separation channels	
• between the channels	No
• between the channels and backplane bus	Yes
• between the channels and the power supply of the electronics	Yes
Permissible potential difference	
between the inputs (UCM)	60 V DC
Isolation	
Isolation tested with	707 V DC (type test)

Article number	6ES7134-6JD00-0DA1
Standards, approvals, certificates	
Suitable for applications according to AMS 2750	Yes; Declaration of Conformity, see online support entry 109757262
Suitable for applications according to CQI-9	Yes; Based on AMS 2750 E
Dimensions	
Width	15 mm
Height	73 mm
Depth	58 mm
Weights	
Weight, approx.	33 g

Operational and basic error limits for thermocouples

Error limits for thermocouples[1] (Interference frequency suppression: 16.6 Hz / 50 Hz / 60 Hz)	
Operational limit for thermocouples (in the entire temperature range)	±1.5 K
Basic error limit for thermocouples (operational limit at 25 °C)	±1 K
Overall error limits when using internal compensation	
• Operational limit (in the entire temperature range at static thermal state, ambient temperature change < 0.3 K/min)	± 2.5 K
• Basic error limit (operational limit at 25 °C at static thermal state, ambient temperature change < 0.3 K/min)	±1.5 K

[1] The indicated error limits apply as of the following temperatures:
Thermocouple type T: -200 °C
Thermocouple type K: -100 °C
Thermocouple type B: +700 °C
Thermocouple type N: -150 °C
Thermocouple type E: -150 °C
Thermocouple type R: +200 °C
Thermocouple type S: +100 °C

Error limits for thermocouples[1] (Interference frequency suppression: None)	
Operational limit for thermocouples (in the entire temperature range)	±3.75 K
Operational limit for thermocouples type B, C, E, R, S (in the entire temperature range)[1]	±7.5 K
Basic error limit for thermocouples (operational limit at 25 °C)	± 2.5 K
Basic error limit for thermocouples type B, C, E, R, S (operational limit at 25 °C)	±5 K
Overall error limits when using internal compensation	
• Operational limit (in the entire temperature range at static thermal state, ambient temperature change < 0.3 K/min)[2]	±5.25 K
• Basic error limit (operational limit at 25 °C at static thermal state, ambient temperature change < 0.3 K/min)[3]	±3 K

[1] The indicated error limits apply as of the following temperatures:
Thermocouple type T: -200 °C
Thermocouple type K: -100 °C
Thermocouple type B: +700 °C
Thermocouple type N: -150 °C
Thermocouple type E: -150 °C
Thermocouple type R: +200 °C
Thermocouple type S: +100 °C

[2] For thermocouple type B, C, E, R, S: ±9 K

[3] For thermocouple type B, C, E, R, S: ±5.5 K

Dimension drawing

See manual ET 200SP BaseUnits
(http://support.automation.siemens.com/WW/view/en/58532597/133300)

Parameter data records

A

A.1 Dependencies when configuring with GSD file

When configuring the module with a GSD file, remember that the settings of some parameters are dependent on each other.

Configuring with a PROFINET GSD file

The table lists the properties and their dependencies on the measurement type and measuring range for PROFINET.

Table A- 1 Dependencies of the measurement type / measuring range

Measurement type	Measuring range	Reference junction	Temperature unit
Deactivated	*	*	*
Voltage	±50 mV, ±80 mV, ±250 mV, ±1 V	*	*
Thermocouple	Type B, N, E, R, S, J, L, T, K, U, C, TXK	Internal reference junction Reference channel of group 0, 1, 2, 3[1]	Degrees Celsius Degrees Fahrenheit Kelvin
		Fixed reference temperature	

x = property is allowed, – = property is **not allowed**, * = property is not relevant.

[1] Use of "Reference channel of group 0, 1, 2, 3":
For each TC channel in the IO device that is intended to use this reference, "Reference junction" must be set to "Reference channel of group 0, 1, 2, 3".

Configuring with a PROFINET GSD file

The table lists the properties and their dependencies on the measurement type for PROFINET.

Table A- 2 Dependencies on the measurement type

Measurement type	Scalable measuring range	Measuring range resolution	Wire break check	Diagnostics				
				Underflow	Overflow	Wire break	Missing supply voltage L+	Reference junction
Deactivated	*	*	*	*	*	*	*	*
Voltage	–	*	-	x	x	–	x	–
Thermocouple	x	2 and 3 decimal places	x	x	x	x[1]	x	x[2]

x = property is allowed, – = property is **not allowed**, * = property is not relevant.

[1] Property is only permitted if the "Wire break check" parameter is enabled.

[2] Property is not relevant when "Fixed reference temperature" is used.

Configuring with a PROFIBUS GSD file

The table lists the properties and their dependencies on the measurement type and measuring range for PROFIBUS.

Table A- 3 Dependencies of the measurement type / measuring range

Measurement type	Measuring range	Slot reference junction	Temperature unit	Wire break check	Diagnostics			
					Underflow / overflow	Wire break	Missing supply voltage L+	Reference junction
Deactivated	*	*	*	*	*	*	*	*
Voltage	±50 mV, ±80 mV, ±250 mV, ±1 V	*	*	-	x	–	x	–
Thermocouple	Type B, N, E, R, S, J, L, T, K, U, C, TXK	Internal reference junction Reference channel of group 0, 1, 2, 3[1]	Degrees Celsius Degrees Fahrenheit Kelvin	x	x	x[2]	x	x
		Fixed reference temperature	Degrees Celsius Degrees Fahrenheit Kelvin	x	x	x[2]	x	*

x = property is allowed, – = property is **not allowed**, * = property is not relevant.

1 Use of "Reference channel of group 0, 1, 2, 3":
For each TC channel in the IO device that is intended to use this reference, "Reference junction" must be set to "Reference channel of group 0, 1, 2, 3".

2 Property is only allowed if the "Wire break check" is enabled.

A.2 Parameter assignment and structure of the parameter data record (S7 representation)

The data record of the module has an identical structure, regardless of whether you configure the module with PROFIBUS DP or PROFINET IO. With data record 128, you can reconfigure the module in your user program regardless of your programming. This means that you can use all the functions of the module even if you configured it via PROFIBUS-GSD.

Parameter assignment in the user program

You can reassign the parameters of the module in RUN. For example, the measuring range of selected channels can be changed in RUN without having an effect on the other channels.

Changing parameters in RUN

The "WRREC" instruction is used to transfer the parameters to the module using data record 128. The parameters set with STEP 7 will not be changed on the CPU, which means that the parameters set in STEP 7 will be valid again after a restart.

Output parameter STATUS

If errors occur when transferring parameters with the "WRREC" instruction, the module continues operation with the previous parameter assignment. The STATUS output parameter contains a corresponding error code.

You will find a description of the "WRREC" instruction and the error codes in the STEP 7 online help.

Structure of data record 128

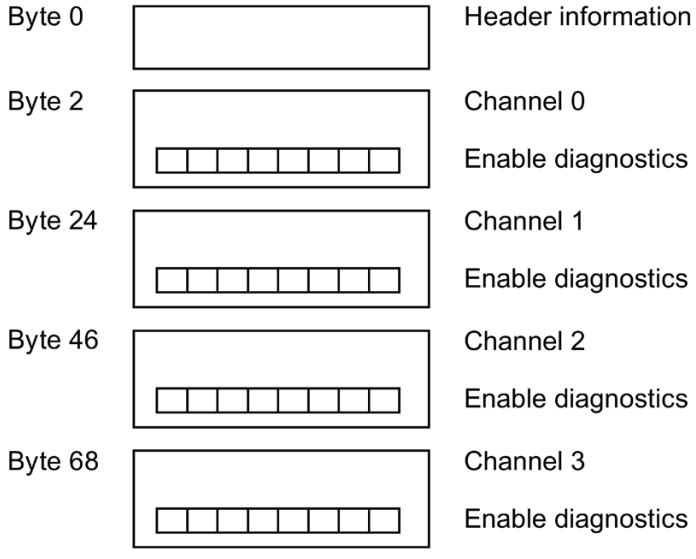

Figure A-1 Structure of data record 128

Header information

The figure below shows the structure of the header information in S7 representation.

Figure A-2 Header information - S7 representation

Channel parameter block

The figure below shows the structure of the parameters for channels 0 to 3.

You can activate a parameter by setting the corresponding bit to "1".

* x = 2 + (channel number * 22); channel number = 0 to 3

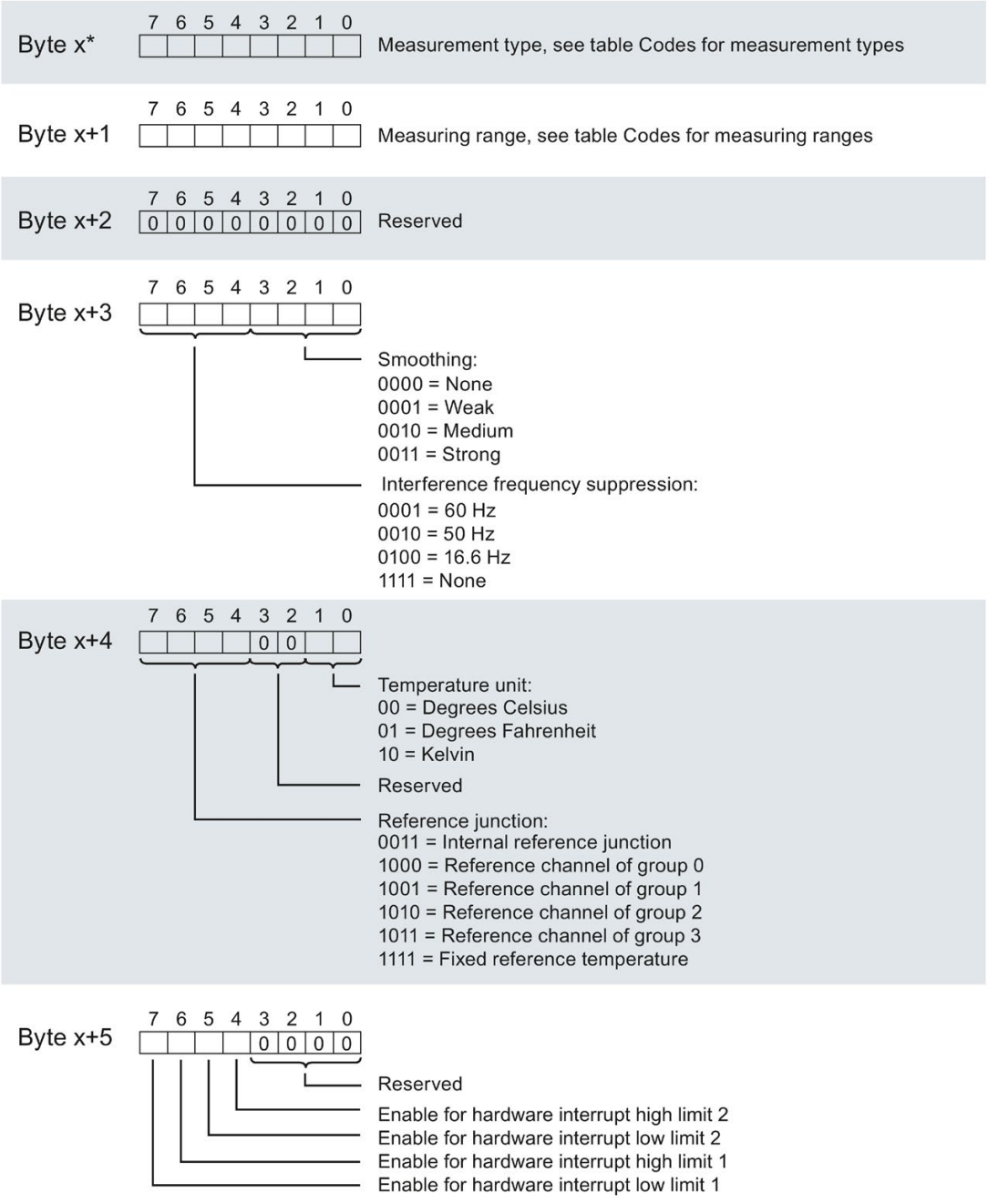
Byte x*
7 6 5 4 3 2 1 0
Measurement type, see table Codes for measurement types
Byte x+1
7 6 5 4 3 2 1 0
Measuring range, see table Codes for measuring ranges
Byte x+2
7 6 5 4 3 2 1 0
0 0 0 0 0 0 0 0
Reserved
Byte x+3
7 6 5 4 3 2 1 0
Smoothing:
0000 = None
0001 = Weak
0010 = Medium
0011 = Strong
Interference frequency suppression:
0001 = 60 Hz
0010 = 50 Hz
0100 = 16.6 Hz
1111 = None
Byte x+4
7 6 5 4 3 2 1 0
0 0
Temperature unit:
00 = Degrees Celsius
01 = Degrees Fahrenheit
10 = Kelvin
Reserved
Reference junction:
0011 = Internal reference junction
1000 = Reference channel of group 0
1001 = Reference channel of group 1
1010 = Reference channel of group 2
1011 = Reference channel of group 3
1111 = Fixed reference temperature
Byte x+5
7 6 5 4 3 2 1 0
0 0 0 0
Reserved
Enable for hardware interrupt high limit 2
Enable for hardware interrupt low limit 2
Enable for hardware interrupt high limit 1
Enable for hardware interrupt low limit 1

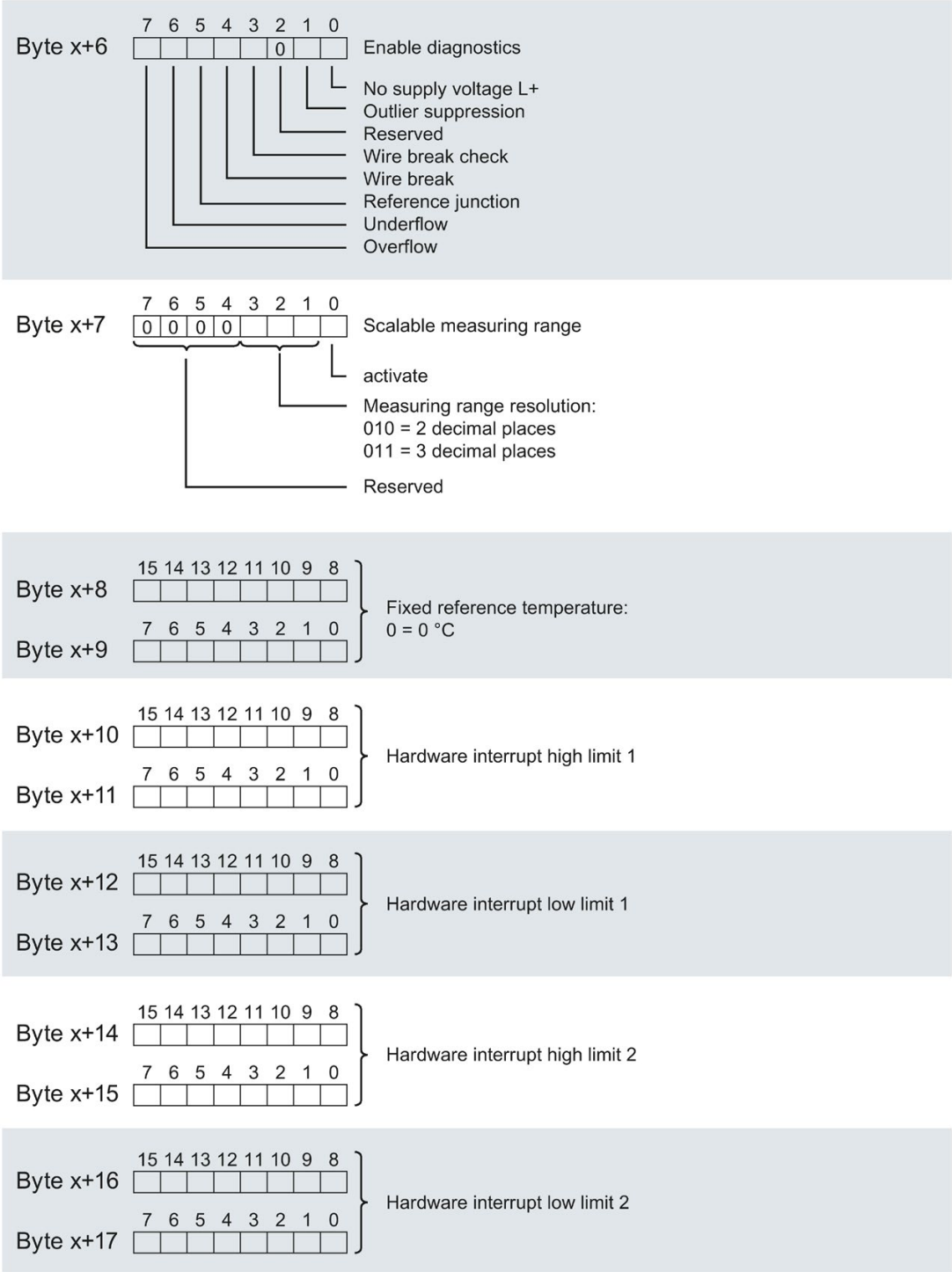
Byte x+6
7 6 5 4 3 2 1 0
0
Enable diagnostics
No supply voltage L+
Outlier suppression
Reserved
Wire break check
Wire break
Reference junction
Underflow
Overflow
Byte x+7
7 6 5 4 3 2 1 0
0 0 0 0
Scalable measuring range
activate
Measuring range resolution:
010 = 2 decimal places
011 = 3 decimal places
Reserved
Byte x+8
15 14 13 12 11 10 9 8
Byte x+9
7 6 5 4 3 2 1 0
Fixed reference temperature:
0 = 0 °C
Byte x+10
15 14 13 12 11 10 9 8
Byte x+11
7 6 5 4 3 2 1 0
Hardware interrupt high limit 1
Byte x+12
15 14 13 12 11 10 9 8
Byte x+13
7 6 5 4 3 2 1 0
Hardware interrupt low limit 1
Byte x+14
15 14 13 12 11 10 9 8
Byte x+15
7 6 5 4 3 2 1 0
Hardware interrupt high limit 2
Byte x+16
15 14 13 12 11 10 9 8
Byte x+17
7 6 5 4 3 2 1 0
Hardware interrupt low limit 2

Figure A-3 Structure of byte x to x+21 for channel 0 to 3 - S7 representation

Codes for measurement type

The following table contains the codes for the measurement types of the analog input module. You need to enter these codes in the relevant byte x.

Table A- 4 Codes for measurement type

Measurement type	Code
Deactivated	0000 0000
Voltage	0000 0001
Thermocouple	0000 1010

Codes for measuring range

The following table contains the codes for the measuring ranges of the analog input module. You need to enter these codes in the relevant x+1.

Table A- 5 Codes for measuring range

Measuring range	Code
Voltage	
50 mV	0000 0001
80 mV	0000 0010
250 mV	0000 0011
1 V	0000 0101
Thermocouple	
Type B	0000 0000
Type N	0000 0001
Type E	0000 0010
Type R	0000 0011
Type S	0000 0100
Type J	0000 0101
Type L	0000 0110
Type T	0000 0111
Type K	0000 1000
Type U	0000 1001
Type C	0000 1010
Type TXK	0000 1011

Limits for hardware interrupts

The following tables contain the permitted limits for hardware interrupts (in each case, the usable value is given). The limits depend on the selected measurement type and the selected measuring range. The value for the high limit must be greater than the value for the low limit.

Table A- 6 Voltage limits

Voltage	
32510	High limit
-32511	Low limit

Table A- 7 Limits for thermocouple types B, C, and E

Thermocouple									
Type B			Type C			Type E			
°C	°F	K	°C	°F	K	°C	°F	K	
20699	32765	23431	24999	32765	27731	11999	21919	14731	High limit
-1199	-1839	1533	-1199	-1839	1533	-2699	-4539	33	Low limit

Table A- 8 Limits for thermocouple types R, S, J, and L

Thermocouple									
Types R, S			Type J			Type L			
°C	°F	K	°C	°F	K	°C	°F	K	
20189	32765	22921	14499	26419	17231	11499	21019	14231	High limit
-1699	-2739	1033	-2099	-3459	633	-1999	-3279	733	Low limit

Table A- 9 Limits for thermocouple types T, K, and U

Thermocouple									
Type T			Type K			Type U			
°C	°F	K	°C	°F	K	°C	°F	K	
5399	10039	8131	16219	29515	18951	8499	15619	11231	High limit
-2699	-4539	33	-2699	-4539	33	-1999	-3279	733	Low limit

Table A- 10 Limits for thermocouple types N and TXK

Thermocouple						
Type N			Type TXK			
°C	°F	K	°C	°F	K	
15499	28219	18231	10499	19219	13231	High limit
-2699	-4539	33	-1999	-3279	733	Low limit

Error transmitting the data record

The module always checks all the values of the transferred data record. Only if all the values were transferred without errors does the module apply the values from the data record.

The WRREC instruction for writing data records returns the appropriate error code if there are errors in the STATUS parameter.

The following table shows the module-specific error codes and their meaning for the parameter data record 128.

Table A- 11 Error messages, their meaning and corrective measures

Error code in the STATUS parameter (hexadecimal)				Meaning	Solution
Byte 0	Byte 1	Byte 2	Byte 3		
DF_H	80_H	$B0_H$	00_H	Number of the data record unknown	Enter a valid number for the data record.
DF_H	80_H	$B1_H$	01_H	Length of the data record incorrect	Enter a valid value for the data record length.
DF_H	80_H	$B2_H$	00_H	Module not accessible	• Check station. • Module not correctly plugged in. • Check parameters of the WRREC block.
DF_H	80_H	$E0_H$	01_H	Incorrect version in header	Correct version number of the parameter block, see Figure A-2 Header information - S7 representation (Page 54).
DF_H	80_H	$E0_H$	02_H	Error in the header, length or number of parameter blocks	Correct the length and number of the parameter blocks, see Figure A-2 Header information - S7 representation (Page 54).
DF_H	80_H	$E1_H$	01_H	Reserved bit set	Write 0 to all reserved bits.
DF_H	80_H	$E1_H$	02_H	Invalid diagnostics enable bit set	Correct diagnostics enables. (Dependence on measurement type, measuring range, wire break check)
DF_H	80_H	$E1_H$	04_H	Value for hardware interrupt limit invalid	Use valid hardware interrupt limits, see Parameter assignment and structure of the parameter data record (S7 representation) (Page 53), "Limits for hardware interrupts" section.
DF_H	80_H	$E1_H$	08_H	Code for interference frequency suppression invalid	Use valid code for interference frequency suppression, see Figure A-3 Structure of byte x to x+21 for channel 0 to 3 - S7 representation (Page 57), byte x+3.
DF_H	80_H	$E1_H$	09_H	Code for smoothing invalid	Use valid code for smoothing.
DF_H	80_H	$E1_H$	$0F_H$	Code for reference junction invalid or not permissible	Use valid code for reference junction.
DF_H	80_H	$E1_H$	10_H	Code for the measurement type invalid	Use valid code for measurement type, see Table A-4 Codes for measurement type (Page 57).

Error code in the STATUS parameter (hexadecimal)				Meaning	Solution
Byte 0	Byte 1	Byte 2	Byte 3		
DF_H	80_H	$E1_H$	11_H	Code for the measuring range invalid	Use valid code for measuring range, see Table A-5 Codes for measuring range (Page 58).
DF_H	80_H	$E1_H$	12_H	Value for fixed reference temperature invalid	Use valid reference temperature, see Figure A-3 Structure of byte x to x+21 for channel 0 to 3 - S7 representation (Page 57), byte x+8.
DF_H	80_H	$E1_H$	21_H	Code for temperature unit invalid	Use valid code for temperature unit Figure A-3 Structure of byte x to x+21 for channel 0 to 3 - S7 representation (Page 57), byte x+4.
DF_H	80_H	$E1_H$	22_H	Code for measuring range resolution invalid or scalable measuring range not permissible	• Use valid code for measuring range resolution. • Disable scalable measuring range.

A.3 Parameter assignment and structure of channel parameter (REAL representation)

The data record of the module has an identical structure, regardless of whether you configure the module with PROFIBUS DP or PROFINET IO. With data record 128, you can reconfigure the module in your user program regardless of your programming. This means that you can use all the functions of the module even if you configured it via PROFIBUS-GSD.

Parameter assignment in the user program

You can reassign the parameters of the module in RUN. For example, the measuring range of selected channels can be changed in RUN without having an effect on the other channels.

Changing parameters in RUN

The "WRREC" instruction is used to transfer the parameters to the module using data record 128. The parameters set with STEP 7 will not be changed on the CPU, which means that the parameters set in STEP 7 will be valid again after a restart.

Output parameter STATUS

If errors occur when transferring parameters with the "WRREC" instruction, the module continues operation with the previous parameter assignment. The STATUS output parameter contains a corresponding error code.

You will find a description of the "WRREC" instruction and the error codes in the STEP 7 online help.

Structure of data record 128

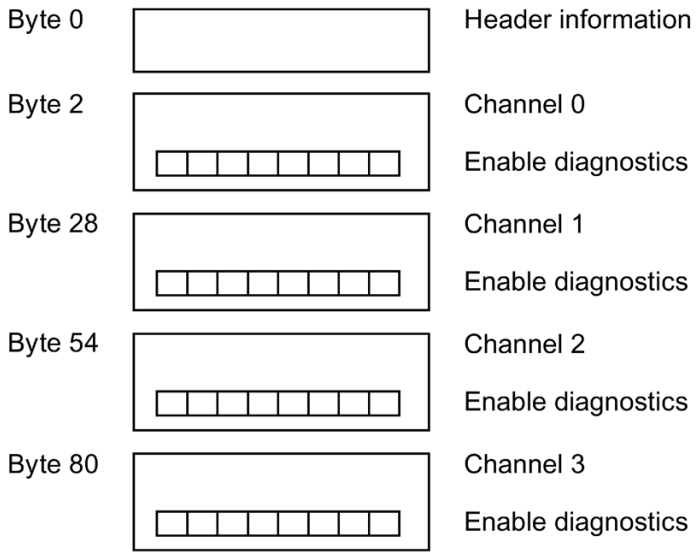

Figure A-4 Structure of data record 128

Header information

The figure below shows the structure of the header information in REAL representation.

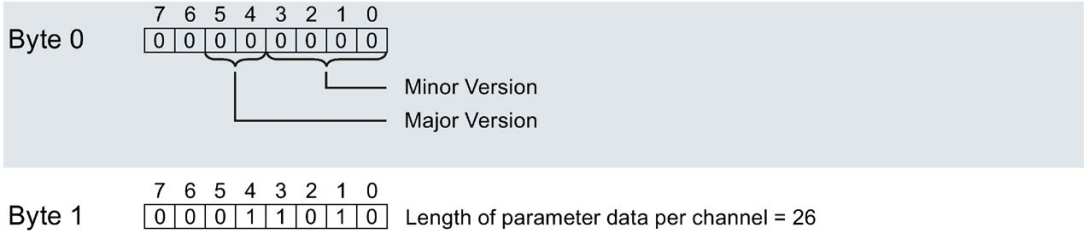

Figure A-5 Header information - REAL representation

Channel parameter block

The figure below shows the structure of the parameters for channels 0 to 3.

You can activate a parameter by setting the corresponding bit to "1".

* x = 2 + (channel number * 26); channel number = 0 to 3

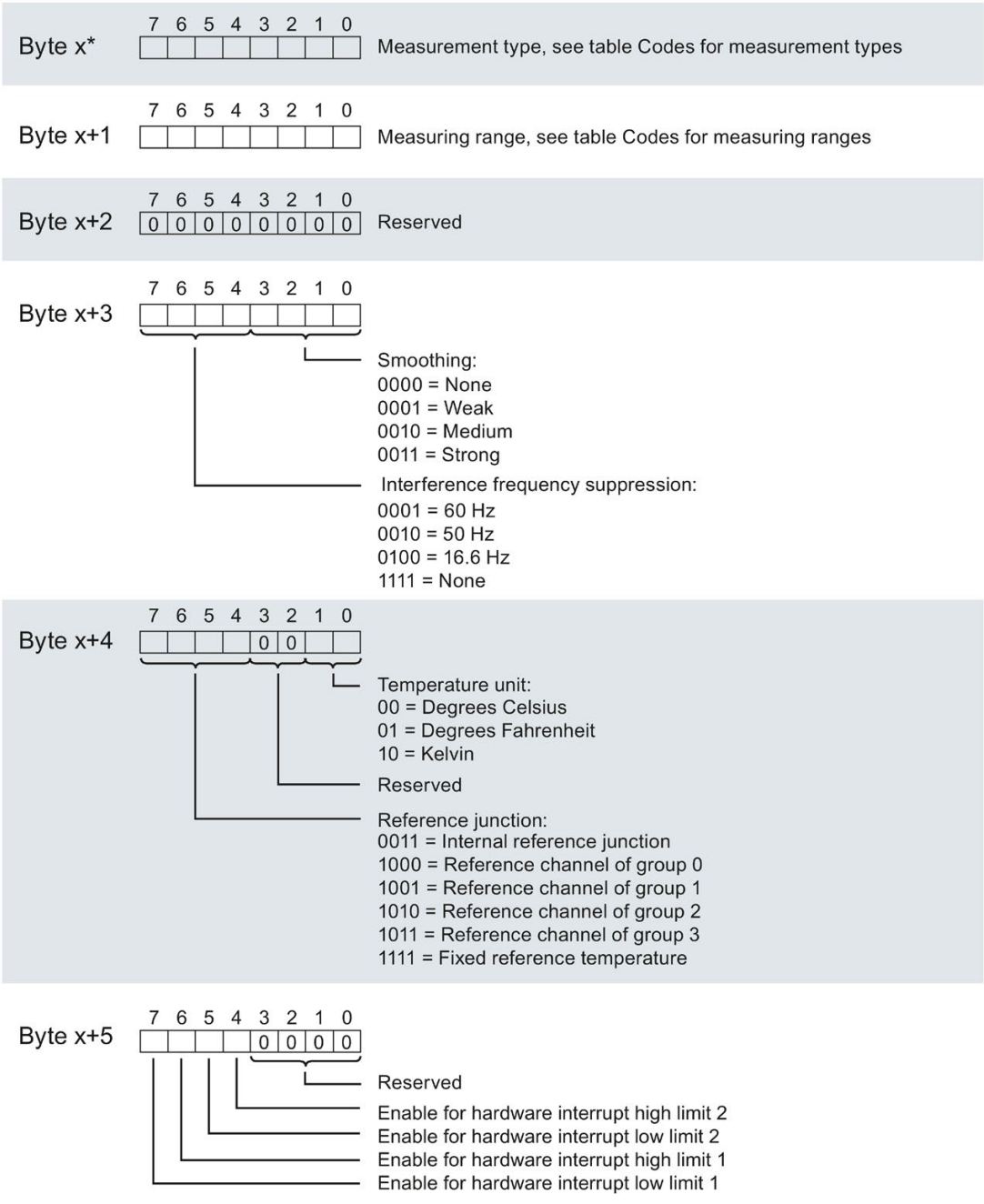

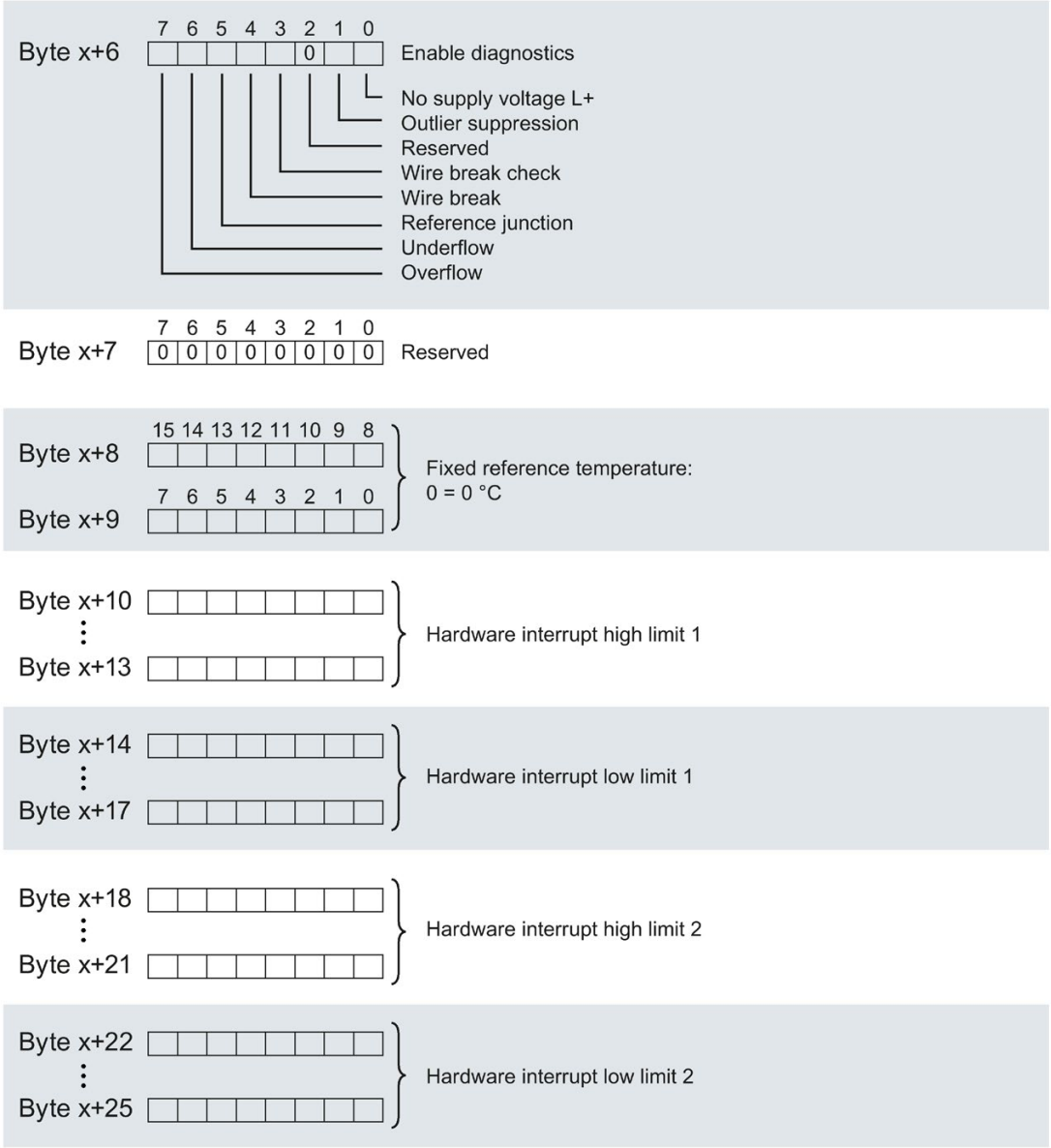

Figure A-6 Structure of byte x to x+25 for channel 0 to 3 - REAL representation

Codes for measurement type

The following table contains the codes for the measurement types of the analog input module. You need to enter these codes in the relevant byte x.

Table A- 12 Codes for measurement type

Measurement type	Code
Deactivated	0000 0000
Voltage	0000 0001
Thermocouple	0000 1010

Codes for measuring range

The following table contains the codes for the measuring ranges of the analog input module. You need to enter these codes in the relevant x+1.

Table A- 13 Codes for measuring range

Measuring range	Code
Voltage	
50 mV	0000 0001
80 mV	0000 0010
250 mV	0000 0011
1 V	0000 0101
Thermocouple	
Type B	0000 0000
Type N	0000 0001
Type E	0000 0010
Type R	0000 0011
Type S	0000 0100
Type J	0000 0101
Type L	0000 0110
Type T	0000 0111
Type K	0000 1000
Type U	0000 1001
Type C	0000 1010
Type TXK	0000 1011

Limits for hardware interrupts

The following tables contain the permitted limits for hardware interrupts (in each case, the usable value is given). The limits depend on the selected measurement type and the selected measuring range. The value for the high limit must be greater than the value for the low limit.

Table A- 14 Voltage limits

Voltage				
±50 mV	±80 mV	±250 mV	± 1 V	
58.7927 mV	94.0683 mV	293.963 mV	1.17585 V	High limit
-58.7945 mV	-94.0712 mV	-293.972 mV	-1.17589 V	Low limit

Table A- 15 Limits for thermocouple types B, C, and E

Thermocouple									
Type B			Type C			Type E			
°C	°F	K	°C	°F	K	°C	°F	K	
2069.9	3276.5	2343.1	2499.9	3276.5	2773.1	1199.9	2191.9	1473.1	High limit
-119.9	-183.9	153.3	-119.9	-183.9	153.3	-269.9	-453.9	3.3	Low limit

Table A- 16 Limits for thermocouple types R, S, J, and L

Thermocouple									
Types R, S			Type J			Type L			
°C	°F	K	°C	°F	K	°C	°F	K	
2018.9	3276.5	2292.1	1449.9	2641.9	1723.1	1149.9	2101.9	1423.1	High limit
-169.9	-273.9	103.3	-209.9	-345.9	63.3	-199.9	-327.9	73.3	Low limit

Table A- 17 Limits for thermocouple types T, K, and U

Thermocouple									
Type T			Type K			Type U			
°C	°F	K	°C	°F	K	°C	°F	K	
539.9	1003.9	813.1	1621.9	2951.5	1895.1	849.9	1561.9	1123.1	High limit
-269.9	-453.9	3.3	-269.9	-453.9	3.3	-199.9	-327.9	73.3	Low limit

Table A- 18 Limits for thermocouple types N and TXK

Thermocouple						
Type N			Type TXK			
°C	°F	K	°C	°F	K	
1549.9	2821.9	1823.1	1049.9	1921.9	1323.1	High limit
-269.9	-453.9	3.3	-199.9	-327.9	73.3	Low limit

Error transmitting the data record

The module always checks all the values of the transferred data record. Only if all the values were transferred without errors does the module apply the values from the data record.

The WRREC instruction for writing data records returns the appropriate error code if there are errors in the STATUS parameter.

The following table shows the module-specific error codes and their meaning for the parameter data record 128.

Table A- 19 Error messages, their meaning and corrective measures

Error code in the STATUS parameter (hexadecimal)				Meaning	Solution
Byte 0	Byte 1	Byte 2	Byte 3		
DF_H	80_H	$B0_H$	00_H	Number of the data record unknown	Enter a valid number for the data record.
DF_H	80_H	$B1_H$	01_H	Length of the data record incorrect	Enter a valid value for the data record length.
DF_H	80_H	$B2_H$	00_H	Module not accessible	• Check station. • Module not correctly plugged in. • Check parameters of the WRREC block.
DF_H	80_H	$E0_H$	01_H	Incorrect version in header	Correct version number of the parameter block, see Figure A-5 Header information - REAL representation (Page 63).
DF_H	80_H	$E0_H$	02_H	Error in the header, length or number of parameter blocks	Correct the length and number of the parameter blocks, see Figure A-5 Header information - REAL representation (Page 63).
DF_H	80_H	$E1_H$	01_H	Reserved bit set	Write 0 to all reserved bits.
DF_H	80_H	$E1_H$	02_H	Invalid diagnostics enable bit set	Correct diagnostics enables. (Dependence on measurement type, measuring range, wire break check)
DF_H	80_H	$E1_H$	04_H	Value for hardware interrupt limit invalid	Use valid hardware interrupt limits, see Parameter assignment and structure of channel parameter (REAL representation) (Page 62), "Limits for hardware interrupts" section.
DF_H	80_H	$E1_H$	08_H	Code for interference frequency suppression invalid	Use valid code for interference frequency suppression, see Figure A-6 Structure of byte x to x+25 for channel 0 to 3 - REAL representation (Page 65), byte x+3.
DF_H	80_H	$E1_H$	09_H	Code for smoothing invalid	Use valid code for smoothingFigure A-6 Structure of byte x to x+25 for channel 0 to 3 - REAL representation (Page 65).
DF_H	80_H	$E1_H$	$0F_H$	Code for reference junction invalid or not permissible	Use valid code for reference junctionFigure A-6 Structure of byte x to x+25 for channel 0 to 3 - REAL representation (Page 65).

Error code in the STATUS parameter (hexadecimal)				Meaning	Solution
Byte 0	Byte 1	Byte 2	Byte 3		
DF_H	80_H	$E1_H$	10_H	Code for the measurement type invalid	Use valid code for measurement type, see Table A-12 Codes for measurement type (Page 65).
DF_H	80_H	$E1_H$	11_H	Code for the measuring range invalid	Use valid code for measuring range, see Table A-13 Codes for measuring range (Page 66).
DF_H	80_H	$E1_H$	12_H	Value for fixed reference temperature invalid	Use valid reference temperature, see Figure A-6 Structure of byte x to x+25 for channel 0 to 3 - REAL representation (Page 65), byte x+8.
DF_H	80_H	$E1_H$	21_H	Code for temperature unit invalid	Use valid code for temperature unit Figure A-6 Structure of byte x to x+25 for channel 0 to 3 - REAL representation (Page 65), byte x+4.

Representation of analog values

B

This appendix shows the analog values for all measuring ranges that you can use with the analog module AI 4xTC HS.

Measured value resolution

The resolution of the analog values differs depending on the analog module and its parameter assignment.

Each analog value is written left aligned to the tags. The bits marked with "x" are set to "0".

Note

Temperature values

The digitized temperature values are the result of a conversion in the analog module. The following resolution therefore does not apply to temperature values.

Table B- 1 Resolution of the analog values

Resolution in bits including sign	Values		Analog value	
	Decimal	Hexadecimal	High byte	Low byte
14	4	4_H	Sign 0 0 0 0 0 0 0	0 0 0 0 0 1 x x
15	2	2_H	Sign 0 0 0 0 0 0 0	0 0 0 0 0 0 1 x
16	1	1_H	Sign 0 0 0 0 0 0 0	0 0 0 0 0 0 0 1

B.1 Representation of input ranges

In the following tables, you can find the digitized representation of the bipolar and unipolar input ranges. The resolution is 16 bits.

Table B- 2 Bipolar input ranges

Dec. value	Measured value in %	Data word																Range
		2^{15}	2^{14}	2^{13}	2^{12}	2^{11}	2^{10}	2^{9}	2^{8}	2^{7}	2^{6}	2^{5}	2^{4}	2^{3}	2^{2}	2^{1}	2^{0}	
32767	>117.589	0	1	1	1	1	1	1	1	1	1	1	1	1	1	1	1	Overflow
32511	117.589	0	1	1	1	1	1	1	0	1	1	1	1	1	1	1	1	Overrange
27649	100.004	0	1	1	0	1	1	0	0	0	0	0	0	0	0	0	1	
27648	100.000	0	1	1	0	1	1	0	0	0	0	0	0	0	0	0	0	Nominal range
1	0.003617	0	0	0	0	0	0	0	0	0	0	0	0	0	0	0	1	
0	0.000	0	0	0	0	0	0	0	0	0	0	0	0	0	0	0	0	
-1	-0.003617	1	1	1	1	1	1	1	1	1	1	1	1	1	1	1	1	
-27648	-100.000	1	0	0	1	0	1	0	0	0	0	0	0	0	0	0	0	
-27649	-100.004	1	0	0	1	0	0	1	1	1	1	1	1	1	1	1	1	Underrange
-32512	-117.593	1	0	0	0	0	0	0	1	0	0	0	0	0	0	0	0	
-32768	<-117.593	1	0	0	0	0	0	0	0	0	0	0	0	0	0	0	0	Underflow

B.2 Representation of analog values in voltage measuring ranges

The following tables list the decimal and hexadecimal values (codes) of the possible voltage measuring ranges.

Table B- 3 Voltage measuring range ±1 V

Values		Voltage measuring range	Range
Dec.	Hex.	±1 V	
32767	7FFF	> 1.176 V	Overflow
32511	7EFF	1.176 V	Overrange
27649	6C01		
27648	6C00	1 V	Nominal range
20736	5100	0.75 V	
1	1	36.17 µV	
0	0	0 V	
-1	FFFF		
-20736	AF00	-0.75 V	
-27648	9400	-1 V	
-27649	93FF		Underrange
-32512	8100	-1.176 V	
-32768	8000	<-1.176 V	Underflow

Table B- 4 Voltage measuring range ±500 mV to ±50 mV

Values		Voltage measuring range			Range
Dec.	Hex.	±250 mV	±80 mV	±50 mV	
32767	7FFF	> 294.0 mV	> 94.1 mV	> 58.8 mV	Overflow
32511	7EFF	294.0 mV	94.1 mV	58.8 mV	Overrange
27649	6C01				
27648	6C00	250 mV	80 mV	50 mV	Nominal range
20736	5100	187.5 mV	60 mV	37.5 mA	
1	1	9.04 µV	2.89 µV	1.81 µV	
0	0	0 mV	0 mV	0 mV	
-1	FFFF				
-20736	AF00	-187.5 mV	-60 mV	-37.5 mV	
-27648	9400	-250 mV	-80 mV	-50 mV	
-27649	93FF				Underrange
-32512	8100	-294.0 mV	-94.1 mV	-58.8 mV	
-32768	8000	<-294.0 mV	<-94.1 mV	<-58.8 mV	Underflow

B.3 Representation of analog values for thermocouples

Note

A higher resolution can be configured for thermocouples, see section Scalable measuring range (Page 25).

The tables below list the decimal and hexadecimal values (codes) of the thermocouples.

Table B- 5 Thermocouple type B

Type B in °C	Values		Type B in °F	Values		Type B in K	Values		Range
	Dec.	Hex.		Dec.	Hex.		Dec.	Hex.	
> 2070.0	32767	7FFF	> 3276.6	32767	7FFF	> 2343.2	32767	7FFF	Overflow
2070.0 : 1820.1	20700 : 18201	50DC : 4719	3276.6 : 2786.6	32766 : 27866	7FFE : 6CDA	2343.2 : 2093.3	23432 : 20933	5B88 : 51C5	Overrange
1820.0 : 0.0	18200 : 0	4718 : 0000	2786.5 : 32.0	27865 : 320	6CD9 : 0140	2093.2 : 273.2	20932 : 2732	51C4 : 0AAC	Nominal range
-0.1 : -120.0	-1 : -1200	FFFF : FB50	31.9 : -184.0	319 : -1840	013F : F8D0	273.1 : 153.2	2731 : 1532	0AAB : 05FC	Underrange
< -120.0	-32768	8000	< -184.0	-32768	8000	< 153.2	-32768	8000	Underflow

Table B- 6 Thermocouple type C

Type C in °C	Values		Type C in °F	Values		Type C in K	Values		Range
	Dec.	Hex.		Dec.	Hex.		Dec.	Hex.	
> 2500.0	32767	7FFF	> 3276.6	32767	7FFF	> 2773.2	32767	7FFF	Overflow
2500.0 : 2315.1	25000 : 23151	61A8 : 5A6F	3276.6 : 2786.6	32766 : 27866	7FFE : 6CDA	2773.2 : 2588.3	27732 : 25883	6C54 : 651B	Overrange
2315.0 : 0.0	23150 : 0	5A6E : 0000	2786.5 : 32.0	27865 : 320	6CD9 : 0140	2588.2 : 273.2	25882 : 2732	651A : 0AAC	Nominal range
-0.1 : -120.0	-1 : -1200	FFFF : FB50	31.9 : -184.0	319 : -1840	013F : F8D0	273.1 : 153.2	2731 : 1532	0AAB : 05FC	Underrange
< -120.0	-32768	8000	< -184.0	-32768	8000	< 153.2	-32768	8000	Underflow

Table B- 7 Thermocouple type E

Type E in °C	Values		Type E in °F	Values		Type E in K	Values		Range
	Dec.	Hex.		Dec.	Hex.		Dec.	Hex.	
> 1200.0	32767	7FFF	> 2192.0	32767	7FFF	> 1473.2	32767	7FFF	Overflow
1200.0 : 1000.1	12000 : 10001	2EE0 : 2711	2192.0 : 1832.1	21920 : 18321	55A0 : 4791	1473.2 : 1273.3	14732 : 12733	398C : 31BD	Overrange
1000.0 : -270.0	10000 : -2700	2710 : F574	1832.0 : -454.0	18320 : -4540	4790 : EE44	1273.2 : 3.2	12732 : 32	31BC : 0020	Nominal range
< -270.0	-32768	8000	< -454.0	-32768	8000	< 3.2	-32768	8000	Underflow

Table B- 8 Thermocouple type J

Type J in °C	Values		Type J in °F	Values		Type J in K	Values		Range
	Dec.	Hex.		Dec.	Hex.		Dec.	Hex.	
> 1450.0	32767	7FFF	> 2642.0	32767	7FFF	> 1723.2	32767	7FFF	Overflow
1450.0 : 1200.1	14500 : 12001	38A4 : 2EE1	2642.0 : 2192.1	26420 : 21921	6734 : 55A1	1723.2 : 1473.3	17232 : 14733	4350 : 398D	Overrange
1200.0 : -210.0	12000 : -2100	2EE0 : F7CC	2192.0 : -346.0	21920 : -3460	55A0 : F27C	1473.2 : 63.2	14732 : 632	398C : 0278	Nominal range
< -210.0	-32768	8000	< -346.0	-32768	8000	< 63.2	-32768	8000	Underflow

Table B- 9 Thermocouple type K

Type K in °C	Values		Type K in °F	Values		Type K in K	Values		Range
	Dec.	Hex.		Dec.	Hex.		Dec.	Hex.	
> 1622.0	32767	7FFF	> 2951.6	32767	7FFF	> 1895.2	32767	7FFF	Overflow
1622.0 : 1372.1	16220 : 13721	3F5C : 3599	2951.6 : 2501.7	29516 : 25017	734C : 61B9	1895.2 : 1645.3	18952 : 16453	4A08 : 4045	Overrange
1372.0 : -270.0	13720 : -2700	3598 : F574	2501.6 : -454.0	25016 : -4540	61B8 : EE44	1645.2 : 3.2	16452 : 32	4044 : 0020	Nominal range
< -270.0	-32768	8000	< -454.0	-32768	8000	< 3.2	-32768	8000	Underflow

Table B- 10 Thermocouple type L

Type L in °C	Values		Type L in °F	Values		Type L in K	Values		Range
	Dec.	Hex.		Dec.	Hex.		Dec.	Hex.	
> 1150.0	32767	7FFF	> 2102.0	32767	7FFF	> 1423.2	32767	7FFF	Overflow
1150.0 : 900.1	11500 : 9001	2CEC : 2329	2102.0 : 1652.1	21020 : 16521	521C : 4089	1423.2 : 1173.3	14232 : 11733	3798 : 2DD5	Overrange
900.0 : -200.0	9000 : -2000	2328 : F830	1652.0 : -328.0	16520 : -3280	4088 : F330	1173.2 : 73.2	11732 : 732	2DD4 : 02DC	Nominal range
< -200.0	-32768	8000	< -328.0	-32768	8000	< 73.2	-32768	8000	Underflow

Table B- 11 Thermocouple type N

Type N in °C	Values		Type N in °F	Values		Type N in K	Values		Range
	Dec.	Hex.		Dec.	Hex.		Dec.	Hex.	
> 1550.0	32767	7FFF	> 2822.0	32767	7FFF	> 1823.2	32767	7FFF	Overflow
1550.0 : 1300.1	15500 : 13001	3C8C : 32C9	2822.0 : 2372.1	28220 : 23721	6E3C : 5CA9	1823.2 : 1573.3	18232 : 15733	4738 : 3D75	Overrange
1300.0 : -270.0	13000 : -2700	32C8 : F574	2372.0 : -454.0	23720 : -4540	5CA8 : EE44	1573.2 : 3.2	15732 : 32	3D74 : 0020	Nominal range
< -270.0	-32768	8000	< -454.0	-32768	8000	< 3.2	-32768	8000	Underflow

Table B- 12 Thermocouples R and S

Types R, S in °C	Values		Types R, S in °F	Values		Types R, S in K	Values		Range
	Dec.	Hex.		Dec.	Hex.		Dec.	Hex.	
> 2019.0	32767	7FFF	> 3276.6	32767	7FFF	> 2292.2	32767	7FFF	Overflow
2019.0 : 1769.1	20190 : 17691	4EDE : 451B	3276.6 : 3216.3	32766 : 32163	7FFE : 7DA3	2292.2 : 2042.3	22922 : 20423	598A : 4FC7	Overrange
1769.0 : -50.0	17690 : -500	451A : FE0C	3216.2 : -58.0	32162 : -580	7DA2 : FDBC	2042.2 : 223.2	20422 : 2232	4FC6 : 08B8	Nominal range
-50.1 : -170.0	-501 : -1700	FE0B : F95C	-58.1 : -274.0	-581 : -2740	FDBB : F54C	223.1 : 103.2	2231 : 1032	08B7 : 0408	Underrange
< -170.0	-32768	8000	< -274.0	-32768	8000	< 103.2	< 1032	8000	Underflow

Table B- 13 Thermocouple type T

Type T in °C	Values		Type T in °F	Values		Type T in K	Values		Range
	Dec.	Hex.		Dec.	Hex.		Dec.	Hex.	
> 540.0	32767	7FFF	> 1004.0	32767	7FFF	> 813.2	32767	7FFF	Overflow
540.0 : 400.1	5400 : 4001	1518 : 0FA1	1004.0 : 752.1	10040 : 7521	2738 : 1D61	813.2 : 673.3	8132 : 6733	1FC4 : 1AAD	Overrange
400.0 : -270.0	4000 : -2700	0FA0 : F574	752.0 : -454.0	7520 : -4540	1D60 : EE44	673.2 : 3.2	6732 : 32	1AAC : 0020	Nominal range
< -270.0	-32768	8000	< -454.0	-32768	8000	< 3.2	-32768	8000	Underflow

Table B- 14 Thermocouple type U

Type U in °C	Values		Type U in °F	Values		Type U in K	Values		Range
	Dec.	Hex.		Dec.	Hex.		Dec.	Hex.	
> 850.0	32767	7FFF	> 1562.0	32767	7FFF	> 1123.2	32767	7FFF	Overflow
850.0 : 600.1	8500 : 6001	2134 : 1771	1562.0 : 1112.1	15620 : 11121	2738.0 : 2B71	1123.2 : 873.3	11232 : 8733	2BE0 : 221D	Overrange
600.0 : -200.0	6000 : -2000	1770 : F830	1112.0 : -328.0	11120 : -3280	2B70 : F330	873.2 : 73.2	8732 : 732	221C : 02DC	Nominal range
< -200.0	-32768	8000	< -328.0	-32768	8000	< 73.2	-32768	8000	Underflow

Table B- 15 Thermocouple type TXK (GOST)

Type TXK in °C	Values		Type TXK in °F	Values		Type TXK in K	Values		Range
	Dec.	Hex.		Dec.	Hex.		Dec.	Hex.	
> 1050.0	32767	7FFF	> 1922.0	32767	7FFF	>1323.2	32767	7FFF	Overflow
1050.0 : 800.1	10500 : 8001	2904 : 1F41	1922.0 : 1472.1	19220 : 14721	4B14 : 3981	1323.2 : 1073.3	13232 : 10733	33B0 : 29ED	Overrange
800.0 : 0.0 : -200.0	8000 : 0 : -2000	1F40 : 0000 : F830	1472.0 : 32.0 : -328.0	14720 : 320 : -3280	3980 : 0140 : F330	1073.2 : 273 : 73.2	10732 : 2730 : 732	29EC : 0AAA : 02DC	Nominal range
< -200.0	-32768	8000	< -328.0	-32768	8000	<73.2	-32768	8000	Underflow

SIEMENS

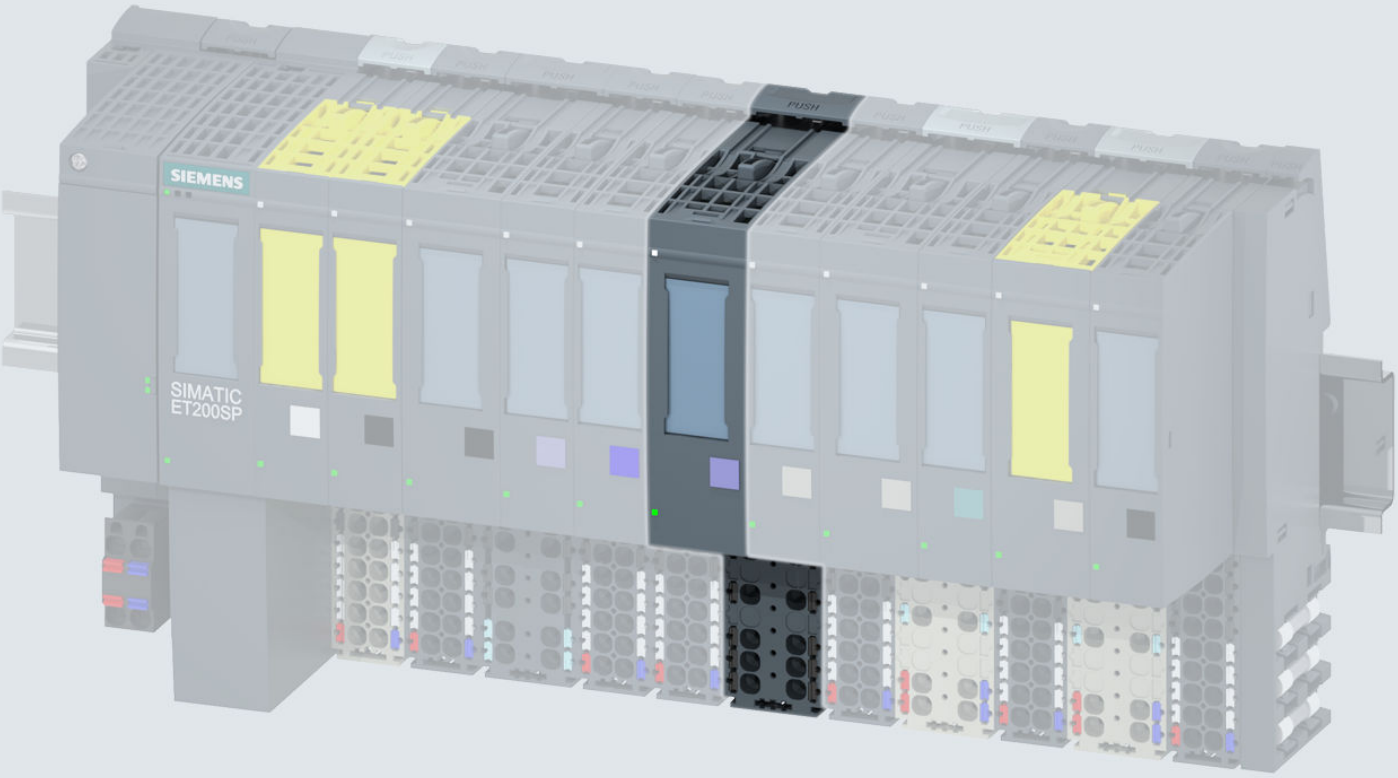

Manual

SIMATIC

ET 200SP

Analog input module
AI Energy Meter 400VAC ST
(6ES7134-6PA01-0BD0)

Edition 10/2017

support.industry.siemens.com

SIEMENS

SIMATIC

ET 200SP
Analog input module
AI Energy Meter 400VAC ST
(6ES7134-6PA01-0BD0)

Manual

Preface

Documentation guide 1

Product overview 2

Wiring 3

Configuration / address space 4

Quick start 5

Reading and processing measured values 6

Energy counters 7

Parameters 8

Interrupts/diagnostic alarms 9

Technical specifications 10

Parameter data records A

Measured variables B

Module versions C

User data variants D

Measured value data records E

Tips and tricks F

10/2017

A5E36061895-AB

Legal information

Warning notice system

This manual contains notices you have to observe in order to ensure your personal safety, as well as to prevent damage to property. The notices referring to your personal safety are highlighted in the manual by a safety alert symbol, notices referring only to property damage have no safety alert symbol. These notices shown below are graded according to the degree of danger.

⚠ DANGER

indicates that death or severe personal injury **will** result if proper precautions are not taken.

⚠ WARNING

indicates that death or severe personal injury **may** result if proper precautions are not taken.

⚠ CAUTION

indicates that minor personal injury can result if proper precautions are not taken.

NOTICE

indicates that property damage can result if proper precautions are not taken.

If more than one degree of danger is present, the warning notice representing the highest degree of danger will be used. A notice warning of injury to persons with a safety alert symbol may also include a warning relating to property damage.

Qualified Personnel

The product/system described in this documentation may be operated only by **personnel qualified** for the specific task in accordance with the relevant documentation, in particular its warning notices and safety instructions. Qualified personnel are those who, based on their training and experience, are capable of identifying risks and avoiding potential hazards when working with these products/systems.

Proper use of Siemens products

Note the following:

⚠ WARNING

Siemens products may only be used for the applications described in the catalog and in the relevant technical documentation. If products and components from other manufacturers are used, these must be recommended or approved by Siemens. Proper transport, storage, installation, assembly, commissioning, operation and maintenance are required to ensure that the products operate safely and without any problems. The permissible ambient conditions must be complied with. The information in the relevant documentation must be observed.

Trademarks

All names identified by ® are registered trademarks of Siemens AG. The remaining trademarks in this publication may be trademarks whose use by third parties for their own purposes could violate the rights of the owner.

Disclaimer of Liability

We have reviewed the contents of this publication to ensure consistency with the hardware and software described. Since variance cannot be precluded entirely, we cannot guarantee full consistency. However, the information in this publication is reviewed regularly and any necessary corrections are included in subsequent editions.

Siemens AG
Division Digital Factory
Postfach 48 48
90026 NÜRNBERG
GERMANY

A5E36061895-AB
℗ 08/2017 Subject to change

Copyright © Siemens AG 2015 - 2017.
All rights reserved

Preface

Purpose of the documentation

This manual supplements the system manual ET 200SP distributed I/O system (http://support.automation.siemens.com/WW/view/en/58649293). Functions that generally relate to the system are described in this manual.

The information provided in this manual and in the system/function manuals supports you in commissioning the system.

Changes compared to previous version

Changes/enhancements described in this manual, compared to the previous version:

- User data variant: Basic variables phase-specific measurement (ID 159 or $9F_H$) added
- Notes on the previous version of this manual have been taken into account in the current edition.

Conventions

CPU: When the term "CPU" is used in this manual, it applies both to the CPUs of the S7-1500 automation system and to the CPUs/interface modules of the distributed I/O system ET 200SP.

STEP 7: In this documentation, "STEP 7" is used as a synonym for all versions of the configuration and programming software "STEP 7 (TIA Portal)".

Please also observe notes marked as follows:

Note

A note contains important information on the product described in the documentation, on the handling of the product and on the section of the documentation to which particular attention should be paid.

Security information

Siemens provides products and solutions with industrial security functions that support the secure operation of plants, systems, machines and networks.

In order to protect plants, systems, machines and networks against cyber threats, it is necessary to implement – and continuously maintain – a holistic, state-of-the-art industrial security concept. Siemens' products and solutions constitute one element of such a concept.

Customers are responsible for preventing unauthorized access to their plants, systems, machines and networks. Such systems, machines and components should only be connected to an enterprise network or the internet if and to the extent such a connection is necessary and only when appropriate security measures (e.g. firewalls and/or network segmentation) are in place.

For additional information on industrial security measures that may be implemented, please visit (http://www.siemens.com/industrialsecurity).

Siemens' products and solutions undergo continuous development to make them more secure. Siemens strongly recommends that product updates are applied as soon as they are available and that the latest product versions are used. Use of product versions that are no longer supported, and failure to apply the latest updates may increase customers' exposure to cyber threats.

To stay informed about product updates, subscribe to the Siemens Industrial Security RSS Feed under (http://www.siemens.com/industrialsecurity).

Table of contents

Preface 4

1 Documentation guide 8

2 Product overview 12

2.1 Area of application 12

2.2 Properties of the AI Energy Meter 400VAC ST 14

3 Wiring 16

3.1 Terminal and block diagram 16

3.2 Connection examples 19

3.3 Current transformer selection data 20

4 Configuration / address space 23

4.1 Configuring 23

4.2 Selecting the module versions 24

4.2.1 Changing over the user data variant during operation 25

4.2.2 Recommendations for selecting the module version 26

4.3 Applicable modules 27

5 Quick start 28

6 Reading and processing measured values 30

6.1 Basics for reading measured values 30

6.2 Quality information 32

6.3 Reading measured values from user data cyclically 34

6.4 Read measured value from a measured value data record 36

7 Energy counters 37

7.1 How the energy meter works 37

7.2 Configuring counters 39

7.3 Evaluating energy counters 41

7.4 Reset energy counter 42

7.4.1 Introduction 42

7.4.2 Reset energy counters via user data 42

7.4.3 Resetting energy counters via data record DS 143 44

7.4.4 Example for resetting energy counters via data record DS 143 46

7.5 Data record for energy counter (DS 143) 49

7.5.1 Structure for energy counters (DS 143) 49

7.5.2 Structure of the control and feedback interface for DS 143 52

8 Parameters 54

8.1 Parameters 54

8.2 Description of parameters 57

9 Interrupts/diagnostic alarms 61

9.1 Status and error display 61

9.2 Interrupts 63

9.2.1 Diagnostics interrupt 63

9.3 Diagnostic alarms 64

9.4 Diagnostics response 65

10 Technical specifications 66

10.1 Technical specifications 66

A Parameter data records 72

A.1 Configuration via parameter data records 72

A.2 Structure of the parameter data record 128 for the entire module 73

B Measured variables 80

C Module versions 85

C.1 Module version "2 I / 2 Q" 85

C.2 Module version "32 I / 12 Q" 88

D User data variants 92

D.1 User data variants with 32 bytes input data / 12 bytes output data 92

E Measured value data records 103

E.1 Overview of all measured value data records 103

E.2 Measured value data record for base measurements (DS 142) 104

E.3 Structure for energy counters (DS 143) 106

F Tips and tricks 109

F.1 Tips and tricks 109

Documentation guide 1

The documentation for the SIMATIC ET 200SP distributed I/O system is arranged into three areas.
This arrangement enables you to access the specific content you require.

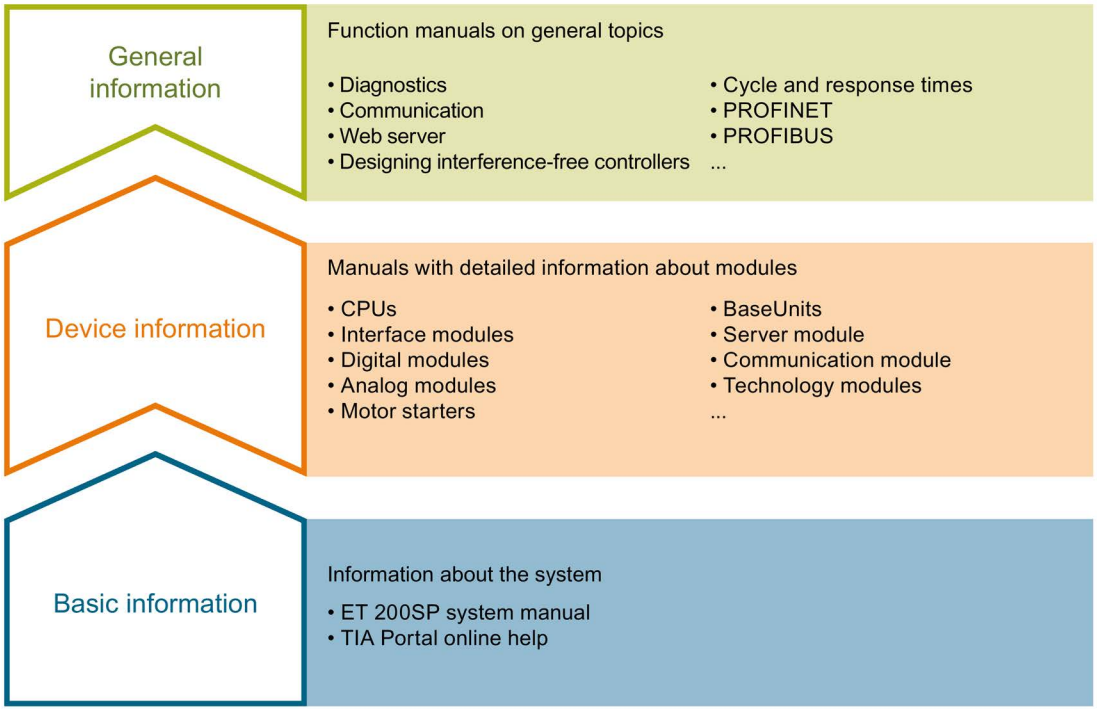

Basic information

The system manual describes in detail the configuration, installation, wiring and commissioning of the SIMATIC ET 200SP. distributed I/O system. The STEP 7 online help supports you in the configuration and programming.

Device information

Product manuals contain a compact description of the module-specific information, such as properties, wiring diagrams, characteristics and technical specifications.

General information

The function manuals contain detailed descriptions on general topics regarding the SIMATIC ET 200SP distributed I/O system, e.g. diagnostics, communication, Web server, motion control and OPC UA.

You can download the documentation free of charge from the Internet (http://w3.siemens.com/mcms/industrial-automation-systems-simatic/en/manual-overview/tech-doc-et200/Pages/Default.aspx).

Changes and supplements to the manuals are documented in a Product Information.

You can download the product information free of charge from the Internet (https://support.industry.siemens.com/cs/us/en/view/73021864).

Manual Collection ET 200SP

The Manual Collection contains the complete documentation on the SIMATIC ET 200SP distributed I/O system gathered together in one file.

You can find the Manual Collection on the Internet (http://support.automation.siemens.com/WW/view/en/84133942).

"mySupport"

With "mySupport", your personal workspace, you make the most of your Industry Online Support.

In "mySupport" you can store filters, favorites and tags, request CAx data and put together your personal library in the Documentation area. Furthermore, your data is automatically filled into support requests and you always have an overview of your current requests.

You need to register once to use the full functionality of "mySupport".

You can find "mySupport" in the Internet (https://support.industry.siemens.com/My/ww/en).

"mySupport" - Documentation

In the Documentation area of "mySupport", you have the possibility to combine complete manuals or parts of them to make your own manual.
You can export the manual in PDF format or in an editable format.

You can find "mySupport" - Documentation in the Internet (http://support.industry.siemens.com/My/ww/en/documentation).

"mySupport" - CAx Data

In the CAx Data area of "mySupport", you can have access the latest product data for your CAx or CAe system.

You configure your own download package with a few clicks.

In doing so you can select:

- Product images, 2D dimension drawings, 3D models, internal circuit diagrams, EPLAN macro files
- Manuals, characteristics, operating manuals, certificates
- Product master data

You can find "mySupport" - CAx Data in the Internet (http://support.industry.siemens.com/my/ww/en/CAxOnline).

Application examples

The application examples support you with various tools and examples for solving your automation tasks. Solutions are shown in interplay with multiple components in the system - separated from the focus in individual products.

You can find the application examples on the Internet (https://support.industry.siemens.com/sc/ww/en/sc/2054).

TIA Selection Tool

With the TIA Selection Tool, you can select, configure and order devices for Totally Integrated Automation (TIA).
This tool is the successor of the SIMATIC Selection Tool and combines the known configurators for automation technology into one tool.
With the TIA Selection Tool, you can generate a complete order list from your product selection or product configuration.

You can find the TIA Selection Tool on the Internet (http://w3.siemens.com/mcms/topics/en/simatic/tia-selection-tool).

SIMATIC Automation Tool

You can use the SIMATIC Automation Tool to run commissioning and maintenance activities simultaneously on various SIMATIC S7 stations as a bulk operation independently of the TIA Portal.

The SIMATIC Automation Tool provides a multitude of functions:

- Scanning of a PROFINET/Ethernet network and identification of all connected CPUs
- Address assignment (IP, subnet, gateway) and station name (PROFINET device) to a CPU
- Transfer of the data and the programming device/PC time converted to UTC time to the module
- Program download to CPU
- Operating mode switchover RUN/STOP
- Localization of the CPU by means of LED flashing
- Reading out CPU error information
- Reading the CPU diagnostic buffer
- Reset to factory settings
- Updating the firmware of the CPU and connected modules

You can find the SIMATIC Automation Tool on the Internet (https://support.industry.siemens.com/cs/ww/en/view/98161300).

PRONETA

With SIEMENS PRONETA (PROFINET network analysis), you analyze the plant network during commissioning. PRONETA features two core functions:

- The topology overview independently scans PROFINET and all connected components.
- The IO check is a fast test of the wiring and the module configuration of a system.

You can find SIEMENS PRONETA on the Internet (https://support.industry.siemens.com/cs/ww/en/view/67460624).

Product overview 2

2.1 Area of application

Introduction

Energy efficiency is playing an increasingly important role in industry. Rising energy prices, increasing pressure to improve profitability and the growing awareness of climate protection are important factors for reducing energy costs and for introducing an energy data management system.

Where can you use the AI Energy Meter 400VAC ST?

AI Energy Meter 400VAC ST is designed for machine-level deployment in an ET 200SP distributed I/O system. AI Energy Meter 400VAC ST records over 200 different electrical measurement and energy values. It lets you create transparency about the energy requirements of individual components of a production plant even down to the machine level.

Using the measured values provided by the AI Energy Meter 400VAC ST, you can determine energy consumption and power consumption. You can determine consumption forecasts and efficiency from the measured values. Power consumption measurements are relevant for load management and maintenance. In addition, you can use the measurements for energy reporting and for determining the CO_2 footprint.

Note

Measuring dangerous electrical quantities

The AI Energy Meter 400VAC ST is not tested according to DIN EN 61010-2-030 and may therefore not be used to verify, measure or monitor protective measures according to DIN EN 61557.

Qualified personnel must ensure through additional measures that no danger ensues for humans and the environment in case of an incorrect display.

TN and TT system

The AI Energy Meter 400VAC ST can be used in TN and TT systems.

Measuring with AI Energy Meter 400VAC ST

A typical supply network of a production plant is usually divided into three voltage ranges:

- The infeed of the entire plant
- The subdistribution, for example, to individual lines within the plant
- The end consumers such as the machines in the lines.

The following figure shows the measurement in an electricity supply network:

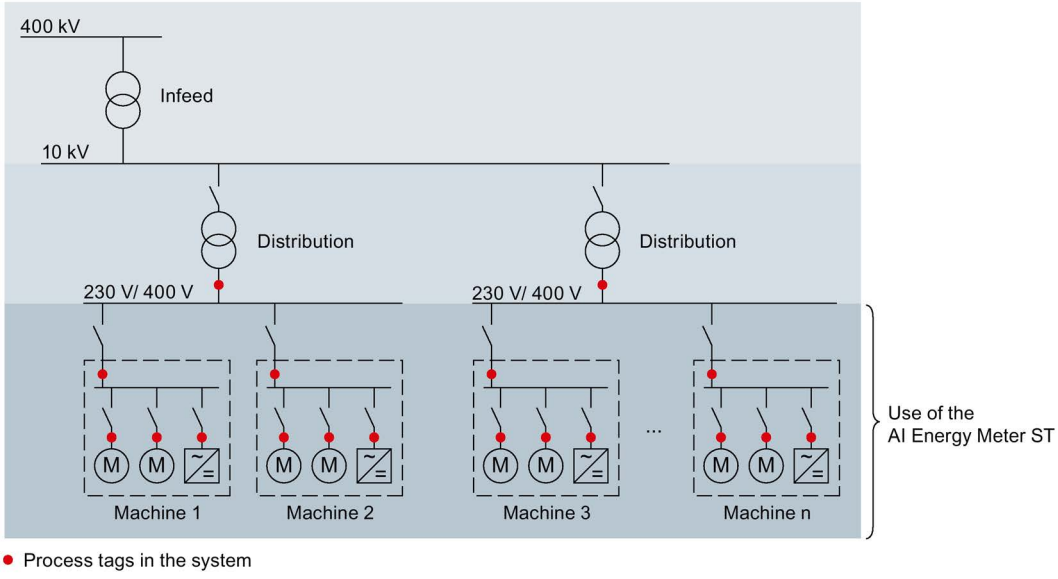

Figure 2-1 Use of the AI Energy Meter 400VAC ST

Advantages of the AI Energy Meter 400VAC ST

The AI Energy Meter 400VAC ST has the following advantages:

- Space-saving especially for use in control cabinet
- PROFINET IO or PROFIBUS DP (depending on the interface module in use)
- Multiple modules can be used with one interface module
- Extension of existing stations by components for energy recording

2.2 Properties of the AI Energy Meter 400VAC ST

Article number

6ES7134-6PA01-0BD0

View of the module

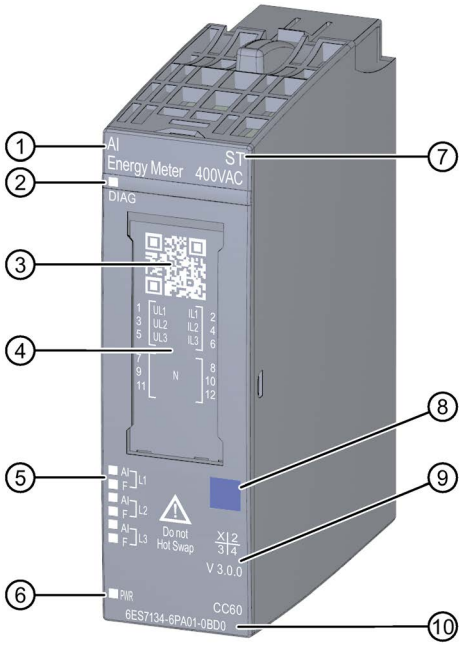

① Module type and name
② LED for diagnostics
③ 2D matrix code
④ Wiring diagram
⑤ LEDs for channel status
⑥ LED for supply voltage
⑦ Function class
⑧ Color identification label module type
⑨ Function and firmware version
⑩ Article number

Figure 2-2 View of the module AI Energy Meter 400VAC ST

Properties

The module has the following technical properties:

- Measurement of electrical variables from single-phase and three-phase supply networks
- Max. nominal voltage between two outer conductors 400 VAC
- Recording of:
  - Voltages
  - Currents
  - Phase angles
  - Power
  - Energy / electrical work
  - Frequencies
  - Power factors

The module supports the following functions:

Table 2- 1 Version dependencies of the functions

Function	HW version	FW version	STEP 7		GSD file	
			TIA Portal	V5.x	PROFINET IO	PROFIBUS DP
Firmware update	FS01	V3.0.0 or higher	V13 SP1 with update 4 and HSP or higher	V5.5 SP4 and hotfix 7 or higher	X	---
Identification data I&M0 to I&M3	FS01	V3.0.0 or higher	V13 SP1 with update 4 and HSP or higher	V5.5 SP4 and hotfix 7 or higher	X	X
Reconfiguration in RUN	FS01	V3.0.0 or higher	V13 SP1 with update 4 and HSP or higher	V5.5 SP4 and hotfix 7 or higher	X	X
Diagnostic error interrupts	FS01	V3.0.0 or higher	V13 SP1 with update 4 and HSP or higher	V5.5 SP4 and hotfix 7 or higher	X	X

Accessories

The following accessories must be ordered separately:

- BaseUnit Type D0
- Labeling strips
- Reference identification label

You can find additional information on the accessories in the ET 200SP distributed I/O system (http://support.automation.siemens.com/WW/view/es/58649293) system manual.

Wiring 3

3.1 Terminal and block diagram

In an ET 200SP station, the AI Energy Meter 400VAC ST forms its own potential group together with its dark BaseUnit.

General safety instructions

WARNING

Danger to life due to electric shock

Touching live parts can lead to death or severe injuries.

Before beginning any work deenergize the system and the Energy Meter and short-circuit installed transformers.

WARNING

Danger to life, dangerous system conditions and material damage possible

Removing and inserting the Energy Meter under live voltage is prohibited! For this reason the symbol "Do not Hot Swap" is located on the Energy Meter.

If you remove and insert the Energy Meter under live voltage during operation, the transformers used can produce dangerous induction voltages and electric arcs and dangerous system conditions can arise.

The Energy Meter may only be removed and inserted during operation if the measuring voltages supplied to the BaseUnit at terminals U_{L1} , U_{L2}, U_{L3} are disconnected at all poles **and** special current transformer terminals are used that short-circuit the transformer on the secondary side on removal.

CAUTION

Use only in three-phase and AC networks

Operation with direct voltage/direct current will destroy the Energy Meter.

Use the Energy Meter solely to measure electrical variables in three-phase and AC networks.

Supplying the module

The Energy Meter is supplied through the terminals U_{L1} and N. The required minimum voltage amounts to 85 VAC.

Protecting the connection cables

To protect the connection cables at U_{L1}, U_{L2} and U_{L3}, make sure there is adequate cable protection, especially after cross-section transitions.

If short-circuit resistance according to IEC 61439-1:2009 is ensured by the design, there is no need for separate cable protection for the AI Energy Meter 400VAC ST.

Terminal and block diagram

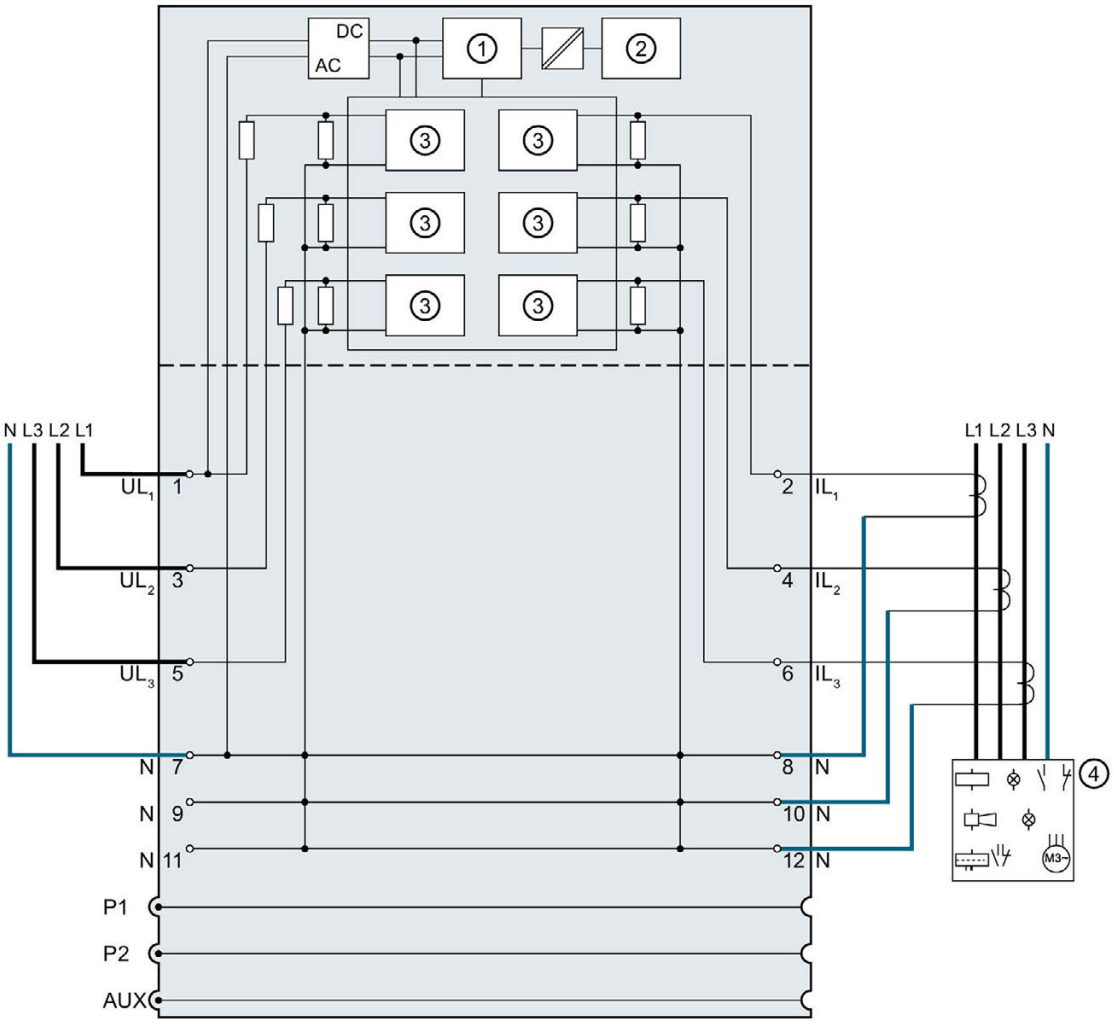

①	Microcontroller	UL_n	Voltage connection
②	Backplane bus interface	IL_n	Current connection
③	Analog-to-digital converter (ADC)	N	Neutral
④	Power measurement		

Figure 3-1 Block diagram of the AI Energy Meter 400VAC ST

Usable BaseUnit

The ET 200SP Distributed I/O System manual explains that a potential group always starts with a light BaseUnit. The AI Energy Meter 400VAC ST makes an exception in this case and only uses the dark BaseUnits type D0, 6ES7193-6BP00-0B**D0**.

The BaseUnit is not in contact with the power bus and passes the potential through from the left to the right slot.

When using some older CPUs / interface modules, note that the first permissible place for AI Energy Meter 400VAC ST is slot 2.

Connection types

The AI Energy Meter 400VAC ST supports the following connection types:

- 3P4W, 3 phases, 4 conductors
- 1P2W, 1 phase, 2 conductors

The input circuit of the module must correspond to one of the listed connection types. Select the appropriate connection type for the intended use.

You will find examples of connections in the section Connection examples (Page 19).

Information on the selection of a current transformer is available in the section Current transformer selection data (Page 20).

3.2 Connection examples

The following figures show the connection of the Energy Meter for three-phase and single-phase measurements. Note that the Energy Meter must always be connected via a current transformer.

Connection type	Wiring diagram	Comment
3P4W Three-phase measurement, 4 wires	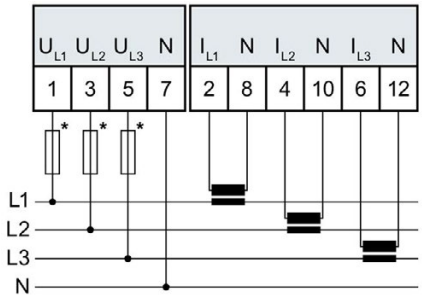	Any load Connection with three current transformers
1P2W Single-phase measurement, 2 conductors	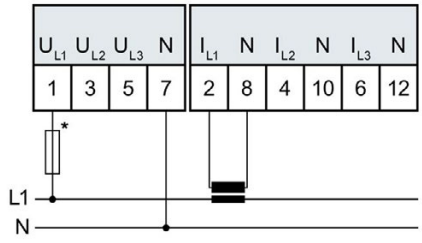	Measurement in an AC network with a current transformer Energy Meter supplies the value "0" for all measured values of Phases 2 and 3 as well as for some cross-phase measured values.

If short-circuit resistance is ensured by conformity to IEC 61439-1:2009, there is no need for separate line protection for the AI Energy Meter 400VAC ST.

Current transformer connection requirements

DIN VDE 0100-557 and IEC 60364-5-55 require the following for the connection of current transformers:

- The secondary circuits of current transformers must not be grounded.
- Guards must not be used in the secondary circuits of current transformers.
- Transformer secondary cable insulation must be designed for the highest voltage of all active components, or the secondary cables must be laid in such a way that their insulation cannot touch any active components, such as busbars.
- Connection points must be provided for temporary measurements.

3.3 Current transformer selection data

Introduction

Connection via a current transformer is always required for the current measurement. Use toroids with an accuracy class of 0.5, 1 or 3.

Dimensioning of the current transformer

The correct dimensioning of the current transformer is important for the following reasons:

- You achieve correct results from the measurements and
- You do not overload or damage the current transformers.

Selecting a current transformer

Use current transformers with a burden capacity 1.5 to 2 times greater than the power dissipation in the terminal circuit (consisting of resistance of the connection cables and burden of the Energy Meter). 1.5 times the power loss is required in order to prevent the transformer from overloading. 2 times the power dissipation is important to ensure the current limiting in case of a short-circuit.

Maximum length of the connection cable

To avoid overloading or damaging the current transformer, the burden Z_n specified on the data sheet of the current transformer (in VA) must not be exceeded. To prevent this being exceeded, the entire burden resistance (consisting of the resistance of the connection cable and the internal resistance of the AI Energy Meter 400VAC ST (see figure below) must be below a certain resistance value (depending on Z_n and I_{max}).

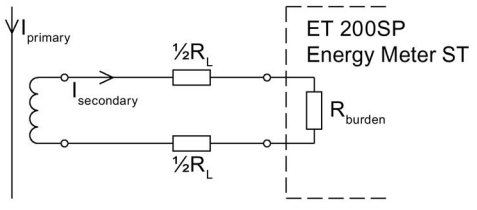

Figure 3-2 Maximum length of the connection cable

The maximum value of the resistance of the connection cable is obtained with the following formula:

$$R_{L,\,max} = \frac{Z_n}{I_{max}^{\ 2}} - R_{burden}$$

R_L	Cable resistance in ohms	I_{max}	Secondary current of the current transformer
Z_n	Rated burden current transformer in VA	R_{burden}	Resistance of the Energy Meter (25 mΩ)

Figure 3-3 Maximum value for the resistance of the connection cable

Based on the maximum cable resistance in ohms, you then calculate the maximum length of the connection cable. To do this, check the data sheet of the connection cable you are using.

Note

The length of the connection cable (outwards and return) must not exceed the value of 200 meters.

Example

Current transformer 500/5 A

You use a current transformer with a transmission ration of 500/5 A that has a rated burden Z_n of 5 VA according to the data sheet.

The maximum primary current in the application is 400 A. This means that the maximum secondary current $I_{max.}$ is 4 A. The burden of the AI Energy Meter including connection resistance amounts to R_{Burden} = 25 mΩ.

The maximum value of the resistance of the connection cable (outgoing and incoming line) is obtained using the following formula:

$$R_{L,\,max} = \frac{Z_n}{I_{max}^{\ 2}} - R_{Burden} = \frac{5\ AV}{16\ A^2} - 25\ m\Omega = 312.5\ m\Omega - 25\ m\Omega = 287.5\ m\Omega$$

The maximum cable resistance between the transformer and the terminals of the Energy Meter may not exceed 287.5 mΩ in this case. The corresponding cable length (outgoing and incoming line) depends on the cross-section used of the copper line and can be determined by using the following table.

The following table shows the resistance values of copper cables for typical cross-sections with ρ = 0.017857 Ω x mm²/m

Estimating the length for a connection cable

The value in the table must be less than the calculated terminal resistance $R_{L\ max}$ of the cable. For the resistance R_{Lmax} of 287.5 mΩ used in the above example it is possible to use a connection cable (outgoing and incoming line) with a length of 10 m from a cross-section of 0.75 mm² upward.

Cross-section	AWG	Cable overview for copper				
		0.5 m	1 m	5 m	10 m	50 m
0.25 mm²	24	35.7 mΩ	71.4 mΩ	357.1 mΩ	714.3 mΩ	3571.4 mΩ
0.34 mm²	22	26.3 mΩ	52.5 mΩ	262.6 mΩ	525.2 mΩ	2626.0 mΩ
0.5 mm²	21	17.9 mΩ	35.7 mΩ	178.6 mΩ	357.1 mΩ	1785.7 mΩ
0.75 mm²	19/20	11.9 mΩ	23.8 mΩ	119.0 mΩ	238.1 mΩ	1190.5 mΩ
1.0 mm²	18	8.9 mΩ	17.9 mΩ	89.3 mΩ	178.6 mΩ	892.9 mΩ
1.5 mm²	16	6.0 mΩ	11.9 mΩ	59.5 mΩ	119.0 mΩ	595.2 mΩ
2.5 mm²	14	3.6 mΩ	7.1 mΩ	35.7 mΩ	71.4 mΩ	357.1 mΩ

Checking the ratio of burden load and power loss

The rated burden of the transformer must be 1.5 to 2 times greater than the power loss in the connection circuit to ensure that the transformer is not overloaded and that the current limitation is ensured during a short-circuit.

At a maximum secondary current of 4 A the power loss in the connection circuit is calculated in accordance with the following formula for a connection cable (outgoing and incoming line) with a length of 10 m and a cross-section of 1.0 mm² and a burden resistance of the Energy Meter of 25 mΩ:

$$P_{Connection\ circuit} = (R_{Connection\ cable} + R_{Burden}) \times I^2_{Max.\ secondary}$$

$$P_{Connection\ circuit} = (178.6\ m\Omega + 25\ m\Omega) \times 4^2\ A^2\ 3.26\ W$$

The ratio of the rated burden and the power loss in the connection circuit thus amounts to:

$$\frac{Z_{N\ rated\ burden}}{P_{Connection\ circuit}} = \frac{5\ VA}{3.26\ W} = 1.54$$

The required ratio of rated burden and power loss in the connection circuit lies within the required range. The transformer is dimensioned sufficiently large.

See also

Technical specifications (Page 66)

Configuration / address space 4

4.1 Configuring

Introduction

To configure the AI Energy Meter 400VAC ST after connecting it, use configuration software such as STEP 7. In addition, you can also change numerous parameters of the AI Energy Meter 400VAC ST in RUN via the user program.

Configuring

You configure the AI Energy Meter 400VAC ST with:

- STEP 7 (TIA Portal) V13 SP1 or higher with Update 4 and HSP
- STEP 7 V5.5 SP4 or higher and Hotfix 7
- GSD file for PROFIBUS or PROFINET

Note

Consistency check of the parameter assignment only with STEP 7

If you configure the AI Energy Meter 400VAC ST using STEP 7, STEP 7 already checks the various parameters for consistency while they are being entered.

If you configure the AI Energy Meter 400VAC ST using a GSD file, a consistency check is not carried out. The module does not recognize incorrect entries until after the parameter data record has been transferred. If the module recognizes an invalid parameter, the module rejects the complete data record.

Preferably use STEP 7 to configure the AI Energy Meter 400VAC ST.

The following instructions show the theoretical procedure for configuring the AI Energy Meter 400VAC ST with STEP 7 (TIA Portal) V13 SP1 or higher with Update 4 and HSP.

1. Select the ET 200SP distributed I/O system you are using in the hardware catalog.
2. Insert the module into your station.
3. Open the device view of the ET 200SP and insert the AI Energy Meter 400VAC ST.
4. Configure the AI Energy Meter 400VAC ST to suit your requirements.

   Once the configuration has been compiled without errors, you can download the configuration to the CPU and commission the ET 200SP station while the AI Energy Meter 400VAC ST is running.

4.2 Selecting the module versions

Introduction

The AI Energy Meter 400VAC ST has different module versions.

During the configuration you use the selection of the module version to specify which measured values can be read.

Each module version supplies quality information via the input user data.

At the module version "32 I / 12 Q" you can read the measured values as user data cyclically from the process image. At each module version you have the option to read measured value records from the AI Energy Meter 400VAC ST by using the RDREC instruction asynchronously.

Influence of the module version on the address space

Note

Influence of the AI Energy Meter 400 VAC ST on the maximum configuration of the ET 200SP

The available address space of the ET 200SP is influenced by the following factors:

- CPU or interface module
- Plugged I/O modules

The address space made **additionally** available by the AI Energy Meter 400 VAC ST is essentially influenced by the length of the user data supplied. The module version determines the length of the user data, which can be supplied by the AI Energy Meter 400VAC ST at maximum.

Module versions of the AI Energy Meter 400VAC Configuring with STEP 7

Module version	User data	Address space	Comment
2 I / 2 Q	No cyclic user data. Access to measured values through "Read data record".	2-byte inputs 2-byte outputs	Information about the structure of the 2 I / 2 Q module version is available in the appendix Module version "2 I / 2 Q" (Page 85).
32 I / 12 Q	User data selectable through defined user data variants	32 byte inputs / 12 byte outputs	You can change over the user data variant during operation. Information about the structure of the 32 I / 12 Q module version is available in the appendix Module version "32 I / 12 Q" (Page 88). Information about the user data variants at 32 I / 12 Q is available in the appendix User data variants with 32 bytes input data / 12 bytes output data (Page 92).

4.2.1 Changing over the user data variant during operation

Introduction

At the module version 32 I / 12 Q you switch over the user data variant in the output data in Byte 0.

Requirement

- User program has been created.
- AI Energy Meter 400VAC ST is configured as the module version 32 I / 12 Q.
- The start address of the module is known in the process image output.

Procedure

1. Create one constant with the data type BYTE per user data variant.
2. Enter the user data ID as a value in each case.
3. Write the constant to the start address of the module in the process image output.

Result

The user data variant is switched with the next cycle.

Note

Information about user data changeover

The parameterized user data variant is set in the following cases:

- A "0" is written in byte 0 in the output data of a user data variant.
- Byte 0 in the output data of a user data variant contains an invalid value:
  - Coding of the user data variant not available

4.2.2 Recommendations for selecting the module version

The following table shows which module version is suitable for a given purpose.

Module version	Remarks on the field of application
2 I / 2 Q	• Solely acyclic reading of the measured values via the RDREC instruction from a measured value data record. • Use of many modules possible because little address space is used.
32 I / 12 Q	• Cyclic reading of the measured values from the user data. – Various measured variables can be read by switching over the user data variant. – One cycle elapses for each user data changeover. Measured values from the next user data variant are supplied with a slight time offset. – Depending on the user data variant, you must convert the measured values in the CPU to physical values using the supplied scaling factor. • Acyclic reading of the measured values via the RDREC instruction from a measured value data record. • Use of less modules possible because each module uses 32 bytes input and 12 bytes output.

4.3 Applicable modules

The following table shows with which controllers the different module versions can be configured.

Controller	Module version	
	2 I / 2Q	32 I / 12 Q
IM 155-6 PN ST	V1.0 or higher	
IM 155-6 PN HF	V2.0 or higher	
IM 155-6 PN BA	V3.2 or higher	
IM 155-6 PN HS	V4.0 or higher	
IM 155-6 DP HF	V1.0 or higher	
CPU 1510SP-1 PN	V1.6 or higher	
CPU 1510SP F-1 PN	V1.7 or higher	
CPU 1512SP-1 PN	V1.6 or higher	
CPU 1512SP F-1 PN	V1.7 or higher	
CPU 1515SP PC	V1.7 or higher	

Quick start 5

Introduction

This section shows you how to read and view your first measured values on the Energy Meter 400 VAC ST in a particularly quick and easy way.

Requirement

You have already connected the Energy Meter to your network with one of the connection types shown in the section Wiring (Page 16). The Energy Meter 400 VAC ST has already been integrated in your configuration tool (such as STEP 7), or the
Energy Meter 400 VAC ST has been integrated in your hardware catalog with the GSD/GSDML file.

Procedure

1. Configure an ET 200SP station

   Configure an ET 200SP station with a CPU 151xSP or an IM 155-6.

2. Plug module in ET 200S station

   Plug the Energy Meter 400 VAC ST into the ET 200SP station and use the module version with 32 bytes inputs and 12 bytes outputs.

3. Set the module parameters

   Set the following parameters for the Energy Meter 400 VAC ST:

   – Connection type that you have used for the Energy Meter 400 VAC ST (e.g. 3P4W)
   – Measuring range, i.e. the phase voltage (UL1-N) of your network (for example 230 V AC)
   – Frequency of your network (for example 50 Hz)
   – Primary and secondary current of the used current transformer (e.g. 100 A and 1 A)

   Leave all other parameters at their default settings and do not change them.

4. Load configuration

   Switch on the ET 200SP station and download the configuration to the CPU.

Result

After being switched on, the Energy Meter supplies the measured values for the "Total power L1L2L3" user data variant "Basic measurements" with the ID 254 or FE_H.

Read and check the measured values provided by the Energy Meter in the output data.

The table below shows the structure of the user data variant, the measured variables and the data type of the measured values in STEP 7 (TIA Portal) that are stored in the 32 bytes of output data of the module. Each measured variable is referenced via the measured value ID. An overview of all the measured variables with their measured value IDs is provided in the section Measured variables (Page 80).

Table 5- 1 Total power L1L2L3

Byte	Allocation	Data type	Unit	Value range	Measured value ID
0	User data variant	BYTE	-	254 (FE_H)	-
1	Quality information = QQ_1 I_3 U_3 I_2 U_2 I_1 U_1	BYTE	Bit string	qq xx xx xx	-
2 ... 3	Current L1	UINT	1 mA	0 … 65535	66007
4 ... 5	Current L2	UINT	1 mA	0 … 65535	66008
6 ... 7	Current L3	UINT	1 mA	0 … 65535	66009
8 ... 9	Total active power L1L2L3	INT	1 W	-27648 … 27648	66035
10 ... 11	Total reactive power L1L2L3	INT	1 var	-27648 … 27648	66036
12 ... 13	Total apparent power L1L2L3	INT	1 VA	-27648 … 27648	66034
14 ... 17	Total active energy L1L2L3	DINT	1 Wh	-2147483647 to +2147483647	225
18 ... 21	Total reactive energy L1L2L3	DINT	1 varh	-2147483647 to +2147483647	226
22	Reserved	BYTE	-	0	-
23	Total power factor L1L2L3	USINT	0.01	0 … 100	66037
24	Scaling current L1	USINT	-	0 ... 255	-
25	Scaling current L2	USINT	-	0 ... 255	-
26	Scaling current L3	USINT	-	0 ... 255	-
27	Scaling total active power L1L2L3	USINT	-	0 ... 255	-
28	Scaling total reactive power L1L2L3	USINT	-	0 ... 255	-
29	Scaling total apparent power L1L2L3	USINT	-	0 ... 255	-
30	Scaling total active energy L1L2L3	USINT	-	0 ... 255	-
31	Scaling total reactive energy L1L2L3	USINT	-	0 ... 255	-

Additional information

If you require further information about the evaluation and interpretation of the measured values, please refer to the section Reading and processing measured values (Page 30).

Reading and processing measured values 6

6.1 Basics for reading measured values

Introduction

The AI Energy Meter 400VAC ST provides the measured values and variables through the following methods:

- Cyclic: User data
- Acyclic: Measured value data records

User data

User data provide pre-defined measured values depending on the configured user data variant. The supplied measured values are cyclically written to the process image of the CPU. With some user data variants, the measured values are supplied as raw data, which you have to convert to the corresponding physical values using a supplied scaling factor.

Measured value data records

Each measured value data record supplies physical values that you can further process immediately. You read the values of a measured value data record acyclically with the RDREC instruction in a PLC tag of the STRUCT data type. You need a corresponding PLC tag for each measured value data record to be read.

You can display the read measured values in a watch table in STEP 7. Address the tag with the STRUCT data type directly.

Note

If you are using CPUs other than S7-1200 or S7-1500, convert 64-bit measured values to 32-bit measured values. Note the conversion can cause loss of accuracy.

For more information, read FAQ: Processing 64-bit-floating-point numbers in S7-300/400 (https://support.industry.siemens.com/cs/ww/en/view/56600676)

Validity of the measured values

After turning on the supply voltage UL1, the first measured values are available after approximately 2 seconds. In the input user data, the content of byte 0 is set to the selected user data variant. You can use this change in byte 0 as a trigger event.

As soon as the module has valid measured values, the value of this byte changes to a value within the value range.

Initial startup of the module

After the first startup or restart of the module, the parameters are transferred to the module. You can preset a user data variant in the parameters of the hardware configuration. This remains in effect until a different user data variant is selected in the output data (byte 0). This allows input user data to be modified dynamically according to the requirements of the process.

The user data variant defined in parameter data record 128 is used under the following conditions:

- A "0" is written in byte 0 in the output data of a user data variant.
- Byte 0 in the output data of a user data variant contains an invalid value: Coding of the user data variant not available

Current measured values become "0"

The current and all other measured values based on it are suppressed (or set "0") in the data records and in the user data in the following cases:

- The incoming current of the current transformer is less than the configured "Low limit for measuring current" parameter
- Incoming secondary current at the channel is higher than 12 A

The following measured values and derived measured variables of the phase involved become "0":

- Effective current value
- Active power
- Reactive power
- Apparent power
- Phase angle
- Power factor

A floating mean value is formed from the power values. These only become "0" after a corresponding time. The energy meter for active, reactive and apparent energy of the reset phase does not count any longer.

Substitute value behavior

The substitute values for input values of the AI Energy Meter 400VAC ST amount to "0".

See also

Reading measured values from user data cyclically (Page 34)

Read measured value from a measured value data record (Page 36)

Selecting the module versions (Page 24)

6.2 Quality information

Introduction

The AI Energy Meter 400VAC ST supplies quality information about the measurement in a status word. This information can be used to evaluate the status:

- Currents (I_{L1}, I_{L2}, I_{L3}) and voltages (U_1, U_2, U_3) lie within the valid measuring range
- Operating quadrants for Phase 1.

You can evaluate the quality information at every module version in Byte 1 of the output user data.

Structure of the quality information

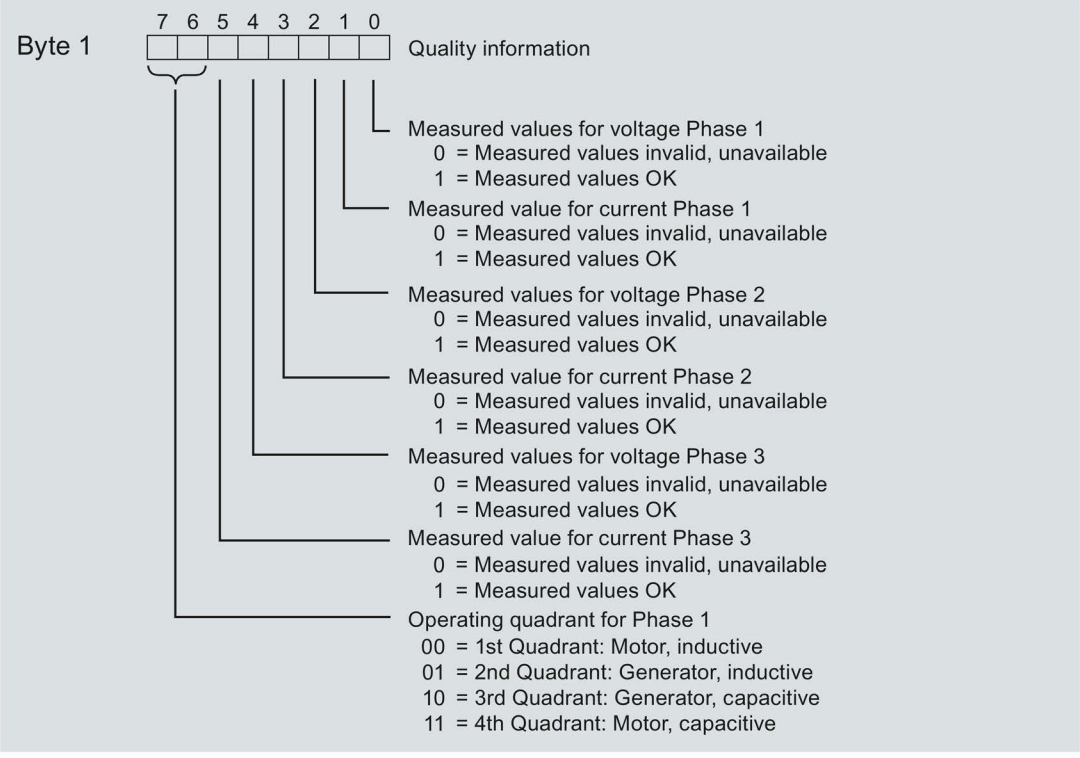

Figure 6-1 Quality information

Operating quadrant

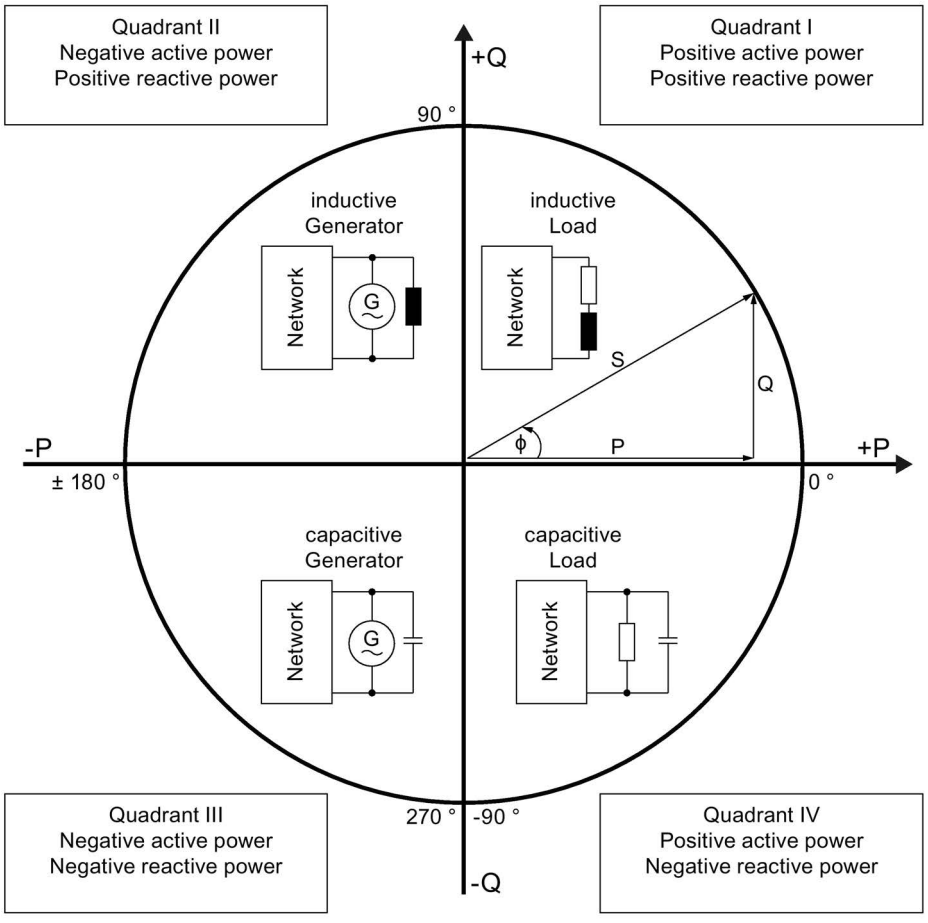

Figure 6-2 Quadrant in the quality bits

See also

Module version "32 I / 12 Q" (Page 88)

6.3 Reading measured values from user data cyclically

Requirement

- STEP 7 is open.
- AI Energy Meter 400VAC ST is configured.

Scaling of measured values in the user data

Since the value range of 16-bit values is often smaller than the value range of the physical value, a scaling factor is supplied together with the basic value in the user data for the respective measured or calculated values. You determine the actual value of the measured variable with the following formula:

Actual value of measured quantity = measured value in the user data x $10^{\text{scaling factor}}$

Procedure

To read measured values from the user data cyclically, proceed as follows:

1. Read the relevant measured value from the input data.
2. Observe the scaling factor at scaled measured values and convert the read measured value using the scaling factor.

Example

The user data variant 254 (FE_H) "Total power L1L2L3" is configured on the AI Energy Meter 400VAC ST. The measured value for "Current L1" should be read.

Table 6- 1 Total power L1L2L3

Byte	Allocation	Data type	Unit	Value range	Measured value ID
0	User data variant	BYTE	-	254 (FE_H)	-
1	Quality information = QQ_1 I_3 U_3 I_2 U_2 I_1 U_1	BYTE	Bit string	qq xx xx xx	-
2 ... 3	Current L1	UINT	1 mA	0 … 65535	66007
4 ... 5	Current L2	UINT	1 mA	0 … 65535	66008
6 ... 7	Current L3	UINT	1 mA	0 … 65535	66009
:	:	:	:	:	:
24	Scaling current L1	USINT	-	0 ... 255	-
25	Scaling current L2	USINT	-	0 ... 255	-
26	Scaling current L3	USINT	-	0 ... 255	-
:	:	:	:	:	:
31	Scaling total reactive energy L1L2L3	USINT	-	0 ... 255	-

In the user data variant FE_H (254) the measured value for the current L1 is stored in Byte 2 + 3. The current is supplied by the module as a 16-bit-fixed-point number in the value range from 0 to 65535 in the unit 1 mA. In addition the scaling factor for the current L1 has to be considered additionally. The module supplies the related scaling factor in Byte 24.

The actual value for current L1 is calculated as follows:

Actual value for current L1 = Current L1 x $10^{\text{Scaling current L1}}$

See also

Basics for reading measured values (Page 30)

6.4 Read measured value from a measured value data record

Introduction

To read measured values of a measured value data record, use the RDREC instruction. The read values are stored in a PLC variable with user-defined data type (UDT).

You can find more information on this in the STEP 7 documentation, under the keyword "RDREC".

Requirement

- STEP 7 is open.
- AI Energy Meter 400VAC ST is configured.

Procedure

1. Create a PLC tag of the STRUCT data type in STEP 7.
2. Insert the number of structural elements, which corresponds to the number of entries contained in the measured value data record.
3. Insert the RDREC instruction in the user program.
4. Configure the RDREC instruction as follows:
   - ID: Hardware identifier or start address of the Energy Meter (depending on the CPU used).
   - INDEX: Number of measured value data record whose entries are read.
   - MLEN: Length of the measured value data record in bytes. "0" if all the entries are to be read.
   - RECORD: Target range for the read data record Length depends on MLEN.
5. Call the RDREC instruction with REQ = 1.

Result

The values from the measured value data record were transferred into the target data area.

See also

Basics for reading measured values (Page 30)

Energy counters 7

7.1 How the energy meter works

Introduction

The AI Energy Meter 400VAC ST provides 42 energy counters that detect both line-based and phase-based energy values.

- Active energy (total, outflow, inflow)
- Reactive energy (total, outflow, inflow)
- Apparent energy (total)

How energy recording works

Based on the measured currents and voltages and the calculation cycle the Energy Meter calculates the active, reactive and apparent energy. The active, reactive and apparent energies are updated in each calculation cycle.

Configuring

You configure the following settings for the energy counters:

- Activation of the gate for the energy counter

  The gate allows you to start and stop the counters via output data (DQ bit). If you deactivate the gate, the count starts immediately when the Energy Meter is switched on.
- Modes of the energy counters

  The energy counter count endlessly.

The settings apply to the energy counter of all phases.

Changing properties in RUN

You can change the following properties of energy counters in runtime:

- Enable / disable energy counter
- Reset energy counter
- Set initial values for the energy counter

Automatic reset of the energy counter

The energy counters are automatically reset to "0" when parameter settings relevant to the energy counter are changed. In the case of phase-specific changing of parameter settings relevant to the energy counter only the energy counters of the respective phases are reset.

Changing of the following parameters results in resetting of the energy counters:

- Measurement type or range
- Current transformer (primary current/secondary current)
- Direction of current

Example

The following figure shows the effect of initial value, reset and start/stop parameters with activated gating using the energy counter as an example:

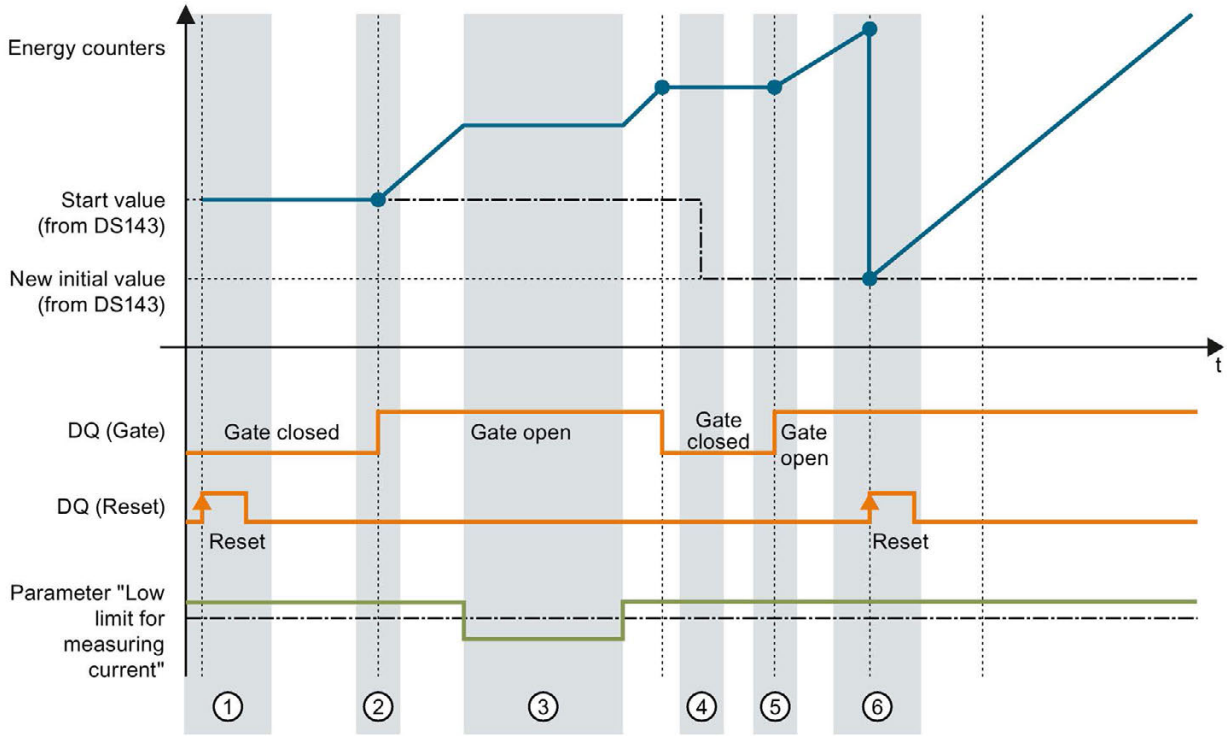

① The counter is reset to the value specified in the configuration. The gate is closed. The counter does not count.

② The gate is opened via the control byte 1 in the output data of the user data variant. The counter counts.

③ The configured current low limit has been violated. The counter does not count.

④ The gate is closed. The counter does not count. A new start value is written to the measured value data record 143 with the WRREC instruction.

⑤ The gate is opened again via the control byte 1 in the output data of the user data variant. The counter counts with the new start value.

⑥ The counter is reset via the control byte 1 in the output data of the user data variant. The counter counts from the new start value that was transferred via the measured value data record 143.

See also

Evaluating energy counters (Page 41)

7.2 Configuring counters

Overview

You can configure the energy counters of the AI Energy Meter 400VAC ST as follows:

- Activate / Deactivate
- Start / stop counters using gate
- Set and reset start value

Energy counter gate

You have the option of starting and stopping the energy counter using the gate. To this purpose you have to:

- Select the "Enable gate control for the energy counter" parameter in the configuration of the AI Energy Meter 400VAC ST.
- Set the DQ bit for the "counter gate" in the user data in Control byte 1 of the output data (Bit 6 in Control byte 1).

The "Enable gate control for the energy counter" parameter and the DQ bit for the "counter date" behave like the parallel connection of contacts.

Gate enabled: Gate "open" if DQ = "1"

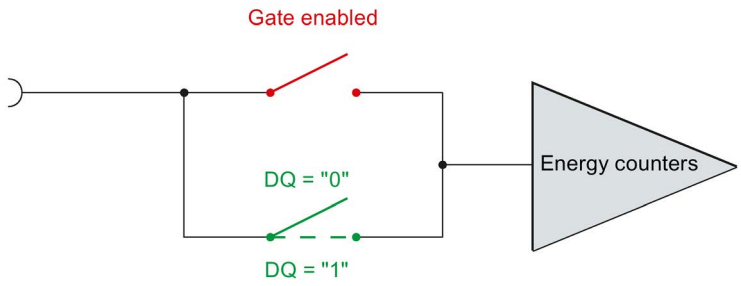

Figure 7-1 Gate enabled

If you deselect the "Enable gate control for the energy counter" parameter in the configuration of the AI Energy Meter 400VAC ST, the energy counters operate independently of the DQ bit as long as the current value lies above the configured "Low limit for measuring current".

Gate disabled: Gate is always "open" (signal path closed)

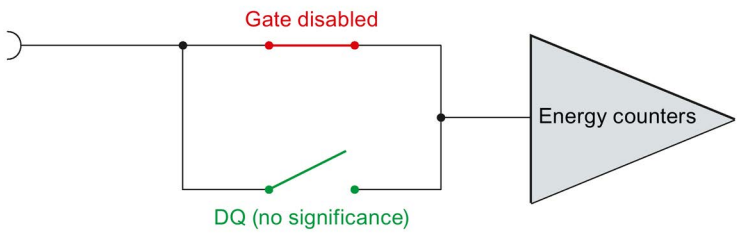

Figure 7-2 Gate disabled

Set and reset start value

The counters can be set to their start value via the output data of each user data variant. With energy counters, you have to reset the bit of the energy counter in control byte 2 of the data record 143.

You can reset each energy counter to the start value or also specify a new start value via the data record 143. You define the moment for updating of the start values in the data record 143 and in Control byte 1 in the user data. Start values are either applied immediately or after a reset bit has been set from 0 to 1.

You can find a detailed description for this in section Data record for energy counter (DS 143) (Page 49).

7.3 Evaluating energy counters

Evaluating energy counters

The energy counters are evaluated by

- Using the input data of the user data variants for energy
  - User data variant "Total energy L1 L2 L3" (ID 249 or $F9_H$)
  - User data variant "Energy L1" (ID 248 or $F8_H$)
  - User data variant "Energy L2" (ID 247 or $F7_H$)
  - User data variant "Energy L3" (ID 246 or $F6_H$)
- By reading data records
  - "Data record for basic measured values (DS 142)" for evaluation of the total energies L1 L2 L3
  - "Data record for energy counter (DS 143)" for evaluation of the phase-specific energies

Evaluate measured values

The evaluation of measured values via the input data of user data variants and reading of data records with the RDREC instruction is described in the section Reading and processing measured values (Page 30).

7.4 Reset energy counter

7.4.1 Introduction

Introduction

At the beginning of a new work order, it may be useful to reset the energy counter of the Energy Meter Reset here means that the energy counters are reset to their start value.

The following sections describe how you

- Reset energy counters via the outputs of the user data.
- Reset energy counters via data record 143.

7.4.2 Reset energy counters via user data

Introduction

Due to the differing lengths of the output data resetting of the energy counters depends on the configured module version.

If you use module versions with 12 bytes of output data, you can

- Reset energy counters for **all** phases separately by active, reactive and apparent energy.
- Reset energy counters for each **individual** phase separately by active, reactive and apparent energy.

If you use the module version with 2 bytes output data, you always reset **all** the energy counters simultaneously.

Procedure at module version with 12 bytes of output data

Resetting energy counters for all 3 phases

1. Select the categories of energy counter that you want to reset in byte 2.
   - Set bit 5 for active energy counters.
   - Set bit 6 for reactive energy counters.
   - Set bit 7 for apparent energy counters.

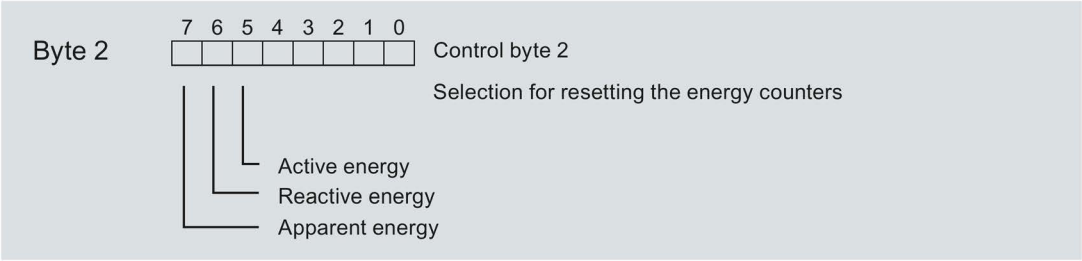

Figure 7-3 Selection of energy counters

2. Set the reset bit (bit 7) in byte 1.

   If there is an edge change of the reset bit for energy counters from 0 to 1, the module resets all energy counters that you previously selected in byte 2.

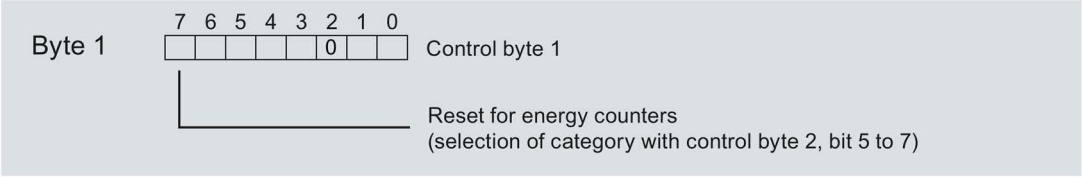

Figure 7-4 Reset bit for energy counters

Procedure at module version with 2 bytes of output data

If you use the module version with 2 bytes of output data, you always reset all the energy counters simultaneously. Set the reset bit (Bit 7) in Control byte 1 from 0 to 1 through an edge change.

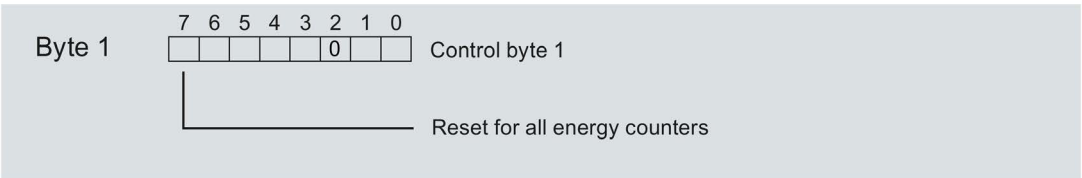

Figure 7-5 Resetting the energy counters at module version with 2 bytes of output data

Start values

After the reset the energy counters count with the specified start values (default = 0). You can change the start values for the energy counters via data record DS 143, see section Structure for energy counters (DS 143) (Page 49).

You can also reset the counters on a phase-specific basis by active, reactive and apparent energy using data record 143.

7.4.3 Resetting energy counters via data record DS 143

Introduction

At all the module versions you can reset the energy counters via the data record DS 143. Resetting is possible for:

- Energy counters for each **individual** phase separately by active, reactive and apparent energy.

Procedure at all module versions via data record DS 143

1. In Control byte 1 of the DS 143 set the reset bit (Bit 2) to 1 and Bit 0 to 1 for the overflow counter.
2. In Control byte 2 of the DS 143 set the category of the energy counters (active, reactive, apparent energy) to 1 via Bits 5 to 7.
3. In Control byte 1 of the DS 143 set Bit 7 for the moment of application of the start values:
   - Bit 7 to 0, if the start value are to be applied immediately after the transfer of the data record
   - Bit 7 to 1, if the start value are only to be applied after the reset bit has been set in the output data of the user data.

4. Transfer the data record with the WRREC instruction.

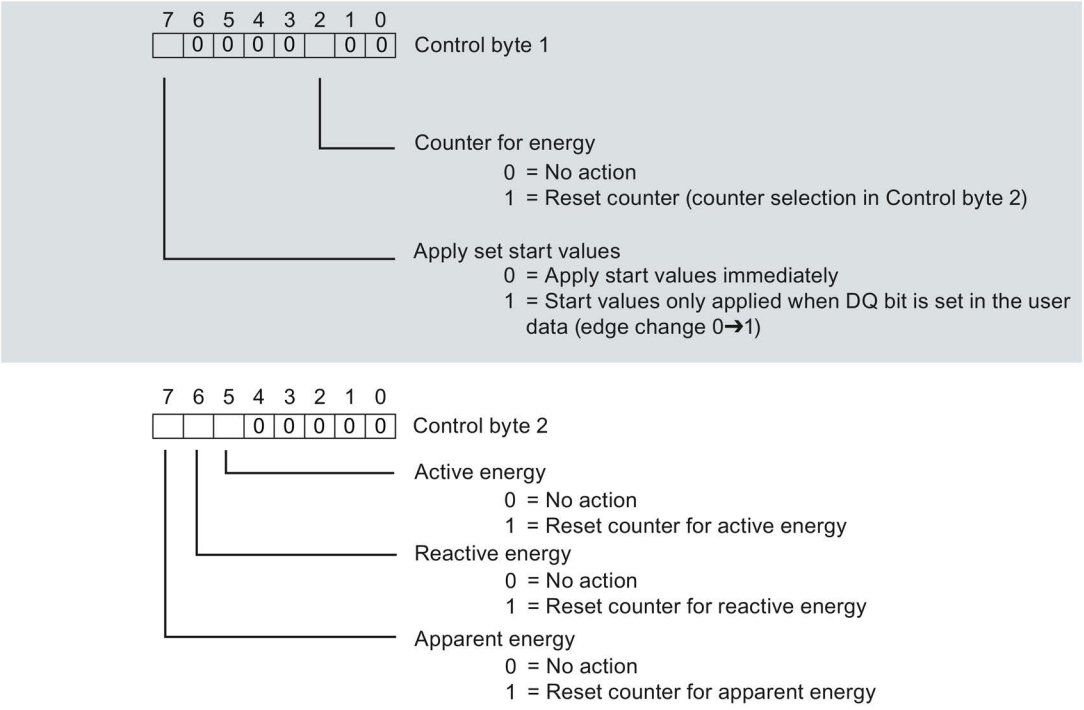

Figure 7-6 Energy counter control information DS 143

Start values

You specify the moment for the application of the start values in Control byte 1 via Bit 7. After the reset the energy counters count with the specified start values (default = 0). You can change the start values for the energy counters via data record DS 143.

7.4.4 Example for resetting energy counters via data record DS 143

Introduction

Before you can transfer the data record DS 143 to the CPU you have to create a PLC data type in your user program that has an identical structure to data record DS 143.

Procedure

1. Create a PLC data type that has an identical structure to data record DS 143.

   Detailed information on the structure of data record 143 is available in section Structure for energy counters (DS 143) (Page 49).

Byte	Measured variable	Data type	Unit	Value range	Measured value ID
0	Version	BYTE	-	1	-
1	Reserved	BYTE	-	0	-
2	Control byte 1 - L1	BYTE	Bit string	-	-
3	Control byte 2 - L1	BYTE	Bit string		
4	Control byte 1 - L2	BYTE	Bit string		
5	Control byte 2 - L2	BYTE	Bit string		
6	Control byte 1 - L3	BYTE	Bit string		
7	Control byte 2 - L3	BYTE	Bit string		
8...15	Active energy inflow (initial value) L1	LREAL	Wh	See Section Structure for energy counters (DS 143) (Page 49)	61180
16...23	Active energy outflow (initial value) L1	LREAL	Wh		61181
:	:	:	:	:	:

2. Create a DB or instance DB and allocate the values of the data record

   Byte 0 and byte 1:

   Enter the value 01_H in Byte 0 and the value 00_H to Byte 1.

   Byte 2 ... byte 7: Control bytes for energy counters

   In the control bytes for the relevant phases, specify which energy counters you want to reset.

   The control bytes specify for each phase (L1, L2, L3) separately if and which energy meter values are to be reset.

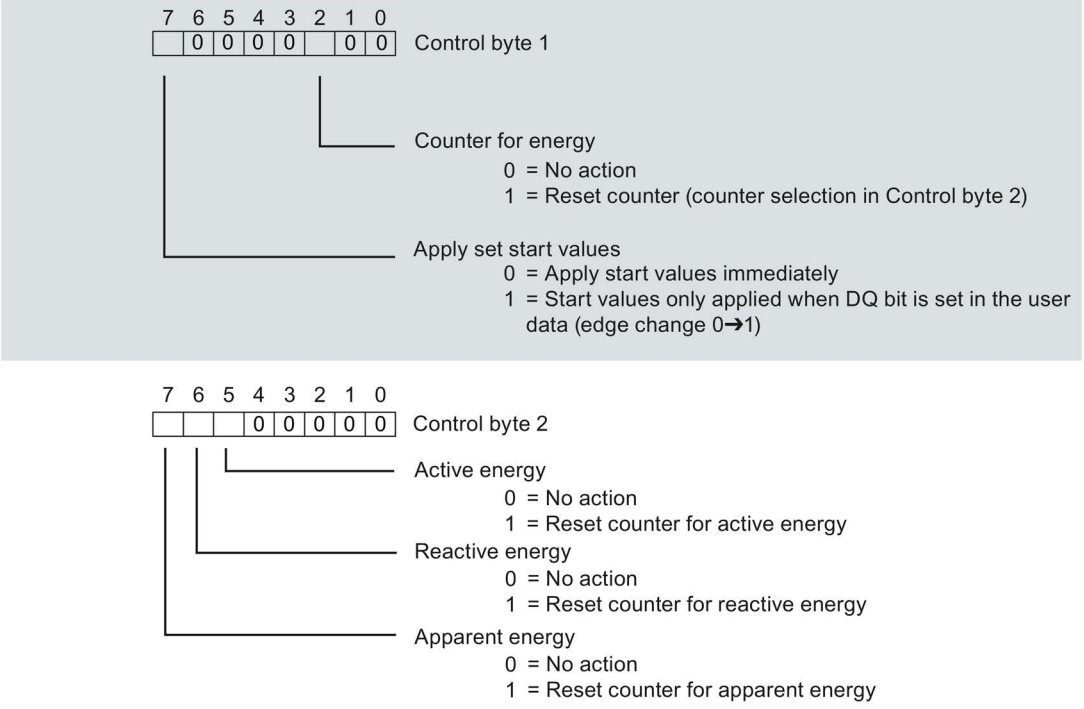

Figure 7-7 Control information DS 143 for energy counter

   Byte 8 ... byte 127: Start values for the individual energy meters

   The start values for energy counters in data record 143 are 64-bit floating point numbers. This corresponds to the data type LREAL in S7-1200 and in S7-1500.

3. Write the data record to the AI Energy Meter 400VAC ST module using the "WRREC" instruction.

   The input parameters must be allocated as follows:

   – REQ: A new write job is triggered if REQ = TRUE.
   – ID: Hardware identifier or start address of the Energy Meter (depending on the CPU used).
   – INDEX: The data record number: 143
   – LEN: The maximum length of the data record: 128
   – RECORD: A pointer to the data area in the CPU which includes data record 143.

Note

If you want to write or read several AI Energy Meter 400VAC ST at the same time, keep in mind the maximum number of active jobs in communication with SFB52/SFB53.

7.5 Data record for energy counter (DS 143)

7.5.1 Structure for energy counters (DS 143)

Energy meter data record 143 for different actions

The energy meter data record 143 includes all energy meters available on the module phase-by-phase. The data record can be used for different actions:

- Reset the energy counter to user-specific value (e.g. "0")
- Reading the current values of the energy counters

Energy meter data record 143

Table 7- 1 Energy meter data record 143

Byte	Measured variable	Data type	Unit	Value range	Measured value ID
0	Version	BYTE	-	1	-
1	Reserved	BYTE	-	0	-
2	Control byte 1 - L1	BYTE	Bit string	-	-
3	Control byte 2 - L1	BYTE	Bit string		
4	Control byte 1 - L2	BYTE	Bit string		
5	Control byte 2 - L2	BYTE	Bit string		
6	Control byte 1 - L3	BYTE	Bit string		
7	Control byte 2 - L3	BYTE	Bit string		
8...15	Active energy inflow (initial value) L1	LREAL	Wh		61180

Byte	Measured variable	Data type	Unit	Value range	Measured value ID
16...23	Active energy outflow (initial value) L1	LREAL	Wh		61181
24...31	Reactive energy inflow (initial value) L1	LREAL	varh		61182
32...39	Reactive energy outflow (initial value) L1	LREAL	varh		61183
40...47	Apparent energy (initial value) L1	LREAL	VAh		61184
48...55	Active energy inflow (initial value) L2	LREAL	Wh		61200
56...63	Active energy outflow (initial value) L2	LREAL	Wh		61201
64...61	Reactive energy inflow (initial value) L2	LREAL	varh		61202
72...79	Reactive energy outflow (initial value) L2	LREAL	varh		61203
80...87	Apparent energy (initial value) L2	LREAL	VAh		61204
88...95	Active energy inflow (initial value) L3	LREAL	Wh		61220
96...103	Active energy outflow (initial value) L3	LREAL	Wh		61221
104...111	Reactive energy inflow (initial value) L3	LREAL	varh		61222
112...119	Reactive energy outflow (initial value) L3	LREAL	varh		61223
120...127	Apparent energy (initial value) L3	LREAL	VAh		61224

Error while transferring the data record

The module always checks all the values of the transferred data record. Only if all the values were transferred without errors does the module apply the values from the data record.

The WRREC instruction for writing data records returns corresponding error codes when errors occur in the STATUS parameter.

The following table shows the module-specific error codes and their meaning for the measured value data record 143:

Error code in STATUS parameter (hexadecimal)				Meaning	Solution
Byte 0	Byte 1	Byte 2	Byte 3		
DF	80	B0	00	Number of the data record unknown	Enter a valid number for the data record.
DF	80	B1	00	Length of the data record incorrect	Enter a valid value for the data record length.
DF	80	B2	00	Slot invalid or cannot be accessed.	Check the station whether the module is plugged or drawn. Check the assigned values for the parameters of the WRREC instruction
DF	80	E1	01	Reserved bits are not 0.	Check Byte 2...7 and set the reserved bits back to 0.
DF	80	E1	39	Incorrect version entered.	Check Byte 0. Enter a valid version.
DF	80	E1	3A	Incorrect data record length entered.	Check the parameters of the WRREC instruction. Enter a valid length.
DF	80	E1	3C	At least one start value is invalid.	Check Bytes 8...103 and Bytes 158...169. The start values may not be negative.
DF	80	E1	3D	At least one start value is too large	Check Bytes 8...103 and Bytes 158...169. Observe the ranges of values for start values.

7.5.2 Structure of the control and feedback interface for DS 143

Introduction

Bytes 2 to 7 of data record 143 form the phase-based control and feedback interface for the measured value data record of the energy counter.

- Bytes 2 and 3: Control and feedback interface for phase 1
- Bytes 4 and 5: Control and feedback interface for phase 2
- Bytes 6 and 7: Control and feedback interface for phase 3

Status information

When data record 143 is read with the RDREC instruction, Bytes 2 to 7 supply phase-specific status information for energy counters.

The status information enables you can see which counters are returning their values in the data record 143. If energy counters return their values in the status byte 1, you can determine the type of energy counter with status byte 2.

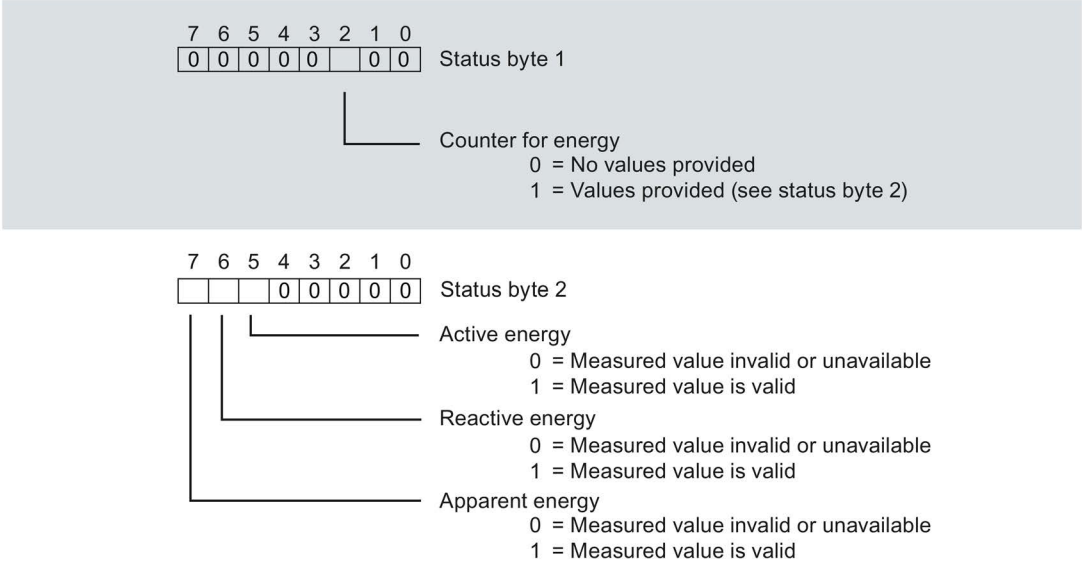

Figure 7-8 Status information DS 143 (read access)

Control information

When data record 143 is written with the WRREC instruction, Bytes 2 to 7 are used as phase-specific control information for energy counters. The length of the control information amounts to 2 bytes for each phase:

- In Control byte 1 you determine how you reset the counter and the time at which the counter is reset.
- In Control byte 2 you determine which energy counter you want to reset.

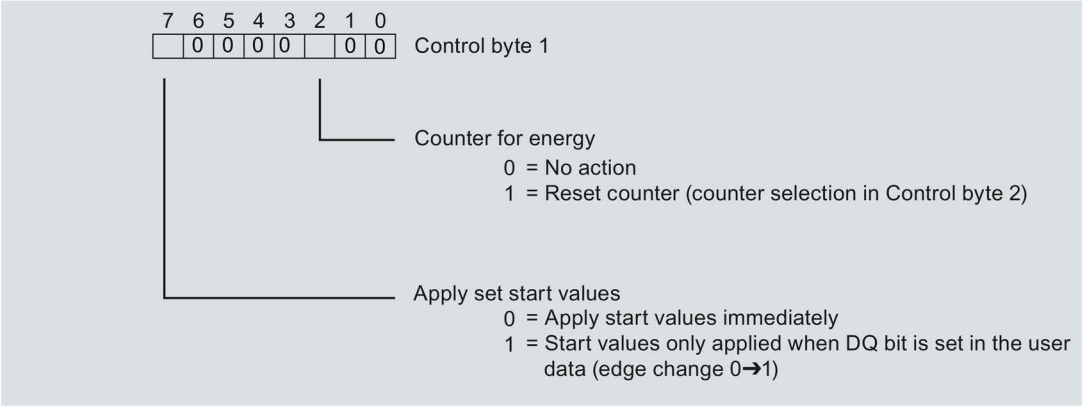

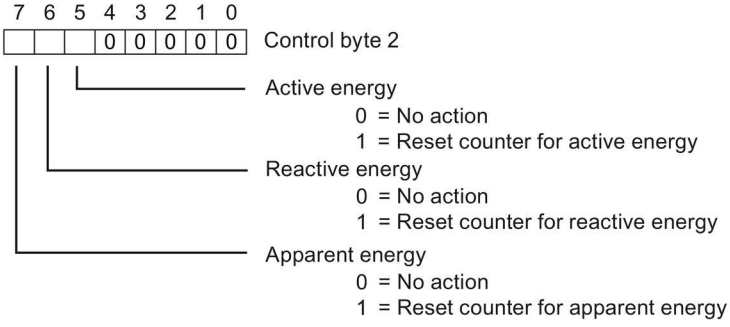

Figure 7-9 Control information DS 143 (write access)

Parameters 8

8.1 Parameters

Parameters of the AI Energy Meter 400VAC ST (DS 128)

As a rule the AI Energy Meter 400VAC ST is already integrated in the hardware catalog of STEP 7 (TIA Portal) or STEP 7 V5.5 or higher. In this case STEP 7 (TIA Portal) or STEP 7 V5.5 or higher checks the parameterized properties for plausibility during designing.

However, you can also assign parameters to the module by means of the GSD file and the configuration software of any provider. The module checks the validity of the configured properties only after the configuration has been downloaded. Note that some parameters depend on the selected connection type of the Energy Meter. For example in the connection type 1P2W for measurements in single-phase AC network it does not make sense to enter parameters for Phases 2 and 3 and they are also not checked by the system in this case.

The effective range of the parameters that can be set using a GSD file depends on the type of bus system used:

- Distributed operation on PROFINET IO in an ET 200SP system
- Distributed operation with PROFIBUS DP in an ET 200SP system

In addition you can change the parameterized properties via the user program in RUN mode. When you assign parameters in the user program, the "WRREC" instruction transfers the parameters to the module using data records (see appendix Configuration via parameter data records (Page 72)). The following table summarizes all the configurable parameters.

Table 8- 1 AI Energy Meter 400VAC ST parameters

Parameters	Value range	Default setting	Reconfiguration in RUN	Effective range with configuration software, e.g. STEP 7 (TIA Portal)	
				GSD file PROFINET IO	GSD file PROFIBUS DP
Diagnostics line voltage	• Disable • Enable	Disable	Yes	Module	Module
Connection type	• Disabled • 1P2W - 1-phase alternating current • 3P4W - 3 phases, 4 conductors	3P4W - 3 phases, 4 conductors	Yes	Module	Module (only 1P2W, 3P4W and deactivated)
Voltage measuring range	• 100 V • 110 V • 115 V • 120 V • 127 V • 190 V • 200 V • 208 V • 220 V • 230 V	230 V	Yes	Module	Module
Line voltage tolerance [%]	• 1 ... 50 %	10 %	Yes	Module	Module
Line frequency	• 50 Hz • 60 Hz	50 Hz	Yes	Module	Module
Enable gate energy counter	• No • Yes	No	Yes	Module	-
User data variant	See the table Overview of the user data variants (Page 92)	Total energy L1 L2 L3 (ID 254 or FE_H)	Yes	Module	Module (only user data variant)
Diagnostics overflow current	• Disable • Enable	Disable	Yes	Channel/phase	Module
Diagnostics overflow voltage	• Disable • Enable	Disable	Yes	Channel/phase	Module

Parameters	Value range	Default setting	Reconfiguration in RUN	Effective range with configuration software, e.g. STEP 7 (TIA Portal)	
				GSD file PROFINET IO	GSD file PROFIBUS DP
Diagnostics underflow voltage	• Disable • Enable	Disable	Yes	Channel/phase	Module
Diagnostics low limit voltage	• Disable • Enable	Disable	Yes	Channel/phase	- (blocking is preset)
Diagnostics overflow cumulative values	• Disable • Enable	Disable	Yes	Channel/phase	Module
Overcurrent tolerance value [0.1 A]	• 10 ... 100 [0.1 A]	100 [0.1 A]	Yes	Channel/phase	Module
Overcurrent tolerance time [ms]	• 1 ... 60000 ms	40000 ms	Yes	Channel/phase	Module
Low limit for current measurement [mA]	• 20 ... 250 mA	50 mA	Yes	Module	- (Default setting: 20 mA)
Current transformer primary current [A]	• 1 ... 10000 A	1 A	Yes	Channel/phase	Module (Value range: 1...65535)
Current transformer secondary current	• 1 A • 5 A	1 A	Yes	Channel/phase	Module
Reverse current direction	• Disable • Enable	Disable	Yes	Channel/phase	Module

8.2 Description of parameters

Diagnostics line voltage

Activate the diagnostics line voltage here. If there is no voltage or too little voltage at L1, the message "No supply voltage at L1" is output and a diagnostic interrupt is triggered.

Connection type

Specify the connection type you used for the Energy Meter here.

For more detailed information, refer to "Connection examples (Page 19)".

Voltage measuring range

Here you can set the voltage measuring range of the power supply system.

Line voltage tolerance

Monitoring the supply voltage based on this tolerance band is a positive or negative value.

Line frequency

Here you can set the line frequency of the power supply system.

Enable gate energy counter

Enable the gate for the energy counter here. When the gate is enabled, the energy counter only counts when the corresponding output data bit (DQ bit) is set to "1".

Diagnostics overflow current

The measured current is monitored after expiry of the "Tolerance time" for "Overcurrent [0.1 A] tolerance value". Exceeding this results in overflow current.

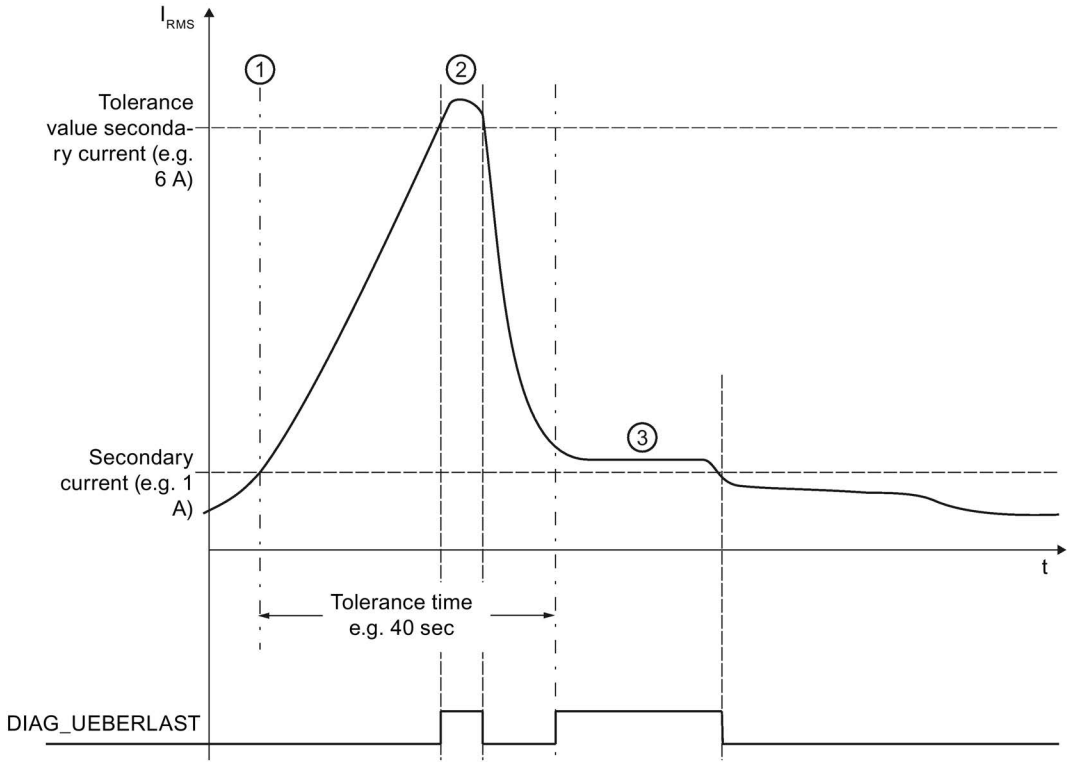

① The tolerance time starts as soon as the secondary current value (1 A, 5 A) is exceeded.

② DIAG_UEBERLAST diagnoses the affected phase if the tolerance value of the secondary current has been exceeded within the assigned tolerance time (or the maximum value of the secondary current (12 A) is exceeded).

③ After the set tolerance time has elapsed, the secondary current value (1 A, 5 A) is monitored. A violation of the secondary current value also returns DIAG_UEBERLAST.

Figure 8-1 Diagnostics response in the event of a current overload

Diagnostics overflow voltage

Line voltage (measuring range) is monitored for tolerance. A violation of the overflow triggers a diagnostic interrupt.

Diagnostics underflow voltage

Line voltage (measuring range) is monitored for tolerance. A violation of the underflow triggers a diagnostic interrupt.

Diagnostics low limit voltage

Low limit for voltage is monitored. A violation of the low limit triggers a diagnostic interrupt.

Diagnostics overflow cumulative values

A cumulative overflow in the calculated variables is displayed. The values stop at the high or low limit. A violation triggers a diagnostic interrupt.

Overcurrent tolerance value [0.1 A]

The tolerance factor secondary overcurrent parameter (10 to 100) indicates the tolerable value of the secondary current in 0.1 A increments (10 = 1 A to 100 = 10 A). Always take note of the current class of the current transformer being used (1 A, 5 A).

Overcurrent tolerance time

Monitoring time in ms in which the overcurrent is tolerated. 0 means that the monitoring time has been disabled.

Low limit for measuring current

The configurable low limit for measuring current refers to the secondary currents and is used to avoid incorrect calculations in the case of very low currents. Incorrect measurements of very low currents in particular are a cause of inaccuracies in the current transformer used. Set the low limit for the current measurement to the required value depending on your process.

Tip: If you want to find the low limit for the current measurement experimentally, set it to a lower value. Then, feed in a very precise low current and determine the measurement error that can no longer be tolerated. Afterwards, set the low limit for the current measurement to the limit value you have determined.

If current falls below the low limit for the current measurement, the following measured values and derived variables of the affected phase are reset.

- Effective current value
- Active power
- Reactive power
- Apparent power
- Phase angle
- Power factor

A moving mean value is formed from the power values and they only become "0" after a corresponding time. The energy meters for active, reactive and apparent energy of the reset phase do not measure any longer.

Current transformer primary current

Enter here the nominal value for the primary current of the current transformer used. The transformer ratio is calculated from the primary and secondary current.

Current transformer secondary current

Enter here the nominal value for the secondary current (1 A or 5 A) of the current transformer used. The transformer ratio is calculated from the primary and secondary current.

Reverse current direction

Setting to determine whether or not to reverse the direction of current.

In the event of inadvertent incorrect connection, this parameter can be used to correct the measured values, thus saving the hassle of rewiring. The direction of the current is only evident from the power measurement values. The current measurement value is an rms value.

Interrupts/diagnostic alarms

9

9.1 Status and error display

LED display

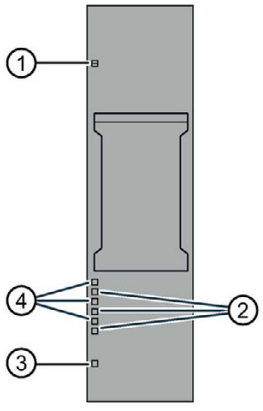

① DIAG (green/red)
② Error (red)
③ PWR (green)
④ Status (green)

Figure 9-1 LED display

Meaning of the LED displays

The following table explains the meaning of the status and error displays. Remedial measures for diagnostic alarms can be found in the section Diagnostic alarms (Page 64).

DIAG LED

Table 9- 1 Meaning of the DIAG LED

DIAG	Meaning
Off	Supply voltage of the ET 200SP not OK
Flashes	Module not ready for operation (no parameters assigned)
On	Module parameters assigned and no module diagnostics
Flashes	Module parameters assigned and module diagnostics

Status LED

Table 9- 2 Meaning of the Status LED

Status	Meaning
Off	Channel deactivated or error
On	Channel activated and no error

Error LED

Table 9- 3 Meaning of the Error LED

Status	Meaning
Off	Channel is OK
On	Channel is faulty

PWR LED

Table 9- 4 Meaning of the PWR LED

PWR	Meaning
Off	Line voltage missing
On	Line voltage available

9.2 Interrupts

The AI Energy Meter 400VAC ST analog input module supports diagnostic alarms.

9.2.1 Diagnostics interrupt

Diagnostic interrupt

The module generates a diagnostic error interrupt at the following events:

- Channel is temporarily unavailable
- Error
- Supply voltage missing
- Parameter assignment error
- Low limit voltage violated (measuring voltage < 80 V)
- High limit value voltage exceeded
- Underflow voltage (tolerance for supply voltage) violated
- Overflow voltage (tolerance for supply voltage) exceeded
- Overload (current measurement > 12 A or tolerance overcurrent exceeded after expiry of the tolerance time)
- Overflow of the calculated values (measured or calculated values screen exceed the representable range of values)

See also

Diagnostic alarms (Page 64)

9.3 Diagnostic alarms

Diagnostic alarms

Note

Assignment channel in diagnostics alarm ⇔ Phase

Channels are counted in the diagnostic messages starting from channel "0" and in the AI Energy Meter 400VAC ST starting from phase "1".

Note the following assignment:

- Channel "0" ⇔ Phase "1"
- Channel "1" ⇔ Phase "2"
- Channel "2" ⇔ Phase "3"

Table 9- 5 Error types

Diagnostic message	Error code	Meaning	Solution
Undervoltage[1]	2_H	Line voltage (measuring range) is monitored for tolerance. Violation leads to voltage overflow/underflow	Observe the line voltage range
Overvoltage	3_H		
Overload	4_H	The measured current is monitored after expiry of the "Tolerance time" for "Tolerance value overcurrent [0.1 A]". Exceeding this results in overflow current. The maximum value of the secondary current (12 A) has been exceeded.	Observe the current range
High limit	7_H	Cumulative overflow in the calculated values	-
Low limit[1]	8_H	Violation of the low limit for voltage measurement. The message occurs when the configured minimum current or voltage is below 80 V.	Observe the voltage range
Error	9_H	Internal module error (diagnostic alarm on channel 0 applies to the entire module).	Replace the module
Parameter assignment error	10_H	• The module cannot evaluate parameters for the channel. • Incorrect parameter assignment.	Correct the parameter assignment
Load voltage missing	11_H	Missing or insufficient line voltage on phase L1	Check supply
Channel is temporarily unavailable	$1F_H$	Firmware upgrade is being performed. Channel 0 applies to the entire module. The module is currently not performing any measurements.	--
		A user calibration is being executed at the channel.	Complete the user calibration

[1] If the "Undervoltage" and "Low limit" diagnostics are active at the same time, the "Low limit" diagnostics has higher priority and deletes the "Undervoltage" diagnostics.

9.4 Diagnostics response

Diagnostics response

This section describes the response of the AI Energy Meter 400VAC ST when diagnostics information is reported.

Measured values in the case of diagnostics

Even in the case of diagnostics, measured values continue to be displayed as long as they can still be acquired. If measured values cannot be measured or calculated, "0" is displayed.

Zero suppression

If the supplied current is less than the configured "Low limit for measuring current" parameter, the current measurement and all dependent variables are suppressed or set to "0".

Overload limitation

If the secondary current fed in at the channel is higher than 12 A, the module changes to limitation and the measured value of the current and all dependent variables are set to "0".

Value falls below "Low limit current measurement"

If current falls below the low limit for the current measurement, the following measured values and derived variables of the affected phase are reset.

- Effective current value
- Active power
- Reactive power
- Apparent power
- Phase angle
- Power factor

A moving mean value is formed from the power values and they only become "0" after a corresponding time. The energy meters for active, reactive and apparent energy of the reset phase do not measure any longer.

Loss of the supply voltage

At a loss of supply voltage at U_{L1} (phase 1), all measurements are interrupted.

After the supply voltage is restored, the AI Energy Meter 400VAC ST operates again with the configuration / parameter assignment stored in the CPU. The energy counter is used for retentively stored values.

Input data to "0"

Note

If the AI Energy Meter 400VAC ST is no longer recognized by the interface module (for example, because it is defective or not plugged in), all input data are set to "0".

Technical specifications 10

10.1 Technical specifications

Technical specifications of the AI Energy Meter 400VAC ST

Article number	6ES7134-6PA01-0BD0
General information	
Product type designation	ET 200SP, AI Energy Meter 400 V AC ST, PU 1
Firmware version	V3.0
usable BaseUnits	BU type D0, BU20-P12+A0+0B
Product function	
• Voltage measurement	Yes
• Voltage measurement with voltage transformers	No
• Current measurement	Yes
• Phase current measurement without current transformers	No
• Phase current measurement with current transformers	Yes
• Energy measurement	Yes
• Frequency measurement	Yes
• Power measurement	Yes
• Active power measurement	Yes
• Reactive power measurement	Yes
• I&M data	Yes; I&M0 to I&M3
• Isochronous mode	No
Engineering with	
• STEP 7 TIA Portal configurable/integrated as of version	V13 SP1
• STEP 7 configurable/integrated as of version	V5.5 SP4 and higher
• PROFIBUS as of GSD version/GSD revision	GSD Revision 5
• PROFINET as of GSD version/GSD revision	V2.3

Article number	6ES7134-6PA01-0BD0
Operating mode	
• cyclic measurement	Yes
• acyclic measurement	Yes
• Acyclic measured value access	Yes
• Fixed measured value sets	Yes
• Freely definable measured value sets	No
Configuration control	
via dataset	Yes
CiR – Configuration in RUN	
Reparameterization possible in RUN	Yes
Calibration possible in RUN	No
Installation type/mounting	
Mounting position	Any
Supply voltage	
Design of the power supply	Supply via voltage measurement channel L1
Type of supply voltage	100 - 240 V AC
permissible range, lower limit (AC)	90 V
permissible range, upper limit (AC)	264 V
Line frequency	
• permissible range, lower limit	47 Hz
• permissible range, upper limit	63 Hz
Power loss	
Power loss, typ.	0.6 W
Address area	
Address space per module	
• Address space per module, max.	44 byte; 32 byte input / 12 byte output
Hardware configuration	
Automatic encoding	
• Mechanical coding element	Yes
Time of day	
Operating hours counter	
• present	No
Analog inputs	
Cycle time (all channels), typ.	50 ms; Time for consistent update of all measured and calculated values (cyclic und acyclic data)

Article number	6ES7134-6PA01-0BD0
Interrupts/diagnostics/status information	
Alarms	
• Diagnostic alarm	Yes
• Limit value alarm	No
• Hardware interrupt	No
Diagnostics indication LED	
• Monitoring of the supply voltage (PWR-LED)	Yes
• Channel status display	Yes; Green LED
• for channel diagnostics	Yes; red Fn LED
• for module diagnostics	Yes; green/red DIAG LED
Integrated Functions	
Measuring functions	
• Measuring procedure for voltage measurement	TRMS
• Measuring procedure for current measurement	TRMS
• Type of measured value acquisition	seamless
• Curve shape of voltage	Sinusoidal or distorted
• Buffering of measured variables	No
• Parameter length	38 byte
• Bandwidth of measured value acquisition	2 kHz; Harmonics: 39 / 50 Hz, 32 / 60 Hz
Operating mode for measured value acquisition	
– automatic detection of line frequency	No; Parameterizable
Measuring range	
– Frequency measurement, min.	45 Hz
– Frequency measurement, max.	65 Hz

Article number	6ES7134-6PA01-0BD0
Measuring inputs for voltage	
– Measurable line voltage between phase and neutral conductor	230 V
– Measurable line voltage between the line conductors	400 V
– Measurable line voltage between phase and neutral conductor, min.	90 V
– Measurable line voltage between phase and neutral conductor, max.	264 V
– Measurable line voltage between the line conductors, min.	155 V
– Measurable line voltage between the line conductors, max.	460 V
– Measurement category for voltage measurement in accordance with IEC 61010-2-030	CAT II; CAT III in case of guaranteed protection level of 1.5 kV
– Internal resistance line conductor and neutral conductor	3.4 MΩ
– Power consumption per phase	20 mW
– Impulse voltage resistance 1,2/50µs	1 kV
Measuring inputs for current	
– measurable relative current (AC), min.	5 %; Relative to the secondary rated current; 1 A, 5 A
– measurable relative current (AC), max.	100 %; Relative to the secondary rated current; 1 A, 5 A
– Continuous current with AC, maximum permissible	5 A
– Apparent power consumption per phase for measuring range 5 A	0.6 V·A
– Rated value short-time withstand current restricted to 1 s	100 A
– Input resistance measuring range 0 to 5 A	25 mΩ; At the terminal
– Zero point suppression	Parameterizable: 20 ... 250 mA, default 50 mA
– Surge strength	10 A; for 1 minute

Article number	6ES7134-6PA01-0BD0
Accuracy class according to IEC 61557-12	
– Measured variable voltage	0.5
– Measured variable current	0.5
– Measured variable apparent power	1
– Measured variable active power	1
– Measured variable reactive power	1
– Measured variable power factor	0.5
– Measured variable active energy	1
– Measured variable reactive energy	2
– Measured variable phase angle	±1 °; not covered by IEC 61557-12
– Measured variable frequency	0.05
Potential separation	
Potential separation channels	
• between the channels and backplane bus	Yes; 3 700V AC (type test) CAT III
Isolation	
Isolation tested with	2 300V AC for 1 min. (type test)
Ambient conditions	
Ambient temperature during operation	
• horizontal installation, min.	0 °C
• horizontal installation, max.	60 °C
• vertical installation, min.	0 °C
• vertical installation, max.	50 °C
Dimensions	
Width	20 mm
Height	73 mm
Depth	58 mm
Weights	
Weight (without packaging)	45 g
Data for selecting a current transformer	
• Burden power current transformer x/1A, min.	As a function of cable length and cross section, see device manual
• Burden power current transformer x/5A, min.	As a function of cable length and cross section, see device manual

ATEX approval

In accordance with EN 60079-15 (Electrical apparatus for potentially explosive atmospheres; Type of protection "n") and EN 60079-0 (Electrical apparatus for potentially explosive gas atmospheres - Part 0: General Requirements)

II 3 G Ex nA IIC Tx Gc
DEKRA 12ATEX0038X

Dimension drawing

See ET 200SP BaseUnits (http://support.automation.siemens.com/WW/view/en/59753521) manual

Parameter data records A

A.1 Configuration via parameter data records

The parameter data records of the module have an identical structure, regardless of whether you configure the module with PROFIBUS DP or PROFINET IO.

Parameter assignment in the user program

You can reassign the module parameters in RUN mode, for example change the diagnostics behavior.

Changing parameters in RUN

The "WRREC" instruction is used to transfer the parameters to the module via the respective data record. The parameters set in STEP 7 do not change in the CPU, which means the parameters set in STEP 7 are still valid after a restart.

If you reconfigure a module (so that the user data size changes) and diagnostics are pending prior to the reconfiguration, these diagnostics are not signaled as "outgoing".

STATUS output parameter

If errors occur during the transfer of parameters with the WRREC instruction, the module continues operation with the previous parameter assignment. However, a corresponding error code is written to the STATUS output parameter.

The description of the WRREC instruction and the error codes is available in the STEP 7 online help.

A.2 Structure of the parameter data record 128 for the entire module

Structure of data record 128

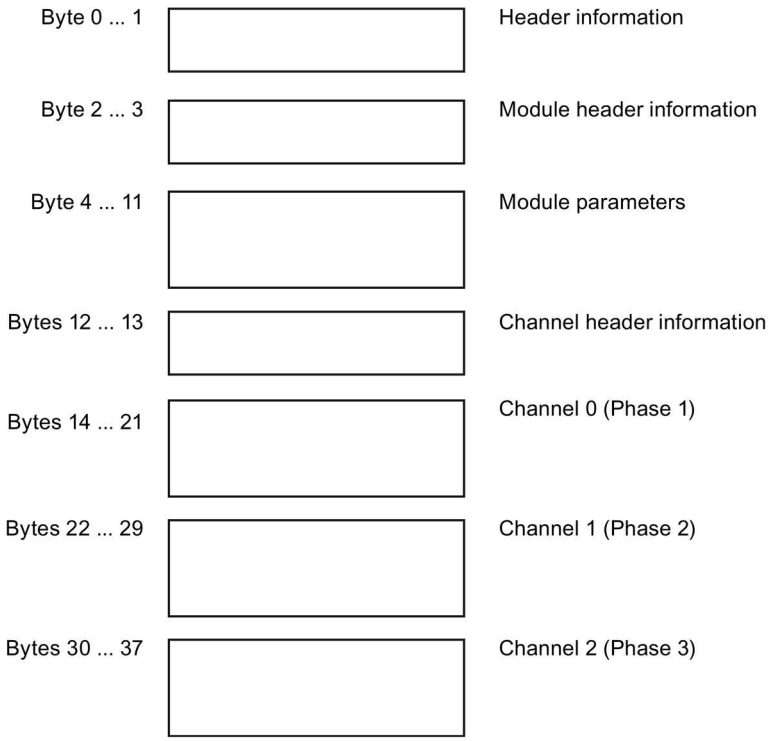

Figure A-1 Parameter data record 128

Header information

The figure below shows the structure of the header information.

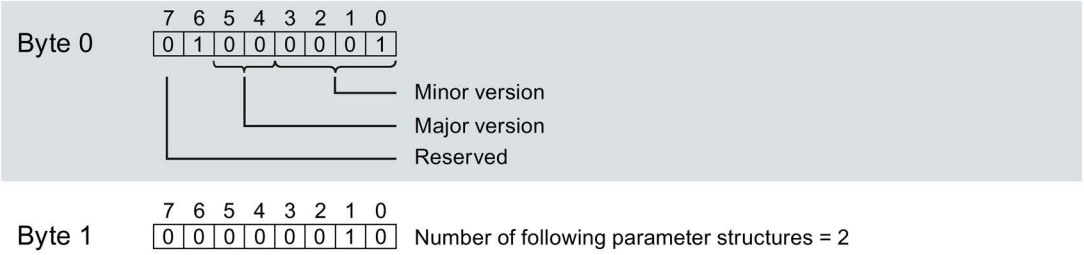

Figure A-2 Header information

Module header information

The figure below shows the structure of the header information for a module.

	7	6	5	4	3	2	1	0	
Byte 2	0	1	0	0	0	0	0	1	Number of the following module parameter blocks = 1
Byte 3	0	0	0	0	1	0	0	0	Length of the following module parameter block = 8

Figure A-3 Module header information

Module parameter block

The figure below shows the structure of the module parameter block.

Enable a parameter by setting the corresponding bit to "1".

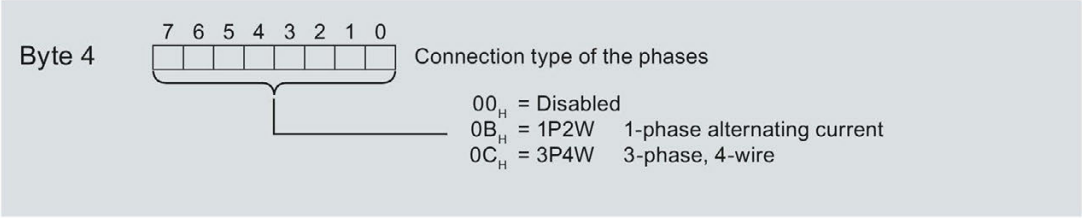
Byte 4
7 6 5 4 3 2 1 0
Connection type of the phases
00_H = Disabled
$0B_H$ = 1P2W 1-phase alternating current
$0C_H$ = 3P4W 3-phase, 4-wire

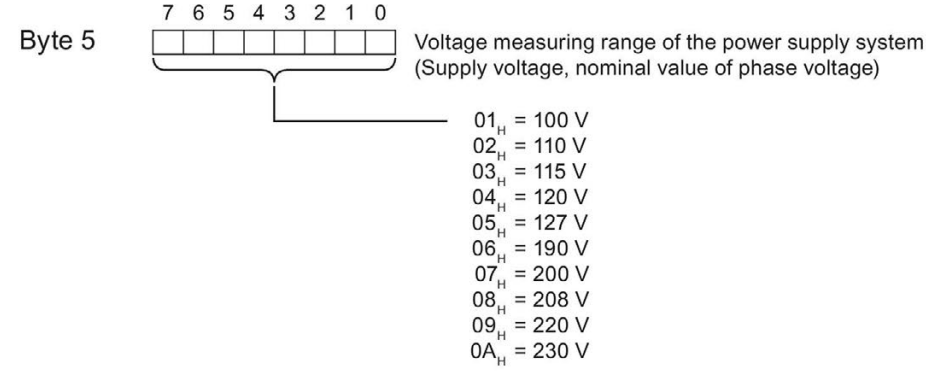
Byte 5
7 6 5 4 3 2 1 0
Voltage measuring range of the power supply system
(Supply voltage, nominal value of phase voltage)
01_H = 100 V
02_H = 110 V
03_H = 115 V
04_H = 120 V
05_H = 127 V
06_H = 190 V
07_H = 200 V
08_H = 208 V
09_H = 220 V
$0A_H$ = 230 V

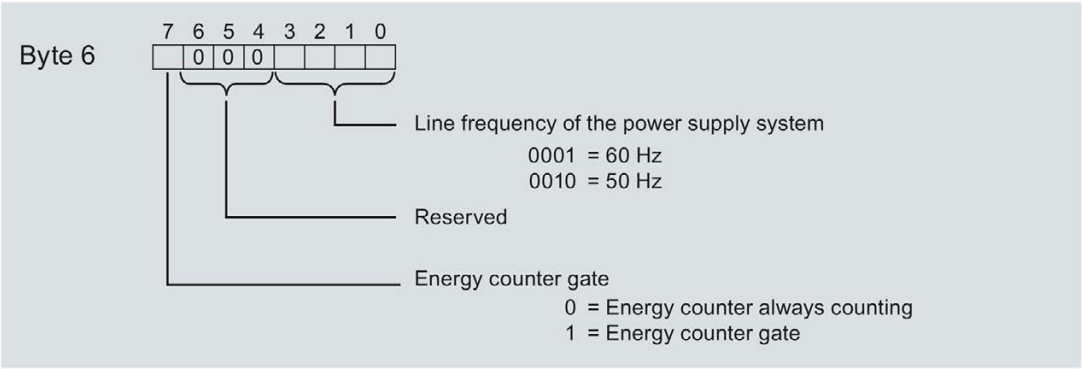
Byte 6
7 6 5 4 3 2 1 0
0 0 0
Line frequency of the power supply system
0001 = 60 Hz
0010 = 50 Hz
Reserved
Energy counter gate
0 = Energy counter always counting
1 = Energy counter gate

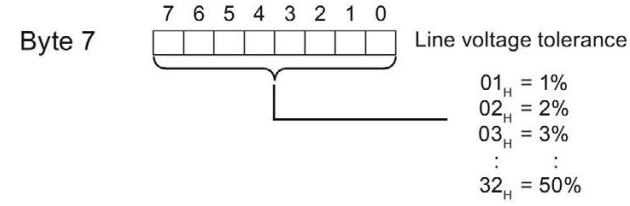
Byte 7
7 6 5 4 3 2 1 0
Line voltage tolerance
01_H = 1%
02_H = 2%
03_H = 3%
: :
32_H = 50%

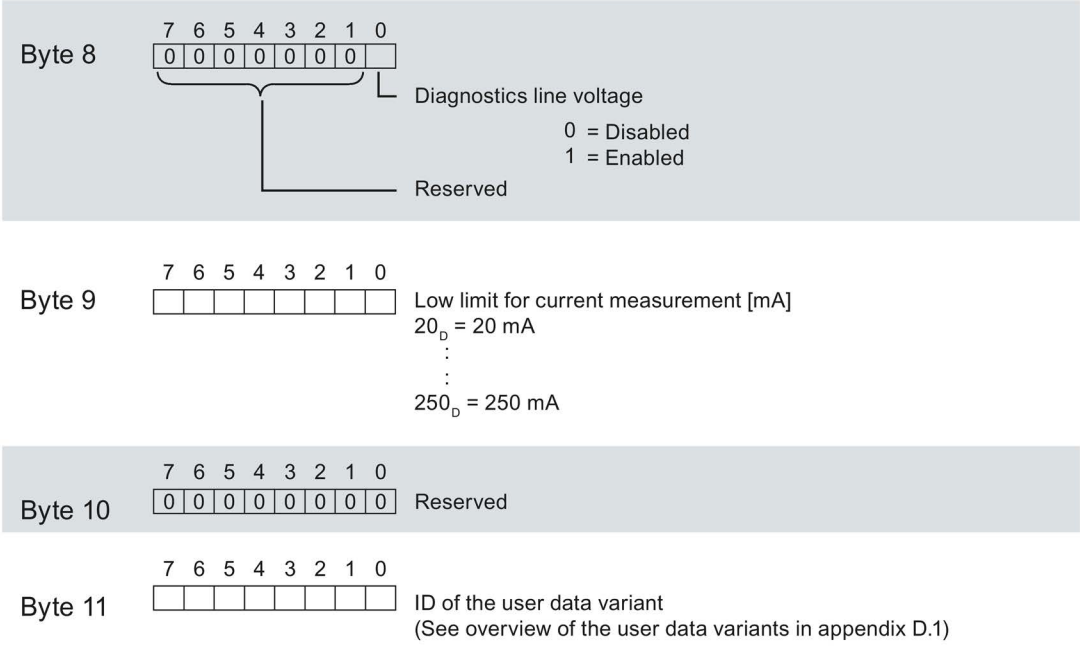

Figure A-4 Module parameter block

You can find the user data variant in the section Overview of the user data variants (Page 92).

Channel header information

The following figure shows the structure of the header information for a channel.

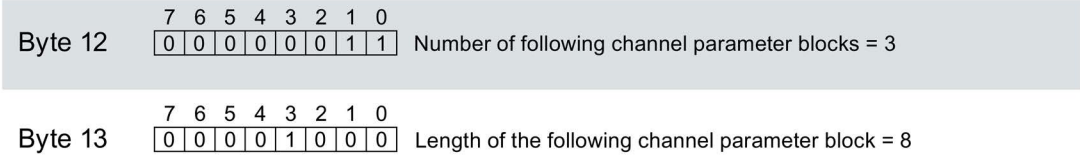

Figure A-5 Channel header information

Channel parameter block

The figure below shows the structure of the channel parameter block.

Enable a parameter by setting the corresponding bit to "1".

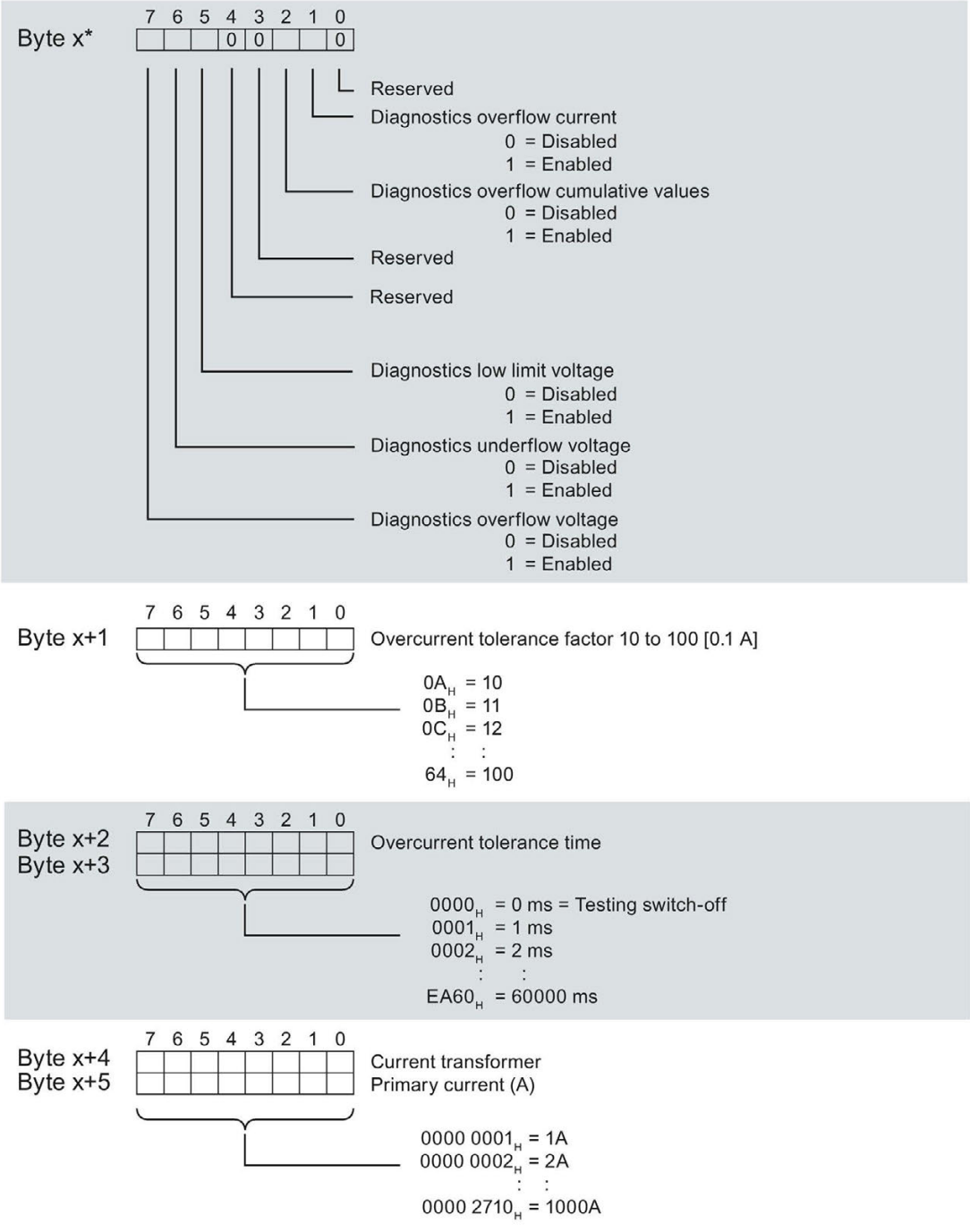

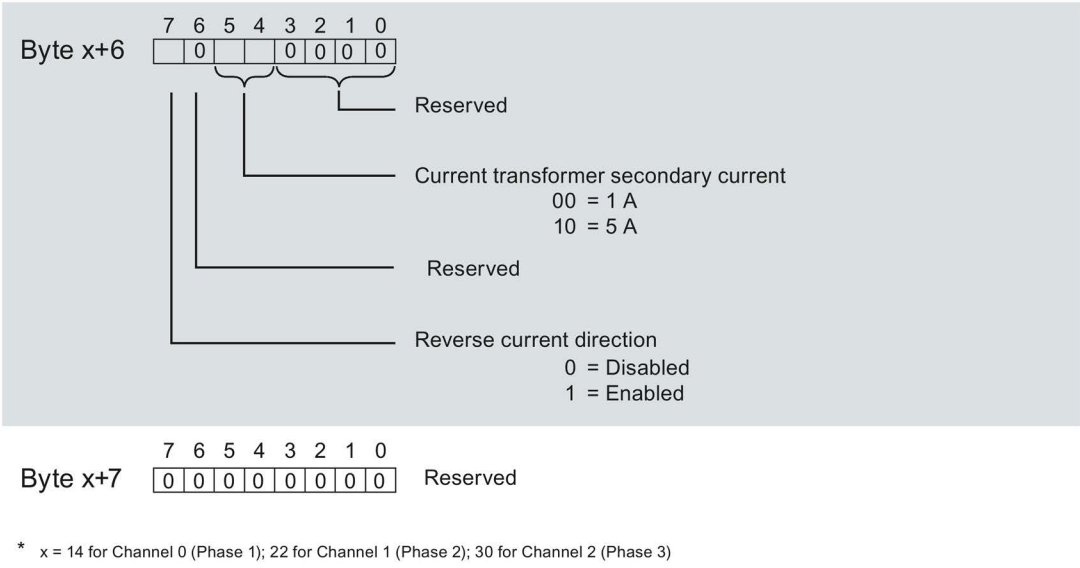

Figure A-6 Channel parameter block

Error while transferring the data record

The module always checks all the values of the transferred data record. Only if all the values were transferred without errors does the module apply the values from the data record.

The WRREC instruction for writing data records returns corresponding error codes when errors occur in the STATUS parameter.

The following table shows the module-specific error codes and their meaning for the parameter data record 128.

Error code in STATUS parameter (hexadecimal)				Meaning	Solution
Byte 0	Byte 1	Byte 2	Byte 3		
DF	80	B0	00	Number of the data record unknown	Enter a valid number for the data record.
DF	80	B1	00	Length of the data record incorrect	Enter a valid value for the data record length.
DF	80	B2	00	Slot invalid or cannot be accessed.	Check the station whether the module is plugged or drawn. Check the assigned values for the parameters of the WRREC instruction
DF	80	E0	01	Incorrect version	Check Byte 0. Enter valid values.
DF	80	E0	02	Error in the header information	Check Bytes 1 and 2. Correct the length and number of the parameter blocks.
DF	80	E1	01	Reserved bits are not 0.	Check Bytes 6, 10, 14, 20...22, 28...30, 36 and 37, and set reserved bits back to 0.
DF	80	E1	02	Reserved bits are not 0.	Check Byte 8 and set reserved bits back to 0.
DF	80	E1	05	Measuring range for voltage invalid.	Check Byte 5. Permitted values: 01_H to $0C_H$
DF	80	E1	20	Connection type invalid.	Check Byte 4. Permitted values: 00_H, $0B_H$ ... 01_H
DF	80	E1	21	Parameter for user data variant in DS 128 not possible or input data configuration not large enough.	Check Byte 11. Select a different user data variant or change the configuration.
DF	80	E1	22	Parameter for user data variant is invalid.	Check Byte 11. Select a valid code for the user data variant.
DF	80	E1	23	Parameter for frequency is invalid.	Check Byte 6. Enter valid values.
DF	80	E1	24	Parameter for tolerance line voltage is invalid.	Check Byte 7. Enter valid values.
DF	80	E1	25	Parameter for current transformer secondary current is invalid.	Check Bit 4...5 in Byte 20, 28, 36. Enter valid values.
DF	80	E1	26	Reserved parameter bits for current transformer on secondary side are not zero.	Enter 0 in Bytes 20, 28 and 36 and in Bits 0...3 and Bit 6.
DF	80	E1	29	Parameter for tolerance value overcurrent invalid.	Check Byte 15, 23, 31. Enter valid values.
DF	80	E1	30	Parameter for tolerance time overcurrent invalid.	Check Bytes 16...17, 24...25, 32...33. Enter valid values.
DF	80	E1	2B	Parameter for low limit measuring current invalid	Check Byte 9. Enter valid values.
DF	80	E1	2C	Parameter for current transformer primary current is invalid.	Check Bytes 18...19, 26...27, 34...35. Enter valid values.
DF	80	E1	30	Invalid data record number.	Check the data record number. Enter a valid data record number.

Measured variables

B

Measured variables for data records and user data

The following table provides an overview of all measured variables that are used in the data records and user data.

Note that the format and unit differ in the evaluation of records and user data.

Table B- 1 Measured variables for data records and user data

Measured value ID	Measured variables	Data type	Unit	Value range	Connection type	
					1P2W	3P4W
1	Voltage UL1-N [1]	REAL	V	0.0 ... 300.0	✓	✓
2	Voltage UL2-N [1]	REAL	V	0.0 ... 300.0		✓
3	Voltage UL3-N [1]	REAL	V	0.0 ... 300.0		✓
4	Voltage UL1-L2 [2]	REAL	V	0.0 ... 600.0		✓
5	Voltage UL2-L3 [2]	REAL	V	0.0 ... 600.0		✓
6	Voltage UL3-L1 [2]	REAL	V	0.0 ... 600.0		✓
7	Current L1 [1]	REAL	A	0.0 … 10000.0	✓	✓
8	Current L2 [1]	REAL	A	0.0 … 10000.0		✓
9	Current L3 [1]	REAL	A	0.0 … 10000.0		✓
10	Apparent power L1 [3]	REAL	VA	-3.0×10^9 … $+3.0 \times 10^9$	✓	✓
11	Apparent power L2 [3]	REAL	VA	-3.0×10^9 … $+3.0 \times 10^9$		✓
12	Apparent power L3 [3]	REAL	VA	-3.0×10^9 … $+3.0 \times 10^9$		✓
13	Active power L1 [3]	REAL	W	-3.0×10^9 … $+3.0 \times 10^9$	✓	✓
14	Active power L2 [3]	REAL	W	-3.0×10^9 … $+3.0 \times 10^9$		
15	Active power L3 [3]	REAL	W	-3.0×10^9 … $+3.0 \times 10^9$		✓
16	Reactive power L1 [3]	REAL	var	-3.0×10^9 … $+3.0 \times 10^9$	✓	✓
17	Reactive power L2 [3]	REAL	var	-3.0×10^9 … $+3.0 \times 10^9$		✓
18	Reactive power L3 [3]	REAL	var	-3.0×10^9 … $+3.0 \times 10^9$		✓
19	Power factor L1 [3]	REAL	-	0.0 ... 1.0	✓	✓
20	Power factor L2 [3]	REAL	-	0.0 ... 1.0		✓

Measured value ID	Measured variables	Data type	Unit	Value range	Connection type	
					1P2W	3P4W
21	Power factor L3 [3]	REAL	-	0.0 ... 1.0		✓
30	Frequency [4]	REAL	Hz	45.0 ... 65.0	✓	✓
34	Total active power L1L2L3 [5]	REAL	W	-3.0×10^9 … $+3.0 \times 10^9$	✓	✓
35	Total reactive power L1L2L3 [5]	REAL	var	-3.0×10^9 … $+3.0 \times 10^9$	✓	✓
36	Total apparent power L1L2L3 [5]	REAL	VA	-3.0×10^9 … $+3.0 \times 10^9$	✓	✓
37	Total power factor L1L2L3 [6 7]	REAL	-	0.0 ... 1.0	✓	✓
38	Amplitude balance for voltage [2]	REAL	%	0 ... 100		✓
39	Amplitude symmetry for current [2]	REAL	%	0 ... 200		✓
200	Total active energy inflow L1L2L3 [6]	REAL	Wh	0.0 ... 3.4×10^{38}	✓	✓
201	Total active energy outflow L1L2L3 [6]	REAL	Wh	0.0 ... 3.4×10^{38}	✓	✓
202	Total reactive energy inflow L1L2L3 [6]	REAL	varh	0.0 ... 3.4×10^{38}	✓	✓
203	Total reactive energy outflow L1L2L3 [6]	REAL	varh	0.0 ... 3.4×10^{38}	✓	✓
204	Total apparent energy L1L2L3 [6]	REAL	VAh	0.0 ... 3.4×10^{38}	✓	✓
205	Total active energy L1L2L3 [6]	REAL	Wh	-3.4×10^{38} to $+3.4 \times 10^{38}$	✓	✓
206	Total reactive energy L1L2L3 [6]	REAL	varh	-3.4×10^{38} to $+3.4 \times 10^{38}$	✓	✓
210	Total active energy inflow L1L2L3 [6]	LREAL	Wh	0.0 ... 1.8×10^{308}	✓	✓
211	Total active energy outflow L1L2L3 [6]	LREAL	Wh	0.0 ... 1.8×10^{308}	✓	✓
212	Total reactive energy inflow L1L2L3 [6]	LREAL	varh	0.0 ... 1.8×10^{308}	✓	✓
213	Total reactive energy outflow L1L2L3 [6]	LREAL	varh	0.0 ... 1.8×10^{308}	✓	✓
214	Total apparent energy L1L2L3 [6]	LREAL	VAh	0.0 ... 1.8×10^{308}	✓	✓
215	Total active energy L1L2L3 [6]	LREAL	Wh	-1.8×10^{308} to $+1.8 \times 10^{308}$	✓	✓
216	Total reactive energy L1L2L3 [6]	LREAL	varh	-1.8×10^{308} to $+1.8 \times 10^{308}$	✓	✓
220	Total active energy inflow L1L2L3 [6]	UDINT	Wh	0 to 2147483647	✓	✓
221	Total active energy outflow L1L2L3 [6]	UDINT	varh	0 to 2147483647	✓	✓
222	Total reactive energy inflow L1L2L3 [6]	UDINT	varh	0 to 2147483647	✓	✓
223	Total reactive energy outflow L1L2L3 [6]	UDINT	VAh	0 to 2147483647	✓	✓
224	Total apparent energy L1L2L3 [6]	UDINT	Wh	0 to 2147483647	✓	✓
225	Total active energy L1L2L3 [6]	DINT	Wh	-2147483647 to +2147483647	✓	✓
226	Total reactive energy L1L2L3 [6]	DINT	varh	-2147483647 to +2147483647	✓	✓

Measured value ID	Measured variables	Data type	Unit	Value range	Connection type	
					1P2W	3P4W
61178	Phase angle L1 [3]	REAL	°	0.0 ... 360.0	✓	✓
61180	Active energy inflow L1 [6]	LREAL	Wh	0.0 ... 1.8 x 10^{308}	✓	✓
61181	Active energy outflow L1 [6]	LREAL	Wh	0.0 ... 1.8 x 10^{308}	✓	✓
61182	Reactive energy inflow L1 [6]	LREAL	varh	0.0 ... 1.8 x 10^{308}	✓	✓
61183	Reactive energy outflow L1 [6]	LREAL	varh	0.0 ... 1.8 x 10^{308}	✓	✓
61184	Apparent energy L1 [6]	LREAL	VAh	0.0 ... 1.8 x 10^{308}	✓	✓
61185	Active energy L1 [6]	LREAL	Wh	-1.8 x 10^{308} to +1.8 x 10^{308}	✓	✓
61186	Reactive energy L1 [6]	LREAL	varh	1.8 x 10^{308} to +1.8 x 10^{308}	✓	✓
61198	Phase angle L2 [3]	REAL	°	0.0 ... 360.0		✓
61200	Active energy inflow L2 [6]	LREAL	Wh	0.0 ... 1.8 x 10^{308}		✓
61201	Active energy outflow L2 [6]	LREAL	Wh	0.0 ... 1.8 x 10^{308}		✓
61202	Reactive energy inflow L2 [6]	LREAL	varh	0.0 ... 1.8 x 10^{308}		✓
61203	Reactive energy outflow L2 [6]	LREAL	varh	0.0 ... 1.8 x 10^{308}		✓
61204	Apparent energy L2 [6]	LREAL	VAh	0.0 ... 1.8 x 10^{308}		✓
61205	Active energy L2 [6]	LREAL	Wh	-1.8 x 10^{308} to +1.8 x 10^{308}		✓
61206	Reactive energy L2 [6]	LREAL	varh	-1.8 x 10^{308} to +1.8 x 10^{308}		✓
61218	Phase angle L3 [3]	REAL		0.0 ... 360.0		✓
61220	Active energy inflow L3 [6]	LREAL	Wh	0.0 ... 1.8 x 10^{308}		✓
61221	Active energy outflow L3 [6]	LREAL	Wh	0.0 ... 1.8 x 10^{308}		✓
61222	Reactive energy inflow L3 [6]	LREAL	varh	0.0 ... 1.8 x 10^{308}		✓
61223	Reactive energy outflow L3 [6]	LREAL	varh	0.0 ... 1.8 x 10^{308}		✓
61224	Apparent energy L3 [6]	LREAL	VAh	0.0 ... 1.8 x 10^{308}		✓
61225	Active energy L3 [6]	LREAL	Wh	-1.8 x 10^{308} to +1.8 x 10^{308}		✓
61226	Reactive energy L3 [6]	LREAL	varh	-1.8 x 10^{308} to +1.8 x 10^{308}		✓
62110	Active energy inflow L1 [6]	UDINT	Wh	0 to 2147483647	✓	✓
62111	Active energy outflow L1 [6]	UDINT	Wh	0 to 2147483647	✓	✓
62112	Reactive energy inflow L1 [6]	UDINT	Varh	0 to 2147483647	✓	✓
62113	Reactive energy outflow L1 [6]	UDINT	Varh	0 to 2147483647	✓	✓
62114	Apparent energy L1 [6]	UDINT	Wh	0 to 2147483647	✓	✓
62210	Active energy inflow L2 [6]	UDINT	Wh	0 to 2147483647		✓
62211	Active energy outflow L2 [6]	UDINT	Wh	0 to 2147483647		✓
62212	Reactive energy inflow L2 [6]	UDINT	Varh	0 to 2147483647		✓
62213	Reactive energy outflow L2 [6]	UDINT	Varh	0 to 2147483647		✓
62214	Apparent energy L2 [6]	UDINT	VAh	0 to 2147483647		✓
62310	Active energy inflow L3 [6]	UDINT	Wh	0 to 2147483647		✓

Measured value ID	Measured variables	Data type	Unit	Value range	Connection type	
					1P2W	3P4W
62311	Active energy outflow L3 [6]	UDINT	Wh	0 to 2147483647		✓
62312	Reactive energy inflow L3 [6]	UDINT	Varh	0 to 2147483647		✓
62313	Reactive energy outflow L3 [6]	UDINT	Varh	0 to 2147483647		✓
62314	Apparent energy L3 [6]	UDINT	VAh	0 to 2147483647		✓
66001	Voltage UL1-N [1]	UINT	0.01 V	0 ... 30000	✓	✓
66002	Voltage UL2-N [1]	UINT	0.01 V	0 ... 30000		✓
66003	Voltage UL3-N [1]	UINT	0.01 V	0 ... 30000		✓
66004	Voltage UL1-L2 [2]	UINT	0.01 V	0 ... 30000		✓
66005	Voltage UL2-L3 [2]	UINT	0.01 V	0 ... 30000		✓
66006	Voltage UL3-L1 [2]	UINT	0.01 V	0 ... 30000		✓
66007	Current L1 [1]	UINT	1 mA	0 ... 65535	✓	✓
66008	Current L2 [1]	UINT	1 mA	0 ... 65535		✓
66009	Current L3 [1]	UINT	1 mA	0 ... 65535		✓
66010	Apparent power L1 [3]	INT	1 VA	-27648 ... 27648	✓	✓
66011	Apparent power L2 [3]	INT	1 VA	-27648 ... 27648		✓
66012	Apparent power L3 [3]	INT	1 VA	-27648 ... 27648		✓
66013	Active power L1 [3]	INT	1 W	-27648 ... 27648	✓	✓
66014	Active power L2 [3]	INT	1 W	-27648 ... 27648		✓
66015	Active power L3 [3]	INT	1 W	-27648 ... 27648		✓
66016	Reactive power L1 [3]	INT	1 var	-27648 ... 27648	✓	✓
66017	Reactive power L2 [3]	INT	1 var	-27648 ... 27648		✓
66018	Reactive power L3 [3]	INT	1 var	-27648 ... 27648		✓
66019	Power factor L1 [3]	USINT	0.01	0 ... 100	✓	✓
66020	Power factor L2 [3]	USINT	0.01	0 ... 100		✓
66021	Power factor L3 [3]	USINT	0.01	0 ... 100		✓
66030	Frequency [4]	USINT	1 Hz	45 ... 65	✓	✓
66034	Total active power L1L2L3 [5]	INT	1 W	-27648 ... 27648	✓	✓
66035	Total reactive power L1L2L3 [5]	INT	1 var	-27648 ... 27648	✓	✓
66036	Total apparent power L1L2L3 [5]	INT	1 VA	-27648 ... 27648	✓	✓
66037	Total power factor L1L2L3 [6]	USINT	0.01	0 ... 100	✓	✓
66038	Frequency [4]	UINT	0.01 Hz	4500 ... 6500	✓	✓

1 Effective value

2 IEC 61557-12

3 Arithmetical mean value over 200 ms as floating mean

4 Arithmetical mean value over 10 s as floating mean

5 Simple summation

6 Calculation from the start/restart (inflow and outflow values are positive numbers)

7 Determined from ratio of active and apparent power

Format

Table B- 2 Format and its length in bytes

Format in STEP 7 (TIA Portal)	Format to IEEE	Length in bytes	Comment
BYTE	BYTE	1 byte	Bit field with 8 bit
WORD	WORD	2 bytes	Bit field with 16 bit
USINT	INT8 (unsigned)	1 byte	Fixed-point number 8 bits without sign
INT	INT16 (signed)	2 bytes	Fixed-point number 16 bits with sign
UINT	INT16 (unsigned)	2 bytes	Fixed-point number 16 bits without sign
UDINT	INT32 (unsigned)	4 bytes	Fixed-point number 32 bits without sign
DINT	INT32 (signed)	4 bytes	Fixed-point number, 32 bits with sign
REAL	Float32	4 bytes	Floating-point number 32 bits with sign
LREAL	Float64	8 bytes	Floating-point number 64 bits with sign

Module versions

C

C.1 Module version "2 I / 2 Q"

User data of the module

The module has 2 bytes of input user data and 2 bytes of output user data for status and control information. At this module version measured variables can be read solely via measured value data records (no measured variables can be evaluated via user data).

Structure of input user data

The structure of the input user data is fixed.

Table C- 1 Structure of input user data (2 bytes)

Byte	Validity	Designation	Comment
0	Module	User data variant	Constant = 0x80
1	Module	Quality information	Quality bits to describe the quality of the basic measured values

Allocation of the input user data

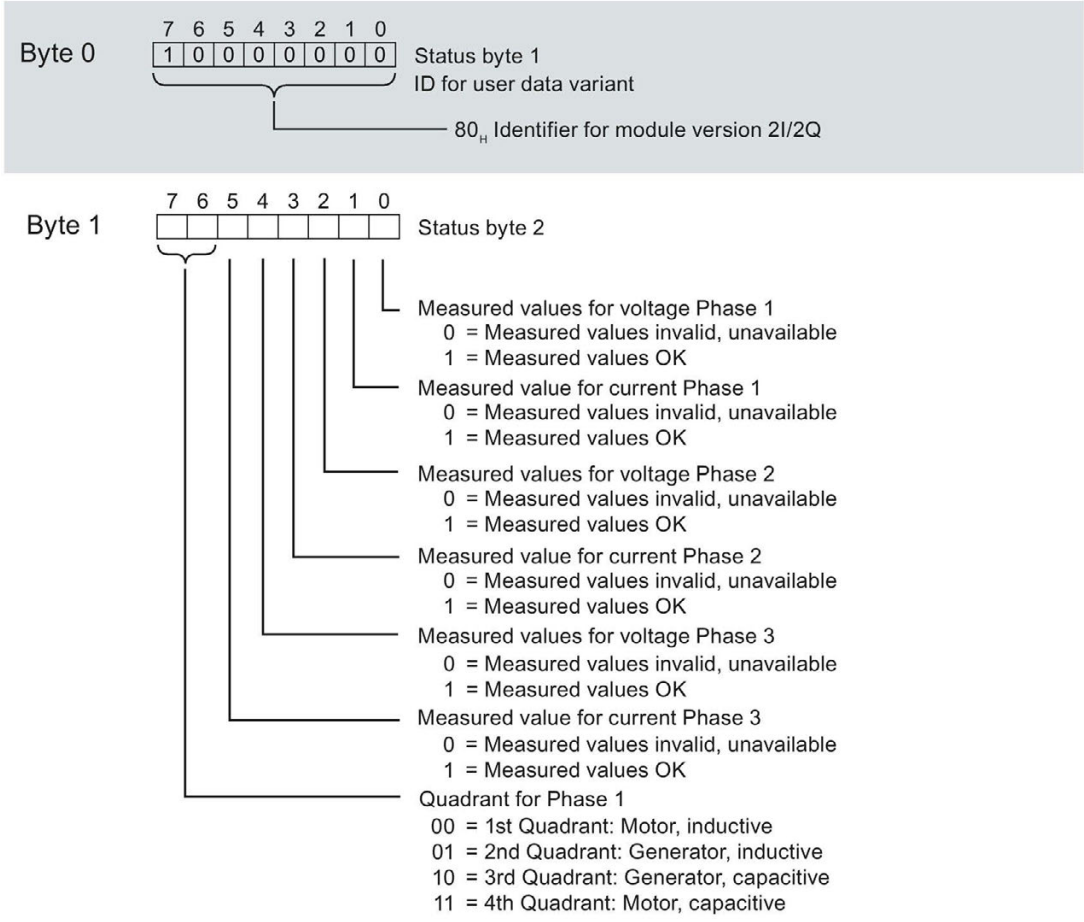

Figure C-1 Allocation of the status bytes in the input user data (2 bytes)

Structure of output user data

The structure of the output user data is fixed.

Table C- 2 Structure of output user data (2 bytes)

Byte	Validity	Designation	Comment
0	Module	Reserved	Reserved
1	Module	Control outputs	Reset of values and counters, gate

Assignment of the output user data

You control the counter gate for the energy counter via the output user data.

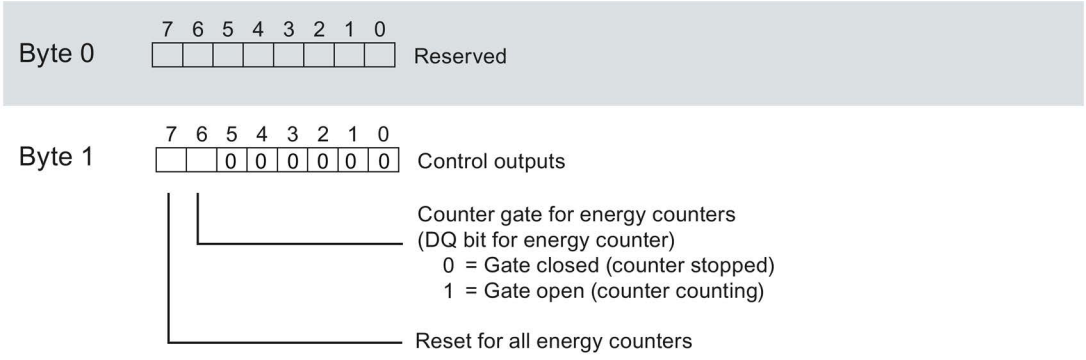

Figure C-2 Allocation of the control byte in the output user data (1 byte)

Note

For module version 2 I / 2 Q, a reset always acts on **all** energy counters of the three phases.

C.2 Module version "32 I / 12 Q"

User data of the module

The module occupies 32 bytes of input user data and 12 bytes of output user data. Of these the module uses 2 bytes input data for status information and 12 bytes output data for control information. Measured variables can be read cyclically via user data (Bytes 2 to 31) or acyclically via measured value data records

Structure of input user data

You can set the contents of the input user data dynamically. You can choose between different user data variants.

Table C- 3 Structure of input user data (32 bytes)

Byte	Validity	Designation	Comment
0	Module	User data variant	Display of the utilized user data variant
1	Module	Quality information	Quality bits to describe the quality of the basic measured values
2 ... 31	Module or phase	Data	2 or 4 bytes of measured values or calculated values according to user data variant

Allocation of the input user data

You can change the measured variables during operation. You can choose between different user data variants.

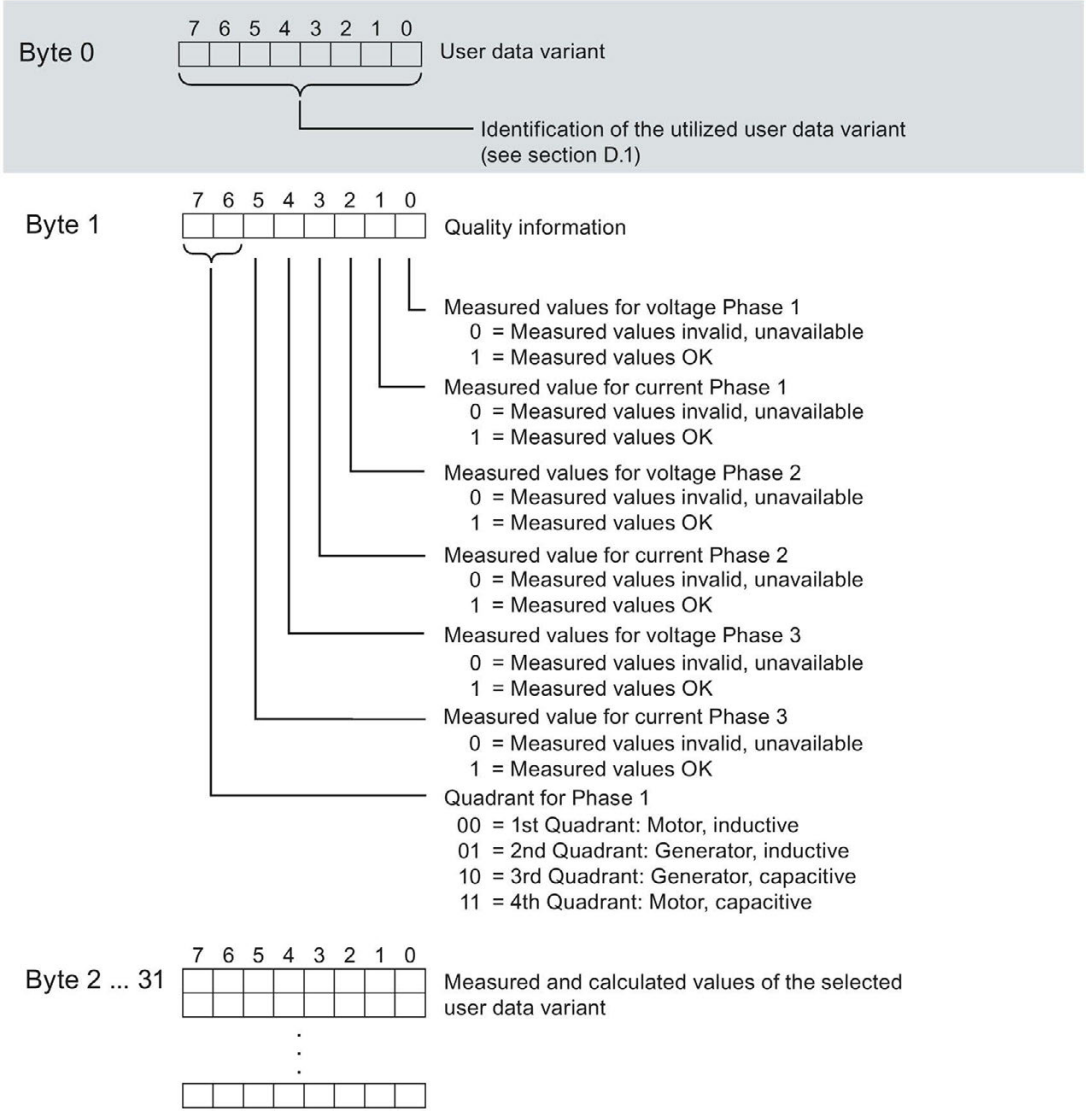

Figure C-3 Assignment of the input user data (32 bytes)

Structure of output user data

The structure of the output user data is fixed and is the same at all the selectable user data variants.

Via the output user data you globally control

- Resetting for energy counter (reset via Byte 1 and selection via Byte 2)
- The counter gate for the energy counter.

Table C- 4 Structure of output user data (12 bytes)

Byte	Validity	Designation	Comment
0	Module	User data variant	Switching the user data variant
1	Module	Control byte 1	Reset of values and counters, gate
2	Module	Control byte 2	Selection for resetting the energy counters
3 ... 11	Reserved		

Control byte for user data variant

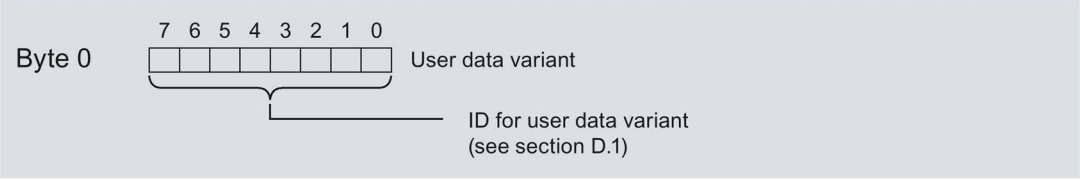

Figure C-4 Allocation of the control bytes for user data variant (Byte 0)

Control bytes for all three phases

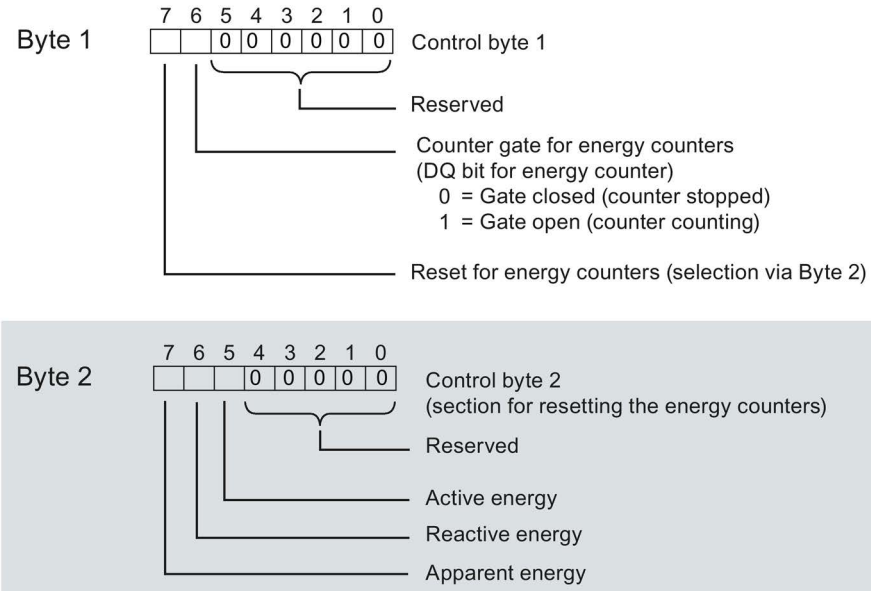

Figure C-5 Allocation of the control bytes for all three phases (bytes 1 and 2)

User data variants

D

D.1 User data variants with 32 bytes input data / 12 bytes output data

User data

30 bytes are available for transferring the measured values in a cycle at the module version 32 I / 12 Q. This module variant therefore supports dynamic switching between 11 preconfigured user data variants that contain a specific selection of measured values.

For more detailed information, refer to "Selecting the module versions (Page 24)".

Table D- 1 Overview of the user data variants

User data	User data variant
Total power L1L2L3	254 (FE_H) - default setting
Active power L1L2L3	253 (FD_H)
Reactive power L1L2L3	252 (FC_H)
Apparent power L1L2L3	251 (FB_H)
Basic measured values L1L2L3	250 (FA_H)
Total energy L1L2L3	249 ($F9_H$)
Energy L1	248 ($F8_H$)
Energy L2	247 ($F7_H$)
Energy L3	246 ($F6_H$)
Basic variables three-phase measurement L1L2L3	245 ($F5_H$)
Basic variables phase-specific measurement L1	159 ($9F_H$)

Total power L1L2L3 (ID 254 or FE_H)

Table D- 2 Total power L1L2L3

Byte	Allocation	Data type	Unit	Value range	Measured value ID
0	User data variant	BYTE	-	254 (FE_H)	-
1	Quality information = QQ_1 I_3 U_3 I_2 U_2 I_1 U_1	BYTE	Bit string	qq xx xx xx	-
2 ... 3	Current L1	UINT	1 mA	0 … 65535	66007
4 ... 5	Current L2	UINT	1 mA	0 … 65535	66008
6 ... 7	Current L3	UINT	1 mA	0 … 65535	66009
8 ... 9	Total active power L1L2L3	INT	1 W	-27648 … 27648	66034
10 ... 11	Total reactive power L1L2L3	INT	1 var	-27648 … 27648	66035
12 ... 13	Total apparent power L1L2L3	INT	1 VA	-27648 … 27648	66036
14 ... 17	Total active energy L1L2L3	DINT	1 Wh	-2147483647 to +2147483647	225
18 ... 21	Total reactive energy L1L2L3	DINT	1 varh	-2147483647 to +2147483647	226
22	Reserved	BYTE	-	0	-
23	Total power factor L1L2L3	USINT	0.01	0 … 100	66037
24	Scaling current L1	USINT	-	0 ... 255	-
25	Scaling current L2	USINT	-	0 ... 255	-
26	Scaling current L3	USINT	-	0 ... 255	-
27	Scaling total active power L1L2L3	USINT	-	0 ... 255	-
28	Scaling total reactive power L1L2L3	USINT	-	0 ... 255	-
29	Scaling total apparent power L1L2L3	USINT	-	0 ... 255	-
30	Scaling total active energy L1L2L3	USINT	-	0 ... 255	-
31	Scaling total reactive energy L1L2L3	USINT	-	0 ... 255	-

Active power L1L2L3 (ID 253 or FD_H)

Table D- 3 Active power L1L2L3

Byte	Allocation	Data type	Unit	Value range	Measured value ID
0	User data variant	BYTE	-	253 (FD_H)	-
1	Quality information = QQ_1 I_3 U_3 I_2 U_2 I_1 U_1	BYTE	Bit string	qq xx xx xx	-
2 ... 3	Current L1	UINT	1 mA	0 … 65535	66007
4 ... 5	Current L2	UINT	1 mA	0 … 65535	66008
6 ... 7	Current L3	UINT	1 mA	0 … 65535	66009
8 ... 9	Active power L1	INT	1 W	-27648 … 27648	66013
10 ... 11	Active power L2	INT	1 W	-27648 … 27648	66014
12 ... 13	Active power L3	INT	1 W	-27648 … 27648	66015
14 ... 15	Total active power L1L2L3	INT	1 W	-27648 … 27648	66034
16 ... 19	Total active energy L1L2L3	DINT	1 Wh	-2147483647 to +2147483647	225
20	Power factor L1	USINT	0.01	0 … 100	66019
21	Power factor L2	USINT	0.01	0 … 100	66020
22	Power factor L3	USINT	0.01	0 … 100	66021
23	Total power factor L1L2L3	USINT	0.01	0 … 100	66037
24	Scaling current L1	USINT	-	0 ... 255	-
25	Scaling current L2	USINT	-	0 ... 255	-
26	Scaling current L3	USINT	-	0 ... 255	-
27	Scaling active power L1	USINT	-	0 ... 255	-
28	Scaling active power L2	USINT	-	0 ... 255	-
29	Scaling active power L3	USINT	-	0 ... 255	-
30	Scaling active power L1L2L3	USINT	-	0 ... 255	-
31	Scaling total active energy L1L2L3	USINT	-	0 ... 255	-

Reactive power L1L2L3 (ID 252 or FC_H)

Table D- 4 Reactive power L1L2L3

Byte	Allocation	Data type	Unit	Value range	Measured value ID
0	User data variant	BYTE	-	252 (FC_H)	-
1	Quality information = QQ_1 I_3 U_3 I_2 U_2 I_1 U_1	BYTE	Bit string	qq xx xx xx	-
2 ... 3	Current L1	UINT	1 mA	0 … 65535	66007
4 ... 5	Current L2	UINT	1 mA	0 … 65535	66008
6 ... 7	Current L3	UINT	1 mA	0 … 65535	66009
8 ... 9	Reactive power L1	INT	1 var	-27648 … 27648	66016
10 ... 11	Reactive power L2	INT	1 var	-27648 … 27648	66017
12 ... 13	Reactive power L3	INT	1 var	-27648 … 27648	66018
14 ... 15	Total reactive power L1L2L3	INT	1 var	-27648 … 27648	66035
16 ... 19	Total reactive energy L1L2L3	DINT	1 varh	-2147483647 to +2147483647	226
20	Power factor L1	USINT	0.01	0 … 100	66019
21	Power factor L2	USINT	0.01	0 … 100	66020
22	Power factor L3	USINT	0.01	0 … 100	66021
23	Total power factor L1L2L3	USINT	0.01	0 … 100	66037
24	Scaling current L1	USINT	-	0 ... 255	-
25	Scaling current L2	USINT	-	0 ... 255	-
26	Scaling current L3	USINT	-	0 ... 255	-
27	Scaling reactive power L1	USINT	-	0 ... 255	-
28	Scaling reactive power L2	USINT	-	0 ... 255	-
29	Scaling reactive power L3	USINT	-	0 ... 255	-
30	Scaling reactive power L1L2L3	USINT	-	0 ... 255	-
31	Scaling total reactive energy L1L2L3	USINT	-	0 ... 255	-

Apparent power L1L2L3 (ID 251 or FB_H)

Table D- 5 Apparent power L1L2L3

Byte	Allocation	Data type	Unit	Value range	Measured value ID
0	User data variant	BYTE	-	251 (FB_H)	-
1	Quality information = QQ_1 I_3 U_3 I_2 U_2 I_1 U_1	BYTE	Bit string	qq xx xx xx	-
2 ... 3	Current L1	UINT	1 mA	0 … 65535	66007
4 ... 5	Current L2	UINT	1 mA	0 … 65535	66008
6 ... 7	Current L3	UINT	1 mA	0 … 65535	66009
8 ... 9	Apparent power L1	INT	1 VA	-27648 … 27648	66010
10 ... 11	Apparent power L2	INT	1 VA	-27648 … 27648	66011
12 ... 13	Apparent power L3	INT	1 VA	-27648 … 27648	66012
14 ... 15	Total apparent power L1L2L3	INT	1 VA	-27648 … 27648	66036
16 ... 19	Total apparent energy L1L2L3	UDINT	1 VAh	0 to 2147483647	224
20	Power factor L1	USINT	0.01	0 … 100	66019
21	Power factor L2	USINT	0.01	0 … 100	66020
22	Power factor L3	USINT	0.01	0 … 100	66021
23	Total power factor L1L2L3	USINT	0.01	0 … 100	66037
24	Scaling current L1	USINT	-	0 ... 255	-
25	Scaling current L2	USINT	-	0 ... 255	-
26	Scaling current L3	USINT	-	0 ... 255	-
27	Scaling apparent power L1	USINT	-	0 ... 255	-
28	Scaling apparent power L2	USINT	-	0 ... 255	-
29	Scaling apparent power L3	USINT	-	0 ... 255	-
30	Scaling apparent power L1L2L3	USINT	-	0 ... 255	-
31	Scaling total apparent energy L1L2L3	USINT	-	0 ... 255	-

Basic measured values L1L2L3 (ID 250 or FA_H)

Table D- 6 Basic measured values L1L2L3

Byte	Allocation	Data type	Unit	Value range	Measured value ID
0	User data variant	BYTE	-	250 (FA_H)	-
1	Quality information = QQ_1 I_3 U_3 I_2 U_2 I_1 U_1	BYTE	Bit string	qq xx xx xx	-
2 ... 3	Current L1	UINT	1 mA	0 … 65535	66007
4 ... 5	Current L2	UINT	1 mA	0 … 65535	66008
6 ... 7	Current L3	UINT	1 mA	0 … 65535	66009
8 ... 9	Voltage UL1-N	UINT	0.01 V	0 … 30000	66001
10 ... 11	Voltage UL2-N	UINT	0.01 V	0 … 30000	66002
12 ... 13	Voltage UL3-N	UINT	0.01 V	0 … 30000	66003
14 ... 15	Voltage UL1-UL2	UINT	0.01 V	0 … 60000	66004
16 ... 17	Voltage UL2-UL3	UINT	0.01 V	0 … 60000	66005
18 ... 19	Voltage UL3-UL1	UINT	0.01 V	0 … 60000	66006
20	Power factor L1	USINT	0.01	0 … 100	66019
21	Power factor L2	USINT	0.01	0 … 100	66020
22	Power factor L3	USINT	0.01	0 … 100	66021
23	Total power factor L1L2L3	USINT	0.01	0 … 100	66037
24	Scaling current L1	USINT	-	0 ... 255	-
25	Scaling current L2	USINT	-	0 ... 255	-
26	Scaling current L3	USINT	-	0 ... 255	-
27	Reserved	BYTE	-	-	-
28	Reserved	BYTE	-	-	-
29	Reserved	BYTE	-	-	-
30 ... 31	Frequency	UINT	0.01 Hz	0 ... 65535	66038

Total energy L1L2L3 (ID 249 or $F9_H$)

Table D- 7 Total energy L1L2L3

Byte	Allocation	Data type	Unit	Value range	Measured value ID
0	User data variant	BYTE	-	249 ($F9_H$)	-
1	Quality information = QQ_1 I_3 U_3 I_2 U_2 I_1 U_1	BYTE	Bit string	qq xx xx xx	-
2	Reserved	BYTE	-	-	-
3	Reserved	BYTE	-	-	-
4 ... 7	Total active energy inflow L1L2L3	UDINT	1 Wh	0 to 2147483647	220
8 ... 11	Total active energy outflow L1L2L3	UDINT	1 Wh	0 to 2147483647	221
11 ... 15	Total reactive energy inflow L1L2L3	UDINT	1 varh	0 to 2147483647	222
16 ... 19	Total reactive energy outflow L1L2L3	UDINT	1 varh	0 to 2147483647	223
20 ... 23	Total apparent energy L1L2L3	UDINT	1 VAh	0 to 2147483647	224
24	Reserved	BYTE	-	-	-
25	Scaling active energy, inflow	USINT	-	0 ... 255	-
26	Scaling active energy, outflow	USINT	-	0 ... 255	-
27	Scaling reactive energy, inflow	USINT	-	0 ... 255	-
28	Scaling reactive energy, outflow	USINT	-	0 ... 255	-
29	Scaling apparent energy	USINT	-	0 ... 255	-
30	Reserved	BYTE	-	-	-
31	Total power factor L1L2L3	USINT	0.01	0 … 100	66037

Energy L1 (ID 248 or $F8_H$)

Table D- 8 Energy L1

Byte	Allocation	Data type	Unit	Value range	Measured value ID
0	User data variant	BYTE	-	248 ($F8_H$)	-
1	Quality information = QQ_1 I_3 U_3 I_2 U_2 I_1 U_1	BYTE	Bit string	qq xx xx xx	-
2 ... 3	Current L1	UINT	1 mA	0 … 65535	66007
4 ... 7	Active energy inflow L1	UDINT	1 Wh	0 to 2147483647	62110
8 ... 11	Active energy outflow L1	UDINT	1 Wh	0 to 2147483647	62111
11 ... 15	Reactive energy inflow L1	UDINT	1 varh	0 to 2147483647	62112
16 ... 19	Reactive energy outflow L1	UDINT	1 varh	0 to 2147483647	62113
20 ... 23	Apparent energy L1	UDINT	1 VAh	0 to 2147483647	62114
24	Scaling current L1	USINT	-	0 ... 255	-
25	Scaling active energy inflow L1	USINT	-	0 ... 255	-
26	Scaling active energy outflow L1	USINT	-	0 ... 255	-
27	Scaling reactive energy inflow L1	USINT	-	0 ... 255	-
28	Scaling reactive energy outflow L1	USINT	-	0 ... 255	-
29	Scaling apparent energy L1	USINT	-	0 ... 255	-
30	Reserved	BYTE	-	-	-
31	Power factor L1	USINT	0.01	0 … 100	66019

Energy L2 (ID 247 or $F7_H$)

Table D- 9 Energy L2

Byte	Allocation	Data type	Unit	Value range	Measured value ID
0	User data variant	BYTE	-	247 ($F7_H$)	-
1	Quality information = QQ_1 I_3 U_3 I_2 U_2 I_1 U_1	BYTE	Bit string	qq xx xx xx	-
2 ... 3	Current L2	UINT	1 mA	0 … 65535	66008
4 ... 7	Active energy inflow L2	UDINT	1 Wh	0 to 2147483647	62210
8 ... 11	Active energy outflow L2	UDINT	1 Wh	0 to 2147483647	62211
11 ... 15	Reactive energy inflow L2	UDINT	1 varh	0 to 2147483647	62212
16 ... 19	Reactive energy outflow L2	UDINT	1 varh	0 to 2147483647	62213
20 ... 23	Apparent energy L2	UDINT	1 VAh	0 to 2147483647	62214
24	Scaling current L2	USINT	-	0 ... 255	-
25	Scaling active energy inflow L2	USINT	-	0 ... 255	-
26	Scaling active energy outflow L2	USINT	-	0 ... 255	-
27	Scaling reactive energy inflow L2	USINT	-	0 ... 255	-
28	Scaling reactive energy outflow L2	USINT	-	0 ... 255	-
29	Scaling apparent energy L2	USINT	-	0 ... 255	-
30	Reserved	BYTE	-	-	-
31	Power factor L2	USINT	0.01	0 … 100	66020

Energy L3 (ID 246 or $F6_H$)

Table D- 10 Energy L3

Byte	Allocation	Data type	Unit	Value range	Measured value ID
0	User data variant	BYTE	-	246 ($F6_H$)	-
1	Quality information = QQ_1 I_3 U_3 I_2 U_2 I_1 U_1	BYTE	Bit string	qq xx xx xx	-
2 ... 3	Current L3	UINT	1 mA	0 … 65535	66009
4 ... 7	Active energy inflow L3	UDINT	1 Wh	0 to 2147483647	62310
8 ... 11	Active energy L3, outflow	UDINT	1 Wh	0 to 2147483647	62311
11 ... 15	Reactive energy inflow L3	UDINT	1 varh	0 to 2147483647	62312
16 ... 19	Reactive energy outflow L3	UDINT	1 varh	0 to 2147483647	62313
20 ... 23	Apparent energy L3	UDINT	1 VAh	0 to 2147483647	62314
24	Scaling current L3	USINT	-	0 ... 255	-
25	Scaling active energy inflow L3	USINT	-	0 ... 255	-
26	Scaling active energy outflow L3	USINT	-	0 ... 255	-
27	Scaling reactive energy inflow L3	USINT	-	0 ... 255	-
28	Scaling reactive energy outflow L3	USINT	-	0 ... 255	-
29	Scaling apparent energy L3	USINT	-	0 ... 255	-
30	Reserved	BYTE	-	-	-
31	Power factor L3	USINT	0.01	0 … 100	66021

Basic variables three-phase measurements (ID 245 or $F5_H$)

Table D- 11 Basic variables three-phase measurements

Byte	Allocation	Data type	Unit	Value range	Measured value ID
0	User data variant	BYTE	-	245 ($F5_H$)	-
1	Quality information = QQ_1 I_3 U_3 I_2 U_2 I_1 U_1	BYTE	Bit string	qq xx xx xx	-
2 ... 5	Total active power L1L2L3	REAL	1 W	-3.0×10^9 ... $+3.0 \times 10^9$	66034
6 ... 9	Total active energy outflow L1L2L3	REAL	1 Wh	0.0 ... 3.4×10^{38}	201
10 ... 13	Total active energy inflow L1L2L3	REAL	1 Wh	0.0 ... 3.4×10^{38}	200
14 ... 17	Current L1	REAL	1 A	0.0 … 10000.0	7
18 ... 21	Current L2	REAL	1 A	0.0 … 10000.0	8
22 ... 25	Current L3	REAL	1 A	0.0 … 10000.0	9
26 ... 27	Voltage UL1-N	UINT	0.01 V	0 … 30000	66001
28 ... 29	Voltage UL2-N	UINT	0.01 V	0 … 30000	66002
30 ... 31	Voltage UL3-N	UINT	0.01 V	0 … 30000	66003

Basic variables phase-specific measurement L1 (ID 159 or $9F_H$)

Table D- 12 Basic variables phase-specific measurement L1

Byte	Allocation	Data type	Unit	Value range	Measured value ID
0	User data variant	BYTE	-	159 (9FH)	-
1	Quality information = QQ_1 I_3 U_3 I_2 U_2 I_1 U_1	BYTE	Bit string	qq xx xx xx	-
2 to 3	Current L1	UINT	1 mA	0 to 65535	66007
4 to 5	Voltage UL1-N	UINT	0.01 V	0 to 65535	66001
6 to 7	Active power L1	INT	1 W	-27648 to 27648	66013
8 to 9	Reactive power L1	INT	1 var	-27648 to 27648	66016
10 to 11	Apparent power L1	INT	1 VA	-27648 to 27648	66010
12 to 15	Active energy L1 total (inflow - outflow)	UDINT	1 Wh	0 to 2147483647	62115
16 to 19	Reactive energy L1 total (inflow - outflow)	UDINT	1 varh	0 to 2147483647	62116
20 to 23	Apparent energy L1	UDINT	1 VAh	0 to 2147483647	62114
24	Scaling current L1	USINT	-	0 to 255	-
25	Scaling active power L1	USINT	-	0 to 255	-
26	Scaling reactive power L1	USINT	-	0 to 255	-
27	Scaling apparent power L1	USINT	-	0 to 255	-
28	Scaling active energy L1 total (inflow - outflow)	USINT	-	0 to 255	-
29	Scaling reactive energy L1 total (inflow - outflow)	USINT	-	0 to 255	-
30	Scaling apparent energy L1	USINT	-	0 to 255	-
31	Power factor L1	USINT	0.01	0 to 100	66019

Measured value data records

E

E.1 Overview of all measured value data records

Energy Meter 400VAC ST writes the measured values in several data records that you can read acyclically using the RDREC instruction in the user program.

The following tables show the structure of the individual data records:

- Data record DS 142 for basic measured values (read only).
- Data record DS 143 for energy counters (read and write).

Note

- The cumulative value of the energy counters in 3-phase operation is obtained from the sums of the respective individual values of the phases.
- Inflow and outflow energy meters are always positive values.

E.2 Measured value data record for base measurements (DS 142)

Measured variables of the module

The following table provides an overview of all the measured variables that data record 142 supplies. Please note that, depending on the connection type used the display of some measured variables does not make sense and that the module deletes measured values that are not relevant.

The measured value identification (measured value ID) is an index which references the overview table of the measured variables in appendix B (Measured variables (Page 80)).

Table E- 1 Data record 142

Byte	Measured variable	Data type	Unit	Value range	Measured value ID
0	Version	BYTE	-	1	-
1	Reserved	BYTE	-	0	-
2...5	Voltage UL1-N	REAL	V	0.0 ... 300.0	1
6...9	Voltage UL2-N	REAL	V	0.0 ... 300.0	2
10...13	Voltage UL3-N	REAL	V	0.0 ... 300.0	3
14...17	Voltage UL1-L2	REAL	V	0.0 ... 600.0	4
18...21	Voltage UL2-L3	REAL	V	0.0 ... 600.0	5
22...25	Voltage UL3-L1	REAL	V	0.0 ... 600.0	6
26...29	Current L1	REAL	A	0.0 … 10000.0	7
30...33	Current L2	REAL	A	0.0 … 10000.0	8
34...37	Current L3	REAL	A	0.0 … 10000.0	9
38...41	Power factor L1	REAL	-	0.0 ... 1.0	19
42...45	Power factor L2	REAL	-	0.0 ... 1.0	20
46...49	Power factor L3	REAL	-	0.0 ... 1.0	21
50...53	Total power factor L1L2L3	REAL	-	0.0 ... 1.0	37
54...57	Frequency	REAL	1 Hz	45.0 ... 65.0	30
58...61	Amplitude unbalance for voltage	REAL	%	0 ... 100	38
62...65	Amplitude unbalance for current	REAL	%	0 to 100	39
66...69	Apparent power L1	REAL	VA	-3.0×10^9 … $+3.0 \times 10^9$	10
70...73	Apparent power L2	REAL	VA	-3.0×10^9 … $+3.0 \times 10^9$	11
74...77	Apparent power L3	REAL	VA	-3.0×10^9 … $+3.0 \times 10^9$	12
78...81	Total apparent power L1L2L3	REAL	VA	-3.0×10^9 … $+3.0 \times 10^9$	36
82...85	Reactive power L1	REAL	var	-3.0×10^9 … $+3.0 \times 10^9$	16
86...89	Reactive power L2	REAL	var	-3.0×10^9 … $+3.0 \times 10^9$	17
90...93	Reactive power L3	REAL	var	-3.0×10^9 … $+3.0 \times 10^9$	18
94...97	Total reactive power L1L2L3	REAL	var	-3.0×10^9 … $+3.0 \times 10^9$	35
98...101	Active power L1	REAL	W	-3.0×10^9 … $+3.0 \times 10^9$	13

Byte	Measured variable	Data type	Unit	Value range	Measured value ID
102...105	Active power L2	REAL	W	-3.0×10^9 … $+3.0 \times 10^9$	14
106...109	Active power L3	REAL	W	-3.0×10^9 … $+3.0 \times 10^9$	15
110...113	Total active power L1L2L3	REAL	W	-3.0×10^9 … $+3.0 \times 10^9$	34
114...117	Phase angle L1	REAL	°	0.0 ... 360.0	61178
118...121	Phase angle L2	REAL	°	0.0 ... 360.0	61198
122...125	Phase angle L3	REAL	°	0.0 ... 360.0	61218
126...129	Total apparent energy L1L2L3	REAL	VAh	$0.0 \ldots 3.4 \times 10^{38}$	204
130...133	Total reactive energy L1L2L3	REAL	varh	-3.4×10^{38} to $+3.4 \times 10^{38}$	206
134...137	Total active energy L1L2L3	REAL	Wh	-3.4×10^{38} to $+3.4 \times 10^{38}$	205
138...141	Total reactive energy inflow L1L2L3	REAL	varh	$0.0 \ldots 3.4 \times 10^{38}$	202
142...145	Total reactive energy outflow L1L2L3	REAL	varh	$0.0 \ldots 3.4 \times 10^{38}$	203
146...149	Total active energy inflow L1L2L3	REAL	Wh	$0.0 \ldots 3.4 \times 10^{38}$	200
150...153	Total active energy outflow L1L2L3	REAL	Wh	$0.0 \ldots 3.4 \times 10^{38}$	201
154...161	Total apparent energy L1L2L3	LREAL	VAh	$0.0 \ldots 1.8 \times 10^{308}$	214
162...169	Total reactive energy L1L2L3	LREAL	varh	-1.8×10^{308} to $+1.8 \times 10^{308}$	216
170...177	Total active energy L1L2L3	LREAL	Wh	-1.8×10^{308} to $+1.8 \times 10^{308}$	215
178...185	Total reactive energy inflow L1L2L3	LREAL	varh	$0.0 \ldots 1.8 \times 10^{308}$	212
186...193	Total reactive energy outflow L1L2L3	LREAL	varh	$0.0 \ldots 1.8 \times 10^{308}$	213
194...201	Total active energy inflow L1L2L3	LREAL	Wh	$0.0 \ldots 1.8 \times 10^{308}$	210
202...209	Total active energy outflow L1L2L3	LREAL	Wh	$0.0 \ldots 1.8 \times 10^{308}$	211

Procedure

Data record 142 is located on the AI Energy Meter 400VAC ST. Use SFB "RDREC" to read out the data record from the module. This system function block is stored in the STEP 7 library.

Measured values in STEP 7 as of V5.5

Measured values are represented as negative values in STEP 7 as of V5.5 if the value range of the integer format (32767 dec) is exceeded. This is not an error in the measured value. Solution: Select hexadecimal representation.

Conversion of 64-bit floating-point numbers

If you cannot process 64-bit floating-point numbers in your automation system, we recommend conversion to 32-bit floating-point numbers. Note the conversion can cause loss of accuracy. For a description of the conversion of the 64-bit floating-point numbers (data type LREAL) into 32-bit floating-point numbers (data type REAL) please refer to the Internet (http://support.automation.siemens.com/WW/view/en/56600676).

E.3 Structure for energy counters (DS 143)

Energy meter data record 143 for different actions

The energy meter data record 143 includes all energy meters available on the module phase-by-phase. The data record can be used for different actions:

- Reset the energy counter to user-specific value (e.g. "0")
- Reading the current values of the energy counters

Energy meter data record 143

Table E- 2 Energy meter data record 143

Byte	Measured variable	Data type	Unit	Value range	Measured value ID
0	Version	BYTE	-	1	-
1	Reserved	BYTE	-	0	-
2	Control byte 1 - L1	BYTE	Bit string	-	-
3	Control byte 2 - L1	BYTE	Bit string		
4	Control byte 1 - L2	BYTE	Bit string		
5	Control byte 2 - L2	BYTE	Bit string		
6	Control byte 1 - L3	BYTE	Bit string		
7	Control byte 2 - L3	BYTE	Bit string		
8...15	Active energy inflow (initial value) L1	LREAL	Wh		61180

Byte	Measured variable	Data type	Unit	Value range	Measured value ID
16...23	Active energy outflow (initial value) L1	LREAL	Wh		61181
24...31	Reactive energy inflow (initial value) L1	LREAL	varh		61182
32...39	Reactive energy outflow (initial value) L1	LREAL	varh		61183
40...47	Apparent energy (initial value) L1	LREAL	VAh		61184
48...55	Active energy inflow (initial value) L2	LREAL	Wh		61200
56...63	Active energy outflow (initial value) L2	LREAL	Wh		61201
64...61	Reactive energy inflow (initial value) L2	LREAL	varh		61202
72...79	Reactive energy outflow (initial value) L2	LREAL	varh		61203
80...87	Apparent energy (initial value) L2	LREAL	VAh		61204
88...95	Active energy inflow (initial value) L3	LREAL	Wh		61220
96...103	Active energy outflow (initial value) L3	LREAL	Wh		61221
104...111	Reactive energy inflow (initial value) L3	LREAL	varh		61222
112...119	Reactive energy outflow (initial value) L3	LREAL	varh		61223
120...127	Apparent energy (initial value) L3	LREAL	VAh		61224

Error while transferring the data record

The module always checks all the values of the transferred data record. Only if all the values were transferred without errors does the module apply the values from the data record.

The WRREC instruction for writing data records returns corresponding error codes when errors occur in the STATUS parameter.

The following table shows the module-specific error codes and their meaning for the measured value data record 143:

Error code in STATUS parameter (hexadecimal)				Meaning	Solution
Byte 0	Byte 1	Byte 2	Byte 3		
DF	80	B0	00	Number of the data record unknown	Enter a valid number for the data record.
DF	80	B1	00	Length of the data record incorrect	Enter a valid value for the data record length.
DF	80	B2	00	Slot invalid or cannot be accessed.	Check the station whether the module is plugged or drawn. Check the assigned values for the parameters of the WRREC instruction
DF	80	E1	01	Reserved bits are not 0.	Check Byte 2...7 and set the reserved bits back to 0.
DF	80	E1	39	Incorrect version entered.	Check Byte 0. Enter a valid version.
DF	80	E1	3A	Incorrect data record length entered.	Check the parameters of the WRREC instruction. Enter a valid length.

Error code in STATUS parameter (hexadecimal)				Meaning	Solution
Byte 0	Byte 1	Byte 2	Byte 3		
DF	80	E1	3C	At least one start value is invalid.	Check Bytes 8...103 and Bytes 158...169. The start values may not be negative.
DF	80	E1	3D	At least one start value is too large	Check Bytes 8...103 and Bytes 158...169. Observe the ranges of values for start values.

Tips and tricks

F

F.1 Tips and tricks

FAQ and application examples

Several FAQs and application examples are available to help you at work with the AI Energy Meter .

Measuring and visualizing energy data

You can find these application example at Internet (http://support.automation.siemens.com/WW/view/en/86299299)

IT network

You must create an artificial N-conductor (for example, by means of a 1:1 voltage transformer) in IT networks due to the missing neutral conductor. You can then use the module.

SIEMENS

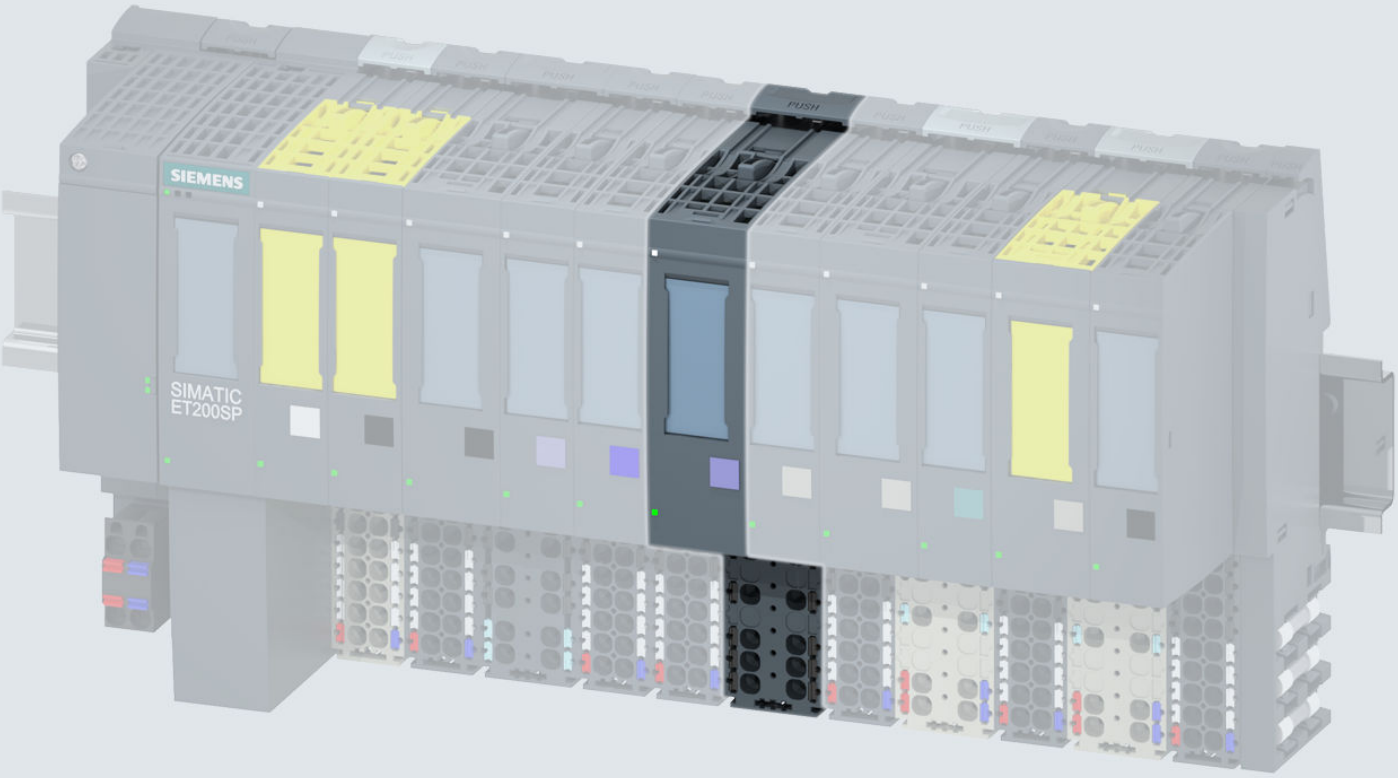

Manual

SIMATIC

ET 200SP

Analog input module
AI Energy Meter 480VAC ST
(6ES7134-6PA20-0BD0)

Edition 10/2017

support.industry.siemens.com

SIEMENS

SIMATIC

ET 200SP
Analog input module
AI Energy Meter 480VAC ST
(6ES7134-6PA20-0BD0)

Manual

Preface

Documentation guide 1

Product overview 2

Wiring 3

Configuration / address space 4

Quick start 5

Reading and processing measured values 6

Energy counters 7

Operating hours counter 8

Limit monitoring 9

Minimum and maximum values 10

Phase-based measured values 11

Parameters 12

Interrupts/diagnostic alarms 13

Technical specifications 14

Parameter data records A

Measured variables B

Module versions C

User data variants D

Measured value data records E

Tips and tricks F

10/2017

A5E36061895-AB

Legal information

Warning notice system

This manual contains notices you have to observe in order to ensure your personal safety, as well as to prevent damage to property. The notices referring to your personal safety are highlighted in the manual by a safety alert symbol, notices referring only to property damage have no safety alert symbol. These notices shown below are graded according to the degree of danger.

⚠ DANGER

indicates that death or severe personal injury **will** result if proper precautions are not taken.

⚠ WARNING

indicates that death or severe personal injury **may** result if proper precautions are not taken.

⚠ CAUTION

indicates that minor personal injury can result if proper precautions are not taken.

NOTICE

indicates that property damage can result if proper precautions are not taken.

If more than one degree of danger is present, the warning notice representing the highest degree of danger will be used. A notice warning of injury to persons with a safety alert symbol may also include a warning relating to property damage.

Qualified Personnel

The product/system described in this documentation may be operated only by **personnel qualified** for the specific task in accordance with the relevant documentation, in particular its warning notices and safety instructions. Qualified personnel are those who, based on their training and experience, are capable of identifying risks and avoiding potential hazards when working with these products/systems.

Proper use of Siemens products

Note the following:

⚠ WARNING

Siemens products may only be used for the applications described in the catalog and in the relevant technical documentation. If products and components from other manufacturers are used, these must be recommended or approved by Siemens. Proper transport, storage, installation, assembly, commissioning, operation and maintenance are required to ensure that the products operate safely and without any problems. The permissible ambient conditions must be complied with. The information in the relevant documentation must be observed.

Trademarks

All names identified by ® are registered trademarks of Siemens AG. The remaining trademarks in this publication may be trademarks whose use by third parties for their own purposes could violate the rights of the owner.

Disclaimer of Liability

We have reviewed the contents of this publication to ensure consistency with the hardware and software described. Since variance cannot be precluded entirely, we cannot guarantee full consistency. However, the information in this publication is reviewed regularly and any necessary corrections are included in subsequent editions.

Siemens AG
Division Digital Factory
Postfach 48 48
90026 NÜRNBERG
GERMANY

A5E36061895-AB
℗ 08/2017 Subject to change

Copyright © Siemens AG 2015 - 2017.
All rights reserved

Preface

Purpose of the documentation

This manual supplements the system manual ET 200SP distributed I/O system (http://support.automation.siemens.com/WW/view/en/58649293). Functions that generally relate to the system are described in this manual.

The information provided in this manual and in the system/function manuals supports you in commissioning the system.

Changes compared to previous version

Changes/enhancements described in this manual, compared to the previous version:

- "Quality information" section rearranged.
- "Measured variables for limit monitoring" section supplemented.
- Notes on the previous version of this manual have been taken into account in the current edition.

Conventions

CPU: When the term "CPU" is used in this manual, it applies both to the CPUs of the S7-1500 automation system and to the CPUs/interface modules of the distributed I/O system ET 200SP.

STEP 7: In this documentation, "STEP 7" is used as a synonym for all versions of the configuration and programming software "STEP 7 (TIA Portal)".

Please also observe notes marked as follows:

Note

A note contains important information on the product described in the documentation, on the handling of the product and on the section of the documentation to which particular attention should be paid.

Security information

Siemens provides products and solutions with industrial security functions that support the secure operation of plants, systems, machines and networks.

In order to protect plants, systems, machines and networks against cyber threats, it is necessary to implement – and continuously maintain – a holistic, state-of-the-art industrial security concept. Siemens' products and solutions constitute one element of such a concept.

Customers are responsible for preventing unauthorized access to their plants, systems, machines and networks. Such systems, machines and components should only be connected to an enterprise network or the internet if and to the extent such a connection is necessary and only when appropriate security measures (e.g. firewalls and/or network segmentation) are in place.

For additional information on industrial security measures that may be implemented, please visit (http://www.siemens.com/industrialsecurity).

Siemens' products and solutions undergo continuous development to make them more secure. Siemens strongly recommends that product updates are applied as soon as they are available and that the latest product versions are used. Use of product versions that are no longer supported, and failure to apply the latest updates may increase customers' exposure to cyber threats.

To stay informed about product updates, subscribe to the Siemens Industrial Security RSS Feed under (http://www.siemens.com/industrialsecurity).

Table of contents

Preface 4

1 Documentation guide 9

2 Product overview 13

2.1 Area of application 13

2.2 Properties of the AI Energy Meter 480VAC ST 15

3 Wiring 18

3.1 Terminal and block diagram 18

3.2 Connection examples 21

3.3 Current transformer selection data 24

4 Configuration / address space 27

4.1 Configuring 27

4.2 Selecting the module versions 28
4.2.1 Module versions at configuration with STEP 7 29
4.2.2 Module versions at configuration with GSD file 30
4.2.3 Changing over the user data variant during operation 31
4.2.4 Recommendations for selecting the module version 32

4.3 Applicable modules 33

5 Quick start 35

6 Reading and processing measured values 37

6.1 Basics for reading measured values 37

6.2 Quality information 39
6.2.1 Quality information in byte 1 of the user data 39
6.2.2 Quality information with measured value IDs 41
6.2.3 Operating quadrant 44

6.3 Reading measured values from user data cyclically 45

6.4 Read measured value from a measured value data record 47

7 Energy counters 48

7.1 How the energy meter works 48

7.2 Configuring counters 51

7.3 Evaluate energy counter and overflow counter 53

7.4 Resetting energy counters and overflow counters 54
7.4.1 Reset energy counters via user data 54
7.4.2 Resetting energy counters and overflow counters via data record DS 143 56
7.4.3 Example for energy counters and overflow counters via data record DS 143 58

7.5 Data record for energy counter (DS 143) 61
7.5.1 Structure for energy counters (DS 143) 61
7.5.2 Structure of the control and feedback interface for DS 143 65

8 Operating hours counter 68

8.1 How the operating hours counter works 68

8.2 Reset operating hours counters 69
8.2.1 Reset operating hours counters via user data 69
8.2.2 Resetting operating hours counters via data record DS 143 70

9 Limit monitoring 72

9.1 How limit monitoring works 72

9.2 Influence of hysteresis and delay time on limit monitoring 74

9.3 Reset, activate and deactivate counters for limit violation 76

9.4 Measured variables for limit monitoring 78

10 Minimum and maximum values 82

10.1 Minimum and maximum values 82

10.2 Resetting minimum and maximum values 84

11 Phase-based measured values 87

11.1 Phase-based measured values 87

12 Parameters 89

12.1 Parameters 89

12.2 Description of parameters 94

13 Interrupts/diagnostic alarms 99

13.1 Status and error display 99

13.2 Interrupts 101
13.2.1 Hardware interrupts 101
13.2.2 Diagnostics interrupt 102

13.3 Diagnostic alarms 103

13.4 Diagnostics response 104

14 Technical specifications 106

14.1 Technical specifications 106

A Parameter data records 112

A.1 Configuration via parameter data records 112

A.2 Structure of the parameter data record 128 for the entire module 113

A.3 Structure of the parameter data record 129 for limit monitoring 121

A.4 Structure of the parameter data record 130 for user-data mapping 125

B Measured variables 131

C Module versions 142
C.1 Module version "2 I / 2 Q" 142
C.2 Module version "32 I / 12 Q" 145
C.3 "User-specific" module version 151
C.4 Module version "EE@Industry measurement data profile E0 / E1 / E2 / E3" 153
D User data variants 155
D.1 User data variants with 32 bytes input data / 12 bytes output data 155
E Measured value data records 175
E.1 Overview of all measured value data records 175
E.2 Measured value data record for base measurements (DS 142) 176
E.3 Structure for energy counters (DS 143) 179
E.4 Measured value data record for maximum values (DS 144) 184
E.5 Measured value data record for minimum values (DS 145) 186
E.6 Measured value data record for phase-based measured values L1 (DS 147) 188
E.7 Measured value data record for phase-based measured values L2 (DS 148) 190
E.8 Measured value data record for phase-based measured values L3 (DS 149) 192
E.9 Measured value data record for advanced measurement and status values (DS 150) 194
F Tips and tricks 196
F.1 Tips and tricks 196

Documentation guide

1

The documentation for the SIMATIC ET 200SP distributed I/O system is arranged into three areas.
This arrangement enables you to access the specific content you require.

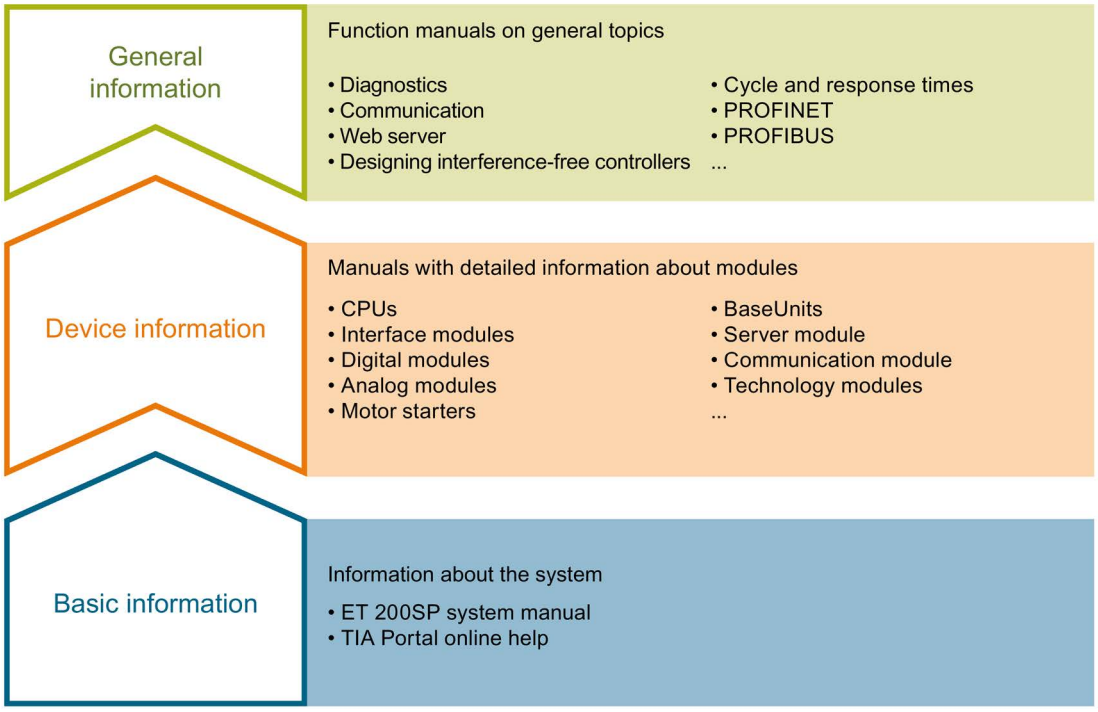

Basic information

The system manual describes in detail the configuration, installation, wiring and commissioning of the SIMATIC ET 200SP. distributed I/O system. The STEP 7 online help supports you in the configuration and programming.

Device information

Product manuals contain a compact description of the module-specific information, such as properties, wiring diagrams, characteristics and technical specifications.

General information

The function manuals contain detailed descriptions on general topics regarding the SIMATIC ET 200SP distributed I/O system, e.g. diagnostics, communication, Web server, motion control and OPC UA.

You can download the documentation free of charge from the Internet (http://w3.siemens.com/mcms/industrial-automation-systems-simatic/en/manual-overview/tech-doc-et200/Pages/Default.aspx).

Changes and supplements to the manuals are documented in a Product Information.

You can download the product information free of charge from the Internet (https://support.industry.siemens.com/cs/us/en/view/73021864).

Manual Collection ET 200SP

The Manual Collection contains the complete documentation on the SIMATIC ET 200SP distributed I/O system gathered together in one file.

You can find the Manual Collection on the Internet (http://support.automation.siemens.com/WW/view/en/84133942).

"mySupport"

With "mySupport", your personal workspace, you make the most of your Industry Online Support.

In "mySupport" you can store filters, favorites and tags, request CAx data and put together your personal library in the Documentation area. Furthermore, your data is automatically filled into support requests and you always have an overview of your current requests.

You need to register once to use the full functionality of "mySupport".

You can find "mySupport" in the Internet (https://support.industry.siemens.com/My/ww/en).

"mySupport" - Documentation

In the Documentation area of "mySupport", you have the possibility to combine complete manuals or parts of them to make your own manual.
You can export the manual in PDF format or in an editable format.

You can find "mySupport" - Documentation in the Internet (http://support.industry.siemens.com/My/ww/en/documentation).

"mySupport" - CAx Data

In the CAx Data area of "mySupport", you can have access the latest product data for your CAx or CAe system.

You configure your own download package with a few clicks.

In doing so you can select:

- Product images, 2D dimension drawings, 3D models, internal circuit diagrams, EPLAN macro files
- Manuals, characteristics, operating manuals, certificates
- Product master data

You can find "mySupport" - CAx Data in the Internet (http://support.industry.siemens.com/my/ww/en/CAxOnline).

Application examples

The application examples support you with various tools and examples for solving your automation tasks. Solutions are shown in interplay with multiple components in the system - separated from the focus in individual products.

You can find the application examples on the Internet (https://support.industry.siemens.com/sc/ww/en/sc/2054).

TIA Selection Tool

With the TIA Selection Tool, you can select, configure and order devices for Totally Integrated Automation (TIA).
This tool is the successor of the SIMATIC Selection Tool and combines the known configurators for automation technology into one tool.
With the TIA Selection Tool, you can generate a complete order list from your product selection or product configuration.

You can find the TIA Selection Tool on the Internet (http://w3.siemens.com/mcms/topics/en/simatic/tia-selection-tool).

SIMATIC Automation Tool

You can use the SIMATIC Automation Tool to run commissioning and maintenance activities simultaneously on various SIMATIC S7 stations as a bulk operation independently of the TIA Portal.

The SIMATIC Automation Tool provides a multitude of functions:

- Scanning of a PROFINET/Ethernet network and identification of all connected CPUs
- Address assignment (IP, subnet, gateway) and station name (PROFINET device) to a CPU
- Transfer of the data and the programming device/PC time converted to UTC time to the module
- Program download to CPU
- Operating mode switchover RUN/STOP
- Localization of the CPU by means of LED flashing
- Reading out CPU error information
- Reading the CPU diagnostic buffer
- Reset to factory settings
- Updating the firmware of the CPU and connected modules

You can find the SIMATIC Automation Tool on the Internet (https://support.industry.siemens.com/cs/ww/en/view/98161300).

PRONETA

With SIEMENS PRONETA (PROFINET network analysis), you analyze the plant network during commissioning. PRONETA features two core functions:

- The topology overview independently scans PROFINET and all connected components.
- The IO check is a fast test of the wiring and the module configuration of a system.

You can find SIEMENS PRONETA on the Internet (https://support.industry.siemens.com/cs/ww/en/view/67460624).

Product overview 2

2.1 Area of application

Introduction

Energy efficiency is playing an increasingly important role in industry. Rising energy prices, increasing pressure to improve profitability and the growing awareness of climate protection are important factors for reducing energy costs and for introducing an energy data management system.

Where can you use the AI Energy Meter 480VAC ST?

AI Energy Meter 480VAC ST is designed for machine-level deployment in an ET 200SP distributed I/O system. AI Energy Meter 480VAC ST records over 200 different electrical measurement and energy values. It lets you create transparency about the energy requirements of individual components of a production plant even down to the machine level.

Using the measured values provided by the AI Energy Meter 480VAC ST, you can determine energy consumption and power consumption. You can determine consumption forecasts and efficiency from the measured values. Power consumption measurements are relevant for load management and maintenance. In addition, you can use the measurements for energy reporting and for determining the CO_2 footprint.

Note

Measuring dangerous electrical quantities

The AI Energy Meter 480VAC ST is not tested according to DIN EN 61010-2-030 and may therefore not be used to verify, measure or monitor protective measures according to DIN EN 61557.

Qualified personnel must ensure through additional measures that no danger ensues for humans and the environment in case of an incorrect display.

TN and TT system

The AI Energy Meter 480VAC ST can be used in TN and TT systems.

Measuring with AI Energy Meter 480VAC ST

A typical supply network of a production plant is usually divided into three voltage ranges:

- The infeed of the entire plant
- The subdistribution, for example, to individual lines within the plant
- The end consumers such as the machines in the lines.

The following figure shows the measurement in an electricity supply network:

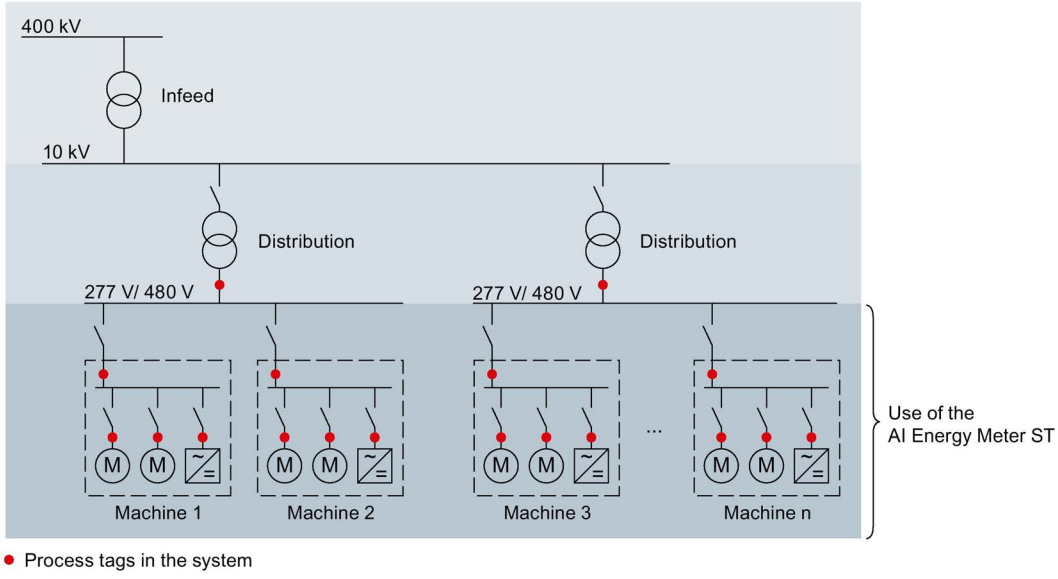

Figure 2-1 Use of the AI Energy Meter 480VAC ST

Advantages of the AI Energy Meter 480VAC ST

The AI Energy Meter 480VAC ST has the following advantages:

- Space-saving especially for use in control cabinet
- PROFINET IO or PROFIBUS DP (depending on the interface module in use)
- Multiple modules can be used with one interface module
- Extension of existing stations by components for energy recording

2.2 Properties of the AI Energy Meter 480VAC ST

Article number

6ES7134-6PA20-0BD0

View of the module

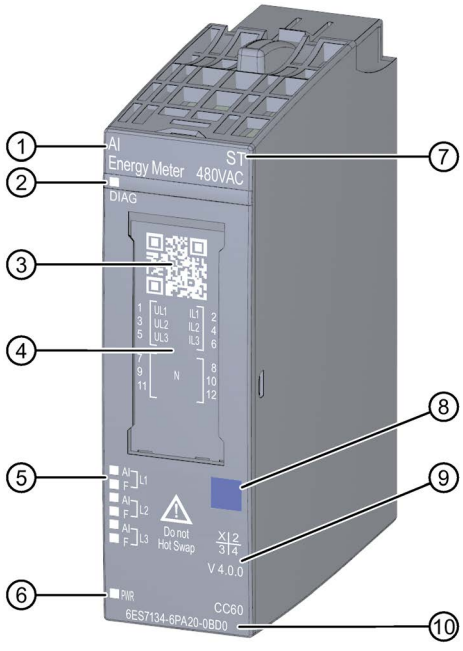

① Module type and name
② LED for diagnostics
③ 2D matrix code
④ Wiring diagram
⑤ LEDs for channel status
⑥ LED for supply voltage
⑦ Function class
⑧ Color identification label module type
⑨ Function and firmware version
⑩ Article number

Figure 2-2 View of the module AI Energy Meter 480VAC ST

Properties

The module has the following technical properties:

- Measurement of electrical variables from single-phase, two-phase and three-phase supply networks
- Max. nominal voltage between two outer conductors 480 VAC
- Retentive storage of the counter values
- Recording of:
  - Voltages
  - Currents
  - Phase angles
  - Power
  - Energy / electrical work
  - Frequencies
  - Minimum and maximum values
  - Power factors
  - Operating hours
  - Limits

The module supports the following functions:

Table 2- 1 Version dependencies of the functions

Function	HW version	FW version	STEP 7		GSD file	
			TIA Portal	V5.x	PROFINET IO	PROFIBUS DP
Firmware update	FS01	V4.0.0 or higher	V13 SP1 with update 4 and HSP or higher	V5.5 SP4 and hotfix 7 or higher	X	---
Calibration in runtime	FS01	V4.0.0 or higher	V13 SP1 with update 4 and HSP or higher	---	---	---
Identification data I&M0 to I&M3	FS01	V4.0.0 or higher	V13 SP1 with update 4 and HSP or higher	V5.5 SP4 and hotfix 7 or higher	X	X
Reconfiguration in RUN	FS01	V4.0.0 or higher	V13 SP1 with update 4 and HSP or higher	V5.5 SP4 and hotfix 7 or higher	X	X
Diagnostic interrupts	FS01	V4.0.0 or higher	V13 SP1 with update 4 and HSP or higher	V5.5 SP4 and hotfix 7 or higher	X	X
Hardware interrupts	FS01	V4.0.0 or higher	V13 SP1 with update 4 and HSP or higher	V5.5 SP4 and hotfix 7 or higher	X	---

Accessories

The following accessories must be ordered separately:

- BaseUnit Type D0
- Labeling strips
- Reference identification label

You can find additional information on the accessories in the ET 200SP distributed I/O system (http://support.automation.siemens.com/WW/view/es/58649293) system manual.

Wiring 3

3.1 Terminal and block diagram

In an ET 200SP station, the AI Energy Meter 480VAC ST forms its own potential group together with its dark BaseUnit.

General safety instructions

WARNING

Danger to life due to electric shock

Touching live parts can lead to death or severe injuries.

Before beginning any work deenergize the system and the Energy Meter and short-circuit installed transformers.

WARNING

Danger to life, dangerous system conditions and material damage possible

Removing and inserting the Energy Meter under live voltage is prohibited! For this reason the symbol "Do not Hot Swap" is located on the Energy Meter.

If you remove and insert the Energy Meter under live voltage during operation, the transformers used can produce dangerous induction voltages and electric arcs and dangerous system conditions can arise.

The Energy Meter may only be removed and inserted during operation if the measuring voltages supplied to the BaseUnit at terminals U_{L1} , U_{L2}, U_{L3} are disconnected at all poles **and** special current transformer terminals are used that short-circuit the transformer on the secondary side on removal.

CAUTION

Use only in three-phase and AC networks

Operation with direct voltage/direct current will destroy the Energy Meter.

Use the Energy Meter solely to measure electrical variables in three-phase and AC networks.

Supplying the module

The Energy Meter is supplied through the terminals U_{L1} and N. The required minimum voltage amounts to 85 VAC.

Protecting the connection cables

To protect the connection cables at U_{L1}, U_{L2} and U_{L3}, make sure there is adequate cable protection, especially after cross-section transitions.

If short-circuit resistance according to IEC 61439-1:2009 is ensured by the design, there is no need for separate cable protection for the AI Energy Meter 480VAC ST.

Terminal and block diagram

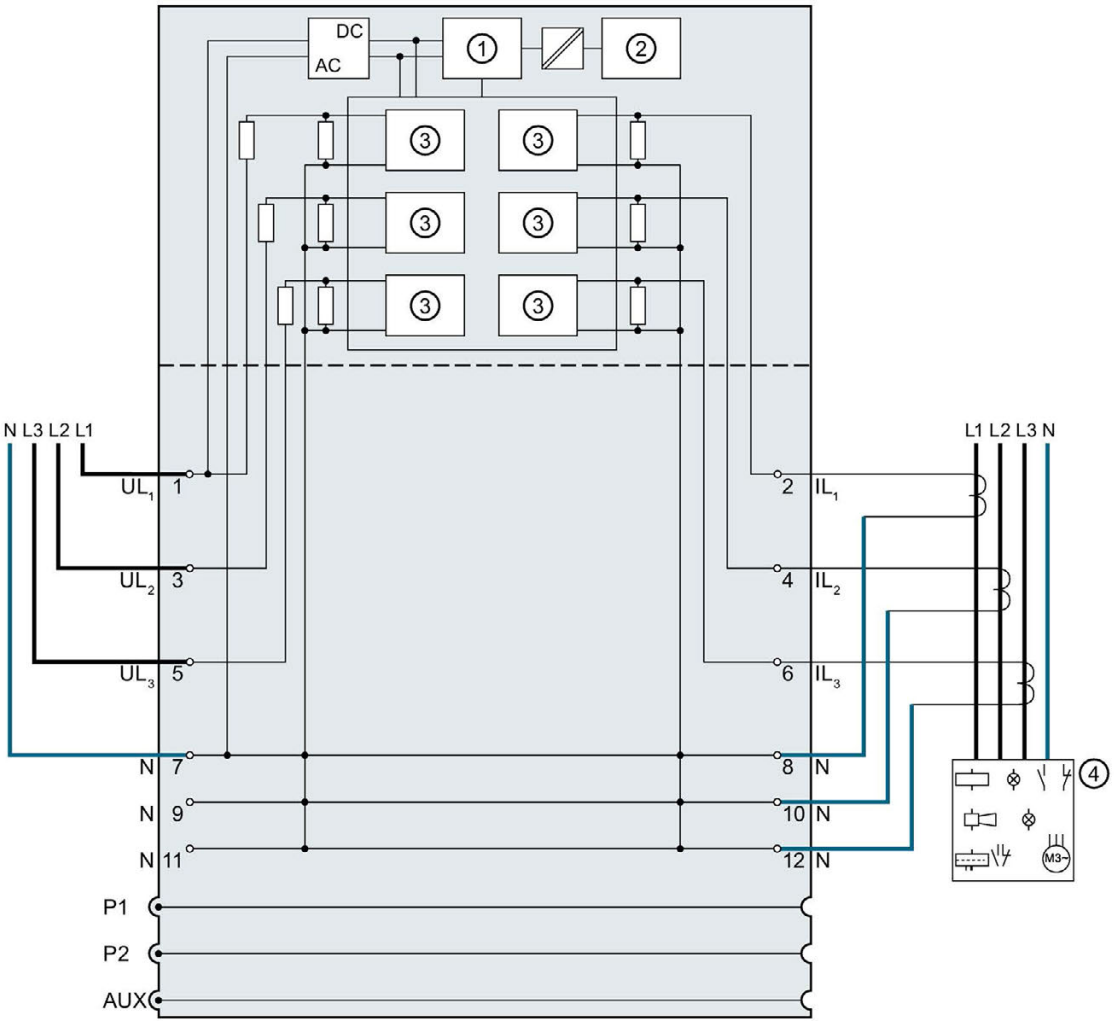

①	Microcontroller	UL_n	Voltage connection
②	Backplane bus interface	IL_n	Current connection
③	Analog-to-digital converter (ADC)	N	Neutral
④	Power measurement		

Figure 3-1 Block diagram of the AI Energy Meter 480VAC ST

Usable BaseUnit

The ET 200SP Distributed I/O System manual explains that a potential group always starts with a light BaseUnit. The AI Energy Meter 480VAC ST makes an exception in this case and only uses the dark BaseUnits type D0, 6ES7193-6BP00-0B**D0**.

The BaseUnit is not in contact with the power bus and passes the potential through from the left to the right slot.

When using some older CPUs / interface modules, note that the first permissible place for AI Energy Meter 480VAC ST is slot 2.

Connection types

The AI Energy Meter 480VAC ST supports the following connection types:

- 3P4W1, 3 phases, 4 conductors, balanced load
- 3P4W, 3 phases, 4 conductors
- 2P3W, 2 phases, 3 conductors
- 1P2W, 1 phase, 2 conductors
- 3 x 1P2W, 3 x 1 phase, 2 conductors

The input circuit of the module must correspond to one of the listed connection types. Select the appropriate connection type for the intended use.

You will find examples of connections in the section Connection examples (Page 21).

Information on the selection of a current transformer is available in the section Current transformer selection data (Page 24).

3.2 Connection examples

The following figures show the connection of the Energy Meter for three-phase, two-phase and single-phase measurements. Note that the Energy Meter must always be connected via a current transformer. The use of voltage transformers is optional.

Connection type	Wiring diagram	Comment
3P4W Three-phase measurement, 4 wires	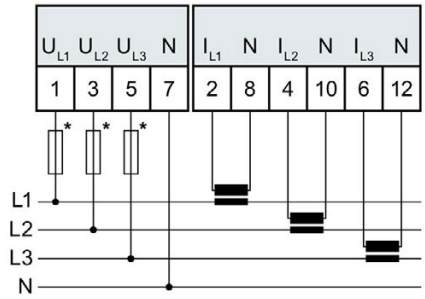	Any load Connection with three current transformers
3P4W Three-phase measurement, 4 wires	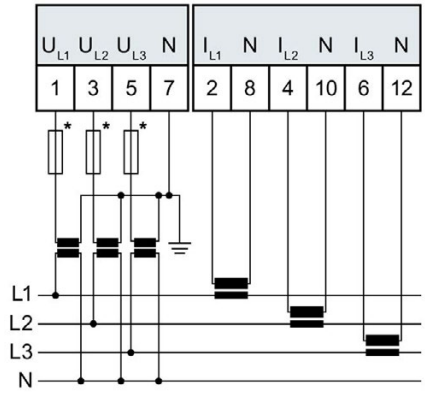	Any load Connection with three current and three voltage transformers
3P4W1 Three-phase measurement, 4 wires	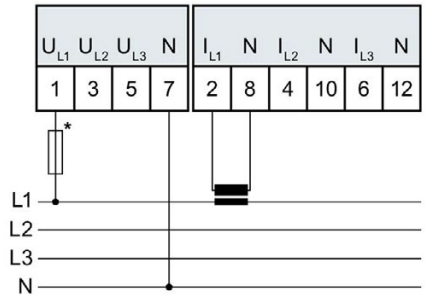	Balanced load Connection with one current transformer

Connection type	Wiring diagram	Comment
3P4W1 Three-phase measurement, 4 wires	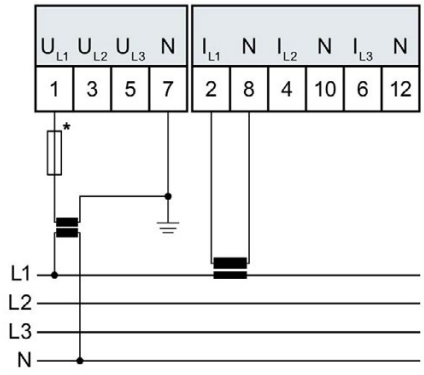	Balanced load Connection with one current and one voltage transformer
2P3W Two-phase measurement, 3 conductors	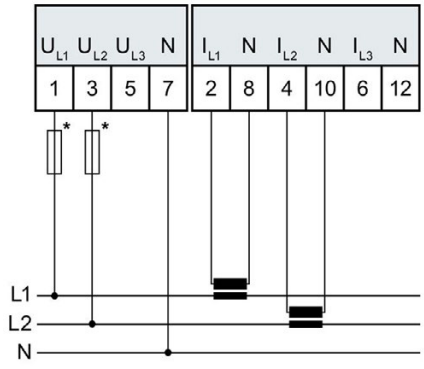	Any load Connection with two current transformers Energy Meter supplies the value "0" for all measured values of Phase 3 as well as for some cross-phase measured values.
2P3W Two-phase measurement, 3 conductors	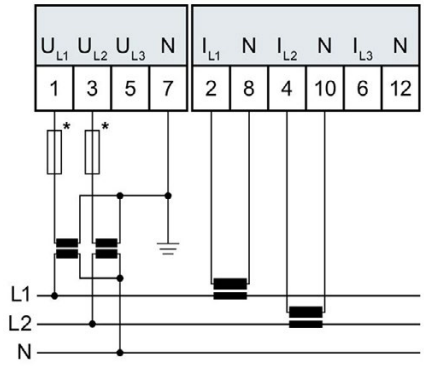	Any load Connection with two current and two voltage transformers Energy Meter supplies the value "0" for all measured values of Phase 3 as well as for some cross-phase measured values.
1P2W Single-phase measurement, 2 conductors	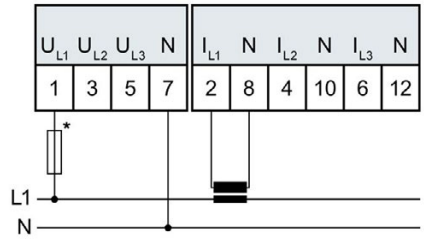	Measurement in an AC network with a current transformer Energy Meter supplies the value "0" for all measured values of Phases 2 and 3 as well as for some cross-phase measured values.

Connection type	Wiring diagram	Comment
1P2W Single-phase measurement, 2 conductors	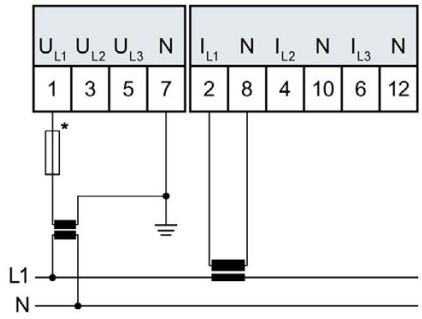	Measuring the load in an AC network with a current and a voltage converter Energy Meter supplies the value "0" for all measured values of Phases 2 and 3 as well as for some cross-phase measured values.
3 x 1P2W 3 x single-phase measurement	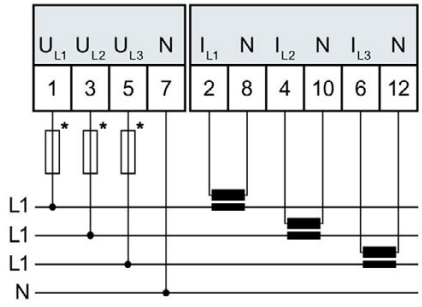	Measurement with three current transformers for any three loads that are each connected to one of the three phases Max. permissible secondary current of the current transformer is 1 A
3 x 1P2W 3 x single-phase measurement	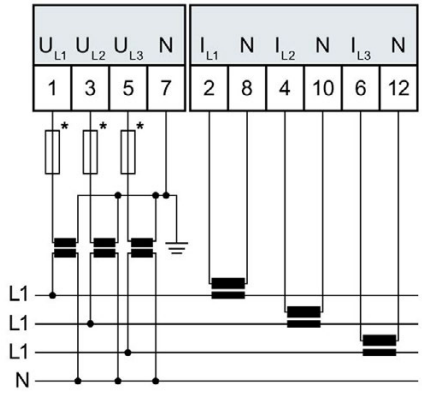	Measurement with three current transformers and three voltage transformers for any three loads that are each connected to one of the three phases Max. permissible secondary current of the current transformer is 1 A

* If short-circuit resistance according to IEC 61439-1:2009 is ensured by the design, there is no need for separate cable protection for the AI Energy Meter 480VAC ST.

Current transformer connection requirements

DIN VDE 0100-557 and IEC 60364-5-55 require the following for the connection of current transformers:

- The secondary circuits of current transformers must not be grounded.
- Guards must not be used in the secondary circuits of current transformers.
- The insulation of the secondary cables of transformers must be designed for the highest voltage of all active components, or the secondary cables must be installed in such a way that their insulation cannot touch any active components, such as busbars.
- Connection points must be provided for temporary measurements.

3.3 Current transformer selection data

Introduction

Connection via a current transformer is always required for the current measurement. Use toroids with an accuracy class of 0.5, 1 or 3.

Dimensioning of the current transformer

The correct dimensioning of the current transformer is important for the following reasons:

- You achieve correct results from the measurements and
- You do not overload or damage the current transformers.

Selecting a current transformer

Use current transformers with a burden capacity 1.5 to 2 times greater than the power dissipation in the terminal circuit (consisting of resistance of the connection cables and burden of energy meter). 1.5 times the power loss is required in order to prevent the transformer from overloading. 2 times the power dissipation is important to ensure the current limiting in case of a short-circuit.

Maximum length of the connection cable

To avoid overloading or damaging the current transformer, the burden Z_n specified on the data sheet of the current transformer (in VA) must not be exceeded. To prevent this being exceeded, the entire burden resistance (consisting of the resistance of the connection cable and the internal resistance of the AI Energy Meter 480VAC ST (see figure below) must be below a certain resistance value (depending on Z_n and I_{max}).

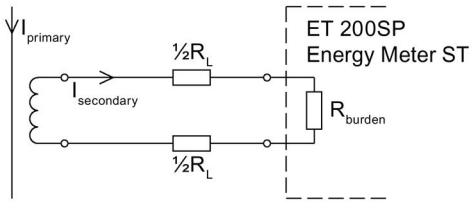

Figure 3-2 Maximum length of the connection cable

The maximum value of the resistance of the connection cable is obtained with the following formula:

$$R_{L,\,max} = \frac{Z_n}{I_{max}^{\,2}} - R_{burden}$$

R_L	Cable resistance in ohms	I_{max}	Secondary current of the current transformer
Z_n	Rated burden current transformer in VA	R_{burden}	Resistance of the Energy Meter (25 mΩ)

Figure 3-3 Maximum value for the resistance of the connection cable

Based on the maximum cable resistance in ohms, you then calculate the maximum length of the connection cable. To do this, check the data sheet of the connection cable you are using.

Note

The length of the connection cable (outwards and return) must not exceed the value of 200 meters.

Example: Usage of a current transformer 500/5 A

You use a current transformer with a transmission ration of 500/5 A that has a rated burden Z_n of 5 VA according to the data sheet.

The maximum primary current in the application amounts to 400 A. This means that the maximum secondary current $I_{max.}$ amounts to 4 A. The burden of the AI Energy Meter including connection resistance amounts to R_{Burden} = 25 mΩ.

The maximum value of the resistance of the connection cable (outgoing and incoming line) is obtained using the following formula:

$$R_{L,\,max} = \frac{Z_n}{I_{max}^{\ 2}} - R_{Burden} = \frac{5\ AV}{16\ A^2} - 25\ m\Omega = 312.5\ m\Omega - 25\ m\Omega = 287.5\ m\Omega$$

The maximum cable resistance between the transformer and the terminals of the Energy Meter may not exceed 287.5 mΩ in this case. The corresponding cable length (outgoing and incoming line) depends on the cross-section used of the copper line and can be determined by using the following table.

The following table shows the resistance values of copper cables for typical cross-sections with ρ = 0.017857 Ω x mm²/m

Estimating the length for a connection cable

The value in the table must be less than the calculated terminal resistance $R_{L\ max}$ of the cable. For the resistance R_{Lmax} of 287.5 mΩ used in the above example it is possible to use a connection cable (outgoing and incoming line) with a length of 10 m from a cross-section of 0.75 mm² upward.

Cross-section	AWG	Cable overview for copper				
		0.5 m	1 m	5 m	10 m	50 m
0.25 mm²	24	35.7 mΩ	71.4 mΩ	357.1 mΩ	714.3 mΩ	3571.4 mΩ
0.34 mm²	22	26.3 mΩ	52.5 mΩ	262.6 mΩ	525.2 mΩ	2626.0 mΩ
0.5 mm²	21	17.9 mΩ	35.7 mΩ	178.6 mΩ	357.1 mΩ	1785.7 mΩ
0.75 mm²	19/20	11.9 mΩ	23.8 mΩ	119.0 mΩ	238.1 mΩ	1190.5 mΩ
1.0 mm²	18	8.9 mΩ	17.9 mΩ	89.3 mΩ	178.6 mΩ	892.9 mΩ
1.5 mm²	16	6.0 mΩ	11.9 mΩ	59.5 mΩ	119.0 mΩ	595.2 mΩ
2.5 mm²	14	3.6 mΩ	7.1 mΩ	35.7 mΩ	71.4 mΩ	357.1 mΩ

Checking the ratio of burden load and power loss

The rated burden of the transformer must be 1.5 to 2 times greater than the power loss in the connection circuit to ensure that the transformer is not overloaded and that the current limitation is ensured during a short-circuit.

At a maximum secondary current of 4 A the power loss in the connection circuit is calculated in accordance with the following formula for a connection cable (outgoing and incoming line) with a length of 10 m and a cross-section of 1.0 mm² and a burden resistance of the Energy Meter of 25 mΩ:

$$P_{\text{Connection circuit}} = (R_{\text{Connection cable}} + R_{\text{Burden}}) \times I^2_{\text{Max. secondary}}$$

$$P_{\text{Connection circuit}} = (178.6\ \text{m}\Omega + 25\ \text{m}\Omega) \times 4^2\ \text{A}^2\ 3.26\ \text{W}$$

The ratio of the rated burden and the power loss in the connection circuit thus amounts to:

$$\frac{Z_{\text{N rated burden}}}{P_{\text{Connection circuit}}} = \frac{5\ \text{VA}}{3.26\ \text{W}} = 1.54$$

The required ratio of rated burden and power loss in the connection circuit lies within the required range. The transformer is dimensioned sufficiently large.

See also

Technical specifications (Page 106)

Configuration / address space 4

4.1 Configuring

Introduction

To configure the AI Energy Meter 480VAC ST after connecting it, use configuration software such as STEP 7. In addition, you can also change numerous parameters of the AI Energy Meter 480VAC ST in RUN via the user program.

Configuring

You configure the AI Energy Meter 480VAC ST with:

- STEP 7 (TIA Portal) V13 SP1 or higher with Update 4 and HSP
- STEP 7 V5.5 SP4 or higher and Hotfix 7
- GSD file for PROFIBUS or PROFINET

Note

Consistency check of the parameter assignment only with STEP 7

If you configure the AI Energy Meter 480VAC ST using STEP 7, STEP 7 already checks the various parameters for consistency while they are being entered.

If you configure the AI Energy Meter 480VAC ST using a GSD file, a consistency check is not carried out. The module does not recognize incorrect entries until after the parameter data record has been transferred. If the module recognizes an invalid parameter, the module rejects the complete data record.

Preferably use STEP 7 to configure the AI Energy Meter 480VAC ST.

The following instructions show the theoretical procedure for configuring the AI Energy Meter 480VAC ST with STEP 7 (TIA Portal) V13 SP1 or higher with Update 4 and HSP.

1. Select the ET 200SP distributed I/O system you are using in the hardware catalog.
2. Insert the module into your station.
3. Open the device view of the ET 200SP and insert the AI Energy Meter 480VAC ST.
4. Configure the AI Energy Meter 480VAC ST to suit your requirements.

   Once the configuration has been compiled without errors, you can download the configuration to the CPU and commission the ET 200SP station while the AI Energy Meter 480VAC ST is running.

4.2 Selecting the module versions

Introduction

The AI Energy Meter 480VAC ST has different module versions.

During the configuration you use the selection of the module version to specify which measured values can be read.

Each module version supplies quality information via the input user data.

With the exception of the module version "2 I / 2 Q" you can read the measured values as user data cyclically from the process image. At each module version you have the option to read measured value records from the AI Energy Meter 480VAC ST by using the RDREC instruction asynchronously.

Influence of the module version on the address space

Note

Influence of the AI Energy Meter 480 VAC ST on the maximum configuration of the ET 200SP

The available address space of the ET 200SP is influenced by the following factors:

- CPU or interface module
- Plugged I/O modules

The address space made **additionally** available by the AI Energy Meter 480 VAC ST is essentially influenced by the length of the user data supplied. The module version determines the length of the user data, which can be supplied by the AI Energy Meter 480VAC ST at maximum.

4.2.1 Module versions at configuration with STEP 7

Module versions with fixed user data assignment

Module version	User data	Address space	Comment
2 I / 2 Q	No cyclic user data. Access to measured values through "Read data record".	2-byte inputs 2-byte outputs	Information about the structure of the 2 I / 2 Q module version is available in the appendix Module version "2 I / 2 Q" (Page 142).
EE@Industry E0	User data in accordance with EE@Industry measurement data profiles	12 byte inputs / 12 byte outputs	Information about the structure of the EE@Industry measured data profiles is available in the appendix Module version "EE@Industry measurement data profile E0 / E1 / E2 / E3" (Page 153).
EE@Industry E1		4 byte inputs / 12 byte outputs	
EE@Industry E2		12 byte inputs / 12 byte outputs	
EE@Industry E3		104 byte inputs / 12 byte outputs	

Module versions with selectable user data variants

Module version	User data	Address space	Comment
32 I / 12 Q	User data selectable through defined user data variants	32 byte inputs / 12 byte outputs	You can change over the user data variant during operation. Information about the structure of the 32 I / 12 Q module version is available in the appendix Module version "32 I / 12 Q" (Page 145). Information about the user data variants at 32 I / 12 Q is available in the appendix User data variants with 32 bytes input data / 12 bytes output data (Page 155).
User-specific	User data selectable through user data mapping or through defined user data variant	Variable* / 12 byte outputs	You have to activate the check box "User data-mapping" in STEP 7 to use the module version user-specifically. You can change over the user data variant during operation. Information about the structure of the user-specific module version is available in the appendix "User-specific" module version (Page 151).

* 16 ... 256 bytes in steps of 16 bytes, depending on the mapped measured values

4.2.2 Module versions at configuration with GSD file

Module versions with fixed user data assignment

Module version	User data	Address space	Comment
2 I / 2 Q	No cyclic user data. Access to measured values through "Read data record".	2-byte inputs 2-byte outputs	Information about the structure of the 2 I / 2 Q module version is available in the appendix Module version "2 I / 2 Q" (Page 142).
E0	User data in accordance with EE@Industry measurement data profiles	12 byte inputs / 12 byte outputs	Information about the structure of the EE@Industry measured data profiles is available in the appendix Module version "EE@Industry measurement data profile E0 / E1 / E2 / E3" (Page 153).
E1		4 byte inputs / 12 byte outputs	
E2		12 byte inputs / 12 byte outputs	
E3		104 byte inputs / 12 byte outputs	

Module versions with selectable user data variants

Module version	User data	Address space	Comment
32 I / 12 Q	User data selectable through user data variants or through user-specific user data*	32 byte inputs / 12 byte outputs	You can change over the user data variant during operation. If you use user-specific user data, you write your measured value profile into the AI Energy Meter 480VAC ST with the data record 130. To do this use the WRREC instruction. Information about the structure of data record 130 is available in appendix Structure of the parameter data record 130 for user-data mapping (Page 125).
64 I / 12 Q		64 byte inputs / 12 byte outputs	
128 I / 12 Q		128 byte inputs / 12 byte outputs	
256 I / 12 Q		256 byte inputs / 12 byte outputs	

*Ensure that the user data do not exceed the size of the address space of the module version. If necessary, use a module version with a larger address space

4.2.3 Changing over the user data variant during operation

Introduction

You change the user data variant in the output data of each user data variant in Byte 0.

The following figure shows to which user data you can change over at various module versions during operation.

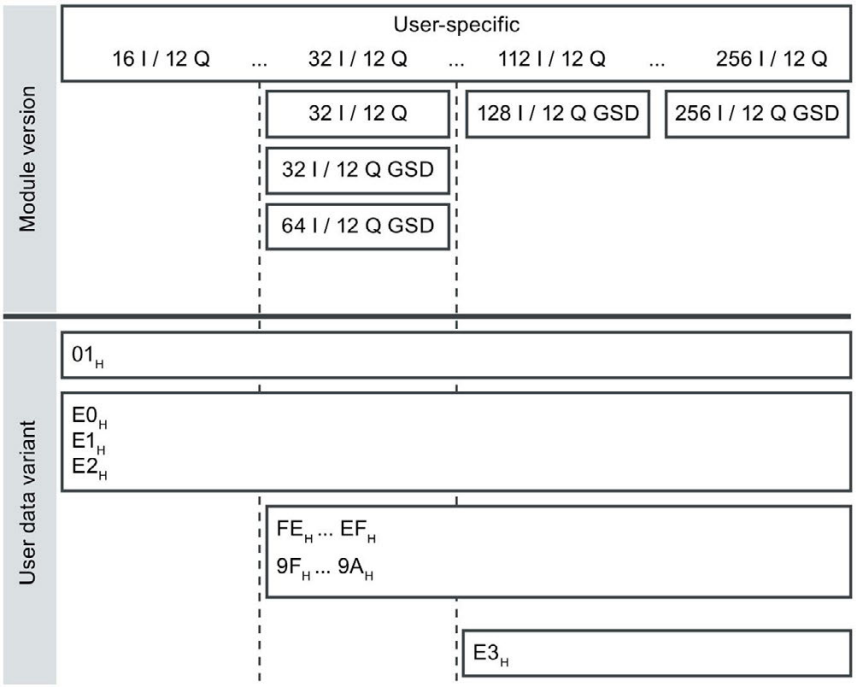

Requirement

- User program has been created.
- AI Energy Meter 480VAC ST is configured as one of the module versions mentioned in the illustration above.
- The start address of the module is known in the process image output.

Procedure

1. Create one constant with the data type BYTE per user data variant.
2. Enter the user data ID as a value in each case.
3. Write the constant to the start address of the module in the process image output.

Result

The user data variant is switched with the next cycle.

Note

Information about user data changeover

The parameterized user data variant is set in the following cases:

- A "0" is written in byte 0 in the output data of a user data variant.
- Byte 0 in the output data of a user data variant contains an invalid value:
  - Coding of the user data variant not available

    or
  - Available address space is not sufficient for the selected user data variant.

4.2.4 Recommendations for selecting the module version

The following table shows which module version is suitable for a given purpose.

Module version	Application	Note
2 I / 2 Q	• Use of many AI Energy Meter 480VAC ST in an ET 200SP or little address space is available	• Read the measured values solely via the RDREC instruction from a measured value data record. • Quality information about the measured values is always available.
EE@Industry measurement data profile E0 / E1 / E2 / E3	• Cyclic measurement per phase • Supplied measured values in accordance with the EE@Industry measured data profile	• Available measured values depend on the configured measurement data profile. • The user data are fixed and cannot be changed dynamically. Alternatively, read the measured values acyclically from a measured value data record via the RDREC instruction. • No quality information
32 I / 12 Q	• Cyclic measurement per phase • Flexibility by switching predefined user data variants	• Quality information about the measured values is always available. • Depending on the user data variant, you must convert the measured values in the CPU to physical values using the supplied scaling factor. • One cycle elapses for each user data changeover. Measured values from the next user data variant are thus supplied with a slight time offset. Alternatively, read the measured values acyclically from a measured value data record via the RDREC instruction. Consistent measured values of a measuring cycle are supplied.
User-specific With GSD configuration • 32 I / 12 Q • 64 I / 12 Q • 128 I / 12 Q • 256 I / 12 Q	• Cyclic measurement of up to 64 measured values configurable • Flexibility by switching predefined user data variants	

4.3 Applicable modules

Configuring with STEP 7

The following table shows with which controllers the different module versions can be configured with STEP 7.

Table 4- 1 Module versions configured with STEP 7

Controller	Module version						
	2 I / 2Q	32 I / 12 Q	User-specific	EE@Industry measurement data profile			
				E0	E1	E2	E3
IM 155-6 PN ST	V1.0 or higher		V1.0 or higher* V3.1 or higher	V1.0 or higher			V3.1 or higher
IM 155-6 PN HF	V2.0 or higher		V2.0 or higher* V3.1 or higher	V2.0 or higher			V3.1 or higher
IM 155-6 PN BA	V3.2 or higher		---	V3.2 or higher			---
IM 155-6 PN HS	V4.0 or higher						
IM 155-6 DP HF	V1.0 or higher		---	V1.0 or higher			---
CPU 1510SP-1 PN	V1.6 or higher		V1.6 or higher* V2.0 or higher	V1.6 or higher			V2.0 or higher
CPU 1510SP F-1 PN	V1.7 or higher		V1.7 or higher* V2.0 or higher	V1.7 or higher			V2.0 or higher
CPU 1512SP-1 PN	V1.6 or higher		V1.6 or higher* V2.0 or higher	V1.6 or higher			V2.0 or higher
CPU 1512SP F-1 PN	V1.7 or higher		V1.7 or higher* V2.0 or higher	V1.7 or higher			V2.0 or higher
CPU 1515SP PC	V1.7 or higher		V1.7 or higher* V2.0 or higher	V1.7 or higher			V2.0 or higher

* Only up to 32 bytes

Configuring with GSD file

The following table shows with which controllers the different module versions can be configured using a GSD file.

Table 4- 2 Module versions configuring with GSD file

Controller	Module version						
	2 I / 2Q	32 I / 12 Q	64 I / 12 Q 128 I / 12 Q 256 I / 12 Q	EE@Industry measurement data profile			
				E0	E1	E2	E3
IM 155-6 PN ST	V1.0 or higher		V3.1 or higher	V1.0 or higher			V3.1 or higher
IM 155-6 PN HF	V2.0 or higher		V3.1 or higher	V2.0 or higher			V3.1 or higher
IM 155-6 PN BA	V3.2 or higher		---	V3.2 or higher			---
IM 155-6 PN HS	V4.0 or higher						---
IM 155-6 DP HF	V1.0 or higher		---	---			---

Quick start

5

Introduction

This section shows you how to read and view your first measured values on the Energy Meter 480 VAC ST in a particularly quick and easy way.

Requirement

You have already connected the Energy Meter to your network with one of the connection types shown in the section Wiring (Page 18). The Energy Meter 480 VAC ST has already been integrated in your configuration tool (such as STEP 7), or the
Energy Meter 480 VAC ST has been integrated in your hardware catalog with the GSD/GSDML file.

Procedure

1. Configure an ET 200SP station

   Configure an ET 200SP station with a CPU 151xSP or an IM 155-6.

2. Plug module in ET 200S station

   Plug the Energy Meter 480 VAC ST into the ET 200SP station and use the module version with 32 bytes inputs and 12 bytes outputs.

3. Set the module parameters

   Set the following parameters for the Energy Meter 480 VAC ST:

   – Connection type that you have used for the Energy Meter 480 VAC ST (e.g. 3P4W)
   – Measuring range, i.e. the phase voltage (UL1-N) of your network (for example 230 V AC)
   – Frequency of your network (for example 50 Hz)
   – Primary and secondary current of the used current transformer (e.g. 100 A and 1 A)
   – Primary and secondary voltages of the used voltage transformer (e.g. 230 V and 230 V)

   Leave all other parameters at their default settings and do not change them.

4. Load configuration

   Switch on the ET 200SP station and download the configuration to the CPU.

Result

After being switched on, the Energy Meter supplies the measured values for the "Total power L1L2L3" user data variant "Basic measurements" with the ID 254 or FE_H.

Read and check the measured values provided by the Energy Meter in the output data.

The table below shows the structure of the user data variant, the measured variables and the data type of the measured values in STEP 7 (TIA Portal) that are stored in the 32 bytes of output data of the module. Each measured variable is referenced via the measured value ID. An overview of all the measured variables with their measured value IDs is provided in the section Measured variables (Page 131).

Table 5- 1 Total power L1L2L3

Byte	Allocation	Data type	Unit	Value range	Measured value ID
0	User data variant	BYTE	-	254 (FE_H)	-
1	Quality information = QQ_1 I_3 U_3 I_2 U_2 I_1 U_1	BYTE	Bit string	qq xx xx xx	-
2 ... 3	Current L1	UINT	1 mA	0 … 65535	66007
4 ... 5	Current L2	UINT	1 mA	0 … 65535	66008
6 ... 7	Current L3	UINT	1 mA	0 … 65535	66009
8 ... 9	Total active power L1L2L3	INT	1 W	-27648 … 27648	66035
10 ... 11	Total reactive power L1L2L3	INT	1 var	-27648 … 27648	66036
12 ... 13	Total apparent power L1L2L3	INT	1 VA	-27648 … 27648	66034
14 ... 17	Total active energy L1L2L3	DINT	1 Wh	-2147483647 to +2147483647	225
18 ... 21	Total reactive energy L1L2L3	DINT	1 varh	-2147483647 to +2147483647	226
22	Reserved	BYTE	-	0	-
23	Total power factor L1L2L3	USINT	0.01	0 … 100	66037
24	Scaling current L1	USINT	-	0 ... 255	-
25	Scaling current L2	USINT	-	0 ... 255	-
26	Scaling current L3	USINT	-	0 ... 255	-
27	Scaling total active power L1L2L3	USINT	-	0 ... 255	-
28	Scaling total reactive power L1L2L3	USINT	-	0 ... 255	-
29	Scaling total apparent power L1L2L3	USINT	-	0 ... 255	-
30	Scaling total active energy L1L2L3	USINT	-	0 ... 255	-
31	Scaling total reactive energy L1L2L3	USINT	-	0 ... 255	-

Additional information

If you require further information about the evaluation and interpretation of the measured values, please refer to the section Reading and processing measured values (Page 37).

Reading and processing measured values 6

6.1 Basics for reading measured values

Introduction

The AI Energy Meter 480VAC ST provides the measured values and variables through the following methods:

- Cyclic: User data
- Acyclic: Measured value data records

User data

User data provide pre-defined measured values depending on the configured user data variant. The supplied measured values are cyclically written to the process image of the CPU. With some user data variants, the measured values are supplied as raw data, which you have to convert to the corresponding physical values using a supplied scaling factor.

Measured value data records

Each measured value data record supplies physical values that you can further process immediately. You read the values of a measured value data record acyclically with the RDREC instruction in a PLC tag. You need a corresponding PLC tag for each measured value data record to be read.

You can display the read measured values in a watch table in STEP 7.

Note

If you are using CPUs other than S7-1200 or S7-1500, convert 64-bit measured values to 32-bit measured values. Note the conversion can cause loss of accuracy.

For more information, read FAQ: Processing 64-bit-floating-point numbers in S7-300/400 (https://support.industry.siemens.com/cs/ww/en/view/56600676)

Validity of the measured values

After turning on the supply voltage UL1, the first measured values are available after approximately 2 seconds. In the input user data, the content of byte 0 is set to the selected user data variant. You can use this change in byte 0 as a trigger event.

As soon as the module has valid measured values, the value of this byte changes to a value within the value range.

Initial module startup

After the first startup or restart of the module, the parameters are transferred to the module. You can preset a user data variant in the parameters of the hardware configuration. This remains in effect until a different user data variant is selected in the output data (byte 0). This allows input user data to be modified dynamically according to the requirements of the process.

The user data variant defined in parameter data record 128 is used under the following conditions:

- A "0" is written in byte 0 in the output data of a user data variant.
- Byte 0 in the output data of a user data variant contains an invalid value:
  - Coding of the user data variant not available, or
  - Available address space is not sufficient for the selected user data variant.

    See "Selecting the module versions (Page 28)".

Current measured values become "0"

The current and all other measured values based on it are suppressed (or set to "0") in the data records and in the user data in the following cases:

- The incoming current of the current transformer is less than the configured "Low limit for measuring current" parameter
- Incoming secondary current at the channel is higher than 12 A

The following measured values and derived measured variables of the phase involved become "0":

- Effective current value
- Active power
- Reactive power
- Apparent power
- Neutral current
- Phase angle
- Power factor

A floating mean value is formed from the power values. These only become "0" after a corresponding time. The operating hours counter and the energy counter for active, reactive and apparent energy of the reset phase stops counting.

Substitute value behavior

The substitute values for input values of the AI Energy Meter 480VAC ST amount to "0".

See also

Reading measured values from user data cyclically (Page 45)

Read measured value from a measured value data record (Page 47)

6.2 Quality information

Use the quality information to evaluate the status for currents, voltage, operating quadrants and the rotating field.

The AI Energy Meter 480VAC ST provides quality information:

- In byte 1 of the user data
- In measured value IDs 65500 to 65503

See also

Module version "32 I / 12 Q" (Page 145)

6.2.1 Quality information in byte 1 of the user data

For all user data variants, the module provides brief quality information in an 8-bit field in byte 1 for:

- Currents (I_{L1}, I_{L2}, I_{L3})
- Voltages (U_1, U_2, U_3)
- Operating quadrant for a phase

Please note that quality information assignment with user data variants for phase-specific measurement (ID 154 to ID 159) is different from user data variant assignment for 3-phase measurement (ID 244 to ID 254).

Quality information in byte 1 of the user data for 3-phase measurement

The quality information for 3-phase measurement is provided by the module in user data variants ID 244 to ID 254.

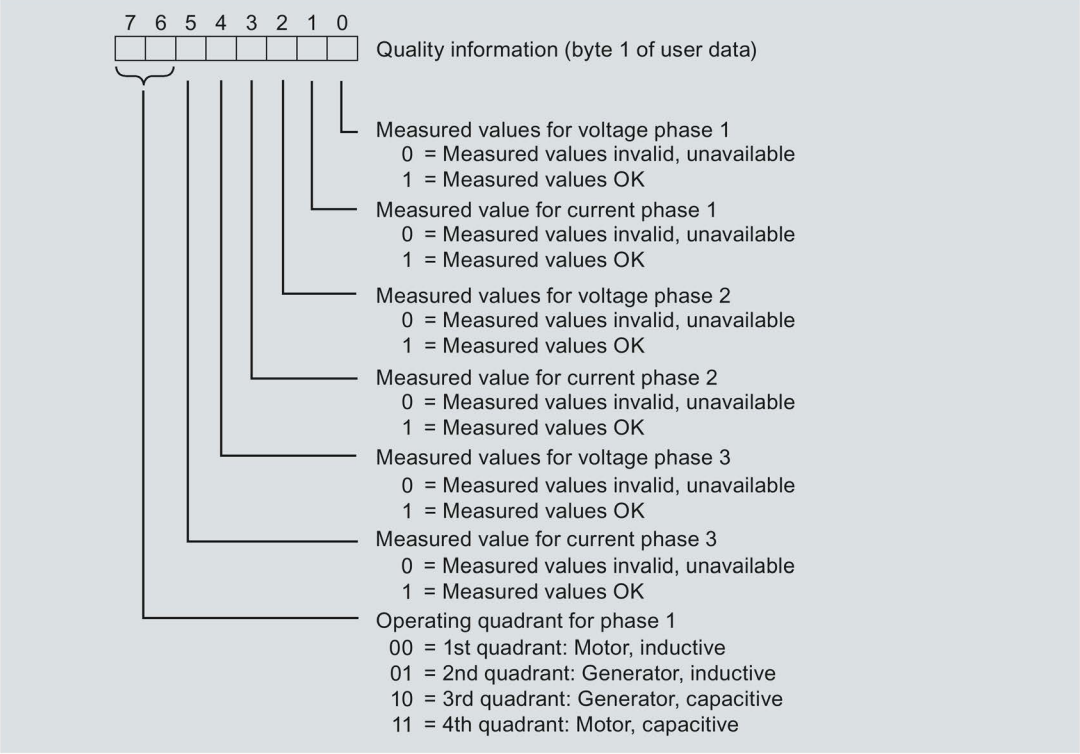

Figure 6-1 Assignment of byte 1 for user data variants ID 224 to ID 254

Quality information in byte 1 for phase-specific measurement

The quality information for phase-specific measurement is provided by the module in user data variants ID 154 to ID 159.

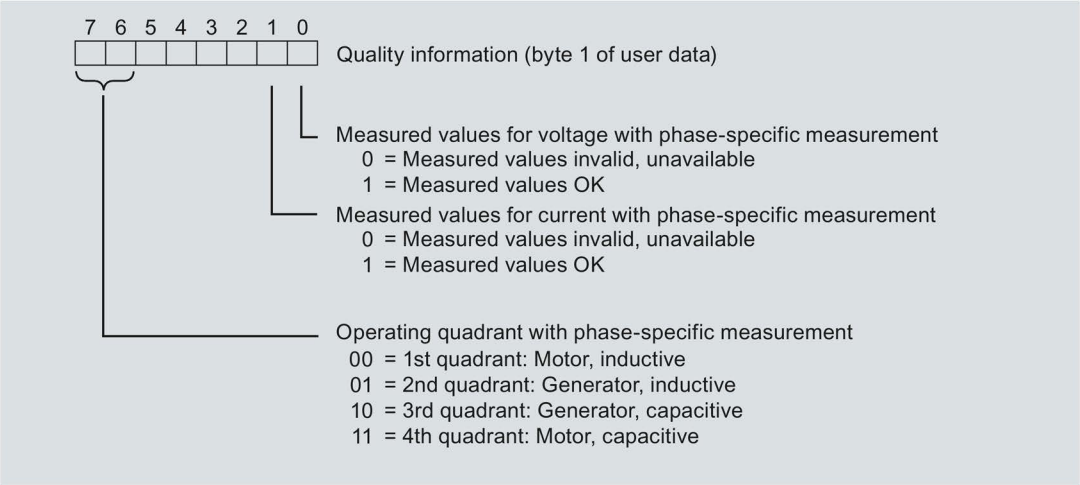

Figure 6-2 Byte 1 assignment for user data variants ID 154 to ID 159

6.2.2 Quality information with measured value IDs

Complete quality information is provided by the module in a 16-bit field with measured value IDs 65500 to 65503.

- Measured value ID 65503 for 3-phase measurement
- Measured value ID 65500, 65501 or 65502 for phase-specific measurement in phase 1, phase 2 or phase 3

Quality information with measured value ID 65503 for 3-phase measurement

The quality information for 3-phase measurement is provided by the module with:

- User data variant "Basic variables quality values three-phase measurement (ID 240 or $F0_H$)
- User data (measured value ID 66503)
- Measured value data record 150

The measured value IDs 65503 provide information on:

- Currents (I_{L1}, I_{L2}, I_{L3})
- Voltages (U_1, U_2, U_3)
- Operating quadrants for all 3 phases
- Rotating field for the 3-phase system

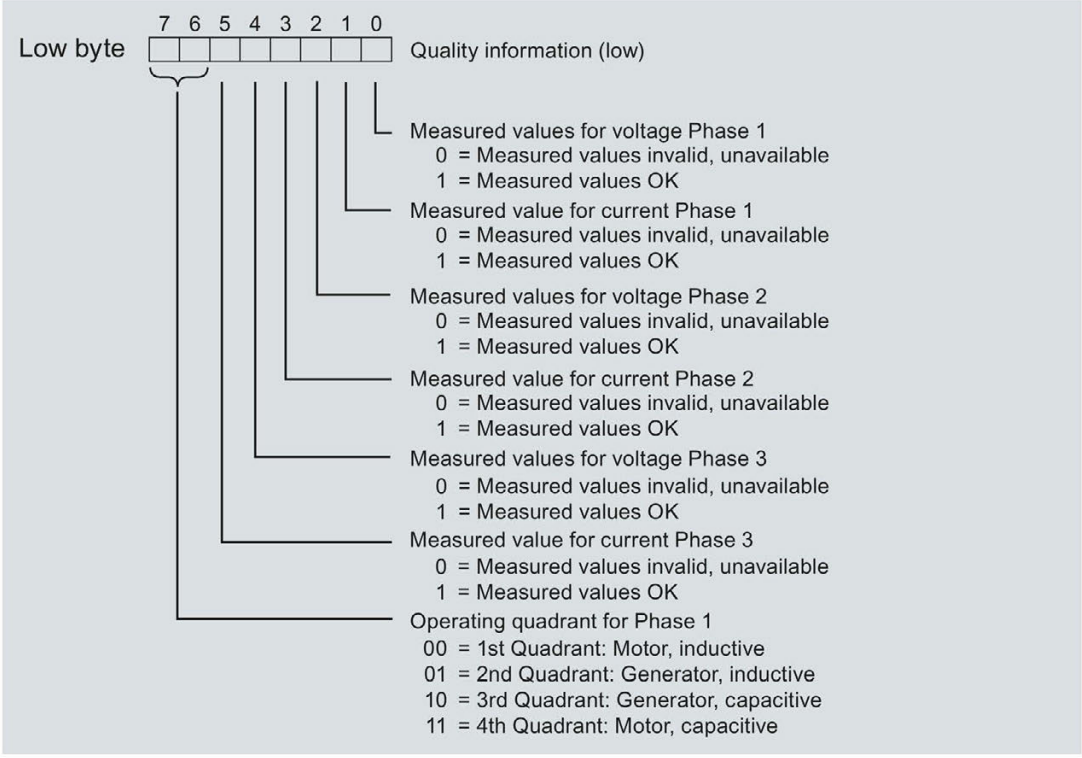

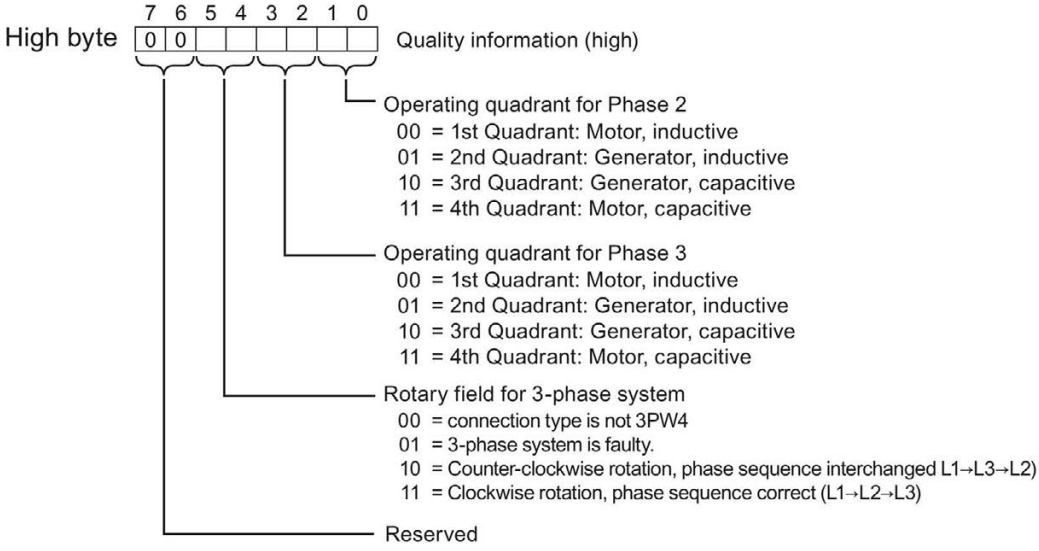

Figure 6-3 Quality information for low and high byte of the measured value ID 65503

Quality information with measured value ID 65500, 65501 or 65502 for phase-specific measurement

The module provides quality information for phase-specific measurement in phase 1, phase 2 or phase 3 with:

- User data (with measured value ID 65500, 65501 or 65502)
- Measured value data record DS 147, 148 or 149

Measured value IDs 65500, 65501 and 65502 provide information on:

- Current of the phase in question
- Voltage of the phase in question
- Operating quadrant of the phase in question

In contrast to the assignment for measured value ID 65503 (figure above), measured value IDs 65500, 65501 and 65502 only contain the phase-specific information for current, voltage and operating quadrant. The information about the other phases and the rotating field have the value 0.

6.2.3 Operating quadrant

The figure below shows the quality information of the operating quadrants.

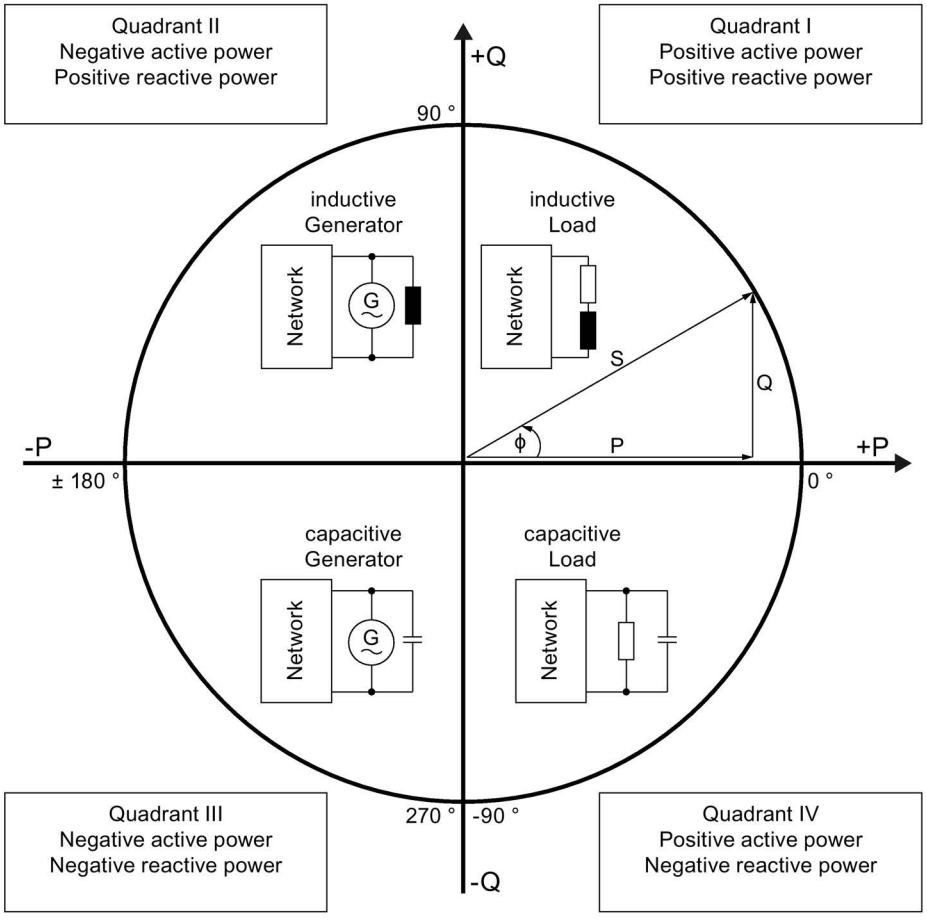

Figure 6-4 Quadrant in the quality bits

6.3 Reading measured values from user data cyclically

Requirement

- STEP 7 is open.
- AI Energy Meter 480VAC ST is configured.

Scaling of measured values in the user data

Since the value range of 16-bit values is often smaller than the value range of the physical value, a scaling factor is supplied together with the basic value in the user data for the respective measured or calculated values. You determine the actual value of the measured variable with the following formula:

Actual value of measured quantity = measured value in the user data x $10^{\text{scaling factor}}$

Procedure

To read measured values from the user data cyclically, proceed as follows:

1. Read the relevant measured value from the input data.
2. Observe the scaling factor at scaled measured values and convert the read measured value using the scaling factor.

Example

The user data variant 254 (FE_H) "Total power L1L2L3" is configured on the AI Energy Meter 480VAC ST. The measured value for "Current L1" should be read.

Table 6- 1 Total power L1L2L3

Byte	Allocation	Data type	Unit	Value range	Measured value ID
0	User data variant	BYTE	-	254 (FE_H)	-
1	Quality information = QQ_1 I_3 U_3 I_2 U_2 I_1 U_1	BYTE	Bit string	qq xx xx xx	-
2 ... 3	Current L1	UINT	1 mA	0 … 65535	66007
4 ... 5	Current L2	UINT	1 mA	0 … 65535	66008
6 ... 7	Current L3	UINT	1 mA	0 … 65535	66009
:	:	:	:	:	:
24	Scaling current L1	USINT	-	0 ... 255	-
25	Scaling current L2	USINT	-	0 ... 255	-
26	Scaling current L3	USINT	-	0 ... 255	-
:	:	:	:	:	:
31	Scaling total reactive energy L1L2L3	USINT	-	0 ... 255	-

In the user data variant FE_H (254) the measured value for the current L1 is stored in Byte 2 + 3. The current is supplied by the module as a 16-bit-fixed-point number in the value range from 0 to 65535 in the unit 1 mA. In addition the scaling factor for the current L1 has to be considered additionally. The module supplies the related scaling factor in Byte 24.

The actual value for current L1 is calculated as follows:

Actual value for current L1 = Current L1 x $10^{\text{Scaling current L1}}$

See also

Basics for reading measured values (Page 37)

6.4 Read measured value from a measured value data record

Introduction

To read measured values of a measured value data record, use the RDREC instruction. The read values are stored in a PLC variable with user-defined data type (UDT).

You can find more information on this in the STEP 7 documentation, under the keyword "RDREC".

Requirement

- STEP 7 is open.
- AI Energy Meter 480VAC ST is configured.

Procedure

1. In STEP 7 create a user-defined data type with the structure of the data record to be read.
2. Insert the number of structural elements, which corresponds to the number of entries contained in the measured value data record.
3. Insert the RDREC instruction in the user program.
4. Configure the RDREC instruction as follows:
   - ID: Hardware identifier or start address of the Energy Meter (depending on the CPU used).
   - INDEX: Number of measured value data record whose entries are read.
   - MLEN: Length of the measured value data record in bytes. "0" if all the entries are to be read.
   - RECORD: Target range for the read data record Length depends on MLEN.
5. Call the RDREC instruction with REQ = 1.

Result

The values from the measured value data record were transferred into the target data area.

See also

Basics for reading measured values (Page 37)

Energy counters 7

7.1 How the energy meter works

Introduction

The AI Energy Meter 480VAC ST provides 42 energy counters that detect both line-based and phase-based energy values.

- Active energy (total, outflow, inflow)
- Reactive energy (total, outflow, inflow)
- Apparent energy (total)

How energy recording works

Based on the measured currents and voltages and the calculation cycle the Energy Meter calculates the active, reactive and apparent energy. The active, reactive and apparent energies are updated in each calculation cycle.

Retentivity

All the counter states of the module are stored retentively in the Energy Meter. After an interruption (e.g. Power System Off → Power System On), the energy counting resumes with the retentively stored values.

Configuring

You configure the following settings for the energy counters:

- Activation of the gate for the energy counter

  The gate allows you to start and stop the counters via output data (DQ bit). If you deactivate the gate, the count starts immediately when the Energy Meter is switched on.

- Modes of the energy counters

  The energy counters count either infinitely or periodically. For periodic counting, the adjustable full-scale values are 10^3, 10^6, 10^{12} and 10^{15}. When the full-scale value is exceeded, the energy counter begins again at 0. At the same time the overflow counter is increased by 1 (see Resetting energy counters and overflow counters (Page 54)).

The settings apply to the energy counter of all phases.

Changing properties in RUN

You can change the following properties of energy counters in runtime:

- Enable / disable energy counter
- Reset energy counter
- Set initial values for the energy counter
- Change the mode of the energy counter

Automatic reset of the energy counter

The energy counters are automatically reset to "0" when parameter settings relevant to the energy counter are changed. In the case of phase-specific changing of parameter settings relevant to the energy counter only the energy counters of the respective phases are reset.

Changing of the following parameters results in resetting of the energy counters:

- Measurement type or range
- Current transformer (primary current/secondary current)
- Voltage transformer (primary voltage/secondary voltage)
- Direction of current
- Full-scale value for energy counter
- Mode of the energy counter (infinite / periodic)

Example

The following figure shows the effect of initial value, reset and start/stop parameters with activated gating using the energy counter as an example:

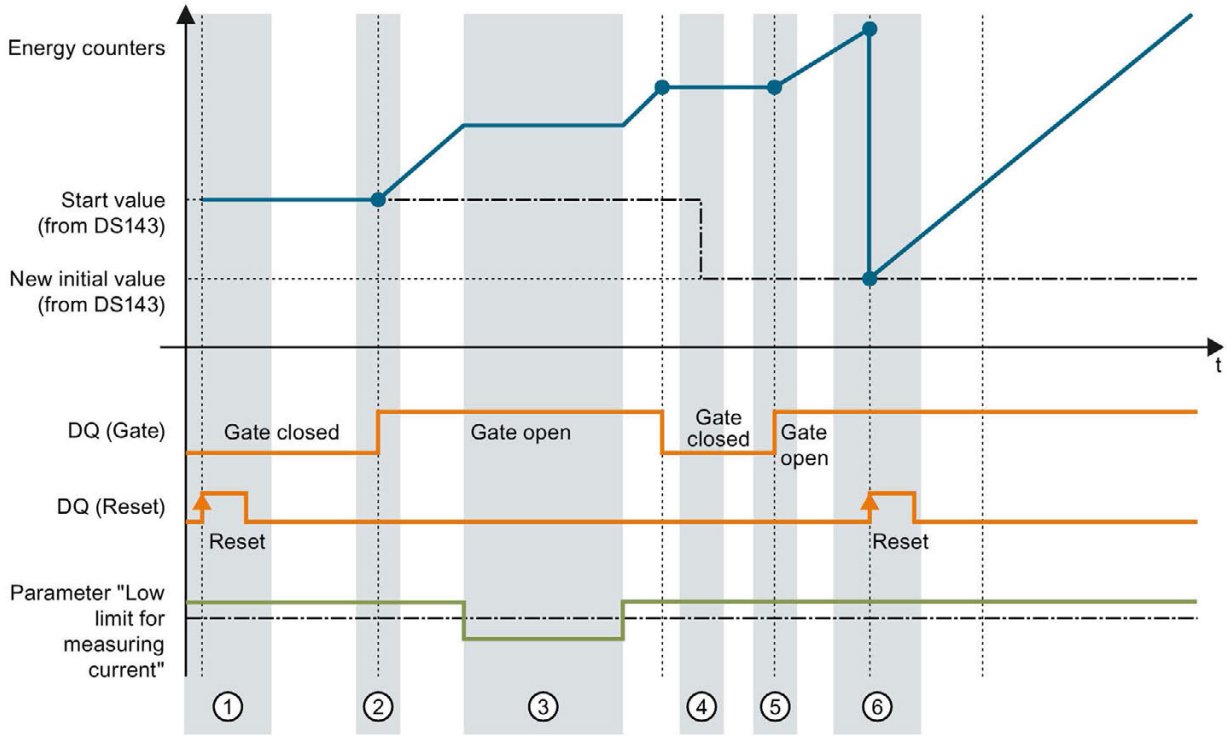

① The counter is reset to the value specified in the configuration. The gate is closed. The counter does not count.

② The gate is opened via the control byte 1 in the output data of the user data variant. The counter counts.

③ The configured current low limit has been violated. The counter does not count.

④ The gate is closed. The counter does not count. A new start value is written to the measured value data record 143 with the WRREC instruction.

⑤ The gate is opened again via the control byte 1 in the output data of the user data variant. The counter counts with the new start value.

⑥ The counter is reset via the control byte 1 in the output data of the user data variant. The counter counts from the new start value that was transferred via the measured value data record 143.

See also

Evaluate energy counter and overflow counter (Page 53)

7.2 Configuring counters

Overview

You can configure the energy counters of the AI Energy Meter 480VAC ST as follows:

- Activate / Deactivate
- Start / stop counters using gate
- Set and reset start value

Energy counter gate

You have the option of starting and stopping the energy counter using the gate. To this purpose you have to:

- Select the "Enable gate control for the energy counter" parameter in the configuration of the AI Energy Meter 480VAC ST.
- Set the DQ bit for the "counter gate" in the user data in Control byte 1 of the output data (Bit 6 in Control byte 1).

The "Enable gate control for the energy counter" parameter and the DQ bit for the "counter date" behave like the parallel connection of contacts.

Gate enabled: Gate "open" if DQ = "1"

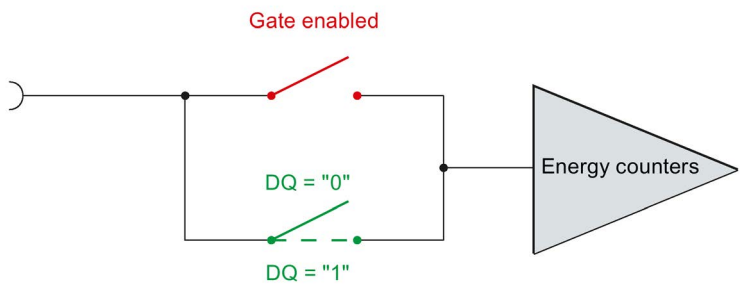

Figure 7-1 Gate enabled

If you deselect the "Enable gate control for the energy counter" parameter in the configuration of the AI Energy Meter 480VAC ST, the energy counters operate independently of the DQ bit as long as the current value lies above the configured "Low limit for measuring current".

Gate disabled: Gate is always "open" (signal path closed)

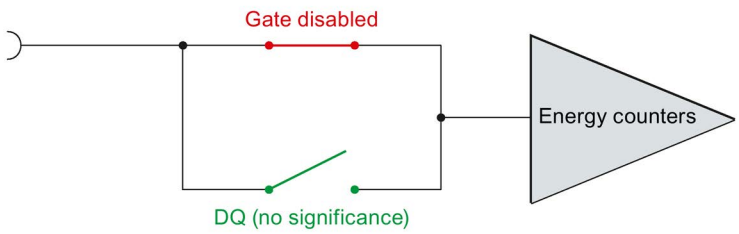

Figure 7-2 Gate disabled

Set and reset start value

The counters can be set to their start value via the output data of each user data variant. With energy counters, you have to reset the bit of the energy counter in control byte 2 of the data record 143.

You can reset each energy counter to the start value or also specify a new start value via the data record 143. You define the moment for updating of the start values in the data record 143 and in Control byte 1 in the user data. Start values are either applied immediately or after a reset bit has been set from 0 to 1.

You can find a detailed description for this in section Resetting energy counters and overflow counters (Page 54).

7.3 Evaluate energy counter and overflow counter

Evaluate energy counter and overflow counter

The energy counters are evaluated by

- Using the input data of the user data variants for energy
  - User data variant "Total energy L1 L2 L3" (ID 249 or $F9_H$)
  - User data variant "Energy L1" (ID 248 or $F8_H$)
  - User data variant "Energy L2" (ID 247 or $F7_H$)
  - User data variant "Energy L3" (ID 246 or $F6_H$)
- Using the input data of the user-defined user data variant with the use of the respective measuring value IDs for energy counters
- By reading data records
  - "Data record for basic measured values (DS 142)" for evaluation of the total energies L1 L2 L3.
  - "Data record for energy counter (DS 143)" for evaluation of the phase-specific energy.
  - "Data record for phase-specific measured values L1 - L3 (DS 147 - 149) for evaluation of the phase-specific energies.

The overflow counters are evaluated by:

- Using the input data of the user-defined user data variant with the use of the respective measuring value IDs for overflow counters
- Reading the "Data record for energy counter (DS 143)".

Evaluate measured values

The evaluation of measured values via the input data of user data variants and reading of data records with the RDREC instruction is described in the section Reading and processing measured values (Page 37).

7.4 Resetting energy counters and overflow counters

Introduction

At the beginning of a new work order, it may be useful to reset the energy and overflow counter of the Energy Meters Resetting here means setting the energy counters to their start values and resetting the overflow counters to 0.

The following sections describe how you

- Reset energy counters via the outputs of the user data.
- Reset energy counters and overflow counters via data record 143.

See also

Structure for energy counters (DS 143) (Page 61)

7.4.1 Reset energy counters via user data

Introduction

Due to the differing lengths of the output data resetting of the energy counters depends on the configured module version.

If you use module versions with 12 bytes of output data, you can

- Reset energy counters for **all** phases separately by active, reactive and apparent energy.
- Reset energy counters for each **individual** phase separately by active, reactive and apparent energy.

If you use the module version with 2 bytes output data, you always reset **all** the energy counters simultaneously.

Procedure at module version with 12 bytes of output data

Resetting energy counters for all 3 phases

1. Select the categories of energy counter that you want to reset in byte 2.
   - Set bit 5 for active energy counters.
   - Set bit 6 for reactive energy counters.
   - Set bit 7 for apparent energy counters.

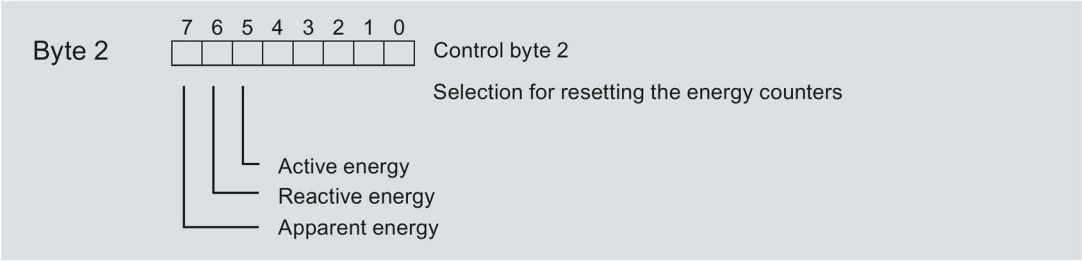

Figure 7-3 Selection of energy counters

2. Set the reset bit (bit 7) in byte 1.

   If there is an edge change of the reset bit for energy counters from 0 to 1, the module resets all energy counters that you previously selected in byte 2.

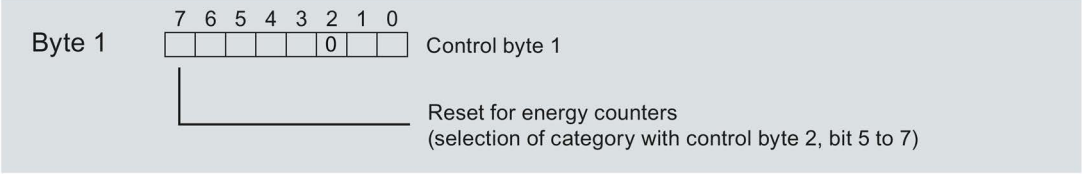

Figure 7-4 Reset bit for energy counters

Resetting energy counters for phase-specific measurement

You can also reset the energy counters on a phase-specific basis using the output data.

Follow the procedure for "Resetting energy counters for all 3 phases" as applicable.

1. Select the categories of energy counter that you want to reset on a phase-specific basis.
   - Set the bits for the phase 1 energy counters in byte 7.
   - Set the bits for the phase 2 energy counters in byte 9.
   - Set the bits for the phase 3 energy counters in byte 11.
2. Set the reset bit (bit 7)
   - in byte 6 for phase 1
   - in byte 8 for phase 2
   - in byte 10 for phase 3

If there is an edge change of the phase-specific reset bit for energy counters from 0 to 1, the module resets the energy counters for the given phase:

Procedure at module version with 2 bytes of output data

If you use the module version with 2 bytes of output data, you always reset **all** the energy counters simultaneously.

Set the reset bit (Bit 7) in Control byte 1 from 0 to 1 through an edge change.

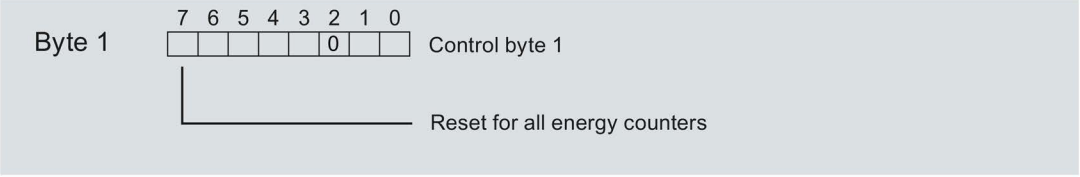

Figure 7-5 Resetting the energy counters at module version with 2 bytes of output data

Start values

After the reset the energy counters count with the specified start values (default = 0). You can change the start values for the energy counters via data record DS 143, see section Resetting energy counters and overflow counters via data record DS 143 (Page 56).

You can also reset the counters on a phase-specific basis by active, reactive and apparent energy using data record 143.

7.4.2 Resetting energy counters and overflow counters via data record DS 143

Introduction

At all the module versions you can reset the energy counters and their overflow counters via the data record DS 143. Resetting is possible for:

- Energy counters and overflow counters for each **individual** phase separately by active, reactive and apparent energy.

Procedure for all module versions using data record DS 143

1. In Control byte 1 of the DS 143 set the reset bit (Bit 2) to 1 and Bit 0 to 1 for the overflow counter.
2. In Control byte 2 of the DS 143 set the category of the energy counters (active, reactive, apparent energy) to 1 via Bits 5 to 7.
3. In Control byte 1 of the DS 143 set Bit 7 for the moment of application of the start values of the desired energy counters:
   - Bit 7 to 0, if the start value are to be applied immediately after the transfer of the data record
   - Bit 7 to 1, if the start value are only to be applied after the reset bit has been set in the output data of the user data.

In Control byte 1 of the DS 143 set the reset bit (Bit 2) to 1 and Bit 0 to 1 for the overflow counter.

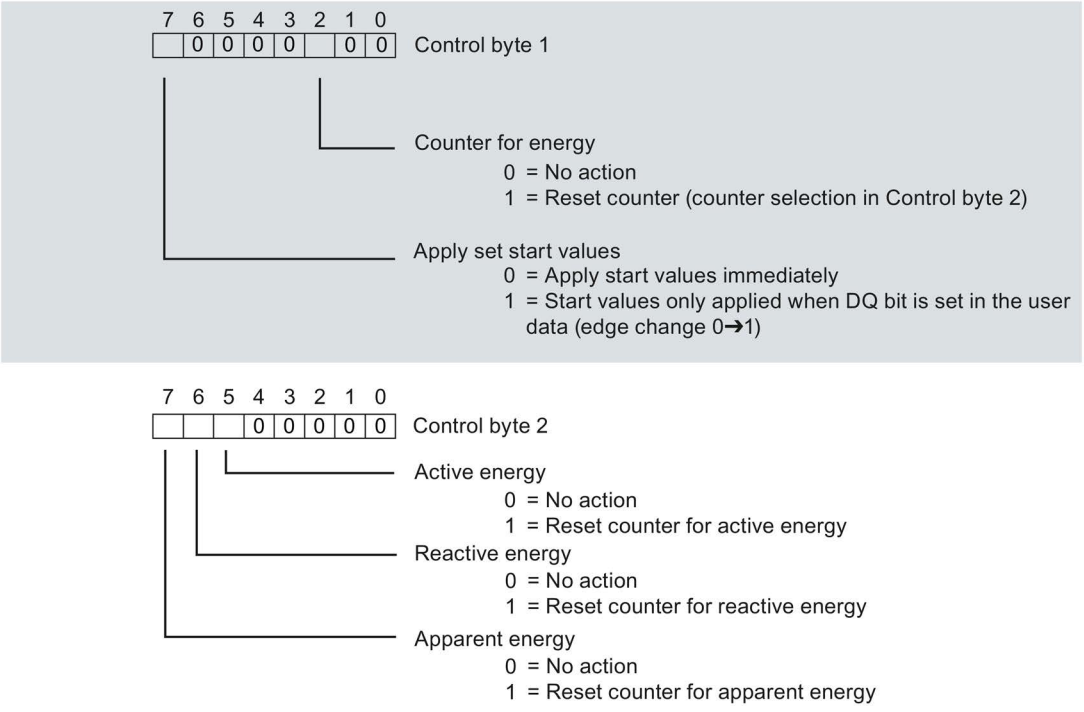

Figure 7-6 Energy counter control information DS 143

4. Transfer the data record with the WRREC instruction.

Start values

You specify the moment for the application of the start values in Control byte 1 via Bit 7. After the reset the energy counters count with the specified start values (default = 0) and the overflow counters begin again with 0. You can change the start values for the energy counters via data record DS 143.

7.4.3 Example for energy counters and overflow counters via data record DS 143

Introduction

Before you can transfer the data record DS 143 to the CPU you have to create a user-defined PLC data type in your user program that has an identical structure to data record DS 143.

Procedure

1. Create a PLC data type that has an identical structure to data record DS 143.

   Detailed information on the structure of data record 143 is available in section Structure for energy counters (DS 143) (Page 179).

Byte	Measured variable	Data type	Unit	Value range	Measured value ID
0	Version	BYTE	-	1	-
1	Reserved	BYTE	-	0	-
2	Control byte 1 - L1	BYTE	Bit string	-	-
3	Control byte 2 - L1	BYTE	Bit string		
4	Control byte 1 - L2	BYTE	Bit string		
5	Control byte 2 - L2	BYTE	Bit string		
6	Control byte 1 - L3	BYTE	Bit string		
7	Control byte 2 - L3	BYTE	Bit string		
8...15	Active energy inflow (initial value) L1	LREAL	Wh	See Section Structure for energy counters (DS 143) (Page 179)	61180
16...23	Active energy outflow (initial value) L1	LREAL	Wh		61181
:	:	:	:	:	:
162...165	Operating hours counter L2 (initial value)	REAL	h	See Section Structure for energy counters (DS 143) (Page 179)	65506
166...169	Operating hours counter L3 (initial value)	REAL	h		65507

2. Create a user-defined PLC data type and allocate the values of the data record in a DB or instance DB.

   Byte 0 and byte 1:

   Enter the value 01_H in Byte 0 and the value 00_H to Byte 1.

   Byte 2 ... byte 7: Control bytes for energy and overflow counter

   In the control byte for the respective phases, specify which energy and overflow counters you want to reset.

   The control bytes specify for each phase (L1, L2, L3) separately if and which energy meter values are to be reset.

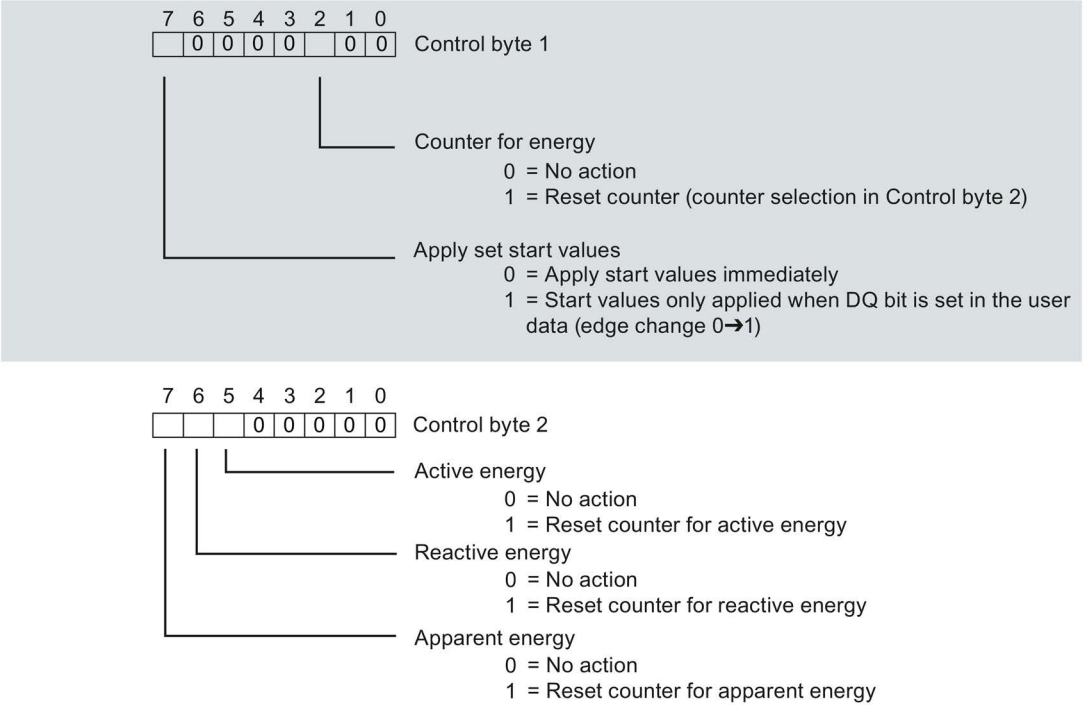

Figure 7-7 Control information DS 143 for energy and overflow counter

   Byte 8 ... byte 127: Start values for the individual energy meters

   The start values for energy counters in data record 143 are 64-bit floating point numbers. This corresponds to the data type LREAL in S7-1200 and in S7-1500.

   Byte 128 ... byte 157: Initial values for overflow counters

   The initial values for overflow counters in data record 143 are 16-bit integers. This corresponds to the data type UINT in S7-1200 and in S7-1500.

3. Write the data record to the AI Energy Meter 480VAC ST module using the "WRREC" instruction.

   The input parameters must be allocated as follows:

   – REQ: A new write job is triggered if REQ = TRUE.
   – ID: Hardware identifier or start address of the Energy Meter (depending on the CPU used).
   – INDEX: The data record number: 143
   – LEN: The maximum length of the data record: 170
   – RECORD: A pointer to the data area in the CPU which includes data record 143.

   Note

   If you want to write or read several AI Energy Meter 480VAC ST at the same time, keep in mind the maximum number of active jobs in communication with SFB52/SFB53.

See also

Structure for energy counters (DS 143) (Page 61)

7.5 Data record for energy counter (DS 143)

7.5.1 Structure for energy counters (DS 143)

Energy meter data record 143 for different actions

The energy meter data record 143 includes all energy meters available on the module phase-by-phase. The data record can be used for different actions:

- Reset the energy counter to user-specific value (e.g. "0")
- Reading the current values of the energy counters
- Reading the overflow counters
- Reading the operating hours

Energy meter data record 143

Table 7- 1 Energy meter data record 143

Byte	Measured variable	Data type	Unit	Value range	Measured value ID
0	Version	BYTE	-	1	-
1	Reserved	BYTE	-	0	-
2	Status / control byte 1 - L1	BYTE	Bit string	-	-
3	Status / control byte 2 - L1	BYTE	Bit string		
4	Status / control byte 1 - L2	BYTE	Bit string		
5	Status / control byte 2 - L2	BYTE	Bit string		
6	Status / control byte 1 - L3	BYTE	Bit string		
7	Status / control byte 2 - L3	BYTE	Bit string		
8...15	Active energy inflow (initial value) L1	LREAL	Wh	During reading: 0.0...1.8 x 10^{308} During writing For continuous counting:	61180
16...23	Active energy outflow (initial value) L1	LREAL	Wh		61181
24...31	Reactive energy inflow (initial value) L1	LREAL	varh		61182
32...39	Reactive energy outflow (initial value) L1	LREAL	varh		61183
40...47	Apparent energy (initial value) L1	LREAL	VAh		61184
48...55	Active energy inflow (initial value) L2	LREAL	Wh		61200
56...63	Active energy outflow (initial value) L2	LREAL	Wh		61201
64...61	Reactive energy inflow (initial value) L2	LREAL	varh		61202

Byte	Measured variable	Data type	Unit	Value range	Measured value ID
72...79	Reactive energy outflow (initial value) L2	LREAL	varh	0.0...3.4 x 10^{12} During writing For periodic counting: 0...configured full-scale value (10^3 ...10^{15})	61203
80...87	Apparent energy (initial value) L2	LREAL	VAh		61204
88...95	Active energy inflow (initial value) L3	LREAL	Wh		61220
96...103	Active energy outflow (initial value) L3	LREAL	Wh		61221
104...111	Reactive energy inflow (initial value) L3	LREAL	varh		61222
112...119	Reactive energy outflow (initial value) L3	LREAL	varh		61223
120...127	Apparent energy (initial value) L3	LREAL	VAh		61224
128...129	Overflow counter active energy inflow L1	UINT	-	During reading: 0...65535 During writing for continuous counting: 0 During writing for periodic counting: 0...65500	61190
130..131	Overflow counter active energy outflow L1	UINT	-		61191
132...133	Overflow counter reactive energy inflow L1	UINT	-		61192
134...135	Overflow counter reactive energy outflow L1	UINT	-		61193
136...137	Overflow counter apparent energy L1	UINT	-		61194
138...139	Overflow counter active energy inflow L2	UINT	-		61210
140...141	Overflow counter active energy outflow L2	UINT	-		61211
142...143	Overflow counter reactive energy inflow L2	UINT	-		61212
144...145	Overflow counter reactive energy outflow L2	UINT	-		61213
146...147	Overflow counter apparent energy L2	UINT	-		61214
148...149	Overflow counter active energy inflow L3	UINT	-		61230
150...151	Overflow counter active energy outflow L3	UINT	-		61231
152...153	Overflow counter reactive energy inflow L3	UINT	-		61232
154...155	Overflow counter reactive energy outflow L3	UINT	-		61233
156...157	Overflow counter apparent energy L3	UINT	-		61234
158...161	Operating hours counter L1 (initial value)	REAL	h	During reading: 0...3.4x10^{38} During writing: 0...10^9	65505
162...165	Operating hours counter L2 (initial value)	REAL	h		65506
166...169	Operating hours counter L3 (initial value)	REAL	h		65507

Status information

When data record 143 is read with the RDREC instruction, Bytes 2 to 7 supply phase-specific status information for energy counters, overflow counters and operating hours counters.

The status information enables you can see which counters are returning their values in the data record 143. If energy counters return their values in the status byte 1, you can determine the type of energy counter with status byte 2.

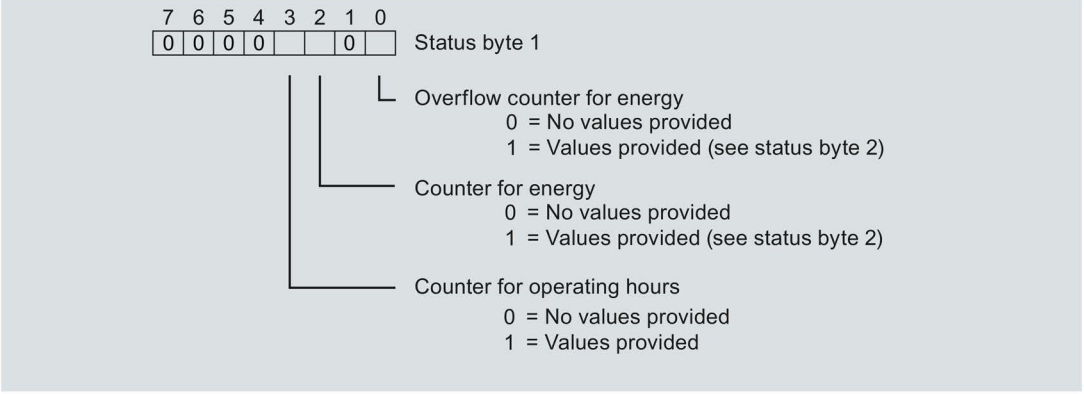

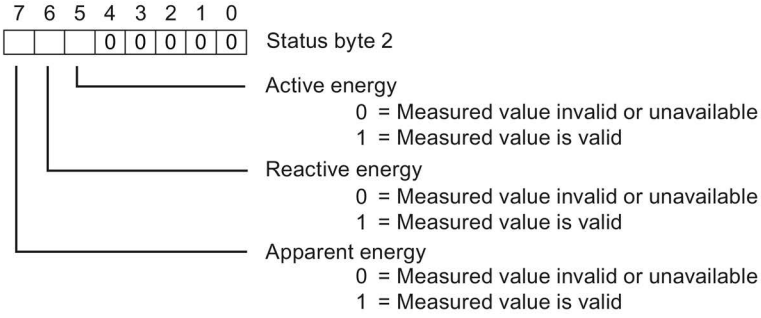

Figure 7-8 Status information DS 143 (read access)

Control information

When data record 143 is written with the WRREC instruction, Bytes 2 to 7 are used as phase-specific control information for energy counters, overflow counters and operating hours counter. The length of the control information amounts to 2 bytes for each phase:

- In control byte 1 you determine which counter you want to reset and the time at which counters are reset.
- In Control byte 2 you determine which energy counters and which overflow counters you want to reset.

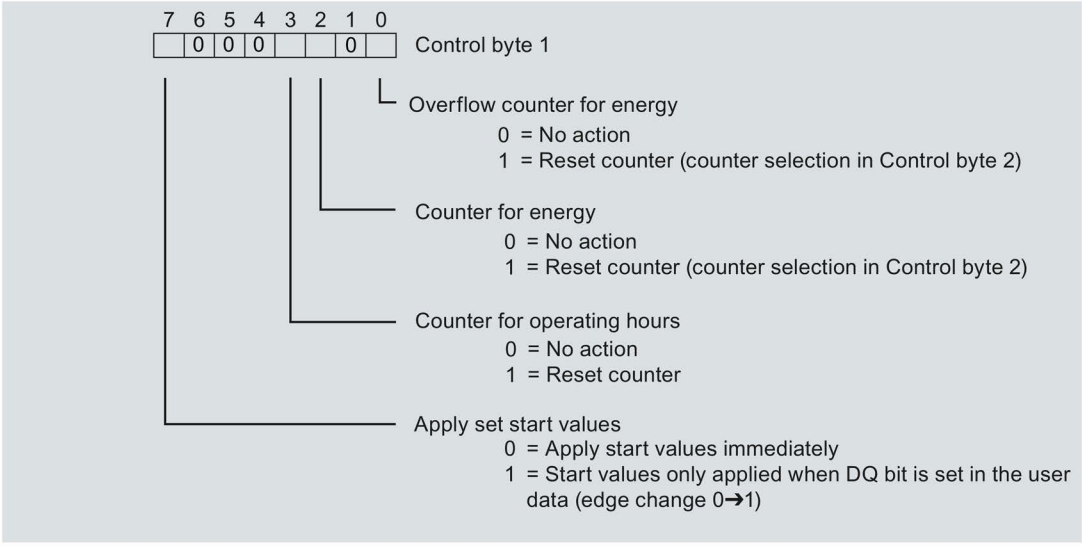

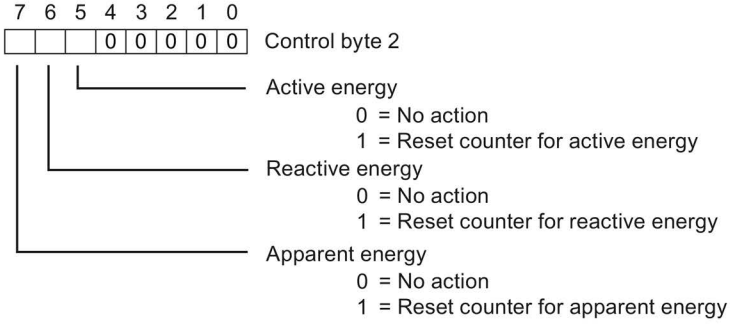

Figure 7-9 Control information DS 143 (write access)

Error while transferring the data record

The module always checks all the values of the transferred data record. Only if all the values were transferred without errors does the module apply the values from the data record.

The WRREC instruction for writing data records returns corresponding error codes when errors occur in the STATUS parameter.

The following table shows the module-specific error codes and their meaning for the measured value data record 143:

Error code in STATUS parameter (hexadecimal)				Meaning	Solution
Byte 0	Byte 1	Byte 2	Byte 3		
DF	80	B0	00	Number of the data record unknown	Enter a valid number for the data record.
DF	80	B1	00	Length of the data record incorrect	Enter a valid value for the data record length.
DF	80	B2	00	Slot invalid or cannot be accessed.	Check the station whether the module is plugged or drawn. Check the assigned values for the parameters of the WRREC instruction
DF	80	E1	01	Reserved bits are not 0.	Check Byte 2...7 and set the reserved bits back to 0.
DF	80	E1	39	Incorrect version entered.	Check Byte 0. Enter a valid version.
DF	80	E1	3A	Incorrect data record length entered.	Check the parameters of the WRREC instruction. Enter a valid length.
DF	80	E1	3C	At least one start value is invalid.	Check Bytes 8...103 and Bytes 158...169. The start values may not be negative.
DF	80	E1	3D	At least one start value is too large	Check Bytes 8...103 and Bytes 158...169. Observe the ranges of values for start values.

7.5.2 Structure of the control and feedback interface for DS 143

Introduction

Bytes 2 to 7 of data record 143 form the phase-based control and feedback interface for the measured value data record of the energy counter.

- Bytes 2 and 3: Control and feedback interface for phase 1
- Bytes 4 and 5: Control and feedback interface for phase 2
- Bytes 6 and 7: Control and feedback interface for phase 3

Status information

When data record 143 is read with the RDREC instruction, Bytes 2 to 7 supply phase-specific status information for energy counters, overflow counters and operating hours counters.

The status information enables you can see which counters are returning their values in the data record 143. If energy counters return their values in the status byte 1, you can determine the type of energy counter with status byte 2.

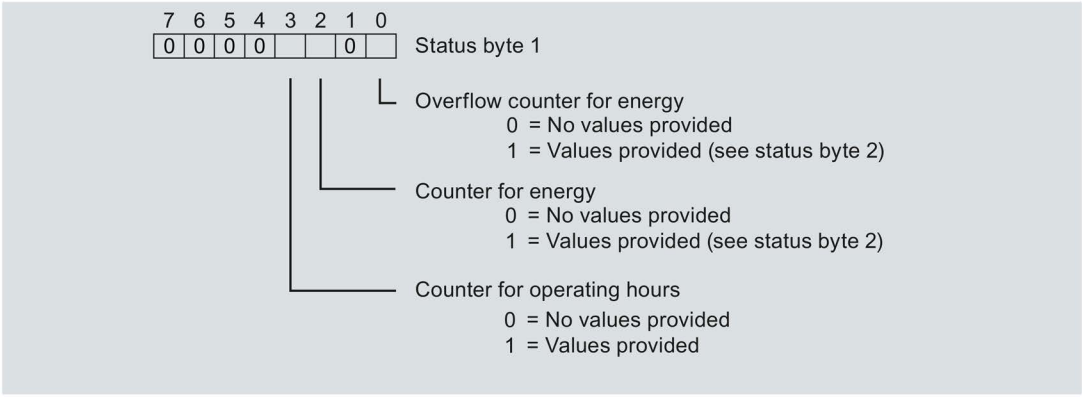

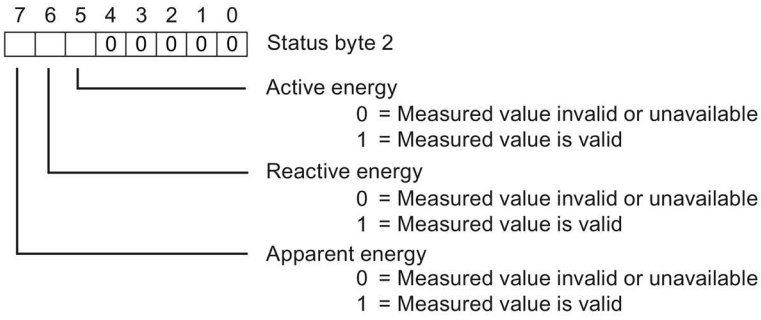

Figure 7-10 Status information DS 143 (read access)

Control information

When data record 143 is written with the WRREC instruction, Bytes 2 to 7 are used as phase-specific control information for energy counters, overflow counters and operating hours counter. The length of the control information amounts to 2 bytes for each phase:

- In control byte 1 you determine which counter you want to reset and the time at which counters are reset.
- In Control byte 2 you determine which energy counters and which overflow counters you want to reset.

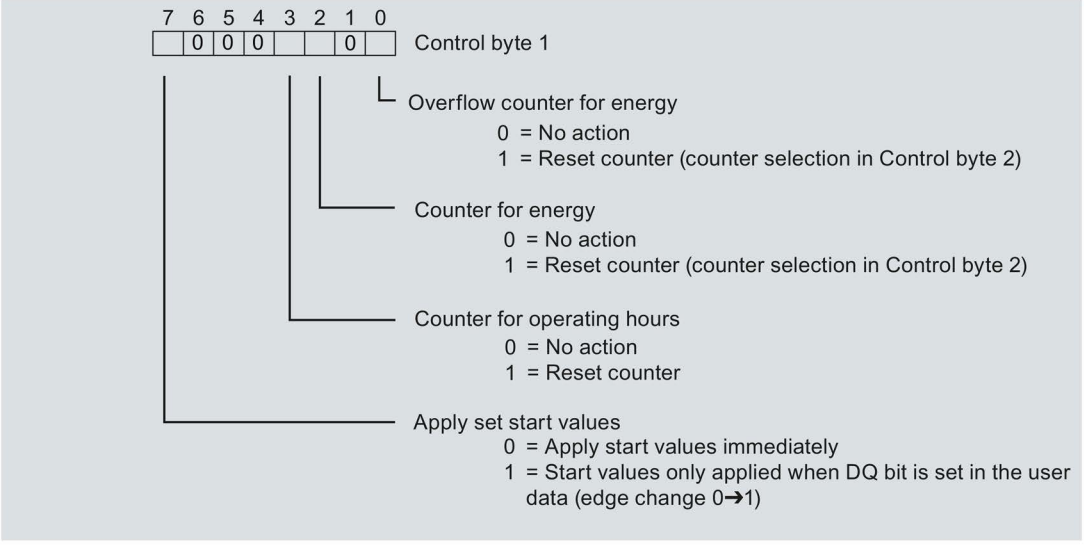

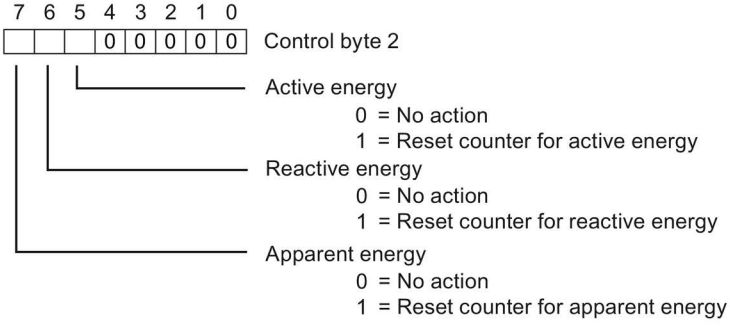

Figure 7-11 Control information DS 143 (write access)

Operating hours counter 8

8.1 How the operating hours counter works

Introduction

The AI Energy Meter 480VAC ST provides one operating hours counter for each phase, which counts the operating hours of the load connected to a phase when there is current greater than the configurable "Low limit for measuring current". The operating hours counter for the entire module is calculated from the sum of the operating hours of the individual phases. The operating hours counter has a value range from 0 to 3.4 x 10^{38}. The values are stored retentively in the module and can be read via the data record 143 (energy counter data record) and data record 150 (measured value for extended measuring and status values).

Configuring

You configure the following operating hours counter settings in STEP 7:

- Activation of the gate for the operating hours counter

Changing properties in RUN

The following table shows the supported control information:

Control information	Default value	Available in
Open / close operating hours counter [1]	Closed	Module version starting at 2 bytes of output data
Set initial value	0	Data record 143
Reset operating hours counter	0	Module version starting at 2 bytes of output data [2]

[1] Effective only with enabled gate

[2] Only module-wide resetting is supported in module version "2 I / 2 Q".

See also

Resetting energy counters and overflow counters (Page 54)

Module version "2 I / 2 Q" (Page 142)

Structure for energy counters (DS 143) (Page 179)

Measured value data record for advanced measurement and status values (DS 150) (Page 194)

8.2 Reset operating hours counters

Introduction

At the beginning of a new work order, it may be useful to reset the operating hours counters of the Energy Meter. Resetting here means that the operating hours counters are reset to their start value.

The following section describes how you

- Reset operating hours counters via the outputs of the user data.
- Reset operating hours counters via data record 143.

8.2.1 Reset operating hours counters via user data

Introduction

Due to the differing lengths of the output data resetting of the operating hours counters depends on the configured module version.

If you use module versions with 12 bytes output data, you can

- Reset operating hours counters for **all** phases.
- Reset operating hours counters for each **individual** phase.

If you use the module version with 2 bytes of output data, you always reset **all** the operating hours counters simultaneously. Differentiated resetting of the counters by phases is only possible via data set DS 143 for this module version, see section Structure for energy counters (DS 143) (Page 179).

Procedure for module version with 12 bytes and 2 bytes of output data

Set the reset bit (Bit 5) in Control byte 1 from 0 to 1 through an edge change.

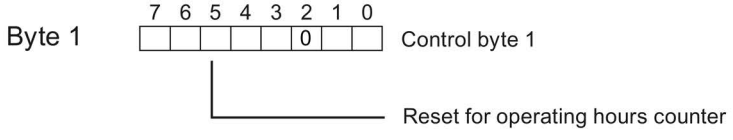

Figure 8-1 Resetting the operating hours counters for module version with 12 bytes and 2 bytes of output data

Resetting operating hours counters on a phase-specific basis

You can also reset the operating hours counters on a phase-specific basis using the output data. Follow the procedure for "Resetting operating hours counters for all 3 phases" as applicable.

Set the reset bit (bit 5):

- in byte 6 for phase 1
- in byte 8 for phase 2
- in byte 10 for phase 3

Start values

After the reset the operating hours counters count with the specified start values (default = 0). You can change the start values for the operating hours counters via data record DS 143, see section Structure for energy counters (DS 143) (Page 179).

8.2.2 Resetting operating hours counters via data record DS 143

Introduction

At all the module versions you can reset the operating hours counters via the data record DS 143. Resetting is possible for:

- Operating hours counters for each **individual** phase.

Procedure at all module versions via data record DS 143

1. Set the reset bit (Bit 3) in Control byte 1 to 1.

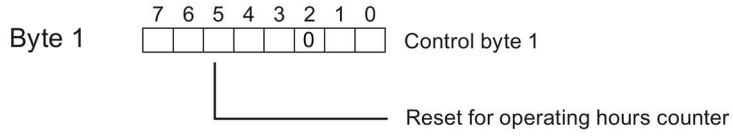

Figure 8-2 Resetting operating hours counters with data record 143

2. In Control byte 1 set Bit 7 for the moment of application of the start values:
   - Bit 7 to 0, if the start value are to be applied immediately after the transfer of the data record
   - Bit 7 to 1, if the start value are only to be applied after the reset bit has been set in the output data of the user data.

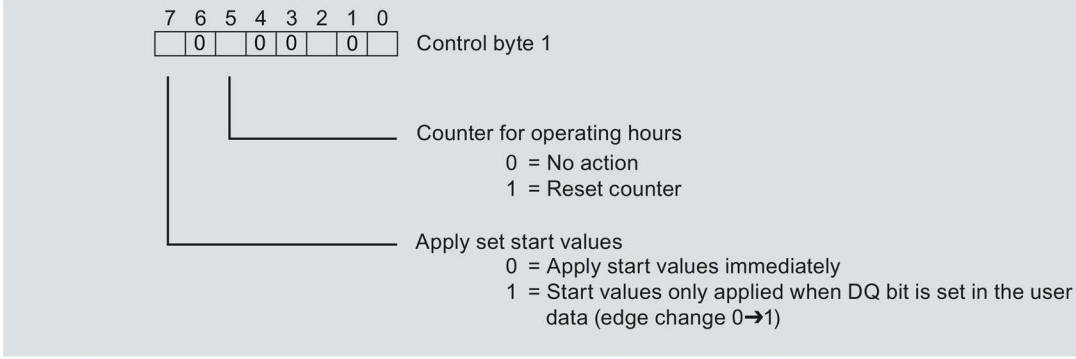

Figure 8-3 Operating hours counter control information DS 143

Start values

You specify the moment for the application of the start values in Control byte 1 via Bit 7. After the reset the operating hours counters count with the specified start values (default = 0). You can change the start values for the operating hours counters via data record DS 143.

Limit monitoring 9

9.1 How limit monitoring works

Introduction

The AI Energy Meter 480VAC ST supports monitoring of parameterizable low **or** high limits for up to 16 analog measured or calculated variables.

You can also define multiple limits for each measured or calculated variable, in order to define a high or low value range.

The measured value data record 150 returns the current status limit violations and per limit one counter that displays the number of limit violations. In addition, a hardware interrupt may be generated for each limit violation.

The status of the limit violations can also be evaluated in the user data variant 240 ($F0_H$) or via the user-defined user data variant via the measured value ID 65509.

Benefits

With activated limit monitoring you can already detect any irregularities in the measured value acquisition already in field level.

Retentivity

All the counter states of the module are stored retentively in the Energy Meter. After an interruption (e.g. Power System Off → Power System On), the counting resumes with the retentively stored values.

Configuring

You configure the following limit monitoring settings in STEP 7:

- Measured variable that is to be monitored.
- Activate / Deactivate limit monitoring.
- High or low limit values.
- Delay time and hysteresis for each limit.
- Activate / Deactivate hardware interrupts at limit violation.
- Measured value that is subject to limit monitoring.

Hardware interrupt at a limit violation

The hardware interrupt provides the following information:

- Measured value ID of the monitored measured or calculated variable
- Number of the limit (0 = Limit 1. 15 = Limit 16)
- Information on whether limit was exceeded or fallen below

For more detailed information, refer to section Hardware interrupts (Page 101).

Changing properties in RUN

The following table shows the supported control information:

Control information	Default value	Available in
Enable/disable monitoring per limit[1]	Disabled	Module version with 12 bytes of output data
Reset number of total limit violations	0	Module version starting at 2 bytes of output data

[1] Effective only with enabled gate

9.2 Influence of hysteresis and delay time on limit monitoring

Delay time and hysteresis

In order to prevent the triggering of limit violations with small fluctuations, you have the following configuration options in STEP 7:

- Delay time in seconds (0 to 10 s)

  With the delay time, you filter faults and thereby prevent limit value monitoring from triggering too frequently. The limit violation is counted only when the limit violation is present for longer than the configured delay time. The deceleration time is also taken into consideration during outgoing of the limit violation.

- Hysteresis as a percentage (0 to 20%)

  With the hysteresis, you suppress fluctuations around the limit. The hysteresis is a tolerance range that you define as a percentage deviation of the configured limit. The limit violation is considered to be corrected only when the monitored value leaves the tolerance range.

Note

You can get information about transient underflow and overflow from the calculation of minimum (Page 186) and maximum values (Page 184) of selected measured variables.

The following figure shows the value-over-time for two measured values using the example of a high and low limit as well as the influence of hysteresis and delay time on the counting of the limit violations.

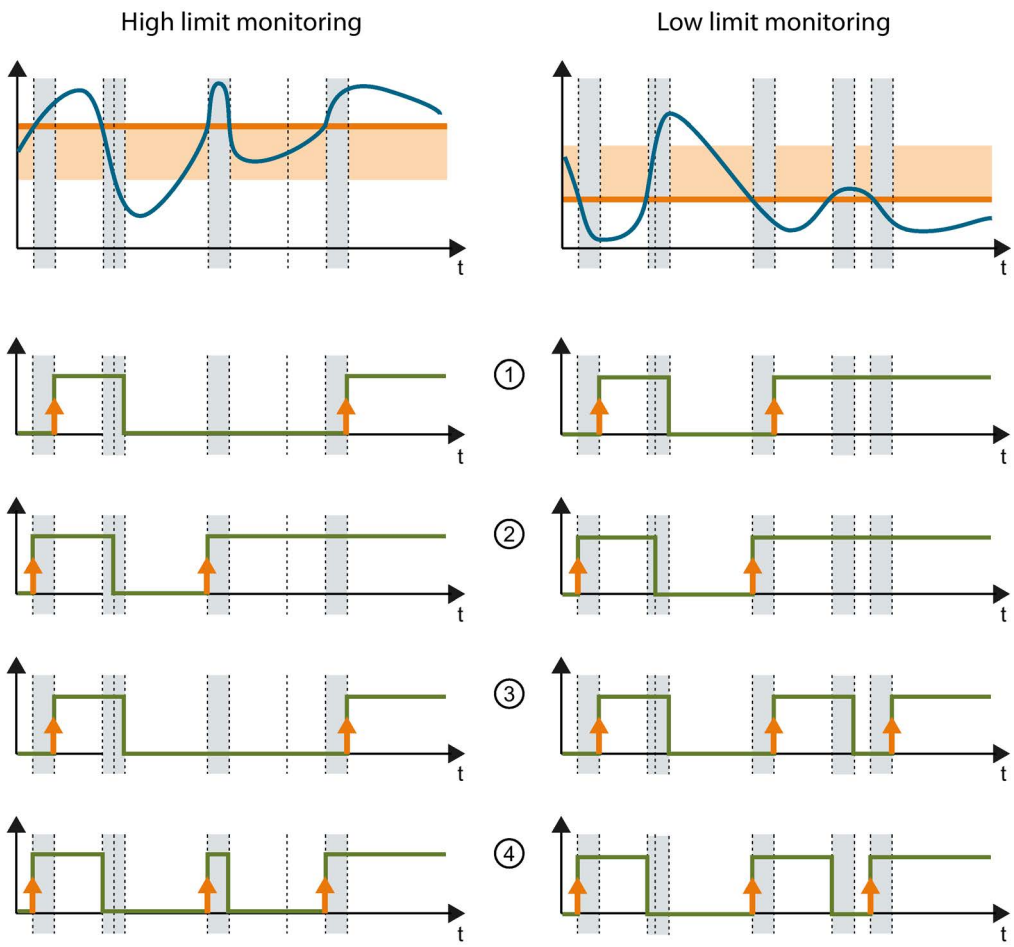

- Configured limit.
- Configured delay time. Is taken into consideration during coming and going.
- Hysteresis range. Only considered for outgoing.
- Value-over-time for which the limit is monitored.
- Edge change. Counter for limit violations is incremented by 1. If parameterized, a hardware interrupt is triggered.
- Signal wave
- ① Limit monitoring with hysteresis and delay time
- ② Limit monitoring with hysteresis, but without delay time
- ③ Limit monitoring without hysteresis, but with delay time
- ④ Limit monitoring without hysteresis and delay time

Figure 9-1 Influence of hysteresis and delay time on the limit

See also

How limit monitoring works (Page 72)

Minimum and maximum values (Page 82)

9.3 Reset, activate and deactivate counters for limit violation

Introduction

At the beginning of a new work order, it can be useful to reset or indeed also enable/disable the counters for limit violations of the Energy Meter.

Resetting here means that the counters for limit violations are reset to 0.

Due to the differing lengths of the output data resetting of the counters for limit violations depends on the configured module version.

Resetting at module version with 12 bytes of output data

1. Select the counters for limit violations that you want to reset in control bytes 3 and 4; see "Enabling/disabling the counters for limit violations".
2. In control byte 1, set the rest bit (bit 3) with an edge change from 0 to 1; see "Resetting the counters for limit violations".

Resetting at module version with 2 bytes of output data

Set the reset bit (Bit 3) in Control byte 1 from 0 to 1 through an edge change. Resetting acts globally on all the configured counters for limit violation.

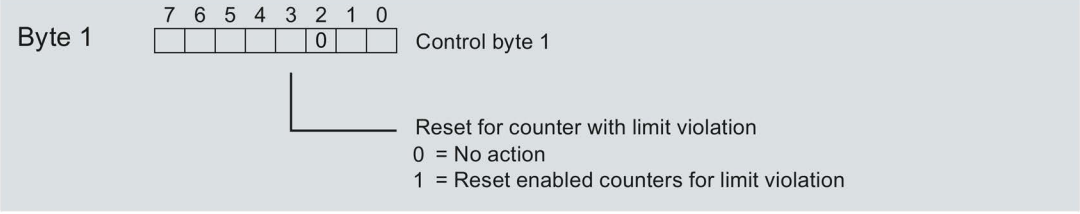

Figure 9-2 Resetting of the counters for limit violations

Activating / Deactivating counters for limit violations

Activating / Deactivating of the counters for limit violations is only possible for module versions with 12 bytes of output data.

Requirements: "Gate for limit value monitoring" was parameterized during configuration of the module using STEP 7 or by writing the data record DS 128.

Select the counters for limit violations that you want to activate / deactivate in Control bytes 3 and 4.

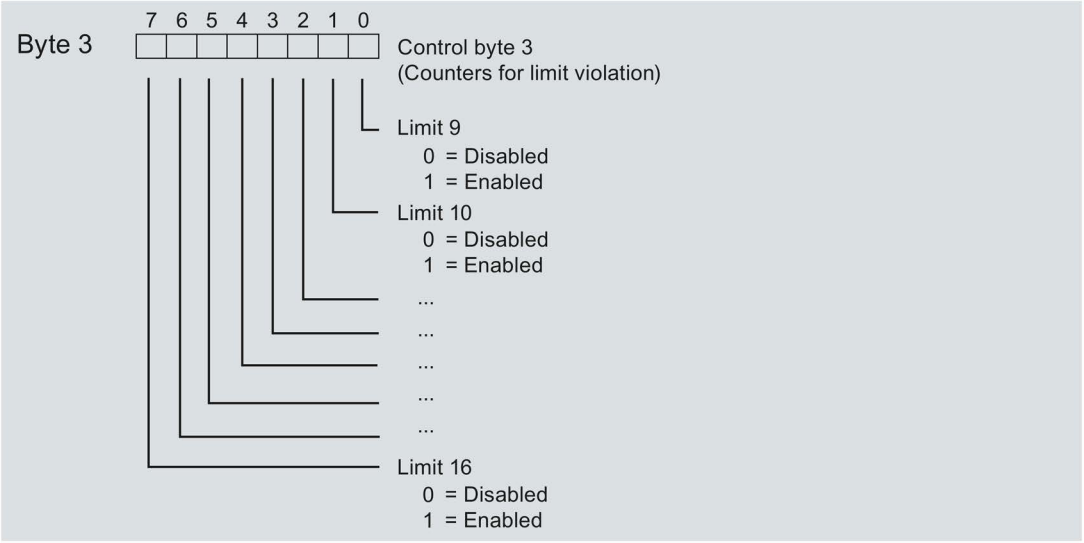

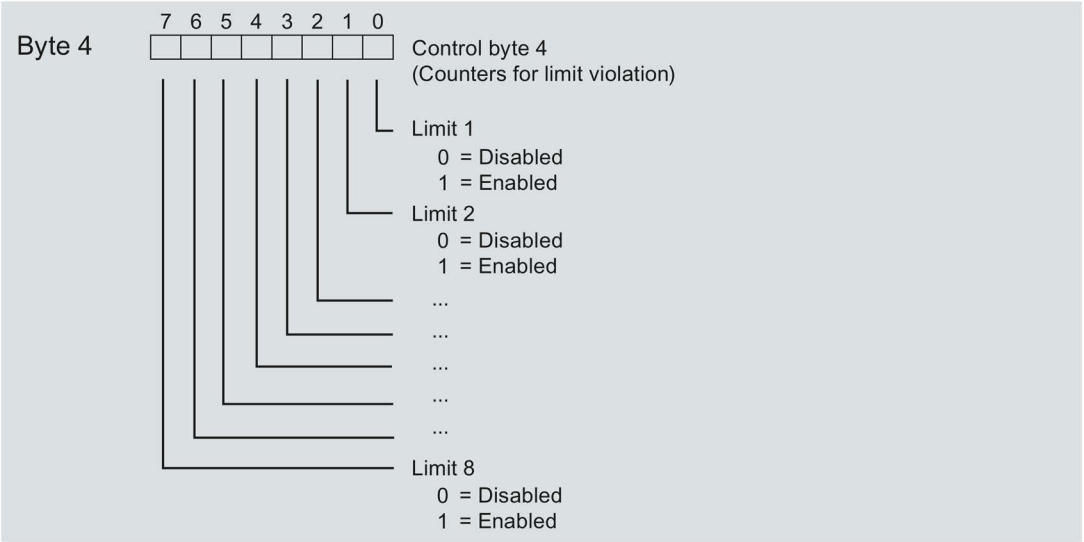

Figure 9-3 Activating / deactivating of the counters for limit violations

9.4 Measured variables for limit monitoring

The table below shows which measured variables are available for limit monitoring.

Measured value ID	Measured variables	Use for limit monitoring
1	Voltage UL1-N	Yes
2	Voltage UL2-N	Yes
3	Voltage UL3-N	Yes
4	Voltage UL1- L2	Yes
5	Voltage UL2- L3	Yes
6	Voltage UL3- L1	Yes
7	Current L1	Yes
8	Current L2	Yes
9	Current L3	Yes
10	Apparent power L1	Yes
11	Apparent power L2	Yes
12	Apparent power L3	Yes
13	Active power L1	Yes
14	Active power L2	Yes
15	Active power L3	Yes
16	Reactive power L1	Yes
17	Reactive power L2	Yes
18	Reactive power L3	Yes
19	Power factor L1	Yes
20	Power factor L2	Yes
21	Power factor L3	Yes
30	Frequency	Yes
34	Total active power L1L2L3	Yes
35	Total reactive power L1L2L3	Yes
36	Total apparent power L1L2L3	Yes
37	Total power factor L1L2L3	Yes
38	Amplitude unbalance for voltage	Yes
39	Amplitude unbalance for current	Yes
40	Max. voltage UL1-N	Yes
41	Max. voltage UL2-N	Yes
42	Max. voltage UL3-N	Yes
43	Max. voltage UL1- L2	Yes
44	Max. voltage UL2- L3	Yes
45	Max. voltage UL3- L1	Yes
46	Max. current L1	Yes
47	Max. current L2	Yes
48	Max. current L3	Yes
49	Max. apparent power L1	Yes
50	Max. apparent power L2	Yes
51	Max. apparent power L3	Yes
52	Max. active power L1	Yes
53	Max. active power L2	Yes

Measured value ID	Measured variables	Use for limit monitoring
54	Max. active power L3	Yes
55	Max. reactive power L1	Yes
56	Max. reactive power L2	Yes
57	Max. reactive power L3	Yes
58	Max. power factor L1	Yes
59	Max. power factor L2	Yes
60	Max. power factor L3	Yes
61	Max. frequency	Yes
65	Max. total active power	Yes
66	Max. total reactive power	Yes
67	Max. total apparent power	Yes
68	Max. total power factor	Yes
70	Min. voltage UL1-N	Yes
71	Min. voltage UL2-N	Yes
72	Min. voltage UL3-N	Yes
73	Min. voltage UL1- L2	Yes
74	Min. voltage UL2- L3	Yes
75	Min. voltage UL3- L1	Yes
76	Min. current L1	Yes
77	Min. current L2	Yes
78	Min. current L3	Yes
79	Min. apparent power L1	Yes
80	Min. apparent power L2	Yes
81	Min. apparent power L3	Yes
82	Min. active power L1	Yes
83	Min. active power L2	Yes
84	Min. active power L3	Yes
85	Min. reactive power L1	Yes
86	Min. reactive power L2	Yes
87	Min. reactive power L3	Yes
88	Min. power factor L1	Yes
89	Min. power factor L2	Yes
90	Min. power factor L3	Yes
91	Min. frequency	Yes
95	Min. total active power	Yes
96	Min. total reactive power	Yes
97	Min. total apparent power	Yes
98	Min. total power factor	Yes
200	Total active energy inflow L1L2L3	Yes
201	Total active energy outflow L1L2L3	Yes
202	Total reactive energy inflow L1L2L3	Yes
203	Total reactive energy outflow L1L2L3	Yes
204	Total apparent energy L1L2L3	Yes
205	Total active energy L1L2L3	Yes
206	Total reactive energy L1L2L3	Yes
210	Total active energy inflow L1L2L3	-

Measured value ID	Measured variables	Use for limit monitoring
211	Total active energy outflow L1L2L3	-
212	Total reactive energy inflow L1L2L3	-
213	Total reactive energy outflow L1L2L3	-
214	Total apparent energy L1L2L3	-
215	Total active energy L1L2L3	-
216	Total reactive energy L1L2L3	-
61140	Overflow counter active energy inflow L1L2L3	-
61141	Overflow counter active energy outflow L1L2L3	-
61142	Overflow counter reactive energy inflow L1L2L3	-
61143	Overflow counter reactive energy outflow L1L2L3	-
61144	Overflow counter apparent energy L1L2L3	-
61149	Neutral current	Yes
61178	Phase angle L1	Yes
61180	Active energy inflow L1	Yes *
61181	Active energy outflow L1	Yes *
61182	Reactive energy inflow L1	Yes *
61183	Reactive energy outflow L1	Yes *
61184	Apparent energy L1	Yes *
61185	Active energy L1	Yes *
61186	Reactive energy L1	Yes *
61190	Overflow counter active energy inflow L1	-
61191	Overflow counter active energy outflow L1	-
61192	Overflow counter reactive energy inflow L1	-
61193	Overflow counter reactive energy outflow L1	-
61194	Overflow counter apparent energy L1	-
61198	Phase angle L2	Yes
61200	Active energy inflow L2	Yes *
61201	Active energy outflow L2	Yes *
61202	Reactive energy inflow L2	Yes *
61203	Reactive energy outflow L2	Yes *
61204	Apparent energy L2	Yes *
61205	Active energy L2	Yes *
61206	Reactive energy L2	Yes *
61210	Overflow counter active energy inflow L2	-
61211	Overflow counter active energy outflow L2	-
61212	Overflow counter reactive energy inflow L2	-
61213	Overflow counter reactive energy outflow L2	-
61214	Overflow counter apparent energy L2	-
61218	Phase angle L3	Yes
61220	Active energy inflow L3	Yes *
61221	Active energy outflow L3	Yes *
61222	Reactive energy inflow L3	Yes *
61223	Reactive energy outflow L3	Yes *
61224	Apparent energy L3	Yes *
61225	Active energy L3	Yes *
61226	Reactive energy L3	Yes *

Measured value ID	Measured variables	Use for limit monitoring
61230	Overflow counter active energy inflow L3	-
61231	Overflow counter active energy outflow L3	-
61232	Overflow counter reactive energy inflow L3	-
61233	Overflow counter reactive energy outflow L3	-
61234	Overflow counter apparent energy L3	-
65500	Qualifier L1	-
65501	Qualifier L2	-
65502	Qualifier L3	-
65503	Qualifier L1L2L3	-
65504	Total operating hours counter L1L2L3	Yes
65505	Operating hours counter L1	Yes
65506	Operating hours counter L2	Yes
65507	Operating hours counter L3	Yes
65510	Counter limit violation GW1	Yes
65511	Counter limit violation GW2	Yes
65512	Counter limit violation GW3	Yes
65513	Counter limit violation GW4	Yes
65514	Counter limit violation GW5	Yes
65515	Counter limit violation GW6	Yes
65516	Counter limit violation GW7	Yes
65517	Counter limit violation GW8	Yes
65518	Counter limit violation GW9	Yes
65519	Counter limit violation GW10	Yes
65520	Counter limit violation GW11	Yes
65521	Counter limit violation GW12	Yes
65522	Counter limit violation GW13	Yes
65523	Counter limit violation GW14	Yes
65524	Counter limit violation GW15	Yes
65525	Counter limit violation GW16	Yes

* Can only be configured in REAL format

Minimum and maximum values 10

10.1 Minimum and maximum values

Introduction

The AI Energy Meter 480VAC ST determines the respective highest and lowest measured or calculated value for a series of measured and calculated values. The values are stored retentively in the module and can be read using measured value data records 144 and 145.

Benefits

Using the stored minimum and maximum values, for example, you can detect further irregularities in addition to limit monitoring.

Calculation of minimum and maximum values

Minimum and maximum values are only calculated for the phases in accordance with the configured connection type. Existing minimum and maximum values that have not been calculated are initialized with 0. If faults such as under or overcurrent occur during operation, new minimum and maximum values are calculated.

The measured and calculated values are initialized as follows during commissioning of the AI Energy Meter 480VAC ST so that the first calculation of minimum and maximum values supplies a plausible result:

- Maximum values for measured and calculated values: Minimum values
- Minimum values for measured and calculated values: Maximum values

Configuring

You configure the following settings in STEP 7:

- Enable calculation of minimum and maximum values

Changing properties in RUN

The following table shows the supported control information:

Control information	Default value	Available in
Reset saved maximum values	0	Module version starting at 2 bytes of output data
Reset saved minimum values	0	Module version starting at 2 bytes of output data

Note

Automatic reset

If you change the parameters for current or voltage transformers, the minimum and maximum values are reset automatically to their initial values.

10.2 Resetting minimum and maximum values

Description

At the beginning of a new work order, it may be useful to reset the minimum and maximum values of the Energy Meter. Resetting means that the minimum and maximum values are reset to their initial values. Initial values are described, see section Measured value data record for maximum values (DS 144) (Page 184) and section Measured value data record for minimum values (DS 145) (Page 186).

As the output data differs in length, resetting the minimum and maximum values depends on the configured module version. If you use module versions with 12 bytes output data, you can

- Reset the minimum and maximum values for **all** phases.
- Reset minimum and maximum values for each **individual** phase.

If you use the module version with 2 bytes of output data, you always reset **all** the minimum and maximum values simultaneously.

Procedure at module version with 12 bytes of output data

Resetting the minimum and maximum values for all 3 phases.

1. Select the categories of minimum and maximum value that you want to reset in byte 2.
   - Set bit 0 for voltage and frequency.
   - Set bit 1 for current and power factor.
   - Set bit 2 for active power.
   - Set bit 3 for reactive power.
   - Set bit 4 for apparent power.

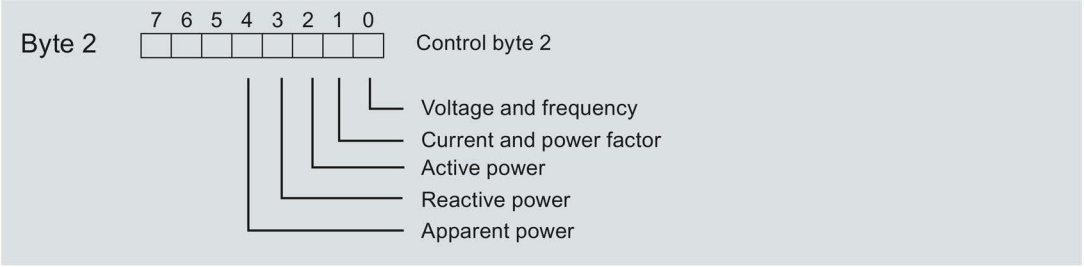

Figure 10-1 Selection of minimum and maximum value category

2. In byte 1, set reset bit 0 for minimum values or reset bit 1 for maximum values.
   If there is an edge change of the reset bits from 0 to 1, the module resets the selected minimum or maximum values for all 3 phases that you previously selected in byte 2.

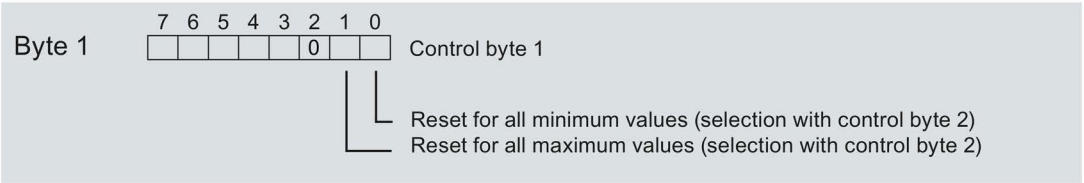

Figure 10-2 Reset bit for minimum and maximum values

Resetting minimum and maximum values for phase-specific measurement

You can also reset the minimum and maximum values on a phase-specific basis using the output data.

Follow the procedure for "Resetting minimum and maximum values for all 3 phases" as applicable.

1. Select the categories of minimum and maximum value that you want to reset on a phase-specific basis.
   - In byte 7, set the bits for the category of minimum and maximum values in phase 1.
   - In byte 9, set the bits for the category of minimum and maximum values in phase 2.
   - In byte 11, set the bits for the category of minimum and maximum values in phase 3.
2. Set the reset bit (bit 0 and bit 1) for minimum or maximum values.
   - in byte 6 for phase 1
   - in byte 8 for phase 2
   - in byte 10 for phase 3

If there is an edge change of the phase-specific reset bits from 0 to 1, the module resets the minimum or maximum values for the given phase.

Procedure at module version with 2 bytes of output data

If you use the module version with 2 bytes of output data, you always reset **all** the minimum and maximum values simultaneously.

Set the reset bit (Bit 0 or Bit 1) in Control byte 1 from 0 to 1 through an edge change.

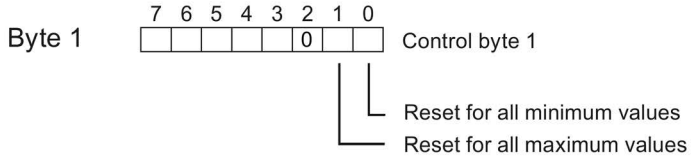

Figure 10-3 Resetting the minimum and maximum values at module version with 2 bytes of output data

Phase-based measured values 11

11.1 Phase-based measured values

Introduction

The AI Energy Meter 480VAC ST makes the measured values of individual phases available.

- Through the user data variants
  - Phase-specific measurement Phase L1 with user data variants 154 ($9A_H$) and 155 ($9B_H$)
  - Phase-specific measurement Phase L2 with user data variants 156 ($9C_H$) and 157 ($9D_H$)
  - Phase-specific measurement Phase L3 with user data variants 158 ($9E_H$) and 159 ($9F_H$)
- Via measured value data records
  - Phase-specific measurement for the phases L1, L2 and L3 with data record 142
  - Phase-specific measurement for phase L1 with data record 147
  - Phase-specific measurement for phase L2 with data record 148
  - Phase-specific measurement for phase L3 with data record 149

User data variants

Through the user data variants 154 ($9A_H$) to 159 ($9F_H$) you can evaluate the following measured values for each phase of an AC / three-phase network:

- Quality information
- Current and voltage
- Active, reactive and apparent power
- Active, reactive and apparent energy
- Power factor

You can find the structure of the user data variants in section Measured value data record for phase-based measured values L1 (DS 147) (Page 188).

Measured value data records

Through the measured value data records DS 142, DS 147, DS 148 and DS 149 you can evaluate the following measured values for each phase of an AC / three-phase network:

- Quality information
- Current and voltage
- Minimum current and minimum voltage
- Maximum current and maximum voltage
- Active, reactive and apparent power
- Minimum active, reactive and apparent power
- Maximum active, reactive and apparent power
- Active, reactive and apparent energy
- Minimum active, reactive and apparent energy
- Maximum active, reactive and apparent energy
- Power factor
- Minimum power factor
- Maximum power factor

You can find the structure of the measured value data records in section Measured value data record for phase-based measured values L1 (DS 147) (Page 188).

See also

Measured value data record for phase-based measured values L2 (DS 148) (Page 190)

Measured value data record for phase-based measured values L3 (DS 149) (Page 192)

Minimum and maximum values (Page 82)

User data variants with 32 bytes input data / 12 bytes output data (Page 155)

Overview of all measured value data records (Page 175)

Parameters 12

12.1 Parameters

Parameters of the AI Energy Meter 480VAC ST (DS 128, DS 129, DS 130)

As a rule, the AI Energy Meter 480VAC ST is already integrated in the hardware catalog of STEP 7 (TIA Portal) or STEP 7 V5.5 or higher. In this case STEP 7 (TIA Portal) or STEP 7 V5.5 or higher checks the parameterized properties for plausibility during designing.

However, you can also assign parameters to the module using a GSD file and the configuration software of any provider. The module checks the validity of the configured properties only after the configuration has been downloaded. Note that some parameters depend on the selected connection type of the Energy Meter. For example in the connection type 1P2W for measurements in single-phase AC network it does not make sense to enter parameters for Phases 2 and 3 and they are also not checked by the system in this case.

The effective range of the parameters that can be set using a GSD file depends on the type of bus system used:

- Distributed operation on PROFINET IO in an ET 200SP system
- Distributed operation with PROFIBUS DP in an ET 200SP system

In addition you can change the parameterized properties via the user program in RUN mode. When you assign parameters in the user program, the "WRREC" instruction transfers the parameters to the module using data records (see appendix Configuration via parameter data records (Page 112)). The following table summarizes all the configurable parameters.

Table 12- 1 AI Energy Meter 480VAC ST parameters

Parameters	Value range	Default setting	Reconfiguration in RUN	Effective range with configuration software, e.g. STEP 7 (TIA Portal)	
				GSD file PROFINET IO	GSD file PROFIBUS DP
Hardware interrupt	• Disable • Enable	Disable	Yes	Module	Module
Diagnostics line voltage	• Disable • Enable	Disable	Yes	Module	Module
Connection type	• Disabled • 1P2W - 1-phase alternating current • 3x1P2W - 3x1 phase, 2 conductors each • 2P3W - 2 phases, 3 conductors • 3P4W - 3 phases, 4 conductors • 3P4W1 - 3 phases, 4 conductors, balanced load	3P4W - 3 phases, 4 conductors	Yes	Module	Module (only 1P2W, 3P4W, 3P4W1 and deactivated)
Voltage measuring range	• 100 V • 110 V • 115 V • 120 V • 127 V • 190 V • 200 V • 208 V • 220 V • 230 V • 240 V • 277 V	230 V	Yes	Module	Module
Line voltage tolerance [%]	• 1 ... 50 %	10 %	Yes	Module	Module
Line frequency	• 50 Hz • 60 Hz	50 Hz	Yes	Module	Module

Parameters	Value range	Default setting	Reconfiguration in RUN	Effective range with configuration software, e.g. STEP 7 (TIA Portal)	
				GSD file PROFINET IO	GSD file PROFIBUS DP
Enable gate energy counter	• No • Yes	No	Yes	Module	-
Full-scale value for energy counter	• No full-scale value - infinite counting • 10^3 - count periodically • 10^6 - count periodically • 10^9 - count periodically • 10^{12} - count periodically • 10^{15} - count periodically	No full-scale value - infinite counting	Yes	Module	- (Default setting. No full-scale value - infinite counting)
User data variant	See the table Overview of the user data variants (Page 155)	Total energy L1 L2 L3 (ID 254 or FE_H)	Yes	Module	Module (only user data variant FE_H, FA_H, $F9_H$, $F8_H$, $9F_H$, $F5_H$, 80_H)
Minimum and maximum value calculation	• Disable • Enable	Disable	Yes	Module	- (Default setting: Disable)
Diagnostics overflow current	• Disable • Enable	Disable	Yes	Channel/phase	Module
Diagnostics overflow voltage	• Disable • Enable	Disable	Yes	Channel/phase	Module
Diagnostics underflow voltage	• Disable • Enable	Disable	Yes	Channel/phase	Module
Diagnostics low limit voltage	• Disable • Enable	Disable	Yes	Channel/phase	- (blocking is preset)
Diagnostics overflow cumulative values	• Disable • Enable	Disable	Yes	Channel/phase	Module
Overcurrent tolerance value [0.1 A]	• 10 ... 100 [0.1 A]	100 [0.1 A]	Yes	Channel/phase	Module
Overcurrent tolerance time [ms]	• 1 ... 60000 ms	40000 ms	Yes	Channel/phase	Module

Parameters	Value range	Default setting	Reconfiguration in RUN	Effective range with configuration software, e.g. STEP 7 (TIA Portal)	
				GSD file PROFINET IO	GSD file PROFIBUS DP
Low limit for current measurement [mA]	• 2 ... 250 mA	50 mA	Yes	Channel/phase	- (Default setting: 2 mA)
Operating hours counter	• Disable • Enable	Disable	Yes	Channel/phase	- (Default setting: Disable)
Enable gate of operating hours counter	• No • Yes	No	Yes	Channel/phase	-
Current transformer primary current [A]	• 1 ... 99999 A	1 A	Yes	Channel/phase	Module (Value range: 1...65535)
Current transformer secondary current	• 1 A • 5 A	1 A	Yes	Channel/phase	Module
Voltage transformer primary voltage [V]	• 1 ... 999999 V	230 V	Yes	Channel/phase	Module
Voltage transformer secondary voltage [V]	• 1 ... 500 V	230 V	Yes	Channel/phase	- (same value as Voltage measuring range parameter)
Reverse current direction	• Disable • Enable	Disable	Yes	Channel/phase	Module
Number of limits	• 0 ... 16	0	Yes	Module	-
Limit monitoring for limit	• Disable • Enable	Disable	Yes	Module	-
Measured variable for limit	• Measured value ID, see Table B-1	None	Yes	Limit	-
Gate for limit via DQ	• Disable • Enable	Disable	Yes	Channel/phase	-
Hardware interrupt for limit	• Disable • Enable	Disable	Yes	Channel/phase	-
Limit	• depending on the selected measured variable	0	Yes	Limit	-
Type of limit	• High limit • Low limit	High limit	Yes	Channel/phase	-

Parameters	Value range	Default setting	Reconfiguration in RUN	Effective range with configuration software, e.g. STEP 7 (TIA Portal)	
				GSD file PROFINET IO	GSD file PROFIBUS DP
Hysteresis for limit monitoring [%]	• 0 ... 200 [0.1%]	0%	Yes	Channel/phase	-
Delay time for limit monitoring [s]	• 0 ... 10 s	0 s	Yes	Channel/phase	-
Number of measured values for user data mapping	• 0 ... 64	0	Yes	Module	- (no user data mapping)
Measured variable	• Measured value ID, see Table B-1	None	Yes	Measured variable	- (no user data mapping)

12.2 Description of parameters

Hardware interrupt

Enable the hardware interrupt for the entire module here.

Diagnostics line voltage

Activate the diagnostics line voltage here. If there is no voltage or too little voltage at L1, the message "No supply voltage at L1" is output and a diagnostic interrupt is triggered.

Connection type

Specify the connection type you used for the Energy Meter here.

For more detailed information, refer to "Connection examples (Page 21)".

Voltage measuring range

Here you can set the voltage measuring range of the power supply system.

Line voltage tolerance

Monitoring the supply voltage based on this tolerance band is a positive or negative value.

Line frequency

Here you can set the line frequency of the power supply system.

Enable gate energy counter

Enable the gate for the energy counter here. When the gate is enabled, the energy counter only counts when the corresponding output data bit (DQ bit) is set to "1".

Full-scale value for energy counter

Select here the full-scale value for the periodic counting of the energy counter. You can also specify that the energy counter is to count without a full-scale value (infinite counting). The calculated energy counter values are stored retentively in the module.

User data variant

Select here the user data variant with which the module is to operate once it is switched on.

Minimum and maximum value calculation

Enable calculation of the minimum and maximum values here. The minimum and maximum value are calculated from the start of the measurement. The calculated values are stored retentively in the Energy Meter.

Diagnostics overflow current

The measured current is monitored after expiry of the "Tolerance time" for "Overcurrent [0.1 A] tolerance value". Exceeding this results in overflow current.

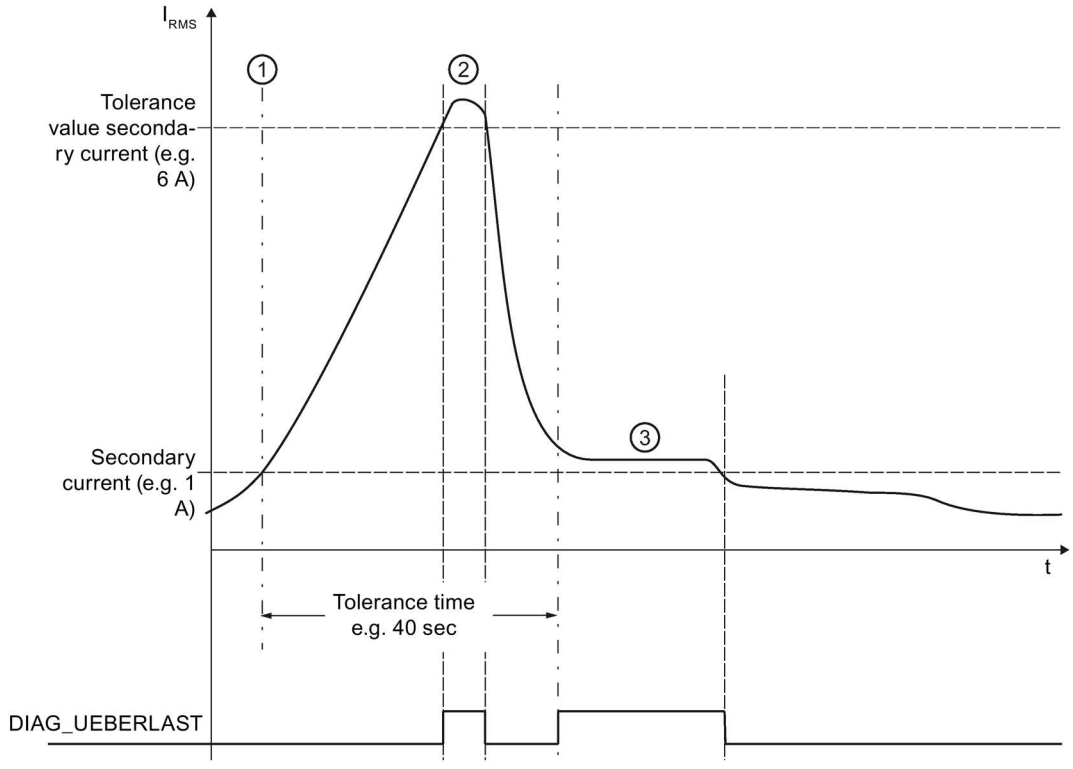

① The tolerance time starts as soon as the secondary current value (1 A, 5 A) is exceeded.

② DIAG_UEBERLAST diagnoses the affected phase if the tolerance value of the secondary current has been exceeded within the assigned tolerance time (or the maximum value of the secondary current (12 A) is exceeded).

③ After the set tolerance time has elapsed, the secondary current value (1 A, 5 A) is monitored. A violation of the secondary current value also returns DIAG_UEBERLAST.

Figure 12-1 Diagnostics response in the event of a current overload

Diagnostics overflow voltage

Line voltage (measuring range) is monitored for tolerance. A violation of the overflow triggers a diagnostic interrupt.

Diagnostics underflow voltage

Line voltage (measuring range) is monitored for tolerance. A violation of the underflow triggers a diagnostic interrupt.

Diagnostics low limit voltage

Low limit for voltage is monitored. A violation of the low limit triggers a diagnostic interrupt.

Diagnostics overflow cumulative values

A cumulative overflow in the calculated variables is displayed. The values stop at the high or low limit. A violation triggers a diagnostic interrupt.

Overcurrent tolerance value [0.1 A]

The tolerance factor secondary overcurrent parameter (10 to 100) indicates the tolerable value of the secondary current in 0.1 A increments (10 = 1 A to 100 = 10 A). Always take note of the current class of the current transformer being used (1 A, 5 A).

Overcurrent tolerance time

Monitoring time in ms in which the overcurrent is tolerated. 0 means that the monitoring time has been disabled.

Low limit for measuring current

The configurable low limit for measuring current refers to the secondary currents and is used to avoid incorrect calculations in the case of very low currents. Incorrect measurements of very low currents in particular are a cause of inaccuracies in the current transformer used. Set the low limit for the current measurement to the required value depending on your process.

Tip: If you want to find the low limit for the current measurement experimentally, set it to a lower value. Then, feed in a very precise low current and determine the measurement error that can no longer be tolerated. Afterwards, set the low limit for the current measurement to the limit value you have determined.

If current falls below the low limit for the current measurement, the following measured values and derived variables of the affected phase are reset.

- Effective current value
- Neutral current
- Active power
- Reactive power
- Apparent power
- Phase angle
- Power factor

A moving mean value is formed from the power values and they only become "0" after a corresponding time. The energy meters for active, reactive and apparent energy of the reset phase do not measure any longer.

Operating hours counter

Enable the operating hours counter here. The counting starts from a programmable minimum current value. The counter can be reset or pre-defined using data record or output bit.

Enable gate of operating hours counter

Enable the gate for the operating hours counter here. When the gate is activated, the operating hours counter only counts when the corresponding output data bit (DQ bit) is set to "1".

Current transformer primary current

Enter here the nominal value for the primary current of the current transformer used. The transformer ratio is calculated from the primary and secondary current.

Current transformer secondary current

Enter here the nominal value for the secondary current (1 A or 5 A) of the current transformer used. The transformer ratio is calculated from the primary and secondary current.

Voltage transformer primary voltage

To determine the voltage transformer ratio, enter the primary voltage here. The transformer ratio is calculated from the primary and secondary voltage.

Voltage transformer secondary voltage

Enter the secondary voltage to determine the voltage transformer ratio here. The transformer ratio is calculated from the primary and secondary voltage.

Reverse current direction

Setting to determine whether or not to reverse the direction of current.

In the event of inadvertent incorrect connection, this parameter can be used to correct the measured values, thus saving the hassle of rewiring. The direction of the current is only evident from the power measurement values. The current measurement value is an rms value.

Number of limits

Enter the number of measured values that you want to monitor for limits.

Limit monitoring

Enable the monitoring of the limit for a freely definable measured value here. Limit violations are counted and the count values stored retentively.

Measured value ID for limit

Enter the ID of a measured value that you want to use for limit monitoring.

Gate enabled with limit monitoring

Enable the gate via limit monitoring here. When the gate is enabled, the limit monitoring is only started when the corresponding bit of the associated output user data is set to "1".

Hardware interrupt for limit

Enable the hardware interrupt here. The hardware interrupt is triggered if a high or low limit is violated. Without activation of a hardware interrupt, a limit violation is only displayed in the user data and in DS 150.

Limit

Enter the limit here that is to trigger a limit violation when exceeded or fallen below. Limit violations are displayed in the user data and in DS 150.

Type of limit

Select here, whether it is an high or low limit. Depending on this selection, the limit violation or hardware interrupt is triggered when a value exceeds (high limit) or falls below (low limit) the limit.

Hysteresis for limit monitoring

Enter the hysteresis for limit in percent here. The percentage refers to the numerical value of the limit when the limit violation occurs. A message is only canceled if the measured value is outside the limit and its hysteresis range. As long as the measured value is in the hysteresis range, no new message is output.

Delay time for limit monitoring

Here you can select the delay time for limit violation. The delay refers to the time that must elapse before an occurrence of a limit violation is reported. Faults can be filtered out by selection of the delay time. The deceleration time is also taken into consideration during outgoing of the limit violation.

Number of measured values for user data mapping

Specify the number of measured values/variables that you want to use for the user-specific user data mapping.

Measured variable

Select the measured variable (with the measured value ID) that you want to use for the user-specific user data mapping.

Interrupts/diagnostic alarms 13

13.1 Status and error display

LED display

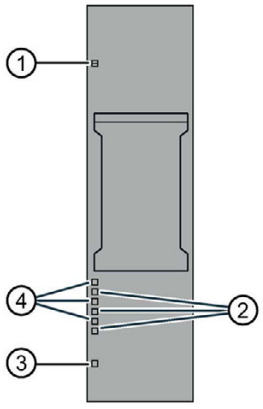

① DIAG (green/red)
② Error (red)
③ PWR (green)
④ Status (green)

Figure 13-1 LED display

Meaning of the LED displays

The following table explains the meaning of the status and error displays. Remedial measures for diagnostic alarms can be found in the section Diagnostic alarms (Page 103).

DIAG LED

Table 13- 1 Meaning of the DIAG LED

DIAG	Meaning
Off	Supply voltage of the ET 200SP not OK
Flashes	Module not ready for operation (no parameters assigned)
On	Module parameters assigned and no module diagnostics
Flashes	Module parameters assigned and module diagnostics

Status LED

Table 13- 2 Meaning of the Status LED

Status	Meaning
Off	Channel deactivated or error
On	Channel activated and no error

Error LED

Table 13- 3 Meaning of the Error LED

Status	Meaning
Off	Channel is OK
On	Channel is faulty

PWR LED

Table 13- 4 Meaning of the PWR LED

PWR	Meaning
Off	Line voltage missing
On	Line voltage available

13.2 Interrupts

The analog input module Energy Meter 480VAC ST supports hardware and diagnostic interrupts.

13.2.1 Hardware interrupts

Hardware interrupts

The module generates a hardware interrupt at the following events:

- Violation of low limit 1 to 16
- Violation of high limit 1 to 16

You can find detailed information on the event in the hardware interrupt organization block with the "RALARM" (read additional interrupt information) instruction and in the STEP 7 online help.

The module channel that triggered the hardware interrupt is entered in the start information of the organization block. The following figure shows the assignment of the local data double word 8 by the start information of the hardware interrupt organization block.

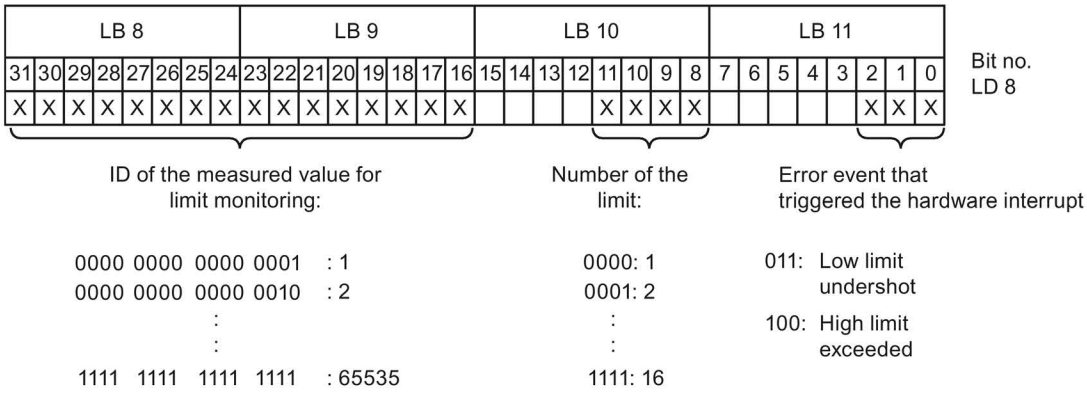

Figure 13-2 Start information of the organization block

Structure of the additional interrupt information

Table 13- 5 Structure of the additional interrupt information

Data block name		Contents	Comment	Bytes
Identifier		W#16#0001 to W#16#FFFF	ID of the measured value for limit monitoring	2
Number of the limit (1 to 16), which has triggered the hardware interrupt				
	Channel	B#16#00 to B#16#0F	Number of the limit	1
Event that triggered the hardware interrupt.				
	Event	B#16#03	Violation of low limit	1
		B#16#04	Violation of high limit	

13.2.2 Diagnostics interrupt

Diagnostic interrupt

The module generates a diagnostic error interrupt at the following events:

- Channel is temporarily unavailable
- Hardware interrupt lost
- Error
- Supply voltage missing
- Parameter assignment error
- Low limit voltage violated (measuring voltage < 80 V)
- High limit value voltage exceeded
- Underflow voltage (tolerance for supply voltage) violated
- Overflow voltage (tolerance for supply voltage) exceeded
- Overload (current measurement > 12 A or tolerance overcurrent exceeded after expiry of the tolerance time)
- Overflow of the calculated values (measured or calculated values screen exceed the representable range of values)

See also

Diagnostic alarms (Page 103)

13.3 Diagnostic alarms

Diagnostic alarms

Note

Assignment channel in diagnostic message ⇔ Phase

In the diagnostic messages the channels are counted from "Channel "0" on, in the AI Energy Meter 480VAC ST from Phase "1" on.

Note the following assignment:

- Channel "0" ⇔ Phase "1"
- Channel "1" ⇔ Phase "2"
- Channel "2" ⇔ Phase "3"

Table 13- 6 Error types

Diagnostic message	Error code	Meaning	Solution
Undervoltage[1]	2_H	Line voltage (measuring range) is monitored for tolerance. Violation leads to voltage overflow/underflow	Observe the line voltage range
Overvoltage	3_H		
Overload	4_H	The measured current is monitored after expiry of the "Tolerance time" for "Tolerance value overcurrent [0.1 A]". Exceeding this results in overflow current. The maximum value of the secondary current (12 A) has been exceeded.	Observe the current range
High limit	7_H	Cumulative overflow in the calculated values	-
Low limit[1]	8_H	Violation of the low limit for voltage measurement. The message occurs when the configured minimum current or voltage is below 80 V.	Observe the voltage range
Error	9_H	Internal module error (diagnostic alarm on channel 0 applies to the entire module).	Replace the module
Parameter assignment error	10_H	• The module cannot evaluate parameters for the channel. • Incorrect parameter assignment.	Correct the parameter assignment
Load voltage missing	11_H	Missing or insufficient line voltage on phase L1	Check supply
Channel is temporarily unavailable	$1F_H$	Firmware upgrade is being performed. Channel 0 applies to the entire module. The module is currently not performing any measurements.	--
		A user calibration is being executed at the channel.	Complete the user calibration

[1] If the "Undervoltage" and "Low limit" diagnostics are active at the same time, the "Low limit" diagnostics has higher priority and deletes the "Undervoltage" diagnostics.

13.4 Diagnostics response

Diagnostics response

This section describes the response of the AI Energy Meter 480VAC ST when diagnostics information is reported.

Measured values in the case of diagnostics

Even in the case of diagnostics, measured values continue to be displayed as long as they can still be acquired. If measured values cannot be measured or calculated, "0" is displayed.

Zero suppression

If the supplied current is less than the configured "Low limit for measuring current" parameter, the current measurement and all dependent variables are suppressed or set to "0".

Overload limitation

If the secondary current fed in at the channel is higher than 12 A, the module changes to limitation and the measured value of the current and all dependent variables are set to "0".

Value falls below "Low limit current measurement"

If current falls below the low limit for the current measurement, the following measured values and derived variables of the affected phase are reset.

- Effective current value
- Neutral current
- Active power
- Reactive power
- Apparent power
- Phase angle
- Power factor

A moving mean value is formed from the power values and they only become "0" after a corresponding time. The energy meters for active, reactive and apparent energy of the reset phase do not measure any longer.

Loss of the supply voltage

At a loss of supply voltage at U_{L1} (phase 1), all measurements are interrupted.

After the supply voltage is restored, the AI Energy Meter 480VAC ST operates again with the configuration / parameter assignment stored in the CPU. The retentively stored values are used at the following counters and calculations:

- Energy and overflow counters
- Operating hours counters
- Counters for limit violation
- Minimum values
- Maximum values

Input data to "0"

Note

If the AI Energy Meter 480VAC ST is no longer recognized by the interface module (for example, because it is defective or not plugged in), all input data are set to "0".

Technical specifications

14

14.1 Technical specifications

Technical specifications of the AI Energy Meter 480VAC ST

Article number	6ES7134-6PA20-0BD0
General information	
Product type designation	ET 200SP, AI Energy Meter 480 V AC ST, PU 1
Firmware version	V4.0
usable BaseUnits	BU type D0, BU20-P12+A0+0B
Product function	
• Voltage measurement	Yes
• Voltage measurement with voltage transformers	Yes
• Current measurement	Yes
• Phase current measurement without current transformers	No
• Phase current measurement with current transformers	Yes
• Energy measurement	Yes
• Frequency measurement	Yes
• Power measurement	Yes
• Active power measurement	Yes
• Reactive power measurement	Yes
• I&M data	Yes; I&M0 to I&M3
• Isochronous mode	No
Engineering with	
• STEP 7 TIA Portal configurable/integrated as of version	V13 SP1
• STEP 7 configurable/integrated as of version	V5.5 SP4 and higher
• PROFIBUS as of GSD version/GSD revision	GSD Revision 5
• PROFINET as of GSD version/GSD revision	V2.3

Article number	6ES7134-6PA20-0BD0
Operating mode	
• cyclic measurement	Yes
• acyclic measurement	Yes
• Acyclic measured value access	Yes
• Fixed measured value sets	Yes
• Freely definable measured value sets	Yes
Configuration control	
via dataset	Yes
CiR – Configuration in RUN	
Reparameterization possible in RUN	Yes
Calibration possible in RUN	Yes
Installation type/mounting	
Mounting position	Any
Supply voltage	
Design of the power supply	Supply via voltage measurement channel L1
Type of supply voltage	AC 100 - 277 V
permissible range, lower limit (AC)	90 V
permissible range, upper limit (AC)	293 V
Line frequency	
• permissible range, lower limit	47 Hz
• permissible range, upper limit	63 Hz
Power loss	
Power loss, typ.	0.6 W
Address area	
Address space per module	
• Address space per module, max.	268 byte; 256 byte input / 12 byte output
Hardware configuration	
Automatic encoding	
• Mechanical coding element	Yes
Time of day	
Operating hours counter	
• present	Yes
Analog inputs	
Cycle time (all channels), typ.	50 ms; Time for consistent update of all measured and calculated values (cyclic und acyclic data)

Article number	6ES7134-6PA20-0BD0
Interrupts/diagnostics/status information	
Alarms	
• Diagnostic alarm	Yes
• Limit value alarm	Yes
• Hardware interrupt	Yes; Monitoring of up to 16 freely selectable process values (exceeding or undershooting of value)
Diagnostics indication LED	
• Monitoring of the supply voltage (PWR-LED)	Yes
• Channel status display	Yes; Green LED
• for channel diagnostics	Yes; red Fn LED
• for module diagnostics	Yes; green/red DIAG LED
Integrated Functions	
Measuring functions	
• Measuring procedure for voltage measurement	TRMS
• Measuring procedure for current measurement	TRMS
• Type of measured value acquisition	seamless
• Curve shape of voltage	Sinusoidal or distorted
• Buffering of measured variables	Yes
• Parameter length	74 byte
• Bandwidth of measured value acquisition	2 kHz; Harmonics: 39 / 50 Hz, 32 / 60 Hz
Operating mode for measured value acquisition	
– automatic detection of line frequency	No; Parameterizable
Measuring range	
– Frequency measurement, min.	45 Hz
– Frequency measurement, max.	65 Hz

Article number	6ES7134-6PA20-0BD0
Measuring inputs for voltage	
– Measurable line voltage between phase and neutral conductor	277 V
– Measurable line voltage between the line conductors	480 V
– Measurable line voltage between phase and neutral conductor, min.	90 V
– Measurable line voltage between phase and neutral conductor, max.	293 V
– Measurable line voltage between the line conductors, min.	155 V
– Measurable line voltage between the line conductors, max.	508 V
– Measurement category for voltage measurement in accordance with IEC 61010-2-030	CAT II; CAT III in case of guaranteed protection level of 1.5 kV
– Internal resistance line conductor and neutral conductor	3.4 MΩ
– Power consumption per phase	20 mW
– Impulse voltage resistance 1,2/50µs	1 kV
Measuring inputs for current	
– measurable relative current (AC), min.	1 %; Relative to the secondary rated current 5 A
– measurable relative current (AC), max.	100 %; Relative to the secondary rated current 5 A
– Continuous current with AC, maximum permissible	5 A
– Apparent power consumption per phase for measuring range 5 A	0.6 V·A
– Rated value short-time withstand current restricted to 1 s	100 A
– Input resistance measuring range 0 to 5 A	25 mΩ; At the terminal
– Zero point suppression	Parameterizable: 2 ... 250 mA, default 50 mA
– Surge strength	10 A; for 1 minute

Article number	6ES7134-6PA20-0BD0
Accuracy class according to IEC 61557-12	
– Measured variable voltage	0,2
– Measured variable current	0,2
– Measured variable apparent power	0.5
– Measured variable active power	0.5
– Measured variable reactive power	1
– Measured variable power factor	0.5
– Measured variable active energy	0.5
– Measured variable reactive energy	1
– Measured variable neutral current	0.5; calculated
– Measured variable phase angle	±1 °; not covered by IEC 61557-12
– Measured variable frequency	0.05
Potential separation	
Potential separation channels	
• between the channels and backplane bus	Yes; 3 700V AC (type test) CAT III
Isolation	
Isolation tested with	2 300V AC for 1 min. (type test)
Ambient conditions	
Ambient temperature during operation	
• horizontal installation, min.	0 °C
• horizontal installation, max.	60 °C
• vertical installation, min.	0 °C
• vertical installation, max.	50 °C
Dimensions	
Width	20 mm
Height	73 mm
Depth	58 mm
Weights	
Weight (without packaging)	45 g
Data for selecting a current transformer	
• Burden power current transformer x/1A, min.	As a function of cable length and cross section, see device manual
• Burden power current transformer x/5A, min.	As a function of cable length and cross section, see device manual

ATEX approval

In accordance with EN 60079-15 (Electrical apparatus for potentially explosive atmospheres; Type of protection "n") and EN 60079-0 (Electrical apparatus for potentially explosive gas atmospheres - Part 0: General Requirements)

II 3 G Ex nA IIC Tx Gc
DEKRA 12ATEX0038X

Dimension drawing

See ET 200SP BaseUnits (http://support.automation.siemens.com/WW/view/en/59753521) manual

Parameter data records

A

A.1 Configuration via parameter data records

The parameter data records of the module have an identical structure, regardless of whether you configure the module with PROFIBUS DP or PROFINET IO.

Parameter assignment in the user program

You can reassign the module parameters in RUN mode, for example change the diagnostics behavior, define new limits or configure a modified user data mapping.

Changing parameters in RUN

The "WRREC" instruction is used to transfer the parameters to the module via the respective data record. The parameters set in STEP 7 do not change in the CPU, which means the parameters set in STEP 7 are still valid after a restart.

If you reconfigure a module (so that the user data size changes) and diagnostics are pending prior to the reconfiguration, these diagnostics are not signaled as "outgoing".

STATUS output parameter

If errors occur during the transfer of parameters with the WRREC instruction, the module continues operation with the previous parameter assignment. However, a corresponding error code is written to the STATUS output parameter.

The description of the WRREC instruction and the error codes is available in the STEP 7 online help.

A.2 Structure of the parameter data record 128 for the entire module

Structure of data record 128

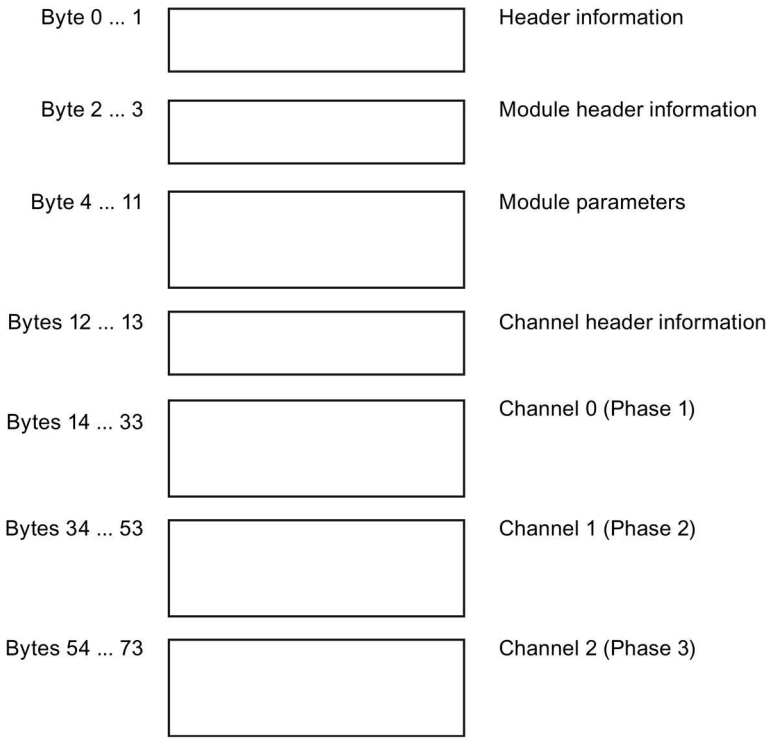

Figure A-1 Parameter data record 128

Header information

The figure below shows the structure of the header information.

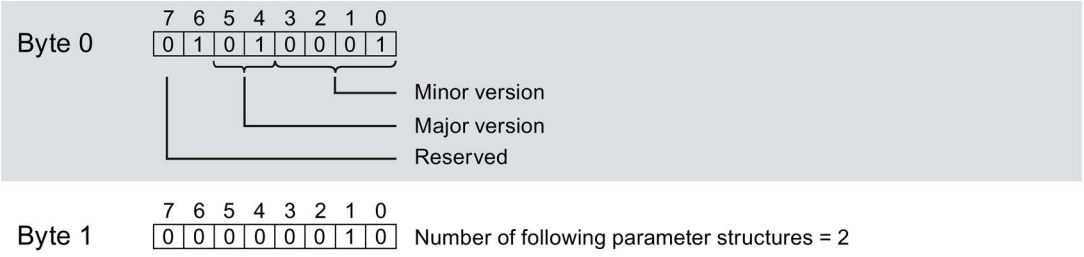

Figure A-2 Header information

Module header information

The figure below shows the structure of the header information for a module.

	7	6	5	4	3	2	1	0	
Byte 2	0	1	0	0	0	0	0	1	Number of the following module parameter blocks = 1
Byte 3	0	0	0	0	1	0	0	0	Length of the following module parameter block = 8

Figure A-3 Module header information

Module parameter block

The figure below shows the structure of the module parameter block.

Enable a parameter by setting the corresponding bit to "1".

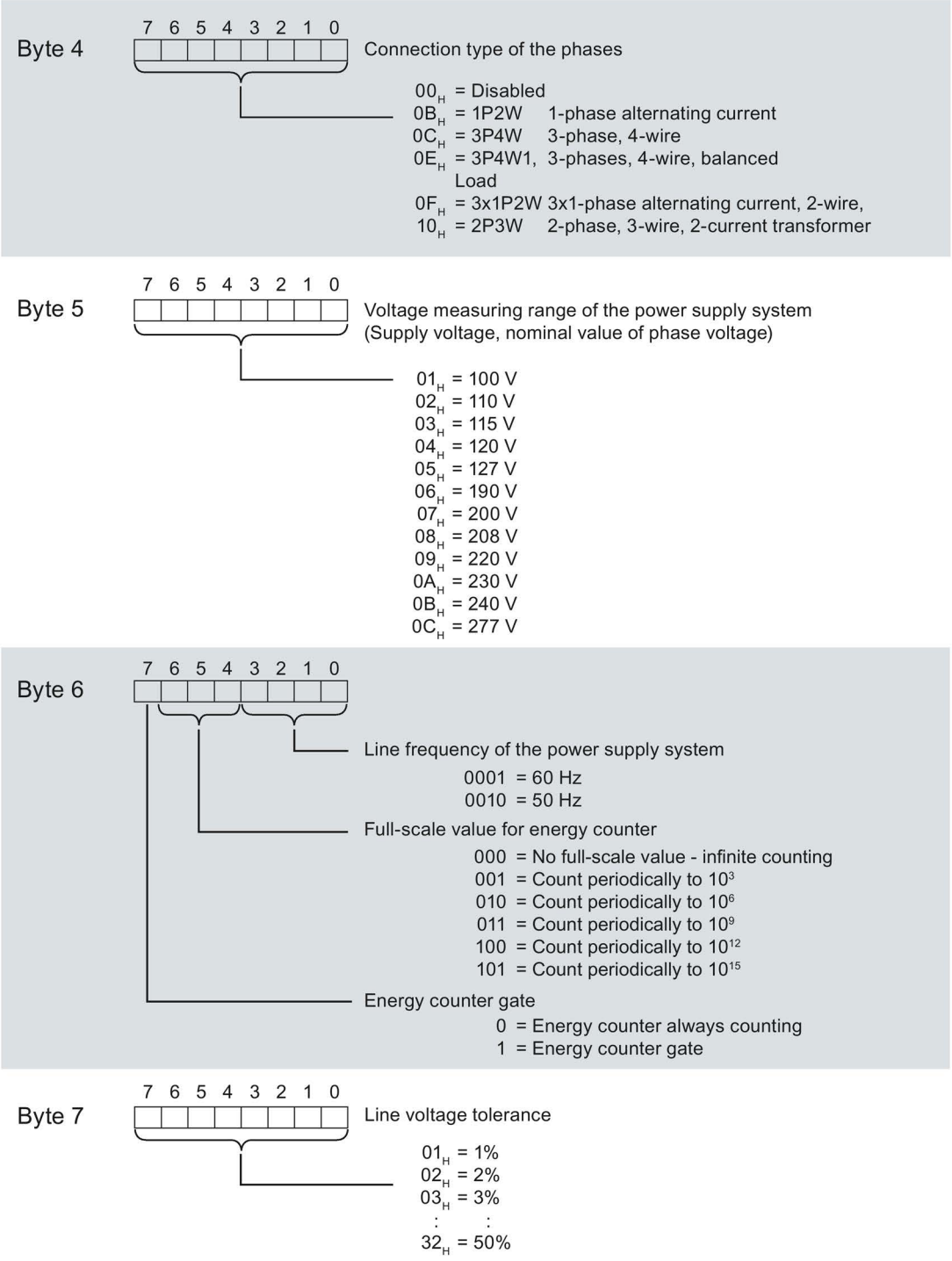

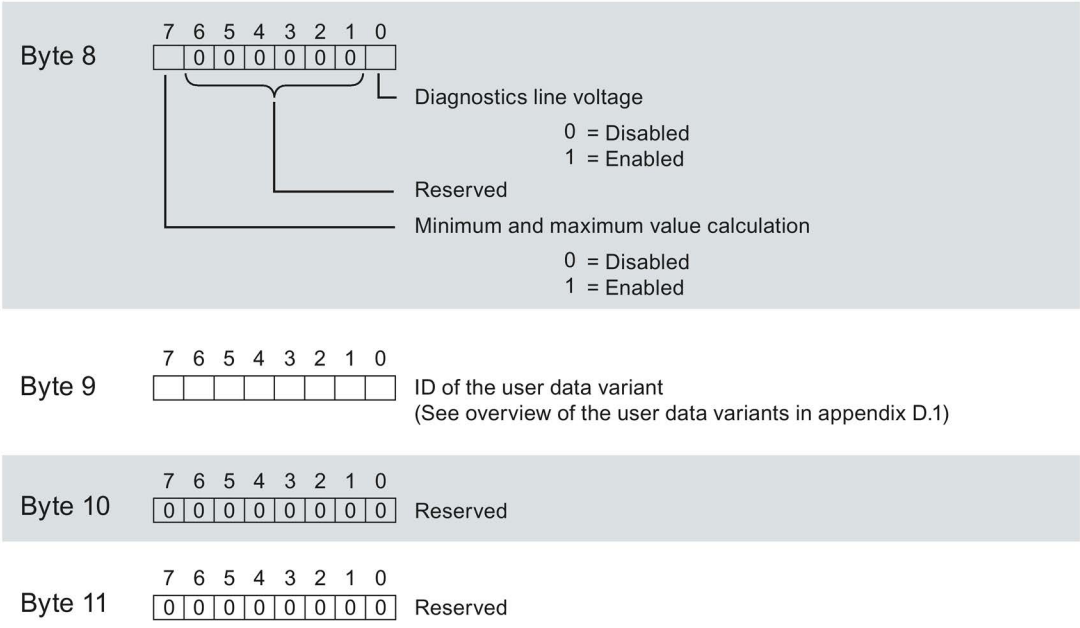

Figure A-4 Module parameter block

You can find the user data variant in the section Overview of the user data variants (Page 155).

Channel header information

The following figure shows the structure of the header information for a channel.

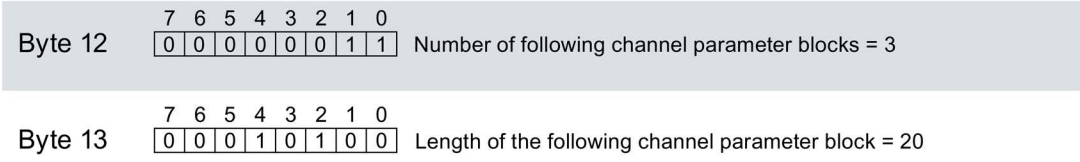

Figure A-5 Channel header information

Channel parameter block

The figure below shows the structure of the channel parameter block.

Enable a parameter by setting the corresponding bit to "1".

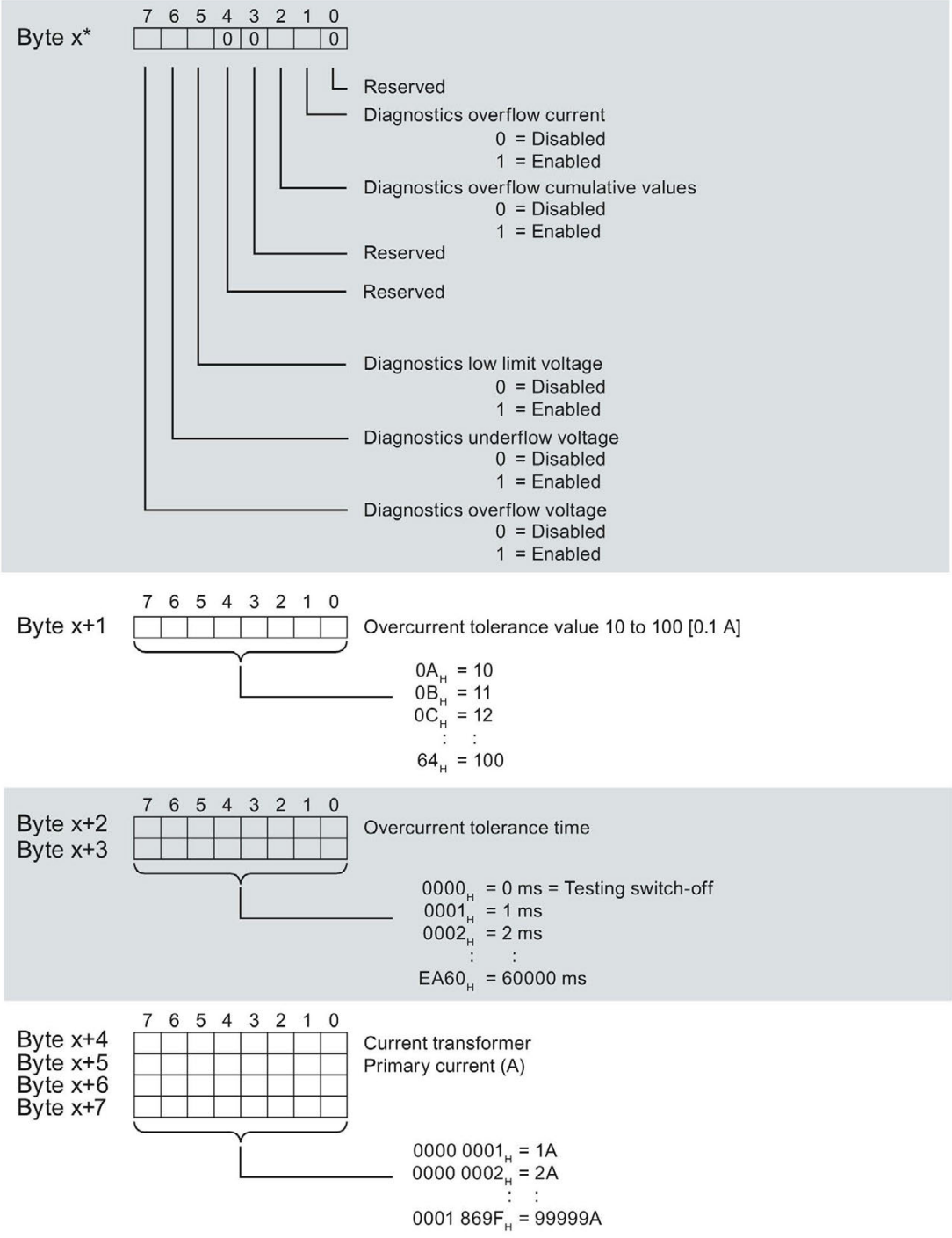

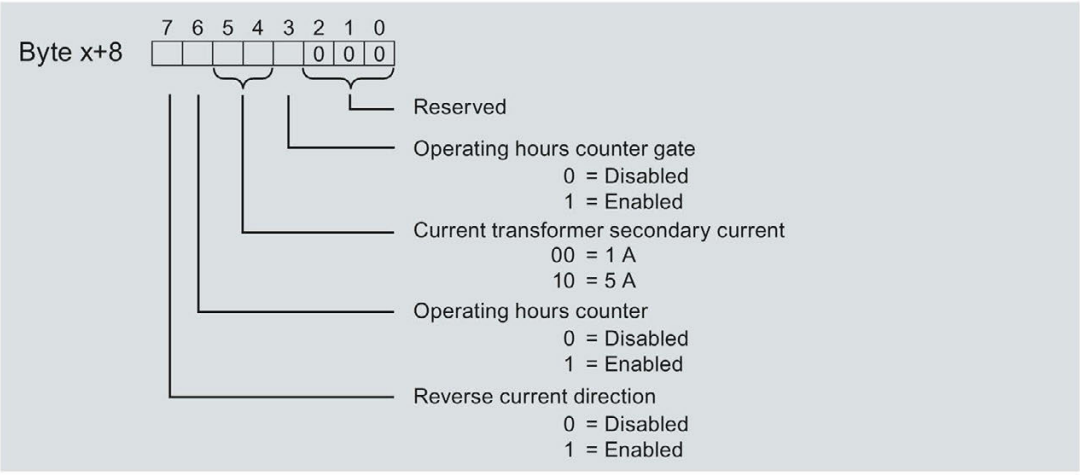
7 6 5 4 3 2 1 0
Byte x+8
0 0 0
Reserved
Operating hours counter gate
0 = Disabled
1 = Enabled
Current transformer secondary current
00 = 1 A
10 = 5 A
Operating hours counter
0 = Disabled
1 = Enabled
Reverse current direction
0 = Disabled
1 = Enabled

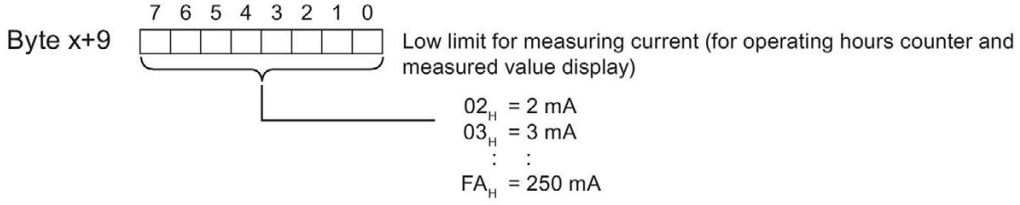
7 6 5 4 3 2 1 0
Byte x+9
Low limit for measuring current (for operating hours counter and measured value display)
02H = 2 mA
03H = 3 mA
FAH = 250 mA

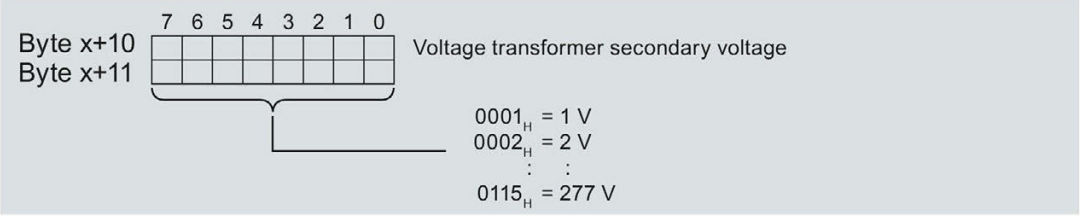
7 6 5 4 3 2 1 0
Byte x+10
Byte x+11
Voltage transformer secondary voltage
0001H = 1 V
0002H = 2 V
0115H = 277 V

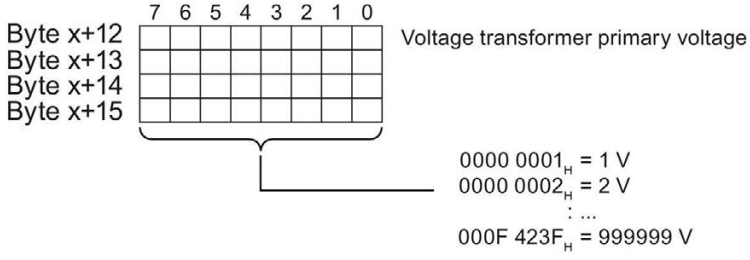
7 6 5 4 3 2 1 0
Byte x+12
Byte x+13
Byte x+14
Byte x+15
Voltage transformer primary voltage
0000 0001H = 1 V
0000 0002H = 2 V
000F 423FH = 999999 V

	7	6	5	4	3	2	1	0	
Byte x+16	0	0	0	0	0	0	0	0	Reserved
Byte x+17	0	0	0	0	0	0	0	0	Reserved
Byte x+18	0	0	0	0	0	0	0	0	Reserved
Byte x+19	0	0	0	0	0	0	0	0	Reserved

* x = 14 for channel/phase 1, 34 for channel/phase 2, 54 for channel/phase 3

Figure A-6 Channel parameter block

Error while transferring the data record

The module always checks all the values of the transferred data record. Only if all the values were transferred without errors does the module apply the values from the data record.

The WRREC instruction for writing data records returns corresponding error codes when errors occur in the STATUS parameter.

The following table shows the module-specific error codes and their meaning for the parameter data record 128.

Error code in STATUS parameter (hexadecimal)				Meaning	Solution
Byte 0	Byte 1	Byte 2	Byte 3		
DF	80	B0	00	Number of the data record unknown	Enter a valid number for the data record.
DF	80	B1	00	Length of the data record incorrect	Enter a valid value for the data record length.
DF	80	B2	00	Slot invalid or cannot be accessed.	Check the station whether the module is plugged or drawn. Check the assigned values for the parameters of the WRREC instruction
DF	80	E0	01	Incorrect version	Check Byte 0. Enter valid values.
DF	80	E0	02	Error in the header information	Check Bytes 1 and 2. Correct the length and number of the parameter blocks.
DF	80	E1	01	Reserved bits are not 0.	Check Byte 10, 11, 14, 22, 30...34, 42, 50...54, 70...74 and set the reserved bits back to 0.
DF	80	E1	02	Reserved bits are not 0.	Check Byte 8 and set the reserved bits back to 0.
DF	80	E1	05	Measuring range for voltage invalid.	Check Byte 5. Permitted values: 01_H to $0C_H$
DF	80	E1	20	Connection type invalid.	Check Byte 4. Permitted values: 00_H, $0B_H$ ... 01_H

Error code in STATUS parameter (hexadecimal)				Meaning	Solution
Byte 0	Byte 1	Byte 2	Byte 3		
DF	80	E1	21	Parameter for user data variant in DS 128 not possible or input data configuration not large enough.	Check Byte 9. Select a different user data variant in DS 128 or change the configuration.
DF	80	E1	22	Parameter for user data variant is invalid.	Check Byte 9. Select a valid code for the user data variant.
DF	80	E1	23	Parameter for frequency is invalid.	Check Byte 6. Enter valid values.
DF	80	E1	24	Parameter for tolerance line voltage is invalid.	Check Byte 7. Enter valid values.
DF	80	E1	25	Parameter for current transformer secondary is invalid.	Check Bit 4...5 in Byte 22, 42...62. Enter valid values.
DF	80	E1	29	Parameter for tolerance value overcurrent invalid.	Check Byte 15, 35...55. Enter valid values.
DF	80	E1	2A	Parameter for tolerance time overcurrent invalid.	Check Byte 16...17, 36...37, 56...57. Enter valid values.
DF	80	E1	2B	Parameter for low limit measuring current invalid	Check Byte 23, 43...63. Enter valid values.
DF	80	E1	2C	Parameter for current transformer primary current is invalid.	Check Byte 18...21, 38...41, 48...61. Enter valid values.
DF	80	E1	2D	Parameter for voltage converter primary voltage invalid.	Check Byte 26...29, 46...49, 66...69. Enter valid values.
DF	80	E1	2E	Parameter for voltage converter secondary voltage invalid.	Check Byte 24...25, 44...45, 64...65. Enter valid values.
DF	80	E1	2F	Parameter for full-scale value for energy counters invalid.	Check Bit 4...6 in Byte 6. Enter valid values.
DF	80	E1	30	Invalid data record number.	Check the data record number. Enter a valid data record number.
DF	80	E1	3E	Only for connection type 3P4W1. Parameters for the different phases are not identical.	Check Bytes 14...33, 34...53, 54...73. Enter identical values at all three phases.
DF	80	E1	3F	Full-scale value for energy counter too small or transmission ratio of current and voltage too high.	Increase the full-scale value or reduce the transmission ratio of the current and voltage transformer.

A.3 Structure of the parameter data record 129 for limit monitoring

Structure of data record 129

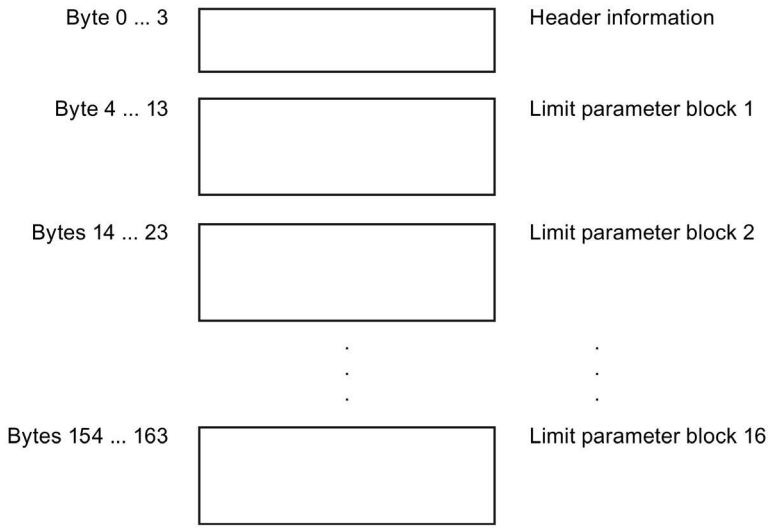

Figure A-7 Structure of data record 129

Header information

The figure below shows the structure of the header information.

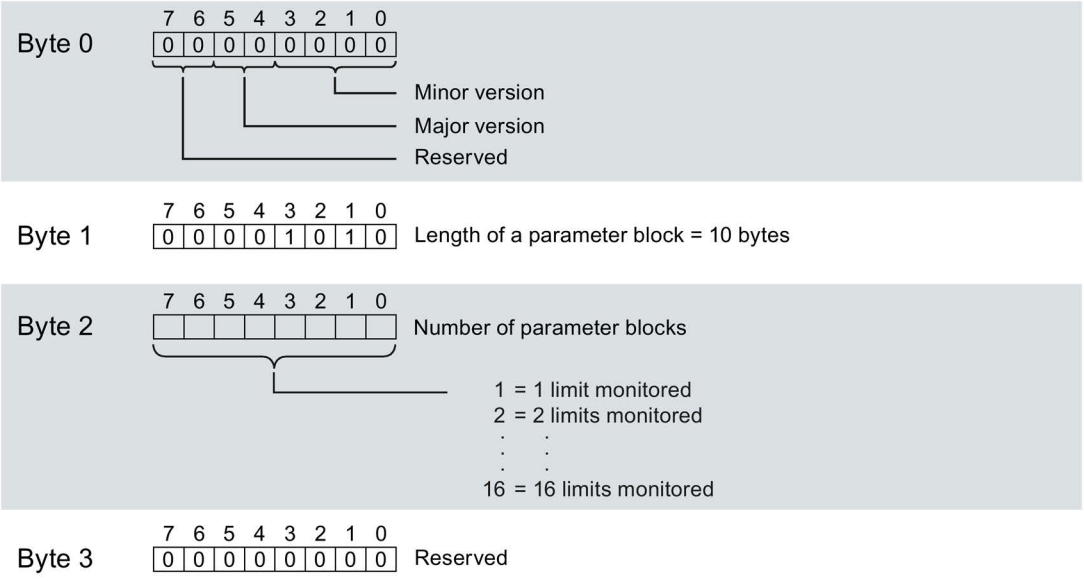

Figure A-8 Header information DS 129

Limit parameter block

The following diagram shows the structure of the parameter blocks for limit monitoring.

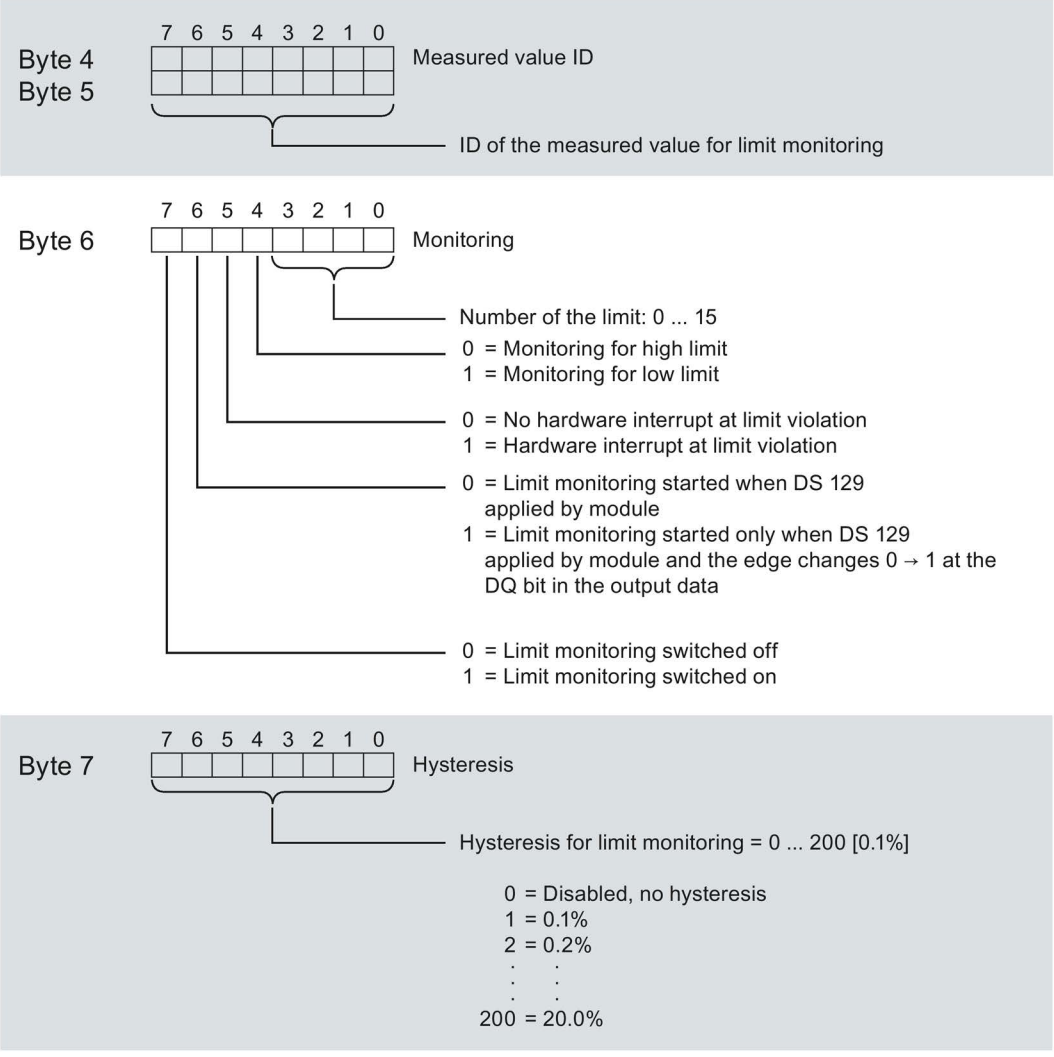

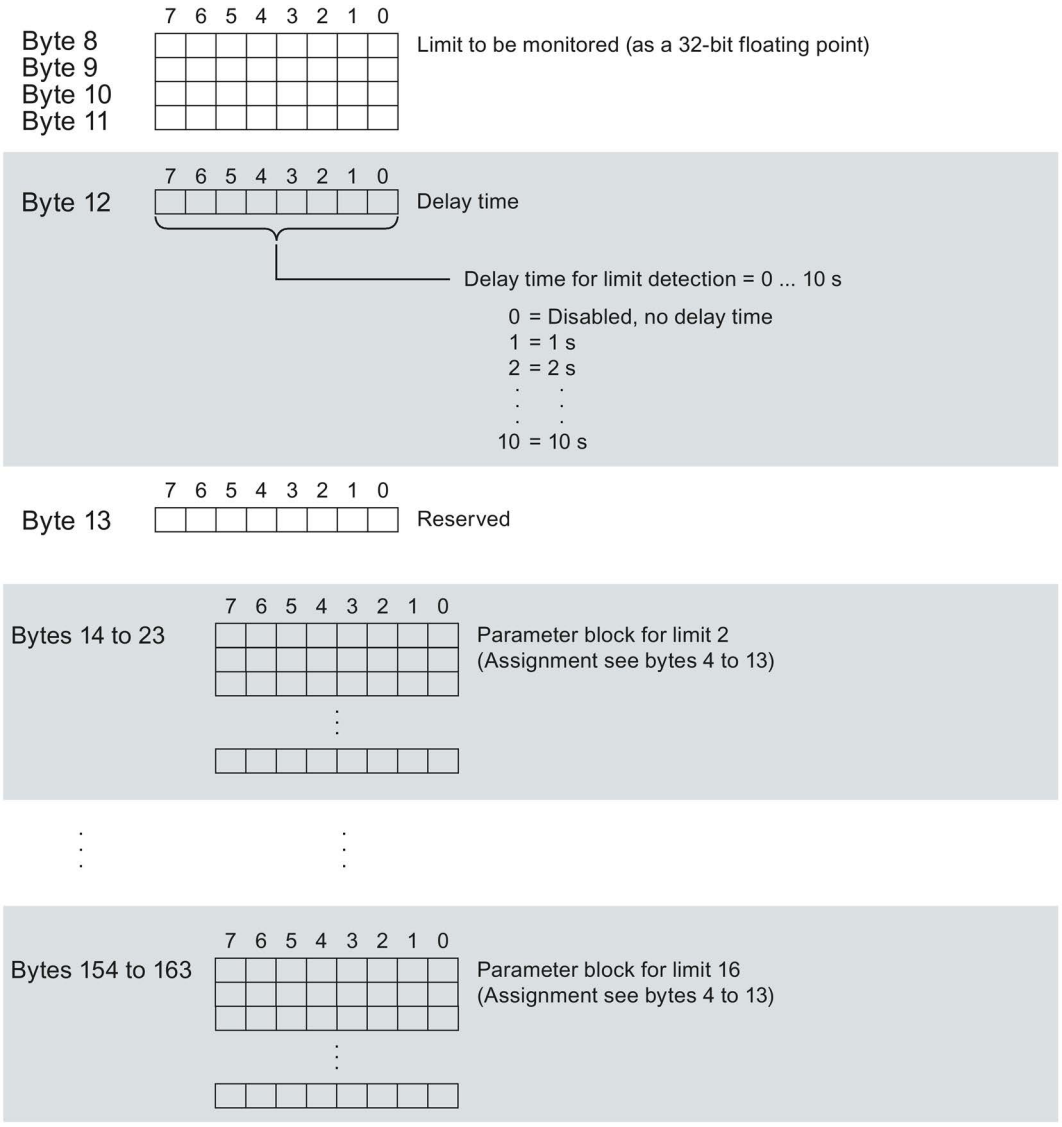

Figure A-9 Limit parameter data block

Error while transferring the data record

The module always checks all the values of the transferred data record. Only if all the values were transferred without errors does the module apply the values from the data record.

The WRREC instruction for writing data records returns corresponding error codes when errors occur in the STATUS parameter.

The following table shows the module-specific error codes and their meaning for the parameter data record 129.

Error code in STATUS parameter (hexadecimal)				Meaning	Solution
Byte 0	Byte 1	Byte 2	Byte 3		
DF	80	B0	00	Number of the data record unknown	Enter a valid number for the data record.
DF	80	B1	00	Length of the data record incorrect	Enter a valid value for the data record length.
DF	80	B2	00	Slot invalid or cannot be accessed.	Check the station whether the module is plugged or drawn. Check the assigned values for the parameters of the WRREC instruction
DF	80	E0	01	Incorrect version	Check Byte 0. Enter valid values.
DF	80	E0	02	Error in the header information	Check Bytes 1 and 2. Correct the length and number of the parameter blocks.
DF	80	E1	01	Reserved bits are not 0.	Check Byte 10, 11, 14, 22, 30...34, 42, 50...54, 70...74 and set the reserved bits back to 0.
DF	80	E1	31	Parameter for length of the parameter block invalid.	Check Byte 1. Length = 10 bytes
DF	80	E1	32	Parameters for number of parameter blocks invalid.	Check Byte 2. Enter valid values.
DF	80	E1	33	Parameter for measured value ID invalid.	Check Bytes 4 and 5. Enter valid values.
DF	80	E1	34	Parameters for monitoring the limits	Check Bit 0...3 in Byte 6. Enter valid values.
DF	80	E1	35	Number for limits in monitoring parameter assigned several times	Check Bit 0...3 in Byte 6. Do not use limit number several times.
DF	80	E1	36	Parameters for hysteresis invalid	Check Byte 7. Enter valid values.
DF	80	E1	37	Parameter for limit to be monitored invalid.	Check Byte 8...11. Enter valid values.
DF	80	E1	38	Delay time in Hysteresis parameter invalid.	Check Byte 12. Enter valid values.

A.4 Structure of the parameter data record 130 for user-data mapping

Structure of data record 130

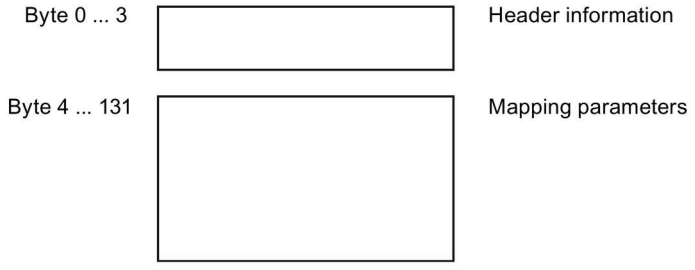

Figure A-10 Structure of data record 130

Header information

The figure below shows the structure of the header information.

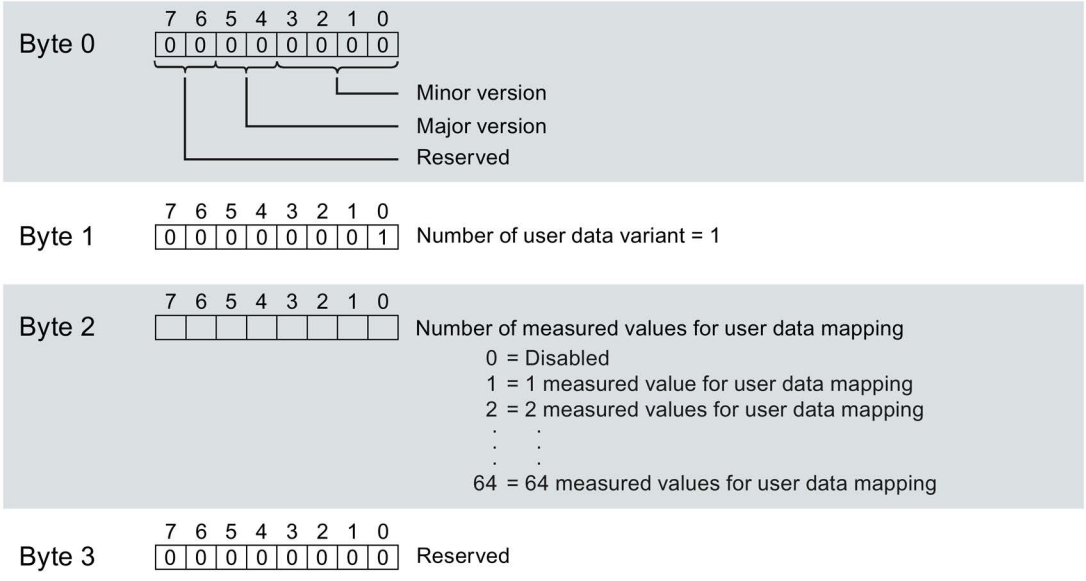

Figure A-11 Header information DS 130

Parameter block for user data mapping

The following diagram shows the structure of the parameter blocks for user data mapping.

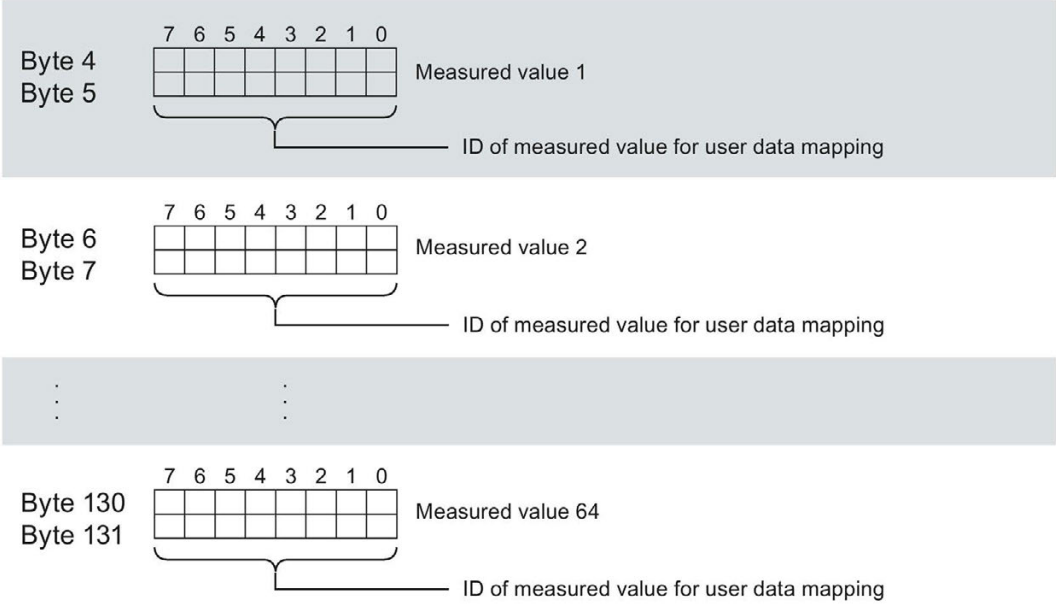

Figure A-12 Parameter block for user data mapping

Error while transferring the data record

The module always checks all the values of the transferred data record. Only if all the values were transferred without errors does the module apply the values from the data record.

The WRREC instruction for writing data records returns corresponding error codes when errors occur in the STATUS parameter.

The following table shows the module-specific error codes and their meaning for the parameter data record 130.

Error code in STATUS parameter (hexadecimal)				Meaning	Solution
Byte 0	Byte 1	Byte 2	Byte 3		
DF	80	B0	00	Number of the data record unknown	Enter a valid number for the data record.
DF	80	B1	00	Length of the data record incorrect	Enter a valid value for the data record length.
DF	80	B2	00	Slot invalid or cannot be accessed.	Check the station whether the module is plugged or drawn. Check the assigned values for the parameters of the WRREC instruction
DF	80	E0	01	Incorrect version	Check Byte 0. Enter valid values.
DF	80	E0	02	Error in the header information	Check Bytes 1 and 2. Correct the length and number of the parameter blocks.

Error code in STATUS parameter (hexadecimal)				Meaning	Solution
Byte 0	Byte 1	Byte 2	Byte 3		
DF	80	E1	01	Reserved bits are not 0.	Check Byte 10, 11, 14, 22, 30...34, 42, 50...54, 70...74 and set the reserved bits back to 0.
DF	80	E1	21	Parameter for user data variant in DS 128 not possible or input data configuration not large enough.	Check Byte 9. Select a different user data variant in DS 128 or change the configuration.
DF	80	E1	30	Invalid data record number.	Check the data record number. Enter a valid data record number.
DF	80	E1	31	Parameter for length of the parameter block invalid.	Check Byte 1. Length = 10 bytes
DF	80	E1	32	Parameters for number of parameter blocks invalid.	Check Byte 2. Enter valid values.
DF	80	E1	33	Parameter for measured value ID invalid.	Check Bytes 4 and 5. Enter valid values.
DF	80	E1	3B	Parameter for user data variant impermissible.	Check Byte 1. Number for user-specific user data variant has to be 01_H.

Measured variables for user data mapping

The table below shows which measured variables are available for user data mapping.

Measured value ID	Measured variables	Use for user data mapping
1	Voltage UL1-N	Yes
2	Voltage UL2-N	Yes
3	Voltage UL3-N	Yes
4	Voltage UL1- L2	Yes
5	Voltage UL2- L3	Yes
6	Voltage UL3- L1	Yes
7	Current L1	Yes
8	Current L2	Yes
9	Current L3	Yes
10	Apparent power L1	Yes
11	Apparent power L2	Yes
12	Apparent power L3	Yes
13	Active power L1	Yes
14	Active power L2	Yes
15	Active power L3	Yes
16	Reactive power L1	Yes
17	Reactive power L2	Yes
18	Reactive power L3	Yes
19	Power factor L1	Yes
20	Power factor L2	Yes
21	Power factor L3	Yes
30	Frequency	Yes

Measured value ID	Measured variables	Use for user data mapping
34	Total active power L1L2L3	Yes
35	Total reactive power L1L2L3	Yes
36	Total apparent power L1L2L3	Yes
37	Total power factor L1L2L3	Yes
38	Amplitude unbalance for voltage	Yes
39	Amplitude unbalance for current	Yes
40	Max. voltage UL1-N	Yes
41	Max. voltage UL2-N	Yes
42	Max. voltage UL3-N	Yes
43	Max. voltage UL1- L2	Yes
44	Max. voltage UL2- L3	Yes
45	Max. voltage UL3- L1	Yes
46	Max. current L1	Yes
47	Max. current L2	Yes
48	Max. current L3	Yes
49	Max. apparent power L1	Yes
50	Max. apparent power L2	Yes
51	Max. apparent power L3	Yes
52	Max. active power L1	Yes
53	Max. active power L2	Yes
54	Max. active power L3	Yes
55	Max. reactive power L1	Yes
56	Max. reactive power L2	Yes
57	Max. reactive power L3	Yes
58	Max. power factor L1	Yes
59	Max. power factor L2	Yes
60	Max. power factor L3	Yes
61	Max. frequency	Yes
65	Max. total active power	Yes
66	Max. total reactive power	Yes
67	Max. total apparent power	Yes
68	Max. total power factor	Yes
70	Min. voltage UL1-N	Yes
71	Min. voltage UL2-N	Yes
72	Min. voltage UL3-N	Yes
73	Min. voltage UL1- L2	Yes
74	Min. voltage UL2- L3	Yes
75	Min. voltage UL3- L1	Yes
76	Min. current L1	Yes
77	Min. current L2	Yes
78	Min. current L3	Yes
79	Min. apparent power L1	Yes
80	Min. apparent power L2	Yes
81	Min. apparent power L3	Yes
82	Min. active power L1	Yes
83	Min. active power L2	Yes

Measured value ID	Measured variables	Use for user data mapping
84	Min. active power L3	Yes
85	Min. reactive power L1	Yes
86	Min. reactive power L2	Yes
87	Min. reactive power L3	Yes
88	Min. power factor L1	Yes
89	Min. power factor L2	Yes
90	Min. power factor L3	Yes
91	Min. frequency	Yes
95	Min. total active power	Yes
96	Min. total reactive power	Yes
97	Min. total apparent power	Yes
98	Min. total power factor	Yes
200	Total active energy inflow L1L2L3	Yes
201	Total active energy outflow L1L2L3	Yes
202	Total reactive energy inflow L1L2L3	Yes
203	Total reactive energy outflow L1L2L3	Yes
204	Total apparent energy L1L2L3	Yes
205	Total active energy L1L2L3	Yes
206	Total reactive energy L1L2L3	Yes
210	Total active energy inflow L1L2L3	Yes
211	Total active energy outflow L1L2L3	Yes
212	Total reactive energy inflow L1L2L3	Yes
213	Total reactive energy outflow L1L2L3	Yes
214	Total apparent energy L1L2L3	Yes
215	Total active energy L1L2L3	Yes
216	Total reactive energy L1L2L3	Yes
61140	Overflow counter active energy inflow L1L2L3	Yes
61141	Overflow counter active energy outflow L1L2L3	Yes
61142	Overflow counter reactive energy inflow L1L2L3	Yes
61143	Overflow counter reactive energy outflow L1L2L3	Yes
61144	Overflow counter apparent energy L1L2L3	Yes
61149	Neutral current	Yes
61178	Phase angle L1	Yes
61180	Active energy inflow L1	Yes
61181	Active energy outflow L1	Yes
61182	Reactive energy inflow L1	Yes
61183	Reactive energy outflow L1	Yes
61184	Apparent energy L1	Yes
61185	Active energy L1	Yes
61186	Reactive energy L1	Yes
61190	Overflow counter active energy inflow L1	Yes
61191	Overflow counter active energy outflow L1	Yes
61192	Overflow counter reactive energy inflow L1	Yes
61193	Overflow counter reactive energy outflow L1	Yes
61194	Overflow counter apparent energy L1	Yes
61198	Phase angle L2	Yes
61200	Active energy inflow L2	Yes
61201	Active energy outflow L2	Yes
61202	Reactive energy inflow L2	Yes
61203	Reactive energy outflow L2	Yes
61204	Apparent energy L2	Yes

Measured value ID	Measured variables	Use for user data mapping
61205	Active energy L2	Yes
61206	Reactive energy L2	Yes
61210	Overflow counter active energy inflow L2	Yes
61211	Overflow counter active energy outflow L2	Yes
61212	Overflow counter reactive energy inflow L2	Yes
61213	Overflow counter reactive energy outflow L2	Yes
61214	Overflow counter apparent energy L2	Yes
61218	Phase angle L3	Yes
61220	Active energy inflow L3	Yes
61221	Active energy outflow L3	Yes
61222	Reactive energy inflow L3	Yes
61223	Reactive energy outflow L3	Yes
61224	Apparent energy L3	Yes
61225	Active energy L3	Yes
61226	Reactive energy L3	Yes
61230	Overflow counter active energy inflow L3	Yes
61231	Overflow counter active energy outflow L3	Yes
61232	Overflow counter reactive energy inflow L3	Yes
61233	Overflow counter reactive energy outflow L3	Yes
61234	Overflow counter apparent energy L3	Yes
65500	Qualifier L1	Yes
65501	Qualifier L2	Yes
65502	Qualifier L3	Yes
65503	Qualifier L1L2L3	Yes
65504	Total operating hours counter L1L2L3	Yes
65505	Operating hours counter L1	Yes
65506	Operating hours counter L2	Yes
65507	Operating hours counter L3	Yes
65510	Counter limit violation GW1	Yes
65511	Counter limit violation GW2	Yes
65512	Counter limit violation GW3	Yes
65513	Counter limit violation GW4	Yes
65514	Counter limit violation GW5	Yes
65515	Counter limit violation GW6	Yes
65516	Counter limit violation GW7	Yes
65517	Counter limit violation GW8	Yes
65518	Counter limit violation GW9	Yes
65519	Counter limit violation GW10	Yes
65520	Counter limit violation GW11	Yes
65521	Counter limit violation GW12	Yes
65522	Counter limit violation GW13	Yes
65523	Counter limit violation GW14	Yes
65524	Counter limit violation GW15	Yes
65525	Counter limit violation GW16	Yes

Measured variables

B

Measured variables for data records and user data

The following table provides an overview of all measured variables that are used in the data records and user data.

Note that the format and unit differ in the evaluation of records and user data.

Table B- 1 Measured variables for data records and user data

Measured value ID	Measured variables	Data type	Unit	Value range	Connection type				
					1P2W	3x1P2W	2P3W	3P4W	3P4W1
1	Voltage UL1-N [1]	REAL	V	0.0 ... 1000000.0	✓	✓	✓	✓	✓
2	Voltage UL2-N [1]	REAL	V	0.0 ... 1000000.0		✓	✓	✓	✓
3	Voltage UL3-N [1]	REAL	V	0.0 ... 1000000.0		✓		✓	✓
4	Voltage UL1-L2 [2]	REAL	V	0.0 ... 1000000.0				✓	✓
5	Voltage UL2-L3 [2]	REAL	V	0.0 ... 1000000.0				✓	✓
6	Voltage UL3-L1 [2]	REAL	V	0.0 ... 1000000.0				✓	✓
7	Current L1 [1]	REAL	A	0.0 … 100000.0	✓	✓	✓	✓	✓
8	Current L2 [1]	REAL	A	0.0 … 100000.0		✓	✓	✓	✓
9	Current L3 [1]	REAL	A	0.0 … 100000.0		✓		✓	✓
10	Apparent power L1 [3]	REAL	VA	-3.0×10^9 … $+3.0 \times 10^9$	✓	✓	✓	✓	✓
11	Apparent power L2 [3]	REAL	VA	-3.0×10^9 … $+3.0 \times 10^9$		✓	✓	✓	✓
12	Apparent power L3 [3]	REAL	VA	-3.0×10^9 … $+3.0 \times 10^9$		✓		✓	✓
13	Active power L1 [3]	REAL	W	-3.0×10^9 … $+3.0 \times 10^9$	✓	✓	✓	✓	✓
14	Active power L2 [3]	REAL	W	-3.0×10^9 … $+3.0 \times 10^9$		✓			
15	Active power L3 [3]	REAL	W	-3.0×10^9 … $+3.0 \times 10^9$		✓		✓	✓
16	Reactive power L1 [3 10]	REAL	var	-3.0×10^9 … $+3.0 \times 10^9$	✓	✓	✓	✓	✓
17	Reactive power L2 [3 10]	REAL	var	-3.0×10^9 … $+3.0 \times 10^9$		✓	✓	✓	✓
18	Reactive power L3 [3 10]	REAL	var	-3.0×10^9 … $+3.0 \times 10^9$		✓		✓	✓
19	Power factor L1 [3]	REAL	-	0.0 ... 1.0	✓	✓	✓	✓	✓
20	Power factor L2 [3]	REAL	-	0.0 ... 1.0		✓	✓	✓	✓

Measured value ID	Measured variables	Data type	Unit	Value range	Connection type				
					1P2W	3x1P2W	2P3W	3P4W	3P4W1
21	Power factor L3 [3]	REAL	-	0.0 ... 1.0		✓		✓	✓
30	Frequency [4]	REAL	Hz	45.0 ... 65.0	✓	✓	✓	✓	✓
34	Total active power L1L2L3 [5]	REAL	W	-3.0×10^9 … $+3.0 \times 10^9$	✓	✓	✓	✓	✓
35	Total reactive power L1L2L3 [5] [11]	REAL	var	-3.0×10^9 … $+3.0 \times 10^9$	✓	✓	✓	✓	✓
36	Total apparent power L1L2L3 [5]	REAL	VA	-3.0×10^9 … $+3.0 \times 10^9$	✓	✓	✓	✓	✓
37	Total power factor L1L2L3 [6] [7]	REAL	-	0.0 ... 1.0	✓	✓	✓	✓	✓
38	Amplitude balance for voltage [2]	REAL	%	0 ... 100				✓	✓
39	Amplitude symmetry for current [2]	REAL	%	0 ... 200				✓	✓
40	Max. voltage UL1-N [6]	REAL	V	0.0 ... 1000000.0	✓	✓	✓	✓	✓
41	Max. voltage UL2-N [6]	REAL	V	0.0 ... 1000000.0		✓	✓	✓	✓
42	Max. voltage UL3-N [6]	REAL	V	0.0 ... 1000000.0		✓		✓	✓
43	Max. voltage UL1-UL2 [6]	REAL	V	0.0 ... 1000000.0				✓	✓
44	Max. voltage UL2-UL3 [6]	REAL	V	0.0 ... 1000000.0				✓	✓
45	Max. voltage UL3-UL1 [6]	REAL	V	0.0 ... 1000000.0				✓	✓
46	Max. current L1 [6]	REAL	A	0.0 ... 100000.0	✓	✓	✓	✓	✓
47	Max. current L2 [6]	REAL	A	0.0 ... 100000.0		✓	✓	✓	✓
48	Max. current L3 [6]	REAL	A	0.0 ... 100000.0		✓		✓	✓
49	Max. apparent power L1 [6]	REAL	VA	-3.0×10^9 … $+3.0 \times 10^9$	✓	✓	✓	✓	✓
50	Max. apparent power L2 [6]	REAL	VA	-3.0×10^9 … $+3.0 \times 10^9$		✓	✓	✓	✓
51	Max. apparent power L3 [6]	REAL	VA	-3.0×10^9 … $+3.0 \times 10^9$		✓		✓	✓
52	Max. active power L1 [6]	REAL	W	-3.0×10^9 … $+3.0 \times 10^9$	✓	✓	✓	✓	✓
53	Max. active power L2 [6]	REAL	W	-3.0×10^9 … $+3.0 \times 10^9$		✓	✓	✓	✓
54	Max. active power L3 [6]	REAL	W	-3.0×10^9 … $+3.0 \times 10^9$		✓		✓	✓
55	Max. reactive power L1 [6]	REAL	var	-3.0×10^9 … $+3.0 \times 10^9$	✓	✓	✓	✓	✓
56	Max. reactive power L2 [6]	REAL	var	-3.0×10^9 … $+3.0 \times 10^9$		✓	✓	✓	✓
57	Max. reactive power L3 [6]	REAL	var	-3.0×10^9 … $+3.0 \times 10^9$		✓		✓	✓
58	Max. power factor L1 [6]	REAL	-	0.0 ... 1.0	✓	✓	✓	✓	✓
59	Max. power factor L2 [6]	REAL	-	0.0 ... 1.0		✓	✓	✓	✓

Measured value ID	Measured variables	Data type	Unit	Value range	Connection type				
					1P2W	3x1P2W	2P3W	3P4W	3P4W1
60	Max. power factor L3 [6]	REAL	-	0.0 ... 1.0		✓		✓	✓
61	Max. frequency [6]	REAL	Hz	45.0 ... 65.0	✓	✓	✓	✓	✓
65	Max. sum of active power [6]	REAL	W	-3.0×10^9 … $+3.0 \times 10^9$	✓	✓	✓	✓	✓
66	Max. sum of reactive power [6]	REAL	var	-3.0×10^9 … $+3.0 \times 10^9$	✓	✓	✓	✓	✓
67	Max. sum of apparent power [6]	REAL	VA	-3.0×10^9 … $+3.0 \times 10^9$	✓	✓	✓	✓	✓
68	Max. total power factor [6]	REAL	-	0.0 ... 1.0	✓	✓	✓	✓	✓
70	Min. voltage UL1-N [6]	REAL	V	0.0 ... 1000000.0	✓	✓	✓	✓	✓
71	Min. voltage UL2-N [6]	REAL	V	0.0 ... 1000000.0		✓	✓	✓	✓
72	Min. voltage UL3-N [6]	REAL	V	0.0 ... 1000000.0		✓		✓	✓
73	Min. voltage UL1-UL2 [6]	REAL	V	0.0 ... 1000000.0				✓	✓
74	Min. voltage UL2-UL3 [6]	REAL	V	0.0 ... 1000000.0				✓	✓
75	Min. voltage UL3-UL1 [6]	REAL	V	0.0 ... 1000000.0				✓	✓
76	Min. current L1 [6]	REAL	A	0.0 ... 100000.0	✓	✓	✓	✓	✓
77	Min. current L2 [6]	REAL	A	0.0 ... 100000.0		✓	✓	✓	✓
78	Min. current L3 [6]	REAL	A	0.0 ... 100000.0		✓		✓	✓
79	Min. apparent power L1 [6]	REAL	VA	-3.0×10^9 … $+3.0 \times 10^9$	✓	✓	✓	✓	✓
80	Min. apparent power L2 [6]	REAL	VA	-3.0×10^9 … $+3.0 \times 10^9$		✓	✓	✓	✓
81	Min. apparent power L3 [6]	REAL	VA	-3.0×10^9 … $+3.0 \times 10^9$		✓		✓	✓
82	Min. active power L1 [6]	REAL	W	-3.0×10^9 … $+3.0 \times 10^9$	✓	✓	✓	✓	✓
83	Min. active power L2 [6]	REAL	W	-3.0×10^9 … $+3.0 \times 10^9$		✓	✓	✓	✓
84	Min. active power L3 [6]	REAL	W	-3.0×10^9 … $+3.0 \times 10^9$		✓		✓	✓
85	Min. reactive power L1 [6]	REAL	var	-3.0×10^9 … $+3.0 \times 10^9$	✓	✓	✓	✓	✓
86	Min. reactive power L2 [6]	REAL	var	-3.0×10^9 … $+3.0 \times 10^9$		✓	✓	✓	✓
87	Min. reactive power L3 [6]	REAL	var	-3.0×10^9 … $+3.0 \times 10^9$		✓		✓	✓
88	Min. power factor L1 [6]	REAL	-	0.0 ... 1.0	✓	✓	✓	✓	✓
89	Min. power factor L2 [6]	REAL	-	0.0 ... 1.0		✓	✓	✓	✓
90	Min. power factor L3 [6]	REAL	-	0.0 ... 1.0		✓		✓	✓
91	Min. frequency [6]	REAL	Hz	45.0 ... 65.0	✓	✓	✓	✓	✓
95	Min. sum of active power [6]	REAL	W	-3.0×10^9 … $+3.0 \times 10^9$	✓	✓	✓	✓	✓

Measured value ID	Measured variables	Data type	Unit	Value range	Connection type				
					1P2W	3x1P2W	2P3W	3P4W	3P4W1
96	Min. sum of reactive power [6]	REAL	var	-3.0×10^9 … $+3.0 \times 10^9$	✓	✓	✓	✓	✓
97	Min. sum of apparent power [6]	REAL	VA	-3.0×10^9 … $+3.0 \times 10^9$	✓	✓	✓	✓	✓
98	Min. total power factor [6]	REAL	-	0.0 ... 1.0	✓	✓	✓	✓	✓
200	Total active energy inflow L1L2L3 [6]	REAL	Wh	0.0 ... 3.4×10^{38}	✓	✓	✓	✓	✓
201	Total active energy outflow L1L2L3 [6]	REAL	Wh	0.0 ... 3.4×10^{38}	✓	✓	✓	✓	✓
202	Total reactive energy inflow L1L2L3 [6]	REAL	varh	0.0 ... 3.4×10^{38}	✓	✓	✓	✓	✓
203	Total reactive energy outflow L1L2L3 [6]	REAL	varh	0.0 ... 3.4×10^{38}	✓	✓	✓	✓	✓
204	Total apparent energy L1L2L3 [6]	REAL	VAh	0.0 ... 3.4×10^{38}	✓	✓	✓	✓	✓
205	Total active energy L1L2L3 [6]	REAL	Wh	-3.4×10^{38} ... $+3.4 \times 10^{38}$	✓	✓	✓	✓	✓
206	Total reactive energy L1L2L3 [6]	REAL	varh	-3.4×10^{38} ... $+3.4 \times 10^{38}$	✓	✓	✓	✓	✓
210	Total active energy inflow L1L2L3 [6]	LREAL	Wh	0.0 ... 1.8×10^{308}	✓	✓	✓	✓	✓
211	Total active energy outflow L1L2L3 [6]	LREAL	Wh	0.0 ... 1.8×10^{308}	✓	✓	✓	✓	✓
212	Total reactive energy inflow L1L2L3 [6]	LREAL	varh	0.0 ... 1.8×10^{308}	✓	✓	✓	✓	✓
213	Total reactive energy outflow L1L2L3 [6]	LREAL	varh	0.0 ... 1.8×10^{308}	✓	✓	✓	✓	✓
214	Total apparent energy L1L2L3 [6]	LREAL	VAh	0.0 ... 1.8×10^{308}	✓	✓	✓	✓	✓
215	Total active energy L1L2L3 [6]	LREAL	Wh	-1.8×10^{308} ... $+1.8 \times 10^{308}$	✓	✓	✓	✓	✓
216	Total reactive energy L1L2L3 [6]	LREAL	varh	-1.8×10^{308} ... $+1.8 \times 10^{308}$	✓	✓	✓	✓	✓
220	Total active energy inflow L1L2L3 [6]	UDINT	Wh	0 ... 2147483647	✓	✓	✓	✓	✓
221	Total active energy outflow L1L2L3 [6]	UDINT	varh	0 ... 2147483647	✓	✓	✓	✓	✓
222	Total reactive energy inflow L1L2L3 [6]	UDINT	varh	0 ... 2147483647	✓	✓	✓	✓	✓
223	Total reactive energy outflow L1L2L3 [6]	UDINT	VAh	0 ... 2147483647	✓	✓	✓	✓	✓
224	Total apparent energy L1L2L3 [6]	UDINT	Wh	0 ... 2147483647	✓	✓	✓	✓	✓
225	Total active energy L1L2L3 [6]	DINT	Wh	-2147483647 ... +2147483647	✓	✓	✓	✓	✓

Measured value ID	Measured variables	Data type	Unit	Value range	Connection type				
					1P2W	3x1P2W	2P3W	3P4W	3P4W1
226	Total reactive energy L1L2L3 [6]	DINT	varh	-2147483647 ... +2147483647	✓	✓	✓	✓	✓
61140	Overflow counter active energy inflow L1L2L3	uint16	-	0 ... 65535	✓	✓	✓	✓	✓
61141	Overflow counter active energy outflow L1L2L3	uint16	-	0 ... 65535	✓	✓	✓	✓	✓
61142	Overflow counter reactive energy inflow L1L2L3	uint16	-	0 ... 65535	✓	✓	✓	✓	✓
61143	Overflow counter reactive energy outflow L1L2L3	uint16	-	0 ... 65535	✓	✓	✓	✓	✓
61144	Overflow counter apparent energy L1L2L3	uint16	-	0 ... 65535	✓	✓	✓	✓	✓
61149	Neutral current [1]	REAL	A	0.0 ... 100000.0				✓	
61178	Phase angle L1 [3]	REAL	°	0.0 ... 360.0	✓	✓	✓	✓	✓
61180	Active energy inflow L1 [6]	LREAL	Wh	0.0 ... 1.8 x 10^{308}	✓	✓	✓	✓	✓
61181	Active energy outflow L1 [6]	LREAL	Wh	0.0 ... 1.8 x 10^{308}	✓	✓	✓	✓	✓
61182	Reactive energy inflow L1 [6]	LREAL	varh	0.0 ... 1.8 x 10^{308}	✓	✓	✓	✓	✓
61183	Reactive energy outflow L1 [6]	LREAL	varh	0.0 ... 1.8 x 10^{308}	✓	✓	✓	✓	✓
61184	Apparent energy L1 [6]	LREAL	VAh	0.0 ... 1.8 x 10^{308}	✓	✓	✓	✓	✓
61185	Active energy L1 [6]	LREAL	Wh	-1.8 x 10^{308} ... +1.8 x 10^{308}	✓	✓	✓	✓	✓
61186	Reactive energy L1 [6]	LREAL	varh	-1.8 x 10^{308} ... +1.8 x 10^{308}	✓	✓	✓	✓	✓
61190	Overflow counter active energy inflow L1 [6]	UINT	-	0 ... 65535	✓	✓	✓	✓	✓
61191	Overflow counter active energy outflow L1 [6]	UINT	-	0 ... 65535	✓	✓	✓	✓	✓
61192	Overflow counter reactive energy inflow L1 [6]	UINT	-	0 ... 65535	✓	✓	✓	✓	✓
61193	Overflow counter reactive energy outflow L1 [6]	UINT	-	0 ... 65535	✓	✓	✓	✓	✓
61194	Overflow counter apparent energy L1 [6]	UINT	-	0 ... 65535	✓	✓	✓	✓	✓
61198	Phase angle L2 [3]	REAL	°	0.0 ... 360.0		✓	✓	✓	✓
61200	Active energy inflow L2 [6]	LREAL	Wh	0.0 ... 1.8 x 10^{308}		✓	✓	✓	✓

Measured value ID	Measured variables	Data type	Unit	Value range	Connection type				
					1P2W	3x1P2W	2P3W	3P4W	3P4W1
61201	Active energy outflow L2 [6]	LREAL	Wh	0.0 ... 1.8 x 10^{308}		✓	✓	✓	✓
61202	Reactive energy inflow L2 [6]	LREAL	varh	0.0 ... 1.8 x 10^{308}		✓	✓	✓	✓
61203	Reactive energy outflow L2 [6]	LREAL	varh	0.0 ... 1.8 x 10^{308}		✓	✓	✓	✓
61204	Apparent energy L2 [6]	LREAL	VAh	0.0 ... 1.8 x 10^{308}		✓	✓	✓	✓
61205	Active energy L2 [6]	LREAL	Wh	-1.8 x 10^{308} ... +1.8 x 10^{308}		✓	✓	✓	✓
61206	Reactive energy L2 [6]	LREAL	varh	-1.8 x 10^{308} ... +1.8 x 10^{308}		✓	✓	✓	✓
61210	Overflow counter active energy inflow L2 [6]	UINT	-	0 ... 65535		✓	✓	✓	✓
61211	Overflow counter active energy outflow L2 [6]	UINT	-	0 ... 65535		✓	✓	✓	✓
61212	Overflow counter reactive energy inflow L2 [6]	UINT	-	0 ... 65535		✓	✓	✓	✓
61213	Overflow counter reactive energy outflow L2 [6]	UINT	-	0 ... 65535		✓	✓	✓	✓
61214	Overflow counter apparent energy L2 [6]	UINT	-	0 ... 65535		✓	✓	✓	✓
61218	Phase angle L3 [3]	REAL		0.0 ... 360.0		✓		✓	✓
61220	Active energy inflow L3 [6]	LREAL	Wh	0.0 ... 1.8 x 10^{308}		✓		✓	✓
61221	Active energy outflow L3 [6]	LREAL	Wh	0.0 ... 1.8 x 10^{308}		✓		✓	✓
61222	Reactive energy inflow L3 [6]	LREAL	varh	0.0 ... 1.8 x 10^{308}		✓		✓	✓
61223	Reactive energy outflow L3 [6]	LREAL	varh	0.0 ... 1.8 x 10^{308}		✓		✓	✓
61224	Apparent energy L3 [6]	LREAL	VAh	0.0 ... 1.8 x 10^{308}		✓		✓	✓
61225	Active energy L3 [6]	LREAL	Wh	-1.8 x 10^{308} ... +1.8 x 10^{308}		✓		✓	✓
61226	Reactive energy L3 [6]	LREAL	varh	-1.8 x 10^{308} ... +1.8 x 10^{308}		✓		✓	✓
61230	Overflow counter active energy inflow L3 [6]	UINT	-	0 ... 65535		✓		✓	✓
61231	Overflow counter active energy outflow L3 [6]	UINT	-	0 ... 65535		✓		✓	✓
61232	Overflow counter reactive energy inflow L3 [6]	UINT	-	0 ... 65535		✓		✓	✓

Measured value ID	Measured variables	Data type	Unit	Value range	Connection type				
					1P2W	3x1P2W	2P3W	3P4W	3P4W1
61233	Overflow counter reactive energy outflow L3 [6]	UINT	-	0 ... 65535		✓		✓	✓
61234	Overflow counter apparent energy L3 [6]	UINT	-	0 ... 65535		✓		✓	✓
62110	Active energy inflow L1 [6]	DINT	Wh	0 ... 2147483647	✓	✓	✓	✓	✓
62111	Active energy outflow L1 [6]	UDINT	Wh	0 ... 2147483647	✓	✓	✓	✓	✓
62112	Reactive energy inflow L1 [6]	UDINT	Varh	0 ... 2147483647	✓	✓	✓	✓	✓
62113	Reactive energy outflow L1 [6]	UDINT	Varh	0 ... 2147483647	✓	✓	✓	✓	✓
62114	Apparent energy L1 [6]	UDINT	Wh	0 ... 2147483647	✓	✓	✓	✓	✓
62115	Active energy L1 total (inflow - outflow) [6]	DINT	Wh	-2147483647 ... + 2147483647	✓	✓	✓	✓	✓
62116	Reactive energy L1 total (inflow - outflow) [6]	DINT	Varh	-2147483647 ... + 2147483647	✓	✓	✓	✓	✓
62210	Active energy inflow L2 [6]	UDINT	Wh	0 ... 2147483647		✓	✓	✓	✓
62211	Active energy outflow L2 [6]	UDINT	Wh	0 ... 2147483647		✓	✓	✓	✓
62212	Reactive energy inflow L2 [6]	UDINT	Varh	0 ... 2147483647		✓	✓	✓	✓
62213	Reactive energy outflow L2 [6]	UDINT	Varh	0 ... 2147483647		✓	✓	✓	✓
62214	Apparent energy L2 [6]	UDINT	VAh	0 ... 2147483647		✓	✓	✓	✓
62215	Active energy L2 total (inflow - outflow) [6]	DINT	Wh	-2147483647 ... + 2147483647		✓	✓	✓	✓
62216	Reactive energy L2 total (inflow - outflow) [6]	DINT	Varh	-2147483647 ... + 2147483647		✓	✓	✓	✓
62310	Active energy inflow L3 [6]	UDINT	Wh	0 ... 2147483647		✓		✓	✓
62311	Active energy outflow L3 [6]	UDINT	Wh	0 ... 2147483647		✓		✓	✓
62312	Reactive energy inflow L3 [6]	UDINT	Varh	0 ... 2147483647		✓		✓	✓
62313	Reactive energy outflow L3 [6]	UDINT	Varh	0 ... 2147483647		✓		✓	✓
62314	Apparent energy L3 [6]	UDINT	VAh	0 ... 2147483647		✓		✓	✓
62315	Active energy L3 total (inflow - outflow) [6]	DINT	Wh	-2147483647 ... + 2147483647		✓		✓	✓

Measured value ID	Measured variables	Data type	Unit	Value range	Connection type				
					1P2W	3x1P2W	2P3W	3P4W	3P4W1
62316	Reactive energy L3 total (inflow - outflow) [6]	DINT	Varh	-2147483647 ... + 2147483647		✓		✓	✓
65500	Qualifier L1	WORD	Bit field	0b 00 00 00 00 0b qq 00 00 xx	✓	✓	✓	✓	✓
65501	Qualifier L2	WORD	Bit field	0b 00 00 00 00 0b qq 00 xx 00		✓	✓	✓	✓
65502	Qualifier L3	WORD	Bit field	0b 00 00 00 00 0b qq xx 00 00		✓		✓	✓
65503	Qualifier L1L2L3	WORD	Bit field	0b 00 00 00 00 0b qq xx xx xx	✓	✓	✓	✓	✓
65504	Total operating hours counter L1L2L3 [5 8 9]	REAL	h	0.0 ... 3.4 x 10^{38}	✓	✓	✓	✓	✓
65505	Operating hours counter L1 [5]	REAL	h	0.0 ... 3.4 x 10^{38}	✓	✓	✓	✓	✓
65506	Operating hours counter L2 [5]	REAL	h	0.0 ... 3.4 x 10^{38}		✓	✓	✓	✓
65507	Operating hours counter L3 [5]	REAL	h	0.0 ... 3.4 x 10^{38}		✓		✓	✓
65508	Status of energy counter overflows	WORD	Bit field	0x xxxx xxxx	✓	✓	✓	✓	✓
65509	Status of limits	WORD	Bit field	0x xxxx xxxx	✓	✓	✓	✓	✓
65510	Counter limit violation GW1 [5]	UDINT		0 ... 4294967295	✓	✓	✓	✓	✓
65511	Counter limit violation GW2 [5]	UDINT		0 ... 4294967295	✓	✓	✓	✓	✓
65512	Counter limit violation GW3 [5]	UDINT		0 ... 4294967295	✓	✓	✓	✓	✓
65513	Counter limit violation GW4 [5]	UDINT		0 ... 4294967295	✓	✓	✓	✓	✓
65514	Counter limit violation GW5 [5]	UDINT		0 ... 4294967295	✓	✓	✓	✓	✓
65515	Counter limit violation GW6 [5]	UDINT		0 ... 4294967295	✓	✓	✓	✓	✓
65516	Counter limit violation GW7 [5]	UDINT		0 ... 4294967295	✓	✓	✓	✓	✓
65517	Counter limit violation GW8 [5]	UDINT		0 ... 4294967295	✓	✓	✓	✓	✓
65518	Counter limit violation GW9 [5]	UDINT		0 ... 4294967295	✓	✓	✓	✓	✓
65519	Counter limit violation GW10 [5]	UDINT		0 ... 4294967295	✓	✓	✓	✓	✓
65520	Counter limit violation GW11 [5]	UDINT		0 ... 4294967295	✓	✓	✓	✓	✓

Measured value ID	Measured variables	Data type	Unit	Value range	Connection type				
					1P2W	3x1P2W	2P3W	3P4W	3P4W1
65521	Counter limit violation GW12 [5]	UDINT		0 ... 4294967295	✓	✓	✓	✓	✓
65522	Counter limit violation GW13 [5]	UDINT		0 ... 4294967295	✓	✓	✓	✓	✓
65523	Counter limit violation GW14 [5]	UDINT		0 ... 4294967295	✓	✓	✓	✓	✓
65524	Counter limit violation GW15 [5]	UDINT		0 ... 4294967295	✓	✓	✓	✓	✓
65525	Counter limit violation GW16 [5]	UDINT		0 ... 4294967295	✓	✓	✓	✓	✓
66001	Voltage UL1-N [1]	UINT	0.01 V	0 ... 65535	✓	✓	✓	✓	✓
66002	Voltage UL2-N [1]	UINT	0.01 V	0 ... 65535		✓	✓	✓	✓
66003	Voltage UL3-N [1]	UINT	0.01 V	0 ... 65535		✓		✓	✓
66004	Voltage UL1-L2 [2]	UINT	0.01 V	0 ... 65535				✓	✓
66005	Voltage UL2-L3 [2]	UINT	0.01 V	0 ... 65535				✓	✓
66006	Voltage UL3-L1 [2]	UINT	0.01 V	0 ... 65535				✓	✓
66007	Current L1 [1]	UINT	1 mA	0 ... 65535	✓	✓	✓	✓	✓
66008	Current L2 [1]	UINT	1 mA	0 ... 65535		✓	✓	✓	✓
66009	Current L3 [1]	UINT	1 mA	0 ... 65535		✓		✓	✓
66010	Apparent power L1 [3]	INT	1 VA	-27648 ... 27648	✓	✓	✓	✓	✓
66011	Apparent power L2 [3]	INT	1 VA	-27648 ... 27648		✓	✓	✓	✓
66012	Apparent power L3 [3]	INT	1 VA	-27648 ... 27648		✓		✓	✓
66013	Active power L1 [3]	INT	1 W	-27648 ... 27648	✓	✓	✓	✓	✓
66014	Active power L2 [3]	INT	1 W	-27648 ... 27648		✓	✓	✓	✓
66015	Active power L3 [3]	INT	1 W	-27648 ... 27648		✓		✓	✓
66016	Reactive power L1 [3] [10]	INT	1 var	-27648 ... 27648	✓	✓	✓	✓	✓
66017	Reactive power L2 [3] [10]	INT	1 var	-27648 ... 27648		✓	✓	✓	✓

Measured value ID	Measured variables	Data type	Unit	Value range	Connection type				
					1P2W	3x1P2W	2P3W	3P4W	3P4W1
66018	Reactive power L3 [3] [10]	INT	1 var	-27648 ... 27648		✓		✓	✓
66019	Power factor L1 [3]	USINT	0.01	0 ... 100	✓	✓	✓	✓	✓
66020	Power factor L2 [3]	USINT	0.01	0 ... 100		✓	✓	✓	✓
66021	Power factor L3 [3]	USINT	0.01	0 ... 100		✓		✓	✓
66030	Frequency [4]	USINT	1 Hz	45 ... 65	✓	✓	✓	✓	✓
66034	Total active power L1L2L3 [5]	INT	1 W	-27648 ... 27648	✓	✓	✓	✓	✓
66035	Total reactive power L1L2L3 [5] [11]	INT	1 var	-27648 ... 27648	✓	✓	✓	✓	✓
66036	Total apparent power L1L2L3 [5]	INT	1 W	-27648 ... 27648	✓	✓	✓	✓	✓
66037	Total power factor L1L2L3 [6]	USINT	0.01	0 ... 100	✓	✓	✓	✓	✓
66038	Frequency [4]	UINT	0.01 Hz	4500 ... 6500	✓	✓	✓	✓	✓

1 Effective value

2 IEC 61557-12

3 Arithmetical mean value over 200 ms as floating mean

4 Arithmetical mean value over 10 s as floating mean

5 Simple summation

6 Calculation from the start/restart (inflow and outflow values are positive numbers)

7 Determined from ratio of active and apparent power

8 For mapping both states as UINT (high: Energy counter overflow, low limit)

9 Corresponds to the maximum of the phase-specific operating hours counters

10 Measured value includes fundamental and harmonics, arithmetic mean over 200 ms as floating mean

11 Measured value includes fundamental and harmonics, simple summation

Format

Table B- 2 Format and its length in bytes

Format in STEP 7 (TIA Portal)	Format to IEEE	Length in bytes	Comment
BYTE	BYTE	1 byte	Bit field with 8 bit
WORD	WORD	2 bytes	Bit field with 16 bit
USINT	INT8 (unsigned)	1 byte	Fixed-point number 8 bits without sign
INT	INT16 (signed)	2 bytes	Fixed-point number 16 bits with sign
UINT	INT16 (unsigned)	2 bytes	Fixed-point number 16 bits without sign
UDINT	INT32 (unsigned)	4 bytes	Fixed-point number 32 bits without sign
DINT	INT32 (signed)	4 bytes	Fixed-point number, 32 bits with sign
REAL	Float32	4 bytes	Floating-point number 32 bits with sign
LREAL	Float64	8 bytes	Floating-point number 64 bits with sign

Module versions

C

C.1 Module version "2 I / 2 Q"

User data of the module

The module has 2 bytes of input user data and 2 bytes of output user data for status and control information. At this module version measured variables can be read solely via measured value data records (no measured variables can be evaluated via user data).

Structure of input user data

The structure of the input user data is fixed.

Table C- 1 Structure of input user data (2 bytes)

Byte	Validity	Designation	Comment
0	Module	User data variant	Constant = 0x80
1	Module	Quality information	Quality bits to describe the quality of the basic measured values

Allocation of the input user data

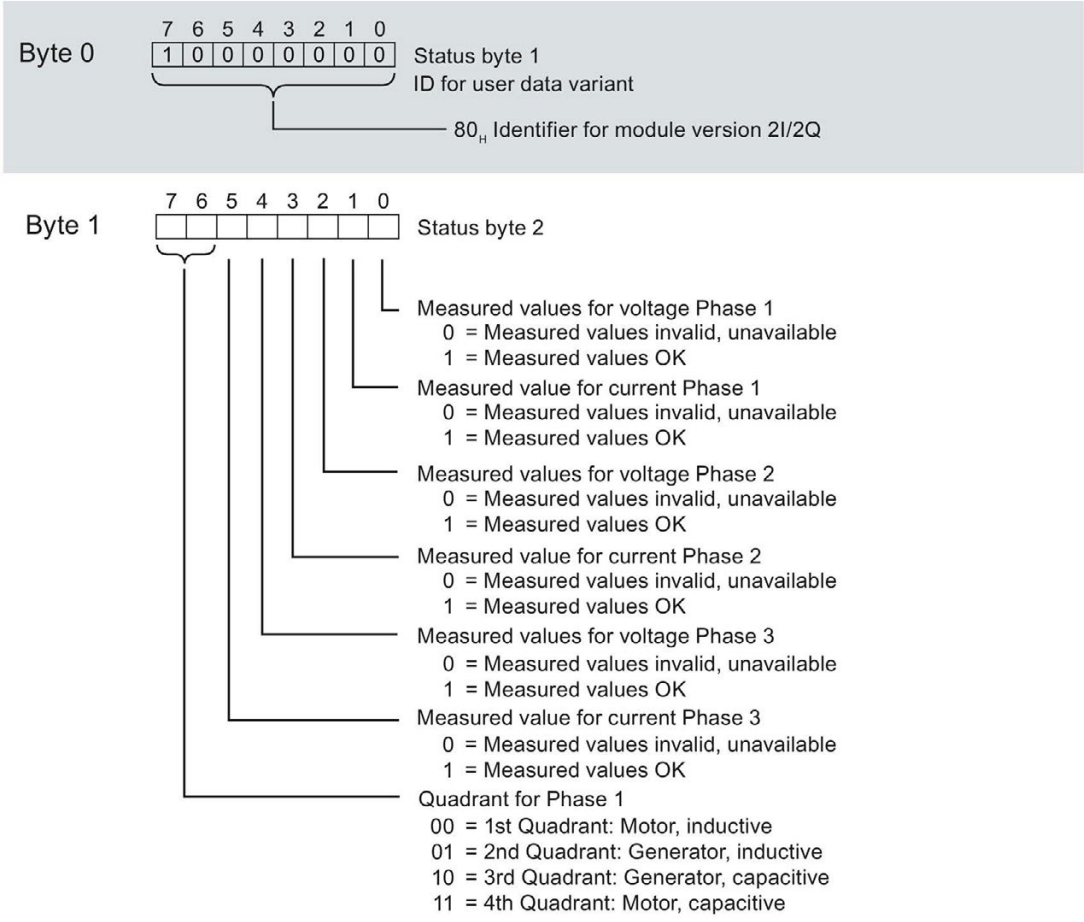

Figure C-1 Allocation of the status bytes in the input user data (2 bytes)

Structure of output user data

The structure of the output user data is fixed.

Table C- 2 Structure of output user data (2 bytes)

Byte	Validity	Designation	Comment
0	Module	Reserved	Reserved
1	Module	Control outputs	Reset of values and counters, gate

Assignment of the output user data

Via the output user data you control for all phases

- Resetting for all minimum values, maximum values, limits, operating hours counter and energy counters.
- The counter gates for operating hours counter and energy counters.

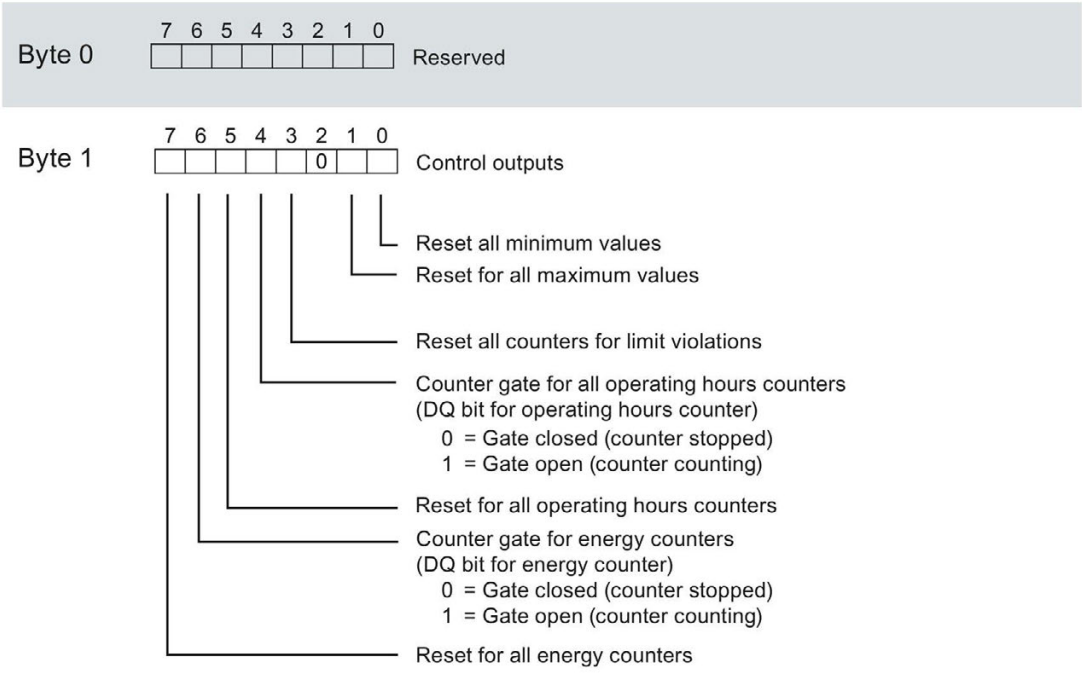

Figure C-2 Allocation of the control byte in the output user data (1 byte)

Note

For module version 2 I / 2 Q, a reset of the selected variables always acts on **all** measured values/counter levels of the three phases.

- Reset energy counter: Acts on all active, reactive and apparent energies of all phases
- Reset operating hours counter: Acts on the counters of Phases 1 to 3
- Reset minimum / maximum values: Acts on the minimum and maximum value calculations of Phases 1-3
- Reset all counters for limit violations: Acts on all 16 limit values.

C.2 Module version "32 I / 12 Q"

User data of the module

The module occupies 32 bytes of input user data and 12 bytes of output user data. Of these the module uses 2 bytes input data for status information and 12 bytes output data for control information. Measured variables can be read cyclically via user data (Bytes 2 to 31) or acyclically via measured value data records

Structure of input user data

You can set the contents of the input user data dynamically. You can choose between different user data variants.

Table C- 3 Structure of input user data (12 bytes)

Byte	Validity	Designation	Comment
0	Module	User data variant	-
1	Module	Quality information	Quality bits to describe the quality of the basic measured values
2 ... 31	Module or phase	Data	2 or 4 bytes of measured values or calculated values according to user data variant

Allocation of the input user data

You can change the measured variables during operation. You can choose between different user data variants.

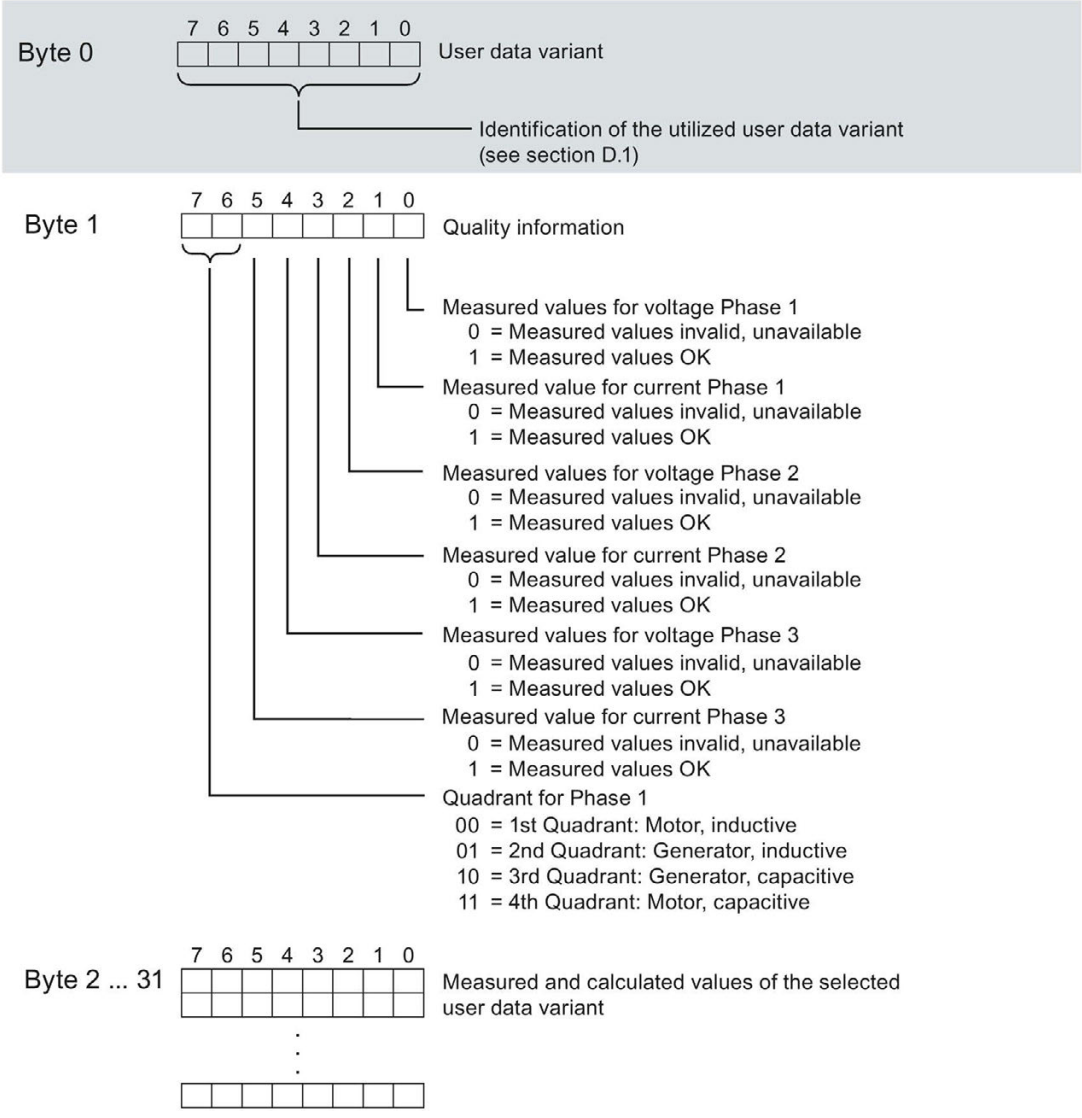

Figure C-3 Assignment of the input user data (32 bytes)

Structure of output user data

The structure of the output user data is fixed and is the same at all the selectable user data variants.

Via the output user data you control globally or phase-specifically

- Resetting for minimum values, maximum values, limits, operating hours counter and energy counters.
- The counter gates for operating hours counter and energy counters.

Table C- 4 Structure of output user data (12 bytes)

Byte	Validity	Designation	Comment
0	Module	User data variant	Control byte for switching the user data variant
1	Module	Control byte 1	Global resetting of values and counters, gate
2	Module	Control byte 2	Selection of the energy counter to be reset
3	Module	Control byte 3	Control of the limit monitoring of limit values 9 to 16
4	Module	Control byte 4	Control of the limit monitoring of limit values 1 to 8
5	Module	Reserved	-
6	Phase L1	Control byte 6	Phase-specific resetting of values and counters, gate for Phase 1
7	Phase L1	Control byte 7	
8	Phase L2	Control byte 8	Phase-specific resetting of values and counters, gate for Phase 2
9	Phase L2	Control byte 9	
10	Phase L3	Control byte 10	Phase-specific resetting of values and counters, gate for Phase 3
11	Phase L3	Control byte 11	

Control bytes for user data variant

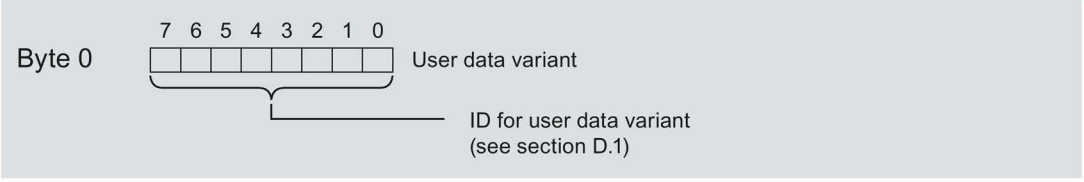

Figure C-4 Allocation of the control bytes for user data variant (Byte 0)

Control bytes for all three phases

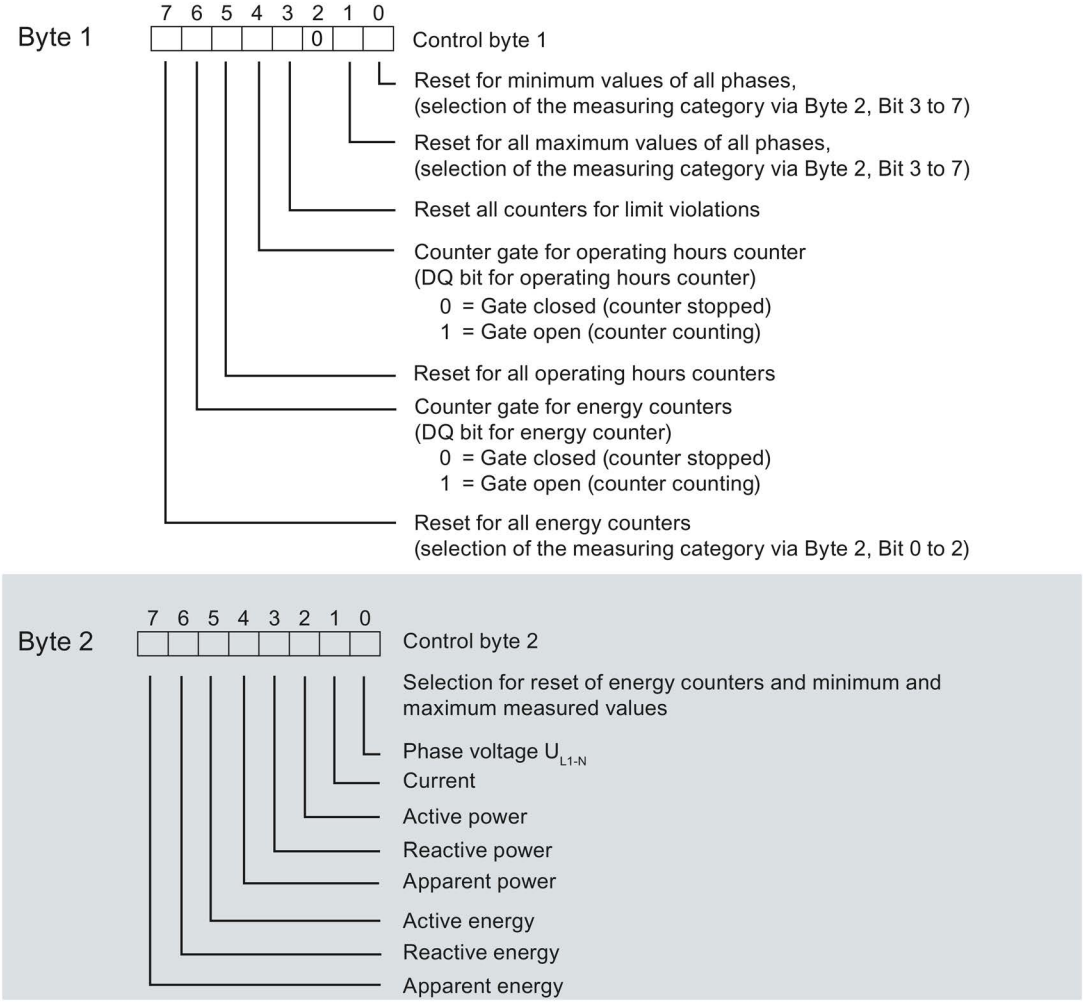

Figure C-5 Allocation of the control bytes for all three phases (bytes 1 and 2)

Control bytes for limit monitoring

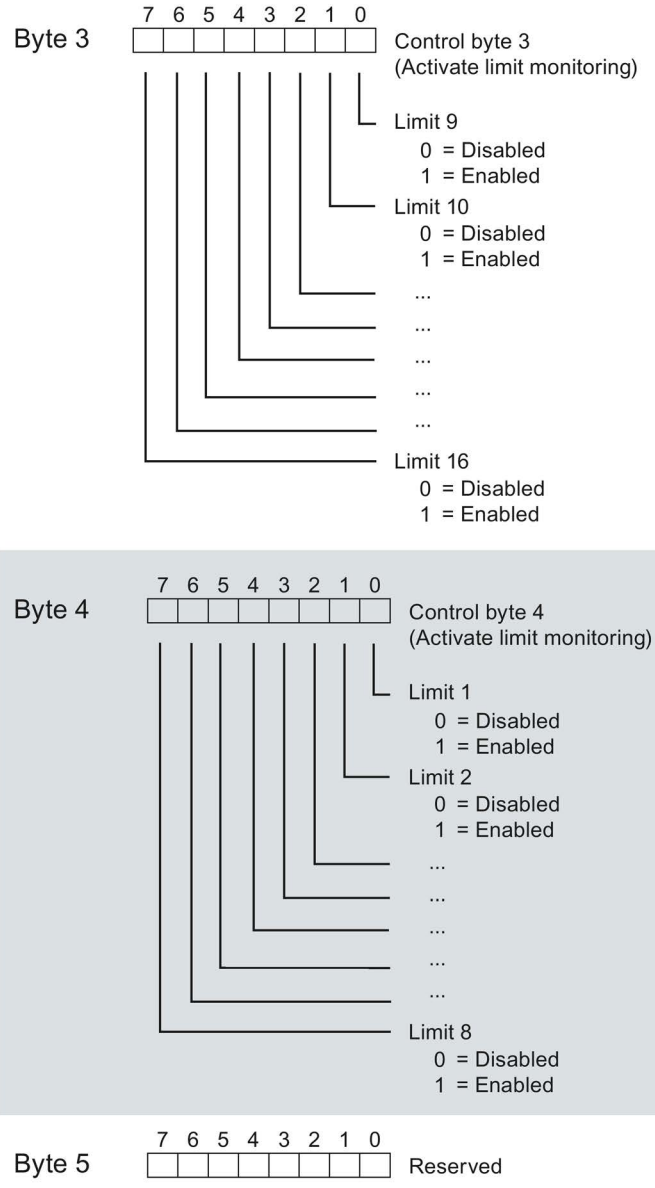

Figure C-6 Allocation of the control bytes for limit monitoring (bytes 3 to 5)

Control bytes for each individual phase

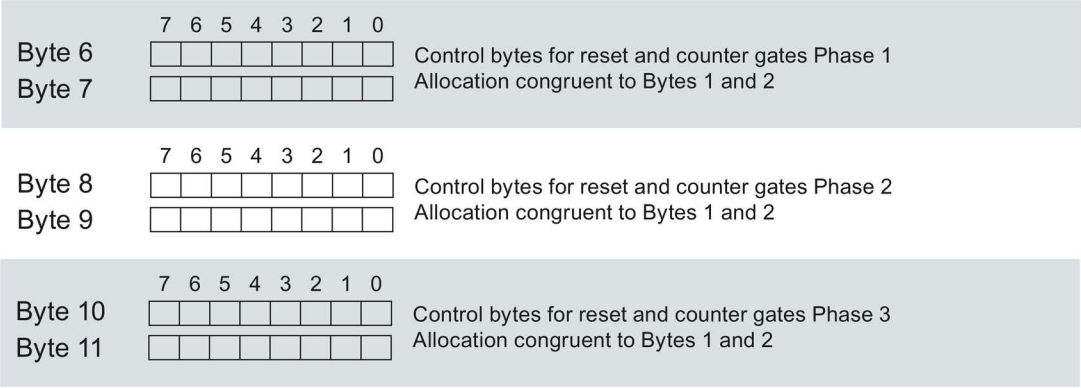

Figure C-7 Allocation of the control bytes for each individual phase (bytes 6 to 11)

C.3 "User-specific" module version

User data of the module

The module occupies between 16 and 256 bytes of input user data and 12 bytes of output user data. Of these the module uses 2 bytes input data for status information and 12 bytes output data for control information. Measured variables can be read cyclically via user data (as of Byte 2) or acyclically via measured value data records

Structure of input user data

You configure the structure of the input user data starting at Byte 2 at this module version itself. An input user data length of 32 bytes also allows you to set the input user data dynamically. You can choose between different user data variants.

Table C- 5 Structure of input user data (16 to 256 bytes)

Byte	Validity	Designation	Comment
0	Module	User data variant	-
1	Module	Quality information	Quality bits to describe the quality of the basic measured values
2 ... 255	Module or phase	Data	Measured values or calculated values in accordance with their configuration: • At configuration in STEP 7 the size of the input user data is calculated automatically. • At configuration via the GSD file the size of the input user data amounts to 32, 64, 128 or 256 bytes. The memory area has to be sufficiently large for the measured variables defined in parameter data record 130.

Allocation of the input user data

You can change the measured variables during operation. You can choose between different user data variants.

The allocation of the status information in Byte 0 and 1 corresponds to the module version 32 I / 12 Q, see appendix Module version "32 I / 12 Q" (Page 145).

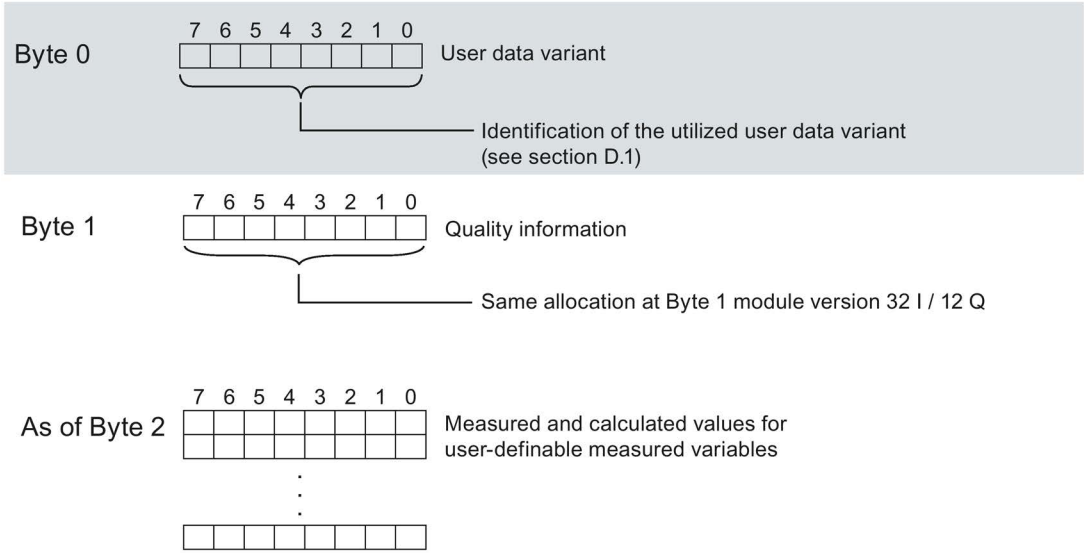

Figure C-8 Allocation of the input user data ("User-specific" module version"

Note

Behavior at switchover in case of the input user data being too small

If the configured size of the variable input user data is smaller than the sized of the fixed user data variant, the response depends on the type of switchover:

- Re-configuration via parameter data record 128 / 130: Output of a parameter assignment error (33). No switchover.
- Switchover using output byte 0 of a user data variant: No switchover and no error message.

Structure of output user data

The structure of the 12 output user data is fixed and is identical to the output user data (control bytes) of the Module version "32 I / 12 Q" (Page 145).

C.4 Module version "EE@Industry measurement data profile E0 / E1 / E2 / E3"

User data of the module

The four versions according to EE@Industry use between 4 and 104 bytes of input user data and 12 bytes of output user data. A dynamic switchover of the input user data is not possible.

Structure of input user data

The structure of the input user data for the module versions according to the EE@Industry standard is fixed and depends on the selected measurement data profile.

Table C- 6 Measurement data profile E0

Byte	Allocation	Data type	Unit	Value range	Measured value ID
0...3	Current L1	REAL	1 A	0.0 … 100000.0	7
4...7	Current L2	REAL	1 A	0.0 … 100000.0	8
8...11	Current L3	REAL	1 A	0.0 … 100000.0	9

Table C- 7 Measurement data profile E1

Byte	Allocation	Data type	Unit	Value range	Measured value ID
0...3	Total active power L1L2L3	REAL	1 W	-3.0×10^9 ... $+3.0 \times 10^9$	34

Table C- 8 Measurement data profile E2

Byte	Allocation	Data type	Unit	Value range	Measured value ID
0...3	Total active power L1L2L3	REAL	1 W	-3.0×10^9 ... $+3.0 \times 10^9$	35
4...7	Total active energy L1L2L3 inflow	REAL	1 Wh	0 ... 1.8×10^{38}	200
8...11	Total active energy L1L2L3 outflow	REAL	1 Wh	0 ... 1.8×10^{38}	201

Table C- 9 Measurement data profile E3

Byte	Allocation	Data type	Unit	Value range	Measured value ID
0...3	Active power L1	REAL	1 W	-3.0×10^9 ... $+3.0 \times 10^9$	13
4...7	Active power L2	REAL	1 W	-3.0×10^9 ... $+3.0 \times 10^9$	14
8...11	Active power L3	REAL	1 W	-3.0×10^9 ... $+3.0 \times 10^9$	15
12...15	Reactive power L1	REAL	1 var	-3.0×10^9 ... $+3.0 \times 10^9$	16
16...19	Reactive power L2	REAL	1 var	-3.0×10^9 ... $+3.0 \times 10^9$	17
20...23	Reactive power L3	REAL	1 var	-3.0×10^9 ... $+3.0 \times 10^9$	18
24...31	Total active energy L1L2L3 inflow	LREAL	1 Wh	0 ... 1.8×10^{308}	210
32...39	Total active energy L1L2L3 outflow	LREAL	1 Wh	0 ... 1.8×10^{308}	211
40...47	Total reactive energy L1L2L3 inflow	LREAL	1 varh	0 ... 1.8×10^{308}	212
48...55	Total reactive energy L1L2L3 outflow	LREAL	1 varh	0 ... 1.8×10^{308}	213
56...59	Voltage UL1-N	REAL	1 V	0.0 … 1000000.0	1
60...63	Voltage UL2-N	REAL	1 V	0.0 … 1000000.0	2
64...67	Voltage UL3-N	REAL	1 V	0.0 … 1000000.0	3
68...71	Voltage UL1-UL2	REAL	1 V	0.0 … 1000000.0	4
72...75	Voltage UL2-UL3	REAL	1 V	0.0 … 1000000.0	5
76...79	Voltage UL3-UL1	REAL	1 V	0.0 … 1000000.0	6
80...83	Current L1	REAL	1 A	0.0 … 100000.0	7
84...87	Current L2	REAL	1 A	0.0 … 100000.0	8
88...91	Current L3	REAL	1 A	0.0 … 100000.0	9
92...95	Power factor L1	REAL	-	0.0 … 1.0	19
96...99	Power factor L2	REAL	-	0.0 … 1.0	20
100...103	Power factor L3	REAL	-	0.0 … 1.0	21

Structure of output user data

The structure of the 12 byte output user data is fixed and is identical to the output user data (control bytes) of the Module version "32 I / 12 Q" (Page 145).

User data variants

D

D.1 User data variants with 32 bytes input data / 12 bytes output data

User data

30 bytes are available for transferring the measured values in a cycle at the module version 32 I / 12 Q. Therefore this module version supports dynamic switching between 22 preconfigured user data variants that contain a specific selection of measured values.

For more detailed information, refer to "Selecting the module versions (Page 28)".

Table D- 1 Overview of the user data variants

User data	User data variant
Total power L1L2L3	254 (FE_H) - default setting
Active power L1L2L3	253 (FD_H)
Reactive power L1L2L3	252 (FC_H)
Apparent power L1L2L3	251 (FB_H)
Basic measured values L1L2L3	250 (FA_H)
Total energy L1L2L3	249 ($F9_H$)
Energy L1	248 ($F8_H$)
Energy L2	247 ($F7_H$)
Energy L3	246 ($F6_H$)
Basic variables three-phase measurement L1L2L3	245 ($F5_H$)
Quality values three-phase measurement	240 ($F0_H$)
Energy measurement (periodic) overflow counter	239 (EF_H)
EE@Industry measurement data profile E3	227 ($E3_H$)
EE@Industry measurement data profile E2	226 ($E2_H$)
EE@Industry measurement data profile E1	225 ($E1_H$)
EE@Industry measurement data profile E0	224 ($E0_H$)
Basic variables phase-specific measurement L1	159 ($9F_H$)
Basic variables phase-specific measurement L1a	158 ($9E_H$)
Basic variables phase-specific measurement L2	157 ($9D_H$)
Basic variables phase-specific measurement L2a	156 ($9C_H$)
Basic variables phase-specific measurement L3	155 ($9B_H$)
Basic variables phase-specific measurement L3a	154 ($9A_H$)
User-defined user data structure	1 (01_H)

Total power L1L2L3 (ID 254 or FE_H)

Table D- 2 Total power L1L2L3

Byte	Allocation	Data type	Unit	Value range	Measured value ID
0	User data variant	BYTE	-	254 (FE_H)	-
1	Quality information = QQ_1 I_3 U_3 I_2 U_2 I_1 U_1	BYTE	Bit string	qq xx xx xx	-
2 ... 3	Current L1	UINT	1 mA	0 … 65535	66007
4 ... 5	Current L2	UINT	1 mA	0 … 65535	66008
6 ... 7	Current L3	UINT	1 mA	0 … 65535	66009
8 ... 9	Total active power L1L2L3	INT	1 W	-27648 … 27648	66034
10 ... 11	Total reactive power L1L2L3	INT	1 var	-27648 … 27648	66035
12 ... 13	Total apparent power L1L2L3	INT	1 VA	-27648 … 27648	66036
14 ... 17	Total active energy L1L2L3	DINT	1 Wh	-2147483647 to +2147483647	225
18 ... 21	Total reactive energy L1L2L3	DINT	1 varh	-2147483647 to +2147483647	226
22	Reserved	BYTE	-	0	-
23	Total power factor L1L2L3	USINT	0.01	0 … 100	66037
24	Scaling current L1	USINT	-	0 ... 255	-
25	Scaling current L2	USINT	-	0 ... 255	-
26	Scaling current L3	USINT	-	0 ... 255	-
27	Scaling total active power L1L2L3	USINT	-	0 ... 255	-
28	Scaling total reactive power L1L2L3	USINT	-	0 ... 255	-
29	Scaling total apparent power L1L2L3	USINT	-	0 ... 255	-
30	Scaling total active energy L1L2L3	USINT	-	0 ... 255	-
31	Scaling total reactive energy L1L2L3	USINT	-	0 ... 255	-

Active power L1L2L3 (ID 253 or FD_H)

Table D- 3 Active power L1L2L3

Byte	Allocation	Data type	Unit	Value range	Measured value ID
0	User data variant	BYTE	-	253 (FD_H)	-
1	Quality information = QQ_1 I_3 U_3 I_2 U_2 I_1 U_1	BYTE	Bit string	qq xx xx xx	-
2 ... 3	Current L1	UINT	1 mA	0 … 65535	66007
4 ... 5	Current L2	UINT	1 mA	0 … 65535	66008
6 ... 7	Current L3	UINT	1 mA	0 … 65535	66009
8 ... 9	Active power L1	INT	1 W	-27648 … 27648	66013
10 ... 11	Active power L2	INT	1 W	-27648 … 27648	66014
12 ... 13	Active power L3	INT	1 W	-27648 … 27648	66015
14 ... 15	Total active power L1L2L3	INT	1 W	-27648 … 27648	66034
16 ... 19	Total active energy L1L2L3	DINT	1 Wh	-2147483647 to +2147483647	225
20	Power factor L1	USINT	0.01	0 … 100	66019
21	Power factor L2	USINT	0.01	0 … 100	66020
22	Power factor L3	USINT	0.01	0 … 100	66021
23	Total power factor L1L2L3	USINT	0.01	0 … 100	66037
24	Scaling current L1	USINT	-	0 ... 255	-
25	Scaling current L2	USINT	-	0 ... 255	-
26	Scaling current L3	USINT	-	0 ... 255	-
27	Scaling active power L1	USINT	-	0 ... 255	-
28	Scaling active power L2	USINT	-	0 ... 255	-
29	Scaling active power L3	USINT	-	0 ... 255	-
30	Scaling active power L1L2L3	USINT	-	0 ... 255	-
31	Scaling total active energy L1L2L3	USINT	-	0 ... 255	-

Reactive power L1L2L3 (ID 252 or FC_H)

Table D- 4 Reactive power L1L2L3

Byte	Allocation	Data type	Unit	Value range	Measured value ID
0	User data variant	BYTE	-	252 (FC_H)	-
1	Quality information = QQ_1 I_3 U_3 I_2 U_2 I_1 U_1	BYTE	Bit string	qq xx xx xx	-
2 ... 3	Current L1	UINT	1 mA	0 … 65535	66007
4 ... 5	Current L2	UINT	1 mA	0 … 65535	66008
6 ... 7	Current L3	UINT	1 mA	0 … 65535	66009
8 ... 9	Reactive power L1	INT	1 var	-27648 … 27648	66016
10 ... 11	Reactive power L2	INT	1 var	-27648 … 27648	66017
12 ... 13	Reactive power L3	INT	1 var	-27648 … 27648	66018
14 ... 15	Total reactive power L1L2L3	INT	1 var	-27648 … 27648	66035
16 ... 19	Total reactive energy L1L2L3	DINT	1 varh	-2147483647 to +2147483647	226
20	Power factor L1	USINT	0.01	0 … 100	66019
21	Power factor L2	USINT	0.01	0 … 100	66020
22	Power factor L3	USINT	0.01	0 … 100	66021
23	Total power factor L1L2L3	USINT	0.01	0 … 100	66037
24	Scaling current L1	USINT	-	0 ... 255	-
25	Scaling current L2	USINT	-	0 ... 255	-
26	Scaling current L3	USINT	-	0 ... 255	-
27	Scaling reactive power L1	USINT	-	0 ... 255	-
28	Scaling reactive power L2	USINT	-	0 ... 255	-
29	Scaling reactive power L3	USINT	-	0 ... 255	-
30	Scaling reactive power L1L2L3	USINT	-	0 ... 255	-
31	Scaling total reactive energy L1L2L3	USINT	-	0 ... 255	-

Apparent power L1L2L3 (ID 251 or FB_H)

Table D- 5 Apparent power L1L2L3

Byte	Allocation	Data type	Unit	Value range	Measured value ID
0	User data variant	BYTE	-	251 (FB_H)	-
1	Quality information = QQ_1 I_3 U_3 I_2 U_2 I_1 U_1	BYTE	Bit string	qq xx xx xx	-
2 ... 3	Current L1	UINT	1 mA	0 … 65535	66007
4 ... 5	Current L2	UINT	1 mA	0 … 65535	66008
6 ... 7	Current L3	UINT	1 mA	0 … 65535	66009
8 ... 9	Apparent power L1	INT	1 VA	-27648 … 27648	66010
10 ... 11	Apparent power L2	INT	1 VA	-27648 … 27648	66011
12 ... 13	Apparent power L3	INT	1 VA	-27648 … 27648	66012
14 ... 15	Total apparent power L1L2L3	INT	1 VA	-27648 … 27648	66036
16 ... 19	Total apparent energy L1L2L3	DINT	1 VAh	0 to 2147483647	224
20	Power factor L1	USINT	0.01	0 … 100	66019
21	Power factor L2	USINT	0.01	0 … 100	66020
22	Power factor L3	USINT	0.01	0 … 100	66021
23	Total power factor L1L2L3	USINT	0.01	0 … 100	66037
24	Scaling current L1	USINT	-	0 ... 255	-
25	Scaling current L2	USINT	-	0 ... 255	-
26	Scaling current L3	USINT	-	0 ... 255	-
27	Scaling apparent power L1	USINT	-	0 ... 255	-
28	Scaling apparent power L2	USINT	-	0 ... 255	-
29	Scaling apparent power L3	USINT	-	0 ... 255	-
30	Scaling apparent power L1L2L3	USINT	-	0 ... 255	-
31	Scaling total apparent energy L1L2L3	USINT	-	0 ... 255	-

Basic measured values L1L2L3 (ID 250 or FA_H)

Table D- 6 Basic measured values L1L2L3

Byte	Allocation	Data type	Unit	Value range	Measured value ID
0	User data variant	BYTE	-	250 (FA_H)	-
1	Quality information = QQ_1 I_3 U_3 I_2 U_2 I_1 U_1	BYTE	Bit string	qq xx xx xx	-
2 ... 3	Current L1	UINT	1 mA	0 … 65535	66007
4 ... 5	Current L2	UINT	1 mA	0 … 65535	66008
6 ... 7	Current L3	UINT	1 mA	0 … 65535	66009
8 ... 9	Voltage UL1-N	UINT	0.01 V	0 … 65535	66001
10 ... 11	Voltage UL2-N	UINT	0.01 V	0 … 65535	66002
12 ... 13	Voltage UL3-N	UINT	0.01 V	0 … 65535	66003
14 ... 15	Voltage UL1-UL2	UINT	0.01 V	0 … 65535	66004
16 ... 17	Voltage UL2-UL3	UINT	0.01 V	0 … 65535	66005
18 ... 19	Voltage UL3-UL1	UINT	0.01 V	0 … 65535	66006
20	Power factor L1	USINT	0.01	0 … 100	66019
21	Power factor L2	USINT	0.01	0 … 100	66020
22	Power factor L3	USINT	0.01	0 … 100	66021
23	Total power factor L1L2L3	USINT	0.01	0 … 100	66037
24	Scaling current L1	USINT	-	0 ... 255	-
25	Scaling current L2	USINT	-	0 ... 255	-
26	Scaling current L3	USINT	-	0 ... 255	-
27	Scaling voltage UL1-N (UL1-UL2)	USINT	-	0 ... 255	-
28	Scaling voltage UL2-N (UL2-UL3)	USINT	-	0 ... 255	-
29	Scaling voltage UL3-N (UL3-UL1)	USINT	-	0 ... 255	-
30 ... 31	Frequency	UINT	0.01 Hz	4500 ... 6500	66038

Total energy L1L2L3 (ID 249 or $F9_H$)

Table D- 7 Total energy L1L2L3

Byte	Allocation	Data type	Unit	Value range	Measured value ID
0	User data variant	BYTE	-	249 ($F9_H$)	-
1	Quality information = QQ_1 I_3 U_3 I_2 U_2 I_1 U_1	BYTE	Bit string	qq xx xx xx	-
2	Reserved	BYTE	-	-	-
3	Reserved	BYTE	-	-	-
4 ... 7	Total active energy inflow L1L2L3	UDINT	1 Wh	0 to 2147483647	220
8 ... 11	Total active energy outflow L1L2L3	UDINT	1 Wh	0 to 2147483647	221
11 ... 15	Total reactive energy inflow L1L2L3	UDINT	1 varh	0 to 2147483647	222
16 ... 19	Total reactive energy outflow L1L2L3	UDINT	1 varh	0 to 2147483647	223
20 ... 23	Total apparent energy L1L2L3	UDINT	1 VAh	0 to 2147483647	224
24	Reserved	BYTE	-	-	-
25	Scaling active energy, inflow	USINT	-	0 ... 255	-
26	Scaling active energy, outflow	USINT	-	0 ... 255	-
27	Scaling reactive energy, inflow	USINT	-	0 ... 255	-
28	Scaling reactive energy, outflow	USINT	-	0 ... 255	-
29	Scaling apparent energy	USINT	-	0 ... 255	-
30	Reserved	BYTE	-	-	-
31	Total power factor L1L2L3	USINT	0.01	0 … 100	66037

Energy L1 (ID 248 or $F8_H$)

Table D- 8 Energy L1

Byte	Allocation	Data type	Unit	Value range	Measured value ID
0	User data variant	BYTE	-	248 ($F8_H$)	-
1	Quality information = QQ_1 I_3 U_3 I_2 U_2 I_1 U_1	BYTE	Bit string	qq xx xx xx	-
2 ... 3	Current L1	UINT	1 mA	0 … 65535	66007
4 ... 7	Active energy inflow L1	UDINT	1 Wh	0 ... 2147483647	62110
8 ... 11	Active energy outflow L1	UDINT	1 Wh	0 ... 2147483647	62111
11 ... 15	Reactive energy inflow L1	UDINT	1 varh	0 ... 2147483647	62112
16 ... 19	Reactive energy outflow L1	UDINT	1 varh	0 ... 2147483647	62113
20 ... 23	Apparent energy L1	UDINT	1 VAh	0 ... 2147483647	62114
24	Scaling current L1	USINT	-	0 ... 255	-
25	Scaling active energy inflow L1	USINT	-	0 ... 255	-
26	Scaling active energy outflow L1	USINT	-	0 ... 255	-
27	Scaling reactive energy inflow L1	USINT	-	0 ... 255	-
28	Scaling reactive energy outflow L1	USINT	-	0 ... 255	-
29	Scaling apparent energy L1	USINT	-	0 ... 255	-
30	Reserved	BYTE	-	-	-
31	Power factor L1	USINT	0.01	0 … 100	66019

Energy L2 (ID 247 or $F7_H$)

Table D- 9 Energy L2

Byte	Allocation	Data type	Unit	Value range	Measured value ID
0	User data variant	BYTE	-	247 ($F7_H$)	-
1	Quality information = QQ_1 I_3 U_3 I_2 U_2 I_1 U_1	BYTE	Bit string	qq xx xx xx	-
2 ... 3	Current L2	UINT	1 mA	0 … 65535	66008
4 ... 7	Active energy inflow L2	UDINT	1 Wh	0 to 2147483647	62210
8 ... 11	Active energy outflow L2	UDINT	1 Wh	0 to 2147483647	62211
11 ... 15	Reactive energy inflow L2	UDINT	1 varh	0 to 2147483647	62212
16 ... 19	Reactive energy outflow L2	UDINT	1 varh	0 to 2147483647	62213
20 ... 23	Apparent energy L2	UDINT	1 VAh	0 to 2147483647	62214
24	Scaling current L2	USINT	-	0 ... 255	-
25	Scaling active energy inflow L2	USINT	-	0 ... 255	-
26	Scaling active energy outflow L2	USINT	-	0 ... 255	-
27	Scaling reactive energy inflow L2	USINT	-	0 ... 255	-
28	Scaling reactive energy outflow L2	USINT	-	0 ... 255	-
29	Scaling apparent energy L2	USINT	-	0 ... 255	-
30	Reserved	BYTE	-	-	-
31	Power factor L2	USINT	0.01	0 … 100	66020

Energy L3 (ID 246 or $F6_H$)

Table D- 10 Energy L3

Byte	Allocation	Data type	Unit	Value range	Measured value ID
0	User data variant	BYTE	-	246 ($F6_H$)	-
1	Quality information = QQ_1 I_3 U_3 I_2 U_2 I_1 U_1	BYTE	Bit string	qq xx xx xx	-
2 ... 3	Current L3	UINT	1 mA	0 … 65535	66009
4 ... 7	Active energy inflow L3	UDINT	1 Wh	0 to 2147483647	62310
8 ... 11	Active energy L3, outflow	UDINT	1 Wh	0 to 2147483647	62311
11 ... 15	Reactive energy inflow L3	UDINT	1 varh	0 to 2147483647	62312
16 ... 19	Reactive energy outflow L3	UDINT	1 varh	0 to 2147483647	62313
20 ... 23	Apparent energy L3	UDINT	1 VAh	0 to 2147483647	62314
24	Scaling current L3	USINT	-	0 ... 255	-
25	Scaling active energy inflow L3	USINT	-	0 ... 255	-
26	Scaling active energy outflow L3	USINT	-	0 ... 255	-
27	Scaling reactive energy inflow L3	USINT	-	0 ... 255	-
28	Scaling reactive energy outflow L3	USINT	-	0 ... 255	-
29	Scaling apparent energy L3	USINT	-	0 ... 255	-
30	Reserved	BYTE	-	-	-
31	Power factor L3	USINT	0.01	0 … 100	66021

Basic variables three-phase measurements (ID 245 or $F5_H$)

Table D- 11 Basic variables three-phase measurements

Byte	Allocation	Data type	Unit	Value range	Measured value ID
0	User data variant	BYTE	-	245 ($F5_H$)	-
1	Quality information = QQ_1 I_3 U_3 I_2 U_2 I_1 U_1	BYTE	Bit string	qq xx xx xx	-
2 ... 5	Total active power L1L2L3	REAL	1 W	-3.0×10^9 ... $+ 3.0 \times 10^9$	35
6 ... 9	Total active energy outflow L1L2L3	REAL	1 Wh	0.0 ... 3.4×10^{38}	201
10 ... 13	Total active energy inflow L1L2L3	REAL	1 Wh	0.0 ... 3.4×10^{38}	200
14 ... 17	Current L1	REAL	1 A	0.0 … 100000.0	7
18 ... 21	Current L2	REAL	1 A	0.0 … 100000.0	8
22 ... 25	Current L3	REAL	1 A	0.0 … 100000.0	9
26 ... 27	Voltage UL1-N	UINT	0.01 V	0 … 65535	66001
28 ... 29	Voltage UL2-N	UINT	0.01 V	0 … 65535	66002
30 ... 31	Voltage UL3-N	UINT	0.01 V	0 … 65535	66003

Basic variables quality values three-phase measurement (ID 240 or $F0_H$)

Table D- 12 Basic variables quality values three-phase measurement

Byte	Allocation	Data type	Unit	Value range	Measured value ID
0	User data variant	BYTE	-	240 (F0H)	-
1	Quality information = QQ_1 I_3 U_3 I_2 U_2 I_1 U_1	BYTE	Bit string	qq xx xx xx	-
2 ... 3	Status of the limit monitoring GW 1 ... 16 (*)	WORD	Bit string	xxxx xxxx xxxx xxxx	65509
4 ... 5	Status of the energy counter overflows (**)	WORD	Bit string	xxxx xxxx xxxx xxxx	65508
6 ... 7	Quality information = 00 DD QQ_3 QQ_2 QQ_1 I_3 U_3 I_2 U_2 I_1 U_1	WORD	Bit string	xxxx xxxx xxxx xxxx	65503
8 ... 9	Reserved	WORD	-	-	-
10 ... 11	Reserved	WORD	-	-	-
12 ... 13	Reserved	WORD	-	-	-
14 ... 15	Reserved	WORD	-	-	-
16 ... 17	Reserved	WORD	-	-	-
18 ... 19	Reserved	WORD	-	-	-
20 ... 21	Reserved	WORD	-	-	-
22 ... 23	Reserved	WORD	-	-	-
24 ... 25	Reserved	WORD	-	-	-
26 ... 27	Reserved	WORD	-	-	-
28 ... 29	Reserved	WORD	-	-	-
30 ... 31	Reserved	WORD	-	-	-

(*) Limit violation in:
Bit 0 = limit 1 to bit 15 = limit 16

(**) Energy counter count periodically - counter overflow at:
Bit 0 = 1: Active energy inflow L1
Bit 1 = 1: Active energy outflow L1
Bit 2 = 1: Reactive energy inflow L1
Bit 3 = 1: Reactive energy outflow L1
Bit 4 = 1: Apparent energy L1
Bit 5 = 1: Active energy inflow L2
Bit 6 = 1: Active energy outflow L2
Bit 7 = 1: Reactive energy inflow L2
Bit 8 = 1: Reactive energy outflow L2
Bit 9 = 1: Apparent energy L2
Bit 10 = 1: Active energy inflow L3
Bit 11 = 1: Active energy outflow L3
Bit 12 = 1: Reactive energy inflow L3
Bit 13 = 1: Reactive energy outflow L3
Bit 14 = 1: Apparent energy L3
Bit 15: Reserved

Basic variables energy counter measurement (periodic) overflow counter (ID 239 or EF_H)

Table D- 13 Basic variables energy counter measurement (periodic) overflow counter

Byte	Allocation	Data type	Unit	Value range	Measured value ID
0	User data variant	BYTE	-	239 (EFH)	-
1	Quality information = QQ_1 I_3 U_3 I_2 U_2 I_1 U_1	BYTE	Bit string	qq xx xx xx	-
2 ... 3	Overflow counter for active energy inflow L1	UINT	-	0 … 65535	65120
4 ... 5	Overflow counter for active energy outflow L1	UINT	-	0 … 65535	65121
6 ... 7	Overflow counter for reactive energy inflow L1	UINT	-	0 … 65535	65122
8 ... 9	Overflow counter for reactive energy outflow L1	UINT	-	0 … 65535	65123
10 ... 11	Overflow counter for apparent energy L1	UINT	-	0 … 65535	65124
12 ... 13	Overflow counter for active energy inflow L2	UINT	-	0 … 65535	62220
14 ... 15	Overflow counter for active energy outflow L2	UINT	-	0 … 65535	62221
16 ... 17	Overflow counter for reactive energy inflow L2	UINT	-	0 … 65535	62222
18 ... 19	Overflow counter for reactive energy outflow L2	UINT	-	0 … 65535	62223
20 ... 21	Overflow counter for apparent energy L2	UINT	-	0 … 65535	62224
22 ... 23	Overflow counter for active energy inflow L3	UINT	-	0 … 65535	62320
24 ... 25	Overflow counter for active energy outflow L3	UINT	-	0 … 65535	62321
26 ... 27	Overflow counter for reactive energy inflow L3	UINT	-	0 … 65535	62322
28 ... 29	Overflow counter for reactive energy outflow L3	UINT	-	0 … 65535	62323
30 ... 31	Overflow counter for apparent energy L3	UINT	-	0 … 65535	62324

Basic variables measurement data profile (ID 227 or $E3_H$)

Table D- 14 Basic variables measurement data profile Energy E3

Byte	Allocation	Data type	Unit	Value range	Measured value ID
0	User data variant	BYTE	-	227 ($E3_H$)	-
1	Quality information = QQ_1 I_3 U_3 I_2 U_2 I_1 U_1	BYTE	Bit string	qq xx xx xx	-
2 ... 5	Active power L1	REAL	1 W	-3.0×10^9 ... $+ 3.0 \times 10^9$	13
6 ... 9	Active power L2	REAL	1 W	-3.0×10^9 ... $+ 3.0 \times 10^9$	14
10 ... 13	Active power L3	REAL	1 W	-3.0×10^9 ... $+ 3.0 \times 10^9$	15
14 ... 17	Reactive power L1	REAL	1 var	-3.0×10^9 ... $+ 3.0 \times 10^9$	16

Byte	Allocation	Data type	Unit	Value range	Measured value ID
18 ... 21	Reactive power L2	REAL	1 var	-3.0×10^9 ... $+ 3.0 \times 10^9$	17
22 ... 25	Reactive power L3	REAL	1 var	-3.0×10^9 ... $+ 3.0 \times 10^9$	18
26 ... 33	Total active energy L1L2L3 inflow	LREAL	1 Wh	0.0 ... 1.8×10^{308}	210
34 ... 41	Total active energy L1L2L3 outflow	LREAL	1 Wh	0.0 ... 1.8×10^{308}	211
42 ... 49	Total reactive energy L1L2L3 inflow	LREAL	1 varh	0.0 ... 1.8×10^{308}	212
50 ... 57	Total reactive energy L1L2L3 outflow	LREAL	1 varh	0.0 ... 1.8×10^{308}	213
58 ... 61	Voltage UL1-N	REAL	1 V	0.0 … 1000000.0	1
62 ... 65	Voltage UL2-N	REAL	1 V	0.0 … 1000000.0	2
66 ... 69	Voltage UL3-N	REAL	1 V	0.0 … 1000000.0	3
70 ... 73	Voltage UL1-UL2	REAL	1 V	0.0 … 1000000.0	4
74 ... 77	Voltage UL2-UL3	REAL	1 V	0.0 … 1000000.0	5
78 ... 81	Voltage UL3-UL1	REAL	1 V	0.0 … 1000000.0	6
82 ... 85	Current L1	REAL	1 A	0.0 … 100000.0	7
86 ... 89	Current L2	REAL	1 A	0.0 … 100000.0	8
90 ... 93	Current L3	REAL	1 A	0.0 … 100000.0	9
94 ... 97	Power factor L1	REAL	-	0.0 … 1.0	19
98 ... 101	Power factor L2	REAL	-	0.0 … 1.0	20
102 ... 105	Power factor L3	REAL	-	0.0 … 1.0	21

Basic variables measurement data profile (ID 226 or $E2_H$)

Table D- 15 Basic variables measurement data profile Energy E2

Byte	Allocation	Data type	Unit	Value range	Measured value ID
0	User data variant	BYTE	-	226 ($E2_H$)	-
1	Quality information = QQ_1 I_3 U_3 I_2 U_2 I_1 U_1	BYTE	Bit string	qq xx xx xx	-
2 ... 5	Total active power L1L2L3	REAL	1 W	-3.0×10^9 ... $+ 3.0 \times 10^9$	34
6 ... 9	Total active energy inflow L1L2L3	REAL	1 W	3.0×10^9	200
10 ...13	Total active energy outflow L1L2L3	REAL	1 W	3.0×10^9	201

Basic variables measurement data profile (ID 225 or $E1_H$)

Table D- 16 Basic variables measurement data profile Energy E1

Byte	Allocation	Data type	Unit	Value range	Measured value ID
0	User data variant	BYTE	-	225 ($E1_H$)	-
1	Quality information = QQ_1 I_3 U_3 I_2 U_2 I_1 U_1	BYTE	Bit string	qq xx xx xx	-
2 ... 5	Total active power L1L2L3	REAL	1 W	-3.0×10^9 ... $+ 3.0 \times 10^9$	34

Basic variables measurement data profile (ID 224 or $E0_H$)

Table D- 17 Basic variables measurement data profile Energy E0

Byte	Allocation	Data type	Unit	Value range	Measured value ID
0	User data variant	BYTE	-	224 ($E0_H$)	-
1	Quality information = QQ_1 I_3 U_3 I_2 U_2 I_1 U_1	BYTE	Bit string	qq xx xx xx	-
2 ... 5	Current L1	REAL	1 A	0.0 … 100000.0	7
6 ... 9	Current L2	REAL	1 A	0.0 … 100000.0	8
10 ...13	Current L3	REAL	1 A	0.0 … 100000.0	9

Basic variables phase-specific measurement (ID 159 or $9F_H$)

Table D- 18 Basic variables phase-specific measurement L1

Byte	Allocation	Data type	Unit	Value range	Measured value ID
0	User data variant	BYTE	-	159 (9FH)	-
1	Quality information = QQ_1 I_3 U_3 I_2 U_2 I_1 U_1	BYTE	Bit string	qq xx xx xx	-
2 ... 3	Current L1	UINT	1 mA	0 … 65535	66007
4 ... 5	Voltage UL1-N	UINT	0.01 V	0 … 65535	66001
6 ... 7	Active power L1	INT	1 W	-27648 … 27648	66013
8 ... 9	Reactive power L1	INT	1 var	-27648 … 27648	66016
10 ... 11	Apparent power L1	INT	1 VA	-27648 … 27648	66010
12 ... 15	Active energy L1 total (inflow - outflow)	DINT	1 Wh	-2147483647 to +2147483647	62115
16 ... 19	Reactive energy L1 total (inflow - outflow)	DINT	1 varh	-2147483647 to +2147483647	62116
20 ... 23	Apparent energy L1	UDINT	1 VAh	0 to 2147483647	62114
24	Scaling current L1	USINT	-	0 ... 255	-
25	Scaling active power L1	USINT	-	0 ... 255	-
26	Scaling reactive power L1	USINT	-	0 ... 255	-
27	Scaling apparent power L1	USINT	-	0 ... 255	-
28	Scaling active energy L1 total (inflow - outflow)	USINT	-	0 ... 255	-
29	Scaling reactive energy L1 total (inflow - outflow)	USINT	-	0 ... 255	-
30	Scaling apparent energy L1	USINT	-	0 ... 255	-
31	Power factor L1	USINT	0.01	0 … 100	66019

Basic variables phase-specific measurement (ID 158 or $9E_H$)

Table D- 19 Basic variables phase-specific measurement L1a

Byte	Allocation	Data type	Unit	Value range	Measured value ID
0	User data variant	BYTE	-	158 (9EH)	-
1	Quality information = QQ_1 I_3 U_3 I_2 U_2 I_1 U_1	BYTE	Bit string	qq xx xx xx	-
2 ... 3	Current L1	UINT	1 mA	0 … 65535	66007
4 ... 5	Voltage UL1-N	UINT	0.01 V	0 … 65535	66001
6 ... 7	Active power L1	INT	1 W	-27648 … 27648	66013
8 ... 9	Reactive power L1	INT	1 var	-27648 … 27648	66016
10 ... 11	Apparent power L1	INT	1 VA	-27648 … 27648	66010
12 ... 15	Active energy L1 total (inflow - outflow)	UDINT	1 Wh	0 … 4294967295	62115
16 ... 19	Reactive energy L1 total (inflow - outflow)	UDINT	1 varh	0 … 4294967295	62116
20 ... 23	Apparent energy L1	UDINT	1 VAh	0 … 4294967295	62114
24	Scaling current L1	USINT	-	0 ... 255	-
25	Scaling active power L1	USINT	-	0 ... 255	-
26	Scaling reactive power L1	USINT	-	0 ... 255	-
27	Scaling apparent power L1	USINT	-	0 ... 255	-
28	Scaling active energy L1 total (inflow - outflow)	USINT	-	0 ... 255	-
29	Scaling reactive energy L1 total (inflow - outflow)	USINT	-	0 ... 255	-
30	Scaling apparent energy L1	USINT	-	0 ... 255	-
31	Scaling voltage UL1-N	USINT	-	0 ... 255	-

Basic variables phase-specific measurement (ID 157 or $9D_H$)

Table D- 20 Basic variables phase-specific measurement L2

Byte	Allocation	Data type	Unit	Value range	Measured value ID
0	User data variant	BYTE	-	157 ($9D_H$)	-
1	Quality information = QQ_1 I_3 U_3 I_2 U_2 I_1 U_1	BYTE	Bit string	qq xx xx xx	-
2 ... 3	Current L2	UINT	1 mA	0 … 65535	66008
4 ... 5	Voltage UL2-N	UINT	0.01 V	0 … 65535	66002
6 ... 7	Active power L2	INT	1 W	-27648 … 27648	66014
8 ... 9	Reactive power L2	INT	1 var	-27648 … 27648	66017
10 ... 11	Apparent power L2	INT	1 VA	-27648 … 27648	66011
12 ... 15	Active energy L2 total (inflow - outflow)	DINT	1 Wh	-2147483647 to +2147483647	62215
16 ... 19	Reactive energy L2 total (inflow - outflow)	DINT	1 varh	-2147483647 to +2147483647	62216
20 ... 23	Apparent energy L2	UDINT	1 VAh	0 to 2147483647	62214
24	Scaling current L2	USINT	-	0 ... 255	-
25	Scaling active power L2	USINT	-	0 ... 255	-
26	Scaling reactive power L2	USINT	-	0 ... 255	-
27	Scaling apparent power L2	USINT	-	0 ... 255	-
28	Scaling active energy L2 total (inflow - outflow)	USINT	-	0 ... 255	-
29	Scaling reactive energy L2 total (inflow - outflow)	USINT	-	0 ... 255	-
30	Scaling apparent energy L2	USINT	-	0 ... 255	-
31	Power factor L2	USINT	0.01	0 … 100	66020

Basic variables phase-specific measurement (ID 156 or $9C_H$)

Table D- 21 Basic variables phase-specific measurement L2a

Byte	Allocation	Data type	Unit	Value range	Measured value ID
0	User data variant	BYTE	-	156 (9CH)	-
1	Quality information = QQ_1 I_3 U_3 I_2 U_2 I_1 U_1	BYTE	Bit string	qq xx xx xx	-
2 ... 3	Current L2	UINT	1 mA	0 … 65535	66008
4 ... 5	Voltage UL2-N	UINT	0.01 V	0 … 65535	66002
6 ... 7	Active power L2	INT	1 W	-27648 … 27648	66014
8 ... 9	Reactive power L2	INT	1 var	-27648 … 27648	66017
10 ... 11	Apparent power L2	INT	1 VA	-27648 … 27648	66011
12 ... 15	Active energy L2 total (inflow - outflow)	DINT	1 Wh	-2147483647 to +2147483647	62215
16 ... 19	Reactive energy L2 total (inflow - outflow)	DINT	1 varh	-2147483647 to +2147483647	62216
20 ... 23	Apparent energy L2	UDINT	1 VAh	0 to 2147483647	62214
24	Scaling current L2	USINT	-	0 ... 255	-
25	Scaling active power L2	USINT	-	0 ... 255	-
26	Scaling reactive power L2	USINT	-	0 ... 255	-
27	Scaling apparent power L2	USINT	-	0 ... 255	-
28	Scaling active energy L2 total (inflow - outflow)	USINT	-	0 ... 255	-
29	Scaling reactive energy L2 total (inflow - outflow)	USINT	-	0 ... 255	-
30	Scaling apparent energy L2	USINT	-	0 ... 255	-
31	Scaling voltage UL2-N	USINT	-	0 ... 255	-

Basic variables phase-specific measurement (ID 155 or $9B_H$)

Table D- 22 Basic variables phase-specific measurement L3

Byte	Allocation	Data type	Unit	Value range	Measured value ID
0	User data variant	BYTE	-	155 ($9B_H$)	-
1	Quality information = QQ_1 I_3 U_3 I_2 U_2 I_1 U_1	BYTE	Bit string	qq xx xx xx	-
2 ... 3	Current L3	UINT	1 mA	0 … 65535	66009
4 ... 5	Voltage UL3-N	UINT	0.01 V	0 … 65535	66003
6 ... 7	Active power L3	INT	1 W	-27648 … 27648	66015
8 ... 9	Reactive power L3	INT	1 var	-27648 … 27648	66018
10 ... 11	Apparent power L3	INT	1 VA	-27648 … 27648	66012
12 ... 15	Active energy L3 total (inflow - outflow)	DINT	1 Wh	-2147483647 to +2147483647	62315
16 ... 19	Reactive energy L3 total (inflow - outflow)	DINT	1 varh	-2147483647 to +2147483647	62316
20 ... 23	Apparent energy L3	UDINT	1 VAh	0 to 2147483647	62314
24	Scaling current L3	USINT	-	0 ... 255	-
25	Scaling active power L3	USINT	-	0 ... 255	-
26	Scaling reactive power L3	USINT	-	0 ... 255	-
27	Scaling apparent power L3	USINT	-	0 ... 255	-
28	Scaling active energy L3 total (inflow - outflow)	USINT	-	0 ... 255	-
29	Scaling reactive energy L3 total (inflow - outflow)	USINT	-	0 ... 255	-
30	Scaling apparent energy L3	USINT	-	0 ... 255	-
31	Power factor L3	USINT	0.01	0 … 100	66021

Basic variables phase-specific measurement (ID 154 or $9A_H$)

Table D- 23 Basic variables phase-specific measurement L3a

Byte	Allocation	Data type	Unit	Value range	Measured value ID
0	User data variant	BYTE	-	154 ($9A_H$)	-
1	Quality information = QQ_1 I_3 U_3 I_2 U_2 I_1 U_1	BYTE	Bit string	qq xx xx xx	-
2 ... 3	Current L3	UINT	1 mA	0 … 65535	66009
4 ... 5	Voltage UL3-N	UINT	0.01 V	0 … 65535	66003
6 ... 7	Active power L3	INT	1 W	-27648 … 27648	66015
8 ... 9	Reactive power L3	INT	1 var	-27648 … 27648	66018
10 ... 11	Apparent power L3	INT	1 VA	-27648 … 27648	66012
12 ... 15	Active energy L3 total (inflow - outflow)	DINT	1 Wh	-2147483647 to +2147483647	62315
16 ... 19	Reactive energy L3 total (inflow - outflow)	DINT	1 varh	-2147483647 to +2147483647	62316
20 ... 23	Apparent energy L3	UDINT	1 VAh	0 to 2147483647	62314
24	Scaling current L3	USINT	-	0 ... 255	-
25	Scaling active power L3	USINT	-	0 ... 255	-
26	Scaling reactive power L3	USINT	-	0 ... 255	-
27	Scaling apparent power L3	USINT	-	0 ... 255	-
28	Scaling active energy L3 total (inflow - outflow)	USINT	-	0 ... 255	-
29	Scaling reactive energy L3 total (inflow - outflow)	USINT	-	0 ... 255	-
30	Scaling apparent energy L3	USINT	-	0 ... 255	-
31	Scaling voltage UL3-N	USINT	-	0 ... 255	-

Measured value data records

E

E.1 Overview of all measured value data records

Energy Meter 480VAC ST writes the measured values in several data records that you can read acyclically using the RDREC instruction in the user program.

The following tables show the structure of the individual data records:

- Data record DS 142 for basic measured values (read only).
- Data record DS 143 for energy counters (read and write).
- Data record DS 144 for maximum values (read only).
- Data record DS 145 for minimum values (read only).
- Data record DS 147 for phase-specific measured values L1 (read only).
- Data record DS 148 for phase-specific measured values L2 (read only).
- Data record DS 149 for phase-specific measured values L3 (read only).
- Data record DS 150 for advanced measurement and status values (read only).

Note

- The cumulative value of the energy counters in 3-phase operation is obtained from the sums of the respective individual values of the phases.
- Inflow and outflow energy meters are always positive values.
- The operating hours counter for the entire module is calculated from the maximum of the operating hours of the individual phases.

E.2 Measured value data record for base measurements (DS 142)

Measured variables of the module

The following table provides an overview of all the measured variables that data record 142 supplies. Please note that, depending on the connection type used the display of some measured variables does not make sense and that the module deletes measured values that are not relevant.

The measured value identification (measured value ID) is an index which references the overview table of the measured variables in appendix B (Measured variables (Page 131)).

Table E- 1 Data record 142

Byte	Measured variable	Data type	Unit	Value range	Measured value ID
0	Version	BYTE	-	1	-
1	Reserved	BYTE	-	0	-
2...5	Voltage UL1-N	REAL	V	0.0 ... 1000000.0	1
6...9	Voltage UL2-N	REAL	V	0.0 ... 1000000.0	2
10...13	Voltage UL3-N	REAL	V	0.0 ... 1000000.0	3
14...17	Voltage UL1-L2	REAL	V	0.0 ... 1000000.0	4
18...21	Voltage UL2-L3	REAL	V	0.0 ... 1000000.0	5
22...25	Voltage UL3-L1	REAL	V	0.0 ... 1000000.0	6
26...29	Current L1	REAL	A	0.0 … 100000.0	7
30...33	Current L2	REAL	A	0.0 … 100000.0	8
34...37	Current L3	REAL	A	0.0 … 100000.0	9
38...41	Power factor L1	REAL	-	0.0 ... 1.0	19
42...45	Power factor L2	REAL	-	0.0 ... 1.0	20
46...49	Power factor L3	REAL	-	0.0 ... 1.0	21
50...53	Total power factor L1L2L3	REAL	-	0.0 ... 1.0	37
54...57	Frequency	REAL	1 Hz	45.0 ... 65.0	30
58...61	Amplitude unbalance for voltage	REAL	%	0 ... 100	38
62...65	Amplitude unbalance for current	REAL	%	0 to 100	39
66...69	Apparent power L1	REAL	VA	-3.0×10^9 … $+3.0 \times 10^9$	10
70...73	Apparent power L2	REAL	VA	-3.0×10^9 … $+3.0 \times 10^9$	11
74...77	Apparent power L3	REAL	VA	-3.0×10^9 … $+3.0 \times 10^9$	12
78...81	Total apparent power L1L2L3	REAL	VA	-3.0×10^9 … $+3.0 \times 10^9$	36
82...85	Reactive power L1	REAL	var	-3.0×10^9 … $+3.0 \times 10^9$	16
86...89	Reactive power L2	REAL	var	-3.0×10^9 … $+3.0 \times 10^9$	17
90...93	Reactive power L3	REAL	var	-3.0×10^9 … $+3.0 \times 10^9$	18
94...97	Total reactive power L1L2L3	REAL	var	-3.0×10^9 … $+3.0 \times 10^9$	35
98...101	Active power L1	REAL	W	-3.0×10^9 … $+3.0 \times 10^9$	13

Byte	Measured variable	Data type	Unit	Value range	Measured value ID
102...105	Active power L2	REAL	W	-3.0×10^9 … $+3.0 \times 10^9$	14
106...109	Active power L3	REAL	W	-3.0×10^9 … $+3.0 \times 10^9$	15
110...113	Total active power L1L2L3	REAL	W	-3.0×10^9 … $+3.0 \times 10^9$	34
114...117	Phase angle L1	REAL	°	0.0 ... 360.0	61178
118...121	Phase angle L2	REAL	°	0.0 ... 360.0	61198
122...125	Phase angle L3	REAL	°	0.0 ... 360.0	61218
126...129	Total apparent energy L1L2L3	REAL	VAh	$0.0 \ldots 3.4 \times 10^{38}$	204
130...133	Total reactive energy L1L2L3	REAL	varh	-3.4×10^{38} to $+3.4 \times 10^{38}$	206
134...137	Total active energy L1L2L3	REAL	Wh	-3.4×10^{38} to $+3.4 \times 10^{38}$	205
138...141	Total reactive energy inflow L1L2L3	REAL	varh	$0.0 \ldots 3.4 \times 10^{38}$	202
142...145	Total reactive energy outflow L1L2L3	REAL	varh	$0.0 \ldots 3.4 \times 10^{38}$	203
146...149	Total active energy inflow L1L2L3	REAL	Wh	$0.0 \ldots 3.4 \times 10^{38}$	200
150...153	Total active energy outflow L1L2L3	REAL	Wh	$0.0 \ldots 3.4 \times 10^{38}$	201
154...161	Total apparent energy L1L2L3	LREAL	VAh	$0.0 \ldots 1.8 \times 10^{308}$	214
162...169	Total reactive energy L1L2L3	LREAL	varh	-1.8×10^{308} to $+1.8 \times 10^{308}$	216
170...177	Total active energy L1L2L3	LREAL	Wh	-1.8×10^{308} to $+1.8 \times 10^{308}$	215
178...185	Total reactive energy inflow L1L2L3	LREAL	varh	$0.0 \ldots 1.8 \times 10^{308}$	212
186...193	Total reactive energy outflow L1L2L3	LREAL	varh	$0.0 \ldots 1.8 \times 10^{308}$	213
194...201	Total active energy inflow L1L2L3	LREAL	Wh	$0.0 \ldots 1.8 \times 10^{308}$	210
202...209	Total active energy outflow L1L2L3	LREAL	Wh	$0.0 \ldots 1.8 \times 10^{308}$	211
210...213	Neutral current	REAL	A	0.0 ... 100000.0	61149

Neutral current

If you operate the AI Energy Meter 480VAC ST with connection type 3P4W, the neutral current is also measured under the following conditions:

- Transmission factors of all phase currents (primary and secondary currents) are identical.
- Measured phase currents are greater than the value of the "Low limit for measuring current parameter.

  The neutral current is subject to a "Low limit for measuring current" like all other measured current values. The lowest value of all three configured low limits is used as the minimum value.

If one of the conditions is not met, 0 is entered as the value for the neutral current. You can read the neutral current calculated using measured value data record 142.

Procedure

Data record 142 is located on the AI Energy Meter 480VAC ST. Use SFB "RDREC" to read out the data record from the module. This system function block is stored in the STEP 7 library.

Measured values in STEP 7 as of V5.5

Measured values are represented as negative values in STEP 7 as of V5.5 if the value range of the integer format (32767 dec) is exceeded. This is not an error in the measured value. Solution: Select hexadecimal representation.

Conversion of 64-bit floating-point numbers

If you cannot process 64-bit floating-point numbers in your automation system, we recommend conversion to 32-bit floating-point numbers. Note the conversion can cause loss of accuracy. For a description of the conversion of the 64-bit floating-point numbers (data type LREAL) into 32-bit floating-point numbers (data type REAL) please refer to the Internet (http://support.automation.siemens.com/WW/view/en/56600676).

E.3 Structure for energy counters (DS 143)

Energy meter data record 143 for different actions

The energy meter data record 143 includes all energy meters available on the module phase-by-phase. The data record can be used for different actions:

- Reset the energy counter to user-specific value (e.g. "0")
- Reading the current values of the energy counters
- Reading the overflow counters
- Reading the operating hours

Energy meter data record 143

Table E- 2 Energy meter data record 143

Byte	Measured variable	Data type	Unit	Value range	Measured value ID
0	Version	BYTE	-	1	-
1	Reserved	BYTE	-	0	-
2	Status / control byte 1 - L1	BYTE	Bit string	-	-
3	Status / control byte 2 - L1	BYTE	Bit string		
4	Status / control byte 1 - L2	BYTE	Bit string		
5	Status / control byte 2 - L2	BYTE	Bit string		
6	Status / control byte 1 - L3	BYTE	Bit string		
7	Status / control byte 2 - L3	BYTE	Bit string		
8...15	Active energy inflow (initial value) L1	LREAL	Wh	During reading: 0.0...1.8 x 10^{308} During writing For continuous counting: 0.0...3.4 x 10^{12} During writing For periodic counting:	61180
16...23	Active energy outflow (initial value) L1	LREAL	Wh		61181
24...31	Reactive energy inflow (initial value) L1	LREAL	varh		61182
32...39	Reactive energy outflow (initial value) L1	LREAL	varh		61183
40...47	Apparent energy (initial value) L1	LREAL	VAh		61184
48...55	Active energy inflow (initial value) L2	LREAL	Wh		61200
56...63	Active energy outflow (initial value) L2	LREAL	Wh		61201
64...61	Reactive energy inflow (initial value) L2	LREAL	varh		61202
72...79	Reactive energy outflow (initial value) L2	LREAL	varh		61203
80...87	Apparent energy (initial value) L2	LREAL	VAh		61204
88...95	Active energy inflow (initial value) L3	LREAL	Wh		61220

Byte	Measured variable	Data type	Unit	Value range	Measured value ID
96...103	Active energy outflow (initial value) L3	LREAL	Wh	0...configured full-scale value (10^3 ...10^{15})	61221
104...111	Reactive energy inflow (initial value) L3	LREAL	varh		61222
112...119	Reactive energy outflow (initial value) L3	LREAL	varh		61223
120...127	Apparent energy (initial value) L3	LREAL	VAh		61224
128...129	Overflow counter active energy inflow L1	UINT	-	During reading: 0...65535 During writing for continuous counting: 0 During writing for periodic counting: 0...65500	61190
130..131	Overflow counter active energy outflow L1	UINT	-		61191
132...133	Overflow counter reactive energy inflow L1	UINT	-		61192
134...135	Overflow counter reactive energy outflow L1	UINT	-		61193
136...137	Overflow counter apparent energy L1	UINT	-		61194
138...139	Overflow counter active energy inflow L2	UINT	-		61210
140...141	Overflow counter active energy outflow L2	UINT	-		61211
142...143	Overflow counter reactive energy inflow L2	UINT	-		61212
144...145	Overflow counter reactive energy outflow L2	UINT	-		61213
146...147	Overflow counter apparent energy L2	UINT	-		61214
148...149	Overflow counter active energy inflow L3	UINT	-		61230
150...151	Overflow counter active energy outflow L3	UINT	-		61231
152...153	Overflow counter reactive energy inflow L3	UINT	-		61232
154...155	Overflow counter reactive energy outflow L3	UINT	-		61233
156...157	Overflow counter apparent energy L3	UINT	-		61234
158...161	Operating hours counter L1 (initial value)	REAL	h	During reading: 0...3.4x10^{38} During writing: 0...10^9	65505
162...165	Operating hours counter L2 (initial value)	REAL	h		65506
166...169	Operating hours counter L3 (initial value)	REAL	h		65507

Status information

When data record 143 is read with the RDREC instruction, Bytes 2 to 7 supply phase-specific status information for energy counters, overflow counters and operating hours counters.

The status information enables you can see which counters are returning their values in the data record 143. If energy counters return their values in the status byte 1, you can determine the type of energy counter with status byte 2.

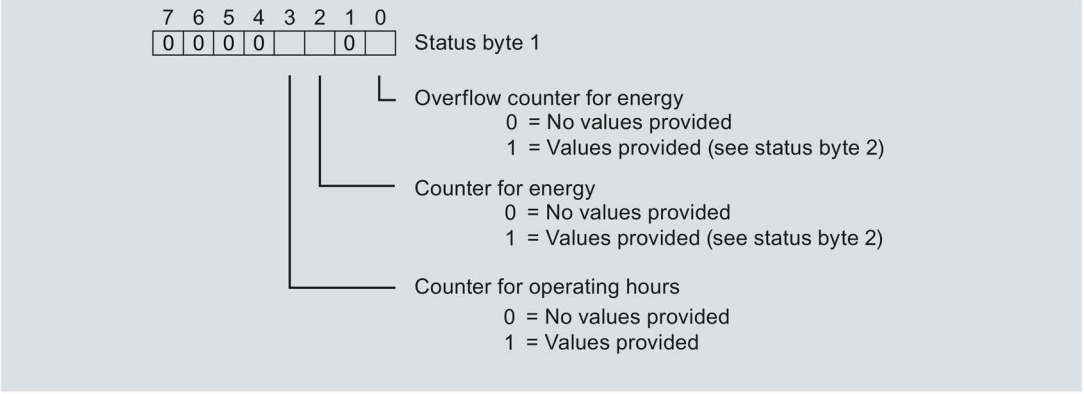

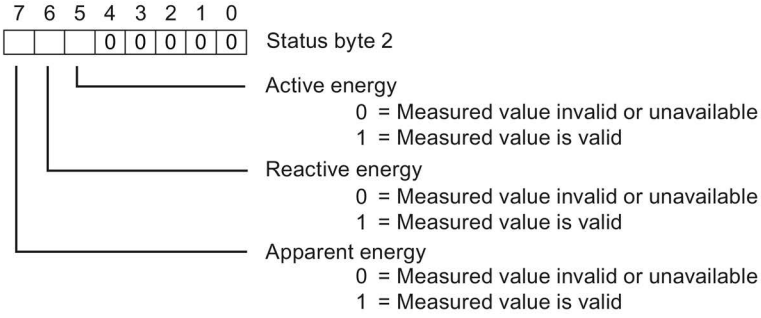

Figure E-1 Status information DS 143 (read access)

Control information

When data record 143 is written with the WRREC instruction, Bytes 2 to 7 are used as phase-specific control information for energy counters, overflow counters and operating hours counter. The length of the control information amounts to 2 bytes for each phase:

- In control byte 1 you determine which counter you want to reset and the time at which counters are reset.
- In Control byte 2 you determine which energy counters and which overflow counters you want to reset.

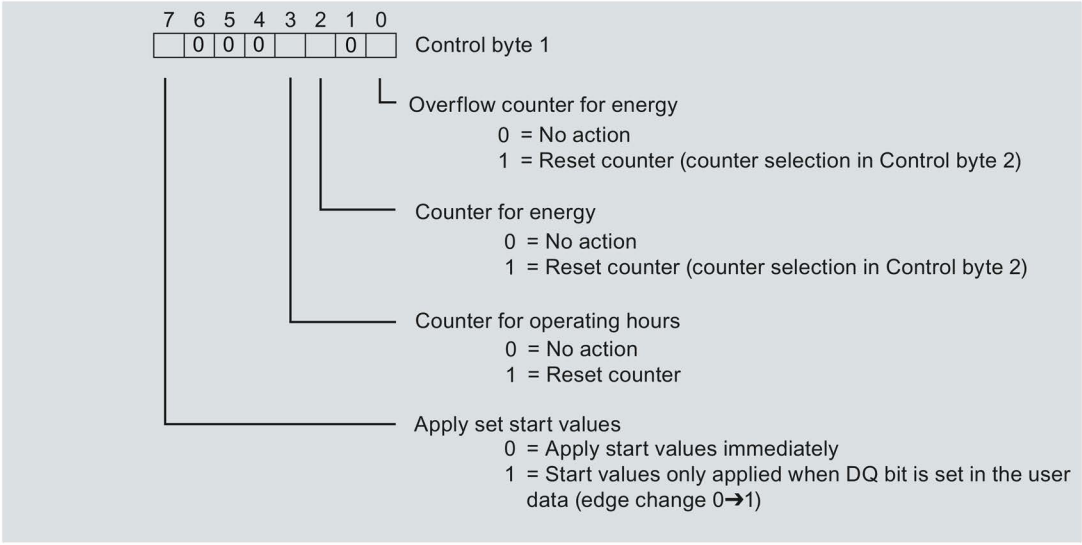

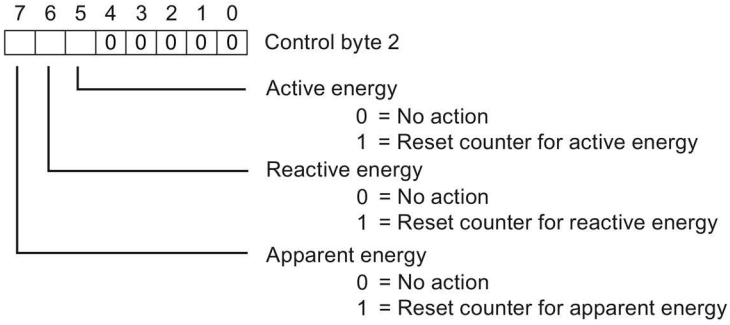

Figure E-2 Control information DS 143 (write access)

Error while transferring the data record

The module always checks all the values of the transferred data record. Only if all the values were transferred without errors does the module apply the values from the data record.

The WRREC instruction for writing data records returns corresponding error codes when errors occur in the STATUS parameter.

The following table shows the module-specific error codes and their meaning for the measured value data record 143:

Error code in STATUS parameter (hexadecimal)				Meaning	Solution
Byte 0	Byte 1	Byte 2	Byte 3		
DF	80	B0	00	Number of the data record unknown	Enter a valid number for the data record.
DF	80	B1	00	Length of the data record incorrect	Enter a valid value for the data record length.
DF	80	B2	00	Slot invalid or cannot be accessed.	Check the station whether the module is plugged or drawn. Check the assigned values for the parameters of the WRREC instruction
DF	80	E1	01	Reserved bits are not 0.	Check Byte 2...7 and set the reserved bits back to 0.
DF	80	E1	39	Incorrect version entered.	Check Byte 0. Enter a valid version.
DF	80	E1	3A	Incorrect data record length entered.	Check the parameters of the WRREC instruction. Enter a valid length.
DF	80	E1	3C	At least one start value is invalid.	Check Bytes 8...103 and Bytes 158...169. The start values may not be negative.
DF	80	E1	3D	At least one start value is too large	Check Bytes 8...103 and Bytes 158...169. Observe the ranges of values for start values.

E.4 Measured value data record for maximum values (DS 144)

Measured variables of the module

The largest values ever measured or calculated from the time AI Energy Meter 480VAC ST was started are stored in this data record.

Byte	Measured variable	Format	Unit	Default	Measured value ID	Connection type				
						1P2W	3x1P2W	2P3W	3P4W	3P4W1
0	Version	BYTE	-	0	-	✓	✓	✓	✓	✓
1	Reserved	BYTE	-	0	-	✓	✓	✓	✓	✓
2...5	Max. voltage UL1-N	REAL	V	0	40	✓	✓	✓	✓	✓
6...9	Max. voltage UL2-N	REAL	V	0	41		✓	✓	✓	✓
10...13	Max. voltage UL3-N	REAL	V	0	42		✓		✓	✓
14...17	Max. voltage UL1-L2	REAL	V	0	43				✓	✓
18...21	Max. voltage UL2-L3	REAL	V	0	44				✓	✓
22...25	Max. voltage UL3-L1	REAL	V	0	45				✓	✓
26...29	Max. current L1 [1]	REAL	A	0	46	✓	✓	✓	✓	✓
30...33	Max. current L2 [1]	REAL	A	0	47		✓	✓	✓	✓
34...37	Max. current L3 [1]	REAL	A	0	48		✓		✓	✓
38...41	Max. apparent power L1	REAL	VA	0	49	✓	✓	✓	✓	✓
42...45	Max. apparent power L2	REAL	VA	0	50		✓	✓	✓	✓
46...49	Max. apparent power L3	REAL	VA	0	51		✓		✓	✓
50...53	Max. active power L1	REAL	W	-3.0×10^9	52	✓	✓	✓	✓	✓
54...57	Max. active power L2	REAL	W	-3.0×10^9	53		✓	✓	✓	✓
58...61	Max. active power L3	REAL	W	-3.0×10^9	54		✓		✓	✓
62...65	Max. reactive power L1	REAL	var	-3.0×10^9	55	✓	✓	✓	✓	✓
66...69	Max. reactive power L2	REAL	var	-3.0×10^9	56		✓	✓	✓	✓
70...73	Max. reactive power L3	REAL	var	-3.0×10^9	57		✓		✓	✓

Byte	Measured variable	Format	Unit	Default	Measured value ID	Connection type				
						1P2W	3x1P2W	2P3W	3P4W	3P4W1
74...77	Max. power factor L1	REAL	-	0	58	✓	✓	✓	✓	✓
78...81	Max. power factor L2	REAL	-	0	59		✓	✓	✓	✓
82...85	Max. power factor L3	REAL	-	0	60		✓		✓	✓
86...89	Max. frequency	REAL	Hz	45	61	✓	✓	✓	✓	✓
90...93	Max. total apparent power	REAL	VA	0	65	✓	✓	✓	✓	✓
94...97	Max. total active power	REAL	W	-3.0×10^9	66	✓	✓	✓	✓	✓
98...101	Max. total reactive power	REAL	var	-3.0×10^9	67	✓	✓	✓	✓	✓
102	Max. total power factor	REAL	-	0	68	✓	✓	✓	✓	✓

[1] The values reference the amount of the current measured value

E.5 Measured value data record for minimum values (DS 145)

Measured variables of the module

The smallest values ever measured or calculated from the time AI Energy Meter 480VAC ST was started are stored in this data record.

Byte	Measured variable	Format	Unit	Default	Measured value ID	Connection type				
						1P2W	3x1P2W	2P3W	3P4W	3P4W1
0	Version	BYTE	-	0	-	✓	✓	✓	✓	✓
1	Reserved	BYTE	-	0	-	✓	✓	✓	✓	✓
2...5	Min. voltage UL1-N	REAL	V	1000000	70	✓	✓	✓	✓	✓
6...9	Min. voltage UL2-N	REAL	V	1000000	71		✓	✓	✓	✓
10...13	Min. voltage UL3-N	REAL	V	1000000	72		✓		✓	✓
14...17	Min. voltage UL1-L2	REAL	V	1800000	73				✓	✓
18...21	Min. voltage UL2-L3	REAL	V	1800000	74				✓	✓
22...25	Min. voltage UL3-L1	REAL	V	1800000	75				✓	✓
26...29	Min. current L1 [1]	REAL	A	100000	76	✓	✓	✓	✓	✓
30...33	Min. current L2 [1]	REAL	A	100000	77		✓	✓	✓	✓
34...37	Min. current L3 [1]	REAL	A	100000	78		✓		✓	✓
38...41	Min. apparent power L1	REAL	VA	$+3.0 \times 10^9$	79	✓	✓	✓	✓	✓
42...45	Min. apparent power L2	REAL	VA	$+3.0 \times 10^9$	80		✓	✓	✓	✓
46...49	Min. apparent power L3	REAL	VA	$+3.0 \times 10^9$	81		✓		✓	✓
50...53	Min. active power L1	REAL	W	$+3.0 \times 10^9$	82	✓	✓	✓	✓	✓
54...57	Min. active power L2	REAL	W	$+3.0 \times 10^9$	83		✓	✓	✓	✓
58...61	Min. active power L3	REAL	W	$+3.0 \times 10^9$	84		✓		✓	✓
62...65	Min. reactive power L1	REAL	var	$+3.0 \times 10^9$	85	✓	✓	✓	✓	✓
66...69	Min. reactive power L2	REAL	var	$+3.0 \times 10^9$	86		✓	✓	✓	✓
70...73	Min. reactive power L3	REAL	var	$+3.0 \times 10^9$	87		✓		✓	✓
74...77	Min. power factor L1	REAL	-	1	88	✓	✓	✓	✓	✓
78...81	Min. power factor L2	REAL	-	1	89		✓	✓	✓	✓
82...85	Min. power factor L3	REAL	-	1	90		✓		✓	✓
86...89	Min. frequency	REAL	Hz	65	91	✓	✓	✓	✓	✓

Byte	Measured variable	Format	Unit	Default	Measured value ID	Connection type				
						1P2W	3x1P2W	2P3W	3P4W	3P4W1
90...93	Min. total apparent power	REAL	VA	+3.0 x 10^9	95	✓	✓	✓	✓	✓
94...97	Min. total active power	REAL	W	+3.0 x 10^9	96	✓	✓	✓	✓	✓
98...101	Min. total reactive power	REAL	var	+3.0 x 10^9	97	✓	✓	✓	✓	✓
102	Min. total power factor	REAL	-	1	98	✓	✓	✓	✓	✓

[1] The values reference the amount of the current measured value

E.6 Measured value data record for phase-based measured values L1 (DS 147)

Measured variables of the module (DS 147)

Byte	Measured variable	Format	Unit	Value range	Measured value ID	Connection type				
						1P2W	3x1P2W	2P3W	3P4W	3P4W1
0	Version	BYTE	-	1	-	✓	✓	✓	✓	✓
1	Reserved	BYTE	-	0	-	✓	✓	✓	✓	✓
2...3	Qualifier L1	WORD	Bit field	0b 00 00 00 00 0b qq 00 00 xx	65500	✓	✓	✓	✓	✓
4...7	Voltage UL1-N	REAL	V	0.0 ... 1000000.0	1	✓	✓	✓	✓	✓
8...11	Current L1	REAL	A	0.0 … 100000.0	7	✓	✓	✓	✓	✓
12...15	Apparent power L1	REAL	VA	-3.0×10^9 … $+3.0 \times 10^9$	10	✓	✓	✓	✓	✓
16...19	Active power L1	REAL	W	-3.0×10^9 … $+3.0 \times 10^9$	13	✓	✓	✓	✓	✓
20...23	Reactive power L1	REAL	var	-3.0×10^9 … $+3.0 \times 10^9$	16	✓	✓	✓	✓	✓
24...27	Power factor L1	REAL	-	0.0 ... 1.0	19	✓	✓	✓	✓	✓
28...31	Phase angle L1	REAL	°	0.0 ... 360.0	61178	✓	✓	✓	✓	✓
32...39	Apparent energy L1	LREAL	VAh	0.0 ... 1.8×10^{308}	61184	✓	✓	✓	✓	✓
40...47	Active energy (total) L1	LREAL	Wh	-1.8×10^{308} ... $+1.8 \times 10^{308}$	61185	✓	✓	✓	✓	✓
48...55	Reactive energy (total) L1	LREAL	varh	-1.8×10^{308} ... $+1.8 \times 10^{308}$	61186	✓	✓	✓	✓	✓
56...59	Max. voltage UL1-N	REAL	V	0.0 ... 1000000.0	40	✓	✓	✓	✓	✓
60...63	Max. current L1	REAL	A	0.0 ... 100000.0	46	✓	✓	✓	✓	✓
64...67	Max. apparent power L1	REAL	VA	-3.0×10^9 … $+3.0 \times 10^9$	49	✓	✓	✓	✓	✓
68...71	Max. active power L1	REAL	W	-3.0×10^9 … $+3.0 \times 10^9$	52	✓	✓	✓	✓	✓
72...75	Max. reactive power L1	REAL	var	-3.0×10^9 … $+3.0 \times 10^9$	55	✓	✓	✓	✓	✓
76...79	Max. power factor L1	REAL	-	0.0 ... 1.0	58	✓	✓	✓	✓	✓

Byte	Measured variable	Format	Unit	Value range	Measured value ID	Connection type				
						1P2W	3x1P2W	2P3W	3P4W	3P4W1
80...83	Min. voltage UL1-N	REAL	V	0.0 ... 1000000.0	70	✓	✓	✓	✓	✓
84...87	Min. current L1	REAL	A	0.0 ... 100000.0	76	✓				
88...91	Min. apparent power L1	REAL	VA	-3.0×10^9 … $+3.0 \times 10^9$	79	✓	✓	✓	✓	✓
92...95	Min. active power L1	REAL	W	-3.0×10^9 … $+3.0 \times 10^9$	83	✓	✓	✓	✓	✓
96...99	Min. reactive power L1	REAL	var	-3.0×10^9 … $+3.0 \times 10^9$	85	✓	✓	✓	✓	✓
100...103	Min. power factor L1	REAL	-	0.0 ... 1.0	88	✓	✓	✓	✓	✓

E.7 Measured value data record for phase-based measured values L2 (DS 148)

Measured variables of the module (DS 148)

Byte	Measured variable	Format	Unit	Value range	Measured value ID	Connection type				
						1P2W	3x1P2W	2P3W	3P4W	3P4W1
0	Version	BYTE	-	1	-	✓	✓	✓	✓	✓
1	Reserved	BYTE	-	0	-	✓	✓	✓	✓	✓
2...3	Qualifier L2	WORD	Bit field	0b 00 00 00 00 0b qq 00 00 xx	65501		✓	✓	✓	✓
4...7	Voltage UL1-N	REAL	V	0.0 ... 1000000.0	2		✓	✓	✓	✓
8...11	Current L2	REAL	A	0.0 … 100000.0	8		✓	✓	✓	✓
12...15	Apparent power L2	REAL	VA	-3.0×10^9 … $+3.0 \times 10^9$	11		✓	✓	✓	✓
16...19	Active power L2	REAL	W	-3.0×10^9 … $+3.0 \times 10^9$	14		✓	✓	✓	✓
20...23	Reactive power L2	REAL	var	-3.0×10^9 … $+3.0 \times 10^9$	17		✓	✓	✓	✓
24...27	Power factor L2	REAL	-	0.0 ... 1.0	20		✓	✓	✓	✓
28...31	Phase angle L2	REAL	°	0.0 ... 360.0	61198		✓	✓	✓	✓
32...39	Apparent energy L2	LREAL	VAh	0.0 ... 1.8×10^{308}	61204		✓	✓	✓	✓
40...47	Active energy (total) L2	LREAL	Wh	-1.8×10^{308} to $+1.8 \times 10^{308}$	61205		✓	✓	✓	✓
48...55	Reactive energy (total) L2	LREAL	varh	-1.8×10^{308} to $+1.8 \times 10^{308}$	61206		✓	✓	✓	✓
56...59	Max. voltage UL1-N	REAL	V	0.0 ... 1000000.0	41		✓	✓	✓	✓
60...63	Max. current L2	REAL	A	0.0 ... 100000.0	47		✓	✓	✓	✓
64...67	Max. apparent power L2	REAL	VA	-3.0×10^9 … $+3.0 \times 10^9$	50		✓	✓	✓	✓
68...71	Max. active power L2	REAL	W	-3.0×10^9 … $+3.0 \times 10^9$	53		✓	✓	✓	✓
72...75	Max. reactive power L2	REAL	var	-3.0×10^9 … $+3.0 \times 10^9$	56		✓	✓	✓	✓
76...79	Max. power factor L2	REAL	-	0.0 ... 1.0	59		✓	✓	✓	✓

Byte	Measured variable	Format	Unit	Value range	Measured value ID	Connection type				
						1P2W	3x1P2W	2P3W	3P4W	3P4W1
80...83	Min. voltage UL1-N	REAL	V	0.0 ... 1000000.0	71		✓	✓	✓	✓
84...87	Min. current L2	REAL	A	0.0 ... 100000.0	77					
88...91	Min. apparent power L2	REAL	VA	-3.0×10^9 … $+3.0 \times 10^9$	80		✓	✓	✓	✓
92...95	Min. active power L2	REAL	W	-3.0×10^9 … $+3.0 \times 10^9$	84		✓	✓	✓	✓
96...99	Min. reactive power L2	REAL	var	-3.0×10^9 … $+3.0 \times 10^9$	86		✓	✓	✓	✓
100...103	Min. power factor L2	REAL	-	0.0 ... 1.0	89		✓	✓	✓	✓

E.8 Measured value data record for phase-based measured values L3 (DS 149)

Measured variables of the module (DS 149)

Byte	Measured variable	Format	Unit	Value range	Measured value ID	Connection type				
						1P2W	3x1P2W	2P3W	3P4W	3P4W1
0	Version	BYTE	-	1	-	✓	✓	✓	✓	✓
1	Reserved	BYTE	-	0	-	✓	✓	✓	✓	✓
2...3	Qualifier L3	WORD	Bit field	0b 00 00 00 00 0b qq 00 00 xx	65502		✓		✓	✓
4...7	Voltage UL1-N	REAL	V	0.0 ... 1000000.0	3		✓		✓	✓
8...11	Current L3	REAL	A	0.0 … 100000.0	9		✓		✓	✓
12...15	Apparent power L3	REAL	VA	-3.0×10^9 … $+3.0 \times 10^9$	12		✓		✓	✓
16...19	Active power L3	REAL	W	-3.0×10^9 … $+3.0 \times 10^9$	15		✓		✓	✓
20...23	Reactive power L3	REAL	var	-3.0×10^9 … $+3.0 \times 10^9$	18		✓		✓	✓
24...27	Power factor L3	REAL	-	0.0 ... 1.0	21		✓		✓	✓
28...31	Phase angle L3	REAL	°	0.0 ... 360.0	61218		✓		✓	✓
32...39	Apparent energy L3	LREAL	VAh	0.0 ... 1.8×10^{308}	61224		✓		✓	✓
40...47	Active energy (total) L3	LREAL	Wh	-1.8×10^{308} to $+1.8 \times 10^{308}$	61225		✓		✓	✓
48...55	Reactive energy (total) L3	LREAL	varh	-1.8×10^{308} to $+1.8 \times 10^{308}$	61226		✓		✓	✓
56...59	Max. voltage UL1-N	REAL	V	0.0 ... 1000000.0	42		✓		✓	✓
60...63	Max. current L3	REAL	A	0.0 ... 100000.0	48		✓		✓	✓
64...67	Max. apparent power L3	REAL	VA	-3.0×10^9 … $+3.0 \times 10^9$	51		✓		✓	✓
68...71	Max. active power L3	REAL	W	-3.0×10^9 … $+3.0 \times 10^9$	53		✓		✓	✓
72...75	Max. reactive power L3	REAL	var	-3.0×10^9 … $+3.0 \times 10^9$	57		✓		✓	✓
76...79	Max. power factor L3	REAL	-	0.0 ... 1.0	60		✓		✓	✓

Byte	Measured variable	Format	Unit	Value range	Measured value ID	Connection type				
						1P2W	3x1P2W	2P3W	3P4W	3P4W1
80...83	Min. voltage UL1-N	REAL	V	0.0 ... 1000000.0	72		✓		✓	✓
84...87	Min. current L3	REAL	A	0.0 ... 100000.0	78					
88...91	Min. apparent power L3	REAL	VA	-3.0×10^9 … $+3.0 \times 10^9$	81		✓		✓	✓
92...95	Min. active power L3	REAL	W	-3.0×10^9 … $+3.0 \times 10^9$	85		✓		✓	✓
96...99	Min. reactive power L3	REAL	var	-3.0×10^9 … $+3.0 \times 10^9$	87		✓		✓	✓
100...103	Min. power factor L3	REAL	-	0.0 ... 1.0	90		✓		✓	✓

E.9 Measured value data record for advanced measurement and status values (DS 150)

Measured variables of the module

Data record 150

Byte	Measured variable	Format	Unit	Value range	Measured value ID
0	Version	BYTE	-	1	-
1	Reserved	BYTE	-	0	-
2...5	Operating hours counter L1L2L3	REAL	h	0.0 ... 3.4 x 10^{38}	65504
6...9	Operating hours counter L1	REAL	h	0.0 ... 3.4 x 10^{38}	65505
10...13	Operating hours counter L2	REAL	h	0.0 ... 3.4 x 10^{38}	65506
14...17	Operating hours counter L3	REAL	h	0.0 ... 3.4 x 10^{38}	65507
18...19	Status limit violation GW 1...16	WORD	Bit string	xxxx xxxx xxxx xxxx	65509
20...21	Status of energy counter overflows [1]	WORD	Bit string	xxxx xxxx xxxx xxxx	65508
22...25	Counter limit violation GW 1	UDINT	-	0 ... 4294967296	65510
26...29	Counter limit violation GW 2	UDINT	-	0 ... 4294967296	65511
30...33	Counter limit violation GW 3	UDINT	-	0 ... 4294967296	65512
34...37	Counter limit violation GW 4	UDINT	-	0 ... 4294967296	65513
38...41	Counter limit violation GW 5	UDINT	-	0 ... 4294967296	65514
42...45	Counter limit violation GW 6	UDINT	-	0 ... 4294967296	65515
46...49	Counter limit violation GW 7	UDINT	-	0 ... 4294967296	65516
50...53	Counter limit violation GW 8	UDINT	-	0 ... 4294967296	65517
54...57	Counter limit violation GW 9	UDINT	-	0 ... 4294967296	65518
58...61	Counter limit violation GW 10	UDINT	-	0 ... 4294967296	65519
62...65	Counter limit violation GW 11	UDINT	-	0 ... 4294967296	65520
66...69	Counter limit violation GW 12	UDINT	-	0 ... 4294967296	65521
70...73	Counter limit violation GW 13	UDINT	-	0 ... 4294967296	65522
74...77	Counter limit violation GW 14	UDINT	-	0 ... 4294967296	65523
78...81	Counter limit violation GW 15	UDINT	-	0 ... 4294967296	65524

Byte	Measured variable	Format	Unit	Value range	Measured value ID
82..85	Counter limit violation GW 16	UDINT	-	0 ... 4294967296	65525
86..87	Qualifier L1L2L3	WORD	Bit string	xxxx xxxx xxxx xxxx	65503

[1] Energy counters count periodically - counter overflow at:
Bit 0 = 1: Active energy inflow L1
Bit 1 = 1: Active energy outflow L1
Bit 2 = 1: Reactive energy inflow L1
Bit 3 = 1: Reactive energy outflow L1
Bit 4 = 1: Apparent energy L1
Bit 5 = 1: Active energy inflow L2
Bit 6 = 1: Active energy outflow L2
Bit 7 = 1: Reactive energy inflow L2
Bit 8 = 1: Reactive energy outflow L2
Bit 9 = 1: Apparent energy L2
Bit 10 = 1: Active energy inflow L3
Bit 11 = 1: Active energy outflow L3
Bit 12 = 1: Reactive energy inflow L3
Bit 13 = 1: Reactive energy outflow L3
Bit 14 = 1: Apparent energy L3
Bit 15: Reserved

Tips and tricks

F

F.1 Tips and tricks

Processing and visualizing energy data

On the basis of an application example we show you how the measured values of the AI Energy Meter can be processed further and visualized.

You can find this application example on the Internet (http://support.automation.siemens.com/WW/view/en/86299299)

IT network

You must create an artificial N-conductor (for example, by means of a 1:1 voltage transformer) in IT networks due to the missing neutral conductor. You can then use the module.

SIEMENS

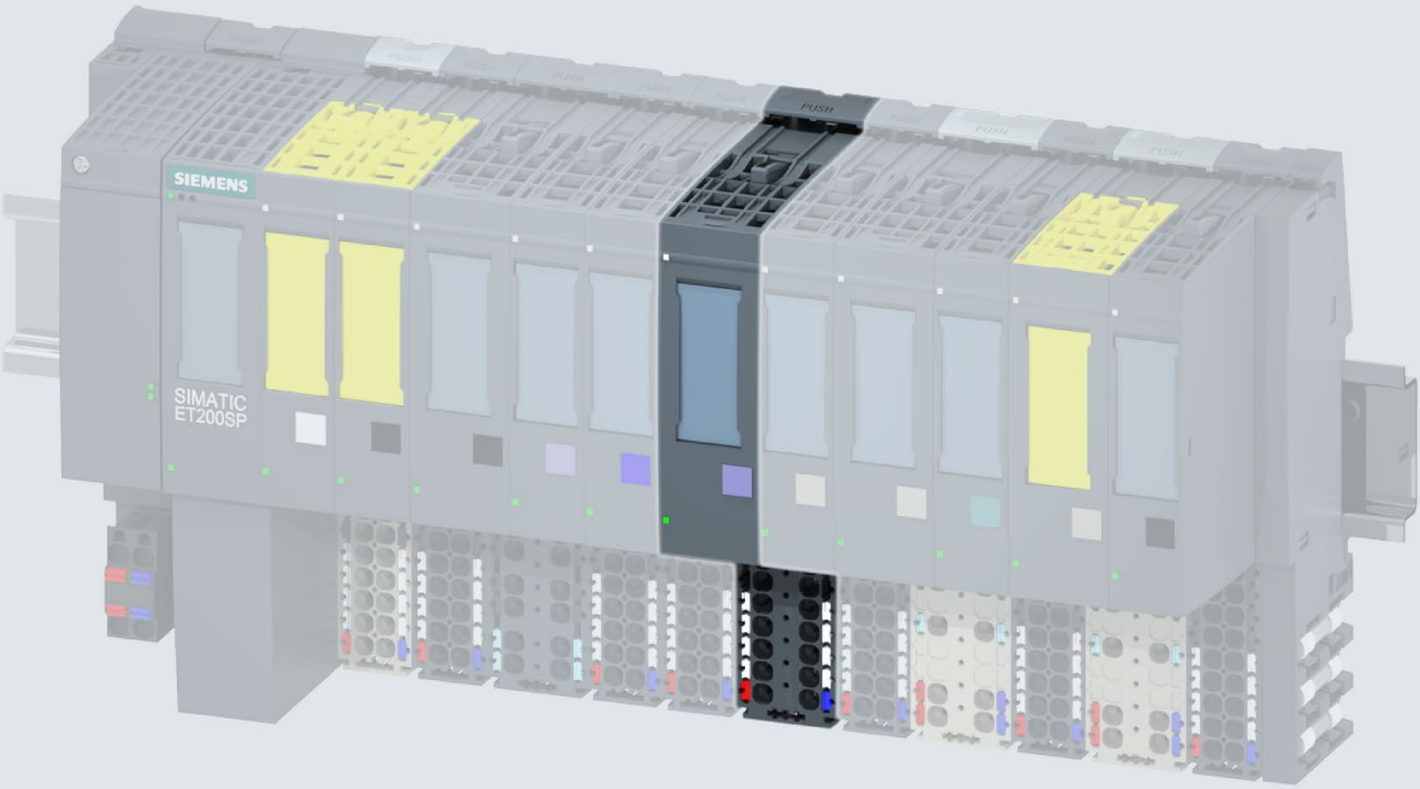

Manual

SIMATIC

ET 200SP

Analog input module
AI Energy Meter 480VAC/CT HF
(6ES7134-6PA00-0CU0)

Edition 07/2018

support.industry.siemens.com

SIEMENS

SIMATIC

ET 200SP
Analog input module
AI Energy Meter 480VAC/CT HF
(6ES7134-6PA00-0CU0)

Manual

Preface

Documentation guide 1

Product overview 2

Wiring 3

Configuration / address space 4

Quick start 5

Reading and processing measured values 6

Energy counters 7

Operating hours counter 8

Limit monitoring 9

Minimum and maximum values 10

Power quality analysis functions 11

Phase-based measured values 12

Parameters 13

Interrupts/diagnostic alarms 14

Technical specifications 15

Parameter data records A

Measured variables B

Module versions C

User data variants D

Measured value data records E

Tips and tricks F

07/2018

A5E42674880-AA

Legal information

Warning notice system

This manual contains notices you have to observe in order to ensure your personal safety, as well as to prevent damage to property. The notices referring to your personal safety are highlighted in the manual by a safety alert symbol, notices referring only to property damage have no safety alert symbol. These notices shown below are graded according to the degree of danger.

⚠ DANGER

indicates that death or severe personal injury **will** result if proper precautions are not taken.

⚠ WARNING

indicates that death or severe personal injury **may** result if proper precautions are not taken.

⚠ CAUTION

indicates that minor personal injury can result if proper precautions are not taken.

NOTICE

indicates that property damage can result if proper precautions are not taken.

If more than one degree of danger is present, the warning notice representing the highest degree of danger will be used. A notice warning of injury to persons with a safety alert symbol may also include a warning relating to property damage.

Qualified Personnel

The product/system described in this documentation may be operated only by **personnel qualified** for the specific task in accordance with the relevant documentation, in particular its warning notices and safety instructions. Qualified personnel are those who, based on their training and experience, are capable of identifying risks and avoiding potential hazards when working with these products/systems.

Proper use of Siemens products

Note the following:

⚠ WARNING

Siemens products may only be used for the applications described in the catalog and in the relevant technical documentation. If products and components from other manufacturers are used, these must be recommended or approved by Siemens. Proper transport, storage, installation, assembly, commissioning, operation and maintenance are required to ensure that the products operate safely and without any problems. The permissible ambient conditions must be complied with. The information in the relevant documentation must be observed.

Trademarks

All names identified by ® are registered trademarks of Siemens AG. The remaining trademarks in this publication may be trademarks whose use by third parties for their own purposes could violate the rights of the owner.

Disclaimer of Liability

We have reviewed the contents of this publication to ensure consistency with the hardware and software described. Since variance cannot be precluded entirely, we cannot guarantee full consistency. However, the information in this publication is reviewed regularly and any necessary corrections are included in subsequent editions.

Siemens AG
Division Digital Factory
Postfach 48 48
90026 NÜRNBERG
GERMANY

A5E42674880-AA
℗ 08/2018 Subject to change

Copyright © Siemens AG 2018.
All rights reserved

Preface

Purpose of the documentation

This manual supplements the system manual ET 200SP distributed I/O system (http://support.automation.siemens.com/WW/view/en/58649293). Functions that generally relate to the system are described in this manual.

The information provided in this manual and in the system/function manuals supports you in commissioning the system.

Conventions

CPU: When the term "CPU" is used in this manual, it applies to the CPUs of the S7-1500 automation system as well as to the CPUs/interface modules of the distributed I/O system ET 200SP.

STEP 7: In this documentation, "STEP 7" is used as a synonym for all versions of the configuration and programming software "STEP 7 (TIA Portal)".

Please also observe notes marked as follows:

Note

A note contains important information on the product described in the documentation, on the handling of the product and on the section of the documentation to which particular attention should be paid.

Recycling and disposal

For environmentally friendly recycling and disposal of your old equipment, contact a certified electronic waste disposal company and dispose of the equipment according to the applicable regulations in your country.

Security information

Siemens provides products and solutions with industrial security functions that support the secure operation of plants, systems, machines and networks.

In order to protect plants, systems, machines and networks against cyber threats, it is necessary to implement – and continuously maintain – a holistic, state-of-the-art industrial security concept. Siemens' products and solutions constitute one element of such a concept.

Customers are responsible for preventing unauthorized access to their plants, systems, machines and networks. Such systems, machines and components should only be connected to an enterprise network or the internet if and to the extent such a connection is necessary and only when appropriate security measures (e.g. firewalls and/or network segmentation) are in place.

For additional information on industrial security measures that may be implemented, please visit (https://www.siemens.com/industrialsecurity).

Siemens' products and solutions undergo continuous development to make them more secure. Siemens strongly recommends that product updates are applied as soon as they are available and that the latest product versions are used. Use of product versions that are no longer supported, and failure to apply the latest updates may increase customers' exposure to cyber threats.

To stay informed about product updates, subscribe to the Siemens Industrial Security RSS Feed under (https://www.siemens.com/industrialsecurity).

Table of contents

Preface 3

1 Documentation guide 9

2 Product overview 14

2.1 Properties of the AI Energy Meter HF 14

2.2 Area of application 16

2.3 Special considerations for use on the PROFIBUS DP and PROFINET IO 18

3 Wiring 20

3.1 Terminal and block diagram 20

3.2 Connection examples 23

3.3 Current transformer selection data 27

4 Configuration / address space 31

4.1 Configuring 31

4.2 Selecting the module versions 32
4.2.1 Module versions at configuration with STEP 7 32
4.2.2 Module versions at configuration with GSD file 33
4.2.3 Changing over the user data variant during operation 34
4.2.4 Recommendations for selecting the module version 36

4.3 Applicable modules 37

5 Quick start 39

6 Reading and processing measured values 41

6.1 Basics for reading measured values 41

6.2 Quality information 44
6.2.1 Quality information in byte 1 of the user data 44
6.2.2 Quality information with measured value IDs 46
6.2.3 Operating quadrant 49

6.3 Reading measured values from user data cyclically 50

6.4 Read out measured values acyclically using data records 52

6.5 Time-of-day synchronization and time stamp 53

7 Energy counters 54

7.1 Evaluate measured values for energy 55

7.2 Preset and apply start values for energy and overflow counters 56
7.2.1 Preset start values for the energy meters 57
7.2.2 Apply start values from data record DS 143 immediately 58
7.2.3 Apply start values from data record DS 143 with DQ bit 60

7.3 Starting and and stopping energy meters ... 63
7.4 Example of measuring and resetting an energy meter ... 66
7.5 What is the structure of the control and feedback interface for DS 143? ... 67
8 Operating hours counter ... 69
8.1 Evaluating operating hours counters ... 70
8.2 Preset and apply start values for operating hours counters ... 71
8.2.1 Preset start values for operating hours counters ... 71
8.2.2 Apply start values from data record DS 143 immediately ... 73
8.2.3 Apply start values from data record DS 143 with DQ bit ... 73
8.3 Starting and stopping operating hours counters ... 75
9 Limit monitoring ... 77
9.1 How limit monitoring works ... 77
9.2 Influence of hysteresis and delay time on limit monitoring ... 78
9.3 Reset, activate and deactivate counters for limit violation ... 80
9.4 Measured variables for limit monitoring ... 82
10 Minimum and maximum values ... 84
10.1 Minimum and maximum values ... 84
10.2 Resetting minimum and maximum values ... 85
11 Power quality analysis functions ... 88
11.1 Power quality analysis status ... 89
11.2 Harmonics analysis ... 90
11.3 Reactive power compensation ... 91
11.4 Detection of residual current ... 91
11.5 Active factor and power factor ... 92
11.6 Neutral current In ... 92
11.7 Monitoring the instantaneous or half-wave values ... 93
12 Phase-based measured values ... 94
13 Parameters ... 96
13.1 Parameters ... 96
13.2 Description of parameters ... 101
14 Interrupts/diagnostic alarms ... 108
14.1 Status and error display ... 108
14.2 Interrupts ... 110
14.2.1 Hardware interrupts ... 110
14.2.2 Diagnostics interrupt ... 111
14.3 Diagnostic alarms ... 111

14.4 Diagnostics response 113
14.4.1 Voltage diagnostics 114
14.4.1.1 Diagnostics: Overflow/underflow 114
14.4.1.2 Voltage swell of the voltage half-wave value 116
14.4.1.3 Voltage dip of the voltage half-wave value 118
14.4.1.4 Peak values of the instantaneous values for voltage 121
14.4.2 Current diagnostics 123
14.4.2.1 Diagnostics: Overload 123
14.4.2.2 Low limit for measuring current undershot 125
14.4.2.3 Peak values of the instantaneous values for current 127
14.4.2.4 Overcurrent of the current half value 129

15 Technical specifications 132

15.1 Technical specifications 132

A Parameter data records 139

A.1 Configuration via parameter data records 139

A.2 Structure of the parameter data record 128 for the entire module 140

A.3 Structure of the parameter data record 129 for limit monitoring 153

A.4 Structure of the parameter data records 130/131 for user-data mapping 157

A.5 Structure of the parameter data record 135 for data record mapping 160

B Measured variables 163

C Module versions 192

C.1 Module version "2 I / 2 Q" 192

C.2 Module version "32 I / 20 Q" 195

C.3 "User-specific" module version 201

C.4 Module version "EE@Industry measurement data profile E0 / E1 / E2 / E3" 203

D User data variants 205

E Measured value data records 226

E.1 Overview of all measured value data records 226

E.2 Measured value data record for base measurements (DS 142) 227
E.2.1 Measured value data record for basic measured values (DS 142) version 2 227
E.2.2 Measured value data record for basic measured values (DS 142) version 3 229

E.3 Structure for energy counters (DS 143) 232

E.4 Measured value data record for maximum values (DS 144) 237
E.4.1 Measured value data record for maximum values (DS 144) version 1 237

E.5 Measured value data record for maximum values with time stamp (DS 154) 239

E.6 Measured value data record for minimum values (DS 145) 243
E.6.1 Measured value data record for minimum values (DS 145) version 1 243

E.7 Measured value data record for minimum values with time stamp (DS 155) 245

E.8 Measured value data record for phase-based measured values L1 (DS 147) 248
E.8.1 Measured value data record for phase-based measured values L1 (DS 147) version 0 248
E.8.2 Measured value data record for phase-based measured values L1 (DS 147) version 1 249

E.9 Measured value data record for phase-based measured values L2 (DS 148) 251
E.9.1 Measured value data record for phase-based measured values L2 (DS 148) version 0 251
E.9.2 Measured value data record for phase-based measured values L2 (DS 148) version 1 252

E.10 Measured value data record for phase-based measured values L3 (DS 149) 254
E.10.1 Measured value data record for phase-based measured values L3 (DS 149) version 0 254
E.10.2 Measured value data record for phase-based measured values L3 (DS 149) version 1 255

E.11 Measured value data record for advanced measurement and status values (DS 150) 257
E.11.1 Measured value data record for advanced measurement and status values (DS 150) version 1 257

E.12 Measured value data record of user-defined data record (DS 151) 258

E.13 Measured value data record for power quality analysis (DS 160) 259

E.14 Measured value data record for harmonics voltage (DS 161) 261

E.15 Measured value data record for harmonics current (DS 163) 265

E.16 Information data record on available measured values (DS 170) 268

F Tips and tricks.....269

F.1 Tips and tricks 269

Documentation guide

1

The documentation for the SIMATIC ET 200SP distributed I/O system is arranged into three areas.
This arrangement enables you to access the specific content you require.

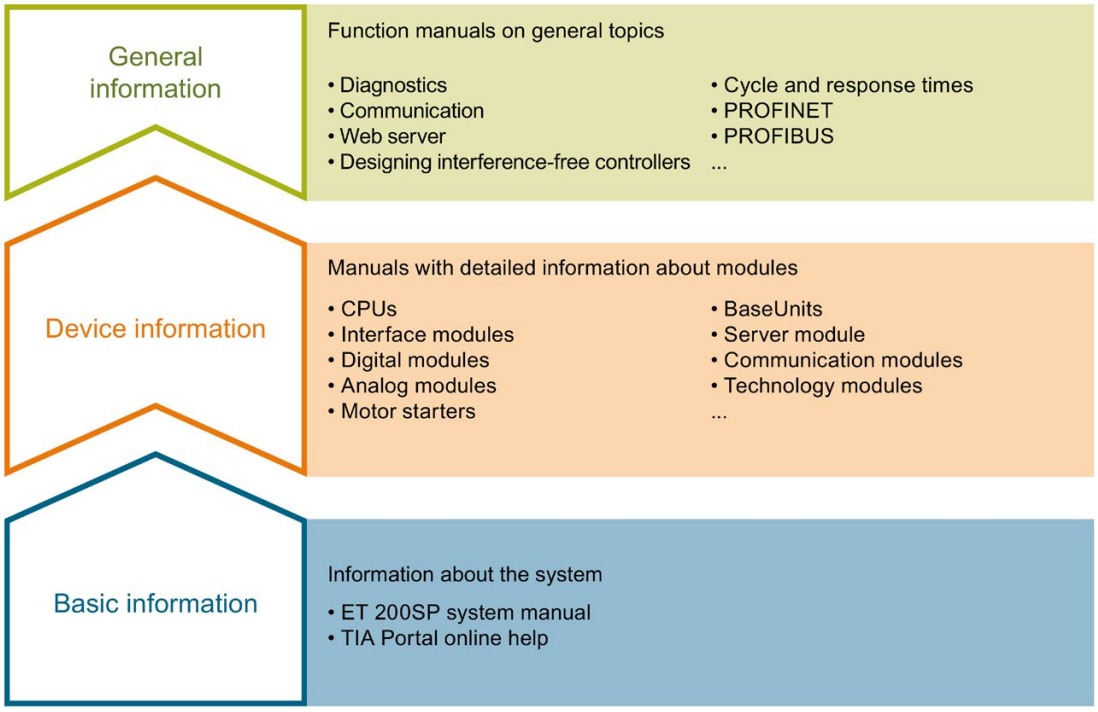

Basic information

The system manual describes in detail the configuration, installation, wiring and commissioning of the SIMATIC ET 200SP. distributed I/O system. The STEP 7 online help supports you in the configuration and programming.

Device information

Product manuals contain a compact description of the module-specific information, such as properties, wiring diagrams, characteristics and technical specifications.

General information

The function manuals contain detailed descriptions on general topics regarding the SIMATIC ET 200SP distributed I/O system, e.g. diagnostics, communication, Web server, motion control and OPC UA.

You can download the documentation free of charge from the Internet (https://support.industry.siemens.com/cs/ww/en/view/109742709).

Changes and supplements to the manuals are documented in a Product Information.

You can download the product information free of charge from the Internet (https://support.industry.siemens.com/cs/us/en/view/73021864).

Manual Collection ET 200SP

The Manual Collection contains the complete documentation on the SIMATIC ET 200SP distributed I/O system gathered together in one file.

You can find the Manual Collection on the Internet (http://support.automation.siemens.com/WW/view/en/84133942).

"mySupport"

With "mySupport", your personal workspace, you make the most of your Industry Online Support.

In "mySupport" you can store filters, favorites and tags, request CAx data and put together your personal library in the Documentation area. Furthermore, your data is automatically filled into support requests and you always have an overview of your current requests.

You need to register once to use the full functionality of "mySupport".

You can find "mySupport" in the Internet (https://support.industry.siemens.com/My/ww/en).

"mySupport" - Documentation

In the Documentation area of "mySupport", you have the possibility to combine complete manuals or parts of them to make your own manual.
You can export the manual in PDF format or in an editable format.

You can find "mySupport" - Documentation in the Internet (http://support.industry.siemens.com/My/ww/en/documentation).

"mySupport" - CAx Data

In the CAx Data area of "mySupport", you can have access the latest product data for your CAx or CAe system.

You configure your own download package with a few clicks.

In doing so you can select:

- Product images, 2D dimension drawings, 3D models, internal circuit diagrams, EPLAN macro files
- Manuals, characteristics, operating manuals, certificates
- Product master data

You can find "mySupport" - CAx Data in the Internet (http://support.industry.siemens.com/my/ww/en/CAxOnline).

Application examples

The application examples support you with various tools and examples for solving your automation tasks. Solutions are shown in interplay with multiple components in the system - separated from the focus in individual products.

You can find the application examples on the Internet (https://support.industry.siemens.com/sc/ww/en/sc/2054).

TIA Selection Tool

With the TIA Selection Tool, you can select, configure and order devices for Totally Integrated Automation (TIA).
This tool is the successor of the SIMATIC Selection Tool and combines the known configurators for automation technology into one tool.
With the TIA Selection Tool, you can generate a complete order list from your product selection or product configuration.

You can find the TIA Selection Tool on the Internet (http://w3.siemens.com/mcms/topics/en/simatic/tia-selection-tool).

SIMATIC Automation Tool

You can use the SIMATIC Automation Tool to run commissioning and maintenance activities simultaneously on various SIMATIC S7 stations as a bulk operation independently of the TIA Portal.

The SIMATIC Automation Tool provides a multitude of functions:

- Scanning of a PROFINET/Ethernet network and identification of all connected CPUs
- Address assignment (IP, subnet, gateway) and station name (PROFINET device) to a CPU
- Transfer of the data and the programming device/PC time converted to UTC time to the module
- Program download to CPU
- Operating mode switchover RUN/STOP
- Localization of the CPU by means of LED flashing
- Reading out CPU error information
- Reading the CPU diagnostic buffer
- Reset to factory settings
- Updating the firmware of the CPU and connected modules

You can find the SIMATIC Automation Tool on the Internet (https://support.industry.siemens.com/cs/ww/en/view/98161300).

PRONETA

With SIEMENS PRONETA (PROFINET network analysis), you analyze the plant network during commissioning. PRONETA features two core functions:

- The topology overview independently scans PROFINET and all connected components.
- The IO check is a fast test of the wiring and the module configuration of a system.

You can find SIEMENS PRONETA on the Internet (https://support.industry.siemens.com/cs/ww/en/view/67460624).

SINETPLAN

SINETPLAN, the Siemens Network Planner, supports you in planning automation systems and networks based on PROFINET. The tool facilitates professional and predictive dimensioning of your PROFINET installation as early as in the planning stage. In addition, SINETPLAN supports you during network optimization and helps you to exploit network resources optimally and to plan reserves. This helps to prevent problems in commissioning or failures during productive operation even in advance of a planned operation. This increases the availability of the production plant and helps improve operational safety.

The advantages at a glance

- Network optimization thanks to port-specific calculation of the network load
- Increased production availability thanks to online scan and verification of existing systems
- Transparency before commissioning through importing and simulation of existing STEP 7 projects
- Efficiency through securing existing investments in the long term and optimal exploitation of resources

You can find SINETPLAN on the Internet (https://www.siemens.com/sinetplan).

Product overview

2

2.1 Properties of the AI Energy Meter HF

Article number

6ES7134-6PA00-0CU0

View of the module

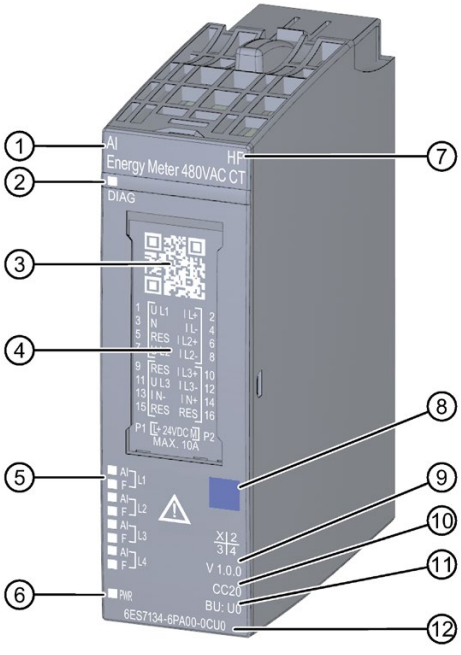

① Module type and name
② LED for diagnostics
③ 2D matrix code
④ Wiring diagram
⑤ LEDs for channel status
⑥ LED for supply voltage
⑦ Function class
⑧ Color coding module type
⑨ Function and firmware version
⑩ Color code for selecting the color identification labels
⑪ BU type
⑫ Article number

Figure 2-1 View of the module AI Energy Meter HF

Properties

The module has the following technical properties:

- Measurement of electrical variables from single-phase, two-phase and three-phase supply networks
- Max. nominal voltage between two line conductors 480 V AC
- Retentive storage of the counter values
- Use on frequency converters
- Recording of:
  - Voltages
  - Currents
  - Phase angles
  - Power
  - Energy / electrical work
  - Frequencies
  - Minimum and maximum values with time stamp
  - Power factors
  - Operating hours
  - Limits
  - Power quality data for voltages and currents

The module supports the following functions:

Table 2- 1 Version dependencies of the functions

Function	HW version	FW version	STEP 7	GSD file	
			TIA Portal	PROFINET IO	PROFIBUS DP
Firmware update	FS01	V6.0.0 or higher	V15 or higher with HSP0253	X	---
Calibration in runtime	FS01	V6.0.0 or higher	V15 or higher with HSP0253	---	---
Identification data I&M0 to I&M3	FS01	V6.0.0 or higher	V15 or higher with HSP0253	X	X
Reconfiguration in RUN	FS01	V6.0.0 or higher	V15 or higher with HSP0253	X	X
Diagnostic interrupts	FS01	V6.0.0 or higher	V15 or higher with HSP0253	X	X
Hardware interrupts	FS01	V6.0.0 or higher	V15 or higher with HSP0253	X	---

Note

The AI Energy Meter HF is released as of TIA Portal V15.0.0.2.

Accessories

The following accessories must be ordered separately:

- BaseUnit type U0
- Labeling strips
- Reference identification label

You can find additional information on the accessories in the ET 200SP distributed I/O system (http://support.automation.siemens.com/WW/view/es/58649293) system manual.

2.2 Area of application

Introduction

Energy efficiency is playing an increasingly important role in industry. Rising energy prices, increasing pressure to improve profitability and the growing awareness of climate protection are important factors for reducing energy costs and for introducing an energy data management system.

Where can you use the AI Energy Meter HF?

AI Energy Meter HF is designed for machine-level deployment in an ET 200SP distributed I/O system. AI Energy Meter HF records over 500 different electrical measurement and energy values. It lets you create transparency about the energy requirements of individual components of a production plant even down to the machine level.

You can use the following measurement values supplied by the AI Energy Meter HF for the following applications:

- Energy consumption
- Power consumption
- Power quality
- Forecasts of consumption
- Efficiency

Power consumption measurements are relevant for load management and maintenance. In addition, you can use the measurements for emission reporting and for determining the CO_2 footprint.

Note

Measuring dangerous electrical quantities

The AI Energy Meter HF is not tested according to DIN EN 61010-2-030 and may therefore not be used to verify, measure or monitor protective measures according to DIN EN 61557.

Qualified personnel must ensure through additional measures that no danger ensues for humans and the environment in case of an incorrect display.

TB, TT and IT system

The AI Energy Meter HF can be used in TN, TT and IT systems.

Measuring with AI Energy Meter HF

A typical supply network of a production plant is usually divided into three voltage ranges:

- The infeed of the entire plant
- The subdistribution, for example, to individual lines within the plant
- The end consumers such as the machines in the lines.

The following figure shows the measurement in an electricity supply network:

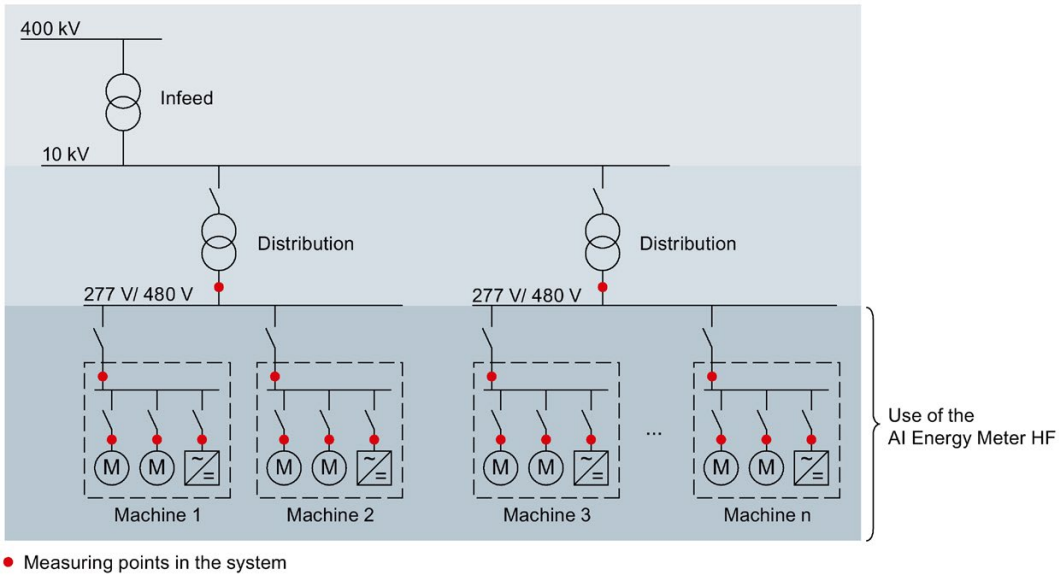

Figure 2-2 Use of the AI Energy Meter HF

Advantages of the AI Energy Meter HF

The AI Energy Meter HF has the following advantages:

- Space-saving especially for use in control cabinet
- PROFINET IO or PROFIBUS DP (depending on the interface module in use)
- Multiple modules can be used with one interface module
- Extension of existing stations by components for energy recording

2.3 Special considerations for use on the PROFIBUS DP and PROFINET IO

You can read data records from the module or write them to the module with both PROFIBUS DP and PROFINET IO.

Operation of the module on PROFIBUS DP

Please note that with PROFIBUS DP you can write data records up to a maximum length of 240 bytes to the module or read them from the module.

PROFIBUS DPV 1

If the DP Master supports the DPV1, you can reconfigure in your user program with the parameter data records DS 128, DS 129, DS 130, DS 131 or DS 135. Note that the maximum data record length is 240 bytes for DS 135.

The following applies for the measured value data records:

- DS 142: When you read the data record, the module returns the measured value data record DS 142 in version 2.
- DS 147, DS 148, DS 149: When you read the data record, the module returns the measured value data record in version 0.
- DS 154, DS 155, DS 161, DS 163, DS 164: When you read the data record, the module returns the first 240 bytes of the structure of the measured value data record.
- DS 151: You define the user-defined measured value data record DS 151 in the parameter data record DS 135. If the structure in the measured value data record DS 151 is greater than 240 bytes, the module returns the first 240 bytes of the structure.

  Information on the data record length of data records DS 135 and DS151 can be found in the appendix Structure of the parameter data record 135 for data record mapping (Page 160).

PROFIBUS DPV 0

If the DP Master does **not** support DPV1, you cannot reassign parameters which results in the following restrictions:

- There are no phase-specific parameters. All parameters apply for all three phases and the neutral conductor.
- The connection types und user data variants are limited.
- The voltage transformers are not configurable (default: 1:1).
- The current transformer value range primary current is restricted.
- The low limit for measuring current cannot be adjusted (default: 50 mA).
- Energy metering is performed continuously (the gate is not enabled).
- Min/Max calculation of values is enabled (the gate is not enabled).
- 3P4W can be set in the parameters for the connection type 3P3W.
- 3P4W can be set in the parameters for the connection type 3P3W1.
- Counting of operating hours is enabled (the gate is not enabled).
- The residual current measurement is enabled.
- Limit value monitoring cannot be used.
- Energy meter default cannot be used.
- The user-defined user data interface cannot be used.
- The user-defined data record cannot be used.
- The power quality analysis cannot be used.
- The separate settings for measuring the neutral current cannot be used.
- The measured value data records cannot be used.

Operation of the module on PROFINET IO

When reading data records partially from the module, please note the following:

- Measured value data record DS 142:
  - When you read the data record with a length of 240 bytes or less, the module returns the measured value data record DS 142 in version 2.
  - When you read the data record with a length of more than 240 bytes, the module returns the measured value data record DS 142 in version 3.
- Measured value data records DS 147, DS 148, DS 149:
  - When you read the data record with a length of 240 bytes or less, the module returns the measured value data record in version 0.
  - When you read the data record with a length of more than 240 bytes, the module returns the measured value data record in version 1.

See also

Measured value data records (Page 226)

Wiring 3

3.1 Terminal and block diagram

General safety instructions

⚠ WARNING
Danger to life due to electric shock Touching live parts can lead to death or severe injuries. Before beginning any work deenergize the system and the AI Energy Meter HF and short-circuit installed transformers.

⚠ WARNING
Danger to life, dangerous system conditions and material damage possible Removing and inserting the AI Energy Meter HF under live voltage is prohibited. If you remove and insert the AI Energy Meter HF under live voltage during operation, the transformers used can produce dangerous induction voltages and electric arcs and dangerous system conditions can arise. The AI Energy Meter HF may only be removed and inserted during operation if the measuring voltages supplied to the BaseUnit at terminals U_{L1} , U_{L2}, U_{L3} are disconnected at all poles **and** special current transformer terminals are used that short-circuit the transformer on the secondary side on removal.

Supplying the module

The AI Energy Meter HF receives its supply voltage via terminals 17 (24 V DC) and 18 (M).

Protecting the connection cables

To protect the connection cables at U_{L1}, U_{L2} and U_{L3}, make sure there is adequate cable protection, especially after cross-section transitions.

If short-circuit resistance according to IEC 61439-1:2009 is ensured by the design, there is no need for separate cable protection for the AI Energy Meter HF.

Terminal and block diagram

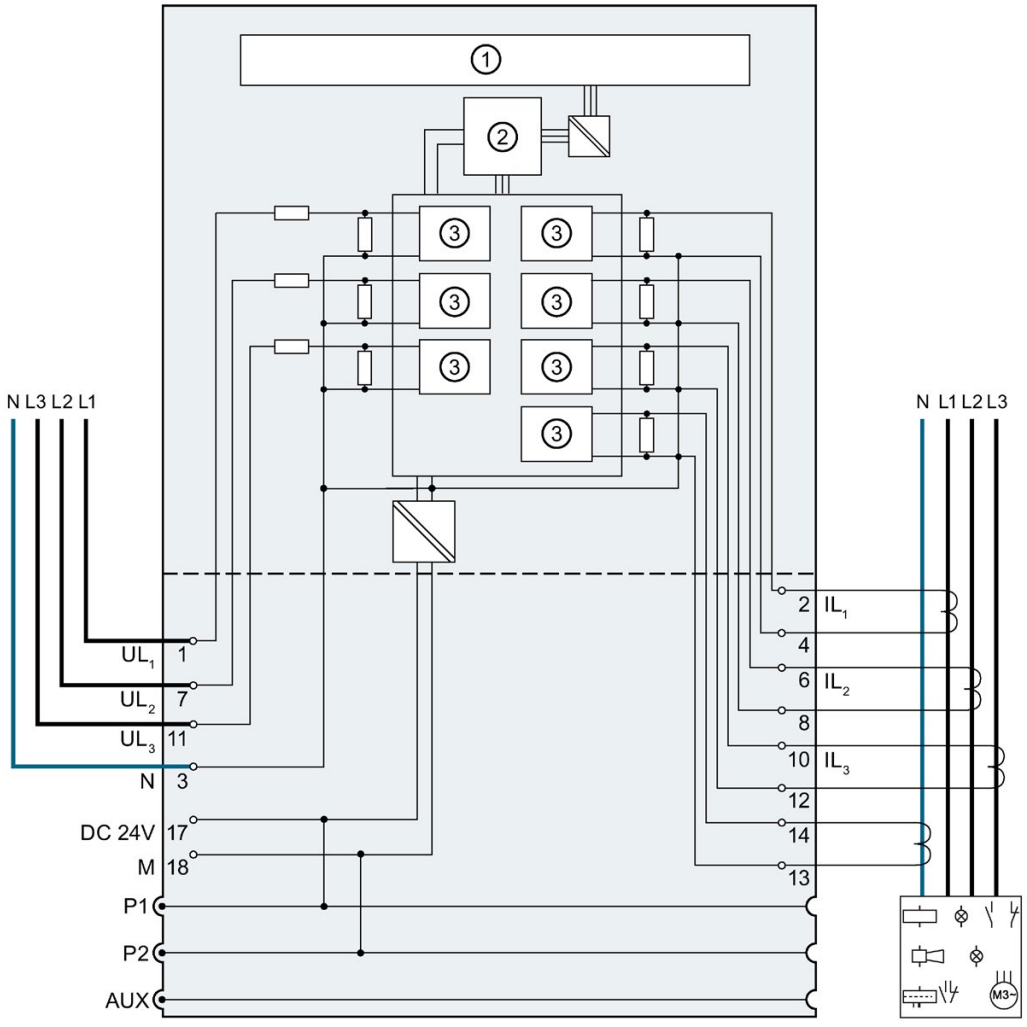

①	Microcontroller	UL_n	Connection of voltage transformers
②	Backplane bus interface	IL_n	Connection of current transformers
③	Analog-to-digital converter (ADC)	N	Neutral
P1, P2, AUX	Internal self-assembling voltage buses Connection to left (dark-colored BaseUnit) Connection to left interrupted (light-colored BaseUnit)		

Figure 3-1 Block diagram of the AI Energy Meter HF

Useable BaseUnits

You can use the following BaseUnits:

- Type BU type U0 dark-colored
- Type BU type U0 light-colored

A potential group opened with a light-colored BU type U0 must contain no dark-colored BaseUnit of BU type A0 or A1.

Connection types

The AI Energy Meter HF supports the following connection types:

- 3P4W1, 3 phases, 4 conductors, balanced load
- 3P4W, 3 phases, 4 conductors
- 2P3W, 2 phases, 3 conductors
- 1P2W, 1 phase, 2 conductors
- 3 x 1P2W, 3 x 1 phase, 2 conductors
- 3P3W, 3 phases, 3 conductors
- 3P3W1, 3 phases, 3 conductors, balanced load
- 3P4WI, 3 phases, 4 conductors (only for current measurement)

The input circuit of the module must correspond to one of the listed connection types. Select the appropriate connection type for the intended use.

You will find examples of connections in the section Connection examples (Page 23).

Information on the selection of a current transformer is available in the section Current transformer selection data (Page 27).

3.2 Connection examples

The following figures show the connection of the AI Energy Meter HF for three-phase, two-phase and single-phase measurements. Note that the AI Energy Meter HF must always be connected via a current transformer. The use of voltage transformers is optional.

Connection type	Wiring diagram	Comment
3P4W Three-phase measurement, 4 wires	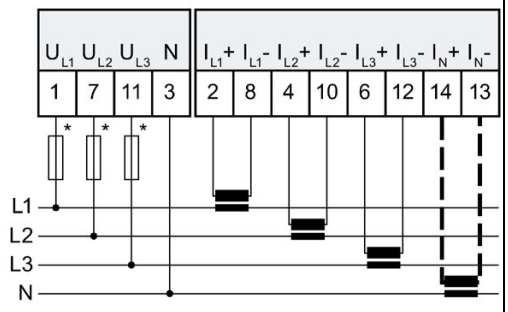	Any load Connection with three current transformers
3P4W Three-phase measurement, 4 wires	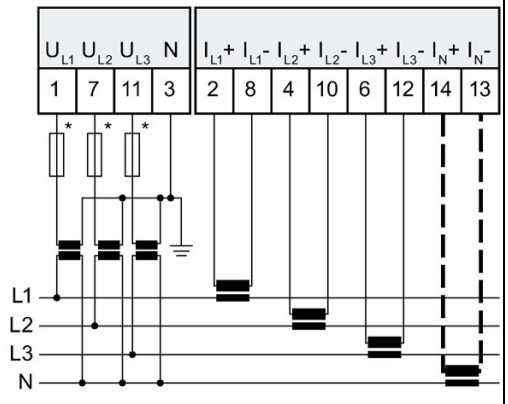	Any load Connection with three current transformers and three voltage transformers.
3P4W1 Three-phase measurement, 4 wires	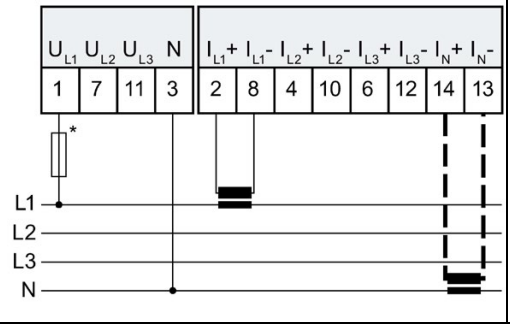	Balanced load Connection with one current transformer

Connection type	Wiring diagram	Comment
3P4W1 Three-phase measurement, 4 wires	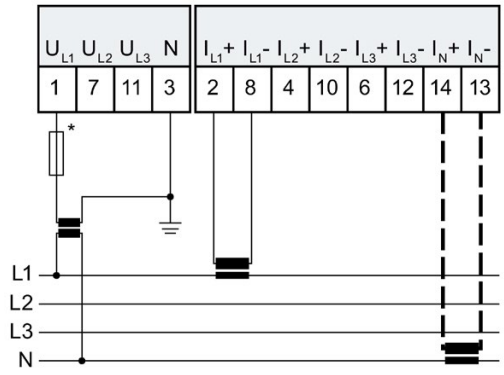	Balanced load Connection with one current transformer and one voltage transformer.
2P3W Two-phase measurement, 3 conductors	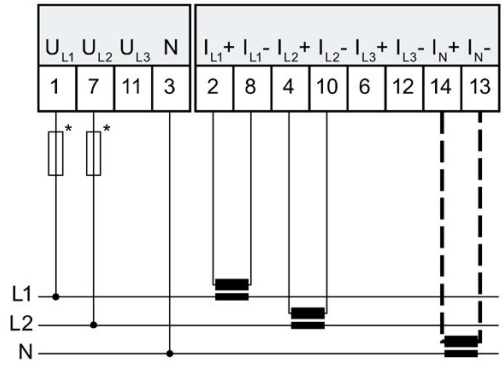	Any load Connection with two current transformers AI Energy Meter HF supplies the value "0" for all measured values of Phase 3 as well as for some cross-phase measured values.
2P3W Two-phase measurement, 3 conductors	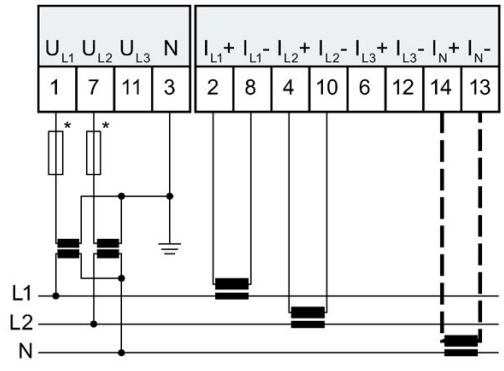	Any load Connection with two current transformers and two voltage transformers. AI Energy Meter HF supplies the value "0" for all measured values of Phase 3 as well as for some cross-phase measured values.
1P2W Single-phase measurement, 2 conductors	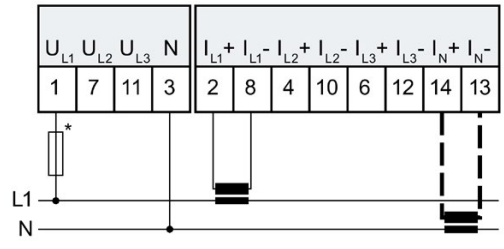	Measurement in an AC network with a current transformer. AI Energy Meter HF supplies the value "0" for all measured values of Phase 2 and 3 as well as for some cross-phase measured values.

Connection type	Wiring diagram	Comment
1P2W Single-phase measurement, 2 conductors	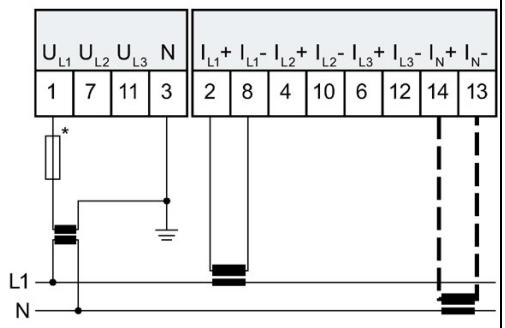	Measuring the load in an AC network with one current transformer and one voltage transformer. AI Energy Meter HF supplies the value "0" for all measured values of Phase 2 and 3 as well as for some cross-phase measured values.
3 x 1P2W 3 x single-phase measurement	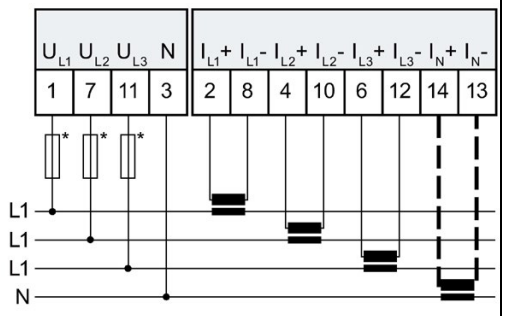	Measurement with three current transformers for any three loads that are each connected to one of the three phases.
3 x 1P2W 3 x single-phase measurement	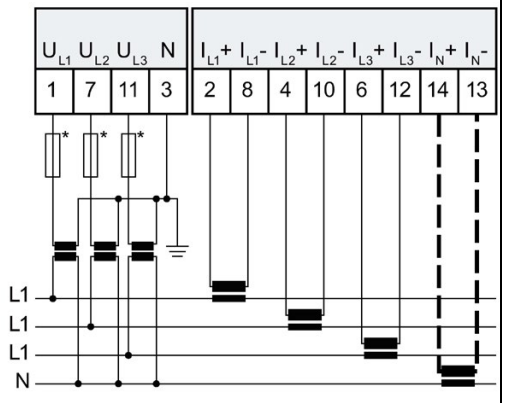	Measurement with three current transformers and three voltage transformers for any three loads that are each connected to one of the three phases.
3P3W Three-phase measurement	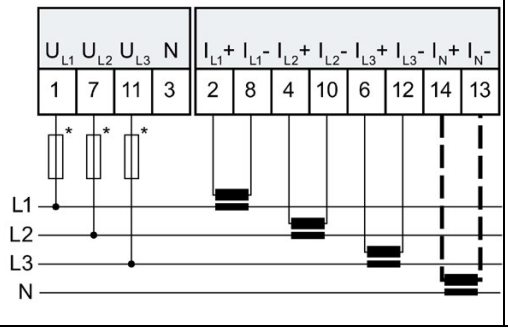	Any load Connection with three current transformers

Connection type	Wiring diagram	Comment
3P3W Three-phase measurement	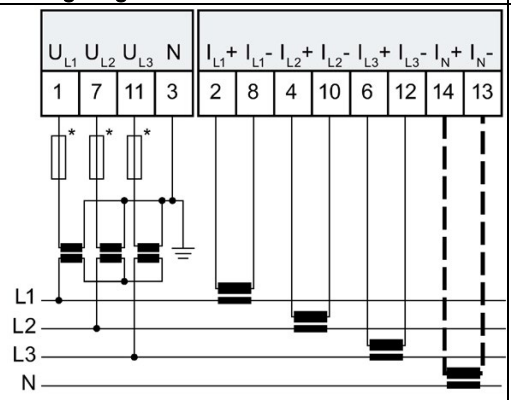	Any load Connection with three current transformers and three voltage transformers.
3P3W1 Three-phase measurement	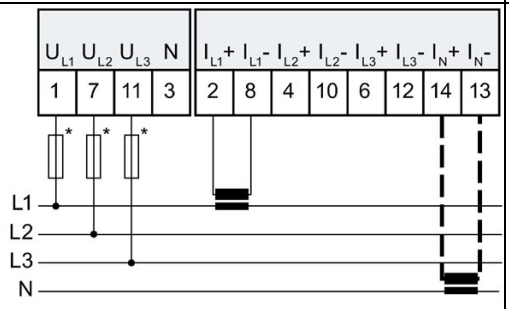	Balanced load Connection with one current transformer
3P3W1 Three-phase measurement	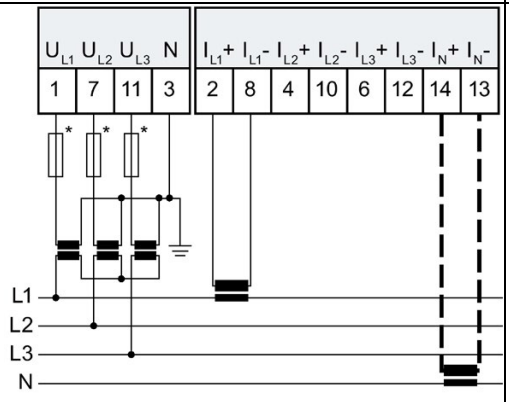	Balanced load Connection with one current transformer and one voltage transformer.
3P4WI Three-phase measurement (only for current measurement)	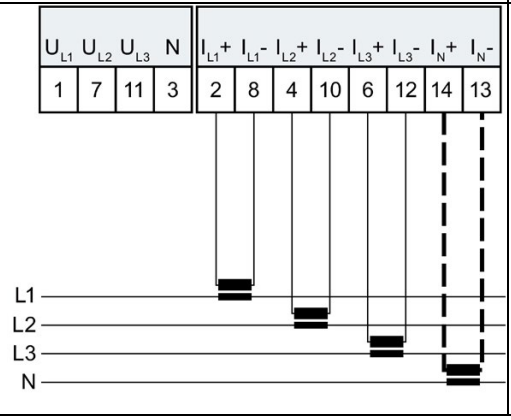	Connection with three current transformers

* If short-circuit resistance according to IEC 61439-1:2009 is ensured by the design, there is no need for separate cable protection for the AI Energy Meter HF.

Current transformer connection requirements

DIN VDE 0100-557 and IEC 60364-5-55 require the following for the connection of current transformers:

- The secondary circuits of current transformers must not be grounded.
- Guards must not be used in the secondary circuits of current transformers.
- The insulation of the secondary cables of transformers must be designed for the highest voltage of all active components, or the secondary cables must be installed in such a way that their insulation cannot touch any active components, such as busbars.
- Connection points must be provided for temporary measurements.

3.3 Current transformer selection data

Introduction

Connection via a current transformer is always required for the current measurement. Use toroids with an accuracy class of 0.5, 1 or 3.

Dimensioning of the current transformer

The correct dimensioning of the current transformer is important for the following reasons:

- You achieve correct results from the measurements and
- You do not overload or damage the current transformers.

Selecting a current transformer

Use current transformers with a burden capacity 1.5 to 2 times greater than the power dissipation in the terminal circuit (consisting of resistance of the connection cables and burden of the AI Energy Meter HF). 1.5 times the power loss is required in order to prevent the transformer from overloading. 2 times the power dissipation is important to ensure the current limiting in case of a short-circuit.

Maximum length of the connection cable

To avoid overloading or damaging the current transformer, the burden Z_n specified on the data sheet of the current transformer (in VA) must not be exceeded. To prevent this being exceeded, the entire burden resistance (consisting of the resistance of the connection cable and the internal resistance of the AI Energy Meter HF (see figure below) must be below a certain resistance value (depending on Z_n and I_{max}).

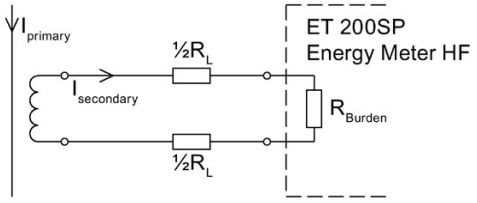

Figure 3-2 Maximum length of the connection cable

The maximum value of the resistance of the connection cable is obtained with the following formula:

$$R_{L,\,max} = \frac{Z_n}{I_{max}^{\,2}} - R_{burden}$$

R_L	Cable resistance in ohms	I_{max}	Secondary current of the current transformer
Z_n	Rated burden current transformer in VA	R_{burden}	Resistance of the AI Energy Meter HF (25 mΩ)

Figure 3-3 Maximum value for the resistance of the connection cable

Based on the maximum cable resistance in ohms, you then calculate the maximum length of the connection cable. To do this, check the data sheet of the connection cable you are using.

Note

The length of the connection cable (outwards and return) must not exceed the value of 200 meters.

Example: Usage of a current transformer 500/5 A

You use a current transformer with a transmission ration of 500/5 A that has a rated burden Z_n of 5 VA according to the data sheet.

The maximum primary current in the application amounts to 400 A. This means that the maximum secondary current $I_{max.}$ amounts to 4 A. The burden of the AI Energy Meter HF including connection resistance amounts to R_{Burden} = 25 mΩ.

The maximum value of the resistance of the connection cable (outgoing and incoming line) is obtained using the following formula:

$$R_{L,\,max} = \frac{Z_n}{I_{max}^{\ 2}} - R_{Burden} = \frac{5\ AV}{16\ A^2} - 25\ m\Omega = 312.5\ m\Omega - 25\ m\Omega = 287.5\ m\Omega$$

The maximum cable resistance between the transformer and the terminals of the AI Energy Meter HF may not exceed 287.5 mΩ in this case. The corresponding cable length (outgoing and incoming line) depends on the cross-section used of the copper line and can be determined by using the following table.

The following table shows the resistance values of copper cables for typical cross-sections with ρ = 0.017857 Ω x mm²/m

Estimating the length for a connection cable

The value in the table must be less than the calculated terminal resistance $R_{L\ max}$ of the cable. For the resistance R_{Lmax} of 287.5 mΩ used in the above example it is possible to use a connection cable (outgoing and incoming line) with a length of 10 m from a cross-section of 0.75 mm² upward.

Cross-section	AWG	Cable overview for copper				
		0.5 m	1 m	5 m	10 m	50 m
0.25 mm²	24	35.7 mΩ	71.4 mΩ	357.1 mΩ	714.3 mΩ	3571.4 mΩ
0.34 mm²	22	26.3 mΩ	52.5 mΩ	262.6 mΩ	525.2 mΩ	2626.0 mΩ
0.5 mm²	21	17.9 mΩ	35.7 mΩ	178.6 mΩ	357.1 mΩ	1785.7 mΩ
0.75 mm²	19/20	11.9 mΩ	23.8 mΩ	119.0 mΩ	238.1 mΩ	1190.5 mΩ
1.0 mm²	18	8.9 mΩ	17.9 mΩ	89.3 mΩ	178.6 mΩ	892.9 mΩ
1.5 mm²	16	6.0 mΩ	11.9 mΩ	59.5 mΩ	119.0 mΩ	595.2 mΩ
2.5 mm²	14	3.6 mΩ	7.1 mΩ	35.7 mΩ	71.4 mΩ	357.1 mΩ

Checking the ratio of burden load and power loss

The rated burden of the transformer must be 1.5 to 2 times greater than the power loss in the connection circuit to ensure that the transformer is not overloaded and that the current limitation is ensured during a short-circuit.

At a maximum secondary current of 4 A the power loss in the connection circuit is calculated in accordance with the following formula for a connection cable (outgoing and incoming line) with a length of 10 m and a cross-section of 1.0 mm² and a burden resistance of the AI Energy Meter HF of 25 mΩ:

$$P_{\text{Connection circuit}} = (R_{\text{Connection cable}} + R_{\text{Burden}}) \times I^2_{\text{Max. secondary}}$$

$$P_{\text{Connection circuit}} = (178.6\ \text{m}\Omega + 25\ \text{m}\Omega) \times 4^2\ \text{A}^2\ 3.26\ \text{W}$$

The ratio of the rated burden and the power loss in the connection circuit thus amounts to:

$$\frac{Z_{\text{N rated burden}}}{P_{\text{Connection circuit}}} = \frac{5\ \text{VA}}{3.26\ \text{W}} = 1.54$$

The required ratio of rated burden and power loss in the connection circuit lies within the required range. The transformer is dimensioned sufficiently large.

See also

Technical specifications (Page 132)

Configuration / address space 4

4.1 Configuring

Introduction

To configure the AI Energy Meter HF after connecting it, use configuration software such as STEP 7 (TIA Portal). In addition, you can also change numerous parameters of the AI Energy Meter HF in RUN via the user program.

Configuring

You configure the AI Energy Meter HF with:

- STEP 7 (TIA Portal) as of V15 and HSP0253
- GSD file for PROFIBUS or PROFINET

Note

Consistency check of the parameter assignment only with STEP 7

If you configure the AI Energy Meter HF using STEP 7 (TIA Portal), STEP 7 (TIA Portal) already checks the various parameters for consistency while they are being entered.

If you configure the AI Energy Meter HF using a GSD file, a consistency check is not carried out. The module does not recognize incorrect entries until after the parameter data record has been transferred. If the module recognizes an invalid parameter, the module rejects the complete data record.

Preferably use STEP 7 (TIA Portal) to configure the AI Energy Meter HF.

The following instructions show the theoretical procedure for configuring the AI Energy Meter HF with STEP 7 (TIA Portal) V15 or higher with HSP0253.

1. Select the ET 200SP distributed I/O system you are using in the hardware catalog.
2. Insert the module into your station.
3. Open the device view of the ET 200SP and insert the AI Energy Meter HF.
4. Configure the AI Energy Meter HF to suit your requirements.

   Once the configuration has been compiled without errors, you can download the configuration to the CPU and commission the ET 200SP station while the AI Energy Meter HF is running.

4.2 Selecting the module versions

Introduction

The AI Energy Meter HF has different module versions.

During the configuration you use the selection of the module version to specify which measured values can be read.

Each module version supplies quality information via the input user data.

With the exception of the module version "2 I / 2 Q" you can read the measured values as user data cyclically from the process image. At each module version you have the option to read measured value records from the AI Energy Meter HF by using the RDREC instruction asynchronously.

Influence of the module version on the address space

Note

Influence of the AI Energy Meter HF on the maximum configuration of the ET 200SP

The available address space of the ET 200SP is influenced by the following factors:

- CPU or interface module
- Plugged I/O modules

The address space made **additionally** available by the AI Energy Meter HF is essentially influenced by the length of the user data supplied. The module version determines the length of the user data, which can be supplied by the AI Energy Meter HF at maximum.

4.2.1 Module versions at configuration with STEP 7

Module versions with fixed user data assignment

Module version	User data	Address space	Comment
2 I / 2 Q	No cyclic user data. Access to measured values through "Read data record".	2-byte inputs 2-byte outputs	Information about the structure of the 2 I / 2 Q module version is available in the appendix Module version "2 I / 2 Q" (Page 192).
EE@Industry E0	User data in accordance with EE@Industry measurement data profiles	12-byte inputs / 20-byte outputs	Information about the structure of the EE@Industry measured data profiles is available in the appendix Module version "EE@Industry measurement data profile E0 / E1 / E2 / E3" (Page 203).
EE@Industry E1		4-byte inputs / 20-byte outputs	
EE@Industry E2		12-byte inputs / 20-byte outputs	
EE@Industry E3		104-byte inputs / 20-byte outputs	

Module versions with selectable user data variants

Module version	User data	Address space	Comment
32 I / 20 Q	User data selectable through defined user data variants	32-byte inputs / 20-byte outputs	You can change over the user data variant during operation. Information about the structure of the 32 I / 20 Q module version is available in appendix Module version "32 I / 20 Q" (Page 195). Information about the user data variants at 32 I / 20 Q is available in appendix User data variants (Page 205).
User-specific	User data selectable through user data mapping or through defined user data variant	variable* / 20-byte outputs	You have to activate the check box "User data-mapping" in STEP 7 to use the module version user-specifically. You can change over the user data variant during operation. Information about the structure of the user-specific module version is available in the appendix "User-specific" module version (Page 201).

* 16 ... 256 bytes in steps of 16 bytes, depending on the mapped measured values

4.2.2 Module versions at configuration with GSD file

Module versions with fixed user data assignment

Module version	User data	Address space	Comment
2 I / 2 Q	No cyclic user data. Access to measured values through "Read data record".	2-byte inputs 2-byte outputs	Information about the structure of the 2 I / 2 Q module version is available in the appendix Module version "2 I / 2 Q" (Page 192).
E0	User data in accordance with EE@Industry measurement data profiles	12-byte inputs / 20-byte outputs	Information about the structure of the EE@Industry measured data profiles is available in the appendix Module version "EE@Industry measurement data profile E0 / E1 / E2 / E3" (Page 203).
E1		4-byte inputs / 20-byte outputs	
E2		12-byte inputs / 20-byte outputs	
E3		104-byte inputs / 20-byte outputs	

Module versions with selectable user data variants

Module version	User data	Address space	Comment
32 I / 20 Q	User data selectable through user data variants or through user-specific user data*	32-byte inputs / 20-byte outputs	You can change over the user data variant during operation. If you use user-specific user data, you write your measured value profile into the AI Energy Meter HF with the data record 130. To do this use the WRREC instruction. Information about the structure of data record 130 is available in appendix Structure of the parameter data records 130/131 for user-data mapping (Page 157).
64 I / 20 Q		64-byte inputs / 20-byte outputs	
128 I / 20 Q		128-byte inputs / 20-byte outputs	
256 I / 20 Q		256-byte inputs / 20-byte outputs	

*Ensure that the user data do not exceed the size of the address space of the module version. If necessary, use a module version with a larger address space

4.2.3 Changing over the user data variant during operation

Introduction

You change the user data variant in the output data of each user data variant in Byte 0.

The following figure shows to which user data you can change over at various module versions during operation.

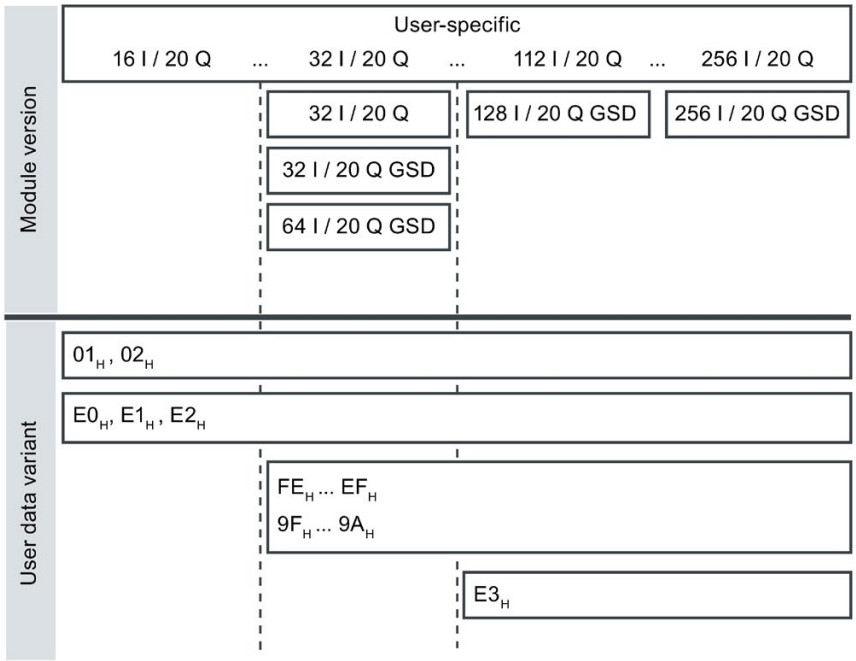

Figure 4-1 Possible user data variants

Requirement

- User program has been created.
- AI Energy Meter HF is configured as one of the module versions mentioned in the figure above.
- The start address of the module is known in the process image output.

Procedure

1. Create one constant with the data type BYTE per user data variant.
2. Enter the user data ID as a value in each case.
3. Write the constant to the start address of the module in the process image output.

Result

The user data variant is switched with the next cycle.

Note

Information about user data changeover

The parameterized user data variant is set in the following cases:

- A "0" is written in byte 0 in the output data of a user data variant.
- Byte 0 in the output data of a user data variant contains an invalid value:
  - Coding of the user data variant not available

    or
  - Available address space is not sufficient for the selected user data variant.

4.2.4 Recommendations for selecting the module version

The following table shows which module version is suitable for a given purpose.

Module version	Application	Note
2 I / 2 Q	• Use of many AI Energy Meter HF in an ET 200SP or little address space is available	• Read the measured values solely via the RDREC instruction from a measured value data record. • Quality information about the measured values is always available.
EE@Industry measurement data profile E0 / E1 / E2 / E3	• Cyclic measurement per phase • Supplied measured values in accordance with the EE@Industry measured data profile	• Available measured values depend on the configured measurement data profile. • The user data are fixed and cannot be changed dynamically. Alternatively, read the measured values acyclically from a measured value data record via the RDREC instruction. • No quality information
32 I / 20 Q	• Cyclic measurement per phase • Flexibility by switching predefined user data variants	• Quality information about the measured values is always available. • Depending on the user data variant, you must convert the measured values in the CPU to physical values using the supplied scaling factor. • One cycle elapses for each user data changeover. Measured values from the next user data variant are thus supplied with a slight time offset. Alternatively, read the measured values acyclically from a measured value data record via the RDREC instruction. Consistent measured values of a measuring cycle are supplied.
User-specific With GSD configuration • 32 I / 20 Q • 64 I / 20 Q • 128 I / 20 Q • 256 I / 20 Q	• Cyclic measurement of up to 64 measured values configurable • Flexibility by switching predefined user data variants	

4.3 Applicable modules

Configuring with STEP 7

The following table shows with which controllers the different module versions can be configured with STEP 7.

Table 4- 1 Module versions configured with STEP 7

Controller	Module version						
	2 I / 2Q	32 I / 20 Q	User-specific	EE@Industry measurement data profile			
				E0	E1	E2	E3
IM 155-6 PN ST	V1.0 or higher		V1.0 or higher* V3.1 or higher	V1.0 or higher			V3.1 or higher
IM 155-6 PN HF **	V2.0 or higher		V2.0 or higher* V3.1 or higher	V2.0 or higher			V3.1 or higher
IM 155-6 PN BA	V3.2 or higher		---	V3.2 or higher			---
IM 155-6 PN HS	V4.0 or higher						
IM 155-6 DP HF	V1.0 or higher		---	V1.0 or higher			---
CPU 1510SP-1 PN	V1.6 or higher		V1.6 or higher* V2.0 or higher	V1.6 or higher			V2.0 or higher
CPU 1510SP F-1 PN	V1.7 or higher		V1.7 or higher* V2.0 or higher	V1.7 or higher			V2.0 or higher
CPU 1512SP-1 PN	V1.6 or higher		V1.6 or higher* V2.0 or higher	V1.6 or higher			V2.0 or higher
CPU 1512SP F-1 PN	V1.7 or higher		V1.7 or higher* V2.0 or higher	V1.7 or higher			V2.0 or higher
CPU 1515SP PC	V1.7 or higher		V1.7 or higher* V2.0 or higher	V1.7 or higher			V2.0 or higher

* Only up to 32 bytes

** Function setting the time as of V4.2

Configuring with GSD file

The following table shows with which controllers the different module versions can be configured using a GSD file.

Table 4- 2 Module versions configuring with GSD file

Controller	Module version						
	2 I / 2Q	32 I / 20 Q	64 I / 20 Q 128 I / 20 Q 256 I / 20 Q	EE@Industry measurement data profile			
				E0	E1	E2	E3
IM 155-6 PN ST	V1.0 or higher		V3.1 or higher	V1.0 or higher			V3.1 or higher
IM 155-6 PN HF	V2.0 or higher		V3.1 or higher	V2.0 or higher			V3.1 or higher
IM 155-6 PN BA	V3.2 or higher		---	V3.2 or higher			---
IM 155-6 PN HS	V4.0 or higher						---
IM 155-6 DP HF	V1.0 or higher		---	---			---

Quick start

5

Introduction

This section shows you how to read and view your first measured values on the AI Energy Meter HF in a particularly quick and easy way.

Requirement

You have already connected the AI Energy Meter HF to your network with one of the connection types shown in the section Wiring (Page 20). The AI Energy Meter HF has already been integrated in your configuration tool (such as STEP 7), or the AI Energy Meter HF has been integrated in your hardware catalog of your configuration tool with the GSD file.

Procedure

1. Configure an ET 200SP station

   Configure an ET 200SP station with a CPU 151xSP or an IM 155-6.

2. Plug module in ET 200S station

   Plug the AI Energy Meter HF into the ET 200SP station and use the module version with 32-byte inputs and 20-byte outputs.

3. Set the module parameters

   Set the following parameters for the AI Energy Meter HF:

   – Connection type that you have used for the AI Energy Meter HF (e.g. 3P4W)
   – Voltage measuring range
   – Frequency of your network (for example 50 Hz)
   – Nominal value current and nominal value voltage for the phases
   – Primary and secondary current of the used current transformer (e.g. 100 A and 1 A)
   – Primary and secondary voltages of the used voltage transformer (e.g. 230 V and 230 V)

   Leave all other parameters at their default settings and do not change them.

4. Load configuration

   Switch on the ET 200SP station and download the configuration to the CPU.

Result

After being switched on, the AI Energy Meter HF supplies the measured values for the "Total power L1L2L3" user data variant with the ID 254 or FE_H.

Read and check the measured values provided by the AI Energy Meter HF in the input data.

The table below shows the structure of the user data variant, the measured variables and the data type of the measured values in STEP 7 (TIA Portal) that are stored in the 32 bytes of output data of the module. Each measured variable is referenced via the measured value ID. An overview of all the measured variables with their measured value IDs is provided in the section Measured variables (Page 163).

Table 5- 1 Total power L1L2L3

Byte	Allocation	Data type	Unit	Value range	Measured value ID
0	User data variant	BYTE	-	254 (FE_H)	-
1	Quality information = QQ_1 I_3 U_3 I_2 U_2 I_1 U_1	BYTE	Bit string	qq xx xx xx	-
2 ... 3	Current L1	UINT	1 mA	0 … 65535	66007
4 ... 5	Current L2	UINT	1 mA	0 … 65535	66008
6 ... 7	Current L3	UINT	1 mA	0 … 65535	66009
8 ... 9	Total active power L1L2L3	INT	1 W	-27648 … 27648	66034
10 ... 11	Total reactive power Qtot L1L2L3	INT	1 var	-27648 … 27648	66038
12 ... 13	Total apparent power L1L2L3	INT	1 VA	-27648 … 27648	66036
14 ... 17	Total active energy L1L2L3	DINT	1 Wh	-2147483647 to +2147483647	225
18 ... 21	Total reactive energy L1L2L3	DINT	1 varh	-2147483647 to +2147483647	226
22	Reserved	BYTE	-	0	-
23	Total power factor λ L1L2L3	USINT	0.01	0 … 100	66037
24	Scaling current L1	USINT	-	0 ... 255	-
25	Scaling current L2	USINT	-	0 ... 255	-
26	Scaling current L3	USINT	-	0 ... 255	-
27	Scaling total active power L1L2L3	USINT	-	0 ... 255	-
28	Scaling total reactive power L1L2L3	USINT	-	0 ... 255	-
29	Scaling total apparent power L1L2L3	USINT	-	0 ... 255	-
30	Scaling total active energy L1L2L3	USINT	-	0 ... 255	-
31	Scaling total reactive energy L1L2L3	USINT	-	0 ... 255	-

Additional information

If you require further information about the evaluation and interpretation of the measured values, please refer to the section Reading and processing measured values (Page 41).

Reading and processing measured values 6

6.1 Basics for reading measured values

Introduction

The AI Energy Meter HF provides the measured values and variables through the following methods:

- Cyclic: User data
- Acyclic: Measured value data records

User data

User data provide pre-defined or user-defined measured values depending on the configured user data variant. The supplied measured values are cyclically written to the process image of the CPU. With some user data variants, the measured values are supplied as raw data, which you have to convert to the corresponding physical values using a supplied scaling factor.

Measured value data records

Each measured value data record supplies physical values that you can further process immediately. You read the values of a measured value data record acyclically with the RDREC instruction in a PLC tag. You need a corresponding PLC tag for each measured value data record to be read. It is also possible to create the corresponding structure in the static variables of an FB or store this structure in a DB.

You can display the read measured values in a watch table in STEP 7.

Note

If you are using CPUs other than S7-1200 or S7-1500, convert 64-bit measured values to 32-bit measured values. Note the conversion can cause loss of accuracy.

For more information, read FAQ: Processing 64-bit-floating-point numbers in S7-300/400 (https://support.industry.siemens.com/cs/ww/en/view/56600676)

Validity of the measured values

After turning on the 24 V DC supply voltage, the first measured values are available at terminal 17 after approximately 2 seconds. In the input user data, the content of byte 0 is set to the selected user data variant. You can use this change in byte 0 as a trigger event.

As soon as the module has valid measured values, the value of this byte changes to a value within the value range.

Initial module startup

After the first startup or restart of the module, the parameters are transferred to the module. You can preset a user data variant in the parameters of the hardware configuration. This remains in effect until a different user data variant is selected in the output data (byte 0). This allows input user data to be modified dynamically according to the requirements of the process.

The user data variant defined in parameter data record 128 or configuration tool is used under the following conditions:

- A "0" is written in byte 0 in the output data of a user data variant.
- Byte 0 in the output data of a user data variant contains an invalid value:
  - Coding of the user data variant not available, or
  - Available address space is not sufficient for the selected user data variant.

    See "Selecting the module versions (Page 32)".

Current measured values become "0"

The current and all other measured values based on it are suppressed (or set to "0") in the data records and in the user data in the following cases:

- The fed-in current of the current transformer is less than the configured "Low limit for measuring current in relation to nominal value current [0.1%]" parameter.
- Fed-in secondary current at the channel is higher than 12 A.

Among others, the following measured values and derived measured variables of the phase involved become "0":

- Effective current value
- Active power
- Reactive power
- Apparent power
- Phase angle
- Power factor

A floating mean value is formed from the power values. These only become "0" after a corresponding time. The operating hours counter and the energy counter for active, reactive and apparent energy of the reset phase stops counting.

General reset

With module versions with 20 bytes of output data you can reset some measured values and counter levels.

An edge change of 0 -> 1 at the bit for the general reset has the following effect:

- Counters for energy, operating hours and limits start at "0" again.
- Results of the power quality analysis are deleted.
- Minimum and maximum value calculation starts again with initial values.

For the general reset, set bit 7 in byte 16 of the output user data. (Page 195)

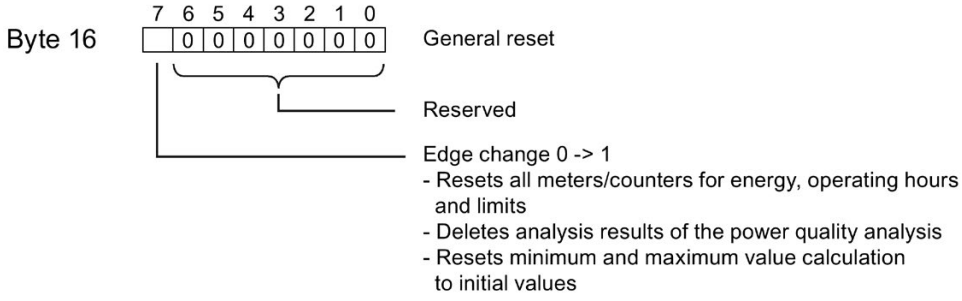

Figure 6-1 Control byte 16 in the output user data for general reset

Substitute value behavior

The substitute values for input values of the AI Energy Meter HF amount to "0".

See also

Reading measured values from user data cyclically (Page 50)

6.2 Quality information

Use the quality information to evaluate the status for currents, voltage, operating quadrants and the rotating field.

The AI Energy Meter HF provides quality information:

- In byte 1 of the user data
- In measured value IDs 65500 to 65503
- In the power quality analysis Qualifier ID 65496 (Page 89)

See also

Module version "32 I / 20 Q" (Page 195)

6.2.1 Quality information in byte 1 of the user data

For all user data variants, the module provides brief quality information in an 8-bit field in byte 1 for:

- Currents (I_{L1}, I_{L2}, I_{L3})
- Voltages (U_{L1}, U_{L2}, U_{L3})
- Operating quadrant for a phase

Please note that quality information assignment with user data variants for phase-specific measurement (ID 154 to ID 159) is different from user data variant assignment for 3-phase measurement (ID 244 to ID 254).

Quality information in byte 1 of the user data for 3-phase measurement

The quality information for 3-phase measurement is provided by the module in user data variants ID 244 to ID 254.

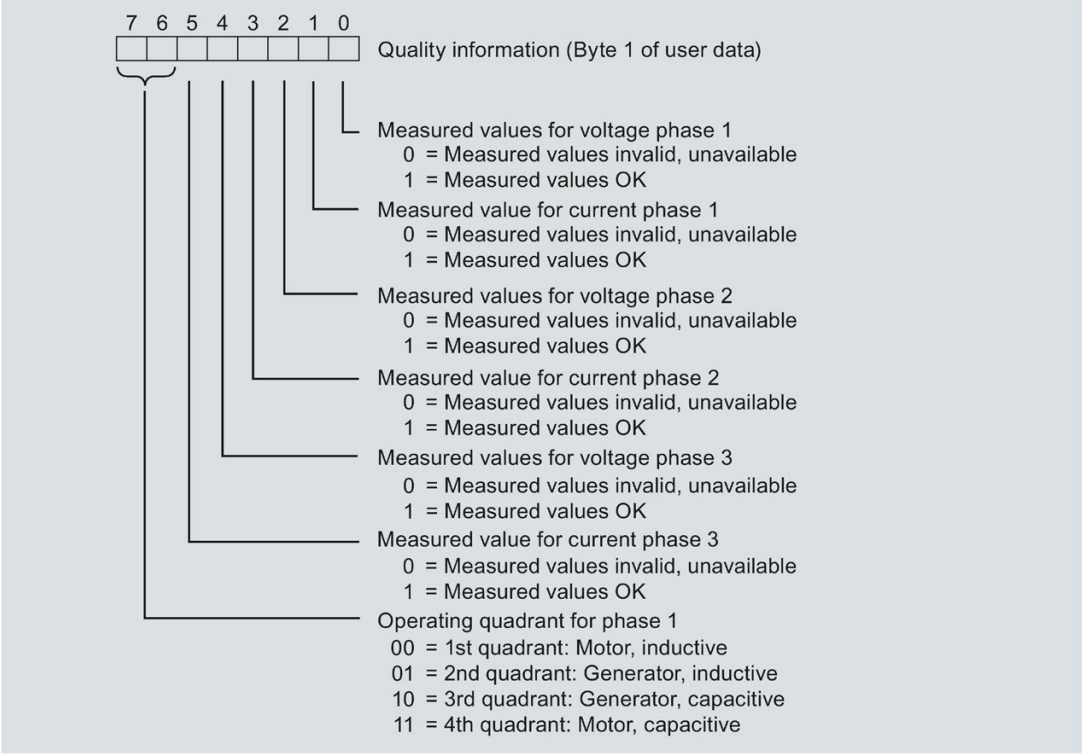

Figure 6-2 Assignment of byte 1 for user data variants ID 224 to ID 254

Quality information in byte 1 for phase-specific measurement

The quality information for phase-specific measurement is provided by the module in user data variants ID 154 to ID 159.

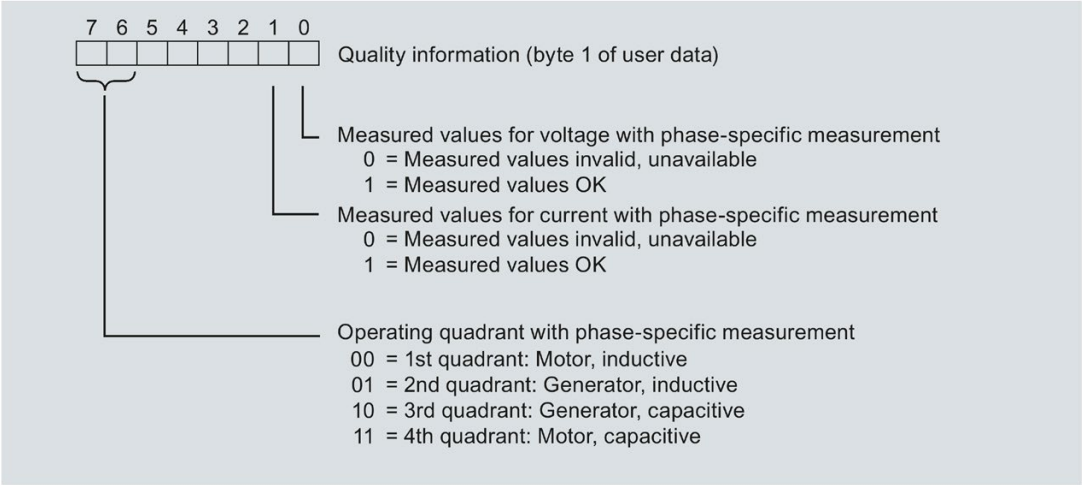

Figure 6-3 Byte 1 assignment for user data variants ID 154 to ID 159

6.2.2 Quality information with measured value IDs

Complete quality information is provided by the module in a 16-bit field with measured value IDs 65500 to 65503.

- Measured value ID 65503 for 3-phase measurement
- Measured value ID 65500, 65501 or 65502 for phase-specific measurement in phase 1, phase 2 or phase 3

Quality information with measured value ID 65503 for 3-phase measurement

The quality information for 3-phase measurement is provided by the module with:

- User data variant "Basic variables quality values three-phase measurement (ID 240 or $F0_H$)
- User data (measured value ID 66503)
- Measured value data record 150

The measured value ID 65503 provides information on:

- Currents (I_{L1}, I_{L2}, I_{L3})
- Voltages (U_{L1}, U_{L2}, U_{L3})
- Operating quadrants for all 3 phases
- Rotating field for the 3-phase system

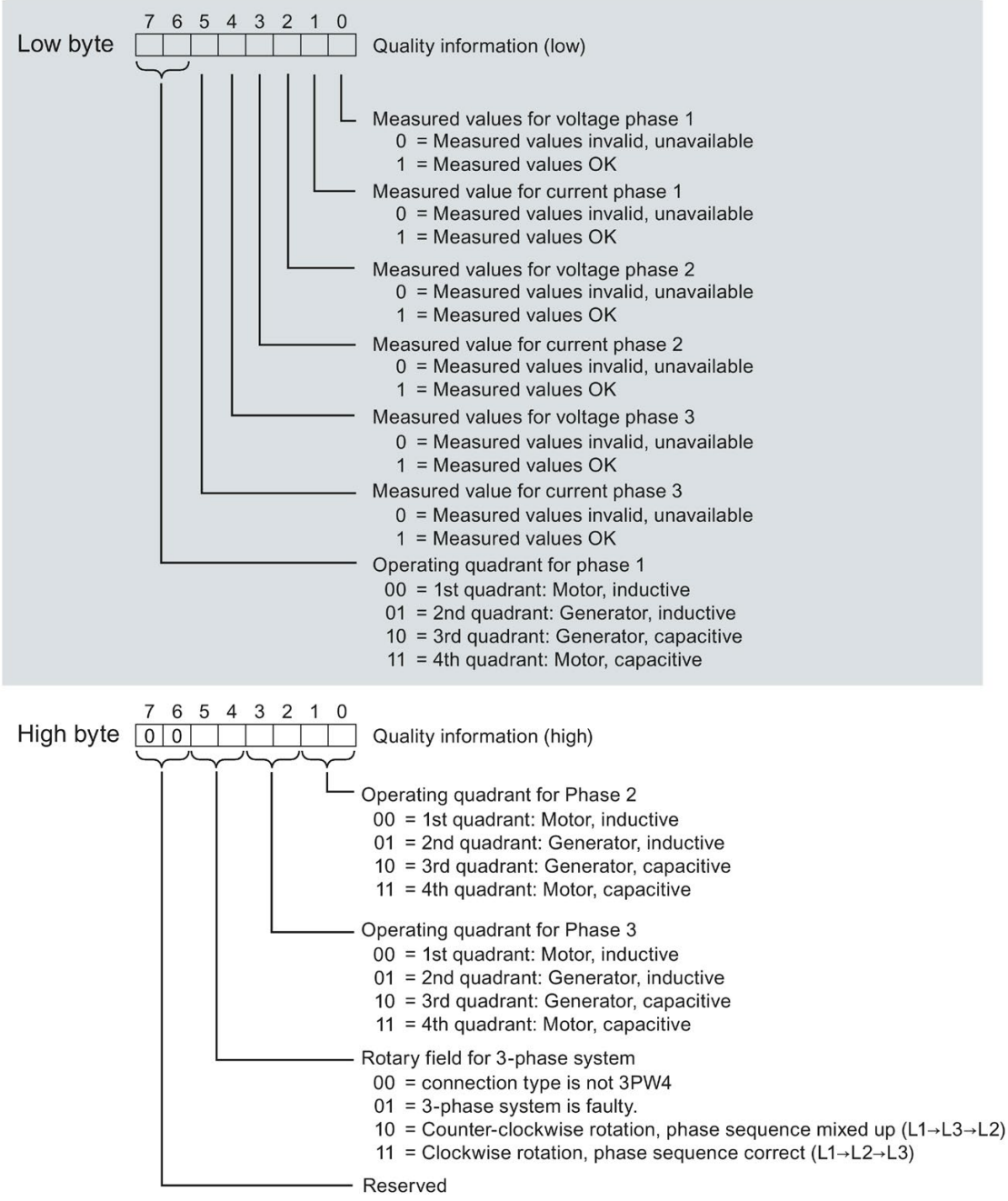

Figure 6-4 Quality information for low and high byte of the measured value ID 65503

Quality information with measured value ID 65500, 65501 or 65502 for phase-specific measurement

The module provides quality information for phase-specific measurement in phase 1, phase 2 or phase 3 with:

- User data (with measured value ID 65500, 65501 or 65502)
- Measured value data record DS 147, 148 or 149

Measured value IDs 65500, 65501 and 65502 provide information on:

- Current of the phase in question
- Voltage of the phase in question
- Operating quadrant of the phase in question

In contrast to the assignment for measured value ID 65503 (figure above), measured value IDs 65500, 65501 and 65502 only contain the phase-specific information for current, voltage and operating quadrant. The information about the other phases and the rotating field have the value 0.

6.2.3 Operating quadrant

The figure below shows the quality information of the operating quadrants.

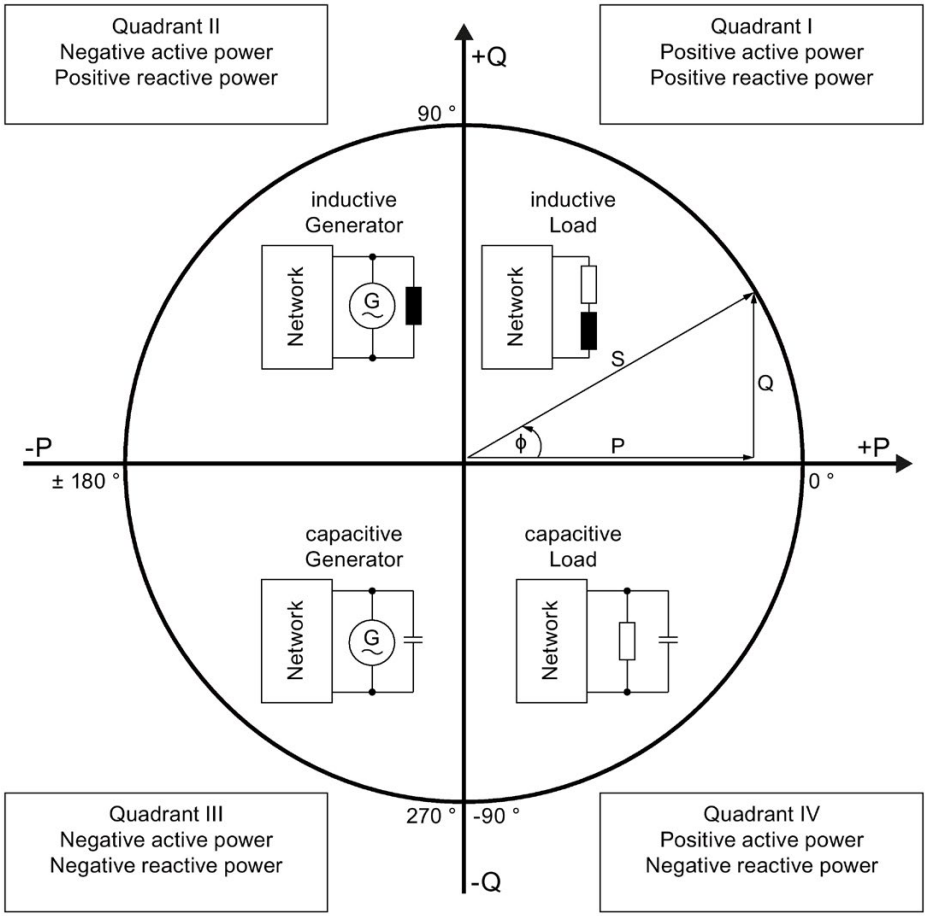

Figure 6-5 Quadrant in the quality bits

6.3 Reading measured values from user data cyclically

Requirement

- STEP 7 is open.
- The AI Energy Meter HF Is configured.

Scaling of measured values in the user data

Since the value range of 16-bit values is often smaller than the value range of the physical value, a scaling factor is supplied together with the basic value in the user data for the respective measured or calculated values. You determine the actual value of the measured variable with the following formula:

Actual value of measured quantity = measured value in the user data x $10^{\text{scaling factor}}$

Procedure

To read measured values from the user data cyclically, proceed as follows:

1. Read the relevant measured value from the input data.
2. Observe the scaling factor at scaled measured values and convert the read measured value using the scaling factor.

Example

The user data variant 254 (FE_H) "Total power L1L2L3" is configured on the AI Energy Meter HF. The measured value for "Current L1" should be read.

Table 6- 1 Total power L1L2L3

Byte	Allocation	Data type	Unit	Value range	Measured value ID
0	User data variant	BYTE	-	254 (FE_H)	-
1	Quality information = QQ_1 I_3 U_3 I_2 U_2 I_1 U_1	BYTE	Bit string	qq xx xx xx	-
2 ... 3	**Current L1**	**UINT**	**1 mA**	**0 … 65535**	**66007**
4 ... 5	Current L2	UINT	1 mA	0 … 65535	66008
6 ... 7	Current L3	UINT	1 mA	0 … 65535	66009
8 ... 9	Total active power L1L2L3	INT	1 W	-27648 … 27648	66034
10 ... 11	Total reactive power Qtot L1L2L3	INT	1 var	-27648 … 27648	66038
12 ... 13	Total apparent power L1L2L3	INT	1 VA	-27648 … 27648	66036
14 ... 17	Total active energy L1L2L3	DINT	1 Wh	-2147483647 to +2147483647	225

Byte	Allocation	Data type	Unit	Value range	Measured value ID
18 ... 21	Total reactive energy L1L2L3	DINT	1 varh	-2147483647 to +2147483647	226
22	Reserved	BYTE	-	0	-
23	Total power factor λ L1L2L3	USINT	0.01	0 … 100	66037
24	**Scaling current L1**	**USINT**	**-**	**0 ... 255**	**-**
25	Scaling current L2	USINT	-	0 ... 255	-
26	Scaling current L3	USINT	-	0 ... 255	-
27	Scaling total active power L1L2L3	USINT	-	0 ... 255	-
28	Scaling total reactive power L1L2L3	USINT	-	0 ... 255	-
29	Scaling total apparent power L1L2L3	USINT	-	0 ... 255	-
30	Scaling total active energy L1L2L3	USINT	-	0 ... 255	-
31	Scaling total reactive energy L1L2L3	USINT	-	0 ... 255	-

In the user data variant FE_H (254) the measured value for the current L1 is stored in Byte 2 + 3. The current is supplied by the module as a 16-bit-fixed-point number in the value range from 0 to 65535 in the unit 1 mA. In addition the scaling factor for the current L1 has to be considered additionally. The module supplies the related scaling factor in Byte 24.

The actual value for current L1 is calculated as follows:

Actual value for current L1 = Current L1 x $10^{\text{Scaling current L1}}$

See also

Basics for reading measured values (Page 41)

6.4 Read out measured values acyclically using data records

With all module versions you can read out the measured values using data records.

An overview of all measured value data records and exact information about the structure is available in the appendix Overview of all measured value data records (Page 226).

Requirement

In the STEP 7 project you have created a PLC data type that has an identical structure to the data record you want to evaluate.

Example of the structure of a data record

The following overview shows the structure of the data record DS 142.

Byte	Measured variable	Data type	Unit	Value range	Measured value ID
0	Version = 2	UINT8	-	-	-
1	Reserved	UINT8	-	-	-
2...5	Voltage UL1-N	REAL	V	0.0 ... 1000000.0	1
6...9	Voltage UL2-N	REAL	V	0.0 ... 1000000.0	2
10...13	Voltage UL3-N	REAL	V	0.0 ... 1000000.0	3
14...17	Voltage UL1-L2	REAL	V	0.0 ... 1000000.0	4
18...21	Voltage UL2-L3	REAL	V	0.0 ... 1000000.0	5
22...25	Voltage UL3-L1	REAL	V	0.0 ... 1000000.0	6
26...29	Current L1	REAL	A	0.0 … 100000.0	7
30...33	Current L2	REAL	A	0.0 … 100000.0	8
34...37	Current L3	REAL	A	0.0 … 100000.0	9
:		:	:	:	:
210...213	Neutral current	REAL	A	0.0 ... 100000.0	61149

Procedure

1. Read the desired data record with the RDREC instruction.

   The measured values are in the target range of the data block which you specified with the RDREC instruction.

2. Evaluate the measured values for the desired measured variables.

Note

If you want to read or write several data records at the same time in the user program, note that the number of active jobs that you started with the RDREC or WRREC instruction is limited by the resources of the CPU used.

See also

Measured value data record for base measurements (DS 142) (Page 227)

6.5 Time-of-day synchronization and time stamp

The AI Energy Meter HF supports time-of-day synchronization and time stamp.

Time stamps are used to date the exact occurrence of information. You can find time information in the measured value data records "Measured value data record for maximum values with time stamp (DS 154)" and "Measured value data record for minimum values with time stamp (DS 155)", for example, or the power quality analysis data records DS160, DS161 and DS163. For the time on the AI Energy Meter HF to correspond to the current system time, the clock must be synchronized externally. Information on this and additional requirements can be found in the application example (http://support.automation.siemens.com/WW/view/en/109754890). In the absence of time-of-day synchronization, the internal time stamp of the AI Energy Meters HF starts at 01.01.1970, 0:00.

Energy counters

7

Introduction

The AI Energy Meter HF provides several energy and overflow counters that detect both line-based and phase-based energy values, e.g.:

- Active energy (total, outflow, inflow)
- Reactive energy (total, outflow, inflow)
- Apparent energy (total)

Retentivity

The AI Energy Meter HF stores all counter values retentively. After an interruption (e.g. Power System Off), the energy counting resumes with the retentively stored values.

Functions

The energy meters provide the following basic functions:

- Measured values for infinite and periodical counting can be read out

  End values for periodic counting: 10^3, 10^6, 10^9, 10^{12} and 10^{15} can be selected with overflow counters
- Measuring ranges can be changed in RUN
- Starting and stopping counters via gate is possible
- Preset and apply start values in RUN
- Measured variables can be evaluated via data records and user data.

7.1 Evaluate measured values for energy

There are two ways of evaluating the measured values:

- Reading measured values using the instruction "RDREC".
- Reading measured values from the user data variants (not for module versions with 2 bytes of input data).

Data records for energy meters

You can read out measured values for energy and overflow counters in the following data records.

The evaluation of measured data using data records is described in section Read out measured values acyclically using data records (Page 52).

Name of the data record	Number of the data record	Comment
Data record for basic measured values (Page 227)	Data record 142	Measured values of the total energy L1L2L3
Data record for energy meter (Page 232)	DS 143	Measured values of energy and overflow counters for phases L1, L2 and L3
Data record for phase-specific measured values L1 (Page 248)	DS 147	Measured values of the phase-specific energy meters L1
Data record for phase-specific measured values L2 (Page 251)	DS 148	Measured values of the phase-specific energy meters L2
Measured value data record for phase-specific measured values L3 (Page 254)	DS 149	Measured values of the phase-specific energy meters L3

User data variants for energy meters

You can read out measured values for energy and overflow meters in the following user data variants.

The evaluation of measured data using user data variants is described in section Reading measured values from user data cyclically (Page 50).

Name of the user data variant	Number of the user data variant	Comment
Total energy L1 L2 L3 (Page 211)	ID 249 or $F9_H$	Measured values of the total energy L1L2L3
Energy L1 (Page 212)	ID 248 or $F8_H$	Measured values of the phase-specific energy meters L1
Energy L2 (Page 213)	ID 247 or $F7_H$	Measured values of the phase-specific energy meters L2
Energy L3 (Page 214)	ID 246 or $F6_H$	Measured values of the phase-specific energy meters L3
Basic variable quality measurement three-phase measurement (Page 214)	ID 240 or $F0_H$	Status on the overflow of the energy meters for phases L1, L2 and L3
Basic variables energy meter measurement (periodic) L1L2L3 (Page 217)	ID 239 or EF_H	Number of counter overflows for energy of phases L1, L2 and L3
EE@Industry measurement data profile E3 (Page 219)	ID 227 or $E3_H$	Measured values for total active energy and total reactive energy L1L2L3

Name of the user data variant	Number of the user data variant	Comment
EE@Industry measurement data profile E2 (Page 219)	ID 226 or $E2_H$	Measured values for total active energy L1L2L3
Basic variables for phase-specific measurement L1 (Page 220)	ID 159 or $9F_H$	Measured values for phase-specific active, reactive and apparent energy for phase L1
Basic variables for phase-specific measurement L1a (Page 221)	ID 158 or $9E_H$	Measured values for phase-specific active, reactive and apparent energy for phase L1
Basic variables for phase-specific measurement L2 (Page 222)	ID 157 or $9D_H$	Measured values for phase-specific active, reactive and apparent energy for Phase L2
Basic variables for phase-specific measurement L2a (Page 223)	ID 156 or $9C_H$	Measured values for phase-specific active, reactive and apparent energy for Phase L2
Basic variables for phase-specific measurement L3 (Page 224)	ID 155 or $9B_H$	Measured values for phase-specific active, reactive and apparent energy for Phase L3
Basic variables for phase-specific measurement L3a (Page 225)	ID 154 or $9A_H$	Measured values for phase-specific active, reactive and apparent energy for Phase L3
User-defined user data variant	ID 1 or 01_H and ID 2 or 02_H	Measured variables for energy can be selected in a user-defined manner

7.2 Preset and apply start values for energy and overflow counters

At the beginning of a new work order, it may be useful to start the energy and overflow counter with new start values.

Define the new start values for the energy and overflow counter in data record DS 143.

Note

Pre-set start values for counters

If you have not yet transferred any start values to the CPU using the data record DS 143, then start the counters with the value 0.

With **all** the module versions there are two ways of applying the start values:

- Transfer start values from data record DS 143 and apply them **immediately**
- Transfer start values from data record DS 143 and only apply them after setting a special bit (DQ bit for counter reset)

Both options are described in the following sections.

General reset

With module versions with 20 bytes of output data you can reset the energy and overflow counters. With a general reset, you cannot preset any start values; the start values for energy and overflow counters are always zero with a general reset.

You can find additional information on the general reset in the section Basics for reading measured values (Page 41).

See also

Structure for energy counters (DS 143) (Page 232)

7.2.1 Preset start values for the energy meters

Define the start values for the energy and overflow meters in data record DS 143.

Introduction

You have created a PLC data type that has an identical structure to data record DS 143.

Structure of data record DS 143

The following overview shows the structure of the data record DS 143 in simplified form.

More detailed information about the structure of data record DS 143 is available in section Structure for energy counters (DS 143) (Page 232).

Byte	Measured variable	Data type	Unit	Value range	Measured value ID
0	Version	BYTE	-	1	-
1	Reserved	BYTE	-	0	-
2	Control byte 1 - L1	BYTE	Bit string	-	-
3	Control byte 2 - L1	BYTE	Bit string		
4	Control byte 1 - L2	BYTE	Bit string		
5	Control byte 2 - L2	BYTE	Bit string		
6	Control byte 1 - L3	BYTE	Bit string		
7	Control byte 2 - L3	BYTE	Bit string		
8...15	Start value for active energy inflow L1	LREAL	Wh	You will find the exact assignment in the section Structure for energy counters (DS 143) (Page 232).	61180
16...23	Initial value active energy outflow L1	LREAL	Wh		61181
:	:	:	:		:
128...129	Start value for overflow counters active energy inflow L1	UNIT	-		61190
130...131	Start value for overflow counter active energy outflow L1	UNIT	-		61191
:	:	:	:		

Assignment of data record DS 143

Byte 0 and Byte 1: Version of the data record

Header information for the version of the data record.

Byte 2 ... Byte 7: Control bytes for energy and overflow counter

When data record 143 is written with the WRREC instruction, Bytes 2 to 7 are used as phase-specific control information for energy meters, overflow counters and operating hours counters. The length of the control information amounts to 2 bytes for each phase.

Byte 8 ... Byte 127: Start values for the individual energy meters

The start values for energy meters in data record 143 are 64-bit floating point numbers. The format corresponds to the data type LREAL in S7-1200 and in S7-1500.

Byte 128 ... Byte 157: Initial values for overflow counters

The initial values for overflow counters in data record 143 are 16-bit integers. The format corresponds to the data type UINT in S7-1200 and in S7-1500.

7.2.2 Apply start values from data record DS 143 immediately

It is possible to apply the start values for energy counters and overflow counters for each **individual** phase separately by active, reactive and apparent energy.

Requirement

In your STEP 7 project you have created a PLC data type that has an identical structure to data record DS 143 and you have entered the start values.

Procedure for all module versions

1. In control byte 2 of the DS 143 (bytes 3, 5 and 7), for each phase set the category of the energy meters (active, reactive, apparent energy) for which you want to set the start values.

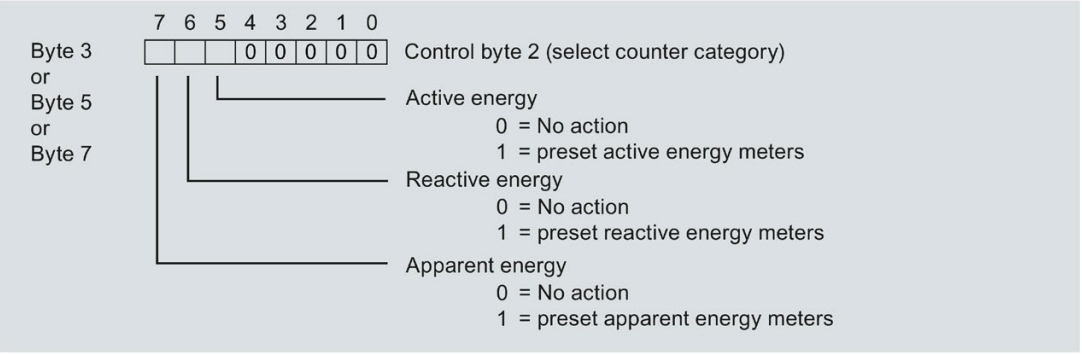

Figure 7-1 Assignment of control byte 2 in DS 143

2. In control byte 1 of DS 143 (bytes 2, 4 and 6), for each phase define whether you want to apply the start values for energy or overflow counters.

   Applying depends on the category selection from control byte 2.

   – Set Bit 0 if you want to apply the start values for the overflow counters.

   – Set Bit 2 if you want to apply the start values for the energy meters.

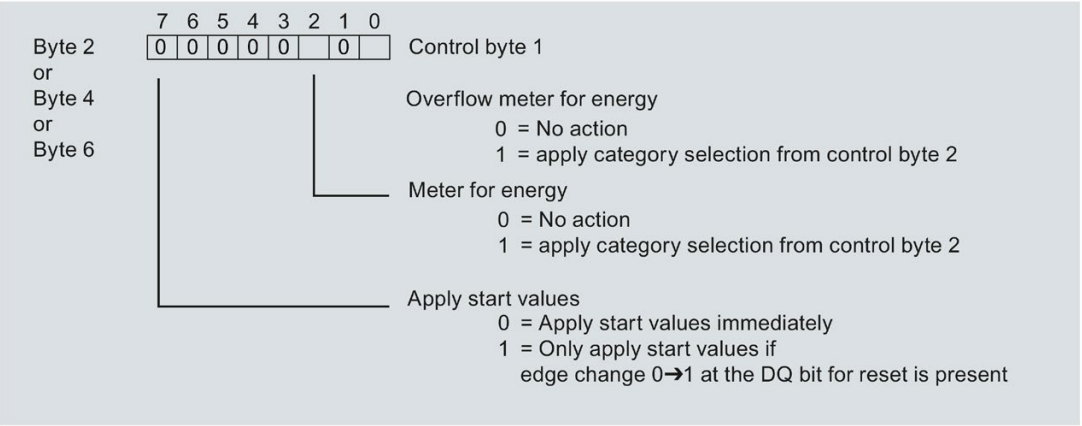

Figure 7-2 Assignment of control byte 1 in DS 143

3. In control byte 1 of DS 143 define that you want to immediately apply the start values.

   – Set Bit 7 to 0 so that the start values are immediately applied after writing the data record.

4. Transfer the data record with the WRREC instruction to the CPU.

7.2.3 Apply start values from data record DS 143 with DQ bit

Due to the differing lengths of the output data, setting of the start values for the energy counters and overflow counters depends on the configured module version.

Module versions with 20 bytes of output data

If you use module versions with 20 bytes of output data, you can:

- Apply start values for energy counters and overflow counters for **all** phases separately by active, reactive and apparent energy.
- Apply start values for energy counters and overflow counters for each **individual** phase separately by active, reactive and apparent energy.

Module version with 2 bytes of output data

If you use the module version with 2 bytes of output data, then you always apply the start values for **all** the energy counters and overflow counters simultaneously.

Requirement

- In your STEP 7 project you have created a PLC data type that has an identical structure to data record DS 143 and have entered the start values.

  Applying depends on the category selection from control byte 2.

  – Set Bit 0 if you want to apply the start values for the overflow counters.

  – Set Bit 2 if you want to apply the start values for the energy meters.
- In control byte 1 of the DS 143 you have set Bit 7 to "1" (apply start values via DQ bit)
- You have transferred the data record DS 143 with new start values to the CPU. The assignment of the data record can be found in Structure for energy counters (DS 143) (Page 232)

Note

Pre-set start values for counters

If you have not yet transferred any start values to the CPU using the data record DS 143, then start the counters with the value 0.

Procedure for module version with 20 bytes of output data

Apply start values for energy counters and overflow counters for all three phases

1. In Byte 2 of the output data, select the categories for which you want to apply start values.
   - Set bit 5 for active energy counters.
   - Set bit 6 for reactive energy counters.
   - Set bit 7 for apparent energy counters.

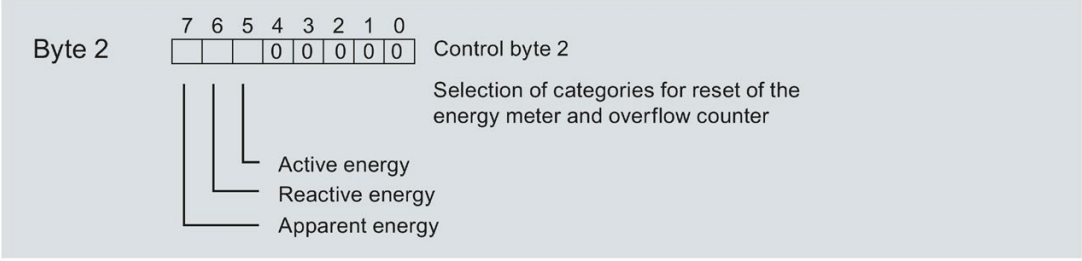

Figure 7-3 Selection of categories for reset

2. Set the reset bit (Bit 7) in byte 1 of the output data.

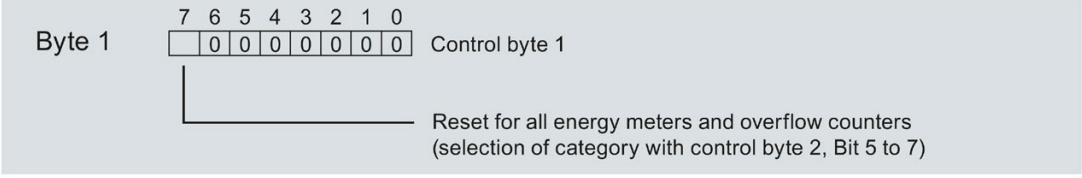

Figure 7-4 Reset bit for energy and overflow counter

If there is an edge change of the reset bit from 0 -> 1, the module resets the energy and overflow counters that you previously selected in byte 2 to their start values.

Apply start values for energy counters and overflow counters for phase-specific counting

You can also reset the energy and overflow counters on a phase-specific basis using the output data.

Follow the procedure as described in "Applying start values for energy counters and overflow counters for all three phases", as applicable.

1. In bytes 7, 9 and 11 of the output data, select the categories for which you want to apply the phase-specific start values.
   - Set Bit 5 for active energy counters.
   - Set Bit 6 for reactive energy counters.
   - Set Bit 7 for apparent energy counters.

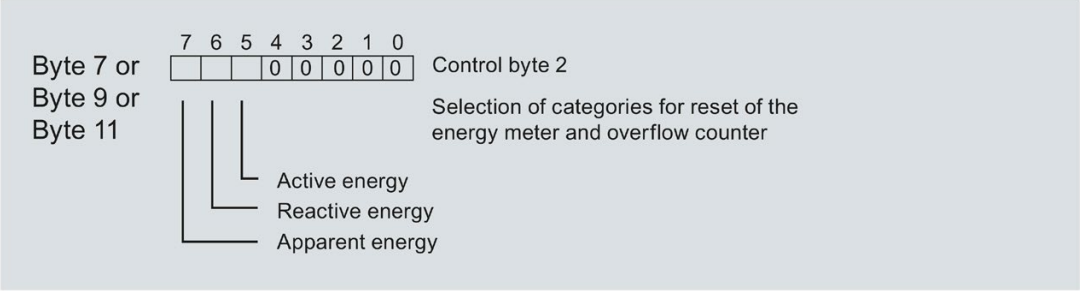

Figure 7-5 Selection of category

2. In bytes 6, 8 and 10 of the output data, set the reset bits (Bit 7) for the phase-specific start values.

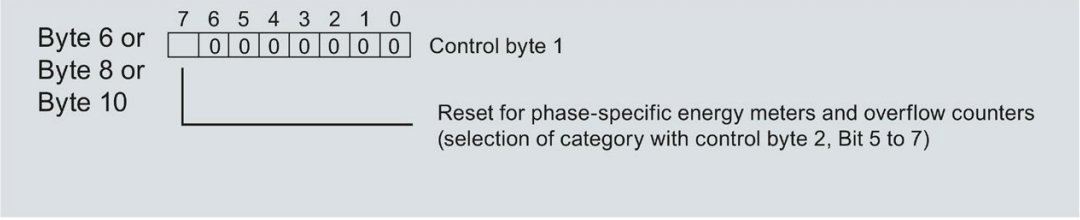

Figure 7-6 Reset bit for phase-specific energy and overflow counters

If there is an edge change of the phase-specific reset bit from 0 -> 1, the module resets the energy and overflow counters that you previously selected in bytes 7, 9 and 11 to their start values.

Procedure for module version with 2 bytes of output data

If you use the module version with 2 bytes of output data, always apply the start values **for all** the energy counters and overflow counters.

- Set the reset bit (Bit 7) in byte 1 of the output data.

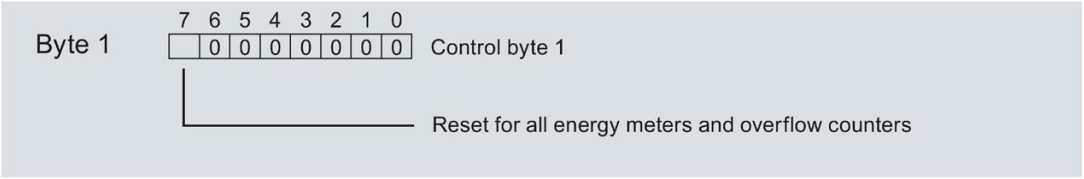

Figure 7-7 Reset bit for all energy and overflow counters

If there is an edge change of the reset bit from 0 -> 1, the module resets **all** energy and overflow counters to their start values.

7.3 Starting and and stopping energy meters

There are two ways of starting or stopping measurement with the energy meter AI Energy Meter HF:

- Counting with gate

  The module starts counting when you set the DQ bit for the counter gate in the output data using an edge change from 0 -> 1. If you reset the DQ bit using an edge change from 1 -> 0, the counter stops.

- Counting without gate

  The module starts counting immediately as soon as the module is switched on. Counting cannot be stopped.

Both options are described in the following sections.

Counting with gate

Requirements:

The current value is higher than the configured "Low limit for measuring current in relation to nominal value current [0.1%]".

Procedure

If you wish to start counting using the gate, proceed as follows:

1. Activate the parameter "Enable energy meter gate" in the parameter assignment of the module.
2. Set the DQ bit for the counter gate (Bit 6) in control byte 1 in the output data.

The module starts counting as soon as there is an edge change from 0 -> 1 at the DQ bit for the counter gate.

If you wish to stop the counting again, then reset Bit 6 in control byte 1 in the output data. Counting stops at an edge change from 1 -> 0.

The "Enable gate control for the energy counter" parameter and the DQ bit for the "counter date" behave like the parallel connection of contacts.

Gate enabled: Gate "open" if DQ = "1"

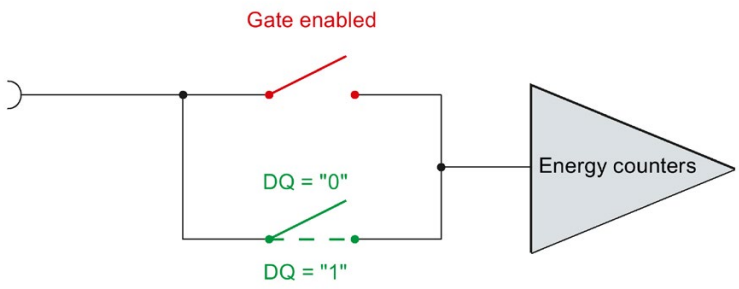

Figure 7-8 Gate enabled

Counting without gate

Requirement

The current value is higher than the configured "Low limit for measuring current in relation to nominal value current [0.1%]".

Procedure

Deactivate the parameter "Enable energy meter gate" in the parameter assignment of the module.

The module starts counting as soon as the module is started. The counter continues to count.

Gate disabled: Gate is always "open" (signal path closed)

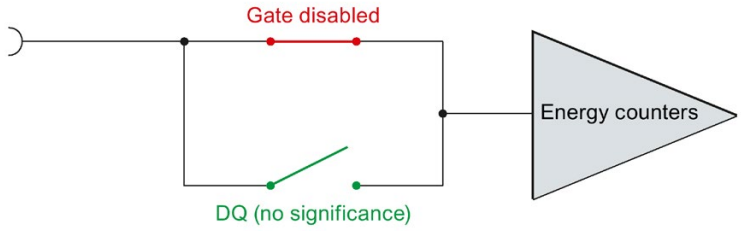

Figure 7-9 Gate disabled

7.4 Example of measuring and resetting an energy meter

The following figure shows resetting and starting/stopping with activated gating using the energy meter as an example:

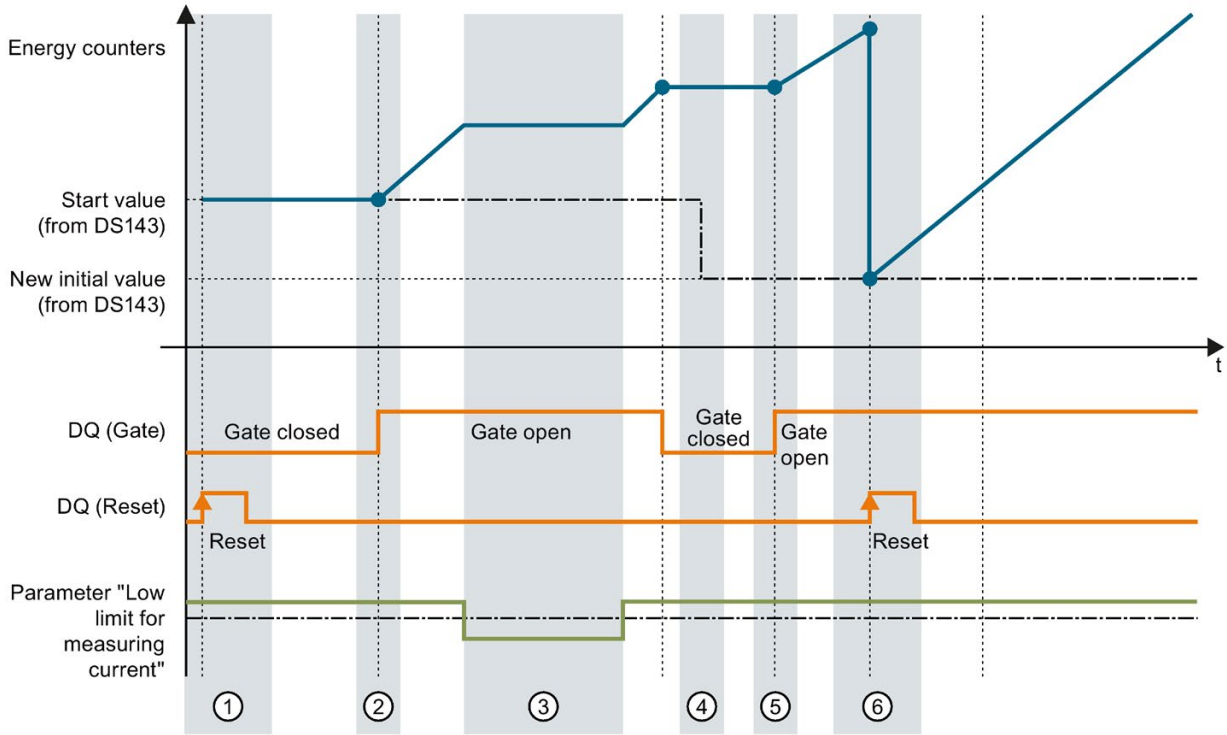

① The counter is reset to the value specified in the configuration. The gate is closed. The counter does not count.

② The gate is opened via the control byte 1 in the output data of the user data variant. The counter counts.

③ The configured current low limit has been violated. The counter does not count.

④ The gate is closed. The counter does not count. A new start value is written to the measured value data record 143 (Page 232) with the WRREC instruction.

⑤ The gate is opened again via the control byte 1 in the output data of the user data variant. The counter counts with the new start value.

⑥ The counter is reset via the control byte 1 in the output data of the user data variant. The counter counts from the new start value that was transferred via the measured value data record 143.

Figure 7-10 Example of an energy meter

7.5 What is the structure of the control and feedback interface for DS 143?

Introduction

Bytes 2 to 7 of data record 143 (Page 232) form the phase-based control and feedback interface for the data record DS 143.

- Bytes 2 and 3: Control and feedback interface for phase 1
- Bytes 4 and 5: Control and feedback interface for phase 2
- Bytes 6 and 7: Control and feedback interface for phase 3

Status information

When data record 143 is read with the RDREC instruction, Bytes 2 to 7 supply phase-specific status information for energy counters, overflow counters and operating hours counters.

The status information enables you can see which counters are returning their values in the data record 143. If energy counters return their values in the status byte 1, you can determine the type of energy counter with status byte 2.

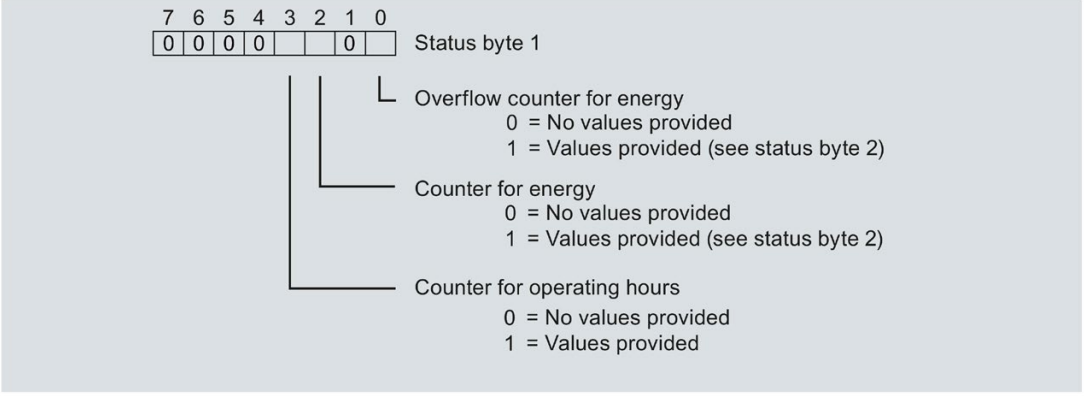

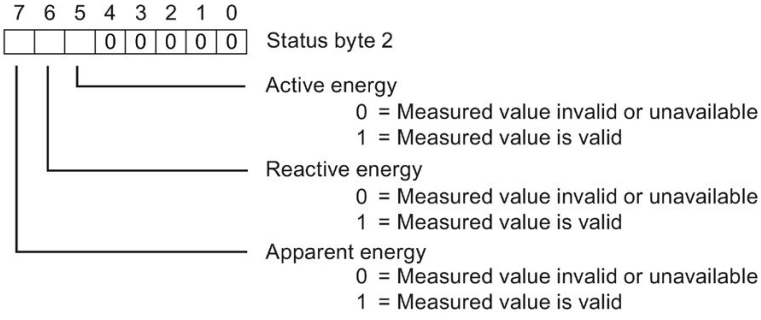

Figure 7-11 Status information DS 143 (read access)

Control information

When data record 143 is written with the WRREC instruction, Bytes 2 to 7 are used as phase-specific control information for energy meters, overflow counters and operating hours counters. The length of the control information amounts to 2 bytes for each phase:

- In control byte 1 you determine which counter you want to preset and the time at which counters are to be preset.

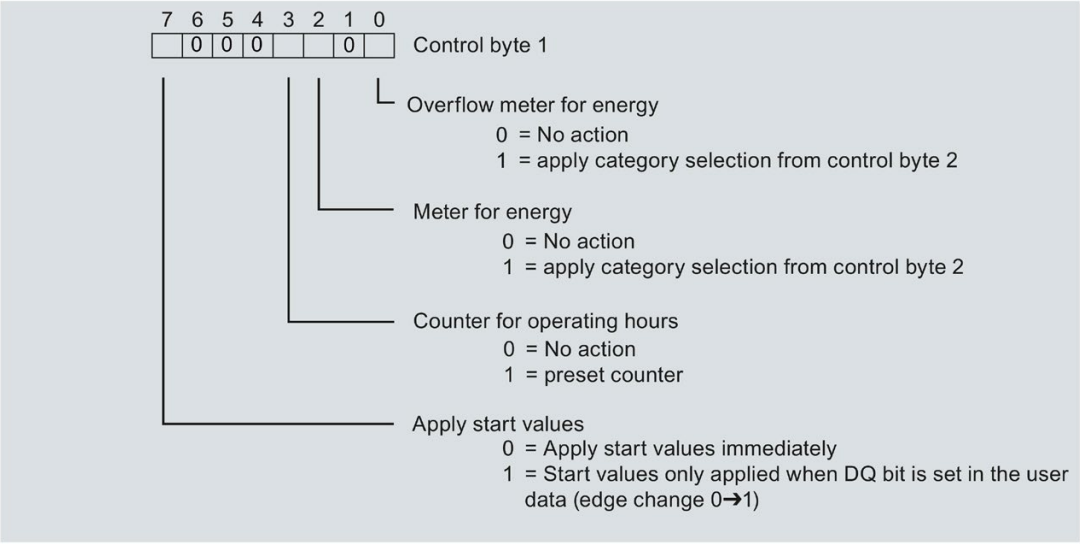

Figure 7-12 Control information DS 143, control byte 1 (write access)

- In control byte 2 you determine which energy meter categories you want to preset.

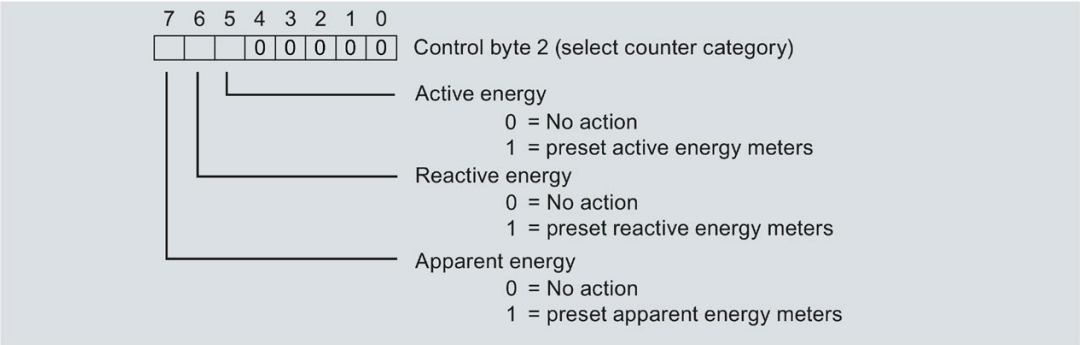

Figure 7-13 Control information DS 143, control byte 2 (write access)

Operating hours counter

8

Introduction

The AI Energy Meter HF provides four operating hours counters which count the operating hours of the connected consumers:

- Three phase-specific operating hours counters
- 1 operating hours counter which displays the value of the largest phase-specific operating hours counter.

Retentivity

The AI Energy Meter HF stores all counter values retentively. After an interruption (e.g. Power System Off), counting resumes with the retentively stored values.

Functions

The operating hours counters provide the following basic functions:

- Measuring ranges from 0 to 3.4 x 10^{38} hours.
- Starting and stopping operating hours counters via gate
- Preset and apply start values in RUN
- Evaluating counter states using data records and user data

8.1 Evaluating operating hours counters

There are two ways of evaluating the operating hours counters:

- Reading counter states using data records with the instruction RDREC.
- Reading counter states from the user-defined user data variants.

Data records for operating hours counter

You can read out measured values for operating hours in the following data records.

The evaluation of measured data using data records is described in section Reading and processing measured values (Page 41).

Name of the data record	Number of the data record	Comment
Data record for energy meter (Page 232)	DS 143	Phase-specific operating hours counter for phase L1, phase L2, phase L3 and largest phase-specific operating hours counter L1L2L3
Measured value data record for advanced measurement and status values (Page 257)	DS 150	
Measured value data record of user-defined data record (Page 258)	DS 151	Operating hours counters can be selected in a user-defined manner

User data variants for operating hours counters

You can read out measured values for operating hours in the following user data variants.

The evaluation of measured data using user data variants is described in section User data variants (Page 205).

Name of the user data variant	Number of the user data variant	Comment
User-defined user data variant	ID 1 or 01_H and ID 2 or 02_H	Operating hours counters can be selected in a user-defined manner

8.2 Preset and apply start values for operating hours counters

Introduction

At the beginning of a new work order, it may be useful to start counting of the operating hours counters with new start values.

Define the new start values for the operating hours counters in data record DS 143.

Note

Pre-set start values for counters

If you have not yet transferred any start values to the CPU using the data record DS 143, then start the counters with the value 0.

With **all** the module versions there are two ways of applying the start values:

- Transfer start values from data record DS 143 and apply them **immediately**
- Transfer start values from data record DS 143 and only apply them after setting a special bit (DQ bit for operating hours counter reset)

Both options are described in the following sections.

General reset

With module versions with 20 bytes of user data you can reset the operating hours counters. With a general reset, you cannot preset any start values; the start values for operating hours counters are always zero with a general reset.

You can find additional information on the general reset in the section Basics for reading measured values (Page 41).

8.2.1 Preset start values for operating hours counters

Define the start values for operating hours counters using data record DS 143.

Introduction

You have created a PLC data type that has an identical structure to data record DS 143.

Structure of data record DS 143

The following overview shows the structure of the data record DS 143 in simplified form.

More detailed information about the structure of data record 143 is available in section Structure for energy counters (DS 143) (Page 232).

Byte	Measured variable	Data type	Unit	Value range	Measured value ID
0	Version	BYTE	-	1	-
1	Reserved	BYTE	-	0	-
2	Control byte 1 - L1	BYTE	Bit string	-	-
3	Control byte 2 - L1	BYTE	Bit string		
4	Control byte 1 - L2	BYTE	Bit string		
5	Control byte 2 - L2	BYTE	Bit string		
6	Control byte 1 - L3	BYTE	Bit string		
7	Control byte 2 - L3	BYTE	Bit string		
8...15	Start value for active energy inflow L1	LREAL	Wh	You will find the exact assignment in the section Structure for energy counters (DS 143) (Page 232).	61180
16...23	Initial value active energy outflow L1	LREAL	Wh		61181
:	:	:	:		:
158...161	Start value operating hours L1	REAL	h		65505
162...165	Start value operating hours L2	REAL	h		65506
166...169	Start value operating hours L3	REAL	h		65507

Assignment of data record DS 143

Byte 0 and Byte 1: Version of the data record

Header information for the version of the data record.

Byte 2 ... Byte 7: Control bytes for energy and overflow counter

When data record 143 is written with the WRREC instruction, Bytes 2 to 7 are used as phase-specific control information for energy meters, overflow counters and operating hours counters. The length of the control information amounts to 2 bytes for each phase.

Byte 8 ... byte 157: Start values for the individual energy meters and overflow counters

The start values for energy counters in data record 143 are 64-bit floating point numbers. The format corresponds to the data type LREAL in S7-1200 and in S7-1500.

The initial values for overflow counters in data record 143 are 16-bit integers. The format corresponds to the data type UINT in S7-1200 and in S7-1500.

Byte 158 ... byte 169: Start values for operating hours counter

The start values for operating hours counters in data record 143 are 32-bit integers. The format corresponds to the data type REAL in S7-1200 and in S7-1500.

8.2.2 Apply start values from data record DS 143 immediately

Applying the start values for each separate operating hours counter is possible.

Requirement

In your STEP 7 project you have created a PLC data type that has an identical structure to data record DS 143 and you have entered the start values.

Procedure for all module versions

1. In Control byte 1 of DS 143 (bytes 2, 4 and 6), for each phase, define that you want to immediately apply the start values for operating hours counters.
   - Set the Bit 3 to 1 so that the start values for the operating hours counters are preset.
   - Set the Bit 7 to 0 so that the module **immediately** applies the start values after writing the data record.

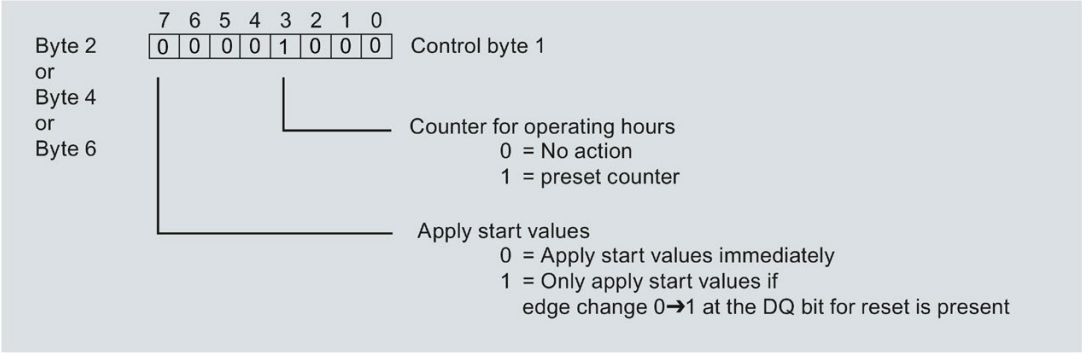

Figure 8-1 Allocation of the control bytes in DS 143 for operating hours

2. Transfer the data record with the WRREC instruction to the CPU.

8.2.3 Apply start values from data record DS 143 with DQ bit

Due to the differing lengths of the output data, setting of the start values for the operating hours counters depends on the configured module version.

Module versions with 20 bytes of output data

If you use module versions with 20 bytes of output data, you can:

- Apply start values for **all** operating hours counters.
- Apply start values for **individual** operating hours counters separately.

Module version with 2 bytes of output data

If you use the module version with 2 bytes of output data, apply the start values for **all** operating hours counters simultaneously.

Requirement

- In your STEP 7 project you have created a PLC data type that has an identical structure to data record DS 143 and have entered the start values.
- Set the Bit 3 to 1 so that the start values for the operating hours counters are preset.
- In control byte 1 of DS 143 you have set Bit 7 to "1" (apply start values via DQ bit). (see previous figure)
- You have transferred the data record DS 143 with new start values to the CPU. The assignment of the data record can be found in Structure for energy counters (DS 143) (Page 232)

Note

Pre-set start values for counters

If you have not yet transferred any start values to the CPU using the data record DS 143, then start the counters with the value 0.

Procedure for applying the start values of all operating hours counters

Applying the start values for all operating hours counters with the module versions with 2 bytes and 20 bytes of output data is identical.

1. Set the reset bit for operating hours counters (Bit 5) in Byte 1 in the output data.

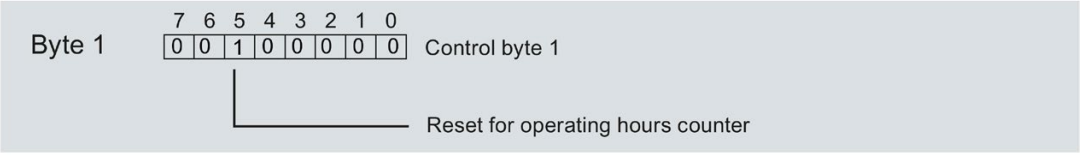

Figure 8-2 Control byte 1 Reset for all operating hours counters

If there is an edge change of the reset bit from 0 to 1, the module applies the start values for all operating hours counters.

Procedure for applying the start values of individual operating hours counters

---

Note

Applying the start values for phase-specific operating hours counters

Applying the start values for phase-specific operating hours counters does not differ from the procedure described above. In the output data, select the reset bits for the phase-specific operating hours counters in bytes 6, 8 and 10.

8.3 Starting and stopping operating hours counters

There are two ways of starting or stopping counting with the operating hours counter AI Energy Meter HF:

- Counting with gate

  The module starts counting when you set the DQ bit for the counter gate in the output data using an edge change from 0 -> 1. If you reset the DQ bit for the counter gate using an edge change from 1 -> 0, the counter stops.

- Counting without gate

  The module starts counting immediately as soon as the module is switched on. Counting cannot be stopped.

Both options are described in the following sections.

Counting with gate

Requirements:

The current value is higher than the configured "Low limit for measuring current in relation to nominal value current [0.1%]".

Procedure

If you wish to start counting using the gate, proceed as follows:

1. Activate the parameter "Enable operating hours counter gate" in the parameter assignment of the module.
2. Set the DQ bit for the counter gate (Bit 4) in control byte 1 in the output data.

The module starts counting as soon as there is an edge change from 0 -> 1 at the DQ bit for the counter gate.

If you wish to stop the counting again, then reset Bit 4 in control byte 1 in the output data. Counting stops at an edge change from 1 -> 0.

The "Enable operating hours counter gate" parameter and the DQ bit for the "counter date" behave like the parallel connection of contacts.

Gate enabled: Gate "open" if DQ = "1"

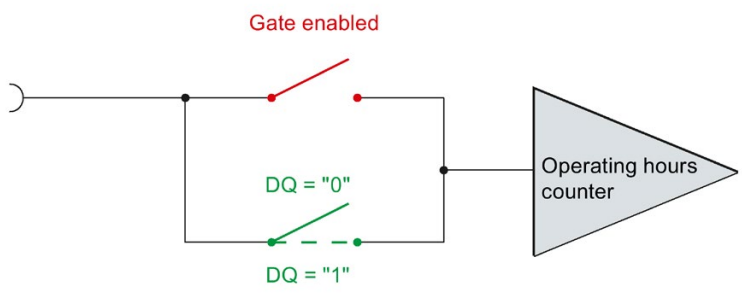

Figure 8-3 Gate enabled

Counting without gate

Requirement

The current value is higher than the configured "Low limit for measuring current in relation to nominal value current [0.1%]".

Procedure

Deactivate the parameter "Enable operating hours counter gate" in the parameter assignment of the module.

The module starts counting as soon as the data record has been applied by the CPU.

The counter continues to count.

Gate disabled: Gate is always "open" (signal path closed)

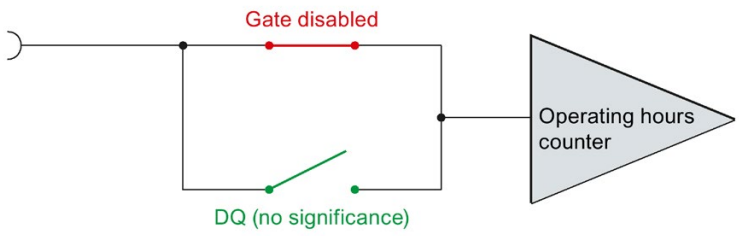

Figure 8-4 Gate disabled

Limit monitoring 9

9.1 How limit monitoring works

Introduction

The AI Energy Meter HF supports monitoring of parameterizable low **or** high limits for up to 16 analog measured or calculated variables.

You can also specify multiple limits for each measured or calculated variable, in order to define a high or low value range.

The measured value data record 150 returns the current status of limit violations and one counter per limit that displays the number of limit violations. In addition, a hardware interrupt may be generated for each limit violation.

The status of the limit violations can also be evaluated in the user data variant 240 ($F0_H$) or via the user-defined user data variant or the user-defined data record via the measured value ID 65509.

Benefits

With activated limit monitoring you can already detect any irregularities in the measured value acquisition already in field level.

Retentivity

All the counter states are stored retentively in the AI Energy Meter HF. After an interruption (e.g. Power System Off), the counting resumes with the retentively stored values.

Configuring

You configure the following limit monitoring settings in STEP 7:

- Measured variable that is to be monitored.
- Activate / Deactivate limit monitoring.
- High or low limit values.
- Delay time and hysteresis for each limit.
- Activate / Deactivate hardware interrupts at limit violation.
- Measured value that is subject to limit monitoring.

Hardware interrupt at a limit violation

The hardware interrupt provides the following information:

- Measured value ID of the monitored measured or calculated variable
- Number of the limit (0 = Limit 1. 15 = Limit 16)
- Information on whether limit was exceeded or fallen below

For more detailed information, refer to section Hardware interrupts (Page 110).

Changing properties in RUN

The following table shows the supported control information:

Control information	Default value	Available in
Enable/disable monitoring per limit[1]	Disabled	Module version with 20 bytes of output data
Reset number of total limit violations	0	Module version starting at 2 bytes of output data

[1] Effective only with enabled gate

9.2 Influence of hysteresis and delay time on limit monitoring

Delay time and hysteresis

In order to prevent the triggering of limit violations with small fluctuations, you have the following configuration options in STEP 7:

- Delay time in seconds (0 to 10 s)

  With the delay time, you filter faults and thereby prevent limit value monitoring from triggering too frequently. The limit violation is counted only when the limit violation is present for longer than the configured delay time. The delay time is also taken into consideration with an outgoing limit violation, directly after a high or low limit has been violated in the permitted range. If the measured variable lies between limit violation and hysteresis after the limit violation has been corrected again, the delay time expires also without leaving the hysteresis.

- Hysteresis as a percentage (0 to 20%)

  With the hysteresis, you suppress fluctuations around the limit. The hysteresis is a tolerance range that you define as a percentage deviation of the configured limit. The limit violation is considered to be corrected only when the monitored value leaves the tolerance range.

Note

You can get information about underflow and overflow from the calculation of minimum (Page 243) and maximum values (Page 237) of selected measured variables.

The following figure shows the value-over-time for two measured values using the example of a high and low limit as well as the influence of hysteresis and delay time on the counting of the limit violations.

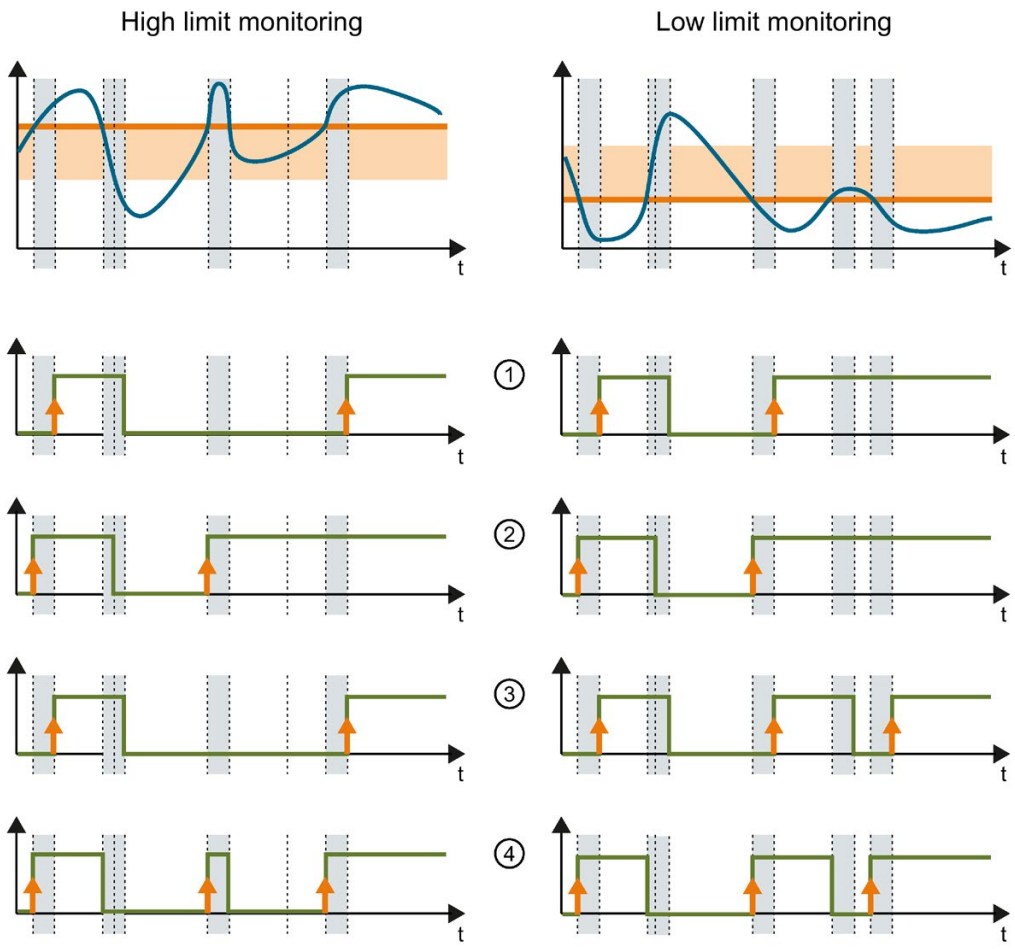

- Configured limit.
- Configured delay time. Is taken into consideration during coming and going.
- Hysteresis range. Only considered for outgoing.
- Value-over-time for which the limit is monitored.
- Edge change. Counter for limit violations is incremented by 1. If parameterized, a hardware interrupt is triggered.
- Signal wave
- ① Limit monitoring with hysteresis and delay time
- ② Limit monitoring with hysteresis, but without delay time
- ③ Limit monitoring without hysteresis, but with delay time
- ④ Limit monitoring without hysteresis and delay time

Figure 9-1 Influence of hysteresis and delay time on the limit

See also

How limit monitoring works (Page 77)

Minimum and maximum values (Page 84)

9.3 Reset, activate and deactivate counters for limit violation

Introduction

At the beginning of a new work order, it can be useful to reset or also enable/disable the counters for limit violations of the AI Energy Meter HF.

Resetting here means that the counters for limit violations are reset to 0.

Due to the differing lengths of the output data resetting of the counters for limit violations depends on the configured module version.

Resetting at module version with 20 bytes of output data

1. Select the counters for limit violations that you want to reset in control bytes 3 and 4; see "Enabling/disabling the counters for limit violations".
2. In control byte 1, set the rest bit (bit 3) with an edge change from 0 to 1; see "Resetting the counters for limit violations".

Resetting for module version with 2 bytes of output data

Set the reset bit (Bit 3) in Control byte 1 from 0 to 1 through an edge change. Resetting acts globally on all the configured counters for limit violation.

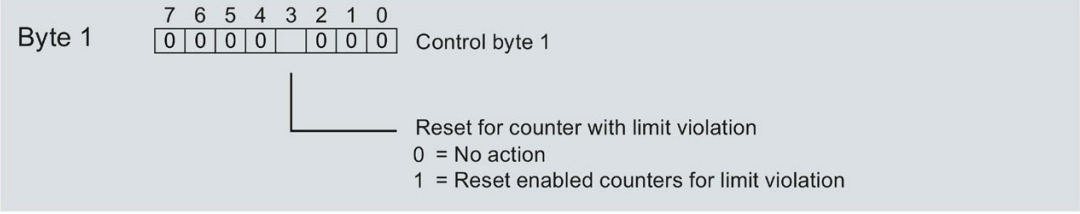

Figure 9-2 Resetting of the counters for limit violations

Activating / Deactivating counters for limit violations

Activating/deactivating of the counters for limit violations is only possible for module versions with 20 bytes of output data.

Requirements: "Gate for limit value monitoring" was parameterized during configuration of the module using STEP 7 or by writing the data record DS 128.

Select the counters for limit violations that you want to activate / deactivate in Control bytes 3 and 4.

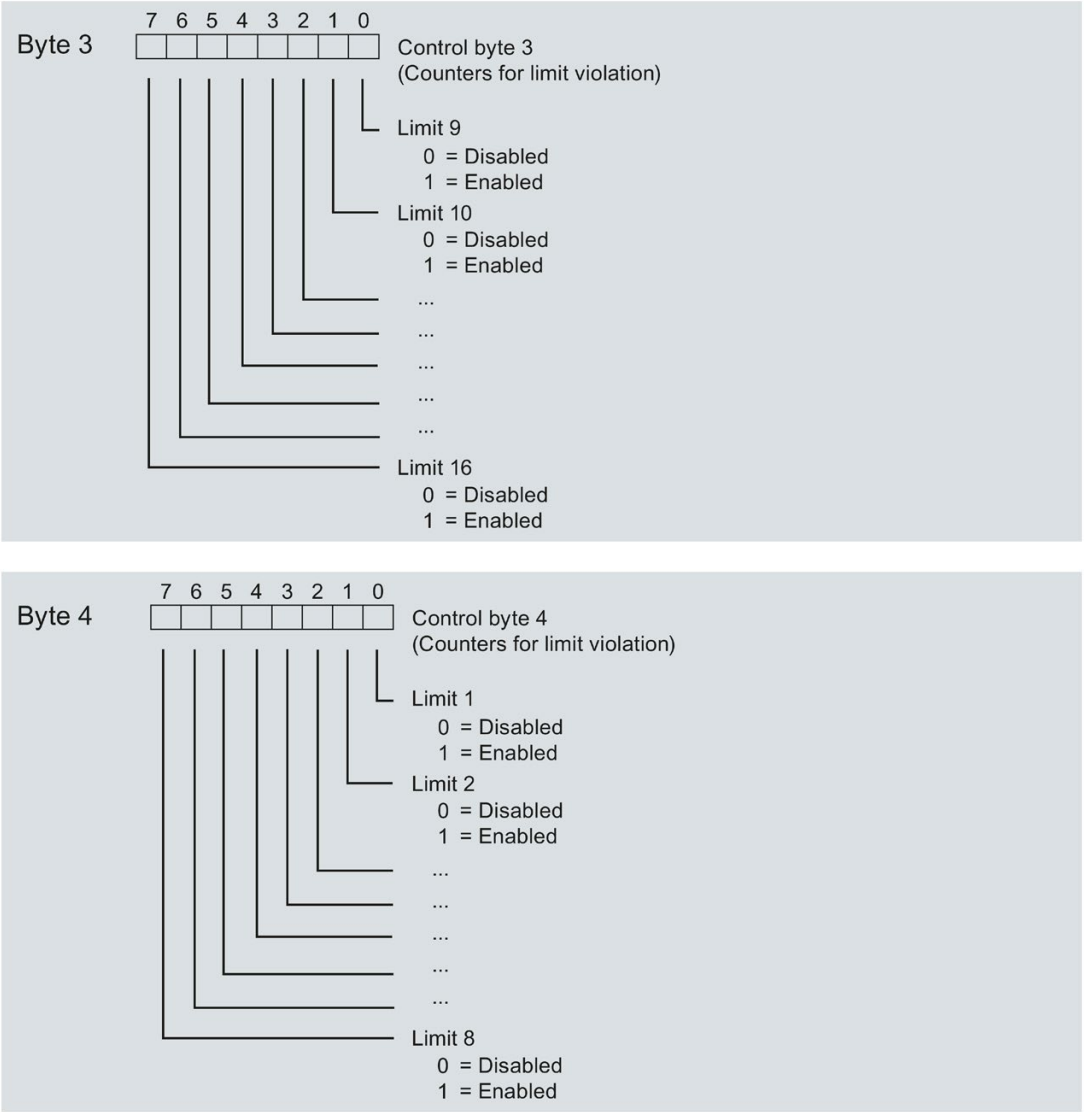

Figure 9-3 Activating / deactivating of the counters for limit violations

9.4 Measured variables for limit monitoring

You can use measured variables from the section Measured variables (Page 163) for limit value monitoring.

The value range of the parameter "Limit x" is -3.0E+09 ... +3.0E+09.

The table below shows you which measured variables are not available for limit monitoring.

Measured value ID	Measured variables
220	Total active energy inflow L1L2L3
221	Total active energy outflow L1L2L3
222	Total reactive energy inflow L1L2L3
223	Total reactive energy outflow L1L2L3
224	Total apparent energy L1L2L3
225	Total active energy L1L2L3
226	Total reactive energy L1L2L3
62110	Active energy inflow L1
62111	Active energy outflow L1
62112	Reactive energy inflow L1
62113	Reactive energy outflow L1
62114	Apparent energy L1
62115	Total active energy L1
62116	Total reactive energy L1
62136	Fundamental cos φ active factor L1
62210	Active energy inflow L2
62211	Active energy outflow L2
62212	Reactive energy inflow L2
62213	Reactive energy outflow L2
62214	Apparent energy L2
62215	Total active energy L2
62216	Total reactive energy L2
62236	Fundamental cos φ active factor L2
62310	Active energy inflow L3
62311	Active energy outflow L3
62312	Reactive energy inflow L3
62313	Reactive energy outflow L3
62314	Apparent energy L3
62315	Total active energy L3
62316	Total reactive energy L3
62336	Fundamental cos φ active factor L3
65496	Power quality analysis qualifier
65497	Current module time
65500	Qualifier L1
65501	Qualifier L2

Measured value ID	Measured variables
65502	Qualifier L3
65503	Qualifier L1L2L3
65508	Status of energy counter overflows
65509	Status of limit violations 1…16
66001	Voltage L1-N
66002	Voltage L2-N
66003	Voltage L3-N
66004	Voltage L1-L2
66005	Voltage L2-L3
66006	Voltage L3-L1
66007	Current L1
66008	Current L2
66009	Current L3
66010	Apparent power L1
66011	Apparent power L2
66012	Apparent power L3
66013	Active power L1
66014	Active power L2
66015	Active power L3
66016	Reactive power Qn L1
66017	Reactive power Qn L2
66018	Reactive power Qn L3
66019	Power factor λ L1
66020	Power factor λ L2
66021	Power factor λ L3
66030	Frequency
66034	Active power L1L2L3
66035	Reactive power Qn L1L2L3
66036	Apparent power L1L2L3
66037	Power factor λ L1L2L3
66038	Frequency

Minimum and maximum values 10

10.1 Minimum and maximum values

Introduction

The AI Energy Meter HF determines the respective highest and lowest measured or calculated value for a series of measured and calculated values. The values are stored retentively in the module and can be read using measured value data records DS 144 (Page 237), DS 145 (Page 243), DS 154 (Page 239) and DS 155 (Page 245).

Benefits

Using the stored minimum and maximum values, for example, you can detect further irregularities in addition to limit monitoring.

Calculation of minimum and maximum values

Minimum and maximum values are only calculated for the phases in accordance with the configured connection type. Existing minimum and maximum values that have not been calculated are assigned initial values. If faults such as under or overcurrent occur during operation, new minimum and maximum values are calculated.

The measured and calculated values are initialized as follows during commissioning of the AI Energy Meter HF so that the first calculation of minimum and maximum values supplies a plausible result:

- Maximum values for measured and calculated values: Minimum values
- Minimum values for measured and calculated values: Maximum values

Minimum and maximum values are determined as "slave pointer procedures" from the start of calculation. Start is effective as of activation of the function or after a reset. The module uses the current actual value as the start value.

When you activate the parameter "Enable minimum and maximum value calculation gate", the calculation only starts if the corresponding DQ bit ("gate open") was set (output data Byte 1, Bit 2 = "1"). You can stop the calculation at any time by deactivating the parameter or closing the gate. Calculation starts again after reactivation. The gate for calculation of the minimum and maximum values functions in the same way as the gate for energy meters.

Configuring

You configure the following settings in STEP 7:

- Enable calculation of minimum and maximum values
- Enable minimum and maximum value calculation gate

Changing properties in RUN

The following table shows the supported control information:

Control information	Default value	Available in
Reset saved maximum values	0	Module version starting at 2 bytes of output data
Reset saved minimum values	0	Module version starting at 2 bytes of output data

Note

Automatic reset

If you change the parameters for current or voltage transformers, the minimum and maximum values are reset automatically to their initial values.

10.2 Resetting minimum and maximum values

Description

At the beginning of a new work order, it may be useful to reset the minimum and maximum values of the AI Energy Meter HF. Resetting means that the minimum and maximum values are reset to their initial values. Initial values are described, see section Measured value data record for maximum values (DS 144) version 1 (Page 237), Measured value data record for minimum values (DS 145) version 1 (Page 243), Measured value data record for maximum values with time stamp (DS 154) (Page 239) and Measured value data record for minimum values with time stamp (DS 155) (Page 245).

Minimum and maximum values are only reset using a Reset via output data (DQ bit).

Due to the differing lengths of the output data resetting of the minimum and maximum values depends on the configured module version. If you use module versions with 20 bytes of output data, you can:

- Reset the minimum and maximum values for **all** phases.
- Reset minimum and maximum values for each **individual** phase.

If you use the module version with 2 bytes of output data, you always reset **all** the minimum and maximum values simultaneously.

Time stamps are set to initial values (01.01.1970, 0:00) on reset.

Procedure for module version with 20 bytes of output data

Resetting the minimum and maximum values for all 3 phases.

1. Select the categories of minimum and maximum value that you want to reset in byte 2.
   - Set bit 0 for voltage and frequency.
   - Set bit 1 for current and power factor.
   - Set bit 2 for active power.
   - Set bit 3 for reactive power.
   - Set bit 4 for apparent power.

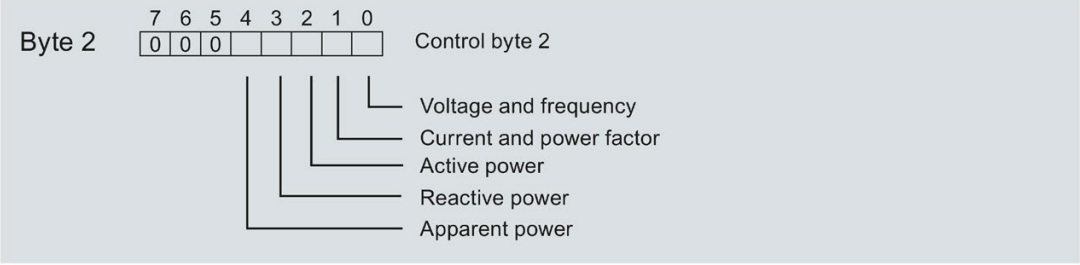

Figure 10-1 Selection of minimum and maximum value category

2. In Byte 1, set reset bit 0 for minimum values or reset bit 1 for maximum values.
   If there is an edge change of the reset bits from 0 to 1, the module resets the selected minimum or maximum values for all 3 phases that you previously selected in Byte 2.

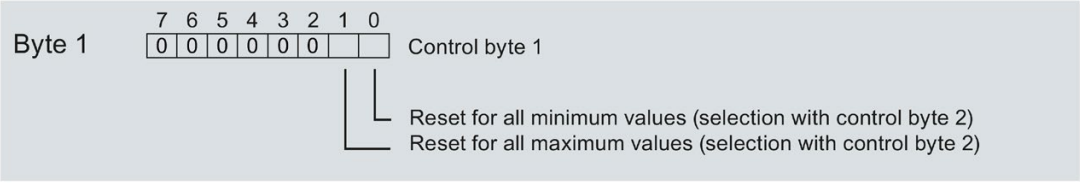

Figure 10-2 Reset bit for minimum and maximum values

Resetting minimum and maximum values for phase-specific measurement

You can also reset the minimum and maximum values on a phase-specific basis using the output data.

Follow the procedure for "Resetting minimum and maximum values for all 3 phases" as applicable.

1. Select the categories of minimum and maximum value that you want to reset on a phase-specific basis.
   - In byte 7, set the bits for the category of minimum and maximum values in phase 1.
   - In byte 9, set the bits for the category of minimum and maximum values in phase 2.
   - In byte 11, set the bits for the category of minimum and maximum values in phase 3.
2. Set the reset bit (bit 0 and bit 1) for minimum or maximum values.
   - in byte 6 for phase 1
   - in byte 8 for phase 2
   - in byte 10 for phase 3

If there is an edge change of the phase-specific reset bits from 0 to 1, the module resets the minimum or maximum values for the given phase.

Procedure for module version with 2 bytes of output data

If you use the module version with 2 bytes of output data, you always reset **all** the minimum and maximum values simultaneously.

Set the reset bit (Bit 0 or Bit 1) in Control byte 1 from 0 to 1 through an edge change.

Figure 10-3 Resetting the minimum and maximum values at module version with 2 bytes of output data

Power quality analysis functions 11

Introduction

Power quality analysis functions are used as an aid to evaluate the quality of the supply network. In a three-phase system, many of these functions only make sense or can be executed if a functioning symmetrical three-phase supply system is available, the detection sensors of the three phases are identical in design and the nominal values current or voltage of the phases have the same values.

The AI Energy Meter HF provides you with the following power quality analysis functions in accordance with IEC 6100-4-30 for monitoring the power quality in your power network:

- Measure the neutral current
- Perform residual current analysis
- Determine active and power factor
- Carry out reactive power compensation
- Analyze fundamental values three-phase (voltage, current, power)
- Analyze the harmonics up to the 40th harmonic
- Determine the total harmonic distortion THD+N current/voltage for all three phases
- Detect voltage dip and voltage swell
- Detect overcurrent
- Detect peak value for current and voltage

The power quality analysis only returns useful results if some basic requirements are met. These include:

- Accuracy of the line frequency (50 Hz or 60 Hz) is maintained according to IEC 61557-12.
- Wiring has been carried out correctly.

Delete the results of the power quality analysis

Delete the results of the power quality analysis by setting the corresponding bits in Byte 12 of the output range (Page 200) for at least 100 ms to "1".

Deletion has the following effects:

- Deletion of the result values and status bits for
  - Peak values of the instantaneous values for voltage and current
  - Overcurrent of the current half value
  - Voltage dip and voltage swell of the voltage half-wave value
- Any pending diagnostics "External fault" is deleted.

Harmonic

Harmonics are superimposed vibrations deviating from the fundamental frequency of the supply network (50 Hz or 60 Hz) with an integer multiple of the fundamental frequency. Harmonics are generated by equipment with a non-linear current–voltage characteristic such as transformers, gas discharge lamps and power electronics devices.

Harmonic component THD (Total Harmonic Distortion)

The THD defines the ratio of the power of the harmonics to the power of the fundamental and provides information about the power quality. The value is dimensionless and is stated as a percentage [%].

The AI Energy Meter HF returns THD+N (Noise) and considers the entire current signal (DS 163) or voltage signal (DS 161). Interference in the network is not filtered out.

11.1 Power quality analysis status

Information about the power quality status can be found in the measured value "Power quality analysis qualifier" with the measured value ID 65496.

The bits 0 to 4 in byte 1 to 3 show in status "1" that information has been available since the last reset, which can be retrieved. The bits 5 to 7 in byte 1 to 3 in status "1" show that the event is currently active. If the event is not active, "0" is displayed.

The measured value "Network analysis qualifier" has the following structure:

Address	Content	Bit 7	Bit 6	Bit 5	Bit 4	Bit 3	Bit 2	Bit 1	Bit 0
Byte 0	Power quality analysis qualifier module	Reserved	Reserved	Status of harmonics analysis: 0_D: No data, no start 1_D … 62_D: running 63_D: Completed, data is available					
Byte 1	Power quality analysis qualifier phase L1	**Overcurrent** Event currently active	**Voltage swell** Event currently active	**Voltage dip** Event currently active	**Overcurrent** Event occurred, data available	**Peak value current** Event occurred, data available	**Voltage peak** Event occurred, data available	**Voltage swell** Event occurred, data available	**Voltage dip** Event occurred, data available
Byte 2	Power quality analysis qualifier phase L2								
Byte 3	Power quality analysis qualifier phase L3								

11.2 Harmonics analysis

The AI Energy Meter HF can determine the effective values for current and voltage up to the 40th harmonic of the fundamental.

The harmonics of the voltage are stored in the data record DS 161 (Page 261).

The harmonics of the current are stored in the data record DS 163 (Page 265).

In addition, you can incorporate the results on IDs with the parameter data records DS 130/DS 131 (Page 157) in the user-defined user data and DS 135 (Page 160) in the user-defined data record DS 151 (Page 258).

The calculation of the harmonics takes several cycles. To determine whether calculation is completed, evaluate the Bits 0 to 5 in the power quality analysis data record DS 160 (Page 259) in Byte 218. If the value 63 is in the Bits 0 to 5, the calculation is completed and the measured values are available.

Note

While the calculation is in progress, you cannot read the data records DS 161 and DS 163.

Note

While the calculation is in progress, quick measured value acquisition (e.g. for controlling reactive-power compensation) is not possible.

Requirement

- The parameter "Power quality analysis function" is activated.
- The parameter "Analyse harmonics" for the corresponding phase must be released.

Voltage and current are always analyzed simultaneously for the enabled phases.

Control via data outputs

The harmonics analysis starts by setting the DQ bit 6 "Power quality analysis Start/Stop L1L2L3" in Byte 12 of the output data. The results of a previous analysis of harmonics are deleted in the process. Results of non-selected channels are "0". If channels which have not yet been analyzed are added, the data are not plausible at the start of the analysis.

If the DQ bit is reset during an ongoing analysis, the analysis stops.

11.3 Reactive power compensation

Use the power factor of the fundamental for the reactive power compensation.

When you activate the power quality analysis function, the power factor of the fundamental is available in the measured value data record DS 160 (Page 259) or in the user data.

See also

User data variants (Page 205)

11.4 Detection of residual current

For the residual current analysis (function "Tamper Detect" = Detection of unauthorized interventions), the total current must be determined:

Isum L1L2L3 (t) = IL1 (t) + IL2 (t) + IL3 (t)

The instantaneous residual current If is obtained by subtracting the results of the current neutral current In from the total current:

If = Isum L1L2L3 – In

Analysis starts immediately after parameter assignment. The measured value "Total current IL1+IL2+IL3-IN" (ID = 61153) returns the residual current. It is contained in DS 160, for example. You can monitor a threshold relevant for your application for a limit value (see function Limit monitoring (Page 77)).

Requirements

- "3P4W" or "3P4WI" is parameterized as the connection type.
- The same current transformers are connected to all three phases.
- The parameter "Reverse current direction" is parameterized identically for all three phases.
- The neutral current is parameterized with "Measuring".
- The residual current analysis is activated in the parameter assignment.

11.5 Active factor and power factor

The AI Energy Meter HF returns the active and power factor individually for each phase and as an aggregate.

Active factor

The active factor is defined as follows:

cos φ (active factor, signed, fundamental oscillation): cos φ = P1 / S1

φ = phase shift angle of fundamental oscillation

P1 = active power of fundamental oscillation

S1 = apparent power of fundamental oscillation

Power factor

The power factor λ = cos Φ is the ratio of active power (P) to the total apparent power (S) over the fundamental oscillation and all harmonics (total):

λ (power factor, unsigned, total): λ = cos Φ = |P| / S

11.6 Neutral current In

The module can measure or calculate the neutral current.

For measuring, you have to connect a current transformer to neutral. The behavior "measuring or calculating" can be set for each parameter. The main application of the measured value "Neutral current IN" (ID: 61149) are three-phase networks with existing 4th conductor, neutral: The neutral current usually shows incorrectly flowing currents. In an ideal three-phase network, the neutral current = 0.

An additional possible application is measuring any 4th current on this channel. Please note that in this case the measured value "Neutral current" displays this 4th current and not the actual neutral current.

Additional values in conjunction with the neutral current is set to 0.

The calculation of the neutral current and the comparison of calculated and measured neutral current (used for residual current analysis) is only possible in the operating modes "3P4W" and "3P4WI".

The determination of the neutral current is not subject to current suppression.

Parameter assignment options

If there a neutral in a connection type, the following parameters are available:

- Neutral current measurement deactivated
- Calculate the neutral current measurement
- Measure the neutral current measurement

If there is no neutral in a connection type, the following parameters are available:

- Do not use current channel
- Measure current channel

Display via channel LED

Neutral exists for connection type	calculate	measuring	Error	Channel LED
Yes	Yes	Yes	No	Green
Channel disabled	---	---	---	Off
No	No	Yes	No	Green

11.7 Monitoring the instantaneous or half-wave values

You can enable the following functions:

- Voltage swell (Page 116)
- Voltage dip (Page 118)
- Voltage peaks (Page 121)
- Current peak value (Page 127)
- Overcurrent value (Page 129)

The results are mapped in the phase-specific data records DS 147 (Page 248), DS 148 (Page 251) and DS 149 (Page 254) and in the power quality analysis data record DS 160 (Page 259).

In addition, you can incorporate the results using IDs in the measured value data record of the user-defined data record DS 151 (Page 258) and in the user data variants 1/2.

You can monitor the results for limits (Page 77) and generate hardware interrupts.

Phase-based measured values 12

Introduction

The AI Energy Meter HF makes the measured values of individual phases available.

- Through the user data variants
  - Phase-specific measurement Phase L1 with user data variants 154 ($9A_H$) and 155 ($9B_H$)
  - Phase-specific measurement Phase L2 with user data variants 156 ($9C_H$) and 157 ($9D_H$)
  - Phase-specific measurement Phase L3 with user data variants 158 ($9E_H$) and 159 ($9F_H$)
- Via measured value data records
  - Phase-specific measurement for the phases L1, L2 and L3 with data record 142
  - Phase-specific measurement for phase L1 with data record 147
  - Phase-specific measurement for phase L2 with data record 148
  - Phase-specific measurement for phase L3 with data record 149

User data variants

Through the user data variants 154 ($9A_H$) to 159 ($9F_H$) you can evaluate the following measured values for each phase of an AC / three-phase network:

- Quality information
- Current and voltage
- Active, reactive and apparent power
- Active, reactive and apparent energy
- Power factor

You can find the structure of the user data variants in appendix User data variants (Page 205).

Measured value data records

Through the measured value data records DS 142, DS 147, DS 148 and DS 149 you can evaluate the following measured values for each phase of an AC / three-phase network:

- Quality information
- Current and voltage
- Minimum current and minimum voltage
- Maximum current and maximum voltage
- Active, reactive and apparent power
- Minimum active, reactive and apparent power
- Maximum active, reactive and apparent power
- Active, reactive and apparent energy
- Power factor
- Minimum power factor
- Maximum power factor
- Harmonic distortion for voltage and current including minimum/maximum values
- Voltage dip
- Voltage swell
- Peak value for voltage and current
- Overcurrent value

You can find the structure of the measured value data records in appendix Measured value data record for phase-based measured values L1 (DS 147) version 1 (Page 249).

See also

Measured value data record for phase-based measured values L2 (DS 148) version 1 (Page 252)

Measured value data record for phase-based measured values L3 (DS 149) version 1 (Page 255)

Minimum and maximum values (Page 84)

Overview of all measured value data records (Page 226)

Parameters 13

13.1 Parameters

Parameters of the AI Energy Meter HF

You will usually configure the AI Energy Meter HF with STEP 7 (TIA Portal, if necessary with HSP). In this case, STEP 7 (TIA Portal) checks the configured properties for plausibility during configuration.

You can also assign parameters to the module using a GSD file and STEP 7 or the configuration software of any provider. In this case, the module checks the validity of the configured properties only after the configuration has been downloaded. Note that some parameters depend on the selected connection type of the AI Energy Meter HF. For example in the connection type 1P2W for measurements in single-phase AC network it does not make sense to enter parameters for Phases 2 and 3. This is not checked by the system if the GSD file is used.

The effective range of the parameters that can be set using a GSD file depends on the type of bus system used:

- Distributed operation on PROFINET IO in an ET 200SP system
- Distributed operation with PROFIBUS DP in an ET 200SP system

In addition you can change the parameterized properties via the user program in RUN mode. When you assign parameters in the user program, the "WRREC" instruction transfers the parameters to the module using data records (see appendix Configuration via parameter data records (Page 139)).

The following table summarizes all the configurable parameters with STEP 7 (GSD file).

Table 13- 1 Parameters AI Energy Meter HF (GSD file)

Parameters	Value range	Default setting	Reconfiguration in RUN
Hardware interrupt	• Disable • Enable	Disable	No
Inputs			
Diagnostics: Missing supply voltage L+	• Disable • Enable	Disable	Yes
Connection type	• Disabled • 1P2W - 1 phase, 2 conductors • 3P4W - 3 phase current measurement, 4 conductors • 3P4W1, 3 phases, 4 conductors, balanced load • 3P4W - 3 phases, 4 conductors • 3x1P2W - 3 x 1 phase, 2 conductors each • 2P3W - 2 phases, 3 conductors • 3P3W, 3 phases, 3 conductors • 3P3W1, 3 phases, 3 conductors, balanced load	3P4W - 3 phases, 4 conductors	Yes
Voltage measuring range	• 100 V • 110 V • 115 V • 120 V • 127 V • 190 V • 200 V • 208 V • 220 V • 230 V • 240 V • 277 V	230 V	Yes
Line frequency	• 50 Hz • 60 Hz	50 Hz	Yes
Energy meter gate enabled	• Disable • Enable	Disable	Yes

Parameters	Value range	Default setting	Reconfiguration in RUN
End value energy meter	• No end value (infinite counting) • Count periodically to 10^3 • Count periodically to 10^6 • Count periodically to 10^9 • Count periodically to 10^{12} • Count periodically to 10^{15}	No end value (infinite counting)	Yes
User data variant	See the table Overview of the user data variants (Page 205)	Total power L1L2L3 (W#16#FE)	Yes
Minimum and maximum value calculation	• Disable • Enable	Disable	Yes
Minimum and maximum value calculation gate	• Disable • Enable	Disable	Yes
Power quality analysis functions	• Disable • Enable	Disable	Yes
Residual current analysis	• Disable • Enable	Disable	Yes
Neutral: Current transformer primary current [A]	• 0 = Disabled • 1 ... 99999 = measuring • 4294967295 = Calculating	0	Yes
Neutral: Current transformer secondary current [A]	• 1 • 5	1	Yes
Voltage dip limit value in relation to nominal value voltage [0.1%]	• 10 ... 1000	100	Yes
Voltage swell limit value in relation to nominal value voltage [0.1%]	• 10 ... 10000	100	Yes
Threshold overcurrent in relation to nominal value current [0.1%]	• 10 ... 60000	100	Yes
Number of cycles for voltage swell and dip analysis	• 4 ... 32767	10	Yes
Diagnostics power quality	• Disable • Enable	Disable	Yes
Diagnostics overflow current	• Disable • Enable	Disable	Yes
Diagnostics overflow voltage	• Disable • Enable	Disable	Yes
Diagnostics underflow voltage	• Disable • Enable	Disable	Yes

Parameters	Value range	Default setting	Reconfiguration in RUN
Diagnostics overflow cumulative values	• Disable • Enable	Disable	Yes
Detect voltage swell and dip	• Disable • Enable	Disable	Yes
Detect peak value current	• Disable • Enable	Disable	Yes
Detect peak value voltage	• Disable • Enable	Disable	Yes
Detect overcurrent	• Disable • Enable	Disable	Yes
Analyse harmonics	• Disable • Enable	Disable	Yes
Nominal value current [A]	• 0 ... 99999	1	Yes
Tolerance factor overcurrent in relation to nominal value current [0.1%]	• 10 ... 60000	100	Yes
Tolerance time overcurrent [ms]	• 0 ... 60000	40000	Yes
Low limit current measurement in relation to nominal value current [0.1%]	• 0 ... 200	10	Yes
Enable operating hours counter	• Disable • Enable	Disable	Yes
Enable gate of operating hours counter	• Disable • Enable	Disable	Yes
Current transformer primary current [A]	• 1 ... 99999 A	1 A	Yes
Current transformer secondary current	• 1 A • 5 A	1 A	Yes
Reverse current direction	• Disabled • Reverse current direction	Disabled	Yes
Nominal value voltage [V]	• 1 ... 999999	230 V	Yes
Tolerance factor overvoltage/undervoltage [0.1%]	• 10 ... 500	100	Yes
Voltage transformer primary voltage [V]	• 1 ... 999999 V	230 V	Yes
Voltage transformer secondary voltage [V]	• 1 ... 500 V	230 V	Yes

Parameters	Value range	Default setting	Reconfiguration in RUN
Limits			
Number of limits	• 0 ... 16	0	Yes
Limit monitoring	• Disable • Enable	Disable	Yes
Measured variable	• Measured value ID see Measured value data records (Page 226)	None	Yes
Enable limit monitoring gate	• Disable • Enable	Disable	Yes
Hardware interrupt	• Disable • Enable	Disable	Yes
Limit	• depending on the selected measured variable	0.0000	Yes
Type	• High limit • Low limit	High limit	Yes
Hysteresis for limit monitoring [0.1%]	• 0 ... 200 [0.1%]	1%	Yes
Delay time for limit monitoring [s]	• None • 1 ... 10 s	None	Yes
User data mapping I/II			
Number of measured values	• 0 ... 64	0	Yes
Measured variable	• Measured value ID see Measured variables (Page 163)	None	Yes
Data record mapping			
Number of measured values	• 0 ... 150 • 0 ... 125 with STEP 7 (TIA Portal) V15 with HSP0253	0	Yes
Measured variable	• Measured value ID see Measured variables (Page 163)	None	Yes

13.2 Description of parameters

Hardware interrupt

Enable the hardware interrupt for the entire module here.

Inputs

Diagnostics: Missing supply voltage L+

Activate the diagnostics No supply voltage L+. If there is no voltage or too little voltage at terminal 17, the message "No supply voltage" is output and a diagnostic interrupt is triggered.

Connection type

Specify the connection type you used for the AI Energy Meter HF.

For more detailed information, refer to "Connection examples (Page 23)".

Voltage measuring range

Here you set the voltage measuring range in which the system connected to the AI Energy Meter HF works.

Line frequency

Here you set the line frequency in which the system connected to the AI Energy Meter HF works.

Enable gate energy meter

Enable the gate for the energy meter When the gate is enabled, the energy meter only counts when the corresponding output data bit (DQ bit) is set to "1".

End value energy meter

Select the end value for the periodic counting of the energy meter. You can also specify that the energy meter is to count without a full-scale value (infinite counting). The calculated energy counter values are stored retentively in the module.

User data variant

Select user data variant with which the module is to operate once it is started up.

Minimum and maximum value calculation

Enable calculation of the minimum and maximum values. The minimum and maximum value are calculated from the start of the measurement. The values determined are stored retentively in the AI Energy Meter HF together with the time stamp.

Minimum and maximum value calculation gate

Enable the gate for minimum and maximum value calculation. When the gate is enabled, the energy meter only counts when the corresponding output data bit (DQ bit) is set to "1".

Power quality analysis function

Enable the power quality analysis function for the entire module.

Residual current analysis

Enable the residual current analysis for the entire module. The residual current analysis is only available in the connection types 3P4W or 3P4WI and the concurrently activated parameter "Neutral current measurement".

Neutral current measurement

Defines whether the neutral current is measured or calculated.

This parameter does not apply to parameter assignment with GSD file.

Neutral: Current transformer primary current [A]

To determine the current transformer ratio, enter the primary current. The transformer ratio is calculated from the primary and secondary current.

The following applies to parameter assignment with GSD file:

- 0 = Neutral function deactivated
- 1 ... 99999 = measure neutral current
- 4294967295 = calculate neutral current

Neutral: Current transformer secondary current [A]

To determine the current transformer ratio, enter the secondary current. The transformer ratio is calculated from the primary and secondary current.

Voltage dip limit value in relation to nominal value voltage [0.1%]

Further information can be found under Voltage dip of the voltage half-wave value (Page 118).

Voltage swell limit value in relation to nominal value voltage [0.1%]

Further information can be found under Voltage swell of the voltage half-wave value (Page 116).

Threshold overcurrent in relation to nominal value current [0.1%]

Further information can be found under Overcurrent of the current half value (Page 129).

Number of cycles for voltage swell and dip analysis

Further information can be found under Voltage swell of the voltage half-wave value (Page 116) and Voltage dip of the voltage half-wave value (Page 118).

Diagnostics power quality

Depending on the enable of the individual functions the diagnostics are triggered when a voltage swell, voltage dip or overcurrent event has occurred.

Diagnostics overflow current

The measured current is monitored after expiry of the "Tolerance time" for "Overcurrent [0.1 A] tolerance value". Exceeding the value generates the diagnostics "overflow current".

Diagnostics overflow voltage

The nominal values voltage are monitored for tolerance. An overflow triggers a diagnostic interrupt.

Diagnostics underflow voltage

The nominal values voltage are monitored for tolerance. An underflow triggers a diagnostic interrupt.

Diagnostics overflow cumulative values

A cumulative overflow in the calculated variables is displayed. The values stop at the high or low limit. A violation triggers a diagnostic interrupt.

Detect voltage swell and dip

Activates the detection of voltage swell and dip. Further information can be found under Diagnostics: Overflow/underflow (Page 114).

Detect peak value current

Activates the detection of current peak values. Further information can be found under Peak values of the instantaneous values for current (Page 127).

Detect peak value voltage

Activates the detection of voltage peak values. Further information can be found under Peak values of the instantaneous values for voltage (Page 121).

Detect overcurrent

Activates the detection of overcurrent. Further information can be found under Overcurrent of the current half value (Page 129).

Analyse harmonics

Activates harmonics analysis

Nominal value current [A]

Enter the nominal value for the current. This is the "operating point" in your application.

Tolerance factor overcurrent in relation to nominal value current [0.1%]

Further information can be found under Diagnostics: Overload (Page 123).

Tolerance time overcurrent [ms]

Further information can be found under Diagnostics: Overload (Page 123).

Low limit current measurement in relation to nominal value current [0.1%]

The configurable low limit for measuring current refers to the nominal value and is used to avoid incorrect calculations in the case of very low currents. Incorrect measurements of very low currents in particular are a cause of inaccuracies in the current transformer used. Set the low limit for the current measurement to the required value depending on your process.

Note

Tip: If you want to find the low limit for the current measurement experimentally, set it to a lower value. Then, feed in a very precise low current and determine the measurement error that can no longer be tolerated. Afterwards, set the low limit for the current measurement to the limit value you have determined.

If current falls below the low limit for the current measurement, the following measured values and derived variables of the affected phase are reset.

- Effective current value
- Neutral current
- Active power
- Reactive power
- Apparent power
- Phase angle
- Power factor

A moving mean value is formed from the power values and they only become "0" after a corresponding time. The energy meters for active, reactive and apparent energy as well as the operating hours counters do not count any longer.

Further information can be found under Low limit for measuring current undershot (Page 125).

Enable operating hours counter

Enable the operating hours counter. The counting starts from the configurable low limit of the current measurement. The counter can be reset or pre-assigned using data record or output bit.

Enable gate of operating hours counter

Enable the gate for the operating hours counter. When the gate is activated, the operating hours counter only counts when the corresponding output data bit (DQ bit) is set to "1".

Current transformer primary current

Enter the nominal value for the primary current of the current transformer used. The transformer ratio is calculated from the primary and secondary current.

Current transformer secondary current

Enter the nominal value for the secondary current (1 A or 5 A) of the current transformer used. The transformer ratio is calculated from the primary and secondary current.

Reverse current direction

Setting to determine whether or not to reverse the direction of current.

In the event of inadvertent incorrect connection, this parameter can be used to correct the measured values, thus saving the hassle of rewiring. The direction of the current is only evident from the power measurement values. The current measurement value is an rms value.

Nominal value voltage [V]

Enter the nominal value for the voltage. This is the "operating point" in your application.

Tolerance factor overvoltage/undervoltage [0.1%]

Enter the tolerance factor overvoltage/undervoltage here in increments of 0.1%. You can find additional information under Diagnostics: Overflow/underflow (Page 114).

Voltage transformer primary voltage [V]

Enter the nominal value for the primary voltage of the voltage transformer used. The transformer ratio is calculated from the primary and secondary voltage.

Voltage transformer secondary voltage [V]

Enter the nominal value for the secondary voltage of the voltage transformer used. The transformer ratio is calculated from the primary and secondary voltage.

Limits

Number of limits

Enter the number of measured values that you want to monitor for limits.

Limit monitoring

Enable the monitoring of the limit for a freely definable measured value here. Limit violations are counted and the count values stored retentively.

Measured variable

Enter the measured value ID (Page 163) that you want to use for limit monitoring.

Enable limit monitoring gate

Enable the limit monitoring gate. When the gate is enabled, the limit monitoring is only started when the corresponding bit of the associated output user data is set to "1".

Hardware interrupt

Enable the hardware interrupt. The hardware interrupt is triggered if a high or low limit is violated. Without activation of a hardware interrupt, a limit violation is only displayed in the user data and in DS 150.

Limit

Enter the limit that is to trigger a limit violation when exceeded or fallen below. Limit violations are displayed in the user data and in DS 150.

Type

Select whether it is a high or low limit. Depending on this selection, the limit violation or hardware interrupt is triggered when a value exceeds (high limit) or falls below (low limit) the limit.

Hysteresis for limit monitoring [0.1%]

Enter the hysteresis for limit in percent.

The hysteresis band is below the high limit or above the low limit. The parameter in % refers to the configured limit. If a measured value fluctuates around the limit but does not leave the hysteresis band, a new limit violation is not triggered.

Delay time for limit monitoring [s]

Select the delay time for limit violation. The delay refers to the time that must elapse before an occurrence of a limit violation is reported. Faults can be filtered out by selection of the delay time. The deceleration time is also taken into consideration during outgoing of the limit violation.

User data mapping I/II

Number of measured values

Specify the number of measured values/variables that you want to use for the user-specific user data mapping.

Measured variable

Select the measured variable (with the measured value ID (Page 163)) that you want to use for the user-specific user data mapping.

Data record mapping

Number of measured values

Specify the number of measured values/variables that you want to use for the user-specific data record mapping.

Measured variable

Select the measured variable (with the measured value ID (Page 163)) that you want to use for the user-specific data record mapping.

Interrupts/diagnostic alarms 14

14.1 Status and error display

LED display

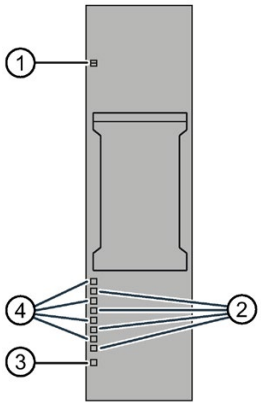

① DIAG (green/red)
② Error (red)
③ PWR (green)
④ Status (green)

Figure 14-1 LED display

Meaning of the LED displays

The following table explains the meaning of the status and error displays. Remedial measures for diagnostic alarms can be found in the section Diagnostic alarms (Page 111).

DIAG LED

Table 14- 1 Meaning of the DIAG LED

DIAG	Meaning
Off	Supply voltage of the ET 200SP not OK
Flashes	Module not ready for operation (no parameters assigned)
On	Module parameters assigned and no module diagnostics
Flashes	Module parameters assigned and module diagnostics

Status LED

Table 14- 2 Meaning of the Status LED

Status	Meaning
Off	Channel disabled
On	Channel activated and no error
On	Channel enabled and error

see also Neutral current In (Page 92)

Error LED

Table 14- 3 Meaning of the Error LED

Status	Meaning
Off	Channel is OK
On	Channel is faulty

PWR LED

Table 14- 4 Meaning of the PWR LED

PWR	Meaning
□ Off	Line voltage missing
■ On	Line voltage available

14.2 Interrupts

The analog input module AI Energy Meter HF supports hardware and diagnostic interrupts.

14.2.1 Hardware interrupts

Hardware interrupts

The module generates a hardware interrupt at the following events:

- Violation of low limit 1 to 16
- Violation of high limit 1 to 16

You can find detailed information on the event in the hardware interrupt organization block with the "RALARM" (read additional interrupt information) instruction and in the STEP 7 online help.

The module channel that triggered the hardware interrupt is entered in the start information of the organization block. The following figure shows the assignment of the local data double word 8 by the start information of the hardware interrupt organization block.

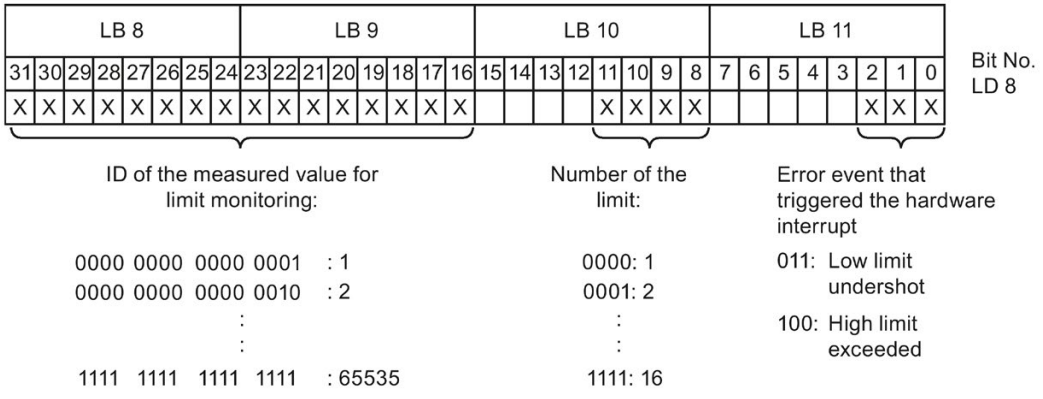

Figure 14-2 Start information of the organization block

14.2.2 Diagnostics interrupt

Diagnostic interrupt

The module generates a diagnostic error interrupt at the following events:

- Power quality
- Channel is temporarily unavailable
- Hardware interrupt lost
- Error
- Supply voltage missing
- Parameter assignment error
- Underflow voltage (tolerance for supply voltage) violated
- Overflow voltage (tolerance for supply voltage) exceeded
- Overload (current measurement > 12 A or tolerance overcurrent exceeded after expiry of the tolerance time)
- Overflow of the calculated values (measured or calculated values screen exceed the representable range of values)

14.3 Diagnostic alarms

Note

Assignment channel in diagnostic message ⇔ Phase

In the diagnostic messages the channels are counted from Channel "0" on, in the AI Energy Meter HF from phase "1" on.

Note the following assignment:

- Channel "0" ⇔ Phase "1"
- Channel "1" ⇔ Phase "2"
- Channel "2" ⇔ Phase "3"

Table 14- 5 Error types

Diagnostic message	Error code	Meaning	Solution
Undervoltage	2_H	Line voltage (measuring range) is monitored for tolerance. Violation leads to voltage overflow/underflow	Observe the line voltage range
Overvoltage	3_H		
Overload	4_H	• The measured current is monitored after the "Tolerance time" for "Tolerance value overcurrent [0.1A]" has expired. Exceeding this results in overflow current. • The maximum value of the secondary current (12 A) has been exceeded.	Observe the current range
Error	9_H	Internal module error (diagnostic alarm on channel 0 applies to the entire module).	Replace the module
Parameter assignment error	10_H	• The module cannot evaluate parameters for the channel. • Incorrect parameter assignment.	Correct the parameter assignment
Load voltage missing	11_H	Missing or insufficient line voltage at terminal 17	Check supply
External fault	$1A_H$	Voltage swell/dip and overcurrent	see: • Voltage swell of the voltage half-wave value (Page 116) • Voltage dip of the voltage half-wave value (Page 118) • Overcurrent of the current half value (Page 129)
Channel is temporarily unavailable	$1F_H$	Firmware upgrade is being performed. Channel 0 applies to the entire module. The module is currently not performing any measurements.	--
		A user calibration is being executed at the channel.	Complete the user calibration

14.4 Diagnostics response

Diagnostics response

This section describes the response of the AI Energy Meters HF when diagnostics information is reported.

Measured values in the case of diagnostics

Even in the case of diagnostics, measured values continue to be displayed as long as they can still be acquired. If measured values cannot be measured or calculated, "0" is displayed.

Low limit for current measurement undershot (zero suppression)

If the supplied current is less than the configured "Low limit for current measurement" parameter, the current measurement and all dependent variables are suppressed and set to "0".

If current falls below the low limit for the current measurement, the following measured values and derived variables of the affected phase are reset.

- Effective current value
- Active power
- Reactive power
- Apparent power
- Phase angle
- Power factor

A moving mean value is formed from the power values and they only become "0" after a corresponding time. The energy meters for active, reactive and apparent energy as well as the operating hours counters do not count any longer.

If the secondary current fed in at the channel is higher than 12 A, the module changes to limitation and the current measurement value of the current and all dependent variables are set to "0".

Input data to "0"

If the AI Energy Meter HF is no longer recognized by the interface module (for example, because it is defective or not plugged in), all input data are set to "0".

14.4.1 Voltage diagnostics

14.4.1.1 Diagnostics: Overflow/underflow

Introduction

You use the parameter "Tolerance factor overvoltage/undervoltage" to define a tolerance range around the set nominal value voltage at the operating point. If the effective value of the primary voltage exceeds this tolerance range, the module reports the diagnostics "overflow" or "underflow".

Calculation of tolerance value measuring voltage

The tolerance value measuring voltage is calculated with the following formula:

Tolerance value measuring voltage = "Nominal value voltage" ± ("Tolerance factor overvoltage/undervoltage [%]" × "Nominal value voltage")

The "Nominal value voltage" is the primary voltage at the operating point.

Parameter assignment

The following table shows the necessary parameters:

Table 14- 6 Parameter assignment

Parameter	
Power quality analysis functions	Enable
Diagnostics overflow	Enable
Diagnostics underflow	Enable
Nominal value voltage	1 ... 999999 V
Voltage transformer primary voltage	1 ... 999999 V
Voltage transformer secondary voltage	1 ... 500 V
Tolerance factor overflow/underflow	10 ... 50%

Example

The following figure is a schematic diagram of the principle of operation:

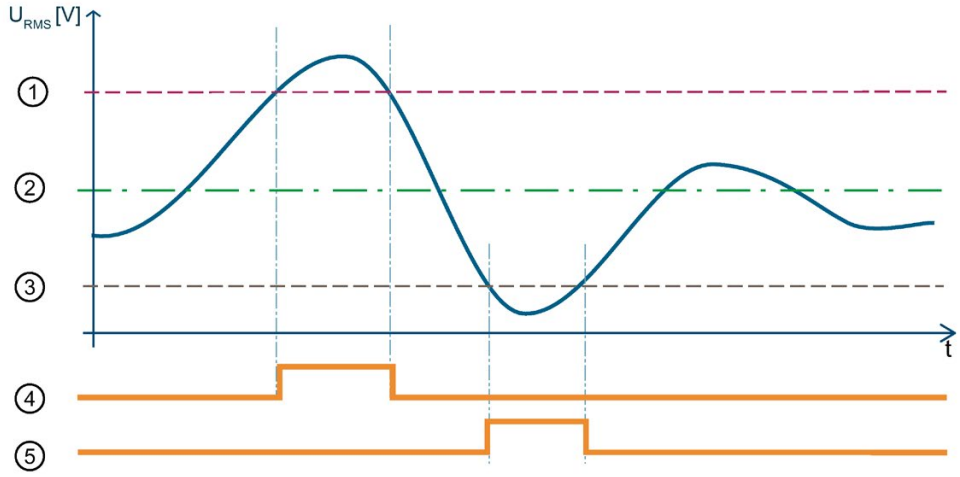

① Upper tolerance value measuring voltage
② Nominal voltage
③ Lower tolerance value measuring voltage
④ Diagnostics "overflow"
⑤ Diagnostics "underflow"

Figure 14-3 "Overflow/Underflow" diagnostics of the effective voltage value

The following table shows the parameter assignment for the example:

Table 14- 7 Parameter assignment

Parameter	
Power quality analysis functions	Enable
Diagnostics overflow	Enable
Diagnostics underflow	Enable
Nominal value voltage	230 V
Voltage transformer primary voltage	1000 V
Voltage transformer secondary voltage	500 V
Tolerance factor overflow/underflow	20%

In this example you define a tolerance range of ± 20%. The tolerance range corresponds to an effective value of primary voltage of ± 46 V.

In the figure the effective value of the primary voltage first exceeds the tolerance range. As long as the effective value of the primary voltage exceeds the tolerance range the module reports the diagnostics "overflow".

The effective value of the primary voltage then exceeds the tolerance range. As long as the effective value of the primary voltage exceeds the tolerance range the module reports the diagnostics "underflow".

14.4.1.2 Voltage swell of the voltage half-wave value

Introduction

Voltage swells are short-term increases in the line voltage which can occur, for example, when switching off large consumers.

With the parameter "Number of cycles for analysis" you define how many measuring cycles the voltage swell must apply at until the module reports the voltage swell. The module reports the diagnostics "Power quality". The module also sets the qualifier bit 6 for the respective phase in data record DS 160 (Page 259). If the voltage lies below the limit for voltage swell again, the module sets the diagnostics "Power quality" again and resets the qualifier bit 6 again.

The AI Energy Meter HF returns the maximum value and the duration of the voltage swell, e.g. in data record 160. The duration is determined exactly to ± 2 cycles.

In the event of voltage swell again, only the diagnostics "Power quality" is reported again and the duration, and if applicable, the maximum voltage swell value is updated.

Calculation of voltage swell limit value

The Voltage swell limit value is the value from which level of voltage the AI Energy Meter HF recognizes a voltage swell.

The "Voltage swell limit value" is calculated by the following formula:

Voltage swell limit = "Nominal value voltage" + ("Voltage swell limit [%]" × "Nominal value voltage")

The "Nominal value voltage" is the primary voltage at the operating point.

Parameter assignment

The following table shows the necessary parameters:

Table 14- 8 Parameter assignment

Parameter	
Power quality analysis functions	Enable
Number of cycles for analysis	4 ... 32767
Diagnostics power quality	Enable
Determination of voltage swell and dip	Enable
Nominal value voltage	1 ... 999999 V
Voltage swell limit	1 ... 1000%

Example

The following figure is a schematic diagram of the principle of operation:

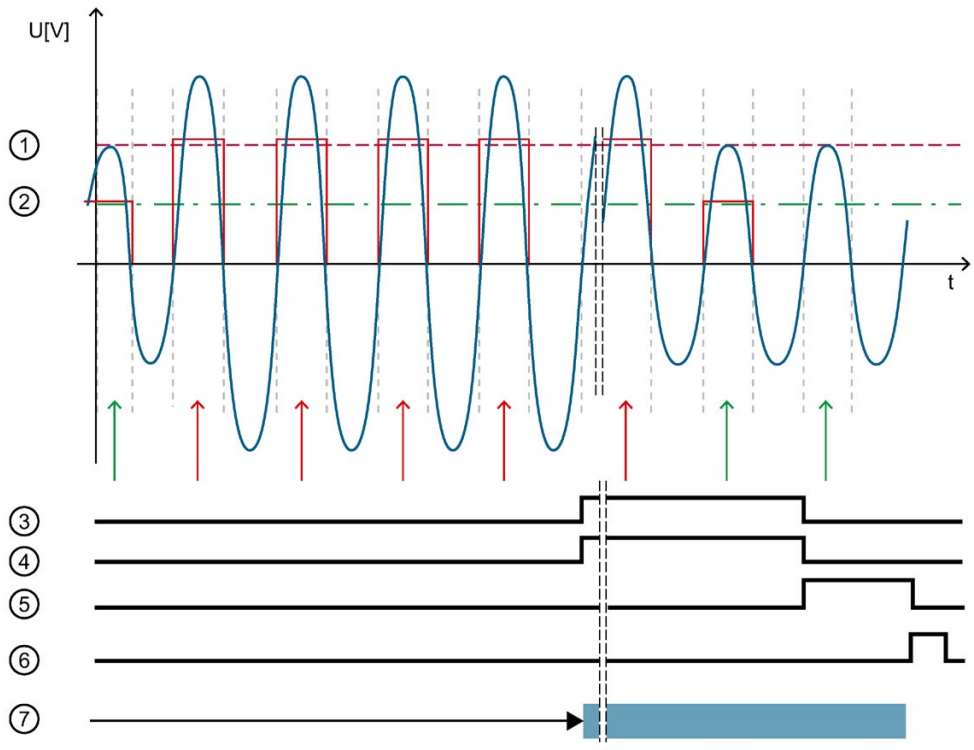

① Voltage swell limit
② Nominal voltage
③ Diagnostics "power quality"
④ Qualifier Bit 6
⑤ Status "Power quality voltage swell"
⑥ Bit "Reset status "power quality""
⑦ Min. voltage swell (half-wave) and duration can be read

Figure 14-4 Example of principle of operation

The following table shows the parameter assignment for the example:

Table 14- 9 Parameter assignment

Parameter	
Power quality analysis functions	Enable
Number of cycles for analysis	4
Diagnostics power quality	Enable
Determination of voltage swell and dip	Enable
Nominal value voltage	230 V
Voltage swell limit	40%

If the module detects that the "Voltage swell limit value" has been exceeded:

- The module reports the diagnostics "Power quality" from "Number of cycles for analysis" as long as there is a voltage swell.
- The module sets the qualifier bit 6 from "Number of cycles for analysis" as long as there is a voltage swell.
- After the module has reset the diagnostics "Power quality" and reset the qualifier bit again, Bit 1 is set.

As long as Bit 1 is set, the module returns the maximum value and the duration of the voltage swell, e.g. in data record 160.

You reset Bit 1 with the bit "reset status "power quality"".

14.4.1.3 Voltage dip of the voltage half-wave value

Introduction

Voltage dips are short-term decreases in the line voltage which can occur, for example, when switching on large consumers.

With the parameter "Number of cycles for analysis" you define how many measuring cycles the voltage dip must be present until the module reports the voltage dip. If the voltage lies above the "Voltage dip limit" again, the module sets the diagnostics "Power quality" and resets the qualifier bit 5 again.

The AI Energy Meter HF returns the maximum value and the duration of the voltage dip, e.g. in data record DS 160 (Page 259). The duration is determined exactly to ± 2 cycles.

In the event of voltage dip, the module reports a "Power quality" diagnostic. The module also sets the qualifier bit 5 for the respective phase in data record DS 160. In the event of voltage dip again, only the "Power quality" diagnostics is reported again and the duration, and if applicable, the minimum voltage dip value is updated.

Calculation of voltage dip limit

The voltage dip limit is the value from which level of voltage the AI Energy Meter HF detects a voltage dip.

The voltage dip limit is calculated by the following formula:

Voltage dip limit = "Nominal value voltage" - ("Voltage dip limit [%]" × "Nominal value voltage")

The "Nominal value voltage" is the primary voltage at the operating point.

Parameter assignment

The following table shows the necessary parameters:

Table 14- 10 Parameter assignment

Parameter	
Power quality analysis functions	Enable
Number of cycles for analysis	4 ... 32767
Diagnostics power quality	Enable
Determination of voltage swell and dip	Enable
Nominal value voltage	1 ... 999999 V
Voltage dip limit	1 ... 100%

Example

The following figure is a schematic diagram of the principle of operation:

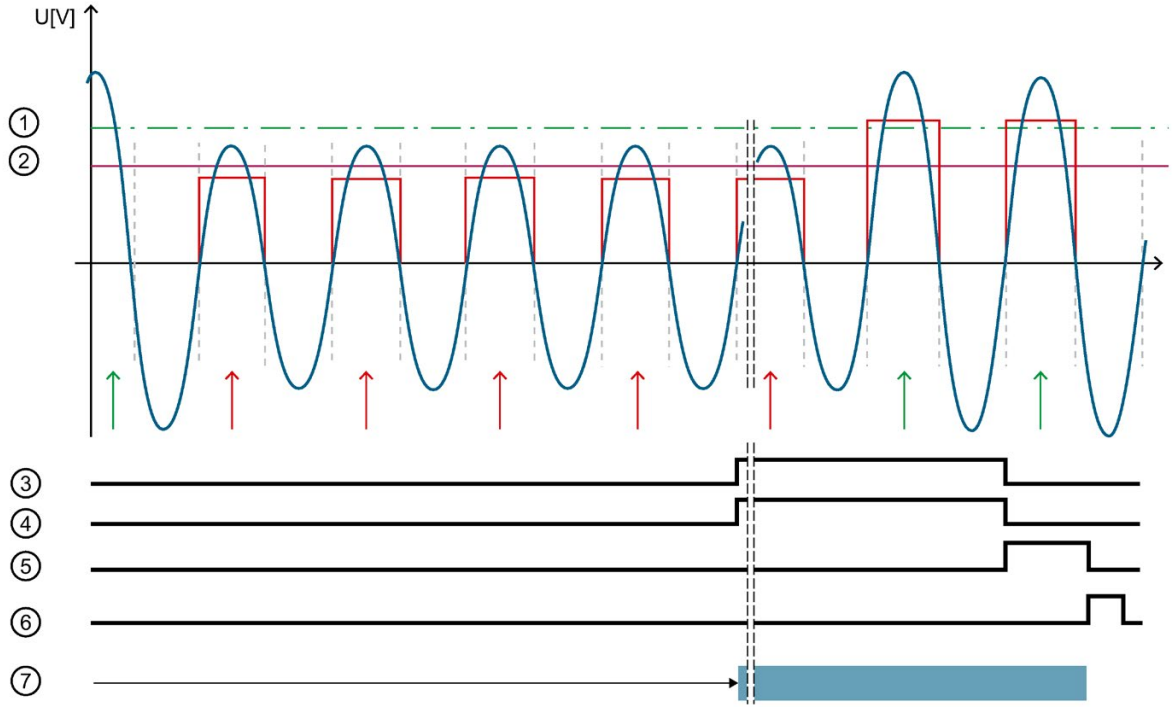

① Nominal voltage
② Voltage dip limit
③ Diagnostics "power quality"
④ Qualifier Bit 0
⑤ Status "Power quality voltage dip"
⑥ Bit "Reset status "power quality""
⑦ Min. voltage dip (half-wave) and duration can be read

Figure 14-5 Example of principle of operation

The following table shows the parameter assignment for the example:

Table 14- 11 Parameter assignment

Parameter	
Power quality analysis functions	Enable
Number of cycles for analysis	4
Diagnostics power quality	Enable
Determination of voltage swell and dip	Enable
Nominal voltage	230 V
Voltage dip limit	50%

If the module detects that the "Voltage dip limit" has been undershot:

- The module reports the diagnostics "Power quality" from "Number of cycles for analysis" as long as there is a voltage dip.
- The module sets the qualifier bit 5 from "Number of cycles for analysis" as long as there is a voltage dip.
- After the module has reset the diagnostics "Power quality" and reset the qualifier bit again, bit 0 is set.

As long as bit 0 is set, the module returns the minimum value and the duration of the voltage dip, e.g. in data record 160.

You reset Bit 0 with the bit "Reset status "power quality"".

14.4.1.4 Peak values of the instantaneous values for voltage

Introduction

The AI Energy Meter HF determines the maximum instantaneous value for the voltage for up to three phases.

The function "Detect peak value voltage" returns the largest voltage value and the associated phase. The module sets the qualifier bit 2 ("Power quality voltage peak") for the phase in question. You can read the maximum voltage value, for example, in the data record DS 160 (Page 259).

Voltage peak detection is based on the function for recording swells of the supply voltage in accordance with IEC 61000-4-30. This function is used to record the maximum voltage value in the supply network. In three-phase systems this function is only useful if the system is symmetrical and when all phases show the same voltage transformers.

Accordingly, measurement always records only the peak value over all phases. In addition to the requirements of IEC 61000-4-30, the phase on which the peak value voltage occurred is detected.

For metrological reasons, only the phase concerned that shows this maximum value can be returned. This may mean that the maximum voltage values of the other phases remain "0". With a "reset power quality analysis" the analysis starts afresh and the current results are discarded.

Parameter assignment

The following table shows the necessary parameters:

Table 14- 12 Parameter assignment

Parameter	
Power quality analysis function (module)	Enable
Determine peak value voltage (channel)	Enable

Example

The following figure is a schematic diagram of the principle of operation:

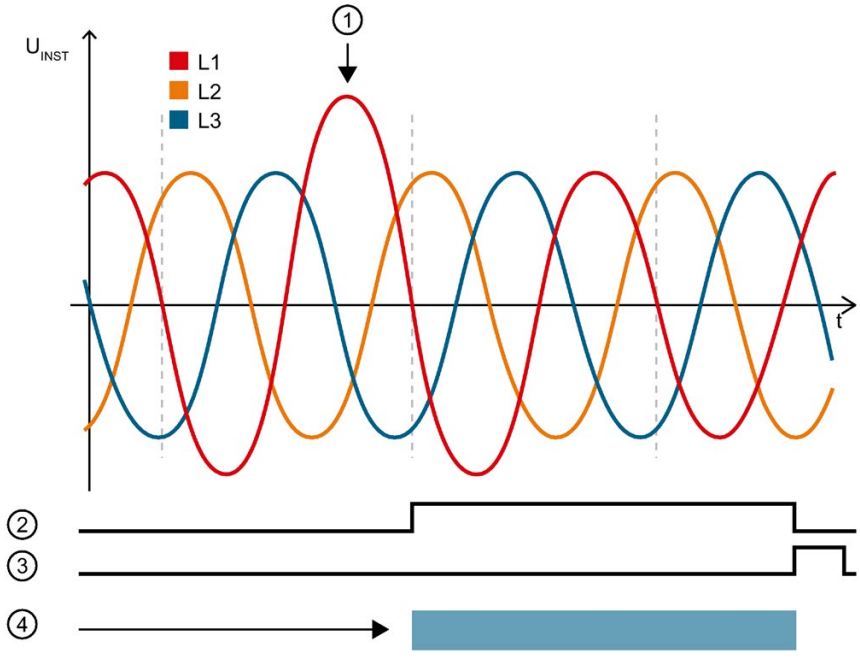

① Voltage peak in L1
② Status "Power quality voltage peak"
③ Bit "Reset status "power quality""
④ Max. voltage peaks instantaneous value can be read out

Figure 14-6 Example of principle of operation

The following table shows the parameter assignment for the example:

Table 14- 13 Parameter assignment

Parameter	
Power quality analysis functions	Enable
Determination of voltage peak value L1	Enable
Determination of voltage peak value L2	Enable
Determination of voltage peak value L3	Enable

The module detects the voltage peak in phase 1 and sets the qualifier bit 2 for phase 1. You can find the maximum voltage value, for example, in the data record DS 160 in bytes 174 to 177 ("Voltage peak value L1").

14.4.2 Current diagnostics

14.4.2.1 Diagnostics: Overload

Introduction

As long as one of the following conditions is met, the module reports the diagnostics "Overload" for each phase:

- If the tolerance value measured current parameterized for each phase is exceeded for the tolerance time overcurrent parameterized for each phase.
- If the maximum measured current of the AI Energy Meters HF is exceeded:
  - Secondary measured current: 12 A

Calculation of tolerance value measured current

The tolerance value measured current is calculated with the following formula:

Tolerance value measured current = "Nominal value current" + ("Tolerance factor overcurrent [%]" × "Nominal value current")

The "Nominal value current" is the primary current at the operating point.

Parameter assignment

The following table shows the necessary parameters:

Table 14- 14 Parameter assignment

Parameter	
Diagnostics overload	Enable
Nominal value current	0 ... 99999 A
Current transformer primary current	1 ... 99999 A
Current transformer secondary current	5 A
Tolerance factor overcurrent	1 ... 6000%
Tolerance time overcurrent	0 ... 60000 ms

Example

The following figure is a schematic diagram of the principle of operation:

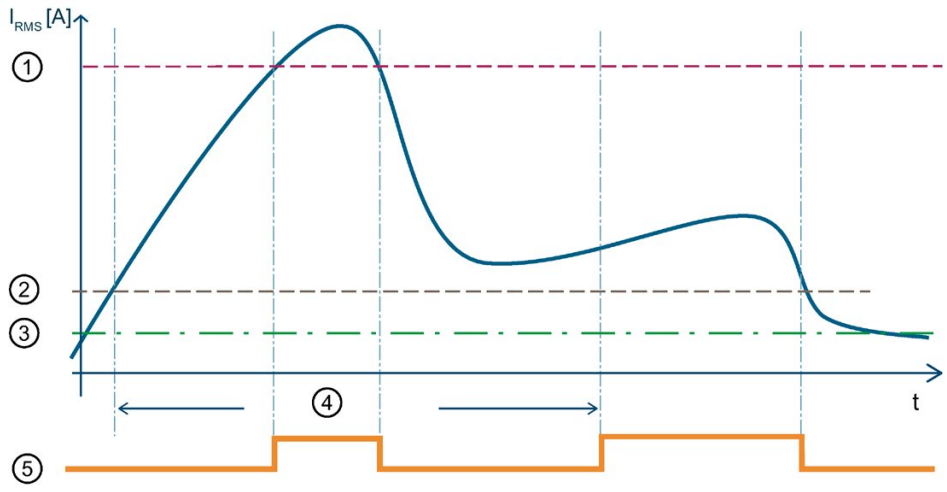

① Maximum measured current 12 A secondary current (CT) or 424 mV secondary voltage (RC)
② Tolerance value measured current
③ Nominal value current
④ Tolerance time
⑤ Diagnostics "overload"

Figure 14-7 Diagnostics "overload" of the effective current value

The following table shows the parameter assignment for the example:

Table 14- 15 Parameter assignment

Parameter	
Diagnostics overload	Enable
Nominal value current	2000 A
Current transformer primary current	5000 A
Current transformer secondary current	5 A
Tolerance factor overcurrent	20%
Tolerance time overcurrent	40000 ms

If the maximum measured current for the module (12000 A primary current) is exceeded, the module reports the diagnostics "Overload" as long as the maximum measured current is exceeded.

After the "Tolerance time overcurrent" of 40000 ms has expired, the module reports the diagnostics "Overload" as long as the configured "Tolerance value measured current" is exceeded.

14.4.2.2 Low limit for measuring current undershot

Introduction

With the function "Low limit for measuring current undershot" the AI Energy Meter HF monitors the low limit of the effective value of the current per phase.

If the low limit for measuring current is undershot, the module sets the current value to 0. Information as to which current measured values are set to 0 can be found under Basics for reading measured values (Page 41).

You activate the function by setting the parameter "Low limit for measuring current" > 0%.

Calculation of low limit for measuring current

The low limit for measuring current is calculated with the following formula:

Low limit measured current = "Nominal value current" × "Low limit for measuring current [%]"

The "Nominal value current" is the primary current at the operating point.

Parameter assignment

The following table shows the necessary parameters:

Table 14- 16 Parameter assignment

Parameter	
Nominal value current	0 ... 99999 A
Current transformer primary current	1 ... 99999 A
Current transformer secondary current	1 ... 16000 A
Low limit for current measurement	0 ... 20% *

* 0% means deactivation of the function

Example

The following figure is a schematic diagram of the principle of operation:

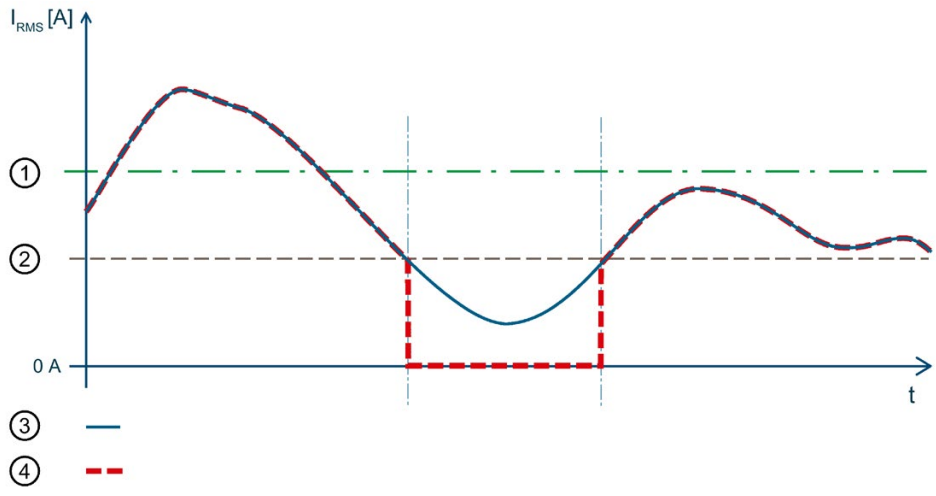

① Nominal current
② Low limit measured current
③ Measured value
④ Returned value

Figure 14-8 Behavior in the event of value falling below "Low limit for measuring current undershot"

The following table shows the parameter assignment for the example:

Table 14- 17 Parameter assignment

Parameter	
Nominal value current	2000 A
Current transformer primary current	5000 A
Current transformer secondary current	5 A
Low limit for current measurement	10%

In this example you define the "Low limit for measuring current" with 10%. This corresponds to an effective value of the primary voltage of 200 A.

If the value falls below the calculated low limit for current measurement, the module sets all current-dependent measured values (effective value current, active power, reactive power, apparent power, phase angle and power factor) to 0 A until the low limit for measuring current is exceeded again. The energy meters and operating hours counters are stopped during this time.

14.4.2.3 Peak values of the instantaneous values for current

Introduction

The AI Energy Meter HF determines the maximum instantaneous value for the current for up to three phases.

The function "Detect peak value current" returns the largest current value and the associated phase. The module sets the qualifier bit 3 ("Power quality current peak") for the phase in question. You can read the maximum current value, for example, in the data record DS 160 (Page 259).

Current peak detection is based on the function for recording swells of the supply voltage in accordance with IEC 61000-4-30. This function is used to record the maximum current value in the supply network. In three-phase systems this function is only useful if current recording is symmetrical and if all phases show the same current transformers.

Accordingly, measurement always records only the peak value over all phases. In addition to the requirements of IEC 61000-4-30, the phase on which the peak value current occurred is detected.

For metrological reasons, only the phase concerned that shows this maximum value can be returned. This may mean that the maximum current values of the other phases remain "0". With a "reset power quality analysis" the analysis starts afresh and the current results are discarded.

Parameter assignment

The following table shows the necessary parameters:

Table 14- 18 Parameter assignment

Parameter	
Power quality analysis function (module)	Enable
Determine peak value current (Channel)	Enable

Example

The following figure is a schematic diagram of the principle of operation:

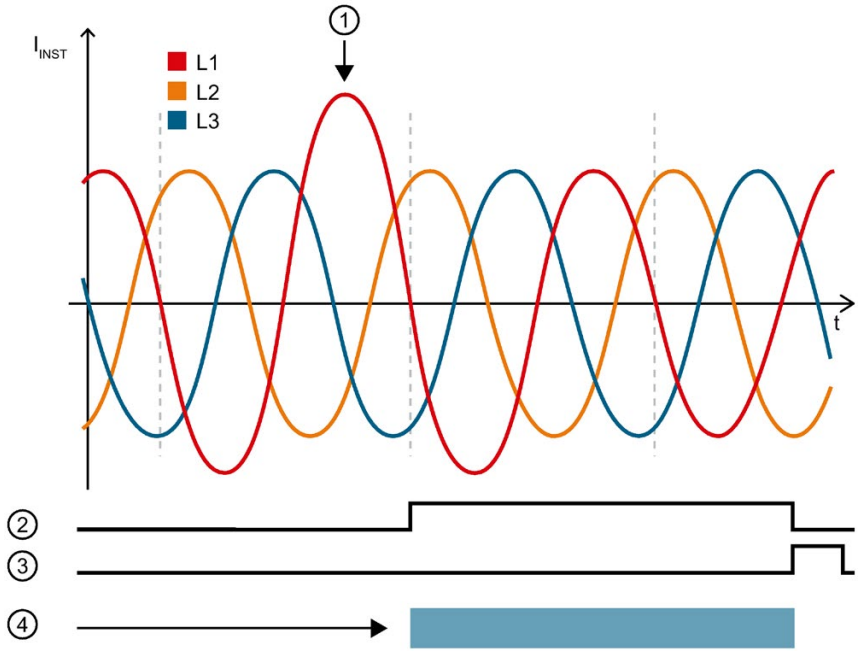

① Current peak in L1
② Status "Power quality current peak"
③ Bit "Reset status "power quality""
④ Max. current peaks instantaneous value can be read out

Figure 14-9 Example of principle of operation

The following table shows the parameter assignment for the example:

Table 14- 19 Parameter assignment

Parameter	
Power quality analysis function	Enable
Determine peak value current (L1)	Enable
Determine peak value current (L2)	Enable
Determine peak value current (L3)	Enable

The module detects the peak value current in phase 1 and sets the qualifier bit 3 for phase 1. You can find the maximum current value, for example, in the data record DS 160 in bytes 186 to 189 ("Current peak value L1").

14.4.2.4 Overcurrent of the current half value

Introduction

The AI Energy Meter HF returns the maximum overcurrent value of the current half-wave value. If the value to be monitored is exceeded, the module reports the diagnostics "Power quality" and the qualifier bit 7 is set. The module also sets Bit 4 for the respective phase in data record DS 160 (Page 259). In the event that the current half-value is exceeded again, only the diagnostics "Power quality" is reported again and, if applicable, the maximum current swell value is updated.

Calculation of overcurrent limit

The overcurrent limit is calculated based on the following formula:

Overcurrent limit = "Nominal value current" + ("Threshold overcurrent [%]" × "Nominal value current")

The "Nominal value current" is the primary current at the operating point.

Parameter assignment

The following table shows the necessary parameters:

Table 14- 20 Parameter assignment

Parameter	
Power quality analysis functions	Enable
Diagnostics power quality	Enable
Determining the overcurrent	Enable
Nominal value current	0 ... 99999 A
Threshold overcurrent	1 ... 6000%

Example

The following figure is a schematic diagram of the principle of operation:

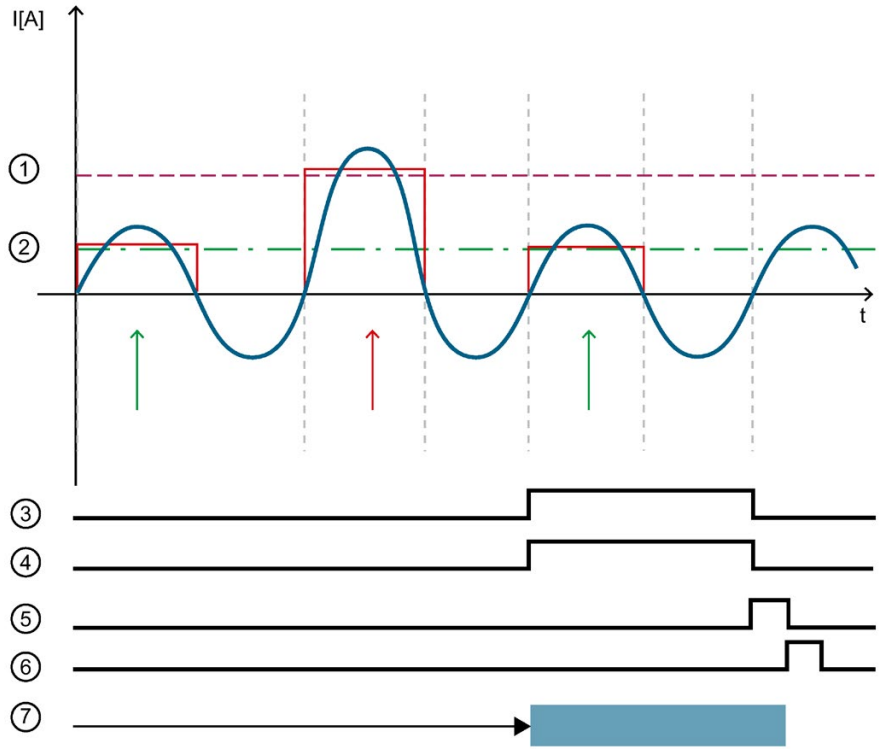

① Threshold overcurrent
② Nominal current
③ Qualifier Bit 7
④ Diagnostics power quality
⑤ Status "power quality overcurrent"
⑥ Bit "Reset status "power quality""
⑦ Max. overcurrent (half-wave) value can be read

Figure 14-10 Example of principle of operation

The following table shows the parameter assignment for the example:

Table 14- 21 Parameter assignment

Parameter	
Power quality analysis functions	Enable
Diagnostics power quality	Enable
Determining the overcurrent	Enable
Nominal value current	2000 A
Threshold overcurrent	100%

In this example you define the Threshold overcurrent of 100%. This corresponds to a primary current of 4000 A.

If the "Threshold overcurrent" is exceeded, the module sets Bit 4 "Overcurrent" for the phase in the data record DS 160.

As long as the "Threshold overcurrent" is exceeded, the module reports the diagnostics "Power quality" and the qualifier bit 7 is set.

Technical specifications 15

15.1 Technical specifications

Technical specifications of the AI Energy Meter HF

The following table shows the technical specifications as of 07/2018. You will find a data sheet including daily updated technical specifications on the Internet (https://support.industry.siemens.com/cs/ww/en/pv/6ES7134-6PA00-0CU0/td?dl=en).

Article number	6ES7134-6PA00-0CU0
General information	
Product type designation	AI Energy Meter 480 VAC/CT HF, PU 1
Firmware version	V6.0
• FW update possible	Yes
usable BaseUnits	BU type U0
Color code for module-specific color identification plate	CC20
Supported power supply systems	TT, TN, IT
Product function	
• Voltage measurement	Yes
– without voltage transformer	Yes
– with voltage transformer	Yes
• Current measurement	Yes
– without current transformer	No
– with current transformer	Yes; 1 A or 5 A current transformer
– with Rogowski coil	No
– with current/voltage transformer	No
• Energy measurement	Yes
• Frequency measurement	Yes
• Power measurement	Yes
• Active power measurement	Yes
• Reactive power measurement	Yes
• Power factor measurement	Yes
• Active factor measurement	Yes
• Reactive power compensation	Yes
• Line analysis	Yes

Article number	6ES7134-6PA00-0CU0
– Monitoring of instantaneous and half-wave values	Yes
– THD measurement for current and voltage	Yes
– Harmonics for current and voltage	Yes
– Voltage dip (DIP)	Yes
– Voltage swell	Yes
• I&M data	Yes; I&M0 to I&M3
• Isochronous mode	No
Engineering with	
• STEP 7 TIA Portal configurable/integrated as of version	STEP 7 V15 or higher
• STEP 7 configurable/integrated as of version	Configurable via GSD file
• PROFIBUS as of GSD version/GSD revision	One GSD file each, Revision 3 and 5 and higher
• PROFINET as of GSD version/GSD revision	V2.3
Operating mode	
• Switching between operating modes in RUN	Yes; For module version 32 I/20 Q, it is possible to dynamically switch between 25 user data variants, 23 of which are pre-defined and 2 of which can be defined by the specific user
• Cyclic measured value access	Yes
• Acyclic measured value access	Yes
• Fixed measured value sets	Yes
• Freely definable measured value sets	Yes
CiR – Configuration in RUN	
Reparameterization possible in RUN	Yes
Calibration possible in RUN	Yes
Installation type/mounting	
Mounting position	Any
Supply voltage	
Design of the power supply	DC
Type of supply voltage	24 V DC
permissible range, lower limit (DC)	19.2 V
permissible range, upper limit (DC)	28.8 V
Input current	
Current consumption (rated value)	12.5 mA
Current consumption, max.	17 mA

Article number	6ES7134-6PA00-0CU0
Power loss	
Power loss, typ.	1.4 W; 4x 5 A input current, 3x 230 V AC
Address area	
Address space per module	
• Inputs	256 byte
• Outputs	20 byte
Hardware configuration	
Automatic encoding	Yes
• Mechanical coding element	Yes
Selection of BaseUnit for connection variants	
• 2-wire connection	BU type U0
Time of day	
Operating hours counter	
• present	Yes
Analog inputs	
Cycle time (all channels), typ.	50 ms; Time for consistent update of all measured and calculated values (cyclic und acyclic data)
Cable length	
• shielded, max.	200 m
• unshielded, max.	200 m
Analog value generation for the inputs	
Sampling frequency, max.	2 048 kHz
Isochronous mode	
Isochronous operation (application synchronized up to terminal)	No
Interrupts/diagnostics/status information	
Alarms	
• Diagnostic alarm	Yes
• Limit value alarm	Yes
• Hardware interrupt	Yes; Monitoring of up to 16 freely selectable process values (exceeding or undershooting of value)

Article number	6ES7134-6PA00-0CU0
Diagnostic messages	
• Line quality	Yes
• Supply voltage	Yes
• Hardware interrupt lost	Yes
• Parameter assignment error	Yes
• Module fault	Yes
• Channel not available	Yes
• Overflow/underflow	Yes
• Overload current	Yes
Diagnostics indication LED	
• Monitoring of the supply voltage (PWR-LED)	Yes
• Channel status display	Yes; Green LED
• for channel diagnostics	Yes; red Fn LED
• for module diagnostics	Yes; green/red DIAG LED
Integrated Functions	
Measuring functions	
• Measuring procedure for voltage measurement	TRMS
• Measuring procedure for current measurement	TRMS
• Type of measured value acquisition	seamless
• Curve shape of voltage	Sinusoidal or distorted
• Buffering of measured variables	Yes
• Parameter length	128 byte
• Bandwidth of measured value acquisition	3.2 kHz; Harmonics: 63 / 50 Hz, 52 / 60 Hz
Measuring range	
– Frequency measurement, min.	45 Hz
– Frequency measurement, max.	65 Hz

Article number	6ES7134-6PA00-0CU0
Measuring inputs for voltage	
– Measurable line voltage between phase and neutral conductor	300 V
– Measurable line voltage between the line conductors	519 V
– Measurable line voltage between phase and neutral conductor, min.	3 V
– Measurable line voltage between phase and neutral conductor, max.	300 V
– Measurable line voltage between the line conductors, min.	6 V
– Measurable line voltage between the line conductors, max.	519 V
– Measurement category for voltage measurement in accordance with IEC 61010-2-030	CAT II
– Internal resistance line conductor and neutral conductor	1.5 MΩ
– Power consumption per phase	60 mW; 300 V AC
– Impulse voltage resistance 1,2/50µs	2.5 kV
Measuring inputs for current	
– measurable relative current (AC), min.	1 %; Relative to the secondary rated current 5 A
– measurable relative current (AC), max.	100 %; Relative to the secondary rated current 5 A
– Continuous current with AC, maximum permissible	5 A; 6 A permanent thermal overload
– Apparent power consumption per phase for measuring range 5 A	0.6 V·A
– Rated value short-time withstand current restricted to 1 s	100 A
– Input resistance measuring range 0 to 5 A	25 mΩ; At the terminal
– Zero point suppression	0 ... 20%, referred to the nominal current
– Surge strength	10 A; for 1 minute

Article number	6ES7134-6PA00-0CU0
Accuracy class according to IEC 61557-12	
– Measured variable voltage	0,2
– Measured variable current	0,2
– Measured variable apparent power	0.5
– Measured variable active power	0.5
– Measured variable reactive power	1
– Measured variable power factor	0.5
– Measured variable active energy	0.5
– Measured variable reactive energy	1
– Measured variable neutral current	0,2
– Measured variable phase angle	±0.5 °; not covered by IEC 61557-12
– Measured variable frequency	0.05
– Measured variable harmonic	1
– Measured variable THDU	1
– Measured variable THDI	1
Accuracy class line analysis acc. to IEC 61000-4-30	
– Measured variable voltage	Class S
– Measured variable current	Class S
– Measured variable frequency	Class S
– Measured variable voltage interruption	Class S
– Measured variable voltage dip and swell	Class S
– Measured variable harmonic voltage	Class S
– Measured variable harmonic current	Class S
Potential separation	
Potential separation channels	
• between the channels	No
• between the channels and backplane bus	Yes
• Between the channels and load voltage L+	Yes; Including FE
Isolation	
Isolation tested with	Between channels and backplane bus, 24 V supply: Routine test, 1 920 V AC, 2 s; between backplane bus and 24 V supply: Type test, 707 V DC

Article number	6ES7134-6PA00-0CU0
Ambient conditions	
Ambient temperature during operation	
• horizontal installation, min.	0 °C; On request: Ambient temperatures lower than 0 °C (without condensation)
• horizontal installation, max.	60 °C
• vertical installation, min.	0 °C; On request: Ambient temperatures lower than 0 °C (without condensation)
• vertical installation, max.	50 °C
Altitude during operation relating to sea level	
• Installation altitude above sea level, max.	3 000 m; Restrictions for installation altitudes > 2 000 m, see manual
Dimensions	
Width	20 mm
Height	73 mm
Depth	58 mm
Weights	
Weight (without packaging)	45 g
Other	
Data for selecting a voltage transformer	
• Secondary side, max.	300 V
Data for selecting a current transformer	
• Burden power current transformer x/1A, min.	As a function of cable length and cross section, see device manual
• Burden power current transformer x/5A, min.	As a function of cable length and cross section, see device manual

ATEX approval

In accordance with EN 60079-15 (Electrical apparatus for potentially explosive atmospheres; Type of protection "n") and EN 60079-0 (Electrical apparatus for potentially explosive gas atmospheres - Part 0: General Requirements)

II 3 G Ex nA IIC Tx Gc
DEKRA 12ATEX0038X

Dimension drawing

See ET 200SP BaseUnits (http://support.automation.siemens.com/WW/view/en/59753521) manual

Parameter data records A

A.1 Configuration via parameter data records

The parameter data records of the module have an identical structure, regardless of whether you configure the module with PROFIBUS DP or PROFINET IO.

Overview of the parameter data records

- Parameter data record DS 128 for the complete module
- Parameter data record DS 129 for limit monitoring
- Parameter data records DS 130/131 for user data mapping
- Parameter data record DS 135 for data record mapping

Parameter assignment in the user program

You can reassign the module parameters in RUN mode, for example change the diagnostics behavior, define new limits or configure a modified user data mapping.

Changing parameters in RUN

The "WRREC" instruction is used to transfer the parameters to the module via the respective data record. The parameters set in STEP 7 do not change in the CPU, which means the parameters set in STEP 7 are still valid after a restart.

If you reconfigure a module (so that the user data size changes) and diagnostics are pending prior to the reconfiguration, these diagnostics are not signaled as "outgoing". The diagnostics "Supply voltage missing" is signaled as outgoing.

STATUS output parameter

If errors occur during the transfer of parameters with the WRREC instruction, the module continues operation with the previous parameter assignment. However, a corresponding error code is written to the STATUS output parameter.

The description of the WRREC instruction and the error codes is available in the STEP 7 online help.

A.2 Structure of the parameter data record 128 for the entire module

Structure of data record 128

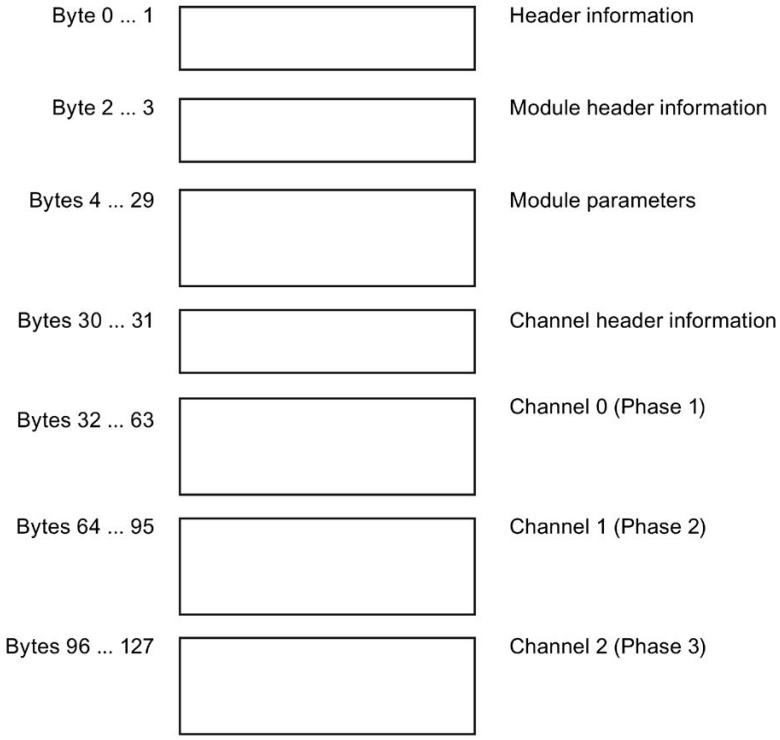

Figure A-1 Parameter data record 128

Header information

The figure below shows the structure of the header information.

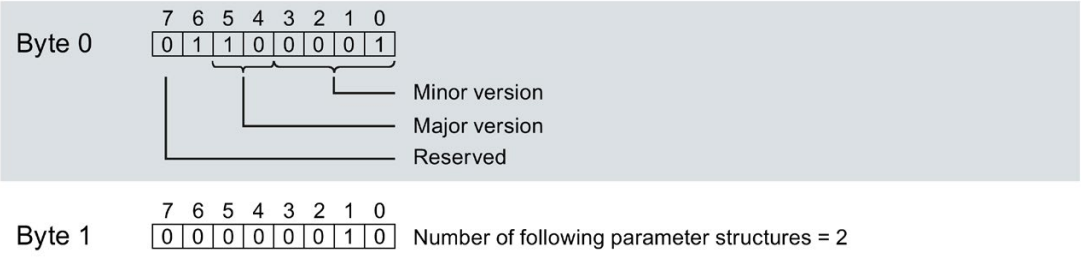

Figure A-2 Header information

Module header information

The figure below shows the structure of the header information for a module.

	7	6	5	4	3	2	1	0	
Byte 2	0	0	0	0	0	0	0	1	Number of the following module parameter blocks = 1
Byte 3	0	0	0	1	1	0	1	0	Length of the following module parameter block = 26

Figure A-3 Module header information

Module parameter block

The figure below shows the structure of the module parameter block.

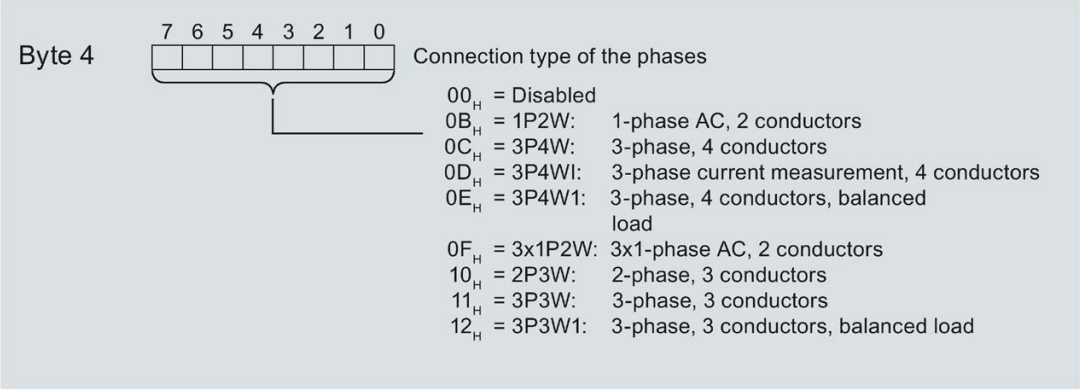

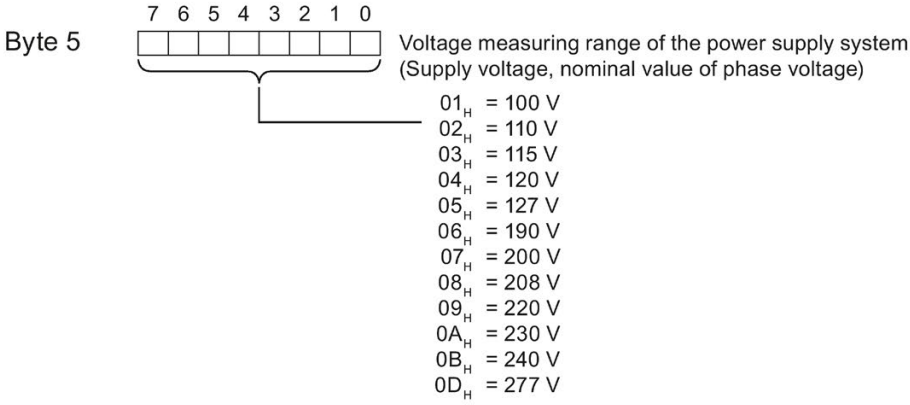

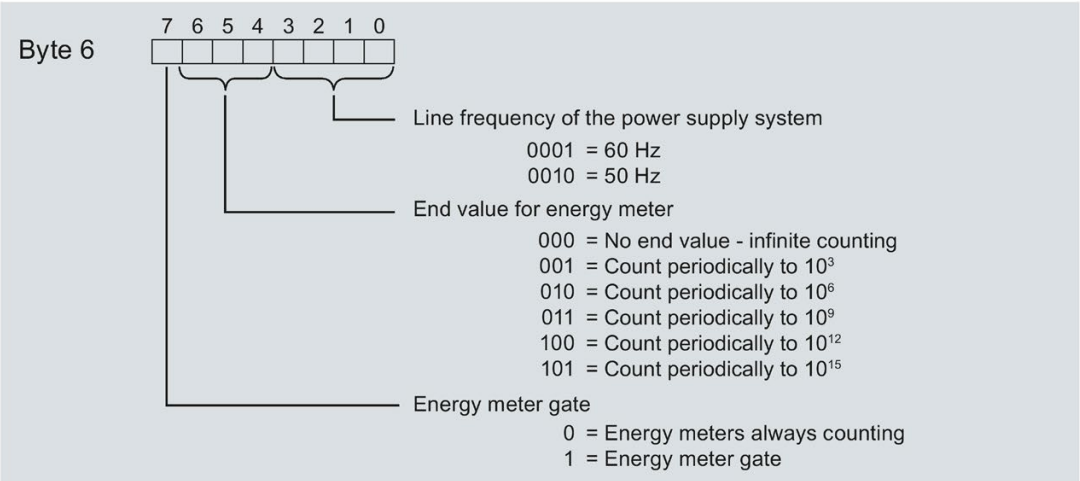

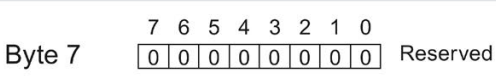

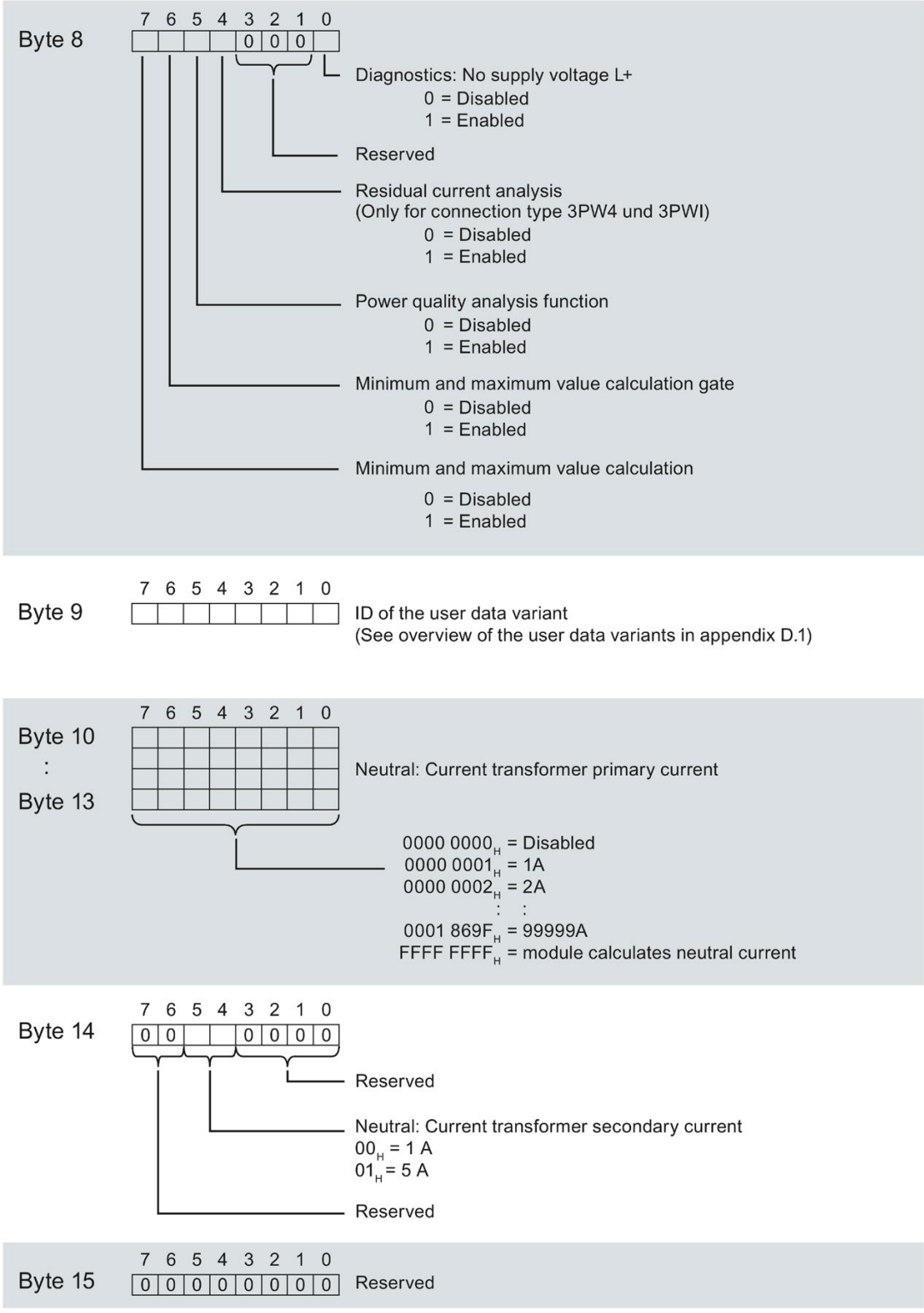

Figure A-4 Module parameter block

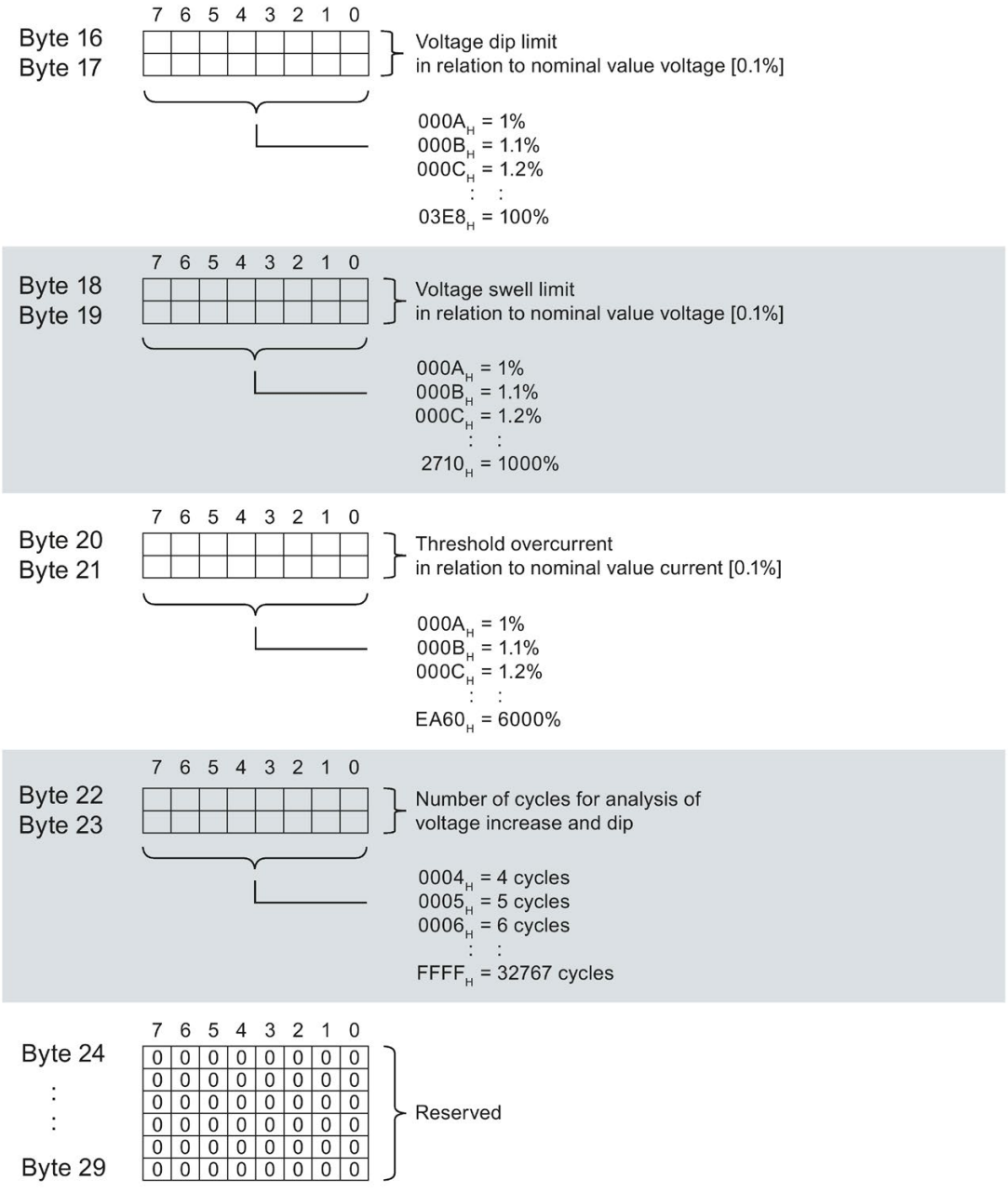

Figure A-5 Module parameter block

You can find the user data variant in the section Overview of the user data variants (Page 205).

Channel header information

The following figure shows the structure of the header information for a channel.

	7	6	5	4	3	2	1	0	
Byte 30	0	0	0	0	0	0	1	1	Number of following channel parameter blocks = 3
Byte 31	0	0	1	0	0	0	0	0	Length of the following channel parameter block = 32

Figure A-6 Channel header information

Channel parameter block for channel 0 (Phase 1)

The following figure shows an example of the structure of the channel parameter block for channel 0 (phase 1, bytes 32 to 63).

For channel 1 (phase 2; bytes 64 to 95) and channel 2 (phase: 3; bytes 96 to 127), the structure is identical.

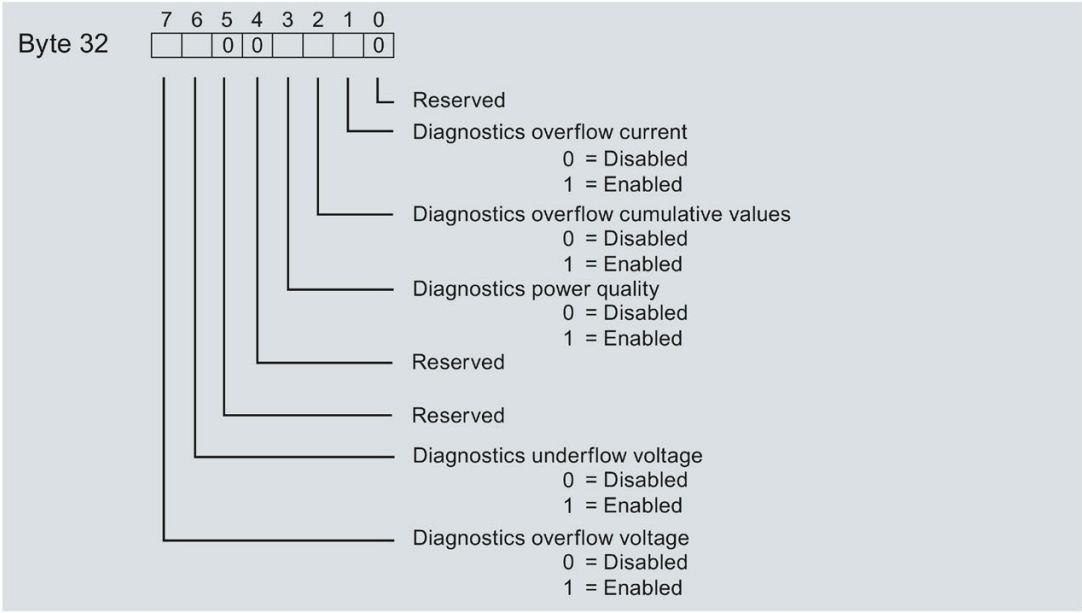
Byte 32
7 6 5 4 3 2 1 0
0 0 0
Reserved
Diagnostics overflow current
0 = Disabled
1 = Enabled
Diagnostics overflow cumulative values
0 = Disabled
1 = Enabled
Diagnostics power quality
0 = Disabled
1 = Enabled
Reserved
Reserved
Diagnostics underflow voltage
0 = Disabled
1 = Enabled
Diagnostics overflow voltage
0 = Disabled
1 = Enabled

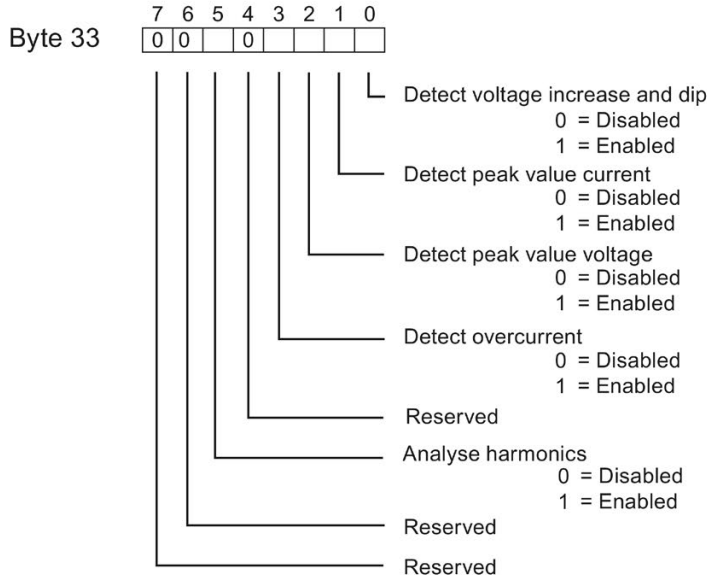
Byte 33
7 6 5 4 3 2 1 0
0 0 0
Detect voltage increase and dip
0 = Disabled
1 = Enabled
Detect peak value current
0 = Disabled
1 = Enabled
Detect peak value voltage
0 = Disabled
1 = Enabled
Detect overcurrent
0 = Disabled
1 = Enabled
Reserved
Analyse harmonics
0 = Disabled
1 = Enabled
Reserved
Reserved

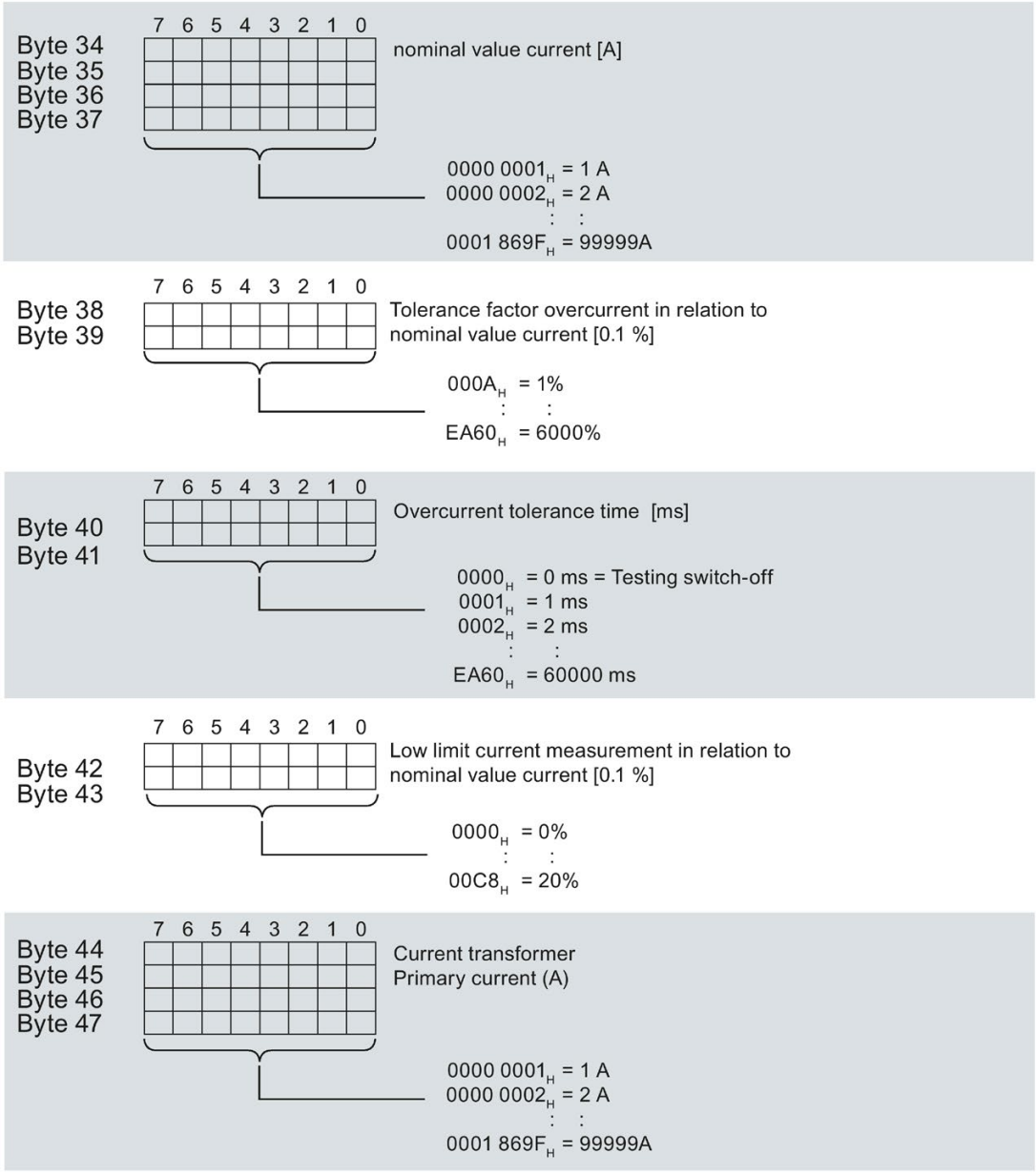

Figure A-7 Channel parameter block

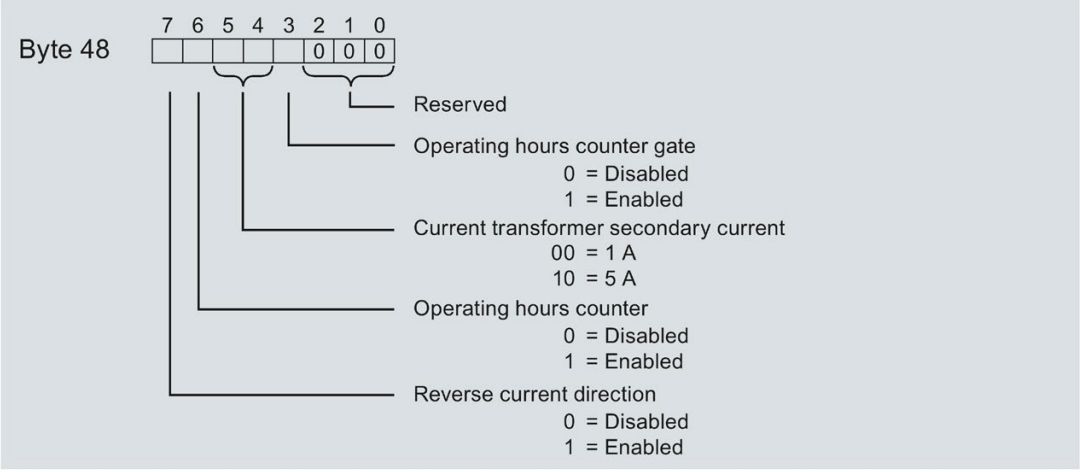
Byte 48
7 6 5 4 3 2 1 0
0 0 0
Reserved
Operating hours counter gate
0 = Disabled
1 = Enabled
Current transformer secondary current
00 = 1 A
10 = 5 A
Operating hours counter
0 = Disabled
1 = Enabled
Reverse current direction
0 = Disabled
1 = Enabled

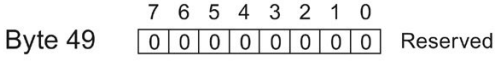
Byte 49
7 6 5 4 3 2 1 0
0 0 0 0 0 0 0 0
Reserved

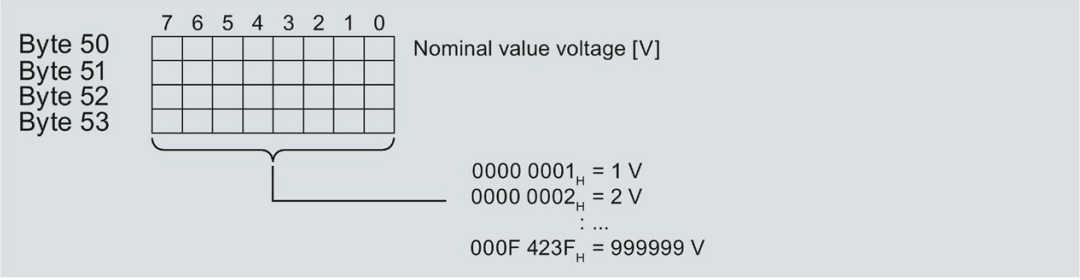
Byte 50
Byte 51
Byte 52
Byte 53
7 6 5 4 3 2 1 0
Nominal value voltage [V]
0000 0001H = 1 V
0000 0002H = 2 V
: ...
000F 423FH = 999999 V

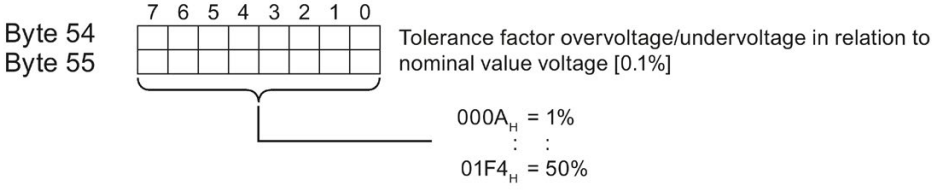
Byte 54
Byte 55
7 6 5 4 3 2 1 0
Tolerance factor overvoltage/undervoltage in relation to nominal value voltage [0.1%]
000AH = 1%
: :
01F4H = 50%

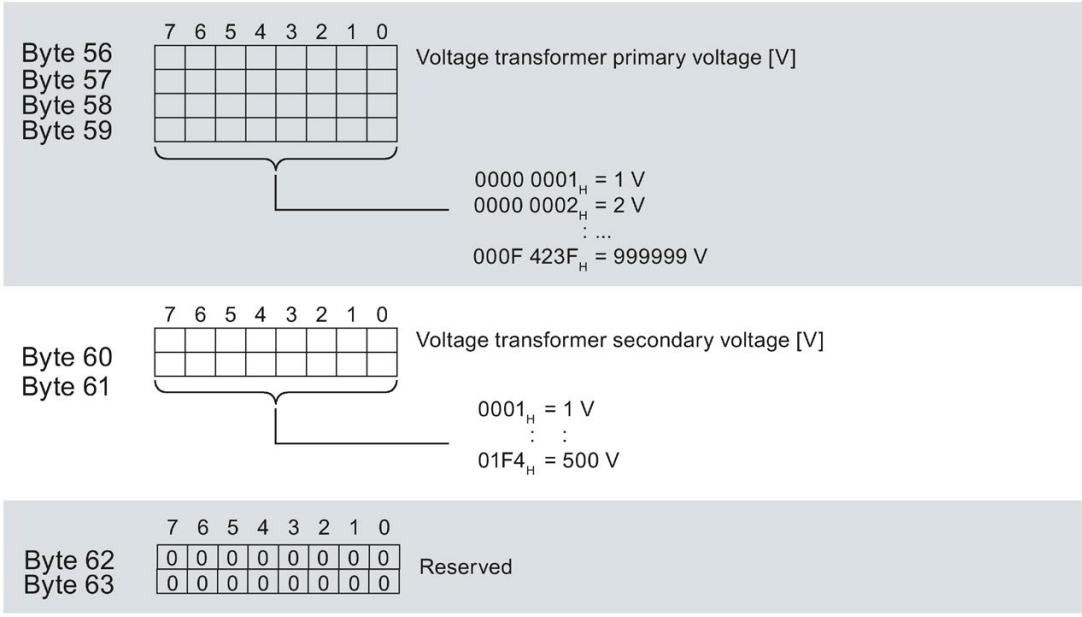

Figure A-8 Channel parameter block

Error while transferring the data record

The module always checks all the values of the transferred data record. Only if all the values were transferred without errors does the module apply the values from the data record.

The WRREC instruction for writing data records returns corresponding error codes when errors occur in the STATUS parameter.

The following table shows the module-specific error codes and their meaning for the parameter data record 128.

Error code in STATUS parameter (hexadecimal)				Meaning	Solution
Byte 0	Byte 1	Byte 2	Byte 3		
DF	80	B0	00	Number of the data record unknown	Enter a valid number for the data record.
DF	80	B1	01	Length of the data record incorrect	Enter a valid value for the data record length.
DF	80	B2	00	Slot invalid or cannot be accessed.	Check the station whether the module is plugged or drawn. Check the assigned values for the parameters of the WRREC instruction
DF	80	E0	01	Incorrect version	Check Byte 0. Enter valid values.
DF	80	E0	02	Error in the header information	Check bytes 1 to 3, 32, 33, 52, 53, 72 and 73. Correct the length and number of the parameter blocks.

Error code in STATUS parameter (hexadecimal)				Meaning	Solution
Byte 0	Byte 1	Byte 2	Byte 3		
DF	80	E1	01	Reserved bits are not 0.	Check bytes 8, 14, 15, 30, 31, 34, 42, 50...53, 54, 62, 70...73, 74, 82, 90...93 and set the reserved bits back to 0.
DF	80	E1	05	"Voltage measuring range" invalid	Check Byte 5. Permitted values: 01_H to $0C_H$
DF	80	E1	20	"Connection type" invalid	Check Byte 4. Permitted values: 00_H, $0B_H$ ... 01_H
DF	80	E1	21	"User data variant" not possible or input data configuration not large enough	Check Byte 9. Select a different user data variant or change the configuration.
DF	80	E1	22	"User data variant" invalid	Check Byte 9. Select a valid code for the user data variant.
DF	80	E1	23	"Line frequency" invalid	Check Byte 6. Enter valid values.
DF	80	E1	29	"Tolerance factor overcurrent in relation to nominal value current [0.1%]" invalid	Check bytes 35, 55 and 75. Enter valid values.
DF	80	E1	2A	"Tolerance time overcurrent" invalid	Check bytes 36...37, 56...57, 67...77. Enter valid values.
DF	80	E1	2B	"Low limit current measurement" in relation to nominal value current [0.1%] invalid	Check bytes 43, 63 and 83. Enter valid values.
DF	80	E1	2C	"Current transformer primary current [A]" invalid.	Check bytes 38...41, 58...61, 78...81. Enter valid values.
DF	80	E1	2D	"Voltage transformer primary voltage [V]" invalid	Check bytes 46...49, 66...69, 66...69, 88...89. Enter valid values.
DF	80	E1	2E	"Voltage transformer secondary voltage [V]" invalid	Check bytes 38…42 with bytes 58…62 and bytes 78…82 and bytes 44…49 with bytes 64…69 and bytes 84…89 for identical values.
DF	80	E1	2F	"End value energy meter" invalid	Check Bit 4...6 in Byte 6. Enter valid values.
DF	80	E1	30	Invalid data record number.	Check the data record number. Enter a valid data record number.
DF	80	E1	3E	Only for connection type 3P4W1 and 3P3W1. Current or voltage transformer parameters for the different phases are not identical.	Check bytes 38...42 with bytes 58...62 and bytes 78...82 as well as bytes 44...49 with bytes 64...69 and bytes 84...80 for identical values. Enter identical values for current transformer (secondary current, primary current, direction of current) and voltage transformer (secondary voltage, primary voltage) at all three phases.
DF	80	E1	3F	"End value for energy meter" or transmission ratio (primary value, secondary value) of current and voltage too low.	Increase the end value of the energy meter or the ratio of primary to secondary current for current transformer and/or primary to secondary voltage for voltage transformer.
DF	80	E1	43	"Current transformer secondary current" for neutral or all three phases invalid	Check bits 4...5 in bytes 14, 42, 62, 82. Enter valid values.

Error code in STATUS parameter (hexadecimal)				Meaning	Solution
Byte 0	Byte 1	Byte 2	Byte 3		
DF	80	E1	44	"Voltage dip limit value in relation to nominal value voltage [0.1%]" invalid	Check bytes 16...17. Enter valid values (voltage dip limit value must be smaller than the respective nominal voltage)
DF	80	E1	45	"Voltage swell limit value in relation to nominal value voltage [0.1%]" invalid	Check bytes 20...23. Enter valid values (voltage swell limit value must be greater than the respective nominal voltage)
DF	80	E1	46	"Threshold overcurrent in relation to nominal value current [0.1%]" invalid	Check bytes 24...27. Enter valid values (threshold overcurrent must be greater than primary current)
DF	80	E1	47	"Number of cycles for analysis of voltage swell/dip" invalid	Check bytes 28...29. Enter valid values.
DF	80	E1	49	Current transformer parameter for "residual current analysis" invalid	Only with connection type 3P4W and 3P4WI and if neutral current is measured. Current transformer primary current and secondary current and direction of current of the three phases must have identical parameters.
DF	80	E1	4 A	Voltage transformer parameters for voltage swell/dip invalid	Check the parameters secondary voltage, primary voltage, nominal value voltage. Enabled channels must have identical parameters.
DF	80	E1	4B	Current transformer parameter for "Detect overcurrent" invalid	Check the parameters secondary current, primary current, nominal value current and direction of current. Enabled channels must have identical parameters.
DF	80	E1	4C	Parameters for determining the neutral current invalid	Neutral current can only be determined with connection type 3P4W and 3P4WI Current transmission parameters primary current, secondary current, nominal value current and direction of current of the three phases must be identical.
DF	80	E1	4D	"Nominal value current [A]" invalid	Check bytes 34...37, 66...69, 98...101. Enter valid values.
DF	80	E1	4E	"Nominal value voltage [V]" invalid	Check bytes 50...53, 82...85, 114...117. Enter valid values.
DF	80	E1	4F	"Low limit current measurement in relation to nominal value current [0.1%]" invalid	Check bytes 42...43, 74...75, 106...107. Enter valid values.
DF	80	E1	50	The combination of "Nominal value voltage [V]" and "Voltage dip limit value in relation to nominal value voltage [0.1%]" invalid.	Select the permissible value in % so that the secondary measuring voltage of 0 V is not undershot.
DF	80	E1	51	The combination of "Nominal value voltage [V]" and "Voltage swell limit value in relation to nominal value voltage [0.1%]" invalid.	Select the permissible value in % so that the secondary measuring voltage of 300 V is not exceeded.
DF	80	E1	52	The combination of "Nominal value current [A]" and "Threshold overcurrent in relation to nominal value current [0.1%]" invalid	Select the permissible value in % so that the secondary measuring current of 6 A is not exceeded.

Error code in STATUS parameter (hexadecimal)				Meaning	Solution
Byte 0	Byte 1	Byte 2	Byte 3		
DF	80	E1	53	The combination of "Nominal value current [A]" and "Tolerance factor overcurrent in relation to nominal value current [0.1%]" invalid	Select the permissible value in % so that the secondary measuring current of 6 A is not exceeded.
DF	80	E1	54	The combination of "Nominal value voltage [V]" and "Tolerance factor overvoltage/undervoltage in relation to nominal value voltage [0.1%]" lies outside the permissible range.	Select the permissible value in % so that the secondary measuring voltage of 300 V is not exceeded.
DF	80	E1	55	"Nominal value current [A]" is too high. "Nominal value current" x transmission factor current generates a secondary current measured variable which exceeds its value range.	Select the permissible value in A so that the secondary measuring current of 6 A is not exceeded. The transmission factor current is calculated from "Current transformer primary current [A]" / "Current transformer secondary current [A]"
DF	80	E1	56	"Nominal value voltage [V]" is too high. "Nominal value voltage" x transmission factor voltage generates a secondary voltage measured variable which exceeds its value range.	Select the permissible value in V so that the secondary measuring voltage of 300 V is not exceeded. The transmission factor voltage is calculated from "Voltage transformer primary voltage [V]" / "Voltage transformer secondary voltage [V]"

A.3 Structure of the parameter data record 129 for limit monitoring

Structure of data record 129

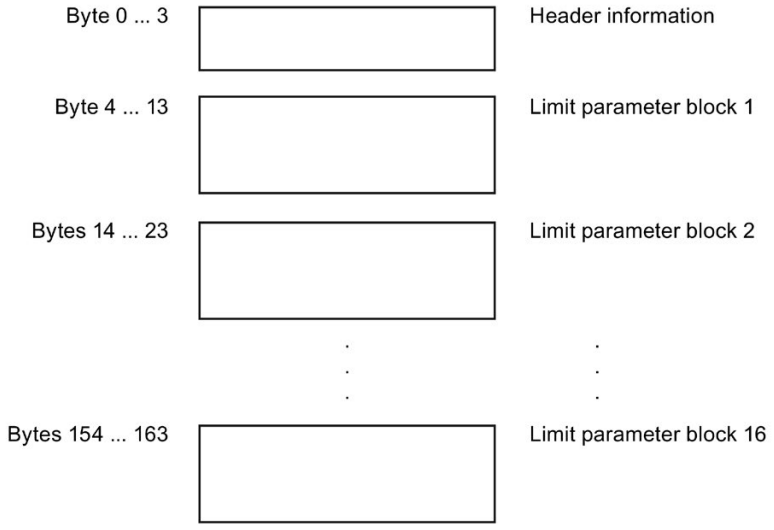

Figure A-9 Structure of data record 129

Header information

The figure below shows the structure of the header information.

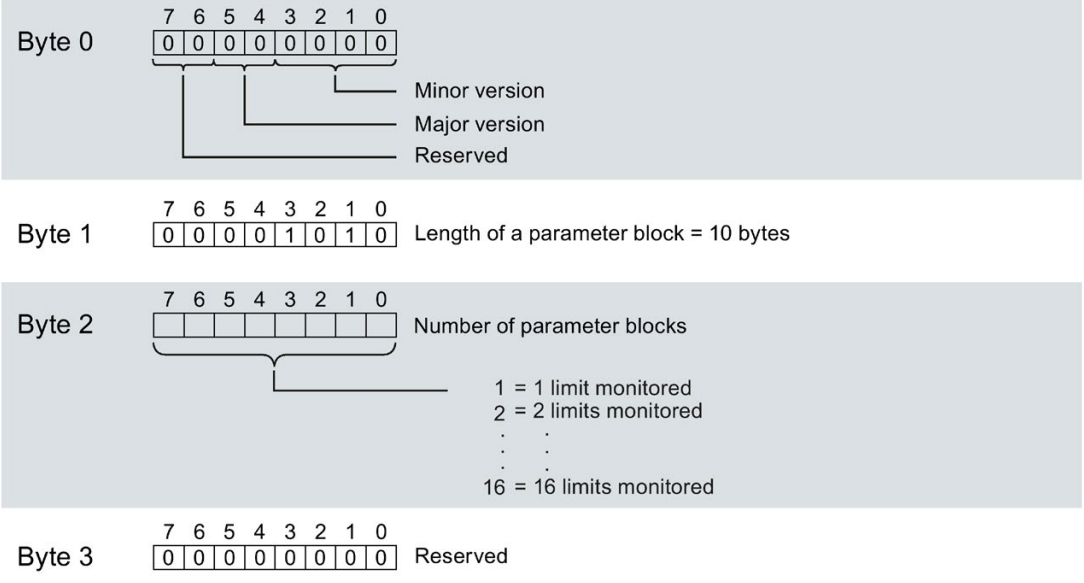

Figure A-10 Header information DS 129

Limit parameter block

The following diagram shows the structure of the parameter blocks for limit monitoring.

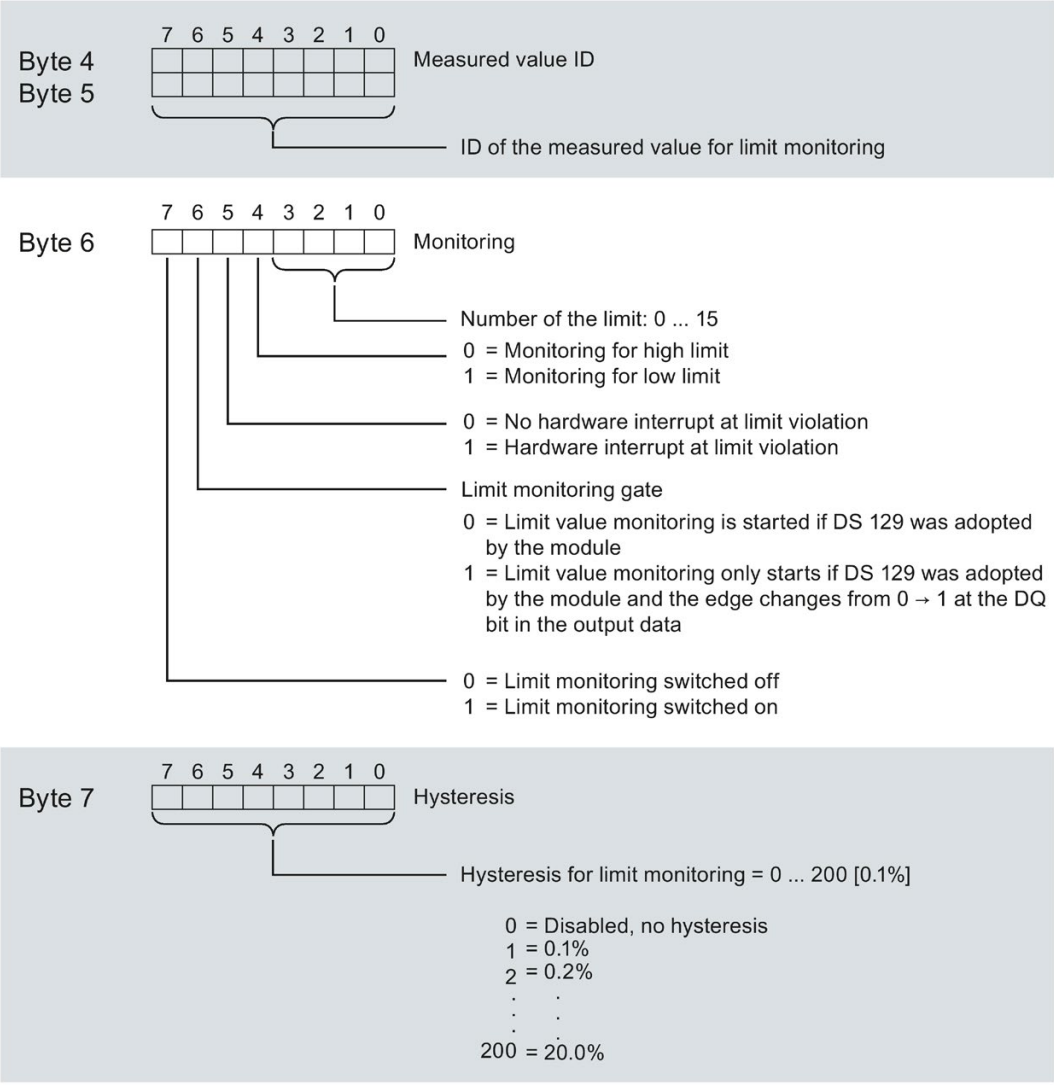

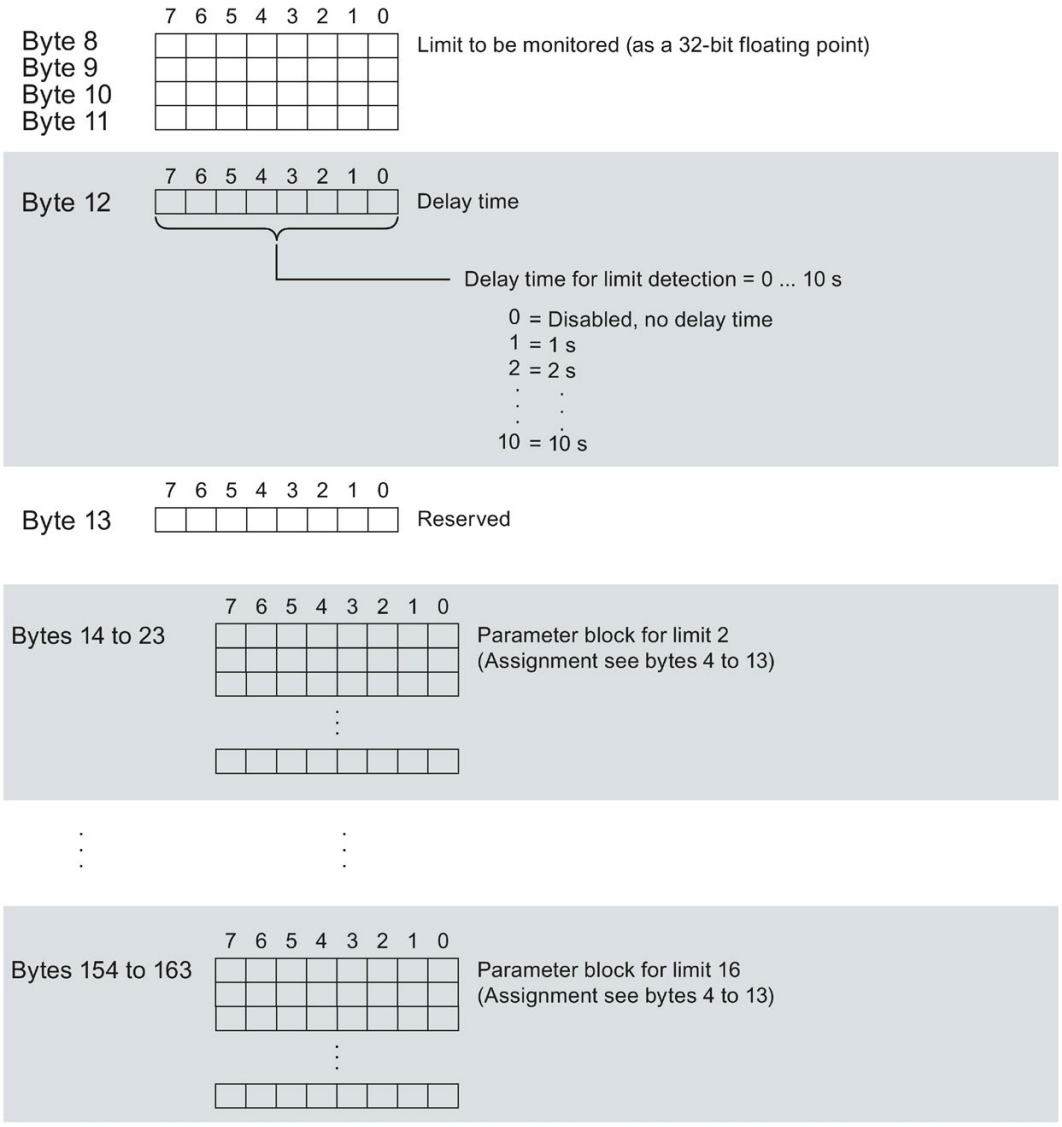

Figure A-11 Limit parameter data block

Error while transferring the data record

The module always checks all the values of the transferred data record. Only if all the values were transferred without errors does the module apply the values from the data record.

The WRREC instruction for writing data records returns corresponding error codes when errors occur in the STATUS parameter.

The following table shows the module-specific error codes and their meaning for the parameter data record 129.

Error code in STATUS parameter (hexadecimal)				Meaning	Solution
Byte 0	Byte 1	Byte 2	Byte 3		
DF	80	B0	00	Number of the data record unknown	Enter a valid number for the data record.
DF	80	B1	01	Length of the data record incorrect	Enter a valid value for the data record length.
DF	80	B2	00	Slot invalid or cannot be accessed.	Check the station whether the module is plugged or drawn. Check the assigned values for the parameters of the WRREC instruction
DF	80	E0	01	Incorrect version	Check Byte 0. Enter valid values.
DF	80	E0	02	Error in the header information	Check Bytes 1 and 2. Correct the length and number of the parameter blocks.
DF	80	E1	01	Reserved bits are not 0.	Check bytes 3, 13, 23, 33...163 and set the reserved bits back to 0.
DF	80	E1	31	"Length of the parameter block" invalid.	Check Byte 1. Length = 10 bytes
DF	80	E1	32	"Number of parameter blocks" invalid.	Check Byte 2. Enter valid values.
DF	80	E1	33	"ID of the measured value for limit monitoring" invalid.	Check Bytes 4 and 5. Enter valid values.
DF	80	E1	34	Parameters for monitoring the limits invalid	Check bits 0...3 in Byte 6. Enter valid values.
DF	80	E1	35	"Number of limit" in 'Monitoring assigned multiple times' parameter	Check bits 0...3 in Byte 6. Do not use limit number several times.
DF	80	E1	36	"Hysteresis for limit monitoring" invalid	Check Byte 7. Enter valid values.
DF	80	E1	37	"Limit" invalid.	Check Byte 8...11. Enter valid values.
DF	80	E1	38	"Delay time for limit monitoring" invalid.	Check Byte 12. Enter valid values.

A.4 Structure of the parameter data records 130/131 for user-data mapping

Structure of data record 130/131

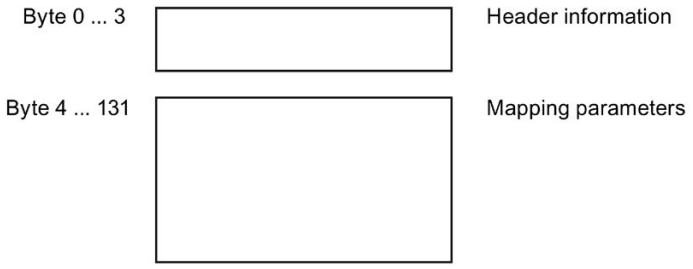

Figure A-12 Structure of data record 130/131

Header information

The figure below shows the structure of the header information.

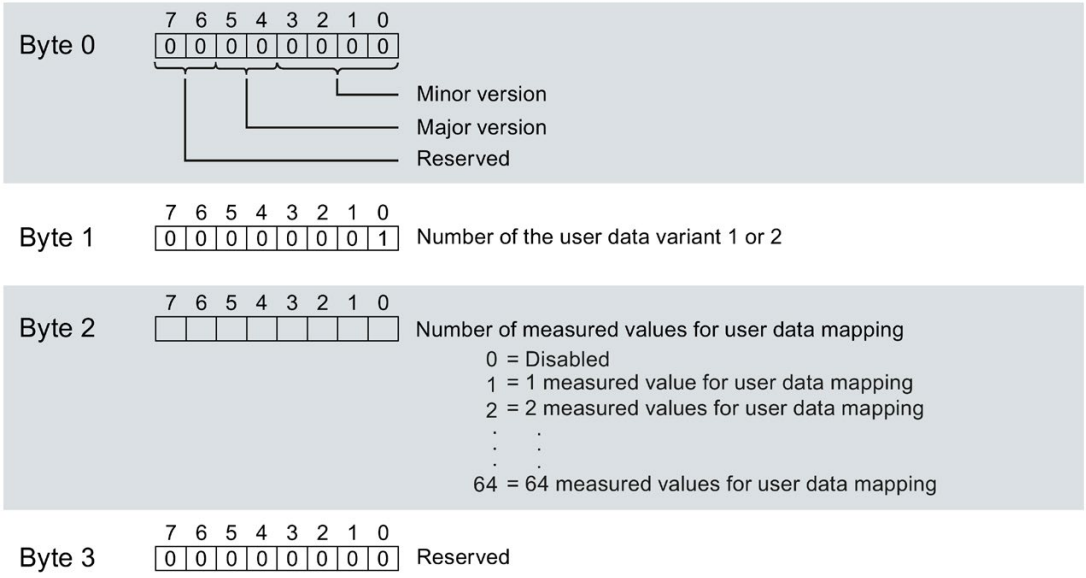

Figure A-13 Header information DS 130/131

Parameter block for user data mapping

The following diagram shows the structure of the parameter blocks for user data mapping.

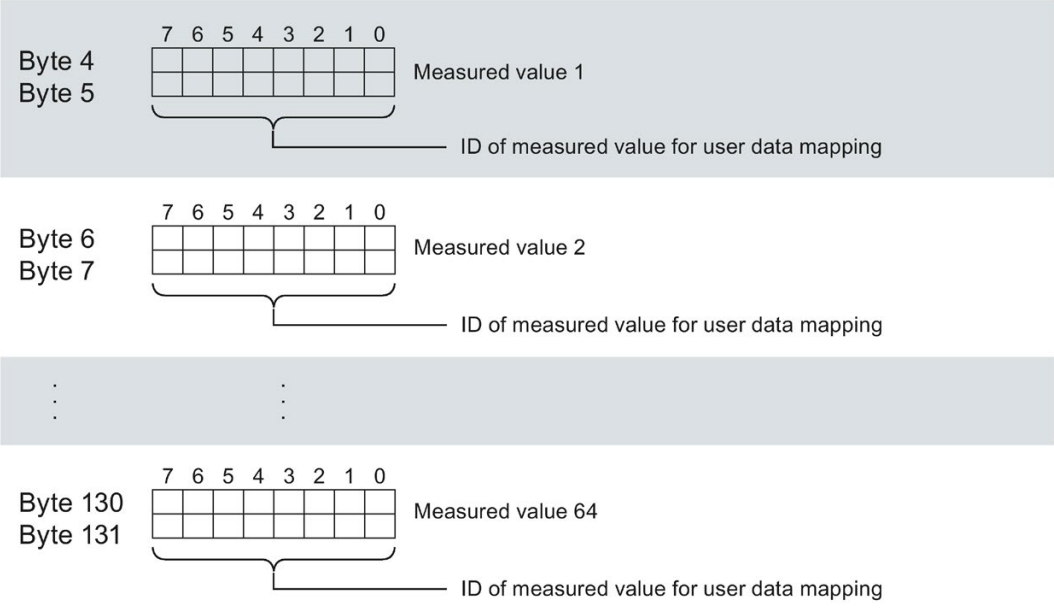

Figure A-14 Parameter block for user data mapping

Error while transferring the data record

The module always checks all the values of the transferred data record. Only if all the values were transferred without errors does the module apply the values from the data record.

The WRREC instruction for writing data records returns corresponding error codes when errors occur in the STATUS parameter.

The following table shows the module-specific error codes and their meaning for the parameter data record 130/131.

Error code in STATUS parameter (hexadecimal)				Meaning	Solution
Byte 0	Byte 1	Byte 2	Byte 3		
DF	80	B0	00	Number of the data record unknown	Enter a valid number for the data record.
DF	80	B1	01	Length of the data record incorrect	Enter a valid value for the data record length.
DF	80	B2	00	Slot invalid or cannot be accessed.	Check the station whether the module is plugged or drawn. Check the assigned values for the parameters of the WRREC instruction
DF	80	E0	01	Incorrect version	Check Byte 0. Enter valid values.
DF	80	E0	02	Error in the header information	Check Bytes 1 and 2. Correct the length and number of the parameter blocks.
DF	80	E1	01	Reserved bits are not 0.	Check Byte 3 and set reserved bits back to 0.
DF	80	E1	21	"User data variant" not possible or input data configuration not large enough	Select a different user data variant or change the configuration.
DF	80	E1	30	Data record number invalid	Check the data record number. Enter a valid data record number.
DF	80	E1	31	"Length of the parameter block" invalid.	Check Byte 1. Length = 10 bytes
DF	80	E1	32	"Number of parameter blocks" invalid.	Check Byte 2. Enter valid values.
DF	80	E1	33	"ID of the measured value for limit monitoring" invalid.	Check Bytes 4 and 5. Enter valid values.
DF	80	E1	3B	"ID of the type of user data mapping" not permitted.	Check Byte 1. Number for user-specific user data variant has to be 01_H or 02_H.

Measured variables for user data mapping

You can find the measured variables under Measured variables (Page 163). The following measured variables are not available to you for user data mapping:

- 220 to 226
- 62110 to 62116
- 62210 to 62216
- 62310 to 62316

A.5 Structure of the parameter data record 135 for data record mapping

Structure of data record 135

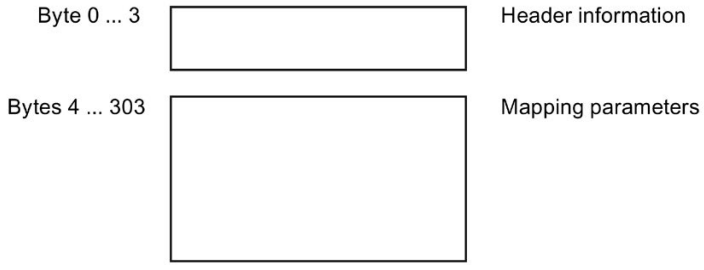

Figure A-15 Structure of data record 135

Header information

The figure below shows the structure of the header information.

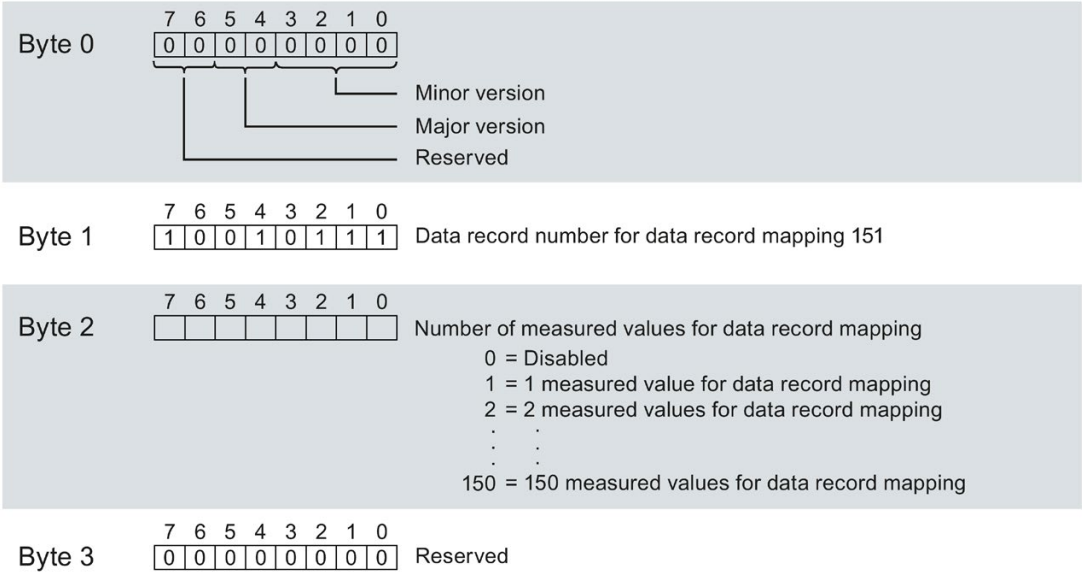

Figure A-16 Header information DS 135

Parameter block for data record mapping

The following diagram shows the structure of the parameter blocks for data record mapping.

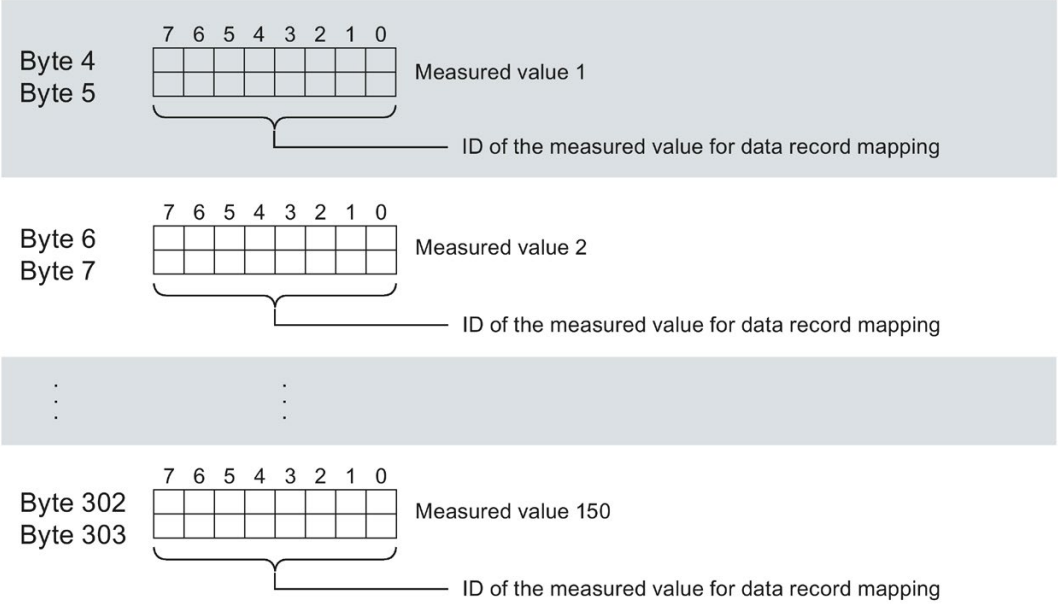

Figure A-17 Parameter block for data record mapping

Data record length DS 135 and DS151

The table below shows the data record lengths of the parameter data record DS 135 and the user-defined data record DS 151 (Page 258).

The length of the data records depends on the number and the format of the measured values.

Number Measured values	Data record length in bytes		
	REAL measured values		LREAL measured values
	DS 135	DS 151	DS 151
29	62	118	234
30	64	122	242 *
40	84	162	322 *
50	104	202	402 *
59	122	238	474 *
100	204	402 *	802 *
118	240	474 *	946 *
150	304*	602 *	1202 *

* not with PROFIBUS DP

Error while transferring the data record

The module always checks all the values of the transferred data record. Only if all the values were transferred without errors does the module apply the values from the data record.

The WRREC instruction for writing data records returns corresponding error codes when errors occur in the STATUS parameter.

The following table shows the module-specific error codes and their meaning for the parameter data record 130/131/135.

Error code in STATUS parameter (hexadecimal)				Meaning	Solution
Byte 0	Byte 1	Byte 2	Byte 3		
DF	80	B0	00	Number of the data record unknown	Enter a valid number for the data record.
DF	80	B1	01	Length of the data record incorrect	Enter a valid value for the data record length.
DF	80	B2	00	Slot invalid or cannot be accessed.	Check the station whether the module is plugged or drawn. Check the assigned values for the parameters of the WRREC instruction
DF	80	E0	01	Incorrect version	Check Byte 0. Enter valid values.
DF	80	E0	02	Error in the header information	Check Bytes 1 and 2. Correct the length and number of the parameter blocks.
DF	80	E1	01	Reserved bits are not 0.	Check Byte 3 and set reserved bits back to 0.
DF	80	E1	21	"User data variant" not possible or input data configuration not large enough	Select a different user data variant or change the configuration.
DF	80	E1	30	Data record number invalid	Check the data record number. Enter a valid data record number.
DF	80	E1	31	"Length of the parameter block" invalid.	Check Byte 1. Length = 10 bytes
DF	80	E1	32	"Number of parameter blocks" invalid.	Check Byte 2. Enter valid values.
DF	80	E1	33	"ID of the measured value for limit monitoring" invalid.	Check Bytes 4 and 5. Enter valid values.

Measured variables for data record mapping

You can find the measured variables under Measured variables (Page 163). The following measured variables are not available to you for data record mapping:

- 220 to 226
- 62110 to 62116
- 62210 to 62216
- 62310 to 62316

Measured variables

B

Measured variables for data records and user data

The following table provides an overview of all measured variables that are used in the data records and user data.

Note that the format and unit differ in the evaluation of records and user data.

On the Internet (https://support.industry.siemens.com/cs/ww/en/view/109755917) you can find an overview of the assignment of the measured values to the user data variants and data records.

Table B- 1 Measured variables for data records and user data

Measured value ID	Measured variables	Data type	Unit	Value range	Connection type							
					1P 2W	2P 3W	3x 1P2W	3P 4W	3P 4W1	3P 3W	3P 3W1	3P 4WI
1	Voltage L1-N [1]	REAL	V	0.0 ... 300.0	✓	✓	✓	✓	✓	✓	✓	
2	Voltage L2-N [1]	REAL	V	0.0 ... 300.0		✓	✓	✓	✓	✓	✓	
3	Voltage L3-N [1]	REAL	V	0.0 ... 300.0			✓	✓	✓	✓	✓	
4	Voltage L1-L2 [2]	REAL	V	0.0 ... 600.0		✓		✓	✓	✓	✓	
5	Voltage L2-L3 [2]	REAL	V	0.0 ... 600.0				✓	✓	✓	✓	
6	Voltage L3-L1 [2]	REAL	V	0.0 ... 600.0				✓	✓	✓	✓	
7	Current L1 [1]	REAL	A	0.0 … 100000.0	✓	✓	✓	✓	✓	✓	✓	✓
8	Current L2 [1]	REAL	A	0.0 … 100000.0		✓	✓	✓	✓	✓	✓	✓
9	Current L3 [1]	REAL	A	0.0 … 100000.0			✓	✓	✓	✓	✓	✓
10	Apparent power L1 [3]	REAL	VA	-3.0e+9 … +3.0e+9	✓	✓	✓	✓	✓	✓	✓	
11	Apparent power L2 [3]	REAL	VA	-3.0e+9 … +3.0e+9		✓	✓	✓	✓	✓	✓	
12	Apparent power L3 [3]	REAL	VA	-3.0e+9 … +3.0e+9			✓	✓	✓	✓	✓	
13	Active power L1 [3]	REAL	W	-3.0e+9 … +3.0e+9	✓	✓	✓	✓	✓	✓	✓	
14	Active power L2 [3]	REAL	W	-3.0e+9 … +3.0e+9		✓	✓	✓	✓	✓	✓	
15	Active power L3 [3]	REAL	W	-3.0e+9 … +3.0e+9			✓	✓	✓	✓	✓	
16	Reactive power Qn L1[3]	REAL	var	-3.0e+9 … +3.0e+9	✓	✓	✓	✓	✓	✓	✓	
17	Reactive power Qn L2[3]	REAL	var	-3.0e+9 … +3.0e+9		✓	✓	✓	✓	✓	✓	
18	Reactive power Qn L3[3]	REAL	var	-3.0e+9 … +3.0e+9			✓	✓	✓	✓	✓	
19	Power factor λ L1 [3]	REAL	-	0.0 ... 1.0	✓	✓	✓	✓	✓	✓	✓	
20	Power factor λ L2 [3]	REAL	-	0.0 ... 1.0		✓	✓	✓	✓	✓	✓	
21	Power factor λ L3 [3]	REAL	-	0.0 ... 1.0			✓	✓	✓	✓	✓	
22	Reactive power Qtot L1 [3]	REAL	var	-3.0e+9 … +3.0e+9	✓	✓	✓	✓	✓	✓	✓	

Meas-ured value ID	Measured variables	Data type	Unit	Value range	Connection type							
					1P 2W	2P 3W	3x 1P2W	3P 4W	3P 4W1	3P 3W	3P 3W1	3P 4WI
23	Reactive power Qtot L2 [3]	REAL	var	-3.0e+9 … +3.0e+9		✓	✓	✓	✓	✓	✓	
24	Reactive power Qtot L3 [3]	REAL	var	-3.0e+9 … +3.0e+9			✓	✓	✓	✓	✓	
30	Frequency [4]	REAL	Hz	45.0 ... 65.0	✓	✓	✓	✓	✓	✓	✓	✓
31	Average voltage L-N (U_{sum}) [12]	REAL	V	0.0 ... 300.0	✓	✓	✓	✓	✓	✓	✓	
32	Average voltage L-L [12]	REAL	V	0.0 ... 600.0				✓	✓	✓	✓	
33	Average current L1L2L3 (I_{sum}) [12]	REAL	A	0.0 ... 100000.0	✓	✓	✓	✓	✓	✓	✓	✓
34	Total active power L1L2L3 [5]	REAL	W	-3.0e+9 … +3.0e+9	✓	✓	✓	✓	✓	✓	✓	
35	Total reactive power L1L2L3 [5]	REAL	var	-3.0e+9 … +3.0e+9	✓	✓	✓	✓	✓	✓	✓	
36	Total apparent power L1L2L3 [5]	REAL	VA	-3.0e+9 … +3.0e+9	✓	✓	✓	✓	✓	✓	✓	
37	Total power factor L1L2L3 [6]	REAL	-	0.0 ... 1.0	✓	✓	✓	✓	✓	✓	✓	
38	Reactive power Qtot L1L2L3[3] [5]	REAL	var	-3.0e+9 … +3.0e+9	✓	✓	✓	✓	✓	✓	✓	
40	Max. voltage UL1-N [14]	REAL	V	0.0 ... 300.0	✓	✓	✓	✓	✓	✓	✓	
41	Max. voltage UL2-N [14]	REAL	V	0.0 ... 300.0		✓	✓	✓	✓	✓	✓	
42	Max. voltage UL3-N [14]	REAL	V	0.0 ... 300.0			✓	✓	✓	✓	✓	
43	Max. voltage UL1-UL2 [14]	REAL	V	0.0 ... 600.0		✓		✓	✓	✓	✓	
44	Max. voltage UL2-UL3 [14]	REAL	V	0.0 ... 600.0				✓	✓	✓	✓	
45	Max. voltage UL3-UL1 [14]	REAL	V	0.0 ... 600.0				✓	✓	✓	✓	
46	Max. current L1 [14]	REAL	A	0.0 ... 100000.0	✓	✓	✓	✓	✓	✓	✓	✓
47	Max. current L2 [14]	REAL	A	0.0 ... 100000.0		✓	✓	✓	✓	✓	✓	✓
48	Max. current L3 [14]	REAL	A	0.0 ... 100000.0			✓	✓	✓	✓	✓	✓
49	Max. apparent power L1 [14]	REAL	VA	-3.0e+9 … +3.0e+9	✓	✓	✓	✓	✓	✓	✓	
50	Max. apparent power L2 [14]	REAL	VA	-3.0e+9 … +3.0e+9		✓	✓	✓	✓	✓	✓	
51	Max. apparent power L3 [14]	REAL	VA	-3.0e+9 … +3.0e+9			✓	✓	✓	✓	✓	
52	Max. active power L1 [14]	REAL	W	-3.0e+9 … +3.0e+9	✓	✓	✓	✓	✓	✓	✓	
53	Max. active power L2 [14]	REAL	W	-3.0e+9 … +3.0e+9		✓	✓	✓	✓	✓	✓	
54	Max. active power L3 [14]	REAL	W	-3.0e+9 … +3.0e+9			✓	✓	✓	✓	✓	

Measured value ID	Measured variables	Data type	Unit	Value range	Connection type							
					1P 2W	2P 3W	3x 1P2W	3P 4W	3P 4W1	3P 3W	3P 3W1	3P 4WI
55	Max. reactive power L1 [14]	REAL	var	-3.0e+9 … +3.0e+9	✓	✓	✓	✓	✓	✓	✓	
56	Max. reactive power L2 [14]	REAL	var	-3.0e+9 … +3.0e+9		✓	✓	✓	✓	✓	✓	
57	Max. reactive power L3 [14]	REAL	var	-3.0e+9 … +3.0e+9			✓	✓	✓	✓	✓	
58	Max. power factor L1 [14]	REAL	-	0.0 ... 1.0	✓	✓	✓	✓	✓	✓	✓	
59	Max. power factor L2 [14]	REAL	-	0.0 ... 1.0		✓	✓	✓	✓	✓	✓	
60	Max. power factor L3 [14]	REAL	-	0.0 ... 1.0			✓	✓	✓	✓	✓	
61	Max. frequency [14]	REAL	Hz	45.0 ... 65.0	✓	✓	✓	✓	✓	✓	✓	✓
62	Max. mean voltage L-N [14]	REAL	V	0.0 ... 300.0	✓	✓	✓	✓	✓			
63	Max. mean voltage L-L [14]	REAL	V	0.0 ... 600.0				✓	✓	✓	✓	
64	Max. mean current L1L2L3 [14]	REAL	A	0.0 … 100000.0	✓	✓	✓	✓	✓	✓	✓	✓
65	Max. active power L1L2L3 [14]	REAL	W	-3.0e+9 … +3.0e+9	✓	✓	✓	✓	✓	✓	✓	
66	Max. reactive power Qn L1L2L3[14]	REAL	var	-3.0e+9 … +3.0e+9	✓	✓	✓	✓	✓	✓	✓	
67	Max. apparent power L1L2L3 [14]	REAL	VA	-3.0e+9 … +3.0e+9	✓	✓	✓	✓	✓	✓	✓	
68	Max. total power factor [14]	REAL	-	0.0 ... 1.0	✓	✓	✓	✓	✓	✓	✓	
70	Min. voltage UL1-N [14]	REAL	V	0.0 ... 300.0	✓	✓	✓	✓	✓	✓	✓	
71	Min. voltage UL2-N [14]	REAL	V	0.0 ... 300.0		✓	✓	✓	✓	✓	✓	
72	Min. voltage UL3-N [14]	REAL	V	0.0 ... 300.0			✓	✓	✓	✓	✓	
73	Min. voltage UL1-UL2 [14]	REAL	V	0.0 ... 600.0		✓		✓	✓	✓	✓	
74	Min. voltage UL2-UL3 [14]	REAL	V	0.0 ... 600.0				✓	✓	✓	✓	
75	Min. voltage UL3-UL1 [14]	REAL	V	0.0 ... 600.0				✓	✓	✓	✓	
76	Min. current L1 [14]	REAL	A	0.0 ... 100000.0	✓	✓	✓	✓	✓	✓	✓	✓
77	Min. current L2 [14]	REAL	A	0.0 ... 100000.0		✓	✓	✓	✓	✓	✓	✓
78	Min. current L3 [14]	REAL	A	0.0 ... 100000.0			✓	✓	✓	✓	✓	✓
79	Min. apparent power L1 [14]	REAL	VA	-3.0e+9 … +3.0e+9	✓	✓	✓	✓	✓	✓	✓	
80	Min. apparent power L2 [14]	REAL	VA	-3.0e+9 … +3.0e+9		✓	✓	✓	✓	✓	✓	

Meas-ured value ID	Measured variables	Data type	Unit	Value range	Connection type							
					1P 2W	2P 3W	3x 1P2W	3P 4W	3P 4W1	3P 3W	3P 3W1	3P 4WI
81	Min. apparent power L3 [14]	REAL	VA	-3.0e+9 … +3.0e+9			✓	✓	✓	✓	✓	
82	Min. active power L1 [14]	REAL	W	-3.0e+9 … +3.0e+9	✓	✓	✓	✓	✓	✓	✓	
83	Min. active power L2 [14]	REAL	W	-3.0e+9 … +3.0e+9		✓	✓	✓	✓	✓	✓	
84	Min. active power L3 [14]	REAL	W	-3.0e+9 … +3.0e+9			✓	✓	✓	✓	✓	
85	Min. reactive power L1 [14]	REAL	var	-3.0e+9 … +3.0e+9	✓	✓	✓	✓	✓	✓	✓	
86	Min. reactive power L2 [14]	REAL	var	-3.0e+9 … +3.0e+9		✓	✓	✓	✓	✓	✓	
87	Min. reactive power L3 [14]	REAL	var	-3.0e+9 … +3.0e+9			✓	✓	✓	✓	✓	
88	Min. power factor L1 [14]	REAL	-	0.0 ... 1.0	✓	✓	✓	✓	✓	✓	✓	
89	Min. power factor L2 [14]	REAL	-	0.0 ... 1.0		✓	✓	✓	✓	✓	✓	
90	Min. power factor L3 [14]	REAL	-	0.0 ... 1.0			✓	✓	✓	✓	✓	
91	Min. frequency [14]	REAL	Hz	45.0 ... 65.0	✓	✓	✓	✓	✓	✓	✓	✓
92	Min. mean voltage L-N [14]	REAL	V	0.0 ... 300.0	✓	✓	✓	✓	✓			
93	Min. mean voltage L-L [14]	REAL	V	0.0 ... 600.0				✓	✓	✓	✓	
94	Min. mean current L1L2L3[14]	REAL	A	0.0 … 100000.0	✓	✓	✓	✓	✓	✓	✓	✓
95	Min. sum of active power [14]	REAL	W	-3.0e+9 … +3.0e+9	✓	✓	✓	✓	✓	✓	✓	
96	Min. sum of reactive power [14]	REAL	var	-3.0e+9 … +3.0e+9	✓	✓	✓	✓	✓	✓	✓	
97	Min. sum of apparent power [14]	REAL	VA	-3.0e+9 … +3.0e+9	✓	✓	✓	✓	✓	✓	✓	
98	Min. total power factor [14]	REAL	-	0.0 ... 1.0	✓	✓	✓	✓	✓	✓	✓	
166	Mean power factor λ L1L2L3[12]	REAL	-	0.0 ... 1.0	✓	✓	✓	✓	✓	✓	✓	
200	Total active energy inflow L1L2L3 [6]	REAL	Wh	0.0 ... 3.4028e+38	✓	✓	✓	✓	✓	✓	✓	
201	Total active energy outflow L1L2L3 [6]	REAL	Wh	0.0 ... 3.4028e+38	✓	✓	✓	✓	✓	✓	✓	
202	Total reactive energy inflow L1L2L3 [6]	REAL	varh	0.0 ... 3.4028e+38	✓	✓	✓	✓	✓	✓	✓	
203	Total reactive energy outflow L1L2L3 [6]	REAL	varh	0.0 ... 3.4028e+38	✓	✓	✓	✓	✓	✓	✓	
204	Total apparent energy L1L2L3 [6]	REAL	VAh	0.0 ... 3.4028e+38	✓	✓	✓	✓	✓	✓	✓	
205	Total active energy L1L2L3 [6]	REAL	Wh	-3.4028e+38 ... +3.4028e+38	✓	✓	✓	✓	✓	✓	✓	

Measured value ID	Measured variables	Data type	Unit	Value range	Connection type							
					1P 2W	2P 3W	3x 1P2W	3P 4W	3P 4W1	3P 3W	3P 3W1	3P 4WI
206	Total reactive energy L1L2L3 [6]	REAL	varh	-3.4028e+38 ... +3.4028e+38	✓	✓	✓	✓	✓	✓	✓	
210	Total active energy inflow L1L2L3 [6]	LREAL	Wh	0.0 ... 1.7976e+308	✓	✓	✓	✓	✓	✓	✓	
211	Total active energy outflow L1L2L3 [6]	LREAL	Wh	0.0 ... 1.7976e+308	✓	✓	✓	✓	✓	✓	✓	
212	Total reactive energy inflow L1L2L3 [6]	LREAL	varh	0.0 ... 1.7976e+308	✓	✓	✓	✓	✓	✓	✓	
213	Total reactive energy outflow L1L2L3 [6]	LREAL	varh	0.0 ... 1.7976e+308	✓	✓	✓	✓	✓	✓	✓	
214	Total apparent energy L1L2L3 [6]	LREAL	VAh	0.0 ... 1.7976e+308	✓	✓	✓	✓	✓	✓	✓	
215	Total active energy L1L2L3 [6]	LREAL	Wh	-1.7976e+308 ... +1.7976e+308	✓	✓	✓	✓	✓	✓	✓	
216	Total reactive energy L1L2L3 [6]	LREAL	varh	-1.7976e+308 ... +1.7976e+308	✓	✓	✓	✓	✓	✓	✓	
220	Total active energy inflow L1L2L3 [6]	UDINT	Wh	0 ... 2147483647	✓	✓	✓	✓	✓	✓	✓	
221	Total active energy outflow L1L2L3 [6]	UDINT	varh	0 ... 2147483647	✓	✓	✓	✓	✓	✓	✓	
222	Total reactive energy inflow L1L2L3 [6]	UDINT	varh	0 ... 2147483647	✓	✓	✓	✓	✓	✓	✓	
223	Total reactive energy outflow L1L2L3 [6]	UDINT	VAh	0 ... 2147483647	✓	✓	✓	✓	✓	✓	✓	
224	Total apparent energy L1L2L3 [6]	UDINT	Wh	0 ... 2147483647	✓	✓	✓	✓	✓	✓	✓	
225	Total active energy L1L2L3 [6]	DINT	Wh	-2147483647 ... +2147483647	✓	✓	✓	✓	✓	✓	✓	
226	Total reactive energy L1L2L3 [6]	DINT	varh	-2147483647 ... +2147483647	✓	✓	✓	✓	✓	✓	✓	
61138	Max. reactive power Qtot L1L2L3[3]	REAL	var	-3.0e+9 … +3.0e+9	✓	✓	✓	✓	✓	✓	✓	
61139	Min. reactive power Qtot L1L2L3[3]	REAL	var	-3.0e+9 … +3.0e+9	✓	✓	✓	✓	✓	✓	✓	
61140	Overflow counter active energy inflow L1L2L3 [6]	UINT	-	0 ... 65535	✓	✓	✓	✓	✓	✓	✓	
61141	Overflow counter active energy outflow L1L2L3 [6]	UINT	-	0 ... 65535	✓	✓	✓	✓	✓	✓	✓	
61142	Overflow counter reactive energy inflow L1L2L3 [6]	UINT	-	0 ... 65535	✓	✓	✓	✓	✓	✓	✓	
61143	Overflow counter reactive energy outflow L1L2L3 [6]	UINT	-	0 ... 65535	✓	✓	✓	✓	✓	✓	✓	

Measured value ID	Measured variables	Data type	Unit	Value range	Connection type							
					1P 2W	2P 3W	3x 1P2W	3P 4W	3P 4W1	3P 3W	3P 3W1	3P 4WI
61144	Overflow counter apparent energy L1L2L3 [6]	UINT	-	0 ... 65535	✓	✓	✓	✓	✓	✓	✓	
61146	Fundamental cos φ active factor L1L2L3[17]	REAL	-	-1.0 ... 1.0	✓	✓	✓	✓	✓	✓	✓	
61147	Max. fundamental cos φ active factor L1L2L3[17]	REAL	-	-1.0 ... 1.0	✓	✓	✓	✓	✓	✓	✓	
61148	Min. fundamental cos φ active factor L1L2L3[17]	REAL	-	-1.0 ... 1.0	✓	✓	✓	✓	✓	✓	✓	
61149	Neutral current [1]	REAL	A	0.0 ... 100000.0	Z	Z	Z	✓	✓	Z	Z	✓
61150	Neutral current 10/12 cycle [1, 19]	REAL	A	0.0 … 100000.0	Z	Z	Z	✓	✓	Z	Z	✓
61151	Neutral current half cycle [1, 16, 19]	REAL	A	0.0 … 100000.0	Z	Z	Z	✓	✓	Z	Z	✓
61153	Total current IL1+IL2+IL3-IN [1]	REAL	A	-100000.0 … 100000.0				✓				✓
61154	Reactive power (fundamental) L1L2L3[5]	REAL	var	-3.0e+9 … +3.0e+9	✓	✓	✓	✓	✓	✓	✓	
61155	Max. reactive power (fundamental) L1L2L3[14]	REAL	var	-3.0e+9 … +3.0e+9	✓	✓	✓	✓	✓	✓	✓	
61156	Min. reactive power (fundamental) L1L2L3[14]	REAL	var	-3.0e+9 … +3.0e+9	✓	✓	✓	✓	✓	✓	✓	
61157	Amplitude unbalance voltage U2 [2]	REAL	%	0 … 100				✓	✓	✓	✓	
61158	Amplitude unbalance current Iunsym [2]	REAL	%	0 … 100				✓	✓	✓	✓	✓
61178	Phase angle L1 [3]	REAL	°	0.0 ... 360.0	✓	✓	✓	✓	✓	✓	✓	
61180	Active energy inflow L1 [6]	LREAL	Wh	0.0 ... 1.7976e+308	✓	✓	✓	✓	✓	✓	✓	
61181	Active energy outflow L1 [6]	LREAL	Wh	0.0 ... 1.7976e+308	✓	✓	✓	✓	✓	✓	✓	
61182	Reactive energy inflow L1 [6]	LREAL	varh	0.0 ... 1.7976e+308	✓	✓	✓	✓	✓	✓	✓	
61183	Reactive energy outflow L1 [6]	LREAL	varh	0.0 ... 1.7976e+308	✓	✓	✓	✓	✓	✓	✓	
61184	Apparent energy L1 [6]	LREAL	VAh	0.0 ... 1.7976e+308	✓	✓	✓	✓	✓	✓	✓	
61185	Total active energy L1 [6]	LREAL	Wh	-1.7976e+308 ... +1.7976e+308	✓	✓	✓	✓	✓	✓	✓	
61186	Total reactive energy L1 [6]	LREAL	varh	-1.7976e+308 ... +1.7976e+308	✓	✓	✓	✓	✓	✓	✓	

Measured value ID	Measured variables	Data type	Unit	Value range	Connection type							
					1P 2W	2P 3W	3x 1P2W	3P 4W	3P 4W1	3P 3W	3P 3W1	3P 4WI
61190	Overflow counter active energy inflow L1 [6]	UINT	-	0 ... 65535	✓	✓	✓	✓	✓	✓	✓	
61191	Overflow counter active energy outflow L1 [6]	UINT	-	0 ... 65535	✓	✓	✓	✓	✓	✓	✓	
61192	Overflow counter reactive energy inflow L1 [6]	UINT	-	0 ... 65535	✓	✓	✓	✓	✓	✓	✓	
61193	Overflow counter reactive energy outflow L1 [6]	UINT	-	0 ... 65535	✓	✓	✓	✓	✓	✓	✓	
61194	Overflow counter apparent energy L1 [6]	UINT	-	0 ... 65535	✓	✓	✓	✓	✓	✓	✓	
61195	Overflow counter total active energy L1 [6]	UINT	-	0 … 65535	✓	✓	✓	✓	✓	✓	✓	
61196	Overflow counter total reactive energy L1 [6]	UINT	-	0 … 65535	✓	✓	✓	✓	✓	✓	✓	
61198	Phase angle L2 [3]	REAL	°	0.0 ... 360.0		✓	✓	✓	✓	✓	✓	
61200	Active energy inflow L2 [6]	LREAL	Wh	0.0 ... 1.7976e+308		✓	✓	✓	✓	✓	✓	
61201	Active energy outflow L2 [6]	LREAL	Wh	0.0 ... 1.7976e+308		✓	✓	✓	✓	✓	✓	
61202	Reactive energy inflow L2 [6]	LREAL	varh	0.0 ... 1.7976e+308		✓	✓	✓	✓	✓	✓	
61203	Reactive energy outflow L2 [6]	LREAL	varh	0.0 ... 1.7976e+308		✓	✓	✓	✓	✓	✓	
61204	Apparent energy L2 [6]	LREAL	VAh	0.0 ... 1.7976e+308		✓	✓	✓	✓	✓	✓	
61205	Total active energy L2 [6]	LREAL	Wh	-1.7976e+308 ... +1.7976e+308		✓	✓	✓	✓	✓	✓	
61206	Total reactive energy L2 [6]	LREAL	varh	-1.7976e+308 ... +1.7976e+308		✓	✓	✓	✓	✓	✓	
61210	Overflow counter active energy inflow L2 [6]	UINT	-	0 ... 65535		✓	✓	✓	✓	✓	✓	
61211	Overflow counter active energy outflow L2 [6]	UINT	-	0 ... 65535		✓	✓	✓	✓	✓	✓	
61212	Overflow counter reactive energy inflow L2 [6]	UINT	-	0 ... 65535		✓	✓	✓	✓	✓	✓	
61213	Overflow counter reactive energy outflow L2 [6]	UINT	-	0 ... 65535		✓	✓	✓	✓	✓	✓	
61214	Overflow counter apparent energy L2 [6]	UINT	-	0 ... 65535		✓	✓	✓	✓	✓	✓	
61215	Overflow counter total active energy L2 [6]	UINT	-	0 …65535		✓	✓	✓	✓	✓	✓	

Measured value ID	Measured variables	Data type	Unit	Value range	Connection type							
					1P 2W	2P 3W	3x 1P2W	3P 4W	3P 4W1	3P 3W	3P 3W1	3P 4WI
61216	Overflow counter total reactive energy L2 [6]	UINT	-	0 …65535		✓	✓	✓	✓	✓	✓	
61218	Phase angle L3 [3]	REAL		0.0 ... 360.0			✓	✓	✓	✓	✓	
61220	Active energy inflow L3 [6]	LREAL	Wh	0.0 ... 1.7976e+308			✓	✓	✓	✓	✓	
61221	Active energy outflow L3 [6]	LREAL	Wh	0.0 ... 1.7976e+308			✓	✓	✓	✓	✓	
61222	Reactive energy inflow L3 [6]	LREAL	varh	0.0 ... 1.7976e+308			✓	✓	✓	✓	✓	
61223	Reactive energy outflow L3 [6]	LREAL	varh	0.0 ... 1.7976e+308			✓	✓	✓	✓	✓	
61224	Apparent energy L3 [6]	LREAL	VAh	0.0 ... 1.7976e+308			✓	✓	✓	✓	✓	
61225	Total active energy L3 [6]	LREAL	Wh	-1.7976e+308 ... +1.7976e+308			✓	✓	✓	✓	✓	
61226	Total reactive energy L3 [6]	LREAL	varh	-1.7976e+308 ... +1.7976e+308			✓	✓	✓	✓	✓	
61230	Overflow counter active energy inflow L3 [6]	UINT	-	0 ... 65535			✓	✓	✓	✓	✓	
61231	Overflow counter active energy outflow L3 [6]	UINT	-	0 ... 65535			✓	✓	✓	✓	✓	
61232	Overflow counter reactive energy inflow L3 [6]	UINT	-	0 ... 65535			✓	✓	✓	✓	✓	
61233	Overflow counter reactive energy outflow L3 [6]	UINT	-	0 ... 65535			✓	✓	✓	✓	✓	
61234	Overflow counter apparent energy L3 [6]	UINT	-	0 ... 65535			✓	✓	✓	✓	✓	
61235	Overflow counter total active energy L3 [6]	UINT	-	0 …65535			✓	✓	✓	✓	✓	
61236	Overflow counter total reactive energy L3 [6]	UINT	-	0 …65535			✓	✓	✓	✓	✓	
62110	Active energy inflow L1 [6]	DINT	Wh	0 ... 2147483647	✓	✓	✓	✓	✓	✓	✓	
62111	Active energy outflow L1 [6]	UDINT	Wh	0 ... 2147483647	✓	✓	✓	✓	✓	✓	✓	
62112	Reactive energy inflow L1 [6]	UDINT	varh	0 ... 2147483647	✓	✓	✓	✓	✓	✓	✓	
62113	Reactive energy outflow L1 [6]	UDINT	varh	0 ... 2147483647	✓	✓	✓	✓	✓	✓	✓	
62114	Apparent energy L1 [6]	UDINT	Wh	0 ... 2147483647	✓	✓	✓	✓	✓	✓	✓	
62115	Total active energy L1 [6]	DINT	Wh	-2147483647 ... + 2147483647	✓	✓	✓	✓	✓	✓	✓	
62116	Total reactive energy L1 [6]	DINT	varh	-2147483647 ... + 2147483647	✓	✓	✓	✓	✓	✓	✓	

Measured value ID	Measured variables	Data type	Unit	Value range	Connection type							
					1P 2W	2P 3W	3x 1P2W	3P 4W	3P 4W1	3P 3W	3P 3W1	3P 4WI
62120	THD+N voltage L1 [13]	REAL	1%	0 % bis 100 %	✓	✓	✓	✓	✓	✓	✓	
62121	THD+N current L1 [13]	REAL	1%	0 % bis 100 %	✓	✓	✓	✓	✓	✓	✓	✓
62122	Fundamental voltage L1 [1]	REAL	V	0.0 ... 440.0	✓	✓	✓	✓	✓	✓	✓	
62123	Fundamental current L1 [1]	REAL	A	0.0 … 100000.0	✓	✓	✓	✓	✓	✓	✓	✓
62124	Fundamental reactive power L1 [3]	REAL	var	-3.0e+9 … +3.0e+9	✓	✓	✓	✓	✓	✓	✓	
62125	Fundamental apparent power L1 [3]	REAL	VA	-3.0e+9 … +3.0e+9	✓	✓	✓	✓	✓	✓	✓	
62126	Fundamental active power L1 [3]	REAL	W	-3.0e+9 … +3.0e+9	✓	✓	✓	✓	✓	✓	✓	
62127	Fundamental cos φ active factor L1 [17]	REAL	-	-1.0 ... 1.0	✓	✓	✓	✓	✓	✓	✓	
62130	Voltage L1 10-12 cycles [1, 19]	REAL	V	0.0 ... 760.0	✓	✓	✓	✓	✓	✓	✓	
62131	Voltage L1 half cycle [1, 16, 19]	REAL	V	0.0 ... 760.0	✓	✓	✓	✓	✓	✓	✓	
62133	Current L1 10-12 cycles [1, 19]	REAL	A	0.0 … 100000.0	✓	✓	✓	✓	✓	✓	✓	✓
62134	Current L1 half cycle [1, 16, 19]	REAL	A	0.0 … 100000.0	✓	✓	✓	✓	✓	✓	✓	✓
62136	Fundamental cos φ active factor L1 [17]	SINT	0.01	-100…100	✓	✓	✓	✓	✓	✓	✓	
62150	Max. THD+N voltage L1 [14]	REAL	1%	0 % bis 100 %	✓	✓	✓	✓	✓	✓	✓	
62151	Max. THD+N current L1 [14]	REAL	1%	0 % bis 100 %	✓	✓	✓	✓	✓	✓	✓	✓
62152	Max. fundamental voltage L1 [14]	REAL	V	0.0 ... 440.0	✓	✓	✓	✓	✓	✓	✓	
62153	Max. fundamental current L1 [14]	REAL	A	0.0 … 100000.0	✓	✓	✓	✓	✓	✓	✓	✓
62154	Max. fundamental reactive power L1 [14]	REAL	var	-3.0e+9 … +3.0e+9	✓	✓	✓	✓	✓	✓	✓	
62155	Max. fundamental apparent power L1 [14]	REAL	VA	-3.0e+9 … +3.0e+9	✓	✓	✓	✓	✓	✓	✓	
62156	Max. fundamental active power L1 [14]	REAL	W	-3.0e+9 … +3.0e+9	✓	✓	✓	✓	✓	✓	✓	
62157	Max. fundamental cos φ active factor L1 [14]	REAL	-	-1.0 ... 1.0	✓	✓	✓	✓	✓	✓	✓	
62160	Max. reactive power Qtot L1 [3]	REAL	var	-3.0e+9 … +3.0e+9	✓	✓	✓	✓	✓	✓	✓	
62170	Min. THD+N voltage L1 [14]	REAL	1%	0 % bis 100 %	✓	✓	✓	✓	✓	✓	✓	

Measured value ID	Measured variables	Data type	Unit	Value range	Connection type							
					1P 2W	2P 3W	3x 1P2W	3P 4W	3P 4W1	3P 3W	3P 3W1	3P 4WI
62171	Min. THD+N current L1 [14]	REAL	1%	0 % bis 100 %	✓	✓	✓	✓	✓	✓	✓	✓
62172	Min. fundamental voltage L1 [14]	REAL	V	0.0 ... 440.0	✓	✓	✓	✓	✓	✓	✓	
62173	Min. fundamental current L1 [14]	REAL	A	0.0 … 100000.0	✓	✓	✓	✓	✓	✓	✓	✓
62174	Min. fundamental reactive power L1 [14]	REAL	var	-3.0e+9 … +3.0e+9	✓	✓	✓	✓	✓	✓	✓	
62175	Min. fundamental apparent power L1[14]	REAL	VA	-3.0e+9 … +3.0e+9	✓	✓	✓	✓	✓	✓	✓	
62176	Min. fundamental active power L1 [14]	REAL	W	-3.0e+9 … +3.0e+9	✓	✓	✓	✓	✓	✓	✓	
62177	Min. fundamental cos φ active factor L1[14]	REAL	-	-1.0 ... 1.0	✓	✓	✓	✓	✓	✓	✓	
62180	Min. reactive power Qtot L1 [3]	REAL	var	-3.0e+9 … +3.0e+9	✓	✓	✓	✓	✓	✓	✓	
62194	Voltage dip - value L1 [16]	REAL	V	0.0 ... 440.0	✓	✓	✓	✓	✓	✓	✓	
62195	Voltage swell - value L1 [16]	REAL	V	0.0 ... 440.0	✓	✓	✓	✓	✓	✓	✓	
62196	Voltage peak value L1 [17]	REAL	V	0.0 ... 440.0	✓	✓	✓	✓	✓	✓	✓	
62197	Current peak value L1 [17]	REAL	A	0.0 … 100000.0	✓	✓	✓	✓	✓	✓	✓	✓
62198	Overcurrent - value L1 [16]	REAL	A	0.0 … 100000.0	✓	✓	✓	✓	✓	✓	✓	✓
62199	Voltage dip - duration L1 [16]	REAL	ms	0.0 ... 100000.0	✓	✓	✓	✓	✓	✓	✓	
62200	Voltage swell - duration L1 [16]	REAL	ms	0.0 ... 100000.0	✓	✓	✓	✓	✓	✓	✓	
62210	Active energy inflow L2 [6]	DINT	Wh	0... 2147483647		✓	✓	✓	✓	✓	✓	
62211	Active energy outflow L2 [6]	DINT	Wh	0... 2147483647		✓	✓	✓	✓	✓	✓	
62212	Reactive energy inflow L2 [6]	DINT	varh	0... 2147483647		✓	✓	✓	✓	✓	✓	
62213	Reactive energy outflow L2 [6]	DINT	varh	0... 2147483647		✓	✓	✓	✓	✓	✓	
62214	Apparent energy L2 [6]	DINT	VAh	0... 2147483647		✓	✓	✓	✓	✓	✓	
62215	Total active energy L2 [6]	DINT	Wh	-2147483647...+2147483647		✓	✓	✓	✓	✓	✓	
62216	Total reactive energy L2 [6]	DINT	varh	-2147483647...+2147483647		✓	✓	✓	✓	✓	✓	

Measured value ID	Measured variables	Data type	Unit	Value range	Connection type							
					1P 2W	2P 3W	3x 1P2W	3P 4W	3P 4W1	3P 3W	3P 3W1	3P 4WI
62220	THD+N voltage L2 [13]	REAL	1%	0 % bis 100 %		✓	✓	✓	✓	✓	✓	
62221	THD+N current L2 [13]	REAL	1%	0 % bis 100 %		✓	✓	✓	✓	✓	✓	✓
62222	Fundamental voltage L2[2]	REAL	V	0.0 ... 440.0		✓	✓	✓	✓	✓	✓	
62223	Fundamental current L2 [1]	REAL	A	0.0 … 100000.0		✓	✓	✓	✓	✓	✓	✓
62224	Fundamental reactive power L2 [3]	REAL	var	-3.0e+9 … +3.0e+9		✓	✓	✓	✓	✓	✓	
62225	Fundamental apparent power L2 [3]	REAL	VA	-3.0e+9 … +3.0e+9		✓	✓	✓	✓	✓	✓	
62226	Fundamental active power L2 [3]	REAL	W	-3.0e+9 … +3.0e+9		✓	✓	✓	✓	✓	✓	
62227	Fundamental cos φ active factor L2 [17]	REAL	-	-1.0 ... 1.0		✓	✓	✓	✓	✓	✓	
62230	Voltage L2 10-12 cycles [1, 19]	REAL	V	0.0 ... 760.0		✓	✓	✓	✓	✓	✓	
62231	Voltage L2 half cycle [1, 16, 19]	REAL	V	0.0 ... 760.0		✓	✓	✓	✓	✓	✓	
62233	Current L2 10-12 cycles [1, 19]	REAL	A	0.0 … 100000.0		✓	✓	✓	✓	✓	✓	✓
62234	Current L2 half cycle [1, 16, 19]	REAL	A	0.0 … 100000.0		✓	✓	✓	✓	✓	✓	✓
62236	Fundamental cos φ active factor L2 [17]	SINT	0.01	-100…100		✓	✓	✓	✓	✓	✓	
62250	Max. THD+N voltage L2 [14]	REAL	1%	0 % bis 100 %		✓	✓	✓	✓	✓	✓	
62251	Max. THD+N current L2 [14]	REAL	1%	0 % bis 100 %		✓	✓	✓	✓	✓	✓	✓
62252	Max. fundamental voltage L2 [14]	REAL	V	0.0 ... 440.0		✓	✓	✓	✓	✓	✓	
62253	Max. fundamental current L2 [14]	REAL	A	0.0 … 100000.0		✓	✓	✓	✓	✓	✓	✓
62254	Max. fundamental reactive power L2 [14]	REAL	var	-3.0e+9 … +3.0e+9		✓	✓	✓	✓	✓	✓	
62255	Max. fundamental apparent power L2 [14]	REAL	VA	-3.0e+9 … +3.0e+9		✓	✓	✓	✓	✓	✓	
62256	Max. fundamental active power L2 [14]	REAL	W	-3.0e+9 … +3.0e+9		✓	✓	✓	✓	✓	✓	
62257	Max. fundamental cos φ active factor L2 [14]	REAL	-	-1.0 ... 1.0		✓	✓	✓	✓	✓	✓	
62260	Max. reactive power Qtot L2 [3]	REAL	var	-3.0e+9 … +3.0e+9		✓	✓	✓	✓	✓	✓	
62270	Min. THD+N voltage L2 [14]	REAL	1%	0 % bis 100 %		✓	✓	✓	✓	✓	✓	

Measured value ID	Measured variables	Data type	Unit	Value range	Connection type							
					1P 2W	2P 3W	3x 1P2W	3P 4W	3P 4W1	3P 3W	3P 3W1	3P 4WI
62271	Min. THD+N current L2 [14]	REAL	1%	0 % bis 100 %		✓	✓	✓	✓	✓	✓	✓
62272	Min. fundamental voltage L2 [14]	REAL	V	0.0 ... 440.0		✓	✓	✓	✓	✓	✓	
62273	Min. fundamental current L2 [14]	REAL	A	0.0 … 100000.0		✓	✓	✓	✓	✓	✓	✓
62274	Min. fundamental reactive power L2 [14]	REAL	var	-3.0e+9 … +3.0e+9		✓	✓	✓	✓	✓	✓	
62275	Min. fundamental apparent power L2[14]	REAL	VA	-3.0e+9 … +3.0e+9		✓	✓	✓	✓	✓	✓	
62276	Min. fundamental active power L2 [14]	REAL	W	-3.0e+9 … +3.0e+9		✓	✓	✓	✓	✓	✓	
62277	Min. fundamental cos φ active factor L2[14]	REAL	-	-1.0 ... 1.0		✓	✓	✓	✓	✓	✓	
62280	Min. reactive power Qtot L2 [3]	REAL	var	-3.0e+9 … +3.0e+9		✓	✓	✓	✓	✓	✓	
62294	Voltage dip - value L2 [16]	REAL	V	0.0 ... 440.0		✓	✓	✓	✓	✓	✓	
62295	Voltage swell - value L2 [16]	REAL	V	0.0 ... 440.0		✓	✓	✓	✓	✓	✓	
62296	Voltage peak value L2 [17]	REAL	V	0.0 ... 440.0		✓	✓	✓	✓	✓	✓	
62297	Current peak value L2 [17]	REAL	A	0.0 … 100000.0		✓	✓	✓	✓	✓	✓	✓
62298	Overcurrent - value L2 [16]	REAL	A	0.0 … 100000.0		✓	✓	✓	✓	✓	✓	✓
62299	Voltage dip - duration L2 [16]	REAL	ms	0.0 ... 100000.0		✓	✓	✓	✓	✓	✓	
62300	Voltage swell - duration L2 [16]	REAL	ms	0.0 ... 100000.0		✓	✓	✓	✓	✓	✓	
62310	Active energy inflow L3 [6]	DINT	Wh	0... 2147483647			✓	✓	✓	✓	✓	
62311	Active energy outflow L3 [6]	DINT	Wh	0... 2147483647			✓	✓	✓	✓	✓	
62312	Reactive energy inflow L3 [6]	DINT	varh	0... 2147483647			✓	✓	✓	✓	✓	
62313	Reactive energy outflow L3 [6]	DINT	varh	0... 2147483647			✓	✓	✓	✓	✓	
62314	Apparent energy L3 [6]	DINT	VAh	0... 2147483647			✓	✓	✓	✓	✓	
62315	Total active energy L3 [6]	DINT	Wh	-2147483647...+2147483647			✓	✓	✓	✓	✓	
62316	Total reactive energy L3 [6]	DINT	varh	-2147483647...+2147483647			✓	✓	✓	✓	✓	

Measured value ID	Measured variables	Data type	Unit	Value range	Connection type							
					1P 2W	2P 3W	3x 1P2W	3P 4W	3P 4W1	3P 3W	3P 3W1	3P 4WI
62320	THD+N voltage L3 [13]	REAL	1%	0 % bis 100 %			✓	✓	✓	✓	✓	
62321	THD+N current L3 [13]	REAL	1%	0 % bis 100 %			✓	✓	✓	✓	✓	✓
62322	Fundamental voltage L3 [2]	REAL	V	0.0 ... 440.0			✓	✓	✓	✓	✓	
62323	Fundamental current L3 [1]	REAL	A	0.0 … 100000.0			✓	✓	✓	✓	✓	✓
62324	Fundamental reactive power L3 [3]	REAL	var	-3.0e+9 … +3.0e+9			✓	✓	✓	✓	✓	
62325	Fundamental apparent power L3 [3]	REAL	VA	-3.0e+9 … +3.0e+9			✓	✓	✓	✓	✓	
62326	Fundamental active power L3[3]	REAL	W	-3.0e+9 … +3.0e+9			✓	✓	✓	✓	✓	
62327	Fundamental cos φ active factor L3 [17]	REAL	-	-1.0 ... 1.0			✓	✓	✓	✓	✓	
62330	Voltage L3 10-12 cycles [1, 19]	REAL	V	0.0 ... 760.0			✓	✓	✓	✓	✓	
62331	Voltage L3 half cycle [1, 16, 19]	REAL	V	0.0 ... 760.0			✓	✓	✓	✓	✓	
62333	Current L3 10-12 cycles [1, 19]	REAL	A	0.0 … 100000.0			✓	✓	✓	✓	✓	✓
62334	Current L3 half cycle [1, 16, 19]	REAL	A	0.0 … 100000.0			✓	✓	✓	✓	✓	✓
62336	Fundamental cos φ active factor L3 [17]	SINT	,01	-100…100			✓	✓	✓	✓	✓	
62350	Max. THD+N voltage L3[14]	REAL	1%	0 % bis 100 %			✓	✓	✓	✓	✓	
62351	Max. THD+N current L3[14]	REAL	1%	0 % bis 100 %			✓	✓	✓	✓	✓	✓
62352	Max. fundamental voltage L3[14]	REAL	V	0.0 ... 440.0			✓	✓	✓	✓	✓	
62353	Max. fundamental current L3[14]	REAL	A	0.0 … 100000.0			✓	✓	✓	✓	✓	✓
62354	Max. fundamental reactive power L3[14]	REAL	var	-3.0e+9 … +3.0e+9			✓	✓	✓	✓	✓	
62355	Max. fundamental apparent power L3[14]	REAL	VA	-3.0e+9 … +3.0e+9			✓	✓	✓	✓	✓	
62356	Max. fundamental active power L3[14]	REAL	W	-3.0e+9 … +3.0e+9			✓	✓	✓	✓	✓	
62357	Max. fundamental cos φ active factor L3[14]	REAL	-	-1.0 ... 1.0			✓	✓	✓	✓	✓	
62360	Max. reactive power Qtot L3[3]	REAL	var	-3.0e+9 … +3.0e+9			✓	✓	✓	✓	✓	
62370	Min. THD+N voltage L3[14]	REAL	1%	0 % bis 100 %			✓	✓	✓	✓	✓	

Measured value ID	Measured variables	Data type	Unit	Value range	Connection type							
					1P 2W	2P 3W	3x 1P2W	3P 4W	3P 4W1	3P 3W	3P 3W1	3P 4WI
62371	Min. THD+N current L3[14]	REAL	1%	0 % bis 100 %			✓	✓	✓	✓	✓	✓
62372	Min. fundamental voltage L3[14]	REAL	V	0.0 ... 440.0			✓	✓	✓	✓	✓	
62373	Min. fundamental current L3 [14]	REAL	A	0.0 … 100000.0			✓	✓	✓	✓	✓	✓
62374	Min. fundamental reactive power L3 [14]	REAL	var	-3.0e+9 … +3.0e+9			✓	✓	✓	✓	✓	
62375	Min. fundamental apparent power L3[14]	REAL	VA	-3.0e+9 … +3.0e+9			✓	✓	✓	✓	✓	
62376	Min. fundamental active power L3[14]	REAL	W	-3.0e+9 … +3.0e+9			✓	✓	✓	✓	✓	
62377	Min. fundamental cos φ active factor L3[14]	REAL	-	-1.0 ... 1.0			✓	✓	✓	✓	✓	
62380	Min. reactive power Qtot L3[3]	REAL	var	-3.0e+9 … +3.0e+9			✓	✓	✓	✓	✓	
62394	Voltage dip - value L3[16]	REAL	V	0.0 ... 440.0			✓	✓	✓	✓	✓	
62395	Voltage swell - value L3[16]	REAL	V	0.0 ... 440.0			✓	✓	✓	✓	✓	
62396	Voltage peak value L3[17]	REAL	V	0.0 ... 440.0			✓	✓	✓	✓	✓	
62397	Current peak value L3[17]	REAL	A	0.0 … 100000.0			✓	✓	✓	✓	✓	✓
62398	Overcurrent - value L3[16]	REAL	A	0.0 … 100000.0			✓	✓	✓	✓	✓	✓
62399	Voltage dip - duration L3[16]	REAL	ms	0.0 ... 100000.0			✓	✓	✓	✓	✓	
62400	Voltage swell - duration L3[16]	REAL	ms	0.0 ... 100000.0			✓	✓	✓	✓	✓	
Harmonics												
63000	Harmonics 1: Voltage L1 [18]	REAL	V	0.0 ... 760.0	✓	✓	✓	✓	✓	✓	✓	
63001	Harmonics 1: Current L1 [18]	REAL	A	0.0 … 100000.0	✓	✓	✓	✓	✓	✓	✓	✓
63002	Harmonics 2: Voltage L1 [18]	REAL	V	0.0 ... 760.0	✓	✓	✓	✓	✓	✓	✓	
63003	Harmonics 2: Current L1 [18]	REAL	A	0.0 … 100000.0	✓	✓	✓	✓	✓	✓	✓	✓
63004	Harmonics 3: Voltage L1 [18]	REAL	V	0.0 ... 760.0	✓	✓	✓	✓	✓	✓	✓	
63005	Harmonics 3: Current L1 [18]	REAL	A	0.0 … 100000.0	✓	✓	✓	✓	✓	✓	✓	✓
63006	Harmonics 4: Voltage L1 [18]	REAL	V	0.0 ... 760.0	✓	✓	✓	✓	✓	✓	✓	

Measured value ID	Measured variables	Data type	Unit	Value range	Connection type							
					1P 2W	2P 3W	3x 1P2W	3P 4W	3P 4W1	3P 3W	3P 3W1	3P 4WI
63007	Harmonics 4: Current L1 [18]	REAL	A	0.0 … 100000.0	✓	✓	✓	✓	✓	✓	✓	✓
63008	Harmonics 5: Voltage L1 [18]	REAL	V	0.0 ... 760.0	✓	✓	✓	✓	✓	✓	✓	
63009	Harmonics 5: Current L1 [18]	REAL	A	0.0 … 100000.0	✓	✓	✓	✓	✓	✓	✓	✓
63010	Harmonics 6: Voltage L1 [18]	REAL	V	0.0 ... 760.0	✓	✓	✓	✓	✓	✓	✓	
63011	Harmonics 6: Current L1 [18]	REAL	A	0.0 … 100000.0	✓	✓	✓	✓	✓	✓	✓	✓
63012	Harmonics 7: Voltage L1 [18]	REAL	V	0.0 ... 760.0	✓	✓	✓	✓	✓	✓	✓	
63013	Harmonics 7: Current L1 [18]	REAL	A	0.0 … 100000.0	✓	✓	✓	✓	✓	✓	✓	✓
63014	Harmonics 8: Voltage L1 [18]	REAL	V	0.0 ... 760.0	✓	✓	✓	✓	✓	✓	✓	
63015	Harmonics 8: Current L1 [18]	REAL	A	0.0 … 100000.0	✓	✓	✓	✓	✓	✓	✓	✓
63016	Harmonics 9: Voltage L1 [18]	REAL	V	0.0 ... 760.0	✓	✓	✓	✓	✓	✓	✓	
63017	Harmonics 9: Current L1 [18]	REAL	A	0.0 … 100000.0	✓	✓	✓	✓	✓	✓	✓	✓
63018	Harmonics 10: Voltage L1 [18]	REAL	V	0.0 ... 760.0	✓	✓	✓	✓	✓	✓	✓	
63019	Harmonics 10: Current L1 [18]	REAL	A	0.0 … 100000.0	✓	✓	✓	✓	✓	✓	✓	✓
63020	Harmonics 11: Voltage L1 [18]	REAL	V	0.0 ... 760.0	✓	✓	✓	✓	✓	✓	✓	
63021	Harmonics 11: Current L1 [18]	REAL	A	0.0 … 100000.0	✓	✓	✓	✓	✓	✓	✓	✓
63022	Harmonics 12: Voltage L1 [18]	REAL	V	0.0 ... 760.0	✓	✓	✓	✓	✓	✓	✓	
63023	Harmonics 12: Current L1 [18]	REAL	A	0.0 … 100000.0	✓	✓	✓	✓	✓	✓	✓	✓
63024	Harmonics 13: Voltage L1 [18]	REAL	V	0.0 ... 760.0	✓	✓	✓	✓	✓	✓	✓	
63025	Harmonics 13: Current L1 [18]	REAL	A	0.0 … 100000.0	✓	✓	✓	✓	✓	✓	✓	✓
63026	Harmonics 14: Voltage L1 [18]	REAL	V	0.0 ... 760.0	✓	✓	✓	✓	✓	✓	✓	
63027	Harmonics 14: Current L1 [18]	REAL	A	0.0 … 100000.0	✓	✓	✓	✓	✓	✓	✓	✓
63028	Harmonics 15: Voltage L1 [18]	REAL	V	0.0 ... 760.0	✓	✓	✓	✓	✓	✓	✓	

Meas-ured value ID	Measured variables	Data type	Unit	Value range	Connection type							
					1P 2W	2P 3W	3x 1P2W	3P 4W	3P 4W1	3P 3W	3P 3W1	3P 4WI
63029	Harmonics 15: Current L1 [18]	REAL	A	0.0 … 100000.0	✓	✓	✓	✓	✓	✓	✓	✓
63030	Harmonics 16: Voltage L1 [18]	REAL	V	0.0 ... 760.0	✓	✓	✓	✓	✓	✓	✓	
63031	Harmonics 16: Current L1 [18]	REAL	A	0.0 … 100000.0	✓	✓	✓	✓	✓	✓	✓	✓
63032	Harmonics 17: Voltage L1 [18]	REAL	V	0.0 ... 760.0	✓	✓	✓	✓	✓	✓	✓	
63033	Harmonics 17: Current L1 [18]	REAL	A	0.0 … 100000.0	✓	✓	✓	✓	✓	✓	✓	✓
63034	Harmonics 18: Voltage L1 [18]	REAL	V	0.0 ... 760.0	✓	✓	✓	✓	✓	✓	✓	
63035	Harmonics 18: Current L1 [18]	REAL	A	0.0 … 100000.0	✓	✓	✓	✓	✓	✓	✓	✓
63036	Harmonics 19: Voltage L1 [18]	REAL	V	0.0 ... 760.0	✓	✓	✓	✓	✓	✓	✓	
63037	Harmonics 19: Current L1 [18]	REAL	A	0.0 … 100000.0	✓	✓	✓	✓	✓	✓	✓	✓
63038	Harmonics 20: Voltage L1 [18]	REAL	V	0.0 ... 760.0	✓	✓	✓	✓	✓	✓	✓	
63039	Harmonics 20: Current L1 [18]	REAL	A	0.0 … 100000.0	✓	✓	✓	✓	✓	✓	✓	✓
63040	Harmonics 21: Voltage L1 [18]	REAL	V	0.0 ... 760.0	✓	✓	✓	✓	✓	✓	✓	
63041	Harmonics 21: Current L1 [18]	REAL	A	0.0 … 100000.0	✓	✓	✓	✓	✓	✓	✓	✓
63042	Harmonics 22: Voltage L1 [18]	REAL	V	0.0 ... 760.0	✓	✓	✓	✓	✓	✓	✓	
63043	Harmonics 22: Current L1 [18]	REAL	A	0.0 … 100000.0	✓	✓	✓	✓	✓	✓	✓	✓
63044	Harmonics 23: Voltage L1 [18]	REAL	V	0.0 ... 760.0	✓	✓	✓	✓	✓	✓	✓	
63045	Harmonics 23: Current L1 [18]	REAL	A	0.0 … 100000.0	✓	✓	✓	✓	✓	✓	✓	✓
63046	Harmonics 24: Voltage L1 [18]	REAL	V	0.0 ... 760.0	✓	✓	✓	✓	✓	✓	✓	
63047	Harmonics 24: Current L1 [18]	REAL	A	0.0 … 100000.0	✓	✓	✓	✓	✓	✓	✓	✓
63048	Harmonics 25: Voltage L1 [18]	REAL	V	0.0 ... 760.0	✓	✓	✓	✓	✓	✓	✓	
63049	Harmonics 25: Current L1 [18]	REAL	A	0.0 … 100000.0	✓	✓	✓	✓	✓	✓	✓	✓
63050	Harmonics 26: Voltage L1 [18]	REAL	V	0.0 ... 760.0	✓	✓	✓	✓	✓	✓	✓	

Measured value ID	Measured variables	Data type	Unit	Value range	Connection type							
					1P 2W	2P 3W	3x 1P2W	3P 4W	3P 4W1	3P 3W	3P 3W1	3P 4WI
63051	Harmonics 26: Current L1 [18]	REAL	A	0.0 … 100000.0	✓	✓	✓	✓	✓	✓	✓	✓
63052	Harmonics 27: Voltage L1 [18]	REAL	V	0.0 ... 760.0	✓	✓	✓	✓	✓	✓	✓	
63053	Harmonics 27: Current L1 [18]	REAL	A	0.0 … 100000.0	✓	✓	✓	✓	✓	✓	✓	✓
63054	Harmonics 28: Voltage L1 [18]	REAL	V	0.0 ... 760.0	✓	✓	✓	✓	✓	✓	✓	
63055	Harmonics 28: Current L1 [18]	REAL	A	0.0 … 100000.0	✓	✓	✓	✓	✓	✓	✓	✓
63056	Harmonics 29: Voltage L1 [18]	REAL	V	0.0 ... 760.0	✓	✓	✓	✓	✓	✓	✓	
63057	Harmonics 29: Current L1 [18]	REAL	A	0.0 … 100000.0	✓	✓	✓	✓	✓	✓	✓	✓
63058	Harmonics 30: Voltage L1 [18]	REAL	V	0.0 ... 760.0	✓	✓	✓	✓	✓	✓	✓	
63059	Harmonics 30: Current L1 [18]	REAL	A	0.0 … 100000.0	✓	✓	✓	✓	✓	✓	✓	✓
63060	Harmonics 31: Voltage L1 [18]	REAL	V	0.0 ... 760.0	✓	✓	✓	✓	✓	✓	✓	
63061	Harmonics 31: Current L1 [18]	REAL	A	0.0 … 100000.0	✓	✓	✓	✓	✓	✓	✓	✓
63062	Harmonics 32: Voltage L1 [18]	REAL	V	0.0 ... 760.0	✓	✓	✓	✓	✓	✓	✓	
63063	Harmonics 32: Current L1 [18]	REAL	A	0.0 … 100000.0	✓	✓	✓	✓	✓	✓	✓	✓
63064	Harmonics 33: Voltage L1 [18]	REAL	V	0.0 ... 760.0	✓	✓	✓	✓	✓	✓	✓	
63065	Harmonics 33: Current L1 [18]	REAL	A	0.0 … 100000.0	✓	✓	✓	✓	✓	✓	✓	✓
63066	Harmonics 34: Voltage L1 [18]	REAL	V	0.0 ... 760.0	✓	✓	✓	✓	✓	✓	✓	
63067	Harmonics 34: Current L1 [18]	REAL	A	0.0 … 100000.0	✓	✓	✓	✓	✓	✓	✓	✓
63068	Harmonics 35: Voltage L1 [18]	REAL	V	0.0 ... 760.0	✓	✓	✓	✓	✓	✓	✓	
63069	Harmonics 35: Current L1 [18]	REAL	A	0.0 … 100000.0	✓	✓	✓	✓	✓	✓	✓	✓
63070	Harmonics 36: Voltage L1 [18]	REAL	V	0.0 ... 760.0	✓	✓	✓	✓	✓	✓	✓	
63071	Harmonics 36: Current L1 [18]	REAL	A	0.0 … 100000.0	✓	✓	✓	✓	✓	✓	✓	✓
63072	Harmonics 37: Voltage L1 [18]	REAL	V	0.0 ... 760.0	✓	✓	✓	✓	✓	✓	✓	

Meas-ured value ID	Measured variables	Data type	Unit	Value range	Connection type							
					1P 2W	2P 3W	3x 1P2W	3P 4W	3P 4W1	3P 3W	3P 3W1	3P 4WI
63073	Harmonics 37: Current L1 [18]	REAL	A	0.0 … 100000.0	✓	✓	✓	✓	✓	✓	✓	✓
63074	Harmonics 38: Voltage L1 [18]	REAL	V	0.0 ... 760.0	✓	✓	✓	✓	✓	✓	✓	
63075	Harmonics 38: Current L1 [18]	REAL	A	0.0 … 100000.0	✓	✓	✓	✓	✓	✓	✓	✓
63076	Harmonics 39: Voltage L1 [18]	REAL	V	0.0 ... 760.0	✓	✓	✓	✓	✓	✓	✓	
63077	Harmonics 39: Current L1 [18]	REAL	A	0.0 … 100000.0	✓	✓	✓	✓	✓	✓	✓	✓
63078	Harmonics 40: Voltage L1 [18]	REAL	V	0.0 ... 760.0	✓	✓	✓	✓	✓	✓	✓	
63079	Harmonics 40: Current L1 [18]	REAL	A	0.0 … 100000.0	✓	✓	✓	✓	✓	✓	✓	✓
63400	Harmonics 1: Voltage L2 [18]	REAL	V	0.0 ... 760.0		✓	✓	✓	✓	✓	✓	
63401	Harmonics 1: Current L2 [18]	REAL	A	0.0 … 100000.0		✓	✓	✓	✓	✓	✓	✓
63402	Harmonics 2: Voltage L2 [18]	REAL	V	0.0 ... 760.0		✓	✓	✓	✓	✓	✓	
63403	Harmonics 2: Current L2 [18]	REAL	A	0.0 … 100000.0		✓	✓	✓	✓	✓	✓	✓
63404	Harmonics 3: Voltage L2 [18]	REAL	V	0.0 ... 760.0		✓	✓	✓	✓	✓	✓	
63405	Harmonics 3: Current L2 [18]	REAL	A	0.0 … 100000.0		✓	✓	✓	✓	✓	✓	✓
63406	Harmonics 4: Voltage L2 [18]	REAL	V	0.0 ... 760.0		✓	✓	✓	✓	✓	✓	
63407	Harmonics 4: Current L2 [18]	REAL	A	0.0 … 100000.0		✓	✓	✓	✓	✓	✓	✓
63408	Harmonics 5: Voltage L2 [18]	REAL	V	0.0 ... 760.0		✓	✓	✓	✓	✓	✓	
63409	Harmonics 5: Current L2 [18]	REAL	A	0.0 … 100000.0		✓	✓	✓	✓	✓	✓	✓
63410	Harmonics 6: Voltage L2 [18]	REAL	V	0.0 ... 760.0		✓	✓	✓	✓	✓	✓	
63411	Harmonics 6: Current L2 [18]	REAL	A	0.0 … 100000.0		✓	✓	✓	✓	✓	✓	✓
63412	Harmonics 7: Voltage L2 [18]	REAL	V	0.0 ... 760.0		✓	✓	✓	✓	✓	✓	
63413	Harmonics 7: Current L2 [18]	REAL	A	0.0 … 100000.0		✓	✓	✓	✓	✓	✓	✓
63414	Harmonics 8: Voltage L2 [18]	REAL	V	0.0 ... 760.0		✓	✓	✓	✓	✓	✓	

Meas-ured value ID	Measured variables	Data type	Unit	Value range	Connection type							
					1P 2W	2P 3W	3x 1P2W	3P 4W	3P 4W1	3P 3W	3P 3W1	3P 4WI
63415	Harmonics 8: Current L2 [18]	REAL	A	0.0 … 100000.0		✓	✓	✓	✓	✓	✓	✓
63416	Harmonics 9: Voltage L2 [18]	REAL	V	0.0 ... 760.0		✓	✓	✓	✓	✓	✓	
63417	Harmonics 9: Current L2 [18]	REAL	A	0.0 … 100000.0		✓	✓	✓	✓	✓	✓	✓
63418	Harmonics 10: Voltage L2 [18]	REAL	V	0.0 ... 760.0		✓	✓	✓	✓	✓	✓	
63419	Harmonics 10: Current L2 [18]	REAL	A	0.0 … 100000.0		✓	✓	✓	✓	✓	✓	✓
63420	Harmonics 11: Voltage L2 [18]	REAL	V	0.0 ... 760.0		✓	✓	✓	✓	✓	✓	
63421	Harmonics 11: Current L2 [18]	REAL	A	0.0 … 100000.0		✓	✓	✓	✓	✓	✓	✓
63422	Harmonics 12: Voltage L2 [18]	REAL	V	0.0 ... 760.0		✓	✓	✓	✓	✓	✓	
63423	Harmonics 12: Current L2 [18]	REAL	A	0.0 … 100000.0		✓	✓	✓	✓	✓	✓	✓
63424	Harmonics 13: Voltage L2 [18]	REAL	V	0.0 ... 760.0		✓	✓	✓	✓	✓	✓	
63425	Harmonics 13: Current L2 [18]	REAL	A	0.0 … 100000.0		✓	✓	✓	✓	✓	✓	✓
63426	Harmonics 14: Voltage L2 [18]	REAL	V	0.0 ... 760.0		✓	✓	✓	✓	✓	✓	
63427	Harmonics 14: Current L2 [18]	REAL	A	0.0 … 100000.0		✓	✓	✓	✓	✓	✓	✓
63428	Harmonics 15: Voltage L2 [18]	REAL	V	0.0 ... 760.0		✓	✓	✓	✓	✓	✓	
63429	Harmonics 15: Current L2 [18]	REAL	A	0.0 … 100000.0		✓	✓	✓	✓	✓	✓	✓
63430	Harmonics 16: Voltage L2 [18]	REAL	V	0.0 ... 760.0		✓	✓	✓	✓	✓	✓	
63431	Harmonics 16: Current L2 [18]	REAL	A	0.0 … 100000.0		✓	✓	✓	✓	✓	✓	✓
63432	Harmonics 17: Voltage L2 [18]	REAL	V	0.0 ... 760.0		✓	✓	✓	✓	✓	✓	
63433	Harmonics 17: Current L2 [18]	REAL	A	0.0 … 100000.0		✓	✓	✓	✓	✓	✓	✓
63434	Harmonics 18: Voltage L2 [18]	REAL	V	0.0 ... 760.0		✓	✓	✓	✓	✓	✓	
63435	Harmonics 18: Current L2 [18]	REAL	A	0.0 … 100000.0		✓	✓	✓	✓	✓	✓	✓
63436	Harmonics 19: Voltage L2 [18]	REAL	V	0.0 ... 760.0		✓	✓	✓	✓	✓	✓	

Measured value ID	Measured variables	Data type	Unit	Value range	Connection type							
					1P 2W	2P 3W	3x 1P2W	3P 4W	3P 4W1	3P 3W	3P 3W1	3P 4WI
63437	Harmonics 19: Current L2 [18]	REAL	A	0.0 … 100000.0		✓	✓	✓	✓	✓	✓	✓
63438	Harmonics 20: Voltage L2 [18]	REAL	V	0.0 ... 760.0		✓	✓	✓	✓	✓	✓	
63439	Harmonics 20: Current L2 [18]	REAL	A	0.0 … 100000.0		✓	✓	✓	✓	✓	✓	✓
63440	Harmonics 21: Voltage L2 [18]	REAL	V	0.0 ... 760.0		✓	✓	✓	✓	✓	✓	
63441	Harmonics 21: Current L2 [18]	REAL	A	0.0 … 100000.0		✓	✓	✓	✓	✓	✓	✓
63442	Harmonics 22: Voltage L2 [18]	REAL	V	0.0 ... 760.0		✓	✓	✓	✓	✓	✓	
63443	Harmonics 22: Current L2 [18]	REAL	A	0.0 … 100000.0		✓	✓	✓	✓	✓	✓	✓
63444	Harmonics 23: Voltage L2 [18]	REAL	V	0.0 ... 760.0		✓	✓	✓	✓	✓	✓	
63445	Harmonics 23: Current L2 [18]	REAL	A	0.0 … 100000.0		✓	✓	✓	✓	✓	✓	✓
63446	Harmonics 24: Voltage L2 [18]	REAL	V	0.0 ... 760.0		✓	✓	✓	✓	✓	✓	
63447	Harmonics 24: Current L2 [18]	REAL	A	0.0 … 100000.0		✓	✓	✓	✓	✓	✓	✓
63448	Harmonics 25: Voltage L2 [18]	REAL	V	0.0 ... 760.0		✓	✓	✓	✓	✓	✓	
63449	Harmonics 25: Current L2 [18]	REAL	A	0.0 … 100000.0		✓	✓	✓	✓	✓	✓	✓
63450	Harmonics 26: Voltage L2 [18]	REAL	V	0.0 ... 760.0		✓	✓	✓	✓	✓	✓	
63451	Harmonics 26: Current L2 [18]	REAL	A	0.0 … 100000.0		✓	✓	✓	✓	✓	✓	✓
63452	Harmonics 27: Voltage L2 [18]	REAL	V	0.0 ... 760.0		✓	✓	✓	✓	✓	✓	
63453	Harmonics 27: Current L2 [18]	REAL	A	0.0 … 100000.0		✓	✓	✓	✓	✓	✓	✓
63454	Harmonics 28: Voltage L2 [18]	REAL	V	0.0 ... 760.0		✓	✓	✓	✓	✓	✓	
63455	Harmonics 28: Current L2 [18]	REAL	A	0.0 … 100000.0		✓	✓	✓	✓	✓	✓	✓
63456	Harmonics 29: Voltage L2 [18]	REAL	V	0.0 ... 760.0		✓	✓	✓	✓	✓	✓	
63457	Harmonics 29: Current L2 [18]	REAL	A	0.0 … 100000.0		✓	✓	✓	✓	✓	✓	✓
63458	Harmonics 30: Voltage L2 [18]	REAL	V	0.0 ... 760.0		✓	✓	✓	✓	✓	✓	

Measured value ID	Measured variables	Data type	Unit	Value range	Connection type							
					1P 2W	2P 3W	3x 1P2W	3P 4W	3P 4W1	3P 3W	3P 3W1	3P 4WI
63459	Harmonics 30: Current L2 [18]	REAL	A	0.0 … 100000.0		✓	✓	✓	✓	✓	✓	✓
63460	Harmonics 31: Voltage L2 [18]	REAL	V	0.0 ... 760.0		✓	✓	✓	✓	✓	✓	
63461	Harmonics 31: Current L2 [18]	REAL	A	0.0 … 100000.0		✓	✓	✓	✓	✓	✓	✓
63462	Harmonics 32: Voltage L2 [18]	REAL	V	0.0 ... 760.0		✓	✓	✓	✓	✓	✓	
63463	Harmonics 32: Current L2 [18]	REAL	A	0.0 … 100000.0		✓	✓	✓	✓	✓	✓	✓
63464	Harmonics 33: Voltage L2 [18]	REAL	V	0.0 ... 760.0		✓	✓	✓	✓	✓	✓	
63465	Harmonics 33: Current L2 [18]	REAL	A	0.0 … 100000.0		✓	✓	✓	✓	✓	✓	✓
63466	Harmonics 34: Voltage L2 [18]	REAL	V	0.0 ... 760.0		✓	✓	✓	✓	✓	✓	
63467	Harmonics 34: Current L2 [18]	REAL	A	0.0 … 100000.0		✓	✓	✓	✓	✓	✓	✓
63468	Harmonics 35: Voltage L2 [18]	REAL	V	0.0 ... 760.0		✓	✓	✓	✓	✓	✓	
63469	Harmonics 35: Current L2 [18]	REAL	A	0.0 … 100000.0		✓	✓	✓	✓	✓	✓	✓
63470	Harmonics 36: Voltage L2 [18]	REAL	V	0.0 ... 760.0		✓	✓	✓	✓	✓	✓	
63471	Harmonics 36: Current L2 [18]	REAL	A	0.0 … 100000.0		✓	✓	✓	✓	✓	✓	✓
63472	Harmonics 37: Voltage L2 [18]	REAL	V	0.0 ... 760.0		✓	✓	✓	✓	✓	✓	
63473	Harmonics 37: Current L2 [18]	REAL	A	0.0 … 100000.0		✓	✓	✓	✓	✓	✓	✓
63474	Harmonics 38: Voltage L2 [18]	REAL	V	0.0 ... 760.0		✓	✓	✓	✓	✓	✓	
63475	Harmonics 38: Current L2 [18]	REAL	A	0.0 … 100000.0		✓	✓	✓	✓	✓	✓	✓
63476	Harmonics 39: Voltage L2 [18]	REAL	V	0.0 ... 760.0		✓	✓	✓	✓	✓	✓	
63477	Harmonics 39: Current L2 [18]	REAL	A	0.0 … 100000.0		✓	✓	✓	✓	✓	✓	✓
63478	Harmonics 40: Voltage L2 [18]	REAL	V	0.0 ... 760.0		✓	✓	✓	✓	✓	✓	
63479	Harmonics 40: Current L2 [18]	REAL	A	0.0 … 100000.0		✓	✓	✓	✓	✓	✓	✓
63800	Harmonics 1: Voltage L3 [18]	REAL	V	0.0 ... 760.0			✓	✓	✓	✓	✓	

Measured value ID	Measured variables	Data type	Unit	Value range	Connection type							
					1P 2W	2P 3W	3x 1P2W	3P 4W	3P 4W1	3P 3W	3P 3W1	3P 4WI
63801	Harmonics 1: Current L3 [18]	REAL	A	0.0 … 100000.0			✓	✓	✓	✓	✓	✓
63802	Harmonics 2: Voltage L3 [18]	REAL	V	0.0 ... 760.0			✓	✓	✓	✓	✓	
63803	Harmonics 2: Current L3 [18]	REAL	A	0.0 … 100000.0			✓	✓	✓	✓	✓	✓
63804	Harmonics 3: Voltage L3 [18]	REAL	V	0.0 ... 760.0			✓	✓	✓	✓	✓	
63805	Harmonics 3: Current L3 [18]	REAL	A	0.0 … 100000.0			✓	✓	✓	✓	✓	✓
63806	Harmonics 4: Voltage L3 [18]	REAL	V	0.0 ... 760.0			✓	✓	✓	✓	✓	
63807	Harmonics 4: Current L3 [18]	REAL	A	0.0 … 100000.0			✓	✓	✓	✓	✓	✓
63808	Harmonics 5: Voltage L3 [18]	REAL	V	0.0 ... 760.0			✓	✓	✓	✓	✓	
63809	Harmonics 5: Current L3 [18]	REAL	A	0.0 … 100000.0			✓	✓	✓	✓	✓	✓
63810	Harmonics 6: Voltage L3 [18]	REAL	V	0.0 ... 760.0			✓	✓	✓	✓	✓	
63811	Harmonics 6: Current L3 [18]	REAL	A	0.0 … 100000.0			✓	✓	✓	✓	✓	✓
63812	Harmonics 7: Voltage L3 [18]	REAL	V	0.0 ... 760.0			✓	✓	✓	✓	✓	
63813	Harmonics 7: Current L3 [18]	REAL	A	0.0 … 100000.0			✓	✓	✓	✓	✓	✓
63814	Harmonics 8: Voltage L3 [18]	REAL	V	0.0 ... 760.0			✓	✓	✓	✓	✓	
63815	Harmonics 8: Current L3 [18]	REAL	A	0.0 … 100000.0			✓	✓	✓	✓	✓	✓
63816	Harmonics 9: Voltage L3 [18]	REAL	V	0.0 ... 760.0			✓	✓	✓	✓	✓	
63817	Harmonics 9: Current L3 [18]	REAL	A	0.0 … 100000.0			✓	✓	✓	✓	✓	✓
63818	Harmonics 10: Voltage L3 [18]	REAL	V	0.0 ... 760.0			✓	✓	✓	✓	✓	
63819	Harmonics 10: Current L3 [18]	REAL	A	0.0 … 100000.0			✓	✓	✓	✓	✓	✓
63820	Harmonics 11: Voltage L3 [18]	REAL	V	0.0 ... 760.0			✓	✓	✓	✓	✓	
63821	Harmonics 11: Current L3 [18]	REAL	A	0.0 … 100000.0			✓	✓	✓	✓	✓	✓
63822	Harmonics 12: Voltage L3 [18]	REAL	V	0.0 ... 760.0			✓	✓	✓	✓	✓	

Measured value ID	Measured variables	Data type	Unit	Value range	Connection type							
					1P 2W	2P 3W	3x 1P2W	3P 4W	3P 4W1	3P 3W	3P 3W1	3P 4WI
63823	Harmonics 12: Current L3 [18]	REAL	A	0.0 … 100000.0			✓	✓	✓	✓	✓	✓
63824	Harmonics 13: Voltage L3 [18]	REAL	V	0.0 ... 760.0			✓	✓	✓	✓	✓	
63825	Harmonics 13: Current L3 [18]	REAL	A	0.0 … 100000.0			✓	✓	✓	✓	✓	✓
63826	Harmonics 14: Voltage L3 [18]	REAL	V	0.0 ... 760.0			✓	✓	✓	✓	✓	
63827	Harmonics 14: Current L3 [18]	REAL	A	0.0 … 100000.0			✓	✓	✓	✓	✓	✓
63828	Harmonics 15: Voltage L3 [18]	REAL	V	0.0 ... 760.0			✓	✓	✓	✓	✓	
63829	Harmonics 15: Current L3 [18]	REAL	A	0.0 … 100000.0			✓	✓	✓	✓	✓	✓
63830	Harmonics 16: Voltage L3 [18]	REAL	V	0.0 ... 760.0			✓	✓	✓	✓	✓	
63831	Harmonics 16: Current L3 [18]	REAL	A	0.0 … 100000.0			✓	✓	✓	✓	✓	✓
63832	Harmonics 17: Voltage L3 [18]	REAL	V	0.0 ... 760.0			✓	✓	✓	✓	✓	
63833	Harmonics 17: Current L3 [18]	REAL	A	0.0 … 100000.0			✓	✓	✓	✓	✓	✓
63834	Harmonics 18: Voltage L3 [18]	REAL	V	0.0 ... 760.0			✓	✓	✓	✓	✓	
63835	Harmonics 18: Current L3 [18]	REAL	A	0.0 … 100000.0			✓	✓	✓	✓	✓	✓
63836	Harmonics 19: Voltage L3 [18]	REAL	V	0.0 ... 760.0			✓	✓	✓	✓	✓	
63837	Harmonics 19: Current L3 [18]	REAL	A	0.0 … 100000.0			✓	✓	✓	✓	✓	✓
63838	Harmonics 20: Voltage L3 [18]	REAL	V	0.0 ... 760.0			✓	✓	✓	✓	✓	
63839	Harmonics 20: Current L3 [18]	REAL	A	0.0 … 100000.0			✓	✓	✓	✓	✓	✓
63840	Harmonics 21: Voltage L3 [18]	REAL	V	0.0 ... 760.0			✓	✓	✓	✓	✓	
63841	Harmonics 21: Current L3 [18]	REAL	A	0.0 … 100000.0			✓	✓	✓	✓	✓	✓
63842	Harmonics 22: Voltage L3 [18]	REAL	V	0.0 ... 760.0			✓	✓	✓	✓	✓	
63843	Harmonics 22: Current L3 [18]	REAL	A	0.0 … 100000.0			✓	✓	✓	✓	✓	✓
63844	Harmonics 23: Voltage L3 [18]	REAL	V	0.0 ... 760.0			✓	✓	✓	✓	✓	

Measured value ID	Measured variables	Data type	Unit	Value range	Connection type							
					1P 2W	2P 3W	3x 1P2W	3P 4W	3P 4W1	3P 3W	3P 3W1	3P 4WI
63845	Harmonics 23: Current L3 [18]	REAL	A	0.0 … 100000.0			✓	✓	✓	✓	✓	✓
63846	Harmonics 24: Voltage L3 [18]	REAL	V	0.0 ... 760.0			✓	✓	✓	✓	✓	
63847	Harmonics 24: Current L3 [18]	REAL	A	0.0 … 100000.0			✓	✓	✓	✓	✓	✓
63848	Harmonics 25: Voltage L3 [18]	REAL	V	0.0 ... 760.0			✓	✓	✓	✓	✓	
63849	Harmonics 25: Current L3 [18]	REAL	A	0.0 … 100000.0			✓	✓	✓	✓	✓	✓
63850	Harmonics 26: Voltage L3 [18]	REAL	V	0.0 ... 760.0			✓	✓	✓	✓	✓	
63851	Harmonics 26: Current L3 [18]	REAL	A	0.0 … 100000.0			✓	✓	✓	✓	✓	✓
63852	Harmonics 27: Voltage L3 [18]	REAL	V	0.0 ... 760.0			✓	✓	✓	✓	✓	
63853	Harmonics 27: Current L3 [18]	REAL	A	0.0 … 100000.0			✓	✓	✓	✓	✓	✓
63854	Harmonics 28: Voltage L3 [18]	REAL	V	0.0 ... 760.0			✓	✓	✓	✓	✓	
63855	Harmonics 28: Current L3 [18]	REAL	A	0.0 … 100000.0			✓	✓	✓	✓	✓	✓
63856	Harmonics 29: Voltage L3 [18]	REAL	V	0.0 ... 760.0			✓	✓	✓	✓	✓	
63857	Harmonics 29: Current L3 [18]	REAL	A	0.0 … 100000.0			✓	✓	✓	✓	✓	✓
63858	Harmonics 30: Voltage L3 [18]	REAL	V	0.0 ... 760.0			✓	✓	✓	✓	✓	
63859	Harmonics 30: Current L3 [18]	REAL	A	0.0 … 100000.0			✓	✓	✓	✓	✓	✓
63860	Harmonics 31: Voltage L3 [18]	REAL	V	0.0 ... 760.0			✓	✓	✓	✓	✓	
63861	Harmonics 31: Current L3 [18]	REAL	A	0.0 … 100000.0			✓	✓	✓	✓	✓	✓
63862	Harmonics 32: Voltage L3 [18]	REAL	V	0.0 ... 760.0			✓	✓	✓	✓	✓	
63863	Harmonics 32: Current L3 [18]	REAL	A	0.0 … 100000.0			✓	✓	✓	✓	✓	✓
63864	Harmonics 33: Voltage L3 [18]	REAL	V	0.0 ... 760.0			✓	✓	✓	✓	✓	
63865	Harmonics 33: Current L3 [18]	REAL	A	0.0 … 100000.0			✓	✓	✓	✓	✓	✓
63866	Harmonics 34: Voltage L3 [18]	REAL	V	0.0 ... 760.0			✓	✓	✓	✓	✓	

Measured value ID	Measured variables	Data type	Unit	Value range	Connection type							
					1P 2W	2P 3W	3x 1P2W	3P 4W	3P 4W1	3P 3W	3P 3W1	3P 4WI
63867	Harmonics 34: Current L3 [18]	REAL	A	0.0 … 100000.0			✓	✓	✓	✓	✓	✓
63868	Harmonics 35: Voltage L3 [18]	REAL	V	0.0 ... 760.0			✓	✓	✓	✓	✓	
63869	Harmonics 35: Current L3 [18]	REAL	A	0.0 … 100000.0			✓	✓	✓	✓	✓	✓
63870	Harmonics 36: Voltage L3 [18]	REAL	V	0.0 ... 760.0			✓	✓	✓	✓	✓	
63871	Harmonics 36: Current L3 [18]	REAL	A	0.0 … 100000.0			✓	✓	✓	✓	✓	✓
63872	Harmonics 37: Voltage L3 [18]	REAL	V	0.0 ... 760.0			✓	✓	✓	✓	✓	
63873	Harmonics 37: Current L3 [18]	REAL	A	0.0 … 100000.0			✓	✓	✓	✓	✓	✓
63874	Harmonics 38: Voltage L3 [18]	REAL	V	0.0 ... 760.0			✓	✓	✓	✓	✓	
63875	Harmonics 38: Current L3 [18]	REAL	A	0.0 … 100000.0			✓	✓	✓	✓	✓	✓
63876	Harmonics 39: Voltage L3 [18]	REAL	V	0.0 ... 760.0			✓	✓	✓	✓	✓	
63877	Harmonics 39: Current L3 [18]	REAL	A	0.0 … 100000.0			✓	✓	✓	✓	✓	✓
63878	Harmonics 40: Voltage L3 [18]	REAL	V	0.0 ... 760.0			✓	✓	✓	✓	✓	
63879	Harmonics 40: Current L3 [18]	REAL	A	0.0 … 100000.0			✓	✓	✓	✓	✓	✓
65496	Power quality analysis - Qualifier	UDINT	Bit track	0 ... 4294967295	✓	✓	✓	✓	✓	✓	✓	✓
65497	Current module time	PNIO	sec		✓	✓	✓	✓	✓	✓	✓	✓
65500	Qualifier L1	UINT	Bit track	0 ... 65535	✓	✓	✓	✓	✓	✓	✓	✓
65501	Qualifier L2	UINT	Bit track	0 ... 65535		✓	✓	✓	✓	✓	✓	✓
65502	Qualifier L3	UINT	Bit track	0 ... 65535			✓	✓	✓	✓	✓	✓
65503	Qualifier L1L2L3	UINT	Bit track	0 ... 65535	✓	✓	✓	✓	✓	✓	✓	✓
65504	Operating hours counter L1L2L3 [5]	REAL	h	0.0 ... 3.4e+38	✓	✓	✓	✓	✓	✓	✓	✓
65505	Operating hours counter L1 [5]	REAL	h	0.0 ... 3.4e+38	✓	✓	✓	✓	✓	✓	✓	✓
65506	Operating hours counter L2 [5]	REAL	h	0.0 ... 3.4e+38		✓	✓	✓	✓	✓	✓	✓
65507	Operating hours counter L3 [5]	REAL	h	0.0 ... 3.4e+38			✓	✓	✓	✓	✓	✓

Measured value ID	Measured variables	Data type	Unit	Value range	Connection type							
					1P 2W	2P 3W	3x 1P2W	3P 4W	3P 4W1	3P 3W	3P 3W1	3P 4WI
65508	Status of energy counter overflows	UINT	Bit track	0 ... 65535	✓	✓	✓	✓	✓	✓	✓	✓
65509	Status of limit violations 1…16	UINT	Bit track	0 ... 65535	✓	✓	✓	✓	✓	✓	✓	✓
65510	Counter for limit violations GW1 [5]	UDINT		0 ... 4294967295	✓	✓	✓	✓	✓	✓	✓	✓
65511	Counter for limit violations GW2 [5]	UDINT		0 ... 4294967295	✓	✓	✓	✓	✓	✓	✓	✓
65512	Counter for limit violations GW3 [5]	UDINT		0 ... 4294967295	✓	✓	✓	✓	✓	✓	✓	✓
65513	Counter for limit violations GW4 [5]	UDINT		0 ... 4294967295	✓	✓	✓	✓	✓	✓	✓	✓
65514	Counter for limit violations GW5 [5]	UDINT		0 ... 4294967295	✓	✓	✓	✓	✓	✓	✓	✓
65515	Counter for limit violations GW6 [5]	UDINT		0 ... 4294967295	✓	✓	✓	✓	✓	✓	✓	✓
65516	Counter for limit violations GW7 [5]	UDINT		0 ... 4294967295	✓	✓	✓	✓	✓	✓	✓	✓
65517	Counter for limit violations GW8 [5]	UDINT		0 ... 4294967295	✓	✓	✓	✓	✓	✓	✓	✓
65518	Counter for limit violations GW9 [5]	UDINT		0 ... 4294967295	✓	✓	✓	✓	✓	✓	✓	✓
65519	Counter for limit violations GW10 [5]	UDINT		0 ... 4294967295	✓	✓	✓	✓	✓	✓	✓	✓
65520	Counter for limit violations GW11 [5]	UDINT		0 ... 4294967295	✓	✓	✓	✓	✓	✓	✓	✓
65521	Counter for limit violations GW12 [5]	UDINT		0 ... 4294967295	✓	✓	✓	✓	✓	✓	✓	✓
65522	Counter for limit violations GW13 [5]	UDINT		0 ... 4294967295	✓	✓	✓	✓	✓	✓	✓	✓
65523	Counter for limit violations GW14 [5]	UDINT		0 ... 4294967295	✓	✓	✓	✓	✓	✓	✓	✓

Measured value ID	Measured variables	Data type	Unit	Value range	Connection type							
					1P 2W	2P 3W	3x 1P2W	3P 4W	3P 4W1	3P 3W	3P 3W1	3P 4WI
65524	Counter for limit violations GW15 [5]	UDINT		0 ... 4294967295	✓	✓	✓	✓	✓	✓	✓	✓
65525	Counter for limit violations GW16 [5]	UDINT		0 ... 4294967295	✓	✓	✓	✓	✓	✓	✓	✓

Z = additionally possible measured values in the current path (e.g. instead of neutral current)

1 Effective value

2 IEC 61557-12

3 floating arithmetic average value above 200 ms

4 floating arithmetic average value above 10 s

5 Simple summation

6 Calculation from the start/restart (inflow and outflow values are positive numbers)

7 floating arithmetic average value above 3 s

8 floating arithmetic average value above 600 s

9 floating arithmetic average value above 900 s

10 Block measurement over 900 s

11 direct measurement of the signal wave at 8 ksps

12 Total of the parts / number of parts

13 THD (Total Harmonic Distortion) is calculated once per second by the RMS of the fundamental oscillation and the total effective value (IEEE standard 1459–2010)

14 Min./Max: Slave pointer function of the respective basic value from start/reset

15 Calculation according to DIN EN 61000-3-316 half-wave value

16 Half-wave value

17 Instantaneous value

18 FFT (Fast Fourier Transformation)

19 While pure RMS measured values only contain AC voltage components of the signal, 10/12 and half-wave measured values also show DC voltage components of the signal

The table below is relevant for the description of the user data variants:

Measured value ID	Measured variables	Data type	Unit	Value range	Connection type							
					1 P 2 W	2 P 3 W	3x 1 P 2 W	3 P 4 W	3 P 4 W 1	3 P 3 W	3 P 3 W 1	3 P 4 W I
66001	Voltage L1-N [1]	UINT	0.01 V	0 ... 65535	✓	✓	✓	✓	✓			
66002	Voltage L2-N [1]	UINT	0.01 V	0 ... 65535		✓	✓	✓	✓			
66003	Voltage L3-N [1]	UINT	0.01 V	0 ... 65535			✓	✓	✓			
66004	Voltage L1-L2 [2]	UINT	0.01 V	0 ... 65535		✓		✓	✓	✓	✓	
66005	Voltage L2-L3 [2]	UINT	0.01 V	0 ... 65535				✓	✓	✓	✓	
66006	Voltage L3-L1 [2]	UINT	0.01 V	0 ... 65535				✓	✓	✓	✓	
66007	Current L1 [1]	UINT	1 mA	0 ... 65535	✓	✓	✓	✓	✓	✓	✓	✓
66008	Current L2 [1]	UINT	1 mA	0 ... 65535		✓	✓	✓	✓	✓	✓	✓
66009	Current L3 [1]	UINT	1 mA	0 ... 65535			✓	✓	✓	✓	✓	✓
66010	Apparent power L1 [3]	INT	1 VA	-27648 ... 27648	✓	✓	✓	✓	✓	✓	✓	
66011	Apparent power L2 [3]	INT	1 VA	-27648 ... 27648		✓	✓	✓	✓	✓	✓	
66012	Apparent power L3 [3]	INT	1 VA	-27648 ... 27648			✓	✓	✓	✓	✓	
66013	Active power L1 [3]	INT	1 W	-27648 ... 27648	✓	✓	✓	✓	✓	✓	✓	
66014	Active power L2 [3]	INT	1 W	-27648 ... 27648		✓	✓	✓	✓	✓	✓	
66015	Active power L3 [3]	INT	1 W	-27648 ... 27648			✓	✓	✓	✓	✓	
66016	Reactive power Qn L1[3]	INT	1 var	-27648 ... 27648	✓	✓	✓	✓	✓	✓	✓	
66017	Reactive power Qn L2[3]	INT	1 var	-27648 ... 27648		✓	✓	✓	✓	✓	✓	
66018	Reactive power Qn L3[3]	INT	1 var	-27648 ... 27648			✓	✓	✓	✓	✓	
66019	Power factor λ L1 [3]	USINT	0.01	0 ... 100	✓	✓	✓	✓	✓	✓	✓	
66020	Power factor λ L2 [3]	USINT	0.01	0 ... 100		✓	✓	✓	✓	✓	✓	
66021	Power factor λ L3 [3]	USINT	0.01	0 ... 100			✓	✓	✓	✓	✓	
66030	Frequency [4]	USINT	1 Hz	45 ... 65	✓	✓	✓	✓	✓	✓	✓	✓
66034	Active power L1L2L3 [5]	INT	1 W	-27648 ... 27648	✓	✓	✓	✓	✓	✓	✓	
66035	Reactive power Qn L1L2L3[5]	INT	1 var	-27648 ... 27648	✓	✓	✓	✓	✓	✓	✓	
66036	Apparent power L1L2L3 [5]	INT	1 VA	-27648 ... 27648	✓	✓	✓	✓	✓	✓	✓	
66037	Power factor λ L1L2L3 [6]	USINT	0.01	0 ... 100	✓	✓	✓	✓	✓	✓	✓	
66038	Frequency [4]	UINT	0.01 Hz	4500 ... 6500	✓	✓	✓	✓	✓	✓	✓	✓

Format

Table B- 2 Format and its length in bytes

Format in STEP 7 (TIA Portal)	Format to IEEE	Length in bytes	Comment
BYTE	BYTE	1 byte	Bit field with 8 bit
WORD	WORD	2 bytes	Bit field with 16 bit
SINT	INT8 (signed)	1 byte	Fixed-point number 8 bits with sign
USINT	INT8 (unsigned)	1 byte	Fixed-point number 8 bits without sign
INT	INT (signed)	2 bytes	Fixed-point number 16 bits with sign
UINT	INT (unsigned)	2 bytes	Fixed-point number 16 bits without sign
UDINT	INT32 (unsigned)	4 bytes	Fixed-point number 32 bits without sign
DINT	INT32 (signed)	4 bytes	Fixed-point number, 32 bits with sign
REAL	Float32	4 bytes	Floating-point number 32 bits with sign
LREAL	Float64	8 bytes	Floating-point number 64 bits with sign

Module versions

C

C.1 Module version "2 I / 2 Q"

User data of the module

The module has 2 bytes of input user data and 2 bytes of output user data for status and control information. At this module version measured variables can be read solely via measured value data records (no measured variables can be evaluated via user data).

Structure of input user data

The structure of the input user data is fixed.

Table C- 1 Structure of input user data (2 bytes)

Byte	Validity	Designation	Comment
0	Module	User data variant	Constant = 0x80
1	Module	Quality information	Quality bits to describe the quality of the basic measured values

Allocation of the input user data

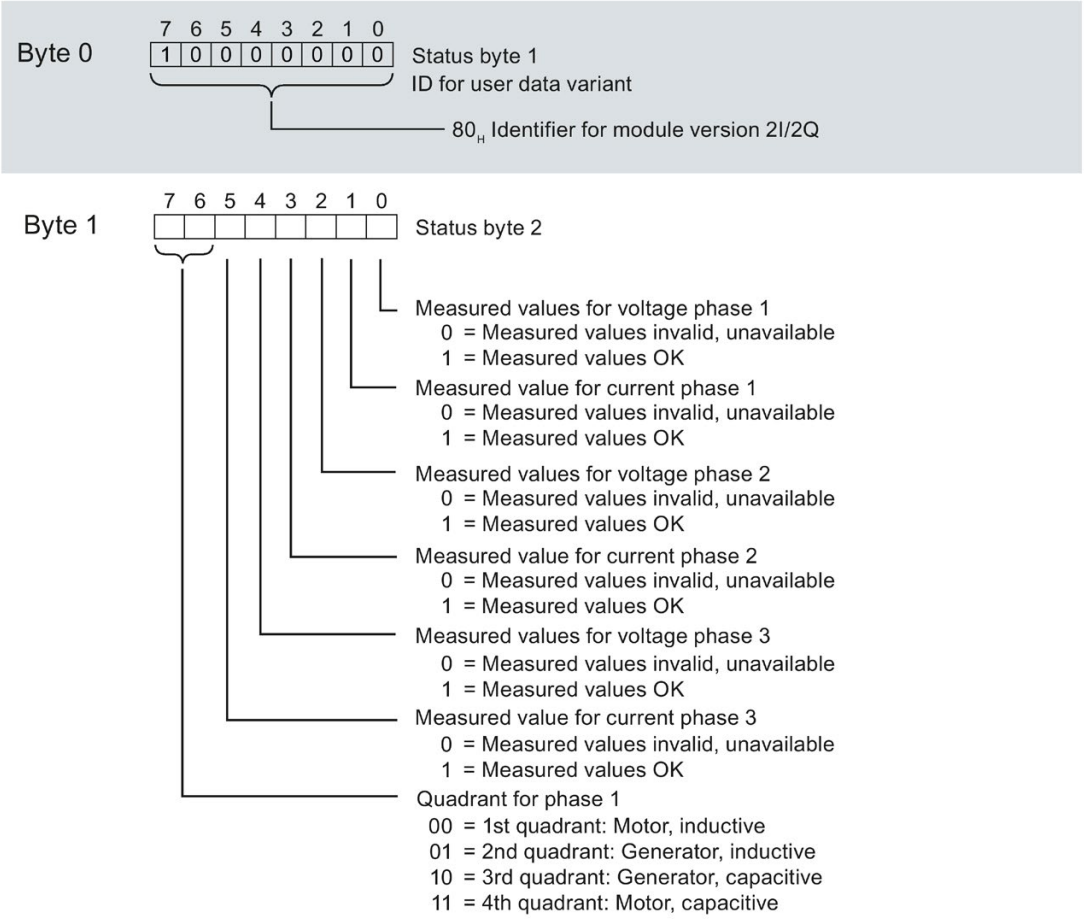

Figure C-1 Allocation of the status bytes in the input user data (2 bytes)

Structure of output user data

The structure of the output user data is fixed.

Table C- 2 Structure of output user data (2 bytes)

Byte	Validity	Designation	Comment
0	Module	Reserved	Reserved
1	Module	Control outputs	Reset of values and counters, gate

Assignment of the output user data

Via the output user data you control for all phases

- Resetting for all minimum values, maximum values, limits, operating hours counter and energy meters.
- The counter gates for operating hours counter and energy counters.

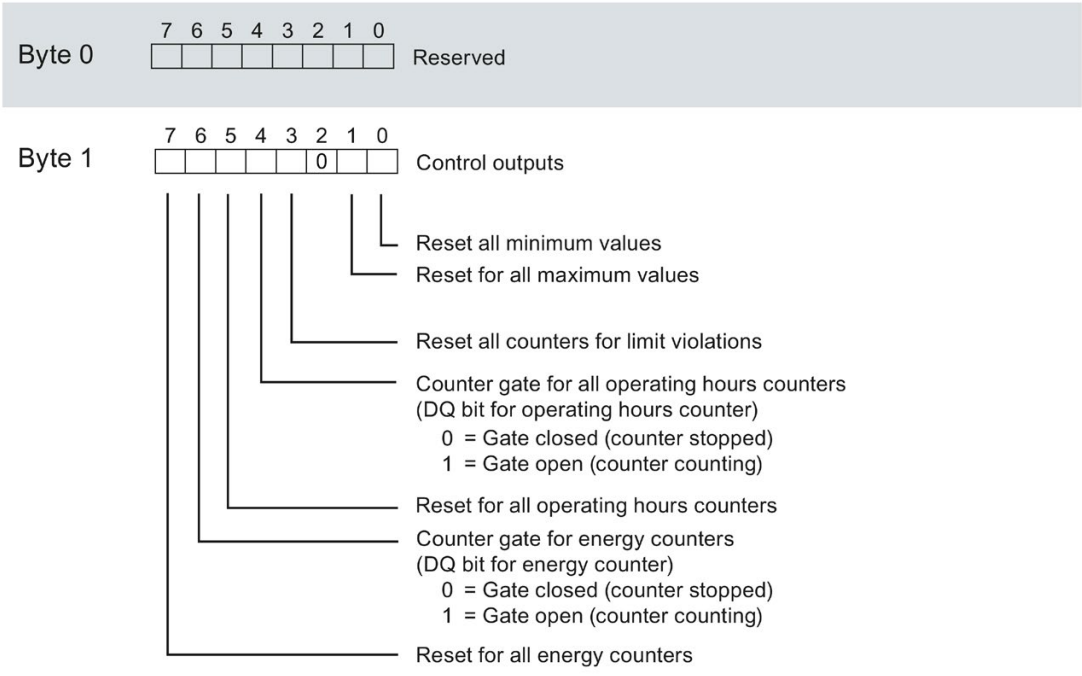

Figure C-2 Allocation of the control byte in the output user data (1 byte)

Note

For module version 2 I / 2 Q, a reset of the selected variables always acts on **all** measured values/counter levels of the three phases.

- Reset energy counter: Acts on all active, reactive and apparent energies of all phases
- Reset operating hours counter: Acts on the counters of Phases 1 to 3
- Reset minimum / maximum values: Acts on the minimum and maximum value calculations of Phases 1-3
- Reset all counters for limit violations: Acts on all 16 limit values.

C.2 Module version "32 I / 20 Q"

User data of the module

The module occupies 32 bytes of input user data and 20 bytes of output user data. Of these the module uses 2 bytes input data for status information and 20 bytes output data for control information. Measured variables can be read cyclically via user data (Bytes 2 to 31) or acyclically via measured value data records

Structure of input user data

You can set the contents of the input user data dynamically. You can choose between different user data variants.

Table C- 3 Structure of input user data (32 bytes)

Byte	Validity	Designation	Comment
0	Module	User data variant	-
1	Module	Quality information	Quality bits to describe the quality of the basic measured values
2 ... 31	Module or phase	Data	2 or 4 byte measured values or cumulative values according to user data variant

Allocation of the input user data

You can change the measured variables during operation. You can choose between different user data variants.

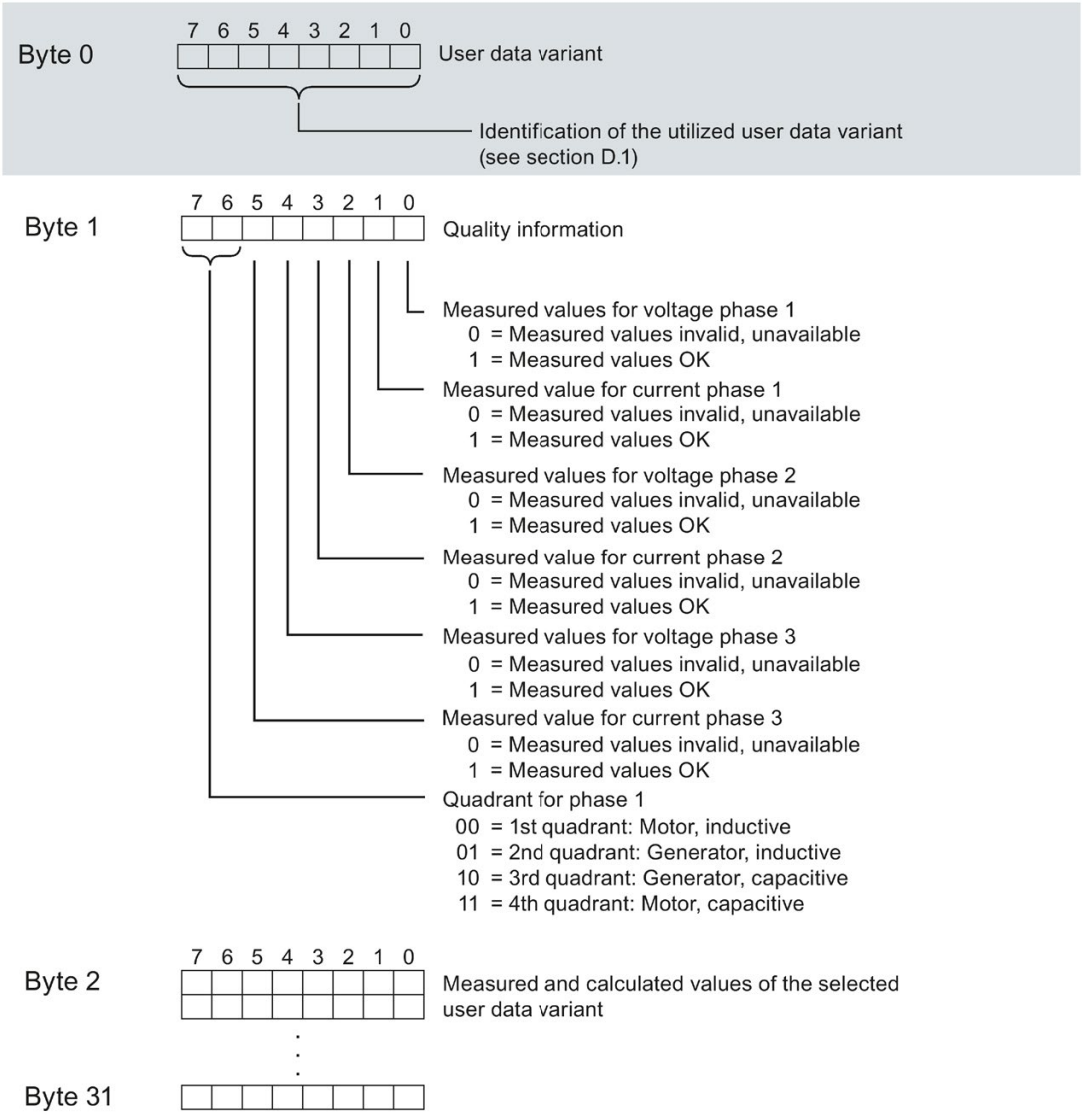

Figure C-3 Assignment of the input user data (32 bytes)

Structure of output user data

The structure of the output user data is fixed and is the same at all the selectable user data variants.

Via the output user data you control globally or phase-specifically

- Resetting for minimum values, maximum values, limits, operating hours counter and energy meters.
- The counter gates for operating hours counter and energy counters.
- Gate for limits, minimum values and maximum values.

Table C- 4 Structure of output user data (20 bytes)

Byte	Validity	Designation	Comment
0	Module	User data variant	Control byte for switching the user data variant
1	Module	Control byte 1	Global resetting of values and counters, gate
2	Module	Control byte 2	Selection of the energy counter to be reset
3	Module	Control byte 3	Control of the limit monitoring of limit values 9 to 16
4	Module	Control byte 4	Control of the limit monitoring of limit values 1 to 8
5	Module	Reserved	-
6	Phase L1	Control byte 6	Phase-specific resetting of values and counters, gate for Phase L1
7	Phase L1	Control byte 7	
8	Phase L2	Control byte 8	Phase-specific resetting of values and counters, gate for Phase L2
9	Phase L2	Control byte 9	
10	Phase L3	Control byte 10	Phase-specific resetting of values and counters, gate for Phase L3
11	Phase L3	Control byte 11	
12	Module and phases L1, L2, L3	Control byte 12	Deletion of power quality analysis results or starting/stopping the analysis of harmonics
13	Reserved		
14	Reserved		
15	Reserved		
16	Module and phases L1, L2, L3	Control byte 16	General reset (Page 41)
17	Reserved		
18	Reserved		
19	Reserved		

Control bytes for user data variant

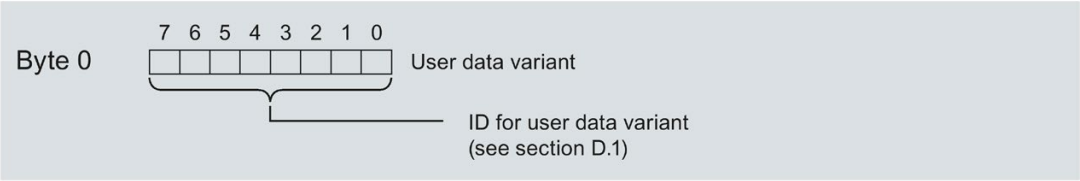

Figure C-4 Allocation of the control bytes for user data variant (Byte 0)

Control bytes for all three phases

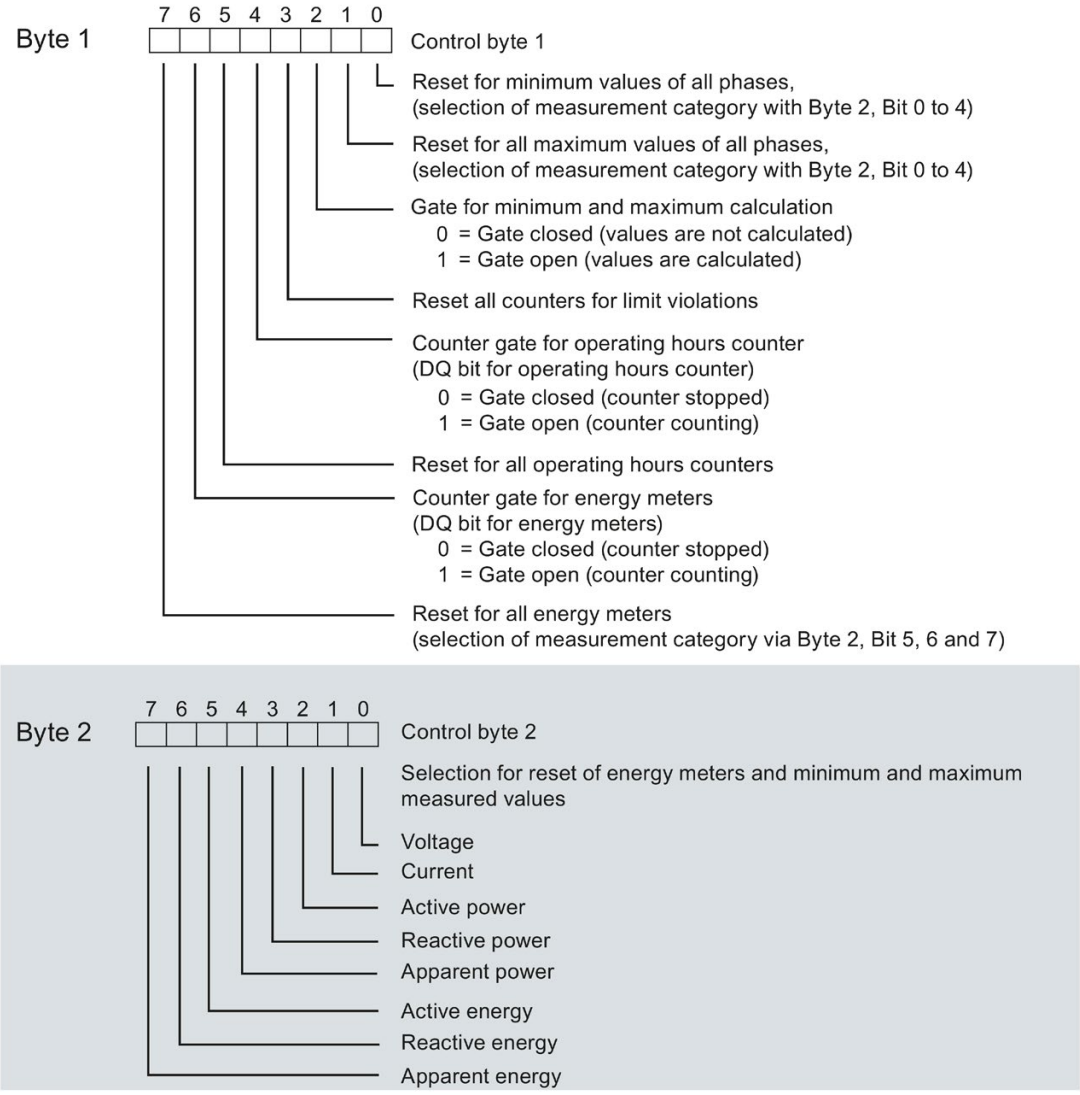

Figure C-5 Allocation of the control bytes for all three phases (bytes 1 and 2)

Control bytes for limit monitoring

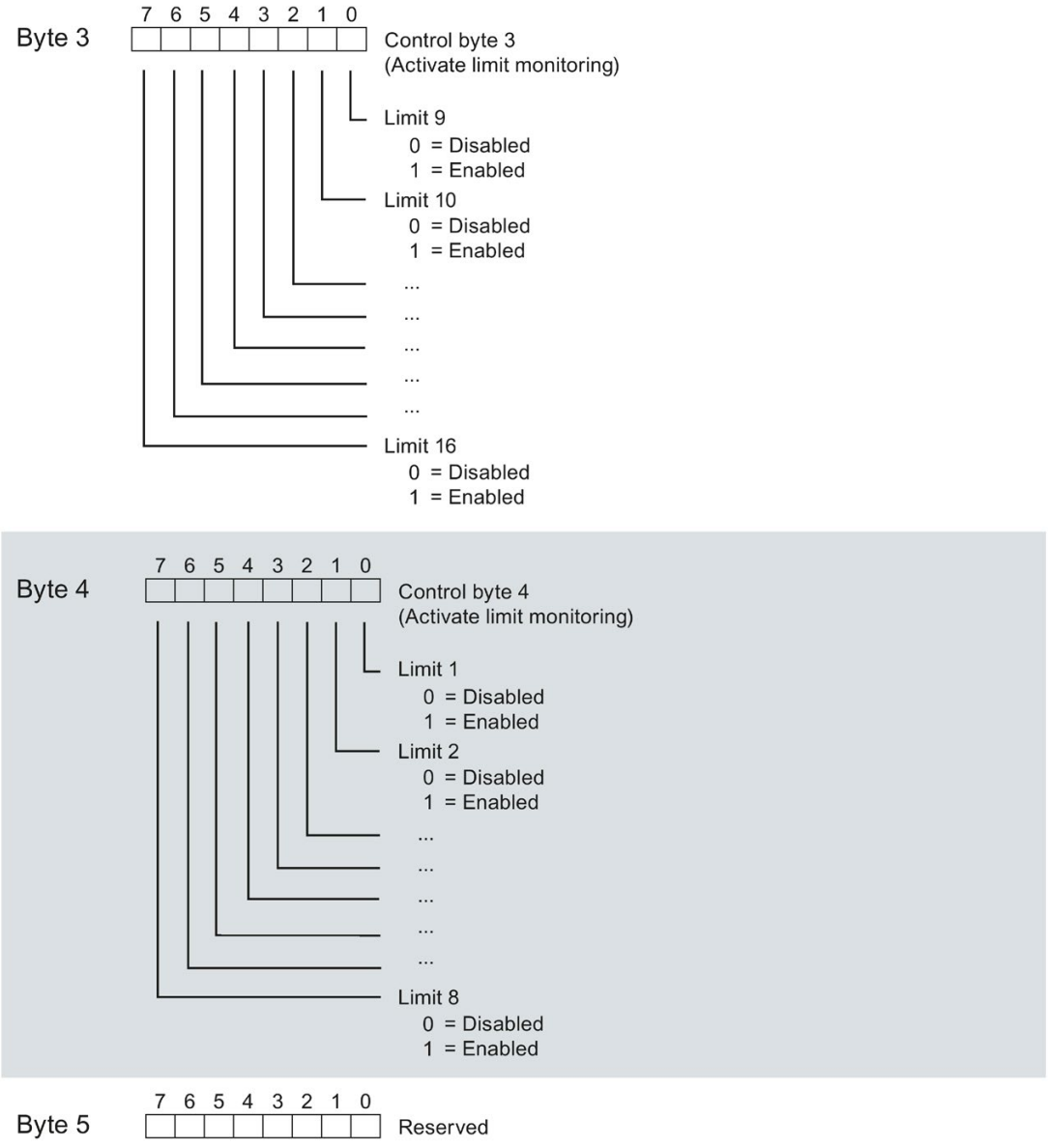

Figure C-6 Allocation of the control bytes for limit monitoring (bytes 3 to 5)

Control bytes for each individual phase

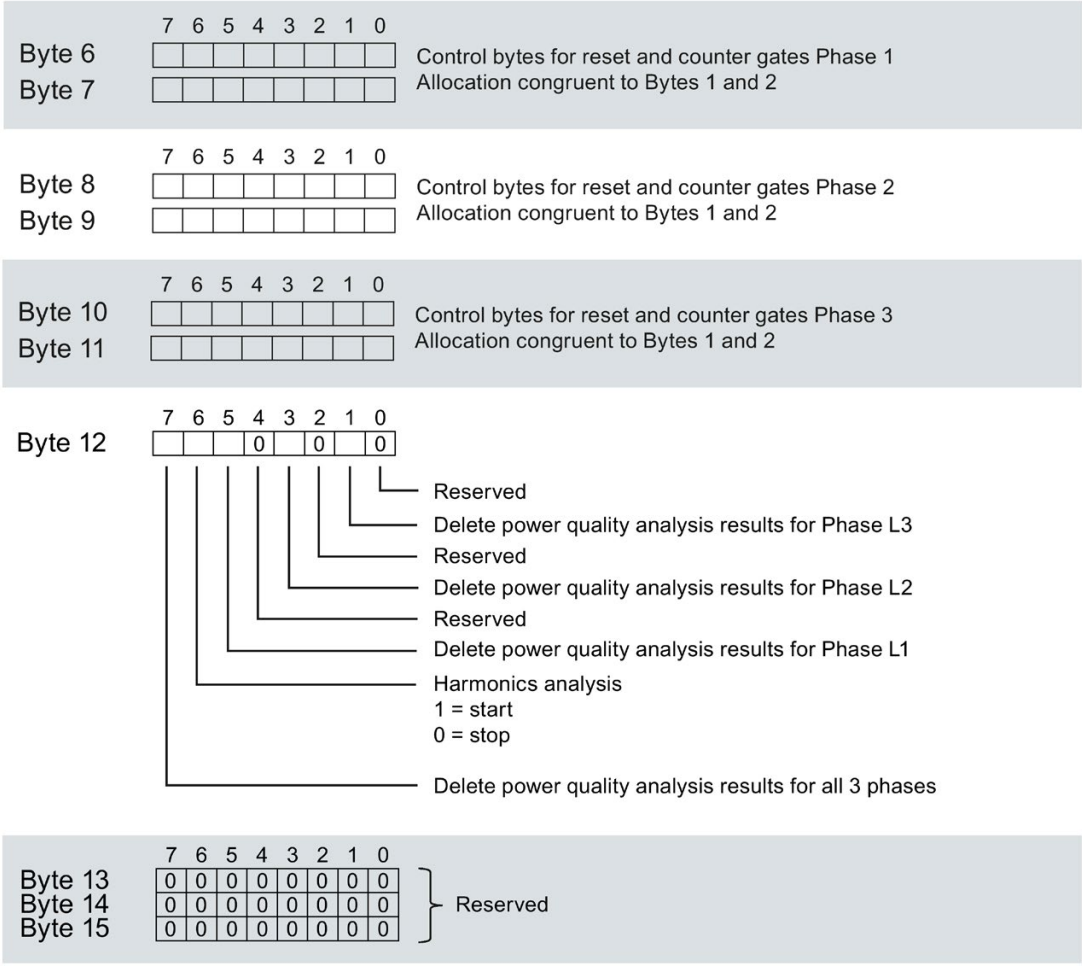

Figure C-7 Allocation of the control bytes for each individual phase (bytes 6 to 15)

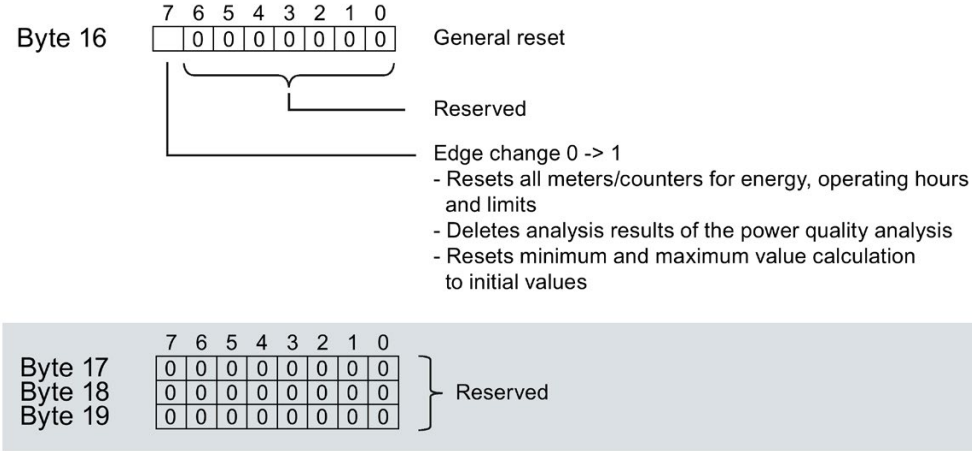

Figure C-8 Allocation of the control bytes for each individual phase (bytes 16 to 19)

C.3 "User-specific" module version

User data of the module

The module occupies between 16 and 256 bytes of input user data and 20 bytes of output user data. Of these the module uses 2 bytes input data for status information and 20 bytes output data for control information. Measured variables can be read cyclically via user data (as of Byte 2) or acyclically via measured value data records

Structure of input user data

You configure the structure of the input user data starting at Byte 2 at this module version itself. An input user data length of 32 bytes also allows you to set the input user data dynamically. You can choose between different user data variants.

Table C- 5 Structure of input user data (16 to 256 bytes)

Byte	Validity	Designation	Comment
0	Module	User data variant	-
1	Module	Quality information	Quality bits to describe the quality of the basic measured values
2 ... 255	Module or phase	Data	Measured values or calculated values in accordance with their configuration: • At configuration in STEP 7 the size of the input user data is calculated automatically. • With configuration via the GSD file the size of the input user data amounts to 32, 64, 128 or 256 bytes. The memory area has to be sufficiently large for the measured variables defined in parameter data record 130 or 131.

Allocation of the input user data

You can change the measured variables during operation. You can choose between different user data variants.

The allocation of the status information in bytes 0 and 1 corresponds to the module version 32 I / 20 Q, see appendix Module version "32 I / 20 Q" (Page 195).

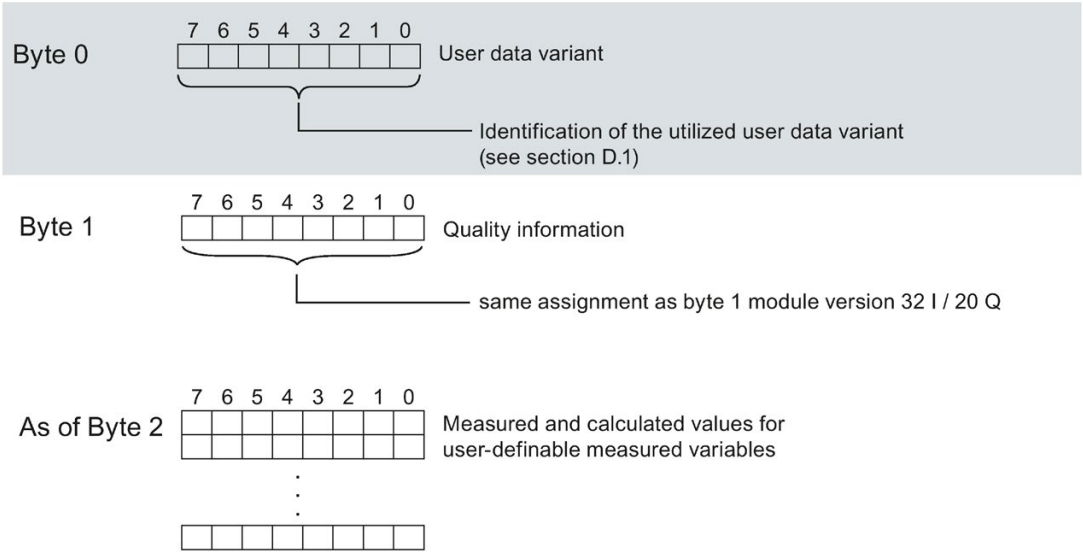

Figure C-9 Allocation of the input user data ("User-specific" module version"

Note

Behavior at switchover in case of the input user data being too small

If the configured size of the variable input user data is smaller than the sized of the fixed user data variant, the response depends on the type of switchover:

- Re-assigning parameters via parameter data records DS 128 / DS 130 / DS 131: Output of a parameter assignment error (33). No switchover.
- Switchover using output byte 0 of a user data variant: No switchover and no error message.

Structure of output user data

The structure of the 20-byte output user data is fixed and is identical to the output user data (control bytes) of the Module version "32 I / 20 Q" (Page 195).

C.4 Module version "EE@Industry measurement data profile E0 / E1 / E2 / E3"

User data of the module

The four versions according to EE@Industry use between 4 and 104 bytes of input user data and 20 bytes of output user data. A dynamic switchover of the input user data is not possible.

Structure of input user data

The structure of the input user data for the module versions according to the EE@Industry standard is fixed and depends on the selected measurement data profile.

Table C- 6 Measurement data profile E0

Byte	Allocation	Data type	Unit	Value range	Measured value ID
0...3	Current L1	REAL	1 A	0.0 … 100000.0	7
4...7	Current L2	REAL	1 A	0.0 … 100000.0	8
8...11	Current L3	REAL	1 A	0.0 … 100000.0	9

Table C- 7 Measurement data profile E1

Byte	Allocation	Data type	Unit	Value range	Measured value ID
0...3	Total active power L1L2L3	REAL	1 W	-3.0e+9 ... +3.0e+9	34

Table C- 8 Measurement data profile E2

Byte	Allocation	Data type	Unit	Value range	Measured value ID
0...3	Total active power L1L2L3	REAL	1 W	-3.0e+9 ... +3.0e+9	34
4...7	Total active energy L1L2L3 inflow	REAL	1 Wh	0.0 ... 3.4028e+38	200
8...11	Total active energy L1L2L3 outflow	REAL	1 Wh	0.0 ... 3.4028e+38	201

Table C- 9 Measurement data profile E3

Byte	Allocation	Data type	Unit	Value range	Measured value ID
0...3	Active power L1	REAL	1 W	-3.0e+9 ... +3.0e+9	13
4...7	Active power L2	REAL	1 W	-3.0e+9 ... +3.0e+9	14
8...11	Active power L3	REAL	1 W	-3.0e+9 ... +3.0e+9	15
12...15	Reactive power Qtot L1	REAL	1 var	-3.0e+9 ... +3.0e+9	22
16...19	Reactive power Qtot L2	REAL	1 var	-3.0e+9 ... +3.0e+9	23
20...23	Reactive power Qtot L3	REAL	1 var	-3.0e+9 ... +3.0e+9	24
24...31	Total active energy L1L2L3 inflow	LREAL	1 Wh	0.0 ... 1.7976e+308	210
32...39	Total active energy L1L2L3 outflow	LREAL	1 Wh	0.0 ... 1.7976e+308	211
40...47	Total reactive energy L1L2L3 inflow	LREAL	1 varh	0.0 ... 1.7976e+308	212
48...55	Total reactive energy L1L2L3 outflow	LREAL	1 varh	0.0 ... 1.7976e+308	213
56...59	Voltage UL1-N	REAL	1 V	0.0 … 1000000.0	1
60...63	Voltage UL2-N	REAL	1 V	0.0 … 1000000.0	2
64...67	Voltage UL3-N	REAL	1 V	0.0 … 1000000.0	3
68...71	Voltage UL1-UL2	REAL	1 V	0.0 … 1000000.0	4
72...75	Voltage UL2-UL3	REAL	1 V	0.0 … 1000000.0	5
76...79	Voltage UL3-UL1	REAL	1 V	0.0 … 1000000.0	6
80...83	Current L1	REAL	1 A	0.0 … 100000.0	7
84...87	Current L2	REAL	1 A	0.0 … 100000.0	8
88...91	Current L3	REAL	1 A	0.0 … 100000.0	9
92...95	Power factor L1	REAL	-	0.0 … 1.0	19
96...99	Power factor L2	REAL	-	0.0 … 1.0	20
100...103	Power factor L3	REAL	-	0.0 … 1.0	21

Structure of output user data

The structure of the 20-byte output user data is fixed and is identical to the output user data (control bytes) of the Module version "32 I / 20 Q" (Page 195).

User data variants

D

User data

The following table shows the existing user data variants.

Table D- 1 Overview of the user data variants

User data	User data variant
Total power L1L2L3	254 (FE_H) - default setting
Active power L1L2L3	253 (FD_H)
Reactive power L1L2L3	252 (FC_H)
Apparent power L1L2L3	251 (FB_H)
Basic measured values L1L2L3	250 (FA_H)
Total energy L1L2L3	249 ($F9_H$)
Energy L1	248 ($F8_H$)
Energy L2	247 ($F7_H$)
Energy L3	246 ($F6_H$)
Basic variables three-phase measurement L1L2L3	245 ($F5_H$)
Reactive power compensation	244 ($F4_H$)
Quality values three-phase measurement	240 ($F0_H$)
Energy measurement (periodic) overflow counter	239 (EF_H)
EE@Industry measurement data profile E3	227 ($E3_H$)
EE@Industry measurement data profile E2	226 ($E2_H$)
EE@Industry measurement data profile E1	225 ($E1_H$)
EE@Industry measurement data profile E0	224 ($E0_H$)
Basic variables phase-specific measurement L1	159 ($9F_H$)
Single-phase measurement L1 with voltage scaling value	158 ($9E_H$)
Basic variables phase-specific measurement L2	157 ($9D_H$)
Single-phase measurement L2 with voltage scaling value	156 ($9C_H$)
Basic variables phase-specific measurement L3	155 ($9B_H$)
Single-phase measurement L3 with voltage scaling value	154 ($9A_H$)
User-defined user data structure I	1 (01_H)
User-defined user data structure II	2 (02_H)

Information on using and dynamic switching of the user data variants can be found under "Selecting the module versions (Page 32)".

Total power L1L2L3 (ID 254 or FE_H)

Table D- 2 Total power L1L2L3

Byte	Allocation	Data type	Unit	Value range	Measured value ID
0	User data variant	BYTE	-	254 (FE_H)	-
1	Quality information = QQ_1 I_3 U_3 I_2 U_2 I_1 U_1	BYTE	Bit string	qq xx xx xx	-
2 ... 3	Current L1	UINT	1 mA	0 … 65535	66007
4 ... 5	Current L2	UINT	1 mA	0 … 65535	66008
6 ... 7	Current L3	UINT	1 mA	0 … 65535	66009
8 ... 9	Total active power L1L2L3	INT	1 W	-27648 … 27648	66034
10 ... 11	Total reactive power Qtot L1L2L3	INT	1 var	-27648 … 27648	66038
12 ... 13	Total apparent power L1L2L3	INT	1 VA	-27648 … 27648	66036
14 ... 17	Total active energy L1L2L3	DINT	1 Wh	-2147483647... +2147483647	225
18 ... 21	Total reactive energy L1L2L3	DINT	1 varh	-2147483647... +2147483647	226
22	Reserved	BYTE	-	0	-
23	Total power factor L1L2L3	USINT	0.01	0 … 100	66037
24	Scaling current L1	USINT	-	0 ... 255	-
25	Scaling current L2	USINT	-	0 ... 255	-
26	Scaling current L3	USINT	-	0 ... 255	-
27	Scaling total active power L1L2L3	USINT	-	0 ... 255	-
28	Scaling total reactive power L1L2L3	USINT	-	0 ... 255	-
29	Scaling total apparent power L1L2L3	USINT	-	0 ... 255	-
30	Scaling total active energy L1L2L3	USINT	-	0 ... 255	-
31	Scaling total reactive energy L1L2L3	USINT	-	0 ... 255	-

Active power L1L2L3 (ID 253 or FD_H)

Table D- 3 Active power L1L2L3

Byte	Allocation	Data type	Unit	Value range	Measured value ID
0	User data variant	BYTE	-	253 (FD_H)	-
1	Quality information = QQ_1 I_3 U_3 I_2 U_2 I_1 U_1	BYTE	Bit string	qq xx xx xx	-
2 ... 3	Current L1	UINT	1 mA	0 … 65535	66007
4 ... 5	Current L2	UINT	1 mA	0 … 65535	66008
6 ... 7	Current L3	UINT	1 mA	0 … 65535	66009
8 ... 9	Active power L1	INT	1 W	-27648 … 27648	66013
10 ... 11	Active power L2	INT	1 W	-27648 … 27648	66014
12 ... 13	Active power L3	INT	1 W	-27648 … 27648	66015
14 ... 15	Total active power L1L2L3	INT	1 W	-27648 … 27648	66034
16 ... 19	Total active energy L1L2L3	DINT	1 Wh	-2147483647... +2147483647	225
20	Power factor L1	USINT	0.01	0 … 100	66019
21	Power factor L2	USINT	0.01	0 … 100	66020
22	Power factor L3	USINT	0.01	0 … 100	66021
23	Total power factor L1L2L3	USINT	0.01	0 … 100	66037
24	Scaling current L1	USINT	-	0 ... 255	-
25	Scaling current L2	USINT	-	0 ... 255	-
26	Scaling current L3	USINT	-	0 ... 255	-
27	Scaling active power L1	USINT	-	0 ... 255	-
28	Scaling active power L2	USINT	-	0 ... 255	-
29	Scaling active power L3	USINT	-	0 ... 255	-
30	Scaling active power L1L2L3	USINT	-	0 ... 255	-
31	Scaling total active energy L1L2L3	USINT	-	0 ... 255	-

Reactive power L1L2L3 (ID 252 or FC_H)

Table D- 4 Reactive power L1L2L3

Byte	Allocation	Data type	Unit	Value range	Measured value ID
0	User data variant	BYTE	-	252 (FC_H)	-
1	Quality information = QQ_1 I_3 U_3 I_2 U_2 I_1 U_1	BYTE	Bit string	qq xx xx xx	-
2 ... 3	Current L1	UINT	1 mA	0 … 65535	66007
4 ... 5	Current L2	UINT	1 mA	0 … 65535	66008
6 ... 7	Current L3	UINT	1 mA	0 … 65535	66009
8 ... 9	Reactive power Qtot L1	INT	1 var	-27648 … 27648	66022
10 ... 11	Reactive power Qtot L2	INT	1 var	-27648 … 27648	66023
12 ... 13	Reactive power Qtot L3	INT	1 var	-27648 … 27648	66024
14 ... 15	Total reactive power Qtot L1L2L3	INT	1 var	-27648 … 27648	66038
16 ... 19	Total reactive energy L1L2L3	DINT	1 varh	-2147483647... +2147483647	222
20	Power factor L1	USINT	0.01	0 … 100	66019
21	Power factor L2	USINT	0.01	0 … 100	66020
22	Power factor L3	USINT	0.01	0 … 100	66021
23	Total power factor L1L2L3	USINT	0.01	0 … 100	66037
24	Scaling current L1	USINT	-	0 ... 255	-
25	Scaling current L2	USINT	-	0 ... 255	-
26	Scaling current L3	USINT	-	0 ... 255	-
27	Scaling reactive power L1	USINT	-	0 ... 255	-
28	Scaling reactive power L2	USINT	-	0 ... 255	-
29	Scaling reactive power L3	USINT	-	0 ... 255	-
30	Scaling reactive power L1L2L3	USINT	-	0 ... 255	-
31	Scaling total reactive energy L1L2L3	USINT	-	0 ... 255	-

Apparent power L1L2L3 (ID 251 or FB_H)

Table D- 5 Apparent power L1L2L3

Byte	Allocation	Data type	Unit	Value range	Measured value ID
0	User data variant	BYTE	-	251 (FB_H)	-
1	Quality information = QQ_1 I_3 U_3 I_2 U_2 I_1 U_1	BYTE	Bit string	qq xx xx xx	-
2 ... 3	Current L1	UINT	1 mA	0 … 65535	66007
4 ... 5	Current L2	UINT	1 mA	0 … 65535	66008
6 ... 7	Current L3	UINT	1 mA	0 … 65535	66009
8 ... 9	Apparent power L1	INT	1 VA	-27648 … 27648	66010
10 ... 11	Apparent power L2	INT	1 VA	-27648 … 27648	66011
12 ... 13	Apparent power L3	INT	1 VA	-27648 … 27648	66012
14 ... 15	Total apparent power L1L2L3	INT	1 VA	-27648 … 27648	66036
16 ... 19	Total apparent energy L1L2L3	DINT	1 VAh	0 to 2147483647	224
20	Power factor L1	USINT	0.01	0 … 100	66019
21	Power factor L2	USINT	0.01	0 … 100	66020
22	Power factor L3	USINT	0.01	0 … 100	66021
23	Total power factor L1L2L3	USINT	0.01	0 … 100	66037
24	Scaling current L1	USINT	-	0 ... 255	-
25	Scaling current L2	USINT	-	0 ... 255	-
26	Scaling current L3	USINT	-	0 ... 255	-
27	Scaling apparent power L1	USINT	-	0 ... 255	-
28	Scaling apparent power L2	USINT	-	0 ... 255	-
29	Scaling apparent power L3	USINT	-	0 ... 255	-
30	Scaling apparent power L1L2L3	USINT	-	0 ... 255	-
31	Scaling total apparent energy L1L2L3	USINT	-	0 ... 255	-

Basic measured values L1L2L3 (ID 250 or FA_H)

Table D- 6 Basic measured values L1L2L3

Byte	Allocation	Data type	Unit	Value range	Measured value ID
0	User data variant	BYTE	-	250 (FA_H)	-
1	Quality information = QQ_1 I_3 U_3 I_2 U_2 I_1 U_1	BYTE	Bit string	qq xx xx xx	-
2 ... 3	Current L1	UINT	1 mA	0 … 65535	66007
4 ... 5	Current L2	UINT	1 mA	0 … 65535	66008
6 ... 7	Current L3	UINT	1 mA	0 … 65535	66009
8 ... 9	Voltage UL1-N	UINT	0.01 V	0 … 65535	66001
10 ... 11	Voltage UL2-N	UINT	0.01 V	0 … 65535	66002
12 ... 13	Voltage UL3-N	UINT	0.01 V	0 … 65535	66003
14 ... 15	Voltage UL1-UL2	UINT	0.01 V	0 … 65535	66004
16 ... 17	Voltage UL2-UL3	UINT	0.01 V	0 … 65535	66005
18 ... 19	Voltage UL3-UL1	UINT	0.01 V	0 … 65535	66006
20	Power factor L1	USINT	0.01	0 … 100	66019
21	Power factor L2	USINT	0.01	0 … 100	66020
22	Power factor L3	USINT	0.01	0 … 100	66021
23	Total power factor L1L2L3	USINT	0.01	0 … 100	66037
24	Scaling current L1	USINT	-	0 ... 255	-
25	Scaling current L2	USINT	-	0 ... 255	-
26	Scaling current L3	USINT	-	0 ... 255	-
27	Scaling voltage UL1-N (UL1-UL2)	USINT	-	0 ... 255	-
28	Scaling voltage UL2-N (UL2-UL3)	USINT	-	0 ... 255	-
29	Scaling voltage UL3-N (UL3-UL1)	USINT	-	0 ... 255	-
30 ... 31	Frequency	UINT	0.01 Hz	4500 ... 6500	66038

Total energy L1L2L3 (ID 249 or $F9_H$)

Table D- 7 Total energy L1L2L3

Byte	Allocation	Data type	Unit	Value range	Measured value ID
0	User data variant	BYTE	-	249 ($F9_H$)	-
1	Quality information = QQ_1 I_3 U_3 I_2 U_2 I_1 U_1	BYTE	Bit string	qq xx xx xx	-
2	Reserved	BYTE	-	-	-
3	Reserved	BYTE	-	-	-
4 ... 7	Total active energy inflow L1L2L3	UDINT	1 Wh	0 to 2147483647	210
8 ... 11	Total active energy outflow L1L2L3	UDINT	1 Wh	0 to 2147483647	211
11 ... 15	Total reactive energy inflow L1L2L3	UDINT	1 varh	0 to 2147483647	212
16 ... 19	Total reactive energy outflow L1L2L3	UDINT	1 varh	0 to 2147483647	213
20 ... 23	Total apparent energy L1L2L3	UDINT	1 VAh	0 to 2147483647	214
24	Reserved	BYTE	-	-	-
25	Scaling active energy, inflow	USINT	-	0 ... 255	-
26	Scaling active energy, outflow	USINT	-	0 ... 255	-
27	Scaling reactive energy, inflow	USINT	-	0 ... 255	-
28	Scaling reactive energy, outflow	USINT	-	0 ... 255	-
29	Scaling apparent energy	USINT	-	0 ... 255	-
30	Reserved	BYTE	-	-	-
31	Total power factor L1L2L3	USINT	0.01	0 … 100	66037

Energy L1 (ID 248 or $F8_H$)

Table D- 8 Energy L1

Byte	Allocation	Data type	Unit	Value range	Measured value ID
0	User data variant	BYTE	-	248 ($F8_H$)	-
1	Quality information = QQ_1 I_3 U_3 I_2 U_2 I_1 U_1	BYTE	Bit string	qq xx xx xx	-
2 ... 3	Current L1	UINT	1 mA	0 … 65535	66007
4 ... 7	Active energy inflow L1	UDINT	1 Wh	0 ... 2147483647	62110
8 ... 11	Active energy outflow L1	UDINT	1 Wh	0 ... 2147483647	62111
11 ... 15	Reactive energy inflow L1	UDINT	1 varh	0 ... 2147483647	62112
16 ... 19	Reactive energy outflow L1	UDINT	1 varh	0 ... 2147483647	62113
20 ... 23	Apparent energy L1	UDINT	1 VAh	0 ... 2147483647	62114
24	Scaling current L1	USINT	-	0 ... 255	-
25	Scaling active energy inflow L1	USINT	-	0 ... 255	-
26	Scaling active energy outflow L1	USINT	-	0 ... 255	-
27	Scaling reactive energy inflow L1	USINT	-	0 ... 255	-
28	Scaling reactive energy outflow L1	USINT	-	0 ... 255	-
29	Scaling apparent energy L1	USINT	-	0 ... 255	-
30	Reserved	BYTE	-	-	-
31	Power factor L1	USINT	0.01	0 … 100	66019

Energy L2 (ID 247 or $F7_H$)

Table D- 9 Energy L2

Byte	Allocation	Data type	Unit	Value range	Measured value ID
0	User data variant	BYTE	-	247 ($F7_H$)	-
1	Quality information = QQ_1 I_3 U_3 I_2 U_2 I_1 U_1	BYTE	Bit string	qq xx xx xx	-
2 ... 3	Current L2	UINT	1 mA	0 … 65535	66008
4 ... 7	Active energy inflow L2	UDINT	1 Wh	0 to 2147483647	62210
8 ... 11	Active energy outflow L2	UDINT	1 Wh	0 to 2147483647	62211
11 ... 15	Reactive energy inflow L2	UDINT	1 varh	0 to 2147483647	62212
16 ... 19	Reactive energy outflow L2	UDINT	1 varh	0 to 2147483647	62213
20 ... 23	Apparent energy L2	UDINT	1 VAh	0 to 2147483647	62214
24	Scaling current L2	USINT	-	0 ... 255	-
25	Scaling active energy inflow L2	USINT	-	0 ... 255	-
26	Scaling active energy outflow L2	USINT	-	0 ... 255	-
27	Scaling reactive energy inflow L2	USINT	-	0 ... 255	-
28	Scaling reactive energy outflow L2	USINT	-	0 ... 255	-
29	Scaling apparent energy L2	USINT	-	0 ... 255	-
30	Reserved	BYTE	-	-	-
31	Power factor L2	USINT	0.01	0 … 100	66020

Energy L3 (ID 246 or $F6_H$)

Table D- 10 Energy L3

Byte	Allocation	Data type	Unit	Value range	Measured value ID
0	User data variant	BYTE	-	246 ($F6_H$)	-
1	Quality information = QQ_1 I_3 U_3 I_2 U_2 I_1 U_1	BYTE	Bit string	qq xx xx xx	-
2 ... 3	Current L3	UINT	1 mA	0 … 65535	66009
4 ... 7	Active energy inflow L3	UDINT	1 Wh	0 to 2147483647	62310
8 ... 11	Active energy L3, outflow	UDINT	1 Wh	0 to 2147483647	62311
11 ... 15	Reactive energy inflow L3	UDINT	1 varh	0 to 2147483647	62312
16 ... 19	Reactive energy outflow L3	UDINT	1 varh	0 to 2147483647	62313
20 ... 23	Apparent energy L3	UDINT	1 VAh	0 to 2147483647	62314
24	Scaling current L3	USINT	-	0 ... 255	-
25	Scaling active energy inflow L3	USINT	-	0 ... 255	-
26	Scaling active energy outflow L3	USINT	-	0 ... 255	-
27	Scaling reactive energy inflow L3	USINT	-	0 ... 255	-
28	Scaling reactive energy outflow L3	USINT	-	0 ... 255	-
29	Scaling apparent energy L3	USINT	-	0 ... 255	-
30	Reserved	BYTE	-	-	-
31	Power factor L3	USINT	0.01	0 … 100	66021

Basic variables three-phase measurements (ID 245 or $F5_H$)

Table D- 11 Basic variables three-phase measurements

Byte	Allocation	Data type	Unit	Value range	Measured value ID
0	User data variant	BYTE	-	245 ($F5_H$)	-
1	Quality information = QQ_1 I_3 U_3 I_2 U_2 I_1 U_1	BYTE	Bit string	qq xx xx xx	-
2 ... 5	Total active power L1L2L3	REAL	1 W	-3×10^9 ... $+3 \times 10^9$	34
6 ... 9	Total active energy outflow L1L2L3	REAL	1 Wh	0.0 ... 3.4×10^{38}	62418
10 ... 13	Total active energy inflow L1L2L3	REAL	1 Wh	0.0 ... 3.4×10^{38}	62417
14 ... 17	Current L1	REAL	1 A	0.0 … 100000.0	7
18 ... 21	Current L2	REAL	1 A	0.0 … 100000.0	8
22 ... 25	Current L3	REAL	1 A	0.0 … 100000.0	9
26 ... 27	Voltage UL1-N	UINT	0.01 V	0 … 65535	66001
28 ... 29	Voltage UL2-N	UINT	0.01 V	0 … 65535	66002
30 ... 31	Voltage UL3-N	UINT	0.01 V	0 … 65535	66003

Reactive power compensation (ID 244 or $F4_H$)

Table D- 12 Reactive power compensation

Byte	Allocation	Data type	Unit	Value range	Measured value ID
0	User data variant	BYTE	-	244 ($F4_H$)	-
1	Quality information = QQ_1 I_3 U_3 I_2 U_2 I_1 U_1	BYTE	Bit string	qq xx xx xx	-
2	Fundamental cos φ active factor L1	BYTE	0.01	-100 ... 100	62136
3	Fundamental cos φ active factor L2	BYTE	0.01	-100 ... 100	62236
4	Fundamental cos φ active factor L3	BYTE	0.01	-100 ... 100	62336
5	Reserved	BYTE	-	-	-
6 ... 9	Fundamental reactive power L1	REAL	var	-3×10^9 ... $+3 \times 10^9$	62124
10 ... 13	Fundamental reactive power L2	REAL	var	-3×10^9 ... $+3 \times 10^9$	62224
14 ... 17	Fundamental reactive power L3	REAL	var	-3×10^9 ... $+3 \times 10^9$	62324

Basic variables quality values three-phase measurement (ID 240 or $F0_H$)

Table D- 13 Basic variables quality values three-phase measurement

Byte	Allocation	Data type	Unit	Value range	Measured value ID
0	User data variant	BYTE	-	240 (F0H)	-
1	Quality information = QQ_1 I_3 U_3 I_2 U_2 I_1 U_1	BYTE	Bit string	qq xx xx xx	-
2 ... 3	Status of the limit monitoring GW 1 ... 16 (*)	WORD	Bit string	xxxx xxxx xxxx xxxx	65509
4 ... 5	Status of the energy counter overflows (**)	WORD	Bit string	xxxx xxxx xxxx xxxx	65508
6 ... 7	Quality information	WORD	Bit string	xxxx xxxx xxxx xxxx	65503
8 ... 9	Quality information power quality analysis	WORD	Bit string	xxxx xxxx xxxx xxxx	65496
10 ... 11	Reserved	WORD	-	-	-
12 ... 13	Reserved	WORD	-	-	-
14 ... 15	Reserved	WORD	-	-	-
16 ... 17	Reserved	WORD	-	-	-
18 ... 19	Reserved	WORD	-	-	-
20 ... 21	Reserved	WORD	-	-	-
22 ... 23	Reserved	WORD	-	-	-
24 ... 25	Reserved	WORD	-	-	-

Byte	Allocation	Data type	Unit	Value range	Measured value ID
26 ... 27	Reserved	WORD	-	-	-
28 ... 29	Reserved	WORD	-	-	-
30 ... 31	Reserved	WORD	-	-	-

(*) Limit violation in:
Bit 0 = limit 1 to bit 15 = limit 16

(**) Energy counter count periodically - counter overflow at:
Bit 0 = 1: Active energy inflow L1
Bit 1 = 1: Active energy outflow L1
Bit 2 = 1: Reactive energy inflow L1
Bit 3 = 1: Reactive energy outflow L1
Bit 4 = 1: Apparent energy L1
Bit 5 = 1: Active energy inflow L2
Bit 6 = 1: Active energy outflow L2
Bit 7 = 1: Reactive energy inflow L2
Bit 8 = 1: Reactive energy outflow L2
Bit 9 = 1: Apparent energy L2
Bit 10 = 1: Active energy inflow L3
Bit 11 = 1: Active energy outflow L3
Bit 12 = 1: Reactive energy inflow L3
Bit 13 = 1: Reactive energy outflow L3
Bit 14 = 1: Apparent energy L3
Bit 15: Reserved

Basic variables energy counter measurement (periodic) overflow counter (ID 239 or EF_H)

Table D- 14 Basic variables energy counter measurement (periodic) overflow counter

Byte	Allocation	Data type	Unit	Value range	Measured value ID
0	User data variant	BYTE	-	239 (EFH)	-
1	Quality information = QQ_1 I_3 U_3 I_2 U_2 I_1 U_1	BYTE	Bit string	qq xx xx xx	-
2 ... 3	Overflow counter for active energy inflow L1	UINT	-	0 … 65535	62120
4 ... 5	Overflow counter for active energy outflow L1	UINT	-	0 … 65535	62121
6 ... 7	Overflow counter for reactive energy inflow L1	UINT	-	0 … 65535	62122
8 ... 9	Overflow counter for reactive energy outflow L1	UINT	-	0 … 65535	62123
10 ... 11	Overflow counter for apparent energy L1	UINT	-	0 … 65535	62124
12 ... 13	Overflow counter for active energy inflow L2	UINT	-	0 … 65535	62220
14 ... 15	Overflow counter for active energy outflow L2	UINT	-	0 … 65535	62221
16 ... 17	Overflow counter for reactive energy inflow L2	UINT	-	0 … 65535	62222
18 ... 19	Overflow counter for reactive energy outflow L2	UINT	-	0 … 65535	62223
20 ... 21	Overflow counter for apparent energy L2	UINT	-	0 … 65535	62224
22 ... 23	Overflow counter for active energy inflow L3	UINT	-	0 … 65535	62320
24 ... 25	Overflow counter for active energy outflow L3	UINT	-	0 … 65535	62321
26 ... 27	Overflow counter for reactive energy inflow L3	UINT	-	0 … 65535	62322
28 ... 29	Overflow counter for reactive energy outflow L3	UINT	-	0 … 65535	62323
30 ... 31	Overflow counter for apparent energy L3	UINT	-	0 … 65535	62324

Basic variables measurement data profile (ID 227 or $E3_H$)

Table D- 15 Basic variables measurement data profile Energy E3

Byte	Allocation	Data type	Unit	Value range	Measured value ID
0	User data variant	BYTE	-	227 ($E3_H$)	-
1	Quality information = QQ_1 I_3 U_3 I_2 U_2 I_1 U_1	BYTE	Bit string	qq xx xx xx	-
2 ... 5	Active power L1	REAL	1 W	-3×10^9 ... $+3 \times 10^9$	13
6 ... 9	Active power L2	REAL	1 W	-3×10^9 ... $+3 \times 10^9$	14
10 ... 13	Active power L3	REAL	1 W	-3×10^9 ... $+3 \times 10^9$	15
14 ... 17	Reactive power Qtot L1	REAL	1 var	-3×10^9 ... $+3 \times 10^9$	22
18 ... 21	Reactive power Qtot L2	REAL	1 var	-3×10^9 ... $+3 \times 10^9$	23
22 ... 25	Reactive power Qtot L3	REAL	1 var	-3×10^9 ... $+3 \times 10^9$	24
26 ... 33	Total active energy L1L2L3 inflow	LREAL	1 Wh	0.0 ... 1.8×10^{308}	210
34 ... 41	Total active energy L1L2L3 outflow	LREAL	1 Wh	0.0 ... 1.8×10^{308}	211
42 ... 49	Total reactive energy L1L2L3 inflow	LREAL	1 varh	0.0 ... 1.8×10^{308}	212
50 ... 57	Total reactive energy L1L2L3 outflow	LREAL	1 varh	0.0 ... 1.8×10^{308}	213
58 ... 61	Voltage UL1-N	REAL	1 V	0.0 … 1000000.0	1
62 ... 65	Voltage UL2-N	REAL	1 V	0.0 … 1000000.0	2
66 ... 69	Voltage UL3-N	REAL	1 V	0.0 … 1000000.0	3
70 ... 73	Voltage UL1-UL2	REAL	1 V	0.0 … 1000000.0	4
74 ... 77	Voltage UL2-UL3	REAL	1 V	0.0 … 1000000.0	5
78 ... 81	Voltage UL3-UL1	REAL	1 V	0.0 … 1000000.0	6
82 ... 85	Current L1	REAL	1 A	0.0 … 100000.0	7
86 ... 89	Current L2	REAL	1 A	0.0 … 100000.0	8
90 ... 93	Current L3	REAL	1 A	0.0 … 100000.0	9
94 ... 97	Power factor L1	REAL	-	0.0 … 1.0	19
98 ... 101	Power factor L2	REAL	-	0.0 … 1.0	20
102 ... 105	Power factor L3	REAL	-	0.0 … 1.0	21

Basic variables measurement data profile (ID 226 or $E2_H$)

Table D- 16 Basic variables measurement data profile Energy E2

Byte	Allocation	Data type	Unit	Value range	Measured value ID
0	User data variant	BYTE	-	226 ($E2_H$)	-
1	Quality information = QQ_1 I_3 U_3 I_2 U_2 I_1 U_1	BYTE	Bit string	qq xx xx xx	-
2 ... 5	Total active power L1L2L3	REAL	1 W	-3.0×10^9 ... $+ 3.0 \times 10^9$	34
6 ... 9	Total active energy inflow L1L2L3	REAL	1 W	3.0×10^9	200
10 ...13	Total active energy outflow L1L2L3	REAL	1 W	3.0×10^9	201

Basic variables measurement data profile (ID 225 or $E1_H$)

Table D- 17 Basic variables measurement data profile Energy E1

Byte	Allocation	Data type	Unit	Value range	Measured value ID
0	User data variant	BYTE	-	225 ($E1_H$)	-
1	Quality information = QQ_1 I_3 U_3 I_2 U_2 I_1 U_1	BYTE	Bit string	qq xx xx xx	-
2 ... 5	Total active power L1L2L3	REAL	1 W	-3.0×10^9 ... $+ 3.0 \times 10^9$	34

Basic variables measurement data profile (ID 224 or $E0_H$)

Table D- 18 Basic variables measurement data profile Energy E0

Byte	Allocation	Data type	Unit	Value range	Measured value ID
0	User data variant	BYTE	-	224 ($E0_H$)	-
1	Quality information = QQ_1 I_3 U_3 I_2 U_2 I_1 U_1	BYTE	Bit string	qq xx xx xx	-
2 ... 5	Current L1	REAL	1 A	0.0 … 100000.0	7
6 ... 9	Current L2	REAL	1 A	0.0 … 100000.0	8
10 ...13	Current L3	REAL	1 A	0.0 … 100000.0	9

Basic variables phase-specific measurement (ID 159 or $9F_H$)

Table D- 19 Basic variables phase-specific measurement L1

Byte	Allocation	Data type	Unit	Value range	Measured value ID
0	User data variant	BYTE	-	159 (9FH)	-
1	Quality information = QQ_1 I_3 U_3 I_2 U_2 I_1 U_1	BYTE	Bit string	qq xx xx xx	-
2 ... 3	Current L1	UINT	1 mA	0 … 65535	66007
4 ... 5	Voltage UL1-N	UINT	0.01 V	0 … 65535	66001
6 ... 7	Active power L1	INT	1 W	-27648 … 27648	66013
8 ... 9	Reactive power Qtot L1	INT	1 var	-27648 … 27648	66022
10 ... 11	Apparent power L1	INT	1 VA	-27648 … 27648	66010
12 ... 15	Active energy L1 total (inflow - outflow)	DINT	1 Wh	-2147483647... +2147483647	62115
16 ... 19	Reactive energy L1 total (inflow - outflow)	DINT	1 varh	-2147483647... +2147483647	62116
20 ... 23	Apparent energy L1	UDINT	1 VAh	0 to 2147483647	62114
24	Scaling current L1	USINT	-	0 ... 255	-
25	Scaling active power L1	USINT	-	0 ... 255	-
26	Scaling reactive power L1	USINT	-	0 ... 255	-
27	Scaling apparent power L1	USINT	-	0 ... 255	-
28	Scaling active energy L1 total (inflow - outflow)	USINT	-	0 ... 255	-
29	Scaling reactive energy L1 total (inflow - outflow)	USINT	-	0 ... 255	-
30	Scaling apparent energy L1	USINT	-	0 ... 255	-
31	Power factor L1	USINT	0.01	0 … 100	66019

Basic variables phase-specific measurement (ID 158 or $9E_H$)

Table D- 20 Single-phase measurement L1 with voltage scaling value

Byte	Allocation	Data type	Unit	Value range	Measured value ID
0	User data variant	BYTE	-	158 (9EH)	-
1	Quality information = QQ_1 I_3 U_3 I_2 U_2 I_1 U_1	BYTE	Bit string	qq xx xx xx	-
2 ... 3	Current L1	UINT	1 mA	0 … 65535	66007
4 ... 5	Voltage UL1-N	UINT	0.01 V	0 … 65535	66001
6 ... 7	Active power L1	INT	1 W	-27648 … 27648	66013
8 ... 9	Reactive power Qtot L1	INT	1 var	-27648 … 27648	66022
10 ... 11	Apparent power L1	INT	1 VA	-27648 … 27648	66010
12 ... 15	Active energy L1 total (inflow - outflow)	UDINT	1 Wh	0 … 4294967295	62115
16 ... 19	Reactive energy L1 total (inflow - outflow)	UDINT	1 varh	0 … 4294967295	62116
20 ... 23	Apparent energy L1	UDINT	1 VAh	0 … 4294967295	62114
24	Scaling current L1	USINT	-	0 ... 255	-
25	Scaling active power L1	USINT	-	0 ... 255	-
26	Scaling reactive power L1	USINT	-	0 ... 255	-
27	Scaling apparent power L1	USINT	-	0 ... 255	-
28	Scaling active energy L1 total (inflow - outflow)	USINT	-	0 ... 255	-
29	Scaling reactive energy L1 total (inflow - outflow)	USINT	-	0 ... 255	-
30	Scaling apparent energy L1	USINT	-	0 ... 255	-
31	Scaling voltage UL1-N	USINT	-	0 ... 255	-

Basic variables phase-specific measurement (ID 157 or $9D_H$)

Table D- 21 Basic variables phase-specific measurement L2

Byte	Allocation	Data type	Unit	Value range	Measured value ID
0	User data variant	BYTE	-	157 ($9D_H$)	-
1	Quality information = QQ_1 I_3 U_3 I_2 U_2 I_1 U_1	BYTE	Bit string	qq xx xx xx	-
2 ... 3	Current L2	UINT	1 mA	0 … 65535	66008
4 ... 5	Voltage UL2-N	UINT	0.01 V	0 … 65535	66002
6 ... 7	Active power L2	INT	1 W	-27648 … 27648	66014
8 ... 9	Reactive power Qtot L2	INT	1 var	-27648 … 27648	66023
10 ... 11	Apparent power L2	INT	1 VA	-27648 … 27648	66011
12 ... 15	Active energy L2 total (inflow - outflow)	DINT	1 Wh	-2147483647... +2147483647	62215
16 ... 19	Reactive energy L2 total (inflow - outflow)	DINT	1 varh	-2147483647... +2147483647	62216
20 ... 23	Apparent energy L2	UDINT	1 VAh	0 to 2147483647	62214
24	Scaling current L2	USINT	-	0 ... 255	-
25	Scaling active power L2	USINT	-	0 ... 255	-
26	Scaling reactive power L2	USINT	-	0 ... 255	-
27	Scaling apparent power L2	USINT	-	0 ... 255	-
28	Scaling active energy L2 total (inflow - outflow)	USINT	-	0 ... 255	-
29	Scaling reactive energy L2 total (inflow - outflow)	USINT	-	0 ... 255	-
30	Scaling apparent energy L2	USINT	-	0 ... 255	-
31	Power factor L2	USINT	0.01	0 … 100	66020

Basic variables phase-specific measurement (ID 156 or $9C_H$)

Table D- 22 Single-phase measurement L2 with voltage scaling value

Byte	Allocation	Data type	Unit	Value range	Measured value ID
0	User data variant	BYTE	-	156 (9CH)	-
1	Quality information = QQ_1 I_3 U_3 I_2 U_2 I_1 U_1	BYTE	Bit string	qq xx xx xx	-
2 ... 3	Current L2	UINT	1 mA	0 … 65535	66008
4 ... 5	Voltage UL2-N	UINT	0.01 V	0 … 65535	66002
6 ... 7	Active power L2	INT	1 W	-27648 … 27648	66014
8 ... 9	Reactive power Qtot L2	INT	1 var	-27648 … 27648	66023
10 ... 11	Apparent power L2	INT	1 VA	-27648 … 27648	66011
12 ... 15	Active energy L2 total (inflow - outflow)	DINT	1 Wh	-2147483647... +2147483647	62215
16 ... 19	Reactive energy L2 total (inflow - outflow)	DINT	1 varh	-2147483647... +2147483647	62216
20 ... 23	Apparent energy L2	UDINT	1 VAh	0 to 2147483647	62214
24	Scaling current L2	USINT	-	0 ... 255	-
25	Scaling active power L2	USINT	-	0 ... 255	-
26	Scaling reactive power L2	USINT	-	0 ... 255	-
27	Scaling apparent power L2	USINT	-	0 ... 255	-
28	Scaling active energy L2 total (inflow - outflow)	USINT	-	0 ... 255	-
29	Scaling reactive energy L2 total (inflow - outflow)	USINT	-	0 ... 255	-
30	Scaling apparent energy L2	USINT	-	0 ... 255	-
31	Scaling voltage UL2-N	USINT	-	0 ... 255	-

Basic variables phase-specific measurement (ID 155 or $9B_H$)

Table D- 23 Basic variables phase-specific measurement L3

Byte	Allocation	Data type	Unit	Value range	Measured value ID
0	User data variant	BYTE	-	155 ($9B_H$)	-
1	Quality information = QQ_1 I_3 U_3 I_2 U_2 I_1 U_1	BYTE	Bit string	qq xx xx xx	-
2 ... 3	Current L3	UINT	1 mA	0 … 65535	66009
4 ... 5	Voltage UL3-N	UINT	0.01 V	0 … 65535	66003
6 ... 7	Active power L3	INT	1 W	-27648 … 27648	66015
8 ... 9	Reactive power Qtot L3	INT	1 var	-27648 … 27648	66024
10 ... 11	Apparent power L3	INT	1 VA	-27648 … 27648	66012
12 ... 15	Active energy L3 total (inflow - outflow)	DINT	1 Wh	-2147483647... +2147483647	62315
16 ... 19	Reactive energy L3 total (inflow - outflow)	DINT	1 varh	-2147483647... +2147483647	62316
20 ... 23	Apparent energy L3	UDINT	1 VAh	0 to 2147483647	62314
24	Scaling current L3	USINT	-	0 ... 255	-
25	Scaling active power L3	USINT	-	0 ... 255	-
26	Scaling reactive power L3	USINT	-	0 ... 255	-
27	Scaling apparent power L3	USINT	-	0 ... 255	-
28	Scaling active energy L3 total (inflow - outflow)	USINT	-	0 ... 255	-
29	Scaling reactive energy L3 total (inflow - outflow)	USINT	-	0 ... 255	-
30	Scaling apparent energy L3	USINT	-	0 ... 255	-
31	Power factor L3	USINT	0.01	0 … 100	66021

Basic variables phase-specific measurement (ID 154 or $9A_H$)

Table D- 24 Single-phase measurement L3 with voltage scaling value

Byte	Allocation	Data type	Unit	Value range	Measured value ID
0	User data variant	BYTE	-	154 ($9A_H$)	-
1	Quality information = QQ_1 I_3 U_3 I_2 U_2 I_1 U_1	BYTE	Bit string	qq xx xx xx	-
2 ... 3	Current L3	UINT	1 mA	0 … 65535	66009
4 ... 5	Voltage UL3-N	UINT	0.01 V	0 … 65535	66003
6 ... 7	Active power L3	INT	1 W	-27648 … 27648	66015
8 ... 9	Reactive power Qtot L3	INT	1 var	-27648 … 27648	66024
10 ... 11	Apparent power L3	INT	1 VA	-27648 … 27648	66012
12 ... 15	Active energy L3 total (inflow - outflow)	DINT	1 Wh	-2147483647... +2147483647	62315
16 ... 19	Reactive energy L3 total (inflow - outflow)	DINT	1 varh	-2147483647... +2147483647	62316
20 ... 23	Apparent energy L3	UDINT	1 VAh	0 to 2147483647	62314
24	Scaling current L3	USINT	-	0 ... 255	-
25	Scaling active power L3	USINT	-	0 ... 255	-
26	Scaling reactive power L3	USINT	-	0 ... 255	-
27	Scaling apparent power L3	USINT	-	0 ... 255	-
28	Scaling active energy L3 total (inflow - outflow)	USINT	-	0 ... 255	-
29	Scaling reactive energy L3 total (inflow - outflow)	USINT	-	0 ... 255	-
30	Scaling apparent energy L3	USINT	-	0 ... 255	-
31	Scaling voltage UL3-N	USINT	-	0 ... 255	-

Measured value data records

E

E.1 Overview of all measured value data records

The AI Energy Meter HF writes the measured values in several data records that you can read acyclically using the RDREC instruction in the user program.

The following tables show the structure of the individual data records:

- Data record DS 142 for basic measured values version 2 (read only).
- Data record DS 142 for basic measured values version 3 (read only).
- Data record DS 143 for energy counters (read and write).
- Data record DS 144 for basic measured values version 1 (read only).
- Data record DS 154 for maximum values with time stamp (read only).
- Data record DS 145 for minimum values version 1 (read only).
- Data record DS 155 for minimum values with time stamp (read only).
- Data record DS 147 for phase-specific measured values L1 version 0 (read only).
- Data record DS 147 for phase-specific measured values L1 version 1 (read only).
- Data record DS 148 for phase-specific measured values L2 DS version 0 (read only).
- Data record DS 148 for phase-specific measured values L2 DS version 1 (read only).
- Data record DS 149 for phase-specific measured values L3 DS version 0 (read only).
- Data record DS 149 for phase-specific measured values L3 DS version 1 (read only).
- Data record DS 150 for advanced measurement and status values version 1 (read only).
- Data record DS 151 for user-defined data record (read only).
- Data record DS 160 for power quality analysis (read only).
- Data record DS 161 for harmonics voltage (DS 161) (read only).
- Data record DS 163 for harmonics current (DS 163) (read only).
- Data record DS 170 information data record on available measured values.

Note

- The cumulative value of the energy counters in 3-phase operation is obtained from the sums of the respective individual values of the phases.
- Inflow and outflow energy meters are always positive values.
- The operating hours counter for the entire module is calculated from the maximum of the operating hours of the individual phases.

See also

Structure of the parameter data record 135 for data record mapping (Page 160)

E.2 Measured value data record for base measurements (DS 142)

E.2.1 Measured value data record for basic measured values (DS 142) version 2

Measured variables of the module

The following table provides an overview of all the measured variables that data record 142 supplies. Please note that, depending on the connection type used the display of some measured variables does not make sense and that the module deletes measured values that are not relevant.

The measured value identification (measured value ID) is an index which references the overview table of the measured variables in appendix (Measured variables (Page 163)).

Table E- 1 Data record 142

Byte	Measured variable	Data type	Unit	Value range	Measured value ID
0	Version = 2	UINT8	-	-	-
1	Reserved	UINT8	-	-	-
2...5	Voltage UL1-N	REAL	V	0.0 ... 1000000.0	1
6...9	Voltage UL2-N	REAL	V	0.0 ... 1000000.0	2
10...13	Voltage UL3-N	REAL	V	0.0 ... 1000000.0	3
14...17	Voltage UL1-L2	REAL	V	0.0 ... 1000000.0	4
18...21	Voltage UL2-L3	REAL	V	0.0 ... 1000000.0	5
22...25	Voltage UL3-L1	REAL	V	0.0 ... 1000000.0	6
26...29	Current L1	REAL	A	0.0 … 100000.0	7
30...33	Current L2	REAL	A	0.0 … 100000.0	8
34...37	Current L3	REAL	A	0.0 … 100000.0	9
38...41	Power factor L1	REAL	-	0.0 ... 1.0	19
42...45	Power factor L2	REAL	-	0.0 ... 1.0	20
46...49	Power factor L3	REAL	-	0.0 ... 1.0	21
50...53	Total power factor L1L2L3	REAL	-	0.0 ... 1.0	37
54...57	Frequency	REAL	1 Hz	45.0 ... 65.0	30
58...61	Amplitude unbalance for voltage	REAL	%	0 ... 100	61157
62...65	Amplitude unbalance for current	REAL	%	0 to 100	61158
66...69	Apparent power L1	REAL	VA	-3.0×10^9 … $+3.0 \times 10^9$	10
70...73	Apparent power L2	REAL	VA	-3.0×10^9 … $+3.0 \times 10^9$	11
74...77	Apparent power L3	REAL	VA	-3.0×10^9 … $+3.0 \times 10^9$	12
78...81	Total apparent power L1L2L3	REAL	VA	-3.0×10^9 … $+3.0 \times 10^9$	36
82...85	Reactive power Qtot L1	REAL	var	-3.0×10^9 … $+3.0 \times 10^9$	22
86...89	Reactive power Qtot L2	REAL	var	-3.0×10^9 … $+3.0 \times 10^9$	23

Byte	Measured variable	Data type	Unit	Value range	Measured value ID
90...93	Reactive power Qtot L3	REAL	var	-3.0×10^9 … $+3.0 \times 10^9$	24
94...97	Total reactive power Qtot L1L2L3	REAL	var	-3.0×10^9 … $+3.0 \times 10^9$	38
98...101	Active power L1	REAL	W	-3.0×10^9 … $+3.0 \times 10^9$	13
102...105	Active power L2	REAL	W	-3.0×10^9 … $+3.0 \times 10^9$	14
106...109	Active power L3	REAL	W	-3.0×10^9 … $+3.0 \times 10^9$	15
110...113	Total active power L1L2L3	REAL	W	-3.0×10^9 … $+3.0 \times 10^9$	34
114...117	Phase angle L1	REAL	°	0.0 ... 360.0	61178
118...121	Phase angle L2	REAL	°	0.0 ... 360.0	61198
122...125	Phase angle L3	REAL	°	0.0 ... 360.0	61218
126...129	Total apparent energy L1L2L3	REAL	VAh	0.0 ... 3.4×10^{38}	204
130...133	Total reactive energy L1L2L3	REAL	varh	-3.4×10^{38} to $+3.4 \times 10^{38}$	206
134...137	Total active energy L1L2L3	REAL	Wh	-3.4×10^{38} to $+3.4 \times 10^{38}$	205
138...141	Total reactive energy inflow L1L2L3	REAL	varh	0.0 ... 3.4×10^{38}	202
142...145	Total reactive energy outflow L1L2L3	REAL	varh	0.0 ... 3.4×10^{38}	203
146...149	Total active energy inflow L1L2L3	REAL	Wh	0.0 ... 3.4×10^{38}	200
150...153	Total active energy outflow L1L2L3	REAL	Wh	0.0 ... 3.4×10^{38}	201
154...161	Total apparent energy L1L2L3	LREAL	VAh	0.0 ... 1.8×10^{308}	214
162...169	Total reactive energy L1L2L3	LREAL	varh	-1.8×10^{308} to $+1.8 \times 10^{308}$	216
170...177	Total active energy L1L2L3	LREAL	Wh	-1.8×10^{308} to $+1.8 \times 10^{308}$	215
178...185	Total reactive energy inflow L1L2L3	LREAL	varh	0.0 ... 1.8×10^{308}	212
186...193	Total reactive energy outflow L1L2L3	LREAL	varh	0.0 ... 1.8×10^{308}	213
194...201	Total active energy inflow L1L2L3	LREAL	Wh	0.0 ... 1.8×10^{308}	210
202...209	Total active energy outflow L1L2L3	LREAL	Wh	0.0 ... 1.8×10^{308}	211
210...213	Neutral current	REAL	A	0.0 ... 100000.0	61149

Neutral current

If you operate the AI Energy Meter HF with connection type 3P4W, 3P4W1 or 3P3W, the neutral current is also calculated under the following conditions:

- Transmission factors of all phase currents (primary and secondary currents) are identical.
- Measured phase currents are greater than the value of the "Low limit for measuring current parameter.
- The parameter "Reverse current direction" must be the same on all phases.

If one of the conditions is not met, 0 is entered as the value for the neutral current. You can read the neutral current calculated using measured value data record 142.

Procedure

Data record 142 is located on the AI Energy Meter HF. Use the RDREC instruction to read out the data record from the module. This system function block is stored in the STEP 7 library.

E.2.2 Measured value data record for basic measured values (DS 142) version 3

Measured variables of the module

The following table provides an overview of all the measured variables that data record 142 supplies. Please note that, depending on the connection type used the display of some measured variables does not make sense and that the module deletes measured values that are not relevant.

The measured value identification (measured value ID) is an index which references the overview table of the measured variables in appendix (Measured variables (Page 163)).

Table E- 2 Data record 142

Byte	Measured variable	Data type	Unit	Value range	Measured value ID
0	Version = 3	BYTE	-	-	-
1	Reserved	BYTE	-	-	-
2...5	Voltage L1-N	REAL	V	0.0 ... 1000000.0	1
6...9	Voltage L2-N	REAL	V	0.0 ... 1000000.0	2
10...13	Voltage L3-N	REAL	V	0.0 ... 1000000.0	3
14...17	Voltage L1-L2	REAL	V	0.0 ... 1000000.0	4
18...21	Voltage L2-L3	REAL	V	0.0 ... 1000000.0	5
22...25	Voltage L3-L1	REAL	V	0.0 ... 1000000.0	6
26...29	Current L1	REAL	A	0.0 … 100000.0	7
30...33	Current L2	REAL	A	0.0 … 100000.0	8
34...37	Current L3	REAL	A	0.0 … 100000.0	9
38...41	Power factor λ L1	REAL	-	0.0 ... 1.0	19
42...45	Power factor λ L2	REAL	-	0.0 ... 1.0	20
46...49	Power factor λ L3	REAL	-	0.0 ... 1.0	21
50...53	Total power factor L1L2L3	REAL	-	0.0 ... 1.0	37
54...57	Frequency	REAL	1 Hz	45.0 ... 65.0	30
58...61	Amplitude unbalance for voltage U_2	REAL	%	0 ... 100	61157
62...65	Amplitude unbalance for current I_{unsym}	REAL	%	0 to 100	61158
66...69	Apparent power L1	REAL	VA	-3.0×10^9 … $+3.0 \times 10^9$	10
70...73	Apparent power L2	REAL	VA	-3.0×10^9 … $+3.0 \times 10^9$	11
74...77	Apparent power L3	REAL	VA	-3.0×10^9 … $+3.0 \times 10^9$	12
78...81	Total apparent power L1L2L3	REAL	VA	-3.0×10^9 … $+3.0 \times 10^9$	36

Byte	Measured variable	Data type	Unit	Value range	Measured value ID
82...85	Reactive power Qtot L1	REAL	var	-3.0×10^9 … $+3.0 \times 10^9$	22
86...89	Reactive power Qtot L2	REAL	var	-3.0×10^9 … $+3.0 \times 10^9$	23
90...93	Reactive power Qtot L3	REAL	var	-3.0×10^9 … $+3.0 \times 10^9$	24
94...97	Total reactive power Qtot L1L2L3	REAL	var	-3.0×10^9 … $+3.0 \times 10^9$	38
98...101	Active power L1	REAL	W	-3.0×10^9 … $+3.0 \times 10^9$	13
102...105	Active power L2	REAL	W	-3.0×10^9 … $+3.0 \times 10^9$	14
106...109	Active power L3	REAL	W	-3.0×10^9 … $+3.0 \times 10^9$	15
110...113	Total active power L1L2L3	REAL	W	-3.0×10^9 … $+3.0 \times 10^9$	35
114...117	Phase angle L1	REAL	°	0.0 ... 360.0	61178
118...121	Phase angle L2	REAL	°	0.0 ... 360.0	61198
122...125	Phase angle L3	REAL	°	0.0 ... 360.0	61218
126...129	Total apparent energy L1L2L3	REAL	VAh	0.0 ... 3.4×10^{38}	204
130...133	Total reactive energy L1L2L3	REAL	varh	-3.4×10^{38} to $+3.4 \times 10^{38}$	206
134...137	Total active energy L1L2L3	REAL	Wh	-3.4×10^{38} to $+3.4 \times 10^{38}$	205
138...141	Total reactive energy inflow L1L2L3	REAL	varh	0.0 ... 3.4×10^{38}	202
142...145	Total reactive energy outflow L1L2L3	REAL	varh	0.0 ... 3.4×10^{38}	203
146...149	Total active energy inflow L1L2L3	REAL	Wh	0.0 ... 3.4×10^{38}	200
150...153	Total active energy outflow L1L2L3	REAL	Wh	0.0 ... 3.4×10^{38}	201
154...161	Total apparent energy L1L2L3	LREAL	VAh	0.0 ... 1.8×10^{308}	214
162...169	Total reactive energy L1L2L3	LREAL	varh	-1.8×10^{308} to $+1.8 \times 10^{308}$	216
170...177	Total active energy L1L2L3	LREAL	Wh	-1.8×10^{308} to $+1.8 \times 10^{308}$	215
178...185	Total reactive energy inflow L1L2L3	LREAL	varh	0.0 ... 1.8×10^{308}	212
186...193	Total reactive energy outflow L1L2L3	LREAL	varh	0.0 ... 1.8×10^{308}	213
194...201	Total active energy inflow L1L2L3	LREAL	Wh	0.0 ... 1.8×10^{308}	210
202...209	Total active energy outflow L1L2L3	LREAL	Wh	0.0 ... 1.8×10^{308}	211
210...213	Neutral current	REAL	A	0.0 ... 100000.0	61149
214...217	Neutral current 10/12 cycle	REAL	A	0.0 ... 100000.0	61150
218...221	Reactive power Qn L1	REAL	var	-3.0×10^9 ... $+3.0 \times 10^9$	16
222...225	Reactive power Qn L2	REAL	var	-3.0×10^9 ... $+3.0 \times 10^9$	17
226...229	Reactive power Qn L3	REAL	var	-3.0×10^9 ... $+3.0 \times 10^9$	18
230...233	Total reactive power Qn L1L2L3	REAL	var	-3.0×10^9 ... $+3.0 \times 10^9$	35
234...237	Average voltage L-N (Usum)	REAL	V	0.0 ... 300.0	31
238...241	Average voltage L-L	REAL	V	0.0 ... 600.0	32
242...245	Average current L1L2L3 (Isum)	REAL	A	0.0 ... 100000.0	33
246...249	Mean power factor λ L1L2L3	REAL	-	0.0 ... 1.0	166
250...253	Fundamental voltage L1	REAL	V	0.0 ... 440.0	62122
254...257	Fundamental voltage L2	REAL	V	0.0 ... 440.0	62222
258...261	Fundamental voltage L3	REAL	V	0.0 ... 440.0	62322
262...265	Fundamental current L1	REAL	A	0.0 ... 100000.0	62123
266...269	Fundamental current L2	REAL	A	0.0 ... 100000.0	62223

Byte	Measured variable	Data type	Unit	Value range	Measured value ID
270...273	Fundamental current L3	REAL	A	0.0 ... 100000.0	62323
274...277	Fundamental apparent power L1	REAL	VA	-3.0×10^9 ... $+3.0 \times 10^9$	62125
278...281	Fundamental apparent power L2	REAL	VA	-3.0×10^9 ... $+3.0 \times 10^9$	62225
282...285	Fundamental apparent power L3	REAL	VA	-3.0×10^9 ... $+3.0 \times 10^9$	62325
286...289	Fundamental reactive power L1	REAL	var	-3.0×10^9 ... $+3.0 \times 10^9$	62124
290...293	Fundamental reactive power L2	REAL	var	-3.0×10^9 ... $+3.0 \times 10^9$	62224
294...297	Fundamental reactive power L3	REAL	var	-3.0×10^9 ... $+3.0 \times 10^9$	62324
298...301	Fundamental active power L1	REAL	W	-3.0×10^9 ... $+3.0 \times 10^9$	62126
302...305	Fundamental active power L2	REAL	W	-3.0×10^9 ... $+3.0 \times 10^9$	62226
306...309	Fundamental active power L3	REAL	W	-3.0×10^9 ... $+3.0 \times 10^9$	62326
310...313	Fundamental cos φ active factor L1	REAL	-	-1.0 ... 1.0	62127
314...317	Fundamental cos φ active factor L2	REAL	-	-1.0 ... 1.0	62227
318...321	Fundamental cos φ active factor L3	REAL	-	-1.0 ... 1.0	62327
322...325	Harmonic distortion (THD+N) voltage L1	REAL	1%	0% to 100%	62120
326...329	Harmonic distortion (THD+N) voltage L2	REAL	1%	0% to 100%	62220
330...333	Harmonic distortion (THD+N) voltage L3	REAL	1%	0% to 100%	62320
334...337	Harmonic distortion (THD+N) current L1	REAL	1%	0% to 100%	62121
338...341	Harmonic distortion (THD+N) current L2	REAL	1%	0% to 100%	62221
342...345	Harmonic distortion (THD+N) current L3	REAL	1%	0% to 100%	62321
346...358	Current module time	PNI-OTime	sec		65497

Neutral current

If you operate the AI Energy Meter HF with connection type 3P4W, 3P4W1 or 3P3W, the neutral current is also calculated under the following conditions:

- Transmission factors of all phase currents (primary and secondary currents) are identical.
- Measured phase currents are greater than the value of the "Low limit for measuring current parameter.
- The parameter "Reverse current direction" must be the same on all phases.

If one of the conditions is not met, 0 is entered as the value for the neutral current. You can read the neutral current calculated using measured value data record 142.

Procedure

Data record 142 is located on the AI Energy Meter HF. Use the RDREC instruction to read out the data record from the module. This system function block is stored in the STEP 7 library.

E.3 Structure for energy counters (DS 143)

Energy meter data record 143 for different actions

The energy meter data record 143 includes all energy meters available on the module phase-by-phase. The data record can be used for different actions:

- Reset the energy meters to user-specific value (e.g. "0")
- Reading the current values of the energy counters
- Reading the overflow counters
- Reading the operating hours

Energy meter data record 143

Table E- 3 Energy meter data record 143

Byte	Measured variable	Data type	Unit	Value range	Measured value ID
0	Version	BYTE	-	1	-
1	Reserved	BYTE	-	0	-
2	Status / control byte 1 - L1	BYTE	Bit string	-	-
3	Status / control byte 2 - L1	BYTE	Bit string		
4	Status / control byte 1 - L2	BYTE	Bit string		
5	Status / control byte 2 - L2	BYTE	Bit string		
6	Status / control byte 1 - L3	BYTE	Bit string		
7	Status / control byte 2 - L3	BYTE	Bit string		
8...15	Active energy inflow (initial value) L1	LREAL	Wh	During reading: 0.0...1.8 x 10^{308} During writing For continuous counting: 0.0...3.4 x 10^{12} During writing For periodic counting:	61180
16...23	Active energy outflow (initial value) L1	LREAL	Wh		61181
24...31	Reactive energy inflow (initial value) L1	LREAL	varh		61182
32...39	Reactive energy outflow (initial value) L1	LREAL	varh		61183
40...47	Apparent energy (initial value) L1	LREAL	VAh		61184
48...55	Active energy inflow (initial value) L2	LREAL	Wh		61200
56...63	Active energy outflow (initial value) L2	LREAL	Wh		61201
64...61	Reactive energy inflow (initial value) L2	LREAL	varh		61202
72...79	Reactive energy outflow (initial value) L2	LREAL	varh		61203
80...87	Apparent energy (initial value) L2	LREAL	VAh		61204
88...95	Active energy inflow (initial value) L3	LREAL	Wh		61220

Byte	Measured variable	Data type	Unit	Value range	Measured value ID
96...103	Active energy outflow (initial value) L3	LREAL	Wh	0...configured full-scale value (10^3 ...10^{15})	61221
104...111	Reactive energy inflow (initial value) L3	LREAL	varh		61222
112...119	Reactive energy outflow (initial value) L3	LREAL	varh		61223
120...127	Apparent energy (initial value) L3	LREAL	VAh		61224
128...129	Overflow counter active energy inflow L1	UINT	-	During reading: 0...65535 During writing for continuous counting: 0 During writing for periodic counting: 0...65500	61190
130..131	Overflow counter active energy outflow L1	UINT	-		61191
132...133	Overflow counter reactive energy inflow L1	UINT	-		61192
134...135	Overflow counter reactive energy outflow L1	UINT	-		61193
136...137	Overflow counter apparent energy L1	UINT	-		61194
138...139	Overflow counter active energy inflow L2	UINT	-		61210
140...141	Overflow counter active energy outflow L2	UINT	-		61211
142...143	Overflow counter reactive energy inflow L2	UINT	-		61212
144...145	Overflow counter reactive energy outflow L2	UINT	-		61213
146...147	Overflow counter apparent energy L2	UINT	-		61214
148...149	Overflow counter active energy inflow L3	UINT	-		61230
150...151	Overflow counter active energy outflow L3	UINT	-		61231
152...153	Overflow counter reactive energy inflow L3	UINT	-		61232
154...155	Overflow counter reactive energy outflow L3	UINT	-		61233
156...157	Overflow counter apparent energy L3	UINT	-		61234
158...161	Operating hours counter L1 (initial value)	REAL	h	During reading: 0...3.4x10^{38} During writing: 0...10^9	65505
162...165	Operating hours counter L2 (initial value)	REAL	h		65506
166...169	Operating hours counter L3 (initial value)	REAL	h		65507

Status information

When data record 143 is read with the RDREC instruction, Bytes 2 to 7 supply phase-specific status information for energy counters, overflow counters and operating hours counters.

The status information enables you can see which counters are returning their values in the data record 143. If energy counters return their values in the status byte 1, you can determine the type of energy counter with status byte 2.

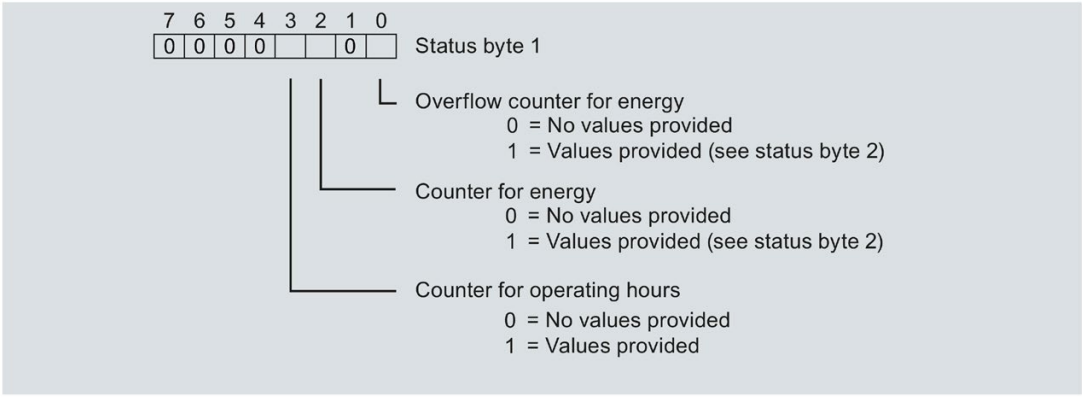

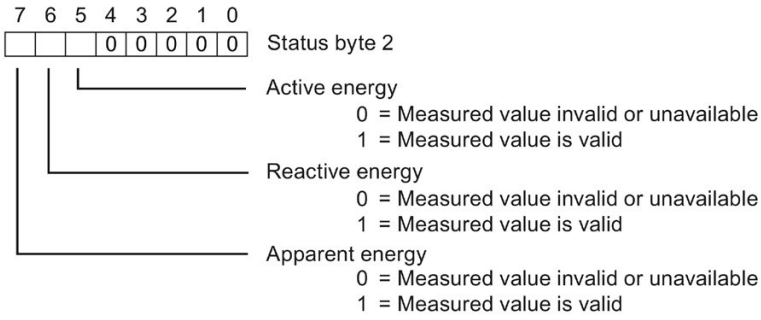

Figure E-1 Status information DS 143 (read access)

Control information

When data record 143 is written with the WRREC instruction, Bytes 2 to 7 are used as phase-specific control information for energy counters, overflow counters and operating hours counter. The length of the control information amounts to 2 bytes for each phase:

- In control byte 1 you determine which counter you want to reset and the time at which counters are reset.
- In Control byte 2 you determine which energy counters and which overflow counters you want to reset.

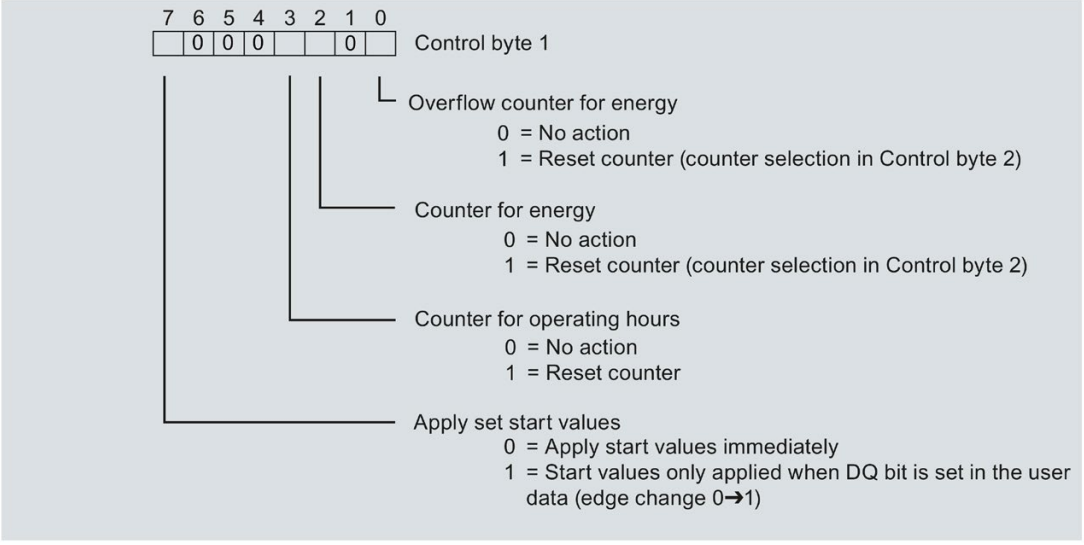

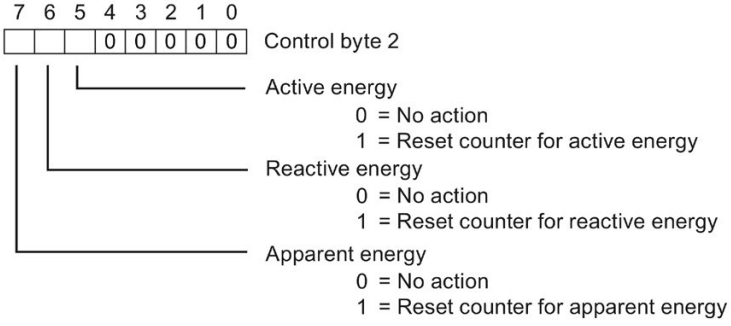

Figure E-2 Control information DS 143 (write access)

Error while transferring the data record

The module always checks all the values of the transferred data record. Only if all the values were transferred without errors does the module apply the values from the data record.

The WRREC instruction for writing data records returns corresponding error codes when errors occur in the STATUS parameter.

The following table shows the module-specific error codes and their meaning for the measured value data record 143:

Error code in STATUS parameter (hexadecimal)				Meaning	Solution
Byte 0	Byte 1	Byte 2	Byte 3		
DF	80	B0	00	Number of the data record unknown	Enter a valid number for the data record.
DF	80	B1	00	Length of the data record incorrect	Enter a valid value for the data record length.
DF	80	B2	00	Slot invalid or cannot be accessed.	Check the station whether the module is plugged or drawn. Check the assigned values for the parameters of the WRREC instruction
DF	80	E1	01	Reserved bits are not 0.	Check Byte 2...7 and set the reserved bits back to 0.
DF	80	E1	39	Incorrect version entered.	Check Byte 0. Enter a valid version.
DF	80	E1	3A	Incorrect data record length entered.	Check the parameters of the WRREC instruction. Enter a valid length.
DF	80	E1	3C	At least one start value is invalid.	Check Bytes 8...103 and Bytes 158...169. The start values may not be negative.
DF	80	E1	3D	At least one start value is too large	Check Bytes 8...103 and Bytes 158...169. Observe the ranges of values for start values.

E.4 Measured value data record for maximum values (DS 144)

E.4.1 Measured value data record for maximum values (DS 144) version 1

Measured variables of the module

The largest values ever measured or calculated from the time AI Energy Meter HF was started are stored in this data record.

The measured value identification (measured value ID) is an index which references the overview table of the measured variables in appendix B (Measured variables (Page 163)).

Byte	Measured variable	Data type	Unit	Default	Measured value ID
0	Version	UINT8	-	0	-
1	Reserved	UINT8	-	0	-
2...5	Max. voltage L1-N	REAL	V	0	40
6...9	Max. voltage L2-N	REAL	V	0	41
10...13	Max. voltage L3-N	REAL	V	0	42
14...17	Max. voltage L1-L2	REAL	V	0	43
18...21	Max. voltage L2-L3	REAL	V	0	44
22...25	Max. voltage L3-L1	REAL	V	0	45
26...29	Max. current L1 [1]	REAL	A	0	46
30...33	Max. current L2 [1]	REAL	A	0	47
34...37	Max. current L3 [1]	REAL	A	0	48
38...41	Max. apparent power L1	REAL	VA	0	49
42...45	Max. apparent power L2	REAL	VA	0	50
46...49	Max. apparent power L3	REAL	VA	0	51
50...53	Max. active power L1	REAL	W	-3.0×10^9	52
54...57	Max. active power L2	REAL	W	-3.0×10^9	53
58...61	Max. active power L3	REAL	W	-3.0×10^9	54
62...65	Max. reactive power Qtot L1	REAL	var	-3.0×10^9	62160
66...69	Max. reactive power Qtot L2	REAL	var	-3.0×10^9	62260
70...73	Max. reactive power Qtot L3	REAL	var	-3.0×10^9	62360
74...77	Max. power factor λ L1	REAL	-	0	58
78...81	Max. power factor λ L2	REAL	-	0	59
82...85	Max. power factor λ L3	REAL	-	0	60
86...89	Max. frequency	REAL	Hz	45	61
90...93	Max. apparent power L1L2L3	REAL	VA	0	67
94...97	Max. active power L1L2L3	REAL	W	-3.0×10^9	65
98...101	Max. reactive power Qtot L1L2L3	REAL	var	-3.0×10^9	61138

Byte	Measured variable	Data type	Unit	Default	Measured value ID
102...105	Max. power factor λ L1L2L3	REAL	-	0	68
106...109	Max. reactive power Qn L1	REAL	var	-3.0×10^9	55
110...113	Max. reactive power Qn L2	REAL	var	-3.0×10^9	56
114...117	Max. reactive power Qn L3	REAL	var	-3.0×10^9	57
118...121	Max. mean voltage L-N	REAL	V	0	62
122...125	Max. mean voltage L-L	REAL	V	0	63
126...129	Max. sum mean value current	REAL	A	0	64
130...133	Max. fundamental voltage L1	REAL	V	0	62152
134...137	Max. fundamental voltage L2	REAL	V	0	62252
138...141	Max. fundamental voltage L3	REAL	V	0	62352
142...145	Max. fundamental current L1	REAL	A	0	62153
146...149	Max. fundamental current L2	REAL	A	0	62253
150...153	Max. fundamental current L3	REAL	A	0	62353
154...157	Max. fundamental apparent power L1	REAL	VA	-3.0×10^9	62155
158...161	Max. fundamental apparent power L2	REAL	VA	-3.0×10^9	62255
162...165	Max. fundamental apparent power L3	REAL	VA	-3.0×10^9	62355
166...169	Max. fundamental reactive power L1	REAL	var	-3.0×10^9	62154
170...173	Max. fundamental reactive power L2	REAL	var	-3.0×10^9	62254
174...177	Max. fundamental reactive power L3	REAL	var	-3.0×10^9	62354
178...181	Max. fundamental active power L1	REAL	W	-3.0×10^9	62156
182...185	Max. fundamental active power L2	REAL	W	-3.0×10^9	62256
186...189	Max. fundamental active power L3	REAL	W	-3.0×10^9	62356
190...193	Max. fundamental cos φ active factor L1	REAL	-	-1	62157
194...197	Max. fundamental cos φ active factor L2	REAL	-	-1	62257
198...201	Max. fundamental cos φ active factor L3	REAL	-	-1	62357
202...205	Max. THD+N voltage L1	REAL	1%	0	62150
206...209	Max. THD+N voltage L2	REAL	1%	0	62250
210...213	Max. THD+N voltage L3	REAL	1%	0	62350
214...217	Max. THD+N current L1	REAL	1%	0	62151
218...221	Max. THD+N current L2	REAL	1%	0	62251
222...225	Max. THD+N current L3	REAL	1%	0	62351

[1] The values reference the amount of the current measured value

E.5 Measured value data record for maximum values with time stamp (DS 154)

Measured variables of the module

The largest values ever measured or calculated from the time AI Energy Meter HF was started are stored in this data record.

The measured values (REAL 4 bytes) are each followed by a time stamp (PN Time 12 bytes).

The measured value identification (measured value ID) is an index which references the overview table of the measured variables in appendix B (Measured variables (Page 163)).

Byte	Measured variable	Data type	Unit	Default	Measured value ID
0	Version	UINT8	-	1	-
1	Reserved	UINT8	-	0	-
2...17	Max. voltage L1-N	REAL + PN Time	V	0	40
18...33	Max. voltage L2-N	REAL + PN Time	V	0	41
34...49	Max. voltage L3-N	REAL + PN Time	V	0	42
50...65	Max. voltage L1-L2	REAL + PN Time	V	0	43
66...81	Max. voltage L2-L3	REAL + PN Time	V	0	44
82...97	Max. voltage L3-L1	REAL + PN Time	V	0	45
98...113	Max. current L1 [1]	REAL + PN Time	A	0	46
114...129	Max. current L2 [1]	REAL + PN Time	A	0	47
130...145	Max. current L3 [1]	REAL + PN Time	A	0	48
146...161	Max. apparent power L1	REAL + PN Time	VA	0	49
162...177	Max. apparent power L2	REAL + PN Time	VA	0	50
178...193	Max. apparent power L3	REAL + PN Time	VA	0	51
194...209	Max. active power L1	REAL + PN Time	W	-3.0×10^9	52
210...225	Max. active power L2	REAL + PN Time	W	-3.0×10^9	53

Byte	Measured variable	Data type	Unit	Default	Measured value ID
226...241	Max. active power L3	REAL + PN Time	W	-3.0×10^9	54
242...257	Max. reactive power Qtot L1	REAL + PN Time	var	-3.0×10^9	62160
258...273	Max. reactive power Qtot L2	REAL + PN Time	var	-3.0×10^9	62260
274...289	Max. reactive power Qtot L3	REAL + PN Time	var	-3.0×10^9	62360
290...305	Max. power factor λ L1	REAL + PN Time	-	0	58
306...321	Max. power factor λ L2	REAL + PN Time	-	0	59
322...337	Max. power factor λ L3	REAL + PN Time	-	0	60
338...353	Max. frequency	REAL + PN Time	Hz	45	61
354...369	Max. apparent power L1L2L3	REAL + PN Time	VA	0	67
370...385	Max. active power L1L2L3	REAL + PN Time	W	-3.0×10^9	65
386...401	Max. reactive power Qtot L1L2L3	REAL + PN Time	var	-3.0×10^9	61138
402...417	Max. power factor λ L1L2L3	REAL + PN Time	-	0	68
418...433	Max. reactive power Qn L1	REAL + PN Time	var	-3.0×10^9	55
434...449	Max. reactive power Qn L2	REAL + PN Time	var	-3.0×10^9	56
450...465	Max. reactive power Qn L3	REAL + PN Time	var	-3.0×10^9	57
466...481	Max. mean voltage L-N	REAL + PN Time	V	0	62
482...497	Max. mean voltage L-L	REAL + PN Time	V	0	63
498...513	Max. sum mean value current L1L2L3	REAL + PN Time	A	0	64
514...529	Max. fundamental voltage L1	REAL + PN Time	V	0	62152
530...545	Max. fundamental voltage L2	REAL + PN Time	V	0	62252
546...561	Max. fundamental voltage L3	REAL + PN Time	V	0	62352
562...577	Max. fundamental current L1	REAL + PN Time	A	0	62153

Byte	Measured variable	Data type	Unit	Default	Measured value ID
578...593	Max. fundamental current L2	REAL + PN Time	A	0	62253
594...609	Max. fundamental current L3	REAL + PN Time	A	0	62353
610...625	Max. fundamental apparent power L1	REAL + PN Time	VA	-3.0×10^9	62155
626...641	Max. fundamental apparent power L2	REAL + PN Time	VA	-3.0×10^9	62255
642...657	Max. fundamental apparent power L3	REAL + PN Time	VA	-3.0×10^9	62355
658...673	Max. fundamental reactive power L1	REAL + PN Time	var	-3.0×10^9	62154
674...689	Max. fundamental reactive power L2	REAL + PN Time	var	-3.0×10^9	62254
690...705	Max. fundamental reactive power L3	REAL + PN Time	var	-3.0×10^9	62354
706...721	Max. fundamental active power L1	REAL + PN Time	W	-3.0×10^9	62156
722...737	Max. fundamental active power L2	REAL + PN Time	W	-3.0×10^9	62256
738...753	Max. fundamental active power L3	REAL + PN Time	W	-3.0×10^9	62356
754...769	Max. fundamental cos φ active factor L1	REAL + PN Time	-	-1	62157
770...785	Max. fundamental cos φ active factor L2	REAL + PN Time	-	-1	62257
786...801	Max. fundamental cos φ active factor L3	REAL + PN Time	-	-1	62357
802...817	Max. THD+N voltage L1	REAL + PN Time	1%	0	62150
818...833	Max. THD+N voltage L2	REAL + PN Time	1%	0	62250
834...849	Max. THD+N voltage L3	REAL + PN Time	1%	0	62350
850...865	Max. THD+N current L1	REAL + PN Time	1%	0	62151
866...881	Max. THD+N current L2	REAL + PN Time	1%	0	62251
882...897	Max. THD+N current L3	REAL + PN Time	1%	0	62351

[1] The values reference the amount of the current measured value

Structure of time stamp

The table below shows the structure of the time stamp:

Byte	PN Time	Format	Length
0	Status 0: Synchronization from system time master available 1: local synchronization available 2: no synchronization	UINT16	2 bytes
2	Seconds high	UINT16	2 bytes
4	Seconds low	UINT32	4 bytes
8	Nanoseconds	UINT32	4 bytes

The start value (initial value) is 01.01.1970, 0:00

Note

If you use the FAQ from the section Time-of-day synchronization and time stamp (Page 53), the status is always 2.

E.6 Measured value data record for minimum values (DS 145)

E.6.1 Measured value data record for minimum values (DS 145) version 1

Measured variables of the module

The smallest values ever measured or calculated from the time AI Energy Meter HF was started are stored in this data record.

The measured value identification (measured value ID) is an index which references the overview table of the measured variables in appendix B (Measured variables (Page 163)).

Byte	Measured variable	Data type	Unit	Default	Measured value ID
0	Version	UINT8	-	1	-
1	Reserved	UINT8	-	0	-
2...5	Min. voltage L1-N	REAL	V	1000000	70
6...9	Min. voltage L2-N	REAL	V	1000000	71
10...13	Min. voltage L3-N	REAL	V	1000000	72
14...17	Min. voltage L1-L2	REAL	V	1800000	73
18...21	Min. voltage L2-L3	REAL	V	1800000	74
22...25	Min. voltage L3-L1	REAL	V	1800000	75
26...29	Min. current L1 [1]	REAL	A	100000	76
30...33	Min. current L2 [1]	REAL	A	100000	77
34...37	Min. current L3 [1]	REAL	A	100000	78
38...41	Min. apparent power L1	REAL	VA	$+3.0 \times 10^9$	79
42...45	Min. apparent power L2	REAL	VA	$+3.0 \times 10^9$	80
46...49	Min. apparent power L3	REAL	VA	$+3.0 \times 10^9$	81
50...53	Min. active power L1	REAL	W	$+3.0 \times 10^9$	82
54...57	Min. active power L2	REAL	W	$+3.0 \times 10^9$	83
58...61	Min. active power L3	REAL	W	$+3.0 \times 10^9$	84
62...65	Min. reactive power Qtot L1	REAL	var	$+3.0 \times 10^9$	62180
66...69	Min. reactive power Qtot L2	REAL	var	$+3.0 \times 10^9$	62280
70...73	Min. reactive power Qtot L3	REAL	var	$+3.0 \times 10^9$	62380
74...77	Min. power factor λ L1	REAL	-	1	88
78...81	Min. power factor λ L2	REAL	-	1	89
82...85	Min. power factor λ L3	REAL	-	1	90
86...89	Min. frequency	REAL	Hz	65	91
90...93	Min. apparent power L1L2L3	REAL	VA	$+3.0 \times 10^9$	97
94...97	Min. active power L1L2L3	REAL	W	$+3.0 \times 10^9$	95
98...101	Min. reactive power Qn L1L2L3	REAL	var	$+3.0 \times 10^9$	61139

Byte	Measured variable	Data type	Unit	Default	Measured value ID
102...105	Min. power factor λ L1L2L3	REAL	-	1	98
106...109	Min. reactive power Qn L1	REAL	var	$+3.0 \times 10^9$	85
110...113	Min. reactive power Qn L2	REAL	var	$+3.0 \times 10^9$	86
114...117	Min. reactive power Qn L3	REAL	var	$+3.0 \times 10^9$	87
118...121	Min. mean voltage L-N	REAL	V	1000000	92
122...125	Min. mean voltage L-L	REAL	V	1800000	93
126...129	Min. mean current L1L2L3	REAL	A	100000	94
130...133	Min. fundamental voltage L1	REAL	V	0	62172
134...137	Min. fundamental voltage L2	REAL	V	0	62272
138...141	Min. fundamental voltage L3	REAL	V	0	62372
142...145	Min. fundamental current L1	REAL	A	1000000	62173
146...149	Min. fundamental current L2	REAL	A	1000000	62273
150...153	Min. fundamental current L3	REAL	A	1000000	62373
154...157	Min. fundamental apparent power L1	REAL	VA	$+3.0 \times 10^9$	62175
158...161	Min. fundamental apparent power L2	REAL	VA	$+3.0 \times 10^9$	62275
162...165	Min. fundamental apparent power L3	REAL	VA	$+3.0 \times 10^9$	62375
166...169	Min. fundamental reactive power L1	REAL	var	$+3.0 \times 10^9$	62174
170...173	Min. fundamental reactive power L2	REAL	var	$+3.0 \times 10^9$	62274
174...177	Min. fundamental reactive power L3	REAL	var	$+3.0 \times 10^9$	62374
178...181	Min. fundamental active power L1	REAL	W	$+3.0 \times 10^9$	62176
182...185	Min. fundamental active power L2	REAL	W	$+3.0 \times 10^9$	62276
186...189	Min. fundamental active power L3	REAL	W	$+3.0 \times 10^9$	62376
190...193	Min. fundamental cos φ active factor L1	REAL	-	1	62177
194...197	Min. fundamental cos φ active factor L2	REAL	-	1	62277
198...201	Min. fundamental cos φ active factor L3	REAL	-	1	62377
202...205	Min. THD+N voltage L1	REAL	1%	100	62170
206...209	Min. THD+N voltage L2	REAL	1%	100	62270
210...213	Min. THD+N voltage L3	REAL	1%	100	62370
214...217	Min. THD+N current L1	REAL	1%	100	62171
218...221	Min. THD+N current L2	REAL	1%	100	62271
222...225	Min. THD+N current L3	REAL	1%	100	62371

[1] The values reference the amount of the current measured value

E.7 Measured value data record for minimum values with time stamp (DS 155)

Measured variables of the module

The smallest values ever measured or calculated from the time AI Energy Meter HF was started are stored in this data record.

The measured values (REAL 4 bytes) are each followed by a time stamp (PN Time 12 bytes).

The measured value identification (measured value ID) is an index which references the overview table of the measured variables in appendix B (Measured variables (Page 163)).

Byte	Measured variable	Data type	Unit	Default	Measured value ID
0	Version	UINT8	-	1	-
1	Reserved	UINT8	-	0	-
2...17	Min. voltage L1-N	REAL + PN Time	V	1000000	70
18...33	Min. voltage L2-N	REAL + PN Time	V	1000000	71
34...49	Min. voltage L3-N	REAL + PN Time	V	1000000	72
50...65	Min. voltage L1-L2	REAL + PN Time	V	1800000	73
66...81	Min. voltage L2-L3	REAL + PN Time	V	1800000	74
82...97	Min. voltage L3-L1	REAL + PN Time	V	1800000	75
98...113	Min. current L1 [1]	REAL + PN Time	A	100000	76
114...129	Min. current L2 [1]	REAL + PN Time	A	100000	77
130...145	Min. current L3 [1]	REAL + PN Time	A	100000	78
146...161	Min. apparent power L1	REAL + PN Time	VA	$+3.0 \times 10^9$	79
162...177	Min. apparent power L2	REAL + PN Time	VA	$+3.0 \times 10^9$	80
178...193	Min. apparent power L3	REAL + PN Time	VA	$+3.0 \times 10^9$	81
194...209	Min. active power L1	REAL + PN Time	W	$+3.0 \times 10^9$	82
210...225	Min. active power L2	REAL + PN Time	W	$+3.0 \times 10^9$	83

Byte	Measured variable	Data type	Unit	Default	Measured value ID
226...241	Min. active power L3	REAL + PN Time	W	$+3.0 \times 10^9$	84
242...257	Min. reactive power Qtot L1	REAL + PN Time	var	$+3.0 \times 10^9$	62180
258...273	Min. reactive power Qtot L2	REAL + PN Time	var	$+3.0 \times 10^9$	62280
274...289	Min. reactive power Qtot L3	REAL + PN Time	var	$+3.0 \times 10^9$	62380
290...305	Min. power factor λ L1	REAL + PN Time	-	1	88
306...321	Min. power factor λ L2	REAL + PN Time	-	1	89
322...337	Min. power factor λ L3	REAL + PN Time	-	1	90
338...353	Min. frequency	REAL + PN Time	Hz	65	91
354...369	Min. apparent power L1L2L3	REAL + PN Time	VA	$+3.0 \times 10^9$	97
370...385	Min. active power L1L2L3	REAL + PN Time	W	$+3.0 \times 10^9$	95
386...401	Min. reactive power Qn L1L2L3	REAL + PN Time	var	$+3.0 \times 10^9$	61139
402...417	Min. power factor λ L1L2L3	REAL + PN Time	-	1	98
418...433	Min. reactive power Qn L1	REAL + PN Time	var	$+3.0 \times 10^9$	85
434...449	Min. reactive power Qn L2	REAL + PN Time	var	$+3.0 \times 10^9$	86
450...465	Min. reactive power Qn L3	REAL + PN Time	var	$+3.0 \times 10^9$	87
466...481	Min. mean voltage L-N	REAL + PN Time	V	1000000	92
482...497	Min. mean voltage L-L	REAL + PN Time	V	1800000	93
498...513	Min. mean current L1L2L3	REAL + PN Time	A	100000	94
514...529	Min. fundamental voltage L1	REAL + PN Time	V	0	62172
530...545	Min. fundamental voltage L2	REAL + PN Time	V	0	62272
546...561	Min. fundamental voltage L3	REAL + PN Time	V	0	62372
562...577	Min. fundamental current L1	REAL + PN Time	A	1000000	62173

Byte	Measured variable	Data type	Unit	Default	Measured value ID
578...593	Min. fundamental current L2	REAL + PN Time	A	1000000	62273
594...609	Min. fundamental current L3	REAL + PN Time	A	1000000	62373
610...625	Min. fundamental apparent power L1	REAL + PN Time	VA	$+3.0 \times 10^9$	62175
626...641	Min. fundamental apparent power L2	REAL + PN Time	VA	$+3.0 \times 10^9$	62275
642...657	Min. fundamental apparent power L3	REAL + PN Time	VA	$+3.0 \times 10^9$	62375
658...673	Min. fundamental reactive power L1	REAL + PN Time	var	$+3.0 \times 10^9$	62174
674...689	Min. fundamental reactive power L2	REAL + PN Time	var	$+3.0 \times 10^9$	62274
690...705	Min. fundamental reactive power L3	REAL + PN Time	var	$+3.0 \times 10^9$	62374
706...721	Min. fundamental active power L1	REAL + PN Time	W	$+3.0 \times 10^9$	62176
722...737	Min. fundamental active power L2	REAL + PN Time	W	$+3.0 \times 10^9$	62276
738...753	Min. fundamental active power L3	REAL + PN Time	W	$+3.0 \times 10^9$	62376
754...769	Min. fundamental cos φ active factor L1	REAL + PN Time	-	1	62177
770...785	Min. fundamental cos φ active factor L2	REAL + PN Time	-	1	62277
786...801	Min. fundamental cos φ active factor L3	REAL + PN Time	-	1	62377
802...817	Min. THD+N voltage L1	REAL + PN Time	1%	100	62170
818...833	Min. THD+N voltage L2	REAL + PN Time	1%	100	62270
834...849	Min. THD+N voltage L3	REAL + PN Time	1%	100	62370
850...865	Min. THD+N current L1	REAL + PN Time	1%	100	62171
866...881	Min. THD+N current L2	REAL + PN Time	1%	100	62271
882...897	Min. THD+N current L3	REAL + PN Time	1%	100	62371

[1] The values reference the amount of the current measured value

E.8 Measured value data record for phase-based measured values L1 (DS 147)

E.8.1 Measured value data record for phase-based measured values L1 (DS 147) version 0

Measured variables of the module

The measured value identification (measured value ID) is an index which references the overview table of the measured variables in appendix B (Measured variables (Page 163)).

Byte	Measured variable	Data type	Unit	Value range	Measured value ID
0	Version	BYTE	-	0	-
1	Reserved	BYTE	-	0	-
2...3	Qualifier L1	WORD	Bit field	0b 00 00 00 00 0b qq 00 00 xx	65500
4...7	Voltage UL1-N	REAL	V	0.0 ... 1000000.0	1
8...11	Current L1	REAL	A	0.0 … 100000.0	7
12...15	Apparent power L1	REAL	VA	-3.0×10^9 … $+3.0 \times 10^9$	10
16...19	Active power L1	REAL	W	-3.0×10^9 … $+3.0 \times 10^9$	13
20...23	Reactive power Qtot L1	REAL	var	-3.0×10^9 … $+3.0 \times 10^9$	22
24...27	Power factor L1	REAL	-	0.0 ... 1.0	19
28...31	Phase angle L1	REAL	°	0.0 ... 360.0	61178
32...39	Apparent energy L1	LREAL	VAh	0.0 ... 1.8×10^{308}	61184
40...47	Total active energy L1	LREAL	Wh	-1.8×10^{308} ... $+1.8 \times 10^{308}$	61185
48...55	Total reactive energy L1	LREAL	varh	-1.8×10^{308} ... $+1.8 \times 10^{308}$	61186
56...59	Max. voltage UL1-N	REAL	V	0.0 ... 1000000.0	40
60...63	Max. current L1	REAL	A	0.0 ... 100000.0	46
64...67	Max. apparent power L1	REAL	VA	-3.0×10^9 … $+3.0 \times 10^9$	49
68...71	Max. active power L1	REAL	W	-3.0×10^9 … $+3.0 \times 10^9$	52
72...75	Max. reactive power Qtot L1	REAL	var	-3.0×10^9 … $+3.0 \times 10^9$	62160
76...79	Max. power factor L1	REAL	-	0.0 ... 1.0	58
80...83	Min. voltage UL1-N	REAL	V	0.0 ... 1000000.0	70
84...87	Min. current L1	REAL	A	0.0 ... 100000.0	76
88...91	Min. apparent power L1	REAL	VA	-3.0×10^9 … $+3.0 \times 10^9$	79
92...95	Min. active power L1	REAL	W	-3.0×10^9 … $+3.0 \times 10^9$	82
96...99	Min. reactive power Qtot L1	REAL	var	-3.0×10^9 … $+3.0 \times 10^9$	62180
100...103	Min. power factor L1	REAL	-	0.0 ... 1.0	88

E.8.2 Measured value data record for phase-based measured values L1 (DS 147) version 1

Measured variables of the module

The measured value identification (measured value ID) is an index which references the overview table of the measured variables in appendix B (Measured variables (Page 163)).

Byte	Measured variable	Data type	Unit	Value range	Measured value ID
0	Version	UINT8	-	1	-
1	Reserved	UINT8	-	0	-
2...3	Qualifier L1	WORD	Bit field	0b 00 00 00 00 0b qq 00 00 xx	65500
4...7	Voltage L1-N	REAL	V	0.0 ... 1000000.0	1
8...11	Current L1	REAL	A	0.0 … 100000.0	7
12...15	Apparent power L1	REAL	VA	-3.0×10^9 … $+3.0 \times 10^9$	10
16...19	Active power L1	REAL	W	-3.0×10^9 … $+3.0 \times 10^9$	13
20...23	Reactive power L1	REAL	var	-3.0×10^9 … $+3.0 \times 10^9$	22
24...27	Power factor L1	REAL	-	0.0 ... 1.0	19
28...31	Phase angle L1	REAL	°	0.0 ... 360.0	61178
32...39	Apparent energy L1	LREAL	VAh	0.0 ... 1.8×10^{308}	61184
40...47	Total active energy L1	LREAL	Wh	-1.8×10^{308} ... $+1.8 \times 10^{308}$	61185
48...55	Total reactive energy L1	LREAL	varh	-1.8×10^{308} ... $+1.8 \times 10^{308}$	61186
56...59	Max. voltage L1-N	REAL	V	0.0 ... 1000000.0	40
60...63	Max. current L1	REAL	A	0.0 ... 100000.0	46
64...67	Max. apparent power L1	REAL	VA	-3.0×10^9 … $+3.0 \times 10^9$	49
68...71	Max. active power L1	REAL	W	-3.0×10^9 … $+3.0 \times 10^9$	52
72...75	Max. reactive power L1	REAL	var	-3.0×10^9 … $+3.0 \times 10^9$	62160
76...79	Max. power factor L1	REAL	-	0.0 ... 1.0	58
80...83	Min. voltage L1-N	REAL	V	0.0 ... 1000000.0	70
84...87	Min. current L1	REAL	A	0.0 ... 100000.0	76
88...91	Min. apparent power L1	REAL	VA	-3.0×10^9 … $+3.0 \times 10^9$	79
92...95	Min. active power L1	REAL	W	-3.0×10^9 … $+3.0 \times 10^9$	82
96...99	Min. reactive power Qtot L1	REAL	var	-3.0×10^9 … $+3.0 \times 10^9$	62180
100...103	Min. power factor L1	REAL	-	0.0 ... 1.0	88
104...107	Reactive power Qn L1	REAL	var	-3.0×10^9 … $+3.0 \times 10^9$	16
108...111	Current L1 10-12 cycles	REAL	V	0.0 ... 760.0	62130
112...115	Current L1 10-12 cycles	REAL	A	0.0 ... 100000.0	62133
116...119	Max. reactive power Qn L1	REAL	var	-3.0×10^9 … $+3.0 \times 10^9$	55
120...123	Min. reactive power Qn L1	REAL	var	-3.0×10^9 … $+3.0 \times 10^9$	85
124...127	Fundamental voltage L1	REAL	V	0.0 ... 440.0	62122

Byte	Measured variable	Data type	Unit	Value range	Measured value ID
128...131	Fundamental current L1	REAL	A	0.0 ... 100000.0	62123
132...135	Fundamental apparent power L1	REAL	VA	-3.0×10^9 … $+3.0 \times 10^9$	62125
136...139	Fundamental reactive power L1	REAL	var	-3.0×10^9 … $+3.0 \times 10^9$	62124
140...143	Fundamental active power L1	REAL	W	-3.0×10^9 … $+3.0 \times 10^9$	62126
144...147	Fundamental cos φ active factor L1	REAL	-	-1.0 ... 1.0	62127
148...151	Max. fundamental voltage L1	REAL	V	0.0 ... 760.0	62152
152...155	Max. fundamental current L1	REAL	A	0.0 ... 100000.0	62153
156...159	Max. fundamental apparent power L1	REAL	VA	-3.0×10^9 … $+3.0 \times 10^9$	62155
160...163	Max. fundamental reactive power L1	REAL	var	-3.0×10^9 … $+3.0 \times 10^9$	62154
164...167	Max. fundamental active power L1	REAL	W	-3.0×10^9 … $+3.0 \times 10^9$	62156
168...171	Max. fundamental cos φ active factor L1	REAL	-	-1.0 ... 1.0	62157
172...175	Min. fundamental voltage L1	REAL	V	0.0 ... 440.0	62172
176...179	Min. fundamental current L1	REAL	A	0.0 ... 100000.0	62173
180...183	Min. fundamental apparent power L1	REAL	VA	-3.0×10^9 … $+3.0 \times 10^9$	62175
184...187	Min. fundamental reactive power L1	REAL	var	-3.0×10^9 … $+3.0 \times 10^9$	62174
188...191	Min. fundamental active power L1	REAL	W	-3.0×10^9 … $+3.0 \times 10^9$	62176
192...195	Min. fundamental cos φ active factor L1	REAL	-	-1.0 ... 1.0	62177
196...199	THD+N voltage L1	REAL	1%	0% to 100%	62120
200...203	THD+N current L1	REAL	1%	0% to 100%	62121
204...207	Max. THD+N voltage L1	REAL	1%	0% to 100%	62150
208...211	Max. THD+N current L1	REAL	1%	0% to 100%	62151
212...215	Min. THD+N voltage L1	REAL	1%	0% to 100%	62170
216...219	Min. THD+N current L1	REAL	1%	0% to 100%	62171
220...223	Voltage dip - value L1	REAL	V	0.0 ... 440.0	62194
224...227	Voltage dip - duration L1	REAL	ms	0.0 ... 100000.0	62199
228...231	Voltage swell - value L1	REAL	V	0.0 ... 440.0	62195
232...235	Voltage swell - duration L1	REAL	ms	0.0 ... 100000.0	62200
236...239	Voltage peak value L1	REAL	V	0.0 ... 440.0	62196
240...243	Current peak value L1	REAL	A	0.0 ... 100000.0	62197
244...247	Overcurrent value L1	REAL	A	0.0 ... 100000.0	62198

E.9 Measured value data record for phase-based measured values L2 (DS 148)

E.9.1 Measured value data record for phase-based measured values L2 (DS 148) version 0

Measured variables of the module

The measured value identification (measured value ID) is an index which references the overview table of the measured variables in appendix B (Measured variables (Page 163)).

Byte	Measured variable	Data type	Unit	Value range	Measured value ID
0	Version	BYTE	-	0	-
1	Reserved	BYTE	-	0	-
2...3	Qualifier L2	WORD	Bit field	0b 00 00 00 00 0b qq 00 00 xx	65501
4...7	Voltage UL1-N	REAL	V	0.0 ... 1000000.0	2
8...11	Current L2	REAL	A	0.0 … 100000.0	8
12...15	Apparent power L2	REAL	VA	-3.0×10^9 … $+3.0 \times 10^9$	11
16...19	Active power L2	REAL	W	-3.0×10^9 … $+3.0 \times 10^9$	14
20...23	Reactive power Qtot L2	REAL	var	-3.0×10^9 … $+3.0 \times 10^9$	23
24...27	Power factor L2	REAL	-	0.0 ... 1.0	20
28...31	Phase angle L2	REAL	°	0.0 ... 360.0	61198
32...39	Apparent energy L2	LREAL	VAh	0.0 ... 1.8×10^{308}	61204
40...47	Total active energy L2	LREAL	Wh	-1.8×10^{308} to $+1.8 \times 10^{308}$	61205
48...55	Total reactive energy L2	LREAL	varh	-1.8×10^{308} to $+1.8 \times 10^{308}$	61206
56...59	Max. voltage UL1-N	REAL	V	0.0 ... 1000000.0	41
60...63	Max. current L2	REAL	A	0.0 ... 100000.0	47
64...67	Max. apparent power L2	REAL	VA	-3.0×10^9 … $+3.0 \times 10^9$	50
68...71	Max. active power L2	REAL	W	-3.0×10^9 … $+3.0 \times 10^9$	53
72...75	Max. reactive power Qtot L2	REAL	var	-3.0×10^9 … $+3.0 \times 10^9$	62260
76...79	Max. power factor L2	REAL	-	0.0 ... 1.0	59
80...83	Min. voltage UL1-N	REAL	V	0.0 ... 1000000.0	71
84...87	Min. current L2	REAL	A	0.0 ... 100000.0	77
88...91	Min. apparent power L2	REAL	VA	-3.0×10^9 … $+3.0 \times 10^9$	80
92...95	Min. active power L2	REAL	W	-3.0×10^9 … $+3.0 \times 10^9$	83
96...99	Min. reactive power Qtot L2	REAL	var	-3.0×10^9 … $+3.0 \times 10^9$	62280
100...103	Min. power factor L2	REAL	-	0.0 ... 1.0	89

E.9.2 Measured value data record for phase-based measured values L2 (DS 148) version 1

Measured variables of the module

The measured value identification (measured value ID) is an index which references the overview table of the measured variables in appendix B (Measured variables (Page 163)).

Byte	Measured variable	Data type	Unit	Value range	Measured value ID
0	Version	UINT8	-	1	-
1	Reserved	UINT8	-	0	-
2...3	Qualifier L2	WORD	Bit field	0b 00 00 00 00 0b qq 00 00 xx	65501
4...7	Voltage L2-N	REAL	V	0.0 ... 1000000.0	2
8...11	Current L2	REAL	A	0.0 … 100000.0	8
12...15	Apparent power L2	REAL	VA	-3.0×10^9 … $+3.0 \times 10^9$	11
16...19	Active power L2	REAL	W	-3.0×10^9 … $+3.0 \times 10^9$	14
20...23	Reactive power L2	REAL	var	-3.0×10^9 … $+3.0 \times 10^9$	23
24...27	Power factor L2	REAL	-	0.0 ... 1.0	20
28...31	Phase angle L2	REAL	°	0.0 ... 360.0	61198
32...39	Apparent energy L2	LREAL	VAh	0.0 ... 1.8×10^{308}	61204
40...47	Total active energy L2	LREAL	Wh	-1.8×10^{308} ... $+1.8 \times 10^{308}$	61205
48...55	Total reactive energy L2	LREAL	varh	-1.8×10^{308} ... $+1.8 \times 10^{308}$	61206
56...59	Max. voltage UL2-N	REAL	V	0.0 ... 1000000.0	41
60...63	Max. current L2	REAL	A	0.0 ... 100000.0	47
64...67	Max. apparent power L2	REAL	VA	-3.0×10^9 … $+3.0 \times 10^9$	50
68...71	Max. active power L2	REAL	W	-3.0×10^9 … $+3.0 \times 10^9$	53
72...75	Max. reactive power L2	REAL	var	-3.0×10^9 … $+3.0 \times 10^9$	62260
76...79	Max. power factor L2	REAL	-	0.0 ... 1.0	59
80...83	Min. voltage UL2-N	REAL	V	0.0 ... 1000000.0	71
84...87	Min. current L2	REAL	A	0.0 ... 100000.0	77
88...91	Min. apparent power L2	REAL	VA	-3.0×10^9 … $+3.0 \times 10^9$	80
92...95	Min. active power L2	REAL	W	-3.0×10^9 … $+3.0 \times 10^9$	83
96...99	Min. reactive power Qtot L2	REAL	var	-3.0×10^9 … $+3.0 \times 10^9$	62280
100...103	Min. power factor L2	REAL	-	0.0 ... 1.0	89
104...107	Reactive power Qn L2	REAL	var	-3.0×10^9 … $+3.0 \times 10^9$	17
108...111	Current L2 10-12 cycles	REAL	V	0.0 ... 760.0	62230
112...115	Current L2 10-12 cycles	REAL	A	0.0 ... 100000.0	62233
116...119	Max. reactive power Qn L2	REAL	var	-3.0×10^9 … $+3.0 \times 10^9$	56
120...123	Min. reactive power Qn L2	REAL	var	-3.0×10^9 … $+3.0 \times 10^9$	86
124...127	Fundamental voltage L2	REAL	V	0.0 ... 440.0	62222

Byte	Measured variable	Data type	Unit	Value range	Measured value ID
128...131	Fundamental current L2	REAL	A	0.0 ... 100000.0	62223
132...135	Fundamental apparent power L2	REAL	VA	-3.0×10^9 … $+3.0 \times 10^9$	62225
136...139	Fundamental reactive power L2	REAL	var	-3.0×10^9 … $+3.0 \times 10^9$	62224
140...143	Fundamental active power L2	REAL	W	-3.0×10^9 … $+3.0 \times 10^9$	62226
144...147	Fundamental cos φ active factor L2	REAL	-	-1.0 ... 1.0	62227
148...151	Max. fundamental voltage L2	REAL	V	0.0 ... 760.0	62252
152...155	Max. fundamental current L2	REAL	A	0.0 ... 100000.0	62253
156...159	Max. fundamental apparent power L2	REAL	VA	-3.0×10^9 … $+3.0 \times 10^9$	62255
160...163	Max. fundamental reactive power L2	REAL	var	-3.0×10^9 … $+3.0 \times 10^9$	62254
164...167	Max. fundamental active power L2	REAL	W	-3.0×10^9 … $+3.0 \times 10^9$	62256
168...171	Max. fundamental cos φ active factor L2	REAL	-	-1.0 ... 1.0	62257
172...175	Min. fundamental voltage L2	REAL	V	0.0 ... 440.0	62272
176...179	Min. fundamental current L2	REAL	A	0.0 ... 100000.0	62273
180...183	Min. fundamental apparent power L2	REAL	VA	-3.0×10^9 … $+3.0 \times 10^9$	62275
184...187	Min. fundamental reactive power L2	REAL	var	-3.0×10^9 … $+3.0 \times 10^9$	62274
188...191	Min. fundamental active power L2	REAL	W	-3.0×10^9 … $+3.0 \times 10^9$	62276
192...195	Min. fundamental cos φ active factor L2	REAL	-	-1.0 ... 1.0	62277
196...199	THD+N voltage L2	REAL	1%	0% to 100%	62220
200...203	THD+N current L2	REAL	1%	0% to 100%	62221
204...207	Max. THD+N voltage L2	REAL	1%	0% to 100%	62250
208...211	Max. THD+N current L2	REAL	1%	0% to 100%	62251
212...215	Min. THD+N voltage L2	REAL	1%	0% to 100%	62270
216...219	Min. THD+N current L2	REAL	1%	0% to 100%	62271
220...223	Voltage dip - value L2	REAL	V	0.0 ... 440.0	62294
224...227	Voltage dip - duration L2	REAL	ms	0.0 ... 100000.0	62299
228...231	Voltage swell - value L2	REAL	V	0.0 ... 440.0	62295
232...235	Voltage swell - duration L2	REAL	ms	0.0 ... 100000.0	62300
236...239	Voltage peak value L2	REAL	V	0.0 ... 440.0	62296
240...243	Current peak value L2	REAL	A	0.0 ... 100000.0	62297
244...247	Overcurrent value L2	REAL	A	0.0 ... 100000.0	62298

E.10 Measured value data record for phase-based measured values L3 (DS 149)

E.10.1 Measured value data record for phase-based measured values L3 (DS 149) version 0

Measured variables of the module

The measured value identification (measured value ID) is an index which references the overview table of the measured variables in appendix B (Measured variables (Page 163)).

Byte	Measured variable	Data type	Unit	Value range	Measured value ID
0	Version	BYTE	-	-	-
1	Reserved	BYTE	-	-	-
2...3	Qualifier L3	WORD	Bit field	0b 00 00 00 00 0b qq 00 00 xx	65502
4...7	Voltage UL1-N	REAL	V	0.0 ... 1000000.0	3
8...11	Current L3	REAL	A	0.0 … 100000.0	9
12...15	Apparent power L3	REAL	VA	-3.0×10^9 … $+3.0 \times 10^9$	12
16...19	Active power L3	REAL	W	-3.0×10^9 … $+3.0 \times 10^9$	15
20...23	Reactive power Qtot L3	REAL	var	-3.0×10^9 … $+3.0 \times 10^9$	24
24...27	Power factor L3	REAL	-	0.0 ... 1.0	21
28...31	Phase angle L3	REAL	°	0.0 ... 360.0	61218
32...39	Apparent energy L3	LREAL	VAh	0.0 ... 1.8×10^{308}	61224
40...47	Total active energy L3	LREAL	Wh	-1.8×10^{308} to $+1.8 \times 10^{308}$	61225
48...55	Total reactive energy L3	LREAL	varh	-1.8×10^{308} to $+1.8 \times 10^{308}$	61226
56...59	Max. voltage UL1-N	REAL	V	0.0 ... 1000000.0	42
60...63	Max. current L3	REAL	A	0.0 ... 100000.0	48
64...67	Max. apparent power L3	REAL	VA	-3.0×10^9 … $+3.0 \times 10^9$	51
68...71	Max. active power L3	REAL	W	-3.0×10^9 … $+3.0 \times 10^9$	54
72...75	Max. reactive power Qtot L3	REAL	var	-3.0×10^9 … $+3.0 \times 10^9$	62360
76...79	Max. power factor L3	REAL	-	0.0 ... 1.0	60
80...83	Min. voltage UL1-N	REAL	V	0.0 ... 1000000.0	72
84...87	Min. current L3	REAL	A	0.0 ... 100000.0	78
88...91	Min. apparent power L3	REAL	VA	-3.0×10^9 … $+3.0 \times 10^9$	81
92...95	Min. active power L3	REAL	W	-3.0×10^9 … $+3.0 \times 10^9$	62380
96...99	Min. reactive power Qtot L3	REAL	var	-3.0×10^9 … $+3.0 \times 10^9$	97
100...103	Min. power factor L3	REAL	-	0.0 ... 1.0	90

E.10.2 Measured value data record for phase-based measured values L3 (DS 149) version 1

Measured variables of the module

The measured value identification (measured value ID) is an index which references the overview table of the measured variables in appendix B (Measured variables (Page 163)).

Byte	Measured variable	Data type	Unit	Value range	Measured value ID
0	Version	UINT8	-	1	-
1	Reserved	UINT8	-	0	-
2...3	Qualifier L3	WORD	Bit field	0b 00 00 00 00 0b qq 00 00 xx	65502
4...7	Voltage L3-N	REAL	V	0.0 ... 1000000.0	3
8...11	Current L3	REAL	A	0.0 … 100000.0	9
12...15	Apparent power L3	REAL	VA	-3.0×10^9 … $+3.0 \times 10^9$	12
16...19	Active power L3	REAL	W	-3.0×10^9 … $+3.0 \times 10^9$	15
20...23	Reactive power L3	REAL	var	-3.0×10^9 … $+3.0 \times 10^9$	24
24...27	Power factor L3	REAL	-	0.0 ... 1.0	21
28...31	Phase angle L3	REAL	°	0.0 ... 360.0	61218
32...39	Apparent energy L3	LREAL	VAh	0.0 ... 1.8×10^{308}	61224
40...47	Total active energy L3	LREAL	Wh	-1.8×10^{308} ... $+1.8 \times 10^{308}$	61225
48...55	Total reactive energy L3	LREAL	varh	-1.8×10^{308} ... $+1.8 \times 10^{308}$	61226
56...59	Max. voltage UL3-N	REAL	V	0.0 ... 1000000.0	42
60...63	Max. current L3	REAL	A	0.0 ... 100000.0	48
64...67	Max. apparent power L3	REAL	VA	-3.0×10^9 … $+3.0 \times 10^9$	51
68...71	Max. active power L3	REAL	W	-3.0×10^9 … $+3.0 \times 10^9$	54
72...75	Max. reactive power L3	REAL	var	-3.0×10^9 … $+3.0 \times 10^9$	62360
76...79	Max. power factor L3	REAL	-	0.0 ... 1.0	60
80...83	Min. voltage UL3-N	REAL	V	0.0 ... 1000000.0	72
84...87	Min. current L3	REAL	A	0.0 ... 100000.0	78
88...91	Min. apparent power L3	REAL	VA	-3.0×10^9 … $+3.0 \times 10^9$	81
92...95	Min. active power L3	REAL	W	-3.0×10^9 … $+3.0 \times 10^9$	84
96...99	Min. reactive power Qtot L3	REAL	var	-3.0×10^9 … $+3.0 \times 10^9$	62380
100...103	Min. power factor L3	REAL	-	0.0 ... 1.0	90
104...107	Reactive power Qn L3	REAL	var	-3.0×10^9 … $+3.0 \times 10^9$	18
108...111	Current L3 10-12 cycles	REAL	V	0.0 ... 760.0	62330
112...115	Current L3 10-12 cycles	REAL	A	0.0 ... 100000.0	62333
116...119	Max. reactive power Qn L3	REAL	var	-3.0×10^9 … $+3.0 \times 10^9$	57
120...123	Min. reactive power Qn L3	REAL	var	-3.0×10^9 … $+3.0 \times 10^9$	87
124...127	Fundamental voltage L3	REAL	V	0.0 ... 440.0	62322

Byte	Measured variable	Data type	Unit	Value range	Measured value ID
128...131	Fundamental current L3	REAL	A	0.0 ... 100000.0	62323
132...135	Fundamental apparent power L3	REAL	VA	-3.0×10^9 … $+3.0 \times 10^9$	62325
136...139	Fundamental reactive power L3	REAL	var	-3.0×10^9 … $+3.0 \times 10^9$	62324
140...143	Fundamental active power L3	REAL	W	-3.0×10^9 … $+3.0 \times 10^9$	62326
144...147	Fundamental cos φ active factor L3	REAL	-	-1.0 ... 1.0	62327
148...151	Max. fundamental voltage L3	REAL	V	0.0 ... 760.0	62352
152...155	Max. fundamental current L3	REAL	A	0.0 ... 100000.0	62353
156...159	Max. fundamental apparent power L3	REAL	VA	-3.0×10^9 … $+3.0 \times 10^9$	62355
160...163	Max. fundamental reactive power L3	REAL	var	-3.0×10^9 … $+3.0 \times 10^9$	62354
164...167	Max. fundamental active power L3	REAL	W	-3.0×10^9 … $+3.0 \times 10^9$	62356
168...171	Max. fundamental cos φ active factor L3	REAL	-	-1.0 ... 1.0	62357
172...175	Min. fundamental voltage L3	REAL	V	0.0 ... 440.0	62372
176...179	Min. fundamental current L3	REAL	A	0.0 ... 100000.0	62373
180...183	Min. fundamental apparent power L3	REAL	VA	-3.0×10^9 … $+3.0 \times 10^9$	62375
184...187	Min. fundamental reactive power L3	REAL	var	-3.0×10^9 … $+3.0 \times 10^9$	62374
188...191	Min. fundamental active power L3	REAL	W	-3.0×10^9 … $+3.0 \times 10^9$	62376
192...195	Min. fundamental cos φ active factor L3	REAL	-	-1.0 ... 1.0	62377
196...199	THD+N voltage L3	REAL	1%	0% to 100%	62320
200...203	THD+N current L3	REAL	1%	0% to 100%	62321
204...207	Max. THD+N voltage L3	REAL	1%	0% to 100%	62350
208...211	Max. THD+N current L3	REAL	1%	0% to 100%	62351
212...215	Min. THD+N voltage L3	REAL	1%	0% to 100%	62370
216...219	Min. THD+N current L3	REAL	1%	0% to 100%	62371
220...223	Voltage dip - value L3	REAL	V	0.0 ... 440.0	62394
224...227	Voltage dip - duration L3	REAL	ms	0.0 ... 100000.0	62399
228...231	Voltage swell - value L3	REAL	V	0.0 ... 440.0	62395
232...235	Voltage swell - duration L3	REAL	ms	0.0 ... 100000.0	62400
236...239	Voltage peak value L3	REAL	V	0.0 ... 440.0	62396
240...243	Current peak value L3	REAL	A	0.0 ... 100000.0	62397
244...247	Overcurrent value L3	REAL	A	0.0 ... 100000.0	62398

E.11 Measured value data record for advanced measurement and status values (DS 150)

E.11.1 Measured value data record for advanced measurement and status values (DS 150) version 1

Measured variables of the module

The measured value identification (measured value ID) is an index which references the overview table of the measured variables in appendix B (Measured variables (Page 163)).

Byte	Measured variable	Data type	Unit	Value range	Measured value ID
0	Version	BYTE	-	1	-
1	Reserved	BYTE	-	0	-
2...5	Operating hours counter L1L2L3	REAL	h	0.0 ... 3.4 x 10^{38}	65504
6...9	Operating hours counter L1	REAL	h	0.0 ... 3.4 x 10^{38}	65505
10...13	Operating hours counter L2	REAL	h	0.0 ... 3.4 x 10^{38}	65506
14...17	Operating hours counter L3	REAL	h	0.0 ... 3.4 x 10^{38}	65507
18...19	Status limit violation GW 1...16	WORD	Bit string	xxxx xxxx xxxx xxxx	65509
20...21	Status of energy counter overflows [1]	WORD	Bit string	xxxx xxxx xxxx xxxx	65508
22...25	Counter limit violation GW 1	UDINT	-	0 ... 4294967296	65510
26...29	Counter limit violation GW 2	UDINT	-	0 ... 4294967296	65511
30...33	Counter limit violation GW 3	UDINT	-	0 ... 4294967296	65512
34...37	Counter limit violation GW 4	UDINT	-	0 ... 4294967296	65513
38...41	Counter limit violation GW 5	UDINT	-	0 ... 4294967296	65514
42...45	Counter limit violation GW 6	UDINT	-	0 ... 4294967296	65515
46...49	Counter limit violation GW 7	UDINT	-	0 ... 4294967296	65516
50...53	Counter limit violation GW 8	UDINT	-	0 ... 4294967296	65517
54...57	Counter limit violation GW 9	UDINT	-	0 ... 4294967296	65518
58...61	Counter limit violation GW 10	UDINT	-	0 ... 4294967296	65519
62...65	Counter limit violation GW 11	UDINT	-	0 ... 4294967296	65520
66...69	Counter limit violation GW 12	UDINT	-	0 ... 4294967296	65521
70...73	Counter limit violation GW 13	UDINT	-	0 ... 4294967296	65522
74...77	Counter limit violation GW 14	UDINT	-	0 ... 4294967296	65523
78...81	Counter limit violation GW 15	UDINT	-	0 ... 4294967296	65524
82...85	Counter limit violation GW 16	UDINT	-	0 ... 4294967296	65525
86...87	Qualifier L1L2L3	WORD	Bit string	xxxx xxxx xxxx xxxx	65503

Byte	Measured variable	Data type	Unit	Value range	Measured value ID
88...91	Power quality analysis - Qualifier	UDINT	Bit string	-	65496
92...103	Current module time	PNI-OTime	sec	-	65497

[1] Energy counters count periodically - counter overflow at:
Bit 0 = 1: Active energy inflow L1
Bit 1 = 1: Active energy outflow L1
Bit 2 = 1: Reactive energy inflow L1
Bit 3 = 1: Reactive energy outflow L1
Bit 4 = 1: Apparent energy L1
Bit 5 = 1: Active energy inflow L2
Bit 6 = 1: Active energy outflow L2
Bit 7 = 1: Reactive energy inflow L2
Bit 8 = 1: Reactive energy outflow L2
Bit 9 = 1: Apparent energy L2
Bit 10 = 1: Active energy inflow L3
Bit 11 = 1: Active energy outflow L3
Bit 12 = 1: Reactive energy inflow L3
Bit 13 = 1: Reactive energy outflow L3
Bit 14 = 1: Apparent energy L3
Bit 15: Reserved

E.12 Measured value data record of user-defined data record (DS 151)

The length and structure of the data record DS 151 depends on the parameter assignment of the data record DS 135 (Page 160).

Byte	Measured variable	Data type	Unit	Default	Measured value ID
0	Version	UINT8	-	0	-
1	Number of measured values	UINT8	-	0	-
2	Measured value 1 corresponding to measured value ID 1 in DS135	Depending on the corresponding measured value ID			
3	Measured value 2 corresponding to measured value ID 2 in DS135	Depending on the corresponding measured value ID			
...	...	Depending on the corresponding measured value ID			
... m	Measured value n corresponding to measured value ID n in DS135	Depending on the corresponding measured value ID			

E.13 Measured value data record for power quality analysis (DS 160)

Measured variables of the module

The measured value identification (measured value ID) is an index which references the overview table of the measured variables in appendix B (Measured variables (Page 163)).

Byte	Measured variable	Data type	Unit	Value range	Measured value ID
0	Version	BYTE	-	-	-
1	Reserved	BYTE	-	-	-
2...5	Neutral current IN	REAL	A	0.0 ... 100000.0	61149
6...9	Neutral current 10/12 cycles	REAL	A	0.0 ... 100000.0	61150
10...13	Total current IL1+IL2+IL3-IN	REAL	A	-100000.0 ... 100000.0	61153
14...17	Fundamental reactive power L1L2L3	REAL	var	-3.0×10^9 ... $+3.0 \times 10^9$	61154
18...21	Max. fundamental reactive power L1L2L3	REAL	var	-3.0×10^9 ... $+3.0 \times 10^9$	61155
22...25	Min. fundamental reactive power L1L2L3	REAL	var	-3.0×10^9 ... $+3.0 \times 10^9$	61156
26...29	Power factor λ L1L2L3	REAL	-	0.0 ... 1.0	37
30...33	Fundamental reactive power L1	REAL	var	-3.0×10^9 ... $+3.0 \times 10^9$	62124
34...37	Fundamental reactive power L2	REAL	var	-3.0×10^9 ... $+3.0 \times 10^9$	62224
38...41	Fundamental reactive power L3	REAL	var	-3.0×10^9 ... $+3.0 \times 10^9$	62324
42...45	Fundamental cos φ active factor L1	REAL	-	-1.0 ... 1.0	62127
46...49	Fundamental cos φ active factor L2	REAL	-	-1.0 ... 1.0	62227
50...53	Fundamental cos φ active factor L3	REAL	-	-1.0 ... 1.0	62327
54...57	THD+N voltage L1	REAL	1%	0% to 100%	62120
58...61	THD+N voltage L2	REAL	1%	0% to 100%	62220
62...65	THD+N voltage L3	REAL	1%	0% to 100%	62320
66...69	THD+N current L1	REAL	1%	0% to 100%	62121
70...73	THD+N current L2	REAL	1%	0% to 100%	62221
74...77	THD+N current L3	REAL	1%	0% to 100%	62321
78...81	Max. THD+N voltage L1	REAL	1%	0% to 100%	62150
82...85	Max. THD+N voltage L2	REAL	1%	0% to 100%	62250
86...89	Max. THD+N voltage L3	REAL	1%	0% to 100%	62350
90...93	Max. THD+N current L1	REAL	1%	0% to 100%	62151
94...97	Max. THD+N current L2	REAL	1%	0% to 100%	62251
98...101	Max. THD+N current L3	REAL	1%	0% to 100%	62351
102...105	Min. THD+N voltage L1	REAL	1%	0% to 100%	62170
106...109	Min. THD+N voltage L2	REAL	1%	0% to 100%	62270
110...113	Min. THD+N voltage L3	REAL	1%	0% to 100%	62370
114...117	Min. THD+N current L1	REAL	1%	0% to 100%	62171
118...121	Min. THD+N current L2	REAL	1%	0% to 100%	62271
122...125	Min. THD+N current L3	REAL	1%	0% to 100%	62371

Byte	Measured variable	Data type	Unit	Value range	Measured value ID
126...129	Voltage dip - value L1	REAL	V	0 ... 440.0	62194
130...133	Voltage dip - duration L1	REAL	ms	0.0 ... 100000.0	62199
134...137	Voltage dip - value L2	REAL	V	0 ... 440.0	62294
138...141	Voltage dip - duration L2	REAL	ms	0.0 ... 100000.0	62299
142...145	Voltage dip - value L3	REAL	V	0 ... 440.0	62394
146...149	Voltage dip - duration L3	REAL	ms	0.0 ... 100000.0	62399
150...153	Voltage increase - value L1	REAL	V	0 ... 440.0	62195
154...157	Voltage increase - duration L1	REAL	ms	0.0 ... 100000.0	62200
158...161	Voltage increase - value L2	REAL	V	0 ... 440.0	62295
162...165	Voltage increase - duration L2	REAL	ms	0.0 ... 100000.0	62300
166...169	Voltage increase - value L3	REAL	V	0 ... 440.0	62395
170...173	Voltage increase - duration L3	REAL	ms	0.0 ... 100000.0	62400
174...177	Voltage peak value L1	REAL	V	0 ... 440.0	62196
178...181	Voltage peak value L2	REAL	V	0 ... 440.0	62296
182...185	Voltage peak value L3	REAL	V	0 ... 440.0	62396
186...189	Current peak value L1	REAL	A	0.0 ... 100000.0	62197
190...193	Current peak value L2	REAL	A	0.0 ... 100000.0	62297
194...197	Current peak value L3	REAL	A	0.0 ... 100000.0	62397
198...201	Overcurrent value L1	REAL	A	0.0 ... 100000.0	62198
202...205	Overcurrent value L2	REAL	A	0.0 ... 100000.0	62298
206...209	Overcurrent value L3	REAL	A	0.0 ... 100000.0	62398
210...213	Amplitude symmetry Voltage U_2	REAL	%	0 ... 100	61157
214...217	Amplitude symmetry Current I_{unsym}	REAL	%	0 ... 100	61158
218...221	Power quality analysis - Qualifier	UDINT	Bit string	-	65496
222...233	Current module time	PNIO Time	sec	-	65497

E.14 Measured value data record for harmonics voltage (DS 161)

Measured variables of the module

The measured value identification (measured value ID) is an index which references the overview table of the measured variables in appendix B (Measured variables (Page 163)).

Byte	Measured variable	Data type	Unit	Value range	Measured value ID
0	Version	BYTE	-	-	-
1	Reserved	BYTE	-	-	-
2...5	THD+N voltage L1	REAL	1%	0% to 100%	62120
6...9	Voltage L1	REAL	V	0.0 ... 440.0	1
10...13	Harmonics 1: Voltage L1	REAL	V	0.0 ... 760.0	63000
14...17	Harmonics 2: Voltage L1	REAL	V	0.0 ... 760.0	63002
18...21	Harmonics 3: Voltage L1	REAL	V	0.0 ... 760.0	63004
22...25	Harmonics 4: Voltage L1	REAL	V	0.0 ... 760.0	63006
26...29	Harmonics 5: Voltage L1	REAL	V	0.0 ... 760.0	63008
30...33	Harmonics 6: Voltage L1	REAL	V	0.0 ... 760.0	63010
34...37	Harmonics 7: Voltage L1	REAL	V	0.0 ... 760.0	63012
38...41	Harmonics 8: Voltage L1	REAL	V	0.0 ... 760.0	63014
42...45	Harmonics 9: Voltage L1	REAL	V	0.0 ... 760.0	63016
46...49	Harmonics 10: Voltage L1	REAL	V	0.0 ... 760.0	63018
50...53	Harmonics 11: Voltage L1	REAL	V	0.0 ... 760.0	63020
54...57	Harmonics 12: Voltage L1	REAL	V	0.0 ... 760.0	63022
58...61	Harmonics 13: Voltage L1	REAL	V	0.0 ... 760.0	63024
62...65	Harmonics 14: Voltage L1	REAL	V	0.0 ... 760.0	63026
66...69	Harmonics 15: Voltage L1	REAL	V	0.0 ... 760.0	63028
70...73	Harmonics 16: Voltage L1	REAL	V	0.0 ... 760.0	63030
74...77	Harmonics 17: Voltage L1	REAL	V	0.0 ... 760.0	63032
78...81	Harmonics 18: Voltage L1	REAL	V	0.0 ... 760.0	63034
82...85	Harmonics 19: Voltage L1	REAL	V	0.0 ... 760.0	63036
86...89	Harmonics 20: Voltage L1	REAL	V	0.0 ... 760.0	63038
90...93	Harmonics 21: Voltage L1	REAL	V	0.0 ... 760.0	63040
94...97	Harmonics 22: Voltage L1	REAL	V	0.0 ... 760.0	63042
98...101	Harmonics 23: Voltage L1	REAL	V	0.0 ... 760.0	63044
102...105	Harmonics 24: Voltage L1	REAL	V	0.0 ... 760.0	63046
106...109	Harmonics 25: Voltage L1	REAL	V	0.0 ... 760.0	63048
110...113	Harmonics 26: Voltage L1	REAL	V	0.0 ... 760.0	63050
114...117	Harmonics 27: Voltage L1	REAL	V	0.0 ... 760.0	63052
118...121	Harmonics 28: Voltage L1	REAL	V	0.0 ... 760.0	63054
122...125	Harmonics 29: Voltage L1	REAL	V	0.0 ... 760.0	63056

Byte	Measured variable	Data type	Unit	Value range	Measured value ID
126...129	Harmonics 30: Voltage L1	REAL	V	0.0 ... 760.0	63058
130...133	Harmonics 31: Voltage L1	REAL	V	0.0 ... 760.0	63060
134...137	Harmonics 32: Voltage L1	REAL	V	0.0 ... 760.0	63062
138...141	Harmonics 33: Voltage L1	REAL	V	0.0 ... 760.0	63064
142...145	Harmonics 34: Voltage L1	REAL	V	0.0 ... 760.0	63066
146...149	Harmonics 35: Voltage L1	REAL	V	0.0 ... 760.0	63068
150...153	Harmonics 36: Voltage L1	REAL	V	0.0 ... 760.0	63070
154...157	Harmonics 37: Voltage L1	REAL	V	0.0 ... 760.0	63072
158...161	Harmonics 38: Voltage L1	REAL	V	0.0 ... 760.0	63074
162...165	Harmonics 39: Voltage L1	REAL	V	0.0 ... 760.0	63076
166...169	Harmonics 40: Voltage L1	REAL	V	0.0 ... 760.0	63078
170...173	THD+N voltage L2	REAL	1%	0% to 100%	62220
174...177	Voltage L2	REAL	V	0.0 ... 440.0	2
178...181	Harmonics 1: Voltage L2	REAL	V	0.0 ... 760.0	63400
182...185	Harmonics 2: Voltage L2	REAL	V	0.0 ... 760.0	63402
186...189	Harmonics 3: Voltage L2	REAL	V	0.0 ... 760.0	63404
190...193	Harmonics 4: Voltage L2	REAL	V	0.0 ... 760.0	63406
194...197	Harmonics 5: Voltage L2	REAL	V	0.0 ... 760.0	63408
198...201	Harmonics 6: Voltage L2	REAL	V	0.0 ... 760.0	63410
202...205	Harmonics 7: Voltage L2	REAL	V	0.0 ... 760.0	63412
206...209	Harmonics 8: Voltage L2	REAL	V	0.0 ... 760.0	63414
210...213	Harmonics 9: Voltage L2	REAL	V	0.0 ... 760.0	63416
214...217	Harmonics 10: Voltage L2	REAL	V	0.0 ... 760.0	63418
218...221	Harmonics 11: Voltage L2	REAL	V	0.0 ... 760.0	63420
222...225	Harmonics 12: Voltage L2	REAL	V	0.0 ... 760.0	63422
226...229	Harmonics 13: Voltage L2	REAL	V	0.0 ... 760.0	63424
230...233	Harmonics 14: Voltage L2	REAL	V	0.0 ... 760.0	63426
234...237	Harmonics 15: Voltage L2	REAL	V	0.0 ... 760.0	63428
238...241	Harmonics 16: Voltage L2	REAL	V	0.0 ... 760.0	63430
242...245	Harmonics 17: Voltage L2	REAL	V	0.0 ... 760.0	63432
246...249	Harmonics 18: Voltage L2	REAL	V	0.0 ... 760.0	63434
250...253	Harmonics 19: Voltage L2	REAL	V	0.0 ... 760.0	63436
254...257	Harmonics 20: Voltage L2	REAL	V	0.0 ... 760.0	63438
258...261	Harmonics 21: Voltage L2	REAL	V	0.0 ... 760.0	63440
262...265	Harmonics 22: Voltage L2	REAL	V	0.0 ... 760.0	63442
266...269	Harmonics 23: Voltage L2	REAL	V	0.0 ... 760.0	63444
270...273	Harmonics 24: Voltage L2	REAL	V	0.0 ... 760.0	63446
274...277	Harmonics 25: Voltage L2	REAL	V	0.0 ... 760.0	63448
278...281	Harmonics 26: Voltage L2	REAL	V	0.0 ... 760.0	63450
281...285	Harmonics 27: Voltage L2	REAL	V	0.0 ... 760.0	63452

Byte	Measured variable	Data type	Unit	Value range	Measured value ID
286...289	Harmonics 28: Voltage L2	REAL	V	0.0 ... 760.0	63454
290...293	Harmonics 29: Voltage L2	REAL	V	0.0 ... 760.0	63456
294...297	Harmonics 30: Voltage L2	REAL	V	0.0 ... 760.0	63458
298...301	Harmonics 31: Voltage L2	REAL	V	0.0 ... 760.0	63460
302...305	Harmonics 32: Voltage L2	REAL	V	0.0 ... 760.0	63462
306...309	Harmonics 33: Voltage L2	REAL	V	0.0 ... 760.0	63464
310...313	Harmonics 34: Voltage L2	REAL	V	0.0 ... 760.0	63466
314...317	Harmonics 35: Voltage L2	REAL	V	0.0 ... 760.0	63468
318...321	Harmonics 36: Voltage L2	REAL	V	0.0 ... 760.0	63470
322...325	Harmonics 37: Voltage L2	REAL	V	0.0 ... 760.0	63472
326...329	Harmonics 38: Voltage L2	REAL	V	0.0 ... 760.0	63474
330...333	Harmonics 39: Voltage L2	REAL	V	0.0 ... 760.0	63476
334...337	Harmonics 40: Voltage L2	REAL	V	0.0 ... 760.0	63478
338...341	THD+N voltage L3	REAL	1%	0% to 100%	62320
342...345	Voltage L3	REAL	V	0.0 ... 440.0	3
346...349	Harmonics 1: Voltage L3	REAL	V	0.0 ... 760.0	63800
350...353	Harmonics 2: Voltage L3	REAL	V	0.0 ... 760.0	63802
354...357	Harmonics 3: Voltage L3	REAL	V	0.0 ... 760.0	63804
358...361	Harmonics 4: Voltage L3	REAL	V	0.0 ... 760.0	63806
362...365	Harmonics 5: Voltage L3	REAL	V	0.0 ... 760.0	63808
366...369	Harmonics 6: Voltage L3	REAL	V	0.0 ... 760.0	63810
370...373	Harmonics 7: Voltage L3	REAL	V	0.0 ... 760.0	63812
374...377	Harmonics 8: Voltage L3	REAL	V	0.0 ... 760.0	63814
378...381	Harmonics 9: Voltage L3	REAL	V	0.0 ... 760.0	63816
382...385	Harmonics 10: Voltage L3	REAL	V	0.0 ... 760.0	63818
386...389	Harmonics 11: Voltage L3	REAL	V	0.0 ... 760.0	63820
390...393	Harmonics 12: Voltage L3	REAL	V	0.0 ... 760.0	63822
394...397	Harmonics 13: Voltage L3	REAL	V	0.0 ... 760.0	63824
398...401	Harmonics 14: Voltage L3	REAL	V	0.0 ... 760.0	63826
402...405	Harmonics 15: Voltage L3	REAL	V	0.0 ... 760.0	63828
406...409	Harmonics 16: Voltage L3	REAL	V	0.0 ... 760.0	63830
410...413	Harmonics 17: Voltage L3	REAL	V	0.0 ... 760.0	63832
414...417	Harmonics 18: Voltage L3	REAL	V	0.0 ... 760.0	63834
418...421	Harmonics 19: Voltage L3	REAL	V	0.0 ... 760.0	63836
422...425	Harmonics 20: Voltage L3	REAL	V	0.0 ... 760.0	63838
426...429	Harmonics 21: Voltage L3	REAL	V	0.0 ... 760.0	63840
430...433	Harmonics 22: Voltage L3	REAL	V	0.0 ... 760.0	63842
434...437	Harmonics 23: Voltage L3	REAL	V	0.0 ... 760.0	63844
438...441	Harmonics 24: Voltage L3	REAL	V	0.0 ... 760.0	63846
442...445	Harmonics 25: Voltage L3	REAL	V	0.0 ... 760.0	63848

Byte	Measured variable	Data type	Unit	Value range	Measured value ID
446...449	Harmonics 26: Voltage L3	REAL	V	0.0 ... 760.0	63850
450...453	Harmonics 27: Voltage L3	REAL	V	0.0 ... 760.0	63852
454...457	Harmonics 28: Voltage L3	REAL	V	0.0 ... 760.0	63854
458...461	Harmonics 29: Voltage L3	REAL	V	0.0 ... 760.0	63856
462...465	Harmonics 30: Voltage L3	REAL	V	0.0 ... 760.0	63858
466...469	Harmonics 31: Voltage L3	REAL	V	0.0 ... 760.0	63860
470...473	Harmonics 32: Voltage L3	REAL	V	0.0 ... 760.0	63862
474...477	Harmonics 33: Voltage L3	REAL	V	0.0 ... 760.0	63864
478...481	Harmonics 34: Voltage L3	REAL	V	0.0 ... 760.0	63866
482...485	Harmonics 35: Voltage L3	REAL	V	0.0 ... 760.0	63868
486...489	Harmonics 36: Voltage L3	REAL	V	0.0 ... 760.0	63870
490...493	Harmonics 37: Voltage L3	REAL	V	0.0 ... 760.0	63872
494...497	Harmonics 38: Voltage L3	REAL	V	0.0 ... 760.0	63874
498...501	Harmonics 39: Voltage L3	REAL	V	0.0 ... 760.0	63876
502...505	Harmonics 40: Voltage L3	REAL	V	0.0 ... 760.0	63878
506...517	current module time	PNI-OTime	sec	-	65497

E.15 Measured value data record for harmonics current (DS 163)

Measured variables of the module

The measured value identification (measured value ID) is an index which references the overview table of the measured variables in appendix B (Measured variables (Page 163)).

Byte	Measured variable	Data type	Unit	Value range	Measured value ID
0	Version	BYTE	-	-	-
1	Reserved	BYTE	-	-	-
2...5	THD+N current L1	REAL	1%	0% to 100%	62121
6...9	Current L1	REAL	A	0.0 ... 100000.0	7
10...13	Harmonics 1: Current L1	REAL	A	0.0 ... 100000.0	63001
14...17	Harmonics 2: Current L1	REAL	A	0.0 ... 100000.0	63003
18...21	Harmonics 3: Current L1	REAL	A	0.0 ... 100000.0	63005
22...25	Harmonics 4: Current L1	REAL	A	0.0 ... 100000.0	63007
26...29	Harmonics 5: Current L1	REAL	A	0.0 ... 100000.0	63009
30...33	Harmonics 6: Current L1	REAL	A	0.0 ... 100000.0	63011
34...37	Harmonics 7: Current L1	REAL	A	0.0 ... 100000.0	63013
38...41	Harmonics 8: Current L1	REAL	A	0.0 ... 100000.0	63015
42...45	Harmonics 9: Current L1	REAL	A	0.0 ... 100000.0	63017
46...49	Harmonics 10: Current L1	REAL	A	0.0 ... 100000.0	63019
50...53	Harmonics 11: Current L1	REAL	A	0.0 ... 100000.0	63021
54...57	Harmonics 12: Current L1	REAL	A	0.0 ... 100000.0	63023
58...61	Harmonics 13: Current L1	REAL	A	0.0 ... 100000.0	63025
62...65	Harmonics 14: Current L1	REAL	A	0.0 ... 100000.0	63027
66...69	Harmonics 15: Current L1	REAL	A	0.0 ... 100000.0	63029
70...73	Harmonics 16: Current L1	REAL	A	0.0 ... 100000.0	63031
74...77	Harmonics 17: Current L1	REAL	A	0.0 ... 100000.0	63033
78...81	Harmonics 18: Current L1	REAL	A	0.0 ... 100000.0	63035
82...85	Harmonics 19: Current L1	REAL	A	0.0 ... 100000.0	63037
86...89	Harmonics 20: Current L1	REAL	A	0.0 ... 100000.0	63039
90...93	Harmonics 21: Current L1	REAL	A	0.0 ... 100000.0	63041
94...97	Harmonics 22: Current L1	REAL	A	0.0 ... 100000.0	63043
98...101	Harmonics 23: Current L1	REAL	A	0.0 ... 100000.0	63045
102...105	Harmonics 24: Current L1	REAL	A	0.0 ... 100000.0	63047
106...109	Harmonics 25: Current L1	REAL	A	0.0 ... 100000.0	63049
110...113	Harmonics 26: Current L1	REAL	A	0.0 ... 100000.0	63051
114...117	Harmonics 27: Current L1	REAL	A	0.0 ... 100000.0	63053
118...121	Harmonics 28: Current L1	REAL	A	0.0 ... 100000.0	63055
122...125	Harmonics 29: Current L1	REAL	A	0.0 ... 100000.0	63057

Byte	Measured variable	Data type	Unit	Value range	Measured value ID
126...129	Harmonics 30: Current L1	REAL	A	0.0 ... 100000.0	63059
130...133	Harmonics 31: Current L1	REAL	A	0.0 ... 100000.0	63061
134...137	Harmonics 32: Current L1	REAL	A	0.0 ... 100000.0	63063
138...141	Harmonics 33: Current L1	REAL	A	0.0 ... 100000.0	63065
142...145	Harmonics 34: Current L1	REAL	A	0.0 ... 100000.0	63067
146...149	Harmonics 35: Current L1	REAL	A	0.0 ... 100000.0	63069
150...153	Harmonics 36: Current L1	REAL	A	0.0 ... 100000.0	63071
154...157	Harmonics 37: Current L1	REAL	A	0.0 ... 100000.0	63073
158...161	Harmonics 38: Current L1	REAL	A	0.0 ... 100000.0	63075
162...165	Harmonics 39: Current L1	REAL	A	0.0 ... 100000.0	63077
166...169	Harmonics 40: Current L1	REAL	A	0.0 ... 100000.0	63079
170...173	THD+N current L2	REAL	1%	0% to 100%	62221
174...177	Current L2	REAL	A	0.0 ... 100000.0	8
178...181	Harmonics 1: Current L2	REAL	A	0.0 ... 100000.0	63401
182...185	Harmonics 2: Current L2	REAL	A	0.0 ... 100000.0	63403
186...189	Harmonics 3: Current L2	REAL	A	0.0 ... 100000.0	63405
190...193	Harmonics 4: Current L2	REAL	A	0.0 ... 100000.0	63407
194...197	Harmonics 5: Current L2	REAL	A	0.0 ... 100000.0	63409
198...201	Harmonics 6: Current L2	REAL	A	0.0 ... 100000.0	63411
202...205	Harmonics 7: Current L2	REAL	A	0.0 ... 100000.0	63413
206...209	Harmonics 8: Current L2	REAL	A	0.0 ... 100000.0	63415
210...213	Harmonics 9: Current L2	REAL	A	0.0 ... 100000.0	63417
214...217	Harmonics 10: Current L2	REAL	A	0.0 ... 100000.0	63419
218...221	Harmonics 11: Current L2	REAL	A	0.0 ... 100000.0	63421
222...225	Harmonics 12: Current L2	REAL	A	0.0 ... 100000.0	63423
226...229	Harmonics 13: Current L2	REAL	A	0.0 ... 100000.0	63425
230...233	Harmonics 14: Current L2	REAL	A	0.0 ... 100000.0	63427
234...237	Harmonics 15: Current L2	REAL	A	0.0 ... 100000.0	63429
238...241	Harmonics 16: Current L2	REAL	A	0.0 ... 100000.0	63431
242...245	Harmonics 17: Current L2	REAL	A	0.0 ... 100000.0	63433
246...249	Harmonics 18: Current L2	REAL	A	0.0 ... 100000.0	63435
250...253	Harmonics 19: Current L2	REAL	A	0.0 ... 100000.0	63437
254...257	Harmonics 20: Current L2	REAL	A	0.0 ... 100000.0	63439
258...261	Harmonics 21: Current L2	REAL	A	0.0 ... 100000.0	63441
262...265	Harmonics 22: Current L2	REAL	A	0.0 ... 100000.0	63443
266...269	Harmonics 23: Current L2	REAL	A	0.0 ... 100000.0	63445
270...273	Harmonics 24: Current L2	REAL	A	0.0 ... 100000.0	63447
274...277	Harmonics 25: Current L2	REAL	A	0.0 ... 100000.0	63449
278...281	Harmonics 26: Current L2	REAL	A	0.0 ... 100000.0	63451
281...285	Harmonics 27: Current L2	REAL	A	0.0 ... 100000.0	63453

Byte	Measured variable	Data type	Unit	Value range	Measured value ID
286...289	Harmonics 28: Current L2	REAL	A	0.0 ... 100000.0	63455
290...293	Harmonics 29: Current L2	REAL	A	0.0 ... 100000.0	63457
294...297	Harmonics 30: Current L2	REAL	A	0.0 ... 100000.0	63459
298...301	Harmonics 31: Current L2	REAL	A	0.0 ... 100000.0	63461
302...305	Harmonics 32: Current L2	REAL	A	0.0 ... 100000.0	63463
306...309	Harmonics 33: Current L2	REAL	A	0.0 ... 100000.0	63465
310...313	Harmonics 34: Current L2	REAL	A	0.0 ... 100000.0	63467
314...317	Harmonics 35: Current L2	REAL	A	0.0 ... 100000.0	63469
318...321	Harmonics 36: Current L2	REAL	A	0.0 ... 100000.0	63471
322...325	Harmonics 37: Current L2	REAL	A	0.0 ... 100000.0	63473
326...329	Harmonics 38: Current L2	REAL	A	0.0 ... 100000.0	63475
330...333	Harmonics 39: Current L2	REAL	A	0.0 ... 100000.0	63477
334...337	Harmonics 40: Current L2	REAL	A	0.0 ... 100000.0	63479
338...341	THD+N current L3	REAL	1%	0% to 100%	62321
342...345	Current L3	REAL	A	0.0 ... 100000.0	9
346...349	Harmonics 1: Current L3	REAL	A	0.0 ... 100000.0	63801
350...353	Harmonics 2: Current L3	REAL	A	0.0 ... 100000.0	63803
354...357	Harmonics 3: Current L3	REAL	A	0.0 ... 100000.0	63805
358...361	Harmonics 4: Current L3	REAL	A	0.0 ... 100000.0	63807
362...365	Harmonics 5: Current L3	REAL	A	0.0 ... 100000.0	63809
366...369	Harmonics 6: Current L3	REAL	A	0.0 ... 100000.0	63811
370...373	Harmonics 7: Current L3	REAL	A	0.0 ... 100000.0	63813
374...377	Harmonics 8: Current L3	REAL	A	0.0 ... 100000.0	6381
378...381	Harmonics 9: Current L3	REAL	A	0.0 ... 100000.0	63817
382...385	Harmonics 10: Current L3	REAL	A	0.0 ... 100000.0	63819
386...389	Harmonics 11: Current L3	REAL	A	0.0 ... 100000.0	63821
390...393	Harmonics 12: Current L3	REAL	A	0.0 ... 100000.0	63823
394...397	Harmonics 13: Current L3	REAL	A	0.0 ... 100000.0	63825
398...401	Harmonics 14: Current L3	REAL	A	0.0 ... 100000.0	63827
402...405	Harmonics 15: Current L3	REAL	A	0.0 ... 100000.0	63829
406...409	Harmonics 16: Current L3	REAL	A	0.0 ... 100000.0	63831
410...413	Harmonics 17: Current L3	REAL	A	0.0 ... 100000.0	63833
414...417	Harmonics 18: Current L3	REAL	A	0.0 ... 100000.0	63835
418...421	Harmonics 19: Current L3	REAL	A	0.0 ... 100000.0	63837
422...425	Harmonics 20: Current L3	REAL	A	0.0 ... 100000.0	63839
426...429	Harmonics 21: Current L3	REAL	A	0.0 ... 100000.0	63841
430...433	Harmonics 22: Current L3	REAL	A	0.0 ... 100000.0	63843
434...437	Harmonics 23: Current L3	REAL	A	0.0 ... 100000.0	63845
438...441	Harmonics 24: Current L3	REAL	A	0.0 ... 100000.0	63847
442...445	Harmonics 25: Current L3	REAL	A	0.0 ... 100000.0	63849

Byte	Measured variable	Data type	Unit	Value range	Measured value ID
446...449	Harmonics 26: Current L3	REAL	A	0.0 ... 100000.0	63851
450...453	Harmonics 27: Current L3	REAL	A	0.0 ... 100000.0	63853
454...457	Harmonics 28: Current L3	REAL	A	0.0 ... 100000.0	63855
458...461	Harmonics 29: Current L3	REAL	A	0.0 ... 100000.0	63857
462...465	Harmonics 30: Current L3	REAL	A	0.0 ... 100000.0	63859
466...469	Harmonics 31: Current L3	REAL	A	0.0 ... 100000.0	63861
470...473	Harmonics 32: Current L3	REAL	A	0.0 ... 100000.0	63863
474...477	Harmonics 33: Current L3	REAL	A	0.0 ... 100000.0	63865
478...481	Harmonics 34: Current L3	REAL	A	0.0 ... 100000.0	63867
482...485	Harmonics 35: Current L3	REAL	A	0.0 ... 100000.0	63869
486...489	Harmonics 36: Current L3	REAL	A	0.0 ... 100000.0	63871
490...493	Harmonics 37: Current L3	REAL	A	0.0 ... 100000.0	63873
494...497	Harmonics 38: Current L3	REAL	A	0.0 ... 100000.0	63875
498...501	Harmonics 39: Current L3	REAL	A	0.0 ... 100000.0	63877
502...505	Harmonics 40: Current L3	REAL	A	0.0 ... 100000.0	63879
506...517	Current module time	PNI-OTime	sec	-	65497

E.16 Information data record on available measured values (DS 170)

Measured variables of the module

Byte	Name	Data type
0	Version	BYTE
1	Reserved	BYTE
2...3	Number of IDs	UINT16
4...5	ID measured value 1	UINT16
5...6	ID measured value 2	UINT16
...	...	...
1149...1150	ID measured value 580	UINT16

Tips and tricks

F

F.1 Tips and tricks

Processing and visualizing energy data

On the basis of an application example we show you how the measured values of the AI Energy Meter can be processed further and visualized.

You can find this application example on the Internet (http://support.automation.siemens.com/WW/view/en/86299299).

Overview of the measuring data

We provide you with an overview of the assignment of the measured values to the user data variants and data records in an Excel file.

You will find the Excel file on the Internet (https://support.industry.siemens.com/cs/ww/en/view/109755917).

Time-of-day synchronization and time stamp

In an application example we show you how to synchronize the time with the AI Energy Meter HF and work with measured values with time stamps.

You can find this application example on the Internet (http://support.automation.siemens.com/WW/view/en/109754890).

Measured values in STEP 7 as of V5.5

Measured values are represented as negative values in STEP 7 as of V5.5 if the value range of the integer format (32767 dec) is exceeded. This is not an error in the measured value. Solution: Select hexadecimal representation.

Conversion of 64-bit floating-point numbers

If you cannot process 64-bit floating-point numbers in your automation system, we recommend conversion to 32-bit floating-point numbers. Note the conversion can cause loss of accuracy. For a description of the conversion of the 64-bit floating-point numbers (data type LREAL) into 32-bit floating-point numbers (data type REAL) please refer to the Internet (http://support.automation.siemens.com/WW/view/en/56600676).

See also

FAQ (http://support.automation.siemens.com/WW/view/en/109755917)

SIEMENS

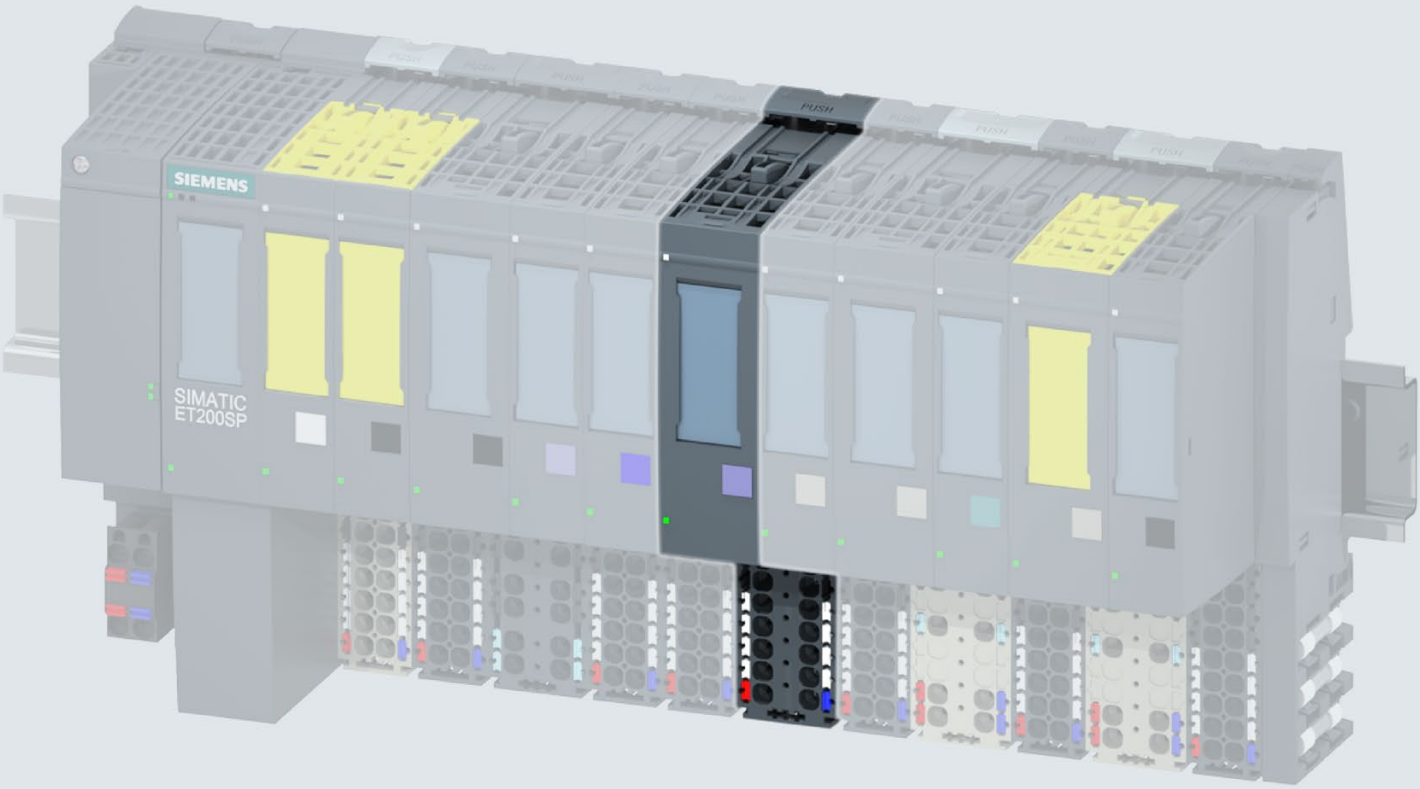

Manual

SIMATIC

ET 200SP

Analog input module
AI Energy Meter 480VAC/RC HF
(6ES7134-6PA20-0CU0)

Edition 07/2018

support.industry.siemens.com

SIEMENS

SIMATIC

ET 200SP
Analog input module
AI Energy Meter 480VAC/RC HF
(6ES7134-6PA20-0CU0)

Manual

Preface

Documentation guide 1

Product overview 2

Wiring 3

Configuration / address space 4

Quick start 5

Reading and processing measured values 6

Energy counters 7

Operating hours counter 8

Limit monitoring 9

Minimum and maximum values 10

Power quality analysis functions 11

Phase-based measured values 12

Parameters 13

Interrupts/diagnostic alarms 14

Technical specifications 15

Parameter data records A

Measured variables B

Module versions C

User data variants D

Measured value data records E

Tips and tricks F

07/2018

A5E42674880-AA

Legal information

Warning notice system

This manual contains notices you have to observe in order to ensure your personal safety, as well as to prevent damage to property. The notices referring to your personal safety are highlighted in the manual by a safety alert symbol, notices referring only to property damage have no safety alert symbol. These notices shown below are graded according to the degree of danger.

⚠ DANGER

indicates that death or severe personal injury **will** result if proper precautions are not taken.

⚠ WARNING

indicates that death or severe personal injury **may** result if proper precautions are not taken.

⚠ CAUTION

indicates that minor personal injury can result if proper precautions are not taken.

NOTICE

indicates that property damage can result if proper precautions are not taken.

If more than one degree of danger is present, the warning notice representing the highest degree of danger will be used. A notice warning of injury to persons with a safety alert symbol may also include a warning relating to property damage.

Qualified Personnel

The product/system described in this documentation may be operated only by **personnel qualified** for the specific task in accordance with the relevant documentation, in particular its warning notices and safety instructions. Qualified personnel are those who, based on their training and experience, are capable of identifying risks and avoiding potential hazards when working with these products/systems.

Proper use of Siemens products

Note the following:

⚠ WARNING

Siemens products may only be used for the applications described in the catalog and in the relevant technical documentation. If products and components from other manufacturers are used, these must be recommended or approved by Siemens. Proper transport, storage, installation, assembly, commissioning, operation and maintenance are required to ensure that the products operate safely and without any problems. The permissible ambient conditions must be complied with. The information in the relevant documentation must be observed.

Trademarks

All names identified by ® are registered trademarks of Siemens AG. The remaining trademarks in this publication may be trademarks whose use by third parties for their own purposes could violate the rights of the owner.

Disclaimer of Liability

We have reviewed the contents of this publication to ensure consistency with the hardware and software described. Since variance cannot be precluded entirely, we cannot guarantee full consistency. However, the information in this publication is reviewed regularly and any necessary corrections are included in subsequent editions.

Siemens AG
Division Digital Factory
Postfach 48 48
90026 NÜRNBERG
GERMANY

A5E42674880-AA
Ⓟ 08/2018 Subject to change

Copyright © Siemens AG 2018.
All rights reserved

Preface

Purpose of the documentation

This manual supplements the system manual ET 200SP distributed I/O system (http://support.automation.siemens.com/WW/view/en/58649293). Functions that generally relate to the system are described in this manual.

The information provided in this manual and in the system/function manuals supports you in commissioning the system.

Conventions

CPU: When the term "CPU" is used in this manual, it applies to the CPUs of the S7-1500 automation system as well as to the CPUs/interface modules of the distributed I/O system ET 200SP.

STEP 7: In this documentation, "STEP 7" is used as a synonym for all versions of the configuration and programming software "STEP 7 (TIA Portal)".

Current measuring transformer: When the term "current measuring transformer" is used in this manual, it applies both to current/voltage transformers and Rogowski coils.

Please also observe notes marked as follows:

Note

A note contains important information on the product described in the documentation, on the handling of the product and on the section of the documentation to which particular attention should be paid.

Recycling and disposal

For environmentally friendly recycling and disposal of your old equipment, contact a certified electronic waste disposal company and dispose of the equipment according to the applicable regulations in your country.

Security information

Siemens provides products and solutions with industrial security functions that support the secure operation of plants, systems, machines and networks.

In order to protect plants, systems, machines and networks against cyber threats, it is necessary to implement – and continuously maintain – a holistic, state-of-the-art industrial security concept. Siemens' products and solutions constitute one element of such a concept.

Customers are responsible for preventing unauthorized access to their plants, systems, machines and networks. Such systems, machines and components should only be connected to an enterprise network or the internet if and to the extent such a connection is necessary and only when appropriate security measures (e.g. firewalls and/or network segmentation) are in place.

For additional information on industrial security measures that may be implemented, please visit (https://www.siemens.com/industrialsecurity).

Siemens' products and solutions undergo continuous development to make them more secure. Siemens strongly recommends that product updates are applied as soon as they are available and that the latest product versions are used. Use of product versions that are no longer supported, and failure to apply the latest updates may increase customers' exposure to cyber threats.

To stay informed about product updates, subscribe to the Siemens Industrial Security RSS Feed under (https://www.siemens.com/industrialsecurity).

Table of contents

Preface 3

1 Documentation guide 9

2 Product overview 14

2.1 Properties of the AI Energy Meter HF 14

2.2 Area of application 16

2.3 Special considerations for use on the PROFIBUS DP and PROFINET IO 18

3 Wiring 20

3.1 Terminal and block diagram 20

3.2 Connection examples 23

3.3 Selection of a current measuring transformer 27

4 Configuration / address space 28

4.1 Configuring 28

4.2 Selecting the module versions 29

4.2.1 Module versions at configuration with STEP 7 29

4.2.2 Module versions at configuration with GSD file 30

4.2.3 Changing over the user data variant during operation 31

4.2.4 Recommendations for selecting the module version 33

4.3 Applicable modules 34

5 Quick start 36

6 Reading and processing measured values 38

6.1 Basics for reading measured values 38

6.2 Quality information 41

6.2.1 Quality information in byte 1 of the user data 41

6.2.2 Quality information with measured value IDs 43

6.2.3 Operating quadrant 46

6.3 Reading measured values from user data cyclically 47

6.4 Read out measured values acyclically using data records 49

6.5 Time-of-day synchronization and time stamp 50

7 Energy counters 51

7.1 Evaluate measured values for energy 52

7.2 Preset and apply start values for energy and overflow counters 54

7.2.1 Preset start values for the energy meters 55

7.2.2 Apply start values from data record DS 143 immediately 56

7.2.3 Apply start values from data record DS 143 with DQ bit 58

7.3 Starting and and stopping energy meters ... 61
7.4 Example of measuring and resetting an energy meter ... 63
7.5 What is the structure of the control and feedback interface for DS 143? ... 64
8 Operating hours counter ... 66
8.1 Evaluating operating hours counters ... 67
8.2 Preset and apply start values for operating hours counters ... 68
8.2.1 Preset start values for operating hours counters ... 69
8.2.2 Apply start values from data record DS 143 immediately ... 70
8.2.3 Apply start values from data record DS 143 with DQ bit ... 71
8.3 Starting and stopping operating hours counters ... 73
9 Limit monitoring ... 75
9.1 How limit monitoring works ... 75
9.2 Influence of hysteresis and delay time on limit monitoring ... 76
9.3 Reset, activate and deactivate counters for limit violation ... 78
9.4 Measured variables for limit monitoring ... 80
10 Minimum and maximum values ... 82
10.1 Minimum and maximum values ... 82
10.2 Resetting minimum and maximum values ... 83
11 Power quality analysis functions ... 86
11.1 Power quality analysis status ... 87
11.2 Harmonics analysis ... 88
11.3 Reactive power compensation ... 88
11.4 Detection of residual current ... 89
11.5 Active factor and power factor ... 89
11.6 Neutral current In ... 90
11.7 Monitoring the instantaneous or half-wave values ... 91
12 Phase-based measured values ... 92
13 Parameters ... 94
13.1 Parameters ... 94
13.2 Description of parameters ... 99
14 Interrupts/diagnostic alarms ... 107
14.1 Status and error display ... 107
14.2 Interrupts ... 109
14.2.1 Hardware interrupts ... 109
14.2.2 Diagnostics interrupt ... 110
14.3 Diagnostic alarms ... 110

14.4 Diagnostics response 112
14.4.1 Voltage diagnostics 113
14.4.1.1 Diagnostics: Overflow/underflow 113
14.4.1.2 Voltage swell of the voltage half-wave value 115
14.4.1.3 Voltage dip of the voltage half-wave value 117
14.4.1.4 Peak values of the instantaneous values for voltage 120
14.4.2 Current diagnostics 122
14.4.2.1 Diagnostics: Overload 122
14.4.2.2 Low limit for measuring current undershot 124
14.4.2.3 Peak values of the instantaneous values for current 126
14.4.2.4 Overcurrent of the current half value 128

15 Technical specifications 131

15.1 Technical specifications 131

A Parameter data records 138

A.1 Configuration via parameter data records 138

A.2 Structure of the parameter data record 128 for the entire module 139

A.3 Structure of the parameter data record 129 for limit monitoring 152

A.4 Structure of the parameter data records 130/131 for user-data mapping 156

A.5 Structure of the parameter data record 135 for data record mapping 159

B Measured variables 162

B.1 Measured variables for connection type 162

C Module versions 191

C.1 Module version "2 I / 2 Q" 191

C.2 Module version "32 I / 20 Q" 194

C.3 "User-specific" module version 200

C.4 Module version "EE@Industry measurement data profile E0 / E1 / E2 / E3" 202

D User data variants 204

D.1 User data variants with 32 bytes input data / 20 bytes output data 204

E Measured value data records 224

E.1 Overview of all measured value data records 224

E.2 Measured value data record for base measurements (DS 142) 225
E.2.1 Measured value data record for basic measured values (DS 142) version 2 225
E.2.2 Measured value data record for basic measured values (DS 142) version 3 227

E.3 Structure for energy counters (DS 143) 230

E.4 Measured value data record for maximum values (DS 144) 235
E.4.1 Measured value data record for maximum values (DS 144) version 1 235

E.5 Measured value data record for maximum values with time stamp (DS 154) 237

E.6 Measured value data record for minimum values (DS 145) 241
E.6.1 Measured value data record for minimum values (DS 145) version 1 241

E.7 Measured value data record for minimum values with time stamp (DS 155) 243

E.8 Measured value data record for phase-based measured values L1 (DS 147) 246
E.8.1 Measured value data record for phase-based measured values L1 (DS 147) version 0 246
E.8.2 Measured value data record for phase-based measured values L1 (DS 147) version 1 247

E.9 Measured value data record for phase-based measured values L2 (DS 148) 249
E.9.1 Measured value data record for phase-based measured values L2 (DS 148) version 0 249
E.9.2 Measured value data record for phase-based measured values L2 (DS 148) version 1 250

E.10 Measured value data record for phase-based measured values L3 (DS 149) 252
E.10.1 Measured value data record for phase-based measured values L3 (DS 149) version 0 252
E.10.2 Measured value data record for phase-based measured values L3 (DS 149) version 1 253

E.11 Measured value data record for advanced measurement and status values (DS 150) 255
E.11.1 Measured value data record for advanced measured values and status values (DS 150) version 1 255

E.12 Measured value data record of user-defined data record (DS 151) 257

E.13 Measured value data record for power quality analysis (DS 160) 258

E.14 Measured value data record for harmonics voltage (DS 161) 260

E.15 Measured value data record for harmonics current (DS 163) 264

E.16 Information data record on available measured values (DS 170) 268

F Tips and tricks.....269

F.1 Tips and tricks 269

Documentation guide

1

The documentation for the SIMATIC ET 200SP distributed I/O system is arranged into three areas.
This arrangement enables you to access the specific content you require.

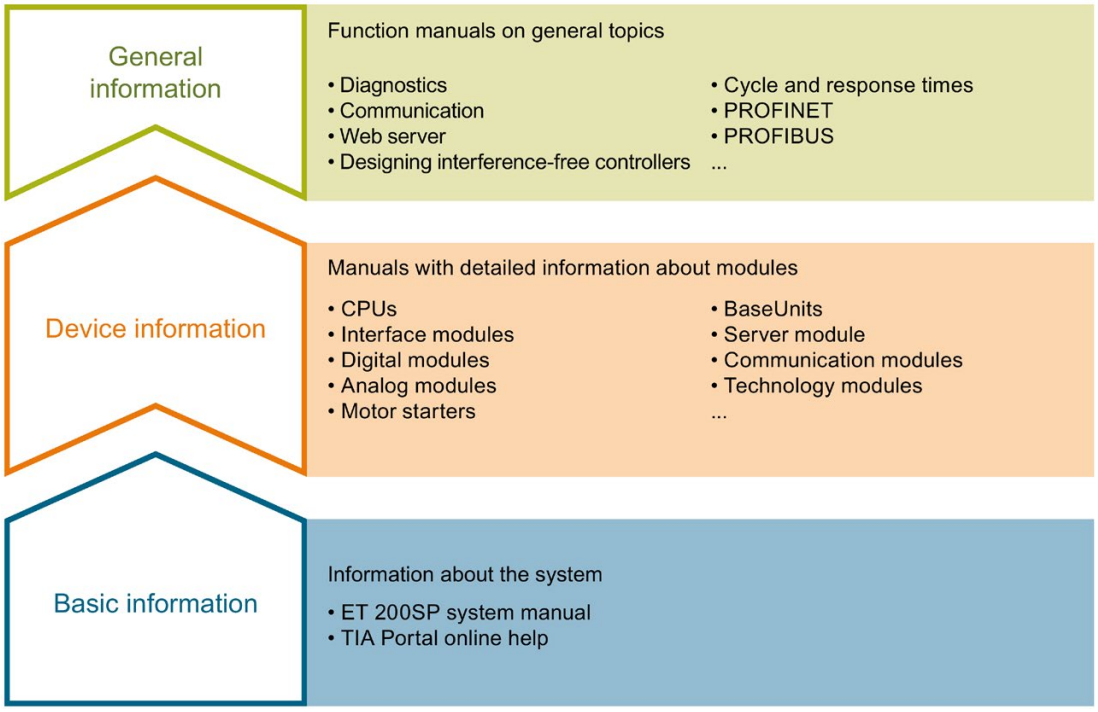

Basic information

The system manual describes in detail the configuration, installation, wiring and commissioning of the SIMATIC ET 200SP. distributed I/O system. The STEP 7 online help supports you in the configuration and programming.

Device information

Product manuals contain a compact description of the module-specific information, such as properties, wiring diagrams, characteristics and technical specifications.

General information

The function manuals contain detailed descriptions on general topics regarding the SIMATIC ET 200SP distributed I/O system, e.g. diagnostics, communication, Web server, motion control and OPC UA.

You can download the documentation free of charge from the Internet (https://support.industry.siemens.com/cs/ww/en/view/109742709).

Changes and supplements to the manuals are documented in a Product Information.

You can download the product information free of charge from the Internet (https://support.industry.siemens.com/cs/us/en/view/73021864).

Manual Collection ET 200SP

The Manual Collection contains the complete documentation on the SIMATIC ET 200SP distributed I/O system gathered together in one file.

You can find the Manual Collection on the Internet (http://support.automation.siemens.com/WW/view/en/84133942).

"mySupport"

With "mySupport", your personal workspace, you make the most of your Industry Online Support.

In "mySupport" you can store filters, favorites and tags, request CAx data and put together your personal library in the Documentation area. Furthermore, your data is automatically filled into support requests and you always have an overview of your current requests.

You need to register once to use the full functionality of "mySupport".

You can find "mySupport" in the Internet (https://support.industry.siemens.com/My/ww/en).

"mySupport" - Documentation

In the Documentation area of "mySupport", you have the possibility to combine complete manuals or parts of them to make your own manual.
You can export the manual in PDF format or in an editable format.

You can find "mySupport" - Documentation in the Internet (http://support.industry.siemens.com/My/ww/en/documentation).

"mySupport" - CAx Data

In the CAx Data area of "mySupport", you can have access the latest product data for your CAx or CAe system.

You configure your own download package with a few clicks.

In doing so you can select:

- Product images, 2D dimension drawings, 3D models, internal circuit diagrams, EPLAN macro files
- Manuals, characteristics, operating manuals, certificates
- Product master data

You can find "mySupport" - CAx Data in the Internet (http://support.industry.siemens.com/my/ww/en/CAxOnline).

Application examples

The application examples support you with various tools and examples for solving your automation tasks. Solutions are shown in interplay with multiple components in the system - separated from the focus in individual products.

You can find the application examples on the Internet (https://support.industry.siemens.com/sc/ww/en/sc/2054).

TIA Selection Tool

With the TIA Selection Tool, you can select, configure and order devices for Totally Integrated Automation (TIA).
This tool is the successor of the SIMATIC Selection Tool and combines the known configurators for automation technology into one tool.
With the TIA Selection Tool, you can generate a complete order list from your product selection or product configuration.

You can find the TIA Selection Tool on the Internet (http://w3.siemens.com/mcms/topics/en/simatic/tia-selection-tool).

SIMATIC Automation Tool

You can use the SIMATIC Automation Tool to run commissioning and maintenance activities simultaneously on various SIMATIC S7 stations as a bulk operation independently of the TIA Portal.

The SIMATIC Automation Tool provides a multitude of functions:

- Scanning of a PROFINET/Ethernet network and identification of all connected CPUs
- Address assignment (IP, subnet, gateway) and station name (PROFINET device) to a CPU
- Transfer of the data and the programming device/PC time converted to UTC time to the module
- Program download to CPU
- Operating mode switchover RUN/STOP
- Localization of the CPU by means of LED flashing
- Reading out CPU error information
- Reading the CPU diagnostic buffer
- Reset to factory settings
- Updating the firmware of the CPU and connected modules

You can find the SIMATIC Automation Tool on the Internet (https://support.industry.siemens.com/cs/ww/en/view/98161300).

PRONETA

With SIEMENS PRONETA (PROFINET network analysis), you analyze the plant network during commissioning. PRONETA features two core functions:

- The topology overview independently scans PROFINET and all connected components.
- The IO check is a fast test of the wiring and the module configuration of a system.

You can find SIEMENS PRONETA on the Internet (https://support.industry.siemens.com/cs/ww/en/view/67460624).

SINETPLAN

SINETPLAN, the Siemens Network Planner, supports you in planning automation systems and networks based on PROFINET. The tool facilitates professional and predictive dimensioning of your PROFINET installation as early as in the planning stage. In addition, SINETPLAN supports you during network optimization and helps you to exploit network resources optimally and to plan reserves. This helps to prevent problems in commissioning or failures during productive operation even in advance of a planned operation. This increases the availability of the production plant and helps improve operational safety.

The advantages at a glance

- Network optimization thanks to port-specific calculation of the network load
- Increased production availability thanks to online scan and verification of existing systems
- Transparency before commissioning through importing and simulation of existing STEP 7 projects
- Efficiency through securing existing investments in the long term and optimal exploitation of resources

You can find SINETPLAN on the Internet (https://www.siemens.com/sinetplan).

Product overview

2

2.1 Properties of the AI Energy Meter HF

Article number

6ES7134-6PA20-0CU0

View of the module

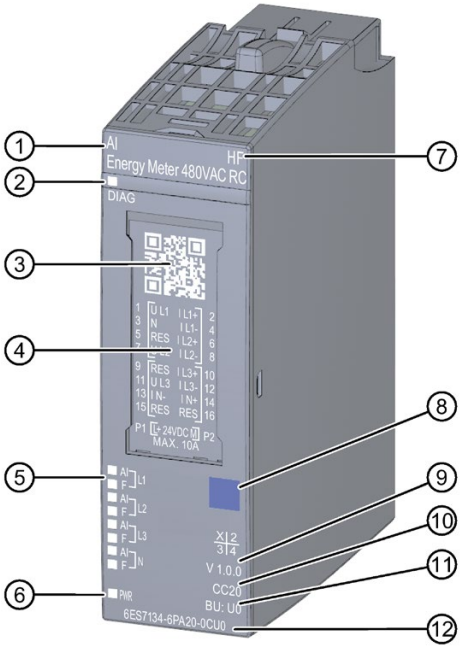

① Module type and name
② LED for diagnostics
③ 2D matrix code
④ Wiring diagram
⑤ LEDs for channel status
⑥ LED for supply voltage
⑦ Function class
⑧ Color coding module type
⑨ Function and firmware version
⑩ Color code for selecting the color identification labels
⑪ BU type
⑫ Article number

Figure 2-1 View of the module AI Energy Meter HF

Properties

The module has the following technical properties:

- Measurement of electrical variables from single-phase, two-phase and three-phase supply networks
- Max. nominal voltage between two line conductors 480 V AC
- Retentive storage of the counter values
- Use on frequency converters
- Recording of:
  - Voltages
  - Currents
  - Phase angles
  - Power
  - Energy / electrical work
  - Frequencies
  - Minimum and maximum values with time stamp
  - Power factors
  - Operating hours
  - Limits
  - Power quality data for voltages and currents

The module supports the following functions:

Table 2- 1 Version dependencies of the functions

Function	HW version	FW version	STEP 7	GSD file	
			TIA Portal	PROFINET IO	PROFIBUS DP
Firmware update	FS01	V6.0.0 or higher	V15 or higher with HSP0253	X	---
Calibration in runtime	FS01	V6.0.0 or higher	V15 or higher with HSP0253	---	---
Identification data I&M0 to I&M3	FS01	V6.0.0 or higher	V15 or higher with HSP0253	X	X
Reconfiguration in RUN	FS01	V6.0.0 or higher	V15 or higher with HSP0253	X	X
Diagnostic interrupts	FS01	V6.0.0 or higher	V15 or higher with HSP0253	X	X
Hardware interrupts	FS01	V6.0.0 or higher	V15 or higher with HSP0253	X	---

Note

The AI Energy Meter HF is released as of TIA Portal V15.0.0.2.

Accessories

The following accessories must be ordered separately:

- BaseUnit type U0
- Labeling strips
- Reference identification label

You can find additional information on the accessories in the ET 200SP distributed I/O system (http://support.automation.siemens.com/WW/view/es/58649293) system manual.

2.2 Area of application

Introduction

Energy efficiency is playing an increasingly important role in industry. Rising energy prices, increasing pressure to improve profitability and the growing awareness of climate protection are important factors for reducing energy costs and for introducing an energy data management system.

Where can you use the AI Energy Meter HF?

AI Energy Meter HF is designed for machine-level deployment in an ET 200SP distributed I/O system. AI Energy Meter HF records over 500 different electrical measurement and energy values. It lets you create transparency about the energy requirements of individual components of a production plant even down to the machine level.

You can use the following measurement values supplied by the AI Energy Meter HF for the following applications:

- Energy consumption
- Power consumption
- Power quality
- Forecasts of consumption
- Efficiency

Power consumption measurements are relevant for load management and maintenance. In addition, you can use the measurements for emission reporting and for determining the CO_2 footprint.

Note

Measuring dangerous electrical quantities

The AI Energy Meter HF is not tested according to DIN EN 61010-2-030 and may therefore not be used to verify, measure or monitor protective measures according to DIN EN 61557.

Qualified personnel must ensure through additional measures that no danger ensues for humans and the environment in case of an incorrect display.

TB, TT and IT system

The AI Energy Meter HF can be used in TN, TT and IT systems.

Measuring with AI Energy Meter HF

A typical supply network of a production plant is usually divided into three voltage ranges:

- The infeed of the entire plant
- The subdistribution, for example, to individual lines within the plant
- The end consumers such as the machines in the lines.

The following figure shows the measurement in an electricity supply network:

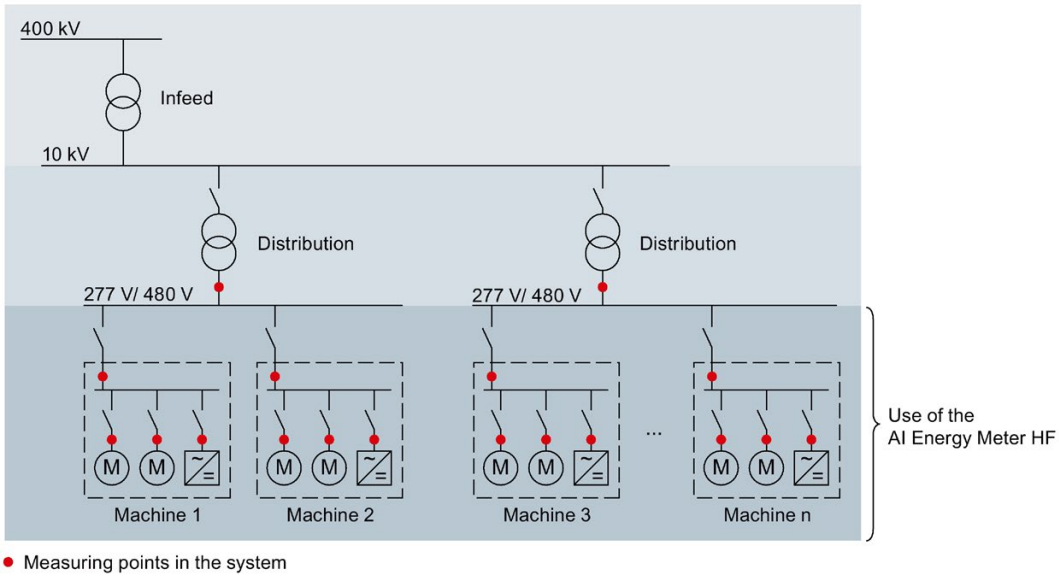

Figure 2-2 Use of the AI Energy Meter HF

Advantages of the AI Energy Meter HF

The AI Energy Meter HF has the following advantages:

- Space-saving especially for use in control cabinet
- PROFINET IO or PROFIBUS DP (depending on the interface module in use)
- Multiple modules can be used with one interface module
- Extension of existing stations by components for energy recording

2.3 Special considerations for use on the PROFIBUS DP and PROFINET IO

You can read data records from the module or write them to the module with both PROFIBUS DP and PROFINET IO.

Operation of the module on PROFIBUS DP

Please note that with PROFIBUS DP you can write data records up to a maximum length of 240 bytes to the module or read them from the module.

PROFIBUS DPV 1

If the DP Master supports the DPV1, you can reconfigure in your user program with the parameter data records DS 128, DS 129, DS 130, DS 131 or DS 135. Note that the maximum data record length is 240 bytes for DS 135.

The following applies for the measured value data records:

- DS 142: When you read the data record, the module returns the measured value data record DS 142 in version 2.
- DS 147, DS 148, DS 149: When you read the data record, the module returns the measured value data record in version 0.
- DS 154, DS 155, DS 161, DS 163, DS 164: When you read the data record, the module returns the first 240 bytes of the structure of the measured value data record.
- DS 151: You define the user-defined measured value data record DS 151 in the parameter data record DS 135. If the structure in the measured value data record DS 151 is greater than 240 bytes, the module returns the first 240 bytes of the structure.

  Information on the data record length of data records DS 135 and DS151 can be found in the appendix Structure of the parameter data record 135 for data record mapping (Page 159).

PROFIBUS DPV 0

If the DP Master does **not** support DPV1, you cannot reassign parameters which results in the following restrictions:

- There are no phase-specific parameters. All parameters apply for all three phases and the neutral conductor.
- The connection types und user data variants are limited.
- The voltage transformers are not configurable (default: 1:1).
- The current transformer value range primary current is restricted.
- The low limit for measuring current cannot be adjusted (default: 50 mA).
- Energy metering is performed continuously (the gate is not enabled).
- Min/Max calculation of values is enabled (the gate is not enabled).
- 3P4W can be set in the parameters for the connection type 3P3W.
- 3P4W can be set in the parameters for the connection type 3P3W1.
- Counting of operating hours is enabled (the gate is not enabled).
- The residual current measurement is enabled.
- Limit value monitoring cannot be used.
- Energy meter default cannot be used.
- The user-defined user data interface cannot be used.
- The user-defined data record cannot be used.
- The power quality analysis cannot be used.
- The separate settings for measuring the neutral current cannot be used.
- The measured value data records cannot be used.

Operation of the module on PROFINET IO

When reading data records partially from the module, please note the following:

- Measured value data record DS 142:
  - When you read the data record with a length of 240 bytes or less, the module returns the measured value data record DS 142 in version 2.
  - When you read the data record with a length of more than 240 bytes, the module returns the measured value data record DS 142 in version 3.
- Measured value data records DS 147, DS 148, DS 149:
  - When you read the data record with a length of 240 bytes or less, the module returns the measured value data record in version 0.
  - When you read the data record with a length of more than 240 bytes, the module returns the measured value data record in version 1.

Wiring 3

3.1 Terminal and block diagram

General safety instructions

⚠ WARNING
Danger to life due to electric shock Touching live parts can lead to death or severe injuries. Before beginning any work deenergize the system and the AI Energy Meter HF and short-circuit installed transformers.

⚠ WARNING
Danger to life, dangerous system conditions and material damage possible Removing and inserting the AI Energy Meter HF under live voltage is prohibited. If you remove and insert the AI Energy Meter HF under live voltage during operation, the transformers used can produce dangerous induction voltages and electric arcs and dangerous system conditions can arise. The AI Energy Meter HF may only be removed and inserted during operation if the measuring voltages supplied to the BaseUnit at terminals U_{L1} , U_{L2}, U_{L3} are disconnected at all poles **and** special current/voltage transformer terminals are used that short-circuit the transformer on the secondary side on removal.

Supplying the module

The AI Energy Meter HF receives its supply voltage via the terminals 17 (24 V DC) and 18 (M).

Protecting the connection cables

To protect the connection cables at U_{L1}, U_{L2} and U_{L3}, make sure there is adequate cable protection, especially after cross-section transitions.

If short-circuit resistance according to IEC 61439-1:2009 is ensured by the design, there is no need for separate cable protection for the AI Energy Meter HF.

Terminal and block diagram

The figure below shows the pin assignments for connecting voltage transformers, current-voltage transformers and Rogowski coils.

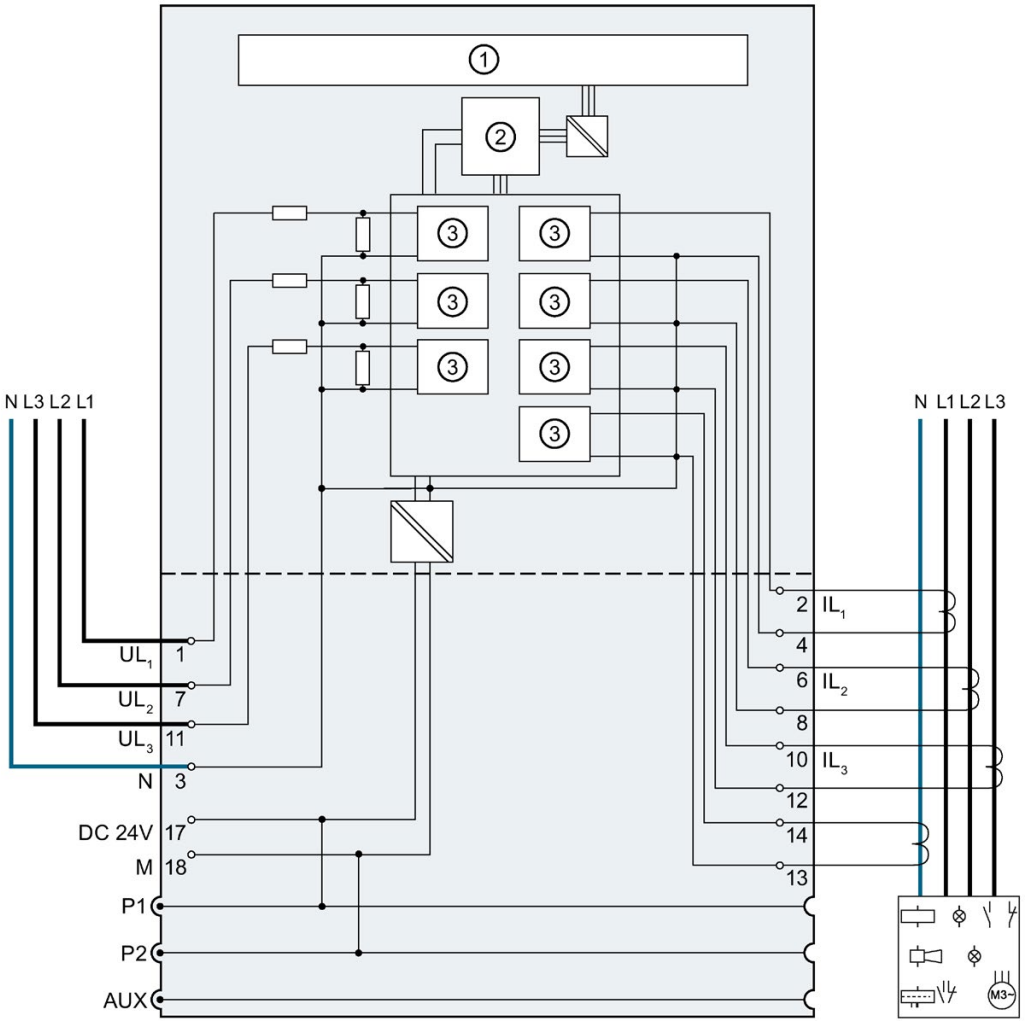

①	Microcontroller	UL_n	Connection of voltage transformers
②	Backplane bus interface	IL_n	Connection of current/voltage transformers and Rogowski coils
③	Analog-to-digital converter (ADC)	N	Neutral
P1, P2, AUX	Internal self-assembling voltage buses Connection to left (dark-colored BaseUnit) Connection to left interrupted (light-colored BaseUnit)		

Figure 3-1 Block diagram of the AI Energy Meter HF

Useable BaseUnits

You can use the following BaseUnits:

- Type BU type U0 dark-colored
- Type BU type U0 light-colored

A potential group opened with a light-colored BU type U0 must contain no dark-colored BaseUnit of BU type A0 or A1.

Connection types

The AI Energy Meter HF supports the following connection types:

- 3P4W1, 3 phases, 4 conductors, balanced load
- 3P4W, 3 phases, 4 conductors
- 2P3W, 2 phases, 3 conductors
- 1P2W, 1 phase, 2 conductors
- 3 x 1P2W, 3 x 1 phase, 2 conductors
- 3P3W, 3 phases, 3 conductors
- 3P3W1, 3 phases, 3 conductors, balanced load
- 3P4WI, 3 phases, 4 conductors (only for current measurement)

The input circuit of the module must correspond to one of the listed connection types. Select the appropriate connection type for the intended use.

You will find examples of connections in the section Connection examples (Page 23).

Selection of a current/voltage transformer can be found in the section Selection of a current measuring transformer (Page 27).

3.2 Connection examples

The following figures show the connection of the AI Energy Meter HF for three-phase, two-phase and single-phase measurements. Note that the AI Energy Meter HF must always be connected via a current measuring transformer. The use of voltage transformers is optional.

Connection type	Wiring diagram	Comment
3P4W Three-phase measurement, 4 wires	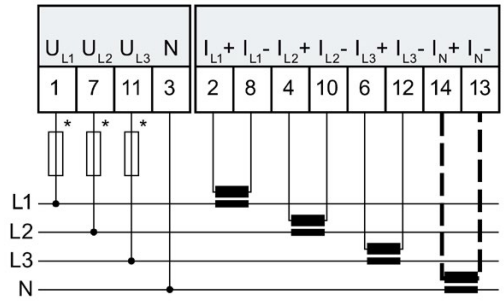	Any load Connection with three current transformers
3P4W Three-phase measurement, 4 wires	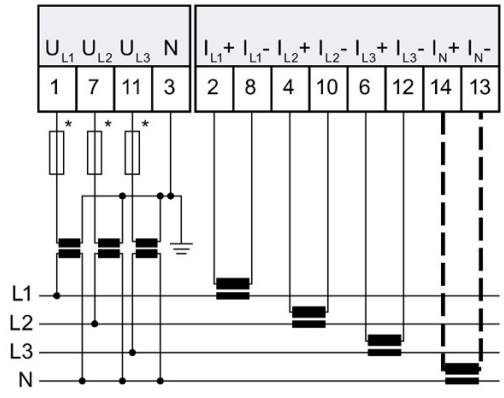	Any load Connection with three current measuring transformers and three voltage transformers.
3P4W1 Three-phase measurement, 4 wires	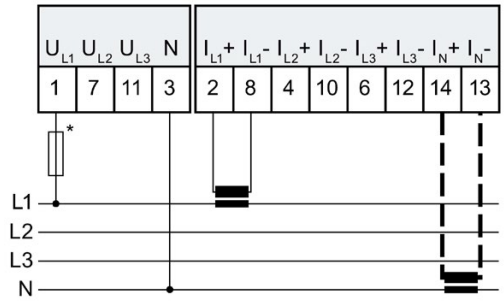	Balanced load Connection with one current measuring transformer

Connection type	Wiring diagram	Comment
3P4W1 Three-phase measurement, 4 wires	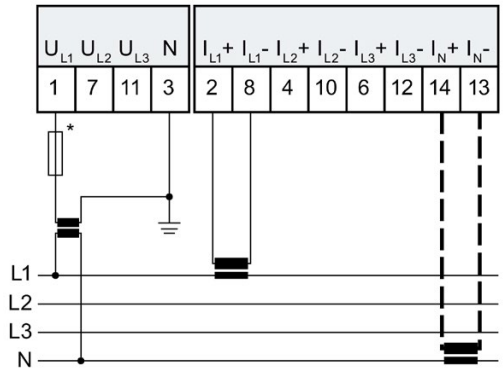	Balanced load Connection with one current measuring transformer and one voltage transformer.
2P3W Two-phase measurement, 3 conductors	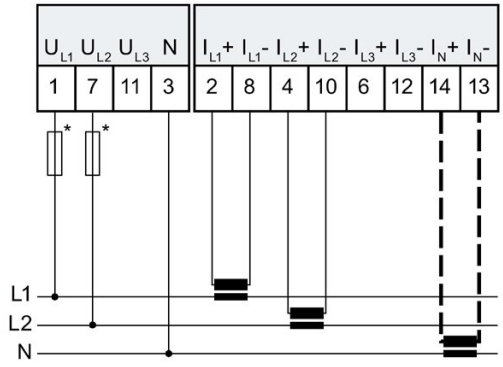	Any load Connection with two current measuring transformers AI Energy Meter HF supplies the value "0" for all measured values of Phase 3 as well as for some cross-phase measured values.
2P3W Two-phase measurement, 3 conductors	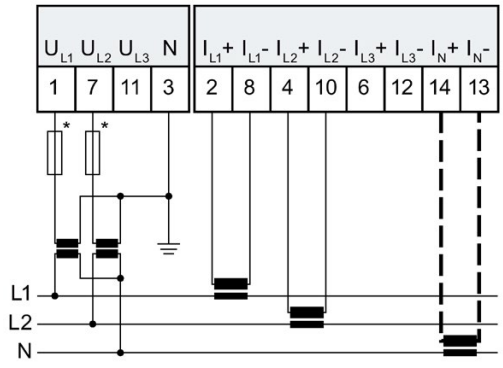	Any load Connection with two current measuring transformers and two voltage transformers. AI Energy Meter HF supplies the value "0" for all measured values of Phase 3 as well as for some cross-phase measured values.
1P2W Single-phase measurement, 2 conductors	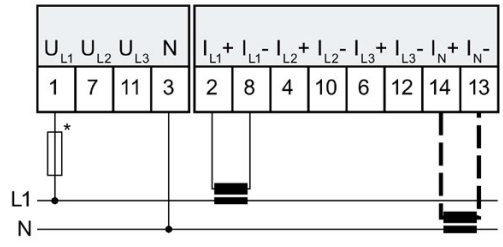	Measurement in an AC network with a current measuring transformer AI Energy Meter HF supplies the value "0" for all measured values of Phase 2 and 3 as well as for some cross-phase measured values.

Connection type	Wiring diagram	Comment
1P2W Single-phase measurement, 2 conductors	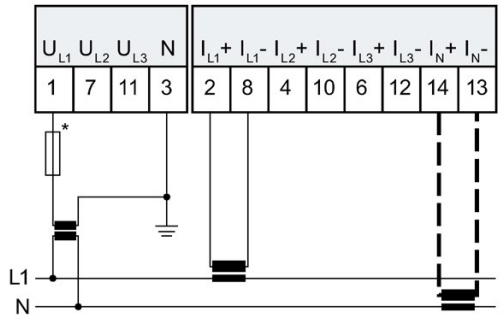	Measuring the load in an AC network with a current measuring transformer and a voltage transformer. AI Energy Meter HF supplies the value "0" for all measured values of Phase 2 and 3 as well as for some cross-phase measured values.
3 x 1P2W 3 x single-phase measurement	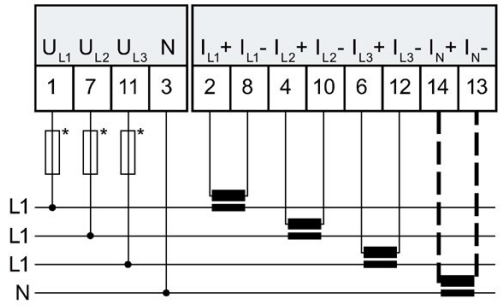	Measurement with three current measuring transformers for any three loads that are each connected to one of the three phases.
3 x 1P2W 3 x single-phase measurement	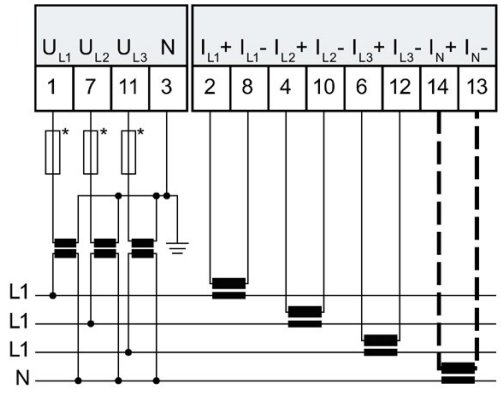	Measurement with three current measuring transformers and three voltage transformers for any three loads that are each connected to one of the three phases.
3P3W Three-phase measurement	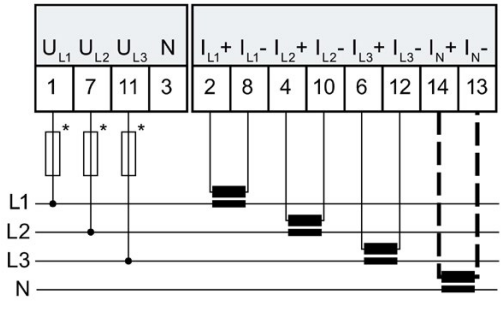	Any load Connection with three current transformers

Connection type	Wiring diagram	Comment
3P3W Three-phase measurement	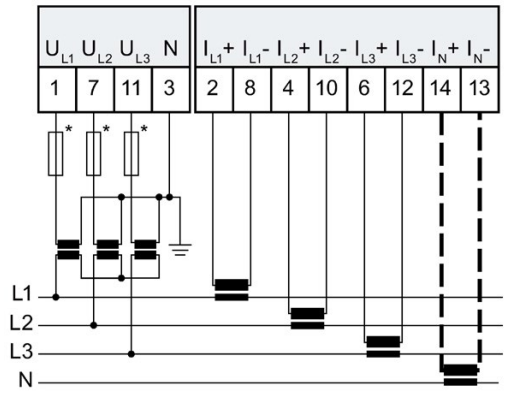	Any load Connection with three current measuring transformers and three voltage transformers.
3P3W1 Three-phase measurement	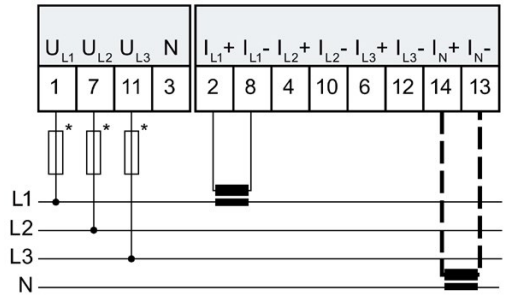	Balanced load Connection with one current measuring transformer.
3P3W1 Three-phase measurement	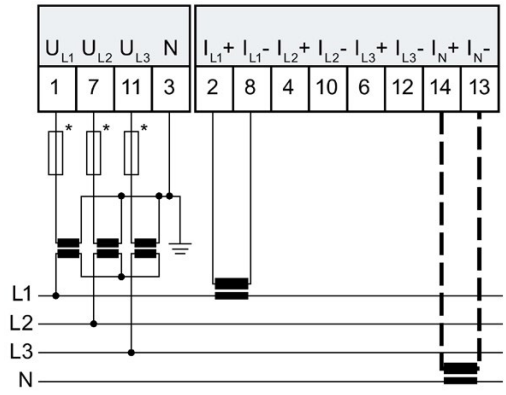	Balanced load Connection with one current measuring transformer and one voltage transformer.
3P4WI Three-phase measurement (only for current measurement)	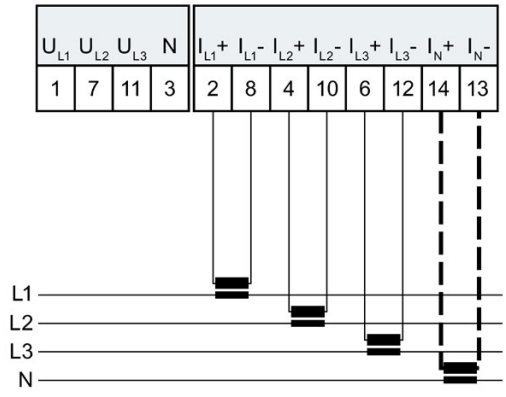	Connection with three current transformers

* If short-circuit resistance according to IEC 61439-1:2009 is ensured by the design, there is no need for separate cable protection for the AI Energy Meter HF.

3.3 Selection of a current measuring transformer

Introduction

The AI Energy Meter HF is designed for the connection of current/voltage transformers with 333 mV interface and Rogowski coils.

Note

Overall accuracy

For the total accuracy of the system consisting of the AI Energy Meter HF and current/voltage transformer or Rogowski coil, ensure that the secondary voltage of the current/voltage transformer or Rogowski coil lies in the specified accuracy range of the AI Energy Meters HF.

Current/voltage transformer

The accuracy specified by the transformer manufacturer, in contrast to pure current transformers, depends on the cable length and the resulting load resistance. Observe the specified minimum resistance of the evaluation electronics. The AI Energy Meter HF has a minimum differential input resistance at the channel terminals of 165 kΩ and a typical input resistance of 185 kΩ.

Rogowski coils

Rogowski coils are current/voltage transformers based on air coils. They do not work on a transformer principle like current transformers, but instead convert the rate of change of the current to a proportional voltage. This principle generates a phase shift of the secondary voltage vis-a-vis the primary current of 90°. An integrator in the AI Energy Meter HF, connected by the selection of the current transformer type in the configuration, compensates the phase shift again.

Interposing current transformers or integrators for connecting Rogowski coils are not required.

The accuracy of Rogowski coils is independent of the cable length. Ensure that the required minimum input resistance of the evaluation electronics is observed. The AI Energy Meter HF has a minimum differential input resistance at the channel terminals of 165 kΩ and a typical input resistance of 185 kΩ.

See also

Technical specifications (Page 131)

Configuration / address space 4

4.1 Configuring

Introduction

To configure the AI Energy Meter HF after connecting it, use configuration software such as STEP 7 (TIA Portal). In addition, you can also change numerous parameters of the AI Energy Meter HF in RUN via the user program.

Configuring

You configure the AI Energy Meter HF with:

- STEP 7 (TIA Portal) as of V15 and HSP0253
- GSD file for PROFIBUS or PROFINET

Note

Consistency check of the parameter assignment only with STEP 7

If you configure the AI Energy Meter HF using STEP 7 (TIA Portal), STEP 7 (TIA Portal) already checks the various parameters for consistency while they are being entered.

If you configure the AI Energy Meter HF using a GSD file, a consistency check is not carried out. The module does not recognize incorrect entries until after the parameter data record has been transferred. If the module recognizes an invalid parameter, the module rejects the complete data record.

Preferably use STEP 7 (TIA Portal) to configure the AI Energy Meter HF.

The following instructions show the theoretical procedure for configuring the AI Energy Meter HF with STEP 7 (TIA Portal) V15 or higher with HSP0253.

1. Select the ET 200SP distributed I/O system you are using in the hardware catalog.
2. Insert the module into your station.
3. Open the device view of the ET 200SP and insert the AI Energy Meter HF.
4. Configure the AI Energy Meter HF to suit your requirements.

   Once the configuration has been compiled without errors, you can download the configuration to the CPU and commission the ET 200SP station while the AI Energy Meter HF is running.

4.2 Selecting the module versions

Introduction

The AI Energy Meter HF has different module versions.

During the configuration you use the selection of the module version to specify which measured values can be read.

Each module version supplies quality information via the input user data.

With the exception of the module version "2 I / 2 Q" you can read the measured values as user data cyclically from the process image. At each module version you have the option to read measured value records from the AI Energy Meter HF by using the RDREC instruction asynchronously.

Influence of the module version on the address space

Note

Influence of the AI Energy Meter HF on the maximum configuration of the ET 200SP

The available address space of the ET 200SP is influenced by the following factors:

- CPU or interface module
- Plugged I/O modules

The address space made **additionally** available by the AI Energy Meter HF is essentially influenced by the length of the user data supplied. The module version determines the length of the user data, which can be supplied by the AI Energy Meter HF at maximum.

4.2.1 Module versions at configuration with STEP 7

Module versions with fixed user data assignment

Module version	User data	Address space	Comment
2 I / 2 Q	No cyclic user data. Access to measured values through "Read data record".	2-byte inputs 2-byte outputs	Information about the structure of the 2 I / 2 Q module version is available in the appendix Module version "2 I / 2 Q" (Page 191).
EE@Industry E0	User data in accordance with EE@Industry measurement data profiles	12-byte inputs / 20-byte outputs	Information about the structure of the EE@Industry measured data profiles is available in the appendix Module version "EE@Industry measurement data profile E0 / E1 / E2 / E3" (Page 202).
EE@Industry E1		4-byte inputs / 20-byte outputs	
EE@Industry E2		12-byte inputs / 20-byte outputs	
EE@Industry E3		104-byte inputs / 20-byte outputs	

Module versions with selectable user data variants

Module version	User data	Address space	Comment
32 I / 20 Q	User data selectable through defined user data variants	32-byte inputs / 20-byte outputs	You can change over the user data variant during operation. Information about the structure of the 32 I / 20 Q module version is available in appendix Module version "32 I / 20 Q" (Page 194). Information about the user data variants at 32 I / 20 Q is available in appendix User data variants with 32 bytes input data / 20 bytes output data (Page 204).
User-specific	User data selectable through user data mapping or through defined user data variant	variable* / 20-byte outputs	You have to activate the check box "User data-mapping" in STEP 7 to use the module version user-specifically. You can change over the user data variant during operation. Information about the structure of the user-specific module version is available in the appendix "User-specific" module version (Page 200).

* 16 ... 256 bytes in steps of 16 bytes, depending on the mapped measured values

4.2.2 Module versions at configuration with GSD file

Module versions with fixed user data assignment

Module version	User data	Address space	Comment
2 I / 2 Q	No cyclic user data. Access to measured values through "Read data record".	2-byte inputs 2-byte outputs	Information about the structure of the 2 I / 2 Q module version is available in the appendix Module version "2 I / 2 Q" (Page 191).
E0	User data in accordance with EE@Industry measurement data profiles	12-byte inputs / 20-byte outputs	Information about the structure of the EE@Industry measured data profiles is available in the appendix Module version "EE@Industry measurement data profile E0 / E1 / E2 / E3" (Page 202).
E1		4-byte inputs / 20-byte outputs	
E2		12-byte inputs / 20-byte outputs	
E3		104-byte inputs / 20-byte outputs	

Module versions with selectable user data variants

Module version	User data	Address space	Comment
32 I / 20 Q	User data selectable through user data variants or through user-specific user data*	32-byte inputs / 20-byte outputs	You can change over the user data variant during operation. If you use user-specific user data, you write your measured value profile into the AI Energy Meter HF with the data record 130. To do this use the WRREC instruction. Information about the structure of data record 130 is available in appendix Structure of the parameter data records 130/131 for user-data mapping (Page 156).
64 I / 20 Q		64-byte inputs / 20-byte outputs	
128 I / 20 Q		128-byte inputs / 20-byte outputs	
256 I / 20 Q		256-byte inputs / 20-byte outputs	

*Ensure that the user data do not exceed the size of the address space of the module version. If necessary, use a module version with a larger address space

4.2.3 Changing over the user data variant during operation

Introduction

You change the user data variant in the output data of each user data variant in Byte 0.

The following figure shows to which user data you can change over at various module versions during operation.

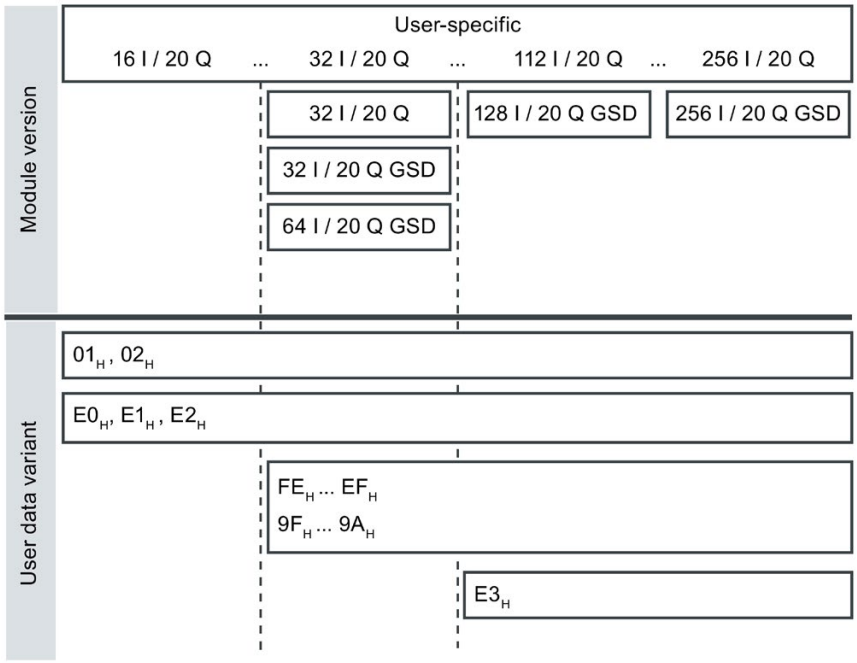

Figure 4-1 Possible user data variants

Requirement

- User program has been created.
- AI Energy Meter HF is configured as one of the module versions mentioned in the figure above.
- The start address of the module is known in the process image output.

Procedure

1. Create one constant with the data type BYTE per user data variant.
2. Enter the user data ID as a value in each case.
3. Write the constant to the start address of the module in the process image output.

Result

The user data variant is switched with the next cycle.

Note

Information about user data changeover

The parameterized user data variant is set in the following cases:

- A "0" is written in byte 0 in the output data of a user data variant.
- Byte 0 in the output data of a user data variant contains an invalid value:
  - Coding of the user data variant not available

    or
  - Available address space is not sufficient for the selected user data variant.

4.2.4 Recommendations for selecting the module version

The following table shows which module version is suitable for a given purpose.

Module version	Application	Note
2 I / 2 Q	• Use of many AI Energy Meter HF in an ET 200SP or little address space is available	• Read the measured values solely via the RDREC instruction from a measured value data record. • Quality information about the measured values is always available.
EE@Industry measurement data profile E0 / E1 / E2 / E3	• Cyclic measurement per phase • Supplied measured values in accordance with the EE@Industry measured data profile	• Available measured values depend on the configured measurement data profile. • The user data are fixed and cannot be changed dynamically. Alternatively, read the measured values acyclically from a measured value data record via the RDREC instruction. • No quality information
32 I / 20 Q	• Cyclic measurement per phase • Flexibility by switching predefined user data variants	• Quality information about the measured values is always available. • Depending on the user data variant, you must convert the measured values in the CPU to physical values using the supplied scaling factor. • One cycle elapses for each user data changeover. Measured values from the next user data variant are thus supplied with a slight time offset. Alternatively, read the measured values acyclically from a measured value data record via the RDREC instruction. Consistent measured values of a measuring cycle are supplied.
User-specific With GSD configuration • 32 I / 20 Q • 64 I / 20 Q • 128 I / 20 Q • 256 I / 20 Q	• Cyclic measurement of up to 64 measured values configurable • Flexibility by switching predefined user data variants	

4.3 Applicable modules

Configuring with STEP 7

The following table shows with which controllers the different module versions can be configured with STEP 7.

Table 4- 1 Module versions configured with STEP 7

Controller	Module version						
	2 I / 2Q	32 I / 20 Q	User-specific	EE@Industry measurement data profile			
				E0	E1	E2	E3
IM 155-6 PN ST	V1.0 or higher		V1.0 or higher* V3.1 or higher	V1.0 or higher			V3.1 or higher
IM 155-6 PN HF **	V2.0 or higher		V2.0 or higher* V3.1 or higher	V2.0 or higher			V3.1 or higher
IM 155-6 PN BA	V3.2 or higher		---	V3.2 or higher			---
IM 155-6 PN HS	V4.0 or higher						
IM 155-6 DP HF	V1.0 or higher		---	V1.0 or higher			---
CPU 1510SP-1 PN	V1.6 or higher		V1.6 or higher* V2.0 or higher	V1.6 or higher			V2.0 or higher
CPU 1510SP F-1 PN	V1.7 or higher		V1.7 or higher* V2.0 or higher	V1.7 or higher			V2.0 or higher
CPU 1512SP-1 PN	V1.6 or higher		V1.6 or higher* V2.0 or higher	V1.6 or higher			V2.0 or higher
CPU 1512SP F-1 PN	V1.7 or higher		V1.7 or higher* V2.0 or higher	V1.7 or higher			V2.0 or higher
CPU 1515SP PC	V1.7 or higher		V1.7 or higher* V2.0 or higher	V1.7 or higher			V2.0 or higher

* Only up to 32 bytes

** Function setting the time as of V4.2

Configuring with GSD file

The following table shows with which controllers the different module versions can be configured using a GSD file.

Table 4- 2 Module versions configuring with GSD file

Controller	Module version						
	2 I / 2Q	32 I / 20 Q	64 I / 20 Q 128 I / 20 Q 256 I / 20 Q	EE@Industry measurement data profile			
				E0	E1	E2	E3
IM 155-6 PN ST	V1.0 or higher		V3.1 or higher	V1.0 or higher			V3.1 or higher
IM 155-6 PN HF	V2.0 or higher		V3.1 or higher	V2.0 or higher			V3.1 or higher
IM 155-6 PN BA	V3.2 or higher		---	V3.2 or higher			---
IM 155-6 PN HS	V4.0 or higher						---
IM 155-6 DP HF	V1.0 or higher		---	---			---

Quick start

5

Introduction

This section shows you how to read and view your first measured values on the AI Energy Meter HF in a particularly quick and easy way.

Note

Current measuring transformer:

When the term "current measuring transformer" is used in this manual, it applies both to current/voltage transformers and Rogowski coils.

Requirement

You have already connected the AI Energy Meter HF to your network with one of the connection types shown in the section Wiring (Page 20). The AI Energy Meter HF has already been integrated in your configuration tool (such as STEP 7), or the AI Energy Meter HF has been integrated in your hardware catalog of your configuration tool with the GSD file.

Procedure

1. Configure an ET 200SP station

   Configure an ET 200SP station with a CPU 151xSP or an IM 155-6.

2. Plug module in ET 200S station

   Plug the AI Energy Meter HF into the ET 200SP station and use the module version with 32-byte inputs and 20-byte outputs.

3. Set the module parameters

   Set the following parameters for the AI Energy Meter HF:

   – Connection type that you have used for the AI Energy Meter HF (e.g. 3P4W)
   – Voltage measuring range (e.g. 230 V)
   – Frequency of your network (for example 50 Hz)
   – Current transformer type for line conductors L1, L2, L3 and neutral conductor (e.g. Rogowski coil)
   – Current transformer primary rated current and secondary voltage (e.g. 1000 A and 333 mV)
   – Voltage transformer primary and secondary voltages (e.g. 230 V and 230 V)

   Leave all other parameters at their default settings and do not change them.

4. Load configuration

   Switch on the ET 200SP station and download the configuration to the CPU.

Result

After being switched on, the AI Energy Meter HF supplies the measured values for the "Total power L1L2L3" user data variant with the ID 254 or FE_H.

Read and check the measured values provided by the AI Energy Meter HF in the input data.

The table below shows the structure of the user data variant, the measured variables and the data type of the measured values in STEP 7 (TIA Portal) that are stored in the 32 bytes of output data of the module. Each measured variable is referenced via the measured value ID. An overview of all the measured variables with their measured value IDs is provided in the section Measured variables for connection type (Page 162).

Table 5- 1 Total power L1L2L3

Byte	Allocation	Data type	Unit	Value range	Measured value ID
0	User data variant	BYTE	-	254 (FE_H)	-
1	Quality information = QQ_1 I_3 U_3 I_2 U_2 I_1 U_1	BYTE	Bit string	qq xx xx xx	-
2 ... 3	Current L1	UINT	1 mA	0 … 65535	66007
4 ... 5	Current L2	UINT	1 mA	0 … 65535	66008
6 ... 7	Current L3	UINT	1 mA	0 … 65535	66009
8 ... 9	Total active power L1L2L3	INT	1 W	-27648 … 27648	66034
10 ... 11	Total reactive power Qtot L1L2L3	INT	1 var	-27648 … 27648	66038
12 ... 13	Total apparent power L1L2L3	INT	1 VA	-27648 … 27648	66036
14 ... 17	Total active energy L1L2L3	DINT	1 Wh	-2147483647 to +2147483647	225
18 ... 21	Total reactive energy L1L2L3	DINT	1 varh	-2147483647 to +2147483647	226
22	Reserved	BYTE	-	0	-
23	Total power factor λ L1L2L3	USINT	0.01	0 … 100	66037
24	Scaling current L1	USINT	-	0 ... 255	-
25	Scaling current L2	USINT	-	0 ... 255	-
26	Scaling current L3	USINT	-	0 ... 255	-
27	Scaling total active power L1L2L3	USINT	-	0 ... 255	-
28	Scaling total reactive power L1L2L3	USINT	-	0 ... 255	-
29	Scaling total apparent power L1L2L3	USINT	-	0 ... 255	-
30	Scaling total active energy L1L2L3	USINT	-	0 ... 255	-
31	Scaling total reactive energy L1L2L3	USINT	-	0 ... 255	-

Additional information

If you require further information about the evaluation and interpretation of the measured values, please refer to the section Reading and processing measured values (Page 38).

Reading and processing measured values 6

6.1 Basics for reading measured values

Introduction

The AI Energy Meter HF provides the measured values and variables through the following methods:

- Cyclic: User data
- Acyclic: Measured value data records

User data

User data provide pre-defined or user-defined measured values depending on the configured user data variant. The supplied measured values are cyclically written to the process image of the CPU. With some user data variants, the measured values are supplied as raw data, which you have to convert to the corresponding physical values using a supplied scaling factor.

Measured value data records

Each measured value data record supplies physical values that you can further process immediately. You read the values of a measured value data record acyclically with the RDREC instruction in a PLC tag. You need a corresponding PLC tag for each measured value data record to be read. It is also possible to create the corresponding structure in the static variables of an FB or store this structure in a DB.

You can display the read measured values in a watch table in STEP 7.

Note

If you are using CPUs other than S7-1200 or S7-1500, convert 64-bit measured values to 32-bit measured values. Note the conversion can cause loss of accuracy.

For more information, read FAQ: Processing 64-bit-floating-point numbers in S7-300/400 (https://support.industry.siemens.com/cs/ww/en/view/56600676)

Validity of the measured values

After turning on the 24 V DC supply voltage, the first measured values are available at terminal 17 after approximately 2 seconds. In the input user data, the content of byte 0 is set to the selected user data variant. You can use this change in byte 0 as a trigger event.

As soon as the module has valid measured values, the value of this byte changes to a value within the value range.

Initial module startup

After the first startup or restart of the module, the parameters are transferred to the module. You can preset a user data variant in the parameters of the hardware configuration. This remains in effect until a different user data variant is selected in the output data (byte 0). This allows input user data to be modified dynamically according to the requirements of the process.

The user data variant defined in parameter data record 128 or configuration tool is used under the following conditions:

- A "0" is written in byte 0 in the output data of a user data variant.
- Byte 0 in the output data of a user data variant contains an invalid value:
  - Coding of the user data variant not available, or
  - Available address space is not sufficient for the selected user data variant.

    See "Selecting the module versions (Page 29)".

Current measured values become "0"

The current and all other measured values based on it are suppressed (or set to "0") in the data records and in the user data in the following cases:

- The incoming current of the current measuring transformer is lower than the configured "Low limit for measuring current in relation to nominal value current [0.1%]" parameter
- Fed-in secondary voltage at the current measuring channel is higher than 424 mV.

Among others, the following measured values and derived measured variables of the phase involved become "0":

- Effective current value
- Active power
- Reactive power
- Apparent power
- Phase angle
- Power factor

A floating mean value is formed from the power values. These only become "0" after a corresponding time. The operating hours counter and the energy counter for active, reactive and apparent energy of the reset phase stops counting.

General reset

With module versions with 20 bytes of output data you can reset some measured values and counter levels.

An edge change of 0 -> 1 at the bit for the general reset has the following effect:

- Counters for energy, operating hours and limits start at "0" again.
- Results of the power quality analysis are deleted.
- Minimum and maximum value calculation starts again with initial values.

For the general reset, set bit 7 in byte 16 of the output user data. (Page 194)

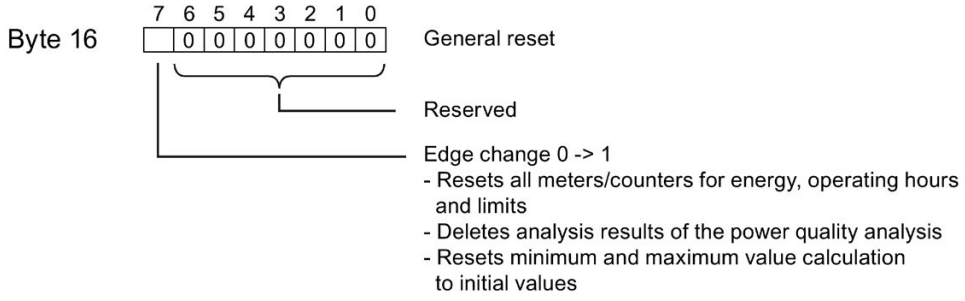

Figure 6-1 Control byte 16 in the output user data for general reset

Substitute value behavior

The substitute values for input values of the AI Energy Meter HF amount to "0".

See also

Reading measured values from user data cyclically (Page 47)

6.2 Quality information

Use the quality information to evaluate the status for currents, voltage, operating quadrants and the rotating field.

The AI Energy Meter HF provides quality information:

- In byte 1 of the user data
- In measured value IDs 65500 to 65503
- In the power quality analysis Qualifier ID 65496 (Page 87)

See also

Module version "32 I / 20 Q" (Page 194)

6.2.1 Quality information in byte 1 of the user data

For all user data variants, the module provides brief quality information in an 8-bit field in byte 1 for:

- Currents (I_{L1}, I_{L2}, I_{L3})
- Voltages (U_{L1}, U_{L2}, U_{L3})
- Operating quadrant for a phase

Please note that quality information assignment with user data variants for phase-specific measurement (ID 154 to ID 159) is different from user data variant assignment for 3-phase measurement (ID 244 to ID 254).

Quality information in byte 1 of the user data for 3-phase measurement

The quality information for 3-phase measurement is provided by the module in user data variants ID 244 to ID 254.

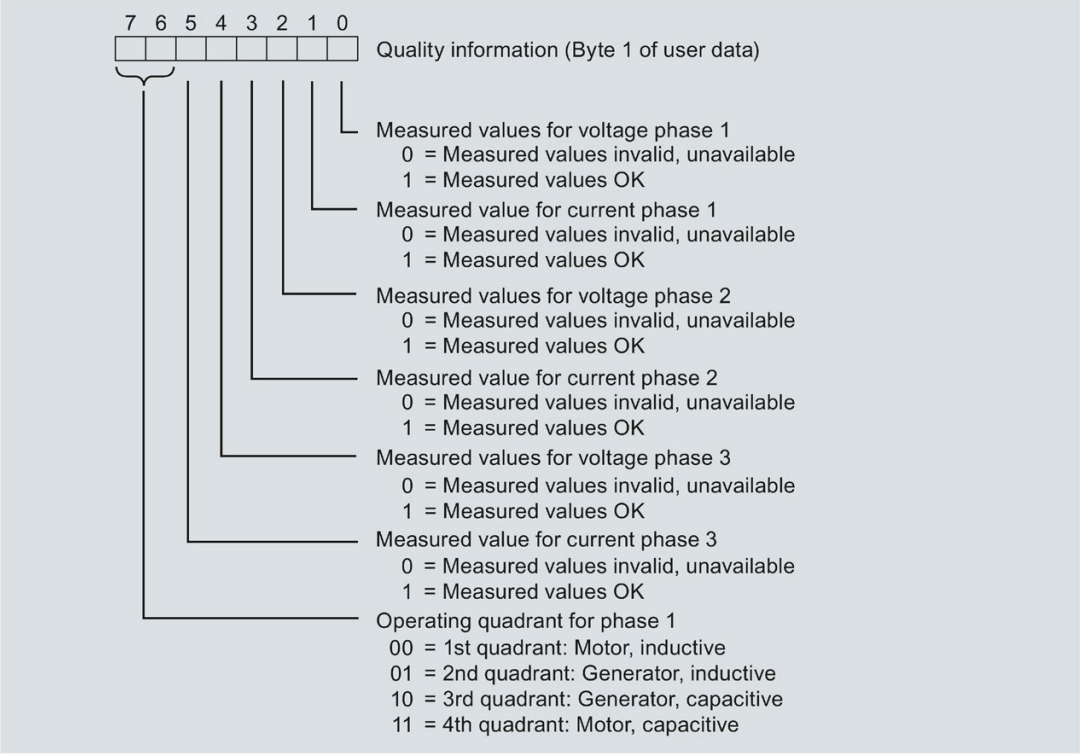

Figure 6-2 Assignment of byte 1 for user data variants ID 224 to ID 254

Quality information in byte 1 for phase-specific measurement

The quality information for phase-specific measurement is provided by the module in user data variants ID 154 to ID 159.

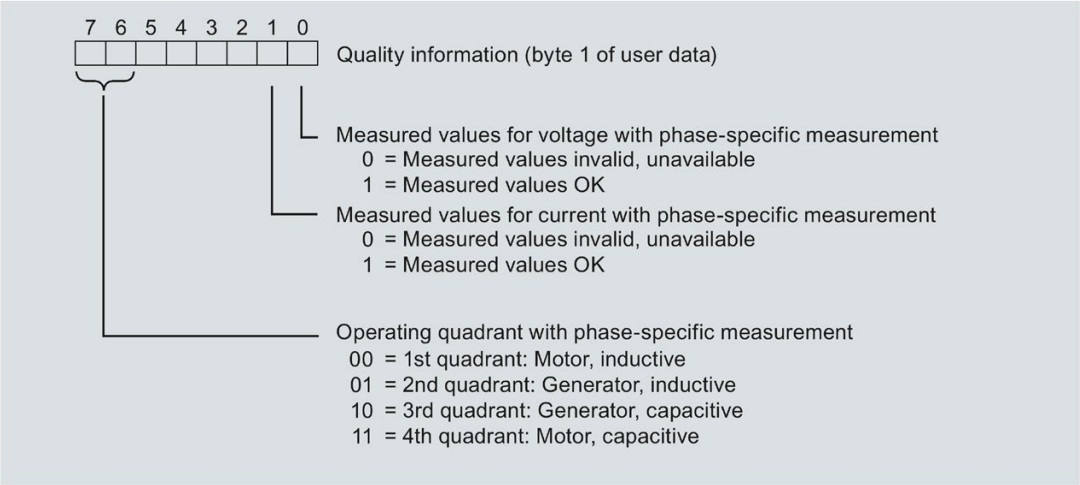

Figure 6-3 Byte 1 assignment for user data variants ID 154 to ID 159

6.2.2 Quality information with measured value IDs

Complete quality information is provided by the module in a 16-bit field with measured value IDs 65500 to 65503.

- Measured value ID 65503 for 3-phase measurement
- Measured value ID 65500, 65501 or 65502 for phase-specific measurement in phase 1, phase 2 or phase 3

Quality information with measured value ID 65503 for 3-phase measurement

The quality information for 3-phase measurement is provided by the module with:

- User data variant "Basic variables quality values three-phase measurement (ID 240 or $F0_H$)
- User data (measured value ID 66503)
- Measured value data record 150

The measured value ID 65503 provides information on:

- Currents (I_{L1}, I_{L2}, I_{L3})
- Voltages (U_{L1}, U_{L2}, U_{L3})
- Operating quadrants for all 3 phases
- Rotating field for the 3-phase system

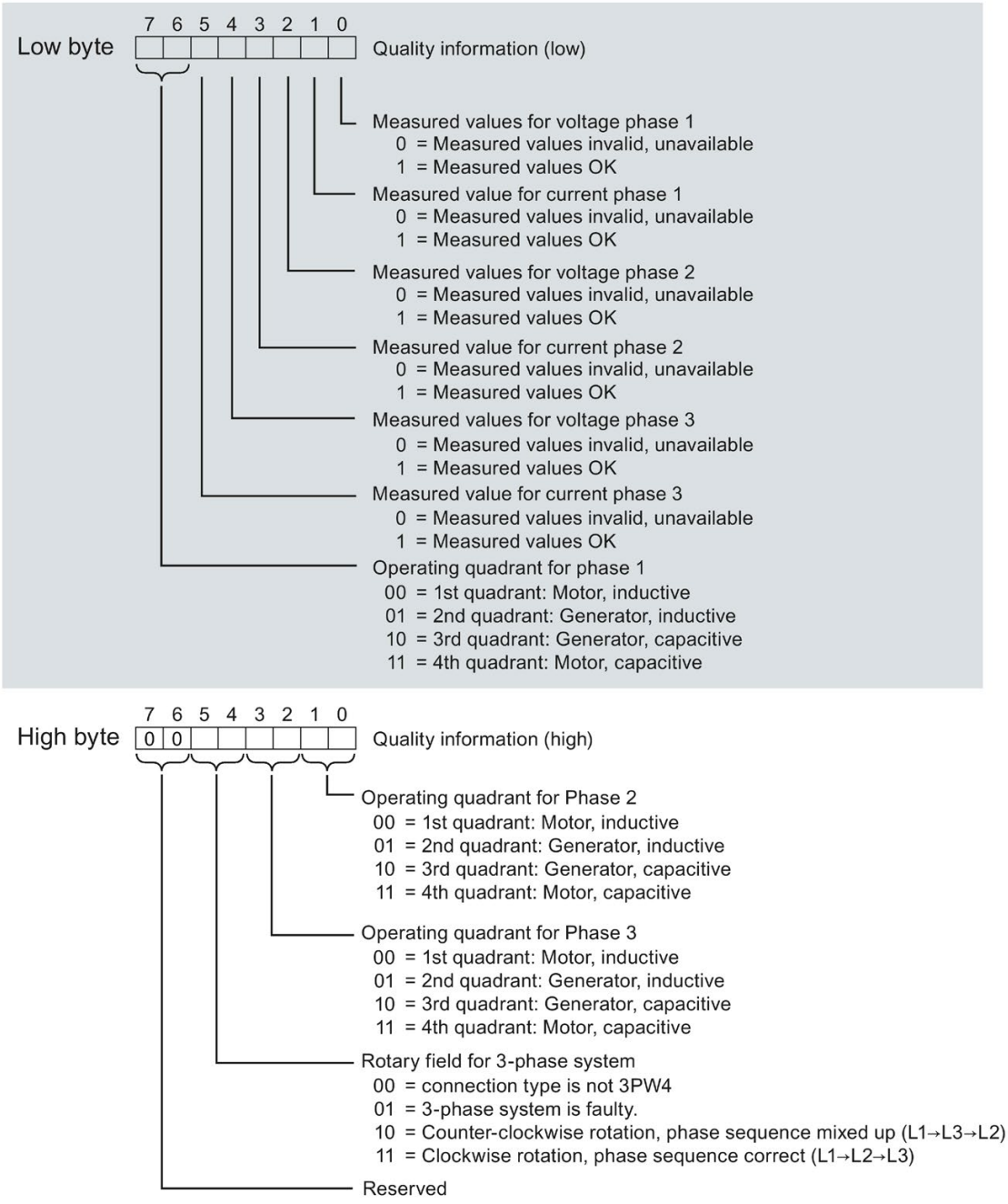

Figure 6-4 Quality information for low and high byte of the measured value ID 65503

Quality information with measured value ID 65500, 65501 or 65502 for phase-specific measurement

The module provides quality information for phase-specific measurement in phase 1, phase 2 or phase 3 with:

- User data (with measured value ID 65500, 65501 or 65502)
- Measured value data record DS 147, 148 or 149

Measured value IDs 65500, 65501 and 65502 provide information on:

- Current of the phase in question
- Voltage of the phase in question
- Operating quadrant of the phase in question

In contrast to the assignment for measured value ID 65503 (figure above), measured value IDs 65500, 65501 and 65502 only contain the phase-specific information for current, voltage and operating quadrant. The information about the other phases and the rotating field have the value 0.

6.2.3 Operating quadrant

The figure below shows the quality information of the operating quadrants.

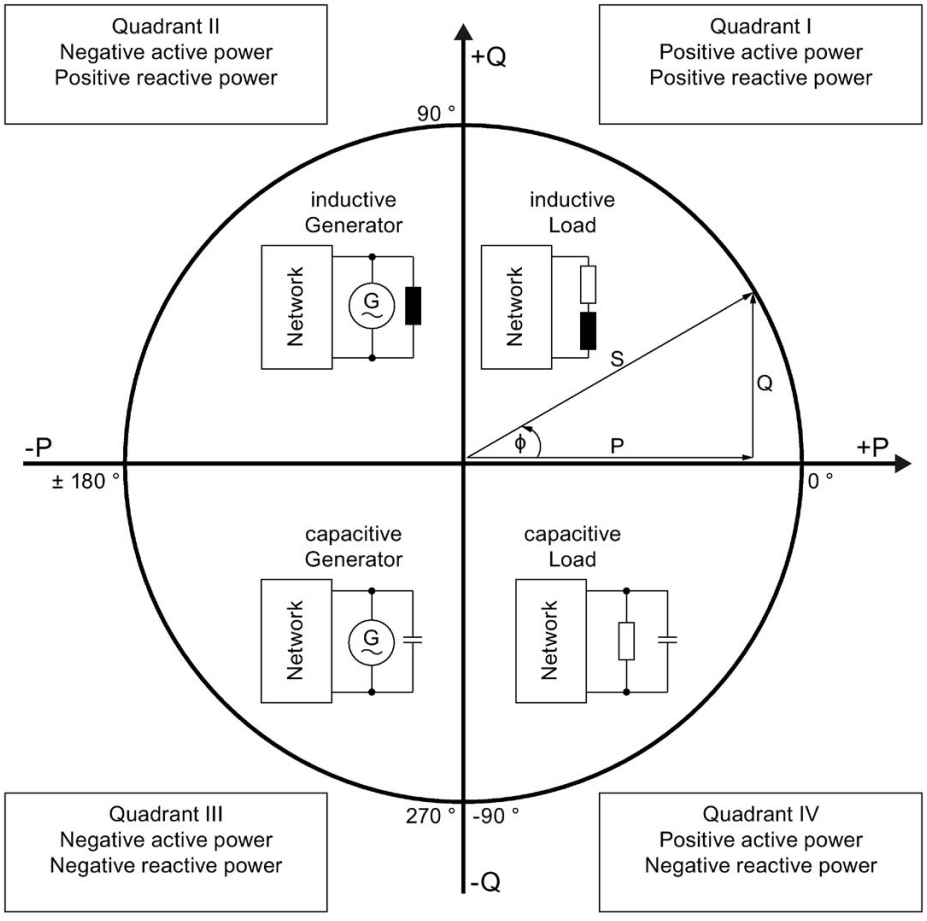

Figure 6-5 Quadrant in the quality bits

6.3 Reading measured values from user data cyclically

Requirement

- STEP 7 is open.
- The AI Energy Meter HF Is configured.

Scaling of measured values in the user data

Since the value range of 16-bit values is often smaller than the value range of the physical value, a scaling factor is supplied together with the basic value in the user data for the respective measured or calculated values. You determine the actual value of the measured variable with the following formula:

Actual value of measured quantity = measured value in the user data x $10^{\text{scaling factor}}$

Procedure

To read measured values from the user data cyclically, proceed as follows:

1. Read the relevant measured value from the input data.
2. Observe the scaling factor at scaled measured values and convert the read measured value using the scaling factor.

Example

The user data variant 254 (FE_H) "Total power L1L2L3" is configured on the AI Energy Meter HF. The measured value for "Current L1" should be read.

Table 6- 1 Total power L1L2L3

Byte	Allocation	Data type	Unit	Value range	Measured value ID
0	User data variant	BYTE	-	254 (FE_H)	-
1	Quality information = QQ_1 I_3 U_3 I_2 U_2 I_1 U_1	BYTE	Bit string	qq xx xx xx	-
2 ... 3	**Current L1**	**UINT**	**1 mA**	**0 … 65535**	**66007**
4 ... 5	Current L2	UINT	1 mA	0 … 65535	66008
6 ... 7	Current L3	UINT	1 mA	0 … 65535	66009
8 ... 9	Total active power L1L2L3	INT	1 W	-27648 … 27648	66034
10 ... 11	Total reactive power Qtot L1L2L3	INT	1 var	-27648 … 27648	66038
12 ... 13	Total apparent power L1L2L3	INT	1 VA	-27648 … 27648	66036
14 ... 17	Total active energy L1L2L3	DINT	1 Wh	-2147483647 to +2147483647	225
18 ... 21	Total reactive energy L1L2L3	DINT	1 varh	-2147483647 to +2147483647	226
22	Reserved	BYTE	-	0	-
23	Total power factor λ L1L2L3	USINT	0.01	0 … 100	66037

Byte	Allocation	Data type	Unit	Value range	Measured value ID
24	**Scaling current L1**	**USINT**	**-**	**0 ... 255**	**-**
25	Scaling current L2	USINT	-	0 ... 255	-
26	Scaling current L3	USINT	-	0 ... 255	-
27	Scaling total active power L1L2L3	USINT	-	0 ... 255	-
28	Scaling total reactive power L1L2L3	USINT	-	0 ... 255	-
29	Scaling total apparent power L1L2L3	USINT	-	0 ... 255	-
30	Scaling total active energy L1L2L3	USINT	-	0 ... 255	-
31	Scaling total reactive energy L1L2L3	USINT	-	0 ... 255	-

In the user data variant FE_H (254) the measured value for the current L1 is stored in Byte 2 + 3. The current is supplied by the module as a 16-bit-fixed-point number in the value range from 0 to 65535 in the unit 1 mA. In addition the scaling factor for the current L1 has to be considered additionally. The module supplies the related scaling factor in Byte 24.

The actual value for current L1 is calculated as follows:

Actual value for current L1 = Current L1 x $10^{\text{Scaling current L1}}$

See also

Basics for reading measured values (Page 38)

6.4 Read out measured values acyclically using data records

With all module versions you can read out the measured values using data records.

An overview of all measured value data records and exact information about the structure is available in the appendix Overview of all measured value data records (Page 224).

Requirement

In the STEP 7 project you have created a PLC data type that has an identical structure to the data record you want to evaluate.

Example of the structure of a data record

The following overview shows the structure of the data record DS 142.

Byte	Measured variable	Data type	Unit	Value range	Measured value ID
0	Version = 2	UINT8	-	-	-
1	Reserved	UINT8	-	-	-
2...5	Voltage UL1-N	REAL	V	0.0 ... 1000000.0	1
6...9	Voltage UL2-N	REAL	V	0.0 ... 1000000.0	2
10...13	Voltage UL3-N	REAL	V	0.0 ... 1000000.0	3
14...17	Voltage UL1-L2	REAL	V	0.0 ... 1000000.0	4
18...21	Voltage UL2-L3	REAL	V	0.0 ... 1000000.0	5
22...25	Voltage UL3-L1	REAL	V	0.0 ... 1000000.0	6
26...29	Current L1	REAL	A	0.0 … 100000.0	7
30...33	Current L2	REAL	A	0.0 … 100000.0	8
34...37	Current L3	REAL	A	0.0 … 100000.0	9
:		:	:	:	:
210...213	Neutral current	REAL	A	0.0 ... 100000.0	61149

Procedure

1. Read the desired data record with the RDREC instruction.

   The measured values are in the target range of the data block which you specified with the RDREC instruction.

2. Evaluate the measured values for the desired measured variables.

Note

If you want to read or write several data records at the same time in the user program, note that the number of active jobs that you started with the RDREC or WRREC instruction is limited by the resources of the CPU used.

6.5 Time-of-day synchronization and time stamp

The AI Energy Meter HF supports time-of-day synchronization and time stamp.

Time stamps are used to date the exact occurrence of information. You can find time information in the measured value data records "Measured value data record for maximum values with time stamp (DS 154)" and "Measured value data record for minimum values with time stamp (DS 155)", for example, or the power quality analysis data records DS160, DS161 and DS163. For the time on the AI Energy Meter HF to correspond to the current system time, the clock must be synchronized externally. Information on this and additional requirements can be found in the application example (http://support.automation.siemens.com/WW/view/en/109754890). In the absence of time-of-day synchronization, the internal time stamp of the AI Energy Meters HF starts at 01.01.1970, 0:00.

Energy counters 7

Introduction

The AI Energy Meter HF provides several energy and overflow counters that detect both line-based and phase-based energy values, e.g.:

- Active energy (total, outflow, inflow)
- Reactive energy (total, outflow, inflow)
- Apparent energy (total)

Retentivity

The AI Energy Meter HF stores all counter values retentively. After an interruption (e.g. Power System Off), the energy counting resumes with the retentively stored values.

Functions

The energy meters provide the following basic functions:

- Measured values for infinite and periodical counting can be read out

  End values for periodic counting: 10^3, 10^6, 10^9, 10^{12} and 10^{15} can be selected with overflow counters
- Measuring ranges can be changed in RUN
- Starting and stopping counters via gate is possible
- Preset and apply start values in RUN
- Measured variables can be evaluated via data records and user data.

7.1 Evaluate measured values for energy

There are two ways of evaluating the measured values:

- Reading measured values using the instruction "RDREC".
- Reading measured values from the user data variants (not for module versions with 2 bytes of input data).

Data records for energy meters

You can read out measured values for energy and overflow counters in the following data records.

The evaluation of measured data using data records is described in section Read out measured values acyclically using data records (Page 49).

Name of the data record	Number of the data record	Comment
Data record for basic measured values (Page 225)	Data record 142	Measured values of the total energy L1L2L3
Data record for energy meter (Page 230)	DS 143	Measured values of energy and overflow counters for phases L1, L2 and L3
Data record for phase-specific measured values L1 (Page 246)	DS 147	Measured values of the phase-specific energy meters L1
Data record for phase-specific measured values L2 (Page 249)	DS 148	Measured values of the phase-specific energy meters L2
Measured value data record for phase-specific measured values L3 (Page 252)	DS 149	Measured values of the phase-specific energy meters L3

User data variants for energy meters

You can read out measured values for energy and overflow meters in the following user data variants.

The evaluation of measured data using user data variants is described in section Reading measured values from user data cyclically (Page 47).

Name of the user data variant	Number of the user data variant	Comment
Total energy L1 L2 L3 (Page 210)	ID 249 or $F9_H$	Measured values of the total energy L1L2L3
Energy L1 (Page 211)	ID 248 or $F8_H$	Measured values of the phase-specific energy meters L1
Energy L2 (Page 212)	ID 247 or $F7_H$	Measured values of the phase-specific energy meters L2
Energy L3 (Page 213)	ID 246 or $F6_H$	Measured values of the phase-specific energy meters L3
Basic variable quality measurement three-phase measurement (Page 214)	ID 240 or $F0_H$	Status on the overflow of the energy meters for phases L1, L2 and L3
Basic variables energy meter measurement (periodic) L1L2L3 (Page 216)	ID 239 or EF_H	Number of counter overflows for energy of phases L1, L2 and L3
EE@Industry measurement data profile E3 (Page 217)	ID 227 or $E3_H$	Measured values for total active energy and total reactive energy L1L2L3
EE@Industry measurement data profile E2 (Page 217)	ID 226 or $E2_H$	Measured values for total active energy L1L2L3
Basic variables for phase-specific measurement L1 (Page 218)	ID 159 or $9F_H$	Measured values for phase-specific active, reactive and apparent energy for phase L1
Basic variables for phase-specific measurement L1a (Page 219)	ID 158 or $9E_H$	Measured values for phase-specific active, reactive and apparent energy for phase L1
Basic variables for phase-specific measurement L2 (Page 220)	ID 157 or $9D_H$	Measured values for phase-specific active, reactive and apparent energy for Phase L2
Basic variables for phase-specific measurement L2a (Page 221)	ID 156 or $9C_H$	Measured values for phase-specific active, reactive and apparent energy for Phase L2
Basic variables for phase-specific measurement L3 (Page 222)	ID 155 or $9B_H$	Measured values for phase-specific active, reactive and apparent energy for Phase L3
Basic variables for phase-specific measurement L3a (Page 223)	ID 154 or $9A_H$	Measured values for phase-specific active, reactive and apparent energy for Phase L3
User-defined user data variant	ID 1 or 01_H and ID 2 or 02_H	Measured variables for energy can be selected in a user-defined manner

7.2 Preset and apply start values for energy and overflow counters

At the beginning of a new work order, it may be useful to start the energy and overflow counter with new start values.

Define the new start values for the energy and overflow counter in data record DS 143.

Note

Pre-set start values for counters

If you have not yet transferred any start values to the CPU using the data record DS 143, then start the counters with the value 0.

With **all** the module versions there are two ways of applying the start values:

- Transfer start values from data record DS 143 and apply them **immediately**
- Transfer start values from data record DS 143 and only apply them after setting a special bit (DQ bit for counter reset)

Both options are described in the following sections.

General reset

With module versions with 20 bytes of output data you can reset the energy and overflow counters. With a general reset, you cannot preset any start values; the start values for energy and overflow counters are always zero with a general reset.

You can find additional information on the general reset in the section Basics for reading measured values (Page 38).

7.2.1 Preset start values for the energy meters

Define the start values for the energy and overflow meters in data record DS 143.

Introduction

You have created a PLC data type that has an identical structure to data record DS 143.

Structure of data record DS 143

The following overview shows the structure of the data record DS 143 in simplified form.

More detailed information about the structure of data record DS 143 is available in section Structure for energy counters (DS 143) (Page 230).

Byte	Measured variable	Data type	Unit	Value range	Measured value ID
0	Version	BYTE	-	1	-
1	Reserved	BYTE	-	0	-
2	Control byte 1 - L1	BYTE	Bit string	-	-
3	Control byte 2 - L1	BYTE	Bit string		
4	Control byte 1 - L2	BYTE	Bit string		
5	Control byte 2 - L2	BYTE	Bit string		
6	Control byte 1 - L3	BYTE	Bit string		
7	Control byte 2 - L3	BYTE	Bit string		
8...15	Start value for active energy inflow L1	LREAL	Wh	You will find the exact assignment in the section Structure for energy counters (DS 143) (Page 230).	61180
16...23	Initial value active energy outflow L1	LREAL	Wh		61181
:	:	:	:		:
128...129	Start value for overflow counters active energy inflow L1	UNIT	-		61190
130...131	Start value for overflow counter active energy outflow L1	UNIT	-		61191
:	:	:	:		

Assignment of data record DS 143

Byte 0 and Byte 1: Version of the data record

Header information for the version of the data record.

Byte 2 ... Byte 7: Control bytes for energy and overflow counter

When data record 143 is written with the WRREC instruction, Bytes 2 to 7 are used as phase-specific control information for energy meters, overflow counters and operating hours counters. The length of the control information amounts to 2 bytes for each phase.

Byte 8 ... Byte 127: Start values for the individual energy meters

The start values for energy meters in data record 143 are 64-bit floating point numbers. The format corresponds to the data type LREAL in S7-1200 and in S7-1500.

Byte 128 ... Byte 157: Initial values for overflow counters

The initial values for overflow counters in data record 143 are 16-bit integers. The format corresponds to the data type UINT in S7-1200 and in S7-1500.

7.2.2 Apply start values from data record DS 143 immediately

It is possible to apply the start values for energy counters and overflow counters for each **individual** phase separately by active, reactive and apparent energy.

Requirement

In your STEP 7 project you have created a PLC data type that has an identical structure to data record DS 143 and you have entered the start values.

Procedure for all module versions

1. In control byte 2 of the DS 143 (bytes 3, 5 and 7), for each phase set the category of the energy meters (active, reactive, apparent energy) for which you want to set the start values.

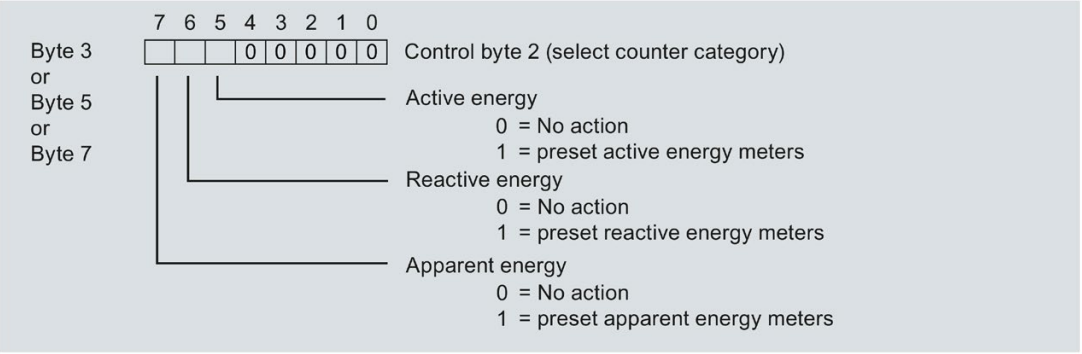

Figure 7-1 Assignment of control byte 2 in DS 143

2. In control byte 1 of DS 143 (bytes 2, 4 and 6), for each phase define whether you want to apply the start values for energy or overflow counters.

   Applying depends on the category selection from control byte 2.

   – Set Bit 0 if you want to apply the start values for the overflow counters.

   – Set Bit 2 if you want to apply the start values for the energy meters.

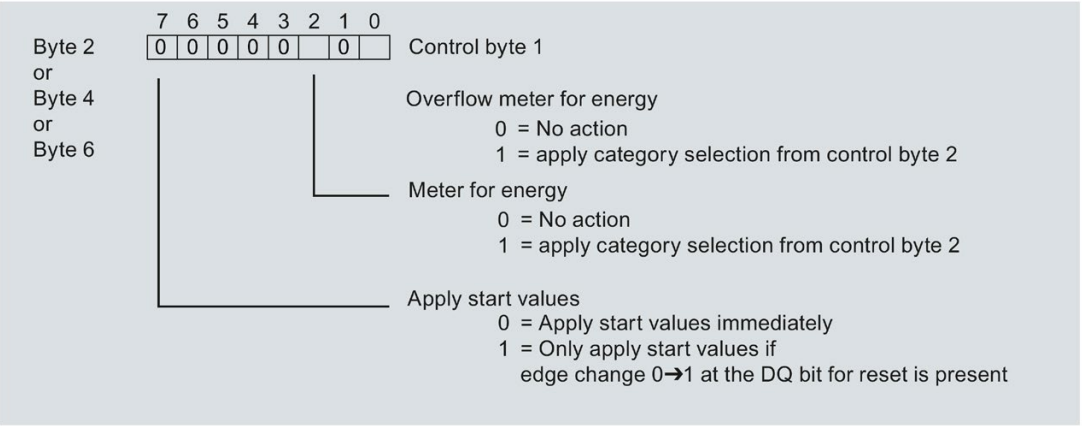

Figure 7-2 Assignment of control byte 1 in DS 143

3. In control byte 1 of DS 143 define that you want to immediately apply the start values.

   – Set Bit 7 to 0 so that the start values are immediately applied after writing the data record.

4. Transfer the data record with the WRREC instruction to the CPU.

7.2.3 Apply start values from data record DS 143 with DQ bit

Due to the differing lengths of the output data, setting of the start values for the energy counters and overflow counters depends on the configured module version.

Module versions with 20 bytes of output data

If you use module versions with 20 bytes of output data, you can:

- Apply start values for energy counters and overflow counters for **all** phases separately by active, reactive and apparent energy.
- Apply start values for energy counters and overflow counters for each **individual** phase separately by active, reactive and apparent energy.

Module version with 2 bytes of output data

If you use the module version with 2 bytes of output data, then you always apply the start values for **all** the energy counters and overflow counters simultaneously.

Requirement

- In your STEP 7 project you have created a PLC data type that has an identical structure to data record DS 143 and have entered the start values.

  Applying depends on the category selection from control byte 2.

  – Set Bit 0 if you want to apply the start values for the overflow counters.

  – Set Bit 2 if you want to apply the start values for the energy meters.
- In control byte 1 of the DS 143 you have set Bit 7 to "1" (apply start values via DQ bit)
- You have transferred the data record DS 143 with new start values to the CPU. The assignment of the data record can be found in Structure for energy counters (DS 143) (Page 230)

Note

Pre-set start values for counters

If you have not yet transferred any start values to the CPU using the data record DS 143, then start the counters with the value 0.

Procedure for module version with 20 bytes of output data

Apply start values for energy counters and overflow counters for all three phases

1. In Byte 2 of the output data, select the categories for which you want to apply start values.
   - Set bit 5 for active energy counters.
   - Set bit 6 for reactive energy counters.
   - Set bit 7 for apparent energy counters.

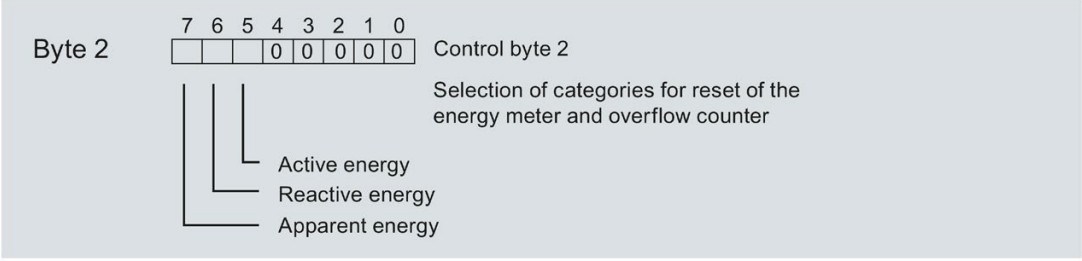

Figure 7-3 Selection of categories for reset

2. Set the reset bit (Bit 7) in byte 1 of the output data.

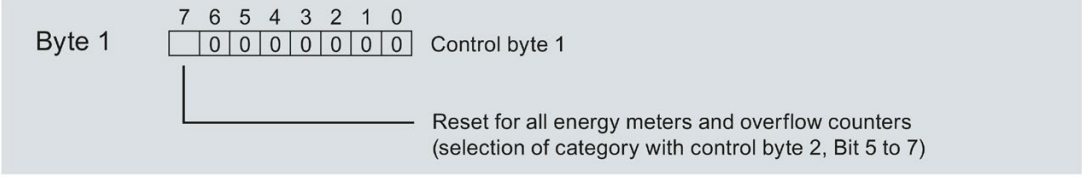

Figure 7-4 Reset bit for energy and overflow counter

If there is an edge change of the reset bit from 0 -> 1, the module resets the energy and overflow counters that you previously selected in byte 2 to their start values.

Apply start values for energy counters and overflow counters for phase-specific counting

You can also reset the energy and overflow counters on a phase-specific basis using the output data.

Follow the procedure as described in "Applying start values for energy counters and overflow counters for all three phases", as applicable.

1. In bytes 7, 9 and 11 of the output data, select the categories for which you want to apply the phase-specific start values.
   - Set Bit 5 for active energy counters.
   - Set Bit 6 for reactive energy counters.
   - Set Bit 7 for apparent energy counters.

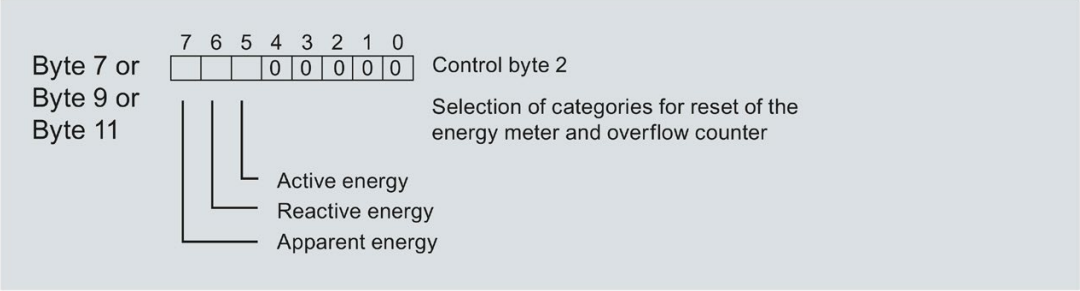

Figure 7-5 Selection of category

2. In bytes 6, 8 and 10 of the output data, set the reset bits (Bit 7) for the phase-specific start values.

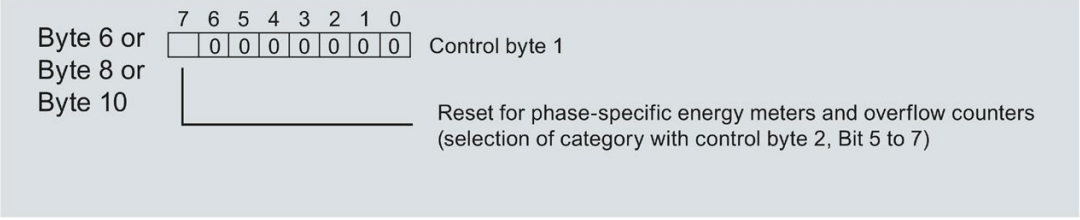

Figure 7-6 Reset bit for phase-specific energy and overflow counters

If there is an edge change of the phase-specific reset bit from 0 -> 1, the module resets the energy and overflow counters that you previously selected in bytes 7, 9 and 11 to their start values.

Procedure for module version with 2 bytes of output data

If you use the module version with 2 bytes of output data, always apply the start values **for all** the energy counters and overflow counters.

- Set the reset bit (Bit 7) in byte 1 of the output data.

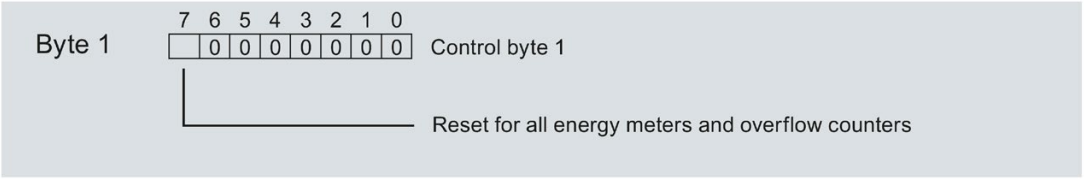

Figure 7-7 Reset bit for all energy and overflow counters

If there is an edge change of the reset bit from 0 -> 1, the module resets **all** energy and overflow counters to their start values.

7.3 Starting and and stopping energy meters

There are two ways of starting or stopping measurement with the energy meter AI Energy Meter HF:

- Counting with gate

  The module starts counting when you set the DQ bit for the counter gate in the output data using an edge change from 0 -> 1. If you reset the DQ bit using an edge change from 1 -> 0, the counter stops.

- Counting without gate

  The module starts counting immediately as soon as the module is switched on. Counting cannot be stopped.

Both options are described in the following sections.

Counting with gate

Requirements:

The current value is higher than the configured "Low limit for measuring current in relation to nominal value current [0.1%]".

Procedure

If you wish to start counting using the gate, proceed as follows:

1. Activate the parameter "Enable energy meter gate" in the parameter assignment of the module.
2. Set the DQ bit for the counter gate (Bit 6) in control byte 1 in the output data.

The module starts counting as soon as there is an edge change from 0 -> 1 at the DQ bit for the counter gate.

If you wish to stop the counting again, then reset Bit 6 in control byte 1 in the output data. Counting stops at an edge change from 1 -> 0.

The "Enable gate control for the energy counter" parameter and the DQ bit for the "counter date" behave like the parallel connection of contacts.

Gate enabled: Gate "open" if DQ = "1"

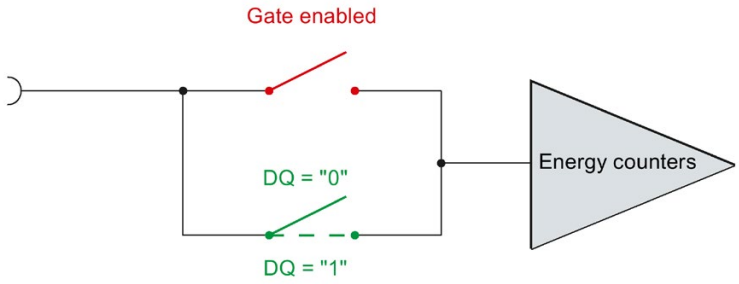

Figure 7-8 Gate enabled

Counting without gate

Requirement

The current value is higher than the configured "Low limit for measuring current in relation to nominal value current [0.1%]".

Procedure

Deactivate the parameter "Enable energy meter gate" in the parameter assignment of the module.

The module starts counting as soon as the module is started. The counter continues to count.

Gate disabled: Gate is always "open" (signal path closed)

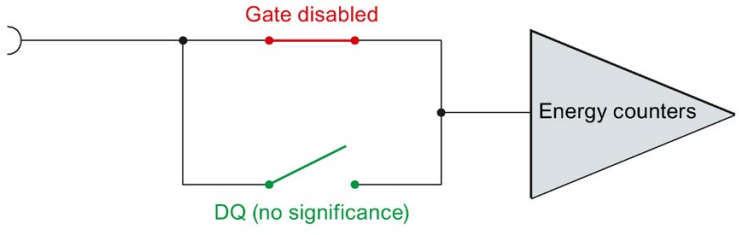

Figure 7-9 Gate disabled

7.4 Example of measuring and resetting an energy meter

The following figure shows resetting and starting/stopping with activated gating using the energy meter as an example:

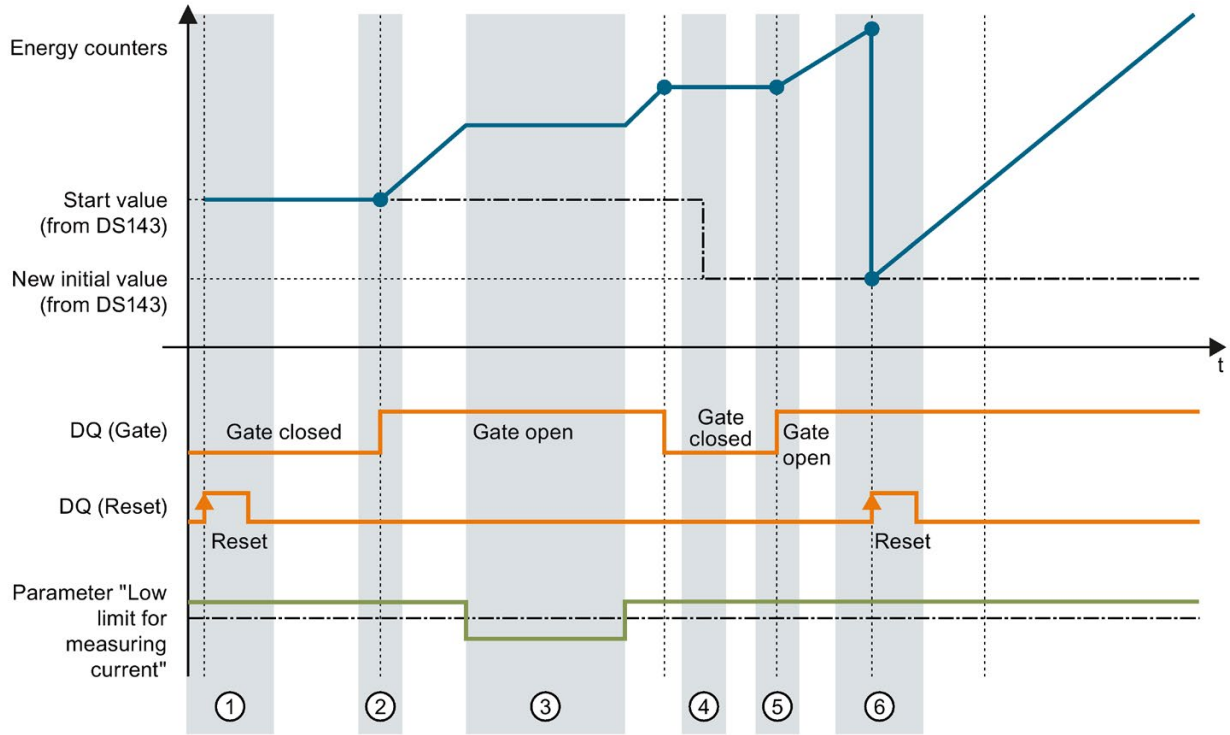

① The counter is reset to the value specified in the configuration. The gate is closed. The counter does not count.

② The gate is opened via the control byte 1 in the output data of the user data variant. The counter counts.

③ The configured current low limit has been violated. The counter does not count.

④ The gate is closed. The counter does not count. A new start value is written to the measured value data record 143 (Page 230) with the WRREC instruction.

⑤ The gate is opened again via the control byte 1 in the output data of the user data variant. The counter counts with the new start value.

⑥ The counter is reset via the control byte 1 in the output data of the user data variant. The counter counts from the new start value that was transferred via the measured value data record 143.

Figure 7-10 Example of an energy meter

7.5 What is the structure of the control and feedback interface for DS 143?

Introduction

Bytes 2 to 7 of data record 143 (Page 230) form the phase-based control and feedback interface for the data record DS 143.

- Bytes 2 and 3: Control and feedback interface for phase 1
- Bytes 4 and 5: Control and feedback interface for phase 2
- Bytes 6 and 7: Control and feedback interface for phase 3

Status information

When data record 143 is read with the RDREC instruction, Bytes 2 to 7 supply phase-specific status information for energy counters, overflow counters and operating hours counters.

The status information enables you can see which counters are returning their values in the data record 143. If energy counters return their values in the status byte 1, you can determine the type of energy counter with status byte 2.

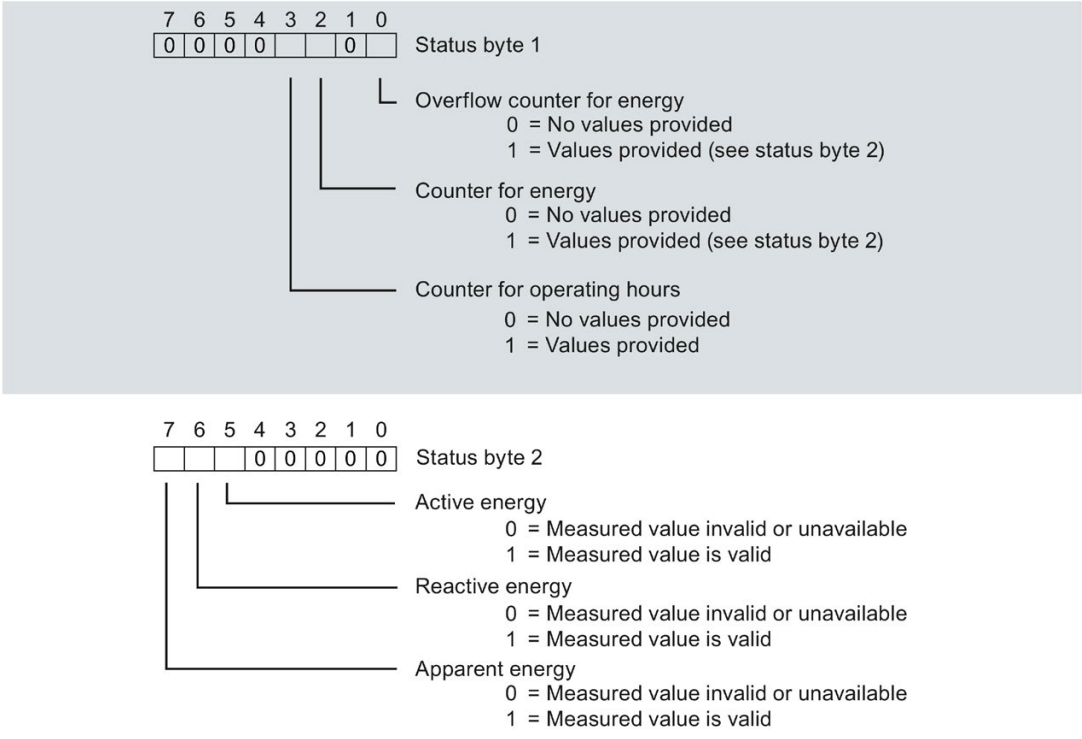

Figure 7-11 Status information DS 143 (read access)

Control information

When data record 143 is written with the WRREC instruction, Bytes 2 to 7 are used as phase-specific control information for energy meters, overflow counters and operating hours counters. The length of the control information amounts to 2 bytes for each phase:

- In control byte 1 you determine which counter you want to preset and the time at which counters are to be preset.

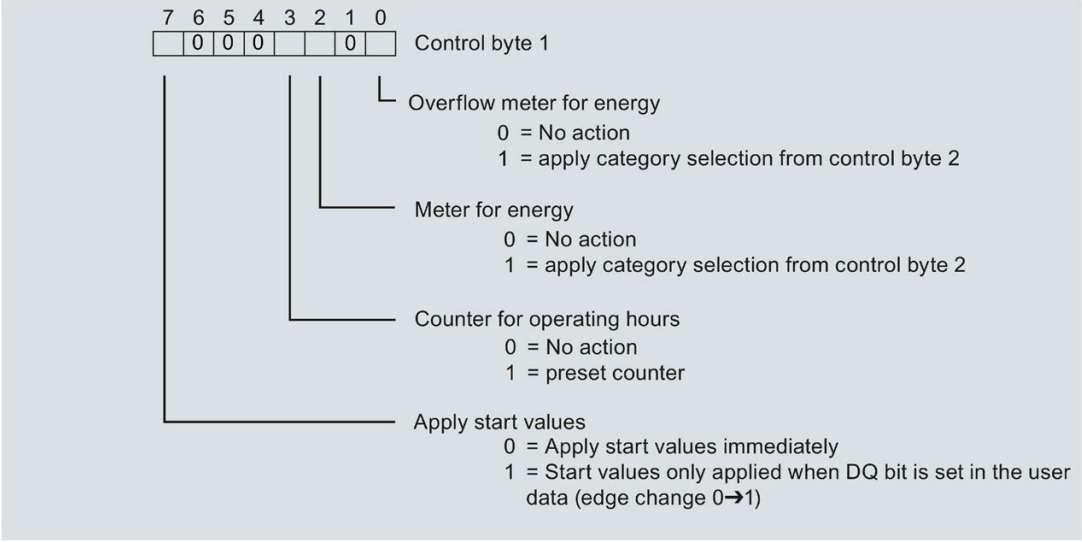

Figure 7-12 Control information DS 143, control byte 1 (write access)

- In control byte 2 you determine which energy meter categories you want to preset.

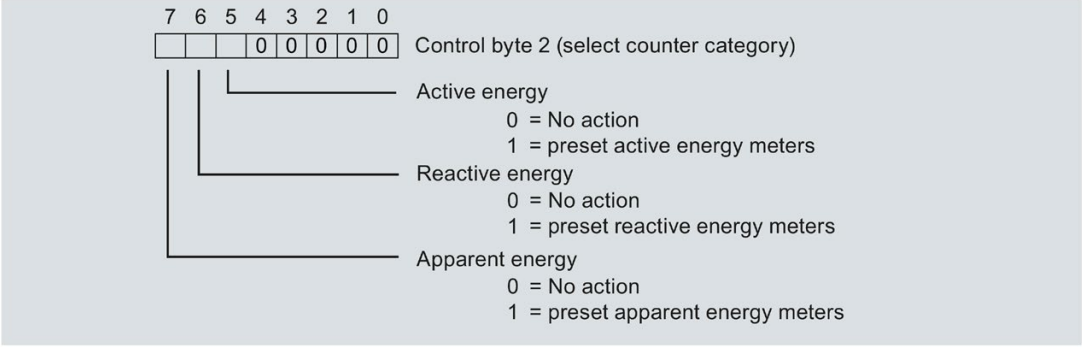

Figure 7-13 Control information DS 143, control byte 2 (write access)

Operating hours counter

8

Introduction

The AI Energy Meter HF provides four operating hours counters which count the operating hours of the connected consumers:

- Three phase-specific operating hours counters
- 1 operating hours counter which displays the value of the largest phase-specific operating hours counter.

Retentivity

The AI Energy Meter HF stores all counter values retentively. After an interruption (e.g. Power System Off), counting resumes with the retentively stored values.

Functions

The operating hours counters provide the following basic functions:

- Measuring ranges from 0 to 3.4 x 10^{38} hours.
- Starting and stopping operating hours counters via gate
- Preset and apply start values in RUN
- Evaluating counter states using data records and user data

8.1 Evaluating operating hours counters

There are two ways of evaluating the operating hours counters:

- Reading counter states using data records with the instruction RDREC.
- Reading counter states from the user-defined user data variants.

Data records for operating hours counter

You can read out measured values for operating hours in the following data records.

The evaluation of measured data using data records is described in section Reading and processing measured values (Page 38).

Name of the data record	Number of the data record	Comment
Data record for energy meter (Page 230)	DS 143	Phase-specific operating hours counter for phase L1, phase L2, phase L3 and largest phase-specific operating hours counter L1L2L3
Measured value data record for advanced measurement and status values (Page 255)	DS 150	
Measured value data record of user-defined data record (Page 257)	DS 151	Operating hours counters can be selected in a user-defined manner

User data variants for operating hours counters

You can read out measured values for operating hours in the following user data variants.

The evaluation of measured data using user data variants is described in section User data variants with 32 bytes input data / 20 bytes output data (Page 204).

Name of the user data variant	Number of the user data variant	Comment
User-defined user data variant	ID 1 or 01_H and ID 2 or 02_H	Operating hours counters can be selected in a user-defined manner

8.2 Preset and apply start values for operating hours counters

Introduction

At the beginning of a new work order, it may be useful to start counting of the operating hours counters with new start values.

Define the new start values for the operating hours counters in data record DS 143.

Note

Pre-set start values for counters

If you have not yet transferred any start values to the CPU using the data record DS 143, then start the counters with the value 0.

With **all** the module versions there are two ways of applying the start values:

- Transfer start values from data record DS 143 and apply them **immediately**
- Transfer start values from data record DS 143 and only apply them after setting a special bit (DQ bit for operating hours counter reset)

Both options are described in the following sections.

General reset

With module versions with 20 bytes of user data you can reset the operating hours counters. With a general reset, you cannot preset any start values; the start values for operating hours counters are always zero with a general reset.

You can find additional information on the general reset in the section Basics for reading measured values (Page 38).

8.2.1 Preset start values for operating hours counters

Define the start values for operating hours counters using data record DS 143.

Introduction

You have created a PLC data type that has an identical structure to data record DS 143.

Structure of data record DS 143

The following overview shows the structure of the data record DS 143 in simplified form.

More detailed information about the structure of data record 143 is available in section Structure for energy counters (DS 143) (Page 230).

Byte	Measured variable	Data type	Unit	Value range	Measured value ID
0	Version	BYTE	-	1	-
1	Reserved	BYTE	-	0	-
2	Control byte 1 - L1	BYTE	Bit string	-	-
3	Control byte 2 - L1	BYTE	Bit string		
4	Control byte 1 - L2	BYTE	Bit string		
5	Control byte 2 - L2	BYTE	Bit string		
6	Control byte 1 - L3	BYTE	Bit string		
7	Control byte 2 - L3	BYTE	Bit string		
8...15	Start value for active energy inflow L1	LREAL	Wh	You will find the exact assignment in the section Structure for energy counters (DS 143) (Page 230).	61180
16...23	Initial value active energy outflow L1	LREAL	Wh		61181
:	:	:	:		:
158...161	Start value operating hours L1	REAL	h		65505
162...165	Start value operating hours L2	REAL	h		65506
166...169	Start value operating hours L3	REAL	h		65507

Assignment of data record DS 143

Byte 0 and Byte 1: Version of the data record

Header information for the version of the data record.

Byte 2 ... Byte 7: Control bytes for energy and overflow counter

When data record 143 is written with the WRREC instruction, Bytes 2 to 7 are used as phase-specific control information for energy meters, overflow counters and operating hours counters. The length of the control information amounts to 2 bytes for each phase.

Byte 8 ... byte 157: Start values for the individual energy meters and overflow counters

The start values for energy counters in data record 143 are 64-bit floating point numbers. The format corresponds to the data type LREAL in S7-1200 and in S7-1500.

The initial values for overflow counters in data record 143 are 16-bit integers. The format corresponds to the data type UINT in S7-1200 and in S7-1500.

Byte 158 ... byte 169: Start values for operating hours counter

The start values for operating hours counters in data record 143 are 32-bit integers. The format corresponds to the data type REAL in S7-1200 and in S7-1500.

8.2.2 Apply start values from data record DS 143 immediately

Applying the start values for each separate operating hours counter is possible.

Requirement

In your STEP 7 project you have created a PLC data type that has an identical structure to data record DS 143 and you have entered the start values.

Procedure for all module versions

1. In Control byte 1 of DS 143 (bytes 2, 4 and 6), for each phase, define that you want to immediately apply the start values for operating hours counters.
   - Set the Bit 3 to 1 so that the start values for the operating hours counters are preset.
   - Set the Bit 7 to 0 so that the module **immediately** applies the start values after writing the data record.

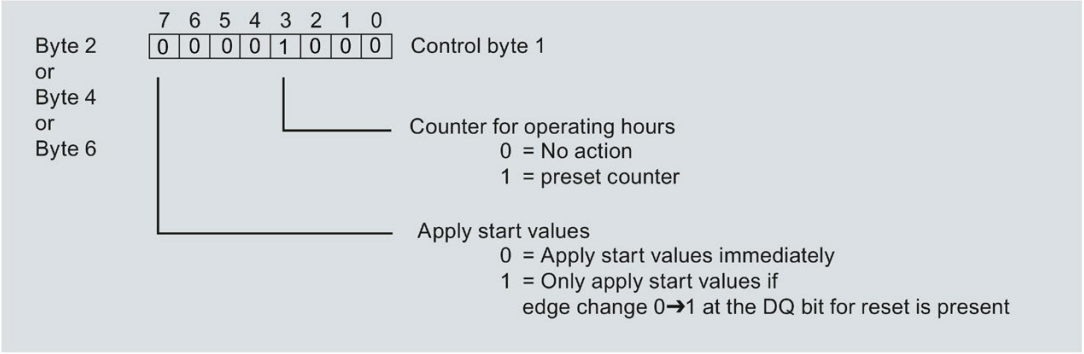

Figure 8-1 Allocation of the control bytes in DS 143 for operating hours

2. Transfer the data record with the WRREC instruction to the CPU.

8.2.3 Apply start values from data record DS 143 with DQ bit

Due to the differing lengths of the output data, setting of the start values for the operating hours counters depends on the configured module version.

Module versions with 20 bytes of output data

If you use module versions with 20 bytes of output data, you can:

- Apply start values for **all** operating hours counters.
- Apply start values for **individual** operating hours counters separately.

Module version with 2 bytes of output data

If you use the module version with 2 bytes of output data, apply the start values for **all** operating hours counters simultaneously.

Requirement

- In your STEP 7 project you have created a PLC data type that has an identical structure to data record DS 143 and have entered the start values.
- Set the Bit 3 to 1 so that the start values for the operating hours counters are preset.
- In control byte 1 of DS 143 you have set Bit 7 to "1" (apply start values via DQ bit). (see previous figure)
- You have transferred the data record DS 143 with new start values to the CPU. The assignment of the data record can be found in Structure for energy counters (DS 143) (Page 230)

Note

Pre-set start values for counters

If you have not yet transferred any start values to the CPU using the data record DS 143, then start the counters with the value 0.

Procedure for applying the start values of all operating hours counters

Applying the start values for all operating hours counters with the module versions with 2 bytes and 20 bytes of output data is identical.

1. Set the reset bit for operating hours counters (Bit 5) in Byte 1 in the output data.

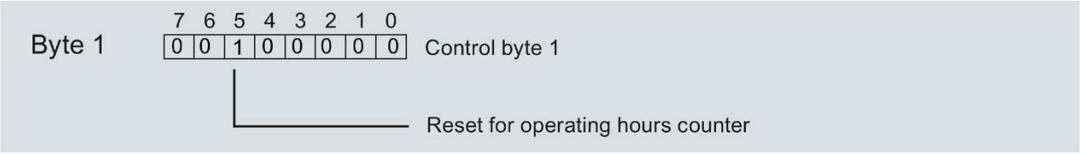

Figure 8-2 Control byte 1 Reset for all operating hours counters

If there is an edge change of the reset bit from 0 to 1, the module applies the start values for all operating hours counters.

Procedure for applying the start values of individual operating hours counters

---

Note

Applying the start values for phase-specific operating hours counters

Applying the start values for phase-specific operating hours counters does not differ from the procedure described above. In the output data, select the reset bits for the phase-specific operating hours counters in bytes 6, 8 and 10.

8.3 Starting and stopping operating hours counters

There are two ways of starting or stopping counting with the operating hours counter AI Energy Meter HF:

- Counting with gate

  The module starts counting when you set the DQ bit for the counter gate in the output data using an edge change from 0 -> 1. If you reset the DQ bit for the counter gate using an edge change from 1 -> 0, the counter stops.

- Counting without gate

  The module starts counting immediately as soon as the module is switched on. Counting cannot be stopped.

Both options are described in the following sections.

Counting with gate

Requirements:

The current value is higher than the configured "Low limit for measuring current in relation to nominal value current [0.1%]".

Procedure

If you wish to start counting using the gate, proceed as follows:

1. Activate the parameter "Enable operating hours counter gate" in the parameter assignment of the module.
2. Set the DQ bit for the counter gate (Bit 4) in control byte 1 in the output data.

The module starts counting as soon as there is an edge change from 0 -> 1 at the DQ bit for the counter gate.

If you wish to stop the counting again, then reset Bit 4 in control byte 1 in the output data. Counting stops at an edge change from 1 -> 0.

The "Enable operating hours counter gate" parameter and the DQ bit for the "counter date" behave like the parallel connection of contacts.

Gate enabled: Gate "open" if DQ = "1"

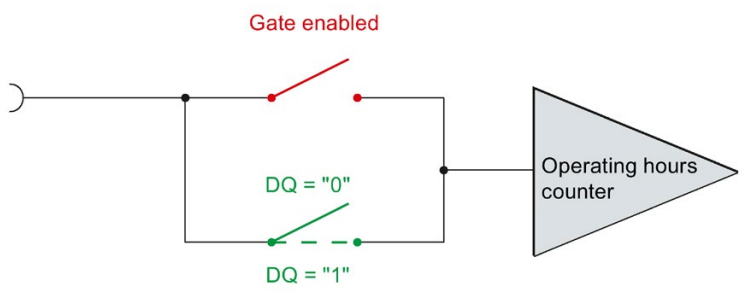

Figure 8-3 Gate enabled

Counting without gate

Requirement

The current value is higher than the configured "Low limit for measuring current in relation to nominal value current [0.1%]".

Procedure

Deactivate the parameter "Enable operating hours counter gate" in the parameter assignment of the module.

The module starts counting as soon as the data record has been applied by the CPU.

The counter continues to count.

Gate disabled: Gate is always "open" (signal path closed)

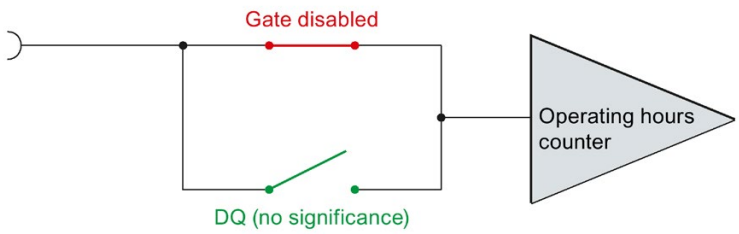

Figure 8-4 Gate disabled

Limit monitoring 9

9.1 How limit monitoring works

Introduction

The AI Energy Meter HF supports monitoring of parameterizable low **or** high limits for up to 16 analog measured or calculated variables.

You can also specify multiple limits for each measured or calculated variable, in order to define a high or low value range.

The measured value data record 150 returns the current status of limit violations and one counter per limit that displays the number of limit violations. In addition, a hardware interrupt may be generated for each limit violation.

The status of the limit violations can also be evaluated in the user data variant 240 ($F0_H$) or via the user-defined user data variant or the user-defined data record via the measured value ID 65509.

Benefits

With activated limit monitoring you can already detect any irregularities in the measured value acquisition already in field level.

Retentivity

All the counter states are stored retentively in the AI Energy Meter HF. After an interruption (e.g. Power System Off), the counting resumes with the retentively stored values.

Configuring

You configure the following limit monitoring settings in STEP 7:

- Measured variable that is to be monitored.
- Activate / Deactivate limit monitoring.
- High or low limit values.
- Delay time and hysteresis for each limit.
- Activate / Deactivate hardware interrupts at limit violation.
- Measured value that is subject to limit monitoring.

Hardware interrupt at a limit violation

The hardware interrupt provides the following information:

- Measured value ID of the monitored measured or calculated variable
- Number of the limit (0 = Limit 1. 15 = Limit 16)
- Information on whether limit was exceeded or fallen below

For more detailed information, refer to section Hardware interrupts (Page 109).

Changing properties in RUN

The following table shows the supported control information:

Control information	Default value	Available in
Enable/disable monitoring per limit[1]	Disabled	Module version with 20 bytes of output data
Reset number of total limit violations	0	Module version starting at 2 bytes of output data

[1] Effective only with enabled gate

9.2 Influence of hysteresis and delay time on limit monitoring

Delay time and hysteresis

In order to prevent the triggering of limit violations with small fluctuations, you have the following configuration options in STEP 7:

- Delay time in seconds (0 to 10 s)

  With the delay time, you filter faults and thereby prevent limit value monitoring from triggering too frequently. The limit violation is counted only when the limit violation is present for longer than the configured delay time. The delay time is also taken into consideration with an outgoing limit violation, directly after a high or low limit has been violated in the permitted range. If the measured variable lies between limit violation and hysteresis after the limit violation has been corrected again, the delay time expires also without leaving the hysteresis.

- Hysteresis as a percentage (0 to 20%)

  With the hysteresis, you suppress fluctuations around the limit. The hysteresis is a tolerance range that you define as a percentage deviation of the configured limit. The limit violation is considered to be corrected only when the monitored value leaves the tolerance range.

Note

You can get information about underflow and overflow from the calculation of minimum (Page 241) and maximum values (Page 235) of selected measured variables.

The following figure shows the value-over-time for two measured values using the example of a high and low limit as well as the influence of hysteresis and delay time on the counting of the limit violations.

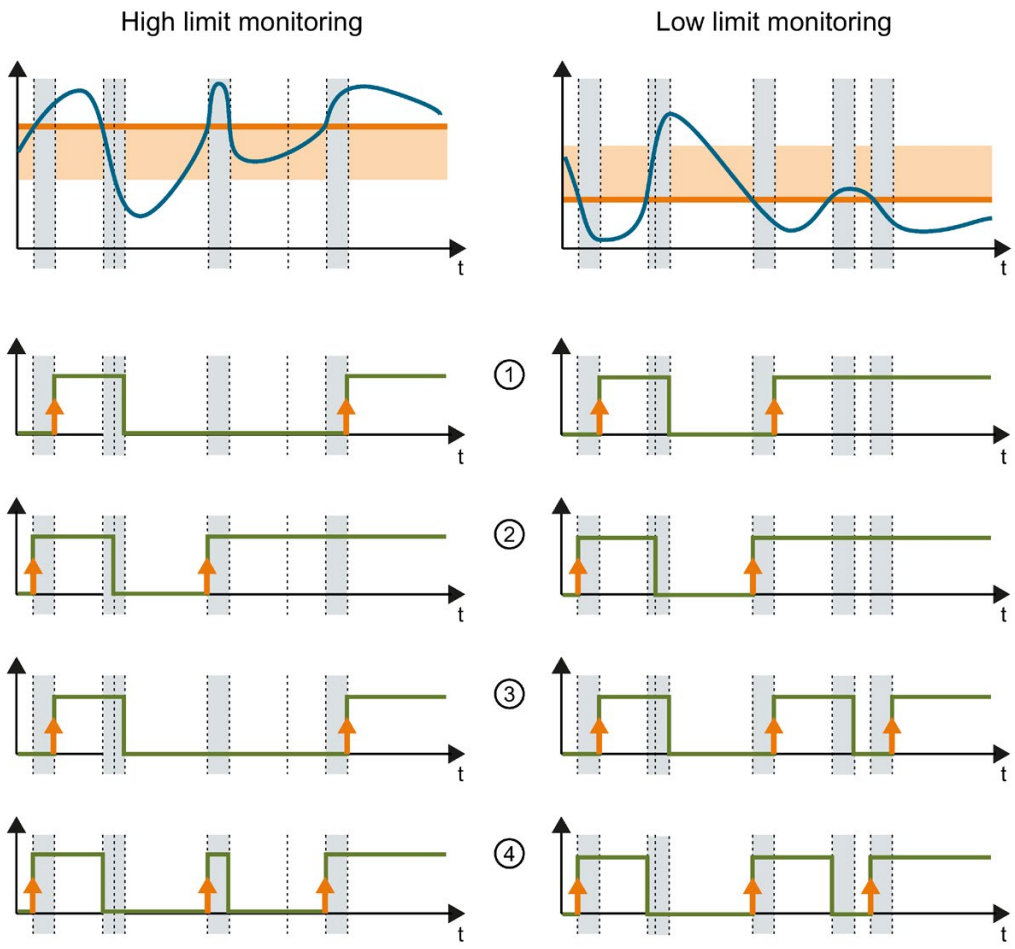

- Configured limit.
- Configured delay time. Is taken into consideration during coming and going.
- Hysteresis range. Only considered for outgoing.
- Value-over-time for which the limit is monitored.
- Edge change. Counter for limit violations is incremented by 1. If parameterized, a hardware interrupt is triggered.
- Signal wave
- ① Limit monitoring with hysteresis and delay time
- ② Limit monitoring with hysteresis, but without delay time
- ③ Limit monitoring without hysteresis, but with delay time
- ④ Limit monitoring without hysteresis and delay time

Figure 9-1 Influence of hysteresis and delay time on the limit

See also

How limit monitoring works (Page 75)

Minimum and maximum values (Page 82)

9.3 Reset, activate and deactivate counters for limit violation

Introduction

At the beginning of a new work order, it can be useful to reset or also enable/disable the counters for limit violations of the AI Energy Meter HF.

Resetting here means that the counters for limit violations are reset to 0.

Due to the differing lengths of the output data resetting of the counters for limit violations depends on the configured module version.

Resetting at module version with 20 bytes of output data

1. Select the counters for limit violations that you want to reset in control bytes 3 and 4; see "Enabling/disabling the counters for limit violations".
2. In control byte 1, set the rest bit (bit 3) with an edge change from 0 to 1; see "Resetting the counters for limit violations".

Resetting for module version with 2 bytes of output data

Set the reset bit (Bit 3) in Control byte 1 from 0 to 1 through an edge change. Resetting acts globally on all the configured counters for limit violation.

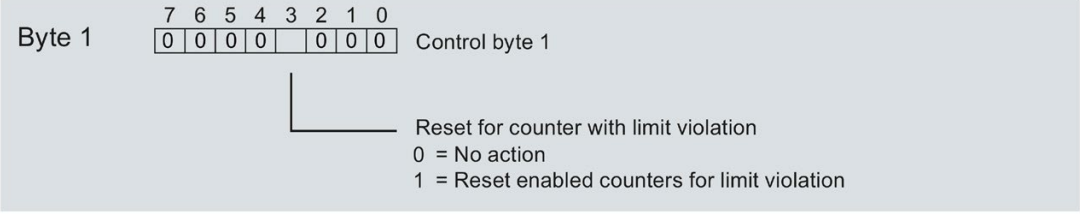

Figure 9-2 Resetting of the counters for limit violations

Activating / Deactivating counters for limit violations

Activating/deactivating of the counters for limit violations is only possible for module versions with 20 bytes of output data.

Requirements: "Gate for limit value monitoring" was parameterized during configuration of the module using STEP 7 or by writing the data record DS 128.

Select the counters for limit violations that you want to activate / deactivate in Control bytes 3 and 4.

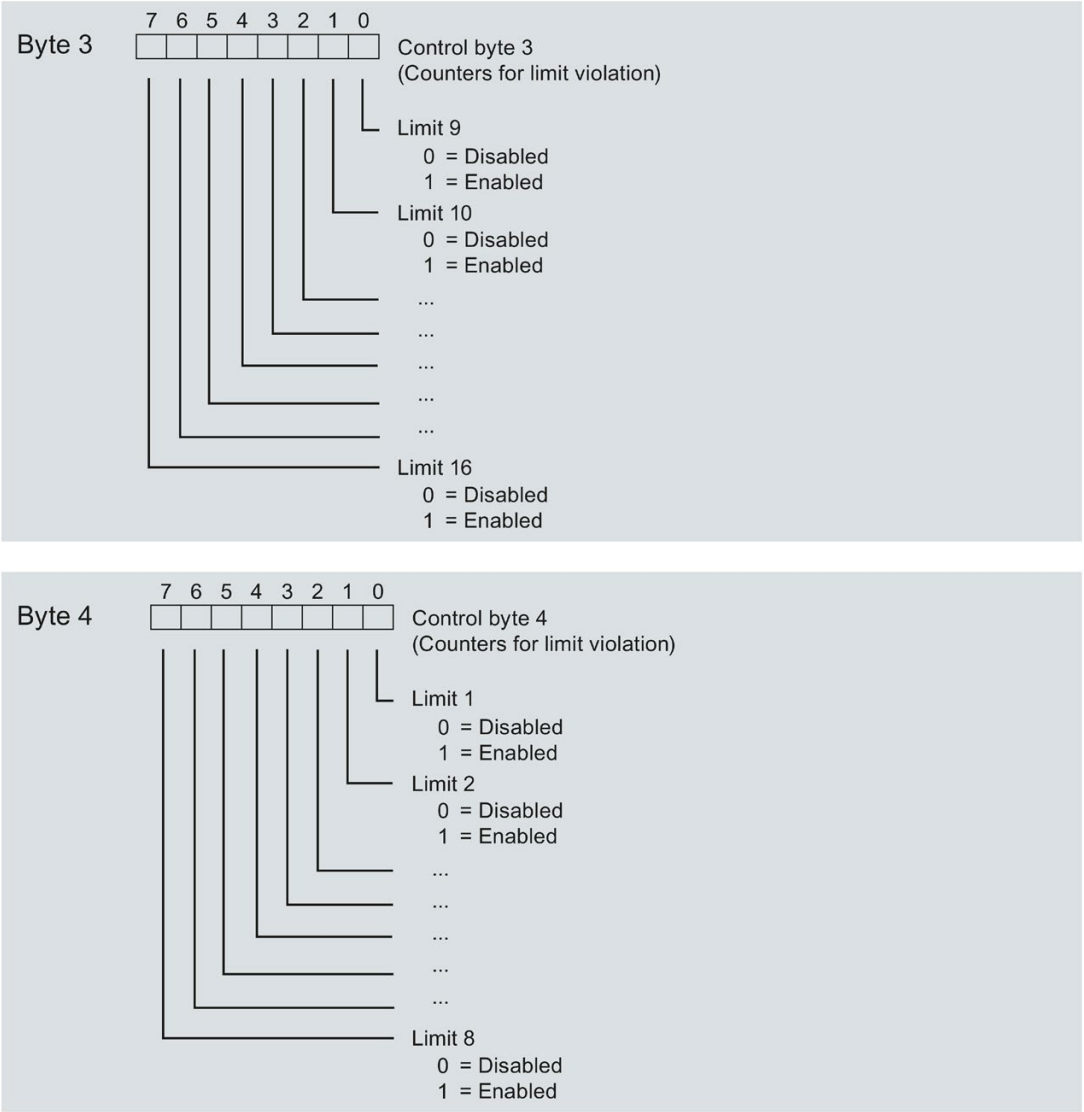

Figure 9-3 Activating / deactivating of the counters for limit violations

9.4 Measured variables for limit monitoring

You can use measured variables from the section Measured variables (Page 162) for limit value monitoring.

The value range of the parameter "Limit x" is -3.0E+09 ... +3.0E+09.

The table below shows you which measured variables are not available for limit monitoring.

Measured value ID	Measured variables
220	Total active energy inflow L1L2L3
221	Total active energy outflow L1L2L3
222	Total reactive energy inflow L1L2L3
223	Total reactive energy outflow L1L2L3
224	Total apparent energy L1L2L3
225	Total active energy L1L2L3
226	Total reactive energy L1L2L3
62110	Active energy inflow L1
62111	Active energy outflow L1
62112	Reactive energy inflow L1
62113	Reactive energy outflow L1
62114	Apparent energy L1
62115	Total active energy L1
62116	Total reactive energy L1
62136	Fundamental cos φ active factor L1
62210	Active energy inflow L2
62211	Active energy outflow L2
62212	Reactive energy inflow L2
62213	Reactive energy outflow L2
62214	Apparent energy L2
62215	Total active energy L2
62216	Total reactive energy L2
62236	Fundamental cos φ active factor L2
62310	Active energy inflow L3
62311	Active energy outflow L3
62312	Reactive energy inflow L3
62313	Reactive energy outflow L3
62314	Apparent energy L3
62315	Total active energy L3
62316	Total reactive energy L3
62336	Fundamental cos φ active factor L3
65496	Power quality analysis qualifier
65497	Current module time
65500	Qualifier L1
65501	Qualifier L2

Measured value ID	Measured variables
65502	Qualifier L3
65503	Qualifier L1L2L3
65508	Status of energy counter overflows
65509	Status of limit violations 1…16
66001	Voltage L1-N
66002	Voltage L2-N
66003	Voltage L3-N
66004	Voltage L1-L2
66005	Voltage L2-L3
66006	Voltage L3-L1
66007	Current L1
66008	Current L2
66009	Current L3
66010	Apparent power L1
66011	Apparent power L2
66012	Apparent power L3
66013	Active power L1
66014	Active power L2
66015	Active power L3
66016	Reactive power Qn L1
66017	Reactive power Qn L2
66018	Reactive power Qn L3
66019	Power factor λ L1
66020	Power factor λ L2
66021	Power factor λ L3
66030	Frequency
66034	Active power L1L2L3
66035	Reactive power Qn L1L2L3
66036	Apparent power L1L2L3
66037	Power factor λ L1L2L3
66038	Frequency

Minimum and maximum values 10

10.1 Minimum and maximum values

Introduction

The AI Energy Meter HF determines the respective highest and lowest measured or calculated value for a series of measured and calculated values. The values are stored retentively in the module and can be read using measured value data records DS 144 (Page 235), DS 145 (Page 241), DS 154 (Page 237) and DS 155 (Page 243).

Benefits

Using the stored minimum and maximum values, for example, you can detect further irregularities in addition to limit monitoring.

Calculation of minimum and maximum values

Minimum and maximum values are only calculated for the phases in accordance with the configured connection type. Existing minimum and maximum values that have not been calculated are assigned initial values. If faults such as under or overcurrent occur during operation, new minimum and maximum values are calculated.

The measured and calculated values are initialized as follows during commissioning of the AI Energy Meter HF so that the first calculation of minimum and maximum values supplies a plausible result:

- Maximum values for measured and calculated values: Minimum values
- Minimum values for measured and calculated values: Maximum values

Minimum and maximum values are determined as "slave pointer procedures" from the start of calculation. Start is effective as of activation of the function or after a reset. The module uses the current actual value as the start value.

If you activate the parameter "Enable minimum and maximum value calculation gate", the calculation only starts if the corresponding DQ bit ("gate open") was set (output data byte 1, bit 2 = "1"). You can stop the calculation at any time by deactivating the parameter or closing the gate. Calculation starts again after reactivation. The gate for calculation of the minimum and maximum values functions in the same way as the gate for energy meters.

Configuring

You configure the following settings in STEP 7:

- Enable calculation of minimum and maximum values
- Enable minimum and maximum value calculation gate

Changing properties in RUN

The following table shows the supported control information:

Control information	Default value	Available in
Reset saved maximum values	0	Module version starting at 2 bytes of output data
Reset saved minimum values	0	Module version starting at 2 bytes of output data

Note

Automatic reset

If you change the parameters for current or voltage transformers, the minimum and maximum values are reset automatically to their initial values.

10.2 Resetting minimum and maximum values

Description

At the beginning of a new work order, it may be useful to reset the minimum and maximum values of the AI Energy Meter HF. Resetting means that the minimum and maximum values are reset to their initial values. Initial values are described, see section Measured value data record for maximum values (DS 144) version 1 (Page 235), Measured value data record for minimum values (DS 145) version 1 (Page 241), Measured value data record for maximum values with time stamp (DS 154) (Page 237) and Measured value data record for minimum values with time stamp (DS 155) (Page 243).

Minimum and maximum values are only reset using a Reset via output data (DQ bit).

Due to the differing lengths of the output data resetting of the minimum and maximum values depends on the configured module version. If you use module versions with 20 bytes of output data, you can:

- Reset the minimum and maximum values for **all** phases.
- Reset minimum and maximum values for each **individual** phase.

If you use the module version with 2 bytes of output data, you always reset **all** the minimum and maximum values simultaneously.

Time stamps are set to initial values (01.01.1970, 0:00) on reset.

Procedure for module version with 20 bytes of output data

Resetting the minimum and maximum values for all 3 phases.

1. Select the categories of minimum and maximum value that you want to reset in byte 2.
   - Set bit 0 for voltage and frequency.
   - Set bit 1 for current and power factor.
   - Set bit 2 for active power.
   - Set bit 3 for reactive power.
   - Set bit 4 for apparent power.

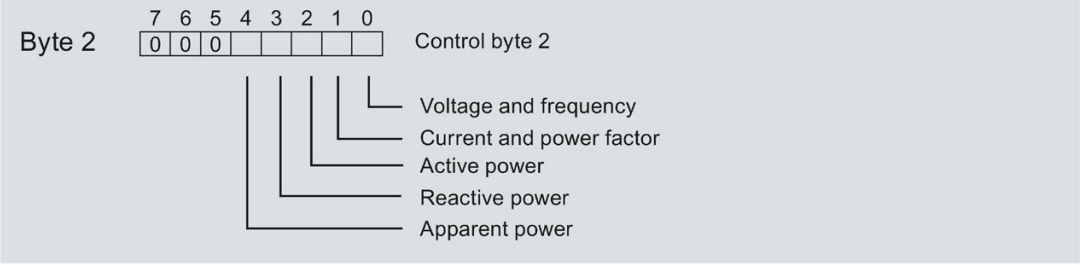

Figure 10-1 Selection of minimum and maximum value category

2. In Byte 1, set reset bit 0 for minimum values or reset bit 1 for maximum values.
   If there is an edge change of the reset bits from 0 to 1, the module resets the selected minimum or maximum values for all 3 phases that you previously selected in Byte 2.

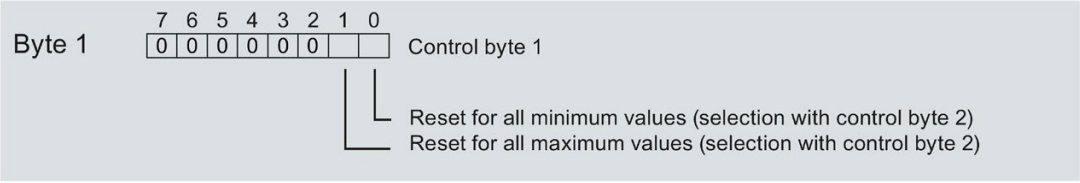

Figure 10-2 Reset bit for minimum and maximum values

Resetting minimum and maximum values for phase-specific measurement

You can also reset the minimum and maximum values on a phase-specific basis using the output data.

Follow the procedure for "Resetting minimum and maximum values for all 3 phases" as applicable.

1. Select the categories of minimum and maximum value that you want to reset on a phase-specific basis.
   - In byte 7, set the bits for the category of minimum and maximum values in phase 1.
   - In byte 9, set the bits for the category of minimum and maximum values in phase 2.
   - In byte 11, set the bits for the category of minimum and maximum values in phase 3.
2. Set the reset bit (bit 0 and bit 1) for minimum or maximum values.
   - in byte 6 for phase 1
   - in byte 8 for phase 2
   - in byte 10 for phase 3

If there is an edge change of the phase-specific reset bits from 0 to 1, the module resets the minimum or maximum values for the given phase.

Procedure for module version with 2 bytes of output data

If you use the module version with 2 bytes of output data, you always reset **all** the minimum and maximum values simultaneously.

Set the reset bit (Bit 0 or Bit 1) in Control byte 1 from 0 to 1 through an edge change.

Figure 10-3 Resetting the minimum and maximum values at module version with 2 bytes of output data

Power quality analysis functions 11

Introduction

Power quality analysis functions are used as an aid to evaluate the quality of the supply network. In a three-phase system, many of these functions only make sense or can be executed if a functioning symmetrical three-phase supply system is available, the detection sensors of the three phases are identical in design and the nominal values current or voltage of the phases have the same values.

The AI Energy Meter HF provides you with the following power quality analysis functions in accordance with IEC 6100-4-30 for monitoring the power quality in your power network:

- Measure the neutral current
- Perform residual current analysis
- Determine active and power factor
- Carry out reactive power compensation
- Analyze fundamental values three-phase (voltage, current, power)
- Analyze the harmonics up to the 40th harmonic
- Determine the total harmonic distortion THD+N current/voltage for all three phases
- Detect voltage dip and voltage swell
- Detect overcurrent
- Detect peak value for current and voltage

The power quality analysis only returns useful results if some basic requirements are met. These include:

- Accuracy of the line frequency (50 Hz or 60 Hz) is maintained according to IEC 61557-12.
- Wiring has been carried out correctly.

Delete the results of the power quality analysis

Delete the results of the power quality analysis by setting the corresponding bits in Byte 12 of the output range (Page 199) for at least 100 ms to "1".

Deletion has the following effects:

- Deletion of the result values and status bits for
  - Peak values of the instantaneous values for voltage and current
  - Overcurrent of the current half value
  - Voltage dip and voltage swell of the voltage half-wave value
- Any pending diagnostics "External fault" is deleted.

Harmonic

Harmonics are superimposed vibrations deviating from the fundamental frequency of the supply network (50 Hz or 60 Hz) with an integer multiple of the fundamental frequency. Harmonics are generated by equipment with a non-linear current–voltage characteristic such as transformers, gas discharge lamps and power electronics devices.

Harmonic component THD (Total Harmonic Distortion)

The THD defines the ratio of the power of the harmonics to the power of the fundamental and provides information about the power quality. The value is dimensionless and is stated as a percentage [%].

The AI Energy Meter HF returns THD+N (Noise) and considers the entire current signal (DS 163) or voltage signal (DS 161). Interference in the network is not filtered out.

11.1 Power quality analysis status

Information about the power quality status can be found in the measured value "Power quality analysis qualifier" with the measured value ID 65496.

The bits 0 to 4 in byte 1 to 3 show in status "1" that information has been available since the last reset, which can be retrieved. The bits 5 to 7 in byte 1 to 3 in status "1" show that the event is currently active. If the event is not active, "0" is displayed.

The measured value "Network analysis qualifier" has the following structure:

Address	Content	Bit 7	Bit 6	Bit 5	Bit 4	Bit 3	Bit 2	Bit 1	Bit 0
Byte 0	Power quality analysis qualifier module	Reserved	Reserved	Status of harmonics analysis: 0_D: No data, no start 1_D … 62_D: running 63_D: Completed, data is available					
Byte 1	Power quality analysis qualifier phase L1	**Overcurrent** Event currently active	**Voltage swell** Event currently active	**Voltage dip** Event currently active	**Overcurrent** Event occurred, data available	**Peak value current** Event occurred, data available	**Voltage peak** Event occurred, data available	**Voltage swell** Event occurred, data available	**Voltage dip** Event occurred, data available
Byte 2	Power quality analysis qualifier phase L2								
Byte 3	Power quality analysis qualifier phase L3								

11.2 Harmonics analysis

The AI Energy Meter HF can determine the effective values for current and voltage up to the 40th harmonic of the fundamental.

The harmonics of the voltage are stored in the data record DS 161 (Page 260).

The harmonics of the current are stored in the data record DS 163 (Page 264).

In addition, you can incorporate the results on IDs with the parameter data records DS 130/DS 131 (Page 156) in the user-defined user data and DS 135 (Page 159) in the user-defined data record DS 151 (Page 257).

The calculation of the harmonics takes several cycles. To determine whether calculation is completed, evaluate the Bits 0 to 5 in the power quality analysis data record DS 160 (Page 258) in Byte 218. If the value 63 is in the Bits 0 to 5, the calculation is completed and the measured values are available.

Note

While the calculation is in progress, you cannot read the data records DS 161 and DS 163.

Note

While the calculation is in progress, quick measured value acquisition (e.g. for controlling reactive-power compensation) is not possible.

Requirement

- The parameter "Power quality analysis function" is activated.
- The parameter "Analyse harmonics" for the corresponding phase must be released.

Voltage and current are always analyzed simultaneously for the enabled phases.

Control via data outputs

The harmonics analysis starts by setting the DQ bit 6 "Power quality analysis Start/Stop L1L2L3" in Byte 12 of the output data. The results of a previous analysis of harmonics are deleted in the process. Results of non-selected channels are "0". If channels which have not yet been analyzed are added, the data are not plausible at the start of the analysis.

If the DQ bit is reset during an ongoing analysis, the analysis stops.

11.3 Reactive power compensation

Use the power factor of the fundamental for the reactive power compensation.

When you activate the power quality analysis function, the power factor of the fundamental is available in the measured value data record DS 160 (Page 258) or in the user data.

11.4 Detection of residual current

For the residual current analysis (function "Tamper Detect" = Detection of unauthorized interventions), the total current must be determined:

Isum L1L2L3 (t) = IL1 (t) + IL2 (t) + IL3 (t)

The instantaneous residual current If is obtained by subtracting the results of the current neutral current In from the total current:

If = Isum L1L2L3 – In

Analysis starts immediately after parameter assignment. The measured value "Total current IL1+IL2+IL3-IN" (ID = 61153) returns the residual current. It is contained in DS 160, for example. You can monitor a threshold relevant for your application for a limit value (see function Limit monitoring (Page 75)).

Requirements

- "3P4W" or "3P4WI" is parameterized as the connection type.
- The same current/voltage transformers or Rogowski coils are connected to all three phases.
- The parameter "Reverse current direction" is parameterized identically for all three phases.
- The neutral current is parameterized with "Measuring".
- The residual current analysis is activated in the parameter assignment.

11.5 Active factor and power factor

The AI Energy Meter HF returns the active and power factor individually for each phase and as an aggregate.

Active factor

The active factor is defined as follows:

cos φ (active factor, signed, fundamental oscillation): cos φ = P1 / S1

φ = phase shift angle of fundamental oscillation

P1 = active power of fundamental oscillation

S1 = apparent power of fundamental oscillation

Power factor

The power factor λ = cos Φ is the ratio of active power (P) to the total apparent power (S) over the fundamental oscillation and all harmonics (total):

λ (power factor, unsigned, total): λ = cos Φ = |P| / S

11.6 Neutral current In

The module can measure or calculate the neutral current.

For measuring, you have to connect a current/voltage transformer or Rogowski coil to neutral. The behavior "measuring or calculating" can be set for each parameter. The main application of the measured value "Neutral current IN" (ID: 61149) are three-phase networks with existing 4th conductor, neutral: The neutral current usually shows incorrectly flowing currents. In an ideal three-phase network, the neutral current = 0.

An additional possible application is measuring any 4th current on this channel. Please note that in this case the measured value "Neutral current" displays this 4th current and not the actual neutral current.

Additional values in conjunction with the neutral current is set to 0.

The calculation of the neutral current and the comparison of calculated and measured neutral current (used for residual current analysis) is only possible in the operating modes "3P4W" and "3P4WI".

The determination of the neutral current is not subject to current suppression.

Parameter assignment options

If there a neutral in a connection type, the following parameters are available:

- Neutral current measurement deactivated
- Calculate the neutral current measurement
- Measure the neutral current measurement

If there is no neutral in a connection type, the following parameters are available:

- Do not use current channel
- Measure current channel

Display via channel LED

Neutral exists for connection type	calculate	measuring	Error	Channel LED
Yes	Yes	Yes	No	Green
Channel disabled	---	---	---	Off
No	No	Yes	No	Green

11.7 Monitoring the instantaneous or half-wave values

You can enable the following functions:

- Voltage swell (Page 115)
- Voltage dip (Page 117)
- Voltage peaks (Page 120)
- Current peak value (Page 126)
- Overcurrent value (Page 128)

The results are mapped in the phase-specific data records DS 147 (Page 246), DS 148 (Page 249) and DS 149 (Page 252) and in the power quality analysis data record DS 160 (Page 258).

In addition, you can incorporate the results using IDs in the measured value data record of the user-defined data record DS 151 (Page 257) and in the user data variants 1/2.

You can monitor the results for limits (Page 75) and generate hardware interrupts.

Phase-based measured values 12

Introduction

The AI Energy Meter HF makes the measured values of individual phases available.

- Through the user data variants
  - Phase-specific measurement Phase L1 with user data variants 154 ($9A_H$) and 155 ($9B_H$)
  - Phase-specific measurement Phase L2 with user data variants 156 ($9C_H$) and 157 ($9D_H$)
  - Phase-specific measurement Phase L3 with user data variants 158 ($9E_H$) and 159 ($9F_H$)
- Via measured value data records
  - Phase-specific measurement for the phases L1, L2 and L3 with data record 142
  - Phase-specific measurement for phase L1 with data record 147
  - Phase-specific measurement for phase L2 with data record 148
  - Phase-specific measurement for phase L3 with data record 149

User data variants

Through the user data variants 154 ($9A_H$) to 159 ($9F_H$) you can evaluate the following measured values for each phase of an AC / three-phase network:

- Quality information
- Current and voltage
- Active, reactive and apparent power
- Active, reactive and apparent energy
- Power factor

You can find the structure of the user data variants in appendix User data variants with 32 bytes input data / 20 bytes output data (Page 204).

Measured value data records

Through the measured value data records DS 142, DS 147, DS 148 and DS 149 you can evaluate the following measured values for each phase of an AC / three-phase network:

- Quality information
- Current and voltage
- Minimum current and minimum voltage
- Maximum current and maximum voltage
- Active, reactive and apparent power
- Minimum active, reactive and apparent power
- Maximum active, reactive and apparent power
- Active, reactive and apparent energy
- Power factor
- Minimum power factor
- Maximum power factor
- Harmonic distortion for voltage and current including minimum/maximum values
- Voltage dip
- Voltage swell
- Peak value for voltage and current
- Overcurrent value

You can find the structure of the measured value data records in appendix Measured value data record for phase-based measured values L1 (DS 147) version 1 (Page 247).

See also

Measured value data record for phase-based measured values L2 (DS 148) version 1 (Page 250)

Measured value data record for phase-based measured values L3 (DS 149) version 1 (Page 253)

Minimum and maximum values (Page 82)

Overview of all measured value data records (Page 224)

Parameters 13

13.1 Parameters

Parameters of the AI Energy Meter HF

You will usually configure the AI Energy Meter HF with STEP 7 (TIA Portal, if necessary with HSP). In this case, STEP 7 (TIA Portal) checks the configured properties for plausibility during configuration.

You can also assign parameters to the module using a GSD file and STEP 7 or the configuration software of any provider. In this case, the module checks the validity of the configured properties only after the configuration has been downloaded. Note that some parameters depend on the selected connection type of the AI Energy Meter HF. For example in the connection type 1P2W for measurements in single-phase AC network it does not make sense to enter parameters for Phases 2 and 3. This is not checked by the system if the GSD file is used.

The effective range of the parameters that can be set using a GSD file depends on the type of bus system used:

- Distributed operation on PROFINET IO in an ET 200SP system
- Distributed operation with PROFIBUS DP in an ET 200SP system

In addition you can change the parameterized properties via the user program in RUN mode. When you assign parameters in the user program, the "WRREC" instruction transfers the parameters to the module using data records (see appendix Configuration via parameter data records (Page 138)).

The following table summarizes all the configurable parameters with STEP 7 (GSD file).

Table 13- 1 Parameters AI Energy Meter HF (GSD file)

Parameters	Value range	Default setting	Reconfiguration in RUN
Hardware interrupt	• Disable • Enable	Disable	No
Inputs			
Diagnostics: Missing supply voltage L+	• Disable • Enable	Disable	Yes
Connection type	• Disabled • 1P2W - 1 phase, 2 conductors • 3P4W - 3 phase current measurement, 4 conductors • 3P4W1, 3 phases, 4 conductors, balanced load • 3P4W - 3 phases, 4 conductors • 3x1P2W - 3 x 1 phase, 2 conductors each • 2P3W - 2 phases, 3 conductors • 3P3W, 3 phases, 3 conductors • 3P3W1, 3 phases, 3 conductors, balanced load	3P4W - 3 phases, 4 conductors	Yes
Voltage measuring range	• 100 V • 110 V • 115 V • 120 V • 127 V • 190 V • 200 V • 208 V • 220 V • 230 V • 240 V • 277 V	230 V	Yes
Line frequency	• 50 Hz • 60 Hz	50 Hz	Yes
Energy meter gate enabled	• Disable • Enable	Disable	Yes

Parameters	Value range	Default setting	Reconfiguration in RUN
End value energy meter	• No end value (infinite counting) • Count periodically to 10^3 • Count periodically to 10^6 • Count periodically to 10^9 • Count periodically to 10^{12} • Count periodically to 10^{15}	No end value (infinite counting)	Yes
User data variant	See the table Overview of the user data variants	Total power L1L2L3 (W#16#FE)	Yes
Minimum and maximum value calculation	• Disable • Enable	Disable	Yes
Minimum and maximum value calculation gate	• Disable • Enable	Disable	Yes
Power quality analysis functions	• Disable • Enable	Disable	Yes
Residual current analysis	• Disable • Enable	Disable	Yes
Neutral: Current transformer secondary voltage [0.1 mV]	• 0 = Disabled • 100 ... 6000 = measuring • 65535 = calculation	250	Yes
Neutral: Current transformer primary rated current [A]	• 1 ... 16000	1000	Yes
Current transformer type for line conductors L1, L2, L3 and neutral conductor	• Rogowski coil • Current-voltage transformer	Rogowski coil	Yes
Voltage dip limit value in relation to nominal value voltage [0.1%]	• 10 ... 1000	100	Yes
Voltage swell limit value in relation to nominal value voltage [0.1%]	• 10 ... 10000	100	Yes
Threshold overcurrent in relation to nominal value current [0.1%]	• 10 ... 60000	100	Yes
Number of cycles for voltage swell and dip analysis	• 4 ... 32767	10	Yes
Diagnostics power quality	• Disable • Enable	Disable	Yes
Diagnostics overflow current	• Disable • Enable	Disable	Yes
Diagnostics overflow voltage	• Disable • Enable	Disable	Yes

Parameters	Value range	Default setting	Reconfiguration in RUN
Diagnostics underflow voltage	• Disable • Enable	Disable	Yes
Diagnostics overflow cumulative values	• Disable • Enable	Disable	Yes
Detect voltage swell and dip	• Disable • Enable	Disable	Yes
Detect peak value current	• Disable • Enable	Disable	Yes
Detect peak value voltage	• Disable • Enable	Disable	Yes
Detect overcurrent	• Disable • Enable	Disable	Yes
Analyse harmonics	• Disable • Enable	Disable	Yes
Nominal value current [A]	• 0 ... 99999	1	Yes
Tolerance factor overcurrent in relation to nominal value current [0.1%]	• 10 ... 60000	100	Yes
Tolerance time overcurrent [ms]	• 0 ... 60000	40000	Yes
Low limit current measurement in relation to nominal value current [0.1%]	• 0 ... 200	10	Yes
Enable operating hours counter	• Disable • Enable	Disable	Yes
Enable gate of operating hours counter	• Disable • Enable	Disable	Yes
Current transformer secondary voltage [0.1 mV]	• 100 ... 6000	250	Yes
Current transformer primary rated current [A]	• 1 ... 16000	1000	Yes
Reverse current direction	• Disabled • Reverse current direction	Disabled	Yes
Nominal value voltage [V]	• 1 ... 999999	230 V	Yes
Tolerance factor overvoltage/undervoltage [0.1%]	• 10 ... 500	100	Yes
Voltage transformer primary voltage [V]	• 1 ... 999999 V	230 V	Yes
Voltage transformer secondary voltage [V]	• 1 ... 500 V	230 V	Yes

Parameters	Value range	Default setting	Reconfiguration in RUN
Limits			
Number of limits	• 0 ... 16	0	Yes
Limit monitoring	• Disable • Enable	Disable	Yes
Measured variable	• Measured value ID see Measured value data records (Page 224)	None	Yes
Enable limit monitoring gate	• Disable • Enable	Disable	Yes
Hardware interrupt	• Disable • Enable	Disable	Yes
Limit	• depending on the selected measured variable	0.0000	Yes
Type	• High limit • Low limit	High limit	Yes
Hysteresis for limit monitoring [0.1%]	• 0 ... 200 [0.1%]	1%	Yes
Delay time for limit monitoring [s]	• None • 1 ... 10 s	None	Yes
User data mapping I/II			
Number of measured values	• 0 ... 64	0	Yes
Measured variable	• Measured value ID see Measured variables for connection type (Page 162)	None	Yes
Data record mapping			
Number of measured values	• 0 ... 150 • 0 ... 125 with STEP 7 (TIA Portal) V15 with HSP0253	0	Yes
Measured variable	• Measured value ID see Measured variables for connection type (Page 162)	None	Yes

13.2 Description of parameters

Hardware interrupt

Enable the hardware interrupt for the entire module here.

Inputs

Diagnostics: Missing supply voltage L+

Activate the diagnostics No supply voltage L+. If there is no voltage or too little voltage at terminal 17, the message "No supply voltage" is output and a diagnostic interrupt is triggered.

Connection type

Specify the connection type you used for the AI Energy Meter HF.

For more detailed information, refer to "Connection examples (Page 23)".

Voltage measuring range

Here you set the voltage measuring range in which the system connected to the AI Energy Meter HF works.

Line frequency

Here you set the line frequency in which the system connected to the AI Energy Meter HF works.

Enable gate energy counter

Enable the gate for the energy meter When the gate is enabled, the energy counter only counts when the corresponding output data bit (DQ bit) is set to "1".

End value energy meter

Select the end value for the periodic counting of the energy meter. You can also specify that the energy counter is to count without a full-scale value (infinite counting). The calculated energy counter values are stored retentively in the module.

User data variant

Select user data variant with which the module is to operate once it is started up.

Minimum and maximum value calculation

Enable calculation of the minimum and maximum values. The minimum and maximum value are calculated from the start of the measurement. The values determined are stored retentively in the AI Energy Meter HF together with the time stamp.

Minimum and maximum value calculation gate

Enable the gate for minimum and maximum value calculation. When the gate is enabled, the energy meter only counts when the corresponding output data bit (DQ bit) is set to "1".

Power quality analysis function

Enable the power quality analysis function for the entire module.

Residual current analysis

Enable the residual current analysis for the entire module. The residual current analysis is only available in the connection types 3P4W or 3P4WI and the concurrently activated parameter "Neutral current measurement".

Neutral current measurement

Defines whether the neutral current is measured or calculated.

This parameter does not apply to parameter assignment with GSD file.

Neutral: Current transformer secondary voltage [0.1 mV]

Enter the secondary voltage to determine the current/voltage transformer ratio. The conversion ratio is determined from the primary rated current and the secondary voltage.

The following applies to parameter assignment with GSD file:

- 0 = Neutral conductor function deactivated
- 100 ... 6000 = measure neutral current
- 65535 = calculate neutral current

Neutral: Current transformer primary rated current [A]

To determine the current/voltage transformer ratio, enter the primary rated current. The conversion ratio is determined from the primary rated current and the secondary voltage.

Current transformer type for line conductors L1, L2, L3 and neutral conductor

Select the connected current measuring transformer type.

Voltage dip limit value in relation to nominal value voltage [0.1%]

Further information can be found under Voltage dip of the voltage half-wave value (Page 117).

Voltage swell limit value in relation to nominal value voltage [0.1%]

Further information can be found under Voltage swell of the voltage half-wave value (Page 115).

Threshold overcurrent in relation to nominal value current [0.1%]

Further information can be found under Overcurrent of the current half value (Page 128).

Number of cycles for voltage swell and dip analysis

Further information can be found under Voltage swell of the voltage half-wave value (Page 115) and Voltage dip of the voltage half-wave value (Page 117).

Diagnostics power quality

Depending on the enable of the individual functions the diagnostics are triggered when a voltage swell, voltage dip or overcurrent event has occurred.

Diagnostics overflow current

The measured current is monitored after expiry of the "Tolerance time" for "Overcurrent [0.1 A] tolerance value". Exceeding the value generates the diagnostics "overflow current".

Diagnostics overflow voltage

The nominal values voltage are monitored for tolerance. An overflow triggers a diagnostic interrupt.

Diagnostics underflow voltage

The nominal values voltage are monitored for tolerance. An underflow triggers a diagnostic interrupt.

Diagnostics overflow cumulative values

A cumulative overflow in the calculated variables is displayed. The values stop at the high or low limit. A violation triggers a diagnostic interrupt.

Detect voltage swell and dip

Activates the detection of voltage swell and dip. Further information can be found under Diagnostics: Overflow/underflow (Page 113).

Detect peak value current

Activates the detection of current peak values. Further information can be found under Peak values of the instantaneous values for current (Page 126).

Detect peak value voltage

Activates the detection of voltage peak values. Further information can be found under Peak values of the instantaneous values for voltage (Page 120).

Detect overcurrent

Activates the detection of overcurrent. Further information can be found under Overcurrent of the current half value (Page 128).

Analyse harmonics

Activates harmonics analysis

Nominal value current [A]

Enter the nominal value for the current. This is the "operating point" in your application.

Tolerance factor overcurrent in relation to nominal value current [0.1%]

Further information can be found under Diagnostics: Overload (Page 122).

Tolerance time overcurrent [ms]

Further information can be found under Diagnostics: Overload (Page 122).

Low limit current measurement in relation to nominal value current [0.1%]

The configurable low limit for measuring current refers to the nominal value and is used to avoid incorrect calculations in the case of very low currents. Incorrect measurements of very low currents in particular are a cause of inaccuracies in the current transformer used. Set the low limit for the current measurement to the required value depending on your process.

Note

Tip: If you want to find the low limit for the current measurement experimentally, set it to a lower value. Then, feed in a very precise low current and determine the measurement error that can no longer be tolerated. Afterwards, set the low limit for the current measurement to the limit value you have determined.

If current falls below the low limit for the current measurement, the following measured values and derived variables of the affected phase are reset.

- Effective current value
- Neutral current
- Active power
- Reactive power
- Apparent power
- Phase angle
- Power factor

A moving mean value is formed from the power values and they only become "0" after a corresponding time. The energy meters for active, reactive and apparent energy as well as the operating hours counters do not count any longer.

Further information can be found under Low limit for measuring current undershot (Page 124).

Enable operating hours counter

Enable the operating hours counter. The counting starts from the configurable low limit of the current measurement. The counter can be reset or pre-assigned using data record or output bit.

Enable gate of operating hours counter

Enable the gate for the operating hours counter. When the gate is activated, the operating hours counter only counts when the corresponding output data bit (DQ bit) is set to "1".

Current transformer type for line conductors L1, L2, L3 and neutral conductor

Activate the transformer type here: Current/transformer type or Rogowski coil

Current transformer secondary voltage [0.1 mV]

Enter the nominal value for the secondary voltage (100 mV bis 6000 mV) of the current/voltage transformer used or Rogowski coil. The conversion ratio is determined from the primary rated current and the secondary voltage.

Current transformer primary rated current [A]

Enter the nominal value for the primary rated current (1 A or 16000 A) of the current/voltage transformer used or Rogowski coil. The conversion ratio is determined from the primary rated current and the secondary voltage.

Reverse current direction

Setting to determine whether or not to reverse the direction of current.

In the event of inadvertent incorrect connection, this parameter can be used to correct the measured values, thus saving the hassle of rewiring. The direction of the current is only evident from the power measurement values. The current measurement value is an rms value.

Nominal value voltage [V]

Enter the nominal value for the voltage. This is the "operating point" in your application.

Tolerance factor overvoltage/undervoltage [0.1%]

Enter the tolerance factor overvoltage/undervoltage here in increments of 0.1%. You can find additional information under Diagnostics: Overflow/underflow (Page 113).

Voltage transformer primary voltage [V]

Enter the nominal value for the primary voltage of the voltage transformer used. The transformer ratio is calculated from the primary and secondary voltage.

Voltage transformer secondary voltage [V]

Enter the nominal value for the secondary voltage of the voltage transformer used. The transformer ratio is calculated from the primary and secondary voltage.

Limits

Number of limits

Enter the number of measured values that you want to monitor for limits.

Limit monitoring

Enable the monitoring of the limit for a freely definable measured value here. Limit violations are counted and the count values stored retentively.

Measured variable

Enter the measured value ID that you want to use for limit monitoring.

Enable limit monitoring gate

Enable the limit monitoring gate. When the gate is enabled, the limit monitoring is only started when the corresponding bit of the associated output user data is set to "1".

Hardware interrupt

Enable the hardware interrupt. The hardware interrupt is triggered if a high or low limit is violated. Without activation of a hardware interrupt, a limit violation is only displayed in the user data and in DS 150.

Limit

Enter the limit that is to trigger a limit violation when exceeded or fallen below. Limit violations are displayed in the user data and in DS 150.

Type

Select whether it is a high or low limit. Depending on this selection, the limit violation or hardware interrupt is triggered when a value exceeds (high limit) or falls below (low limit) the limit.

Hysteresis for limit monitoring [0.1%]

Enter the hysteresis for limit in percent.

The hysteresis band is below the high limit or above the low limit. The parameter in % refers to the configured limit. If a measured value fluctuates around the limit but does not leave the hysteresis band, a new limit violation is not triggered.

Delay time for limit monitoring [s]

Select the delay time for limit violation. The delay refers to the time that must elapse before an occurrence of a limit violation is reported. Faults can be filtered out by selection of the delay time. The deceleration time is also taken into consideration during outgoing of the limit violation.

User data mapping I/II

Number of measured values

Specify the number of measured values/variables that you want to use for the user-specific user data mapping.

Measured variable

Select the measured variable (with the measured value ID) that you want to use for the user-specific user data mapping.

Data record mapping

Number of measured values

Specify the number of measured values/variables that you want to use for the user-specific data record mapping.

Measured variable

Select the measured variable (with the measured value ID) that you want to use for the user-specific data record mapping.

Interrupts/diagnostic alarms

14

14.1 Status and error display

LED display

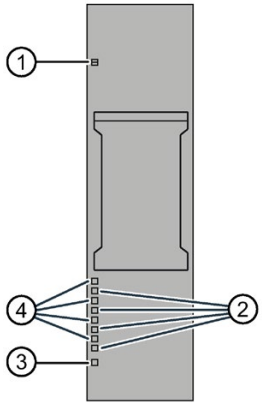

① DIAG (green/red)
② Error (red)
③ PWR (green)
④ Status (green)

Figure 14-1 LED display

Meaning of the LED displays

The following table explains the meaning of the status and error displays. Remedial measures for diagnostic alarms can be found in the section Diagnostic alarms (Page 110).

DIAG LED

Table 14- 1 Meaning of the DIAG LED

DIAG	Meaning
Off	Supply voltage of the ET 200SP not OK
Flashes	Module not ready for operation (no parameters assigned)
On	Module parameters assigned and no module diagnostics
Flashes	Module parameters assigned and module diagnostics

Status LED

Table 14- 2 Meaning of the Status LED

Status	Meaning
Off	Channel disabled
On	Channel activated and no error
On	Channel enabled and error

see also Neutral current In (Page 90)

Error LED

Table 14- 3 Meaning of the Error LED

Status	Meaning
Off	Channel is OK
On	Channel is faulty

PWR LED

Table 14- 4 Meaning of the PWR LED

PWR	Meaning
□ Off	Line voltage missing
■ On	Line voltage available

14.2 Interrupts

The analog input module AI Energy Meter HF supports hardware and diagnostic interrupts.

14.2.1 Hardware interrupts

Hardware interrupts

The module generates a hardware interrupt at the following events:

- Violation of low limit 1 to 16
- Violation of high limit 1 to 16

You can find detailed information on the event in the hardware interrupt organization block with the "RALARM" (read additional interrupt information) instruction and in the STEP 7 online help.

The module channel that triggered the hardware interrupt is entered in the start information of the organization block. The following figure shows the assignment of the local data double word 8 by the start information of the hardware interrupt organization block.

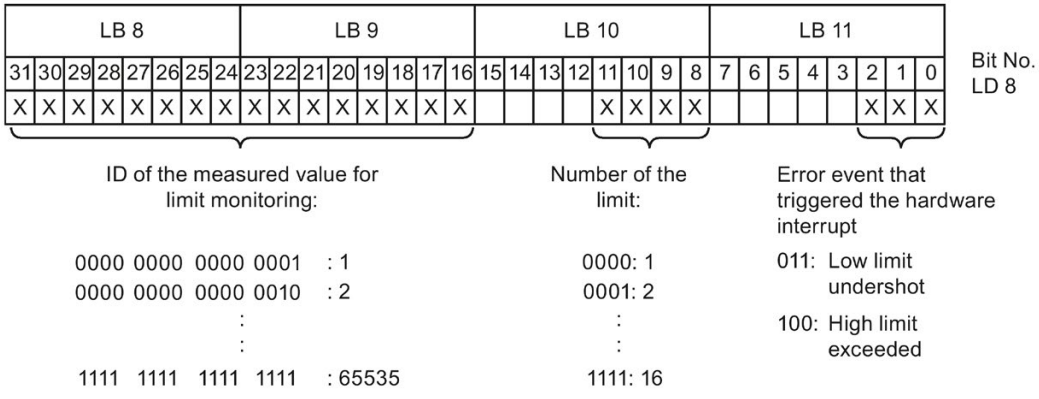

Figure 14-2 Start information of the organization block

14.2.2 Diagnostics interrupt

Diagnostic interrupt

The module generates a diagnostic error interrupt at the following events:

- Power quality
- Channel is temporarily unavailable
- Hardware interrupt lost
- Error
- Supply voltage missing
- Parameter assignment error
- Underflow voltage (tolerance for supply voltage) violated
- Overflow voltage (tolerance for supply voltage) exceeded
- Overload (voltage measured value > 424 mV or tolerance value overcurrent exceeded after the tolerance time has expired)
- Overflow of the calculated values (measured or calculated values screen exceed the representable range of values)

14.3 Diagnostic alarms

Note

Assignment channel in diagnostic message ⇔ Phase

In the diagnostic messages the channels are counted from Channel "0" on, in the AI Energy Meter HF from phase "1" on.

Note the following assignment:

- Channel "0" ⇔ Phase "1"
- Channel "1" ⇔ Phase "2"
- Channel "2" ⇔ Phase "3"

Table 14- 5 Error types

Diagnostic message	Error code	Meaning	Solution
Undervoltage	2_H	Line voltage (measuring range) is monitored for tolerance. Violation leads to voltage overflow/underflow	Observe the line voltage range
Overvoltage	3_H		
Overload	4_H	• The measured current is monitored after the "Tolerance time" for "Tolerance value overcurrent [0.1A]" has expired. Exceeding this results in overflow current. • The maximum value of the secondary voltage (424 mV) is exceeded.	Observe the current range
Error	9_H	Internal module error (diagnostic alarm on channel 0 applies to the entire module).	Replace the module
Parameter assignment error	10_H	• The module cannot evaluate parameters for the channel. • Incorrect parameter assignment.	Correct the parameter assignment
Load voltage missing	11_H	Missing or insufficient line voltage at terminal 17	Check supply
External fault	$1A_H$	Voltage swell/dip and overcurrent	see: • Voltage swell of the voltage half-wave value (Page 115) • Voltage dip of the voltage half-wave value (Page 117) • Overcurrent of the current half value (Page 128)
Channel is temporarily unavailable	$1F_H$	Firmware upgrade is being performed. Channel 0 applies to the entire module. The module is currently not performing any measurements.	--
		A user calibration is being executed at the channel.	Complete the user calibration

14.4 Diagnostics response

Diagnostics response

This section describes the response of the AI Energy Meters HF when diagnostics information is reported.

Measured values in the case of diagnostics

Even in the case of diagnostics, measured values continue to be displayed as long as they can still be acquired. If measured values cannot be measured or calculated, "0" is displayed.

Low limit for current measurement undershot (zero suppression)

If the supplied current is less than the configured "Low limit for current measurement" parameter, the current measurement and all dependent variables are suppressed and set to "0".

If current falls below the low limit for the current measurement, the following measured values and derived variables of the affected phase are reset.

- Effective current value
- Active power
- Reactive power
- Apparent power
- Phase angle
- Power factor

A moving mean value is formed from the power values and they only become "0" after a corresponding time. The energy meters for active, reactive and apparent energy as well as the operating hours counters do not count any longer.

If the secondary current fed in at the current measuring channel is higher than 424 mV, the module changes to limitation and the current measurement value and all dependent variables are set to "0".

Input data to "0"

If the AI Energy Meter HF is no longer recognized by the interface module (for example, because it is defective or not plugged in), all input data are set to "0".

14.4.1 Voltage diagnostics

14.4.1.1 Diagnostics: Overflow/underflow

Introduction

You use the parameter "Tolerance factor overvoltage/undervoltage" to define a tolerance range around the set nominal value voltage at the operating point. If the effective value of the primary voltage exceeds this tolerance range, the module reports the diagnostics "overflow" or "underflow".

Calculation of tolerance value measuring voltage

The tolerance value measuring voltage is calculated with the following formula:

Tolerance value measuring voltage = "Nominal value voltage" ± ("Tolerance factor overvoltage/undervoltage [%]" × "Nominal value voltage")

The "Nominal value voltage" is the primary voltage at the operating point.

Parameter assignment

The following table shows the necessary parameters:

Table 14- 6 Parameter assignment

Parameter	
Power quality analysis functions	Enable
Diagnostics overflow	Enable
Diagnostics underflow	Enable
Nominal value voltage	1 ... 999999 V
Voltage transformer primary voltage	1 ... 999999 V
Voltage transformer secondary voltage	1 ... 500 V
Tolerance factor overflow/underflow	10 ... 50%

Example

The following figure is a schematic diagram of the principle of operation:

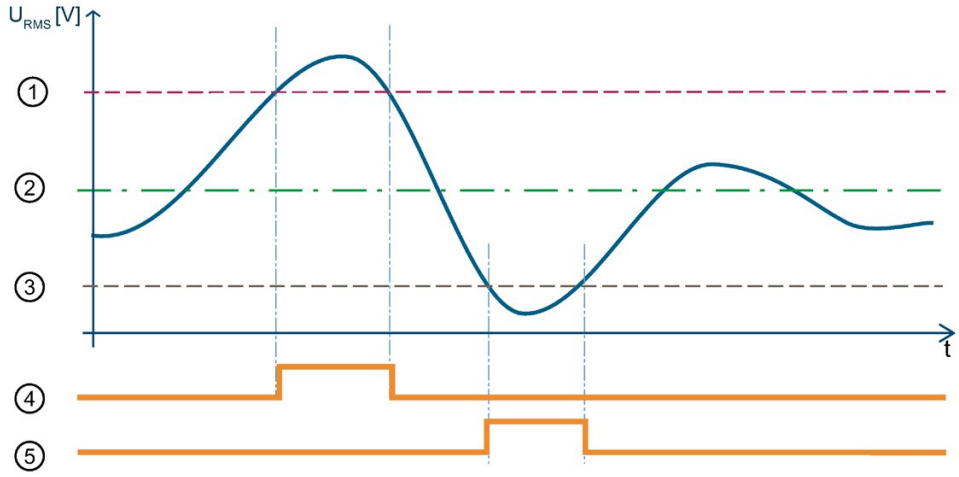

① Upper tolerance value measuring voltage
② Nominal voltage
③ Lower tolerance value measuring voltage
④ Diagnostics "overflow"
⑤ Diagnostics "underflow"

Figure 14-3 "Overflow/Underflow" diagnostics of the effective voltage value

The following table shows the parameter assignment for the example:

Table 14- 7 Parameter assignment

Parameter	
Power quality analysis functions	Enable
Diagnostics overflow	Enable
Diagnostics underflow	Enable
Nominal value voltage	230 V
Voltage transformer primary voltage	1000 V
Voltage transformer secondary voltage	500 V
Tolerance factor overflow/underflow	20%

In this example you define a tolerance range of ± 20%. The tolerance range corresponds to an effective value of primary voltage of ± 46 V.

In the figure the effective value of the primary voltage first exceeds the tolerance range. As long as the effective value of the primary voltage exceeds the tolerance range the module reports the diagnostics "overflow".

The effective value of the primary voltage then exceeds the tolerance range. As long as the effective value of the primary voltage exceeds the tolerance range the module reports the diagnostics "underflow".

14.4.1.2 Voltage swell of the voltage half-wave value

Introduction

Voltage swells are short-term increases in the line voltage which can occur, for example, when switching off large consumers.

With the parameter "Number of cycles for analysis" you define how many measuring cycles the voltage swell must apply at until the module reports the voltage swell. The module reports the diagnostics "Power quality". The module also sets the qualifier bit 6 for the respective phase in data record DS 160 (Page 258). If the voltage lies below the limit for voltage swell again, the module sets the diagnostics "Power quality" again and resets the qualifier bit 6 again.

The AI Energy Meter HF returns the maximum value and the duration of the voltage swell, e.g. in data record 160. The duration is determined exactly to ± 2 cycles.

In the event of voltage swell again, only the diagnostics "Power quality" is reported again and the duration, and if applicable, the maximum voltage swell value is updated.

Calculation of voltage swell limit value

The Voltage swell limit value is the value from which level of voltage the AI Energy Meter HF recognizes a voltage swell.

The "Voltage swell limit value" is calculated by the following formula:

Voltage swell limit = "Nominal value voltage" + ("Voltage swell limit [%]" × "Nominal value voltage")

The "Nominal value voltage" is the primary voltage at the operating point.

Parameter assignment

The following table shows the necessary parameters:

Table 14- 8 Parameter assignment

Parameter	
Power quality analysis functions	Enable
Number of cycles for analysis	4 ... 32767
Diagnostics power quality	Enable
Determination of voltage swell and dip	Enable
Nominal value voltage	1 ... 999999 V
Voltage swell limit	1 ... 1000%

Example

The following figure is a schematic diagram of the principle of operation:

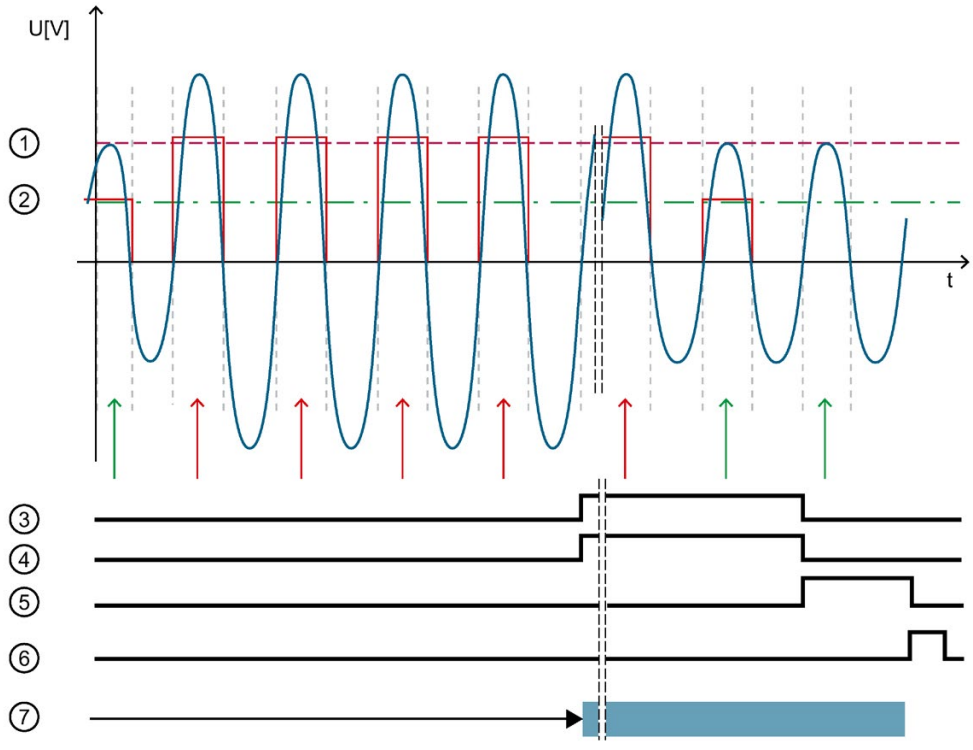

① Voltage swell limit
② Nominal voltage
③ Diagnostics "power quality"
④ Qualifier Bit 6
⑤ Status "Power quality voltage swell"
⑥ Bit "Reset status "power quality""
⑦ Min. voltage swell (half-wave) and duration can be read

Figure 14-4 Example of principle of operation

The following table shows the parameter assignment for the example:

Table 14- 9 Parameter assignment

Parameter	
Power quality analysis functions	Enable
Number of cycles for analysis	4
Diagnostics power quality	Enable
Determination of voltage swell and dip	Enable
Nominal value voltage	230 V
Voltage swell limit	40%

If the module detects that the "Voltage swell limit value" has been exceeded:

- The module reports the diagnostics "Power quality" from "Number of cycles for analysis" as long as there is a voltage swell.
- The module sets the qualifier bit 6 from "Number of cycles for analysis" as long as there is a voltage swell.
- After the module has reset the diagnostics "Power quality" and reset the qualifier bit again, Bit 1 is set.

As long as Bit 1 is set, the module returns the maximum value and the duration of the voltage swell, e.g. in data record 160.

You reset Bit 1 with the bit "reset status "power quality"".

14.4.1.3 Voltage dip of the voltage half-wave value

Introduction

Voltage dips are short-term decreases in the line voltage which can occur, for example, when switching on large consumers.

With the parameter "Number of cycles for analysis" you define how many measuring cycles the voltage dip must be present until the module reports the voltage dip. If the voltage lies above the "Voltage dip limit" again, the module sets the diagnostics "Power quality" and resets the qualifier bit 5 again.

The AI Energy Meter HF returns the maximum value and the duration of the voltage dip, e.g. in data record DS 160 (Page 258). The duration is determined exactly to ± 2 cycles.

In the event of voltage dip, the module reports a "Power quality" diagnostic. The module also sets the qualifier bit 5 for the respective phase in data record DS 160. In the event of voltage dip again, only the "Power quality" diagnostics is reported again and the duration, and if applicable, the minimum voltage dip value is updated.

Calculation of voltage dip limit

The voltage dip limit is the value from which level of voltage the AI Energy Meter HF detects a voltage dip.

The voltage dip limit is calculated by the following formula:

Voltage dip limit = "Nominal value voltage" - ("Voltage dip limit [%]" × "Nominal value voltage")

The "Nominal value voltage" is the primary voltage at the operating point.

Parameter assignment

The following table shows the necessary parameters:

Table 14- 10 Parameter assignment

Parameter	
Power quality analysis functions	Enable
Number of cycles for analysis	4 ... 32767
Diagnostics power quality	Enable
Determination of voltage swell and dip	Enable
Nominal value voltage	1 ... 999999 V
Voltage dip limit	1 ... 100%

Example

The following figure is a schematic diagram of the principle of operation:

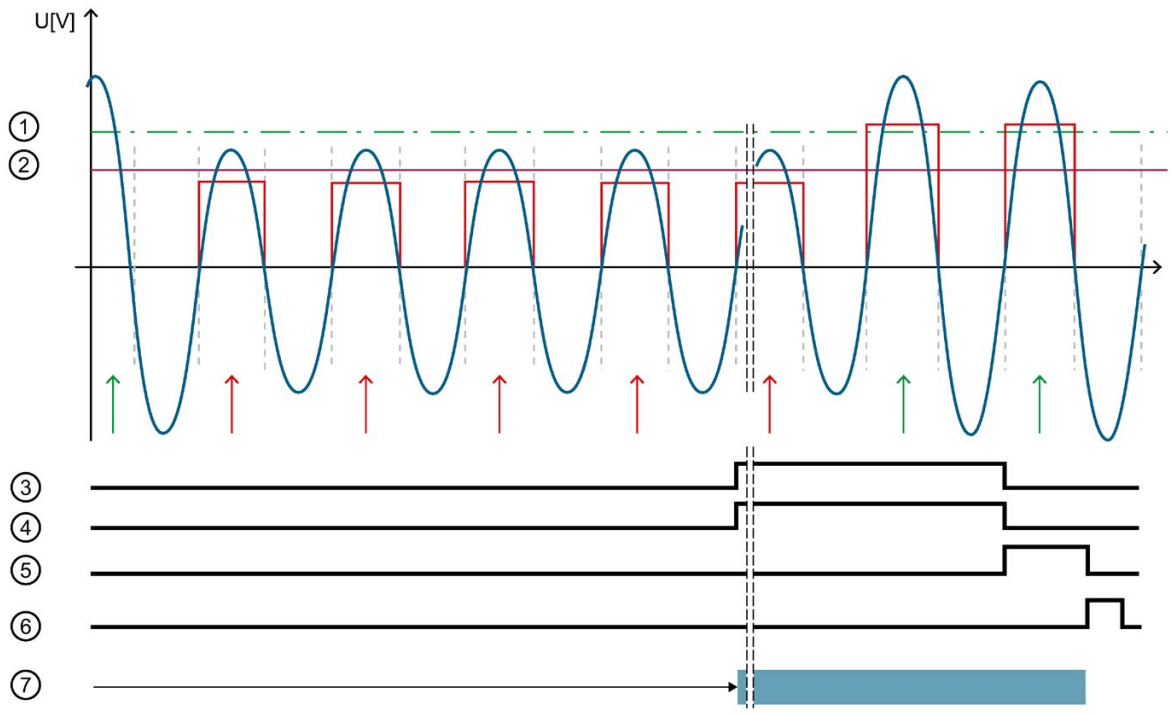

① Nominal voltage
② Voltage dip limit
③ Diagnostics "power quality"
④ Qualifier Bit 0
⑤ Status "Power quality voltage dip"
⑥ Bit "Reset status "power quality""
⑦ Min. voltage dip (half-wave) and duration can be read

Figure 14-5 Example of principle of operation

The following table shows the parameter assignment for the example:

Table 14- 11 Parameter assignment

Parameter	
Power quality analysis functions	Enable
Number of cycles for analysis	4
Diagnostics power quality	Enable
Determination of voltage swell and dip	Enable
Nominal voltage	230 V
Voltage dip limit	50%

If the module detects that the "Voltage dip limit" has been undershot:

- The module reports the diagnostics "Power quality" from "Number of cycles for analysis" as long as there is a voltage dip.
- The module sets the qualifier bit 5 from "Number of cycles for analysis" as long as there is a voltage dip.
- After the module has reset the diagnostics "Power quality" and reset the qualifier bit again, bit 0 is set.

As long as bit 0 is set, the module returns the minimum value and the duration of the voltage dip, e.g. in data record 160.

You reset Bit 0 with the bit "Reset status "power quality"".

14.4.1.4 Peak values of the instantaneous values for voltage

Introduction

The AI Energy Meter HF determines the maximum instantaneous value for the voltage for up to three phases.

The function "Detect peak value voltage" returns the largest voltage value and the associated phase. The module sets the qualifier bit 2 ("Power quality voltage peak") for the phase in question. You can read the maximum voltage value, for example, in the data record DS 160 (Page 258).

Voltage peak detection is based on the function for recording swells of the supply voltage in accordance with IEC 61000-4-30. This function is used to record the maximum voltage value in the supply network. In three-phase systems this function is only useful if the system is symmetrical and when all phases show the same voltage transformers.

Accordingly, measurement always records only the peak value over all phases. In addition to the requirements of IEC 61000-4-30, the phase on which the peak value voltage occurred is detected.

For metrological reasons, only the phase concerned that shows this maximum value can be returned. This may mean that the maximum voltage values of the other phases remain "0". With a "reset power quality analysis" the analysis starts afresh and the current results are discarded.

Parameter assignment

The following table shows the necessary parameters:

Table 14- 12 Parameter assignment

Parameter	
Power quality analysis function (module)	Enable
Determine peak value voltage (channel)	Enable

Example

The following figure is a schematic diagram of the principle of operation:

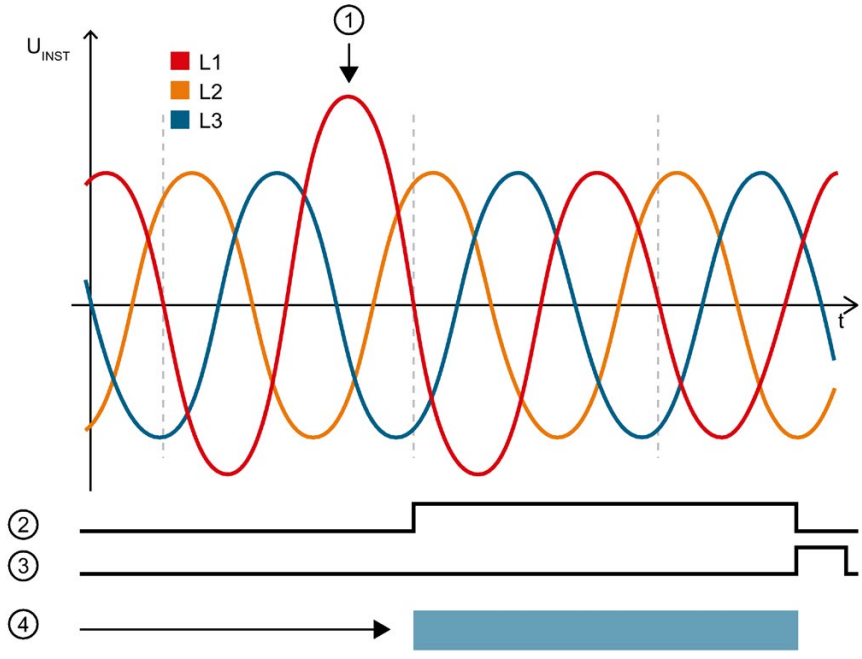

① Voltage peak in L1
② Status "Power quality voltage peak"
③ Bit "Reset status "power quality""
④ Max. voltage peaks instantaneous value can be read out

Figure 14-6 Example of principle of operation

The following table shows the parameter assignment for the example:

Table 14- 13 Parameter assignment

Parameter	
Power quality analysis functions	Enable
Determination of voltage peak value L1	Enable
Determination of voltage peak value L2	Enable
Determination of voltage peak value L3	Enable

The module detects the voltage peak in phase 1 and sets the qualifier bit 2 for phase 1. You can find the maximum voltage value, for example, in the data record DS 160 in bytes 174 to 177 ("Voltage peak value L1").

14.4.2 Current diagnostics

14.4.2.1 Diagnostics: Overload

Introduction

As long as one of the following conditions is met, the module reports the diagnostics "Overload" for each phase:

- Parameterized maximum relative measured current longer than the parameterized "Tolerance time overcurrent" is exceeded.
- Maximum permissible secondary voltage of 424 mV at a current measuring channel of the AI Energy Meters HF is exceeded.

Calculation of the parameterizable maximum measured current

The tolerance value for the maximum relative measured current is calculated with the following formula:

Tolerance factor for maximum relative measured current = "Nominal value current" + ("Tolerance factor overcurrent [%]" × "Nominal value current")

The "Nominal value current" is the primary current at the operating point.

Parameter assignment

The following table shows the necessary parameters:

Table 14- 14 Parameter assignment

Parameter	
Diagnostics overload	Enable
Nominal value current	0 ... 99999 A
Current transformer primary rated current	1 ... 16000 A
Current transformer secondary voltage	10 ... 600 mV
Tolerance factor overcurrent	1 ... 6000%
Tolerance time overcurrent	0 ... 60000 ms

Example

The following figure is a schematic diagram of the signal wave for the diagnostics "Overload":

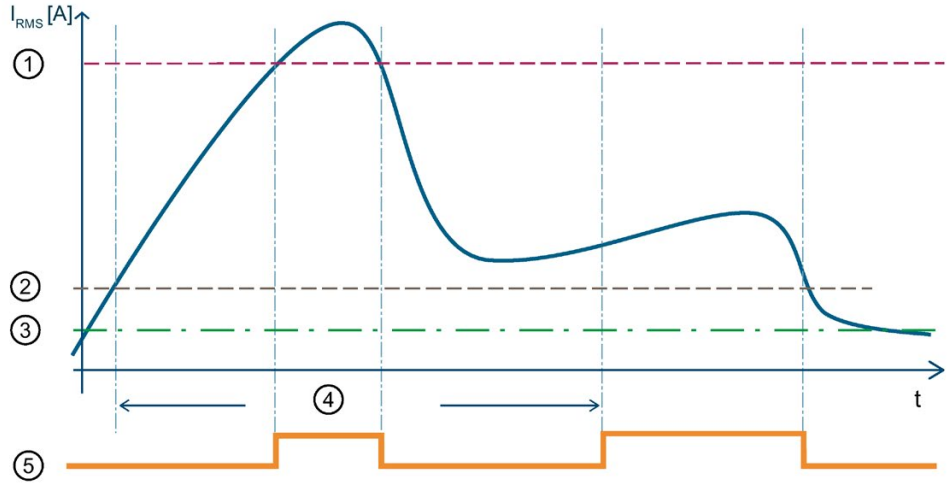

① Maximum relative measured current at permissible secondary voltage of 424 mV

The module reports the diagnostics Overload when the maximum permissible secondary voltage amounting to 424 mV is exceeded (primary current = 424 mV x 10000 A / 333 mV = 12732 A).

② Tolerance value measured current

After the "Tolerance time overcurrent" of 40000 ms has expired, the module reports the diagnostics "Overload" as long as the configured tolerance value for the maximum measured current of 2400 A
(= 2000 A + 20% x 2000 A) is exceeded.

③ Nominal value current

④ Tolerance time

⑤ Diagnostics "overload"

Figure 14-7 Diagnostics "overload" of the effective current value

The following table shows the parameter assignment for the example:

Table 14- 15 Parameter assignment

Parameter	
Diagnostics overload	Enable
Nominal value current	2000 A
Current transformer primary rated current	10000 A
Current transformer secondary voltage	333 mV
Tolerance factor overcurrent	20%
Tolerance time overcurrent	40000 ms

14.4.2.2 Low limit for measuring current undershot

Introduction

With the function "Low limit for measuring current undershot" the AI Energy Meter HF monitors the low limit of the effective value of the current per phase.

If the low limit for measuring current is undershot, the module sets the current value to 0. Information as to which current measured values are set to 0 can be found under Basics for reading measured values (Page 38).

You activate the function by setting the parameter "Low limit for measuring current" > 0%.

Calculation of low limit for measuring current

The low limit for measuring current is calculated using the following formula:

Low limit measured current = "Nominal value current" × "Low limit for measuring current [%]"

The "Nominal value current" is the primary current at the operating point.

Parameter assignment

The following table shows the necessary parameters:

Table 14- 16 Parameter assignment

Parameter	
Nominal value current	0 ... 99999 A
Current transformer primary rated current	1 ... 16000 A
Current transformer secondary voltage	10 ... 600 mV
Low limit for current measurement	0 ... 20% *

* 0% means deactivation of the function

Example

The following figure is a schematic diagram of the principle of operation:

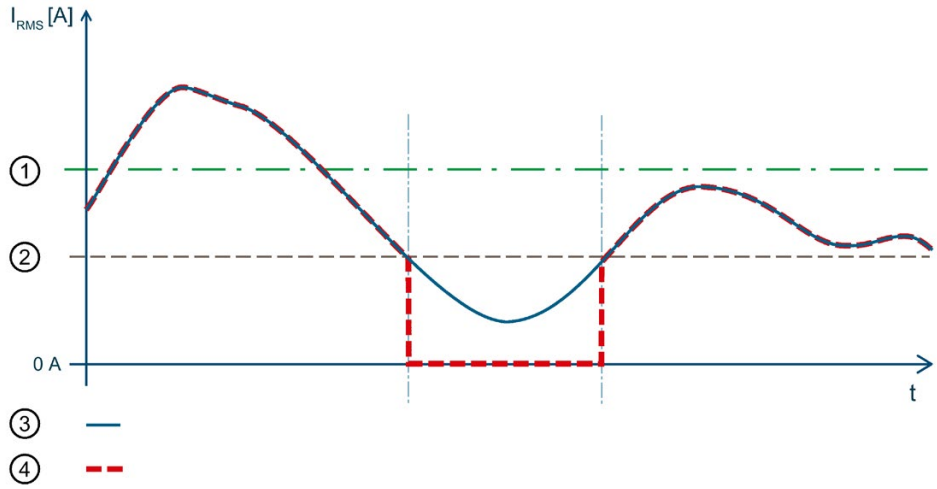

① Nominal current
② Low limit measured current
③ Measured value
④ Returned value

Figure 14-8 Behavior in the event of value falling below "Low limit for measuring current undershot"

The following table shows the parameter assignment for the example:

Table 14- 17 Parameter assignment

Parameter	
Nominal value current	2000 A
Current transformer primary rated current	5000 A
Current transformer secondary voltage	333 mV
Low limit for current measurement	10%

In this example you define the "Low limit for measuring current" with 10%. This corresponds to an effective value of the primary voltage of 200 A.

If the value falls below the calculated low limit current measurement ②, the module sets all the current-dependent measured values (effective value current, active power, reactive power, apparent power, phase angle and power factor) to 0 A until the low limit measuring current is exceeded again. The energy meters and operating hours counters are stopped during this time.

14.4.2.3 Peak values of the instantaneous values for current

Introduction

The AI Energy Meter HF determines the maximum instantaneous value for the current for up to three phases.

The function "Detect peak value current" returns the largest current value and the associated phase. The module sets the qualifier bit 3 ("Power quality current peak") for the phase in question. You can read the maximum current value, for example, in the data record DS 160 (Page 258).

Current peak detection is based on the function for recording swells of the supply voltage in accordance with IEC 61000-4-30. This function is used to record the maximum current value in the supply network. In three-phase systems this function is only useful if current recording is symmetrical and if all phases show the same current measuring transformers.

Accordingly, measurement always records only the peak value over all phases. In addition to the requirements of IEC 61000-4-30, the phase on which the peak value current occurred is detected.

For metrological reasons, only the phase concerned that shows this maximum value can be returned. This may mean that the maximum current values of the other phases remain "0". With a "reset power quality analysis" the analysis starts afresh and the current results are discarded.

Parameter assignment

The following table shows the necessary parameters:

Table 14- 18 Parameter assignment

Parameter	
Power quality analysis function (module)	Enable
Determine peak value current (Channel)	Enable

Example

The following figure is a schematic diagram of the principle of operation:

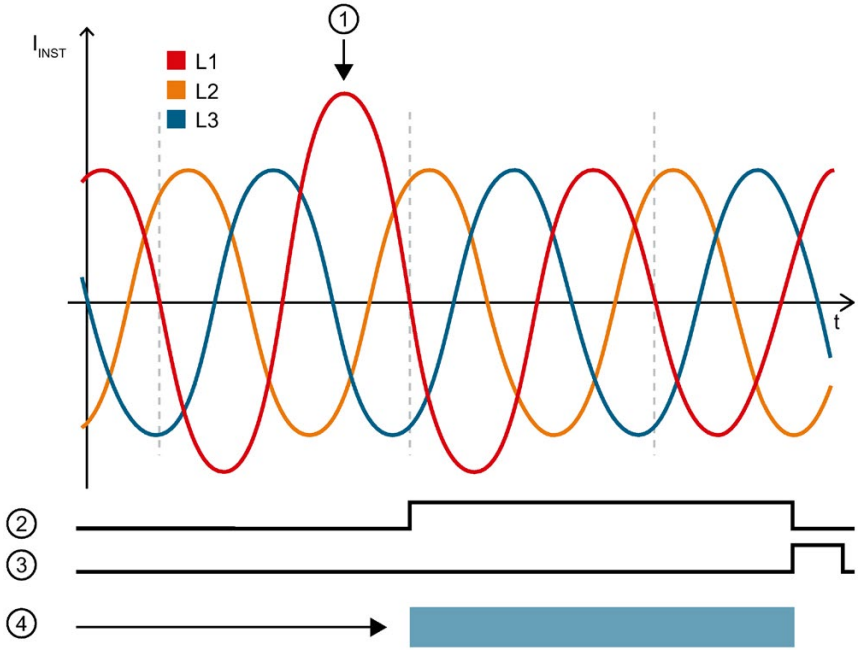

① Current peak in L1
② Status "Power quality current peak"
③ Bit "Reset status "power quality""
④ Max. current peaks instantaneous value can be read out

Figure 14-9 Example of principle of operation

The following table shows the parameter assignment for the example:

Table 14- 19 Parameter assignment

Parameter	
Power quality analysis function	Enable
Determine peak value current (L1)	Enable
Determine peak value current (L2)	Enable
Determine peak value current (L3)	Enable

The module detects the peak value current in phase 1 and sets the qualifier bit 3 for phase 1. You can find the maximum current value, for example, in the data record DS 160 in bytes 186 to 189 ("Current peak value L1").

14.4.2.4 Overcurrent of the current half value

Introduction

The AI Energy Meter HF returns the maximum overcurrent value of the current half-wave value. If the value to be monitored is exceeded, the module reports the diagnostics "Power quality" and the qualifier bit 7 is set. The module also sets Bit 4 for the respective phase in data record DS 160 (Page 258). In the event that the current half-value is exceeded again, only the diagnostics "Power quality" is reported again and, if applicable, the maximum current swell value is updated.

Calculation of overcurrent limit

The overcurrent limit is calculated based on the following formula:

Overcurrent limit = "Nominal value current" + ("Threshold overcurrent [%]" × "Nominal value current")

The "Nominal value current" is the primary current at the operating point.

Parameter assignment

The following table shows the necessary parameters:

Table 14- 20 Parameter assignment

Parameter	
Power quality analysis functions	Enable
Diagnostics power quality	Enable
Determining the overcurrent	Enable
Nominal value current	0 ... 99999 A
Threshold overcurrent	1 ... 6000%

Example

The following figure is a schematic diagram of the principle of operation:

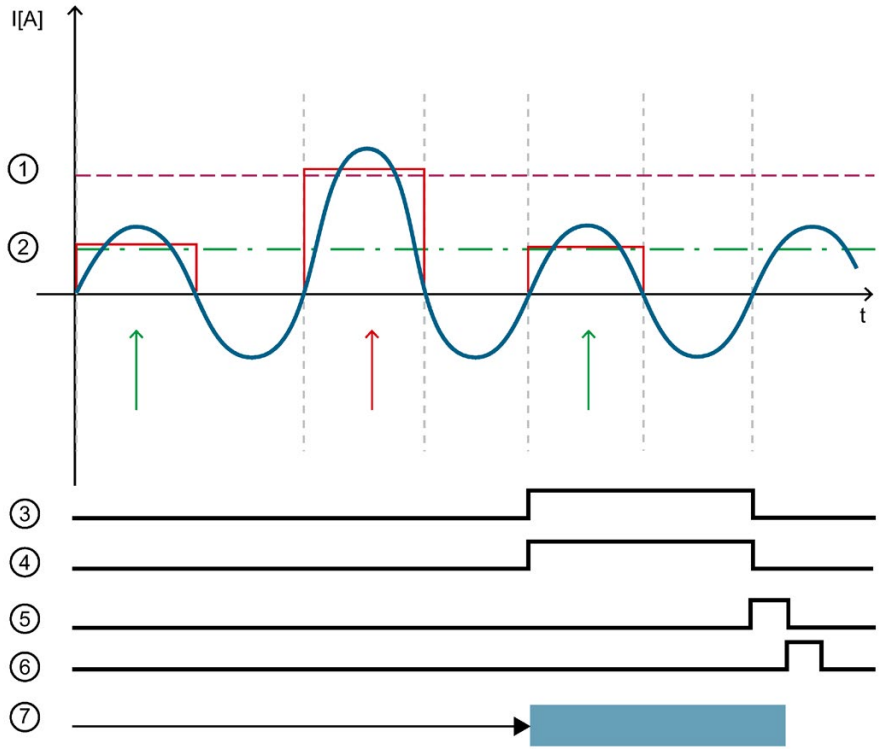

① Threshold overcurrent
② Nominal current
③ Qualifier Bit 7
④ Diagnostics power quality
⑤ Status "power quality overcurrent"
⑥ Bit "Reset status "power quality""
⑦ Max. overcurrent (half-wave) value can be read

Figure 14-10 Example of principle of operation

The following table shows the parameter assignment for the example:

Table 14- 21 Parameter assignment

Parameter	
Power quality analysis functions	Enable
Diagnostics power quality	Enable
Determining the overcurrent	Enable
Nominal value current	2000 A
Threshold overcurrent	100%

In this example you define the Threshold overcurrent of 100%. This corresponds to a primary current of 4000 A.

If the "Threshold overcurrent" is exceeded, the module sets Bit 4 "Overcurrent" for the phase in the data record DS 160.

As long as the "Threshold overcurrent" is exceeded, the module reports the diagnostics "Power quality" and the qualifier bit 7 is set.

Technical specifications 15

15.1 Technical specifications

Technical specifications of the AI Energy Meter HF

The following table shows the technical specifications as of 07/2018. You will find a data sheet including daily updated technical specifications on the Internet (https://support.industry.siemens.com/cs/ww/en/pv/6ES7134-6PA20-0CU0/td?dl=en).

Article number	6ES7134-6PA20-0CU0
General information	
Product type designation	AI Energy Meter 480 VAC/RC HF, PU 1
Firmware version	V6.0
• FW update possible	Yes
usable BaseUnits	BU type U0
Color code for module-specific color identification plate	CC20
Supported power supply systems	TT, TN, IT
Product function	
• Voltage measurement	Yes
– without voltage transformer	Yes
– with voltage transformer	Yes
• Current measurement	Yes
– without current transformer	No
– with current transformer	No
– with Rogowski coil	Yes
– with current/voltage transformer	Yes; 333 mV interface
• Energy measurement	Yes
• Frequency measurement	Yes
• Power measurement	Yes
• Active power measurement	Yes
• Reactive power measurement	Yes
• Power factor measurement	Yes
• Active factor measurement	Yes
• Reactive power compensation	Yes
• Line analysis	Yes

Article number	6ES7134-6PA20-0CU0
– Monitoring of instantaneous and half-wave values	Yes
– THD measurement for current and voltage	Yes
– Harmonics for current and voltage	Yes
– Voltage dip (DIP)	Yes
– Voltage swell	Yes
• I&M data	Yes; I&M0 to I&M3
• Isochronous mode	No
Engineering with	
• STEP 7 TIA Portal configurable/integrated as of version	STEP 7 V15 or higher
• STEP 7 configurable/integrated as of version	Configurable via GSD file
• PROFIBUS as of GSD version/GSD revision	One GSD file each, Revision 3 and 5 and higher
• PROFINET as of GSD version/GSD revision	V2.3
Operating mode	
• Switching between operating modes in RUN	Yes; For module version 32 I/20 Q, it is possible to dynamically switch between 25 user data variants, 23 of which are pre-defined and 2 of which can be defined by the specific user
• Cyclic measured value access	Yes
• Acyclic measured value access	Yes
• Fixed measured value sets	Yes
• Freely definable measured value sets	Yes
CiR – Configuration in RUN	
Reparameterization possible in RUN	Yes
Calibration possible in RUN	Yes
Installation type/mounting	
Mounting position	Any
Supply voltage	
Design of the power supply	DC
Type of supply voltage	24 V DC
permissible range, lower limit (DC)	19.2 V
permissible range, upper limit (DC)	28.8 V
Input current	
Current consumption (rated value)	12.5 mA
Current consumption, max.	17 mA

Article number	6ES7134-6PA20-0CU0
Power loss	
Power loss, typ.	400 mW; 3x 230 V AC
Address area	
Address space per module	
• Inputs	256 byte
• Outputs	20 byte
Hardware configuration	
Automatic encoding	Yes
• Mechanical coding element	Yes
Selection of BaseUnit for connection variants	
• 2-wire connection	BU type U0
Time of day	
Operating hours counter	
• present	Yes
Analog inputs	
Cycle time (all channels), typ.	50 ms; Time for consistent update of all measured and calculated values (cyclic und acyclic data)
Cable length	
• shielded, max.	200 m
• unshielded, max.	30 m
Analog value generation for the inputs	
Sampling frequency, max.	2 048 kHz
Isochronous mode	
Isochronous operation (application synchronized up to terminal)	No
Interrupts/diagnostics/status information	
Alarms	
• Diagnostic alarm	Yes
• Limit value alarm	Yes
• Hardware interrupt	Yes; Monitoring of up to 16 freely selectable process values (exceeding or undershooting of value)

Article number	6ES7134-6PA20-0CU0
Diagnostic messages	
• Line quality	Yes
• Supply voltage	Yes
• Hardware interrupt lost	Yes
• Parameter assignment error	Yes
• Module fault	Yes
• Channel not available	Yes
• Overflow/underflow	Yes
• Overload current	Yes
Diagnostics indication LED	
• Monitoring of the supply voltage (PWR-LED)	Yes
• Channel status display	Yes; Green LED
• for channel diagnostics	Yes; red Fn LED
• for module diagnostics	Yes; green/red DIAG LED
Integrated Functions	
Measuring functions	
• Measuring procedure for voltage measurement	TRMS
• Measuring procedure for current measurement	TRMS
• Type of measured value acquisition	seamless
• Curve shape of voltage	Sinusoidal or distorted
• Buffering of measured variables	Yes
• Parameter length	128 byte
• Bandwidth of measured value acquisition	3.2 kHz; Harmonics: 63 / 50 Hz, 52 / 60 Hz
Measuring range	
– Frequency measurement, min.	45 Hz
– Frequency measurement, max.	65 Hz

Article number	6ES7134-6PA20-0CU0
Measuring inputs for voltage	
– Measurable line voltage between phase and neutral conductor	300 V
– Measurable line voltage between the line conductors	519 V
– Measurable line voltage between phase and neutral conductor, min.	3 V
– Measurable line voltage between phase and neutral conductor, max.	300 V
– Measurable line voltage between the line conductors, min.	6 V
– Measurable line voltage between the line conductors, max.	519 V
– Measurement category for voltage measurement in accordance with IEC 61010-2-030	CAT II
– Internal resistance line conductor and neutral conductor	1.5 MΩ
– Power consumption per phase	60 mW; 300 V AC
– Impulse voltage resistance 1,2/50µs	2.5 kV
Measuring inputs for current (Rog. or I/U converter)	
– Measurable current at AC, max.	424 mV
– Continuous voltage, maximum permissible	2 V
– Rated value, short-time withstand voltage restricted to 1 s	30 V
– Input resistance	120 kΩ
– Zero point suppression	Yes; 0 ... 20%, referred to the nominal current

Article number	6ES7134-6PA20-0CU0
Accuracy class according to IEC 61557-12	
– Measured variable voltage	0,2
– Measured variable current	0,2
– Measured variable apparent power	0.5
– Measured variable active power	0.5
– Measured variable reactive power	1
– Measured variable power factor	0.5
– Measured variable active energy	0.5
– Measured variable reactive energy	1
– Measured variable neutral current	0,2
– Measured variable phase angle	±0.5 °; not covered by IEC 61557-12
– Measured variable frequency	0.05
– Measured variable harmonic	1
– Measured variable THDU	1
– Measured variable THDI	1
Accuracy class line analysis acc. to IEC 61000-4-30	
– Measured variable voltage	Class S
– Measured variable current	Class S
– Measured variable frequency	Class S
– Measured variable voltage interruption	Class S
– Measured variable voltage dip and swell	Class S
– Measured variable harmonic voltage	Class S
– Measured variable harmonic current	Class S
Potential separation	
Potential separation channels	
• between the channels	No
• between the channels and backplane bus	Yes
• Between the channels and load voltage L+	Yes; Including FE
Isolation	
Isolation tested with	Between channels and backplane bus, 24 V supply: Routine test, 1 920 V AC, 2 s; between backplane bus and 24 V supply: Type test, 707 V DC

Article number	6ES7134-6PA20-0CU0
Ambient conditions	
Ambient temperature during operation	
• horizontal installation, min.	0 °C; On request: Ambient temperatures lower than 0 °C (without condensation)
• horizontal installation, max.	60 °C
• vertical installation, min.	0 °C; On request: Ambient temperatures lower than 0 °C (without condensation)
• vertical installation, max.	50 °C
Altitude during operation relating to sea level	
• Installation altitude above sea level, max.	3 000 m; Restrictions for installation altitudes > 2 000 m, see manual
Dimensions	
Width	20 mm
Height	73 mm
Depth	58 mm
Weights	
Weight (without packaging)	45 g
Other	
Data for selecting a voltage transformer	
• Secondary side, max.	300 V

ATEX approval

In accordance with EN 60079-15 (Electrical apparatus for potentially explosive atmospheres; Type of protection "n") and EN 60079-0 (Electrical apparatus for potentially explosive gas atmospheres - Part 0: General Requirements)

II 3 G Ex nA IIC Tx Gc
DEKRA 12ATEX0038X

Dimension drawing

See ET 200SP BaseUnits (http://support.automation.siemens.com/WW/view/en/59753521) manual

Parameter data records A

A.1 Configuration via parameter data records

The parameter data records of the module have an identical structure, regardless of whether you configure the module with PROFIBUS DP or PROFINET IO.

Overview of the parameter data records

- Parameter data record DS 128 for the complete module
- Parameter data record DS 129 for limit monitoring
- Parameter data records DS 130/131 for user data mapping
- Parameter data record DS 135 for data record mapping

Parameter assignment in the user program

You can reassign the module parameters in RUN mode, for example change the diagnostics behavior, define new limits or configure a modified user data mapping.

Changing parameters in RUN

The "WRREC" instruction is used to transfer the parameters to the module via the respective data record. The parameters set in STEP 7 do not change in the CPU, which means the parameters set in STEP 7 are still valid after a restart.

If you reconfigure a module (so that the user data size changes) and diagnostics are pending prior to the reconfiguration, these diagnostics are not signaled as "outgoing". The diagnostics "Supply voltage missing" is signaled as outgoing.

STATUS output parameter

If errors occur during the transfer of parameters with the WRREC instruction, the module continues operation with the previous parameter assignment. However, a corresponding error code is written to the STATUS output parameter.

The description of the WRREC instruction and the error codes is available in the STEP 7 online help.

A.2 Structure of the parameter data record 128 for the entire module

Structure of data record 128

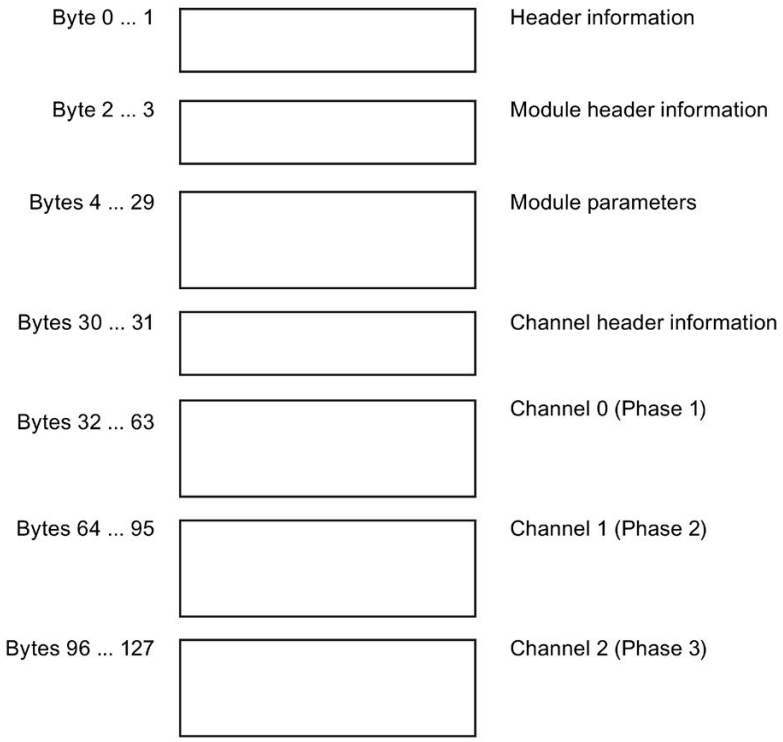

Figure A-1 Parameter data record 128

Header information

The figure below shows the structure of the header information.

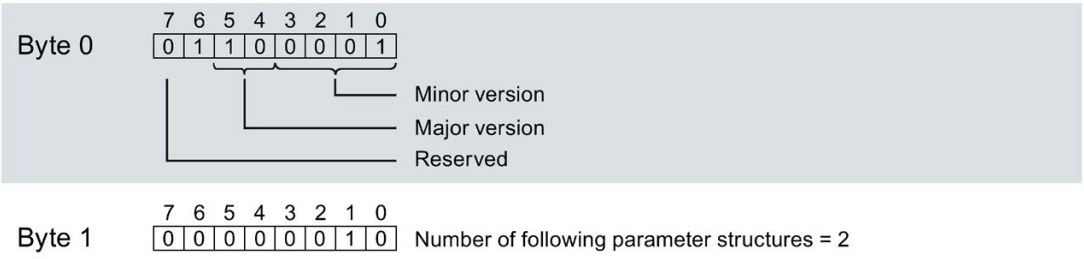

Figure A-2 Header information

Module header information

The figure below shows the structure of the header information for a module.

	7	6	5	4	3	2	1	0	
Byte 2	0	0	0	0	0	0	0	1	Number of the following module parameter blocks = 1
Byte 3	0	0	0	1	1	0	1	0	Length of the following module parameter block = 26

Figure A-3 Module header information

Module parameter block

The figure below shows the structure of the module parameter block.

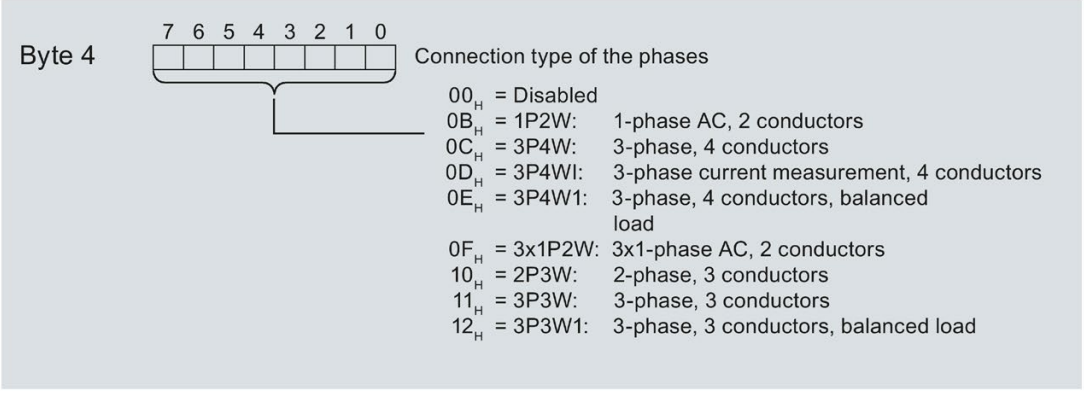

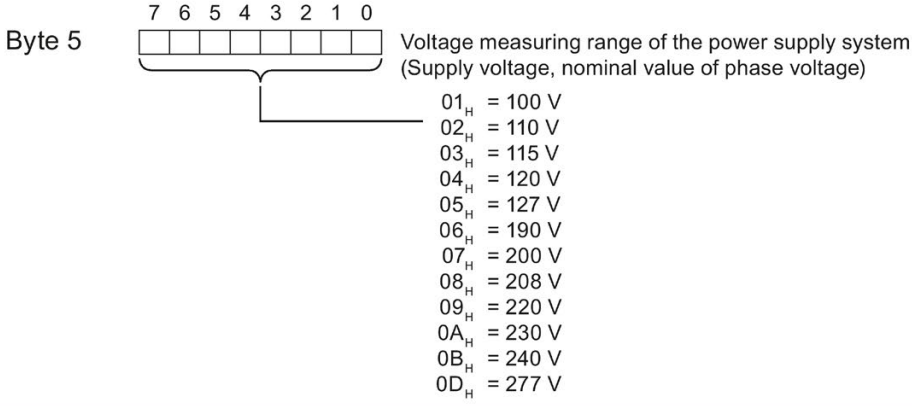

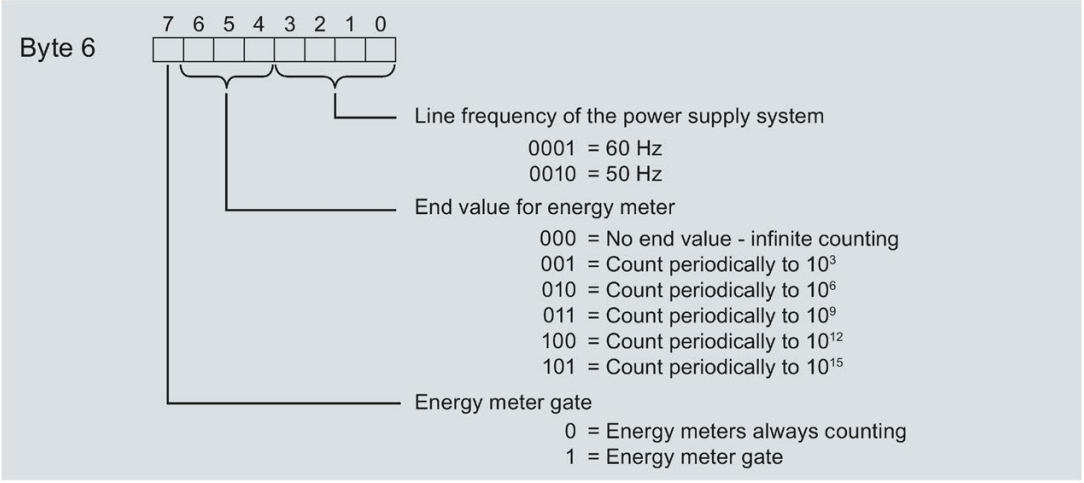

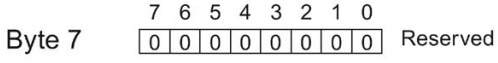

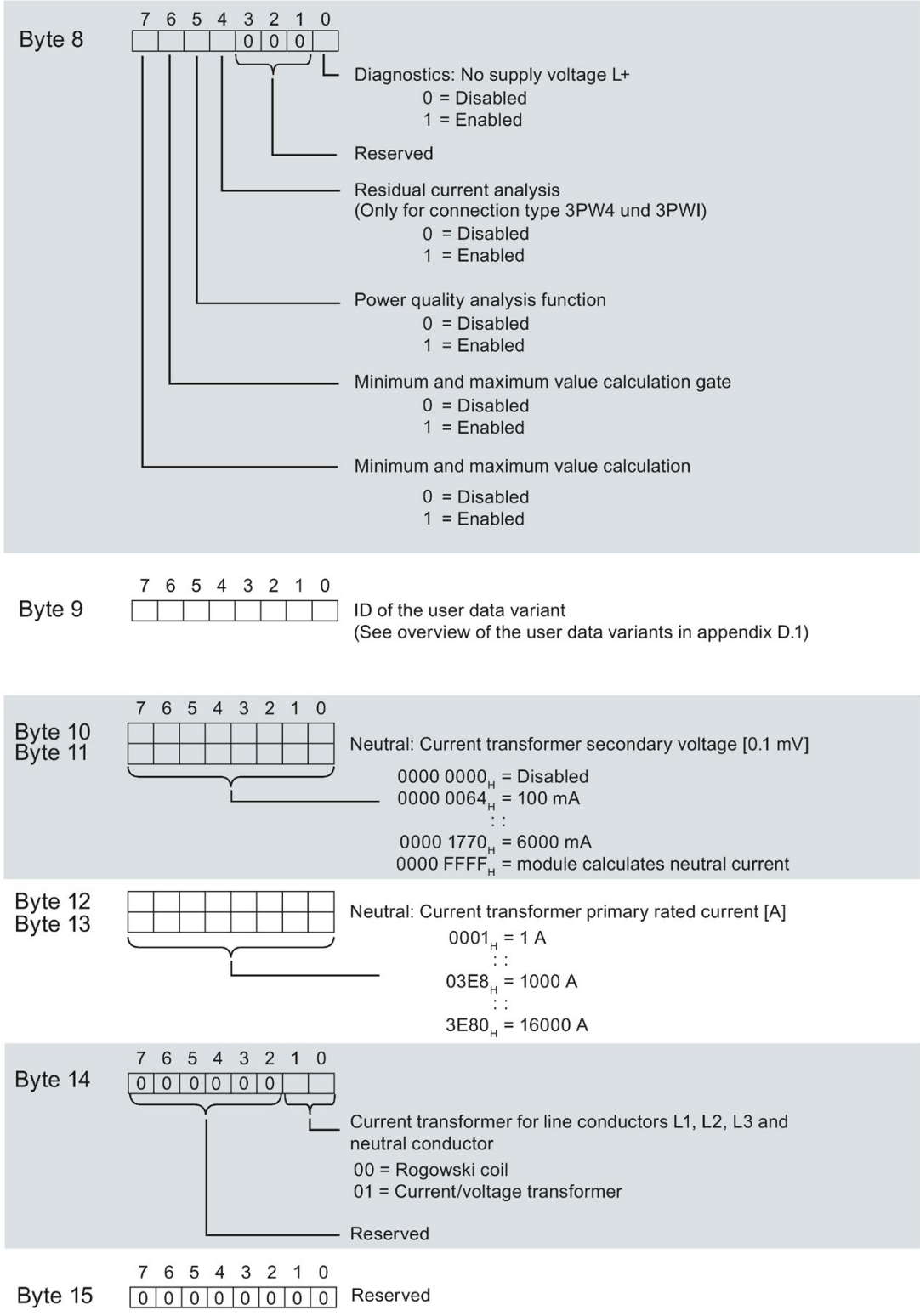

Figure A-4 Module parameter block

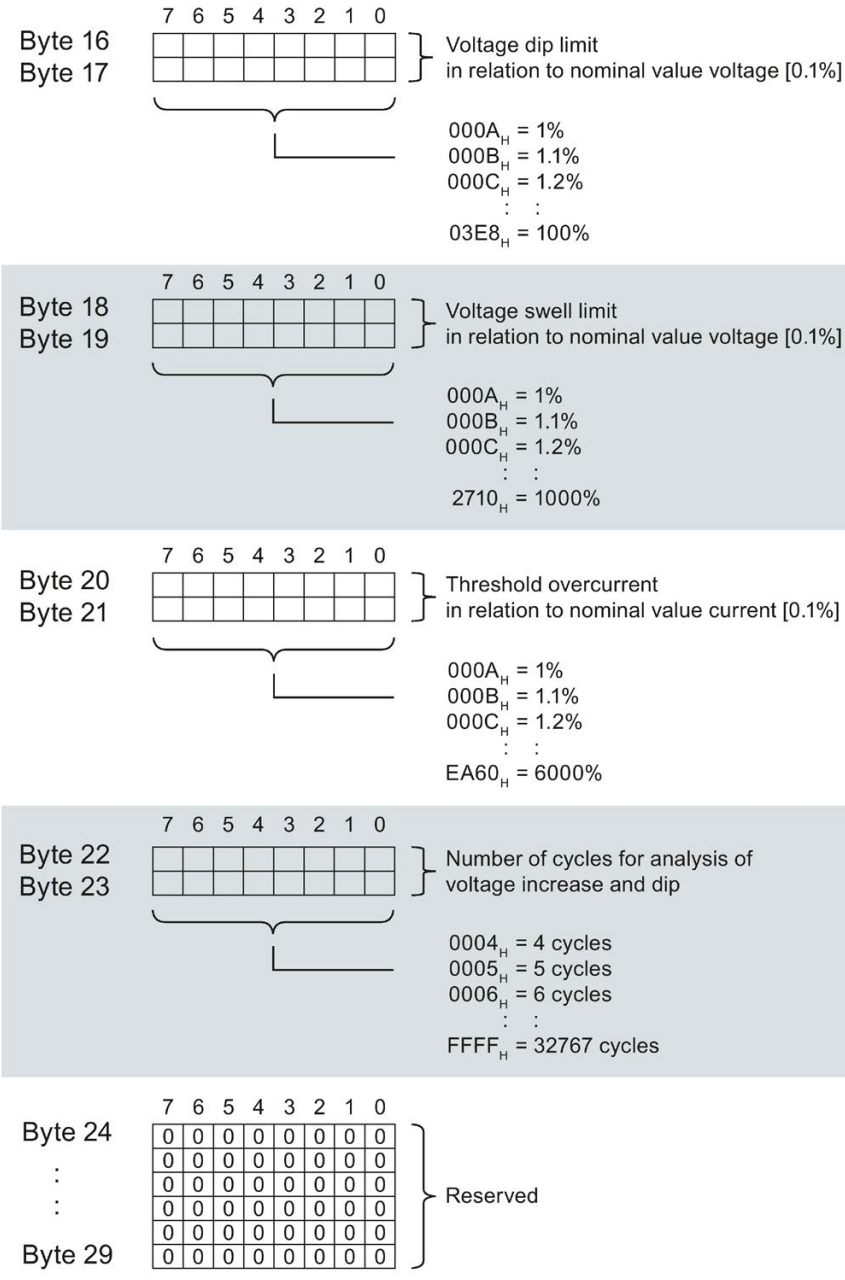

Figure A-5 Module parameter block

You can find the user data variant in the section Overview of the user data variants (Page 204).

Channel header information

The following figure shows the structure of the header information for a channel.

	7	6	5	4	3	2	1	0	
Byte 30	0	0	0	0	0	0	1	1	Number of following channel parameter blocks = 3
Byte 31	0	0	1	0	0	0	0	0	Length of the following channel parameter block = 32

Figure A-6 Channel header information

Channel parameter block for channel 0 (Phase 1)

The following figure shows an example of the structure of the channel parameter block for channel 0 (phase 1, bytes 32 to 63).

For channel 1 (phase 2; bytes 64 to 95) and channel 2 (phase: 3; bytes 96 to 127), the structure is identical.

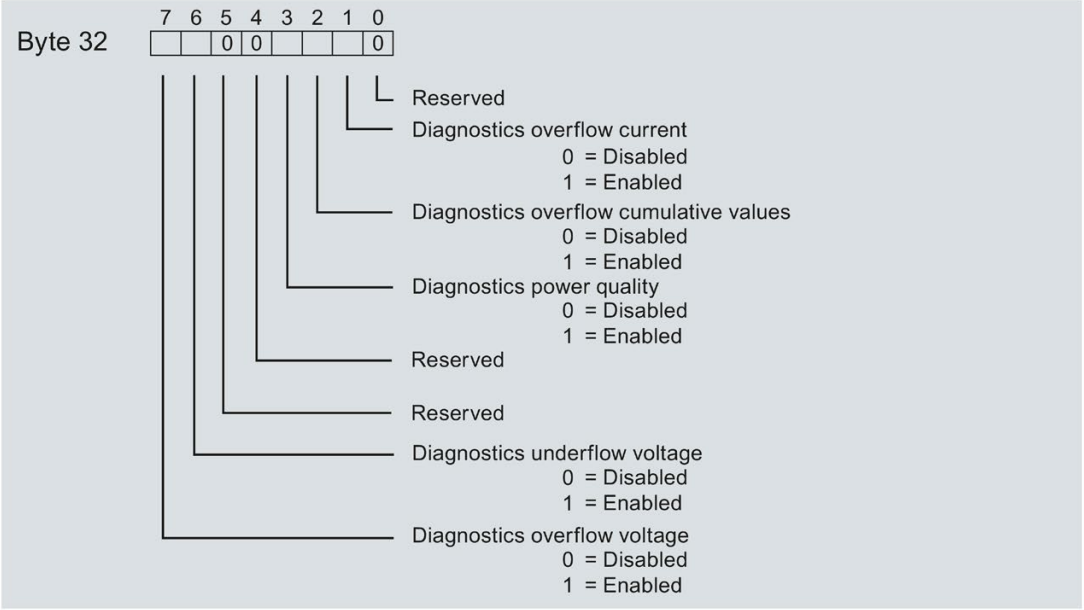

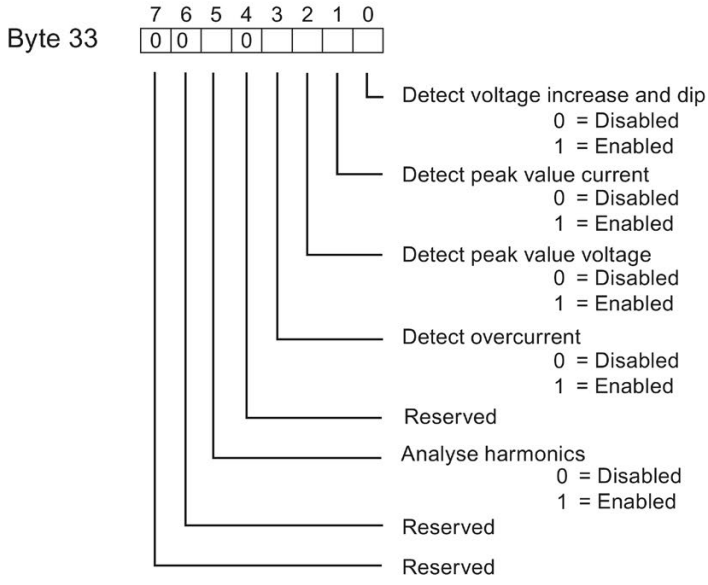

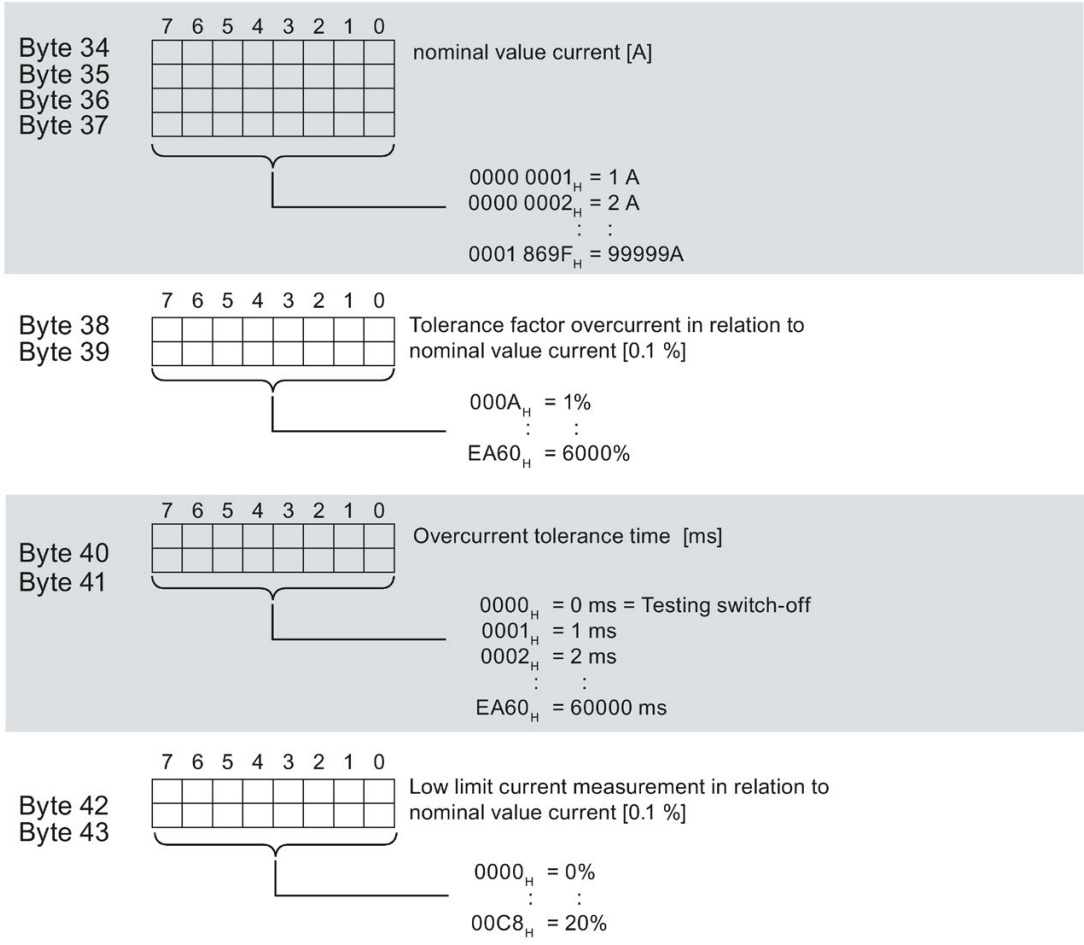

Figure A-7 Channel parameter block

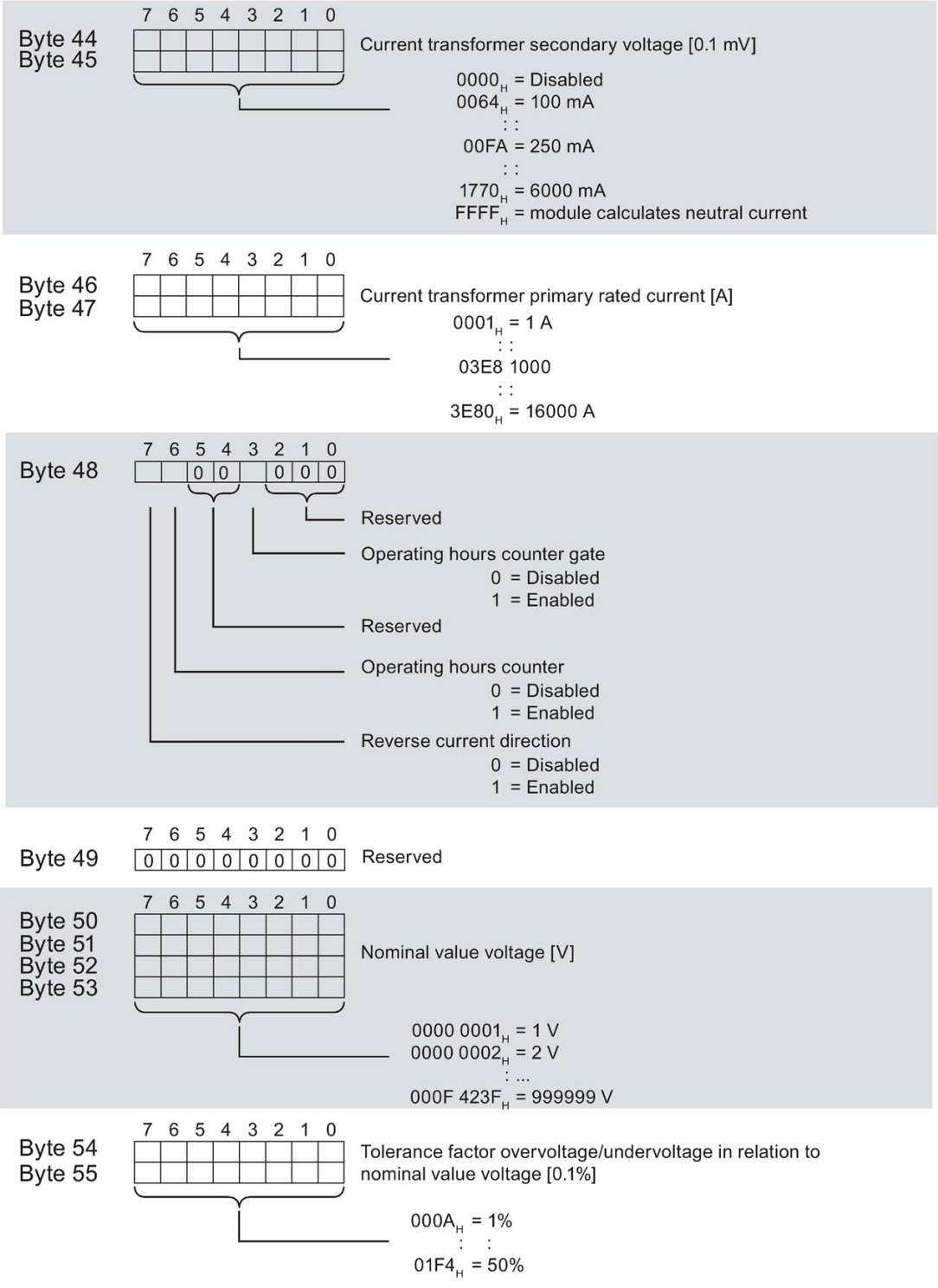
7 6 5 4 3 2 1 0
Byte 44
Byte 45
Current transformer secondary voltage [0.1 mV]
0000H = Disabled
0064H = 100 mA
: :
00FA = 250 mA
: :
1770H = 6000 mA
FFFFH = module calculates neutral current
7 6 5 4 3 2 1 0
Byte 46
Byte 47
Current transformer primary rated current [A]
0001H = 1 A
: :
03E8 1000
: :
3E80H = 16000 A
7 6 5 4 3 2 1 0
Byte 48
0 0
0 0 0
Reserved
Operating hours counter gate
0 = Disabled
1 = Enabled
Reserved
Operating hours counter
0 = Disabled
1 = Enabled
Reverse current direction
0 = Disabled
1 = Enabled
7 6 5 4 3 2 1 0
Byte 49
0 0 0 0 0 0 0 0
Reserved
7 6 5 4 3 2 1 0
Byte 50
Byte 51
Byte 52
Byte 53
Nominal value voltage [V]
0000 0001H = 1 V
0000 0002H = 2 V
: ...
000F 423FH = 999999 V
7 6 5 4 3 2 1 0
Byte 54
Byte 55
Tolerance factor overvoltage/undervoltage in relation to nominal value voltage [0.1%]
000AH = 1%
: :
01F4H = 50%

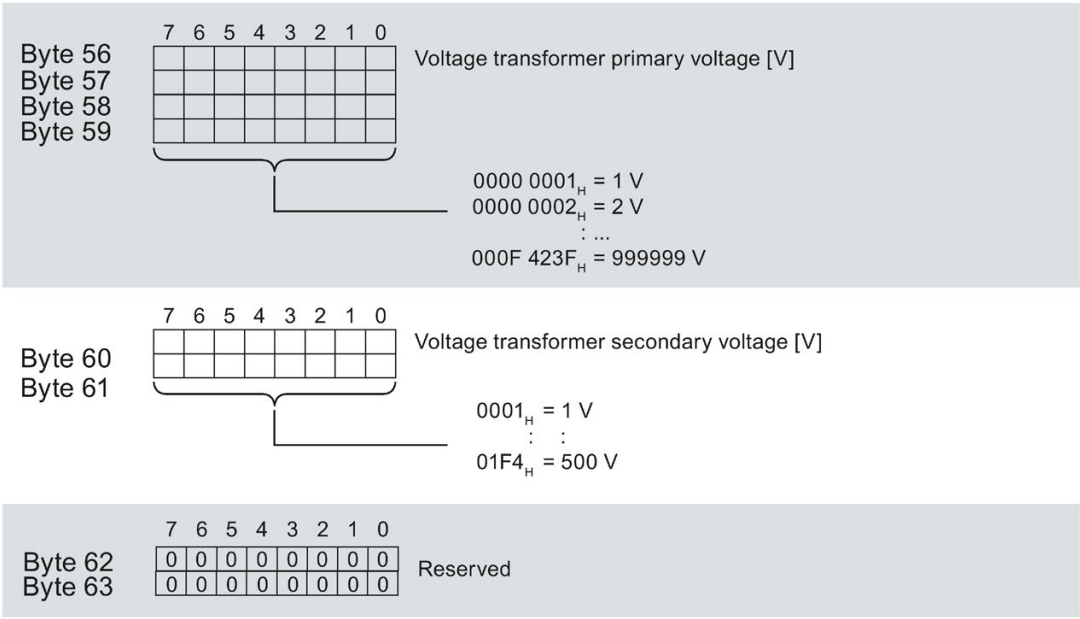

Figure A-8 Channel parameter block

Error while transferring the data record

The module always checks all the values of the transferred data record. Only if all the values were transferred without errors does the module apply the values from the data record.

The WRREC instruction for writing data records returns corresponding error codes when errors occur in the STATUS parameter.

The following table shows the module-specific error codes and their meaning for the parameter data record 128.

Error code in STATUS parameter (hexadecimal)				Meaning	Solution
Byte 0	Byte 1	Byte 2	Byte 3		
DF	80	B0	00	Number of the data record unknown	Enter a valid number for the data record.
DF	80	B1	01	Length of the data record incorrect	Enter a valid value for the data record length.
DF	80	B2	00	Slot invalid or cannot be accessed.	Check the station whether the module is plugged or drawn. Check the assigned values for the parameters of the WRREC instruction
DF	80	E0	01	Incorrect version	Check Byte 0. Enter valid values.
DF	80	E0	02	Error in the header information	Check bytes 1 to 3, 32, 33, 52, 53, 72 and 73. Correct the length and number of the parameter blocks.
DF	80	E1	01	Reserved bits are not 0.	Check bytes 8, 14, 15, 30, 31, 34, 42, 50...53, 54, 62, 70...73, 74, 82, 90...93 and set the reserved bits back to 0.

Error code in STATUS parameter (hexadecimal)				Meaning	Solution
Byte 0	Byte 1	Byte 2	Byte 3		
DF	80	E1	05	"Voltage measuring range" invalid	Check Byte 5. Permitted values: 01_H to $0C_H$
DF	80	E1	20	"Connection type" invalid	Check Byte 4. Permitted values: 00_H, $0B_H$ ... 01_H
DF	80	E1	21	"User data variant" not possible or input data configuration not large enough	Check Byte 9. Select a different user data variant or change the configuration.
DF	80	E1	22	"User data variant" invalid	Check Byte 9. Select a valid code for the user data variant.
DF	80	E1	23	"Line frequency" invalid	Check Byte 6. Enter valid values.
DF	80	E1	29	"Tolerance factor overcurrent in relation to nominal value current [0.1%]" invalid	Check bytes 35, 55 and 75. Enter valid values.
DF	80	E1	2A	"Tolerance time overcurrent" invalid	Check bytes 36...37, 56...57, 67...77. Enter valid values.
DF	80	E1	2B	"Low limit current measurement" in relation to nominal value current [0.1%] invalid	Check bytes 43, 63 and 83. Enter valid values.
DF	80	E1	2C	"Current transformer primary rated current [A]" invalid.	Check bytes 40...41, 60...61, 80...81 Enter valid values.
DF	80	E1	2D	"Voltage transformer primary voltage [V]" invalid	Check bytes 46...49, 66...69, 66...69, 88...89. Enter valid values.
DF	80	E1	2E	"Voltage transformer secondary voltage [V]" invalid	Check bytes 44…45, bytes 64…65 and bytes 84…85. Enter valid values.
DF	80	E1	2F	"End value energy meter" invalid	Check Bit 4...6 in Byte 6. Enter valid values.
DF	80	E1	30	Invalid data record number.	Check the data record number. Enter a valid data record number.
DF	80	E1	3E	Only for connection type 3P4W1 and 3P3W1. Current or voltage transformer parameters for the different phases are not identical.	Check bytes 38...42 with bytes 58...62 and bytes 78...82 as well as bytes 44...49 with bytes 64...69 and bytes 84...80 for identical values. Enter identical values for current measuring transformer (secondary current, primary current, direction of current) and voltage transformer (secondary voltage, primary voltage) at all three phases.
DF	80	E1	3F	"End value for energy meter" or transmission ratio (primary value, secondary value) of current and voltage too low.	Increase the end value of the energy meter or the ratio of primary to secondary current for current measuring transformer and/or primary rated current to secondary voltage for voltage transformer.
DF	80	E1	42	"Current transformer type for line conductors L1, L2, L3 and neutral conductor" invalid	Check Bit 0... in Byte 14. Enter valid values.
DF	80	E1	44	"Voltage dip limit value in relation to nominal value voltage [0.1%]" invalid	Check bytes 16...17. Enter valid values (voltage dip limit value must be smaller than the respective nominal voltage)

Error code in STATUS parameter (hexadecimal)				Meaning	Solution
Byte 0	Byte 1	Byte 2	Byte 3		
DF	80	E1	45	"Voltage swell limit value in relation to nominal value voltage [0.1%]" invalid	Check bytes 20...23. Enter valid values (voltage swell limit value must be greater than the respective nominal voltage)
DF	80	E1	46	"Threshold overcurrent in relation to nominal value current [0.1%]" invalid	Check bytes 24...27. Enter valid values (threshold overcurrent must be greater than primary current)
DF	80	E1	47	"Number of cycles for analysis of voltage swell/dip" invalid	Check bytes 28...29. Enter valid values.
DF	80	E1	48	"Current transformer secondary voltage " invalid	Check bytes 10...11, 38...39, 58...59 and 78...79. Enter valid values.
DF	80	E1	49	Current transformer parameter for "residual current analysis" invalid	Only with connection type 3P4W and 3P4WI and if neutral current is measured. Current measuring transformer primary rated current and secondary voltage and direction of current of the three phases must have identical parameters.
DF	80	E1	4 A	Voltage transformer parameters for voltage swell/dip invalid	Check the parameters secondary voltage, primary voltage, nominal value voltage. Enabled channels must have identical parameters.
DF	80	E1	4B	Current transformer parameter for "Detect overcurrent" invalid	Check the parameters secondary voltage, primary rated current, nominal value current and direction of current. Enabled channels must have identical parameters.
DF	80	E1	4C	Parameters for determining the neutral current invalid	Neutral current can only be determined with connection type 3P4W and 3P4WI Current transmission parameters primary current, secondary voltage, nominal value current and direction of current of the three phases must be identical.
DF	80	E1	4D	"Nominal value current [A]" invalid	Check bytes 34...37, 66...69, 98...101. Enter valid values.
DF	80	E1	4E	"Nominal value voltage [V]" invalid	Check bytes 50...53, 82...85, 114...117. Enter valid values.
DF	80	E1	4F	"Low limit current measurement in relation to nominal value current [0.1%]" invalid	Check bytes 42...43, 74...75, 106...107. Enter valid values.
DF	80	E1	50	The combination of "Nominal value voltage [V]" and "Voltage dip limit value in relation to nominal value voltage [0.1%]" invalid.	Select the permissible value in % so that the secondary measuring voltage of 0 V is not undershot.
DF	80	E1	51	The combination of "Nominal value voltage [V]" and "Voltage swell limit value in relation to nominal value voltage [0.1%]" invalid.	Select the permissible value in % so that the secondary measuring voltage of 300 V is not exceeded.
DF	80	E1	52	The combination of "Nominal value current [A]" and "Threshold overcurrent in relation to nominal value current [0.1%]" invalid	Select the permissible value in % so that the secondary measuring voltage of 424 mA is not exceeded.

Error code in STATUS parameter (hexadecimal)				Meaning	Solution
Byte 0	Byte 1	Byte 2	Byte 3		
DF	80	E1	53	The combination of "Nominal value current [A]" and "Tolerance factor overcurrent in relation to nominal value current [0.1%]" invalid	Select the permissible value in % so that the secondary measuring voltage of 424 mA is not exceeded.
DF	80	E1	54	The combination of "Nominal value voltage [V]" and "Tolerance factor overvoltage/undervoltage in relation to nominal value voltage [0.1%]" lies outside the permissible range.	Select the permissible value in % so that the secondary measuring voltage of 300 V is not exceeded.
DF	80	E1	55	"Nominal value current [A]" is too high. "Nominal value current" x transmission factor current generates a secondary current measured variable which exceeds its value range.	Select the permissible value in A so that the secondary measuring voltage of 424 mA is not exceeded. The transmission factor current is calculated from "Current transformer primary rated current [A]" / "Current transformer secondary voltage [0.1 mV]"
DF	80	E1	56	"Nominal value voltage [V]" is too high. "Nominal value voltage" x transmission factor voltage generates a secondary voltage measured variable which exceeds its value range.	Select the permissible value in V so that the secondary measuring voltage of 300 V is not exceeded. The transmission factor voltage is calculated from "Voltage transformer primary voltage [V]" / "Voltage transformer secondary voltage [V]"

A.3 Structure of the parameter data record 129 for limit monitoring

Structure of data record 129

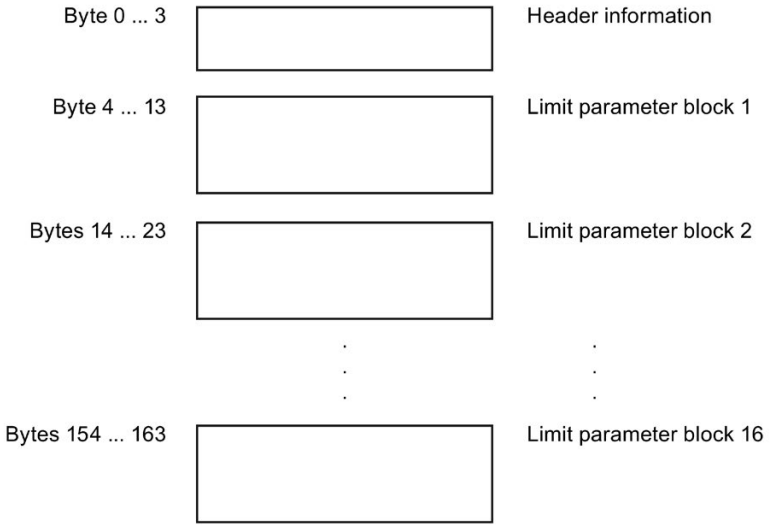

Figure A-9 Structure of data record 129

Header information

The figure below shows the structure of the header information.

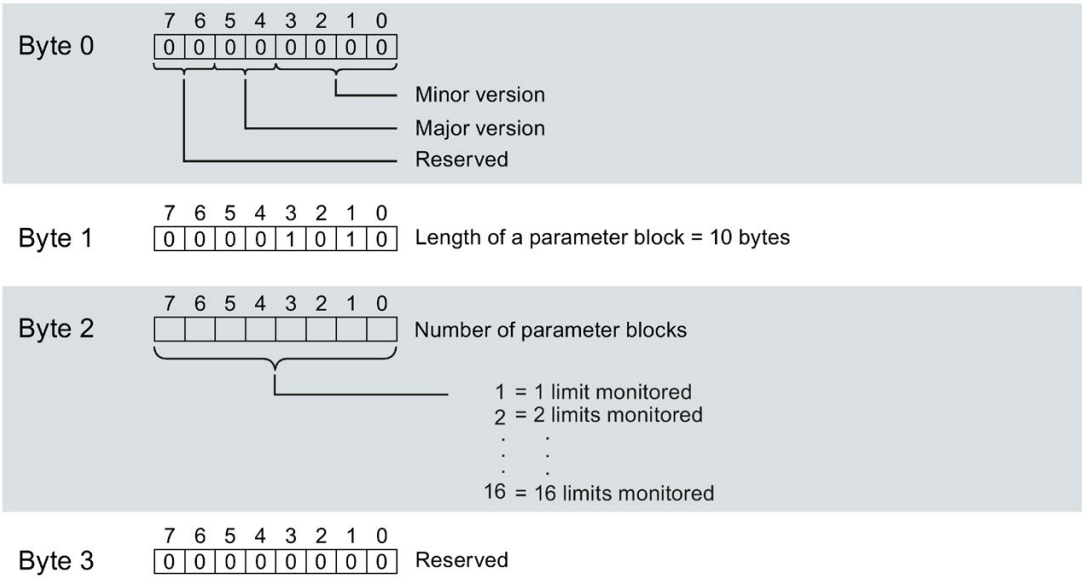

Figure A-10 Header information DS 129

Limit parameter block

The following diagram shows the structure of the parameter blocks for limit monitoring.

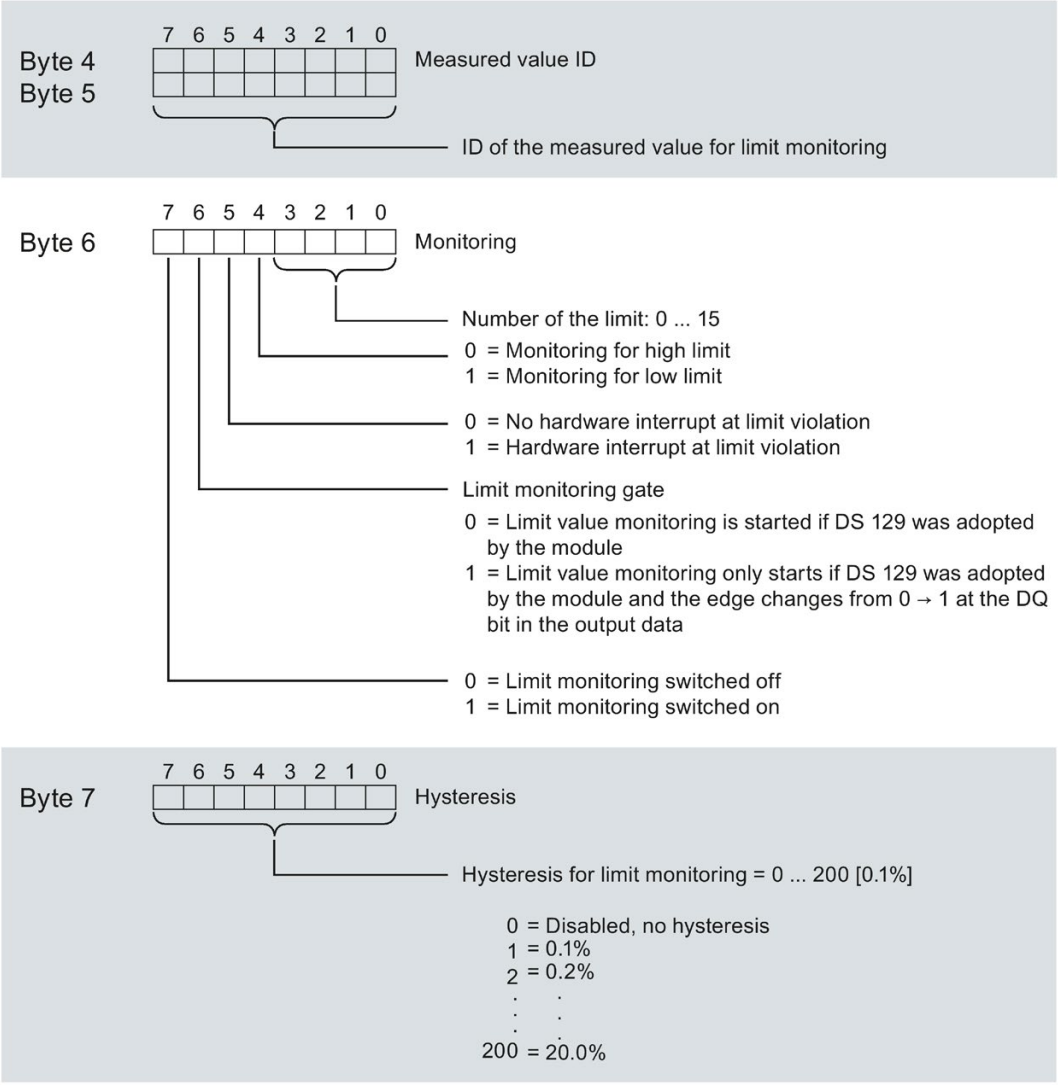

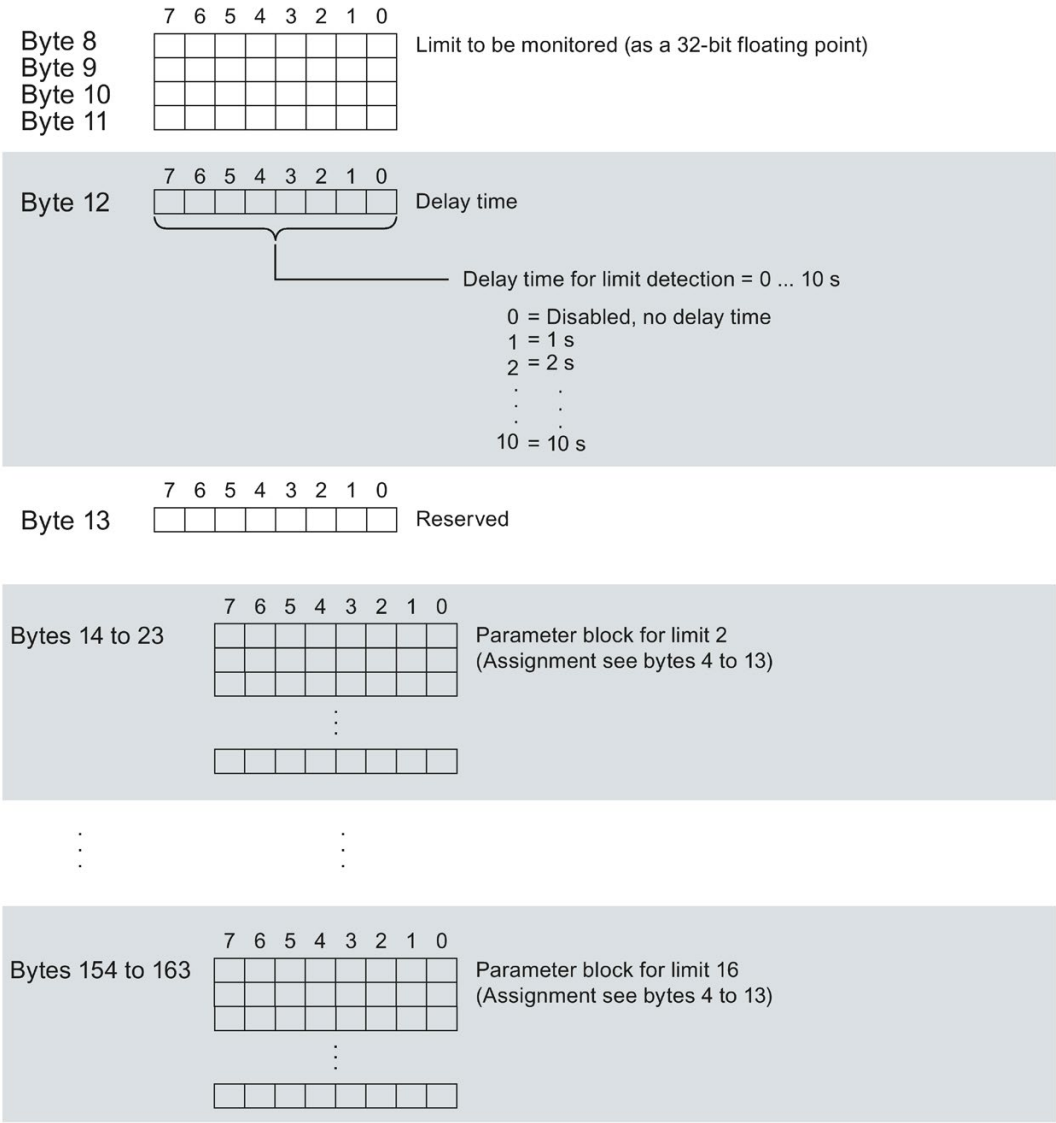

Figure A-11 Limit parameter data block

Error while transferring the data record

The module always checks all the values of the transferred data record. Only if all the values were transferred without errors does the module apply the values from the data record.

The WRREC instruction for writing data records returns corresponding error codes when errors occur in the STATUS parameter.

The following table shows the module-specific error codes and their meaning for the parameter data record 129.

Error code in STATUS parameter (hexadecimal)				Meaning	Solution
Byte 0	Byte 1	Byte 2	Byte 3		
DF	80	B0	00	Number of the data record unknown	Enter a valid number for the data record.
DF	80	B1	01	Length of the data record incorrect	Enter a valid value for the data record length.
DF	80	B2	00	Slot invalid or cannot be accessed.	Check the station whether the module is plugged or drawn. Check the assigned values for the parameters of the WRREC instruction
DF	80	E0	01	Incorrect version	Check Byte 0. Enter valid values.
DF	80	E0	02	Error in the header information	Check Bytes 1 and 2. Correct the length and number of the parameter blocks.
DF	80	E1	01	Reserved bits are not 0.	Check bytes 3, 13, 23, 33...163 and set the reserved bits back to 0.
DF	80	E1	31	"Length of the parameter block" invalid.	Check Byte 1. Length = 10 bytes
DF	80	E1	32	"Number of parameter blocks" invalid.	Check Byte 2. Enter valid values.
DF	80	E1	33	"ID of the measured value for limit monitoring" invalid.	Check Bytes 4 and 5. Enter valid values.
DF	80	E1	34	Parameters for monitoring the limits invalid	Check bits 0...3 in Byte 6. Enter valid values.
DF	80	E1	35	"Number of limit" in 'Monitoring assigned multiple times' parameter	Check bits 0...3 in Byte 6. Do not use limit number several times.
DF	80	E1	36	"Hysteresis for limit monitoring" invalid	Check Byte 7. Enter valid values.
DF	80	E1	37	"Limit" invalid.	Check Byte 8...11. Enter valid values.
DF	80	E1	38	"Delay time for limit monitoring" invalid.	Check Byte 12. Enter valid values.

A.4 Structure of the parameter data records 130/131 for user-data mapping

Structure of data record 130/131

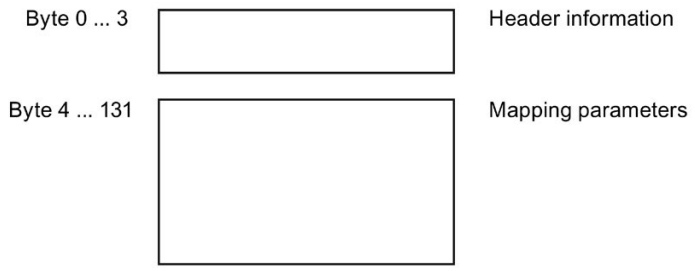

Figure A-12 Structure of data record 130/131

Header information

The figure below shows the structure of the header information.

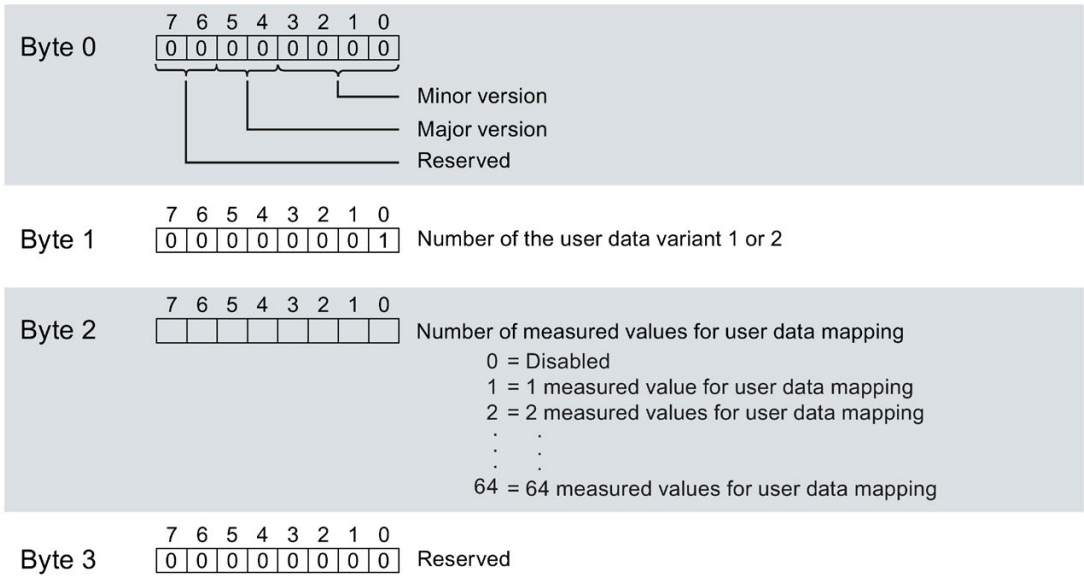

Figure A-13 Header information DS 130/131

Parameter block for user data mapping

The following diagram shows the structure of the parameter blocks for user data mapping.

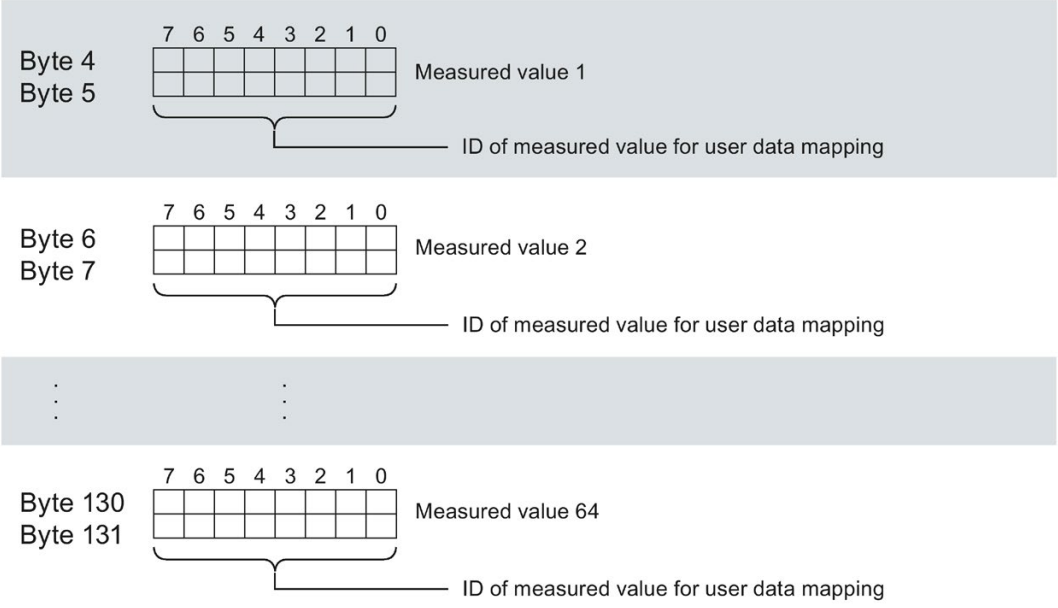

Figure A-14 Parameter block for user data mapping

Error while transferring the data record

The module always checks all the values of the transferred data record. Only if all the values were transferred without errors does the module apply the values from the data record.

The WRREC instruction for writing data records returns corresponding error codes when errors occur in the STATUS parameter.

The following table shows the module-specific error codes and their meaning for the parameter data record 130/131.

Error code in STATUS parameter (hexadecimal)				Meaning	Solution
Byte 0	Byte 1	Byte 2	Byte 3		
DF	80	B0	00	Number of the data record unknown	Enter a valid number for the data record.
DF	80	B1	01	Length of the data record incorrect	Enter a valid value for the data record length.
DF	80	B2	00	Slot invalid or cannot be accessed.	Check the station whether the module is plugged or drawn. Check the assigned values for the parameters of the WRREC instruction
DF	80	E0	01	Incorrect version	Check Byte 0. Enter valid values.
DF	80	E0	02	Error in the header information	Check Bytes 1 and 2. Correct the length and number of the parameter blocks.

Error code in STATUS parameter (hexadecimal)				Meaning	Solution
Byte 0	Byte 1	Byte 2	Byte 3		
DF	80	E1	01	Reserved bits are not 0.	Check Byte 3 and set reserved bits back to 0.
DF	80	E1	21	"User data variant" not possible or input data configuration not large enough	Select a different user data variant or change the configuration.
DF	80	E1	30	Data record number invalid	Check the data record number. Enter a valid data record number.
DF	80	E1	31	"Length of the parameter block" invalid.	Check Byte 1. Length = 10 bytes
DF	80	E1	32	"Number of parameter blocks" invalid.	Check Byte 2. Enter valid values.
DF	80	E1	33	"ID of the measured value for limit monitoring" invalid.	Check Bytes 4 and 5. Enter valid values.
DF	80	E1	3B	"ID of the type of user data mapping" not permitted.	Check Byte 1. Number for user-specific user data variant has to be 01_H or 02_H.

Measured variables for user data mapping

You can find the measured variables under Measured variables for connection type (Page 162). The following measured variables are not available to you for user data mapping:

- 220 to 226
- 62110 to 62116
- 62210 to 62216
- 62310 to 62316

A.5 Structure of the parameter data record 135 for data record mapping

Structure of data record 135

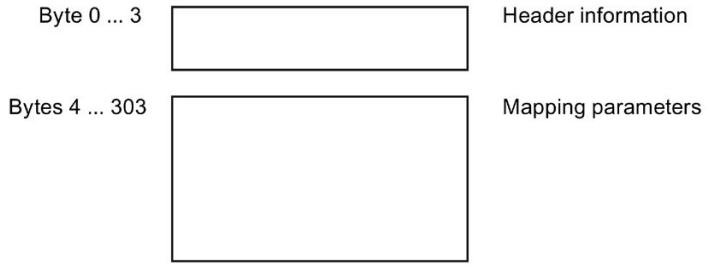

Figure A-15 Structure of data record 135

Header information

The figure below shows the structure of the header information.

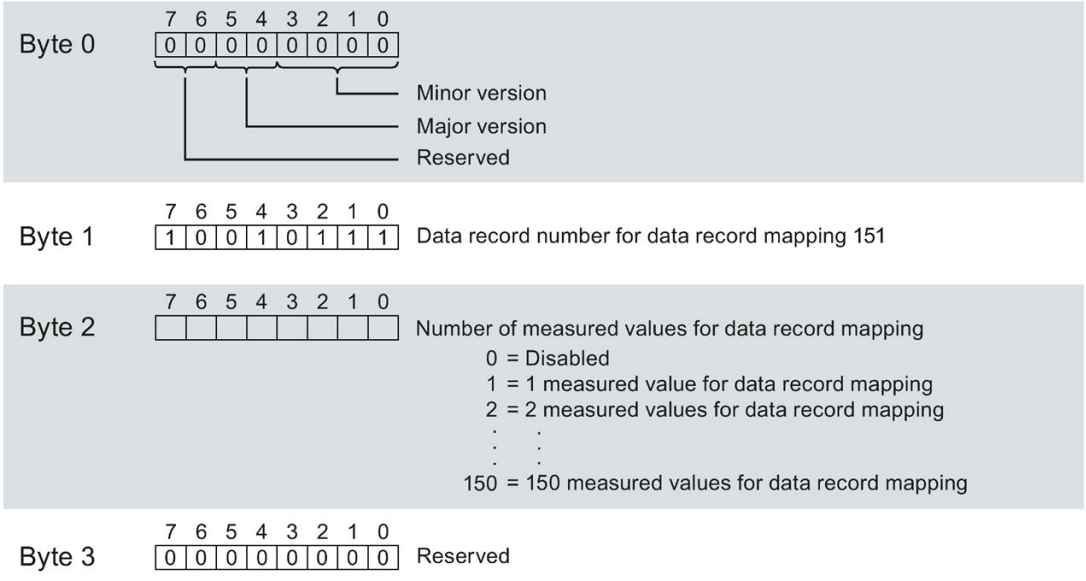

Figure A-16 Header information DS 135

Parameter block for data record mapping

The following diagram shows the structure of the parameter blocks for data record mapping.

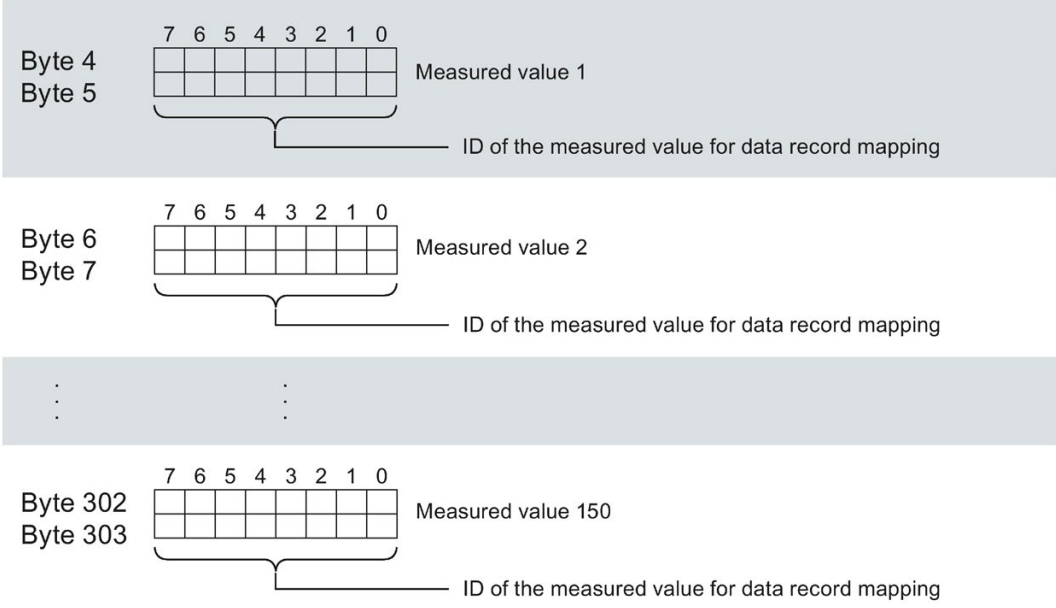

Figure A-17 Parameter block for data record mapping

Data record length DS 135 and DS151

The table below shows the data record lengths of the parameter data record DS 135 and the user-defined data record DS 151 (Page 257).

The length of the data records depends on the number and the format of the measured values.

Number Measured values	Data record length in bytes		
	REAL measured values		LREAL measured values
	DS 135	DS 151	DS 151
29	62	118	234
30	64	122	242 *
40	84	162	322 *
50	104	202	402 *
59	122	238	474 *
100	204	402 *	802 *
118	240	474 *	946 *
150	304*	602 *	1202 *

* not with PROFIBUS DP

Error while transferring the data record

The module always checks all the values of the transferred data record. Only if all the values were transferred without errors does the module apply the values from the data record.

The WRREC instruction for writing data records returns corresponding error codes when errors occur in the STATUS parameter.

The following table shows the module-specific error codes and their meaning for the parameter data record 130/131/135.

Error code in STATUS parameter (hexadecimal)				Meaning	Solution
Byte 0	Byte 1	Byte 2	Byte 3		
DF	80	B0	00	Number of the data record unknown	Enter a valid number for the data record.
DF	80	B1	01	Length of the data record incorrect	Enter a valid value for the data record length.
DF	80	B2	00	Slot invalid or cannot be accessed.	Check the station whether the module is plugged or drawn. Check the assigned values for the parameters of the WRREC instruction
DF	80	E0	01	Incorrect version	Check Byte 0. Enter valid values.
DF	80	E0	02	Error in the header information	Check Bytes 1 and 2. Correct the length and number of the parameter blocks.
DF	80	E1	01	Reserved bits are not 0.	Check Byte 3 and set reserved bits back to 0.
DF	80	E1	21	"User data variant" not possible or input data configuration not large enough	Select a different user data variant or change the configuration.
DF	80	E1	30	Data record number invalid	Check the data record number. Enter a valid data record number.
DF	80	E1	31	"Length of the parameter block" invalid.	Check Byte 1. Length = 10 bytes
DF	80	E1	32	"Number of parameter blocks" invalid.	Check Byte 2. Enter valid values.
DF	80	E1	33	"ID of the measured value for limit monitoring" invalid.	Check Bytes 4 and 5. Enter valid values.

Measured variables for data record mapping

You can find the measured variables under Measured variables for connection type (Page 162). The following measured variables are not available to you for data record mapping:

- 220 to 226
- 62110 to 62116
- 62210 to 62216
- 62310 to 62316

Measured variables

B

B.1 Measured variables for connection type

Measured variables for data records and user data

The following table provides an overview of all measured variables that are used in the data records and user data.

Note that the format and unit differ in the evaluation of records and user data.

On the Internet (https://support.industry.siemens.com/cs/ww/en/view/109755917) you can find an overview of the assignment of the measured values to the user data variants and data records.

Table B- 1 Measured variables for data records and user data

Measured value ID	Measured variables	Data type	Unit	Value range	Connection type							
					1P 2W	2P 3W	3x 1P2W	3P 4W	3P 4W1	3P 3W	3P 3W1	3P 4WI
1	Voltage L1-N [1]	REAL	V	0.0 ... 300.0	✓	✓	✓	✓	✓	✓	✓	
2	Voltage L2-N [1]	REAL	V	0.0 ... 300.0		✓	✓	✓	✓	✓	✓	
3	Voltage L3-N [1]	REAL	V	0.0 ... 300.0			✓	✓	✓	✓	✓	
4	Voltage L1-L2 [2]	REAL	V	0.0 ... 600.0		✓		✓	✓	✓	✓	
5	Voltage L2-L3 [2]	REAL	V	0.0 ... 600.0				✓	✓	✓	✓	
6	Voltage L3-L1 [2]	REAL	V	0.0 ... 600.0				✓	✓	✓	✓	
7	Current L1 [1]	REAL	A	0.0 … 100000.0	✓	✓	✓	✓	✓	✓	✓	✓
8	Current L2 [1]	REAL	A	0.0 … 100000.0		✓	✓	✓	✓	✓	✓	✓
9	Current L3 [1]	REAL	A	0.0 … 100000.0			✓	✓	✓	✓	✓	✓
10	Apparent power L1 [3]	REAL	VA	-3.0e+9 … +3.0e+9	✓	✓	✓	✓	✓	✓	✓	
11	Apparent power L2 [3]	REAL	VA	-3.0e+9 … +3.0e+9		✓	✓	✓	✓	✓	✓	
12	Apparent power L3 [3]	REAL	VA	-3.0e+9 … +3.0e+9			✓	✓	✓	✓	✓	
13	Active power L1 [3]	REAL	W	-3.0e+9 … +3.0e+9	✓	✓	✓	✓	✓	✓	✓	
14	Active power L2 [3]	REAL	W	-3.0e+9 … +3.0e+9		✓	✓	✓	✓	✓	✓	
15	Active power L3 [3]	REAL	W	-3.0e+9 … +3.0e+9			✓	✓	✓	✓	✓	
16	Reactive power Qn L1[3]	REAL	var	-3.0e+9 … +3.0e+9	✓	✓	✓	✓	✓	✓	✓	
17	Reactive power Qn L2[3]	REAL	var	-3.0e+9 … +3.0e+9		✓	✓	✓	✓	✓	✓	
18	Reactive power Qn L3[3]	REAL	var	-3.0e+9 … +3.0e+9			✓	✓	✓	✓	✓	
19	Power factor λ L1 [3]	REAL	-	0.0 ... 1.0	✓	✓	✓	✓	✓	✓	✓	
20	Power factor λ L2 [3]	REAL	-	0.0 ... 1.0		✓	✓	✓	✓	✓	✓	
21	Power factor λ L3 [3]	REAL	-	0.0 ... 1.0			✓	✓	✓	✓	✓	

Measured value ID	Measured variables	Data type	Unit	Value range	Connection type							
					1P 2W	2P 3W	3x 1P2W	3P 4W	3P 4W1	3P 3W	3P 3W1	3P 4WI
22	Reactive power Qtot L1 [3]	REAL	var	-3.0e+9 … +3.0e+9	✓	✓	✓	✓	✓	✓	✓	
23	Reactive power Qtot L2 [3]	REAL	var	-3.0e+9 … +3.0e+9		✓	✓	✓	✓	✓	✓	
24	Reactive power Qtot L3 [3]	REAL	var	-3.0e+9 … +3.0e+9			✓	✓	✓	✓	✓	
30	Frequency [4]	REAL	Hz	45.0 ... 65.0	✓	✓	✓	✓	✓	✓	✓	✓
31	Average Voltage L-N (U_{sum}) [12]	REAL	V	0.0 ... 300.0	✓	✓	✓	✓	✓	✓	✓	
32	Average Voltage L-L [12]	REAL	V	0.0 ... 600.0				✓	✓	✓	✓	
33	Average Current L1L2L3 (I_{sum}) [12]	REAL	A	0.0 ... 100000.0	✓	✓	✓	✓	✓	✓	✓	✓
34	Total active power L1L2L3 [5]	REAL	W	-3.0e+9 … +3.0e+9	✓	✓	✓	✓	✓	✓	✓	
35	Total reactive power L1L2L3 [5]	REAL	var	-3.0e+9 … +3.0e+9	✓	✓	✓	✓	✓	✓	✓	
36	Total apparent power L1L2L3 [5]	REAL	VA	-3.0e+9 … +3.0e+9	✓	✓	✓	✓	✓	✓	✓	
37	Total power factor L1L2L3 [6]	REAL	-	0.0 ... 1.0	✓	✓	✓	✓	✓	✓	✓	
38	Reactive power Qtot L1L2L3[3] [5]	REAL	var	-3.0e+9 … +3.0e+9	✓	✓	✓	✓	✓	✓	✓	
40	Max. voltage UL1-N [14]	REAL	V	0.0 ... 300.0	✓	✓	✓	✓	✓	✓	✓	
41	Max. voltage UL2-N [14]	REAL	V	0.0 ... 300.0		✓	✓	✓	✓	✓	✓	
42	Max. voltage UL3-N [14]	REAL	V	0.0 ... 300.0			✓	✓	✓	✓	✓	
43	Max. voltage UL1-UL2 [14]	REAL	V	0.0 ... 600.0		✓		✓	✓	✓	✓	
44	Max. voltage UL2-UL3 [14]	REAL	V	0.0 ... 600.0				✓	✓	✓	✓	
45	Max. voltage UL3-UL1 [14]	REAL	V	0.0 ... 600.0				✓	✓	✓	✓	
46	Max. current L1 [14]	REAL	A	0.0 ... 100000.0	✓	✓	✓	✓	✓	✓	✓	✓
47	Max. current L2 [14]	REAL	A	0.0 ... 100000.0		✓	✓	✓	✓	✓	✓	✓
48	Max. current L3 [14]	REAL	A	0.0 ... 100000.0			✓	✓	✓	✓	✓	✓
49	Max. apparent power L1 [14]	REAL	VA	-3.0e+9 … +3.0e+9	✓	✓	✓	✓	✓	✓	✓	
50	Max. apparent power L2 [14]	REAL	VA	-3.0e+9 … +3.0e+9		✓	✓	✓	✓	✓	✓	
51	Max. apparent power L3 [14]	REAL	VA	-3.0e+9 … +3.0e+9			✓	✓	✓	✓	✓	
52	Max. active power L1 [14]	REAL	W	-3.0e+9 … +3.0e+9	✓	✓	✓	✓	✓	✓	✓	
53	Max. active power L2 [14]	REAL	W	-3.0e+9 … +3.0e+9		✓	✓	✓	✓	✓	✓	

Meas-ured value ID	Measured variables	Data type	Unit	Value range	Connection type							
					1P 2W	2P 3W	3x 1P2W	3P 4W	3P 4W1	3P 3W	3P 3W1	3P 4WI
54	Max. active power L3 [14]	REAL	W	-3.0e+9 … +3.0e+9			✓	✓	✓	✓	✓	
55	Max. reactive power L1 [14]	REAL	var	-3.0e+9 … +3.0e+9	✓	✓	✓	✓	✓	✓	✓	
56	Max. reactive power L2 [14]	REAL	var	-3.0e+9 … +3.0e+9		✓	✓	✓	✓	✓	✓	
57	Max. reactive power L3 [14]	REAL	var	-3.0e+9 … +3.0e+9			✓	✓	✓	✓	✓	
58	Max. power factor L1 [14]	REAL	-	0.0 ... 1.0	✓	✓	✓	✓	✓	✓	✓	
59	Max. power factor L2 [14]	REAL	-	0.0 ... 1.0		✓	✓	✓	✓	✓	✓	
60	Max. power factor L3 [14]	REAL	-	0.0 ... 1.0			✓	✓	✓	✓	✓	
61	Max. frequency [14]	REAL	Hz	45.0 ... 65.0	✓	✓	✓	✓	✓	✓	✓	✓
62	Max. mean voltage L-N [14]	REAL	V	0.0 ... 300.0	✓	✓	✓	✓	✓			
63	Max. mean voltage L-L [14]	REAL	V	0.0 ... 600.0				✓	✓	✓	✓	
64	Max. mean current L1L2L3 [14]	REAL	A	0.0 … 100000.0	✓	✓	✓	✓	✓	✓	✓	✓
65	Max. active power L1L2L3 [14]	REAL	W	-3.0e+9 … +3.0e+9	✓	✓	✓	✓	✓	✓	✓	
66	Max. reactive power Qn L1L2L3[14]	REAL	var	-3.0e+9 … +3.0e+9	✓	✓	✓	✓	✓	✓	✓	
67	Max. apparent power L1L2L3 [14]	REAL	VA	-3.0e+9 … +3.0e+9	✓	✓	✓	✓	✓	✓	✓	
68	Max. total power factor [14]	REAL	-	0.0 ... 1.0	✓	✓	✓	✓	✓	✓	✓	
70	Min. voltage UL1-N [14]	REAL	V	0.0 ... 300.0	✓	✓	✓	✓	✓	✓	✓	
71	Min. voltage UL2-N [14]	REAL	V	0.0 ... 300.0		✓	✓	✓	✓	✓	✓	
72	Min. voltage UL3-N [14]	REAL	V	0.0 ... 300.0			✓	✓	✓	✓	✓	
73	Min. voltage UL1-UL2 [14]	REAL	V	0.0 ... 600.0		✓		✓	✓	✓	✓	
74	Min. voltage UL2-UL3 [14]	REAL	V	0.0 ... 600.0				✓	✓	✓	✓	
75	Min. voltage UL3-UL1 [14]	REAL	V	0.0 ... 600.0				✓	✓	✓	✓	
76	Min. current L1 [14]	REAL	A	0.0 ... 100000.0	✓	✓	✓	✓	✓	✓	✓	✓
77	Min. current L2 [14]	REAL	A	0.0 ... 100000.0		✓	✓	✓	✓	✓	✓	✓
78	Min. current L3 [14]	REAL	A	0.0 ... 100000.0			✓	✓	✓	✓	✓	✓
79	Min. apparent power L1 [14]	REAL	VA	-3.0e+9 … +3.0e+9	✓	✓	✓	✓	✓	✓	✓	

Measured value ID	Measured variables	Data type	Unit	Value range	Connection type							
					1P 2W	2P 3W	3x 1P2W	3P 4W	3P 4W1	3P 3W	3P 3W1	3P 4WI
80	Min. apparent power L2 [14]	REAL	VA	-3.0e+9 … +3.0e+9		✓	✓	✓	✓	✓	✓	
81	Min. apparent power L3 [14]	REAL	VA	-3.0e+9 … +3.0e+9			✓	✓	✓	✓	✓	
82	Min. active power L1 [14]	REAL	W	-3.0e+9 … +3.0e+9	✓	✓	✓	✓	✓	✓	✓	
83	Min. active power L2 [14]	REAL	W	-3.0e+9 … +3.0e+9		✓	✓	✓	✓	✓	✓	
84	Min. active power L3 [14]	REAL	W	-3.0e+9 … +3.0e+9			✓	✓	✓	✓	✓	
85	Min. reactive power L1 [14]	REAL	var	-3.0e+9 … +3.0e+9	✓	✓	✓	✓	✓	✓	✓	
86	Min. reactive power L2 [14]	REAL	var	-3.0e+9 … +3.0e+9		✓	✓	✓	✓	✓	✓	
87	Min. reactive power L3 [14]	REAL	var	-3.0e+9 … +3.0e+9			✓	✓	✓	✓	✓	
88	Min. power factor L1 [14]	REAL	-	0.0 ... 1.0	✓	✓	✓	✓	✓	✓	✓	
89	Min. power factor L2 [14]	REAL	-	0.0 ... 1.0		✓	✓	✓	✓	✓	✓	
90	Min. power factor L3 [14]	REAL	-	0.0 ... 1.0			✓	✓	✓	✓	✓	
91	Min. frequency [14]	REAL	Hz	45.0 ... 65.0	✓	✓	✓	✓	✓	✓	✓	✓
92	Min. mean voltage L-N [14]	REAL	V	0.0 ... 300.0	✓	✓	✓	✓	✓			
93	Min. mean voltage L-L [14]	REAL	V	0.0 ... 600.0				✓	✓	✓	✓	
94	Min. mean current L1L2L3[14]	REAL	A	0.0 … 100000.0	✓	✓	✓	✓	✓	✓	✓	✓
95	Min. sum of active power [14]	REAL	W	-3.0e+9 … +3.0e+9	✓	✓	✓	✓	✓	✓	✓	
96	Min. sum of reactive power [14]	REAL	var	-3.0e+9 … +3.0e+9	✓	✓	✓	✓	✓	✓	✓	
97	Min. sum of apparent power [14]	REAL	VA	-3.0e+9 … +3.0e+9	✓	✓	✓	✓	✓	✓	✓	
98	Min. total power factor [14]	REAL	-	0.0 ... 1.0	✓	✓	✓	✓	✓	✓	✓	
166	Mean power factor λ L1L2L3[12]	REAL	-	0.0 ... 1.0	✓	✓	✓	✓	✓	✓	✓	
200	Total active energy inflow L1L2L3 [6]	REAL	Wh	0.0 ... 3.4028e+38	✓	✓	✓	✓	✓	✓	✓	
201	Total active energy outflow L1L2L3 [6]	REAL	Wh	0.0 ... 3.4028e+38	✓	✓	✓	✓	✓	✓	✓	
202	Total reactive energy inflow L1L2L3 [6]	REAL	varh	0.0 ... 3.4028e+38	✓	✓	✓	✓	✓	✓	✓	
203	Total reactive energy outflow L1L2L3 [6]	REAL	varh	0.0 ... 3.4028e+38	✓	✓	✓	✓	✓	✓	✓	
204	Total apparent energy L1L2L3 [6]	REAL	VAh	0.0 ... 3.4028e+38	✓	✓	✓	✓	✓	✓	✓	

Measured value ID	Measured variables	Data type	Unit	Value range	Connection type							
					1P 2W	2P 3W	3x 1P2W	3P 4W	3P 4W1	3P 3W	3P 3W1	3P 4WI
205	Total active energy L1L2L3 [6]	REAL	Wh	-3.4028e+38 ... +3.4028e+38	✓	✓	✓	✓	✓	✓	✓	
206	Total reactive energy L1L2L3 [6]	REAL	varh	-3.4028e+38 ... +3.4028e+38	✓	✓	✓	✓	✓	✓	✓	
210	Total active energy inflow L1L2L3 [6]	LREAL	Wh	0.0 ... 1.7976e+308	✓	✓	✓	✓	✓	✓	✓	
211	Total active energy outflow L1L2L3 [6]	LREAL	Wh	0.0 ... 1.7976e+308	✓	✓	✓	✓	✓	✓	✓	
212	Total reactive energy inflow L1L2L3 [6]	LREAL	varh	0.0 ... 1.7976e+308	✓	✓	✓	✓	✓	✓	✓	
213	Total reactive energy outflow L1L2L3 [6]	LREAL	varh	0.0 ... 1.7976e+308	✓	✓	✓	✓	✓	✓	✓	
214	Total apparent energy L1L2L3 [6]	LREAL	VAh	0.0 ... 1.7976e+308	✓	✓	✓	✓	✓	✓	✓	
215	Total active energy L1L2L3 [6]	LREAL	Wh	-1.7976e+308 ... +1.7976e+308	✓	✓	✓	✓	✓	✓	✓	
216	Total reactive energy L1L2L3 [6]	LREAL	varh	-1.7976e+308 ... +1.7976e+308	✓	✓	✓	✓	✓	✓	✓	
220	Total active energy inflow L1L2L3 [6]	UDINT	Wh	0 ... 2147483647	✓	✓	✓	✓	✓	✓	✓	
221	Total active energy outflow L1L2L3 [6]	UDINT	varh	0 ... 2147483647	✓	✓	✓	✓	✓	✓	✓	
222	Total reactive energy inflow L1L2L3 [6]	UDINT	varh	0 ... 2147483647	✓	✓	✓	✓	✓	✓	✓	
223	Total reactive energy outflow L1L2L3 [6]	UDINT	VAh	0 ... 2147483647	✓	✓	✓	✓	✓	✓	✓	
224	Total apparent energy L1L2L3 [6]	UDINT	Wh	0 ... 2147483647	✓	✓	✓	✓	✓	✓	✓	
225	Total active energy L1L2L3 [6]	DINT	Wh	-2147483647 ... +2147483647	✓	✓	✓	✓	✓	✓	✓	
226	Total reactive energy L1L2L3 [6]	DINT	varh	-2147483647 ... +2147483647	✓	✓	✓	✓	✓	✓	✓	
61138	Max. reactive power Qtot L1L2L3[3]	REAL	var	-3.0e+9 … +3.0e+9	✓	✓	✓	✓	✓	✓	✓	
61139	Min. reactive power Qtot L1L2L3[3]	REAL	var	-3.0e+9 … +3.0e+9	✓	✓	✓	✓	✓	✓	✓	
61140	Overflow counter active energy inflow L1L2L3 [6]	UINT	-	0 ... 65535	✓	✓	✓	✓	✓	✓	✓	
61141	Overflow counter active energy outflow L1L2L3 [6]	UINT	-	0 ... 65535	✓	✓	✓	✓	✓	✓	✓	
61142	Overflow counter reactive energy inflow L1L2L3 [6]	UINT	-	0 ... 65535	✓	✓	✓	✓	✓	✓	✓	

Measured value ID	Measured variables	Data type	Unit	Value range	Connection type							
					1P 2W	2P 3W	3x 1P2W	3P 4W	3P 4W1	3P 3W	3P 3W1	3P 4WI
61143	Overflow counter reactive energy outflow L1L2L3 [6]	UINT	-	0 ... 65535	✓	✓	✓	✓	✓	✓	✓	
61144	Overflow counter apparent energy L1L2L3 [6]	UINT	-	0 ... 65535	✓	✓	✓	✓	✓	✓	✓	
61146	Fundamental cos φ active factor L1L2L3[17]	REAL	-	-1.0 ... 1.0	✓	✓	✓	✓	✓	✓	✓	
61147	Max. fundamental cos φ active factor L1L2L3[17]	REAL	-	-1.0 ... 1.0	✓	✓	✓	✓	✓	✓	✓	
61148	Min. fundamental cos φ active factor L1L2L3[17]	REAL	-	-1.0 ... 1.0	✓	✓	✓	✓	✓	✓	✓	
61149	Neutral current [1]	REAL	A	0.0 ... 100000.0	Z	Z	Z	✓	✓	Z	Z	✓
61150	Neutral current 10/12 cycle [1, 19]	REAL	A	0.0 … 100000.0	Z	Z	Z	✓	✓	Z	Z	✓
61151	Neutral current half cycle [1, 16, 19]	REAL	A	0.0 … 100000.0	Z	Z	Z	✓	✓	Z	Z	✓
61153	Total current IL1+IL2+IL3-IN [1]	REAL	A	-100000.0 … 100000.0				✓				✓
61154	Reactive power (fundamental) L1L2L3[5]	REAL	var	-3.0e+9 … +3.0e+9	✓	✓	✓	✓	✓	✓	✓	
61155	Max. reactive power (fundamental) L1L2L3[14]	REAL	var	-3.0e+9 … +3.0e+9	✓	✓	✓	✓	✓	✓	✓	
61156	Min. reactive power (fundamental) L1L2L3[14]	REAL	var	-3.0e+9 … +3.0e+9	✓	✓	✓	✓	✓	✓	✓	
61157	Amplitude unbalance voltage U2 [2]	REAL	%	0 … 100				✓	✓	✓	✓	
61158	Amplitude unbalance current Iunsym [2]	REAL	%	0 … 100				✓	✓	✓	✓	✓
61178	Phase angle L1 [3]	REAL	°	0.0 ... 360.0	✓	✓	✓	✓	✓	✓	✓	
61180	Active energy inflow L1 [6]	LREAL	Wh	0.0 ... 1.7976e+308	✓	✓	✓	✓	✓	✓	✓	
61181	Active energy outflow L1 [6]	LREAL	Wh	0.0 ... 1.7976e+308	✓	✓	✓	✓	✓	✓	✓	
61182	Reactive energy inflow L1 [6]	LREAL	varh	0.0 ... 1.7976e+308	✓	✓	✓	✓	✓	✓	✓	
61183	Reactive energy outflow L1 [6]	LREAL	varh	0.0 ... 1.7976e+308	✓	✓	✓	✓	✓	✓	✓	
61184	Apparent energy L1 [6]	LREAL	VAh	0.0 ... 1.7976e+308	✓	✓	✓	✓	✓	✓	✓	
61185	Total active energy L1 [6]	LREAL	Wh	-1.7976e+308 ... +1.7976e+308	✓	✓	✓	✓	✓	✓	✓	

Measured value ID	Measured variables	Data type	Unit	Value range	Connection type							
					1P 2W	2P 3W	3x 1P2W	3P 4W	3P 4W1	3P 3W	3P 3W1	3P 4WI
61186	Total reactive energy L1 [6]	LREAL	varh	-1.7976e+308 ... +1.7976e+308	✓	✓	✓	✓	✓	✓	✓	
61190	Overflow counter active energy inflow L1 [6]	UINT	-	0 ... 65535	✓	✓	✓	✓	✓	✓	✓	
61191	Overflow counter active energy outflow L1 [6]	UINT	-	0 ... 65535	✓	✓	✓	✓	✓	✓	✓	
61192	Overflow counter reactive energy inflow L1 [6]	UINT	-	0 ... 65535	✓	✓	✓	✓	✓	✓	✓	
61193	Overflow counter reactive energy outflow L1 [6]	UINT	-	0 ... 65535	✓	✓	✓	✓	✓	✓	✓	
61194	Overflow counter apparent energy L1 [6]	UINT	-	0 ... 65535	✓	✓	✓	✓	✓	✓	✓	
61195	Overflow counter total active energy L1 [6]	UINT	-	0 … 65535	✓	✓	✓	✓	✓	✓	✓	
61196	Overflow counter total reactive energy L1 [6]	UINT	-	0 … 65535	✓	✓	✓	✓	✓	✓	✓	
61198	Phase angle L2 [3]	REAL	°	0.0 ... 360.0		✓	✓	✓	✓	✓	✓	
61200	Active energy inflow L2 [6]	LREAL	Wh	0.0 ... 1.7976e+308		✓	✓	✓	✓	✓	✓	
61201	Active energy outflow L2 [6]	LREAL	Wh	0.0 ... 1.7976e+308		✓	✓	✓	✓	✓	✓	
61202	Reactive energy inflow L2 [6]	LREAL	varh	0.0 ... 1.7976e+308		✓	✓	✓	✓	✓	✓	
61203	Reactive energy outflow L2 [6]	LREAL	varh	0.0 ... 1.7976e+308		✓	✓	✓	✓	✓	✓	
61204	Apparent energy L2 [6]	LREAL	VAh	0.0 ... 1.7976e+308		✓	✓	✓	✓	✓	✓	
61205	Total active energy L2 [6]	LREAL	Wh	-1.7976e+308 ... +1.7976e+308		✓	✓	✓	✓	✓	✓	
61206	Total reactive energy L2 [6]	LREAL	varh	-1.7976e+308 ... +1.7976e+308		✓	✓	✓	✓	✓	✓	
61210	Overflow counter active energy inflow L2 [6]	UINT	-	0 ... 65535		✓	✓	✓	✓	✓	✓	
61211	Overflow counter active energy outflow L2 [6]	UINT	-	0 ... 65535		✓	✓	✓	✓	✓	✓	
61212	Overflow counter reactive energy inflow L2 [6]	UINT	-	0 ... 65535		✓	✓	✓	✓	✓	✓	
61213	Overflow counter reactive energy outflow L2 [6]	UINT	-	0 ... 65535		✓	✓	✓	✓	✓	✓	
61214	Overflow counter apparent energy L2 [6]	UINT	-	0 ... 65535		✓	✓	✓	✓	✓	✓	

Measured value ID	Measured variables	Data type	Unit	Value range	Connection type							
					1P 2W	2P 3W	3x 1P2W	3P 4W	3P 4W1	3P 3W	3P 3W1	3P 4WI
61215	Overflow counter total active energy L2 [6]	UINT	-	0 …65535		✓	✓	✓	✓	✓	✓	
61216	Overflow counter total reactive energy L2 [6]	UINT	-	0 …65535		✓	✓	✓	✓	✓	✓	
61218	Phase angle L3 [3]	REAL		0.0 ... 360.0			✓	✓	✓	✓	✓	
61220	Active energy inflow L3 [6]	LREAL	Wh	0.0 ... 1.7976e+308			✓	✓	✓	✓	✓	
61221	Active energy outflow L3 [6]	LREAL	Wh	0.0 ... 1.7976e+308			✓	✓	✓	✓	✓	
61222	Reactive energy inflow L3 [6]	LREAL	varh	0.0 ... 1.7976e+308			✓	✓	✓	✓	✓	
61223	Reactive energy outflow L3 [6]	LREAL	varh	0.0 ... 1.7976e+308			✓	✓	✓	✓	✓	
61224	Apparent energy L3 [6]	LREAL	VAh	0.0 ... 1.7976e+308			✓	✓	✓	✓	✓	
61225	Total active energy L3 [6]	LREAL	Wh	-1.7976e+308 ... +1.7976e+308			✓	✓	✓	✓	✓	
61226	Total reactive energy L3 [6]	LREAL	varh	-1.7976e+308 ... +1.7976e+308			✓	✓	✓	✓	✓	
61230	Overflow counter active energy inflow L3 [6]	UINT	-	0 ... 65535			✓	✓	✓	✓	✓	
61231	Overflow counter active energy outflow L3 [6]	UINT	-	0 ... 65535			✓	✓	✓	✓	✓	
61232	Overflow counter reactive energy inflow L3 [6]	UINT	-	0 ... 65535			✓	✓	✓	✓	✓	
61233	Overflow counter reactive energy outflow L3 [6]	UINT	-	0 ... 65535			✓	✓	✓	✓	✓	
61234	Overflow counter apparent energy L3 [6]	UINT	-	0 ... 65535			✓	✓	✓	✓	✓	
61235	Overflow counter total active energy L3 [6]	UINT	-	0 …65535			✓	✓	✓	✓	✓	
61236	Overflow counter total reactive energy L3 [6]	UINT	-	0 …65535			✓	✓	✓	✓	✓	
62110	Active energy inflow L1 [6]	DINT	Wh	0 ... 2147483647	✓	✓	✓	✓	✓	✓	✓	
62111	Active energy outflow L1 [6]	UDINT	Wh	0 ... 2147483647	✓	✓	✓	✓	✓	✓	✓	
62112	Reactive energy inflow L1 [6]	UDINT	varh	0 ... 2147483647	✓	✓	✓	✓	✓	✓	✓	
62113	Reactive energy outflow L1 [6]	UDINT	varh	0 ... 2147483647	✓	✓	✓	✓	✓	✓	✓	
62114	Apparent energy L1 [6]	UDINT	Wh	0 ... 2147483647	✓	✓	✓	✓	✓	✓	✓	
62115	Total active energy L1 [6]	DINT	Wh	-2147483647 ... + 2147483647	✓	✓	✓	✓	✓	✓	✓	

Measured value ID	Measured variables	Data type	Unit	Value range	Connection type							
					1P 2W	2P 3W	3x 1P2W	3P 4W	3P 4W1	3P 3W	3P 3W1	3P 4WI
62116	Total reactive energy L1 [6]	DINT	varh	-2147483647 ... + 2147483647	✓	✓	✓	✓	✓	✓	✓	
62120	THD+N voltage L1 [13]	REAL	1%	0 % bis 100 %	✓	✓	✓	✓	✓	✓	✓	
62121	THD+N current L1 [13]	REAL	1%	0 % bis 100 %	✓	✓	✓	✓	✓	✓	✓	✓
62122	Fundamental voltage L1 [1]	REAL	V	0.0 ... 440.0	✓	✓	✓	✓	✓	✓	✓	
62123	Fundamental current L1 [1]	REAL	A	0.0 … 100000.0	✓	✓	✓	✓	✓	✓	✓	✓
62124	Fundamental reactive power L1 [3]	REAL	var	-3.0e+9 … +3.0e+9	✓	✓	✓	✓	✓	✓	✓	
62125	Fundamental apparent power L1 [3]	REAL	VA	-3.0e+9 … +3.0e+9	✓	✓	✓	✓	✓	✓	✓	
62126	Fundamental active power L1 [3]	REAL	W	-3.0e+9 … +3.0e+9	✓	✓	✓	✓	✓	✓	✓	
62127	Fundamental cos φ active factor L1 [17]	REAL	-	-1.0 ... 1.0	✓	✓	✓	✓	✓	✓	✓	
62130	Voltage L1 10-12 cycles [1, 19]	REAL	V	0.0 ... 760.0	✓	✓	✓	✓	✓	✓	✓	
62131	Voltage L1 half cycle [1, 16, 19]	REAL	V	0.0 ... 760.0	✓	✓	✓	✓	✓	✓	✓	
62133	Current L1 10-12 cycles [1, 19]	REAL	A	0.0 … 100000.0	✓	✓	✓	✓	✓	✓	✓	✓
62134	Current L1 half cycle [1, 16, 19]	REAL	A	0.0 … 100000.0	✓	✓	✓	✓	✓	✓	✓	✓
62136	Fundamental cos φ active factor L1 [17]	SINT	0.01	-100…100	✓	✓	✓	✓	✓	✓	✓	
62150	Max. THD+N voltage L1 [14]	REAL	1%	0 % bis 100 %	✓	✓	✓	✓	✓	✓	✓	
62151	Max. THD+N current L1 [14]	REAL	1%	0 % bis 100 %	✓	✓	✓	✓	✓	✓	✓	✓
62152	Max. fundamental voltage L1 [14]	REAL	V	0.0 ... 440.0	✓	✓	✓	✓	✓	✓	✓	
62153	Max. fundamental current L1 [14]	REAL	A	0.0 … 100000.0	✓	✓	✓	✓	✓	✓	✓	✓
62154	Max. fundamental reactive power L1 [14]	REAL	var	-3.0e+9 … +3.0e+9	✓	✓	✓	✓	✓	✓	✓	
62155	Max. fundamental apparent power L1 [14]	REAL	VA	-3.0e+9 … +3.0e+9	✓	✓	✓	✓	✓	✓	✓	
62156	Max. fundamental active power L1 [14]	REAL	W	-3.0e+9 … +3.0e+9	✓	✓	✓	✓	✓	✓	✓	
62157	Max. fundamental cos φ active factor L1 [14]	REAL	-	-1.0 ... 1.0	✓	✓	✓	✓	✓	✓	✓	
62160	Max. reactive power Qtot L1 [3]	REAL	var	-3.0e+9 … +3.0e+9	✓	✓	✓	✓	✓	✓	✓	

Measured value ID	Measured variables	Data type	Unit	Value range	Connection type							
					1P 2W	2P 3W	3x 1P2W	3P 4W	3P 4W1	3P 3W	3P 3W1	3P 4WI
62170	Min. THD+N voltage L1 [14]	REAL	1%	0 % bis 100 %	✓	✓	✓	✓	✓	✓	✓	
62171	Min. THD+N current L1 [14]	REAL	1%	0 % bis 100 %	✓	✓	✓	✓	✓	✓	✓	✓
62172	Min. fundamental voltage L1 [14]	REAL	V	0.0 ... 440.0	✓	✓	✓	✓	✓	✓	✓	
62173	Min. fundamental current L1 [14]	REAL	A	0.0 … 100000.0	✓	✓	✓	✓	✓	✓	✓	✓
62174	Min. fundamental reactive power L1 [14]	REAL	var	-3.0e+9 … +3.0e+9	✓	✓	✓	✓	✓	✓	✓	
62175	Min. fundamental apparent power L1[14]	REAL	VA	-3.0e+9 … +3.0e+9	✓	✓	✓	✓	✓	✓	✓	
62176	Min. fundamental active power L1 [14]	REAL	W	-3.0e+9 … +3.0e+9	✓	✓	✓	✓	✓	✓	✓	
62177	Min. fundamental cos φ active factor L1[14]	REAL	-	-1.0 ... 1.0	✓	✓	✓	✓	✓	✓	✓	
62180	Min. reactive power Qtot L1 [3]	REAL	var	-3.0e+9 … +3.0e+9	✓	✓	✓	✓	✓	✓	✓	
62194	Voltage dip - value L1 [16]	REAL	V	0.0 ... 440.0	✓	✓	✓	✓	✓	✓	✓	
62195	Voltage swell - value L1 [16]	REAL	V	0.0 ... 440.0	✓	✓	✓	✓	✓	✓	✓	
62196	Voltage peak value L1 [17]	REAL	V	0.0 ... 440.0	✓	✓	✓	✓	✓	✓	✓	
62197	Current peak value L1 [17]	REAL	A	0.0 … 100000.0	✓	✓	✓	✓	✓	✓	✓	✓
62198	Overcurrent- value L1 [16]	REAL	A	0.0 … 100000.0	✓	✓	✓	✓	✓	✓	✓	✓
62199	Voltage dip - duration L1 [16]	REAL	ms	0.0 ... 100000.0	✓	✓	✓	✓	✓	✓	✓	
62200	Voltage swell - duration L1 [16]	REAL	ms	0.0 ... 100000.0	✓	✓	✓	✓	✓	✓	✓	
62210	Active energy inflow L2 [6]	DINT	Wh	0... 2147483647		✓	✓	✓	✓	✓	✓	
62211	Active energy outflow L2 [6]	DINT	Wh	0... 2147483647		✓	✓	✓	✓	✓	✓	
62212	Reactive energy inflow L2 [6]	DINT	varh	0... 2147483647		✓	✓	✓	✓	✓	✓	
62213	Reactive energy outflow L2 [6]	DINT	varh	0... 2147483647		✓	✓	✓	✓	✓	✓	
62214	Apparent energy L2 [6]	DINT	VAh	0... 2147483647		✓	✓	✓	✓	✓	✓	
62215	Total active energy L2 [6]	DINT	Wh	-2147483647...+2147483647		✓	✓	✓	✓	✓	✓	

Measured value ID	Measured variables	Data type	Unit	Value range	Connection type							
					1P 2W	2P 3W	3x 1P2W	3P 4W	3P 4W1	3P 3W	3P 3W1	3P 4WI
62216	Total reactive energy L2 [6]	DINT	varh	-2147483647...+2147483647		✓	✓	✓	✓	✓	✓	
62220	THD+N voltage L2 [13]	REAL	1%	0 % bis 100 %		✓	✓	✓	✓	✓	✓	
62221	THD+N current L2 [13]	REAL	1%	0 % bis 100 %		✓	✓	✓	✓	✓	✓	✓
62222	Fundamental voltage L2[2]	REAL	V	0.0 ... 440.0		✓	✓	✓	✓	✓	✓	
62223	Fundamental current L2 [1]	REAL	A	0.0 … 100000.0		✓	✓	✓	✓	✓	✓	✓
62224	Fundamental reactive power L2 [3]	REAL	var	-3.0e+9 … +3.0e+9		✓	✓	✓	✓	✓	✓	
62225	Fundamental apparent power L2 [3]	REAL	VA	-3.0e+9 … +3.0e+9		✓	✓	✓	✓	✓	✓	
62226	Fundamental active power L2 [3]	REAL	W	-3.0e+9 … +3.0e+9		✓	✓	✓	✓	✓	✓	
62227	Fundamental cos φ active factor L2 [17]	REAL	-	-1.0 ... 1.0		✓	✓	✓	✓	✓	✓	
62230	Voltage L2 10-12 cycles [1, 19]	REAL	V	0.0 ... 760.0		✓	✓	✓	✓	✓	✓	
62231	Voltage L2 half cycle [1, 16, 19]	REAL	V	0.0 ... 760.0		✓	✓	✓	✓	✓	✓	
62233	Current L2 10-12 cycles [1, 19]	REAL	A	0.0 … 100000.0		✓	✓	✓	✓	✓	✓	✓
62234	Current L2 half cycle [1, 16, 19]	REAL	A	0.0 … 100000.0		✓	✓	✓	✓	✓	✓	✓
62236	Fundamental cos φ active factor L2 [17]	SINT	0.01	-100…100		✓	✓	✓	✓	✓	✓	
62250	Max. THD+N voltage L2 [14]	REAL	1%	0 % bis 100 %		✓	✓	✓	✓	✓	✓	
62251	Max. THD+N current L2 [14]	REAL	1%	0 % bis 100 %		✓	✓	✓	✓	✓	✓	✓
62252	Max. fundamental voltage L2 [14]	REAL	V	0.0 ... 440.0		✓	✓	✓	✓	✓	✓	
62253	Max. fundamental current L2 [14]	REAL	A	0.0 … 100000.0		✓	✓	✓	✓	✓	✓	✓
62254	Max. fundamental reactive power L2 [14]	REAL	var	-3.0e+9 … +3.0e+9		✓	✓	✓	✓	✓	✓	
62255	Max. fundamental apparent power L2 [14]	REAL	VA	-3.0e+9 … +3.0e+9		✓	✓	✓	✓	✓	✓	
62256	Max. fundamental active power L2 [14]	REAL	W	-3.0e+9 … +3.0e+9		✓	✓	✓	✓	✓	✓	
62257	Max. fundamental cos φ active factor L2 [14]	REAL	-	-1.0 ... 1.0		✓	✓	✓	✓	✓	✓	
62260	Max. reactive power Qtot L2 [3]	REAL	var	-3.0e+9 … +3.0e+9		✓	✓	✓	✓	✓	✓	

Measured value ID	Measured variables	Data type	Unit	Value range	Connection type							
					1P 2W	2P 3W	3x 1P2W	3P 4W	3P 4W1	3P 3W	3P 3W1	3P 4WI
62270	Min. THD+N voltage L2 [14]	REAL	1%	0 % bis 100 %		✓	✓	✓	✓	✓	✓	
62271	Min. THD+N current L2 [14]	REAL	1%	0 % bis 100 %		✓	✓	✓	✓	✓	✓	✓
62272	Min. fundamental voltage L2 [14]	REAL	V	0.0 ... 440.0		✓	✓	✓	✓	✓	✓	
62273	Min. fundamental current L2 [14]	REAL	A	0.0 … 100000.0		✓	✓	✓	✓	✓	✓	✓
62274	Min. fundamental reactive power L2 [14]	REAL	var	-3.0e+9 … +3.0e+9		✓	✓	✓	✓	✓	✓	
62275	Min. fundamental apparent power L2[14]	REAL	VA	-3.0e+9 … +3.0e+9		✓	✓	✓	✓	✓	✓	
62276	Min. fundamental active power L2 [14]	REAL	W	-3.0e+9 … +3.0e+9		✓	✓	✓	✓	✓	✓	
62277	Min. fundamental cos φ active factor L2[14]	REAL	-	-1.0 ... 1.0		✓	✓	✓	✓	✓	✓	
62280	Min. reactive power Qtot L2 [3]	REAL	var	-3.0e+9 … +3.0e+9		✓	✓	✓	✓	✓	✓	
62294	Voltage dip - value L2 [16]	REAL	V	0.0 ... 440.0		✓	✓	✓	✓	✓	✓	
62295	Voltage swell - value L2 [16]	REAL	V	0.0 ... 440.0		✓	✓	✓	✓	✓	✓	
62296	Voltage peak value L2 [17]	REAL	V	0.0 ... 440.0		✓	✓	✓	✓	✓	✓	
62297	Current peak value L2 [17]	REAL	A	0.0 … 100000.0		✓	✓	✓	✓	✓	✓	✓
62298	Overcurrent- value L2 [16]	REAL	A	0.0 … 100000.0		✓	✓	✓	✓	✓	✓	✓
62299	Voltage dip - duration L2 [16]	REAL	ms	0.0 ... 100000.0		✓	✓	✓	✓	✓	✓	
62300	Voltage swell - duration L2 [16]	REAL	ms	0.0 ... 100000.0		✓	✓	✓	✓	✓	✓	
62310	Active energy inflow L3 [6]	DINT	Wh	0... 2147483647			✓	✓	✓	✓	✓	
62311	Active energy outflow L3 [6]	DINT	Wh	0... 2147483647			✓	✓	✓	✓	✓	
62312	Reactive energy inflow L3 [6]	DINT	varh	0... 2147483647			✓	✓	✓	✓	✓	
62313	Reactive energy outflow L3 [6]	DINT	varh	0... 2147483647			✓	✓	✓	✓	✓	
62314	Apparent energy L3 [6]	DINT	VAh	0... 2147483647			✓	✓	✓	✓	✓	
62315	Total active energy L3 [6]	DINT	Wh	-2147483647...+2147483647			✓	✓	✓	✓	✓	

Measured value ID	Measured variables	Data type	Unit	Value range	Connection type							
					1P 2W	2P 3W	3x 1P2W	3P 4W	3P 4W1	3P 3W	3P 3W1	3P 4WI
62316	Total reactive energy L3 [6]	DINT	varh	-2147483647...+2147483647			✓	✓	✓	✓	✓	
62320	THD+N voltage L3 [13]	REAL	1%	0 % bis 100 %			✓	✓	✓	✓	✓	
62321	THD+N current L3 [13]	REAL	1%	0 % bis 100 %			✓	✓	✓	✓	✓	✓
62322	Fundamental voltage L3 [2]	REAL	V	0.0 ... 440.0			✓	✓	✓	✓	✓	
62323	Fundamental current L3 [1]	REAL	A	0.0 … 100000.0			✓	✓	✓	✓	✓	✓
62324	Fundamental reactive power L3 [3]	REAL	var	-3.0e+9 … +3.0e+9			✓	✓	✓	✓	✓	
62325	Fundamental apparent power L3 [3]	REAL	VA	-3.0e+9 … +3.0e+9			✓	✓	✓	✓	✓	
62326	Fundamental active power L3[3]	REAL	W	-3.0e+9 … +3.0e+9			✓	✓	✓	✓	✓	
62327	Fundamental cos φ active factor L3 [17]	REAL	-	-1.0 ... 1.0			✓	✓	✓	✓	✓	
62330	Voltage L3 10-12 cycles [1, 19]	REAL	V	0.0 ... 760.0			✓	✓	✓	✓	✓	
62331	Voltage L3 half cycle [1, 16, 19]	REAL	V	0.0 ... 760.0			✓	✓	✓	✓	✓	
62333	Current L3 10-12 cycles [1, 19]	REAL	A	0.0 … 100000.0			✓	✓	✓	✓	✓	✓
62334	Current L3 half cycle [1, 16, 19]	REAL	A	0.0 … 100000.0			✓	✓	✓	✓	✓	✓
62336	Fundamental cos φ active factor L3 [17]	SINT	0.01	-100…100			✓	✓	✓	✓	✓	
62350	Max. THD+N voltage L3[14]	REAL	1%	0 % bis 100 %			✓	✓	✓	✓	✓	
62351	Max. THD+N current L3[14]	REAL	1%	0 % bis 100 %			✓	✓	✓	✓	✓	✓
62352	Max. fundamental voltage L3[14]	REAL	V	0.0 ... 440.0			✓	✓	✓	✓	✓	
62353	Max. fundamental current L3[14]	REAL	A	0.0 … 100000.0			✓	✓	✓	✓	✓	✓
62354	Max. fundamental reactive power L3[14]	REAL	var	-3.0e+9 … +3.0e+9			✓	✓	✓	✓	✓	
62355	Max. fundamental apparent power L3[14]	REAL	VA	-3.0e+9 … +3.0e+9			✓	✓	✓	✓	✓	
62356	Max. fundamental active power L3[14]	REAL	W	-3.0e+9 … +3.0e+9			✓	✓	✓	✓	✓	
62357	Max. fundamental cos φ active factor L3[14]	REAL	-	-1.0 ... 1.0			✓	✓	✓	✓	✓	
62360	Max. reactive power Qtot L3[3]	REAL	var	-3.0e+9 … +3.0e+9			✓	✓	✓	✓	✓	

Measured value ID	Measured variables	Data type	Unit	Value range	Connection type							
					1P 2W	2P 3W	3x 1P2W	3P 4W	3P 4W1	3P 3W	3P 3W1	3P 4WI
62370	Min. THD+N voltage L3[14]	REAL	1%	0 % bis 100 %			✓	✓	✓	✓	✓	
62371	Min. THD+N current L3[14]	REAL	1%	0 % bis 100 %			✓	✓	✓	✓	✓	✓
62372	Min. fundamental voltage L3[14]	REAL	V	0.0 ... 440.0			✓	✓	✓	✓	✓	
62373	Min. fundamental current L3 [14]	REAL	A	0.0 … 100000.0			✓	✓	✓	✓	✓	✓
62374	Min. fundamental reactive power L3 [14]	REAL	var	-3.0e+9 … +3.0e+9			✓	✓	✓	✓	✓	
62375	Min. fundamental apparent power L3[14]	REAL	VA	-3.0e+9 … +3.0e+9			✓	✓	✓	✓	✓	
62376	Min. fundamental active power L3[14]	REAL	W	-3.0e+9 … +3.0e+9			✓	✓	✓	✓	✓	
62377	Min. fundamental cos φ active factor L3[14]	REAL	-	-1.0 ... 1.0			✓	✓	✓	✓	✓	
62380	Min. reactive power Qtot L3[3]	REAL	var	-3.0e+9 … +3.0e+9			✓	✓	✓	✓	✓	
62394	Voltage dip - value L3[16]	REAL	V	0.0 ... 440.0			✓	✓	✓	✓	✓	
62395	Voltage swell - value L3[16]	REAL	V	0.0 ... 440.0			✓	✓	✓	✓	✓	
62396	Voltage peak value L3[17]	REAL	V	0.0 ... 440.0			✓	✓	✓	✓	✓	
62397	Current peak value L3[17]	REAL	A	0.0 … 100000.0			✓	✓	✓	✓	✓	✓
62398	Overcurrent- value L3[16]	REAL	A	0.0 … 100000.0			✓	✓	✓	✓	✓	✓
62399	Voltage dip - duration L3[16]	REAL	ms	0.0 ... 100000.0			✓	✓	✓	✓	✓	
62400	Voltage swell - duration L3[16]	REAL	ms	0.0 ... 100000.0			✓	✓	✓	✓	✓	
Harmonics												
63000	Harmonics 1: Voltage L1 [18]	REAL	V	0.0 ... 760.0	✓	✓	✓	✓	✓	✓	✓	
63001	Harmonics 1: Current L1 [18]	REAL	A	0.0 … 100000.0	✓	✓	✓	✓	✓	✓	✓	✓
63002	Harmonics 2: Voltage L1 [18]	REAL	V	0.0 ... 760.0	✓	✓	✓	✓	✓	✓	✓	
63003	Harmonics 2: Current L1 [18]	REAL	A	0.0 … 100000.0	✓	✓	✓	✓	✓	✓	✓	✓
63004	Harmonics 3: Voltage L1 [18]	REAL	V	0.0 ... 760.0	✓	✓	✓	✓	✓	✓	✓	
63005	Harmonics 3: Current L1 [18]	REAL	A	0.0 … 100000.0	✓	✓	✓	✓	✓	✓	✓	✓

Measured value ID	Measured variables	Data type	Unit	Value range	Connection type							
					1P 2W	2P 3W	3x 1P2W	3P 4W	3P 4W1	3P 3W	3P 3W1	3P 4WI
63006	Harmonics 4: Voltage L1 [18]	REAL	V	0.0 ... 760.0	✓	✓	✓	✓	✓	✓	✓	
63007	Harmonics 4: Current L1 [18]	REAL	A	0.0 … 100000.0	✓	✓	✓	✓	✓	✓	✓	✓
63008	Harmonics 5: Voltage L1 [18]	REAL	V	0.0 ... 760.0	✓	✓	✓	✓	✓	✓	✓	
63009	Harmonics 5: Current L1 [18]	REAL	A	0.0 … 100000.0	✓	✓	✓	✓	✓	✓	✓	✓
63010	Harmonics 6: Voltage L1 [18]	REAL	V	0.0 ... 760.0	✓	✓	✓	✓	✓	✓	✓	
63011	Harmonics 6: Current L1 [18]	REAL	A	0.0 … 100000.0	✓	✓	✓	✓	✓	✓	✓	✓
63012	Harmonics 7: Voltage L1 [18]	REAL	V	0.0 ... 760.0	✓	✓	✓	✓	✓	✓	✓	
63013	Harmonics 7: Current L1 [18]	REAL	A	0.0 … 100000.0	✓	✓	✓	✓	✓	✓	✓	✓
63014	Harmonics 8: Voltage L1 [18]	REAL	V	0.0 ... 760.0	✓	✓	✓	✓	✓	✓	✓	
63015	Harmonics 8: Current L1 [18]	REAL	A	0.0 … 100000.0	✓	✓	✓	✓	✓	✓	✓	✓
63016	Harmonics 9: Voltage L1 [18]	REAL	V	0.0 ... 760.0	✓	✓	✓	✓	✓	✓	✓	
63017	Harmonics 9: Current L1 [18]	REAL	A	0.0 … 100000.0	✓	✓	✓	✓	✓	✓	✓	✓
63018	Harmonics 10: Voltage L1 [18]	REAL	V	0.0 ... 760.0	✓	✓	✓	✓	✓	✓	✓	
63019	Harmonics 10: Current L1 [18]	REAL	A	0.0 … 100000.0	✓	✓	✓	✓	✓	✓	✓	✓
63020	Harmonics 11: Voltage L1 [18]	REAL	V	0.0 ... 760.0	✓	✓	✓	✓	✓	✓	✓	
63021	Harmonics 11: Current L1 [18]	REAL	A	0.0 … 100000.0	✓	✓	✓	✓	✓	✓	✓	✓
63022	Harmonics 12: Voltage L1 [18]	REAL	V	0.0 ... 760.0	✓	✓	✓	✓	✓	✓	✓	
63023	Harmonics 12: Current L1 [18]	REAL	A	0.0 … 100000.0	✓	✓	✓	✓	✓	✓	✓	✓
63024	Harmonics 13: Voltage L1 [18]	REAL	V	0.0 ... 760.0	✓	✓	✓	✓	✓	✓	✓	
63025	Harmonics 13: Current L1 [18]	REAL	A	0.0 … 100000.0	✓	✓	✓	✓	✓	✓	✓	✓
63026	Harmonics 14: Voltage L1 [18]	REAL	V	0.0 ... 760.0	✓	✓	✓	✓	✓	✓	✓	
63027	Harmonics 14: Current L1 [18]	REAL	A	0.0 … 100000.0	✓	✓	✓	✓	✓	✓	✓	✓

Measured value ID	Measured variables	Data type	Unit	Value range	Connection type							
					1P 2W	2P 3W	3x 1P2W	3P 4W	3P 4W1	3P 3W	3P 3W1	3P 4WI
63028	Harmonics 15: Voltage L1 [18]	REAL	V	0.0 ... 760.0	✓	✓	✓	✓	✓	✓	✓	
63029	Harmonics 15: Current L1 [18]	REAL	A	0.0 … 100000.0	✓	✓	✓	✓	✓	✓	✓	✓
63030	Harmonics 16: Voltage L1 [18]	REAL	V	0.0 ... 760.0	✓	✓	✓	✓	✓	✓	✓	
63031	Harmonics 16: Current L1 [18]	REAL	A	0.0 … 100000.0	✓	✓	✓	✓	✓	✓	✓	✓
63032	Harmonics 17: Voltage L1 [18]	REAL	V	0.0 ... 760.0	✓	✓	✓	✓	✓	✓	✓	
63033	Harmonics 17: Current L1 [18]	REAL	A	0.0 … 100000.0	✓	✓	✓	✓	✓	✓	✓	✓
63034	Harmonics 18: Voltage L1 [18]	REAL	V	0.0 ... 760.0	✓	✓	✓	✓	✓	✓	✓	
63035	Harmonics 18: Current L1 [18]	REAL	A	0.0 … 100000.0	✓	✓	✓	✓	✓	✓	✓	✓
63036	Harmonics 19: Voltage L1 [18]	REAL	V	0.0 ... 760.0	✓	✓	✓	✓	✓	✓	✓	
63037	Harmonics 19: Current L1 [18]	REAL	A	0.0 … 100000.0	✓	✓	✓	✓	✓	✓	✓	✓
63038	Harmonics 20: Voltage L1 [18]	REAL	V	0.0 ... 760.0	✓	✓	✓	✓	✓	✓	✓	
63039	Harmonics 20: Current L1 [18]	REAL	A	0.0 … 100000.0	✓	✓	✓	✓	✓	✓	✓	✓
63040	Harmonics 21: Voltage L1 [18]	REAL	V	0.0 ... 760.0	✓	✓	✓	✓	✓	✓	✓	
63041	Harmonics 21: Current L1 [18]	REAL	A	0.0 … 100000.0	✓	✓	✓	✓	✓	✓	✓	✓
63042	Harmonics 22: Voltage L1 [18]	REAL	V	0.0 ... 760.0	✓	✓	✓	✓	✓	✓	✓	
63043	Harmonics 22: Current L1 [18]	REAL	A	0.0 … 100000.0	✓	✓	✓	✓	✓	✓	✓	✓
63044	Harmonics 23: Voltage L1 [18]	REAL	V	0.0 ... 760.0	✓	✓	✓	✓	✓	✓	✓	
63045	Harmonics 23: Current L1 [18]	REAL	A	0.0 … 100000.0	✓	✓	✓	✓	✓	✓	✓	✓
63046	Harmonics 24: Voltage L1 [18]	REAL	V	0.0 ... 760.0	✓	✓	✓	✓	✓	✓	✓	
63047	Harmonics 24: Current L1 [18]	REAL	A	0.0 … 100000.0	✓	✓	✓	✓	✓	✓	✓	✓
63048	Harmonics 25: Voltage L1 [18]	REAL	V	0.0 ... 760.0	✓	✓	✓	✓	✓	✓	✓	
63049	Harmonics 25: Current L1 [18]	REAL	A	0.0 … 100000.0	✓	✓	✓	✓	✓	✓	✓	✓

Measured value ID	Measured variables	Data type	Unit	Value range	Connection type							
					1P 2W	2P 3W	3x 1P2W	3P 4W	3P 4W1	3P 3W	3P 3W1	3P 4WI
63050	Harmonics 26: Voltage L1 [18]	REAL	V	0.0 ... 760.0	✓	✓	✓	✓	✓	✓	✓	
63051	Harmonics 26: Current L1 [18]	REAL	A	0.0 … 100000.0	✓	✓	✓	✓	✓	✓	✓	✓
63052	Harmonics 27: Voltage L1 [18]	REAL	V	0.0 ... 760.0	✓	✓	✓	✓	✓	✓	✓	
63053	Harmonics 27: Current L1 [18]	REAL	A	0.0 … 100000.0	✓	✓	✓	✓	✓	✓	✓	✓
63054	Harmonics 28: Voltage L1 [18]	REAL	V	0.0 ... 760.0	✓	✓	✓	✓	✓	✓	✓	
63055	Harmonics 28: Current L1 [18]	REAL	A	0.0 … 100000.0	✓	✓	✓	✓	✓	✓	✓	✓
63056	Harmonics 29: Voltage L1 [18]	REAL	V	0.0 ... 760.0	✓	✓	✓	✓	✓	✓	✓	
63057	Harmonics 29: Current L1 [18]	REAL	A	0.0 … 100000.0	✓	✓	✓	✓	✓	✓	✓	✓
63058	Harmonics 30: Voltage L1 [18]	REAL	V	0.0 ... 760.0	✓	✓	✓	✓	✓	✓	✓	
63059	Harmonics 30: Current L1 [18]	REAL	A	0.0 … 100000.0	✓	✓	✓	✓	✓	✓	✓	✓
63060	Harmonics 31: Voltage L1 [18]	REAL	V	0.0 ... 760.0	✓	✓	✓	✓	✓	✓	✓	
63061	Harmonics 31: Current L1 [18]	REAL	A	0.0 … 100000.0	✓	✓	✓	✓	✓	✓	✓	✓
63062	Harmonics 32: Voltage L1 [18]	REAL	V	0.0 ... 760.0	✓	✓	✓	✓	✓	✓	✓	
63063	Harmonics 32: Current L1 [18]	REAL	A	0.0 … 100000.0	✓	✓	✓	✓	✓	✓	✓	✓
63064	Harmonics 33: Voltage L1 [18]	REAL	V	0.0 ... 760.0	✓	✓	✓	✓	✓	✓	✓	
63065	Harmonics 33: Current L1 [18]	REAL	A	0.0 … 100000.0	✓	✓	✓	✓	✓	✓	✓	✓
63066	Harmonics 34: Voltage L1 [18]	REAL	V	0.0 ... 760.0	✓	✓	✓	✓	✓	✓	✓	
63067	Harmonics 34: Current L1 [18]	REAL	A	0.0 … 100000.0	✓	✓	✓	✓	✓	✓	✓	✓
63068	Harmonics 35: Voltage L1 [18]	REAL	V	0.0 ... 760.0	✓	✓	✓	✓	✓	✓	✓	
63069	Harmonics 35: Current L1 [18]	REAL	A	0.0 … 100000.0	✓	✓	✓	✓	✓	✓	✓	✓
63070	Harmonics 36: Voltage L1 [18]	REAL	V	0.0 ... 760.0	✓	✓	✓	✓	✓	✓	✓	
63071	Harmonics 36: Current L1 [18]	REAL	A	0.0 … 100000.0	✓	✓	✓	✓	✓	✓	✓	✓

Measured value ID	Measured variables	Data type	Unit	Value range	Connection type							
					1P 2W	2P 3W	3x 1P2W	3P 4W	3P 4W1	3P 3W	3P 3W1	3P 4WI
63072	Harmonics 37: Voltage L1 [18]	REAL	V	0.0 ... 760.0	✓	✓	✓	✓	✓	✓	✓	
63073	Harmonics 37: Current L1 [18]	REAL	A	0.0 … 100000.0	✓	✓	✓	✓	✓	✓	✓	✓
63074	Harmonics 38: Voltage L1 [18]	REAL	V	0.0 ... 760.0	✓	✓	✓	✓	✓	✓	✓	
63075	Harmonics 38: Current L1 [18]	REAL	A	0.0 … 100000.0	✓	✓	✓	✓	✓	✓	✓	✓
63076	Harmonics 39: Voltage L1 [18]	REAL	V	0.0 ... 760.0	✓	✓	✓	✓	✓	✓	✓	
63077	Harmonics 39: Current L1 [18]	REAL	A	0.0 … 100000.0	✓	✓	✓	✓	✓	✓	✓	✓
63078	Harmonics 40: Voltage L1 [18]	REAL	V	0.0 ... 760.0	✓	✓	✓	✓	✓	✓	✓	
63079	Harmonics 40: Current L1 [18]	REAL	A	0.0 … 100000.0	✓	✓	✓	✓	✓	✓	✓	✓
63400	Harmonics 1: Voltage L2 [18]	REAL	V	0.0 ... 760.0		✓	✓	✓	✓	✓	✓	
63401	Harmonics 1: Current L2 [18]	REAL	A	0.0 … 100000.0		✓	✓	✓	✓	✓	✓	✓
63402	Harmonics 2: Voltage L2 [18]	REAL	V	0.0 ... 760.0		✓	✓	✓	✓	✓	✓	
63403	Harmonics 2: Current L2 [18]	REAL	A	0.0 … 100000.0		✓	✓	✓	✓	✓	✓	✓
63404	Harmonics 3: Voltage L2 [18]	REAL	V	0.0 ... 760.0		✓	✓	✓	✓	✓	✓	
63405	Harmonics 3: Current L2 [18]	REAL	A	0.0 … 100000.0		✓	✓	✓	✓	✓	✓	✓
63406	Harmonics 4: Voltage L2 [18]	REAL	V	0.0 ... 760.0		✓	✓	✓	✓	✓	✓	
63407	Harmonics 4: Current L2 [18]	REAL	A	0.0 … 100000.0		✓	✓	✓	✓	✓	✓	✓
63408	Harmonics 5: Voltage L2 [18]	REAL	V	0.0 ... 760.0		✓	✓	✓	✓	✓	✓	
63409	Harmonics 5: Current L2 [18]	REAL	A	0.0 … 100000.0		✓	✓	✓	✓	✓	✓	✓
63410	Harmonics 6: Voltage L2 [18]	REAL	V	0.0 ... 760.0		✓	✓	✓	✓	✓	✓	
63411	Harmonics 6: Current L2 [18]	REAL	A	0.0 … 100000.0		✓	✓	✓	✓	✓	✓	✓
63412	Harmonics 7: Voltage L2 [18]	REAL	V	0.0 ... 760.0		✓	✓	✓	✓	✓	✓	
63413	Harmonics 7: Current L2 [18]	REAL	A	0.0 … 100000.0		✓	✓	✓	✓	✓	✓	✓

Measured value ID	Measured variables	Data type	Unit	Value range	Connection type							
					1P 2W	2P 3W	3x 1P2W	3P 4W	3P 4W1	3P 3W	3P 3W1	3P 4WI
63414	Harmonics 8: Voltage L2 [18]	REAL	V	0.0 ... 760.0		✓	✓	✓	✓	✓	✓	
63415	Harmonics 8: Current L2 [18]	REAL	A	0.0 … 100000.0		✓	✓	✓	✓	✓	✓	✓
63416	Harmonics 9: Voltage L2 [18]	REAL	V	0.0 ... 760.0		✓	✓	✓	✓	✓	✓	
63417	Harmonics 9: Current L2 [18]	REAL	A	0.0 … 100000.0		✓	✓	✓	✓	✓	✓	✓
63418	Harmonics 10: Voltage L2 [18]	REAL	V	0.0 ... 760.0		✓	✓	✓	✓	✓	✓	
63419	Harmonics 10: Current L2 [18]	REAL	A	0.0 … 100000.0		✓	✓	✓	✓	✓	✓	✓
63420	Harmonics 11: Voltage L2 [18]	REAL	V	0.0 ... 760.0		✓	✓	✓	✓	✓	✓	
63421	Harmonics 11: Current L2 [18]	REAL	A	0.0 … 100000.0		✓	✓	✓	✓	✓	✓	✓
63422	Harmonics 12: Voltage L2 [18]	REAL	V	0.0 ... 760.0		✓	✓	✓	✓	✓	✓	
63423	Harmonics 12: Current L2 [18]	REAL	A	0.0 … 100000.0		✓	✓	✓	✓	✓	✓	✓
63424	Harmonics 13: Voltage L2 [18]	REAL	V	0.0 ... 760.0		✓	✓	✓	✓	✓	✓	
63425	Harmonics 13: Current L2 [18]	REAL	A	0.0 … 100000.0		✓	✓	✓	✓	✓	✓	✓
63426	Harmonics 14: Voltage L2 [18]	REAL	V	0.0 ... 760.0		✓	✓	✓	✓	✓	✓	
63427	Harmonics 14: Current L2 [18]	REAL	A	0.0 … 100000.0		✓	✓	✓	✓	✓	✓	✓
63428	Harmonics 15: Voltage L2 [18]	REAL	V	0.0 ... 760.0		✓	✓	✓	✓	✓	✓	
63429	Harmonics 15: Current L2 [18]	REAL	A	0.0 … 100000.0		✓	✓	✓	✓	✓	✓	✓
63430	Harmonics 16: Voltage L2 [18]	REAL	V	0.0 ... 760.0		✓	✓	✓	✓	✓	✓	
63431	Harmonics 16: Current L2 [18]	REAL	A	0.0 … 100000.0		✓	✓	✓	✓	✓	✓	✓
63432	Harmonics 17: Voltage L2 [18]	REAL	V	0.0 ... 760.0		✓	✓	✓	✓	✓	✓	
63433	Harmonics 17: Current L2 [18]	REAL	A	0.0 … 100000.0		✓	✓	✓	✓	✓	✓	✓
63434	Harmonics 18: Voltage L2 [18]	REAL	V	0.0 ... 760.0		✓	✓	✓	✓	✓	✓	
63435	Harmonics 18: Current L2 [18]	REAL	A	0.0 … 100000.0		✓	✓	✓	✓	✓	✓	✓

Meas-ured value ID	Measured variables	Data type	Unit	Value range	Connection type							
					1P 2W	2P 3W	3x 1P2W	3P 4W	3P 4W1	3P 3W	3P 3W1	3P 4WI
63436	Harmonics 19: Voltage L2 [18]	REAL	V	0.0 ... 760.0		✓	✓	✓	✓	✓	✓	
63437	Harmonics 19: Current L2 [18]	REAL	A	0.0 … 100000.0		✓	✓	✓	✓	✓	✓	✓
63438	Harmonics 20: Voltage L2 [18]	REAL	V	0.0 ... 760.0		✓	✓	✓	✓	✓	✓	
63439	Harmonics 20: Current L2 [18]	REAL	A	0.0 … 100000.0		✓	✓	✓	✓	✓	✓	✓
63440	Harmonics 21: Voltage L2 [18]	REAL	V	0.0 ... 760.0		✓	✓	✓	✓	✓	✓	
63441	Harmonics 21: Current L2 [18]	REAL	A	0.0 … 100000.0		✓	✓	✓	✓	✓	✓	✓
63442	Harmonics 22: Voltage L2 [18]	REAL	V	0.0 ... 760.0		✓	✓	✓	✓	✓	✓	
63443	Harmonics 22: Current L2 [18]	REAL	A	0.0 … 100000.0		✓	✓	✓	✓	✓	✓	✓
63444	Harmonics 23: Voltage L2 [18]	REAL	V	0.0 ... 760.0		✓	✓	✓	✓	✓	✓	
63445	Harmonics 23: Current L2 [18]	REAL	A	0.0 … 100000.0		✓	✓	✓	✓	✓	✓	✓
63446	Harmonics 24: Voltage L2 [18]	REAL	V	0.0 ... 760.0		✓	✓	✓	✓	✓	✓	
63447	Harmonics 24: Current L2 [18]	REAL	A	0.0 … 100000.0		✓	✓	✓	✓	✓	✓	✓
63448	Harmonics 25: Voltage L2 [18]	REAL	V	0.0 ... 760.0		✓	✓	✓	✓	✓	✓	
63449	Harmonics 25: Current L2 [18]	REAL	A	0.0 … 100000.0		✓	✓	✓	✓	✓	✓	✓
63450	Harmonics 26: Voltage L2 [18]	REAL	V	0.0 ... 760.0		✓	✓	✓	✓	✓	✓	
63451	Harmonics 26: Current L2 [18]	REAL	A	0.0 … 100000.0		✓	✓	✓	✓	✓	✓	✓
63452	Harmonics 27: Voltage L2 [18]	REAL	V	0.0 ... 760.0		✓	✓	✓	✓	✓	✓	
63453	Harmonics 27: Current L2 [18]	REAL	A	0.0 … 100000.0		✓	✓	✓	✓	✓	✓	✓
63454	Harmonics 28: Voltage L2 [18]	REAL	V	0.0 ... 760.0		✓	✓	✓	✓	✓	✓	
63455	Harmonics 28: Current L2 [18]	REAL	A	0.0 … 100000.0		✓	✓	✓	✓	✓	✓	✓
63456	Harmonics 29: Voltage L2 [18]	REAL	V	0.0 ... 760.0		✓	✓	✓	✓	✓	✓	
63457	Harmonics 29: Current L2 [18]	REAL	A	0.0 … 100000.0		✓	✓	✓	✓	✓	✓	✓

Measured value ID	Measured variables	Data type	Unit	Value range	Connection type							
					1P 2W	2P 3W	3x 1P2W	3P 4W	3P 4W1	3P 3W	3P 3W1	3P 4WI
63458	Harmonics 30: Voltage L2 [18]	REAL	V	0.0 ... 760.0		✓	✓	✓	✓	✓	✓	
63459	Harmonics 30: Current L2 [18]	REAL	A	0.0 … 100000.0		✓	✓	✓	✓	✓	✓	✓
63460	Harmonics 31: Voltage L2 [18]	REAL	V	0.0 ... 760.0		✓	✓	✓	✓	✓	✓	
63461	Harmonics 31: Current L2 [18]	REAL	A	0.0 … 100000.0		✓	✓	✓	✓	✓	✓	✓
63462	Harmonics 32: Voltage L2 [18]	REAL	V	0.0 ... 760.0		✓	✓	✓	✓	✓	✓	
63463	Harmonics 32: Current L2 [18]	REAL	A	0.0 … 100000.0		✓	✓	✓	✓	✓	✓	✓
63464	Harmonics 33: Voltage L2 [18]	REAL	V	0.0 ... 760.0		✓	✓	✓	✓	✓	✓	
63465	Harmonics 33: Current L2 [18]	REAL	A	0.0 … 100000.0		✓	✓	✓	✓	✓	✓	✓
63466	Harmonics 34: Voltage L2 [18]	REAL	V	0.0 ... 760.0		✓	✓	✓	✓	✓	✓	
63467	Harmonics 34: Current L2 [18]	REAL	A	0.0 … 100000.0		✓	✓	✓	✓	✓	✓	✓
63468	Harmonics 35: Voltage L2 [18]	REAL	V	0.0 ... 760.0		✓	✓	✓	✓	✓	✓	
63469	Harmonics 35: Current L2 [18]	REAL	A	0.0 … 100000.0		✓	✓	✓	✓	✓	✓	✓
63470	Harmonics 36: Voltage L2 [18]	REAL	V	0.0 ... 760.0		✓	✓	✓	✓	✓	✓	
63471	Harmonics 36: Current L2 [18]	REAL	A	0.0 … 100000.0		✓	✓	✓	✓	✓	✓	✓
63472	Harmonics 37: Voltage L2 [18]	REAL	V	0.0 ... 760.0		✓	✓	✓	✓	✓	✓	
63473	Harmonics 37: Current L2 [18]	REAL	A	0.0 … 100000.0		✓	✓	✓	✓	✓	✓	✓
63474	Harmonics 38: Voltage L2 [18]	REAL	V	0.0 ... 760.0		✓	✓	✓	✓	✓	✓	
63475	Harmonics 38: Current L2 [18]	REAL	A	0.0 … 100000.0		✓	✓	✓	✓	✓	✓	✓
63476	Harmonics 39: Voltage L2 [18]	REAL	V	0.0 ... 760.0		✓	✓	✓	✓	✓	✓	
63477	Harmonics 39: Current L2 [18]	REAL	A	0.0 … 100000.0		✓	✓	✓	✓	✓	✓	✓
63478	Harmonics 40: Voltage L2 [18]	REAL	V	0.0 ... 760.0		✓	✓	✓	✓	✓	✓	
63479	Harmonics 40: Current L2 [18]	REAL	A	0.0 … 100000.0		✓	✓	✓	✓	✓	✓	✓

Meas-ured value ID	Measured variables	Data type	Unit	Value range	Connection type							
					1P 2W	2P 3W	3x 1P2W	3P 4W	3P 4W1	3P 3W	3P 3W1	3P 4WI
63800	Harmonics 1: Voltage L3 [18]	REAL	V	0.0 ... 760.0			✓	✓	✓	✓	✓	
63801	Harmonics 1: Current L3 [18]	REAL	A	0.0 … 100000.0			✓	✓	✓	✓	✓	✓
63802	Harmonics 2: Voltage L3 [18]	REAL	V	0.0 ... 760.0			✓	✓	✓	✓	✓	
63803	Harmonics 2: Current L3 [18]	REAL	A	0.0 … 100000.0			✓	✓	✓	✓	✓	✓
63804	Harmonics 3: Voltage L3 [18]	REAL	V	0.0 ... 760.0			✓	✓	✓	✓	✓	
63805	Harmonics 3: Current L3 [18]	REAL	A	0.0 … 100000.0			✓	✓	✓	✓	✓	✓
63806	Harmonics 4: Voltage L3 [18]	REAL	V	0.0 ... 760.0			✓	✓	✓	✓	✓	
63807	Harmonics 4: Current L3 [18]	REAL	A	0.0 … 100000.0			✓	✓	✓	✓	✓	✓
63808	Harmonics 5: Voltage L3 [18]	REAL	V	0.0 ... 760.0			✓	✓	✓	✓	✓	
63809	Harmonics 5: Current L3 [18]	REAL	A	0.0 … 100000.0			✓	✓	✓	✓	✓	✓
63810	Harmonics 6: Voltage L3 [18]	REAL	V	0.0 ... 760.0			✓	✓	✓	✓	✓	
63811	Harmonics 6: Current L3 [18]	REAL	A	0.0 … 100000.0			✓	✓	✓	✓	✓	✓
63812	Harmonics 7: Voltage L3 [18]	REAL	V	0.0 ... 760.0			✓	✓	✓	✓	✓	
63813	Harmonics 7: Current L3 [18]	REAL	A	0.0 … 100000.0			✓	✓	✓	✓	✓	✓
63814	Harmonics 8: Voltage L3 [18]	REAL	V	0.0 ... 760.0			✓	✓	✓	✓	✓	
63815	Harmonics 8: Current L3 [18]	REAL	A	0.0 … 100000.0			✓	✓	✓	✓	✓	✓
63816	Harmonics 9: Voltage L3 [18]	REAL	V	0.0 ... 760.0			✓	✓	✓	✓	✓	
63817	Harmonics 9: Current L3 [18]	REAL	A	0.0 … 100000.0			✓	✓	✓	✓	✓	✓
63818	Harmonics 10: Voltage L3 [18]	REAL	V	0.0 ... 760.0			✓	✓	✓	✓	✓	
63819	Harmonics 10: Current L3 [18]	REAL	A	0.0 … 100000.0			✓	✓	✓	✓	✓	✓
63820	Harmonics 11: Voltage L3 [18]	REAL	V	0.0 ... 760.0			✓	✓	✓	✓	✓	
63821	Harmonics 11: Current L3 [18]	REAL	A	0.0 … 100000.0			✓	✓	✓	✓	✓	✓

Meas-ured value ID	Measured variables	Data type	Unit	Value range	Connection type							
					1P 2W	2P 3W	3x 1P2W	3P 4W	3P 4W1	3P 3W	3P 3W1	3P 4WI
63822	Harmonics 12: Voltage L3 [18]	REAL	V	0.0 ... 760.0			✓	✓	✓	✓	✓	
63823	Harmonics 12: Current L3 [18]	REAL	A	0.0 … 100000.0			✓	✓	✓	✓	✓	✓
63824	Harmonics 13: Voltage L3 [18]	REAL	V	0.0 ... 760.0			✓	✓	✓	✓	✓	
63825	Harmonics 13: Current L3 [18]	REAL	A	0.0 … 100000.0			✓	✓	✓	✓	✓	✓
63826	Harmonics 14: Voltage L3 [18]	REAL	V	0.0 ... 760.0			✓	✓	✓	✓	✓	
63827	Harmonics 14: Current L3 [18]	REAL	A	0.0 … 100000.0			✓	✓	✓	✓	✓	✓
63828	Harmonics 15: Voltage L3 [18]	REAL	V	0.0 ... 760.0			✓	✓	✓	✓	✓	
63829	Harmonics 15: Current L3 [18]	REAL	A	0.0 … 100000.0			✓	✓	✓	✓	✓	✓
63830	Harmonics 16: Voltage L3 [18]	REAL	V	0.0 ... 760.0			✓	✓	✓	✓	✓	
63831	Harmonics 16: Current L3 [18]	REAL	A	0.0 … 100000.0			✓	✓	✓	✓	✓	✓
63832	Harmonics 17: Voltage L3 [18]	REAL	V	0.0 ... 760.0			✓	✓	✓	✓	✓	
63833	Harmonics 17: Current L3 [18]	REAL	A	0.0 … 100000.0			✓	✓	✓	✓	✓	✓
63834	Harmonics 18: Voltage L3 [18]	REAL	V	0.0 ... 760.0			✓	✓	✓	✓	✓	
63835	Harmonics 18: Current L3 [18]	REAL	A	0.0 … 100000.0			✓	✓	✓	✓	✓	✓
63836	Harmonics 19: Voltage L3 [18]	REAL	V	0.0 ... 760.0			✓	✓	✓	✓	✓	
63837	Harmonics 19: Current L3 [18]	REAL	A	0.0 … 100000.0			✓	✓	✓	✓	✓	✓
63838	Harmonics 20: Voltage L3 [18]	REAL	V	0.0 ... 760.0			✓	✓	✓	✓	✓	
63839	Harmonics 20: Current L3 [18]	REAL	A	0.0 … 100000.0			✓	✓	✓	✓	✓	✓
63840	Harmonics 21: Voltage L3 [18]	REAL	V	0.0 ... 760.0			✓	✓	✓	✓	✓	
63841	Harmonics 21: Current L3 [18]	REAL	A	0.0 … 100000.0			✓	✓	✓	✓	✓	✓
63842	Harmonics 22: Voltage L3 [18]	REAL	V	0.0 ... 760.0			✓	✓	✓	✓	✓	
63843	Harmonics 22: Current L3 [18]	REAL	A	0.0 … 100000.0			✓	✓	✓	✓	✓	✓

Measured value ID	Measured variables	Data type	Unit	Value range	Connection type							
					1P 2W	2P 3W	3x 1P2W	3P 4W	3P 4W1	3P 3W	3P 3W1	3P 4WI
63844	Harmonics 23: Voltage L3 [18]	REAL	V	0.0 ... 760.0			✓	✓	✓	✓	✓	
63845	Harmonics 23: Current L3 [18]	REAL	A	0.0 … 100000.0			✓	✓	✓	✓	✓	✓
63846	Harmonics 24: Voltage L3 [18]	REAL	V	0.0 ... 760.0			✓	✓	✓	✓	✓	
63847	Harmonics 24: Current L3 [18]	REAL	A	0.0 … 100000.0			✓	✓	✓	✓	✓	✓
63848	Harmonics 25: Voltage L3 [18]	REAL	V	0.0 ... 760.0			✓	✓	✓	✓	✓	
63849	Harmonics 25: Current L3 [18]	REAL	A	0.0 … 100000.0			✓	✓	✓	✓	✓	✓
63850	Harmonics 26: Voltage L3 [18]	REAL	V	0.0 ... 760.0			✓	✓	✓	✓	✓	
63851	Harmonics 26: Current L3 [18]	REAL	A	0.0 … 100000.0			✓	✓	✓	✓	✓	✓
63852	Harmonics 27: Voltage L3 [18]	REAL	V	0.0 ... 760.0			✓	✓	✓	✓	✓	
63853	Harmonics 27: Current L3 [18]	REAL	A	0.0 … 100000.0			✓	✓	✓	✓	✓	✓
63854	Harmonics 28: Voltage L3 [18]	REAL	V	0.0 ... 760.0			✓	✓	✓	✓	✓	
63855	Harmonics 28: Current L3 [18]	REAL	A	0.0 … 100000.0			✓	✓	✓	✓	✓	✓
63856	Harmonics 29: Voltage L3 [18]	REAL	V	0.0 ... 760.0			✓	✓	✓	✓	✓	
63857	Harmonics 29: Current L3 [18]	REAL	A	0.0 … 100000.0			✓	✓	✓	✓	✓	✓
63858	Harmonics 30: Voltage L3 [18]	REAL	V	0.0 ... 760.0			✓	✓	✓	✓	✓	
63859	Harmonics 30: Current L3 [18]	REAL	A	0.0 … 100000.0			✓	✓	✓	✓	✓	✓
63860	Harmonics 31: Voltage L3 [18]	REAL	V	0.0 ... 760.0			✓	✓	✓	✓	✓	
63861	Harmonics 31: Current L3 [18]	REAL	A	0.0 … 100000.0			✓	✓	✓	✓	✓	✓
63862	Harmonics 32: Voltage L3 [18]	REAL	V	0.0 ... 760.0			✓	✓	✓	✓	✓	
63863	Harmonics 32: Current L3 [18]	REAL	A	0.0 … 100000.0			✓	✓	✓	✓	✓	✓
63864	Harmonics 33: Voltage L3 [18]	REAL	V	0.0 ... 760.0			✓	✓	✓	✓	✓	
63865	Harmonics 33: Current L3 [18]	REAL	A	0.0 … 100000.0			✓	✓	✓	✓	✓	✓

Measured value ID	Measured variables	Data type	Unit	Value range	Connection type							
					1P 2W	2P 3W	3x 1P2W	3P 4W	3P 4W1	3P 3W	3P 3W1	3P 4WI
63866	Harmonics 34: Voltage L3 [18]	REAL	V	0.0 ... 760.0			✓	✓	✓	✓	✓	
63867	Harmonics 34: Current L3 [18]	REAL	A	0.0 … 100000.0			✓	✓	✓	✓	✓	✓
63868	Harmonics 35: Voltage L3 [18]	REAL	V	0.0 ... 760.0			✓	✓	✓	✓	✓	
63869	Harmonics 35: Current L3 [18]	REAL	A	0.0 … 100000.0			✓	✓	✓	✓	✓	✓
63870	Harmonics 36: Voltage L3 [18]	REAL	V	0.0 ... 760.0			✓	✓	✓	✓	✓	
63871	Harmonics 36: Current L3 [18]	REAL	A	0.0 … 100000.0			✓	✓	✓	✓	✓	✓
63872	Harmonics 37: Voltage L3 [18]	REAL	V	0.0 ... 760.0			✓	✓	✓	✓	✓	
63873	Harmonics 37: Current L3 [18]	REAL	A	0.0 … 100000.0			✓	✓	✓	✓	✓	✓
63874	Harmonics 38: Voltage L3 [18]	REAL	V	0.0 ... 760.0			✓	✓	✓	✓	✓	
63875	Harmonics 38: Current L3 [18]	REAL	A	0.0 … 100000.0			✓	✓	✓	✓	✓	✓
63876	Harmonics 39: Voltage L3 [18]	REAL	V	0.0 ... 760.0			✓	✓	✓	✓	✓	
63877	Harmonics 39: Current L3 [18]	REAL	A	0.0 … 100000.0			✓	✓	✓	✓	✓	✓
63878	Harmonics 40: Voltage L3 [18]	REAL	V	0.0 ... 760.0			✓	✓	✓	✓	✓	
63879	Harmonics 40: Current L3 [18]	REAL	A	0.0 … 100000.0			✓	✓	✓	✓	✓	✓
65496	Power quality analysis - Qualifier	UDINT	Bit track	0 ... 4294967295	✓	✓	✓	✓	✓	✓	✓	✓
65497	Current module time	PNIO	sec		✓	✓	✓	✓	✓	✓	✓	✓
65500	Qualifier L1	UINT	Bit track	0 ... 65535	✓	✓	✓	✓	✓	✓	✓	✓
65501	Qualifier L2	UINT	Bit track	0 ... 65535		✓	✓	✓	✓	✓	✓	✓
65502	Qualifier L3	UINT	Bit track	0 ... 65535			✓	✓	✓	✓	✓	✓
65503	Qualifier L1L2L3	UINT	Bit track	0 ... 65535	✓	✓	✓	✓	✓	✓	✓	✓
65504	Operating hours counter L1L2L3 [5]	REAL	h	0.0 ... 3.4e+38	✓	✓	✓	✓	✓	✓	✓	✓
65505	Operating hours counter L1 [5]	REAL	h	0.0 ... 3.4e+38	✓	✓	✓	✓	✓	✓	✓	✓
65506	Operating hours counter L2 [5]	REAL	h	0.0 ... 3.4e+38		✓	✓	✓	✓	✓	✓	✓

Measured value ID	Measured variables	Data type	Unit	Value range	Connection type							
					1P 2W	2P 3W	3x 1P2W	3P 4W	3P 4W1	3P 3W	3P 3W1	3P 4WI
65507	Operating hours counter L3 [5]	REAL	h	0.0 ... 3.4e+38			✓	✓	✓	✓	✓	✓
65508	Status of energy counter overflows	UINT	Bit track	0 ... 65535	✓	✓	✓	✓	✓	✓	✓	✓
65509	Status of limit violations 1…16	UINT	Bit track	0 ... 65535	✓	✓	✓	✓	✓	✓	✓	✓
65510	Counter for limit violations GW1 [5]	UDINT		0 ... 4294967295	✓	✓	✓	✓	✓	✓	✓	✓
65511	Counter for limit violations GW2 [5]	UDINT		0 ... 4294967295	✓	✓	✓	✓	✓	✓	✓	✓
65512	Counter for limit violations GW3 [5]	UDINT		0 ... 4294967295	✓	✓	✓	✓	✓	✓	✓	✓
65513	Counter for limit violations GW4 [5]	UDINT		0 ... 4294967295	✓	✓	✓	✓	✓	✓	✓	✓
65514	Counter for limit violations GW5 [5]	UDINT		0 ... 4294967295	✓	✓	✓	✓	✓	✓	✓	✓
65515	Counter for limit violations GW6 [5]	UDINT		0 ... 4294967295	✓	✓	✓	✓	✓	✓	✓	✓
65516	Counter for limit violations GW7 [5]	UDINT		0 ... 4294967295	✓	✓	✓	✓	✓	✓	✓	✓
65517	Counter for limit violations GW8 [5]	UDINT		0 ... 4294967295	✓	✓	✓	✓	✓	✓	✓	✓
65518	Counter for limit violations GW9 [5]	UDINT		0 ... 4294967295	✓	✓	✓	✓	✓	✓	✓	✓
65519	Counter for limit violations GW10 [5]	UDINT		0 ... 4294967295	✓	✓	✓	✓	✓	✓	✓	✓
65520	Counter for limit violations GW11 [5]	UDINT		0 ... 4294967295	✓	✓	✓	✓	✓	✓	✓	✓
65521	Counter for limit violations GW12 [5]	UDINT		0 ... 4294967295	✓	✓	✓	✓	✓	✓	✓	✓
65522	Counter for limit violations GW13 [5]	UDINT		0 ... 4294967295	✓	✓	✓	✓	✓	✓	✓	✓
65523	Counter for limit violations GW14 [5]	UDINT		0 ... 4294967295	✓	✓	✓	✓	✓	✓	✓	✓

Measured value ID	Measured variables	Data type	Unit	Value range	Connection type							
					1P 2W	2P 3W	3x 1P2W	3P 4W	3P 4W1	3P 3W	3P 3W1	3P 4WI
65524	Counter for limit violations GW15 [5]	UDINT		0 ... 4294967295	✓	✓	✓	✓	✓	✓	✓	✓
65525	Counter for limit violations GW16 [5]	UDINT		0 ... 4294967295	✓	✓	✓	✓	✓	✓	✓	✓

Z = additionally possible measured values in the current path (e.g. instead of neutral current)

1 Effective value

2 IEC 61557-12

3 floating arithmetic average value above 200 ms

4 floating arithmetic average value above 10 s

5 Simple summation

6 Calculation from the start/restart (inflow and outflow values are positive numbers)

7 floating arithmetic average value above 3 s

8 floating arithmetic average value above 600 s

9 floating arithmetic average value above 900 s

10 Block measurement over 900 s

11 direct measurement of the signal wave at 8 ksps

12 Total of the parts / number of parts

13 THD (Total Harmonic Distortion) is calculated once per second by the RMS of the fundamental oscillation and the total effective value (IEEE standard 1459–2010)

14 Min./Max: Slave pointer function of the respective basic value from start/reset

15 Calculation according to DIN EN 61000-3-316 half-wave value

16 Half-wave value

17 Instantaneous value

18 FFT (Fast Fourier Transformation)

19 While pure RMS measured values only contain AC voltage components of the signal, 10/12 and half-wave measured values also show DC voltage components of the signal

The table below is relevant for the description of the user data variants:

Measured value ID	Measured variables	Data type	Unit	Value range	Connection type							
					1 P 2 W	2 P 3 W	3x 1 P 2 W	3 P 4 W	3 P 4 W 1	3 P 3 W	3 P 3 W 1	3 P 4 W I
66001	Voltage L1-N [1]	UINT	0.01 V	0 ... 65535	✓	✓	✓	✓	✓			
66002	Voltage L2-N [1]	UINT	0.01 V	0 ... 65535		✓	✓	✓	✓			
66003	Voltage L3-N [1]	UINT	0.01 V	0 ... 65535			✓	✓	✓			
66004	Voltage L1-L2 [2]	UINT	0.01 V	0 ... 65535		✓		✓	✓	✓	✓	
66005	Voltage L2-L3 [2]	UINT	0.01 V	0 ... 65535				✓	✓	✓	✓	
66006	Voltage L3-L1 [2]	UINT	0.01 V	0 ... 65535				✓	✓	✓	✓	
66007	Current L1 [1]	UINT	1 mA	0 ... 65535	✓	✓	✓	✓	✓	✓	✓	✓
66008	Current L2 [1]	UINT	1 mA	0 ... 65535		✓	✓	✓	✓	✓	✓	✓
66009	Current L3 [1]	UINT	1 mA	0 ... 65535			✓	✓	✓	✓	✓	✓
66010	Apparent power L1 [3]	INT	1 VA	-27648 ... 27648	✓	✓	✓	✓	✓	✓	✓	
66011	Apparent power L2 [3]	INT	1 VA	-27648 ... 27648		✓	✓	✓	✓	✓	✓	
66012	Apparent power L3 [3]	INT	1 VA	-27648 ... 27648			✓	✓	✓	✓	✓	
66013	Active power L1 [3]	INT	1 W	-27648 ... 27648	✓	✓	✓	✓	✓	✓	✓	
66014	Active power L2 [3]	INT	1 W	-27648 ... 27648		✓	✓	✓	✓	✓	✓	
66015	Active power L3 [3]	INT	1 W	-27648 ... 27648			✓	✓	✓	✓	✓	
66016	Reactive power Qn L1[3]	INT	1 var	-27648 ... 27648	✓	✓	✓	✓	✓	✓	✓	
66017	Reactive power Qn L2[3]	INT	1 var	-27648 ... 27648		✓	✓	✓	✓	✓	✓	
66018	Reactive power Qn L3[3]	INT	1 var	-27648 ... 27648			✓	✓	✓	✓	✓	
66019	Power factor λ L1 [3]	USINT	0.01	0 ... 100	✓	✓	✓	✓	✓	✓	✓	
66020	Power factor λ L2 [3]	USINT	0.01	0 ... 100		✓	✓	✓	✓	✓	✓	
66021	Power factor λ L3 [3]	USINT	0.01	0 ... 100			✓	✓	✓	✓	✓	
66030	Frequency [4]	USINT	1 Hz	45 ... 65	✓	✓	✓	✓	✓	✓	✓	✓
66034	Active power L1L2L3 [5]	INT	1 W	-27648 ... 27648	✓	✓	✓	✓	✓	✓	✓	
66035	Reactive power Qn L1L2L3[5]	INT	1 var	-27648 ... 27648	✓	✓	✓	✓	✓	✓	✓	
66036	Apparent power L1L2L3 [5]	INT	1 VA	-27648 ... 27648	✓	✓	✓	✓	✓	✓	✓	
66037	Power factor λ L1L2L3 [6]	USINT	0.01	0 ... 100	✓	✓	✓	✓	✓	✓	✓	
66038	Frequency [4]	UINT	0.01 Hz	4500 ... 6500	✓	✓	✓	✓	✓	✓	✓	✓

Format

Table B- 2 Format and its length in bytes

Format in STEP 7 (TIA Portal)	Format to IEEE	Length in bytes	Comment
BYTE	BYTE	1 byte	Bit field with 8 bit
WORD	WORD	2 bytes	Bit field with 16 bit
SINT	INT8 (signed)	1 byte	Fixed-point number 8 bits with sign
USINT	INT8 (unsigned)	1 byte	Fixed-point number 8 bits without sign
INT	INT (signed)	2 bytes	Fixed-point number 16 bits with sign
UINT	INT (unsigned)	2 bytes	Fixed-point number 16 bits without sign
UDINT	INT32 (unsigned)	4 bytes	Fixed-point number 32 bits without sign
DINT	INT32 (signed)	4 bytes	Fixed-point number, 32 bits with sign
REAL	Float32	4 bytes	Floating-point number 32 bits with sign
LREAL	Float64	8 bytes	Floating-point number 64 bits with sign

Module versions

C

C.1 Module version "2 I / 2 Q"

User data of the module

The module has 2 bytes of input user data and 2 bytes of output user data for status and control information. At this module version measured variables can be read solely via measured value data records (no measured variables can be evaluated via user data).

Structure of input user data

The structure of the input user data is fixed.

Table C- 1 Structure of input user data (2 bytes)

Byte	Validity	Designation	Comment
0	Module	User data variant	Constant = 0x80
1	Module	Quality information	Quality bits to describe the quality of the basic measured values

Allocation of the input user data

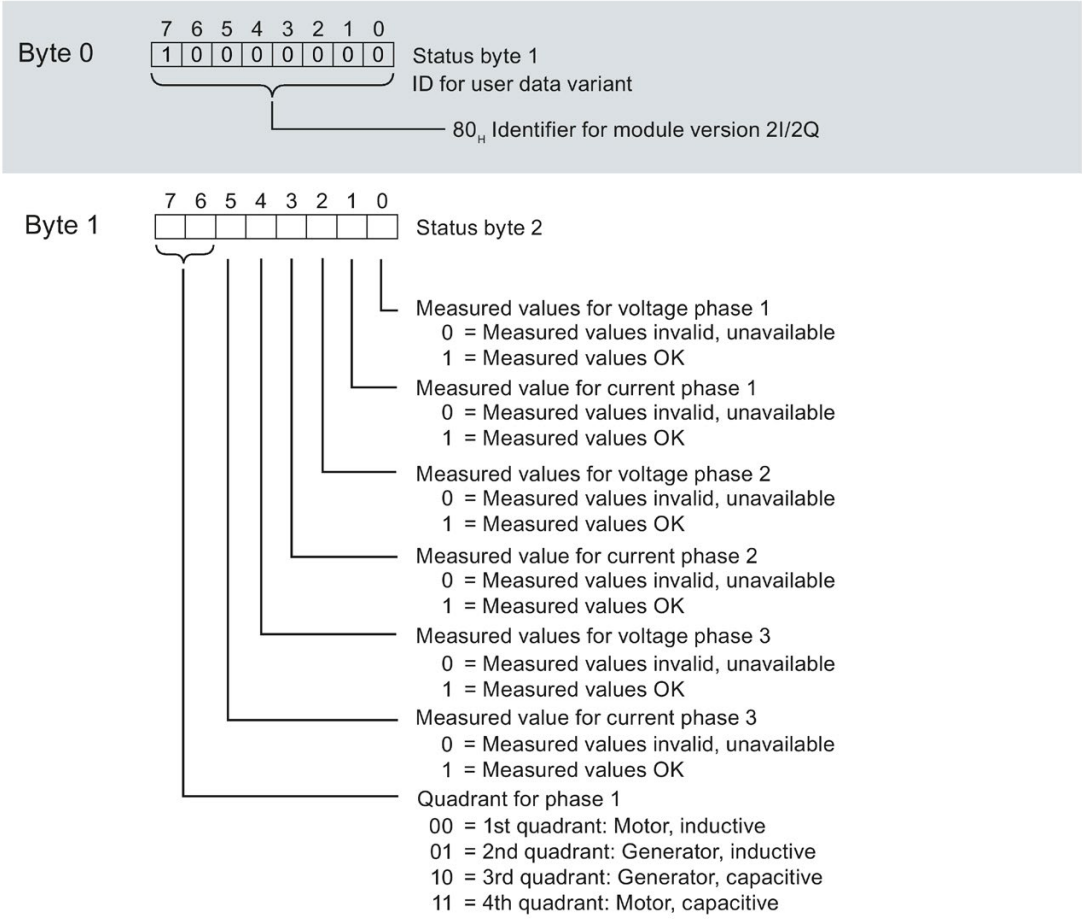

Figure C-1 Allocation of the status bytes in the input user data (2 bytes)

Structure of output user data

The structure of the output user data is fixed.

Table C- 2 Structure of output user data (2 bytes)

Byte	Validity	Designation	Comment
0	Module	Reserved	Reserved
1	Module	Control outputs	Reset of values and counters, gate

Assignment of the output user data

Via the output user data you control for all phases

- Resetting for all minimum values, maximum values, limits, operating hours counter and energy meters.
- The counter gates for operating hours counter and energy counters.

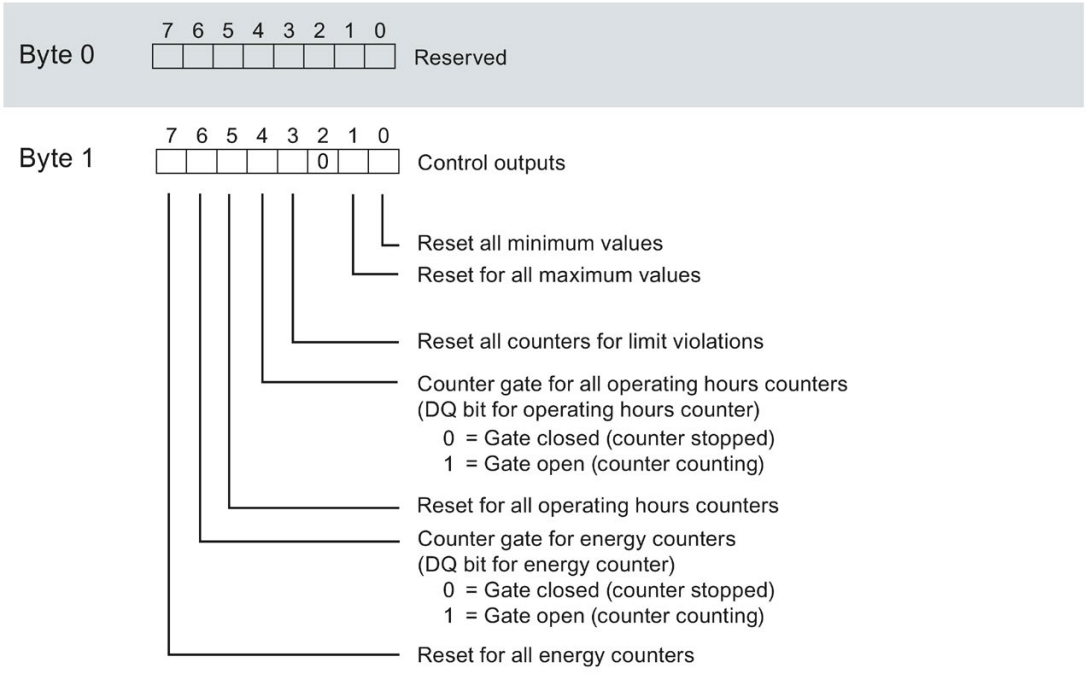

Figure C-2 Allocation of the control byte in the output user data (1 byte)

Note

For module version 2 I / 2 Q, a reset of the selected variables always acts on **all** measured values/counter levels of the three phases.

- Reset energy counter: Acts on all active, reactive and apparent energies of all phases
- Reset operating hours counter: Acts on the counters of Phases 1 to 3
- Reset minimum / maximum values: Acts on the minimum and maximum value calculations of Phases 1-3
- Reset all counters for limit violations: Acts on all 16 limit values.

C.2 Module version "32 I / 20 Q"

User data of the module

The module occupies 32 bytes of input user data and 20 bytes of output user data. Of these the module uses 2 bytes input data for status information and 20 bytes output data for control information. Measured variables can be read cyclically via user data (Bytes 2 to 31) or acyclically via measured value data records

Structure of input user data

You can set the contents of the input user data dynamically. You can choose between different user data variants.

Table C- 3 Structure of input user data (32 bytes)

Byte	Validity	Designation	Comment
0	Module	User data variant	-
1	Module	Quality information	Quality bits to describe the quality of the basic measured values
2 ... 31	Module or phase	Data	2 or 4 byte measured values or cumulative values according to user data variant

Allocation of the input user data

You can change the measured variables during operation. You can choose between different user data variants.

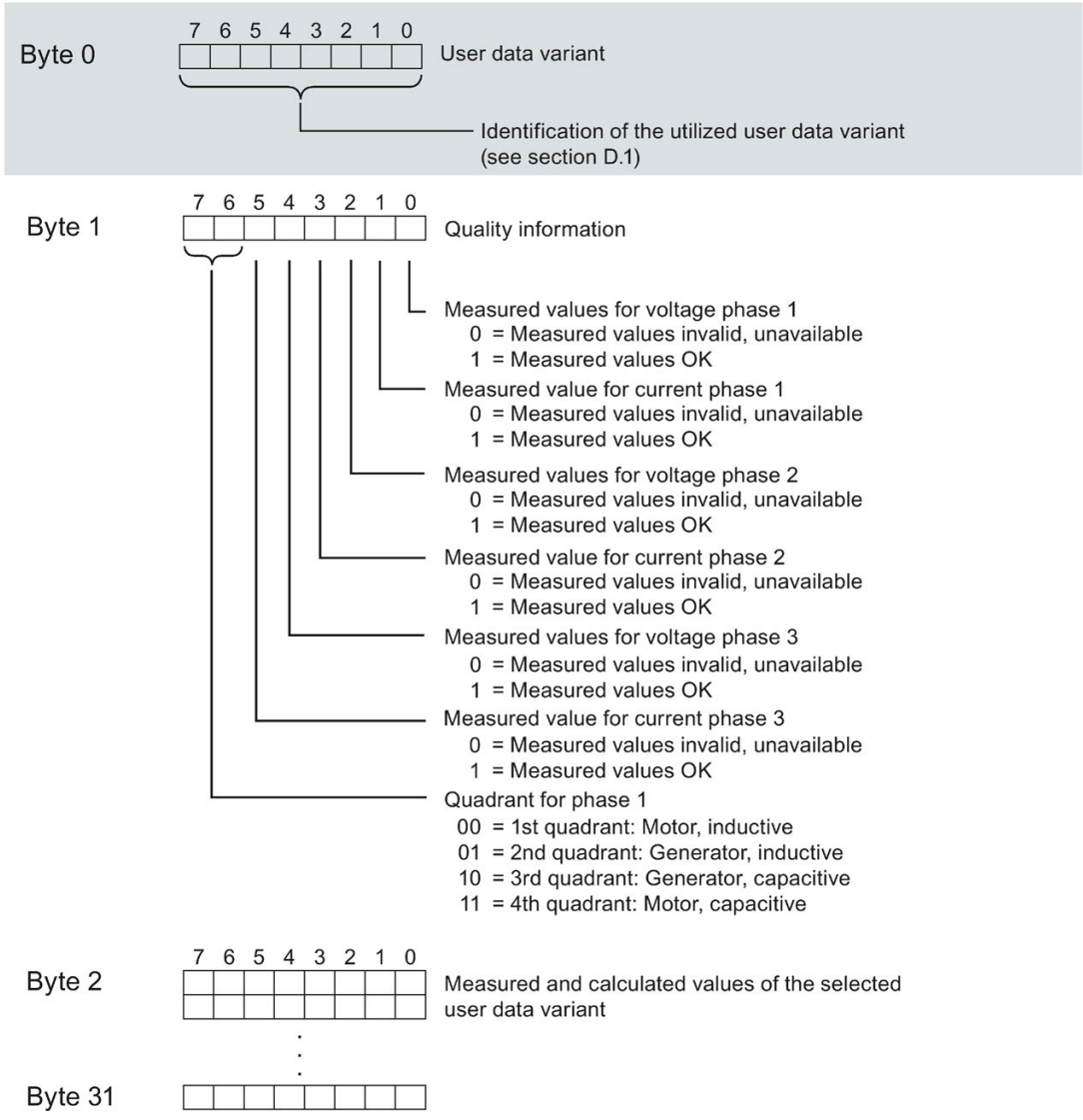

Figure C-3 Assignment of the input user data (32 bytes)

Structure of output user data

The structure of the output user data is fixed and is the same at all the selectable user data variants.

Via the output user data you control globally or phase-specifically

- Resetting for minimum values, maximum values, limits, operating hours counter and energy meters.
- The counter gates for operating hours counter and energy counters.
- Gate for limits, minimum values and maximum values.

Table C- 4 Structure of output user data (20 bytes)

Byte	Validity	Designation	Comment
0	Module	User data variant	Control byte for switching the user data variant
1	Module	Control byte 1	Global resetting of values and counters, gate
2	Module	Control byte 2	Selection of the energy counter to be reset
3	Module	Control byte 3	Control of the limit monitoring of limit values 9 to 16
4	Module	Control byte 4	Control of the limit monitoring of limit values 1 to 8
5	Module	Reserved	-
6	Phase L1	Control byte 6	Phase-specific resetting of values and counters, gate for Phase L1
7	Phase L1	Control byte 7	
8	Phase L2	Control byte 8	Phase-specific resetting of values and counters, gate for Phase L2
9	Phase L2	Control byte 9	
10	Phase L3	Control byte 10	Phase-specific resetting of values and counters, gate for Phase L3
11	Phase L3	Control byte 11	
12	Module and phases L1, L2, L3	Control byte 12	Phase-specific deletion of power quality analysis results
13	Reserved		
14	Reserved		
15	Reserved		
16	Module and phases L1, L2, L3	Control byte 16	General reset (Page 38)
17	Reserved		
18	Reserved		
19	Reserved		

Control bytes for user data variant

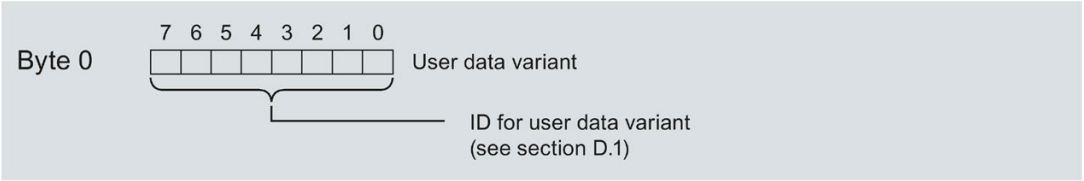

Figure C-4 Allocation of the control bytes for user data variant (Byte 0)

Control bytes for all three phases

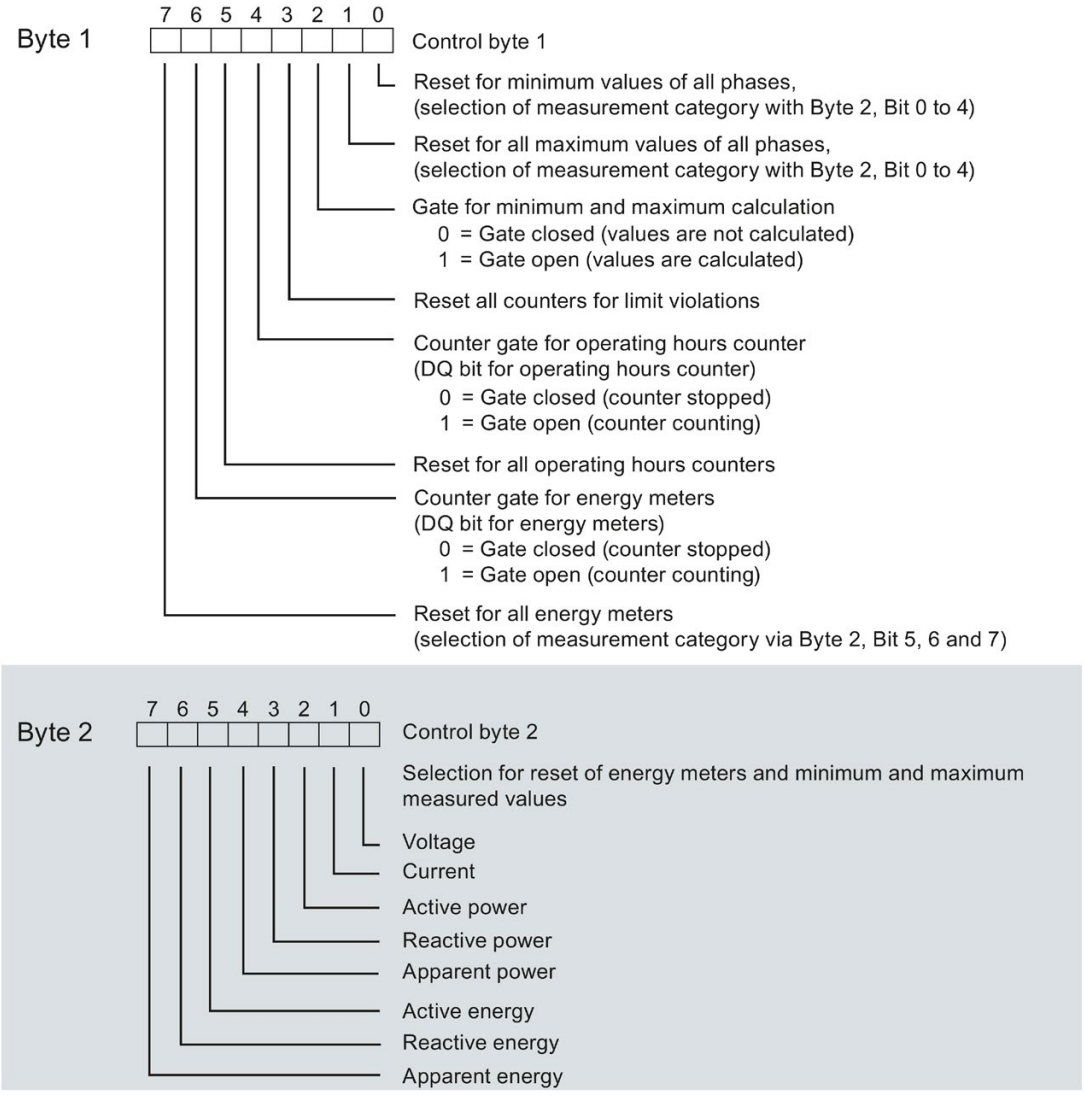

Figure C-5 Allocation of the control bytes for all three phases (bytes 1 and 2)

Control bytes for limit monitoring

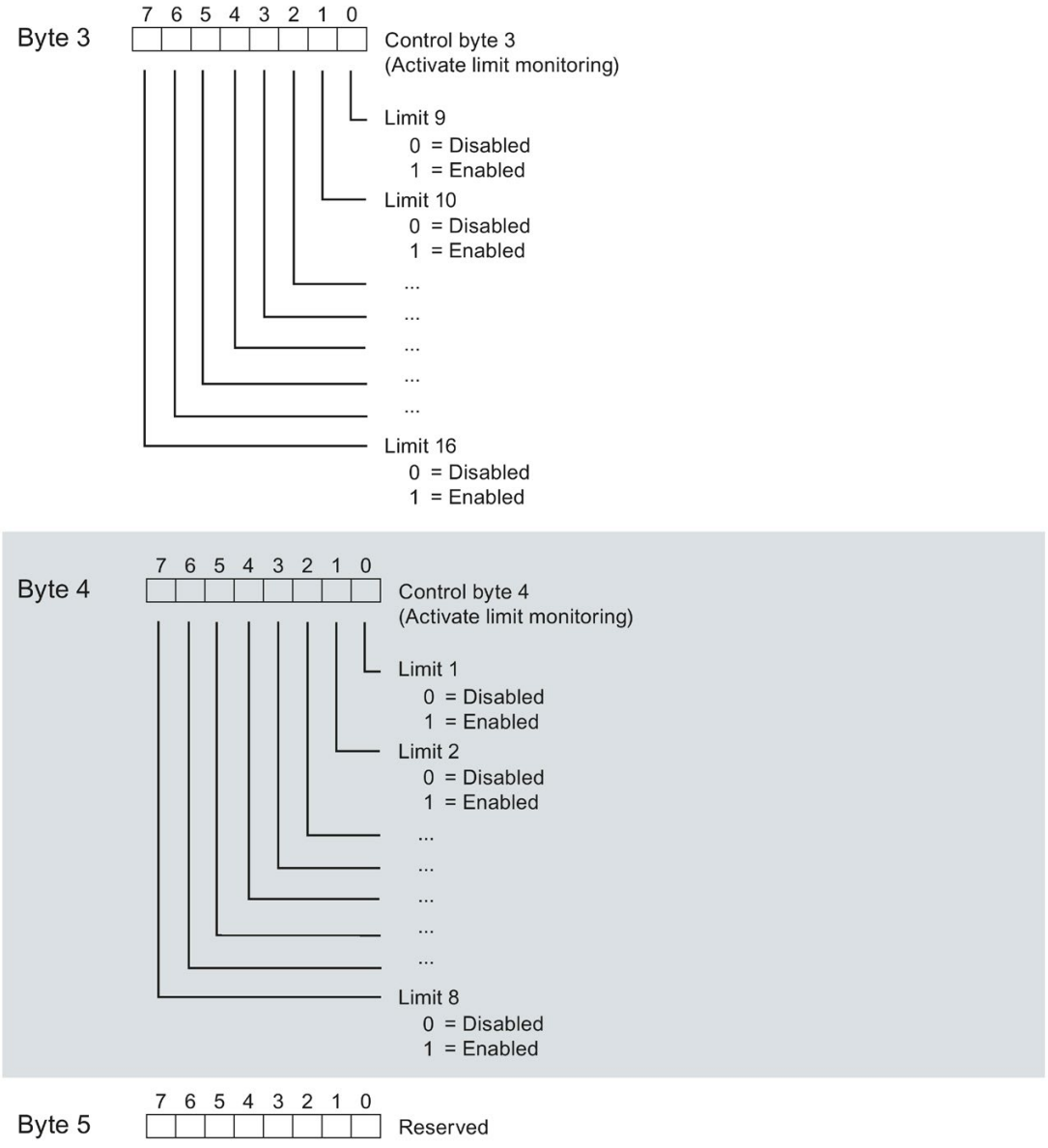

Figure C-6 Allocation of the control bytes for limit monitoring (bytes 3 to 5)

Control bytes for each individual phase

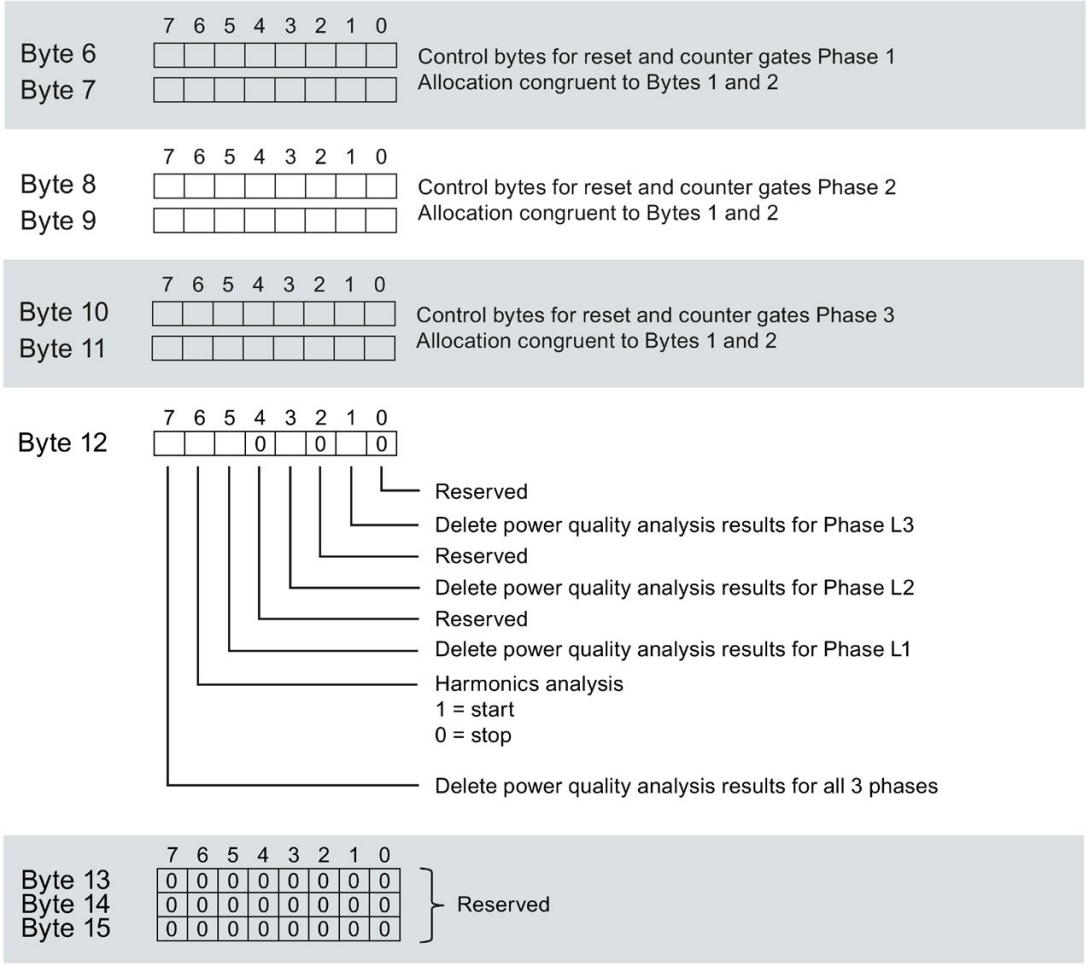

Figure C-7 Allocation of the control bytes for each individual phase (bytes 6 to 15)

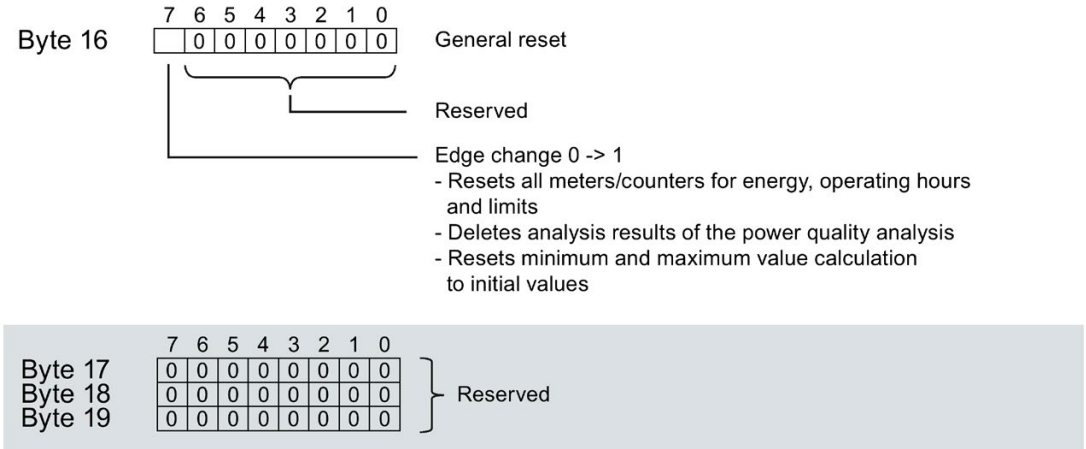

Figure C-8 Allocation of the control bytes for each individual phase (bytes 16 to 19)

C.3 "User-specific" module version

User data of the module

The module occupies between 16 and 256 bytes of input user data and 20 bytes of output user data. Of these the module uses 2 bytes input data for status information and 20 bytes output data for control information. Measured variables can be read cyclically via user data (as of Byte 2) or acyclically via measured value data records

Structure of input user data

You configure the structure of the input user data starting at Byte 2 at this module version itself. An input user data length of 32 bytes also allows you to set the input user data dynamically. You can choose between different user data variants.

Table C- 5 Structure of input user data (16 to 256 bytes)

Byte	Validity	Designation	Comment
0	Module	User data variant	-
1	Module	Quality information	Quality bits to describe the quality of the basic measured values
2 ... 255	Module or phase	Data	Measured values or calculated values in accordance with their configuration: • At configuration in STEP 7 the size of the input user data is calculated automatically. • With configuration via the GSD file the size of the input user data amounts to 32, 64, 128 or 256 bytes. The memory area has to be sufficiently large for the measured variables defined in parameter data record 130 or 131.

Allocation of the input user data

You can change the measured variables during operation. You can choose between different user data variants.

The allocation of the status information in bytes 0 and 1 corresponds to the module version 32 I / 20 Q, see appendix Module version "32 I / 20 Q" (Page 194).

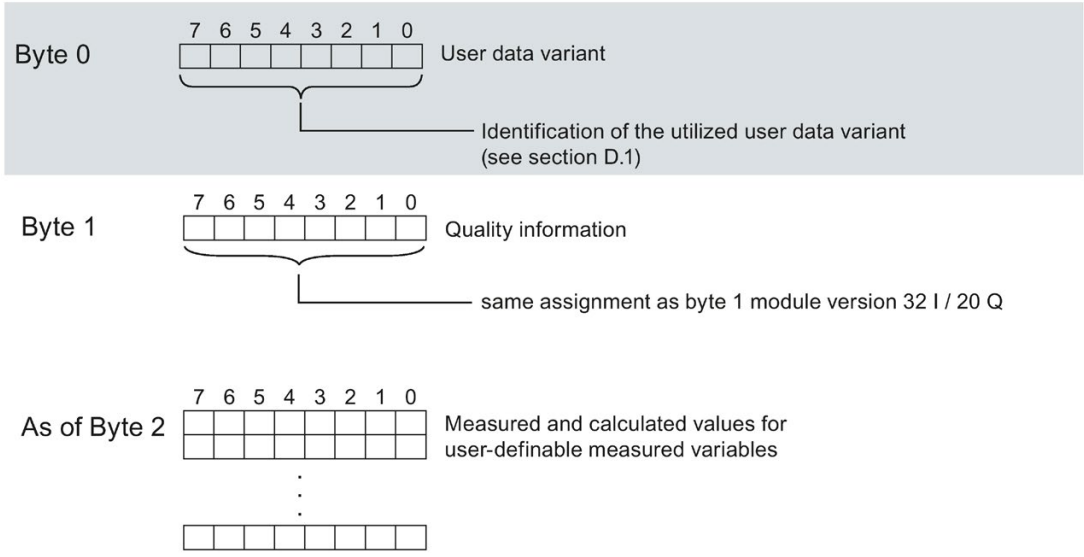

Figure C-9 Allocation of the input user data ("User-specific" module version"

Note

Behavior at switchover in case of the input user data being too small

If the configured size of the variable input user data is smaller than the sized of the fixed user data variant, the response depends on the type of switchover:

- Re-assigning parameters via parameter data records DS 128 / DS 130 / DS 131: Output of a parameter assignment error (33). No switchover.
- Switchover using output byte 0 of a user data variant: No switchover and no error message.

Structure of output user data

The structure of the 20-byte output user data is fixed and is identical to the output user data (control bytes) of the Module version "32 I / 20 Q" (Page 194).

C.4 Module version "EE@Industry measurement data profile E0 / E1 / E2 / E3"

User data of the module

The four versions according to EE@Industry use between 4 and 104 bytes of input user data and 20 bytes of output user data. A dynamic switchover of the input user data is not possible.

Structure of input user data

The structure of the input user data for the module versions according to the EE@Industry standard is fixed and depends on the selected measurement data profile.

Table C- 6 Measurement data profile E0

Byte	Allocation	Data type	Unit	Value range	Measured value ID
0...3	Current L1	REAL	1 A	0.0 … 100000.0	7
4...7	Current L2	REAL	1 A	0.0 … 100000.0	8
8...11	Current L3	REAL	1 A	0.0 … 100000.0	9

Table C- 7 Measurement data profile E1

Byte	Allocation	Data type	Unit	Value range	Measured value ID
0...3	Total active power L1L2L3	REAL	1 W	-3.0e+9 ... +3.0e+9	34

Table C- 8 Measurement data profile E2

Byte	Allocation	Data type	Unit	Value range	Measured value ID
0...3	Total active power L1L2L3	REAL	1 W	-3.0e+9 ... +3.0e+9	34
4...7	Total active energy L1L2L3 inflow	REAL	1 Wh	0.0 ... 3.4028e+38	200
8...11	Total active energy L1L2L3 outflow	REAL	1 Wh	0.0 ... 3.4028e+38	201

Table C- 9 Measurement data profile E3

Byte	Allocation	Data type	Unit	Value range	Measured value ID
0...3	Active power L1	REAL	1 W	-3.0e+9 ... +3.0e+9	13
4...7	Active power L2	REAL	1 W	-3.0e+9 ... +3.0e+9	14
8...11	Active power L3	REAL	1 W	-3.0e+9 ... +3.0e+9	15
12...15	Reactive power Qtot L1	REAL	1 var	-3.0e+9 ... +3.0e+9	22
16...19	Reactive power Qtot L2	REAL	1 var	-3.0e+9 ... +3.0e+9	23
20...23	Reactive power Qtot L3	REAL	1 var	-3.0e+9 ... +3.0e+9	24
24...31	Total active energy L1L2L3 inflow	LREAL	1 Wh	0.0 ... 1.7976e+308	210
32...39	Total active energy L1L2L3 outflow	LREAL	1 Wh	0.0 ... 1.7976e+308	211
40...47	Total reactive energy L1L2L3 inflow	LREAL	1 varh	0.0 ... 1.7976e+308	212
48...55	Total reactive energy L1L2L3 outflow	LREAL	1 varh	0.0 ... 1.7976e+308	213
56...59	Voltage UL1-N	REAL	1 V	0.0 … 1000000.0	1
60...63	Voltage UL2-N	REAL	1 V	0.0 … 1000000.0	2
64...67	Voltage UL3-N	REAL	1 V	0.0 … 1000000.0	3
68...71	Voltage UL1-UL2	REAL	1 V	0.0 … 1000000.0	4
72...75	Voltage UL2-UL3	REAL	1 V	0.0 … 1000000.0	5
76...79	Voltage UL3-UL1	REAL	1 V	0.0 … 1000000.0	6
80...83	Current L1	REAL	1 A	0.0 … 100000.0	7
84...87	Current L2	REAL	1 A	0.0 … 100000.0	8
88...91	Current L3	REAL	1 A	0.0 … 100000.0	9
92...95	Power factor L1	REAL	-	0.0 … 1.0	19
96...99	Power factor L2	REAL	-	0.0 … 1.0	20
100...103	Power factor L3	REAL	-	0.0 … 1.0	21

Structure of output user data

The structure of the 20-byte output user data is fixed and is identical to the output user data (control bytes) of the Module version "32 I / 20 Q" (Page 194).

User data variants

D

D.1 User data variants with 32 bytes input data / 20 bytes output data

User data

The following table shows the existing user data variants.

Table D- 1 Overview of the user data variants

User data	User data variant
Total power L1L2L3	254 (FE_H) - default setting
Active power L1L2L3	253 (FD_H)
Reactive power L1L2L3	252 (FC_H)
Apparent power L1L2L3	251 (FB_H)
Basic measured values L1L2L3	250 (FA_H)
Total energy L1L2L3	249 ($F9_H$)
Energy L1	248 ($F8_H$)
Energy L2	247 ($F7_H$)
Energy L3	246 ($F6_H$)
Basic variables three-phase measurement L1L2L3	245 ($F5_H$)
Reactive power compensation	244 ($F4_H$)
Quality values three-phase measurement	240 ($F0_H$)
Energy measurement (periodic) overflow counter	239 (EF_H)
EE@Industry measurement data profile E3	227 ($E3_H$)
EE@Industry measurement data profile E2	226 ($E2_H$)
EE@Industry measurement data profile E1	225 ($E1_H$)
EE@Industry measurement data profile E0	224 ($E0_H$)
Basic variables phase-specific measurement L1	159 ($9F_H$)
Single-phase measurement L1 with voltage scaling value	158 ($9E_H$)
Basic variables phase-specific measurement L2	157 ($9D_H$)
Single-phase measurement L2 with voltage scaling value	156 ($9C_H$)
Basic variables phase-specific measurement L3	155 ($9B_H$)
Single-phase measurement L3 with voltage scaling value	154 ($9A_H$)
User-defined user data structure I	1 (01_H)
User-defined user data structure II	2 (02_H)

Information on using and dynamic switching of the user data variants can be found under "Selecting the module versions (Page 29)".

Total power L1L2L3 (ID 254 or FE_H)

Table D- 2 Total power L1L2L3

Byte	Allocation	Data type	Unit	Value range	Measured value ID
0	User data variant	BYTE	-	254 (FE_H)	-
1	Quality information = QQ_1 I_3 U_3 I_2 U_2 I_1 U_1	BYTE	Bit string	qq xx xx xx	-
2 ... 3	Current L1	UINT	1 mA	0 … 65535	66007
4 ... 5	Current L2	UINT	1 mA	0 … 65535	66008
6 ... 7	Current L3	UINT	1 mA	0 … 65535	66009
8 ... 9	Total active power L1L2L3	INT	1 W	-27648 … 27648	66034
10 ... 11	Total reactive power Qtot L1L2L3	INT	1 var	-27648 … 27648	66038
12 ... 13	Total apparent power L1L2L3	INT	1 VA	-27648 … 27648	66036
14 ... 17	Total active energy L1L2L3	DINT	1 Wh	-2147483647... +2147483647	225
18 ... 21	Total reactive energy L1L2L3	DINT	1 varh	-2147483647... +2147483647	226
22	Reserved	BYTE	-	0	-
23	Total power factor L1L2L3	USINT	0.01	0 … 100	66037
24	Scaling current L1	USINT	-	0 ... 255	-
25	Scaling current L2	USINT	-	0 ... 255	-
26	Scaling current L3	USINT	-	0 ... 255	-
27	Scaling total active power L1L2L3	USINT	-	0 ... 255	-
28	Scaling total reactive power L1L2L3	USINT	-	0 ... 255	-
29	Scaling total apparent power L1L2L3	USINT	-	0 ... 255	-
30	Scaling total active energy L1L2L3	USINT	-	0 ... 255	-
31	Scaling total reactive energy L1L2L3	USINT	-	0 ... 255	-

Active power L1L2L3 (ID 253 or FD_H)

Table D- 3 Active power L1L2L3

Byte	Allocation	Data type	Unit	Value range	Measured value ID
0	User data variant	BYTE	-	253 (FD_H)	-
1	Quality information = QQ_1 I_3 U_3 I_2 U_2 I_1 U_1	BYTE	Bit string	qq xx xx xx	-
2 ... 3	Current L1	UINT	1 mA	0 … 65535	66007
4 ... 5	Current L2	UINT	1 mA	0 … 65535	66008
6 ... 7	Current L3	UINT	1 mA	0 … 65535	66009
8 ... 9	Active power L1	INT	1 W	-27648 … 27648	66013
10 ... 11	Active power L2	INT	1 W	-27648 … 27648	66014
12 ... 13	Active power L3	INT	1 W	-27648 … 27648	66015
14 ... 15	Total active power L1L2L3	INT	1 W	-27648 … 27648	66034
16 ... 19	Total active energy L1L2L3	DINT	1 Wh	-2147483647... +2147483647	225
20	Power factor L1	USINT	0.01	0 … 100	66019
21	Power factor L2	USINT	0.01	0 … 100	66020
22	Power factor L3	USINT	0.01	0 … 100	66021
23	Total power factor L1L2L3	USINT	0.01	0 … 100	66037
24	Scaling current L1	USINT	-	0 ... 255	-
25	Scaling current L2	USINT	-	0 ... 255	-
26	Scaling current L3	USINT	-	0 ... 255	-
27	Scaling active power L1	USINT	-	0 ... 255	-
28	Scaling active power L2	USINT	-	0 ... 255	-
29	Scaling active power L3	USINT	-	0 ... 255	-
30	Scaling active power L1L2L3	USINT	-	0 ... 255	-
31	Scaling total active energy L1L2L3	USINT	-	0 ... 255	-

Reactive power L1L2L3 (ID 252 or FC_H)

Table D- 4 Reactive power L1L2L3

Byte	Allocation	Data type	Unit	Value range	Measured value ID
0	User data variant	BYTE	-	252 (FC_H)	-
1	Quality information = QQ_1 I_3 U_3 I_2 U_2 I_1 U_1	BYTE	Bit string	qq xx xx xx	-
2 ... 3	Current L1	UINT	1 mA	0 … 65535	66007
4 ... 5	Current L2	UINT	1 mA	0 … 65535	66008
6 ... 7	Current L3	UINT	1 mA	0 … 65535	66009
8 ... 9	Reactive power Qtot L1	INT	1 var	-27648 … 27648	66022
10 ... 11	Reactive power Qtot L2	INT	1 var	-27648 … 27648	66023
12 ... 13	Reactive power Qtot L3	INT	1 var	-27648 … 27648	66024
14 ... 15	Total reactive power Qtot L1L2L3	INT	1 var	-27648 … 27648	66038
16 ... 19	Total reactive energy L1L2L3	DINT	1 varh	-2147483647... +2147483647	222
20	Power factor L1	USINT	0.01	0 … 100	66019
21	Power factor L2	USINT	0.01	0 … 100	66020
22	Power factor L3	USINT	0.01	0 … 100	66021
23	Total power factor L1L2L3	USINT	0.01	0 … 100	66037
24	Scaling current L1	USINT	-	0 ... 255	-
25	Scaling current L2	USINT	-	0 ... 255	-
26	Scaling current L3	USINT	-	0 ... 255	-
27	Scaling reactive power L1	USINT	-	0 ... 255	-
28	Scaling reactive power L2	USINT	-	0 ... 255	-
29	Scaling reactive power L3	USINT	-	0 ... 255	-
30	Scaling reactive power L1L2L3	USINT	-	0 ... 255	-
31	Scaling total reactive energy L1L2L3	USINT	-	0 ... 255	-

Apparent power L1L2L3 (ID 251 or FB_H)

Table D- 5 Apparent power L1L2L3

Byte	Allocation	Data type	Unit	Value range	Measured value ID
0	User data variant	BYTE	-	251 (FB_H)	-
1	Quality information = QQ_1 I_3 U_3 I_2 U_2 I_1 U_1	BYTE	Bit string	qq xx xx xx	-
2 ... 3	Current L1	UINT	1 mA	0 … 65535	66007
4 ... 5	Current L2	UINT	1 mA	0 … 65535	66008
6 ... 7	Current L3	UINT	1 mA	0 … 65535	66009
8 ... 9	Apparent power L1	INT	1 VA	-27648 … 27648	66010
10 ... 11	Apparent power L2	INT	1 VA	-27648 … 27648	66011
12 ... 13	Apparent power L3	INT	1 VA	-27648 … 27648	66012
14 ... 15	Total apparent power L1L2L3	INT	1 VA	-27648 … 27648	66036
16 ... 19	Total apparent energy L1L2L3	DINT	1 VAh	0 to 2147483647	224
20	Power factor L1	USINT	0.01	0 … 100	66019
21	Power factor L2	USINT	0.01	0 … 100	66020
22	Power factor L3	USINT	0.01	0 … 100	66021
23	Total power factor L1L2L3	USINT	0.01	0 … 100	66037
24	Scaling current L1	USINT	-	0 ... 255	-
25	Scaling current L2	USINT	-	0 ... 255	-
26	Scaling current L3	USINT	-	0 ... 255	-
27	Scaling apparent power L1	USINT	-	0 ... 255	-
28	Scaling apparent power L2	USINT	-	0 ... 255	-
29	Scaling apparent power L3	USINT	-	0 ... 255	-
30	Scaling apparent power L1L2L3	USINT	-	0 ... 255	-
31	Scaling total apparent energy L1L2L3	USINT	-	0 ... 255	-

Basic measured values L1L2L3 (ID 250 or FA_H)

Table D- 6 Basic measured values L1L2L3

Byte	Allocation	Data type	Unit	Value range	Measured value ID
0	User data variant	BYTE	-	250 (FA_H)	-
1	Quality information = QQ_1 I_3 U_3 I_2 U_2 I_1 U_1	BYTE	Bit string	qq xx xx xx	-
2 ... 3	Current L1	UINT	1 mA	0 … 65535	66007
4 ... 5	Current L2	UINT	1 mA	0 … 65535	66008
6 ... 7	Current L3	UINT	1 mA	0 … 65535	66009
8 ... 9	Voltage UL1-N	UINT	0.01 V	0 … 65535	66001
10 ... 11	Voltage UL2-N	UINT	0.01 V	0 … 65535	66002
12 ... 13	Voltage UL3-N	UINT	0.01 V	0 … 65535	66003
14 ... 15	Voltage UL1-UL2	UINT	0.01 V	0 … 65535	66004
16 ... 17	Voltage UL2-UL3	UINT	0.01 V	0 … 65535	66005
18 ... 19	Voltage UL3-UL1	UINT	0.01 V	0 … 65535	66006
20	Power factor L1	USINT	0.01	0 … 100	66019
21	Power factor L2	USINT	0.01	0 … 100	66020
22	Power factor L3	USINT	0.01	0 … 100	66021
23	Total power factor L1L2L3	USINT	0.01	0 … 100	66037
24	Scaling current L1	USINT	-	0 ... 255	-
25	Scaling current L2	USINT	-	0 ... 255	-
26	Scaling current L3	USINT	-	0 ... 255	-
27	Scaling voltage UL1-N (UL1-UL2)	USINT	-	0 ... 255	-
28	Scaling voltage UL2-N (UL2-UL3)	USINT	-	0 ... 255	-
29	Scaling voltage UL3-N (UL3-UL1)	USINT	-	0 ... 255	-
30 ... 31	Frequency	UINT	0.01 Hz	4500 ... 6500	66038

Total energy L1L2L3 (ID 249 or $F9_H$)

Table D- 7 Total energy L1L2L3

Byte	Allocation	Data type	Unit	Value range	Measured value ID
0	User data variant	BYTE	-	249 ($F9_H$)	-
1	Quality information = QQ_1 I_3 U_3 I_2 U_2 I_1 U_1	BYTE	Bit string	qq xx xx xx	-
2	Reserved	BYTE	-	-	-
3	Reserved	BYTE	-	-	-
4 ... 7	Total active energy inflow L1L2L3	UDINT	1 Wh	0 to 2147483647	210
8 ... 11	Total active energy outflow L1L2L3	UDINT	1 Wh	0 to 2147483647	211
11 ... 15	Total reactive energy inflow L1L2L3	UDINT	1 varh	0 to 2147483647	212
16 ... 19	Total reactive energy outflow L1L2L3	UDINT	1 varh	0 to 2147483647	213
20 ... 23	Total apparent energy L1L2L3	UDINT	1 VAh	0 to 2147483647	214
24	Reserved	BYTE	-	-	-
25	Scaling active energy, inflow	USINT	-	0 ... 255	-
26	Scaling active energy, outflow	USINT	-	0 ... 255	-
27	Scaling reactive energy, inflow	USINT	-	0 ... 255	-
28	Scaling reactive energy, outflow	USINT	-	0 ... 255	-
29	Scaling apparent energy	USINT	-	0 ... 255	-
30	Reserved	BYTE	-	-	-
31	Total power factor L1L2L3	USINT	0.01	0 … 100	66037

Energy L1 (ID 248 or $F8_H$)

Table D- 8 Energy L1

Byte	Allocation	Data type	Unit	Value range	Measured value ID
0	User data variant	BYTE	-	248 ($F8_H$)	-
1	Quality information = QQ_1 I_3 U_3 I_2 U_2 I_1 U_1	BYTE	Bit string	qq xx xx xx	-
2 ... 3	Current L1	UINT	1 mA	0 … 65535	66007
4 ... 7	Active energy inflow L1	UDINT	1 Wh	0 ... 2147483647	62110
8 ... 11	Active energy outflow L1	UDINT	1 Wh	0 ... 2147483647	62111
11 ... 15	Reactive energy inflow L1	UDINT	1 varh	0 ... 2147483647	62112
16 ... 19	Reactive energy outflow L1	UDINT	1 varh	0 ... 2147483647	62113
20 ... 23	Apparent energy L1	UDINT	1 VAh	0 ... 2147483647	62114
24	Scaling current L1	USINT	-	0 ... 255	-
25	Scaling active energy inflow L1	USINT	-	0 ... 255	-
26	Scaling active energy outflow L1	USINT	-	0 ... 255	-
27	Scaling reactive energy inflow L1	USINT	-	0 ... 255	-
28	Scaling reactive energy outflow L1	USINT	-	0 ... 255	-
29	Scaling apparent energy L1	USINT	-	0 ... 255	-
30	Reserved	BYTE	-	-	-
31	Power factor L1	USINT	0.01	0 … 100	66019

Energy L2 (ID 247 or $F7_H$)

Table D- 9 Energy L2

Byte	Allocation	Data type	Unit	Value range	Measured value ID
0	User data variant	BYTE	-	247 ($F7_H$)	-
1	Quality information = QQ_1 I_3 U_3 I_2 U_2 I_1 U_1	BYTE	Bit string	qq xx xx xx	-
2 ... 3	Current L2	UINT	1 mA	0 … 65535	66008
4 ... 7	Active energy inflow L2	UDINT	1 Wh	0 to 2147483647	62210
8 ... 11	Active energy outflow L2	UDINT	1 Wh	0 to 2147483647	62211
11 ... 15	Reactive energy inflow L2	UDINT	1 varh	0 to 2147483647	62212
16 ... 19	Reactive energy outflow L2	UDINT	1 varh	0 to 2147483647	62213
20 ... 23	Apparent energy L2	UDINT	1 VAh	0 to 2147483647	62214
24	Scaling current L2	USINT	-	0 ... 255	-
25	Scaling active energy inflow L2	USINT	-	0 ... 255	-
26	Scaling active energy outflow L2	USINT	-	0 ... 255	-
27	Scaling reactive energy inflow L2	USINT	-	0 ... 255	-
28	Scaling reactive energy outflow L2	USINT	-	0 ... 255	-
29	Scaling apparent energy L2	USINT	-	0 ... 255	-
30	Reserved	BYTE	-	-	-
31	Power factor L2	USINT	0.01	0 … 100	66020

Energy L3 (ID 246 or $F6_H$)

Table D- 10 Energy L3

Byte	Allocation	Data type	Unit	Value range	Measured value ID
0	User data variant	BYTE	-	246 ($F6_H$)	-
1	Quality information = QQ_1 I_3 U_3 I_2 U_2 I_1 U_1	BYTE	Bit string	qq xx xx xx	-
2 ... 3	Current L3	UINT	1 mA	0 … 65535	66009
4 ... 7	Active energy inflow L3	UDINT	1 Wh	0 to 2147483647	62310
8 ... 11	Active energy L3, outflow	UDINT	1 Wh	0 to 2147483647	62311
11 ... 15	Reactive energy inflow L3	UDINT	1 varh	0 to 2147483647	62312
16 ... 19	Reactive energy outflow L3	UDINT	1 varh	0 to 2147483647	62313
20 ... 23	Apparent energy L3	UDINT	1 VAh	0 to 2147483647	62314
24	Scaling current L3	USINT	-	0 ... 255	-
25	Scaling active energy inflow L3	USINT	-	0 ... 255	-
26	Scaling active energy outflow L3	USINT	-	0 ... 255	-
27	Scaling reactive energy inflow L3	USINT	-	0 ... 255	-
28	Scaling reactive energy outflow L3	USINT	-	0 ... 255	-
29	Scaling apparent energy L3	USINT	-	0 ... 255	-
30	Reserved	BYTE	-	-	-
31	Power factor L3	USINT	0.01	0 … 100	66021

Basic variables three-phase measurements (ID 245 or $F5_H$)

Table D- 11 Basic variables three-phase measurements

Byte	Allocation	Data type	Unit	Value range	Measured value ID
0	User data variant	BYTE	-	245 ($F5_H$)	-
1	Quality information = QQ_1 I_3 U_3 I_2 U_2 I_1 U_1	BYTE	Bit string	qq xx xx xx	-
2 ... 5	Total active power L1L2L3	REAL	1 W	-3×10^9 ... $+3 \times 10^9$	34
6 ... 9	Total active energy outflow L1L2L3	REAL	1 Wh	0.0 ... 3.4×10^{38}	62418
10 ... 13	Total active energy inflow L1L2L3	REAL	1 Wh	0.0 ... 3.4×10^{38}	62417
14 ... 17	Current L1	REAL	1 A	0.0 … 100000.0	7
18 ... 21	Current L2	REAL	1 A	0.0 … 100000.0	8
22 ... 25	Current L3	REAL	1 A	0.0 … 100000.0	9
26 ... 27	Voltage UL1-N	UINT	0.01 V	0 … 65535	66001
28 ... 29	Voltage UL2-N	UINT	0.01 V	0 … 65535	66002
30 ... 31	Voltage UL3-N	UINT	0.01 V	0 … 65535	66003

Reactive power compensation (ID 244 or $F4_H$)

Table D- 12 Reactive power compensation

Byte	Allocation	Data type	Unit	Value range	Measured value ID
0	User data variant	BYTE	-	244 ($F4_H$)	-
1	Quality information = QQ_1 I_3 U_3 I_2 U_2 I_1 U_1	BYTE	Bit string	qq xx xx xx	-
2	Fundamental cos φ active factor L1	BYTE	0.01	-100 ... 100	62136
3	Fundamental cos φ active factor L2	BYTE	0.01	-100 ... 100	62236
4	Fundamental cos φ active factor L3	BYTE	0.01	-100 ... 100	62336
5	Reserved	BYTE	-	-	-
6 ... 9	Fundamental reactive power L1	REAL	var	-3×10^9 ... $+3 \times 10^9$	62124
10 ... 13	Fundamental reactive power L2	REAL	var	-3×10^9 ... $+3 \times 10^9$	62224
14 ... 17	Fundamental reactive power L3	REAL	var	-3×10^9 ... $+3 \times 10^9$	62324

Basic variables quality values three-phase measurement (ID 240 or $F0_H$)

Table D- 13 Basic variables quality values three-phase measurement

Byte	Allocation	Data type	Unit	Value range	Measured value ID
0	User data variant	BYTE	-	240 (F0H)	-
1	Quality information = QQ_1 I_3 U_3 I_2 U_2 I_1 U_1	BYTE	Bit string	qq xx xx xx	-
2 ... 3	Status of the limit monitoring GW 1 ... 16 (*)	WORD	Bit string	xxxx xxxx xxxx xxxx	65509
4 ... 5	Status of the energy counter overflows (**)	WORD	Bit string	xxxx xxxx xxxx xxxx	65508
6 ... 7	Quality information	WORD	Bit string	xxxx xxxx xxxx xxxx	65503
8 ... 9	Quality information power quality analysis	WORD	Bit string	xxxx xxxx xxxx xxxx	65496
10 ... 11	Reserved	WORD	-	-	-
12 ... 13	Reserved	WORD	-	-	-
14 ... 15	Reserved	WORD	-	-	-
16 ... 17	Reserved	WORD	-	-	-
18 ... 19	Reserved	WORD	-	-	-
20 ... 21	Reserved	WORD	-	-	-
22 ... 23	Reserved	WORD	-	-	-
24 ... 25	Reserved	WORD	-	-	-

Byte	Allocation	Data type	Unit	Value range	Measured value ID
26 ... 27	Reserved	WORD	-	-	-
28 ... 29	Reserved	WORD	-	-	-
30 ... 31	Reserved	WORD	-	-	-

(*) Limit violation in:
Bit 0 = limit 1 to bit 15 = limit 16

(**) Energy counter count periodically - counter overflow at:
Bit 0 = 1: Active energy inflow L1
Bit 1 = 1: Active energy outflow L1
Bit 2 = 1: Reactive energy inflow L1
Bit 3 = 1: Reactive energy outflow L1
Bit 4 = 1: Apparent energy L1
Bit 5 = 1: Active energy inflow L2
Bit 6 = 1: Active energy outflow L2
Bit 7 = 1: Reactive energy inflow L2
Bit 8 = 1: Reactive energy outflow L2
Bit 9 = 1: Apparent energy L2
Bit 10 = 1: Active energy inflow L3
Bit 11 = 1: Active energy outflow L3
Bit 12 = 1: Reactive energy inflow L3
Bit 13 = 1: Reactive energy outflow L3
Bit 14 = 1: Apparent energy L3
Bit 15: Reserved

Basic variables energy counter measurement (periodic) overflow counter (ID 239 or EF_H)

Table D- 14 Basic variables energy counter measurement (periodic) overflow counter

Byte	Allocation	Data type	Unit	Value range	Measured value ID
0	User data variant	BYTE	-	239 (EFH)	-
1	Quality information = QQ_1 I_3 U_3 I_2 U_2 I_1 U_1	BYTE	Bit string	qq xx xx xx	-
2 ... 3	Overflow counter for active energy inflow L1	UINT	-	0 … 65535	62120
4 ... 5	Overflow counter for active energy outflow L1	UINT	-	0 … 65535	62121
6 ... 7	Overflow counter for reactive energy inflow L1	UINT	-	0 … 65535	62122
8 ... 9	Overflow counter for reactive energy outflow L1	UINT	-	0 … 65535	62123
10 ... 11	Overflow counter for apparent energy L1	UINT	-	0 … 65535	62124
12 ... 13	Overflow counter for active energy inflow L2	UINT	-	0 … 65535	62220
14 ... 15	Overflow counter for active energy outflow L2	UINT	-	0 … 65535	62221
16 ... 17	Overflow counter for reactive energy inflow L2	UINT	-	0 … 65535	62222
18 ... 19	Overflow counter for reactive energy outflow L2	UINT	-	0 … 65535	62223
20 ... 21	Overflow counter for apparent energy L2	UINT	-	0 … 65535	62224
22 ... 23	Overflow counter for active energy inflow L3	UINT	-	0 … 65535	62320
24 ... 25	Overflow counter for active energy outflow L3	UINT	-	0 … 65535	62321
26 ... 27	Overflow counter for reactive energy inflow L3	UINT	-	0 … 65535	62322
28 ... 29	Overflow counter for reactive energy outflow L3	UINT	-	0 … 65535	62323
30 ... 31	Overflow counter for apparent energy L3	UINT	-	0 … 65535	62324

Basic variables measurement data profile (ID 227 or $E3_H$)

Table D- 15 Basic variables measurement data profile Energy E3

Byte	Allocation	Data type	Unit	Value range	Measured value ID
0	User data variant	BYTE	-	227 ($E3_H$)	-
1	Quality information = QQ_1 I_3 U_3 I_2 U_2 I_1 U_1	BYTE	Bit string	qq xx xx xx	-
2 ... 5	Active power L1	REAL	1 W	-3×10^9 ... $+3 \times 10^9$	13
6 ... 9	Active power L2	REAL	1 W	-3×10^9 ... $+3 \times 10^9$	14
10 ... 13	Active power L3	REAL	1 W	-3×10^9 ... $+3 \times 10^9$	15
14 ... 17	Reactive power Qtot L1	REAL	1 var	-3×10^9 ... $+3 \times 10^9$	22
18 ... 21	Reactive power Qtot L2	REAL	1 var	-3×10^9 ... $+3 \times 10^9$	23
22 ... 25	Reactive power Qtot L3	REAL	1 var	-3×10^9 ... $+3 \times 10^9$	24
26 ... 33	Total active energy L1L2L3 inflow	LREAL	1 Wh	0.0 ... 1.8×10^{308}	210

Byte	Allocation	Data type	Unit	Value range	Measured value ID
34 ... 41	Total active energy L1L2L3 outflow	LREAL	1 Wh	0.0 ... 1.8 x 10^{308}	211
42 ... 49	Total reactive energy L1L2L3 inflow	LREAL	1 varh	0.0 ... 1.8 x 10^{308}	212
50 ... 57	Total reactive energy L1L2L3 outflow	LREAL	1 varh	0.0 ... 1.8 x 10^{308}	213
58 ... 61	Voltage UL1-N	REAL	1 V	0.0 … 1000000.0	1
62 ... 65	Voltage UL2-N	REAL	1 V	0.0 … 1000000.0	2
66 ... 69	Voltage UL3-N	REAL	1 V	0.0 … 1000000.0	3
70 ... 73	Voltage UL1-UL2	REAL	1 V	0.0 … 1000000.0	4
74 ... 77	Voltage UL2-UL3	REAL	1 V	0.0 … 1000000.0	5
78 ... 81	Voltage UL3-UL1	REAL	1 V	0.0 … 1000000.0	6
82 ... 85	Current L1	REAL	1 A	0.0 … 100000.0	7
86 ... 89	Current L2	REAL	1 A	0.0 … 100000.0	8
90 ... 93	Current L3	REAL	1 A	0.0 … 100000.0	9
94 ... 97	Power factor L1	REAL	-	0.0 … 1.0	19
98 ... 101	Power factor L2	REAL	-	0.0 … 1.0	20
102 ... 105	Power factor L3	REAL	-	0.0 … 1.0	21

Basic variables measurement data profile (ID 226 or $E2_H$)

Table D- 16 Basic variables measurement data profile Energy E2

Byte	Allocation	Data type	Unit	Value range	Measured value ID
0	User data variant	BYTE	-	226 ($E2_H$)	-
1	Quality information = QQ_1 I_3 U_3 I_2 U_2 I_1 U_1	BYTE	Bit string	qq xx xx xx	-
2 ... 5	Total active power L1L2L3	REAL	1 W	-3.0 x 10^9 ... + 3.0 x 10^9	34
6 ... 9	Total active energy inflow L1L2L3	REAL	1 W	3.0 x 10^9	200
10 ...13	Total active energy outflow L1L2L3	REAL	1 W	3.0 x 10^9	201

Basic variables measurement data profile (ID 225 or $E1_H$)

Table D- 17 Basic variables measurement data profile Energy E1

Byte	Allocation	Data type	Unit	Value range	Measured value ID
0	User data variant	BYTE	-	225 ($E1_H$)	-
1	Quality information = QQ_1 I_3 U_3 I_2 U_2 I_1 U_1	BYTE	Bit string	qq xx xx xx	-
2 ... 5	Total active power L1L2L3	REAL	1 W	-3.0×10^9 ... $+ 3.0 \times 10^9$	34

Basic variables measurement data profile (ID 224 or $E0_H$)

Table D- 18 Basic variables measurement data profile Energy E0

Byte	Allocation	Data type	Unit	Value range	Measured value ID
0	User data variant	BYTE	-	224 ($E0_H$)	-
1	Quality information = QQ_1 I_3 U_3 I_2 U_2 I_1 U_1	BYTE	Bit string	qq xx xx xx	-
2 ... 5	Current L1	REAL	1 A	0.0 … 100000.0	7
6 ... 9	Current L2	REAL	1 A	0.0 … 100000.0	8
10 ...13	Current L3	REAL	1 A	0.0 … 100000.0	9

Basic variables phase-specific measurement (ID 159 or $9F_H$)

Table D- 19 Basic variables phase-specific measurement L1

Byte	Allocation	Data type	Unit	Value range	Measured value ID
0	User data variant	BYTE	-	159 (9FH)	-
1	Quality information = QQ_1 I_3 U_3 I_2 U_2 I_1 U_1	BYTE	Bit string	qq xx xx xx	-
2 ... 3	Current L1	UINT	1 mA	0 … 65535	66007
4 ... 5	Voltage UL1-N	UINT	0.01 V	0 … 65535	66001
6 ... 7	Active power L1	INT	1 W	-27648 … 27648	66013
8 ... 9	Reactive power Qtot L1	INT	1 var	-27648 … 27648	66022
10 ... 11	Apparent power L1	INT	1 VA	-27648 … 27648	66010

Byte	Allocation	Data type	Unit	Value range	Measured value ID
12 ... 15	Active energy L1 total (inflow - outflow)	DINT	1 Wh	-2147483647... +2147483647	62115
16 ... 19	Reactive energy L1 total (inflow - outflow)	DINT	1 varh	-2147483647... +2147483647	62116
20 ... 23	Apparent energy L1	UDINT	1 VAh	0 to 2147483647	62114
24	Scaling current L1	USINT	-	0 ... 255	-
25	Scaling active power L1	USINT	-	0 ... 255	-
26	Scaling reactive power L1	USINT	-	0 ... 255	-
27	Scaling apparent power L1	USINT	-	0 ... 255	-
28	Scaling active energy L1 total (inflow - outflow)	USINT	-	0 ... 255	-
29	Scaling reactive energy L1 total (inflow - outflow)	USINT	-	0 ... 255	-
30	Scaling apparent energy L1	USINT	-	0 ... 255	-
31	Power factor L1	USINT	0.01	0 … 100	66019

Basic variables phase-specific measurement (ID 158 or $9E_H$)

Table D- 20 Single-phase measurement L1 with voltage scaling value

Byte	Allocation	Data type	Unit	Value range	Measured value ID
0	User data variant	BYTE	-	158 (9EH)	-
1	Quality information = QQ_1 I_3 U_3 I_2 U_2 I_1 U_1	BYTE	Bit string	qq xx xx xx	-
2 ... 3	Current L1	UINT	1 mA	0 … 65535	66007
4 ... 5	Voltage UL1-N	UINT	0.01 V	0 … 65535	66001
6 ... 7	Active power L1	INT	1 W	-27648 … 27648	66013
8 ... 9	Reactive power Qtot L1	INT	1 var	-27648 … 27648	66022
10 ... 11	Apparent power L1	INT	1 VA	-27648 … 27648	66010
12 ... 15	Active energy L1 total (inflow - outflow)	UDINT	1 Wh	0 … 4294967295	62115
16 ... 19	Reactive energy L1 total (inflow - outflow)	UDINT	1 varh	0 … 4294967295	62116
20 ... 23	Apparent energy L1	UDINT	1 VAh	0 … 4294967295	62114
24	Scaling current L1	USINT	-	0 ... 255	-
25	Scaling active power L1	USINT	-	0 ... 255	-
26	Scaling reactive power L1	USINT	-	0 ... 255	-
27	Scaling apparent power L1	USINT	-	0 ... 255	-
28	Scaling active energy L1 total (inflow - outflow)	USINT	-	0 ... 255	-
29	Scaling reactive energy L1 total (inflow - outflow)	USINT	-	0 ... 255	-
30	Scaling apparent energy L1	USINT	-	0 ... 255	-
31	Scaling voltage UL1-N	USINT	-	0 ... 255	-

Basic variables phase-specific measurement (ID 157 or $9D_H$)

Table D- 21 Basic variables phase-specific measurement L2

Byte	Allocation	Data type	Unit	Value range	Measured value ID
0	User data variant	BYTE	-	157 ($9D_H$)	-
1	Quality information = QQ_1 I_3 U_3 I_2 U_2 I_1 U_1	BYTE	Bit string	qq xx xx xx	-
2 ... 3	Current L2	UINT	1 mA	0 … 65535	66008
4 ... 5	Voltage UL2-N	UINT	0.01 V	0 … 65535	66002
6 ... 7	Active power L2	INT	1 W	-27648 … 27648	66014
8 ... 9	Reactive power Qtot L2	INT	1 var	-27648 … 27648	66023
10 ... 11	Apparent power L2	INT	1 VA	-27648 … 27648	66011
12 ... 15	Active energy L2 total (inflow - outflow)	DINT	1 Wh	-2147483647... +2147483647	62215
16 ... 19	Reactive energy L2 total (inflow - outflow)	DINT	1 varh	-2147483647... +2147483647	62216
20 ... 23	Apparent energy L2	UDINT	1 VAh	0 to 2147483647	62214
24	Scaling current L2	USINT	-	0 ... 255	-
25	Scaling active power L2	USINT	-	0 ... 255	-
26	Scaling reactive power L2	USINT	-	0 ... 255	-
27	Scaling apparent power L2	USINT	-	0 ... 255	-
28	Scaling active energy L2 total (inflow - outflow)	USINT	-	0 ... 255	-
29	Scaling reactive energy L2 total (inflow - outflow)	USINT	-	0 ... 255	-
30	Scaling apparent energy L2	USINT	-	0 ... 255	-
31	Power factor L2	USINT	0.01	0 … 100	66020

Basic variables phase-specific measurement (ID 156 or $9C_H$)

Table D- 22 Single-phase measurement L2 with voltage scaling value

Byte	Allocation	Data type	Unit	Value range	Measured value ID
0	User data variant	BYTE	-	156 (9CH)	-
1	Quality information = QQ_1 I_3 U_3 I_2 U_2 I_1 U_1	BYTE	Bit string	qq xx xx xx	-
2 ... 3	Current L2	UINT	1 mA	0 … 65535	66008
4 ... 5	Voltage UL2-N	UINT	0.01 V	0 … 65535	66002
6 ... 7	Active power L2	INT	1 W	-27648 … 27648	66014
8 ... 9	Reactive power Qtot L2	INT	1 var	-27648 … 27648	66023
10 ... 11	Apparent power L2	INT	1 VA	-27648 … 27648	66011
12 ... 15	Active energy L2 total (inflow - outflow)	DINT	1 Wh	-2147483647... +2147483647	62215
16 ... 19	Reactive energy L2 total (inflow - outflow)	DINT	1 varh	-2147483647... +2147483647	62216
20 ... 23	Apparent energy L2	UDINT	1 VAh	0 to 2147483647	62214
24	Scaling current L2	USINT	-	0 ... 255	-
25	Scaling active power L2	USINT	-	0 ... 255	-
26	Scaling reactive power L2	USINT	-	0 ... 255	-
27	Scaling apparent power L2	USINT	-	0 ... 255	-
28	Scaling active energy L2 total (inflow - outflow)	USINT	-	0 ... 255	-
29	Scaling reactive energy L2 total (inflow - outflow)	USINT	-	0 ... 255	-
30	Scaling apparent energy L2	USINT	-	0 ... 255	-
31	Scaling voltage UL2-N	USINT	-	0 ... 255	-

Basic variables phase-specific measurement (ID 155 or $9B_H$)

Table D- 23 Basic variables phase-specific measurement L3

Byte	Allocation	Data type	Unit	Value range	Measured value ID
0	User data variant	BYTE	-	155 ($9B_H$)	-
1	Quality information = QQ_1 I_3 U_3 I_2 U_2 I_1 U_1	BYTE	Bit string	qq xx xx xx	-
2 ... 3	Current L3	UINT	1 mA	0 … 65535	66009
4 ... 5	Voltage UL3-N	UINT	0.01 V	0 … 65535	66003
6 ... 7	Active power L3	INT	1 W	-27648 … 27648	66015
8 ... 9	Reactive power Qtot L3	INT	1 var	-27648 … 27648	66024
10 ... 11	Apparent power L3	INT	1 VA	-27648 … 27648	66012
12 ... 15	Active energy L3 total (inflow - outflow)	DINT	1 Wh	-2147483647... +2147483647	62315
16 ... 19	Reactive energy L3 total (inflow - outflow)	DINT	1 varh	-2147483647... +2147483647	62316
20 ... 23	Apparent energy L3	UDINT	1 VAh	0 to 2147483647	62314
24	Scaling current L3	USINT	-	0 ... 255	-
25	Scaling active power L3	USINT	-	0 ... 255	-
26	Scaling reactive power L3	USINT	-	0 ... 255	-
27	Scaling apparent power L3	USINT	-	0 ... 255	-
28	Scaling active energy L3 total (inflow - outflow)	USINT	-	0 ... 255	-
29	Scaling reactive energy L3 total (inflow - outflow)	USINT	-	0 ... 255	-
30	Scaling apparent energy L3	USINT	-	0 ... 255	-
31	Power factor L3	USINT	0.01	0 … 100	66021

Basic variables phase-specific measurement (ID 154 or $9A_H$)

Table D- 24 Single-phase measurement L3 with voltage scaling value

Byte	Allocation	Data type	Unit	Value range	Measured value ID
0	User data variant	BYTE	-	154 ($9A_H$)	-
1	Quality information = QQ_1 I_3 U_3 I_2 U_2 I_1 U_1	BYTE	Bit string	qq xx xx xx	-
2 ... 3	Current L3	UINT	1 mA	0 … 65535	66009
4 ... 5	Voltage UL3-N	UINT	0.01 V	0 … 65535	66003
6 ... 7	Active power L3	INT	1 W	-27648 … 27648	66015
8 ... 9	Reactive power Qtot L3	INT	1 var	-27648 … 27648	66024
10 ... 11	Apparent power L3	INT	1 VA	-27648 … 27648	66012
12 ... 15	Active energy L3 total (inflow - outflow)	DINT	1 Wh	-2147483647... +2147483647	62315
16 ... 19	Reactive energy L3 total (inflow - outflow)	DINT	1 varh	-2147483647... +2147483647	62316
20 ... 23	Apparent energy L3	UDINT	1 VAh	0 to 2147483647	62314
24	Scaling current L3	USINT	-	0 ... 255	-
25	Scaling active power L3	USINT	-	0 ... 255	-
26	Scaling reactive power L3	USINT	-	0 ... 255	-
27	Scaling apparent power L3	USINT	-	0 ... 255	-
28	Scaling active energy L3 total (inflow - outflow)	USINT	-	0 ... 255	-
29	Scaling reactive energy L3 total (inflow - outflow)	USINT	-	0 ... 255	-
30	Scaling apparent energy L3	USINT	-	0 ... 255	-
31	Scaling voltage UL3-N	USINT	-	0 ... 255	-

See also

Module versions at configuration with STEP 7 (Page 29)

Measured value data records

E

E.1 Overview of all measured value data records

The AI Energy Meter HF writes the measured values in several data records that you can read acyclically using the RDREC instruction in the user program.

The following tables show the structure of the individual data records:

- Data record DS 142 for basic measured values version 2 (read only).
- Data record DS 142 for basic measured values version 3 (read only).
- Data record DS 143 for energy counters (read and write).
- Data record DS 144 for basic measured values version 1 (read only).
- Data record DS 154 for maximum values with time stamp (read only).
- Data record DS 145 for minimum values version 1 (read only).
- Data record DS 155 for minimum values with time stamp (read only).
- Data record DS 147 for phase-specific measured values L1 version 0 (read only).
- Data record DS 147 for phase-specific measured values L1 version 1 (read only).
- Data record DS 148 for phase-specific measured values L2 DS version 0 (read only).
- Data record DS 148 for phase-specific measured values L2 DS version 1 (read only).
- Data record DS 149 for phase-specific measured values L3 DS version 0 (read only).
- Data record DS 149 for phase-specific measured values L3 DS version 1 (read only).
- Data record DS 150 for advanced measurement and status values version 1 (read only).
- Data record DS 151 for user-defined data record (read only).
- Data record DS 160 for power quality analysis (read only).
- Data record DS 161 for harmonics voltage (DS 161) (read only).
- Data record DS 163 for harmonics current (DS 163) (read only).
- Data record DS 170 information data record on available measured values.

Note

- The cumulative value of the energy counters in 3-phase operation is obtained from the sums of the respective individual values of the phases.
- Inflow and outflow energy meters are always positive values.
- The operating hours counter for the entire module is calculated from the maximum of the operating hours of the individual phases.

E.2 Measured value data record for base measurements (DS 142)

E.2.1 Measured value data record for basic measured values (DS 142) version 2

Measured variables of the module

The following table provides an overview of all the measured variables that data record 142 supplies. Please note that, depending on the connection type used the display of some measured variables does not make sense and that the module deletes measured values that are not relevant.

The measured value identification (measured value ID) is an index which references the overview table of the measured variables in appendix (Measured variables for connection type (Page 162)).

Table E- 1 Data record 142

Byte	Measured variable	Data type	Unit	Value range	Measured value ID
0	Version = 2	UINT8	-	-	-
1	Reserved	UINT8	-	-	-
2...5	Voltage UL1-N	REAL	V	0.0 ... 1000000.0	1
6...9	Voltage UL2-N	REAL	V	0.0 ... 1000000.0	2
10...13	Voltage UL3-N	REAL	V	0.0 ... 1000000.0	3
14...17	Voltage UL1-L2	REAL	V	0.0 ... 1000000.0	4
18...21	Voltage UL2-L3	REAL	V	0.0 ... 1000000.0	5
22...25	Voltage UL3-L1	REAL	V	0.0 ... 1000000.0	6
26...29	Current L1	REAL	A	0.0 … 100000.0	7
30...33	Current L2	REAL	A	0.0 … 100000.0	8
34...37	Current L3	REAL	A	0.0 … 100000.0	9
38...41	Power factor L1	REAL	-	0.0 ... 1.0	19
42...45	Power factor L2	REAL	-	0.0 ... 1.0	20
46...49	Power factor L3	REAL	-	0.0 ... 1.0	21
50...53	Total power factor L1L2L3	REAL	-	0.0 ... 1.0	37
54...57	Frequency	REAL	1 Hz	45.0 ... 65.0	30
58...61	Amplitude unbalance for voltage	REAL	%	0 ... 100	61157
62...65	Amplitude unbalance for current	REAL	%	0 to 100	61158
66...69	Apparent power L1	REAL	VA	-3.0×10^9 … $+3.0 \times 10^9$	10
70...73	Apparent power L2	REAL	VA	-3.0×10^9 … $+3.0 \times 10^9$	11
74...77	Apparent power L3	REAL	VA	-3.0×10^9 … $+3.0 \times 10^9$	12
78...81	Total apparent power L1L2L3	REAL	VA	-3.0×10^9 … $+3.0 \times 10^9$	36
82...85	Reactive power Qtot L1	REAL	var	-3.0×10^9 … $+3.0 \times 10^9$	22

Byte	Measured variable	Data type	Unit	Value range	Measured value ID
86...89	Reactive power Qtot L2	REAL	var	-3.0×10^9 … $+3.0 \times 10^9$	23
90...93	Reactive power Qtot L3	REAL	var	-3.0×10^9 … $+3.0 \times 10^9$	24
94...97	Total reactive power Qtot L1L2L3	REAL	var	-3.0×10^9 … $+3.0 \times 10^9$	38
98...101	Active power L1	REAL	W	-3.0×10^9 … $+3.0 \times 10^9$	13
102...105	Active power L2	REAL	W	-3.0×10^9 … $+3.0 \times 10^9$	14
106...109	Active power L3	REAL	W	-3.0×10^9 … $+3.0 \times 10^9$	15
110...113	Total active power L1L2L3	REAL	W	-3.0×10^9 … $+3.0 \times 10^9$	34
114...117	Phase angle L1	REAL	°	0.0 ... 360.0	61178
118...121	Phase angle L2	REAL	°	0.0 ... 360.0	61198
122...125	Phase angle L3	REAL	°	0.0 ... 360.0	61218
126...129	Total apparent energy L1L2L3	REAL	VAh	0.0 ... 3.4×10^{38}	204
130...133	Total reactive energy L1L2L3	REAL	varh	-3.4×10^{38} to $+3.4 \times 10^{38}$	206
134...137	Total active energy L1L2L3	REAL	Wh	-3.4×10^{38} to $+3.4 \times 10^{38}$	205
138...141	Total reactive energy inflow L1L2L3	REAL	varh	0.0 ... 3.4×10^{38}	202
142...145	Total reactive energy outflow L1L2L3	REAL	varh	0.0 ... 3.4×10^{38}	203
146...149	Total active energy inflow L1L2L3	REAL	Wh	0.0 ... 3.4×10^{38}	200
150...153	Total active energy outflow L1L2L3	REAL	Wh	0.0 ... 3.4×10^{38}	201
154...161	Total apparent energy L1L2L3	LREAL	VAh	0.0 ... 1.8×10^{308}	214
162...169	Total reactive energy L1L2L3	LREAL	varh	-1.8×10^{308} to $+1.8 \times 10^{308}$	216
170...177	Total active energy L1L2L3	LREAL	Wh	-1.8×10^{308} to $+1.8 \times 10^{308}$	215
178...185	Total reactive energy inflow L1L2L3	LREAL	varh	0.0 ... 1.8×10^{308}	212
186...193	Total reactive energy outflow L1L2L3	LREAL	varh	0.0 ... 1.8×10^{308}	213
194...201	Total active energy inflow L1L2L3	LREAL	Wh	0.0 ... 1.8×10^{308}	210
202...209	Total active energy outflow L1L2L3	LREAL	Wh	0.0 ... 1.8×10^{308}	211
210...213	Neutral current	REAL	A	0.0 ... 100000.0	61149

Neutral current

If you operate the AI Energy Meter HF with connection type 3P4W, 3P4W1 or 3P3W, the neutral current is also calculated under the following conditions:

- Transmission factors of all phase currents (primary rated current and secondary voltage) are identical.
- Measured phase currents are greater than the value of the "Low limit for measuring current parameter.
- The parameter "Reverse current direction" must be the same on all phases.

If one of the conditions is not met, 0 is entered as the value for the neutral current. You can read the neutral current calculated using measured value data record 142.

Procedure

Data record 142 is located on the AI Energy Meter HF. Use the RDREC instruction to read out the data record from the module. This system function block is stored in the STEP 7 library.

E.2.2 Measured value data record for basic measured values (DS 142) version 3

Measured variables of the module

The following table provides an overview of all the measured variables that data record 142 supplies. Please note that, depending on the connection type used the display of some measured variables does not make sense and that the module deletes measured values that are not relevant.

The measured value identification (measured value ID) is an index which references the overview table of the measured variables in appendix (Measured variables for connection type (Page 162)).

Table E- 2 Data record 142

Byte	Measured variable	Data type	Unit	Value range	Measured value ID
0	Version = 3	BYTE	-	-	-
1	Reserved	BYTE	-	-	-
2...5	Voltage L1-N	REAL	V	0.0 ... 1000000.0	1
6...9	Voltage L2-N	REAL	V	0.0 ... 1000000.0	2
10...13	Voltage L3-N	REAL	V	0.0 ... 1000000.0	3
14...17	Voltage L1-L2	REAL	V	0.0 ... 1000000.0	4
18...21	Voltage L2-L3	REAL	V	0.0 ... 1000000.0	5
22...25	Voltage L3-L1	REAL	V	0.0 ... 1000000.0	6
26...29	Current L1	REAL	A	0.0 … 100000.0	7
30...33	Current L2	REAL	A	0.0 … 100000.0	8
34...37	Current L3	REAL	A	0.0 … 100000.0	9
38...41	Power factor λ L1	REAL	-	0.0 ... 1.0	19
42...45	Power factor λ L2	REAL	-	0.0 ... 1.0	20
46...49	Power factor λ L3	REAL	-	0.0 ... 1.0	21
50...53	Total power factor L1L2L3	REAL	-	0.0 ... 1.0	37
54...57	Frequency	REAL	1 Hz	45.0 ... 65.0	30
58...61	Amplitude unbalance for voltage U_2	REAL	%	0 ... 100	61157
62...65	Amplitude unbalance for current I_{unsym}	REAL	%	0 to 100	61158
66...69	Apparent power L1	REAL	VA	-3.0×10^9 … $+3.0 \times 10^9$	10
70...73	Apparent power L2	REAL	VA	-3.0×10^9 … $+3.0 \times 10^9$	11
74...77	Apparent power L3	REAL	VA	-3.0×10^9 … $+3.0 \times 10^9$	12

Byte	Measured variable	Data type	Unit	Value range	Measured value ID
78...81	Total apparent power L1L2L3	REAL	VA	-3.0×10^9 … $+3.0 \times 10^9$	36
82...85	Reactive power Qtot L1	REAL	var	-3.0×10^9 … $+3.0 \times 10^9$	22
86...89	Reactive power Qtot L2	REAL	var	-3.0×10^9 … $+3.0 \times 10^9$	23
90...93	Reactive power Qtot L3	REAL	var	-3.0×10^9 … $+3.0 \times 10^9$	24
94...97	Total reactive power Qtot L1L2L3	REAL	var	-3.0×10^9 … $+3.0 \times 10^9$	38
98...101	Active power L1	REAL	W	-3.0×10^9 … $+3.0 \times 10^9$	13
102...105	Active power L2	REAL	W	-3.0×10^9 … $+3.0 \times 10^9$	14
106...109	Active power L3	REAL	W	-3.0×10^9 … $+3.0 \times 10^9$	15
110...113	Total active power L1L2L3	REAL	W	-3.0×10^9 … $+3.0 \times 10^9$	35
114...117	Phase angle L1	REAL	°	0.0 ... 360.0	61178
118...121	Phase angle L2	REAL	°	0.0 ... 360.0	61198
122...125	Phase angle L3	REAL	°	0.0 ... 360.0	61218
126...129	Total apparent energy L1L2L3	REAL	VAh	0.0 ... 3.4×10^{38}	204
130...133	Total reactive energy L1L2L3	REAL	varh	-3.4×10^{38} to $+3.4 \times 10^{38}$	206
134...137	Total active energy L1L2L3	REAL	Wh	-3.4×10^{38} to $+3.4 \times 10^{38}$	205
138...141	Total reactive energy inflow L1L2L3	REAL	varh	0.0 ... 3.4×10^{38}	202
142...145	Total reactive energy outflow L1L2L3	REAL	varh	0.0 ... 3.4×10^{38}	203
146...149	Total active energy inflow L1L2L3	REAL	Wh	0.0 ... 3.4×10^{38}	200
150...153	Total active energy outflow L1L2L3	REAL	Wh	0.0 ... 3.4×10^{38}	201
154...161	Total apparent energy L1L2L3	LREAL	VAh	0.0 ... 1.8×10^{308}	214
162...169	Total reactive energy L1L2L3	LREAL	varh	-1.8×10^{308} to $+1.8 \times 10^{308}$	216
170...177	Total active energy L1L2L3	LREAL	Wh	-1.8×10^{308} to $+1.8 \times 10^{308}$	215
178...185	Total reactive energy inflow L1L2L3	LREAL	varh	0.0 ... 1.8×10^{308}	212
186...193	Total reactive energy outflow L1L2L3	LREAL	varh	0.0 ... 1.8×10^{308}	213
194...201	Total active energy inflow L1L2L3	LREAL	Wh	0.0 ... 1.8×10^{308}	210
202...209	Total active energy outflow L1L2L3	LREAL	Wh	0.0 ... 1.8×10^{308}	211
210...213	Neutral current	REAL	A	0.0 ... 100000.0	61149
214...217	Neutral current 10/12 cycle	REAL	A	0.0 ... 100000.0	61150
218...221	Reactive power Qn L1	REAL	var	-3.0×10^9 ... $+3.0 \times 10^9$	16
222...225	Reactive power Qn L2	REAL	var	-3.0×10^9 ... $+3.0 \times 10^9$	17
226...229	Reactive power Qn L3	REAL	var	-3.0×10^9 ... $+3.0 \times 10^9$	18
230...233	Total reactive power Qn L1L2L3	REAL	var	-3.0×10^9 ... $+3.0 \times 10^9$	35
234...237	Average voltage L-N (Usum)	REAL	V	0.0 ... 300.0	31
238...241	Average voltage L-L	REAL	V	0.0 ... 600.0	32
242...245	Average current L1L2L3 (Isum)	REAL	A	0.0 ... 100000.0	33
246...249	Mean power factor λ L1L2L3	REAL	-	0.0 ... 1.0	166
250...253	Fundamental voltage L1	REAL	V	0.0 ... 440.0	62122
254...257	Fundamental voltage L2	REAL	V	0.0 ... 440.0	62222
258...261	Fundamental voltage L3	REAL	V	0.0 ... 440.0	62322
262...265	Fundamental current L1	REAL	A	0.0 ... 100000.0	62123

Byte	Measured variable	Data type	Unit	Value range	Measured value ID
266...269	Fundamental current L2	REAL	A	0.0 ... 100000.0	62223
270...273	Fundamental current L3	REAL	A	0.0 ... 100000.0	62323
274...277	Fundamental apparent power L1	REAL	VA	-3.0×10^9 ... $+3.0 \times 10^9$	62125
278...281	Fundamental apparent power L2	REAL	VA	-3.0×10^9 ... $+3.0 \times 10^9$	62225
282...285	Fundamental apparent power L3	REAL	VA	-3.0×10^9 ... $+3.0 \times 10^9$	62325
286...289	Fundamental reactive power L1	REAL	var	-3.0×10^9 ... $+3.0 \times 10^9$	62124
290...293	Fundamental reactive power L2	REAL	var	-3.0×10^9 ... $+3.0 \times 10^9$	62224
294...297	Fundamental reactive power L3	REAL	var	-3.0×10^9 ... $+3.0 \times 10^9$	62324
298...301	Fundamental active power L1	REAL	W	-3.0×10^9 ... $+3.0 \times 10^9$	62126
302...305	Fundamental active power L2	REAL	W	-3.0×10^9 ... $+3.0 \times 10^9$	62226
306...309	Fundamental active power L3	REAL	W	-3.0×10^9 ... $+3.0 \times 10^9$	62326
310...313	Fundamental cos φ active factor L1	REAL	-	-1.0 ... 1.0	62127
314...317	Fundamental cos φ active factor L2	REAL	-	-1.0 ... 1.0	62227
318...321	Fundamental cos φ active factor L3	REAL	-	-1.0 ... 1.0	62327
322...325	Harmonic distortion (THD+N) voltage L1	REAL	1%	0% to 100%	62120
326...329	Harmonic distortion (THD+N) voltage L2	REAL	1%	0% to 100%	62220
330...333	Harmonic distortion (THD+N) voltage L3	REAL	1%	0% to 100%	62320
334...337	Harmonic distortion (THD+N) current L1	REAL	1%	0% to 100%	62121
338...341	Harmonic distortion (THD+N) current L2	REAL	1%	0% to 100%	62221
342...345	Harmonic distortion (THD+N) current L3	REAL	1%	0% to 100%	62321
346...358	Current module time	PNI-OTime	sec		65497

Neutral current

If you operate the AI Energy Meter HF with connection type 3P4W, 3P4W1 or 3P3W, the neutral current is also calculated under the following conditions:

- Transmission factors of all phase currents (primary rated current and secondary voltage) are identical.
- Measured phase currents are greater than the value of the "Low limit for measuring current parameter.
- The parameter "Reverse current direction" must be the same on all phases.

If one of the conditions is not met, 0 is entered as the value for the neutral current. You can read the neutral current calculated using measured value data record 142.

Procedure

Data record 142 is located on the AI Energy Meter HF. Use the RDREC instruction to read out the data record from the module. This system function block is stored in the STEP 7 library.

E.3 Structure for energy counters (DS 143)

Energy meter data record 143 for different actions

The energy meter data record 143 includes all energy meters available on the module phase-by-phase. The data record can be used for different actions:

- Reset the energy meters to user-specific value (e.g. "0")
- Reading the current values of the energy counters
- Reading the overflow counters
- Reading the operating hours

Energy meter data record 143

Table E- 3 Energy meter data record 143

Byte	Measured variable	Data type	Unit	Value range	Measured value ID
0	Version	BYTE	-	1	-
1	Reserved	BYTE	-	0	-
2	Status / control byte 1 - L1	BYTE	Bit string	-	-
3	Status / control byte 2 - L1	BYTE	Bit string		
4	Status / control byte 1 - L2	BYTE	Bit string		
5	Status / control byte 2 - L2	BYTE	Bit string		
6	Status / control byte 1 - L3	BYTE	Bit string		
7	Status / control byte 2 - L3	BYTE	Bit string		
8...15	Active energy inflow (initial value) L1	LREAL	Wh	During reading: 0.0...1.8 x 10^{308} During writing For continuous counting: 0.0...3.4 x 10^{12} During writing For periodic counting:	61180
16...23	Active energy outflow (initial value) L1	LREAL	Wh		61181
24...31	Reactive energy inflow (initial value) L1	LREAL	varh		61182
32...39	Reactive energy outflow (initial value) L1	LREAL	varh		61183
40...47	Apparent energy (initial value) L1	LREAL	VAh		61184
48...55	Active energy inflow (initial value) L2	LREAL	Wh		61200
56...63	Active energy outflow (initial value) L2	LREAL	Wh		61201
64...61	Reactive energy inflow (initial value) L2	LREAL	varh		61202
72...79	Reactive energy outflow (initial value) L2	LREAL	varh		61203
80...87	Apparent energy (initial value) L2	LREAL	VAh		61204
88...95	Active energy inflow (initial value) L3	LREAL	Wh		61220

Byte	Measured variable	Data type	Unit	Value range	Measured value ID
96...103	Active energy outflow (initial value) L3	LREAL	Wh	0...configured full-scale value (10^3 ...10^{15})	61221
104...111	Reactive energy inflow (initial value) L3	LREAL	varh		61222
112...119	Reactive energy outflow (initial value) L3	LREAL	varh		61223
120...127	Apparent energy (initial value) L3	LREAL	VAh		61224
128...129	Overflow counter active energy inflow L1	UINT	-	During reading: 0...65535 During writing for continuous counting: 0 During writing for periodic counting: 0...65500	61190
130..131	Overflow counter active energy outflow L1	UINT	-		61191
132...133	Overflow counter reactive energy inflow L1	UINT	-		61192
134...135	Overflow counter reactive energy outflow L1	UINT	-		61193
136...137	Overflow counter apparent energy L1	UINT	-		61194
138...139	Overflow counter active energy inflow L2	UINT	-		61210
140...141	Overflow counter active energy outflow L2	UINT	-		61211
142...143	Overflow counter reactive energy inflow L2	UINT	-		61212
144...145	Overflow counter reactive energy outflow L2	UINT	-		61213
146...147	Overflow counter apparent energy L2	UINT	-		61214
148...149	Overflow counter active energy inflow L3	UINT	-		61230
150...151	Overflow counter active energy outflow L3	UINT	-		61231
152...153	Overflow counter reactive energy inflow L3	UINT	-		61232
154...155	Overflow counter reactive energy outflow L3	UINT	-		61233
156...157	Overflow counter apparent energy L3	UINT	-		61234
158...161	Operating hours counter L1 (initial value)	REAL	h	During reading: 0...3.4x10^{38} During writing: 0...10^9	65505
162...165	Operating hours counter L2 (initial value)	REAL	h		65506
166...169	Operating hours counter L3 (initial value)	REAL	h		65507

Status information

When data record 143 is read with the RDREC instruction, Bytes 2 to 7 supply phase-specific status information for energy counters, overflow counters and operating hours counters.

The status information enables you can see which counters are returning their values in the data record 143. If energy counters return their values in the status byte 1, you can determine the type of energy counter with status byte 2.

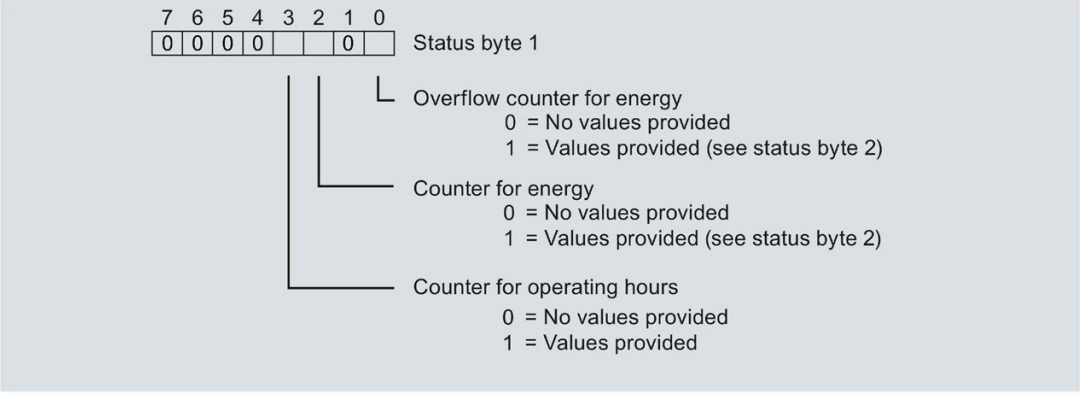

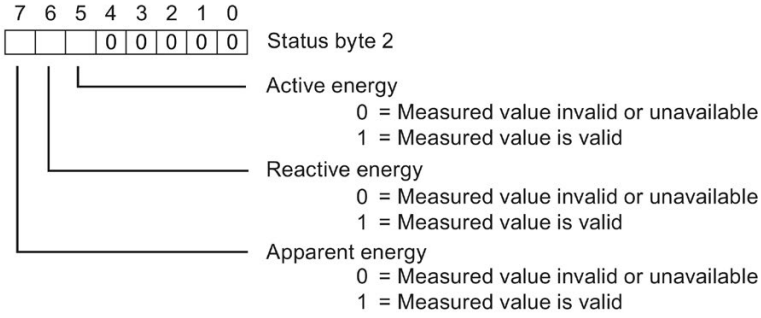

Figure E-1 Status information DS 143 (read access)

Control information

When data record 143 is written with the WRREC instruction, Bytes 2 to 7 are used as phase-specific control information for energy counters, overflow counters and operating hours counter. The length of the control information amounts to 2 bytes for each phase:

- In control byte 1 you determine which counter you want to reset and the time at which counters are reset.
- In Control byte 2 you determine which energy counters and which overflow counters you want to reset.

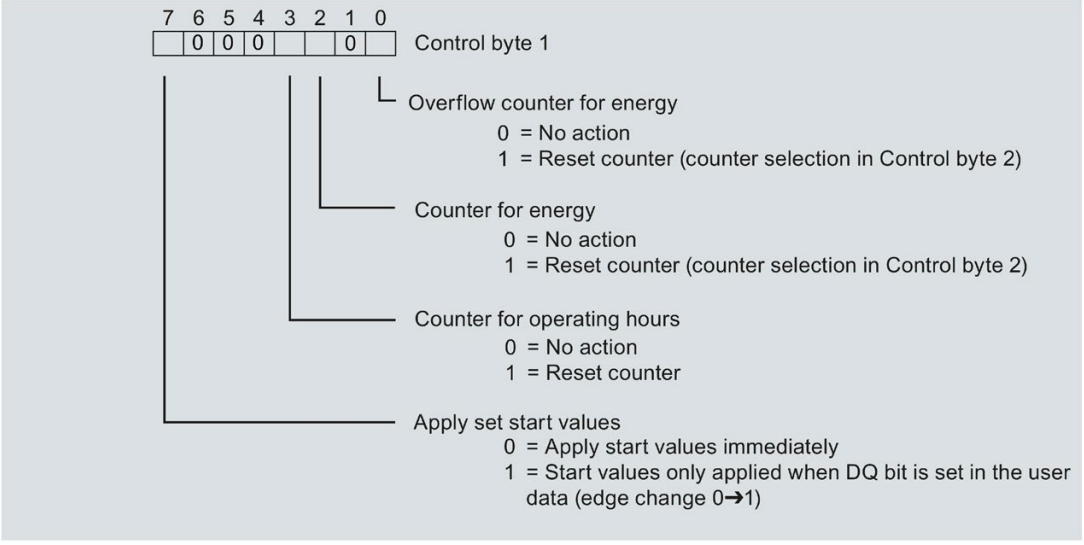

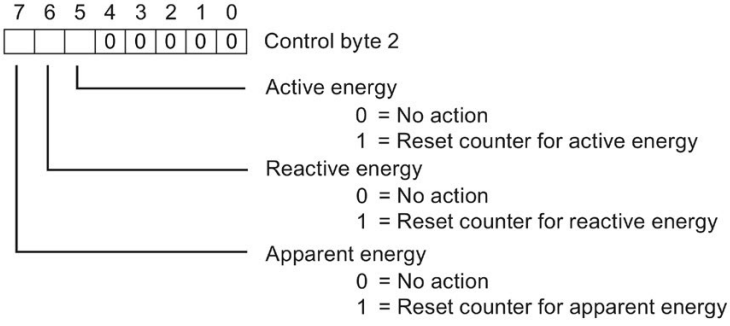

Figure E-2 Control information DS 143 (write access)

Error while transferring the data record

The module always checks all the values of the transferred data record. Only if all the values were transferred without errors does the module apply the values from the data record.

The WRREC instruction for writing data records returns corresponding error codes when errors occur in the STATUS parameter.

The following table shows the module-specific error codes and their meaning for the measured value data record 143:

Error code in STATUS parameter (hexadecimal)				Meaning	Solution
Byte 0	Byte 1	Byte 2	Byte 3		
DF	80	B0	00	Number of the data record unknown	Enter a valid number for the data record.
DF	80	B1	00	Length of the data record incorrect	Enter a valid value for the data record length.
DF	80	B2	00	Slot invalid or cannot be accessed.	Check the station whether the module is plugged or drawn. Check the assigned values for the parameters of the WRREC instruction
DF	80	E1	01	Reserved bits are not 0.	Check Byte 2...7 and set the reserved bits back to 0.
DF	80	E1	39	Incorrect version entered.	Check Byte 0. Enter a valid version.
DF	80	E1	3A	Incorrect data record length entered.	Check the parameters of the WRREC instruction. Enter a valid length.
DF	80	E1	3C	At least one start value is invalid.	Check Bytes 8...103 and Bytes 158...169. The start values may not be negative.
DF	80	E1	3D	At least one start value is too large	Check Bytes 8...103 and Bytes 158...169. Observe the ranges of values for start values.

E.4 Measured value data record for maximum values (DS 144)

E.4.1 Measured value data record for maximum values (DS 144) version 1

Measured variables of the module

The largest values ever measured or calculated from the time AI Energy Meter HF was started are stored in this data record.

The measured value identification (measured value ID) is an index which references the overview table of the measured variables in appendix B (Measured variables for connection type (Page 162)).

Byte	Measured variable	Data type	Unit	Default	Measured value ID
0	Version	UINT8	-	0	-
1	Reserved	UINT8	-	0	-
2...5	Max. voltage L1-N	REAL	V	0	40
6...9	Max. voltage L2-N	REAL	V	0	41
10...13	Max. voltage L3-N	REAL	V	0	42
14...17	Max. voltage L1-L2	REAL	V	0	43
18...21	Max. voltage L2-L3	REAL	V	0	44
22...25	Max. voltage L3-L1	REAL	V	0	45
26...29	Max. current L1 [1]	REAL	A	0	46
30...33	Max. current L2 [1]	REAL	A	0	47
34...37	Max. current L3 [1]	REAL	A	0	48
38...41	Max. apparent power L1	REAL	VA	0	49
42...45	Max. apparent power L2	REAL	VA	0	50
46...49	Max. apparent power L3	REAL	VA	0	51
50...53	Max. active power L1	REAL	W	-3.0×10^9	52
54...57	Max. active power L2	REAL	W	-3.0×10^9	53
58...61	Max. active power L3	REAL	W	-3.0×10^9	54
62...65	Max. reactive power Qtot L1	REAL	var	-3.0×10^9	62160
66...69	Max. reactive power Qtot L2	REAL	var	-3.0×10^9	62260
70...73	Max. reactive power Qtot L3	REAL	var	-3.0×10^9	62360
74...77	Max. power factor λ L1	REAL	-	0	58
78...81	Max. power factor λ L2	REAL	-	0	59
82...85	Max. power factor λ L3	REAL	-	0	60
86...89	Max. frequency	REAL	Hz	45	61
90...93	Max. apparent power L1L2L3	REAL	VA	0	67
94...97	Max. active power L1L2L3	REAL	W	-3.0×10^9	65
98...101	Max. reactive power Qtot L1L2L3	REAL	var	-3.0×10^9	61138

Byte	Measured variable	Data type	Unit	Default	Measured value ID
102...105	Max. power factor λ L1L2L3	REAL	-	0	68
106...109	Max. reactive power Qn L1	REAL	var	-3.0×10^9	55
110...113	Max. reactive power Qn L2	REAL	var	-3.0×10^9	56
114...117	Max. reactive power Qn L3	REAL	var	-3.0×10^9	57
118...121	Max. mean voltage L-N	REAL	V	0	62
122...125	Max. mean voltage L-L	REAL	V	0	63
126...129	Max. sum mean value current	REAL	A	0	64
130...133	Max. fundamental voltage L1	REAL	V	0	62152
134...137	Max. fundamental voltage L2	REAL	V	0	62252
138...141	Max. fundamental voltage L3	REAL	V	0	62352
142...145	Max. fundamental current L1	REAL	A	0	62153
146...149	Max. fundamental current L2	REAL	A	0	62253
150...153	Max. fundamental current L3	REAL	A	0	62353
154...157	Max. fundamental apparent power L1	REAL	VA	-3.0×10^9	62155
158...161	Max. fundamental apparent power L2	REAL	VA	-3.0×10^9	62255
162...165	Max. fundamental apparent power L3	REAL	VA	-3.0×10^9	62355
166...169	Max. fundamental reactive power L1	REAL	var	-3.0×10^9	62154
170...173	Max. fundamental reactive power L2	REAL	var	-3.0×10^9	62254
174...177	Max. fundamental reactive power L3	REAL	var	-3.0×10^9	62354
178...181	Max. fundamental active power L1	REAL	W	-3.0×10^9	62156
182...185	Max. fundamental active power L2	REAL	W	-3.0×10^9	62256
186...189	Max. fundamental active power L3	REAL	W	-3.0×10^9	62356
190...193	Max. fundamental cos φ active factor L1	REAL	-	-1	62157
194...197	Max. fundamental cos φ active factor L2	REAL	-	-1	62257
198...201	Max. fundamental cos φ active factor L3	REAL	-	-1	62357
202...205	Max. THD+N voltage L1	REAL	1%	0	62150
206...209	Max. THD+N voltage L2	REAL	1%	0	62250
210...213	Max. THD+N voltage L3	REAL	1%	0	62350
214...217	Max. THD+N current L1	REAL	1%	0	62151
218...221	Max. THD+N current L2	REAL	1%	0	62251
222...225	Max. THD+N current L3	REAL	1%	0	62351

[1] The values reference the amount of the current measured value

E.5 Measured value data record for maximum values with time stamp (DS 154)

Measured variables of the module

The largest values ever measured or calculated from the time AI Energy Meter HF was started are stored in this data record.

The measured values (REAL 4-byte) are each followed by a time stamp (PN Time 12 bytes).

The measured value identification (measured value ID) is an index which references the overview table of the measured variables in appendix B (Measured variables for connection type (Page 162)).

Byte	Measured variable	Data type	Unit	Default	Measured value ID
0	Version	UINT8	-	1	-
1	Reserved	UINT8	-	0	-
2...17	Max. voltage L1-N	REAL + PN Time	V	0	40
18...33	Max. voltage L2-N	REAL + PN Time	V	0	41
34...49	Max. voltage L3-N	REAL + PN Time	V	0	42
50...65	Max. voltage L1-L2	REAL + PN Time	V	0	43
66...81	Max. voltage L2-L3	REAL + PN Time	V	0	44
82...97	Max. voltage L3-L1	REAL + PN Time	V	0	45
98...113	Max. current L1 [1]	REAL + PN Time	A	0	46
114...129	Max. current L2 [1]	REAL + PN Time	A	0	47
130...145	Max. current L3 [1]	REAL + PN Time	A	0	48
146...161	Max. apparent power L1	REAL + PN Time	VA	0	49
162...177	Max. apparent power L2	REAL + PN Time	VA	0	50
178...193	Max. apparent power L3	REAL + PN Time	VA	0	51
194...209	Max. active power L1	REAL + PN Time	W	-3.0×10^9	52
210...225	Max. active power L2	REAL + PN Time	W	-3.0×10^9	53

Byte	Measured variable	Data type	Unit	Default	Measured value ID
226...241	Max. active power L3	REAL + PN Time	W	-3.0×10^9	54
242...257	Max. reactive power Qtot L1	REAL + PN Time	var	-3.0×10^9	62160
258...273	Max. reactive power Qtot L2	REAL + PN Time	var	-3.0×10^9	62260
274...289	Max. reactive power Qtot L3	REAL + PN Time	var	-3.0×10^9	62360
290...305	Max. power factor λ L1	REAL + PN Time	-	0	58
306...321	Max. power factor λ L2	REAL + PN Time	-	0	59
322...337	Max. power factor λ L3	REAL + PN Time	-	0	60
338...353	Max. frequency	REAL + PN Time	Hz	45	61
354...369	Max. apparent power L1L2L3	REAL + PN Time	VA	0	67
370...385	Max. active power L1L2L3	REAL + PN Time	W	-3.0×10^9	65
386...401	Max. reactive power Qtot L1L2L3	REAL + PN Time	var	-3.0×10^9	61138
402...417	Max. power factor λ L1L2L3	REAL + PN Time	-	0	68
418...433	Max. reactive power Qn L1	REAL + PN Time	var	-3.0×10^9	55
434...449	Max. reactive power Qn L2	REAL + PN Time	var	-3.0×10^9	56
450...465	Max. reactive power Qn L3	REAL + PN Time	var	-3.0×10^9	57
466...481	Max. mean voltage L-N	REAL + PN Time	V	0	62
482...497	Max. mean voltage L-L	REAL + PN Time	V	0	63
498...513	Max. sum mean value current L1L2L3	REAL + PN Time	A	0	64
514...529	Max. fundamental voltage L1	REAL + PN Time	V	0	62152
530...545	Max. fundamental voltage L2	REAL + PN Time	V	0	62252
546...561	Max. fundamental voltage L3	REAL + PN Time	V	0	62352
562...577	Max. fundamental current L1	REAL + PN Time	A	0	62153

Byte	Measured variable	Data type	Unit	Default	Measured value ID
578...593	Max. fundamental current L2	REAL + PN Time	A	0	62253
594...609	Max. fundamental current L3	REAL + PN Time	A	0	62353
610...625	Max. fundamental apparent power L1	REAL + PN Time	VA	-3.0×10^9	62155
626...641	Max. fundamental apparent power L2	REAL + PN Time	VA	-3.0×10^9	62255
642...657	Max. fundamental apparent power L3	REAL + PN Time	VA	-3.0×10^9	62355
658...673	Max. fundamental reactive power L1	REAL + PN Time	var	-3.0×10^9	62154
674...689	Max. fundamental reactive power L2	REAL + PN Time	var	-3.0×10^9	62254
690...705	Max. fundamental reactive power L3	REAL + PN Time	var	-3.0×10^9	62354
706...721	Max. fundamental active power L1	REAL + PN Time	W	-3.0×10^9	62156
722...737	Max. fundamental active power L2	REAL + PN Time	W	-3.0×10^9	62256
738...753	Max. fundamental active power L3	REAL + PN Time	W	-3.0×10^9	62356
754...769	Max. fundamental cos φ active factor L1	REAL + PN Time	-	-1	62157
770...785	Max. fundamental cos φ active factor L2	REAL + PN Time	-	-1	62257
786...801	Max. fundamental cos φ active factor L3	REAL + PN Time	-	-1	62357
802...817	Max. THD+N voltage L1	REAL + PN Time	1%	0	62150
818...833	Max. THD+N voltage L2	REAL + PN Time	1%	0	62250
834...849	Max. THD+N voltage L3	REAL + PN Time	1%	0	62350
850...865	Max. THD+N current L1	REAL + PN Time	1%	0	62151
866...881	Max. THD+N current L2	REAL + PN Time	1%	0	62251
882...897	Max. THD+N current L3	REAL + PN Time	1%	0	62351

[1] The values reference the amount of the current measured value

Structure of time stamp

The table below shows the structure of the time stamp:

Byte	PN Time	Format	Length
0	Status 0: Synchronization from system time master available 1: local synchronization available 2: no synchronization	UINT16	2 bytes
2	Seconds high	UINT16	2 bytes
4	Seconds low	UINT32	4 bytes
8	Nanoseconds	UINT32	4 bytes

The start value (initial value) is 01.01.1970, 0:00

Note

If you use the FAQ from the section Time-of-day synchronization and time stamp (Page 50), the status is always 2.

E.6 Measured value data record for minimum values (DS 145)

E.6.1 Measured value data record for minimum values (DS 145) version 1

Measured variables of the module

The smallest values ever measured or calculated from the time AI Energy Meter HF was started are stored in this data record.

The measured value identification (measured value ID) is an index which references the overview table of the measured variables in appendix B (Measured variables for connection type (Page 162)).

Byte	Measured variable	Data type	Unit	Default	Measured value ID
0	Version	UINT8	-	1	-
1	Reserved	UINT8	-	0	-
2...5	Min. voltage L1-N	REAL	V	1000000	70
6...9	Min. voltage L2-N	REAL	V	1000000	71
10...13	Min. voltage L3-N	REAL	V	1000000	72
14...17	Min. voltage L1-L2	REAL	V	1800000	73
18...21	Min. voltage L2-L3	REAL	V	1800000	74
22...25	Min. voltage L3-L1	REAL	V	1800000	75
26...29	Min. current L1 [1]	REAL	A	100000	76
30...33	Min. current L2 [1]	REAL	A	100000	77
34...37	Min. current L3 [1]	REAL	A	100000	78
38...41	Min. apparent power L1	REAL	VA	$+3.0 \times 10^9$	79
42...45	Min. apparent power L2	REAL	VA	$+3.0 \times 10^9$	80
46...49	Min. apparent power L3	REAL	VA	$+3.0 \times 10^9$	81
50...53	Min. active power L1	REAL	W	$+3.0 \times 10^9$	82
54...57	Min. active power L2	REAL	W	$+3.0 \times 10^9$	83
58...61	Min. active power L3	REAL	W	$+3.0 \times 10^9$	84
62...65	Min. reactive power Qtot L1	REAL	var	$+3.0 \times 10^9$	62180
66...69	Min. reactive power Qtot L2	REAL	var	$+3.0 \times 10^9$	62280
70...73	Min. reactive power Qtot L3	REAL	var	$+3.0 \times 10^9$	62380
74...77	Min. power factor λ L1	REAL	-	1	88
78...81	Min. power factor λ L2	REAL	-	1	89
82...85	Min. power factor λ L3	REAL	-	1	90
86...89	Min. frequency	REAL	Hz	65	91
90...93	Min. apparent power L1L2L3	REAL	VA	$+3.0 \times 10^9$	97
94...97	Min. active power L1L2L3	REAL	W	$+3.0 \times 10^9$	95
98...101	Min. reactive power Qn L1L2L3	REAL	var	$+3.0 \times 10^9$	61139

Byte	Measured variable	Data type	Unit	Default	Measured value ID
102...105	Min. power factor λ L1L2L3	REAL	-	1	98
106...109	Min. reactive power Qn L1	REAL	var	$+3.0 \times 10^9$	85
110...113	Min. reactive power Qn L2	REAL	var	$+3.0 \times 10^9$	86
114...117	Min. reactive power Qn L3	REAL	var	$+3.0 \times 10^9$	87
118...121	Min. mean voltage L-N	REAL	V	1000000	92
122...125	Min. mean voltage L-L	REAL	V	1800000	93
126...129	Min. mean current L1L2L3	REAL	A	100000	94
130...133	Min. fundamental voltage L1	REAL	V	0	62172
134...137	Min. fundamental voltage L2	REAL	V	0	62272
138...141	Min. fundamental voltage L3	REAL	V	0	62372
142...145	Min. fundamental current L1	REAL	A	1000000	62173
146...149	Min. fundamental current L2	REAL	A	1000000	62273
150...153	Min. fundamental current L3	REAL	A	1000000	62373
154...157	Min. fundamental apparent power L1	REAL	VA	$+3.0 \times 10^9$	62175
158...161	Min. fundamental apparent power L2	REAL	VA	$+3.0 \times 10^9$	62275
162...165	Min. fundamental apparent power L3	REAL	VA	$+3.0 \times 10^9$	62375
166...169	Min. fundamental reactive power L1	REAL	var	$+3.0 \times 10^9$	62174
170...173	Min. fundamental reactive power L2	REAL	var	$+3.0 \times 10^9$	62274
174...177	Min. fundamental reactive power L3	REAL	var	$+3.0 \times 10^9$	62374
178...181	Min. fundamental active power L1	REAL	W	$+3.0 \times 10^9$	62176
182...185	Min. fundamental active power L2	REAL	W	$+3.0 \times 10^9$	62276
186...189	Min. fundamental active power L3	REAL	W	$+3.0 \times 10^9$	62376
190...193	Min. fundamental cos φ active factor L1	REAL	-	1	62177
194...197	Min. fundamental cos φ active factor L2	REAL	-	1	62277
198...201	Min. fundamental cos φ active factor L3	REAL	-	1	62377
202...205	Min. THD+N voltage L1	REAL	1%	100	62170
206...209	Min. THD+N voltage L2	REAL	1%	100	62270
210...213	Min. THD+N voltage L3	REAL	1%	100	62370
214...217	Min. THD+N current L1	REAL	1%	100	62171
218...221	Min. THD+N current L2	REAL	1%	100	62271
222...225	Min. THD+N current L3	REAL	1%	100	62371

[1] The values reference the amount of the current measured value

E.7 Measured value data record for minimum values with time stamp (DS 155)

Measured variables of the module

The smallest values ever measured or calculated from the time AI Energy Meter HF was started are stored in this data record.

The measured values (REAL 4 bytes) are each followed by a time stamp (PN Time 12 bytes)

The measured value identification (measured value ID) is an index which references the overview table of the measured variables in appendix B (Measured variables for connection type (Page 162)).

Byte	Measured variable	Data type	Unit	Default	Measured value ID
0	Version	UINT8	-	1	-
1	Reserved	UINT8	-	0	-
2...17	Min. voltage L1-N	REAL + PN Time	V	1000000	70
18...33	Min. voltage L2-N	REAL + PN Time	V	1000000	71
34...49	Min. voltage L3-N	REAL + PN Time	V	1000000	72
50...65	Min. voltage L1-L2	REAL + PN Time	V	1800000	73
66...81	Min. voltage L2-L3	REAL + PN Time	V	1800000	74
82...97	Min. voltage L3-L1	REAL + PN Time	V	1800000	75
98...113	Min. current L1 [1]	REAL + PN Time	A	100000	76
114...129	Min. current L2 [1]	REAL + PN Time	A	100000	77
130...145	Min. current L3 [1]	REAL + PN Time	A	100000	78
146...161	Min. apparent power L1	REAL + PN Time	VA	$+3.0 \times 10^9$	79
162...177	Min. apparent power L2	REAL + PN Time	VA	$+3.0 \times 10^9$	80
178...193	Min. apparent power L3	REAL + PN Time	VA	$+3.0 \times 10^9$	81
194...209	Min. active power L1	REAL + PN Time	W	$+3.0 \times 10^9$	82
210...225	Min. active power L2	REAL + PN Time	W	$+3.0 \times 10^9$	83

Byte	Measured variable	Data type	Unit	Default	Measured value ID
226...241	Min. active power L3	REAL + PN Time	W	$+3.0 \times 10^9$	84
242...257	Min. reactive power Qtot L1	REAL + PN Time	var	$+3.0 \times 10^9$	62180
258...273	Min. reactive power Qtot L2	REAL + PN Time	var	$+3.0 \times 10^9$	62280
274...289	Min. reactive power Qtot L3	REAL + PN Time	var	$+3.0 \times 10^9$	62380
290...305	Min. power factor λ L1	REAL + PN Time	-	1	88
306...321	Min. power factor λ L2	REAL + PN Time	-	1	89
322...337	Min. power factor λ L3	REAL + PN Time	-	1	90
338...353	Min. frequency	REAL + PN Time	Hz	65	91
354...369	Min. apparent power L1L2L3	REAL + PN Time	VA	$+3.0 \times 10^9$	97
370...385	Min. active power L1L2L3	REAL + PN Time	W	$+3.0 \times 10^9$	95
386...401	Min. reactive power Qn L1L2L3	REAL + PN Time	var	$+3.0 \times 10^9$	61139
402...417	Min. power factor λ L1L2L3	REAL + PN Time	-	1	98
418...433	Min. reactive power Qn L1	REAL + PN Time	var	$+3.0 \times 10^9$	85
434...449	Min. reactive power Qn L2	REAL + PN Time	var	$+3.0 \times 10^9$	86
450...465	Min. reactive power Qn L3	REAL + PN Time	var	$+3.0 \times 10^9$	87
466...481	Min. mean voltage L-N	REAL + PN Time	V	1000000	92
482...497	Min. mean voltage L-L	REAL + PN Time	V	1800000	93
498...513	Min. mean current L1L2L3	REAL + PN Time	A	100000	94
514...529	Min. fundamental voltage L1	REAL + PN Time	V	0	62172
530...545	Min. fundamental voltage L2	REAL + PN Time	V	0	62272
546...561	Min. fundamental voltage L3	REAL + PN Time	V	0	62372
562...577	Min. fundamental current L1	REAL + PN Time	A	1000000	62173

Byte	Measured variable	Data type	Unit	Default	Measured value ID
578...593	Min. fundamental current L2	REAL + PN Time	A	1000000	62273
594...609	Min. fundamental current L3	REAL + PN Time	A	1000000	62373
610...625	Min. fundamental apparent power L1	REAL + PN Time	VA	$+3.0 \times 10^9$	62175
626...641	Min. fundamental apparent power L2	REAL + PN Time	VA	$+3.0 \times 10^9$	62275
642...657	Min. fundamental apparent power L3	REAL + PN Time	VA	$+3.0 \times 10^9$	62375
658...673	Min. fundamental reactive power L1	REAL + PN Time	var	$+3.0 \times 10^9$	62174
674...689	Min. fundamental reactive power L2	REAL + PN Time	var	$+3.0 \times 10^9$	62274
690...705	Min. fundamental reactive power L3	REAL + PN Time	var	$+3.0 \times 10^9$	62374
706...721	Min. fundamental active power L1	REAL + PN Time	W	$+3.0 \times 10^9$	62176
722...737	Min. fundamental active power L2	REAL + PN Time	W	$+3.0 \times 10^9$	62276
738...753	Min. fundamental active power L3	REAL + PN Time	W	$+3.0 \times 10^9$	62376
754...769	Min. fundamental cos φ active factor L1	REAL + PN Time	-	1	62177
770...785	Min. fundamental cos φ active factor L2	REAL + PN Time	-	1	62277
786...801	Min. fundamental cos φ active factor L3	REAL + PN Time	-	1	62377
802...817	Min. THD+N voltage L1	REAL + PN Time	1%	100	62170
818...833	Min. THD+N voltage L2	REAL + PN Time	1%	100	62270
834...849	Min. THD+N voltage L3	REAL + PN Time	1%	100	62370
850...865	Min. THD+N current L1	REAL + PN Time	1%	100	62171
866...881	Min. THD+N current L2	REAL + PN Time	1%	100	62271
882...897	Min. THD+N current L3	REAL + PN Time	1%	100	62371

[1] The values reference the amount of the current measured value

E.8 Measured value data record for phase-based measured values L1 (DS 147)

E.8.1 Measured value data record for phase-based measured values L1 (DS 147) version 0

Measured variables of the module

The measured value identification (measured value ID) is an index which references the overview table of the measured variables in appendix B (Measured variables for connection type (Page 162)).

Byte	Measured variable	Data type	Unit	Value range	Measured value ID
0	Version	BYTE	-	0	-
1	Reserved	BYTE	-	0	-
2...3	Qualifier L1	WORD	Bit field	0b 00 00 00 00 0b qq 00 00 xx	65500
4...7	Voltage UL1-N	REAL	V	0.0 ... 1000000.0	1
8...11	Current L1	REAL	A	0.0 … 100000.0	7
12...15	Apparent power L1	REAL	VA	-3.0×10^9 … $+3.0 \times 10^9$	10
16...19	Active power L1	REAL	W	-3.0×10^9 … $+3.0 \times 10^9$	13
20...23	Reactive power Qtot L1	REAL	var	-3.0×10^9 … $+3.0 \times 10^9$	22
24...27	Power factor L1	REAL	-	0.0 ... 1.0	19
28...31	Phase angle L1	REAL	°	0.0 ... 360.0	61178
32...39	Apparent energy L1	LREAL	VAh	0.0 ... 1.8×10^{308}	61184
40...47	Total active energy L1	LREAL	Wh	-1.8×10^{308} ... $+1.8 \times 10^{308}$	61185
48...55	Total reactive energy L1	LREAL	varh	-1.8×10^{308} ... $+1.8 \times 10^{308}$	61186
56...59	Max. voltage UL1-N	REAL	V	0.0 ... 1000000.0	40
60...63	Max. current L1	REAL	A	0.0 ... 100000.0	46
64...67	Max. apparent power L1	REAL	VA	-3.0×10^9 … $+3.0 \times 10^9$	49
68...71	Max. active power L1	REAL	W	-3.0×10^9 … $+3.0 \times 10^9$	52
72...75	Max. reactive power Qtot L1	REAL	var	-3.0×10^9 … $+3.0 \times 10^9$	62160
76...79	Max. power factor L1	REAL	-	0.0 ... 1.0	58
80...83	Min. voltage UL1-N	REAL	V	0.0 ... 1000000.0	70
84...87	Min. current L1	REAL	A	0.0 ... 100000.0	76
88...91	Min. apparent power L1	REAL	VA	-3.0×10^9 … $+3.0 \times 10^9$	79
92...95	Min. active power L1	REAL	W	-3.0×10^9 … $+3.0 \times 10^9$	82
96...99	Min. reactive power Qtot L1	REAL	var	-3.0×10^9 … $+3.0 \times 10^9$	62180
100...103	Min. power factor L1	REAL	-	0.0 ... 1.0	88

E.8.2 Measured value data record for phase-based measured values L1 (DS 147) version 1

Measured variables of the module

The measured value identification (measured value ID) is an index which references the overview table of the measured variables in appendix B (Measured variables for connection type (Page 162)).

Byte	Measured variable	Data type	Unit	Value range	Measured value ID
0	Version	UINT8	-	1	-
1	Reserved	UINT8	-	0	-
2...3	Qualifier L1	WORD	Bit field	0b 00 00 00 00 0b qq 00 00 xx	65500
4...7	Voltage L1-N	REAL	V	0.0 ... 1000000.0	1
8...11	Current L1	REAL	A	0.0 … 100000.0	7
12...15	Apparent power L1	REAL	VA	-3.0×10^9 … $+3.0 \times 10^9$	10
16...19	Active power L1	REAL	W	-3.0×10^9 … $+3.0 \times 10^9$	13
20...23	Reactive power L1	REAL	var	-3.0×10^9 … $+3.0 \times 10^9$	22
24...27	Power factor L1	REAL	-	0.0 ... 1.0	19
28...31	Phase angle L1	REAL	°	0.0 ... 360.0	61178
32...39	Apparent energy L1	LREAL	VAh	0.0 ... 1.8×10^{308}	61184
40...47	Total active energy L1	LREAL	Wh	-1.8×10^{308} ... $+1.8 \times 10^{308}$	61185
48...55	Total reactive energy L1	LREAL	varh	-1.8×10^{308} ... $+1.8 \times 10^{308}$	61186
56...59	Max. voltage L1-N	REAL	V	0.0 ... 1000000.0	40
60...63	Max. current L1	REAL	A	0.0 ... 100000.0	46
64...67	Max. apparent power L1	REAL	VA	-3.0×10^9 … $+3.0 \times 10^9$	49
68...71	Max. active power L1	REAL	W	-3.0×10^9 … $+3.0 \times 10^9$	52
72...75	Max. reactive power L1	REAL	var	-3.0×10^9 … $+3.0 \times 10^9$	62160
76...79	Max. power factor L1	REAL	-	0.0 ... 1.0	58
80...83	Min. voltage L1-N	REAL	V	0.0 ... 1000000.0	70
84...87	Min. current L1	REAL	A	0.0 ... 100000.0	76
88...91	Min. apparent power L1	REAL	VA	-3.0×10^9 … $+3.0 \times 10^9$	79
92...95	Min. active power L1	REAL	W	-3.0×10^9 … $+3.0 \times 10^9$	82
96...99	Min. reactive power Qtot L1	REAL	var	-3.0×10^9 … $+3.0 \times 10^9$	62180
100...103	Min. power factor L1	REAL	-	0.0 ... 1.0	88
104...107	Reactive power Qn L1	REAL	var	-3.0×10^9 … $+3.0 \times 10^9$	16
108...111	Current L1 10-12 cycles	REAL	V	0.0 ... 760.0	62130
112...115	Current L1 10-12 cycles	REAL	A	0.0 ... 100000.0	62133
116...119	Max. reactive power Qn L1	REAL	var	-3.0×10^9 … $+3.0 \times 10^9$	55
120...123	Min. reactive power Qn L1	REAL	var	-3.0×10^9 … $+3.0 \times 10^9$	85

Byte	Measured variable	Data type	Unit	Value range	Measured value ID
124...127	Fundamental voltage L1	REAL	V	0.0 ... 440.0	62122
128...131	Fundamental current L1	REAL	A	0.0 ... 100000.0	62123
132...135	Fundamental apparent power L1	REAL	VA	-3.0×10^9 … $+3.0 \times 10^9$	62125
136...139	Fundamental reactive power L1	REAL	var	-3.0×10^9 … $+3.0 \times 10^9$	62124
140...143	Fundamental active power L1	REAL	W	-3.0×10^9 … $+3.0 \times 10^9$	62126
144...147	Fundamental cos φ active factor L1	REAL	-	-1.0 ... 1.0	62127
148...151	Max. fundamental voltage L1	REAL	V	0.0 ... 760.0	62152
152...155	Max. fundamental current L1	REAL	A	0.0 ... 100000.0	62153
156...159	Max. fundamental apparent power L1	REAL	VA	-3.0×10^9 … $+3.0 \times 10^9$	62155
160...163	Max. fundamental reactive power L1	REAL	var	-3.0×10^9 … $+3.0 \times 10^9$	62154
164...167	Max. fundamental active power L1	REAL	W	-3.0×10^9 … $+3.0 \times 10^9$	62156
168...171	Max. fundamental cos φ active factor L1	REAL	-	-1.0 ... 1.0	62157
172...175	Min. fundamental voltage L1	REAL	V	0.0 ... 440.0	62172
176...179	Min. fundamental current L1	REAL	A	0.0 ... 100000.0	62173
180...183	Min. fundamental apparent power L1	REAL	VA	-3.0×10^9 … $+3.0 \times 10^9$	62175
184...187	Min. fundamental reactive power L1	REAL	var	-3.0×10^9 … $+3.0 \times 10^9$	62174
188...191	Min. fundamental active power L1	REAL	W	-3.0×10^9 … $+3.0 \times 10^9$	62176
192...195	Min. fundamental cos φ active factor L1	REAL	-	-1.0 ... 1.0	62177
196...199	THD+N voltage L1	REAL	1%	0% to 100%	62120
200...203	THD+N current L1	REAL	1%	0% to 100%	62121
204...207	Max. THD+N voltage L1	REAL	1%	0% to 100%	62150
208...211	Max. THD+N current L1	REAL	1%	0% to 100%	62151
212...215	Min. THD+N voltage L1	REAL	1%	0% to 100%	62170
216...219	Min. THD+N current L1	REAL	1%	0% to 100%	62171
220...223	Voltage dip - value L1	REAL	V	0.0 ... 440.0	62194
224...227	Voltage dip - duration L1	REAL	ms	0.0 ... 100000.0	62199
228...231	Voltage swell - value L1	REAL	V	0.0 ... 440.0	62195
232...235	Voltage swell - duration L1	REAL	ms	0.0 ... 100000.0	62200
236...239	Voltage peak value L1	REAL	V	0.0 ... 440.0	62196
240...243	Current peak value L1	REAL	A	0.0 ... 100000.0	62197
244...247	Overcurrent value L1	REAL	A	0.0 ... 100000.0	62198

E.9 Measured value data record for phase-based measured values L2 (DS 148)

E.9.1 Measured value data record for phase-based measured values L2 (DS 148) version 0

Measured variables of the module

The measured value identification (measured value ID) is an index which references the overview table of the measured variables in appendix B (Measured variables for connection type (Page 162)).

Byte	Measured variable	Data type	Unit	Value range	Measured value ID
0	Version	BYTE	-	0	-
1	Reserved	BYTE	-	0	-
2...3	Qualifier L2	WORD	Bit field	0b 00 00 00 00 0b qq 00 00 xx	65501
4...7	Voltage UL1-N	REAL	V	0.0 ... 1000000.0	2
8...11	Current L2	REAL	A	0.0 … 100000.0	8
12...15	Apparent power L2	REAL	VA	-3.0×10^9 … $+3.0 \times 10^9$	11
16...19	Active power L2	REAL	W	-3.0×10^9 … $+3.0 \times 10^9$	14
20...23	Reactive power Qtot L2	REAL	var	-3.0×10^9 … $+3.0 \times 10^9$	23
24...27	Power factor L2	REAL	-	0.0 ... 1.0	20
28...31	Phase angle L2	REAL	°	0.0 ... 360.0	61198
32...39	Apparent energy L2	LREAL	VAh	0.0 ... 1.8×10^{308}	61204
40...47	Total active energy L2	LREAL	Wh	-1.8×10^{308} to $+1.8 \times 10^{308}$	61205
48...55	Total reactive energy L2	LREAL	varh	-1.8×10^{308} to $+1.8 \times 10^{308}$	61206
56...59	Max. voltage UL1-N	REAL	V	0.0 ... 1000000.0	41
60...63	Max. current L2	REAL	A	0.0 ... 100000.0	47
64...67	Max. apparent power L2	REAL	VA	-3.0×10^9 … $+3.0 \times 10^9$	50
68...71	Max. active power L2	REAL	W	-3.0×10^9 … $+3.0 \times 10^9$	53
72...75	Max. reactive power Qtot L2	REAL	var	-3.0×10^9 … $+3.0 \times 10^9$	62260
76...79	Max. power factor L2	REAL	-	0.0 ... 1.0	59
80...83	Min. voltage UL1-N	REAL	V	0.0 ... 1000000.0	71
84...87	Min. current L2	REAL	A	0.0 ... 100000.0	77
88...91	Min. apparent power L2	REAL	VA	-3.0×10^9 … $+3.0 \times 10^9$	80
92...95	Min. active power L2	REAL	W	-3.0×10^9 … $+3.0 \times 10^9$	83
96...99	Min. reactive power Qtot L2	REAL	var	-3.0×10^9 … $+3.0 \times 10^9$	62280
100...103	Min. power factor L2	REAL	-	0.0 ... 1.0	89

E.9.2 Measured value data record for phase-based measured values L2 (DS 148) version 1

Measured variables of the module

The measured value identification (measured value ID) is an index which references the overview table of the measured variables in appendix B (Measured variables for connection type (Page 162)).

Byte	Measured variable	Data type	Unit	Value range	Measured value ID
0	Version	UINT8	-	1	-
1	Reserved	UINT8	-	0	-
2...3	Qualifier L2	WORD	Bit field	0b 00 00 00 00 0b qq 00 00 xx	65501
4...7	Voltage L2-N	REAL	V	0.0 ... 1000000.0	2
8...11	Current L2	REAL	A	0.0 … 100000.0	8
12...15	Apparent power L2	REAL	VA	-3.0×10^9 … $+3.0 \times 10^9$	11
16...19	Active power L2	REAL	W	-3.0×10^9 … $+3.0 \times 10^9$	14
20...23	Reactive power L2	REAL	var	-3.0×10^9 … $+3.0 \times 10^9$	23
24...27	Power factor L2	REAL	-	0.0 ... 1.0	20
28...31	Phase angle L2	REAL	°	0.0 ... 360.0	61198
32...39	Apparent energy L2	LREAL	VAh	0.0 ... 1.8×10^{308}	61204
40...47	Total active energy L2	LREAL	Wh	-1.8×10^{308} ... $+1.8 \times 10^{308}$	61205
48...55	Total reactive energy L2	LREAL	varh	-1.8×10^{308} ... $+1.8 \times 10^{308}$	61206
56...59	Max. voltage UL2-N	REAL	V	0.0 ... 1000000.0	41
60...63	Max. current L2	REAL	A	0.0 ... 100000.0	47
64...67	Max. apparent power L2	REAL	VA	-3.0×10^9 … $+3.0 \times 10^9$	50
68...71	Max. active power L2	REAL	W	-3.0×10^9 … $+3.0 \times 10^9$	53
72...75	Max. reactive power L2	REAL	var	-3.0×10^9 … $+3.0 \times 10^9$	62260
76...79	Max. power factor L2	REAL	-	0.0 ... 1.0	59
80...83	Min. voltage UL2-N	REAL	V	0.0 ... 1000000.0	71
84...87	Min. current L2	REAL	A	0.0 ... 100000.0	77
88...91	Min. apparent power L2	REAL	VA	-3.0×10^9 … $+3.0 \times 10^9$	80
92...95	Min. active power L2	REAL	W	-3.0×10^9 … $+3.0 \times 10^9$	83
96...99	Min. reactive power Qtot L2	REAL	var	-3.0×10^9 … $+3.0 \times 10^9$	62280
100...103	Min. power factor L2	REAL	-	0.0 ... 1.0	89
104...107	Reactive power Qn L2	REAL	var	-3.0×10^9 … $+3.0 \times 10^9$	17
108...111	Current L2 10-12 cycles	REAL	V	0.0 ... 760.0	62230
112...115	Current L2 10-12 cycles	REAL	A	0.0 ... 100000.0	62233
116...119	Max. reactive power Qn L2	REAL	var	-3.0×10^9 … $+3.0 \times 10^9$	56
120...123	Min. reactive power Qn L2	REAL	var	-3.0×10^9 … $+3.0 \times 10^9$	86

Byte	Measured variable	Data type	Unit	Value range	Measured value ID
124...127	Fundamental voltage L2	REAL	V	0.0 ... 440.0	62222
128...131	Fundamental current L2	REAL	A	0.0 ... 100000.0	62223
132...135	Fundamental apparent power L2	REAL	VA	-3.0×10^9 … $+3.0 \times 10^9$	62225
136...139	Fundamental reactive power L2	REAL	var	-3.0×10^9 … $+3.0 \times 10^9$	62224
140...143	Fundamental active power L2	REAL	W	-3.0×10^9 … $+3.0 \times 10^9$	62226
144...147	Fundamental cos φ active factor L2	REAL	-	-1.0 ... 1.0	62227
148...151	Max. fundamental voltage L2	REAL	V	0.0 ... 760.0	62252
152...155	Max. fundamental current L2	REAL	A	0.0 ... 100000.0	62253
156...159	Max. fundamental apparent power L2	REAL	VA	-3.0×10^9 … $+3.0 \times 10^9$	62255
160...163	Max. fundamental reactive power L2	REAL	var	-3.0×10^9 … $+3.0 \times 10^9$	62254
164...167	Max. fundamental active power L2	REAL	W	-3.0×10^9 … $+3.0 \times 10^9$	62256
168...171	Max. fundamental cos φ active factor L2	REAL	-	-1.0 ... 1.0	62257
172...175	Min. fundamental voltage L2	REAL	V	0.0 ... 440.0	62272
176...179	Min. fundamental current L2	REAL	A	0.0 ... 100000.0	62273
180...183	Min. fundamental apparent power L2	REAL	VA	-3.0×10^9 … $+3.0 \times 10^9$	62275
184...187	Min. fundamental reactive power L2	REAL	var	-3.0×10^9 … $+3.0 \times 10^9$	62274
188...191	Min. fundamental active power L2	REAL	W	-3.0×10^9 … $+3.0 \times 10^9$	62276
192...195	Min. fundamental cos φ active factor L2	REAL	-	-1.0 ... 1.0	62277
196...199	THD+N voltage L2	REAL	1%	0% to 100%	62220
200...203	THD+N current L2	REAL	1%	0% to 100%	62221
204...207	Max. THD+N voltage L2	REAL	1%	0% to 100%	62250
208...211	Max. THD+N current L2	REAL	1%	0% to 100%	62251
212...215	Min. THD+N voltage L2	REAL	1%	0% to 100%	62270
216...219	Min. THD+N current L2	REAL	1%	0% to 100%	62271
220...223	Voltage dip - value L2	REAL	V	0.0 ... 440.0	62294
224...227	Voltage dip - duration L2	REAL	ms	0.0 ... 100000.0	62299
228...231	Voltage swell - value L2	REAL	V	0.0 ... 440.0	62295
232...235	Voltage swell - duration L2	REAL	ms	0.0 ... 100000.0	62300
236...239	Voltage peak value L2	REAL	V	0.0 ... 440.0	62296
240...243	Current peak value L2	REAL	A	0.0 ... 100000.0	62297
244...247	Overcurrent value L2	REAL	A	0.0 ... 100000.0	62298

E.10 Measured value data record for phase-based measured values L3 (DS 149)

E.10.1 Measured value data record for phase-based measured values L3 (DS 149) version 0

Measured variables of the module

The measured value identification (measured value ID) is an index which references the overview table of the measured variables in appendix B (Measured variables for connection type (Page 162)).

Byte	Measured variable	Data type	Unit	Value range	Measured value ID
0	Version	BYTE	-	-	-
1	Reserved	BYTE	-	-	-
2...3	Qualifier L3	WORD	Bit field	0b 00 00 00 00 0b qq 00 00 xx	65502
4...7	Voltage UL1-N	REAL	V	0.0 ... 1000000.0	3
8...11	Current L3	REAL	A	0.0 … 100000.0	9
12...15	Apparent power L3	REAL	VA	-3.0×10^9 … $+3.0 \times 10^9$	12
16...19	Active power L3	REAL	W	-3.0×10^9 … $+3.0 \times 10^9$	15
20...23	Reactive power Qtot L3	REAL	var	-3.0×10^9 … $+3.0 \times 10^9$	24
24...27	Power factor L3	REAL	-	0.0 ... 1.0	21
28...31	Phase angle L3	REAL	°	0.0 ... 360.0	61218
32...39	Apparent energy L3	LREAL	VAh	0.0 ... 1.8×10^{308}	61224
40...47	Total active energy L3	LREAL	Wh	-1.8×10^{308} to $+1.8 \times 10^{308}$	61225
48...55	Total reactive energy L3	LREAL	varh	-1.8×10^{308} to $+1.8 \times 10^{308}$	61226
56...59	Max. voltage UL1-N	REAL	V	0.0 ... 1000000.0	42
60...63	Max. current L3	REAL	A	0.0 ... 100000.0	48
64...67	Max. apparent power L3	REAL	VA	-3.0×10^9 … $+3.0 \times 10^9$	51
68...71	Max. active power L3	REAL	W	-3.0×10^9 … $+3.0 \times 10^9$	54
72...75	Max. reactive power Qtot L3	REAL	var	-3.0×10^9 … $+3.0 \times 10^9$	62360
76...79	Max. power factor L3	REAL	-	0.0 ... 1.0	60
80...83	Min. voltage UL1-N	REAL	V	0.0 ... 1000000.0	72
84...87	Min. current L3	REAL	A	0.0 ... 100000.0	78
88...91	Min. apparent power L3	REAL	VA	-3.0×10^9 … $+3.0 \times 10^9$	81
92...95	Min. active power L3	REAL	W	-3.0×10^9 … $+3.0 \times 10^9$	62380
96...99	Min. reactive power Qtot L3	REAL	var	-3.0×10^9 … $+3.0 \times 10^9$	97
100...103	Min. power factor L3	REAL	-	0.0 ... 1.0	90

E.10.2 Measured value data record for phase-based measured values L3 (DS 149) version 1

Measured variables of the module

The measured value identification (measured value ID) is an index which references the overview table of the measured variables in appendix B (Measured variables for connection type (Page 162)).

Byte	Measured variable	Data type	Unit	Value range	Measured value ID
0	Version	UINT8	-	1	-
1	Reserved	UINT8	-	0	-
2...3	Qualifier L3	WORD	Bit field	0b 00 00 00 00 0b qq 00 00 xx	65502
4...7	Voltage L3-N	REAL	V	0.0 ... 1000000.0	3
8...11	Current L3	REAL	A	0.0 … 100000.0	9
12...15	Apparent power L3	REAL	VA	-3.0×10^9 … $+3.0 \times 10^9$	12
16...19	Active power L3	REAL	W	-3.0×10^9 … $+3.0 \times 10^9$	15
20...23	Reactive power L3	REAL	var	-3.0×10^9 … $+3.0 \times 10^9$	24
24...27	Power factor L3	REAL	-	0.0 ... 1.0	21
28...31	Phase angle L3	REAL	°	0.0 ... 360.0	61218
32...39	Apparent energy L3	LREAL	VAh	0.0 ... 1.8×10^{308}	61224
40...47	Total active energy L3	LREAL	Wh	-1.8×10^{308} ... $+1.8 \times 10^{308}$	61225
48...55	Total reactive energy L3	LREAL	varh	-1.8×10^{308} ... $+1.8 \times 10^{308}$	61226
56...59	Max. voltage UL3-N	REAL	V	0.0 ... 1000000.0	42
60...63	Max. current L3	REAL	A	0.0 ... 100000.0	48
64...67	Max. apparent power L3	REAL	VA	-3.0×10^9 … $+3.0 \times 10^9$	51
68...71	Max. active power L3	REAL	W	-3.0×10^9 … $+3.0 \times 10^9$	54
72...75	Max. reactive power L3	REAL	var	-3.0×10^9 … $+3.0 \times 10^9$	62360
76...79	Max. power factor L3	REAL	-	0.0 ... 1.0	60
80...83	Min. voltage UL3-N	REAL	V	0.0 ... 1000000.0	72
84...87	Min. current L3	REAL	A	0.0 ... 100000.0	78
88...91	Min. apparent power L3	REAL	VA	-3.0×10^9 … $+3.0 \times 10^9$	81
92...95	Min. active power L3	REAL	W	-3.0×10^9 … $+3.0 \times 10^9$	84
96...99	Min. reactive power Qtot L3	REAL	var	-3.0×10^9 … $+3.0 \times 10^9$	62380
100...103	Min. power factor L3	REAL	-	0.0 ... 1.0	90
104...107	Reactive power Qn L3	REAL	var	-3.0×10^9 … $+3.0 \times 10^9$	18
108...111	Current L3 10-12 cycles	REAL	V	0.0 ... 760.0	62330
112...115	Current L3 10-12 cycles	REAL	A	0.0 ... 100000.0	62333
116...119	Max. reactive power Qn L3	REAL	var	-3.0×10^9 … $+3.0 \times 10^9$	57
120...123	Min. reactive power Qn L3	REAL	var	-3.0×10^9 … $+3.0 \times 10^9$	87

Byte	Measured variable	Data type	Unit	Value range	Measured value ID
124...127	Fundamental voltage L3	REAL	V	0.0 ... 440.0	62322
128...131	Fundamental current L3	REAL	A	0.0 ... 100000.0	62323
132...135	Fundamental apparent power L3	REAL	VA	-3.0×10^9 … $+3.0 \times 10^9$	62325
136...139	Fundamental reactive power L3	REAL	var	-3.0×10^9 … $+3.0 \times 10^9$	62324
140...143	Fundamental active power L3	REAL	W	-3.0×10^9 … $+3.0 \times 10^9$	62326
144...147	Fundamental cos φ active factor L3	REAL	-	-1.0 ... 1.0	62327
148...151	Max. fundamental voltage L3	REAL	V	0.0 ... 760.0	62352
152...155	Max. fundamental current L3	REAL	A	0.0 ... 100000.0	62353
156...159	Max. fundamental apparent power L3	REAL	VA	-3.0×10^9 … $+3.0 \times 10^9$	62355
160...163	Max. fundamental reactive power L3	REAL	var	-3.0×10^9 … $+3.0 \times 10^9$	62354
164...167	Max. fundamental active power L3	REAL	W	-3.0×10^9 … $+3.0 \times 10^9$	62356
168...171	Max. fundamental cos φ active factor L3	REAL	-	-1.0 ... 1.0	62357
172...175	Min. fundamental voltage L3	REAL	V	0.0 ... 440.0	62372
176...179	Min. fundamental current L3	REAL	A	0.0 ... 100000.0	62373
180...183	Min. fundamental apparent power L3	REAL	VA	-3.0×10^9 … $+3.0 \times 10^9$	62375
184...187	Min. fundamental reactive power L3	REAL	var	-3.0×10^9 … $+3.0 \times 10^9$	62374
188...191	Min. fundamental active power L3	REAL	W	-3.0×10^9 … $+3.0 \times 10^9$	62376
192...195	Min. fundamental cos φ active factor L3	REAL	-	-1.0 ... 1.0	62377
196...199	THD+N voltage L3	REAL	1%	0% to 100%	62320
200...203	THD+N current L3	REAL	1%	0% to 100%	62321
204...207	Max. THD+N voltage L3	REAL	1%	0% to 100%	62350
208...211	Max. THD+N current L3	REAL	1%	0% to 100%	62351
212...215	Min. THD+N voltage L3	REAL	1%	0% to 100%	62370
216...219	Min. THD+N current L3	REAL	1%	0% to 100%	62371
220...223	Voltage dip - value L3	REAL	V	0.0 ... 440.0	62394
224...227	Voltage dip - duration L3	REAL	ms	0.0 ... 100000.0	62399
228...231	Voltage swell - value L3	REAL	V	0.0 ... 440.0	62395
232...235	Voltage swell - duration L3	REAL	ms	0.0 ... 100000.0	62400
236...239	Voltage peak value L3	REAL	V	0.0 ... 440.0	62396
240...243	Current peak value L3	REAL	A	0.0 ... 100000.0	62397
244...247	Overcurrent value L3	REAL	A	0.0 ... 100000.0	62398

E.11 Measured value data record for advanced measurement and status values (DS 150)

E.11.1 Measured value data record for advanced measured values and status values (DS 150) version 1

Measured variables of the module

The measured value identification (measured value ID) is an index which references the overview table of the measured variables in appendix B (Measured variables for connection type (Page 162)).

Byte	Measured variable	Data type	Unit	Value range	Measured value ID
0	Version	BYTE	-	1	-
1	Reserved	BYTE	-	0	-
2...5	Operating hours counter L1L2L3	REAL	h	0.0 ... 3.4 x 10^{38}	65504
6...9	Operating hours counter L1	REAL	h	0.0 ... 3.4 x 10^{38}	65505
10...13	Operating hours counter L2	REAL	h	0.0 ... 3.4 x 10^{38}	65506
14...17	Operating hours counter L3	REAL	h	0.0 ... 3.4 x 10^{38}	65507
18...19	Status limit violation GW 1...16	WORD	Bit string	xxxx xxxx xxxx xxxx	65509
20...21	Status of energy counter overflows [1]	WORD	Bit string	xxxx xxxx xxxx xxxx	65508
22...25	Counter limit violation GW 1	UDINT	-	0 ... 4294967296	65510
26...29	Counter limit violation GW 2	UDINT	-	0 ... 4294967296	65511
30...33	Counter limit violation GW 3	UDINT	-	0 ... 4294967296	65512
34...37	Counter limit violation GW 4	UDINT	-	0 ... 4294967296	65513
38...41	Counter limit violation GW 5	UDINT	-	0 ... 4294967296	65514
42...45	Counter limit violation GW 6	UDINT	-	0 ... 4294967296	65515
46...49	Counter limit violation GW 7	UDINT	-	0 ... 4294967296	65516
50...53	Counter limit violation GW 8	UDINT	-	0 ... 4294967296	65517
54...57	Counter limit violation GW 9	UDINT	-	0 ... 4294967296	65518
58...61	Counter limit violation GW 10	UDINT	-	0 ... 4294967296	65519
62...65	Counter limit violation GW 11	UDINT	-	0 ... 4294967296	65520
66...69	Counter limit violation GW 12	UDINT	-	0 ... 4294967296	65521
70...73	Counter limit violation GW 13	UDINT	-	0 ... 4294967296	65522
74...77	Counter limit violation GW 14	UDINT	-	0 ... 4294967296	65523
78...81	Counter limit violation GW 15	UDINT	-	0 ... 4294967296	65524
82...85	Counter limit violation GW 16	UDINT	-	0 ... 4294967296	65525

Byte	Measured variable	Data type	Unit	Value range	Measured value ID
86...87	Qualifier L1L2L3	WORD	Bit string	xxxx xxxx xxxx xxxx	65503
88...91	Power quality analysis - Qualifier	UDINT	Bit string	-	65496
92...103	Current module time	PNI-OTime	sec	-	65497

[1] Energy counters count periodically - counter overflow at:
Bit 0 = 1: Active energy inflow L1
Bit 1 = 1: Active energy outflow L1
Bit 2 = 1: Reactive energy inflow L1
Bit 3 = 1: Reactive energy outflow L1
Bit 4 = 1: Apparent energy L1
Bit 5 = 1: Active energy inflow L2
Bit 6 = 1: Active energy outflow L2
Bit 7 = 1: Reactive energy inflow L2
Bit 8 = 1: Reactive energy outflow L2
Bit 9 = 1: Apparent energy L2
Bit 10 = 1: Active energy inflow L3
Bit 11 = 1: Active energy outflow L3
Bit 12 = 1: Reactive energy inflow L3
Bit 13 = 1: Reactive energy outflow L3
Bit 14 = 1: Apparent energy L3
Bit 15: Reserved

E.12 Measured value data record of user-defined data record (DS 151)

The length and structure of the data record DS 151 depends on the parameter assignment of the data record DS 135 (Page 159).

Byte	Measured variable	Data type	Unit	Default	Measured value ID
0	Version	UINT8	-	0	-
1	Number of measured values	UINT8	-	0	-
2	Measured value 1 corresponding to measured value ID 1 in DS135	Depending on the corresponding measured value ID			
3	Measured value 2 corresponding to measured value ID 2 in DS135	Depending on the corresponding measured value ID			
...	...	Depending on the corresponding measured value ID			
... m	Measured value n corresponding to measured value ID n in DS135	Depending on the corresponding measured value ID			

E.13 Measured value data record for power quality analysis (DS 160)

Measured variables of the module

The measured value identification (measured value ID) is an index which references the overview table of the measured variables in appendix B (Measured variables for connection type (Page 162)).

Byte	Measured variable	Data type	Unit	Value range	Measured value ID
0	Version	BYTE	-	-	-
1	Reserved	BYTE	-	-	-
2...5	Neutral current IN	REAL	A	0.0 ... 100000.0	61149
6...9	Neutral current 10/12 cycles	REAL	A	0.0 ... 100000.0	61150
10...13	Total current IL1+IL2+IL3-IN	REAL	A	-100000.0 ... 100000.0	61153
14...17	Fundamental reactive power L1L2L3	REAL	var	-3.0×10^9 ... $+3.0 \times 10^9$	61154
18...21	Max. fundamental reactive power L1L2L3	REAL	var	-3.0×10^9 ... $+3.0 \times 10^9$	61155
22...25	Min. fundamental reactive power L1L2L3	REAL	var	-3.0×10^9 ... $+3.0 \times 10^9$	61156
26...29	Power factor λ L1L2L3	REAL	-	0.0 ... 1.0	37
30...33	Fundamental reactive power L1	REAL	var	-3.0×10^9 ... $+3.0 \times 10^9$	62124
34...37	Fundamental reactive power L2	REAL	var	-3.0×10^9 ... $+3.0 \times 10^9$	62224
38...41	Fundamental reactive power L3	REAL	var	-3.0×10^9 ... $+3.0 \times 10^9$	62324
42...45	Fundamental cos φ active factor L1	REAL	-	-1.0 ... 1.0	62127
46...49	Fundamental cos φ active factor L2	REAL	-	-1.0 ... 1.0	62227
50...53	Fundamental cos φ active factor L3	REAL	-	-1.0 ... 1.0	62327
54...57	THD+N voltage L1	REAL	1%	0% to 100%	62120
58...61	THD+N voltage L2	REAL	1%	0% to 100%	62220
62...65	THD+N voltage L3	REAL	1%	0% to 100%	62320
66...69	THD+N current L1	REAL	1%	0% to 100%	62121
70...73	THD+N current L2	REAL	1%	0% to 100%	62221
74...77	THD+N current L3	REAL	1%	0% to 100%	62321
78...81	Max. THD+N voltage L1	REAL	1%	0% to 100%	62150
82...85	Max. THD+N voltage L2	REAL	1%	0% to 100%	62250
86...89	Max. THD+N voltage L3	REAL	1%	0% to 100%	62350
90...93	Max. THD+N current L1	REAL	1%	0% to 100%	62151
94...97	Max. THD+N current L2	REAL	1%	0% to 100%	62251
98...101	Max. THD+N current L3	REAL	1%	0% to 100%	62351
102...105	Min. THD+N voltage L1	REAL	1%	0% to 100%	62170
106...109	Min. THD+N voltage L2	REAL	1%	0% to 100%	62270
110...113	Min. THD+N voltage L3	REAL	1%	0% to 100%	62370
114...117	Min. THD+N current L1	REAL	1%	0% to 100%	62171
118...121	Min. THD+N current L2	REAL	1%	0% to 100%	62271

Byte	Measured variable	Data type	Unit	Value range	Measured value ID
122...125	Min. THD+N current L3	REAL	1%	0% to 100%	62371
126...129	Voltage dip - value L1	REAL	V	0 ... 440.0	62194
130...133	Voltage dip - duration L1	REAL	ms	0.0 ... 100000.0	62199
134...137	Voltage dip - value L2	REAL	V	0 ... 440.0	62294
138...141	Voltage dip - duration L2	REAL	ms	0.0 ... 100000.0	62299
142...145	Voltage dip - value L3	REAL	V	0 ... 440.0	62394
146...149	Voltage dip - duration L3	REAL	ms	0.0 ... 100000.0	62399
150...153	Voltage increase - value L1	REAL	V	0 ... 440.0	62195
154...157	Voltage increase - duration L1	REAL	ms	0.0 ... 100000.0	62200
158...161	Voltage increase - value L2	REAL	V	0 ... 440.0	62295
162...165	Voltage increase - duration L2	REAL	ms	0.0 ... 100000.0	62300
166...169	Voltage increase - value L3	REAL	V	0 ... 440.0	62395
170...173	Voltage increase - duration L3	REAL	ms	0.0 ... 100000.0	62400
174...177	Voltage peak value L1	REAL	V	0 ... 440.0	62196
178...181	Voltage peak value L2	REAL	V	0 ... 440.0	62296
182...185	Voltage peak value L3	REAL	V	0 ... 440.0	62396
186...189	Current peak value L1	REAL	A	0.0 ... 100000.0	62197
190...193	Current peak value L2	REAL	A	0.0 ... 100000.0	62297
194...197	Current peak value L3	REAL	A	0.0 ... 100000.0	62397
198...201	Overcurrent value L1	REAL	A	0.0 ... 100000.0	62198
202...205	Overcurrent value L2	REAL	A	0.0 ... 100000.0	62298
206...209	Overcurrent value L3	REAL	A	0.0 ... 100000.0	62398
210...213	Amplitude symmetry Voltage U_2	REAL	%	0 ... 100	61157
214...217	Amplitude symmetry Current I_{unsym}	REAL	%	0 ... 100	61158
218...221	Power quality analysis - Qualifier	UDINT	Bit string	-	65496
222...233	Current module time	PNIO Time	sec	-	65497

E.14 Measured value data record for harmonics voltage (DS 161)

Measured variables of the module

The measured value identification (measured value ID) is an index which references the overview table of the measured variables in appendix B (Measured variables for connection type (Page 162)).

Byte	Measured variable	Data type	Unit	Value range	Measured value ID
0	Version	BYTE	-	-	-
1	Reserved	BYTE	-	-	-
2...5	THD+N voltage L1	REAL	1%	0% to 100%	62120
6...9	Voltage L1	REAL	V	0.0 ... 440.0	1
10...13	Harmonics 1: Voltage L1	REAL	V	0.0 ... 760.0	63000
14...17	Harmonics 2: Voltage L1	REAL	V	0.0 ... 760.0	63002
18...21	Harmonics 3: Voltage L1	REAL	V	0.0 ... 760.0	63004
22...25	Harmonics 4: Voltage L1	REAL	V	0.0 ... 760.0	63006
26...29	Harmonics 5: Voltage L1	REAL	V	0.0 ... 760.0	63008
30...33	Harmonics 6: Voltage L1	REAL	V	0.0 ... 760.0	63010
34...37	Harmonics 7: Voltage L1	REAL	V	0.0 ... 760.0	63012
38...41	Harmonics 8: Voltage L1	REAL	V	0.0 ... 760.0	63014
42...45	Harmonics 9: Voltage L1	REAL	V	0.0 ... 760.0	63016
46...49	Harmonics 10: Voltage L1	REAL	V	0.0 ... 760.0	63018
50...53	Harmonics 11: Voltage L1	REAL	V	0.0 ... 760.0	63020
54...57	Harmonics 12: Voltage L1	REAL	V	0.0 ... 760.0	63022
58...61	Harmonics 13: Voltage L1	REAL	V	0.0 ... 760.0	63024
62...65	Harmonics 14: Voltage L1	REAL	V	0.0 ... 760.0	63026
66...69	Harmonics 15: Voltage L1	REAL	V	0.0 ... 760.0	63028
70...73	Harmonics 16: Voltage L1	REAL	V	0.0 ... 760.0	63030
74...77	Harmonics 17: Voltage L1	REAL	V	0.0 ... 760.0	63032
78...81	Harmonics 18: Voltage L1	REAL	V	0.0 ... 760.0	63034
82...85	Harmonics 19: Voltage L1	REAL	V	0.0 ... 760.0	63036
86...89	Harmonics 20: Voltage L1	REAL	V	0.0 ... 760.0	63038
90...93	Harmonics 21: Voltage L1	REAL	V	0.0 ... 760.0	63040
94...97	Harmonics 22: Voltage L1	REAL	V	0.0 ... 760.0	63042
98...101	Harmonics 23: Voltage L1	REAL	V	0.0 ... 760.0	63044
102...105	Harmonics 24: Voltage L1	REAL	V	0.0 ... 760.0	63046
106...109	Harmonics 25: Voltage L1	REAL	V	0.0 ... 760.0	63048
110...113	Harmonics 26: Voltage L1	REAL	V	0.0 ... 760.0	63050
114...117	Harmonics 27: Voltage L1	REAL	V	0.0 ... 760.0	63052
118...121	Harmonics 28: Voltage L1	REAL	V	0.0 ... 760.0	63054

Byte	Measured variable	Data type	Unit	Value range	Measured value ID
122...125	Harmonics 29: Voltage L1	REAL	V	0.0 ... 760.0	63056
126...129	Harmonics 30: Voltage L1	REAL	V	0.0 ... 760.0	63058
130...133	Harmonics 31: Voltage L1	REAL	V	0.0 ... 760.0	63060
134...137	Harmonics 32: Voltage L1	REAL	V	0.0 ... 760.0	63062
138...141	Harmonics 33: Voltage L1	REAL	V	0.0 ... 760.0	63064
142...145	Harmonics 34: Voltage L1	REAL	V	0.0 ... 760.0	63066
146...149	Harmonics 35: Voltage L1	REAL	V	0.0 ... 760.0	63068
150...153	Harmonics 36: Voltage L1	REAL	V	0.0 ... 760.0	63070
154...157	Harmonics 37: Voltage L1	REAL	V	0.0 ... 760.0	63072
158...161	Harmonics 38: Voltage L1	REAL	V	0.0 ... 760.0	63074
162...165	Harmonics 39: Voltage L1	REAL	V	0.0 ... 760.0	63076
166...169	Harmonics 40: Voltage L1	REAL	V	0.0 ... 760.0	63078
170...173	THD+N voltage L2	REAL	1%	0% to 100%	62220
174...177	Voltage L2	REAL	V	0.0 ... 440.0	2
178...181	Harmonics 1: Voltage L2	REAL	V	0.0 ... 760.0	63400
182...185	Harmonics 2: Voltage L2	REAL	V	0.0 ... 760.0	63402
186...189	Harmonics 3: Voltage L2	REAL	V	0.0 ... 760.0	63404
190...193	Harmonics 4: Voltage L2	REAL	V	0.0 ... 760.0	63406
194...197	Harmonics 5: Voltage L2	REAL	V	0.0 ... 760.0	63408
198...201	Harmonics 6: Voltage L2	REAL	V	0.0 ... 760.0	63410
202...205	Harmonics 7: Voltage L2	REAL	V	0.0 ... 760.0	63412
206...209	Harmonics 8: Voltage L2	REAL	V	0.0 ... 760.0	63414
210...213	Harmonics 9: Voltage L2	REAL	V	0.0 ... 760.0	63416
214...217	Harmonics 10: Voltage L2	REAL	V	0.0 ... 760.0	63418
218...221	Harmonics 11: Voltage L2	REAL	V	0.0 ... 760.0	63420
222...225	Harmonics 12: Voltage L2	REAL	V	0.0 ... 760.0	63422
226...229	Harmonics 13: Voltage L2	REAL	V	0.0 ... 760.0	63424
230...233	Harmonics 14: Voltage L2	REAL	V	0.0 ... 760.0	63426
234...237	Harmonics 15: Voltage L2	REAL	V	0.0 ... 760.0	63428
238...241	Harmonics 16: Voltage L2	REAL	V	0.0 ... 760.0	63430
242...245	Harmonics 17: Voltage L2	REAL	V	0.0 ... 760.0	63432
246...249	Harmonics 18: Voltage L2	REAL	V	0.0 ... 760.0	63434
250...253	Harmonics 19: Voltage L2	REAL	V	0.0 ... 760.0	63436
254...257	Harmonics 20: Voltage L2	REAL	V	0.0 ... 760.0	63438
258...261	Harmonics 21: Voltage L2	REAL	V	0.0 ... 760.0	63440
262...265	Harmonics 22: Voltage L2	REAL	V	0.0 ... 760.0	63442
266...269	Harmonics 23: Voltage L2	REAL	V	0.0 ... 760.0	63444
270...273	Harmonics 24: Voltage L2	REAL	V	0.0 ... 760.0	63446
274...277	Harmonics 25: Voltage L2	REAL	V	0.0 ... 760.0	63448
278...281	Harmonics 26: Voltage L2	REAL	V	0.0 ... 760.0	63450

Byte	Measured variable	Data type	Unit	Value range	Measured value ID
281...285	Harmonics 27: Voltage L2	REAL	V	0.0 ... 760.0	63452
286...289	Harmonics 28: Voltage L2	REAL	V	0.0 ... 760.0	63454
290...293	Harmonics 29: Voltage L2	REAL	V	0.0 ... 760.0	63456
294...297	Harmonics 30: Voltage L2	REAL	V	0.0 ... 760.0	63458
298...301	Harmonics 31: Voltage L2	REAL	V	0.0 ... 760.0	63460
302...305	Harmonics 32: Voltage L2	REAL	V	0.0 ... 760.0	63462
306...309	Harmonics 33: Voltage L2	REAL	V	0.0 ... 760.0	63464
310...313	Harmonics 34: Voltage L2	REAL	V	0.0 ... 760.0	63466
314...317	Harmonics 35: Voltage L2	REAL	V	0.0 ... 760.0	63468
318...321	Harmonics 36: Voltage L2	REAL	V	0.0 ... 760.0	63470
322...325	Harmonics 37: Voltage L2	REAL	V	0.0 ... 760.0	63472
326...329	Harmonics 38: Voltage L2	REAL	V	0.0 ... 760.0	63474
330...333	Harmonics 39: Voltage L2	REAL	V	0.0 ... 760.0	63476
334...337	Harmonics 40: Voltage L2	REAL	V	0.0 ... 760.0	63478
338...341	THD+N voltage L3	REAL	1%	0% to 100%	62320
342...345	Voltage L3	REAL	V	0.0 ... 440.0	3
346...349	Harmonics 1: Voltage L3	REAL	V	0.0 ... 760.0	63800
350...353	Harmonics 2: Voltage L3	REAL	V	0.0 ... 760.0	63802
354...357	Harmonics 3: Voltage L3	REAL	V	0.0 ... 760.0	63804
358...361	Harmonics 4: Voltage L3	REAL	V	0.0 ... 760.0	63806
362...365	Harmonics 5: Voltage L3	REAL	V	0.0 ... 760.0	63808
366...369	Harmonics 6: Voltage L3	REAL	V	0.0 ... 760.0	63810
370...373	Harmonics 7: Voltage L3	REAL	V	0.0 ... 760.0	63812
374...377	Harmonics 8: Voltage L3	REAL	V	0.0 ... 760.0	63814
378...381	Harmonics 9: Voltage L3	REAL	V	0.0 ... 760.0	63816
382...385	Harmonics 10: Voltage L3	REAL	V	0.0 ... 760.0	63818
386...389	Harmonics 11: Voltage L3	REAL	V	0.0 ... 760.0	63820
390...393	Harmonics 12: Voltage L3	REAL	V	0.0 ... 760.0	63822
394...397	Harmonics 13: Voltage L3	REAL	V	0.0 ... 760.0	63824
398...401	Harmonics 14: Voltage L3	REAL	V	0.0 ... 760.0	63826
402...405	Harmonics 15: Voltage L3	REAL	V	0.0 ... 760.0	63828
406...409	Harmonics 16: Voltage L3	REAL	V	0.0 ... 760.0	63830
410...413	Harmonics 17: Voltage L3	REAL	V	0.0 ... 760.0	63832
414...417	Harmonics 18: Voltage L3	REAL	V	0.0 ... 760.0	63834
418...421	Harmonics 19: Voltage L3	REAL	V	0.0 ... 760.0	63836
422...425	Harmonics 20: Voltage L3	REAL	V	0.0 ... 760.0	63838
426...429	Harmonics 21: Voltage L3	REAL	V	0.0 ... 760.0	63840
430...433	Harmonics 22: Voltage L3	REAL	V	0.0 ... 760.0	63842
434...437	Harmonics 23: Voltage L3	REAL	V	0.0 ... 760.0	63844
438...441	Harmonics 24: Voltage L3	REAL	V	0.0 ... 760.0	63846

Byte	Measured variable	Data type	Unit	Value range	Measured value ID
442...445	Harmonics 25: Voltage L3	REAL	V	0.0 ... 760.0	63848
446...449	Harmonics 26: Voltage L3	REAL	V	0.0 ... 760.0	63850
450...453	Harmonics 27: Voltage L3	REAL	V	0.0 ... 760.0	63852
454...457	Harmonics 28: Voltage L3	REAL	V	0.0 ... 760.0	63854
458...461	Harmonics 29: Voltage L3	REAL	V	0.0 ... 760.0	63856
462...465	Harmonics 30: Voltage L3	REAL	V	0.0 ... 760.0	63858
466...469	Harmonics 31: Voltage L3	REAL	V	0.0 ... 760.0	63860
470...473	Harmonics 32: Voltage L3	REAL	V	0.0 ... 760.0	63862
474...477	Harmonics 33: Voltage L3	REAL	V	0.0 ... 760.0	63864
478...481	Harmonics 34: Voltage L3	REAL	V	0.0 ... 760.0	63866
482...485	Harmonics 35: Voltage L3	REAL	V	0.0 ... 760.0	63868
486...489	Harmonics 36: Voltage L3	REAL	V	0.0 ... 760.0	63870
490...493	Harmonics 37: Voltage L3	REAL	V	0.0 ... 760.0	63872
494...497	Harmonics 38: Voltage L3	REAL	V	0.0 ... 760.0	63874
498...501	Harmonics 39: Voltage L3	REAL	V	0.0 ... 760.0	63876
502...505	Harmonics 40: Voltage L3	REAL	V	0.0 ... 760.0	63878
506...517	Current module time	PNI-OTime	sec	-	65497

E.15 Measured value data record for harmonics current (DS 163)

Measured variables of the module

The measured value identification (measured value ID) is an index which references the overview table of the measured variables in appendix B (Measured variables for connection type (Page 162)).

Byte	Measured variable	Data type	Unit	Value range	Measured value ID
0	Version	BYTE	-	-	-
1	Reserved	BYTE	-	-	-
2...5	THD+N current L1	REAL	1%	0% to 100%	62121
6...9	Current L1	REAL	A	0.0 ... 100000.0	7
10...13	Harmonics 1: Current L1	REAL	A	0.0 ... 100000.0	63001
14...17	Harmonics 2: Current L1	REAL	A	0.0 ... 100000.0	63003
18...21	Harmonics 3: Current L1	REAL	A	0.0 ... 100000.0	63005
22...25	Harmonics 4: Current L1	REAL	A	0.0 ... 100000.0	63007
26...29	Harmonics 5: Current L1	REAL	A	0.0 ... 100000.0	63009
30...33	Harmonics 6: Current L1	REAL	A	0.0 ... 100000.0	63011
34...37	Harmonics 7: Current L1	REAL	A	0.0 ... 100000.0	63013
38...41	Harmonics 8: Current L1	REAL	A	0.0 ... 100000.0	63015
42...45	Harmonics 9: Current L1	REAL	A	0.0 ... 100000.0	63017
46...49	Harmonics 10: Current L1	REAL	A	0.0 ... 100000.0	63019
50...53	Harmonics 11: Current L1	REAL	A	0.0 ... 100000.0	63021
54...57	Harmonics 12: Current L1	REAL	A	0.0 ... 100000.0	63023
58...61	Harmonics 13: Current L1	REAL	A	0.0 ... 100000.0	63025
62...65	Harmonics 14: Current L1	REAL	A	0.0 ... 100000.0	63027
66...69	Harmonics 15: Current L1	REAL	A	0.0 ... 100000.0	63029
70...73	Harmonics 16: Current L1	REAL	A	0.0 ... 100000.0	63031
74...77	Harmonics 17: Current L1	REAL	A	0.0 ... 100000.0	63033
78...81	Harmonics 18: Current L1	REAL	A	0.0 ... 100000.0	63035
82...85	Harmonics 19: Current L1	REAL	A	0.0 ... 100000.0	63037
86...89	Harmonics 20: Current L1	REAL	A	0.0 ... 100000.0	63039
90...93	Harmonics 21: Current L1	REAL	A	0.0 ... 100000.0	63041
94...97	Harmonics 22: Current L1	REAL	A	0.0 ... 100000.0	63043
98...101	Harmonics 23: Current L1	REAL	A	0.0 ... 100000.0	63045
102...105	Harmonics 24: Current L1	REAL	A	0.0 ... 100000.0	63047
106...109	Harmonics 25: Current L1	REAL	A	0.0 ... 100000.0	63049
110...113	Harmonics 26: Current L1	REAL	A	0.0 ... 100000.0	63051
114...117	Harmonics 27: Current L1	REAL	A	0.0 ... 100000.0	63053
118...121	Harmonics 28: Current L1	REAL	A	0.0 ... 100000.0	63055

Byte	Measured variable	Data type	Unit	Value range	Measured value ID
122...125	Harmonics 29: Current L1	REAL	A	0.0 ... 100000.0	63057
126...129	Harmonics 30: Current L1	REAL	A	0.0 ... 100000.0	63059
130...133	Harmonics 31: Current L1	REAL	A	0.0 ... 100000.0	63061
134...137	Harmonics 32: Current L1	REAL	A	0.0 ... 100000.0	63063
138...141	Harmonics 33: Current L1	REAL	A	0.0 ... 100000.0	63065
142...145	Harmonics 34: Current L1	REAL	A	0.0 ... 100000.0	63067
146...149	Harmonics 35: Current L1	REAL	A	0.0 ... 100000.0	63069
150...153	Harmonics 36: Current L1	REAL	A	0.0 ... 100000.0	63071
154...157	Harmonics 37: Current L1	REAL	A	0.0 ... 100000.0	63073
158...161	Harmonics 38: Current L1	REAL	A	0.0 ... 100000.0	63075
162...165	Harmonics 39: Current L1	REAL	A	0.0 ... 100000.0	63077
166...169	Harmonics 40: Current L1	REAL	A	0.0 ... 100000.0	63079
170...173	THD+N current L2	REAL	1%	0% to 100%	62221
174...177	Current L2	REAL	A	0.0 ... 100000.0	8
178...181	Harmonics 1: Current L2	REAL	A	0.0 ... 100000.0	63401
182...185	Harmonics 2: Current L2	REAL	A	0.0 ... 100000.0	63403
186...189	Harmonics 3: Current L2	REAL	A	0.0 ... 100000.0	63405
190...193	Harmonics 4: Current L2	REAL	A	0.0 ... 100000.0	63407
194...197	Harmonics 5: Current L2	REAL	A	0.0 ... 100000.0	63409
198...201	Harmonics 6: Current L2	REAL	A	0.0 ... 100000.0	63411
202...205	Harmonics 7: Current L2	REAL	A	0.0 ... 100000.0	63413
206...209	Harmonics 8: Current L2	REAL	A	0.0 ... 100000.0	63415
210...213	Harmonics 9: Current L2	REAL	A	0.0 ... 100000.0	63417
214...217	Harmonics 10: Current L2	REAL	A	0.0 ... 100000.0	63419
218...221	Harmonics 11: Current L2	REAL	A	0.0 ... 100000.0	63421
222...225	Harmonics 12: Current L2	REAL	A	0.0 ... 100000.0	63423
226...229	Harmonics 13: Current L2	REAL	A	0.0 ... 100000.0	63425
230...233	Harmonics 14: Current L2	REAL	A	0.0 ... 100000.0	63427
234...237	Harmonics 15: Current L2	REAL	A	0.0 ... 100000.0	63429
238...241	Harmonics 16: Current L2	REAL	A	0.0 ... 100000.0	63431
242...245	Harmonics 17: Current L2	REAL	A	0.0 ... 100000.0	63433
246...249	Harmonics 18: Current L2	REAL	A	0.0 ... 100000.0	63435
250...253	Harmonics 19: Current L2	REAL	A	0.0 ... 100000.0	63437
254...257	Harmonics 20: Current L2	REAL	A	0.0 ... 100000.0	63439
258...261	Harmonics 21: Current L2	REAL	A	0.0 ... 100000.0	63441
262...265	Harmonics 22: Current L2	REAL	A	0.0 ... 100000.0	63443
266...269	Harmonics 23: Current L2	REAL	A	0.0 ... 100000.0	63445
270...273	Harmonics 24: Current L2	REAL	A	0.0 ... 100000.0	63447
274...277	Harmonics 25: Current L2	REAL	A	0.0 ... 100000.0	63449
278...281	Harmonics 26: Current L2	REAL	A	0.0 ... 100000.0	63451

Byte	Measured variable	Data type	Unit	Value range	Measured value ID
281...285	Harmonics 27: Current L2	REAL	A	0.0 ... 100000.0	63453
286...289	Harmonics 28: Current L2	REAL	A	0.0 ... 100000.0	63455
290...293	Harmonics 29: Current L2	REAL	A	0.0 ... 100000.0	63457
294...297	Harmonics 30: Current L2	REAL	A	0.0 ... 100000.0	63459
298...301	Harmonics 31: Current L2	REAL	A	0.0 ... 100000.0	63461
302...305	Harmonics 32: Current L2	REAL	A	0.0 ... 100000.0	63463
306...309	Harmonics 33: Current L2	REAL	A	0.0 ... 100000.0	63465
310...313	Harmonics 34: Current L2	REAL	A	0.0 ... 100000.0	63467
314...317	Harmonics 35: Current L2	REAL	A	0.0 ... 100000.0	63469
318...321	Harmonics 36: Current L2	REAL	A	0.0 ... 100000.0	63471
322...325	Harmonics 37: Current L2	REAL	A	0.0 ... 100000.0	63473
326...329	Harmonics 38: Current L2	REAL	A	0.0 ... 100000.0	63475
330...333	Harmonics 39: Current L2	REAL	A	0.0 ... 100000.0	63477
334...337	Harmonics 40: Current L2	REAL	A	0.0 ... 100000.0	63479
338...341	THD+N current L3	REAL	1%	0% to 100%	62321
342...345	Current L3	REAL	A	0.0 ... 100000.0	9
346...349	Harmonics 1: Current L3	REAL	A	0.0 ... 100000.0	63801
350...353	Harmonics 2: Current L3	REAL	A	0.0 ... 100000.0	63803
354...357	Harmonics 3: Current L3	REAL	A	0.0 ... 100000.0	63805
358...361	Harmonics 4: Current L3	REAL	A	0.0 ... 100000.0	63807
362...365	Harmonics 5: Current L3	REAL	A	0.0 ... 100000.0	63809
366...369	Harmonics 6: Current L3	REAL	A	0.0 ... 100000.0	63811
370...373	Harmonics 7: Current L3	REAL	A	0.0 ... 100000.0	63813
374...377	Harmonics 8: Current L3	REAL	A	0.0 ... 100000.0	6381
378...381	Harmonics 9: Current L3	REAL	A	0.0 ... 100000.0	63817
382...385	Harmonics 10: Current L3	REAL	A	0.0 ... 100000.0	63819
386...389	Harmonics 11: Current L3	REAL	A	0.0 ... 100000.0	63821
390...393	Harmonics 12: Current L3	REAL	A	0.0 ... 100000.0	63823
394...397	Harmonics 13: Current L3	REAL	A	0.0 ... 100000.0	63825
398...401	Harmonics 14: Current L3	REAL	A	0.0 ... 100000.0	63827
402...405	Harmonics 15: Current L3	REAL	A	0.0 ... 100000.0	63829
406...409	Harmonics 16: Current L3	REAL	A	0.0 ... 100000.0	63831
410...413	Harmonics 17: Current L3	REAL	A	0.0 ... 100000.0	63833
414...417	Harmonics 18: Current L3	REAL	A	0.0 ... 100000.0	63835
418...421	Harmonics 19: Current L3	REAL	A	0.0 ... 100000.0	63837
422...425	Harmonics 20: Current L3	REAL	A	0.0 ... 100000.0	63839
426...429	Harmonics 21: Current L3	REAL	A	0.0 ... 100000.0	63841
430...433	Harmonics 22: Current L3	REAL	A	0.0 ... 100000.0	63843
434...437	Harmonics 23: Current L3	REAL	A	0.0 ... 100000.0	63845
438...441	Harmonics 24: Current L3	REAL	A	0.0 ... 100000.0	63847

Byte	Measured variable	Data type	Unit	Value range	Measured value ID
442...445	Harmonics 25: Current L3	REAL	A	0.0 ... 100000.0	63849
446...449	Harmonics 26: Current L3	REAL	A	0.0 ... 100000.0	63851
450...453	Harmonics 27: Current L3	REAL	A	0.0 ... 100000.0	63853
454...457	Harmonics 28: Current L3	REAL	A	0.0 ... 100000.0	63855
458...461	Harmonics 29: Current L3	REAL	A	0.0 ... 100000.0	63857
462...465	Harmonics 30: Current L3	REAL	A	0.0 ... 100000.0	63859
466...469	Harmonics 31: Current L3	REAL	A	0.0 ... 100000.0	63861
470...473	Harmonics 32: Current L3	REAL	A	0.0 ... 100000.0	63863
474...477	Harmonics 33: Current L3	REAL	A	0.0 ... 100000.0	63865
478...481	Harmonics 34: Current L3	REAL	A	0.0 ... 100000.0	63867
482...485	Harmonics 35: Current L3	REAL	A	0.0 ... 100000.0	63869
486...489	Harmonics 36: Current L3	REAL	A	0.0 ... 100000.0	63871
490...493	Harmonics 37: Current L3	REAL	A	0.0 ... 100000.0	63873
494...497	Harmonics 38: Current L3	REAL	A	0.0 ... 100000.0	63875
498...501	Harmonics 39: Current L3	REAL	A	0.0 ... 100000.0	63877
502...505	Harmonics 40: Current L3	REAL	A	0.0 ... 100000.0	63879
506...517	Current module time	PNI-OTime	sec	-	65497

E.16 Information data record on available measured values (DS 170)

Measured variables of the module

Byte	Name	Data type
0	Version	BYTE
1	Reserved	BYTE
2...3	Number of IDs	UINT16
4...5	ID measured value 1	UINT16
5...6	ID measured value 2	UINT16
...	...	...
1149...1150	ID measured value 580	UINT16

Tips and tricks

F

F.1 Tips and tricks

Processing and visualizing energy data

On the basis of an application example we show you how the measured values of the AI Energy Meter can be processed further and visualized.

You can find this application example on the Internet (http://support.automation.siemens.com/WW/view/en/86299299).

Overview of the measuring data

We provide you with an overview of the assignment of the measured values to the user data variants and data records in an Excel file.

You will find the Excel file on the Internet (https://support.industry.siemens.com/cs/ww/en/view/109755917).

Time-of-day synchronization and time stamp

In an application example we show you how to synchronize the time with the AI Energy Meter HF and work with measured values with time stamps.

You can find this application example on the Internet (http://support.automation.siemens.com/WW/view/en/109754890).

Measured values in STEP 7 as of V5.5

Measured values are represented as negative values in STEP 7 as of V5.5 if the value range of the integer format (32767 dec) is exceeded. This is not an error in the measured value. Solution: Select hexadecimal representation.

Conversion of 64-bit floating-point numbers

If you cannot process 64-bit floating-point numbers in your automation system, we recommend conversion to 32-bit floating-point numbers. Note the conversion can cause loss of accuracy. For a description of the conversion of the 64-bit floating-point numbers (data type LREAL) into 32-bit floating-point numbers (data type REAL) please refer to the Internet (http://support.automation.siemens.com/WW/view/en/56600676).

See also

FAQ (http://support.automation.siemens.com/WW/view/en/109755917)

SIEMENS

SIMATIC

ET 200SP

Product information on the "AI Energy Meter 480VAC/CT HF" and "AI Energy Meter 480VAC/RC HF" device manuals

Product Information

Security information

Siemens provides products and solutions with industrial security functions that support the secure operation of plants, systems, machines and networks.

In order to protect plants, systems, machines and networks against cyber threats, it is necessary to implement – and continuously maintain – a holistic, state-of-the-art industrial security concept. Siemens' products and solutions constitute one element of such a concept.

Customers are responsible for preventing unauthorized access to their plants, systems, machines and networks. Such systems, machines and components should only be connected to an enterprise network or the internet if and to the extent such a connection is necessary and only when appropriate security measures (e.g. firewalls and/or network segmentation) are in place.

For additional information on industrial security measures that may be implemented, please visit (https://www.siemens.com/industrialsecurity).

Siemens' products and solutions undergo continuous development to make them more secure. Siemens strongly recommends that product updates are applied as soon as they are available and that the latest product versions are used. Use of product versions that are no longer supported, and failure to apply the latest updates may increase customers' exposure to cyber threats.

To stay informed about product updates, subscribe to the Siemens Industrial Security RSS Feed under (https://www.siemens.com/industrialsecurity).

General amendments to the documentation

This product information contains supplements and corrections to the "Analog input module AI Energy Meter 480VAC/CT HF" (6ES7134-6PA00-0CU0) and "Analog input module AI Energy Meter 480VAC/RC HF" (6ES7134-6PA20-0CU0) device manuals.

The product information is part of the product supplied. The statements provided in it should be considered more up-to-date than other documentation if uncertainties arise.

Voltage swell or voltage dip of the voltage half-wave value

For technical reasons, the **voltage swell** and **voltage dip** functions display a voltage increase duration or voltage dip duration that is slightly too long when the process value of the voltage goes to "0".

Information on startup characteristics

For technical reasons, the **frequency**, all **measured values of harmonic distortion** THD+N current and voltage as well as the **minimum and maximum values** are delivered with a delay of approx. 2 seconds after connecting the module or switching on the load voltage.

© Siemens AG 2018. All rights reserved

Peak values of the instantaneous values for current and voltage

For technical reasons, both the "Detect current peaks" and "Detect voltage peaks" functions are activated at the same time internally to ensure the correct evaluation of the **peak value detection of current and/or voltage** of a phase. AI Energy Meter HF always shows the phase that exhibits the highest instantaneous value for current or voltage respectively. If peak values are displayed for several phases, you can correlate the available phase values to determine the maximum value of the module.
Peak value detection of the instantaneous values of current and voltage only works when the module is correctly connected to the corresponding phases selected for the connection type. That is to say, if you use connection type 1P2W, only phase 1 should be connected; for 2P3W, only phases 1 and 2 should be connected accordingly.

Siemens AG
Division Digital Factory
Postfach 48 48
90026 NÜRNBERG
GERMANY

Product information on the "AI Energy Meter 480VAC/CT HF" and "AI Energy Meter 480VAC/RC HF" device manuals
A5E44378658-AA, 04/2018

SIEMENS

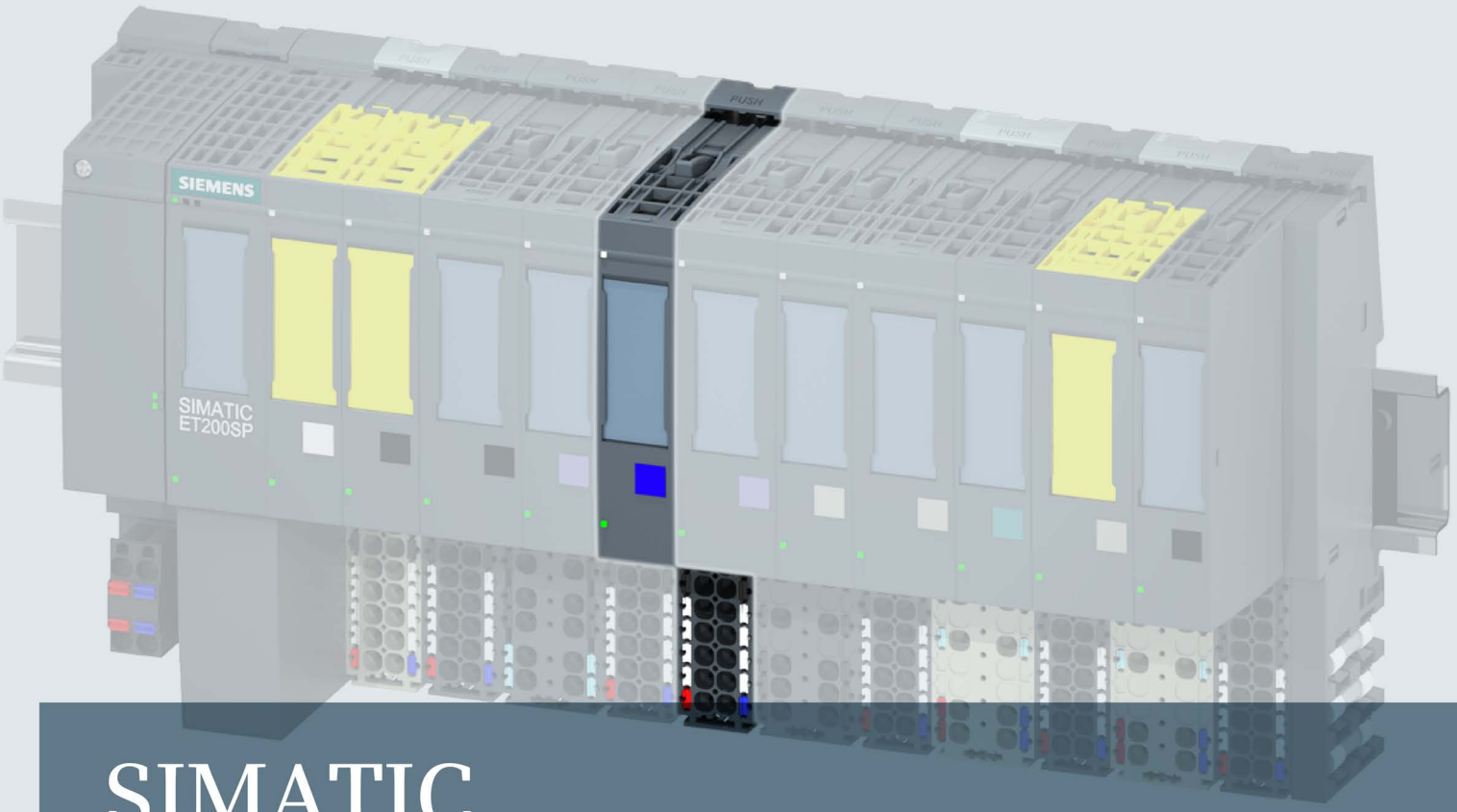

SIMATIC

ET 200SP

Analog output module AQ 2xI ST (6ES7135-6GB00-0BA1)

Manual

Edition 12/2015

Answers for industry.

SIEMENS

SIMATIC

ET 200SP
Analog output module AQ 2xI ST (6ES7135-6GB00-0BA1)

Manual

Preface

Documentation guide 1

Product overview 2

Wiring 3

Parameters/address space 4

Interrupts/diagnostics alarms 5

Technical specifications 6

Parameter data record A

Representation of analog values B

12/2015

A5E36104864-AA

Legal information

Warning notice system

This manual contains notices you have to observe in order to ensure your personal safety, as well as to prevent damage to property. The notices referring to your personal safety are highlighted in the manual by a safety alert symbol, notices referring only to property damage have no safety alert symbol. These notices shown below are graded according to the degree of danger.

⚠ DANGER

indicates that death or severe personal injury **will** result if proper precautions are not taken.

⚠ WARNING

indicates that death or severe personal injury **may** result if proper precautions are not taken.

⚠ CAUTION

indicates that minor personal injury can result if proper precautions are not taken.

NOTICE

indicates that property damage can result if proper precautions are not taken.

If more than one degree of danger is present, the warning notice representing the highest degree of danger will be used. A notice warning of injury to persons with a safety alert symbol may also include a warning relating to property damage.

Qualified Personnel

The product/system described in this documentation may be operated only by **personnel qualified** for the specific task in accordance with the relevant documentation, in particular its warning notices and safety instructions. Qualified personnel are those who, based on their training and experience, are capable of identifying risks and avoiding potential hazards when working with these products/systems.

Proper use of Siemens products

Note the following:

⚠ WARNING

Siemens products may only be used for the applications described in the catalog and in the relevant technical documentation. If products and components from other manufacturers are used, these must be recommended or approved by Siemens. Proper transport, storage, installation, assembly, commissioning, operation and maintenance are required to ensure that the products operate safely and without any problems. The permissible ambient conditions must be complied with. The information in the relevant documentation must be observed.

Trademarks

All names identified by ® are registered trademarks of Siemens AG. The remaining trademarks in this publication may be trademarks whose use by third parties for their own purposes could violate the rights of the owner.

Disclaimer of Liability

We have reviewed the contents of this publication to ensure consistency with the hardware and software described. Since variance cannot be precluded entirely, we cannot guarantee full consistency. However, the information in this publication is reviewed regularly and any necessary corrections are included in subsequent editions.

Siemens AG
Division Digital Factory
Postfach 48 48
90026 NÜRNBERG
GERMANY

A5E36104864-AA
℗ 12/2015 Subject to change

Copyright © Siemens AG 2015.
All rights reserved

Preface

Purpose of the documentation

This manual supplements the ET 200SP distributed I/O system (http://support.automation.siemens.com/WW/view/en/58649293) system manual.

Functions that generally relate to the system are described in this system manual.

The information provided in this manual and in the system/function manuals supports you in commissioning the system.

Conventions

CPU: When the term "CPU" is used in this manual, it applies to the CPUs of the S7-1500 automation system as well as to the CPUs/interface modules of the ET 200SP distributed I/O system.

STEP 7: In this documentation, "STEP 7" is used as a synonym for all versions of the configuration and programming software "STEP 7 (TIA Portal)".

Please also observe notes marked as follows:

Note

A note contains important information on the product described in the documentation, on the handling of the product or on the section of the documentation to which particular attention should be paid.

Security information

Siemens provides products and solutions with industrial security functions that support the secure operation of plants, solutions, machines, equipment and/or networks. They are important components in a holistic industrial security concept. With this in mind, Siemens' products and solutions undergo continuous development. Siemens recommends strongly that you regularly check for product updates.

For the secure operation of Siemens products and solutions, it is necessary to take suitable preventive action (e.g. cell protection concept) and integrate each component into a holistic, state-of-the-art industrial security concept. Third-party products that may be in use should also be considered. You can find more information about industrial security on the Internet (http://www.siemens.com/industrialsecurity).

To stay informed about product updates as they occur, sign up for a product-specific newsletter. You can find more information on the Internet (http://support.automation.siemens.com).

Table of contents

Preface 4
1 Documentation guide 6
2 Product overview 9
2.1 Properties 9
3 Wiring 11
3.1 Wiring and block diagram 11
4 Parameters/address space 13
4.1 Output ranges 13
4.2 Parameters 14
4.3 Explanation of the parameters 16
4.4 Address space 17
5 Interrupts/diagnostics alarms 18
5.1 Status and error display 18
5.2 Interrupts 20
5.3 Diagnostics alarms 21
6 Technical specifications 22
6.1 Technical specifications 22
A Parameter data record 25
A.1 Dependencies when configuring with GSD file 25
A.2 Parameter assignment and structure of the parameter data record 26
B Representation of analog values 30
B.1 Representation of analog values 30
B.2 Representation of output ranges 31
B.3 Representation of analog values in the current output ranges 32

Documentation guide

1

The documentation for the SIMATIC ET 200SP distributed I/O system is arranged into three areas.
This arrangement enables you to access the specific content you require.

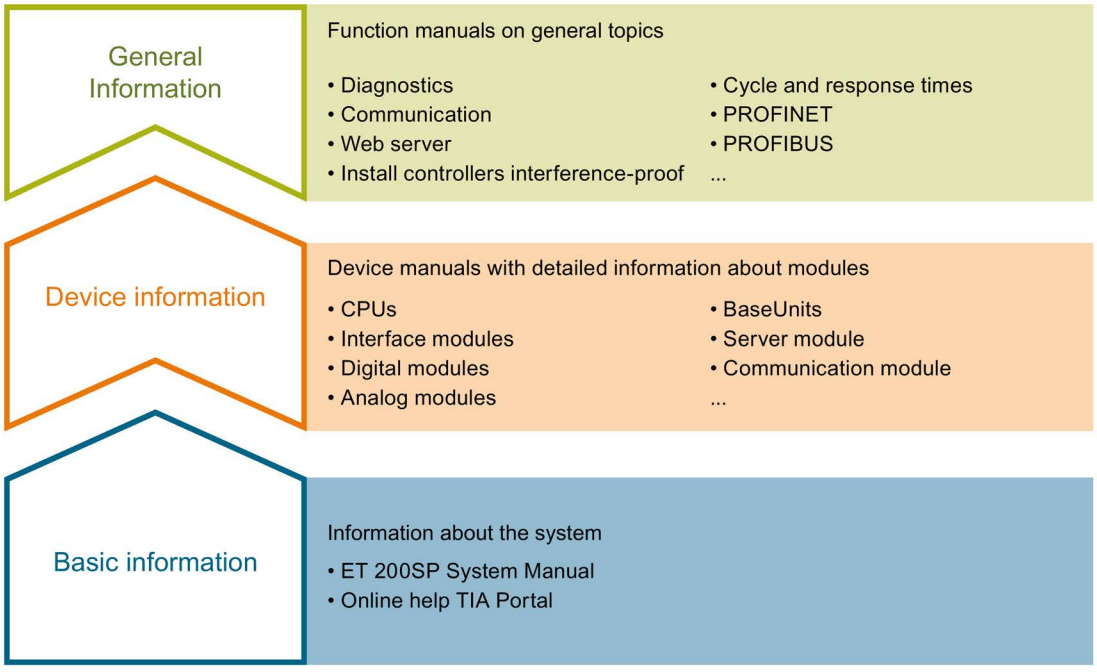

Basic information

The system manual describes in detail the configuration, installation, wiring and commissioning of the SIMATIC ET 200SP. distributed I/O system. The STEP 7 online help supports you in the configuration and programming.

Device information

Product manuals contain a compact description of the module-specific information, such as properties, terminal diagrams, characteristics and technical specifications.

General information

The function manuals contain detailed descriptions on general topics regarding the SIMATIC ET 200SP distributed I/O system, e.g. diagnostics, communication, Web server, designing interference-free controllers.

You can download the documentation free of charge from the Internet (http://w3.siemens.com/mcms/industrial-automation-systems-simatic/en/manual-overview/tech-doc-et200/Pages/Default.aspx).

Changes and supplements to the manuals are documented in a Product Information.

You can download the product information free of charge from the Internet (https://support.industry.siemens.com/cs/us/en/view/73021864).

Manual Collection ET 200SP

The Manual Collection contains the complete documentation on the SIMATIC ET 200SP distributed I/O system gathered together in one file.

You can find the Manual Collection on the Internet (http://support.automation.siemens.com/WW/view/en/84133942).

"mySupport"

With "mySupport", your personal workspace, you make the most of your Industry Online Support.

In "mySupport" you can store filters, favorites and tags, request CAx data and put together your personal library in the Documentation area. Furthermore, your data is automatically filled into support requests and you always have an overview of your current requests.

You need to register once to use the full functionality of "mySupport".

You can find "mySupport" in the Internet (https://support.industry.siemens.com/My/ww/en).

"mySupport" - Documentation

In the Documentation area of "mySupport", you have the possibility to combine complete manuals or parts of them to make your own manual.
You can export the manual in PDF format or in an editable format.

You can find "mySupport" - Documentation in the Internet (http://support.industry.siemens.com/My/ww/en/documentation).

"mySupport" - CAx Data

In the CAx Data area of "mySupport", you can have access the latest product data for your CAx or CAe system.

You configure your own download package with a few clicks.

In doing so you can select:

- Product images, 2D dimension drawings, 3D models, internal circuit diagrams, EPLAN macro files
- Manuals, characteristics, operating manuals, certificates
- Product master data

You can find "mySupport" - CAx Data in the Internet (http://support.industry.siemens.com/my/ww/en/CAxOnline).

Application examples

The application examples support you with various tools and examples for solving your automation tasks. Solutions are shown in interplay with multiple components in the system - separated from the focus in individual products.

You can find the application examples on the Internet (https://support.industry.siemens.com/sc/ww/en/sc/2054).

TIA Selection Tool

With the TIA Selection Tool, you can select, configure and order devices for Totally Integrated Automation (TIA).
This tool is the successor of the SIMATIC Selection Tool and combines the known configurators for automation technology into one tool.
With the TIA Selection Tool, you can generate a complete order list from your product selection or product configuration.

You can find the TIA Selection Tool on the Internet (http://w3.siemens.com/mcms/topics/en/simatic/tia-selection-tool).

Product overview

2

2.1 Properties

Article number

6ES7135-GB00-0BA1

View of the module

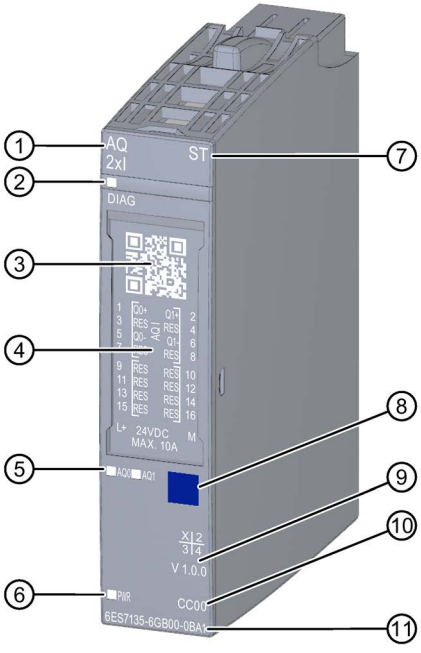

① Module type and name
② LED for diagnostics
③ 2D matrix code
④ Wiring diagram
⑤ LEDs for channel status
⑥ LED for supply voltage
⑦ Function class
⑧ Color coding module type
⑨ Function and firmware version
⑩ Color code for selecting the color identification labels
⑪ Article number

Image 2-1 View of the module AQ 2xI ST

Properties

The module has the following technical properties:

- Analog output module with 2 outputs
  - for current output
- Output range for current output:
  - ±20 mA, resolution 16 bits including sign
  - 0 mA to 20 mA, resolution 15 bits
  - 4 to 20 mA, resolution 14 bits
- Electrically isolated from supply voltage L+
- Configurable diagnostics (per module)

The module supports the following functions:

- Firmware update
- I&M identification data
- Configuration in RUN
- PROFIenergy
- Value status

You can configure the module with STEP 7 (TIA Portal) and with a GSD file.

Accessories

The following accessories must be ordered separately:

- Labeling strips
- Color identification labels
- Reference identification label
- Shield connector

See also

You can find additional information on the accessories in the ET 200SP distributed I/O system (http://support.automation.siemens.com/WW/view/en/58649293) system manual.

Wiring 3

3.1 Wiring and block diagram

This section includes the block diagram of the AQ 2xI ST with the terminal assignments.

You can find information on wiring the BaseUnit in the ET 200SP distributed I/O system (http://support.automation.siemens.com/WW/view/en/58649293) system manual.

Note

The load group of the module must begin with a light-colored BaseUnit. Keep this in mind also during the configuration.

Wiring: Current output 2-wire connection

The following figure shows the block diagram and an example of the terminal assignment of the analog output module AQ 2xI ST on the BaseUnit BU type A0/A1.

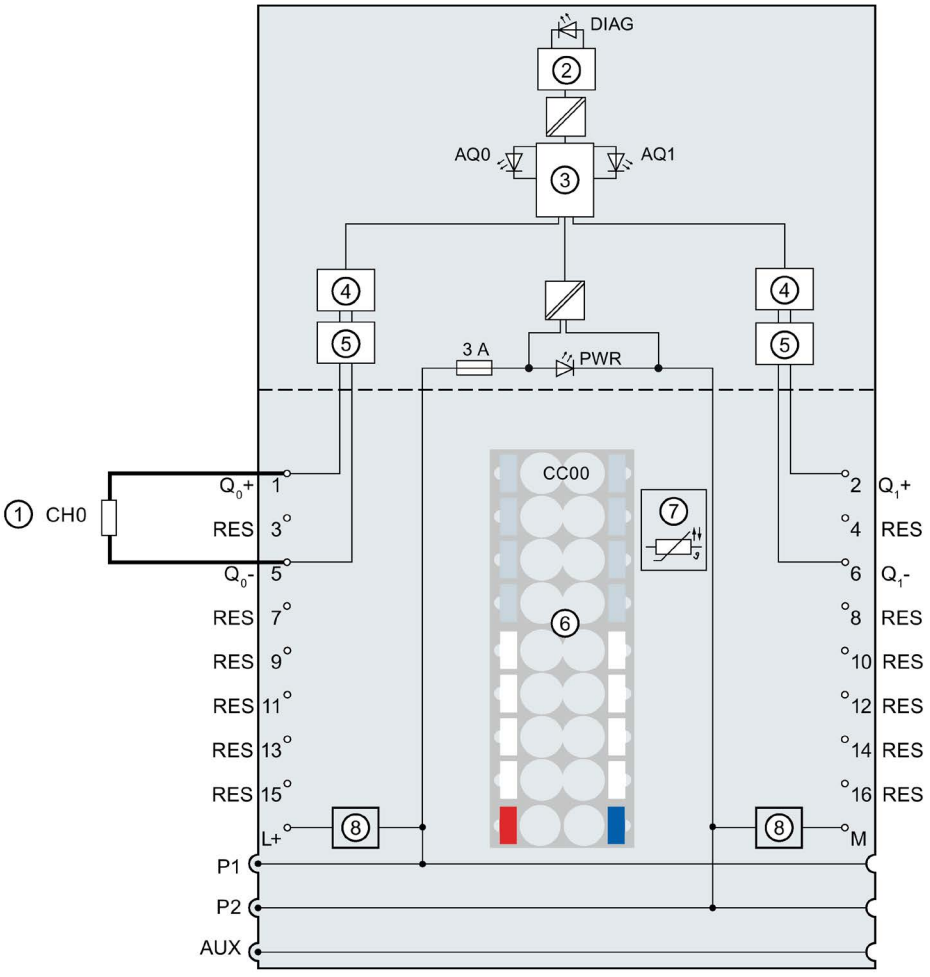

①	2-wire connection for current output	Q_n+	Analog output current positive, channel n
②	Backplane bus interface	Q_n-	Analog output current negative, channel n
③	Microcontroller	RES	Reserve, must remain unused for future function extensions
④	Digital-to-analog converter (DAC)	L+	24 V DC (infeed only with light-colored BaseUnit)
⑤	Output conditioner	M	Ground
⑥	Color-coded label with color code CC00 (optional)	P1, P2, AUX	Internal self-assembling voltage buses Connection to left (dark-colored BaseUnit) Connection to left interrupted (light-colored BaseUnit)
⑦	Temperature recording for BU type A1 only (function cannot be used for this module)	DIAG	Diagnostics LED (green, red)
⑧	Filter connection supply voltage (only when light-colored BaseUnit is present)	AQ0, AQ1	Channel status LED (green)
		PWR	Power LED (green)

Image 3-1 Wiring and block diagram for current output 2-wire connection

Parameters/address space 4

4.1 Output ranges

The analog output module AQ 2×I ST has the following output ranges:

Table 4- 1 Output ranges

Output type	Output ranges	Resolution
Current	± 20 mA	16 bits incl. sign
	0 mA to 20 mA	15 bits
	4 mA to 20 mA	14 bits

The tables of the output ranges, overflow, overrange, etc. can be found in section Representation of analog values (Page 30).

4.2 Parameters

Parameters of the AQ 2xI ST

The effective range of the configurable parameters depends on the type of configuration. The following configurations are possible:

- Central operation with an ET 200SP CPU
- Distributed operation on PROFINET IO in an ET 200SP system
- Distributed operation on PROFIBUS DP in an ET 200SP system

When assigning parameters in the user program, use the "WRREC" instruction to transfer the parameters to the module using the data records; refer to section Parameter assignment and structure of the parameter data record (Page 26).

The following parameter settings are possible:

Table 4- 2 Configurable parameters and their defaults (GSD file)

Parameters	Range of values	Default	Parameter reassignment in RUN	Effective range with configuration software, e.g. STEP 7 (TIA Portal)	
				GSD file PROFINET IO	GSD file PROFIBUS DP
Diagnostics: No supply voltage L+	• Disable • Enable	Disable	Yes	Module	Module
Diagnostics: Overflow [1]	• Disable • Enable	Disable	Yes	Module	Module [1]
Diagnostics: Underflow [1]	• Disable • Enable	Disable	Yes	Module	
Diagnostics: Wire break [2]	• Disable • Enable	Disable	Yes	Module	Module
Output type/range	• Deactivated • Current +/- 20 mA • Current 0 - 20 mA • Current 4 - 20 mA	Current 4 - 20 mA	Yes	Channel	Channel
Reaction to CPU STOP	• Turn off • Keep last value • Output substitute value	Turn off	Yes	Channel	Module

Parameters	Range of values	Default	Parameter reassignment in RUN	Effective range with configuration software, e.g. STEP 7 (TIA Portal)	
				GSD file PROFINET IO	GSD file PROFIBUS DP
Substitute value	For permissible substitute values for the various output ranges, see appendix Parameter assignment and structure of the parameter data record (Page 26), Substitute values → Codes for substitute values table	0	Yes	Channel	Channel
Potential group	• Use potential group of the left module (module plugged into a dark-colored BaseUnit) • Enable new potential group (module plugged into light-colored BaseUnit)	Use potential group of the left module	No	Module	Module

[1] Due to the limited number of parameters of a maximum of 244 bytes per ET 200SP station with a PROFIBUS GSD configuration, the parameter assignment options are restricted. If required, you can assign these parameters using data record 128 as described in the "GSD file PROFINET IO" column (see table above). The parameter length of the I/O module is 7 bytes.

[2] No diagnostics detection between -3 and +3 mA (no wire break detection)

Note

Unused channels

A disabled channel always returns the value "no current or voltage".

4.3 Explanation of the parameters

Diagnostics: No supply voltage L+

Enabling of the diagnostics for no or insufficient supply voltage L+.

Diagnostics: Overflow

Enabling of the diagnostics when the output value exceeds the overrange.

Diagnostics: Underflow

Enabling of the diagnostics when the output value exceeds the overrange, falls below the minimum output value or reaches underflow.

Diagnostics: Wire break

Enabling of the diagnostics if the line to the actuator is broken.

Output type / output range

See section Output ranges (Page 13).

Reaction to CPU STOP

Determines the behavior of the module at CPU STOP.

Substitute value

The substitute value is the value that the module outputs in case of a CPU STOP.

Potential group

A potential group consists of a group of directly adjacent I/O modules within an ET 200SP station, which are supplied via a common supply voltage.

A potential group begins with a light-colored BaseUnit through which the required voltage is supplied for all modules of the potential group. The light-colored BaseUnit interrupts the three self-assembling voltage buses P1, P2 and AUX to the left neighbor.

All additional I/O modules of this potential group are plugged into dark-colored BaseUnits. You take the potential of the self-assembling voltage buses P1, P2 and AUX from the left neighbor.

A potential group ends with the dark-colored BaseUnit, which follows a light-colored BaseUnit or server module in the station configuration.

See also

You can find additional information in the system manual ET 200SP distributed I/O system (http://support.automation.siemens.com/WW/view/en/58649293).

4.4 Address space

Configuration options

The following configurations are possible:

- Configuration 1: Without value status
- Configuration 2: With value status

Evaluating the value status

If you enable the value status for the analog module, an additional byte is occupied in the input address space. Bits 0 and 1 in this byte are assigned to a channel. They provide information about the validity of the analog value.

Bit = 1: There are no errors on the module.

Bit = 0: Channel is deactivated or there is a fault on the module.

If a fault occurs on a channel with this module, the value status for all channels is 0.

Address space

The following figure shows the assignment of the address space for the AQ 2×I ST with value status (Quality Information (QI)). The addresses for the value status are only available if the value status is enabled.

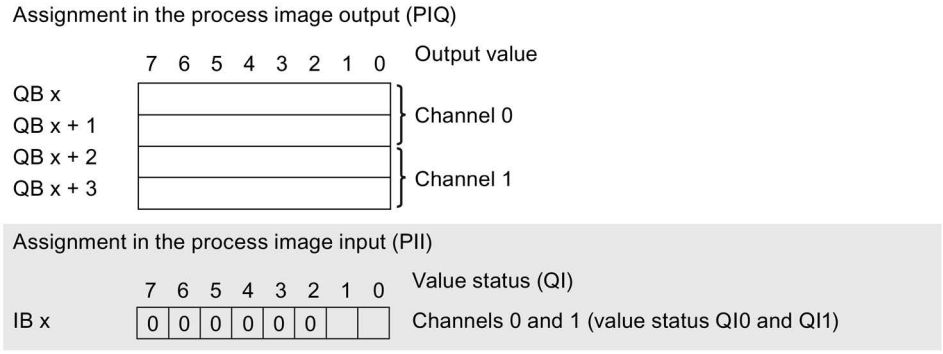

Image 4-1 Address space of the AQ 2×I ST with value status

Interrupts/diagnostics alarms

5

5.1 Status and error display

LED display

The following figure shows you the LED display of the AQ 2xI ST.

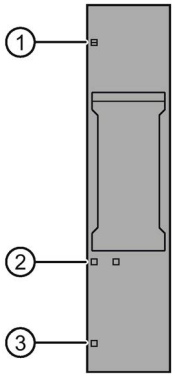

① DIAG (green/red)
② Channel status (green)
③ PWR (green)

Image 5-1 LED display

Meaning of the LEDs

The following tables show the meaning of the status and error displays. Corrective measures for diagnostics alarms can be found in section Diagnostics alarms (Page 21).

DIAG LED

Table 5- 1 Error display of the DIAG LED

DIAG LED	Meaning
□ Off	Backplane bus supply of the ET 200SP not OK
☼ Flashes	Module parameters not assigned
■ On	Module parameters assigned and no module diagnostics
☼ Flashes	Module parameters assigned and module diagnostics

Channel status LED

Table 5- 2 Status display of the channel status LED

Channel status LED	Meaning
□ Off	Channel disabled
■ On	Channel activated

PWR LED

Table 5- 3 Status display of the PWR LED

PWR LED	Meaning
□ Off	Missing supply voltage L+
■ On	Supply voltage L+ present

5.2 Interrupts

The AQ 2×I ST analog output module supports diagnostics interrupts.

Diagnostics interrupts

The module generates a diagnostic interrupt at the following events:

- Line break (current)
- High limit violated
- Low limit violated
- Error
- Parameter assignment error
- Supply voltage missing
- Channel temporarily unavailable

5.3 Diagnostics alarms

A diagnostics alarm is generated and the DIAG-LED flashes on the module for each diagnostics event. You can read out the diagnostics alarms, for example, in the diagnostics buffer of the CPU. You can evaluate the error codes with the user program.

Table 5- 4 Diagnostics alarms, their meaning and corrective measures

Diagnostics alarm	Error code	Meaning	Solution
Wire break	6_H	Actuator circuit impedance too high	Use a different actuator type or modify the wiring, e.g. use cables with larger cross-section
		Wire break between the module and actuator	Connect the cable
		Channel not connected (open)	• Disable the channel ("output type" parameter) • Connect the channel
High limit violated	7_H	The output value specified by the user program exceeds the overrange.	Correct the output value
Low limit violated	8_H	The output value specified by the user program is below the underrange.	Correct the output value
Error	9_H	Internal module error occurred.	Replace module
Parameter assignment error	10_H	• The module cannot evaluate parameters for the channel. • Incorrect parameter assignment.	Correct the parameter assignment
Supply voltage missing	11_H	Missing or insufficient supply voltage L+	• Check supply voltage L+ on the BaseUnit • Check BaseUnit type
Channel temporarily unavailable	$1F_H$	Firmware update is currently in progress or has been canceled. The module does not output any process or substitute values in this state.	• Wait for firmware update. • Restart the firmware update.

Technical specifications

6

6.1 Technical specifications

Technical specifications of the AQ 2×I ST

	6ES7135-6GB00-0BA1
General information	
Product type designation	ET 200SP, AQ 2xI Standard
Firmware version	V1.0
Usable BaseUnits	BU type A0, A1
Color code for module-specific color identification label	CC00
Product function	
I&M data	Yes; I&M0 to I&M3
Scalable output range	No
Engineering with	
STEP 7 TIA Portal can be configured/integrated as of version	V13 SP1 / -
STEP 7 can be configured/integrated as of version	V5.5 SP3 / -
PROFIBUS as of GSD version/GSD revision	GSD revision 5
PROFINET as of GSD version/GSD revision	GSDML V2.3
Operating mode	
Oversampling	No
MSO	No
CiR Configuration in RUN	
Configuration in RUN possible	Yes
Calibration in RUN possible	No
Supply voltage	
Rated value (DC)	24 V
Valid range, low limit (DC)	19.2 V
Valid range, high limit (DC)	28.8 V
Polarity reversal protection	Yes
Input current	
Current consumption, max.	110 mA
Power loss	
Power loss, typ.	1.5 W
Address area	
Address space per module	
Address space per module, max.	4 bytes; + 1 byte for QI information

	6ES7135-6GB00-0BA1
Analog outputs	
Number of analog outputs	2
Cycle time (all channels), min.	1 ms
Analog output with oversampling	No
Output ranges, current	
0 mA to 20 mA	Yes; 15 bits
-20 mA to +20 mA	Yes; 16 bits incl. sign
4 mA to 20 mA	Yes; 14 bits
Connection of actuators	
for current output two-wire connection	Yes
Load resistance (in nominal range of the output)	
For current outputs, max.	500 Ω
For current outputs, inductive load, max.	1 mH
Destruction limit for externally applied voltages and currents	
Voltages at the outputs	30 V
Cable length	
Shielded, max.	1000 m
Analog value generation for the outputs	
Oscillation time	
For resistive load	0.1 ms; typ. value
For inductive load	0.5 ms
Errors/accuracies	
Linearity error (in relation to output range), (+/-)	0.03%
Temperature error (in relation to output range), (+/-)	0.005%/K
Crosstalk between outputs, min.	-50 dB
Repeat accuracy in settled state at 25 °C (in relation to output range), (+/-)	0.05%
Operational limit in the entire temperature range	
Voltage in relation to output range, (+/-)	0.5%
Current in relation to output range, (+/-)	0.5%
Basic error limit (operational limit at 25 °C)	
Voltage in relation to output range, (+/-)	0.3%
Current in relation to output range, (+/-)	0.3%
Isochronous mode	
Isochronous mode (application synchronized up to terminal)	No

	6ES7135-6GB00-0BA1
Interrupts/diagnostics/status information	
Substitute values can be applied	Yes
Interrupts	
Diagnostics interrupt	Yes
Diagnostics alarms	
Diagnostics	Yes
Monitoring of the supply voltage	Yes
Wire break	Yes
Group error	Yes
Overflow/underflow	Yes
Diagnostics indicator LED	
Monitoring of the supply voltage (PWR LED)	Yes; green PWR LED
Channel status display	Yes; green LED
For channel diagnostics	No
For module diagnostics	Yes; green/red DIAG LED
Electrical isolation	
Electrical isolation of channels	
Between the channels	No
Between the channels and backplane bus	Yes
Between the channels and voltage supply of the electronics	Yes
Permitted potential difference	
Between different circuits	75 V DC / 60 V AC (basic isolation)
Isolation	
Isolation tested with	707 V DC (type test)
Environmental conditions	
Ambient temperature in operation	
Horizontal installation, min.	0 °C
Horizontal installation, max.	60 °C
Vertical installation, min.	0 °C
Vertical installation, max.	50 °C
Dimensions	
Width	15 mm
Weights	
Weight, approx.	31 g

Dimension drawing

See manual ET 200SP BaseUnits
(http://support.automation.siemens.com/WW/view/en/59753521)

Parameter data record

A

A.1 Dependencies when configuring with GSD file

When configuring the module with a GSD file, remember that the settings of some parameters are dependent on each other.

Configuring with a PROFINET GSD file

The table lists the properties and their dependencies on the output type and output range for PROFINET.

Output type	Output range	Diagnostics				Reaction to CPU STOP	Substitute value
		No supply voltage L+	Overflow	Underflow	Wire break		
Deactivated		*	*	*	*	*	*
Current	±20 mA	x	x	x	x	x	x
	0 mA to 20 mA	x	x	x	x	x	x
	4 mA to 20 mA	x	x	x	x	x	x

x = Property is allowed, - = Property is **not allowed**, * = Property is not relevant

Configuring with a PROFIBUS GSD file

The table lists the properties and their dependencies on the output type and output range for PROFIBUS.

Output type	Output range	Diagnostics				Reaction to CPU STOP	Substitute value
		No supply voltage L+	Overflow	Underflow	Wire break		
Deactivated		*	*	*	*	*	*
Current	±20 mA	x	x	x	x	x	x
	0 mA to 20 mA	x	x	x	x	x	x
	4 mA to 20 mA	x	x	x	x	x	x

x = Property is allowed, - = Property is **not allowed**, * = Property is not relevant

A.2 Parameter assignment and structure of the parameter data record

Parameter assignment in the user program

You can change the parameters of the module in RUN. For example, the voltage or current values of selected channels can be changed in RUN without having an effect on the other channels.

Changing parameters in RUN

The "WRREC" instruction is used to transfer the parameters to the module using data record 128. The parameters set in STEP 7 are not changed in the CPU, which means that the parameters set in STEP 7 will be valid again after a restart.

Output parameter STATUS

If errors occur when transferring parameters with the "WRREC" instruction, the module continues operation with the previous parameter assignment. The STATUS output parameter contains a corresponding error code.

You will find a description of the "WRREC" instruction and the error codes in the STEP 7 online help.

Structure of data record 128

Note

Channel 0 includes the diagnostics enable for the entire module.

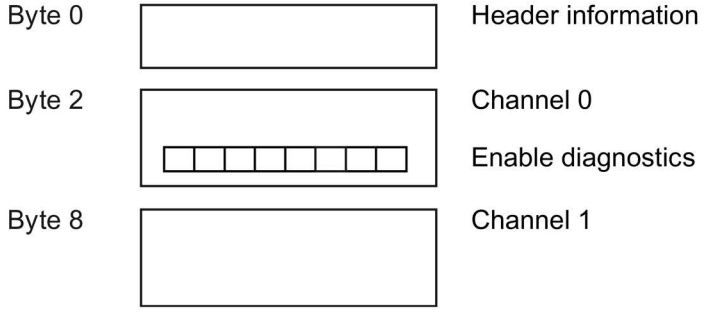

Image A-1 Structure of data record 128

Header information

The figure below shows the structure of the header information.

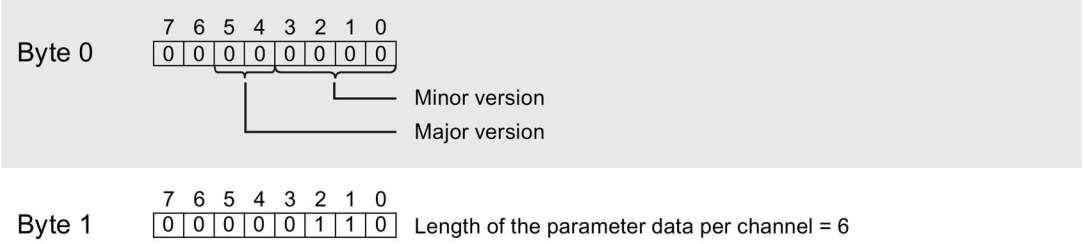

Image A-2 Header information

Parameters

The following figure shows the structure of the parameters for channels 0 and 1.

You enable a parameter by setting the corresponding bit to "1".

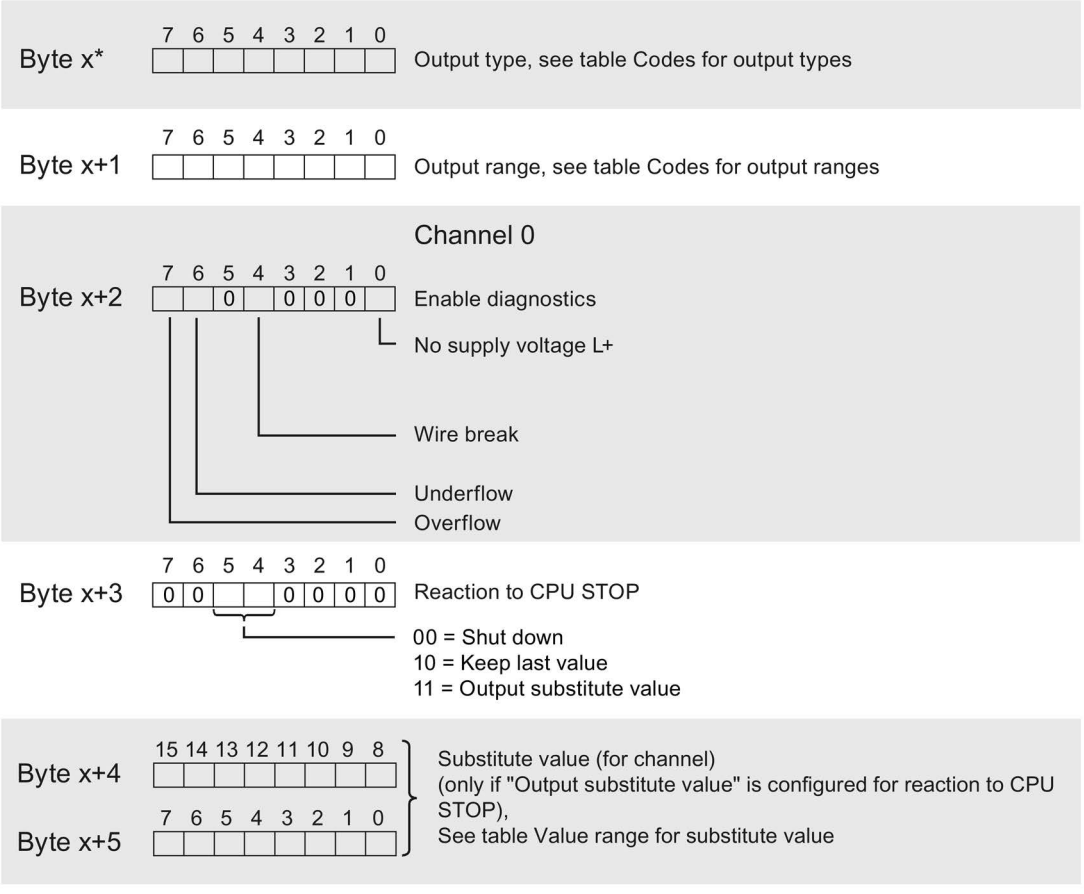

* x = 2 + (channel number × 6); channel number = 0 and 1

Image A-3 Structure of bytes x to x+5 for channels 0 and 1

Codes for output types

The following table contains the codes for the output types of the analog output module. You enter this coding in byte x (see previous figure).

Table A- 1 Codes for output types

Output type	Code
Deactivated	0000 0000
Current	0000 0011

Codes for output ranges

The following table contains the codes for the output ranges of the analog output module. You enter these codes in byte x+1 of data record 128 (see previous figure).

Table A- 2 Codes for output ranges

Output range	Code
Current	
±20 mA	0000 0000
0 mA to 20 mA	0000 0001
4 mA to 20 mA	0000 0010

Value range for substitute value

The following table contains the value ranges for the substitute values. You must enter the corresponding codes in bytes x+4 and x+5 (see previous figure).

Output range	Permissible value range
Current	
±20 mA	-29031 to 29030
0 mA to 20 mA	0 to 29030
4 to 20 mA	-692 to 29376

Error transmitting the data record

The module always checks all values of the transmitted data record. The module applies the values from the data record only when all values have been transmitted without errors.

The WRREC instruction for writing data records returns the appropriate error codes if there are errors in the STATUS parameter.

The following table shows the module-specific error codes and their meaning for parameter data record 128.

Error code in the STATUS parameter (hexadecimal)				Meaning	Solution
Byte 0	Byte 1	Byte 2	Byte 3		
DF	80	B0	xx	Number of the data record unknown	Enter valid number for data record.
DF	80	B1	xx	Length of the data record incorrect	Enter valid value for data record length.
DF	80	B2	xx	Slot invalid or unavailable	• Check the station to determine if the module is plugged in or pulled. • Check assigned values for the parameters of the WREC instruction.
DF	80	I0	xx	Incorrect version or error in the header information	Correct the version, length and number of parameter blocks.
DF	80	I1	xx	Parameter error	Check the parameters of the module.

Representation of analog values

B

B.1 Representation of analog values

This appendix describes the analog values for all output ranges supported by the AQ 2xI ST analog module.

Measured value resolution

The digitized analog value is the same for all output values at the same nominal range. Analog values are output as fixed point numbers in two's complement.

In the following table, you will find the representation of the binary analog values and the associated decimal or hexadecimal units of the analog values.

The resolutions 15 and 16 bits including sign are shown. Each analog value is entered left aligned into the ACCU. The bits marked with "x" are set to "0".

Table B- 1 Possible resolutions of the analog values

Resolution in bits	Values		Analog value	
	Decimal	Hexadecimal	High byte	Low byte
15	2	2_H	Sign 0 0 0 0 0 0 0	0 0 0 0 0 0 1 x
16	1	1_H	Sign 0 0 0 0 0 0 0	0 0 0 0 0 0 0 1

B.2 Representation of output ranges

In the following tables, you can find the digitized representation of the bipolar and unipolar range output ranges. The resolution is 16 bits.

Table B- 2 Bipolar output ranges

Dec. value	Output value in %	Data word																Range
		2^{15}	2^{14}	2^{13}	2^{12}	2^{11}	2^{10}	2^{9}	2^{8}	2^{7}	2^{6}	2^{5}	2^{4}	2^{3}	2^{2}	2^{1}	2^{0}	
≥32512	117.589	0	1	1	1	1	1	1	0	1	1	1	1	1	1	1	1	Maximum output value
32511	117.589	0	1	1	1	1	1	1	0	1	1	1	1	1	1	1	1	Overrange
27649	100.004	0	1	1	0	1	1	0	0	0	0	0	0	0	0	0	1	
27648	100.000	0	1	1	0	1	1	0	0	0	0	0	0	0	0	0	0	Nominal range
1	0.003617	0	0	0	0	0	0	0	0	0	0	0	0	0	0	0	1	
0	0.000	0	0	0	0	0	0	0	0	0	0	0	0	0	0	0	0	
-1	-0.003617	1	1	1	1	1	1	1	1	1	1	1	1	1	1	1	1	
-27648	-100.000	1	0	0	1	0	1	0	0	0	0	0	0	0	0	0	0	
-27649	100.004	1	0	0	1	0	0	1	1	1	1	1	1	1	1	1	1	Underrange
-32512	-117.593	1	0	0	0	0	0	0	1	0	0	0	0	0	0	0	0	
≤ -32513	-117.593	1	0	0	0	0	0	0	1	0	0	0	0	0	0	0	0	Minimum output value

Table B- 3 Unipolar output ranges

Dec. value	Output value in %	Data word																Range
		2^{15}	2^{14}	2^{13}	2^{12}	2^{11}	2^{10}	2^{9}	2^{8}	2^{7}	2^{6}	2^{5}	2^{4}	2^{3}	2^{2}	2^{1}	2^{0}	
≥32512	117.589	0	1	1	1	1	1	1	1	x	x	x	x	x	x	x	x	Maximum output value
32511	117.589	0	1	1	1	1	1	1	0	1	1	1	1	1	1	1	1	Overrange
27649	100.004	0	1	1	0	1	1	0	0	0	0	0	0	0	0	0	1	
27648	100.000	0	1	1	0	1	1	0	0	0	0	0	0	0	0	0	0	Nominal range
1	0.003617	0	0	0	0	0	0	0	0	0	0	0	0	0	0	0	1	
0	0.000	0	0	0	0	0	0	0	0	0	0	0	0	0	0	0	0	
≤ 0	0	0	0	0	0	0	0	0	0	0	0	0	0	0	0	0	0	Minimum output value

B.3 Representation of analog values in the current output ranges

The tables below list the decimal and hexadecimal values (codes) of the possible current output ranges.

Table B- 4 Current output range ±20 mA

Values			Current output range	Range
	Dec.	Hex.	±20 mA	
118.5149%	32767	7FFF	21 mA	Overflow*
	29031	7167		
105%	29030	7166	21 mA	Overrange
	27649	6C01	20 mA + 723.4 nA	
100%	27648	6C00	20 mA	Nominal range
75%	20736	5100	15 mA	
0.003617%	1	1	723.4 nA	
0%	0	0	0 mA	
	-1	FFFF	-723.4 nA	
-75%	-20736	AF00	-15 mA	
-100%	-27648	9400	-20 mA	
	-27649	93FF	-20 mA + 723.4 nA	Underrange
-105%	-29031	8E99	-21 mA	
	-29032	8E98	-21 mA	Underflow*
-118.519%	-32768	8000		

* Outputs positive maximum value or negative minimum value

Table B- 5 Current output range 0 to 20 mA

Values			Current output range	Range
	Dec.	Hex.	0 to 20 mA	
118.5149%	32767	7FFF	21 mA	Overflow*
	29031	7167		
105%	29030	7166	21 mA	Overrange
	27649	6C01	20 mA + 723.4 nA	
100%	27648	6C00	20 mA	Nominal range
75%	20736	5100	15 mA	
0.003617%	1	1	723.4 nA	
0%	0	0	0 mA	
	-1	FFFF	0 mA	Underflow*
-118.519%	-32768	8000		

* Outputs positive maximum value or negative minimum value

Table B- 6 Current output ranges 4 to 20 mA

Values			Current output range	Range
	Dec.	Hex.	4 to 20 mA	
118.5149%	32767	7FFF	21 mA	Overflow*
	29377	72C1		
106.25%	29376	72C0	21 mA	Overrange
	27649	6C01	20 mA + 578.7 nA	
100%	27648	6C00	20 mA	Nominal range
75%	19008	4A40	16 mA	
0.003617%	1	1	4 mA + 578.7 nA	
0%	0	0	4 mA	
	-1	FFFF	3.9995 mA	Underrange
-2.5%	-692	FD4C	3.6 mA	
	-693	FD4B	3.6 mA	Underflow*
-118.519%	-32768	8000		

* Outputs positive maximum value or negative minimum value

SIEMENS

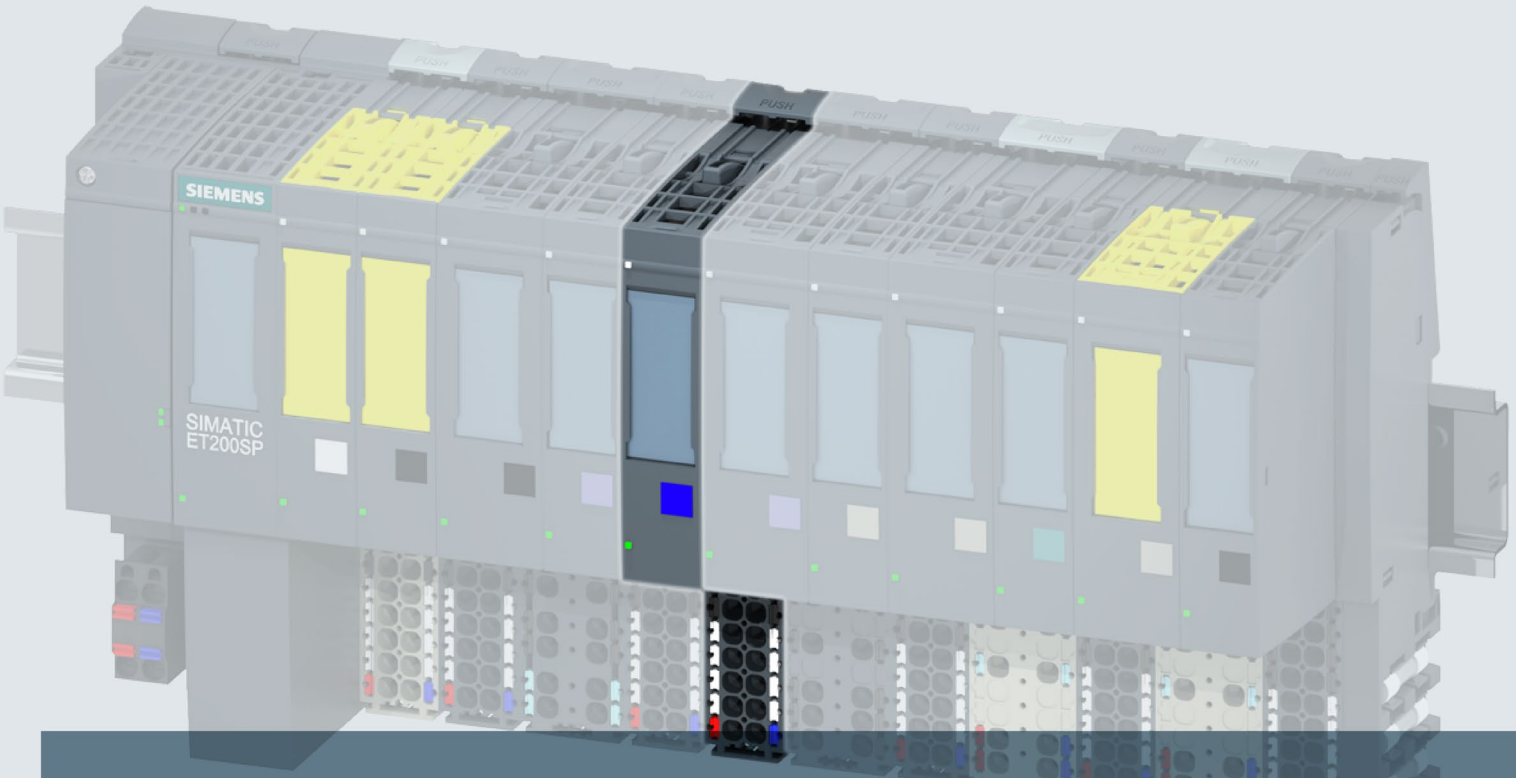

SIMATIC

ET 200SP

Analog output module AQ 2xU ST (6ES7135-6FB00-0BA1)

Manual

Edition 12/2015

Answers for industry.

SIEMENS

SIMATIC

ET 200SP
Analog output module AQ 2xU ST (6ES7135-6FB00-0BA1)

Manual

Preface

Documentation guide 1

Product overview 2

Wiring 3

Parameters/address space 4

Interrupts/diagnostics alarms 5

Technical specifications 6

Parameter data record A

Representation of analog values B

12/2015

A5E36105248-AA

Legal information

Warning notice system

This manual contains notices you have to observe in order to ensure your personal safety, as well as to prevent damage to property. The notices referring to your personal safety are highlighted in the manual by a safety alert symbol, notices referring only to property damage have no safety alert symbol. These notices shown below are graded according to the degree of danger.

⚠ DANGER

indicates that death or severe personal injury **will** result if proper precautions are not taken.

⚠ WARNING

indicates that death or severe personal injury **may** result if proper precautions are not taken.

⚠ CAUTION

indicates that minor personal injury can result if proper precautions are not taken.

NOTICE

indicates that property damage can result if proper precautions are not taken.

If more than one degree of danger is present, the warning notice representing the highest degree of danger will be used. A notice warning of injury to persons with a safety alert symbol may also include a warning relating to property damage.

Qualified Personnel

The product/system described in this documentation may be operated only by **personnel qualified** for the specific task in accordance with the relevant documentation, in particular its warning notices and safety instructions. Qualified personnel are those who, based on their training and experience, are capable of identifying risks and avoiding potential hazards when working with these products/systems.

Proper use of Siemens products

Note the following:

⚠ WARNING

Siemens products may only be used for the applications described in the catalog and in the relevant technical documentation. If products and components from other manufacturers are used, these must be recommended or approved by Siemens. Proper transport, storage, installation, assembly, commissioning, operation and maintenance are required to ensure that the products operate safely and without any problems. The permissible ambient conditions must be complied with. The information in the relevant documentation must be observed.

Trademarks

All names identified by ® are registered trademarks of Siemens AG. The remaining trademarks in this publication may be trademarks whose use by third parties for their own purposes could violate the rights of the owner.

Disclaimer of Liability

We have reviewed the contents of this publication to ensure consistency with the hardware and software described. Since variance cannot be precluded entirely, we cannot guarantee full consistency. However, the information in this publication is reviewed regularly and any necessary corrections are included in subsequent editions.

Siemens AG
Division Digital Factory
Postfach 48 48
90026 NÜRNBERG
GERMANY

A5E36105248-AA
℗ 12/2015 Subject to change

Copyright © Siemens AG 2015.
All rights reserved

Preface

Purpose of the documentation

This manual supplements the ET 200SP distributed I/O system (http://support.automation.siemens.com/WW/view/en/58649293) system manual.

Functions that generally relate to the system are described in this system manual.

The information provided in this manual and in the system/function manuals supports you in commissioning the system.

Conventions

CPU: When the term "CPU" is used in this manual, it applies to the CPUs of the S7-1500 automation system as well as to the CPUs/interface modules of the ET 200SP distributed I/O system.

STEP 7: In this documentation, "STEP 7" is used as a synonym for all versions of the configuration and programming software "STEP 7 (TIA Portal)".

Please also observe notes marked as follows:

Note

A note contains important information on the product described in the documentation, on the handling of the product or on the section of the documentation to which particular attention should be paid.

Security information

Siemens provides products and solutions with industrial security functions that support the secure operation of plants, solutions, machines, equipment and/or networks. They are important components in a holistic industrial security concept. With this in mind, Siemens' products and solutions undergo continuous development. Siemens recommends strongly that you regularly check for product updates.

For the secure operation of Siemens products and solutions, it is necessary to take suitable preventive action (e.g. cell protection concept) and integrate each component into a holistic, state-of-the-art industrial security concept. Third-party products that may be in use should also be considered. You can find more information about industrial security on the Internet (http://www.siemens.com/industrialsecurity).

To stay informed about product updates as they occur, sign up for a product-specific newsletter. You can find more information on the Internet (http://support.automation.siemens.com).

Table of contents

Preface 4

1 Documentation guide 6

2 Product overview 9

2.1 Properties 9

3 Wiring 11

3.1 Wiring and block diagram 11

4 Parameters/address space 13

4.1 Output ranges 13

4.2 Parameters 13

4.3 Explanation of the parameters 15

4.4 Address space 16

5 Interrupts/diagnostics alarms 17

5.1 Status and error display 17

5.2 Interrupts 19

5.3 Diagnostics alarms 19

6 Technical specifications 20

6.1 Technical specifications 20

A Parameter data record 23

A.1 Dependencies when configuring with GSD file 23

A.2 Parameter assignment and structure of the parameter data record 24

B Representation of analog values 28

B.1 Representation of analog values 28

B.2 Representation of output ranges 29

B.3 Representation of analog values in the voltage output ranges 30

Documentation guide

1

The documentation for the SIMATIC ET 200SP distributed I/O system is arranged into three areas.
This arrangement enables you to access the specific content you require.

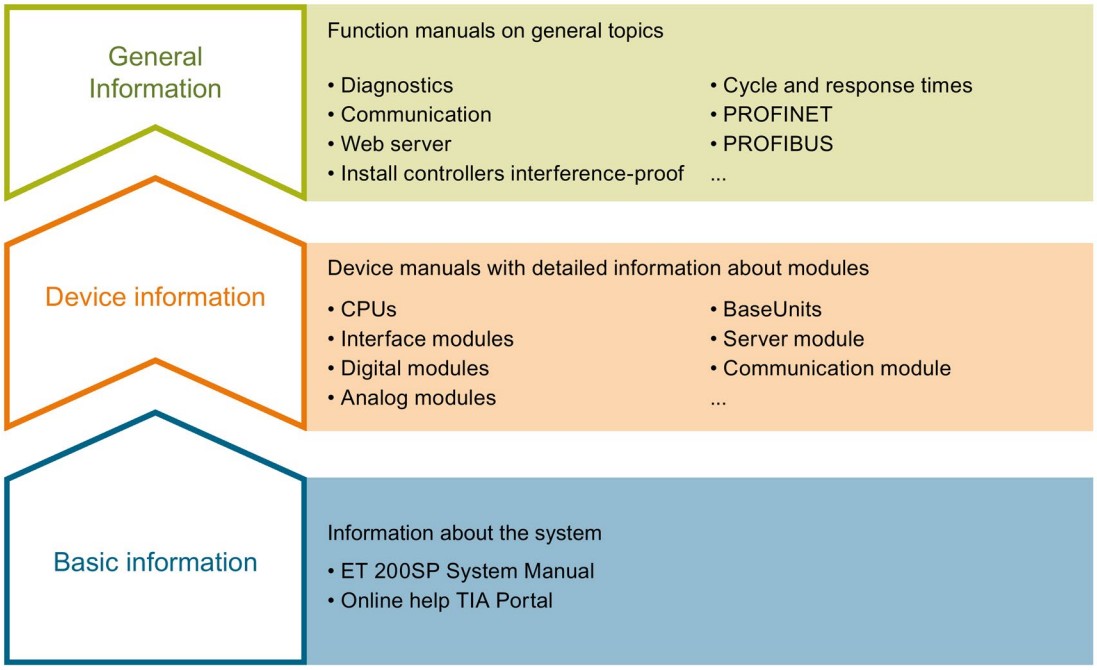

Basic information

The system manual describes in detail the configuration, installation, wiring and commissioning of the SIMATIC ET 200SP. distributed I/O system. The STEP 7 online help supports you in the configuration and programming.

Device information

Product manuals contain a compact description of the module-specific information, such as properties, terminal diagrams, characteristics and technical specifications.

General information

The function manuals contain detailed descriptions on general topics regarding the SIMATIC ET 200SP distributed I/O system, e.g. diagnostics, communication, Web server, designing interference-free controllers.

You can download the documentation free of charge from the Internet (http://w3.siemens.com/mcms/industrial-automation-systems-simatic/en/manual-overview/tech-doc-et200/Pages/Default.aspx).

Changes and supplements to the manuals are documented in a Product Information.

You can download the product information free of charge from the Internet (https://support.industry.siemens.com/cs/us/en/view/73021864).

Manual Collection ET 200SP

The Manual Collection contains the complete documentation on the SIMATIC ET 200SP distributed I/O system gathered together in one file.

You can find the Manual Collection on the Internet (http://support.automation.siemens.com/WW/view/en/84133942).

"mySupport"

With "mySupport", your personal workspace, you make the most of your Industry Online Support.

In "mySupport" you can store filters, favorites and tags, request CAx data and put together your personal library in the Documentation area. Furthermore, your data is automatically filled into support requests and you always have an overview of your current requests.

You need to register once to use the full functionality of "mySupport".

You can find "mySupport" in the Internet (https://support.industry.siemens.com/My/ww/en).

"mySupport" - Documentation

In the Documentation area of "mySupport", you have the possibility to combine complete manuals or parts of them to make your own manual.
You can export the manual in PDF format or in an editable format.

You can find "mySupport" - Documentation in the Internet (http://support.industry.siemens.com/My/ww/en/documentation).

"mySupport" - CAx Data

In the CAx Data area of "mySupport", you can have access the latest product data for your CAx or CAe system.

You configure your own download package with a few clicks.

In doing so you can select:

- Product images, 2D dimension drawings, 3D models, internal circuit diagrams, EPLAN macro files
- Manuals, characteristics, operating manuals, certificates
- Product master data

You can find "mySupport" - CAx Data in the Internet (http://support.industry.siemens.com/my/ww/en/CAxOnline).

Application examples

The application examples support you with various tools and examples for solving your automation tasks. Solutions are shown in interplay with multiple components in the system - separated from the focus in individual products.

You can find the application examples on the Internet (https://support.industry.siemens.com/sc/ww/en/sc/2054).

TIA Selection Tool

With the TIA Selection Tool, you can select, configure and order devices for Totally Integrated Automation (TIA).
This tool is the successor of the SIMATIC Selection Tool and combines the known configurators for automation technology into one tool.
With the TIA Selection Tool, you can generate a complete order list from your product selection or product configuration.

You can find the TIA Selection Tool on the Internet (http://w3.siemens.com/mcms/topics/en/simatic/tia-selection-tool).

Product overview

2

2.1 Properties

Article number

6ES7135-6FB00-0BA1

View of the module

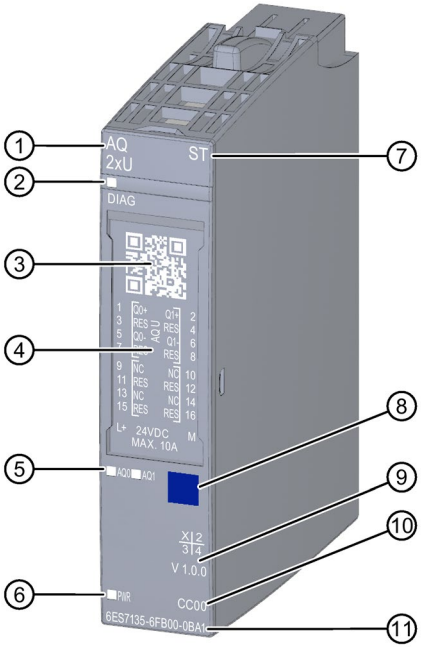

① Module type and name
② LED for diagnostics
③ 2D matrix code
④ Wiring diagram
⑤ LEDs for channel status
⑥ LED for supply voltage
⑦ Function class
⑧ Color coding module type
⑨ Function and firmware version
⑩ Color code for selecting the color identification labels
⑪ Article number

Image 2-1 View of the module AQ 2×U ST

Properties

The module has the following technical properties:

- Analog output module with 2 outputs
  - for voltage output
- Output range for voltage output:
  - ±10 V, resolution 16 bits including sign
  - ±5 V, resolution 15 bits including sign
  - 0 to 10 V, resolution 15 bits
  - 1 to 5 V, resolution 13 bits
- Electrically isolated from supply voltage L+
- Configurable diagnostics (per module)

The module supports the following functions:

- Firmware update
- I&M identification data
- Configuration in RUN
- PROFIenergy
- Value status

You can configure the module with STEP 7 (TIA Portal) and with a GSD file.

Accessories

The following accessories must be ordered separately:

- Labeling strips
- Color identification labels
- Reference identification label
- Shield connector

See also

You can find additional information on the accessories in the ET 200SP distributed I/O system (http://support.automation.siemens.com/WW/view/en/58649293) system manual.

Wiring 3

3.1 Wiring and block diagram

This section includes the block diagram of the AQ 2xU ST module with the terminal assignments for a 2-wire connection.

You can find information on wiring the BaseUnit in the ET 200SP distributed I/O system (http://support.automation.siemens.com/WW/view/en/58649293) system manual.

Note

The load group of the module must begin with a light-colored BaseUnit. Keep this in mind also during the configuration.

Wiring: Voltage output 2-wire connection

The following figure shows the block diagram and an example of the terminal assignment of the analog output module AQ 2xU ST on the BaseUnit BU type A0/A1.

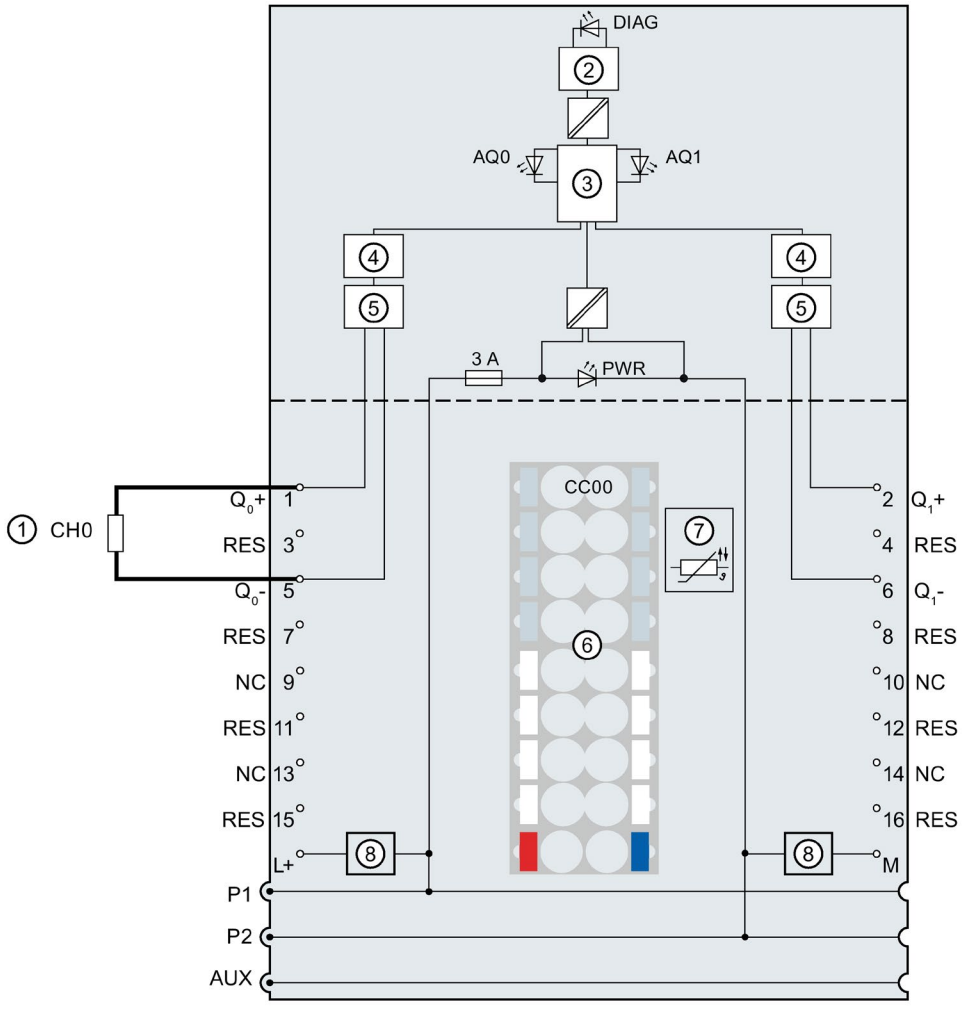

①	2-wire connection for voltage output	Q_n+	Analog output voltage positive, channel n
②	Backplane bus interface	Q_n-	Analog output voltage negative, channel n
③	Microcontroller	NC	Not connected
④	Digital-to-analog converter (DAC)	RES	Reserve, must remain unused for future function extensions
⑤	Output conditioner	L+	24 V DC (infeed only with light-colored BaseUnit)
⑥	Color-coded label with color code CC00 (optional)	M	Ground
⑦	Temperature recording for BU type A1 only (function cannot be used for this module)	P1, P2, AUX	Internal self-assembling voltage buses Connection to left (dark-colored BaseUnit) Connection to left interrupted (light-colored BaseUnit)
⑧	Filter connection supply voltage (only when light-colored BaseUnit is present)	DIAG	Diagnostics LED (green, red)
		AQ0, AQ1	Channel status LED (green)
		PWR	Power LED (green)

Image 3-1 Wiring and block diagram for voltage output 2-wire connection

Parameters/address space 4

4.1 Output ranges

The analog output module AQ 2×U ST has the following output ranges:

Table 4- 1 Output ranges

Output type	Output ranges	Resolution
Voltage	± 10 V	16 bits incl. sign
	± 5 V	15 bits including sign
	0 to 10 V	15 bits
	1 to 5 V	13 bits

The tables of the output ranges, overflow, overrange, etc. can be found in section Representation of analog values (Page 28).

4.2 Parameters

Parameters of the AQ 2xU ST

The effective range of the configurable parameters depends on the type of configuration. The following configurations are possible:

- Central operation with an ET 200SP CPU
- Distributed operation on PROFINET IO in an ET 200SP system
- Distributed operation on PROFIBUS DP in an ET 200SP system

When assigning parameters in the user program, use the "WRREC" instruction to transfer the parameters to the module using the data records; refer to section Parameter assignment and structure of the parameter data record (Page 24).
The following parameter settings are possible:

Table 4- 2 Configurable parameters and their defaults (GSD file)

Parameters	Range of values	Default	Parameter reassignment in RUN	Effective range with configuration software, e.g. STEP 7 (TIA Portal)	
				GSD file PROFINET IO	GSD file PROFIBUS DP
Diagnostics: No supply voltage L+	• Disable • Enable	Disable	Yes	Module	Module
Diagnostics Short-circuit to ground[1]	• Disable • Enable	Disable	Yes	Module	Module
Diagnostics: Overflow	• Disable • Enable	Disable	Yes	Module	Module [2]
Diagnostics: Underflow	• Disable • Enable	Disable	Yes	Module	

Parameters	Range of values	Default	Parameter reassignment in RUN	Effective range with configuration software, e.g. STEP 7 (TIA Portal)	
				GSD file PROFINET IO	GSD file PROFIBUS DP
Output type/range	• Deactivated • Voltage +/- 10 V • Voltage +/- 5 V • Voltage 0..10 V • Voltage 1..5 V	Voltage +/- 10 V	Yes	Channel	Channel
Reaction to CPU STOP	• Turn off • Keep last value • Output substitute value	Turn off	Yes	Channel	Module
Substitute value	For permissible substitute values for the various output ranges, see appendix Parameter assignment and structure of the parameter data record (Page 24), Substitute values → Codes for substitute values table	0	Yes	Channel	Channel
Potential group	• Use potential group of the left module (module plugged into a dark-colored BaseUnit) • Enable new potential group (module plugged into light-colored BaseUnit)	Use potential group of the left module	No	Module	Module

[1] No diagnostics detection between -0.5 V and +0.5 V (no short-circuit detection)

[2] Due to the limited number of parameters of a maximum of 244 bytes per ET 200SP station with a PROFIBUS GSD configuration, the parameter assignment options are restricted. If required, you can assign these parameters using data record 128 as described in the "GSD file PROFINET IO" column (see table above). The parameter length of the I/O module is 7 bytes.

Note

Unused channels

A deactivated channel always returns the value "no voltage".

4.3 Explanation of the parameters

Diagnostics: No supply voltage L+

Enabling of the diagnostics for no or insufficient supply voltage L+.

Diagnostics: Short-circuit

Enabling of the diagnostics when a short-circuit of the actuator supply occurs.

Diagnostics: Overflow

Enabling of the diagnostics when the output value exceeds the overrange.

Diagnostics: Underflow

Enabling of the diagnostics when the output value exceeds the overrange, falls below the minimum output value or reaches underflow.

Output type / output range

See section Output ranges (Page 13)

Reaction to CPU STOP

Determines the behavior of the module at CPU STOP.

Substitute value

The substitute value is the value that the module outputs in case of a CPU STOP.

Potential group

A potential group consists of a group of directly adjacent I/O modules within an ET 200SP station, which are supplied via a common supply voltage.

A potential group begins with a light-colored BaseUnit through which the required voltage is supplied for all modules of the potential group. The light-colored BaseUnit interrupts the three self-assembling voltage buses P1, P2 and AUX to the left neighbor.

All additional I/O modules of this potential group are plugged into dark-colored BaseUnits. You take the potential of the self-assembling voltage buses P1, P2 and AUX from the left neighbor.

A potential group ends with the dark-colored BaseUnit, which follows a light-colored BaseUnit or server module in the station configuration.

See also

You can find additional information in the system manual ET 200SP distributed I/O system (http://support.automation.siemens.com/WW/view/en/58649293).

4.4 Address space

Configuration options

The following configurations are possible:

- Configuration 1: Without value status
- Configuration 2: With value status

Evaluating the value status

If you enable the value status for the analog module, an additional byte is occupied in the input address space. Bits 0 and 1 in this byte are assigned to a channel. They provide information about the validity of the analog value.

Bit = 1: There are no errors on the module.

Bit = 0: Channel is deactivated or there is a fault on the module.

If a fault occurs on a channel with this module, the value status for all channels is 0.

Address space

The following figure shows the assignment of the address space for the AQ 2×U ST with value status (Quality Information (QI)). The addresses for the value status are only available if the value status is enabled.

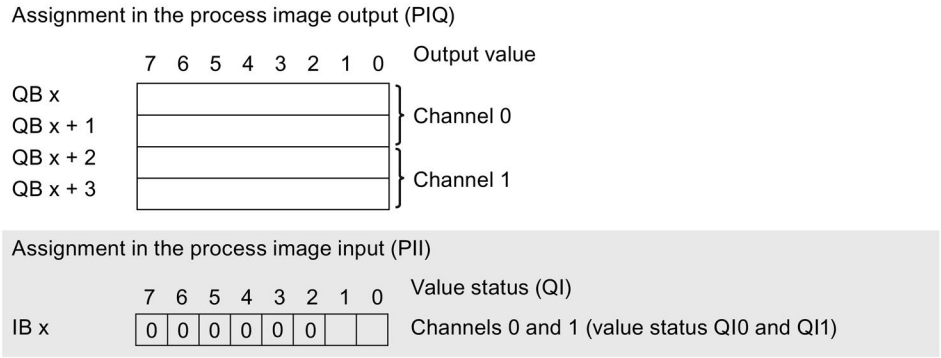

Image 4-1 Address space of the AQ 2×U ST with value status

Interrupts/diagnostics alarms

5

5.1 Status and error display

LED display

The following figure shows you the LED display of the AQ 2xU ST.

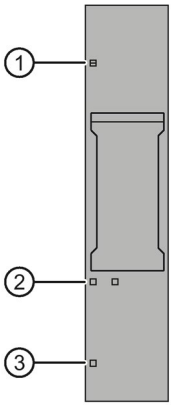

① DIAG (green/red)
② Channel status (green)
③ PWR (green)

Image 5-1 LED display

Meaning of the LEDs

The following tables show the meaning of the status and error displays. Corrective measures for diagnostics alarms can be found in section Diagnostics alarms (Page 19).

DIAG LED

Table 5- 1 Error display of the DIAG LED

DIAG LED	Meaning
Off	Backplane bus supply of the ET 200SP not OK
Flashes	Module parameters not assigned
On	Module parameters assigned and no module diagnostics
Flashes	Module parameters assigned and module diagnostics

Channel status LED

Table 5- 2 Status display of the channel status LED

Channel status LED	Meaning
Off	Channel disabled
On	Channel activated

PWR LED

Table 5- 3 Status display of the PWR LED

PWR LED	Meaning
Off	Missing supply voltage L+
On	Supply voltage L+ present

5.2 Interrupts

The AQ 2×U ST analog output module supports diagnostics interrupts.

Diagnostics interrupts

The module generates a diagnostic interrupt at the following events:

- Short-circuit (voltage)
- High limit violated
- Low limit violated
- Error
- Parameter assignment error
- Supply voltage missing
- Channel temporarily unavailable

5.3 Diagnostics alarms

A diagnostics alarm is generated and the DIAG-LED flashes on the module for each diagnostics event. You can read out the diagnostics alarms, for example, in the diagnostics buffer of the CPU. You can evaluate the error codes with the user program.

Table 5- 4 Diagnostics alarms, their meaning and corrective measures

Diagnostics alarm	Error code	Meaning	Solution
Short-circuit	1_H	Short-circuit of the actuator supply	Correct the process wiring
High limit violated	7_H	The output value specified by the user program exceeds the overrange.	Correct the output value
Low limit violated	8_H	The output value specified by the user program is below the underrange.	Correct the output value
Error	9_H	Internal module error occurred.	Replace module
Parameter assignment error	10_H	• The module cannot evaluate parameters for the channel. • Incorrect parameter assignment.	Correct the parameter assignment
Supply voltage missing	11_H	Missing or insufficient supply voltage L+	• Check supply voltage L+ on the BaseUnit • Check BaseUnit type
Channel temporarily unavailable	$1F_H$	Firmware update is currently in progress or has been canceled. The module does not output any process or substitute values in this state.	• Wait for firmware update • Restart the firmware update

Technical specifications

6

6.1 Technical specifications

Technical specifications of the AQ 2×U ST

	6ES7135-6FB00-0BA1
General information	
Product type designation	ET 200SP, AQ 2xU Standard
Firmware version	V1.0
Usable BaseUnits	BU type A0, A1
Color code for module-specific color identification label	CC00
Product function	
I&M data	Yes; I&M0 to I&M3
Scalable output range	No
Engineering with	
STEP 7 TIA Portal can be configured/integrated as of version	V13 SP1 / -
STEP 7 can be configured/integrated as of version	V5.5 SP3 / -
PROFIBUS as of GSD version/GSD revision	GSD revision 5
PROFINET as of GSD version/GSD revision	GSDML V2.3
Operating mode	
Oversampling	No
MSO	No
CiR Configuration in RUN	
Configuration in RUN possible	Yes
Calibration in RUN possible	No
Supply voltage	
Rated value (DC)	24 V
Valid range, low limit (DC)	19.2 V
Valid range, high limit (DC)	28.8 V
Polarity reversal protection	Yes
Input current	
Current consumption, max.	80 mA
Power loss	
Power loss, typ.	1 W
Address area	
Address space per module	
Address space per module, max.	4 bytes; + 1 byte for QI information

	6ES7135-6FB00-0BA1
Analog outputs	
Number of analog outputs	2
Voltage output, short-circuit current, max.	45 mA
Cycle time (all channels), min.	1 ms
Analog output with oversampling	No
Output ranges, voltage	
0 to 10 V	Yes; 15 bits
1 V to 5 V	Yes; 13 bits
-5 V to +5 V	Yes; 15 bits including sign
-10 V to +10 V	Yes; 16 bits incl. sign
Connection of actuators	
for voltage output two-wire connection	Yes
for voltage output four-wire connection	No
Load resistance (in nominal range of the output)	
For voltage outputs, min.	2 kΩ
For voltage outputs, capacitive load, max.	1 µF
Destruction limit for externally applied voltages and currents	
Voltages at the outputs	30 V
Cable length	
Shielded, max.	200 m
Analog value generation for the outputs	
Oscillation time	
For resistive load	0.1 ms
For capacitive load	1 ms
Errors/accuracies	
Linearity error (in relation to output range), (+/-)	0.03%
Temperature error (in relation to output range), (+/-)	0.005%/K
Crosstalk between outputs, min.	-50 dB
Repeat accuracy in settled state at 25 °C (in relation to output range), (+/-)	0.05%
Operational limit in the entire temperature range	
Voltage in relation to output range, (+/-)	0.5%
Current in relation to output range, (+/-)	0.5%
Basic error limit (operational limit at 25 °C)	
Voltage in relation to output range, (+/-)	0.3%
Current in relation to output range, (+/-)	0.3%
Isochronous mode	
Isochronous mode (application synchronized up to terminal)	No
Interrupts/diagnostics/status information	
Substitute values can be applied	Yes

	6ES7135-6FB00-0BA1
Interrupts	
Diagnostics interrupt	Yes
Diagnostics alarms	
Diagnostics	Yes
Monitoring of the supply voltage	Yes
Short-circuit	Yes
Group error	Yes
Overflow/underflow	Yes
Diagnostics indicator LED	
Monitoring of the supply voltage (PWR LED)	Yes; green PWR LED
Channel status display	Yes; green LED
For channel diagnostics	No
For module diagnostics	Yes; green/red DIAG LED
Electrical isolation	
Electrical isolation of channels	
Between the channels	No
Between the channels and backplane bus	Yes
Between the channels and voltage supply of the electronics	Yes
Permitted potential difference	
Between different circuits	75 V DC / 60 V AC (basic isolation)
Isolation	
Isolation tested with	707 V DC (type test)
Environmental conditions	
Ambient temperature in operation	
Horizontal installation, min.	0 °C
Horizontal installation, max.	60 °C
Vertical installation, min.	0 °C
Vertical installation, max.	50 °C
Dimensions	
Width	15 mm
Weights	
Weight, approx.	31 g

Dimension drawing

See manual ET 200SP BaseUnits
(http://support.automation.siemens.com/WW/view/en/59753521)

Parameter data record

A

A.1 Dependencies when configuring with GSD file

When configuring the module with a GSD file, remember that the settings of some parameters are dependent on each other.

Configuring with a PROFINET GSD file

The table lists the properties and their dependencies on the output type and output range for PROFINET.

Output type	Output range	Diagnostics				Reaction to CPU STOP	Substitute value
		No supply voltage L+	Short-circuit to ground	Overflow	Underflow		
Deactivated		*	*	*	*	*	*
Voltage	±10 V	x	x	x	x	x	x
	±5 V	x	x	x	x	x	x
	0 V to 10 V	x	x	x	x	x	x
	1 V to 5 V	x	x	x	x	x	x

x = Property is allowed, - = Property is **not allowed**, * = Property is not relevant

Configuring with a PROFIBUS GSD file

The table lists the properties and their dependencies on the output type and output range for PROFIBUS.

Output type	Output range	Diagnostics				Reaction to CPU STOP	Substitute value
		No supply voltage L+	Short-circuit to ground	Overflow	Underflow		
Deactivated		*	*	*	*	*	*
Voltage	±10 V	x	x	x	x	x	x
	±5 V	x	x	x	x	x	x
	0 V to 10 V	x	x	x	x	x	x
	1 V to 5 V	x	x	x	x	x	x

x = Property is allowed, - = Property is **not allowed**, * = Property is not relevant

A.2 Parameter assignment and structure of the parameter data record

Parameter assignment in the user program

You can reassign the module parameters in RUN. For example, the voltage or current values of selected channels can be changed in RUN without having an effect on the other channels.

Changing parameters in RUN

The "WRREC" instruction is used to transfer the parameters to the module using data record 128. The parameters set in STEP 7 are not changed in the CPU, which means that the parameters set in STEP 7 will be valid again after a restart.

Output parameter STATUS

If errors occur when transferring parameters with the "WRREC" instruction, the module continues operation with the previous parameter assignment. The STATUS output parameter contains a corresponding error code.

You will find a description of the "WRREC" instruction and the error codes in the STEP 7 online help.

Structure of data record 128

Note

Channel 0 includes the diagnostics enable for the entire module.

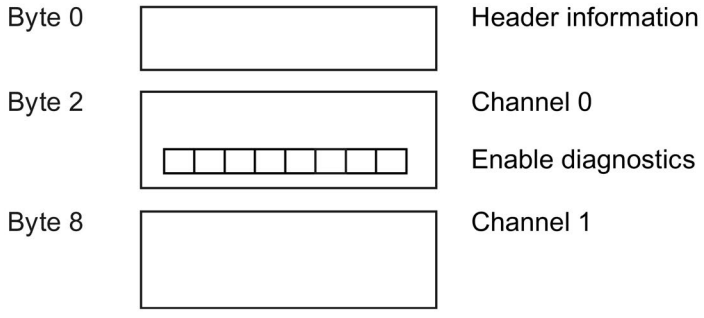

Image A-1 Structure of data record 128

Header information

The figure below shows the structure of the header information.

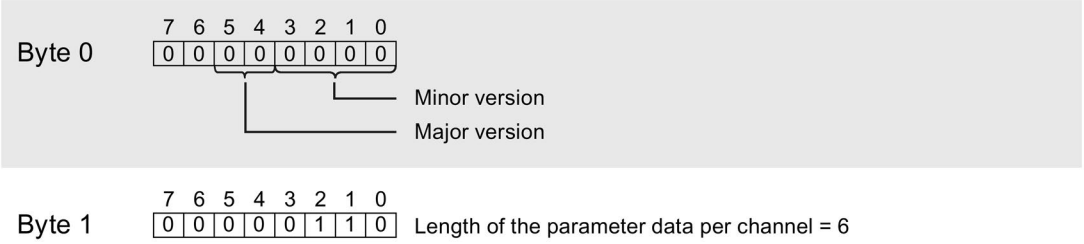

Image A-2 Header information

Parameters

The following figure shows the structure of the parameters for channels 0 and 1.

You enable a parameter by setting the corresponding bit to "1".

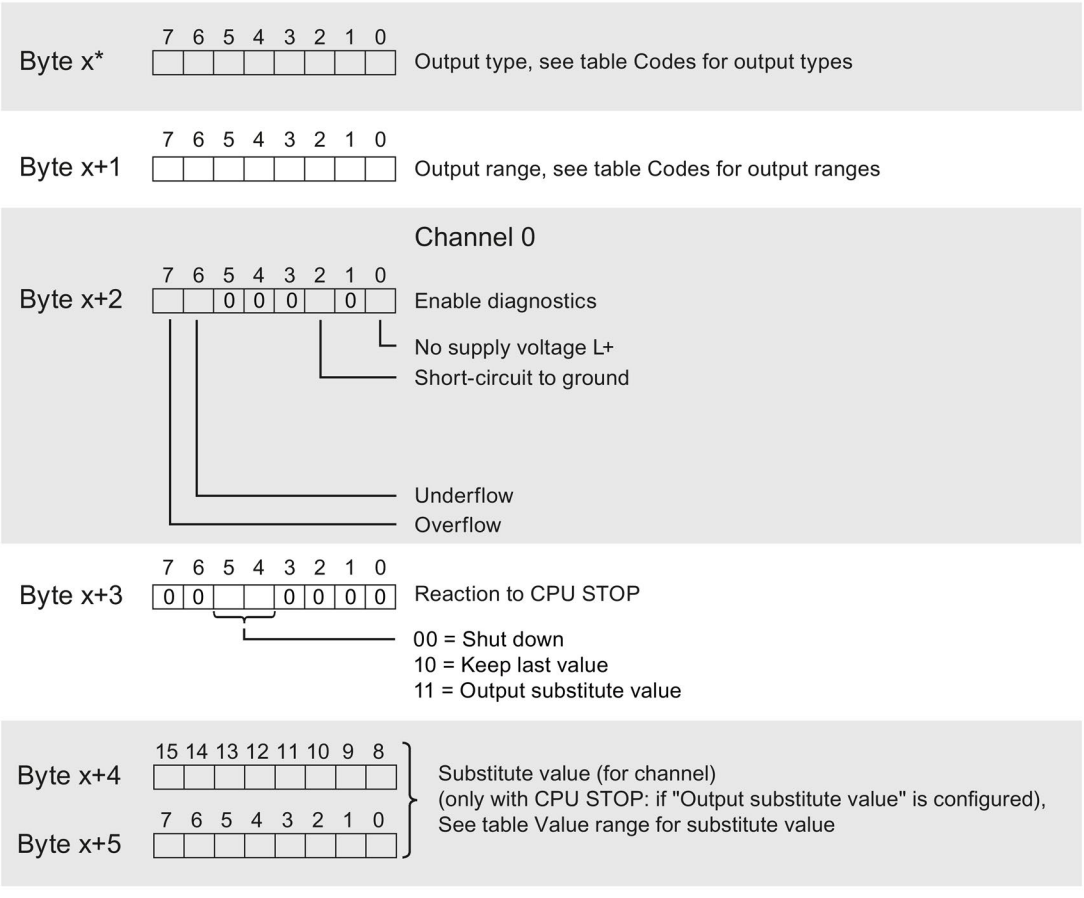

* x = 2 + (channel number × 6); channel number = 0 and 1

Image A-3 Structure of bytes x to x+5 for channels 0 and 1

Codes for output types

The following table contains the codes for the output types of the analog output module. You enter this coding in byte x (see previous figure).

Table A- 1 Codes for output types

Output type	Code
Deactivated	0000 0000
Voltage	0000 0001

Codes for output ranges

The following table contains the codes for the output ranges of the analog output module. You enter these codes in byte x+1 of data record 128 (see previous figure).

Table A- 2 Codes for output ranges

Output range	Code
Voltage	
±10 V	0000 0000
±5 V	0000 0001
0 to 10 V	0000 0010
1 to 5 V	0000 0011

Value range for substitute value

The following table contains the value ranges for the substitute values. You must enter the corresponding codes in bytes x+4 and x+5 (see previous figure).

Output range	Permissible value range
Voltage	
±10 V	-32512 to 32511
±5 V	-32512 to 32511
0 to 10 V	0 to 32511
1 to 5 V	-6912 to 32511

Error transmitting the data record

The module always checks all values of the transmitted data record. The module applies the values from the data record only when all values have been transmitted without errors.

The WRREC instruction for writing data records returns the appropriate error codes if there are errors in the STATUS parameter.

The following table shows the module-specific error codes and their meaning for parameter data record 128.

Error code in the STATUS parameter (hexadecimal)				Meaning	Solution
Byte 0	Byte 1	Byte 2	Byte 3		
DF	80	B0	xx	Number of the data record unknown	Enter valid number for data record.
DF	80	B1	xx	Length of the data record incorrect	Enter valid value for data record length.
DF	80	B2	xx	Slot invalid or unavailable	• Check the station to determine if the module is plugged in or pulled. • Check assigned values for the parameters of the WREC instruction.
DF	80	I0	xx	Incorrect version or error in the header information	Correct the version, length and number of parameter blocks.
DF	80	I1	xx	Parameter error	Check the parameters of the module.

Representation of analog values

B

B.1 Representation of analog values

This appendix describes the analog values for all output ranges supported by the AQ 2xU ST analog module.

Measured value resolution

The digitized analog value is the same for all output values at the same nominal range. Analog values are output as fixed point numbers in two's complement.

In the following table, you will find the representation of the binary analog values and the associated decimal or hexadecimal units of the analog values.

The resolutions 13, 14, 15 and 16 bits including sign are shown. Each analog value is entered left aligned into the ACCU. The bits marked with "x" are set to "0".

Table B- 1 Possible resolutions of the analog values

Resolution in bits	Values		Analog value	
	Decimal	Hexadecimal	High byte	Low byte
13	8	8_H	Sign 0 0 0 0 0 0 0	0 0 0 0 1 x x x
14	4	4_H	Sign 0 0 0 0 0 0 0	0 0 0 0 0 1 x x
15	2	2_H	Sign 0 0 0 0 0 0 0	0 0 0 0 0 0 1 x
16	1	1_H	Sign 0 0 0 0 0 0 0	0 0 0 0 0 0 0 1

B.2 Representation of output ranges

In the following tables, you can find the digitized representation of the bipolar and unipolar range output ranges. The resolution is 16 bits.

Table B- 2 Bipolar output ranges

Dec. value	Output value in %	Data word																Range
		2^{15}	2^{14}	2^{13}	2^{12}	2^{11}	2^{10}	2^{9}	2^{8}	2^{7}	2^{6}	2^{5}	2^{4}	2^{3}	2^{2}	2^{1}	2^{0}	
≥32512	117.589	0	1	1	1	1	1	1	0	1	1	1	1	1	1	1	1	Maximum output value
32511	117.589	0	1	1	1	1	1	1	0	1	1	1	1	1	1	1	1	Overrange
27649	100.004	0	1	1	0	1	1	0	0	0	0	0	0	0	0	0	1	
27648	100.000	0	1	1	0	1	1	0	0	0	0	0	0	0	0	0	0	Nominal range
1	0.003617	0	0	0	0	0	0	0	0	0	0	0	0	0	0	0	1	
0	0.000	0	0	0	0	0	0	0	0	0	0	0	0	0	0	0	0	
-1	-0.003617	1	1	1	1	1	1	1	1	1	1	1	1	1	1	1	1	
-27648	-100.000	1	0	0	1	0	1	0	0	0	0	0	0	0	0	0	0	
-27649	100.004	1	0	0	1	0	0	1	1	1	1	1	1	1	1	1	1	Underrange
-32512	-117.593	1	0	0	0	0	0	0	1	0	0	0	0	0	0	0	0	
≤ -32513	-117.593	1	0	0	0	0	0	0	1	0	0	0	0	0	0	0	0	Minimum output value

Table B- 3 Unipolar output ranges

Dec. value	Output value in %	Data word																Range
		2^{15}	2^{14}	2^{13}	2^{12}	2^{11}	2^{10}	2^{9}	2^{8}	2^{7}	2^{6}	2^{5}	2^{4}	2^{3}	2^{2}	2^{1}	2^{0}	
≥32512	117.589	0	1	1	1	1	1	1	1	x	x	x	x	x	x	x	x	Maximum output value
32511	117.589	0	1	1	1	1	1	1	0	1	1	1	1	1	1	1	1	Overrange
27649	100.004	0	1	1	0	1	1	0	0	0	0	0	0	0	0	0	1	
27648	100.000	0	1	1	0	1	1	0	0	0	0	0	0	0	0	0	0	Nominal range
1	0.003617	0	0	0	0	0	0	0	0	0	0	0	0	0	0	0	1	
0	0.000	0	0	0	0	0	0	0	0	0	0	0	0	0	0	0	0	
≤ 0	0	0	0	0	0	0	0	0	0	0	0	0	0	0	0	0	0	Minimum output value

B.3 Representation of analog values in the voltage output ranges

The tables below list the decimal and hexadecimal values (codes) of the possible voltage output ranges.

Table B- 4 Voltage output ranges ±10 V and ±5 V

Values			Voltage output range		Range
	Dec.	Hex.	±10 V	±5 V	
118.5149%	32767	7FFF	11.76 V	5.88 V	Overflow*
	32512	7F00			
117.589%	32511	7EFF	11.76 V	5.88 V	Overrange
	27649	6C01			
100%	27648	6C00	10 V	5 V	Nominal range
75%	20736	5100	7.5 V	3.75 V	
0.003617%	1	1	361.7 µV	180.8 µV	
0%	0	0	0 V	0 V	
	-1	FFFF	-361.7 µV	-180.8 µV	
-75%	-20736	AF00	-7.5 V	-3.75 V	
-100%	-27648	9400	-10 V	-5 V	
	-27649	93FF			Underrange
-117.593%	-32512	8100	-11.76 V	-5.88 V	
	-32513	80FF	-11.76	-5.88 V	Underflow*
-118.519%	-32768	8000			

* Outputs positive maximum value or negative minimum value

Table B- 5 Voltage output range 0 V to 10 V

Values			Voltage output range	Range
	Dec.	Hex.	0 to 10 V	
118.519%	32767	7FFF	11.76 V	Overflow*
	32512	7F00		
117.589%	32511	7EFF	11.76 V	Overrange
	27649	6C01		
100%	27648	6C00	10 V	Nominal range
75%	20736	5100	7.5 V	
0.003617%	1	1	361.7 µV	
0%	0	0	0 V	
	-1	FFFF	0 V	Underflow*
-118.519%	-32768	8000		

* Outputs positive maximum value or negative minimum value

Table B- 6 Voltage output range 1 V to 5 V

Values			Voltage output range	Range
	Dec.	Hex.	1 to 5 V	
118.519%	32767	7FFF	5.70 V	Overflow*
	32512	7F00		
117.589%	32511	7EFF	5.70 V	Overrange
	27649	6C01		
100%	27648	6C00	5 V	Nominal range
75%	20736	5100	4 V	
0.003617%	1	1	1 V + 144.7 µV	
0%	0	0	1 V	
	-1	FFFF	1 V - 144.7 µV	Underrange
-25%	-6912	E500	0 V	
	-6913	E4FF	0 V	Underflow*
-118.519%	-32768	8000		

* outputs positive maximum value or negative minimum value

SIEMENS

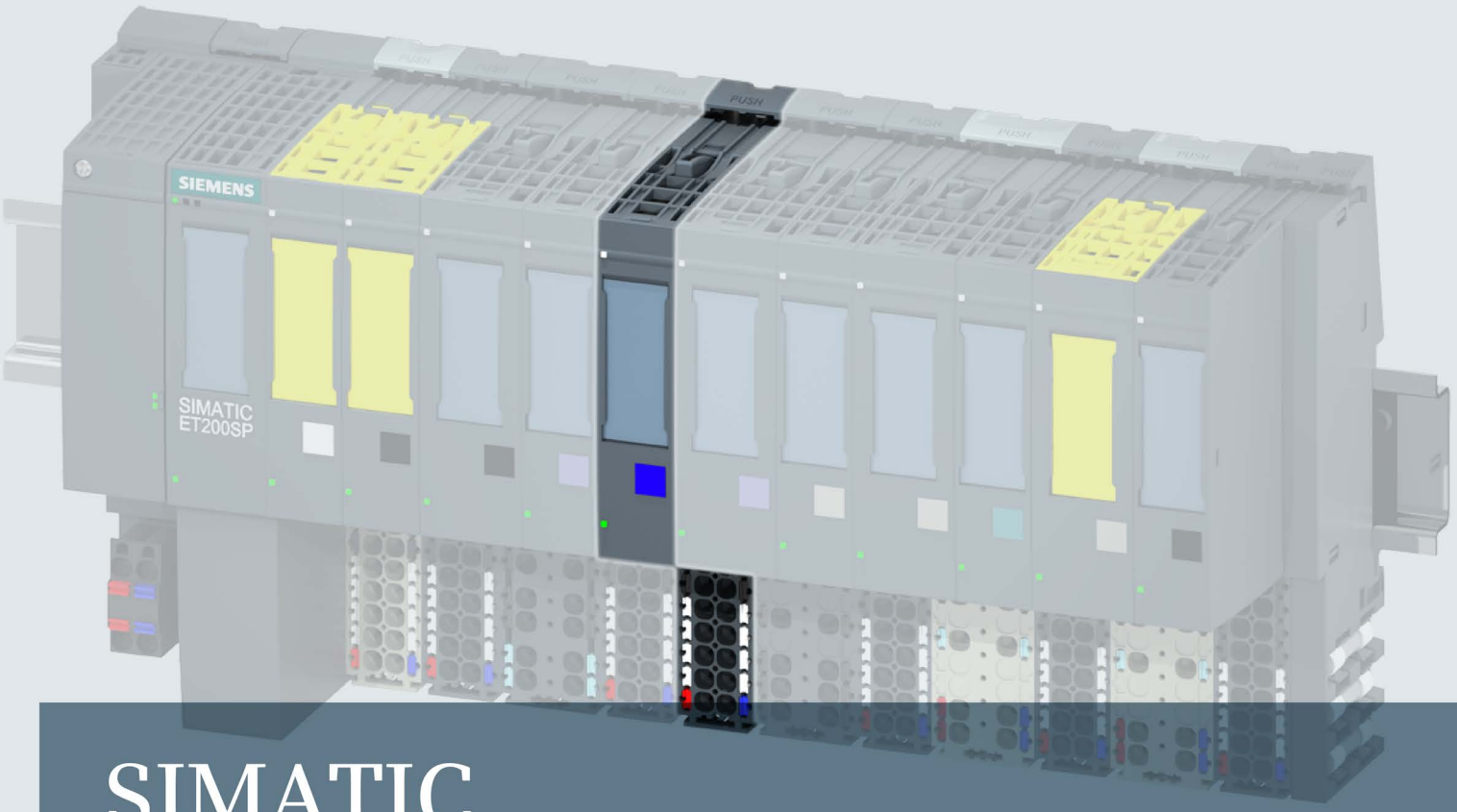

SIMATIC

ET 200SP

Analog output module AQ 2xU/I HS (6ES7135-6HB00-0DA1)

Manual

Edition 09/2016

siemens.com

SIEMENS

SIMATIC

ET 200SP
Analog output module AQ 2xU/I HS (6ES7135-6HB00-0DA1)

Manual

Preface

Documentation Guide 1

Product overview 2

Connecting 3

Parameters/address space 4

Interrupts/diagnostics alarms 5

Technical specifications 6

Parameter data record A

Representation of analog values B

09/2016

A5E03576140-AD

Legal information

Warning notice system

This manual contains notices you have to observe in order to ensure your personal safety, as well as to prevent damage to property. The notices referring to your personal safety are highlighted in the manual by a safety alert symbol, notices referring only to property damage have no safety alert symbol. These notices shown below are graded according to the degree of danger.

⚠ DANGER

indicates that death or severe personal injury **will** result if proper precautions are not taken.

⚠ WARNING

indicates that death or severe personal injury **may** result if proper precautions are not taken.

⚠ CAUTION

indicates that minor personal injury can result if proper precautions are not taken.

NOTICE

indicates that property damage can result if proper precautions are not taken.

If more than one degree of danger is present, the warning notice representing the highest degree of danger will be used. A notice warning of injury to persons with a safety alert symbol may also include a warning relating to property damage.

Qualified Personnel

The product/system described in this documentation may be operated only by **personnel qualified** for the specific task in accordance with the relevant documentation, in particular its warning notices and safety instructions. Qualified personnel are those who, based on their training and experience, are capable of identifying risks and avoiding potential hazards when working with these products/systems.

Proper use of Siemens products

Note the following:

⚠ WARNING

Siemens products may only be used for the applications described in the catalog and in the relevant technical documentation. If products and components from other manufacturers are used, these must be recommended or approved by Siemens. Proper transport, storage, installation, assembly, commissioning, operation and maintenance are required to ensure that the products operate safely and without any problems. The permissible ambient conditions must be complied with. The information in the relevant documentation must be observed.

Trademarks

All names identified by ® are registered trademarks of Siemens AG. The remaining trademarks in this publication may be trademarks whose use by third parties for their own purposes could violate the rights of the owner.

Disclaimer of Liability

We have reviewed the contents of this publication to ensure consistency with the hardware and software described. Since variance cannot be precluded entirely, we cannot guarantee full consistency. However, the information in this publication is reviewed regularly and any necessary corrections are included in subsequent editions.

Siemens AG
Division Digital Factory
Postfach 48 48
90026 NÜRNBERG
GERMANY

A5E03576140-AD
℗ 09/2016 Subject to change

Copyright © Siemens AG 2013 - 2016.
All rights reserved

Preface

Purpose of the documentation

This manual supplements the ET 200SP distributed I/O system (http://support.automation.siemens.com/WW/view/en/58649293) system manual.

Functions that generally relate to the system are described in this system manual.

The information provided in this manual and in the system/function manuals supports you in commissioning the system.

Conventions

CPU: When the term "CPU" is used in this manual, it applies to the CPUs of the S7-1500 automation system as well as to the CPUs/interface modules of the ET 200SP distributed I/O system.

STEP 7: In this documentation, "STEP 7" is used as a synonym for all versions of the configuration and programming software "STEP 7 (TIA Portal)".

Please also observe notes marked as follows:

Note

A note contains important information on the product described in the documentation, on the handling of the product or on the section of the documentation to which particular attention should be paid.

Security information

Siemens provides products and solutions with industrial security functions that support the secure operation of plants, systems, machines and networks.

In order to protect plants, systems, machines and networks against cyber threats, it is necessary to implement – and continuously maintain – a holistic, state-of-the-art industrial security concept. Siemens' products and solutions only form one element of such a concept.

Customer is responsible to prevent unauthorized access to its plants, systems, machines and networks. Systems, machines and components should only be connected to the enterprise network or the internet if and to the extent necessary and with appropriate security measures (e.g. use of firewalls and network segmentation) in place.

Additionally, Siemens' guidance on appropriate security measures should be taken into account. For more information about industrial security, please visit (http://www.siemens.com/industrialsecurity).

Siemens' products and solutions undergo continuous development to make them more secure. Siemens strongly recommends to apply product updates as soon as available and to always use the latest product versions. Use of product versions that are no longer supported, and failure to apply latest updates may increase customer's exposure to cyber threats.

To stay informed about product updates, subscribe to the Siemens Industrial Security RSS Feed under (http://www.siemens.com/industrialsecurity).

Table of contents

Preface 4
1 Documentation Guide 7
2 Product overview 11
2.1 Properties 11
3 Connecting 14
3.1 Wiring and block diagram 14
4 Parameters/address space 18
4.1 Output types and output ranges 18
4.2 Parameters 19
4.3 Description of parameters 21
4.4 Oversampling 22
4.5 Address space 24
5 Interrupts/diagnostics alarms 27
5.1 Status and error displays 27
5.2 Interrupts 29
5.3 Diagnostics alarms 30
6 Technical specifications 31
6.1 Technical specifications 31
A Parameter data record 37
A.1 Dependencies when configuring with GSD file 37
A.2 Parameter assignment and structure of the parameter data record 38
B Representation of analog values 43
B.1 Representation of output ranges 44
B.2 Representation of analog values in the voltage output ranges 45
B.3 Representation of analog values in the current output ranges 47

Documentation Guide

1

The documentation for the SIMATIC ET 200SP distributed I/O system is arranged into three areas.
This arrangement enables you to access the specific content you require.

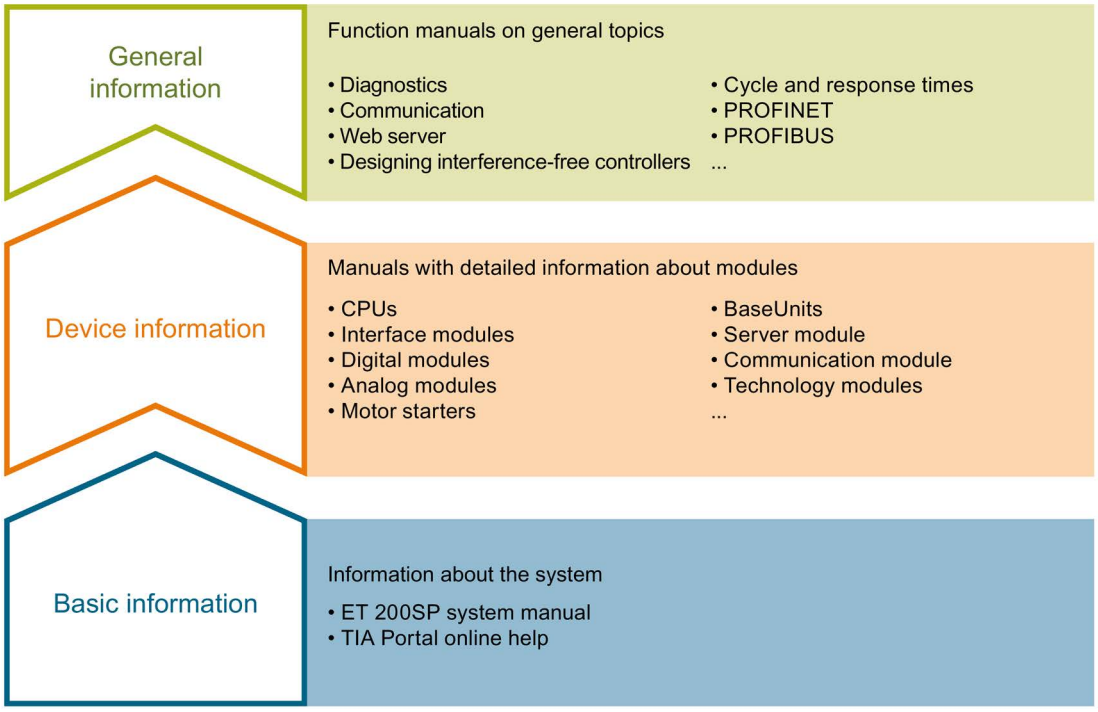

Basic information

The system manual describes in detail the configuration, installation, wiring and commissioning of the SIMATIC ET 200SP. distributed I/O system. The STEP 7 online help supports you in the configuration and programming.

Device information

Product manuals contain a compact description of the module-specific information, such as properties, wiring diagrams, characteristics and technical specifications.

General information

The function manuals contain detailed descriptions on general topics regarding the SIMATIC ET 200SP distributed I/O system, e.g. diagnostics, communication, Web server, motion control and OPC UA.

You can download the documentation free of charge from the Internet (http://w3.siemens.com/mcms/industrial-automation-systems-simatic/en/manual-overview/tech-doc-et200/Pages/Default.aspx).

Changes and supplements to the manuals are documented in a Product Information.

You can download the product information free of charge from the Internet (https://support.industry.siemens.com/cs/us/en/view/73021864).

Manual Collection ET 200SP

The Manual Collection contains the complete documentation on the SIMATIC ET 200SP distributed I/O system gathered together in one file.

You can find the Manual Collection on the Internet (http://support.automation.siemens.com/WW/view/en/84133942).

"mySupport"

With "mySupport", your personal workspace, you make the most of your Industry Online Support.

In "mySupport" you can store filters, favorites and tags, request CAx data and put together your personal library in the Documentation area. Furthermore, your data is automatically filled into support requests and you always have an overview of your current requests.

You need to register once to use the full functionality of "mySupport".

You can find "mySupport" in the Internet (https://support.industry.siemens.com/My/ww/en).

"mySupport" - Documentation

In the Documentation area of "mySupport", you have the possibility to combine complete manuals or parts of them to make your own manual.
You can export the manual in PDF format or in an editable format.

You can find "mySupport" - Documentation in the Internet (http://support.industry.siemens.com/My/ww/en/documentation).

"mySupport" - CAx Data

In the CAx Data area of "mySupport", you can have access the latest product data for your CAx or CAe system.

You configure your own download package with a few clicks.

In doing so you can select:

- Product images, 2D dimension drawings, 3D models, internal circuit diagrams, EPLAN macro files
- Manuals, characteristics, operating manuals, certificates
- Product master data

You can find "mySupport" - CAx Data in the Internet (http://support.industry.siemens.com/my/ww/en/CAxOnline).

Application examples

The application examples support you with various tools and examples for solving your automation tasks. Solutions are shown in interplay with multiple components in the system - separated from the focus in individual products.

You can find the application examples on the Internet (https://support.industry.siemens.com/sc/ww/en/sc/2054).

TIA Selection Tool

With the TIA Selection Tool, you can select, configure and order devices for Totally Integrated Automation (TIA).
This tool is the successor of the SIMATIC Selection Tool and combines the known configurators for automation technology into one tool.
With the TIA Selection Tool, you can generate a complete order list from your product selection or product configuration.

You can find the TIA Selection Tool on the Internet (http://w3.siemens.com/mcms/topics/en/simatic/tia-selection-tool).

SIMATIC Automation Tool

You can use the SIMATIC Automation Tool to run commissioning and maintenance activities simultaneously on various SIMATIC S7 stations as a bulk operation independently of the TIA Portal.

The SIMATIC Automation Tool provides a multitude of functions:

- Scanning of a PROFINET/Ethernet network and identification of all connected CPUs
- Address assignment (IP, subnet, gateway) and station name (PROFINET device) to a CPU
- Transfer of the data and the programming device/PC time converted to UTC time to the module
- Program download to CPU
- Operating mode switchover RUN/STOP
- Localization of the CPU by means of LED flashing
- Reading out CPU error information
- Reading the CPU diagnostic buffer
- Reset to factory settings
- Updating the firmware of the CPU and connected modules

You can find the SIMATIC Automation Tool on the Internet (https://support.industry.siemens.com/cs/ww/en/view/98161300).

PRONETA

With SIEMENS PRONETA (PROFINET network analysis), you analyze the plant network during commissioning. PRONETA features two core functions:

- The topology overview independently scans PROFINET and all connected components.
- The IO check is a fast test of the wiring and the module configuration of a system.

You can find SIEMENS PRONETA on the Internet (https://support.industry.siemens.com/cs/ww/en/view/67460624).

Product overview

2

2.1 Properties

Article number

6ES7135-6HB00-0DA1

View of the module

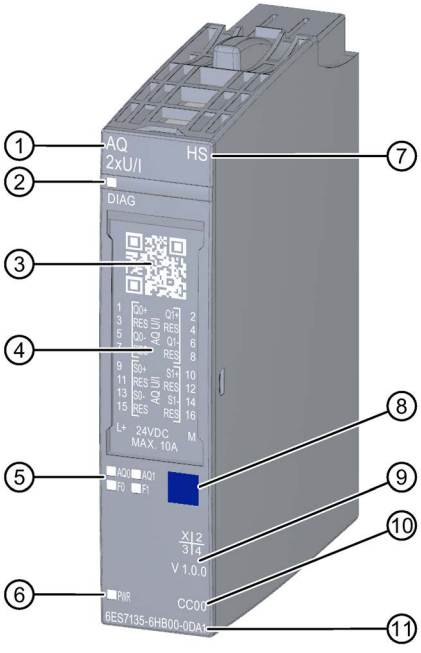

① Module type and name
② LED for diagnostics
③ 2D matrix code
④ Wiring diagram
⑤ LEDs for channel status
⑥ LED for supply voltage
⑦ Function class
⑧ Color coding module type
⑨ Function and firmware version
⑩ Color code for selecting the color identification labels
⑪ Article number

Figure 2-1 View of the AQ 2×U/I HS module

Properties

The module has the following technical properties:

- Analog output module with 2 outputs
  - For current output and
  - Voltage output
- Output ranges for current output:
  - ±20 mA, resolution 16 bit including sign
  - 0 to 20 mA, resolution 15 bit
  - 4 to 20 mA, resolution 14 bit
- Output ranges for voltage output:
  - ±10 V, resolution 16 bit including sign
  - ±5 V, resolution 15 bit incl. sign
  - 0 to 10 V, resolution 15 bit
  - 1 to 5 V, resolution 13 bit
- Electrically isolated from supply voltage L+
- Configurable diagnostics (per channel)

The module supports the following functions:

- Firmware update
- I&M identification data
- Reconfiguration in RUN
- PROFIenergy

Table 2- 1 Version dependencies of other module functions

Function	Product version of the module as of	Firmware version of the module as of
Basic version	1	V1.0.0
Isochronous mode with send clock up to 250 µs	2	V1.1.0
Value status	2	V1.1.0
Oversampling channel 0	2	V1.1.0
Oversampling channel 0 and 1	2	V2.0.0
Isochronous mode with send clock up to 125 µs	2	V2.0.1

Accessories

The following accessories must be ordered separately:

- Labeling strips
- Reference identification label
- Shield connector

See also

You can find more information on accessories in the ET 200SP distributed I/O system (https://support.industry.siemens.com/cs/ww/en/view/58649293) system manual.

Connecting 3

3.1 Wiring and block diagram

This section includes the block diagram of the module with the AQ 2xU/I HS pin assignments for a 2-wire, 3-wire and 4-wire connection for voltage output.

The 3-wire and 4-wire connection are used for the compensation of the voltage drop on the connection cables.

You can find information on wiring the BaseUnit in the ET 200SP distributed I/O system (http://support.automation.siemens.com/WW/view/en/58649293) system manual.

Note

You may use and combine the different wiring options for all channels.

Note

The load group of the module must begin with a light-colored BaseUnit. Keep this in mind also during the configuration.

Connection: Current output 2-wire connection

The figure below shows the block diagram and an example of the terminal assignment of the analog output module AQ 2xU/I HS on the BaseUnit BU type A0/A1.

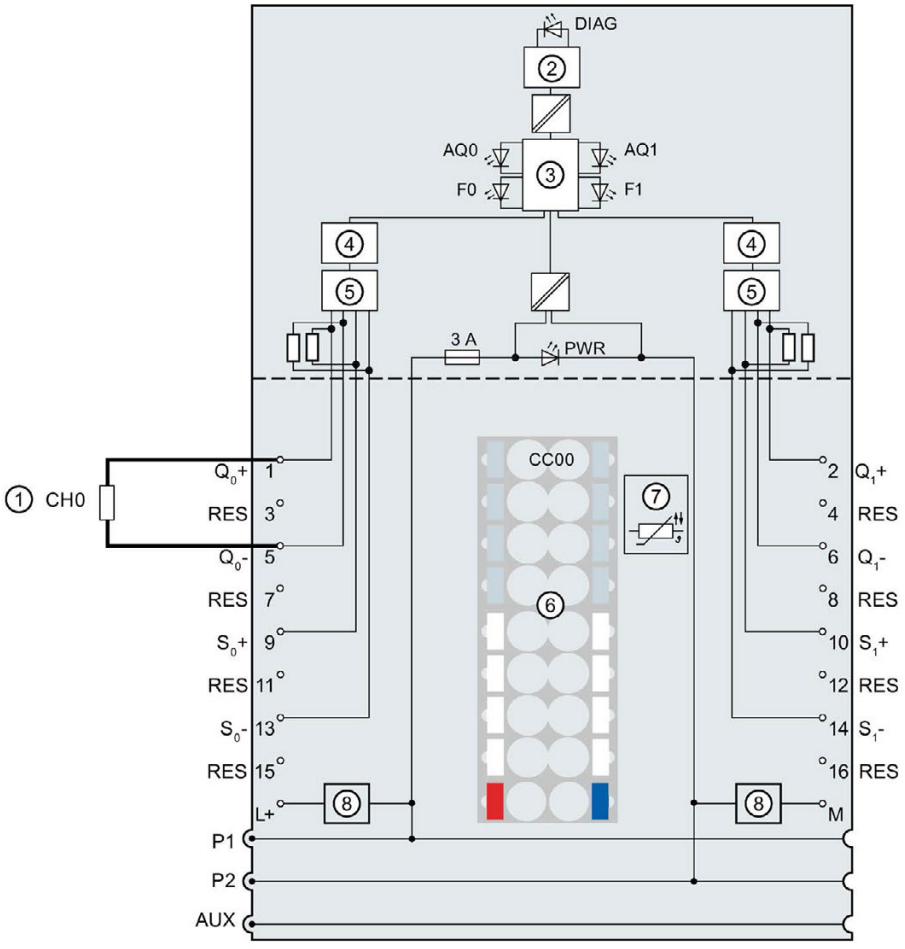

①	2-wire connection for current output	S_n+	Sensor cable positive, channel n
②	Backplane bus interface	S_n-	Sensor cable negative, channel n
③	Microcontroller	RES	Reserve, must remain unused for future function extensions
④	Digital-to-analog converter (DAC)	L+	24 V DC (infeed only with light-colored BaseUnit)
⑤	Output conditioner	M	Ground
⑥	Color identification label CCxx (optional)	P1, P2, AUX	Internal self-assembling voltage buses Connection to left (dark-colored BaseUnit) Connection to left interrupted (light-colored BaseUnit)
⑦	Temperature recording for BU type A1 only (function cannot be used for this module)	DIAG	Diagnostics LED (green, red)
⑧	Filter connection supply voltage (only when light-colored BaseUnit is present)	AQ0, AQ1	Channel status LED (green)
Q_n+	Analog output voltage/current positive, channel n	F0, F1	Channel fault LED (red)
Q_n-	Analog output voltage/current negative, channel n	PWR	Power LED (green)

Figure 3-1 Wiring and block diagram for current output 2-wire connection

Connection: Voltage output 2-wire and 3-wire connection

The following figure shows the block diagram and an example of the terminal assignment of the analog output module AQ 2xU/I HSon the BaseUnit BU type A0/A1.

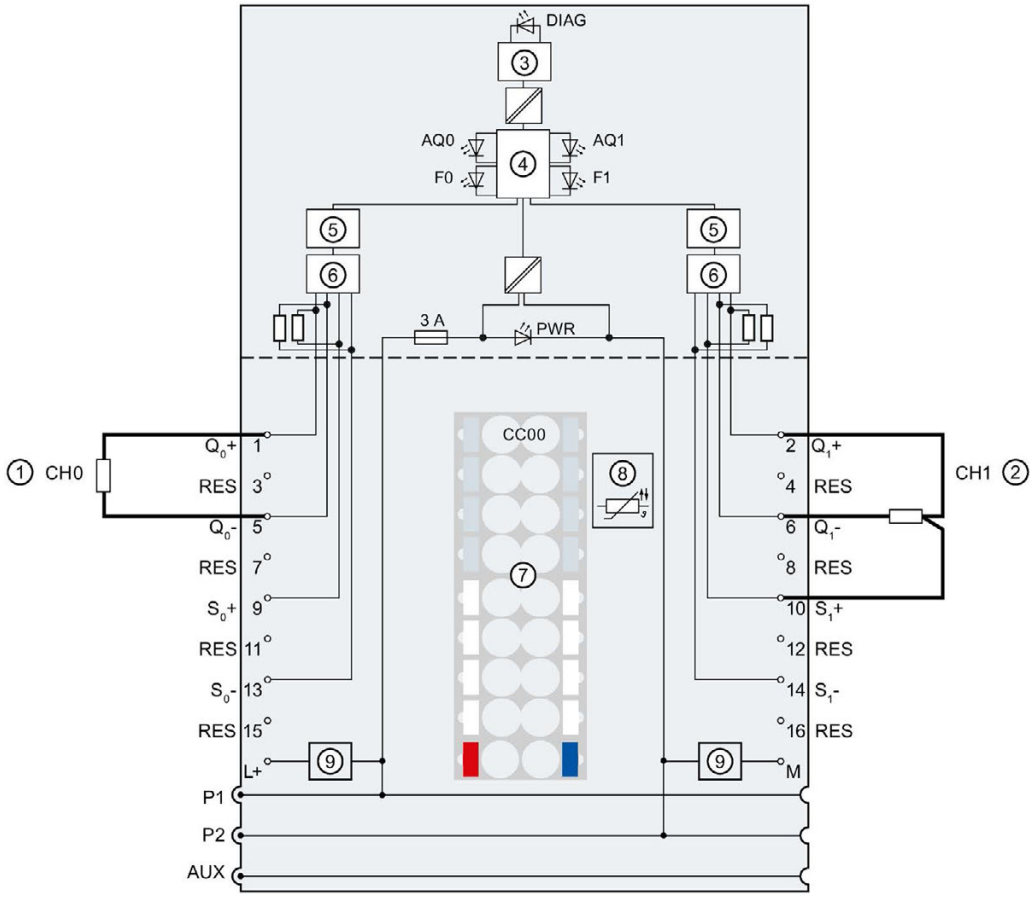

①	2-wire connection for voltage output	S_n+	Sensor cable positive, channel n
②	3-wire connection for voltage output	S_n-	Sensor cable negative, channel n
③	Output conditioner	RES	Reserve, must remain unused for future function extensions
④	Digital-to-analog converter (DAC)	L+	24 V DC (infeed only with light-colored BaseUnit)
⑤	Microcontroller	M	Ground
⑥	Backplane bus interface	P1, P2, AUX	Internal self-assembling voltage buses Connection to left (dark-colored BaseUnit) Connection to left interrupted (light-colored BaseUnit)
⑦	Color identification label CCxx (optional)	DIAG	Diagnostics LED (green, red)
⑧	Temperature recording for BU type A1 only (function cannot be used for this module)	AQ0, AQ1	Channel status LED (green)
⑨	Filter connection supply voltage (only when light-colored BaseUnit is present)	F0, F1	Channel fault LED (red)
Q_n+	Analog output voltage/current positive, channel n	PWR	Power LED (green)
Q_n-	Analog output voltage/current negative, channel n		

Figure 3-2 Wiring and block diagram for voltage output 2-wire and 3-wire connection

Connection: Voltage output 2-wire and 4-wire connection

The figure below shows the block diagram and an example of the terminal assignment of the analog output module AQ 2xU/I HS on the BaseUnit BU type A0/A1.

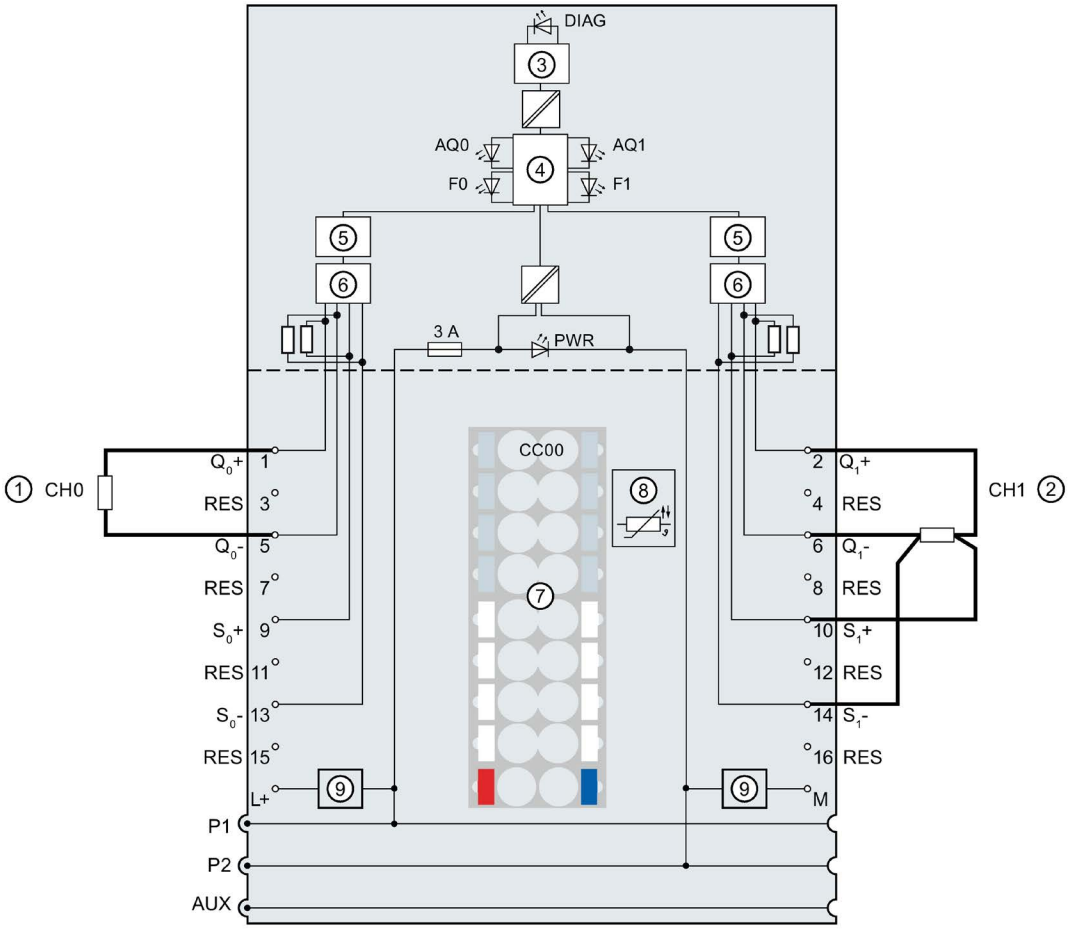

①	2-wire connection for voltage output	S_n+	Sensor cable positive, channel n
②	4-wire connection for voltage output	S_n-	Sensor cable negative, channel n
③	Output conditioner	RES	Reserve, must remain unused for future function extensions
④	Digital-to-analog converter (DAC)	L+	24 V DC (infeed only with light-colored BaseUnit)
⑤	Microcontroller	M	Ground
⑥	Backplane bus interface	P1, P2, AUX	Internal self-assembling voltage buses Connection to left (dark-colored BaseUnit) Connection to left interrupted (light-colored BaseUnit)
⑦	Color identification label CCxx (optional)	DIAG	Diagnostics LED (green, red)
⑧	Temperature recording for BU type A1 only (function cannot be used for this module)	AQ0, AQ1	Channel status LED (green)
⑨	Filter connection supply voltage (only when light-colored BaseUnit is present)	F0, F1	Channel fault LED (red)
Q_n+	Analog output voltage/current positive, channel n	PWR	Power LED (green)
Q_n-	Analog output voltage/current negative, channel n		

Figure 3-3 Wiring and block diagram for voltage output 2-wire and 4-wire connection

Parameters/address space 4

4.1 Output types and output ranges

The analog output module AQ 2×U/I HS has the following output ranges:

Table 4- 1 Output ranges

Output type	Output range	Resolution
Current	±20 mA 0 to 20 mA 4 to 20 mA	16 bit incl. sign 15 bit 14 bit
Voltage	± 10 V ± 5 V 0 to 10 V 1 to 5 V	16 bit incl. sign 15 bit incl. sign 15 bit 13 bit

You will find the tables of output ranges and overflow, overrange, etc. in the section Representation of analog values (Page 43) and the "Analog value processing" function manual.

4.2 Parameters

Parameters of the AQ 2×U/I HS

The effective range of the parameters depends on the type of configuration. The following configurations are possible:

- Central operation on an ET 200SP oder an einem ET 200SP Open Controller CPU
- Distributed operation on PROFINET IO in an ET 200SP system
- Distributed operation on PROFIBUS DP in an ET 200SP system

In addition to assigning parameters with the configuration software, you can also set the parameters in RUN mode (dynamically) using the user program. When assigning parameters in the user program, use the "WRREC" instruction to transfer the parameters to the module by means of data records; see section Parameter assignment and structure of parameter data record (Page 38).

The following parameter settings are possible:

Table 4- 2 Configurable parameters and their defaults (GSD file)

Parameter	Value range	Default	Reconfiguration in RUN	Effective range with configuration software, e.g. STEP 7 (TIA Portal)	
				GSD file PROFINET IO	GSD file PROFIBUS DP
Sampling rate	1 value/cycle	1 value/cycle	No	Module	Module
Diagnostics: No supply voltage L+	• Disable • Enable	Disable	Yes	Channel	Channel
Diagnostics: Short-circuit to ground [1]	• Disable • Enable	Disable	Yes	Channel	Channel
Diagnostics: Overflow	• Disable • Enable	Disable	Yes	Channel	Channel [3]
Diagnostics: Underflow	• Disable • Enable	Disable	Yes	Channel	
Diagnostics: Wire break[2]	• Disable • Enable	Disable	Yes	Channel	Channel
Output type/range	• Deactivated • Voltage +/- 10 V • Voltage +/- 5 V • Voltage 0 to 10 V • Voltage 1 to 5 V • Current +/- 20 mA • Current 0 to 20 mA • Current 4 to 20 mA	Current 4 to 20 mA	Yes	Channel	Channel

Parameter	Value range	Default	Reconfiguration in RUN	Effective range with configuration software, e.g. STEP 7 (TIA Portal)	
				GSD file PROFINET IO	GSD file PROFIBUS DP
Reaction to CPU STOP	• Shut down • Keep last value • Output substitute value	Shut down	Yes	Channel	Module [3]
Substitute value	For permissible substitute values for the various output ranges, see Parameter assignment and structure of the parameter data record (Page 38) appendix, Substitute values → Codes for substitute values table	0	Yes	Channel	Channel
Potential group	• Use potential group of the left module (dark-colored BaseUnit) • Enable new potential group (light-colored BaseUnit)	Use potential group of the left module	No	Module	Module

[1] No diagnostics detection between -0.5 V and +0.5 V (no short-circuit detection)

[2] No diagnostics detection between -3 mA and +3 mA (no wire break detection)

[3] Due to the limited number of parameters of a maximum of 244 bytes per ET 200SP station with a PROFIBUS GSD configuration, the parameter assignment options are restricted. If required, you can still assign these parameters using the data record 128 as described in the column "GSD file PROFINET IO" (see table above). The parameter length of the I/O module is 7 bytes.

Note

Unused channels

A deactivated channel always returns the value "no current or voltage".

4.3 Description of parameters

Diagnostics: No supply voltage L+

Enabling of the diagnostics alarm for missing or insufficient supply voltage L+.

Diagnostics: Short-circuit to ground

Enabling of the diagnostics when a short-circuit of the actuator supply occurs.

Diagnostics: Overflow

Enabling of the diagnostics when the output value exceeds the overrange.

Diagnostics: Underflow

Enabling of the diagnostics when the output value falls below the underrange or reaches the minimum output value or underflow.

Diagnostics: Wire break

Enabling of the diagnostics if the line to the actuator is broken.

Output type/output range

See the section Output types and output ranges (Page 18).

Reaction to CPU STOP

Determines the behavior of the module at CPU STOP.

Substitute value

The substitute values are values issued by the outputs (the output) in the event of a CPU STOP.

Potential group

You can use the "Potential group" parameter to specify whether the module is inserted in a light-colored or dark-colored BaseUnit.

A potential group always starts with an I/O module that is inserted on a light-colored BaseUnit. All modules inserted to the right of this on dark-colored BaseUnits belong to the same potential group, because the dark-colored BaseUnits are supplied via the light-colored BaseUnits.

The potential group ends with a new light-colored BaseUnit or the end of the station.

See also

ET 200SP Distributed I/O System
(http://support.automation.siemens.com/WW/view/en/58649293)

4.4 Oversampling

Function

Oversampling is the output of data in constant bus cycle segments (sub-cycles), whereby n sub-cycles correspond to one PROFINET bus cycle. A data packet is transmitted from the controller to the module, which outputs the packet in n constant bus sub-cycles.

Oversampling is useful whenever you require output of data with high time resolution but without using an extremely short PROFINET bus cycle and thus fast CPU cycles.

With oversampling, a PROFINET bus cycle is divided into constant bus sub-cycles:

- Each sub-cycle returns an output value.
- The minimum PROFINET bus cycle for oversampling is 250 µs.
- You can configure oversampling for:
  - Channel 0 (1-channel operation)
  - Channel 0/1 (2-channel operation)
- The number of sub-cycles can be set as follows:
  - From 2 to 16 for one channel
  - From 2 to 8 for two channels

Requirement

Oversampling is only possible when isochronous mode is set.

Configuration

You configure oversampling with the following parameter:

- Sampling rate

Note

Do not use a reduction ratio for blocks in the case of configuration with oversampling in the runtime groups of your user program. This will ensure that the data processing in the user program of the CPU is synchronized with the acquisition on the module.

Overview of the operating modes

Function	Normal operation	Oversampling in normal operation	
		1-channel operation	2-channel operation
Isochronous mode	Yes, optional	Yes, required	
• Shortest send clock	125 µs	250 µs	
Oversampling	No	Yes	Yes
• Number of over-sampling levels (output rate)	-	2 to 16	2 to 8
• Shortest sub-cycle (= shortest sampling time)	-	35 µs	45 µs
±10 V	x	x	
0 to 10 V	x	x	
±5 V	x	x	
1 to 5 V	x	x	
±20 mA	x	x	
0 to 20 mA	x	x	
4 to 20 mA	x	x	
Overflow	x	x	
Underflow	x	x	
Wire break for current	x	x	
Short-circuit for voltage	x	x	
Load voltage diagnostics	x	x	
Value status (QI)	x	-	
Reaction to CPU STOP	x	x	
Data length	4 bytes	32 bytes	

Chronological sequence

The figure shows the chronological sequence for oversampling. The output data present in the CPU is output in the data cycle after the next one, distributed across the sub-cycles which are generated on the actual module.

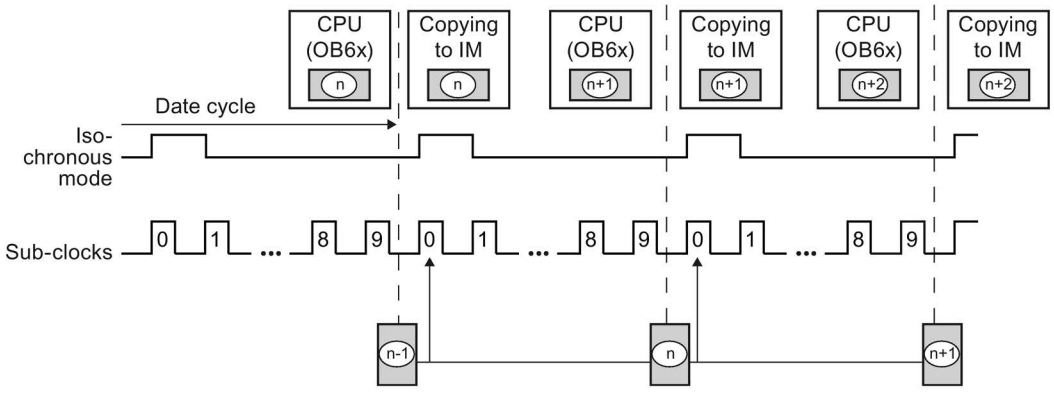

① n = output values from bus cycle n

Figure 4-1 Oversampling

4.5 Address space

Configuration options

The following configurations are possible:

- Configuration 1: Without value status
- Configuration 2: With value status

Evaluating the value status

An additional byte is occupied in the input address space if you enable the value status for the analog module. Bit 0 and 1 in this byte are assigned to the module. They provide information about the validity of the analog value.

Bit =1: No fault is present on the channel.

Bit =0: The wiring, the value created on the channel, or similar is incorrect.

Address space

The following figure shows the assignment of the address space for the AQ 2xU/I HS with value status (Quality Information (QI)). The addresses for the value status are only available if the value status is enabled.

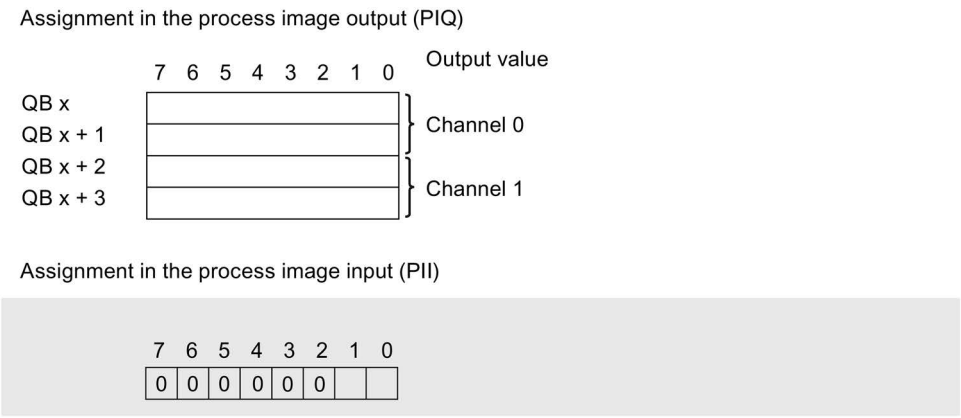

Figure 4-2 Address space of the AQ 2xU/I HS with value status

Address space of the AQ 2xU/I HS for oversampling with one channel

The following figure shows the assignment of the address space for oversampling with one channel. Writing always starts from QB x. Only a maximum of 16 sub-cycles are possible.

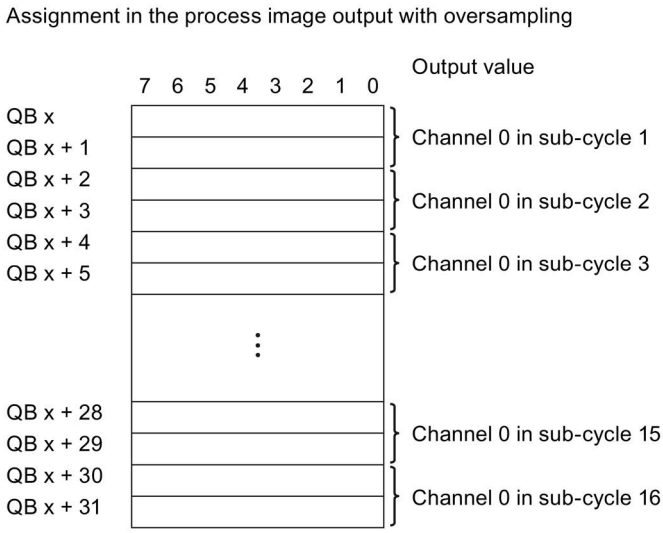

Figure 4-3 Address space of the AQ 2xU/I HS for oversampling with one channel

Address space of the AQ 2xU/I HS for oversampling with two channels

The following figure shows the assignment of the address space for oversampling with two channels. Writing always starts from QB x. Only a maximum of 8 sub-cycles are possible.

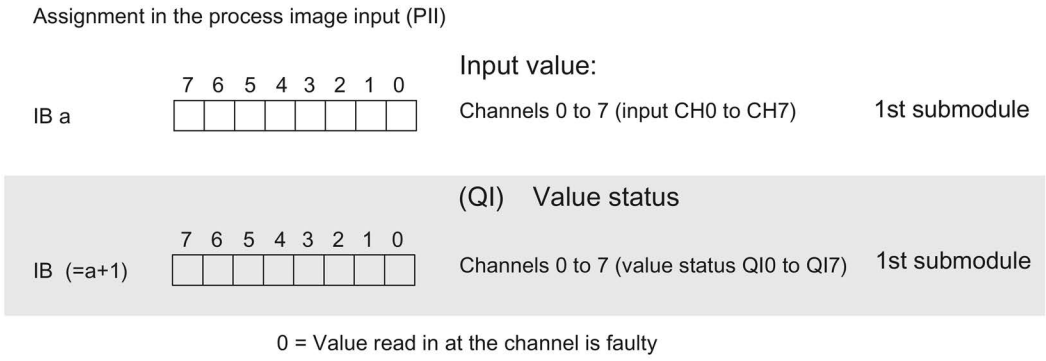

Figure 4-4 Address space of the AQ 2xU/I HS for oversampling with two channels

Interrupts/diagnostics alarms

5

5.1 Status and error displays

LED display

The figure below shows the LED displays of the AQ 2×U/I HS.

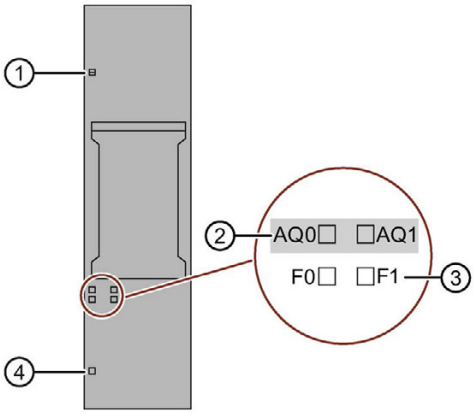

① DIAG (green/red)
② Channel status (green)
③ Channel fault (red)
④ PWR (green)

Figure 5-1 LED displays

Meaning of the LEDs

The following table contains the meaning of the status and error displays. Corrective measures for diagnostics alarms can be found in section Diagnostics alarms (Page 30).

DIAG LED

Table 5- 1 Error display of the DIAG LED

DIAG	Meaning
Off	Backplane bus supply of the ET 200SP not OK
Flashes	Module parameters not assigned
On	Module parameters assigned and no module diagnostics
Flashes	Module parameters assigned and module diagnostics

Channel status/channel fault LED

Table 5- 2 Status/error display of the channel status/channel fault LED

Channel status	Channel fault	Meaning
Off	Off	Channel deactivated or no load voltage L+
On	Off	Channel activated and no channel diagnostics
Off	On	Channel activated and channel diagnostics
On	On	Not permitted (error)

PWR LED

Table 5- 3 Status display of the PWR LED

PWR	Meaning
Off	No supply voltage L+
On	Supply voltage L+ present

5.2 Interrupts

The analog output module AQ 2×U/I HS supports diagnostics interrupts.

Diagnostics interrupt

The module generates a diagnostics interrupt at the following events:

- Short-circuit
- Overtemperature
- Wire break
- High limit violated
- Low limit violated
- Error
- Parameter assignment error
- No load voltage
- Channel temporarily unavailable

5.3 Diagnostics alarms

A diagnostics alarm is output for each diagnostics event and the DIAG LED flashes on the module. The diagnostics alarms can, for example, be read from the diagnostics buffer of the CPU. You can evaluate the error codes with the user program

Table 5- 4 Error types

Diagnostics alarm	Error code	Meaning	Solution
Short-circuit (current)	1_H	Short-circuit of the actuator supply	Correct the process wiring
Overtemperature	4_H	Thermal overload of the I/O module	Reduce the ambient temperature, pay attention to derating
Wire break (current)	6_H	Impedance of actuator circuit too high	Use a different actuator type or modify the wiring, for example, using cables with larger cross-section
		Wire break between the module and actuator	Connect the cable
		Channel not connected (open)	• Deactivate the channel ("Output type" parameter) • Deactivate diagnostics • Connect the channel
High limit violated	7_H	The output value defined by the user program is above the overrange.	Correct the output value
Low limit violated	8_H	The output value defined by the user program is below the underrange.	Correct the output value
Error	9_H	Internal module error occurred	Replace the module
Parameter assignment error	10_H	• The module cannot evaluate parameters for the channel. • Incorrect parameter assignment.	Correct the parameter assignment
No load voltage	11_H	No or insufficient supply voltage L+	• Check supply voltage L+ on the BaseUnit • Check BaseUnit type
Channel temporarily unavailable	$1F_H$	Firmware update is currently in progress or has been canceled. The module does not output any process or substitute values in this state.	• Wait for firmware update • Restart the firmware update

Technical specifications

6

6.1 Technical specifications

Technical specifications of the AQ 2×U/I HS

	6ES7135-6HB00-0DA1
Product type designation	ET 200SP, AQ 2xU/I High Speed
General information	
Firmware version	V2.0.1
Usable BaseUnits	BU type A0, A1
Color code for module-specific color identification label	CC00
Product function	
I&M data	Yes; I&M0 to I&M3
Engineering with	
STEP 7 TIA Portal can be configured/integrated as of version	V13 SP1
STEP 7 can be configured/integrated as of version	V5.5 SP3 / -
PROFIBUS as of GSD version/GSD revision	GSD revision 5
PROFINET as of GSD version/GSD revision	GSDML V2.3
Operating mode	
Oversampling	Yes; 2 channels per module
CiR Configuration in RUN	
Reconfiguration in RUN possible	Yes
Calibration in RUN possible	Yes
Supply voltage	
Rated value (DC)	24 V
Valid range, low limit (DC)	19.2 V
Valid range, high limit (DC)	28.8 V
Input current	
Current consumption (rated value)	45 mA; no load
Power loss	
Power loss, typ.	0.9 W
Address area	
Address space per module	
Address space per module, max.	4 byte; + 1 byte for QI information (32 bytes in oversampling mode)

	6ES7135-6HB00-0DA1
Analog outputs	
Number of analog outputs	2
Voltage output, short-circuit protection	Yes
Voltage output, short-circuit current, max.	45 mA
Cycle time (all channels), min.	125 µs
Analog output with oversampling	Yes
• Values per cycle, max.	16
• Resolution, min.	45 µs; (2 channels), 35 µs (1 channel)
Output ranges, voltage	
0 to 10 V	Yes; 15 bit
1 V to 5 V	Yes; 13 bit
-5 V to +5 V	Yes; 15 bit incl. sign
-10 V to +10 V	Yes; 16 bit incl. sign
Output ranges, current	
0 to 20 mA	Yes; 15 bit
-20 mA to +20 mA	Yes; 16 bit incl. sign
4 mA to 20 mA	Yes; 14 bit
Wiring the actuators	
for voltage output two-wire connection	Yes
for voltage output four-wire connection	Yes
for current output two-wire connection	Yes
Load resistance (in rated range of the output)	
For voltage outputs, min.	2 kΩ
For voltage outputs, capacitive load, max.	1 µF
For current outputs, max.	500 Ω
For current outputs, inductive load, max.	1 mH
Destruction limit for externally applied voltages and currents	
Voltages at the outputs	30 V
Cable length	
Shielded, max.	1000 m; 200 m for voltage output
Formation of analog values for the outputs	
Settling time	
For resistive load	0.05 ms
For capacitive load	0.05 ms; max. 47 nF and 20 m cable length
For inductive load	0.05 ms

	6ES7135-6HB00-0DA1
Errors/accuracies	
Output ripple (in relation to output range, bandwidth 0 kHz to 50 kHz), (+/-)	0.02%
Linearity error (in relation to output range), (+/-)	0.03%
Temperature error (in relation to output range), (+/-)	0.003%/K
Crosstalk between outputs, max.	-50 dB
Repeat accuracy in settled state at 25 °C (in relation to output range), (+/-)	0.03%
Operational limit in the entire temperature range	
Voltage in relation to output range, (+/-)	0.2%
Current in relation to output range, (+/-)	0.2%
Basic error limit (operational limit at 25 °C)	
Voltage in relation to output range, (+/-)	0.1%
Current in relation to output range, (+/-)	0.1%
Isochronous mode	
Isochronous mode (application synchronized up to terminal)	Yes
Execution and activation time (TCO), min.	70 µs
Bus cycle time (TDP), min.	125 µs
Interrupts/diagnostics/status information	
Substitute values can be applied	Yes
Interrupts	
Diagnostics interrupt	Yes
Diagnostics alarms	
Diagnostics	Yes
Monitoring of supply voltage	Yes
Wire break	Yes; channel-based, only for output type current
Short-circuit	Yes; channel-based, only for output type voltage
Overflow/underflow	Yes
Diagnostics display LED	
Monitoring of supply voltage (PWR LED)	Yes; green PWR LED
Channel status display	Yes; green LED
For channel diagnostics	Yes; red LED
For module diagnostics	Yes; green/red DIAG LED
Electrical isolation	
Electrical isolation of channels	
Between the channels	No
Between the channels and the backplane bus	Yes
Between the channels and the supply voltage of the electronics	Yes
Insulation	
Insulation tested with	707 V DC (type test)

	6ES7135-6HB00-0DA1
Ambient conditions	
Ambient temperature during operation	
Horizontal installation, min.	0 °C
Horizontal installation, max.	60 °C
Vertical installation, min.	0 °C
Vertical installation, max.	50 °C
Dimensions	
Width	15 mm
Weights	
Weight, approx.	31 g

Derating trends with horizontal installation:

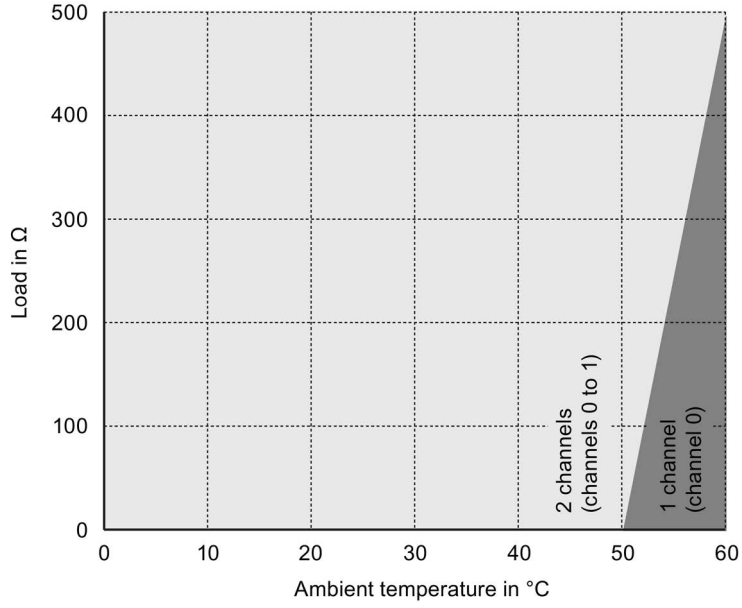

Figure 6-1 Derating trend current output (horizontal)

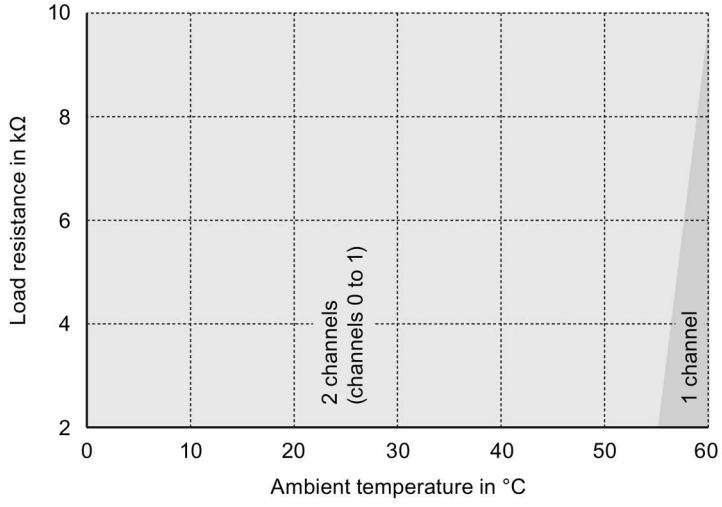

Figure 6-2 Derating trend voltage output (horizontal)

Derating trends with vertical installation:

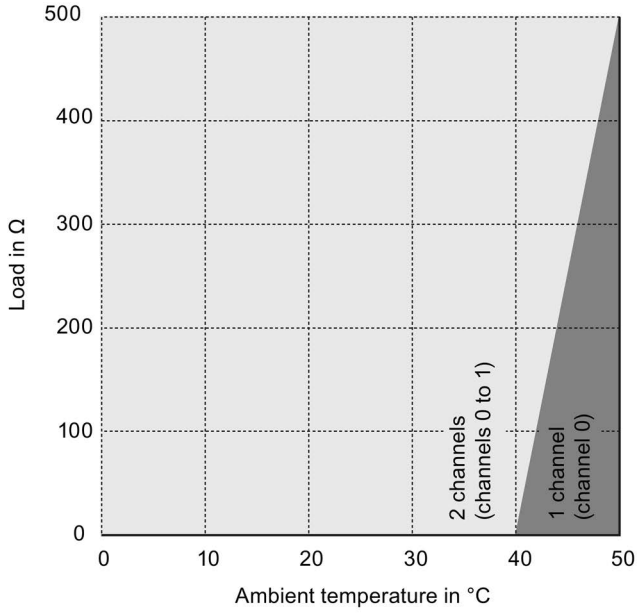

Figure 6-3 Derating trend current output (vertical)

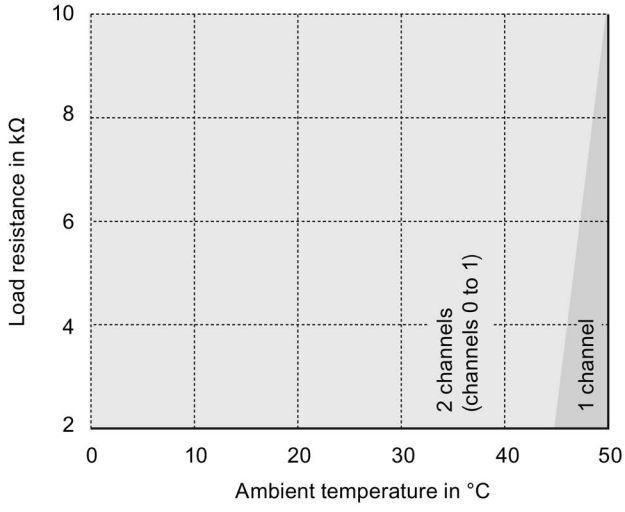

Figure 6-4 Derating trend voltage trend (vertical)

Dimension drawing

See manual ET 200SP BaseUnits
(http://support.automation.siemens.com/WW/view/en/59753521)

Parameter data record

A

A.1 Dependencies when configuring with GSD file

When configuring the module with a GSD file, remember that the settings of some parameters are dependent on each other.

Configuring with a PROFINET GSD file

The table lists the properties and their dependencies on the measurement type and measuring range for PROFINET.

Output type	Output range	Diagnostics					Reaction to CPU STOP	Substitute value
		No supply voltage L+	Short-circuit to ground	Overflow	Underflow	Wire break		
Deactivated		*	*	*	*	*	*	*
Voltage	±5 V	x	x	x	x	-	x	x
	±10 V	x	x	x	x	-	x	x
	1 to 5 V	x	x	x	x	-	x	x
	0 to 10 V	x	x	x	x	-	x	x
Current	±20 mA	x	-	x	x	x	x	x
	0 to 20 mA	x	-	x	x	x	x	x
	4 to 20 mA	x	-	x	x	x	x	x

x = Property is allowed, - = Property is **not allowed**, * = Property is not relevant

Configuring with a PROFIBUS GSD file

The table lists the properties and their dependencies on the measurement type and measuring range for PROFIBUS.

Output type	Output range	Diagnostics				Reaction to CPU STOP	Substitute value
		No supply voltage L+	Short-circuit to ground	Overflow/ Underflow	Wire break		
Deactivated		*	*	*	*	*	*
Voltage	±5 V	x	x	x	-	x	x
	±10 V	x	x	x	-	x	x
	1 to 5 V	x	x	x	-	x	x
	0 to 10 V	x	x	x	-	x	x
Current	±20 mA	x	-	x	x	x	x
	0 to 20 mA	x	-	x	x	x	x
	4 to 20 mA	x	-	x	x	x	x

x = Property is allowed, - = Property is **not allowed**, * = Property is not relevant

A.2 Parameter assignment and structure of the parameter data record

Parameter assignment in the user program

The module can be re-configured in RUN (for example, the voltage or current ranges of selected channels can be changed in RUN without having an effect on the other channels).

Note

Following a firmware update, you need to re-configure the I/O module before you can use the new functions.

Changing parameters in RUN

The "WRREC" instruction is used to transfer the parameters to the module using data record 128. The parameters set in STEP 7 are not changed in the CPU, which means the parameters set in STEP 7 are valid again after a restart.

Note

Changing parameters in RUN

A parameter data record that has content different from the startup parameter assignment results in a brief exit from clocked measuring mode and renewed synchronization with the fieldbus cycle. The slowest channel provides the "internal" measuring cycle.

STATUS output parameter

The module ignores errors that occur during the transfer of parameters with the "WRREC" instruction and continues operation with the previous parameter assignment. The STATUS output parameter contains a corresponding error code.

The description of the "WRREC" instruction and the error codes is available in the STEP 7 online help.

Structure of data record 128 for entire module

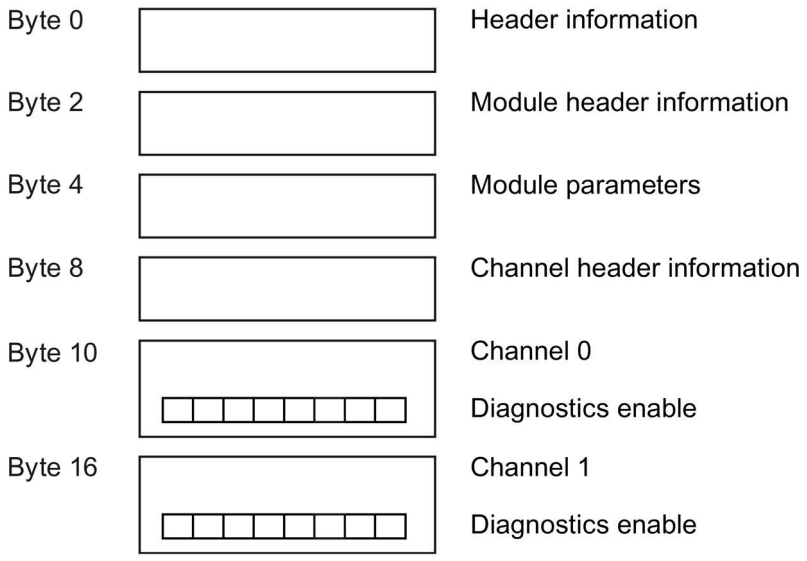

Figure A-1 Structure of data record 128 for entire module

Header information

The figure below shows the structure of the header information.

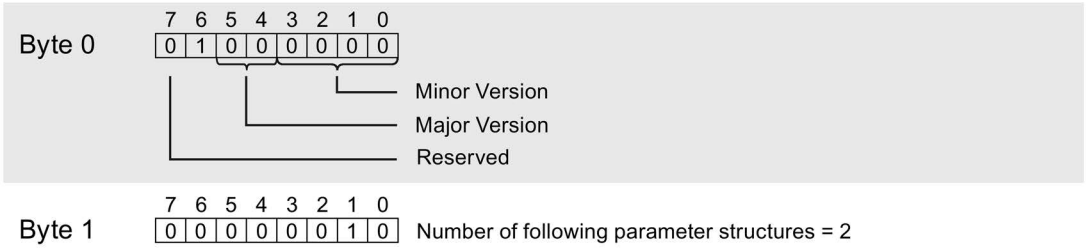

Figure A-2 Header information

Module header information

The figure below shows the structure of the module header information.

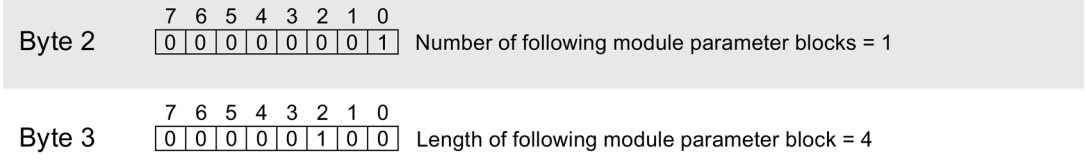

Figure A-3 Module header information

Module parameter block

The figure below shows the structure of the module parameter block for channels 0 and 1.

Enable a parameter by setting the corresponding bit to "1".

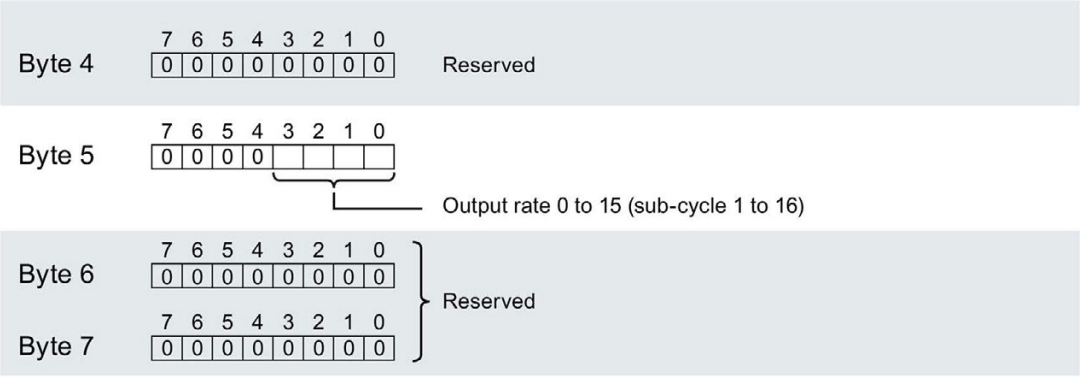

Figure A-4 Module parameter block

Channel header information

The figure below shows the structure of the channel header information.

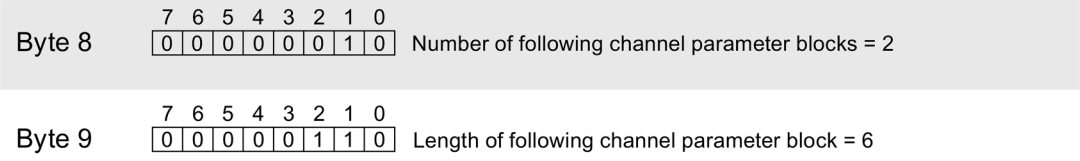

Figure A-5 Channel header information

Channel parameter block

The figure below shows the structure of the channel parameter block.

Enable a parameter by setting the corresponding bit to "1".

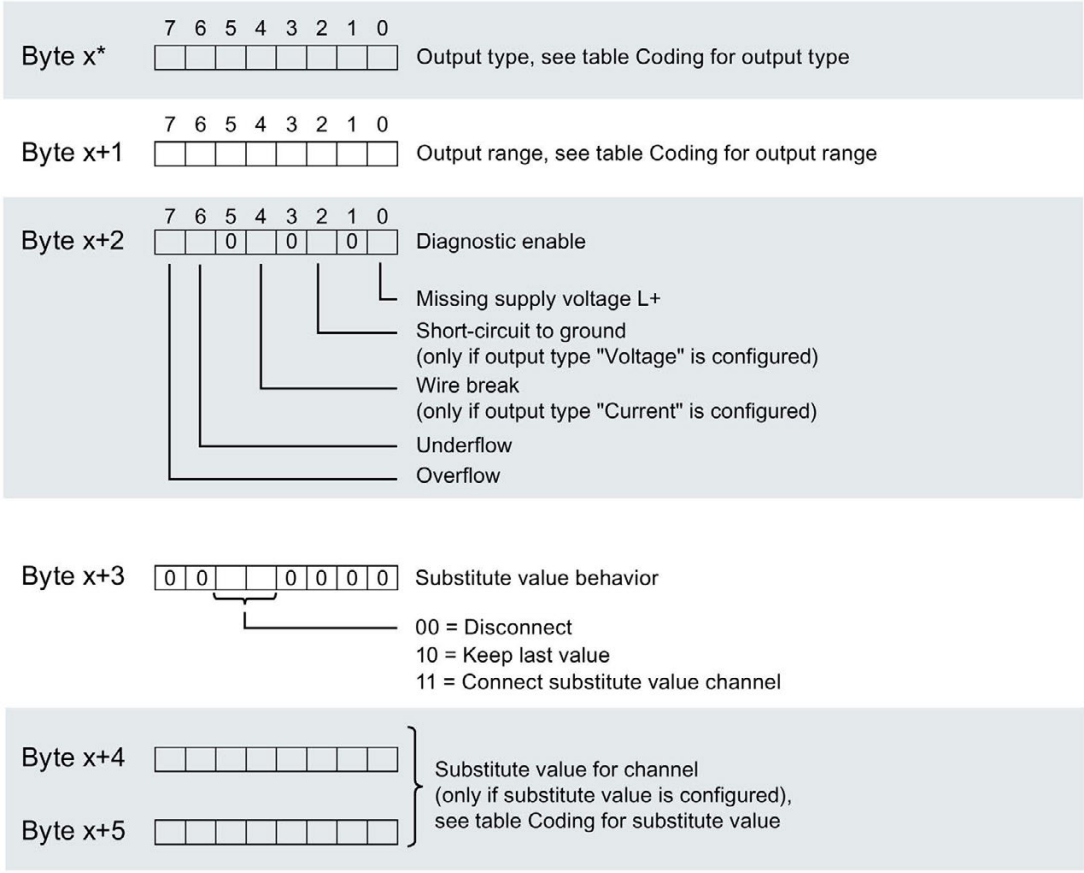

* x = 10 + (channel number × 6); channel number = 0 to 1

Figure A-6 Structure of byte x to x+5 for channels 0 and 1

Codes for output types

The table below contains the codes for the output types of the analog output module. You must enter these codes in bytes x of the channel parameter block of data record 128 (see previous figure).

Table A- 1 Codes for output types

Output type	Code
Deactivated	0000 0000
Voltage	0000 0001
Current	0000 0011

Codes for output ranges

The table below contains the codes for the output ranges of the analog output module. You must enter these codes in bytes x+1 of the channel parameter block of data record 128 (see previous figure).

Table A- 2 Codes for output ranges

Output range	Code
Voltage	
±10 V	0000 0000
±5 V	0000 0001
0 to 10 V	0000 0010
1 to 5 V	0000 0011
Current	
±20 mA	0000 0000
0 to 20 mA	0000 0001
4 to 20 mA	0000 0010

Codes for substitute values

The table below contains the codes for the substitute values. You must enter these codes in bytes x+4 and x+5 (see previous figure).

Table A- 3 Codes for substitute values

Output range for	Permitted substitute value
Voltage	
±10 V	-32512 ... +32511
±5 V	-32512 ... +32511
0 to 10 V	0 ... +32511
1 to 5 V	-6912 ... +32511
Current	
±20 mA	-29031 ... +29030
0 to 20 mA	0 ... +29030
4 to 20 mA	-692 ... +29030

Representation of analog values

B

This appendix describes the analog values for all output ranges supported by the AQ 2xU/I HS analog output module.

Measured value resolution

The digitized analog value is the same for input and output values at the same nominal range. The analog values are represented as a fixed point number in the two's complement.

The following table shows the representation of the binary analog values and the associated decimal and hexadecimal units of the analog values.

The resolutions 13, 14, 15, and 16 bit including sign are displayed. Each analog value is entered in the ACCU left-justified. The bits marked with "x" are set to "0".

Table B- 1 Possible resolutions of the analog values

Resolution in bit	Values		Analog value	
	Decimal	Hexadecimal	High byte	Low byte
13	8	8_H	Sign 0 0 0 0 0 0 0	0 0 0 0 1 x x x
14	4	4_H	Sign 0 0 0 0 0 0 0	0 0 0 0 0 1 x x
15	2	2_H	Sign 0 0 0 0 0 0 0	0 0 0 0 0 0 1 x
16	1	1_H	Sign 0 0 0 0 0 0 0	0 0 0 0 0 0 0 1

B.1 Representation of output ranges

In the following tables, you can find the digitized representation of the bipolar and unipolar range output ranges. The resolution is 16 bits.

Table B- 2 Bipolar output ranges

Dec. value	Output value in %	Data word																Range
		2^{15}	2^{14}	2^{13}	2^{12}	2^{11}	2^{10}	2^{9}	2^{8}	2^{7}	2^{6}	2^{5}	2^{4}	2^{3}	2^{2}	2^{1}	2^{0}	
≥32512	117.589	0	1	1	1	1	1	1	0	1	1	1	1	1	1	1	1	Maximum output value
32511	117.589	0	1	1	1	1	1	1	0	1	1	1	1	1	1	1	1	Overrange
27649	100.004	0	1	1	0	1	1	0	0	0	0	0	0	0	0	0	1	
27648	100.000	0	1	1	0	1	1	0	0	0	0	0	0	0	0	0	0	Nominal range
1	0.003617	0	0	0	0	0	0	0	0	0	0	0	0	0	0	0	1	
0	0.000	0	0	0	0	0	0	0	0	0	0	0	0	0	0	0	0	
-1	-0.003617	1	1	1	1	1	1	1	1	1	1	1	1	1	1	1	1	
-27648	-100.000	1	0	0	1	0	1	0	0	0	0	0	0	0	0	0	0	
-27649	100.004	1	0	0	1	0	0	1	1	1	1	1	1	1	1	1	1	Underrange
-32512	-117.593	1	0	0	0	0	0	0	1	0	0	0	0	0	0	0	0	
≤ -32513	-117.593	1	0	0	0	0	0	0	1	0	0	0	0	0	0	0	0	Minimum output value

Table B- 3 Unipolar output ranges

Dec. value	Output value in %	Data word																Range
		2^{15}	2^{14}	2^{13}	2^{12}	2^{11}	2^{10}	2^{9}	2^{8}	2^{7}	2^{6}	2^{5}	2^{4}	2^{3}	2^{2}	2^{1}	2^{0}	
≥32512	117.589	0	1	1	1	1	1	1	1	x	x	x	x	x	x	x	x	Maximum output value
32511	117.589	0	1	1	1	1	1	1	0	1	1	1	1	1	1	1	1	Overrange
27649	100.004	0	1	1	0	1	1	0	0	0	0	0	0	0	0	0	1	
27648	100.000	0	1	1	0	1	1	0	0	0	0	0	0	0	0	0	0	Nominal range
1	0.003617	0	0	0	0	0	0	0	0	0	0	0	0	0	0	0	1	
0	0.000	0	0	0	0	0	0	0	0	0	0	0	0	0	0	0	0	
≤ 0	0	0	0	0	0	0	0	0	0	0	0	0	0	0	0	0	0	Minimum output value

B.2 Representation of analog values in the voltage output ranges

The tables below list the decimal and hexadecimal values (codes) of the possible voltage output ranges.

Table B- 4 Voltage output ranges ±10 V and ±5 V

Values			Voltage output range		Range
	Dec.	Hex.	±10 V	±5 V	
118.515%	32767	7FFF	11.76 V	5.88 V	Overflow*
	32512	7F00			
117.589%	32511	7EFF	11.76 V	5.88 V	Overrange
	27649	6C01			
100%	27648	6C00	10 V	5 V	Nominal range
75%	20736	5100	7.5 V	3.75 V	
0.003617%	1	1	361.7 µV	180.8 µV	
0%	0	0	0 V	0 V	
	-1	FFFF	-361.7 µV	-180.8 µV	
-75%	-20736	AF00	-7.5 V	-3.75 V	
-100%	-27648	9400	-10 V	-5 V	
	-27649	93FF			Underrange
-117.593%	-32512	8100	-11.76 V	-5.88 V	
	-32513	80FF	-11.76	-5.88 V	Underflow*
-118.519%	-32768	8000			

* Outputs positive maximum value or negative minimum value

Table B- 5 Voltage output range 0 V to 10 V

Values			Voltage output range	Range
	Dec.	Hex.	0 to 10 V	
118.515%	32767	7FFF	11.76 V	Overflow*
	32512	7F00		
117.589%	32511	7EFF	11.76 V	Overrange
	27649	6C01		
100%	27648	6C00	10 V	Nominal range
75%	20736	5100	7.5 V	
0.003617%	1	1	361.7 µV	
0%	0	0	0 V	
	-1	FFFF	0 V	Underflow*
-118.519%	-32768	8000		

* Outputs positive maximum value or negative minimum value

Table B- 6 Voltage output range 1 V to 5 V

Values			Voltage output range	Range
	Dec.	Hex.	1 to 5 V	
118.515%	32767	7FFF	5.70 V	Overflow*
	32512	7F00		
117.589%	32511	7EFF	5.70 V	Overrange
	27649	6C01		
100%	27648	6C00	5 V	Nominal range
75%	20736	5100	4 V	
0.003617%	1	1	1 V + 144.7 µV	
0%	0	0	1 V	
	-1	FFFF	1 V - 144.7 µV	Underrange
-25%	-6912	E500	0 V	
	-6913	E4FF	0 V	Underflow*
-118.519%	-32768	8000		

* Outputs positive maximum value or negative minimum value

B.3 Representation of analog values in the current output ranges

The tables below list the decimal and hexadecimal values (codes) of the possible current output ranges.

Table B- 7 Current output range ±20 mA

Values			Current output range	Range
	Dec.	Hex.	±20 mA	
118.515%	32767	7FFF	21 mA	Overflow*
	29031	7167		
105%	29030	7166	21 mA	Overrange
	27649	6C01	20 mA + 723.4 nA	
100%	27648	6C00	20 mA	Nominal range
75%	20736	5100	15 mA	
0.003617%	1	1	723.4 nA	
0%	0	0	0 mA	
	-1	FFFF	-723.4 nA	
-75%	-20736	AF00	-15 mA	
-100%	-27648	9400	-20 mA	
	-27649	93FF	-20 mA - 723.4nA	Underrange
-105%	-29031	8E99	-21 mA	
	-29032	8E98	-21 mA	Underflow*
-118.519%	-32768	8000		

* Outputs positive maximum value or negative minimum value

Table B- 8 Current output range 0 to 20 mA

Values			Current output range	Range
	Dec.	Hex.	0 to 20 mA	
118.515%	32767	7FFF	21 mA	Overflow*
	29031	7167		
105%	29030	7166	21 mA	Overrange
	27649	6C01	20 mA + 723.4 nA	
100%	27648	6C00	20 mA	Nominal range
75%	20736	5100	15 mA	
0.003617%	1	1	723.4 nA	
0%	0	0	0 mA	
	-1	FFFF	0 mA	Underflow*
-118.519%	-32768	8000		

* Outputs positive maximum value or negative minimum value

Table B- 9 Current output ranges 4 to 20 mA

Values			Current output range	Range
	Dec.	Hex.	4 to 20 mA	
118.515%	32767	7FFF	21 mA	Overflow*
	29377	72C1		
106.25%	29376	72C0	21 mA	Overrange
	27649	6C01	20 mA + 578.7 nA	
100%	27648	6C00	20 mA	Nominal range
75%	19008	4A40	16 mA	
0.003617%	1	1	4 mA + 578.7 nA	
0%	0	0	4 mA	
	-1	FFFF	3.9995 mA	Underrange
-2.5%	-692	FD4C	3.6 mA	
	-693	FD4B	3.6 mA	Underflow*
-118.519%	-32768	8000		

* Outputs positive maximum value or negative minimum value

SIEMENS

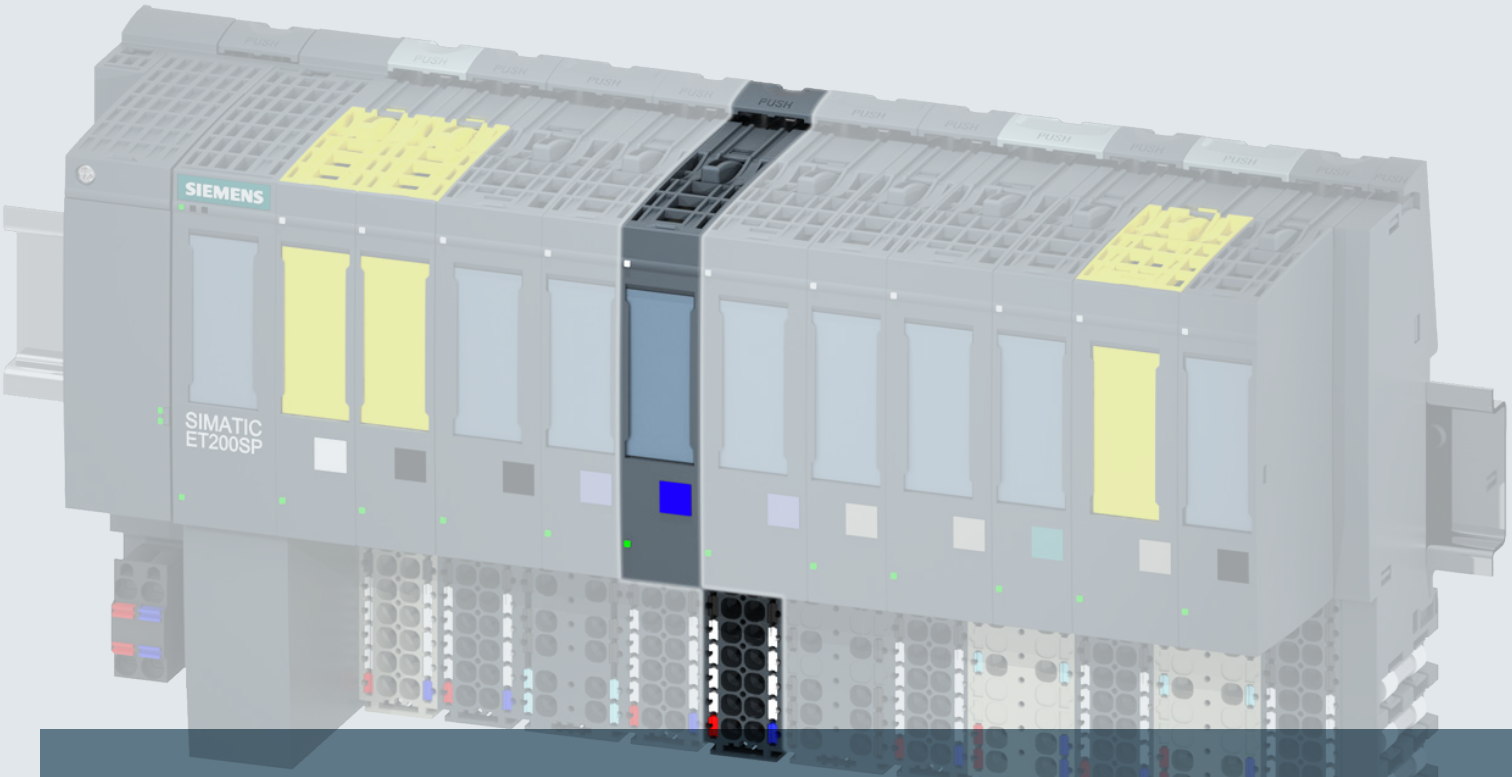

SIMATIC

ET 200SP

Analog output module AQ 2xU/I HF (6ES7135-6HB00-0CA1)

Manual

Edition 02/2014

Answers for industry.

SIEMENS

SIMATIC

ET 200SP
Analog output module
AQ 2xU/I HF
(6ES7135-6HB00-0CA1)

Manual

Preface

Guide to documentation 1

Product overview 2

Wiring 3

Parameters/address space 4

Interrupts/diagnostics alarms 5

Technical specifications 6

Parameter data record A

Representation of analog values B

02/2014

A5E33062529-AA

Legal information

Warning notice system

This manual contains notices you have to observe in order to ensure your personal safety, as well as to prevent damage to property. The notices referring to your personal safety are highlighted in the manual by a safety alert symbol, notices referring only to property damage have no safety alert symbol. These notices shown below are graded according to the degree of danger.

⚠
indicates that death or severe personal injury **will** result if proper precautions are not taken.

⚠ WARNING
indicates that death or severe personal injury **may** result if proper precautions are not taken.

⚠ CAUTION
indicates that minor personal injury can result if proper precautions are not taken.

NOTICE
indicates that property damage can result if proper precautions are not taken.

If more than one degree of danger is present, the warning notice representing the highest degree of danger will be used. A notice warning of injury to persons with a safety alert symbol may also include a warning relating to property damage.

Qualified Personnel

The product/system described in this documentation may be operated only by **personnel qualified** for the specific task in accordance with the relevant documentation, in particular its warning notices and safety instructions. Qualified personnel are those who, based on their training and experience, are capable of identifying risks and avoiding potential hazards when working with these products/systems.

Proper use of Siemens products

Note the following:

⚠ WARNING
Siemens products may only be used for the applications described in the catalog and in the relevant technical documentation. If products and components from other manufacturers are used, these must be recommended or approved by Siemens. Proper transport, storage, installation, assembly, commissioning, operation and maintenance are required to ensure that the products operate safely and without any problems. The permissible ambient conditions must be complied with. The information in the relevant documentation must be observed.

Trademarks

All names identified by ® are registered trademarks of Siemens AG. The remaining trademarks in this publication may be trademarks whose use by third parties for their own purposes could violate the rights of the owner.

Disclaimer of Liability

We have reviewed the contents of this publication to ensure consistency with the hardware and software described. Since variance cannot be precluded entirely, we cannot guarantee full consistency. However, the information in this publication is reviewed regularly and any necessary corrections are included in subsequent editions.

Siemens AG
Industry Sector
Postfach 48 48
90026 NÜRNBERG
GERMANY

A5E33062529-AA
Ⓟ 02/2014 Subject to change

Copyright © Siemens AG 2014.
All rights reserved

Preface

Purpose of the documentation

This device manual complements the system manual ET 200SP distributed I/O system (http://support.automation.siemens.com/WW/view/en/58649293). Functions that generally relate to the system are described in this manual.

The information provided in this manual and in the system/function manuals supports you in commissioning the system.

Conventions

Please also observe notes marked as follows:

Note

A note contains important information on the product described in the documentation, on the handling of the product and on the section of the documentation to which particular attention should be paid.

Security information

Siemens provides products and solutions with industrial security functions that support the secure operation of plants, solutions, machines, equipment and/or networks. They are important components in a holistic industrial security concept. With this in mind, Siemens' products and solutions undergo continuous development. Siemens recommends strongly that you regularly check for product updates.

For the secure operation of Siemens products and solutions, it is necessary to take suitable preventive action (e.g. cell protection concept) and integrate each component into a holistic, state-of-the-art industrial security concept. Third-party products that may be in use should also be considered. You can find more information about industrial security on the Internet (http://www.siemens.com/industrialsecurity).

To stay informed about product updates as they occur, sign up for a product-specific newsletter. You can find more information on the Internet (http://support.automation.siemens.com).

Table of contents

Preface 3
1 Guide to documentation 5
2 Product overview 7
2.1 Properties 7
3 Wiring 9
3.1 Pin assignment 9
3.2 Block diagram 10
4 Parameters/address space 11
4.1 Output type and output ranges 11
4.2 Parameters 12
4.3 Explanation of parameters 14
4.4 Address space 15
5 Interrupts/diagnostics alarms 16
5.1 Status and error displays 16
5.2 Interrupts 18
5.3 Diagnostics alarms 19
6 Technical specifications 20
A Parameter data record 24
A.1 Dependencies when configuring with GSD file 24
A.2 Parameter assignment and structure of parameter data record 25
B Representation of analog values 29
B.1 Representation of output ranges 30
B.2 Representation of analog values in the voltage output ranges 31
B.3 Representation of analog values in the current output ranges 32

Guide to documentation 1

Introduction

This modular documentation of the SIMATIC products covers diverse topics concerning your automation system.

The complete documentation for the ET 200SP distributed I/O system consists of a system manual, function manuals and product manuals.

The STEP 7 information system (online help) also supports you during the configuration and programming of your automation system.

Overview of documentation for analog output module AQ 2×U/I HF

The following table shows additional documentation that you need when using the AQ 2×U/I HF analog output module.

Table 1- 1 Documentation for the analog output module AQ 2×U/I HF

Topic	Documentation	Key contents
System description	System manual ET 200SP distributed I/O system (http://support.automation.siemens.com/WW/view/en/58649293)	• Application planning • Installation • Wiring • Commissioning
Designing interference-free controllers	Function manual Designing interference-free controllers (http://support.automation.siemens.com/WW/view/en/59193566)	• Basics • Electromagnetic compatibility • Lightning protection
Analog value processing	Function manual Analog value processing (http://support.automation.siemens.com/WW/view/en/67989094)	• Basics of analog technology (wiring, processing, installation technology) • Description/explanation of meaning, e.g., conversion and cycle times, basic error limits, operational limits
System diagnostics	Function manual System diagnostics (http://support.automation.siemens.com/WW/view/en/59192926)	• Overview • Diagnostics evaluation of hardware/software

Topic	Documentation	Key contents
BaseUnits	Manual ET 200SP BaseUnits (http://support.automation.siemens.com/WW/view/en/59753521)	Technical specifications
Amendments and special features of the ET 200SP distributed I/O system	Product information on documentation of the ET 200SP distributed I/O system (http://support.automation.siemens.com/WW/view/en/73021864)	Current information not yet documented in the system manuals, function manuals, or product manuals.

SIMATIC manuals

All current manuals for SIMATIC products are available to download free of charge on the Internet (http://www.siemens.com/simatic-tech-doku-portal).

Product overview

2

2.1 Properties

Article number

6ES7135-6HB00-0CA1

View of the module

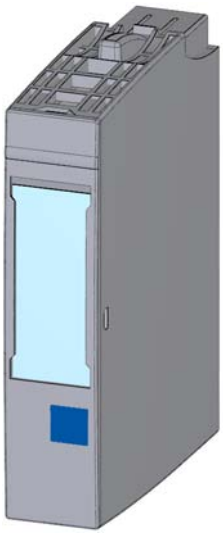

Figure 2-1 View of the module AQ 2×U/I HF

Properties

The module has the following technical properties:

- Analog output module with 2 outputs
- Resolution: Up to 16 bits including sign
- Voltage output can be set for each channel
- Current output can be set for each channel
- Configurable diagnostics for each channel

The module supports the following functions:

- Firmware update
- I&M identification data
- Reconfiguration in RUN
- PROFIenergy
- Calibration in runtime
- Isochronous mode (PROFINET IO only)
- Value status (PROFINET IO only)

You can configure the module with STEP 7 (TIA Portal) and with a GSD file.

Accessories

The following accessories must be ordered separately:

- Labeling strips
- Color identification labels
- Reference identification label
- Shield connection

See also

For more information on accessories, refer to the system manual ET 200SP distributed I/O system (http://support.automation.siemens.com/WW/view/en/58649293).

Wiring

3

3.1 Pin assignment

General pin assignment

Table 3- 1 Pin assignment for AQ 2×U/I HF

Pin assignment for AQ 2×U/I HF (6ES7135-6HB00-0CA1)						
Terminal	**Assign-ment**	**Terminal**	**Assign-ment**	**Notes**	**BaseUnits**[1]	**Color identification label**
1	Q_0+	**2**	Q_1+	• Q_n+: Analog output voltage/current (positive), channel n • Q_n-: Analog output voltage/current negative, channel n • S_n+: Sensor line positive, channel n • S_n-: Sensor line negative, channel n • RES: Reserved; not connected	A0, A1	–
3	RES	**4**	RES			
5	Q_0-	**6**	Q_1-			
7	RES	**8**	RES			
9	S_0+	**10**	S_1+			
11	RES	**12**	RES			
13	S_0-	**14**	S_1-			
15	RES	**16**	RES			
L+	24 VDC	**M**	M			
Voltage 2-wire connection 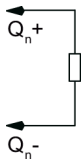				Voltage 4-wire 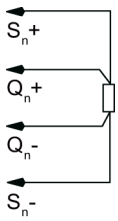		Current 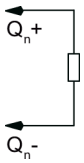

[1] Usable BaseUnit types, can be identified by the last two digits of the article number. See also "ET 200SP distributed I/O system" system manual.

Note

The first BaseUnit of a station must be a light-colored BaseUnit. Keep this in mind also during the configuration.

See also

ET 200SP distributed I/O system
(http://support.automation.siemens.com/WW/view/en/58649293)

3.2 Block diagram

Block diagram

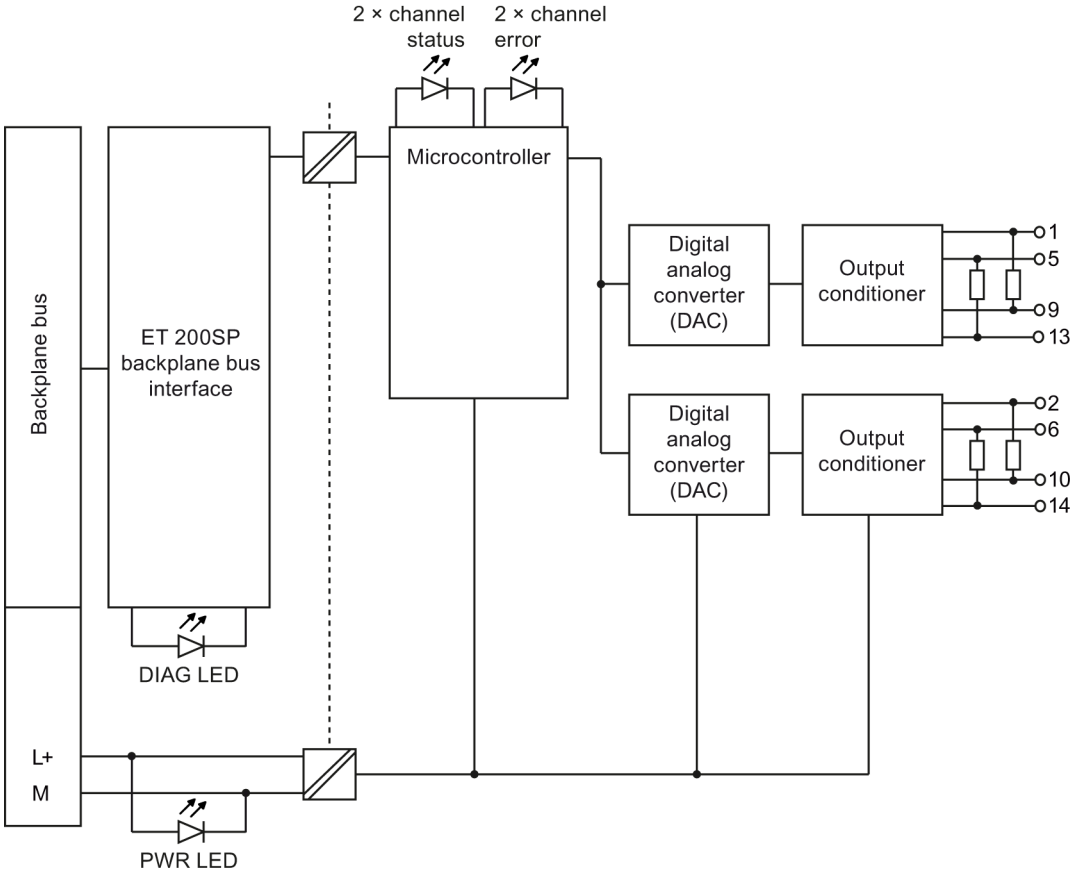

Figure 3-1 Block diagram of AQ 2xU/I HF

Parameters/address space 4

4.1 Output type and output ranges

The following table shows the output type and the respective output ranges.

Table 4- 1 Output ranges

Output type	Output ranges	Resolution
Current	± 20 mA 0 to 20 mA 4 to 20 mA	16 bit including sign 15 bit 14 bit
Voltage	± 10 V ± 5 V 0 to 10 V 1 to 5 V	16 bit including sign 15 bit including sign 15 bit 13 bit

You can find the tables of output ranges and overflow, overload, etc. in the section Representation of analog values (Page 30) and in the function manual Analog value processing (http://support.automation.siemens.com/WW/view/en/67989094).

4.2 Parameters

Parameters of the AQ 2xU/I HF

The following table lists the configurable parameters. The effective range of the configurable parameters depends on the type of configuration. The following configurations are possible:

- Distributed operation on PROFINET IO in an ET 200SP system
- Distributed operation on PROFIBUS DP in an ET 200SP system

When assigning parameters in the user program, use the WRREC instruction to transfer the parameters to the module by means of data records; refer to the section Parameter assignment and structure of parameter data record (Page 25).

The following parameter settings are possible:

Table 4- 2 Configurable parameters and their defaults (GSD file)

Parameter	Value range	Default	Reconfigu-ration in RUN	Scope with configuration software, e.g. STEP 7 (TIA Portal)	
				GSD file PROFINET IO	GSD file PROFIBUS DP [3]
Diagnostics: Missing supply voltage L+	• Disable • Enable	Disable	Yes	Channel	Channel
Diagnostics: Short-circuit to ground [1]	• Disable • Enable	Disable	Yes	Channel	Channel
Diagnostics: Overflow [3]	• Disable • Enable	Disable	Yes	Channel	Channel
Diagnostics: Underflow [3]	• Disable • Enable	Disable	Yes	Channel	Channel
Diagnostics: Wire break [2]	• Disable • Enable	Disable	Yes	Channel	Channel
Output type/range	• Deactivated • Voltage ±10 V • Voltage ±5 V • Voltage 0..10 V • Voltage 1..5 V • Current ±20 mA • Current 0 - 20 mA • Current 4 - 20 mA	Current 4 - 20 mA	Yes	Channel	Channel

Parameter	Value range	Default	Reconfiguration in RUN	Scope with configuration software, e.g. STEP 7 (TIA Portal)	
				GSD file PROFINET IO	GSD file PROFIBUS DP [3]
Reaction to CPU STOP [3]	• Turn off • Keep last value • Output substitute value	Turn off	Yes	Channel	Module
Substitute value	For permissible substitute values for the various measuring ranges, see device manual AQ 2xU/I HF, Substitute values → Codes for substitute value table	0	Yes	Channel	Channel
Potential group	• Use potential group of the left module • Enable new potential group	Use potential group of the left module	No	Module	Module

1 No diagnostics detection between -0.5 and +0.5 V (no short-circuit detection)

2 No diagnostics detection between -3 and +3 mA (no wire break detection)

3 Due to the limited number of parameters at a maximum of 244 bytes per ET 200SP station with a PROFIBUS GSD configuration, the configuration options are restricted. If required, you can still assign these parameters using data record 128 as described in the "GSD file PROFINET IO" column (see table above). The parameter length of the I/O module is 8 bytes.

Note

Unused channels

"Deactivate" the unused outputs in the parameter assignment.

A deactivated output always returns the value "no current or voltage".

4.3 Explanation of parameters

Diagnostics: Missing supply voltage L+

Enabling of the diagnostics for missing or insufficient supply voltage L+.

Diagnostics: Short-circuit

Enabling of the diagnostics when a short-circuit of the actuator supply occurs.

Diagnostics: Overflow

Enabling of the diagnostics when the output value exceeds the overrange.

Diagnostics: Underflow

Enabling of the diagnostics when the output value falls below the underrange or reaches the minimum output value or underflow.

Diagnostics: Wire break

Enabling of the diagnostics if the line to the actuator is broken.

Substitute value

The substitute value is the value that the module outputs in case of a CPU STOP.

Potential group

Specifies that a BaseUnit with incoming voltage supply is located on this slot (see system manual ET 200SP distributed I/O system (http://support.automation.siemens.com/WW/view/en/58649293)).

4.4 Address space

Address space of the analog output module AQ 2×U/I HF

The following figure shows the assignment of the address space for the AQ 2xU/I HF with value status (Quality Information (QI)). The addresses for the value status are only available if the value status is enabled.

Assignment in the process image output (PIQ)

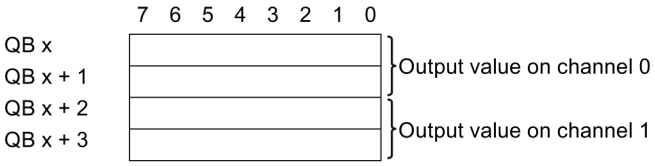

Assignment in the process image input (PII)

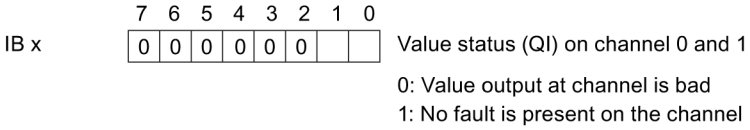

Figure 4-1 Address space of the analog output module AQ 2×U/I HF

Configuration options of the AQ 2xU/I HF

The following configurations are possible:

- Configuration 1: Without value status
- Configuration 2: With value status

Evaluating the value status

An additional byte is occupied in the input address space if you enable the value status for the analog module. Bits 0 to 1 in this byte are assigned to a channel. They provide information about the validity of the analog value.

Bit = 1: No fault is present on the channel.

Bit = 0: The wiring, the value created on the channel, or similar is incorrect.

Interrupts/diagnostics alarms

5

5.1 Status and error displays

LED displays

The figure below shows the LED displays of the AQ 2xU/I HF.

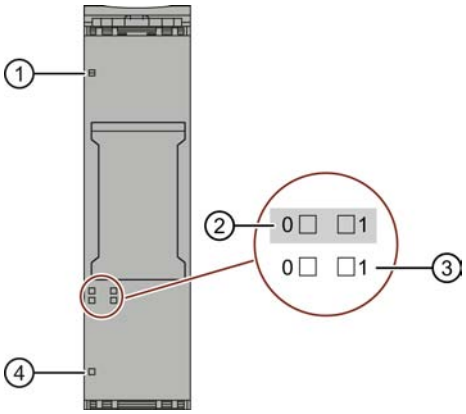

① DIAG (green/red)
② Channel status (green)
③ Channel error (red)
④ PWR (green)

Figure 5-1 LED display

Meaning of the LED displays

The following tables contain the meaning of the status and error displays. Remedies for diagnostics alarms can be found in section Diagnostics alarms (Page 19).

Table 5- 1 Error display of the DIAG LED

DIAG LED	Meaning
□ Off	Backplane bus supply of the ET 200SP not OK
☼ Flashes	Module parameters not assigned
■ On	Module parameters assigned and no module diagnostics
☼ Flashes	Module parameters assigned and module diagnostics

Table 5- 2 Status display of Channel status/channel error LED

Channel status	Channel error	Meaning
□ Off	□ Off	Channel deactivated or load voltage L+ missing
■ On	□ Off	Channel activated and no channel diagnostics
□ Off	■ On	Channel activated and channel diagnostics
■ On	■ On	Not permitted (error)

Table 5- 3 Status display of the PWR LED

PWR LED	Meaning
□ Off	Supply voltage L+ missing
■ On	Supply voltage L+ present

5.2 Interrupts

The analog output module AQ 2×U/I HF supports diagnostic error interrupts.

Diagnostic error interrupt

The module generates a diagnostic error interrupt at the following events:

- Channel temporarily unavailable
- Short-circuit
- Overtemperature
- Wire break
- Violation of high limit
- Violation of low limit
- Error
- Parameter assignment error
- Load voltage missing

You can obtain detailed information on the event in the hardware interrupt organization block with the "RALARM" (read additional interrupt information) instruction and in the STEP 7 online help.

5.3 Diagnostics alarms

Diagnostics alarms

A diagnostics alarm is output for each diagnostics event and the DIAG LED on the module flashes. The diagnostics alarms can, for example, be read from the diagnostics buffer of the CPU. You can evaluate the error codes with the user program.

Table 5- 4 Diagnostics alarms, their meaning and remedies

Diagnostics alarm	Error code	Meaning	Remedy
Channel temporarily unavailable	$1F_H$	Firmware update is being performed. Channel 0 applies to the entire module. The module is currently not performing any measurements.	–
		The channel is currently being calibrated.	
Short-circuit	1_H	Short-circuit of the actuator supply	Correct the process wiring
Overtemperature	4_H	Thermal overload of the I/O module	Correct the process wiring
Wire break	6_H	Actuator circuit resistance too high	Use a different actuator type or change the wiring, for example, use cables with larger cross-section
		Wire break between the module and actuator	Connect the cable
		Channel not connected (open)	• Deactivate the channel ("Measurement type" parameter) • Connect the channel
Violation of high limit	7_H	The output value specified by the user program exceeds the overrange.	Correct the output value
Violation of low limit	8_H	The output value specified by the user program falls below the underrange.	Correct the output value
Error	9_H	Internal module error has occurred (diagnostics alarm on channel 0 applies to the entire module).	Replace module
Parameter assignment error	10_H	The module cannot evaluate parameters for the channel: Module plugged in does not match the configuration. Incorrect parameter assignment.	• Correct the configuration (comparison of preset and actual setup). • Correct the parameter assignment (diagnostics wire break set only with the permitted measuring ranges).
Load voltage missing	11_H	Missing or insufficient supply voltage L+	• Check supply voltage L+ on the BaseUnit • Check BaseUnit type

Technical specifications 6

Technical specifications of AQ 2×U/I HF

	6ES7135-6HB00-0CA1
Product type designation	AQ 2xU/I HF
General information	
Firmware version	V1.0
Usable BaseUnits	BU type A0, A1
Product function	
I&M data	Yes; I&M0 to I&M3
Engineering with	
STEP 7 TIA Portal can be configured/integrated as of version	V13 / V13
STEP 7 can be configured/integrated as of version	V5.5 SP3 / V5.5 SP4
PROFIBUS as of GSD version/GSD revision	GSD revision 5
PROFINET as of GSD version/GSD revision	GSDML V2.3
CiR Configuration in RUN	
Reconfiguration in RUN possible	Yes
Calibration in RUN possible	Yes
Installation type/mounting	
Rack mounting possible	Yes
Front installation possible	Yes
Rail mounting possible	Yes
Supply voltage	
Type of supply voltage	DC
Rated value (DC)	24 V
Valid range low limit (DC)	19.2 V
Valid range high limit (DC)	28.8 V
Input current	
Current consumption (rated value)	45 mA; no load
Current consumption, max.	90 mA; 2 channels current output 20 mA
Power loss	
Power loss, typ.	0.9 W
Address area	
Address space per module	
Address space per module, max.	4 bytes; + 1 byte for QI information

	6ES7135-6HB00-0CA1
Analog outputs	
Number of analog outputs	2
Voltage output, short-circuit protection	Yes
Voltage output, short circuit current, max.	45 mA
Cycle time (all channels), min.	750 µs
Output ranges, voltage	
0 to 10 V	Yes; 15 bits
1 to 5 V	Yes; 13 bits
-5 to +5 V	Yes; 15 bits incl. sign
-10 to +10 V	Yes; 16 bits incl. sign
Output ranges, current	
0 to 20 mA	Yes; 15 bits
-20 to +20 mA	Yes; 16 bits incl. sign
4 to 20 mA	Yes; 14 bits
Connecting the actuators	
For voltage output 2-wire connection	Yes
For voltage output 4-wire connection	Yes
For current output 2-wire connection	Yes
Load resistance (in nominal range of the output)	
For voltage outputs, min.	2 kΩ
For voltage outputs, capacitive load, max.	1 µF
For current outputs, max.	500 Ω
For current outputs, inductive load, max.	1 mH
Destruction limit for externally applied voltages and currents	
Voltages at the outputs	30 V
Cable length	
Cable length shielded, max.	200 m; 1000 m for current output
Analog value generation	
Settling time	
For resistive load	0.05 ms
For capacitive load	0.05 ms; max. 47 nF and 20 m cable length
For inductive load	0.05 ms
Errors/accuracies	
Output ripple (in relation to output range, bandwidth 0 to 50 kHz), (+/-)	± 0.02%
Linearity error (in relation to output range), (+/-)	± 0.03%
Temperature error (in relation to output range)	± 0.003%
Crosstalk between outputs, max.	-50 dB
Repeat accuracy in settled state at 25 °C (in relation to output range), (+/-)	± 0.03%

	6ES7135-6HB00-0CA1
Operational limit in entire temperature range	
Voltage in relation to output range, (+/-)	± 0.2%
Current in relation to output range, (+/-)	± 0.2%
Basic error limit (operational limit at 25 °C)	
Voltage in relation to output range, (+/-)	± 0.1%
Current in relation to output range, (+/-)	± 0.1%
Isochronous mode	
Isochronous mode (application synchronized up to terminal)	Yes
Execution and activation time (TCO), min.	500 µs
Bus cycle time (TDP), min.	750 µs
Jitter, max.	5 µs
Interrupts/diagnostics/status information	
Substitute values can be applied	Yes
Interrupts	
Diagnostic error interrupt	Yes
Diagnostics alarms	
Diagnostics	Yes
Monitoring of supply voltage	Yes
Wire break	Yes; channel-based, only for output type current
Short-circuit	Yes; channel-based, only for output type voltage
Overflow/underflow	Yes
Diagnostics indicator LED	
Monitoring of supply voltage	Yes; green PWR LED
Channel status display	Yes; green LED
For channel diagnostics	Yes; red LED
For module diagnostics	Yes; green/red DIAG LED
Electrical isolation	
Electrical isolation channels	
Between the channels	No
Between the channels and the backplane bus	Yes
Between the channels and the supply voltage of the electronics	Yes
Permitted potential difference	
Between different circuits	75 VDC / 60 VAC (basic insulation)
Insulation	
Insulation tested with	707 VDC (type test)
Dimensions	
Width	15 mm
Weights	
Weight, approx.	31 g

Dimension drawing

See manual ET 200SP BaseUnits
(http://support.automation.siemens.com/WW/view/en/59753521)

Parameter data record

A

A.1 Dependencies when configuring with GSD file

When configuring the module with a GSD file, remember that the settings of some parameters are dependent on each other.

Configuring with a PROFINET GSD file

The table lists the properties and their dependencies on the measurement type and measuring range for PROFINET.

Measurement type	Measuring range	Diagnostics				
		Underflow	Overflow	Wire break	Short-circuit to ground	Missing supply voltage L+
Deactivated	*	*	*	*	*	*
Voltage	±10 V	x	x	–	x	x
	±5 V	x	x	–	x	x
	0 to 10 V	x	x	–	x	x
	1 to 5 V	x	x	–	x	x
Current	±20 mA	x	x	x	–	x
	0 to 20 mA	x	x	x	–	x
	4 to 20 mA	x	x	x	–	x

x = property is allowed, – = property is **not allowed**, * = property is not relevant

Configuring with a PROFIBUS GSD file

The table lists the properties and their dependencies on the measurement type and measuring range for PROFIBUS.

Measurement type	Measuring range	Diagnostics			
		Underflow / overflow	Wire break	Load voltage L+	Short-circuit to ground
Deactivated	*	*	*	*	*
Voltage	±10 V	x	–	x	x
	±5 V	x	–	x	x
	0 to 10 V	x	–	x	x
	1 to 5 V	x	–	x	x
Current	±20 mA	x	x	x	–
Current (2-wire connection)	0 to 20 mA	x	x	x	–
	4 to 20 mA	x	x	x	–

x = property is allowed, – = property is **not allowed**, * = property is not relevant

A.2 Parameter assignment and structure of parameter data record

The data records of the module have an identical structure, regardless of whether you configure the module with PROFIBUS DP or PROFINET IO.

Parameter assignment in the user program

The module parameter settings can be changed in RUN (for example, the voltage or current values of selected channels can be edited in RUN without having an effect on the other channels).

Changing parameters in RUN

The "WRREC" instruction is used to transfer the parameters to the module using data record 128. The parameters set with STEP 7 will not be changed on the CPU, which means that the parameters set in STEP 7 will be valid again after a restart.

Output parameter STATUS

If errors occur when transferring parameters with the "WRREC" instruction, the module continues operation with the previous parameter assignment. However, the STATUS output parameter contains a corresponding error code.

You will find a description of the "WRREC" instruction and the error codes in the STEP 7 online help.

Structure of data record 128

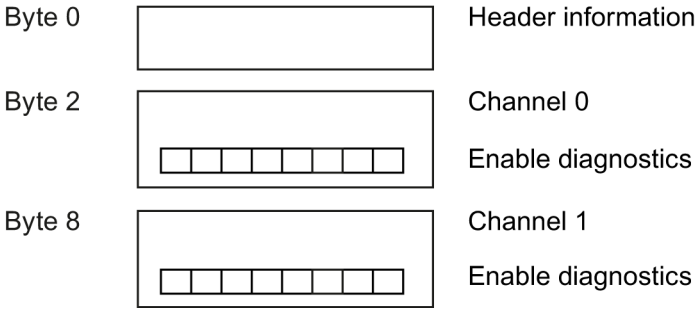

Figure A-1 Structure of data record 128

Header information

The figure below shows the structure of the header information.

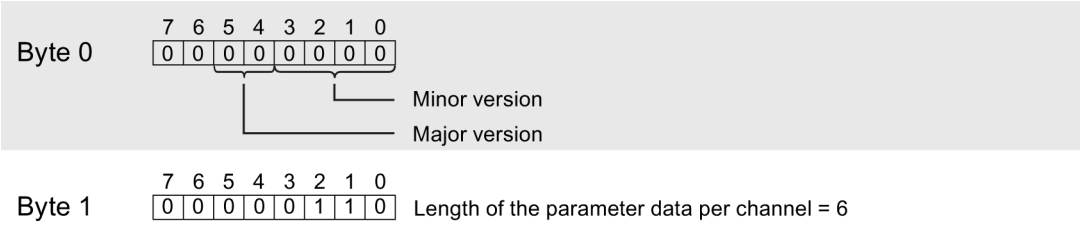

Figure A-2 Header information

Parameters

The figure below shows the structure of the parameters for channels 0 to 1.

You can activate a parameter by setting the corresponding bit to "1".

* x = 2 + (channel number x 6); channel number = 0 to 1

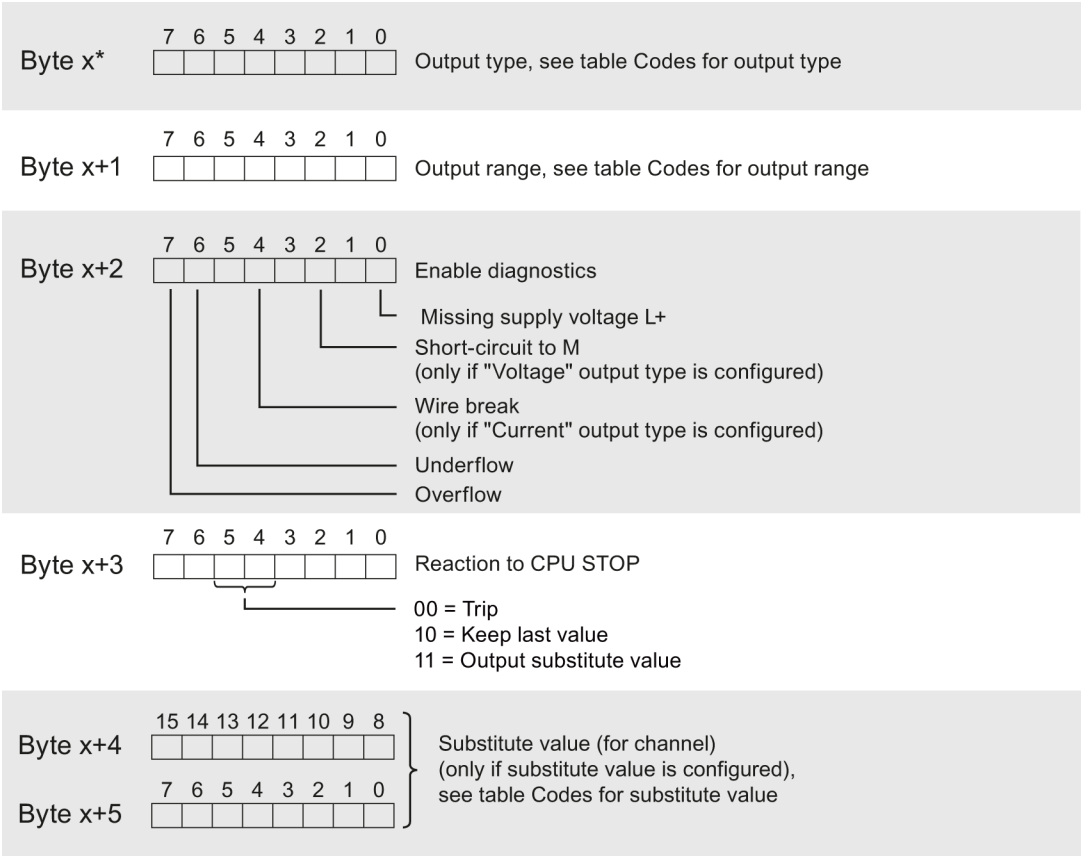

Figure A-3 Structure of byte x to x+5 for channel 0 and 1

Codes for output type

The following table contains the codes for the output types of the analog output module. You must enter these codes in byte x (see previous figure).

Table A- 1 Codes for output type

Output range for voltage	Code
Deactivated	0000 0000
Voltage	0000 0001
Current	0000 0011

Codes for output range

The following table contains the codes for the output ranges of the analog output module. You must enter these codes in byte x+1 (see previous figure).

Table A- 2 Codes for output range

Output range for voltage	Code
±10 V	0000 0000
±5 V	0000 0001
0 to 10 V	0000 0010
1 to 5 V	0000 0011
Output range for current	**Code**
±20 mA	0000 0000
0 to 20 mA	0000 0001
4 to 20 mA	0000 0010

Codes for substitute value

The following table contains the codes for the substitute values. You must enter these codes in bytes x+4 and x+5 (see previous figure).

Table A- 3 Codes for substitute value

Output range for voltage and current	Valid substitute value
±10 V	-32512 to 32511
±5 V	-32512 to 32511
0 to 10 V	0 to 32511
1 to 5 V	-6912 to 32511
±20 mA	-29031 to 29030
0 to 20 mA	0 to 29030
4 to 20 mA	-692 to 29376

Representation of analog values

B

This appendix describes the analog values for all output ranges supported by the AQ 2xU/I HF analog module.

Measured value resolution

The digitized analog value is the same for all output values at the same nominal range. The analog values are represented as a fixed point number in the two's complement.

The resolutions 13, 14, 15, and 16 bit including sign are displayed. Each analog value is entered in the ACCU left-justified. The bits marked with "x" are set to "0".

Table B- 1 Possible resolutions of the analog values

Resolution in bits	Values		Analog value	
	Decimal	Hexadecimal	High byte	Low byte
13	8	8_H	Sign 0 0 0 0 0 0 0	0 0 0 0 1 x x x
14	4	4_H	Sign 0 0 0 0 0 0 0	0 0 0 0 0 1 x x
15	2	2_H	Sign 0 0 0 0 0 0 0	0 0 0 0 0 0 1 x
16	1	1_H	Sign 0 0 0 0 0 0 0	0 0 0 0 0 0 0 1

B.1 Representation of output ranges

In the following tables, you can find the digitized representation of the bipolar and unipolar range output ranges. The resolution is 16 bits.

Table B- 2 Bipolar output ranges

Dec. value	Output value in %	Data word																Range
		2^{15}	2^{14}	2^{13}	2^{12}	2^{11}	2^{10}	2^{9}	2^{8}	2^{7}	2^{6}	2^{5}	2^{4}	2^{3}	2^{2}	2^{1}	2^{0}	
≥ 32512	117.589	0	1	1	1	1	1	1	0	1	1	1	1	1	1	1	1	Maximum output value
32511	117.589	0	1	1	1	1	1	1	0	1	1	1	1	1	1	1	1	Overrange
27649	100.004	0	1	1	0	1	1	0	0	0	0	0	0	0	0	0	1	
27648	100.000	0	1	1	0	1	1	0	0	0	0	0	0	0	0	0	0	Nominal range
1	0.003617	0	0	0	0	0	0	0	0	0	0	0	0	0	0	0	1	
0	0.000	0	0	0	0	0	0	0	0	0	0	0	0	0	0	0	0	
-1	-0.003617	1	1	1	1	1	1	1	1	1	1	1	1	1	1	1	1	
-27648	-100.000	1	0	0	1	0	1	0	0	0	0	0	0	0	0	0	0	
-27649	-100.004	1	0	0	1	0	0	1	1	1	1	1	1	1	1	1	1	Underrange
-32512	-117.593	1	0	0	0	0	0	0	1	0	0	0	0	0	0	0	0	
≤ -32513	-117.593	1	0	0	0	0	0	0	1	0	0	0	0	0	0	0	0	Minimum output value

Table B- 3 Unipolar output ranges

Dec. value	Output value in %	Data word																Range
		2^{15}	2^{14}	2^{13}	2^{12}	2^{11}	2^{10}	2^{9}	2^{8}	2^{7}	2^{6}	2^{5}	2^{4}	2^{3}	2^{2}	2^{1}	2^{0}	
≥ 32512	117.589	0	1	1	1	1	1	1	1	x	x	x	x	x	x	x	x	Maximum output value
32511	117.589	0	1	1	1	1	1	1	0	1	1	1	1	1	1	1	1	Overrange
27649	100.004	0	1	1	0	1	1	0	0	0	0	0	0	0	0	0	1	
27648	100.000	0	1	1	0	1	1	0	0	0	0	0	0	0	0	0	0	Nominal range
1	0.003617	0	0	0	0	0	0	0	0	0	0	0	0	0	0	0	1	
0	0.000	0	0	0	0	0	0	0	0	0	0	0	0	0	0	0	0	
≤ 0	0	0	0	0	0	0	0	0	0	0	0	0	0	0	0	0	0	Minimum output value

B.2 Representation of analog values in the voltage output ranges

The tables below list the decimal and hexadecimal values (codes) of the possible voltage output ranges.

Table B- 4 Voltage output ranges ±10 V and ±5 V

Values			Voltage output range		Range
	Dec.	Hex.	±10 V	±5 V	
118.515%	32767	7FFF	11.76 V	5.88 V	Overflow*
	32512	7F00			
117.589%	32511	7EFF	11.76 V	5.88 V	Overrange
	27649	6C01			
100%	27648	6C00	10 V	5 V	Nominal range
75%	20736	5100	7.5 V	3.75 V	
0.003617%	1	1	361.7 µV	180.8 µV	
0%	0	0	0 V	0 V	
	-1	FFFF	-361.7 µV	-180.8 µV	
-75%	-20736	AF00	-7.5 V	-3.75 V	
-100%	-27648	9400	-10 V	-5 V	
	-27649	93FF			Underrange
-117.593%	-32512	8100	-11.76 V	-5.88 V	
	-32513	80FF	-11.76	-5.88 V	Underflow*
-118.519%	-32768	8000			

* outputs positive maximum value or negative minimum value

Table B- 5 Voltage output range 0 V to 10 V

Values			Voltage output range	Range
	Dec.	Hex.	0 to 10 V	
118.519%	32767	7FFF	11.76 V	Overflow*
	32512	7F00		
117.589%	32511	7EFF	11.76 V	Overrange
	27649	6C01		
100%	27648	6C00	10 V	Nominal range
75%	20736	5100	7.5 V	
0.003617%	1	1	361.7 µV	
0%	0	0	0 V	
	-1	FFFF	0 V	Underflow*
-118.519%	-32768	8000		

* outputs positive maximum value or negative minimum value

Table B- 6 Voltage output range 1 V to 5 V

Values			Voltage output range	Range
	Dec.	Hex.	1 to 5 V	
118.519%	32767	7FFF	5.70 V	Overflow*
	32512	7F00		
117.589%	32511	7EFF	5.70 V	Overrange
	27649	6C01		
100%	27648	6C00	5 V	Nominal range
75%	20736	5100	4 V	
0.003617%	1	1	1 V + 144.7 µV	
0%	0	0	1 V	
	-1	FFFF	1 V - 144.7 µV	Underrange
-25%	-6912	E500	0 V	
	-6913	E4FF	0 V	Underflow*
-118.519%	-32768	8000		

* outputs positive maximum value or negative minimum value

B.3 Representation of analog values in the current output ranges

The tables below list the decimal and hexadecimal values (codes) of the possible current output ranges.

Table B- 7 Current output range ±20 mA

Values			Current output range	Range
	Dec.	Hex.	±20 mA	
118.5149%	32767	7FFF	21 mA	Overflow*
	29031	7167		
105%	29030	7166	21 mA	Overrange
	27649	6C01	20 mA + 723.4 nA	
100%	27648	6C00	20 mA	Nominal range
75%	20736	5100	15 mA	
0.003617%	1	1	723.4 nA	
0%	0	0	0 mA	
	-1	FFFF	-723.4 nA	
-75%	-20736	AF00	-15 mA	
-100%	-27648	9400	-20 mA	
	-27649	93FF	-20 mA + 723.4 nA	Underrange
-105%	-29031	8E99	-21 mA	
	-29032	8E98	-21 mA	Underflow*
-118.519%	-32768	8000		

* outputs positive maximum value or negative minimum value

Table B- 8 Current output range 0 to 20 mA

Values			Current output range	Range
	Dec.	Hex.	0 to 20 mA	
118.5149%	32767	7FFF	21 mA	Overflow*
	29031	7167		
105%	29030	7166	21 mA	Overrange
	27649	6C01	20 mA + 723.4 nA	
100%	27648	6C00	20 mA	Nominal range
75%	20736	5100	15 mA	
0.003617%	1	1	723.4 nA	
0%	0	0	0 mA	
	-1	FFFF	0 mA	Underflow*
-118.519%	-32768	8000		

* outputs positive maximum value or negative minimum value

Table B- 9 Current output ranges 4 to 20 mA

Values			Current output range	Range
	Dec.	Hex.	4 to 20 mA	
118.5149%	32767	7FFF	21 mA	Overflow*
	29377	72C1		
106.25%	29376	72C0	21 mA	Overrange
	27649	6C01	20 mA + 578.7 nA	
100%	27648	6C00	20 mA	Nominal range
75%	19008	4A40	16 mA	
0.003617%	1	1	4 mA + 578.7 nA	
0%	0	0	4 mA	
	-1	FFFF	3.9995 mA	Underrange
-2.5%	-692	FD4C	3.6 mA	
	-693	FD4B	3.6 mA	Underflow*
-118.519%	-32768	8000		

* outputs positive maximum value or negative minimum value

SIEMENS

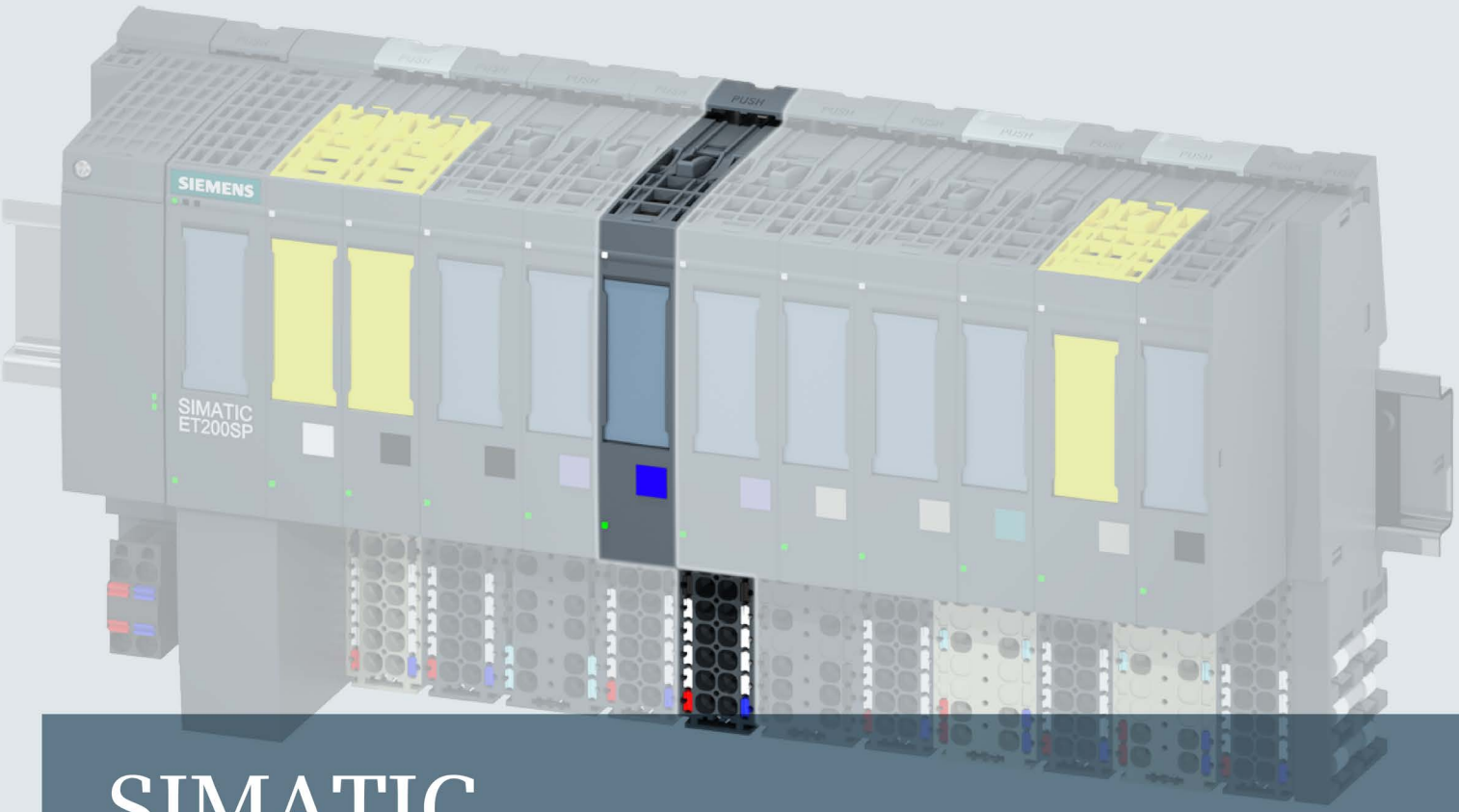

SIMATIC

ET 200SP

Analog output module AQ 4xU/I ST (6ES7135-6HD00-0BA1)

Manual

Edition 03/2016

siemens.com

SIEMENS

SIMATIC

ET 200SP
Analog Output Module AQ 4xU/I ST (6ES7135-6HD00-0BA1)

Manual

Preface

Documentation guide 1

Product overview 2

Wiring up 3

Parameters/address space 4

Interrupts/diagnostics alarms 5

Technical specifications 6

Parameter data record A

Representation of analog values B

03/2016

A5E03573365-AD

Legal information

Warning notice system

This manual contains notices you have to observe in order to ensure your personal safety, as well as to prevent damage to property. The notices referring to your personal safety are highlighted in the manual by a safety alert symbol, notices referring only to property damage have no safety alert symbol. These notices shown below are graded according to the degree of danger.

⚠ DANGER

indicates that death or severe personal injury **will** result if proper precautions are not taken.

⚠ WARNING

indicates that death or severe personal injury **may** result if proper precautions are not taken.

⚠ CAUTION

indicates that minor personal injury can result if proper precautions are not taken.

NOTICE

indicates that property damage can result if proper precautions are not taken.

If more than one degree of danger is present, the warning notice representing the highest degree of danger will be used. A notice warning of injury to persons with a safety alert symbol may also include a warning relating to property damage.

Qualified Personnel

The product/system described in this documentation may be operated only by **personnel qualified** for the specific task in accordance with the relevant documentation, in particular its warning notices and safety instructions. Qualified personnel are those who, based on their training and experience, are capable of identifying risks and avoiding potential hazards when working with these products/systems.

Proper use of Siemens products

Note the following:

⚠ WARNING

Siemens products may only be used for the applications described in the catalog and in the relevant technical documentation. If products and components from other manufacturers are used, these must be recommended or approved by Siemens. Proper transport, storage, installation, assembly, commissioning, operation and maintenance are required to ensure that the products operate safely and without any problems. The permissible ambient conditions must be complied with. The information in the relevant documentation must be observed.

Trademarks

All names identified by ® are registered trademarks of Siemens AG. The remaining trademarks in this publication may be trademarks whose use by third parties for their own purposes could violate the rights of the owner.

Disclaimer of Liability

We have reviewed the contents of this publication to ensure consistency with the hardware and software described. Since variance cannot be precluded entirely, we cannot guarantee full consistency. However, the information in this publication is reviewed regularly and any necessary corrections are included in subsequent editions.

Siemens AG
Division Digital Factory
Postfach 48 48
90026 NÜRNBERG
GERMANY

A5E03573365-AD
Ⓟ 04/2016 Subject to change

Copyright © Siemens AG 2012 - 2016.
All rights reserved

Preface

Purpose of the documentation

This manual supplements the system manual ET 200SP distributed I/O system (http://support.automation.siemens.com/WW/view/en/58649293).

Functions that generally relate to the system are described in this manual.

The information provided in this manual and in the system/function manuals supports you in commissioning the system.

Changes compared to previous version

Changes described in this manual, compared to the edition 07/2014:

- 3-wire connection for voltage output
- Derating trend for current output for modules as of hardware version FS 06.

Conventions

CPU: When the term "CPU" is used in this manual, it applies to the CPUs of the S7-1500 automation system as well as to the CPUs/interface modules of the distributed I/O system ET 200SP.

STEP 7: In this documentation, "STEP 7" is used as a synonym for all versions of the configuration and programming software "STEP 7 (TIA Portal)".

Please also observe notes marked as follows:

Note

A note contains important information on the product described in the documentation, on the handling of the product or on the section of the documentation to which particular attention should be paid.

Security information

Siemens provides products and solutions with industrial security functions that support the secure operation of plants, solutions, machines, equipment and/or networks. They are important components in a holistic industrial security concept. With this in mind, Siemens' products and solutions undergo continuous development. Siemens recommends strongly that you regularly check for product updates.

For the secure operation of Siemens products and solutions, it is necessary to take suitable preventive action (e.g. cell protection concept) and integrate each component into a holistic, state-of-the-art industrial security concept. Third-party products that may be in use should also be considered. You can find more information about industrial security on the Internet (http://www.siemens.com/industrialsecurity).

To stay informed about product updates as they occur, sign up for a product-specific newsletter. You can find more information on the Internet (http://support.automation.siemens.com).

Table of contents

Preface 4
1 Documentation guide 7
2 Product overview 11
2.1 Properties 11
3 Wiring up 14
3.1 Terminal assignment 14
3.2 Schematic circuit diagram 15
4 Parameters/address space 16
4.1 Output ranges 16
4.2 Parameters 17
4.3 Explanation of the parameters 19
4.4 Address space 20
5 Interrupts/diagnostics alarms 21
5.1 Status and error display 21
5.2 Interrupts 23
5.3 Diagnostics alarms 24
6 Technical specifications 25
6.1 Technical specifications 25
A Parameter data record 30
A.1 Dependencies when configuring with GSD file 30
A.2 Parameter assignment and structure of the parameter data record 31
B Representation of analog values 34
B.1 Representation of output ranges 35
B.2 Representation of analog values in the voltage output ranges 36
B.3 Representation of analog values in the current output ranges 37

Documentation guide

1

The documentation for the SIMATIC ET 200SP distributed I/O system is arranged into three areas.
This arrangement enables you to access the specific content you require.

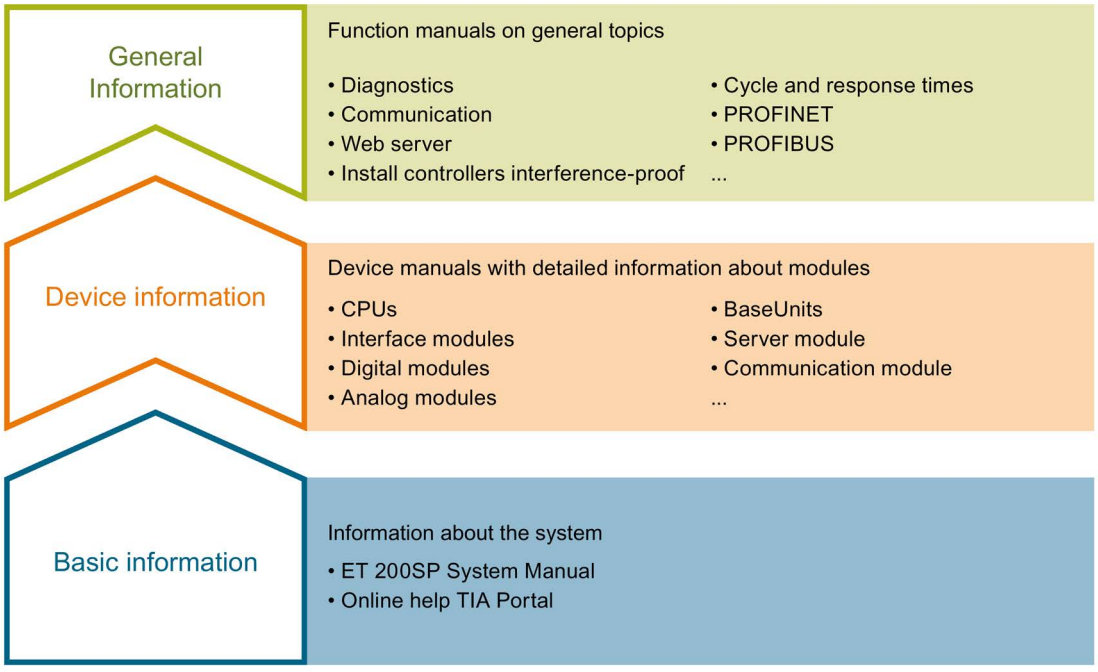

Basic information

The system manual describes in detail the configuration, installation, wiring and commissioning of the SIMATIC ET 200SP. distributed I/O system. The STEP 7 online help supports you in the configuration and programming.

Device information

Product manuals contain a compact description of the module-specific information, such as properties, wiring diagrams, characteristics and technical specifications.

General information

The function manuals contain detailed descriptions on general topics regarding the SIMATIC ET 200SP distributed I/O system, e.g. diagnostics, communication, Web server, designing interference-free controllers.

You can download the documentation free of charge from the Internet (http://w3.siemens.com/mcms/industrial-automation-systems-simatic/en/manual-overview/tech-doc-et200/Pages/Default.aspx).

Changes and supplements to the manuals are documented in a Product Information.

You can download the product information free of charge from the Internet (https://support.industry.siemens.com/cs/us/en/view/73021864).

Manual Collection ET 200SP

The Manual Collection contains the complete documentation on the SIMATIC ET 200SP distributed I/O system gathered together in one file.

You can find the Manual Collection on the Internet (http://support.automation.siemens.com/WW/view/en/84133942).

"mySupport"

With "mySupport", your personal workspace, you make the most of your Industry Online Support.

In "mySupport" you can store filters, favorites and tags, request CAx data and put together your personal library in the Documentation area. Furthermore, your data is automatically filled into support requests and you always have an overview of your current requests.

You need to register once to use the full functionality of "mySupport".

You can find "mySupport" in the Internet (https://support.industry.siemens.com/My/ww/en).

"mySupport" - Documentation

In the Documentation area of "mySupport", you have the possibility to combine complete manuals or parts of them to make your own manual.
You can export the manual in PDF format or in an editable format.

You can find "mySupport" - Documentation in the Internet (http://support.industry.siemens.com/My/ww/en/documentation).

"mySupport" - CAx Data

In the CAx Data area of "mySupport", you can have access the latest product data for your CAx or CAe system.

You configure your own download package with a few clicks.

In doing so you can select:

- Product images, 2D dimension drawings, 3D models, internal circuit diagrams, EPLAN macro files
- Manuals, characteristics, operating manuals, certificates
- Product master data

You can find "mySupport" - CAx Data in the Internet (http://support.industry.siemens.com/my/ww/en/CAxOnline).

Application examples

The application examples support you with various tools and examples for solving your automation tasks. Solutions are shown in interplay with multiple components in the system - separated from the focus in individual products.

You can find the application examples on the Internet (https://support.industry.siemens.com/sc/ww/en/sc/2054).

TIA Selection Tool

With the TIA Selection Tool, you can select, configure and order devices for Totally Integrated Automation (TIA).
This tool is the successor of the SIMATIC Selection Tool and combines the known configurators for automation technology into one tool.
With the TIA Selection Tool, you can generate a complete order list from your product selection or product configuration.

You can find the TIA Selection Tool on the Internet (http://w3.siemens.com/mcms/topics/en/simatic/tia-selection-tool).

SIMATIC Automation Tool

You can use the SIMATIC Automation Tool to run commissioning and maintenance activities simultaneously on various SIMATIC S7 stations as a bulk operation independently of the TIA Portal.

The SIMATIC Automation Tool provides a multitude of functions:

- Scanning of a PROFINET/Ethernet network and identification of all connected CPUs
- Address assignment (IP, subnet, gateway) and station name (PROFINET device) to a CPU
- Transfer of the data and the programming device/PC time converted to UTC time to the module
- Program download to CPU
- Operating mode switchover RUN/STOP
- Localization of the CPU by means of LED flashing
- Reading out CPU error information
- Reading the CPU diagnostic buffer
- Reset to factory settings
- Updating the firmware of the CPU and connected modules

You can find the SIMATIC Automation Tool on the Internet (https://support.industry.siemens.com/cs/ww/en/view/98161300).

PRONETA

With SIEMENS PRONETA (PROFINET network analysis), you analyze the plant network during commissioning. PRONETA features two core functions:

- The topology overview independently scans PROFINET and all connected components.
- The IO check is a fast test of the wiring and the module configuration of a system.

You can find SIEMENS PRONETA on the Internet (https://support.industry.siemens.com/cs/ww/en/view/67460624).

Product overview

2

2.1 Properties

Article number

6ES7135-6HD00-0BA1

View of the module

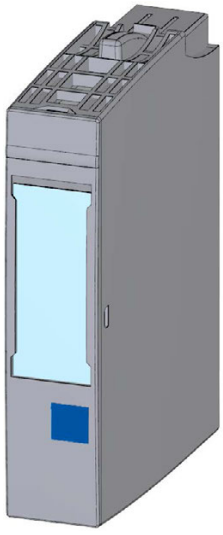

Image 2-1 View of the module AQ 4×U/I ST

Properties

The module has the following technical properties:

- Analog output module with 4 outputs
  - For current output and
  - voltage output
- Output range for current output:
  - ±20 mA, resolution 16 bits including sign
  - 0 to 20 mA, resolution 15 bits
  - 4 to 20 mA, resolution 14 bits
- Output range for voltage output:
  - ±10 V, resolution 16 bits including sign
  - ±5 V, resolution 15 bits including sign
  - 0 to 10 V, resolution 15 bits
  - 1 to 5 V, resolution 13 bits
- Electrically isolated from supply voltage L+
- Configurable diagnostics per module

The module supports the following functions:

- Firmware update
- I&M identification data
- Configuration in RUN
- PROFIenergy

Table 2- 1 Version dependencies of other module functions

Function	Product version of the module as of	Firmware version of the module as of
Value status	1	V1.1.0

You can configure the module with STEP 7 (TIA Portal) and with a GSD file.

Accessories

The following accessories must be ordered separately:

- Labeling strips
- Color identification labels
- Reference identification label
- Shield connector

See also

You will find additional information on the accessories in the ET 200SP distributed I/O system (http://support.automation.siemens.com/WW/view/en/58649293) system manual.

Wiring up

3

3.1 Terminal assignment

General terminal assignment

Table 3- 1 Terminal assignment

Terminal assignment for AQ 4×U/I ST (6ES7135-6HD00-0BA1)						
Terminal	**Assignment**	**Terminal**	**Assignment**	**Explanation**	**BaseUnit**[1]	**Color identification label**
1	Q_0+	**2**	Q_1+	• Q_n+: Analog output voltage/current (positive), channel n • Q_n-: Analog output voltage/current (negative), channel n • S_n+: Sensor line positive, channel n • S_n-: Sensor line negative, channel n	A0 A1	---
3	Q_2+	**4**	Q_3+			
5	Q_0-	**6**	Q_1-			
7	Q_2-	**8**	Q_3-			
9	S_0+	**10**	S_1+			
11	S_2+	**12**	S_3+			
13	S_0-	**14**	S_1-			
15	S_2-	**16**	S_3-			
L+	24 VDC	**M**	M			
Voltage 2-wire connection 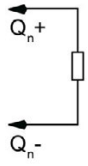		Voltage 3-wire connection 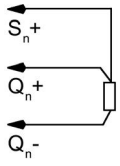		Voltage 4-wire connection 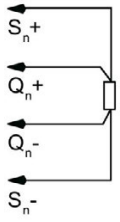		Current 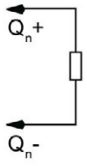

[1] Usable BaseUnit types, can be identified by the last two digits of the article number.

Note

The first BaseUnit of a station must be a light-colored BaseUnit. Also keep this in mind during the configuration.

You will find additional information on the BaseUnit types in the ET 200SP distributed I/O system (http://support.automation.siemens.com/WW/view/en/58649293) system manual.

3.2 Schematic circuit diagram

Schematic circuit diagram

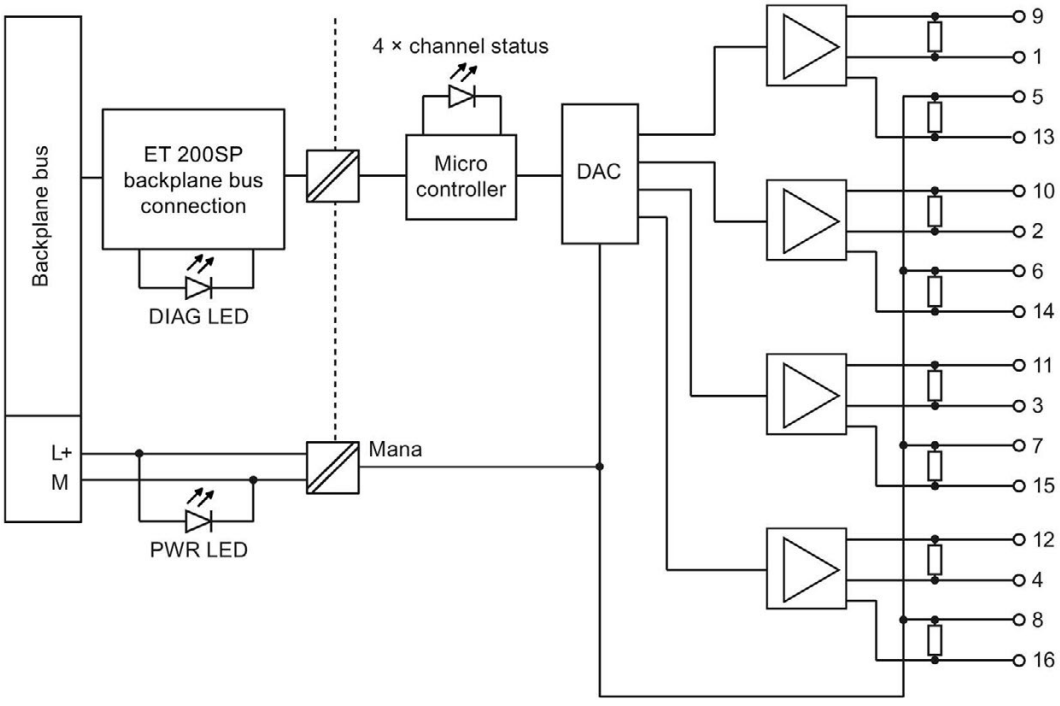

Image 3-1 Schematic circuit diagram for AQ 4×U/I ST

Parameters/address space 4

4.1 Output ranges

The analog output module AQ 4×U/I ST has the following measuring ranges:

Table 4- 1 Output ranges

Output type	Output ranges	Resolution
Current	± 20 mA 0 to 20 mA 4 to 20 mA	16 bits including sign 15 bits 14 bits
Voltage	±10 V ±5 V 0 to 10 V 1 to 5 V	16 bits including sign 15 bits including sign 15 bits 13 bits

The tables of the output ranges, overflow, overrange, etc. can be found in section Representation of analog values (Page 34).

4.2 Parameters

Parameters of the AQ 4xU/I ST

The effective range of the parameters depends on the type of configuration. The following configurations are possible:

- Central operation with an S7-1500 CPU
- Distributed operation on PROFINET IO in an ET 200SP system
- Distributed operation on PROFIBUS DP in an ET 200SP system

When assigning parameters in the user program, use the "WRREC" instruction to transfer the parameters to the module using the data records; refer to the section Parameter assignment and structure of the parameter data record (Page 31).

The following parameter settings are possible:

Table 4- 2 Settable parameters and their defaults (GSD file)

Parameters	Value range	Default	Configuration in RUN	Effective range with configuration software, e.g. STEP 7 (TIA Portal)	
				GSD file PROFINET IO	GSD file PROFIBUS DP
Diagnostics No supply voltage L+	• Disable • Enable	Disable	yes	Module	Module
Diagnostics: Short-circuit[1]	• Disable • Enable	Disable	yes	Module	Module
Diagnostics Overflow	• Disable • Enable	Disable	yes	Module	Module
Diagnostics Underflow	• Disable • Enable	Disable	yes	Module	Module
Diagnostics wire break[2]	• Disable • Enable	Disable	yes	Module	Module
Output type/range	• deactivated • Voltage +/- 10 V • Voltage +/- 5 V • Voltage 0..10 V • Voltage 1..5 V • Current +/- 20 mA • Current 0 - 20 mA • Current 4 - 20 mA	Current 4 - 20 mA	yes	Channel	Channel
Reaction to CPU STOP	• Turn off • Keep last value • Output substitute value	Turn off	yes	Channel	Module

Parameters	Value range	Default	Configuration in RUN	Effective range with configuration software, e.g. STEP 7 (TIA Portal)	
				GSD file PROFINET IO	GSD file PROFIBUS DP
Substitute value	For permissible substitute values for the various output ranges, see appendix Parameter data record (Page 30), Substitute values → Codes for substitute value table	0	yes	Channel	Channel
Potential group	• Use potential group of the left module • Allow new potential group	Use potential group of the left module	no	Module	Module

[1] no diagnostics detection between -0.5 V and +0.5 V (no short-circuit detection)

[2] no diagnostics detection between -3 mA and +3 mA (no wire break detection)

Note

Unused channels

"Disable" the unused channels in the parameter assignment. This improves the temperature characteristics of the module, see Derating, section Technical specifications (Page 25).

A disabled channel always returns the value "no current or voltage".

4.3 Explanation of the parameters

Diagnostics no supply voltage L+

Enabling of the diagnostics for no or insufficient supply voltage L+.

Diagnostics: Short-circuit

Enabling of the diagnostics when a short-circuit of the actuator supply occurs.

Diagnostics overflow

Enabling of the diagnostics when the output value exceeds the overrange.

Diagnostics underflow

Enabling of the diagnostics when the output value exceeds the overrange, falls below the minimum output value or reaches underflow.

Diagnostics wire break

Enabling of the diagnostics if the line to the actuator is broken.

Output type / output range

See section Output ranges (Page 16)

Reaction to CPU STOP

Determines the behavior of the module at CPU STOP.

Substitute value

The substitute value is the value that the module outputs in case of a CPU STOP.

Potential group

Specifies that a BaseUnit with voltage supply feed-in is located in this slot (see system manual ET 200SP Distributed I/O System (http://support.automation.siemens.com/WW/view/en/58649293)).

4.4 Address space

Configuration options

The following configurations are possible:

- Configuration 1: Without value status
- Configuration 2: With value status

Evaluating the value status

If you enable the value status for the analog module, an additional byte is occupied in the input address space. Bits 0 to 3 in this byte are assigned to a channel. They provide information about the validity of the analog value.

Bit = 1: There are no faults/errors on the module.

Bit = 0: Channel is disabled or there is a fault/error on the module.

If a fault/error occurs on a channel with this module, the value status for all channels is 0.

Address space

The following figure shows the assignment of the address space for the AQ 4×U/I ST with value status (Quality Information (QI)). The addresses for the value status are only available if the value status is enabled.

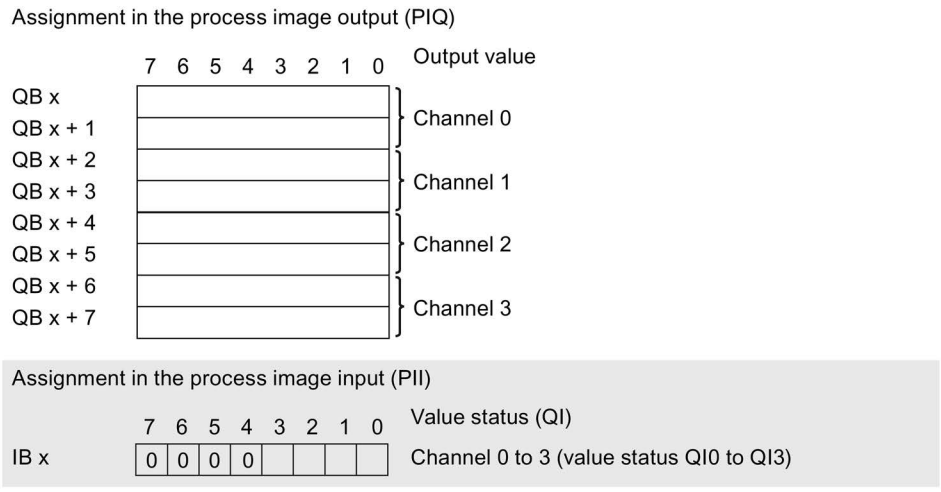

Image 4-1 Address space of the AQ 4×U/I ST with value status

Interrupts/diagnostics alarms

5

5.1 Status and error display

LED display

The figure below shows the LED displays of the AQ 4xU/I ST.

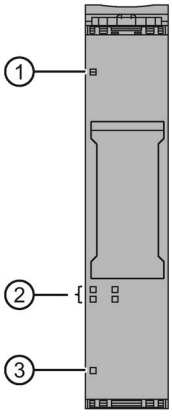

① DIAG (green/red)
② Channel status (green)
③ PWR (green)

Image 5-1 LED display

Meaning of the LED displays

The following tables show the meaning of the status and error displays. Measures for dealing with diagnostics alarms can be found in the section Diagnostics alarms (Page 24).

DIAG LED

Table 5- 1 DIAG LED fault/error display

DIAG LED	Meaning
□ off	Backplane bus supply of the ET 200SP not OK
☼ Flashes	Module parameters not assigned
■ on	Module parameters assigned and no module diagnostics
☼ Flashes	Module parameters assigned and module diagnostics

Channel status LED

Table 5- 2 Status display of the channel status LED

Channel status LED	Meaning
□ off	Channel disabled
■ on	Channel enabled

PWR LED

Table 5- 3 Status display of the PWR LED

PWR LED	Meaning
□ off	No supply voltage L+
■ on	Supply voltage L+ present

5.2 Interrupts

The analog output module AQ 4×U/I ST supports diagnostic interrupts.

Diagnostics interrupt

The module generates a diagnostics interrupt for the following events:

- Channel temporarily unavailable
- Short-circuit (voltage)
- Overtemperature
- Line break (current)
- High limit violated
- Low limit violated
- Error
- Parameter assignment error
- No load voltage

5.3 Diagnostics alarms

A diagnostics alarm is output for each diagnostics event and the DIAG LED on the module flashes. The diagnostics alarms can, for example, be read from the diagnostics buffer of the CPU. You can evaluate the error codes with the user program.

Table 5- 4 Diagnostics alarms, their meaning and how to deal with them

Diagnostics alarm	Error code	Meaning	Remedy
Channel temporarily unavailable	$1F_H$	Firmware being updated. The module is currently not performing any outputs.	–
		The channel is currently being calibrated.	
Short-circuit	1_H	Short-circuit of the actuator supply	Correct the process wiring
Overtemperature	4_H	Thermal overload of the I/O module	Correct the process wiring
Wire break	6_H	Actuator circuit impedance too high.	Use a different actuator type or wire differently, e.g. use cables with a larger cross-section
		Wire break between the module and actuator	Connect the cable
		Channel not connected (open)	• Disable the channel ("output type" parameter) • Connect the channel
High limit violated	7_H	The output value specified by the user program exceeds the overrange.	Correct the output value
Low limit violated	8_H	The output value specified by the user program is below the underrange.	Correct the output value
Error	9_H	Internal module error occurred.	Replace module
Parameter assignment error	10_H	• The module cannot evaluate parameters for the channel. • Incorrect parameter assignment.	Correct the parameter assignment
No load voltage	11_H	No or insufficient supply voltage L+	• Check supply voltage L+ on the BaseUnit • Check BaseUnit type

Technical specifications

6

6.1 Technical specifications

Technical specifications of AQ 4×U/I ST

	6ES7135-6HD00-0BA1
Product type designation	AQ 4xU/I ST
General information	
Firmware version	V1.1
Usable BaseUnits	BU type A0, A1
Color code for module-specific color identification label	CC00
Product function	
I&M data	Yes
Engineering with	
STEP 7 TIA Portal can be configured/integrated as of version	V11 SP2 / V13
STEP 7 can be configured/integrated as of version	V5.5 SP3 / -
PROFIBUS as of GSD version/GSD revision	GSD revision 5
PROFINET as of GSD version/GSD revision	V2.3 / -
CiR Configuration in RUN	
Configuration in RUN possible	Yes
Installation type/mounting	
Rack mounting possible	Yes
Front installation possible	Yes
Rail mounting possible	Yes
Wall/direct mounting possible	No
Supply voltage	
Type of supply voltage	DC
Rated value (DC)	24 V
Valid range low limit (DC)	19.2 V
Valid range high limit (DC)	28.8 V
Reverse polarity protection	Yes
Input current	
Current consumption, max.	150 mA
Power loss	
Power loss, typ.	1.5 W
Address area	
Address space per module	
Address space per module, max.	8 bytes; + 1 byte for QI information

	6ES7135-6HD00-0BA1
Analog outputs	
Number of analog outputs	4
Voltage output, short-circuit current, max.	45 mA
Cycle time (all channels), min.	5 ms
Output ranges, voltage	
0 to 10 V	Yes; 15 bits
1 to 5 V	Yes; 13 bits
-5 to +5 V	Yes; 15 bits including sign
-10 to +10 V	Yes; 16 bits including sign
Output ranges, current	
0 to 20 mA	Yes; 15 bits
-20 to +20 mA	Yes; 16 bits including sign
4 to 20 mA	Yes; 14 bits
Connection of actuators	
for voltage output two-wire connection	Yes
for voltage output three-wire connection	Yes
for voltage output four-wire connection	Yes
for current output two-wire connection	Yes
Load resistance (in nominal range of the output)	
For voltage outputs, min.	2 kΩ
For voltage outputs, capacitive load, max.	1 µF
For current outputs, max.	500 Ω
For current outputs, inductive load, max.	1 mH
Destruction limit for externally applied voltages and currents	
Voltages at the outputs	30 V
Cable length	
Cable length shielded, max.	1000 m; 200 m for voltage output
Analog value formation	
Oscillation time	
For resistive load	0.1 ms
For capacitive load	1 ms
For inductive load	0.5 ms
Errors/accuracies	
Linearity error (in relation to output range), (+/-)	±0.03 %
Temperature error (in relation to output range), (+/-)	0.005 %/K
Crosstalk between outputs, min.	-50 dB
Repeat accuracy in settled state at 25 °C (in relation to output range), (+/-)	±0.05 %
Operational limit in the entire temperature range	
Voltage in relation to output range, (+/-)	±0.5 %
Current in relation to output range, (+/-)	±0.5 %

	6ES7135-6HD00-0BA1
Basic error limit (operational limit at 25 °C)	
Voltage in relation to output range, (+/-)	±0.3 %
Current in relation to output range, (+/-)	±0.3 %
Interrupts/diagnostics/status information	
Substitute values can be applied	Yes
Interrupts	
Diagnostics interrupt	Yes
Diagnostics alarms	
Diagnostics	Yes
Monitoring of supply voltage	Yes
Wire break	Yes
Short-circuit	Yes
Overflow/underflow	Yes
Diagnostics display LED	
Monitoring of the supply voltage (PWR LED)	Yes; green LED
Channel status display	Yes; green LED
For module diagnostics	Yes; green/red LED
Electrical isolation	
Electrical isolation of channels	
Between the channels	No
Between the channels and the backplane bus	Yes
Between the channels and the supply voltage of the electronics	Yes
Permitted potential difference	
Between different circuits	75 VDC / 60 VAC (basic isolation)
Insulation	
Insulation tested with	707 VDC (type test)
Environmental conditions	
Operating temperature	
Horizontal installation, min.	0 °C
Horizontal installation, max.	60 °C
Vertical installation, min.	0 °C
Vertical installation, max.	50 °C
Dimensions	
Width	15 mm
Weights	
Weight, approx.	31 g

Derating trend for permitted load during power output and horizontal mounting position:

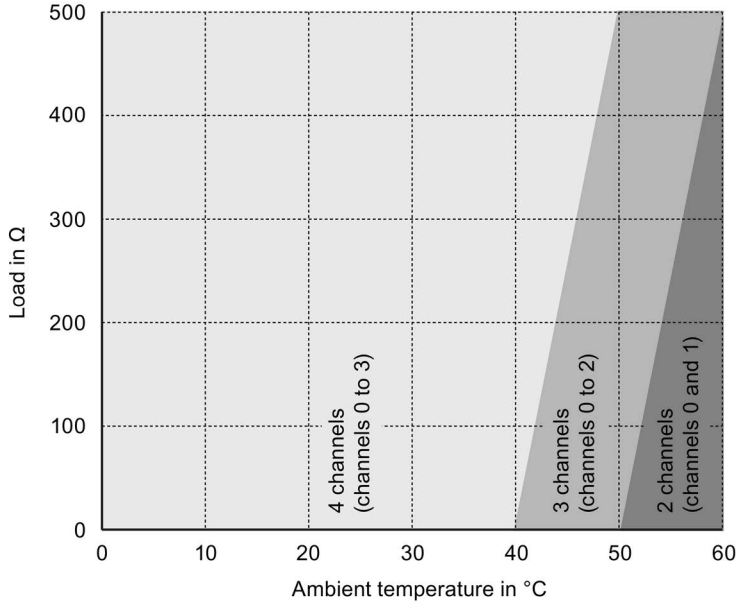

Image 6-1 Derating trend current output (horizontal)

Derating trend for permitted load during power output and vertical mounting position:

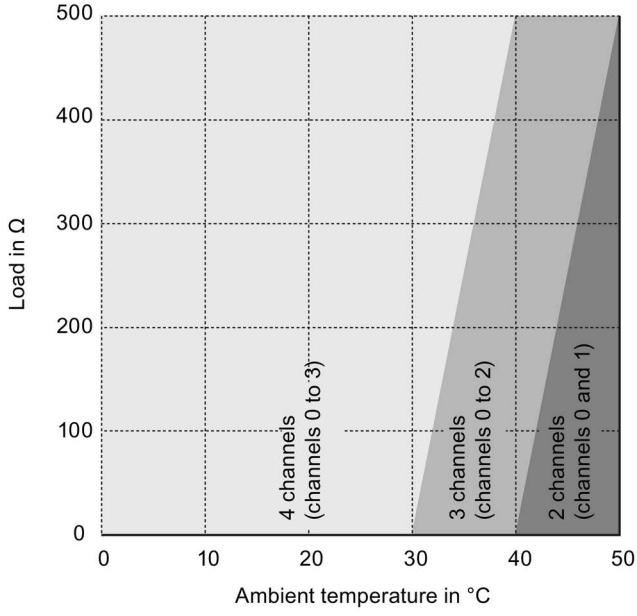

Image 6-2 Derating trend current output (vertical)

Dimension drawing

See manual ET 200SP BaseUnits
(http://support.automation.siemens.com/WW/view/en/59753521)

Parameter data record

A

A.1 Dependencies when configuring with GSD file

When configuring the module with a GSD file, remember that the settings of some parameters are dependent on each other.

Configuring with a PROFINET GSD file

The table lists the properties and their dependencies on the output type and output range for PROFINET.

Output type	Output range	Diagnostics					Reaction to CPU STOP	Substitute value
		No supply voltage L+	Short-circuit to M	Overflow	Underflow	Wire break		
deactivated		*	*	*	*	*	*	*
Voltage	±5 V	x	x	x	x	-	x	x
	±10 V	x	x	x	x	-	x	x
	1..5 V	x	x	x	x	-	x	x
	0..10 V	x	x	x	x	-	x	x
Current	±20 mA	x	-	x	x	x	x	x
	0..20 mA	x	-	x	x	x	x	x
	4..20 mA	x	-	x	x	x	x	x

x = Property is allowed, - = Property is **not allowed**, * = Property is not relevant

Configuring with a PROFIBUS GSD file

The table lists the properties and their dependencies on the output type and output range for PROFIBUS.

Output type	Output range	Diagnostics				Reaction to CPU STOP	Substitute value
		No supply voltage L+	Short-circuit to M	Overflow/ Underflow	Wire break		
deactivated		*	*	*	*	*	*
Voltage	±5 V	x	x	x	-	x	x
	±10 V	x	x	x	-	x	x
	1..5 V	x	x	x	-	x	x
	0..10 V	x	x	x	-	x	x
Current	±20 mA	x	-	x	x	x	x
	0..20 mA	x	-	x	x	x	x
	4..20 mA	x	-	x	x	x	x

x = Property is allowed, - = Property is **not allowed**, * = Property is not relevant

A.2 Parameter assignment and structure of the parameter data record

Parameter assignment in the user program

The module can be re-configured in RUN (for example, the voltage or current values of selected channels can be changed in RUN without having an effect on the other channels).

Changing parameters in RUN

The "WRREC" instruction is used to transfer the parameters to the module using data record 128. The parameters set in STEP 7 are not changed in the CPU, which means that the parameters set in STEP 7 will be valid again after a restart.

Output parameter STATUS

If errors occur when transferring parameters with the "WRREC" instruction, the module continues operation with the previous parameter assignment. The STATUS output parameter contains a corresponding error code.

You will find a description of the "WRREC" instruction and the error codes in the STEP 7 online help.

Structure of data record 128

Note

Channel 0 contains the diagnostics for the entire module.

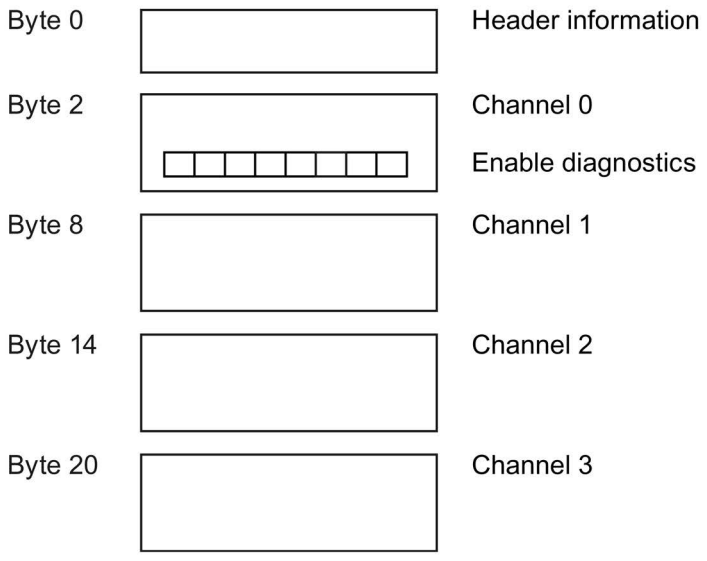

Image A-1 Structure of data record 128

Header information

The figure below shows the structure of the header information.

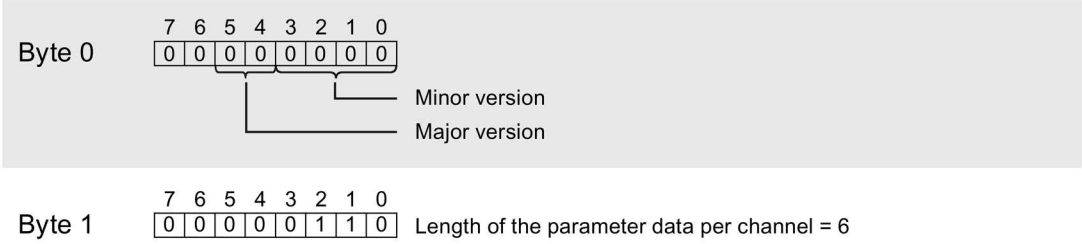

Image A-2 Header information

Parameters

The figure below shows the structure of the parameters for channels 0 to 3.

You enable a parameter by setting the corresponding bit to "1".

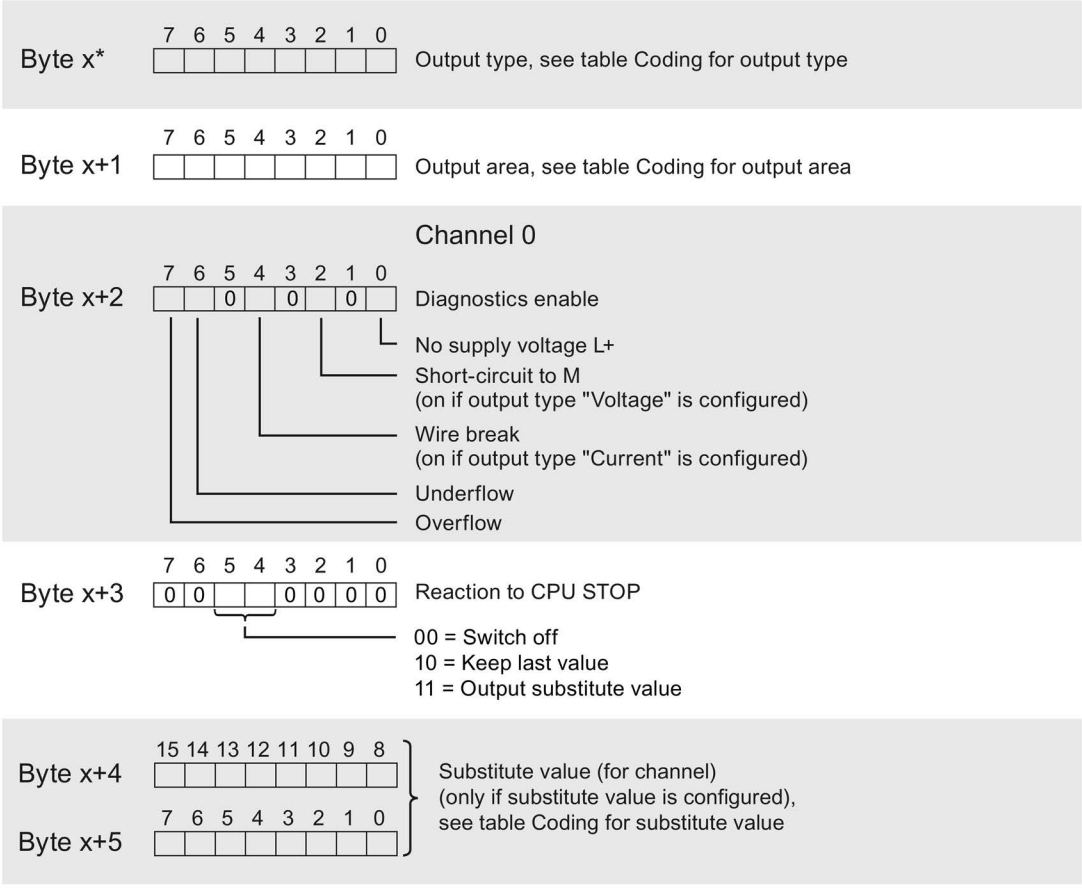

* x = 2 + (channel number × 6); channel number = 0 to 3

Image A-3 Structure byte x up to x+5 for the channel 0 to 3

Codes for output type

The following table contains the codes for the output types of the analog output module. You enter this coding in byte x (see previous figure).

Table A- 1 Codes for output type

Output type	Coding
Deactivated	0000 0000
Voltage	0000 0001
Current	0000 0011

Codes for output range

The following table contains the codes for the output ranges of the analog output module. You enter these codes in byte x+1 of data record 128 (see previous figure).

Table A- 2 Codes for output range

Output range	Coding
Voltage	
±10 V	0000 0000
±5 V	0000 0001
0 to 10 V	0000 0010
1 to 5 V	0000 0011
Current	
±20 mA	0000 0000
0 to 20 mA	0000 0001
4 to 20 mA	0000 0010

Codes for substitute value

The following table contains the codes for the substitute values. You enter these codes in bytes x+4 and x+5 (see previous figure).

Output range	Permissible substitute value
Voltage	
±10 V	-32512 to 32511
±5 V	-32512 to 32511
0 to 10 V	0 to 32511
1 to 5 V	-6912 to 32511
Current	
±20 mA	-29031 to 29030
0 to 20 mA	0 to 29030
4 to 20 mA	-692 to 29376

Representation of analog values

B

This appendix describes the analog values for all output ranges that you can use with the analog module AQ 4xU/I ST.

Measured value resolution

The digitized analog value is the same for all output values at the same nominal range. Analog values are output as fixed point numbers in two's complement.

In the following table, you will find the representation of the binary analog values and the associated decimal or hexadecimal units of the analog values.

The resolutions 14, 15 and 16 bits including sign are shown. Each analog value is entered in the ACCU left-justified. The bits marked with "x" are set to "0".

Table B- 1 Possible resolutions of the analog values

Resolution in bits	Values		Analog value	
	Decimal	Hexadecimal	High byte	Low byte
14	4	4_H	Sign 0 0 0 0 0 0 0	0 0 0 0 0 1 x x
15	2	2_H	Sign 0 0 0 0 0 0 0	0 0 0 0 0 0 1 x
16	1	1_H	Sign 0 0 0 0 0 0 0	0 0 0 0 0 0 0 1

B.1 Representation of output ranges

In the following tables, you can find the digitized representation of the bipolar and unipolar range output ranges. The resolution is 16 bits.

Table B- 2 Bipolar output ranges

Dec. value	Output value in %	Data word																Range
		2^{15}	2^{14}	2^{13}	2^{12}	2^{11}	2^{10}	2^{9}	2^{8}	2^{7}	2^{6}	2^{5}	2^{4}	2^{3}	2^{2}	2^{1}	2^{0}	
≥32512	117.589	0	1	1	1	1	1	1	0	1	1	1	1	1	1	1	1	Maximum output value
32511	117.589	0	1	1	1	1	1	1	0	1	1	1	1	1	1	1	1	Overrange
27649	100.004	0	1	1	0	1	1	0	0	0	0	0	0	0	0	0	1	
27648	100.000	0	1	1	0	1	1	0	0	0	0	0	0	0	0	0	0	Nominal range
1	0.003617	0	0	0	0	0	0	0	0	0	0	0	0	0	0	0	1	
0	0.000	0	0	0	0	0	0	0	0	0	0	0	0	0	0	0	0	
-1	-0.003617	1	1	1	1	1	1	1	1	1	1	1	1	1	1	1	1	
-27648	-100.000	1	0	0	1	0	1	0	0	0	0	0	0	0	0	0	0	
-27649	100.004	1	0	0	1	0	0	1	1	1	1	1	1	1	1	1	1	Underrange
-32512	-117.593	1	0	0	0	0	0	0	1	0	0	0	0	0	0	0	0	
≤ -32513	-117.593	1	0	0	0	0	0	0	1	0	0	0	0	0	0	0	0	Minimum output value

Table B- 3 Unipolar output ranges

Dec. value	Output value in %	Data word																Range
		2^{15}	2^{14}	2^{13}	2^{12}	2^{11}	2^{10}	2^{9}	2^{8}	2^{7}	2^{6}	2^{5}	2^{4}	2^{3}	2^{2}	2^{1}	2^{0}	
≥32512	117.589	0	1	1	1	1	1	1	1	x	x	x	x	x	x	x	x	Maximum output value
32511	117.589	0	1	1	1	1	1	1	0	1	1	1	1	1	1	1	1	Overrange
27649	100.004	0	1	1	0	1	1	0	0	0	0	0	0	0	0	0	1	
27648	100.000	0	1	1	0	1	1	0	0	0	0	0	0	0	0	0	0	Nominal range
1	0.003617	0	0	0	0	0	0	0	0	0	0	0	0	0	0	0	1	
0	0.000	0	0	0	0	0	0	0	0	0	0	0	0	0	0	0	0	
≤ 0	0	0	0	0	0	0	0	0	0	0	0	0	0	0	0	0	0	Minimum output value

B.2 Representation of analog values in the voltage output ranges

The tables below list the decimal and hexadecimal values (codes) of the possible voltage output ranges.

Table B- 4 Voltage output ranges ±10 V and ±5 V

Values			Voltage output range		Range
	Dec.	Hex.	±10 V	±5 V	
118.5149 %	32767	7FFF	11.76 V	5.88 V	Overflow*
	32512	7F00			
117.589 %	32511	7EFF	11.76 V	5.88 V	Overrange
	27649	6C01			
100 %	27648	6C00	10 V	5 V	Nominal range
75 %	20736	5100	7.5 V	3.75 V	
0.003617 %	1	1	361.7 µV	180.8 µV	
0 %	0	0	0 V	0 V	
	-1	FFFF	-361.7 µV	-180.8 µV	
-75 %	-20736	AF00	-7.5 V	-3.75 V	
-100 %	-27648	9400	-10 V	-5 V	
	-27649	93FF			Underrange
-117.593 %	-32512	8100	-11.76 V	-5.88 V	
	-32513	80FF	-11.76	-5.88 V	Underflow*
-118.519 %	-32768	8000			

* outputs positive maximum value or negative minimum value

Table B- 5 Voltage output range 0 V to 10 V

Values			Voltage output range	Range
	Dec.	Hex.	0 to 10 V	
118.519 %	32767	7FFF	11.76 V	Overflow*
	32512	7F00		
117.589 %	32511	7EFF	11.76 V	Overrange
	27649	6C01		
100 %	27648	6C00	10 V	Nominal range
75 %	20736	5100	7.5 V	
0.003617 %	1	1	361.7 µV	
0 %	0	0	0 V	
	-1	FFFF	0 V	Underflow*
-118.519 %	-32768	8000		

* outputs positive maximum value or negative minimum value

Table B- 6 Voltage output range 1 V to 5 V

Values			Voltage output range	Range
	Dec.	Hex.	1 to 5 V	
118.519 %	32767	7FFF	5.70 V	Overflow*
	32512	7F00		
117.589 %	32511	7EFF	5.70 V	Overrange
	27649	6C01		
100 %	27648	6C00	5 V	Nominal range
75 %	20736	5100	4 V	
0.003617 %	1	1	1 V + 144.7 µV	
0 %	0	0	1 V	
	-1	FFFF	1 V - 144.7 µV	Underrange
-25 %	-6912	E500	0 V	
	-6913	E4FF	0 V	Underflow*
-118.519 %	-32768	8000		

* outputs positive maximum value or negative minimum value

B.3 Representation of analog values in the current output ranges

The tables below list the decimal and hexadecimal values (codes) of the possible current output ranges.

Table B- 7 Current output range ±20 mA

Values			Current output range	Range
	Dec.	Hex.	±20 mA	
118.5149 %	32767	7FFF	21 mA	Overflow*
	29031	7167		
105 %	29030	7166	21 mA	Overrange
	27649	6C01	20 mA + 723.4 nA	
100 %	27648	6C00	20 mA	Nominal range
75 %	20736	5100	15 mA	
0.003617 %	1	1	723.4 nA	
0 %	0	0	0 mA	
	-1	FFFF	-723.4 nA	
-75 %	-20736	AF00	-15 mA	
-100 %	-27648	9400	-20 mA	
	-27649	93FF	-20 mA + 723.4 nA	Underrange
-105 %	-29031	8E99	-21 mA	
	-29032	8E98	-21 mA	Underflow*
-118.519 %	-32768	8000		

* outputs positive maximum value or negative minimum value

Table B- 8 Current output range 0 to 20 mA

Values			Current output range	Range
	Dec.	Hex.	0 to 20 mA	
118.5149 %	32767	7FFF	21 mA	Overflow*
	29031	7167		
105 %	29030	7166	21 mA	Overrange
	27649	6C01	20 mA + 723.4 nA	
100 %	27648	6C00	20 mA	Nominal range
75 %	20736	5100	15 mA	
0.003617 %	1	1	723.4 nA	
0 %	0	0	0 mA	
	-1	FFFF	0 mA	Underflow*
-118.519 %	-32768	8000		

* outputs positive maximum value or negative minimum value

Table B- 9 Current output ranges 4 to 20 mA

Values			Current output range	Range
	Dec.	Hex.	4 to 20 mA	
118.5149 %	32767	7FFF	21 mA	Overflow*
	29377	72C1		
106.25 %	29376	72C0	21 mA	Overrange
	27649	6C01	20 mA + 578.7 nA	
100 %	27648	6C00	20 mA	Nominal range
75 %	19008	4A40	16 mA	
0.003617 %	1	1	4 mA + 578.7 nA	
0 %	0	0	4 mA	
	-1	FFFF	3.9995 mA	Underrange
-2.5 %	-692	FD4C	3.6 mA	
	-693	FD4B	3.6 mA	Underflow*
-118.519 %	-32768	8000		

* outputs positive maximum value or negative minimum value

SIEMENS

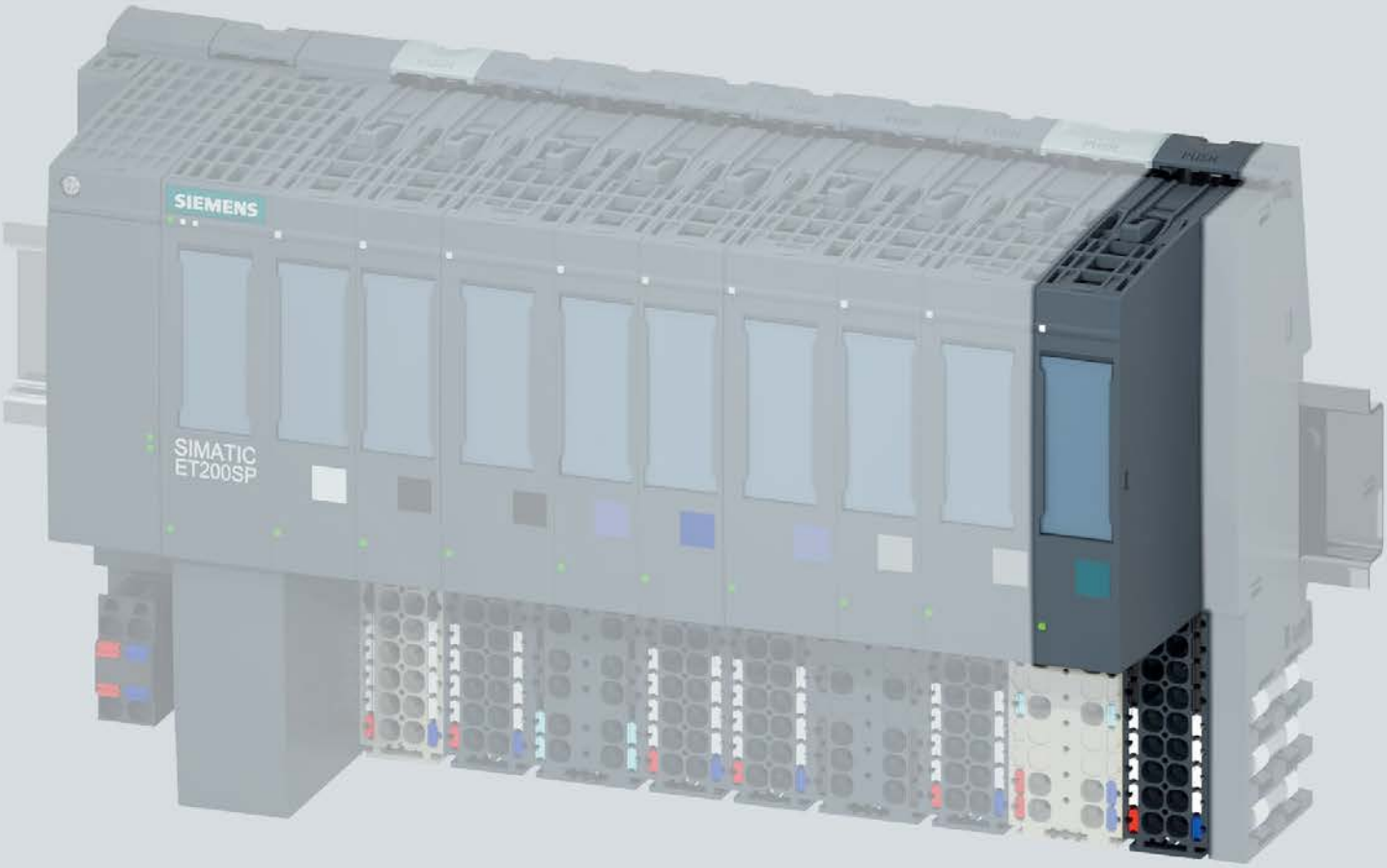

Manual

SIMATIC

ET 200SP

Technology module
TM Count 1x24V (6ES7138-6AA00-0BA0)

Edition 06/2018

SIEMENS

SIMATIC

ET 200SP
Technology Module TM Count 1x24V (6ES7138-6AA00-0BA0)

Manual

Preface

Documentation guide 1

Product overview 2

Wiring 3

Configuring/address space 4

Interrupts/diagnostic messages 5

Technical specifications 6

Parameter data record A

06/2018

A5E33002339-AC

Legal information

Warning notice system

This manual contains notices you have to observe in order to ensure your personal safety, as well as to prevent damage to property. The notices referring to your personal safety are highlighted in the manual by a safety alert symbol, notices referring only to property damage have no safety alert symbol. These notices shown below are graded according to the degree of danger.

⚠ DANGER

indicates that death or severe personal injury **will** result if proper precautions are not taken.

⚠ WARNING

indicates that death or severe personal injury **may** result if proper precautions are not taken.

⚠ CAUTION

indicates that minor personal injury can result if proper precautions are not taken.

NOTICE

indicates that property damage can result if proper precautions are not taken.

If more than one degree of danger is present, the warning notice representing the highest degree of danger will be used. A notice warning of injury to persons with a safety alert symbol may also include a warning relating to property damage.

Qualified Personnel

The product/system described in this documentation may be operated only by **personnel qualified** for the specific task in accordance with the relevant documentation, in particular its warning notices and safety instructions. Qualified personnel are those who, based on their training and experience, are capable of identifying risks and avoiding potential hazards when working with these products/systems.

Proper use of Siemens products

Note the following:

⚠ WARNING

Siemens products may only be used for the applications described in the catalog and in the relevant technical documentation. If products and components from other manufacturers are used, these must be recommended or approved by Siemens. Proper transport, storage, installation, assembly, commissioning, operation and maintenance are required to ensure that the products operate safely and without any problems. The permissible ambient conditions must be complied with. The information in the relevant documentation must be observed.

Trademarks

All names identified by ® are registered trademarks of Siemens AG. The remaining trademarks in this publication may be trademarks whose use by third parties for their own purposes could violate the rights of the owner.

Disclaimer of Liability

We have reviewed the contents of this publication to ensure consistency with the hardware and software described. Since variance cannot be precluded entirely, we cannot guarantee full consistency. However, the information in this publication is reviewed regularly and any necessary corrections are included in subsequent editions.

Siemens AG
Division Digital Factory
Postfach 48 48
90026 NÜRNBERG
GERMANY

A5E33002339-AC
℗ 05/2018 Subject to change

Copyright © Siemens AG 2018.
All rights reserved

Preface

Purpose of the documentation

This manual includes module-specific information on wiring, diagnostics and the technical specifications of the technology module.

General information regarding design and commissioning of the ET 200SP is available in the ET 200SP system manual.

The counting and measuring functions of the TM Count 1x24V technology module are described in more detail in the Counting, Measurement and Position Detection (http://support.automation.siemens.com/WW/view/en/59709820) function manual.

Conventions

Please observe notes marked as follows:

Note

A note contains important information on the product described in the documentation, on the handling of the product and on the section of the documentation to which particular attention should be paid.

Security information

Siemens provides products and solutions with industrial security functions that support the secure operation of plants, systems, machines and networks.

In order to protect plants, systems, machines and networks against cyber threats, it is necessary to implement – and continuously maintain – a holistic, state-of-the-art industrial security concept. Siemens' products and solutions only form one element of such a concept.

Customer is responsible to prevent unauthorized access to its plants, systems, machines and networks. Systems, machines and components should only be connected to the enterprise network or the internet if and to the extent necessary and with appropriate security measures (e.g. use of firewalls and network segmentation) in place.

Additionally, Siemens' guidance on appropriate security measures should be taken into account. For more information about industrial security, please visit (http://www.siemens.com/industrialsecurity).

Siemens' products and solutions undergo continuous development to make them more secure. Siemens strongly recommends to apply product updates as soon as available and to always use the latest product versions. Use of product versions that are no longer supported, and failure to apply latest updates may increase customer's exposure to cyber threats.

To stay informed about product updates, subscribe to the Siemens Industrial Security RSS Feed under (http://www.siemens.com/industrialsecurity).

Open Source Software

Open-source software is used in the firmware of the product described. Open Source Software is provided free of charge. We are liable for the product described, including the open-source software contained in it, pursuant to the conditions applicable to the product. Siemens accepts no liability for the use of the open source software over and above the intended program sequence, or for any faults caused by modifications to the software.

For legal reasons, we are obliged to publish the original text of the license conditions and copyright notices. Please read the information on this on the Internet (https://support.industry.siemens.com/cs/ww/en/view/109740777).

Table of contents

Preface 3

1 Documentation guide 7

2 Product overview 11

2.1 Properties 11

2.2 Functions 15
2.2.1 Detection of counting signals 15
2.2.2 Measured value determination 16
2.2.3 Switching the outputs at comparison values 16
2.2.4 Position input for Motion Control 17
2.2.5 Fast Mode 17
2.2.6 Additional functions 18

3 Wiring 19

3.1 Pin assignment and block diagram 19

4 Configuring/address space 23

4.1 Operating with "Counting and measurement" technology object 23
4.1.1 Configuring 23
4.1.2 Reaction to CPU STOP 24
4.1.3 Parameter setting 24
4.1.4 Address space 30
4.1.5 Isochronous mode 31

4.2 Position input for ""Motion Control"" technology object 32
4.2.1 Configuring 32
4.2.2 Parameter setting 34
4.2.3 Address space 36
4.2.4 Isochronous mode 36

4.3 Manual operation (without technology object) 38
4.3.1 Configuring 38
4.3.2 Reaction to CPU STOP 40
4.3.3 Parameter setting 41
4.3.4 Address space 47
4.3.5 Control and feedback interface 47
4.3.5.1 Assignment of the control interface 47
4.3.5.2 Assignment of the feedback interface 50
4.3.6 Isochronous mode 53

4.4 Fast Mode ... 54
4.4.1 Configuring ... 55
4.4.2 Reaction to CPU STOP ... 57
4.4.3 Parameter setting ... 57
4.4.4 Explanation of parameters ... 62
4.4.5 Address space ... 71
4.4.6 Assignment of the feedback interface ... 71
4.4.7 Isochronous mode ... 73

5 Interrupts/diagnostic messages ... 74

5.1 Status and error display ... 74

5.2 Diagnostic messages ... 77

5.3 Hardware interrupts ... 81

6 Technical specifications ... 83

A Parameter data record ... 91

A.1 Parameter assignment and structure of parameter data record ... 91

A.2 Parameter validation error ... 101

Documentation guide

1

The documentation for the SIMATIC ET 200SP distributed I/O system is arranged into three areas.
This arrangement enables you to access the specific content you require.

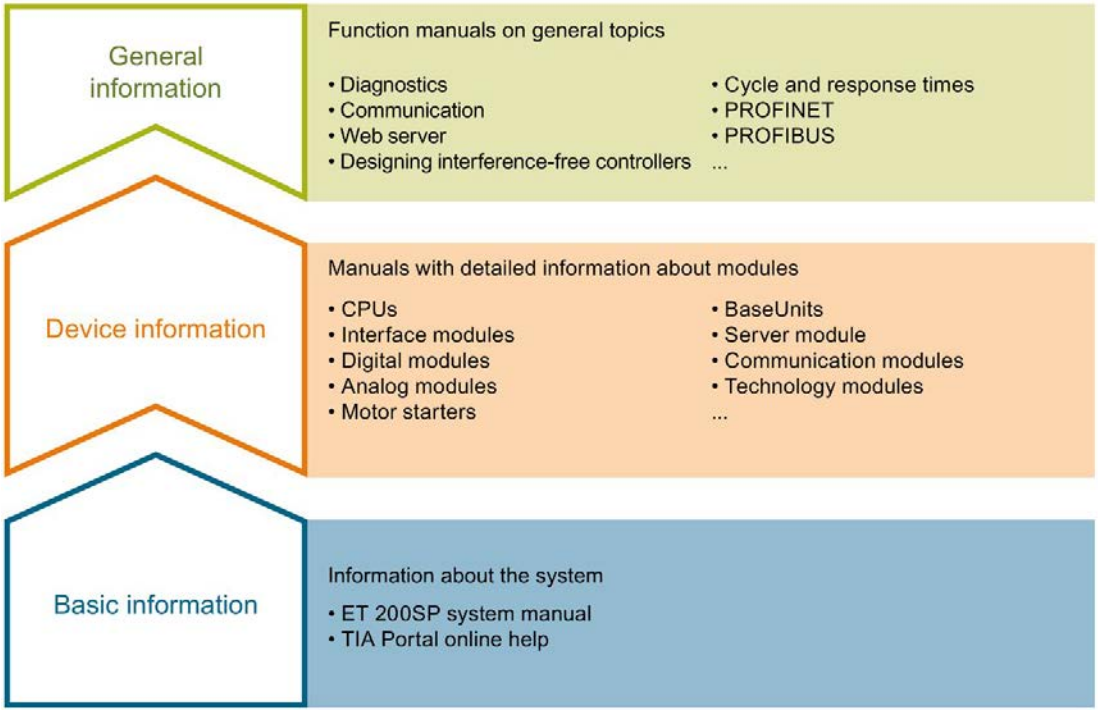

Basic information

The system manual describes in detail the configuration, installation, wiring and commissioning of the SIMATIC ET 200SP. distributed I/O system. The STEP 7 online help supports you in the configuration and programming.

Device information

Product manuals contain a compact description of the module-specific information, such as properties, wiring diagrams, characteristics and technical specifications.

General information

The function manuals contain detailed descriptions on general topics regarding the SIMATIC ET 200SP distributed I/O system, e.g. diagnostics, communication, Web server, motion control and OPC UA.

You can download the documentation free of charge from the Internet (https://support.industry.siemens.com/cs/ww/en/view/109742709).

Changes and supplements to the manuals are documented in a Product Information.

You can download the product information free of charge from the Internet (https://support.industry.siemens.com/cs/us/en/view/73021864).

Manual Collection ET 200SP

The Manual Collection contains the complete documentation on the SIMATIC ET 200SP distributed I/O system gathered together in one file.

You can find the Manual Collection on the Internet (https://support.industry.siemens.com/cs/ww/en/view/84133942).

"mySupport"

With "mySupport", your personal workspace, you make the most of your Industry Online Support.

In "mySupport" you can store filters, favorites and tags, request CAx data and put together your personal library in the Documentation area. Furthermore, your data is automatically filled into support requests and you always have an overview of your current requests.

You need to register once to use the full functionality of "mySupport".

You can find "mySupport" in the Internet (https://support.industry.siemens.com/My/ww/en).

"mySupport" - Documentation

In the Documentation area of "mySupport", you have the possibility to combine complete manuals or parts of them to make your own manual.
You can export the manual in PDF format or in an editable format.

You can find "mySupport" - Documentation in the Internet (http://support.industry.siemens.com/My/ww/en/documentation).

"mySupport" - CAx Data

In the CAx Data area of "mySupport", you can have access the latest product data for your CAx or CAe system.

You configure your own download package with a few clicks.

In doing so you can select:

- Product images, 2D dimension drawings, 3D models, internal circuit diagrams, EPLAN macro files
- Manuals, characteristics, operating manuals, certificates
- Product master data

You can find "mySupport" - CAx Data in the Internet (http://support.industry.siemens.com/my/ww/en/CAxOnline).

Application examples

The application examples support you with various tools and examples for solving your automation tasks. Solutions are shown in interplay with multiple components in the system - separated from the focus in individual products.

You can find the application examples on the Internet (https://support.industry.siemens.com/sc/ww/en/sc/2054).

TIA Selection Tool

With the TIA Selection Tool, you can select, configure and order devices for Totally Integrated Automation (TIA).
This tool is the successor of the SIMATIC Selection Tool and combines the known configurators for automation technology into one tool.
With the TIA Selection Tool, you can generate a complete order list from your product selection or product configuration.

You can find the TIA Selection Tool on the Internet (http://w3.siemens.com/mcms/topics/en/simatic/tia-selection-tool).

SIMATIC Automation Tool

You can use the SIMATIC Automation Tool to run commissioning and maintenance activities simultaneously on various SIMATIC S7 stations as a bulk operation independently of the TIA Portal.

The SIMATIC Automation Tool provides a multitude of functions:

- Scanning of a PROFINET/Ethernet network and identification of all connected CPUs
- Address assignment (IP, subnet, gateway) and station name (PROFINET device) to a CPU
- Transfer of the data and the programming device/PC time converted to UTC time to the module
- Program download to CPU
- Operating mode switchover RUN/STOP
- Localization of the CPU by means of LED flashing
- Reading out CPU error information
- Reading the CPU diagnostic buffer
- Reset to factory settings
- Updating the firmware of the CPU and connected modules

You can find the SIMATIC Automation Tool on the Internet (https://support.industry.siemens.com/cs/ww/en/view/98161300).

PRONETA

With SIEMENS PRONETA (PROFINET network analysis), you analyze the plant network during commissioning. PRONETA features two core functions:

- The topology overview independently scans PROFINET and all connected components.
- The IO check is a fast test of the wiring and the module configuration of a system.

You can find SIEMENS PRONETA on the Internet (https://support.industry.siemens.com/cs/ww/en/view/67460624).

SINETPLAN

SINETPLAN, the Siemens Network Planner, supports you in planning automation systems and networks based on PROFINET. The tool facilitates professional and predictive dimensioning of your PROFINET installation as early as in the planning stage. In addition, SINETPLAN supports you during network optimization and helps you to exploit network resources optimally and to plan reserves. This helps to prevent problems in commissioning or failures during productive operation even in advance of a planned operation. This increases the availability of the production plant and helps improve operational safety.

The advantages at a glance

- Network optimization thanks to port-specific calculation of the network load
- Increased production availability thanks to online scan and verification of existing systems
- Transparency before commissioning through importing and simulation of existing STEP 7 projects
- Efficiency through securing existing investments in the long term and optimal exploitation of resources

You can find SINETPLAN on the Internet (https://www.siemens.com/sinetplan).

Product overview

2

2.1 Properties

Article number

6ES7138-6AA00-0BA0

Firmware version

This manual describes the properties of the module with firmware version V1.3.

View of the module

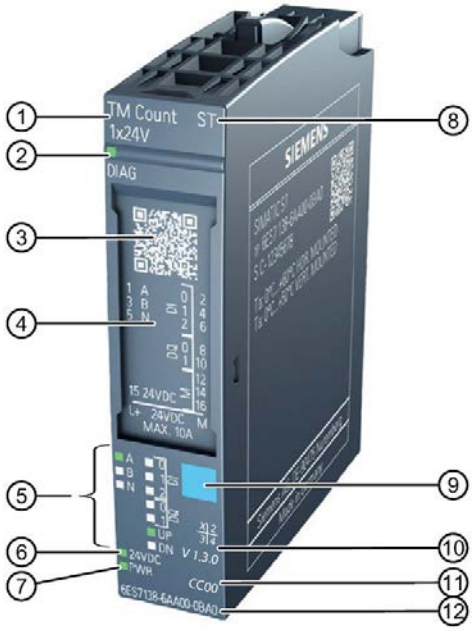

①	Module type and designation	⑦	LED for supply voltage
②	LED for diagnostics	⑧	Function class
③	2D matrix code	⑨	Module type color coding
④	Wiring diagram	⑩	Function and firmware version
⑤	LEDs for channel status	⑪	Color code for selecting the color-coded labels
⑥	LED for encoder supply	⑫	Article number

Figure 2-1 View of the TM Count 1x24V module

Properties

The TM Count 1x24V technology module has the following properties:

- Technical properties
  - One channel
  - Interfaces:

    24 V encoder signals A, B and N from sourcing, sinking or push-pull encoders and sensors

    24 V encoder supply, short-circuit-proof

    DI0, DI1 and DI2 digital input signals

    DQ0 and DQ1 digital output signals

    Supply voltage L+
  - Count range: 32 bits
  - Monitoring of encoder signals for wire break
  - Hardware interrupts configurable
  - Input filters for suppression of interferences at encoder inputs and digital inputs can be configured
- Supported encoder/signal types
  - 24 V incremental encoder with N signal
  - 24 V incremental encoder without N signal
  - 24 V pulse encoder with direction signal
  - 24 V pulse encoder without direction signal
  - 24 V pulse encoder with up/down counting signal
- Supported system functions
  - Isochronous mode
  - Firmware update
  - Identification data I&M

The module supports the following functions:

Table 2- 1 Version dependencies of the functions

Function	Firmware version of module	Configurable as of			
		STEP 7 (TIA Portal)	STEP 7	GSD	
				PROFINET IO	PROFIBUS DP
Firmware update	V1.0 or higher	V13	V5.5 SP4	X	—
I&M identification data	V1.0 or higher	V13	V5.5 SP4	X	X
Parameter reassignment in RUN	V1.0 or higher	V13	V5.5 SP4	X	X
Isochronous mode	V1.0 or higher	V13	V5.5 SP4	—	—
Counting/measuring	V1.0 or higher	V13	V5.5 SP4 or V5.5 SP3 with HSP0240 V1.0	X	X
Operating with "Counting and measurement" technology object	V1.0 or higher	V13	—	—	—
Position input for "Motion Control" technology object	V1.0 or higher	V13	—	—	—
Central operation on CPU 151xSP	V1.1 or higher	V13 SP1	—	—	—
Fast Mode	V1.2 or higher	V14 SP1 or V14 with HSP0199	V5.6 or V5.5 SP4 with HSP0240 V5.0	X	X
Operating with "Measuring input" technology object	V1.3 or higher	V15 with HSP0256	—	—	—
Position value range of 32 bits	V1.3 or higher	V15 with HSP0256	—	X	X

Accessories

The following accessories can be used with the module and are not included in the scope of delivery:

- Labeling strip
- Color identification labels
- Reference identification labels
- Shield connector

A BaseUnit of the A0 type is required to operate the technology module. You can find an overview of the BaseUnits that you can use with the technology module in the product information for the documentation of the ET 200SP distributed I/O system (http://support.automation.siemens.com/WW/view/en/73021864).

For detailed information on the installation procedure, refer to the ET 200SP Distributed I/O System (http://support.automation.siemens.com/WW/view/en/58649293) system manual.

2.2 Functions

2.2.1 Detection of counting signals

Counting is the detecting and adding up of events. The counters of the technology module detect encoder signals and pulses and evaluate them accordingly. The count direction can be specified using encoder or pulse signals or through the user program.

You can control the counting processes with the digital inputs. In addition, you can read the signal state of the respective digital input via the feedback interface.

You can specify the counter characteristics using the functions described below.

Counting limits

The counting limits define the counter value range used. The counting limits are configurable and can be modified during runtime with the user program.

You can configure the behavior of the counter at the counting limits.

Start value

You can configure a start value within the counting limits. The start value can be modified during runtime with the user program.

Gate control

You can define the time window in which the count signals are acquired with the hardware gate (HW gate) and software gate (SW gate).

Capture (Latch)

You can configure an external reference signal edge that triggers the saving of the current counter value as Capture value. The following external signals can trigger the Capture function:

- Rising or falling edge of a digital input
- Both edges of a digital input
- Rising edge of the N signal at the encoder input

The "Frequency of Capture function" parameter specifies whether the function is executed at each configured edge or only once after each enable.

Measuring input

If you use Position input for Motion Control (Page 17), you can use the "Measuring input" technology object to execute a measuring input function with a hardware digital input.

Hardware interrupts

The technology module can trigger a hardware interrupt in the CPU, for example, if a comparison event occurs, in the event of overflow or underflow, in the event of a zero crossing of the counter and/or of a change of count direction (direction reversal). You can specify which events during operation are to trigger a hardware interrupt.

2.2.2 Measured value determination

The following high-accuracy measurement functions are available (accuracy up to 100 ppm):

- Frequency measurement with the unit of hertz
- Period measurement with the unit of seconds
- Velocity measurement with a flexibly adaptable unit

Update time

You can configure the interval at which the technology module updates the measured values cyclically as the update time.

Gate control

You can define the time window in which the count signals are acquired with the hardware gate (HW gate) and software gate (SW gate).

2.2.3 Switching the outputs at comparison values

The available digital outputs DQ0 and DQ1 can be directly activated/switched by the specified comparison values or via the user program. The comparison values are configurable and can be modified during runtime with the user program. This enables very fast reaction times to be achieved.

Comparison values in the Counting mode

You define two comparison values in the Counting mode. If the current counter value meets the configured comparison condition, the corresponding digital output can be set to directly initiate control processes in the process.

Comparison values in the Measuring mode

You define two comparison values in the Measuring mode. If the current measured value meets the configured comparison condition, the corresponding digital output can be set to directly initiate control processes in the process.

2.2.4 Position input for Motion Control

You can use the technology module for position detection for the following axis technology objects of S7-1500 Motion Control :

- TO_PositioningAxis
- TO_SynchronousAxis
- TO_ExternalEncoder

In this operating mode, you can use the measuring input technology object (TO_MeasuringInput) to execute a measuring input function with hardware digital input DI1.

Additional information

You can find a detailed description of the use of Motion Control and its configuration in the following:

- Function manual S7-1500 Motion Control available for download on the Internet (http://support.automation.siemens.com/WW/view/en/59381279)
- Function manual S7-1500T Motion Control available for download on the Internet (https://support.industry.siemens.com/cs/ww/en/view/109481326)

2.2.5 Fast Mode

You can use the technology module in Fast Mode for very fast acquisition of counter or position value with compressed functionality. A reduced feedback interface but no control interface is available in Fast Mode. This allows you to use a shorter send clock for the CPU.

2.2.6 Additional functions

Synchronization

You can configure the edge of an external reference signal that loads the counter with the specified start value. The following external signals can trigger a synchronization:

- Rising or falling edge of a digital input
- Rising edge of signal N at the encoder input
- Rising edge of signal N at the encoder input depending on the level of the assigned digital input

The "Frequency of synchronization" parameter specifies whether the function is executed at each configured edge or only once after each enable.

Hysteresis

You can specify a hysteresis for the comparison values within which a digital output will be prevented from switching again.

Diagnostic interrupt

The technology module can trigger diagnostic interrupts. You enable the diagnostic interrupts in the device configuration.

Input filter

To suppress interference, you can configure an input filter for the 24 V encoder inputs and for the digital inputs.

Isochronous mode

The technology module supports the "Isochronous mode" system function. This system function enables counter values and measured values to be acquired in a defined system cycle.

Wiring 3

3.1 Pin assignment and block diagram

Das TM Count 1x24V is used with a BaseUnit of type A0 (article number 6ES7193-6BPx0-0xA0).

You connect the encoder signals, the digital input and output signals and the encoder supplies to the BaseUnit of the technology module. The supply voltage feed on the light BaseUnit BU...D of the associated potential group supplies the module and the digital outputs, and generates the encoder supply voltage.

BaseUnit

The BaseUnit is not included in the scope of delivery of the module and must be ordered separately.

You can find an overview of the BaseUnits that you can use with the technology module in the product information for the documentation of the ET 200SP distributed I/O system (http://support.automation.siemens.com/WW/view/en/73021864).

You can find information about selecting a suitable BaseUnit in the ET 200SP Distributed I/O System (http://support.automation.siemens.com/WW/view/en/58649293) system manual and ET 200SP BaseUnits (http://support.automation.siemens.com/WW/view/en/58532597/133300) device manual.

You can find information on wiring the BaseUnit, connecting cable shields, etc. in the Connecting section of the ET 200SP Distributed I/O System (http://support.automation.siemens.com/WW/view/en/58649293) system manual.

Supply voltage L+/M

You connect the supply voltage to terminals L+ and M on a light BaseUnit. For a dark BaseUnit, the supply voltage of the module to the left is used. An internal protection circuit protects the technology module from reverse polarity of the supply voltage. The technology module monitors whether the supply voltage is connected.

Encoder supply

For supplying the encoders and sensors connected to the digital inputs, the technology module provides a 24 V DC supply voltage at output 24VDC (terminal 15) with reference to M (terminals 12, 14 and 16). The voltage is monitored for short-circuit and overload.

Digital inputs DI0, DI1 and DI2

The digital inputs are used for gate control, synchronization and the Capture function.

The digital inputs are not isolated from each other.

Input delay for digital inputs

In order to suppress noise you can configure an input delay for the digital inputs.

Note

If you select the "None" or "0.05 ms" option, you must use shielded cables for connection of the digital inputs.

Digital outputs DQ0 and DQ1

The digital outputs are not isolated from each other.

The digital outputs are 24 V sourcing outputs in reference to M and can carry a rated load current of 0.5 A. They are protected against overload and short-circuit.

Relays and contactors can be directly connected without an external protective circuit. You can find information on the maximum possible operating frequencies and the inductive loads connected to the digital outputs in section Technical specifications (Page 83).

24 V encoder signals/count signals

The 24 V encoder signals are designated with the letters A, B and N. You can connect the following encoder types:

- Incremental encoder with N signal:

  The A, B and N signals are connected using the correspondingly marked terminals. The A and B signals are the two 90° phase-shifted incremental signals. N is the zero mark signal that supplies one pulse per revolution.

- Incremental encoder without N signal:

  The A and B signals are connected using the correspondingly marked terminals. The A and B signals are the two 90° phase-shifted incremental signals. The N terminal remains unconnected.

- Pulse encoder without direction signal:

  The counting signal is connected to the A terminal. The count direction can be specified via the control interface. The B and N terminals remain unconnected.

- Pulse encoder with direction signal:

  The counting signal is connected to the A terminal. The direction signal is connected to the B terminal. Counting down takes place at a high level of the direction signal. The N terminal remains unconnected.

- Pulse encoder with up/down counting signal:

  The up counting signal is connected to the A terminal. The down counting signal is connected to the B terminal. The N terminal remains unconnected.

The inputs are not isolated from each other. The inputs are isolated from the backplane bus.

You can connect the following encoders or sensors to the A, B and N inputs:

- Sourcing output:
  The A, B and N inputs are switched by the encoder or sensor to 24VDC .
- Sinking output:
  The A, B and N inputs are switched by the encoder or sensor to ground M .
- Push-pull:
  The A, B and N inputs are switched by the encoder or sensor alternately to 24VDC and ground M . Monitoring for wire break is possible with this type of encoder/sensor. The procedure of the wire break detection (alternate switching) requires that, in the event of a fault (wire break), the count can also change without a counting pulse until the wire break is detected.

Pin assignment of the BaseUnit

The table below shows the pin assignment, using the BaseUnit BU15-P16+A0+2B as an example.

Table 3- 1 Pin assignment of the BaseUnit BU15-P16+A0+2B

Designation					Signal name		View	Signal name		Designation
24 V incremental encoder		24 V pulse encoder								
with signal N	without signal N	with direction signal	without direction signal	up/down						
Encoder signal A		Counting signal A		Up counting signal A	A	1	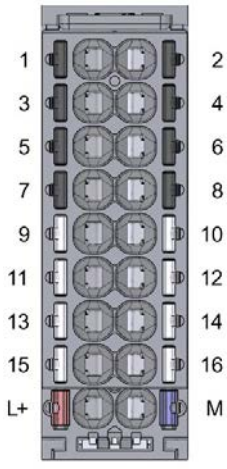	2	DI0	Digital input DI0
Encoder signal B		Direction signal B	—	Down counting signal B	B	3		4	DI1	Digital input DI1
Encoder signal N	—				N	5		6	DI2	Digital input DI2
—					—	7		8	DQ0	Digital output DQ0
—					—	9		10	DQ1	Digital output DQ1
—					—	11		12	M	Ground for encoder supply, digital inputs and digital outputs
—					—	13		14	M	
Encoder supply 24 V DC					24VDC	15		16	M	
Supply voltage DC 24 V					L+				M	Ground for supply voltage

Block diagram

The figure below shows the block diagram of the technology module.

You must ground the shields of the cables between encoder and technology module both through the shield terminal on the BaseUnit (shield bracket and terminal) and also on the encoder.

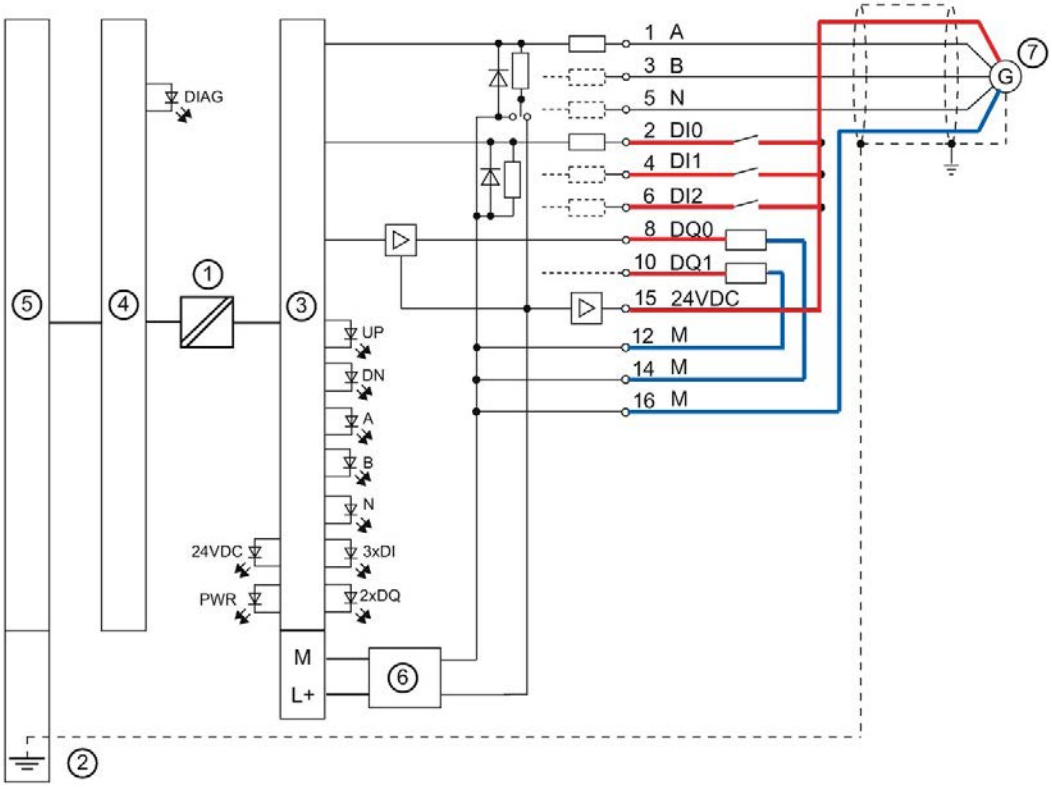

① Electrical isolation
② Shield terminal on the BaseUnit
③ Technology
④ Backplane bus interface module of the technology module
⑤ Backplane bus
⑥ Input filter
⑦ Incremental encoder with signal N

Figure 3-1 Block diagram with incremental encoder

Configuring/address space 4

4.1 Operating with "Counting and measurement" technology object

4.1.1 Configuring

Introduction

You configure the technology module and assign its parameters with STEP 7 (TIA Portal).

The technology object is used to control and monitor the functions of the technology module.

System environment

The technology module can be used in the following system environments:

Applications	Components required	Configuration software	In the user program
Central operation with a CPU 151xSP	• S7-1500 automation system • TM Count 1x24V	STEP 7 (TIA Portal): • Device configuration with hardware configuration • Parameter setting with High_Speed_Counter technology object	High_Speed_Counter instruction
Distributed operation with an S7-1500 CPU	• S7-1500 automation system • ET 200SP distributed I/O system • TM Count 1x24V		

Additional information

You can find a detailed description of the counting and measurement functions and their configuration in the following:

- Function manual Counting, Measurement and Position Detection available for download on the Internet (http://support.automation.siemens.com/WW/view/en/59709820)
- Information system of STEP 7 (TIA Portal) under "Using technology functions > Counting, measurement and position input > Counting, measurement and position input (S7-1500)"

Hardware Support Packages (HSP)

If firmware version V1.3 of the module is not yet integrated in your TIA Portal Version V15, you can integrate a corresponding module using HSP0256.

You can find the Hardware Support Packages (HSP) for download on the Internet (https://support.industry.siemens.com/cs/ww/en/view/72341852).

You can also access this download from the menu bar of STEP 7 (TIA Portal): "Options > Support packages > Download from the Internet".

4.1.2 Reaction to CPU STOP

You set the response of the technology module to CPU STOP for each channel in the basic parameters of the device configuration.

Table 4- 1 Response of technology module to CPU STOP

Option	Meaning
Continue operation	The technology module remains fully functional. Incoming count pulses are processed. The digital outputs continue to switch according to the parameter assignment.
Output substitute value	The technology module outputs the configured substitute values at the digital outputs until the next CPU STOP-RUN transition. The technology module is returned to its startup state after a STOP-RUN transition: The counter value is set to the start value and the digital outputs switch according to the parameter assignment.
Keep last value	The technology module outputs the values at the digital outputs that were valid when the transition to STOP took place until the next CPU STOP-RUN transition. If a digital output with the function "At comparison value for a pulse duration" is set at CPU stop, the digital output is reset after the pulse duration elapses. The technology module is returned to its startup state after a STOP-RUN transition: The counter value is set to the start value and the digital outputs switch according to the parameter assignment.

4.1.3 Parameter setting

You specify the properties of the technology module using various parameters. Depending on the settings, not all parameters are available. When parameters are assigned in the user program, the parameters are transferred to the module with the "WRREC" instruction and data record 128 (Page 91).

You set the parameters of the module as follows in this operating mode:

1. Insert the module from the hardware catalog under "Technology modules".
2. Set the device configuration in the hardware configuration.
   "Operating with "Counting and measurement" technology object" must be set as the operating mode.
3. Insert the High_Speed_Counter technology object from the project tree in folder "Technology objects > Add new object > Counting and measurement".
   You can find information on configuring with a technology object in function manual Counting, measurement and position detection (http://support.automation.siemens.com/WW/view/en/59709820).
4. Open the configuration of the High_Speed_Counter technology object, e.g. using the Configuration button in the instruction for the technology object.
5. Set the parameters of the technology object.
6. Download the project to the CPU.

Parameters of the TM Count 1x24V

The following parameter settings are possible in the hardware configuration:

Table 4- 2 Settable parameters and their default setting

Parameter	Value range	Default setting	Parameter reassignment in RUN	Scope
				HSP for STEP 7 (TIA Portal)
Potential group	• Use the potential group of the left module (dark BaseUnit) • Enable new potential group (light BaseUnit)	Use the potential group of the left module (dark BaseUnit)	No	Module
Reaction to CPU STOP	• Output substitute value • Keep last value • Continue operation	Output substitute value	Yes	Channel
Enable diagnostic interrupt on wire break	• Deactivated • Activated	Deactivated	Yes	Channel
Enable additional diagnostic interrupts	• Deactivated • Activated	Deactivated	Yes	Channel
Hardware interrupt: New Capture value available	• Deactivated • Activated	Deactivated	Yes	Channel
Hardware interrupt: Synchronization of the counter by an external signal	• Deactivated • Activated	Deactivated	Yes	Channel
Hardware interrupt: Gate start	• Deactivated • Activated	Deactivated	Yes	Channel
Hardware interrupt: Gate stop	• Deactivated • Activated	Deactivated	Yes	Channel
Hardware interrupt: Overflow (high counting limit violated)	• Deactivated • Activated	Deactivated	Yes	Channel
Hardware interrupt:Underflow (low counting limit violated)	• Deactivated • Activated	Deactivated	Yes	Channel
Hardware interrupt: Direction reversal	• Deactivated • Activated	Deactivated	Yes	Channel
Hardware interrupt: Zero crossing	• Deactivated • Activated	Deactivated	Yes	Channel

Parameter	Value range	Default setting	Parameter reassignment in RUN	Scope
				HSP for STEP 7 (TIA Portal)
Hardware interrupt: Comparison event for DQ0 occurred	• Deactivated • Activated	Deactivated	Yes	Channel
Hardware interrupt: Comparison event for DQ1 occurred	• Deactivated • Activated	Deactivated	Yes	Channel

The following parameter settings are possible in the technology object:

Table 4- 3 Settable parameters and their default setting

Parameter	Value range	Default setting	Parameter reassign-ment in RUN	Scope HSP for STEP 7 (TIA Portal)
Signal type	• Pulse (A) • Pulse (A) and direction (B) • Count up (A), count down (B) • Incremental encoder (A, B phase-shifted) • Incremental encoder (A, B, N)	Pulse (A) and direction (B)	Yes	Channel
Signal evaluation for counter inputs	• Single • Double • Quadruple	Single	Yes	Channel
Invert direction (counter inputs)	• Deactivated • Activated	Deactivated	Yes	Channel
Filter frequency for counter inputs	• 100 Hz • 200 Hz • 500 Hz • 1 kHz • 2 kHz • 5 kHz • 10 kHz • 20 kHz • 50 kHz • 100 kHz • 200 kHz	200 kHz	Yes	Channel
Sensor type	• Sourcing output • Sinking output • Push-pull (sinking and sourcing output)	Sourcing output	Yes	Channel
Reaction to signal N	• No reaction to signal N • Synchronization at signal N • Capture at signal N	No reaction to signal N	Yes	Channel
Frequency of synchronization	• Once • Periodic	Once	Yes	Channel
Frequency of Capture func-tion	• Once • Periodic	Once	Yes	Channel

Parameter	Value range	Default setting	Parameter reassignment in RUN	Scope HSP for STEP 7 (TIA Portal)
Counting high limit	-2147483648...2147483647	2147483647	Yes	Channel
Start value	-2147483648...2147483647	0	Yes	Channel
Counting low limit	-2147483648...2147483647	-2147483648	Yes	Channel
Reaction to violation of a counting limit	• Stop counting • Continue counting	Continue counting	Yes	Channel
Reset when counting limit is violated	• To opposite counting limit • To start value	To opposite counting limit	Yes	Channel
Reaction to gate start	• Set to start value • Continue with current value	Continue with current value	Yes	Channel
Set function of DI	• Gate start/stop (level-triggered) • Gate start (edge-triggered) • Gate stop (edge-triggered) • Synchronization • Enable synchronization at signal N • Capture • Digital input without function	• DI0: Gate start/stop (level-triggered) • DI1: Digital input without function • DI2: Digital input without function	Yes	Channel
Input delay for digital inputs	• None • 0.05 ms • 0.1 ms • 0.4 ms • 0.8 ms • 1.6 ms • 3.2 ms • 12.8 ms • 20 ms	0.1 ms	Yes	Channel
Edge selection for DI	• At rising edge • At falling edge • At rising and falling edge	At rising edge	Yes	Channel
Select level for DI	• Active with high level • Active with low level	Active with high level	Yes	Channel
Behavior of counter value after Capture with DI	• Continue counting • Set to start value and continue counting	Continue counting	Yes	Channel
Comparison value 0	-2147483648...2147483647	0	Yes	Channel
Comparison value 1	-2147483648...2147483647	10	Yes	Channel

Parameter	Value range	Default setting	Parameter reassignment in RUN	Scope HSP for STEP 7 (TIA Portal)
Operating mode	• Use count value as reference • Use measured value as reference	Use count value as reference	No	Channel
Set output	• Use by user program • Between comparison value and high limit / measured value >= comparison value • Between comparison value and low limit / measured value <= comparison value • At comparison value for a pulse duration • After set command from CPU until comparison value • Between comparison value 0 and 1 • Not between comparison value 0 and 1	DQ0, DQ1: Between comparison value and high limit	Yes	Channel
Count direction of DQ function	• Up • Down • In both directions	In both directions	Yes	Channel
Pulse duration [ms/10]	0...65535	5000 (corresponds to 0.5 s)	Yes	Channel
Substitute value for DQ0	• 0 • 1	0	Yes	Channel
Substitute value for DQ1	• 0 • 1	0	Yes	Channel
Hysteresis (in increments)	0...255	0	Yes	Channel
Measured variable	• Frequency • Period • Velocity	Frequency	Yes	Channel
Update time [ms] of measuring function	0...25000	10	Yes	Channel
Time base for velocity measurement	• 1 ms • 10 ms • 100 ms • 1 s • 60 s	60 s	Yes	Channel
Increments per unit	1...65535	1	Yes	Channel

Explanation of parameters

You can find a detailed description of the parameters in function manual Counting, Measurement and Position Detection in sections Basic parameters and Configuring the High_Speed_Counter available for download on the Internet (http://support.automation.siemens.com/WW/view/en/59709820).

4.1.4 Address space

Address space of the technology module

Table 4- 4 Size of input and output addresses of the TM Count 1x24V when operating with "Counting and measurement" technology object

	Inputs	Outputs
Range	16 bytes	12 bytes

4.1.5 Isochronous mode

The technology module supports the "Isochronous mode" system function. This system function enables counter values and measured values to be acquired in a defined system cycle.

In isochronous mode, the cycle of the user program, the transmission of the input signals and processing in the technology module are synchronized. The output signals switch immediately if the relevant comparison condition is met. A status change of a digital input immediately triggers the specified reaction of the technology module and the change of the status bit of the digital input in the feedback interface.

Use an OB of type "Synchronous Cycle" (e.g. OB61) in this operating mode. The High_Speed_Counter instruction is called in the assigned OB.

The update time for the measured value is synchronized with the system cycle in a suitable ratio and, if necessary, adapted in length. If you set "0", the measured value is updated once per system cycle.

Data processing

The data that was transmitted to the technology module in the current bus cycle via the control interface takes effect when it is processed in the internal technology module cycle. At the time the input data is read in (T_i), the counter value and the measured value as well as status bits are acquired and made available in the feedback interface for retrieval in the current bus cycle.

Isochronous mode parameters

In isochronous mode, the "Filter frequency" parameter can affect the isochronous mode parameters of the sync domain.

Because the isochronous mode parameters are not checked in RUN, overflows can occur if you change the parameters in RUN. To prevent overflows, select the option with the largest time required in the offline parameter assignment.

Additional information

You can find a detailed description of isochronous mode in the following:

- Function manual Isochronous Mode (STEP 7 (TIA Portal) V15.1 or higher) available for download on the Internet (https://support.industry.siemens.com/cs/ww/en/view/109755401)
- Function manual PROFINET with STEP 7 available for download on the Internet (https://support.industry.siemens.com/cs/ww/en/view/49948856)

4.2 Position input for ""Motion Control"" technology object

4.2.1 Configuring

Introduction

You configure the technology module and assign its parameters with STEP 7 (TIA Portal).

The technology object is used to control and monitor the functions of the technology module.

System environment

The technology module can be used in the following system environments:

Applications	Components required	Configuration software	In the user program
Central operation with a CPU 151xSP	• S7-1500 automation system • TM Count 1x24V	STEP 7 (TIA Portal): • Device configuration with hardware configuration • Parameter setting with axis and measuring input technology objects	Motion Control instructions
Distributed operation with an S7-1500 CPU	• S7-1500 automation system • ET 200SP distributed I/O system • TM Count 1x24V		

Additional information

You can find a detailed description of the use of Motion Control and its configuration in the following:

- Function manual S7-1500 Motion Control available for download on the Internet (http://support.automation.siemens.com/WW/view/en/59381279)
- Function manual S7-1500T Motion Control available for download on the Internet (https://support.industry.siemens.com/cs/ww/en/view/109481326)
- Information system of STEP 7 (TIA Portal) under "Using technology functions > Motion Control > Motion Control (S7-1200, S7-1500)"

You can find a description of configuring the technology module for position detection in the following:

- Function manual Counting, Measurement and Position Detection available for download on the Internet (http://support.automation.siemens.com/WW/view/en/59709820)
- Information system of STEP 7 (TIA Portal) under "Using technology functions > Counting, measurement and position input > Counting, measurement and position input (S7-1500)"

Hardware Support Packages (HSP)

If firmware version V1.3 of the module is not yet integrated in your TIA Portal Version V15, you can integrate a corresponding module using HSP0256.

You can find the Hardware Support Packages (HSP) for download on the Internet (https://support.industry.siemens.com/cs/ww/en/view/72341852).

You can also access this download from the menu bar of STEP 7 (TIA Portal): "Options > Support packages > Download from the Internet".

4.2.2 Parameter setting

You specify the properties of the technology module using various parameters. Depending on the settings, not all parameters are available.

You set the parameters of the module as follows in this operating mode:

1. Insert the module from the hardware catalog under "Technology modules".
2. Set the device configuration and the parameters of the module in the hardware configuration.
   "Position input for "Motion Control" technology object" must be set as the operating mode.
3. Insert the axis technology object and, if necessary, the measuring input technology object from the project tree in folder "Technology objects > Add new object > Motion Control". You can find information on configuring with axis technology objects in function manual S7-1500T Motion Control (https://support.industry.siemens.com/cs/ww/en/view/109481326).
4. Open the configuration of the axis technology object, e.g. using the Configuration button in the respective instruction for the technology object.
5. Set the parameters of the technology objects.
6. Download the project to the CPU.

Parameters of the TM Count 1x24V

The following parameter settings are possible:

Table 4- 5 Settable parameters and their default setting

Parameter	Value range	Default setting	Scope
			HSP for STEP 7 (TIA Portal)
Potential group	• Use the potential group of the left module (dark BaseUnit) • Enable new potential group (light BaseUnit)	Use the potential group of the left module (dark BaseUnit)	Module
Signal type	• Pulse (A) • Pulse (A) and direction (B) • Count up (A), count down (B) • Incremental encoder (A, B phase-shifted) • Incremental encoder (A, B, N)	Pulse (A) and direction (B)	Channel
Invert direction (counter inputs)	• Deactivated • Activated	Deactivated	Channel
Signal evaluation for counter inputs	• Single • Double • Quadruple	Single	Channel

Parameter	Value range	Default setting	Scope
			HSP for STEP 7 (TIA Portal)
Filter frequency for counter inputs	• 100 Hz • 200 Hz • 500 Hz • 1 kHz • 2 kHz • 5 kHz • 10 kHz • 20 kHz • 50 kHz • 100 kHz • 200 kHz	200 kHz	Channel
Sensor type	• Sourcing output • Sinking output • Push-pull (sinking and sourcing output)	Sourcing output	Channel
Signal selection for reference mark 0	• DI0 • Signal N of incremental encoder	DI0	Channel
Measuring input	DI1	DI1	Channel
Increments per revolution / steps per revolution	1...65535	1	Channel
Reference speed	6.00...210000.00 U/min	3000.00 U/min	Channel
Enable diagnostic interrupt on wire break	• Deactivated • Activated	Deactivated	Channel
Enable additional diagnostic interrupts	• Deactivated • Activated	Deactivated	Channel

Explanation of parameters

You can find a detailed description of the parameters in function manual Counting, Measurement and Position Detection, section Module parameters (position input for Motion Control) available for download on the Internet (http://support.automation.siemens.com/WW/view/en/59709820).

4.2.3 Address space

Address space of the technology module

Table 4- 6 Size of input and output addresses of the TM Count 1x24V with position input for "Motion Control" technology object

	Inputs	Outputs
Range	16 bytes	4 bytes

4.2.4 Isochronous mode

The technology module supports the "Isochronous mode" system function. Counter values can be acquired in a fixed system cycle with this system function.

In isochronous mode, the cycle of the user program, the transmission of the input signals and processing in the technology module are synchronized. A status change of a digital input immediately triggers the specified reaction of the technology module and the change of the status bit of the digital input in the feedback interface.

Use an OB of type "MC-Servo" in this operating mode. Isochronous mode is needed when using the output cam and cam track technology objects. When the measuring input technology is used in combination with hardware digital input DI1, isochronous mode is not needed.

Data processing

The data that was transmitted to the technology module in the current bus cycle via the control interface takes effect when it is processed in the internal technology module cycle. At the time the input data is read in (T_i), the counter value and the status bits are acquired and made available in the feedback interface for retrieval in the current bus cycle.

Isochronous mode parameters

In isochronous mode, the "Filter frequency" parameter can affect the isochronous mode parameters of the sync domain.

Because the isochronous mode parameters are not checked in RUN, overflows can occur if you change the parameters in RUN. To prevent overflows, select the option with the largest time required in the offline parameter assignment.

Additional information

You can find a detailed description of isochronous mode in the following:

- Function manual Isochronous Mode (STEP 7 (TIA Portal) V15.1 or higher) available for download on the Internet (https://support.industry.siemens.com/cs/ww/en/view/109755401)
- Function manual PROFINET with STEP 7 available for download on the Internet (https://support.industry.siemens.com/cs/ww/en/view/49948856)

4.3 Manual operation (without technology object)

4.3.1 Configuring

Introduction

You configure the technology module and assign its parameters with the configuration software.

The functions of the technology module are controlled and checked by the user program via the control and feedback interface.

System environment

The technology module can be used in the following system environments:

Applications	Components required	Configuration software	In the user program
Central operation with a CPU 151xSP	• S7-1500 automation system • TM Count 1x24V	STEP 7 (TIA Portal): • Device configuration and parameter setting with hardware configuration	Direct access to control and feedback interface in the I/O data
Distributed operation with an S7-1500 CPU	• S7-1500 automation system • ET 200SP distributed I/O system • TM Count 1x24V	STEP 7 (TIA Portal): • Device configuration and parameter setting with hardware configuration	
Distributed operation with an S7-300/400 CPU	• S7-300/400 or S7-1200 automation system • ET 200SP distributed I/O system • TM Count 1x24V	STEP 7 (TIA Portal): Device configuration and parameter setting with hardware configuration STEP 7: Device configuration and parameter setting with HSP (up to firmware version V1.2) or GSD file	
Distributed operation with an S7-1200 CPU	• S7-300/400 or S7-1200 automation system • ET 200SP distributed I/O system • TM Count 1x24V	STEP 7 (TIA Portal): Device configuration and parameter setting with hardware configuration	
Distributed operation in a third-party system	• Third-party automation system • ET 200SP distributed I/O system • TM Count 1x24V	Third-party configuration software: Device configuration and parameter setting with GSD file	

Additional information

You can find a detailed description of the counting and measurement functions and their configuration in the following:

- Function manual Counting, Measurement and Position Detection available for download on the Internet (http://support.automation.siemens.com/WW/view/en/59709820)
- Information system of STEP 7 (TIA Portal) under "Using technology functions > Counting, measurement and position input > Counting, measurement and position input (S7-1500)"

Hardware Support Packages (HSP)

STEP 7 (TIA Portal)

If firmware version V1.3 of the module is not yet integrated in your TIA Portal Version V15, you can integrate a corresponding module using HSP0256.

You can find the Hardware Support Packages (HSP) for download on the Internet (https://support.industry.siemens.com/cs/ww/en/view/72341852).

You can also access this download from the menu bar of STEP 7 (TIA Portal): "Options > Support packages > Download from the Internet".

STEP 7

You can find the Hardware Support Packages (HSP) for download on the Internet (https://support.industry.siemens.com/cs/ww/en/view/23183356).

GSD file

You can find the respective GSD file for the ET 200SP distributed I/O system for download on the Internet:

- GSD file for PROFINET IO (http://support.automation.siemens.com/WW/view/en/57138621)
- GSD file for PROFIBUS DP (http://support.automation.siemens.com/WW/view/en/73016883)

4.3.2 Reaction to CPU STOP

You set the response of the technology module to CPU STOP for each channel in the basic parameters of the device configuration.

Table 4- 7 Response of technology module to CPU STOP

Option	Meaning
Continue operation	The technology module remains fully functional. Incoming count pulses are processed. The digital outputs continue to switch according to the parameter assignment.
Output substitute value	The technology module outputs the configured substitute values at the digital outputs until the next CPU STOP-RUN transition. The technology module is returned to its startup state after a STOP-RUN transition: The counter value is set to the start value and the digital outputs switch according to the parameter assignment.
Keep last value	The technology module outputs the values at the digital outputs that were valid when the transition to STOP took place until the next CPU STOP-RUN transition. If a digital output with the function "At comparison value for a pulse duration" is set at CPU stop, the digital output is reset after the pulse duration elapses. The technology module is returned to its startup state after a STOP-RUN transition: The counter value is set to the start value and the digital outputs switch according to the parameter assignment.

4.3.3 Parameter setting

You specify the properties of the technology module using various parameters. Depending on the settings, not all parameters are available. When parameters are assigned in the user program, the parameters are transferred to the module with the "WRREC" instruction and data record 128 (Page 91).

You set the parameters of the module as follows in this operating mode:

Parameter setting using...	Basic procedure
Hardware configuration in STEP 7 (TIA Portal)	1. Insert the module from the hardware catalog under "Technology modules". 2. Set the device configuration and the parameters of the module in the hardware configuration. "Manual operation (without technology object)" must be set as the operating mode. 3. Download the project to the CPU.
Hardware configuration in STEP 7 with HSP	1. Install the appropriate HSP file. You will then find the module in the hardware catalog under "ET 200SP". 2. Set the device configuration and the parameters in the hardware configuration. 3. Download the project to the CPU.
Hardware configuration with GSD file for distributed operation on PROFINET IO	1. Install the current PROFINET GSD file. You will then find the module in the hardware catalog under "Other field devices > PROFINET IO > I/O". 2. Set the parameters in the hardware configuration. You can find information on the respective dependencies of the parameters in function manual Counting, Measurement and Position Detection (http://support.automation.siemens.com/WW/view/en/59709820). 3. Download the project to the CPU.
Hardware configuration with GSD file for distributed operation on PROFIBUS DP	1. Install the current PROFIBUS GSD file. You will then find the module in the hardware catalog under "Other field devices > PROFIBUS DP > I/O". 2. Set the parameters in the hardware configuration. You can find information on the respective dependencies of the parameters in function manual Counting, Measurement and Position Detection (http://support.automation.siemens.com/WW/view/en/59709820). The parameters marked with [1] in the following tables are not configurable in the PROFIBUS GSD file. 3. Download the project to the CPU. The parameters marked with [1] in the following tables are downloaded with their default setting. 4. If necessary, set the parameters marked with [1] in the user program using data record 128.

Parameters of the TM Count 1x24V

The following parameter settings are possible:

Table 4- 8 Settable parameters and their default setting

Parameter	Value range	Default setting	Parameter reassignment in RUN	Scope
				HSP for STEP 7 (TIA Portal); HSP for STEP 7; GSD file
Potential group	• Use the potential group of the left module (dark BaseUnit) • Enable new potential group (light BaseUnit)	Use the potential group of the left module (dark BaseUnit)	No	Module
Operating mode[3]	• Counting • Measuring	Counting	No	Channel
Reaction to CPU STOP[1]	• Output substitute value • Keep last value • Continue operation	Output substitute value	Yes	Channel
Substitute value for DQ0[1]	• 0 • 1	0	Yes	Channel
Substitute value for DQ1[1]	• 0 • 1	0	Yes	Channel
Enable diagnostic interrupt on wire break[2]	• Deactivated • Activated	Deactivated	Yes	Channel
Enable additional diagnostic interrupts	• Deactivated • Activated	Deactivated	Yes	Channel
Hardware interrupt: New Capture value available[1]	• Deactivated • Activated	Deactivated	Yes	Channel
Hardware interrupt: Synchronization of the counter by an external signal[1]	• Deactivated • Activated	Deactivated	Yes	Channel
Hardware interrupt: Gate start[1]	• Deactivated • Activated	Deactivated	Yes	Channel
Hardware interrupt: Gate stop[1]	• Deactivated • Activated	Deactivated	Yes	Channel
Hardware interrupt: Overflow (high counting limit violated)[1]	• Deactivated • Activated	Deactivated	Yes	Channel
Hardware interrupt:Underflow (low counting limit violated)[1]	• Deactivated • Activated	Deactivated	Yes	Channel

Parameter	Value range	Default setting	Parameter reassign-ment in RUN	Scope
				HSP for STEP 7 (TIA Portal); HSP for STEP 7; GSD file
Hardware interrupt: Direction reversal[1]	• Deactivated • Activated	Deactivated	Yes	Channel
Hardware interrupt: Zero crossing[1]	• Deactivated • Activated	Deactivated	Yes	Channel
Hardware interrupt: Comparison event for DQ0 occurred[1]	• Deactivated • Activated	Deactivated	Yes	Channel
Hardware interrupt: Comparison event for DQ1 occurred[1]	• Deactivated • Activated	Deactivated	Yes	Channel
Signal type	• Pulse (A) • Pulse (A) and direction (B) • Count up (A), count down (B) • Incremental encoder (A, B phase-shifted) • Incremental encoder (A, B, N)	Pulse (A) and direction (B)	Yes	Channel
Invert direction[1] (counter inputs)	• Deactivated • Activated	Deactivated	Yes	Channel
Signal evaluation for counter inputs	• Single • Double • Quadruple	Single	Yes	Channel
Filter frequency for counter inputs[1]	• 100 Hz • 200 Hz • 500 Hz • 1 kHz • 2 kHz • 5 kHz • 10 kHz • 20 kHz • 50 kHz • 100 kHz • 200 kHz	200 kHz	Yes	Channel
Sensor type	• Sourcing output • Sinking output • Push-pull (sinking and sourcing output)	Sourcing output	Yes	Channel

Parameter	Value range	Default setting	Parameter reassignment in RUN	Scope
				HSP for STEP 7 (TIA Portal); HSP for STEP 7; GSD file
Reaction to signal N[1]	• No reaction to signal N • Synchronization at signal N • Capture at signal N	No reaction to signal N	Yes	Channel
Frequency of synchronization[1]	• Once • Periodic	Once	Yes	Channel
Frequency of Capture function[1,4]	• Once • Periodic	Once	Yes	Channel
High counting limit[1]	-2147483648...2147483647	2147483647	Yes	Channel
Start value[1]	-2147483648...2147483647	0	Yes	Channel
Counting low limit[1]	-2147483648...2147483647	-2147483648	Yes	Channel
Reaction to violation of a counting limit	• Stop counting • Continue counting	Continue counting	Yes	Channel
Reset when counting limit is violated	• To opposite counting limit • To start value	To opposite counting limit	Yes	Channel
Reaction to gate start	• Set to start value • Continue with current value	Continue with current value	Yes	Channel
Set function of DI	• Gate start/stop (level-triggered) • Gate start (edge-triggered) • Gate stop (edge-triggered) • Synchronization • Enable synchronization at signal N • Capture • Digital input without function	• DI0: Gate start/stop (level-triggered) • DI1: Digital input without function • DI2: Digital input without function	Yes	Channel
Select level for DI[1]	• Active with high level • Active with low level	Active with high level	Yes	Channel
Edge selection for DI[1]	• At rising edge • At falling edge • At rising and falling edge	At rising edge	Yes	Channel
Behavior of counter value after Capture with DI [1]	• Continue counting • Set to start value and continue counting	Continue counting	Yes	Channel

Parameter	Value range	Default setting	Parameter reassignment in RUN	Scope
				HSP for STEP 7 (TIA Portal); HSP for STEP 7; GSD file
Input delay for digital inputs[1]	• None • 0.05 ms • 0.1 ms • 0.4 ms • 0.8 ms • 1.6 ms • 3.2 ms • 12.8 ms • 20 ms	0.1 ms	Yes	Channel
Set output	• Use by user program • Between comparison value and high limit / measured value >= comparison value • Between comparison value and low limit / measured value <= comparison value • At comparison value for a pulse duration • After set command from CPU until comparison value • Between comparison value 0 and 1 • Not between comparison value 0 and 1	DQ0, DQ1: Between comparison value and high limit	Yes	Channel
Comparison value 0[1]	-2147483648...2147483647	0	Yes	Channel
Comparison value 1[1]	-2147483648...2147483647	10	Yes	Channel
Count direction of DQ function[1]	• Up • Down • In both directions	In both directions	Yes	Channel
Pulse duration [ms/10][1]	0...65535	5000 (corresponds to 0.5 s)	Yes	Channel
Hysteresis (in increments)[1]	0...255	0	Yes	Channel
Measured variable	• Frequency • Period • Velocity	Frequency	Yes	Channel
Update time [ms] of the measuring function[1]	0...25000	10	Yes	Channel

Parameter	Value range	Default setting	Parameter reassign-ment in RUN	Scope
				HSP for STEP 7 (TIA Portal); HSP for STEP 7; GSD file
Time base for velocity measurement[1]	• 1 ms • 10 ms • 100 ms • 1 s • 60 s	60 s	Yes	Channel
Increments per unit[1]	1...65535	1	Yes	Channel

[1] Because the number of parameters is limited to a maximum of 244 bytes per station in the PROFIBUS GSD configuration, the possible parameter assignments are limited. The parameters are preassigned default settings in the module. If your PROFIBUS master supports the "Write/read data record" function, you can set these parameters using data record 128.

[2] When a GSD file is used, this diagnostic interrupt is enabled with the "Enable additional diagnostic interrupts" parameter and is then not separately configurable.

[3] When configuring with HSP for STEP 7 or with a GSD file, you determine the operating mode when you select the module name.

[4] Not available with HSP for STEP 7

Explanation of parameters

You can find a detailed description of the parameters in function manual Counting, Measurement and Position Detection, sections Basic parameters and Manual operation available for download on the Internet (http://support.automation.siemens.com/WW/view/en/59709820).

4.3.4 Address space

Address space of the technology module

Table 4- 9 Size of input and output addresses of the TM Count 1x24V with manual operation

	Inputs	Outputs
Range	16 bytes	12 bytes

4.3.5 Control and feedback interface

Note

The control and feedback interface is compatible with the control and feedback interface of the TM Count 2x24V, TM PosInput 2 and TM PosInput 1 technology modules of the S7-1500 automation system.

4.3.5.1 Assignment of the control interface

The user program uses the control interface to influence the behavior of the technology module.

Control interface

The following table shows the assignment of the control interface:

Byte offset from start address ↓	Bit 7	Bit 6	Bit 5	Bit 4	Bit 3	Bit 2	Bit 1	Bit 0
0…3	SLOT_0: DINT or REAL: Load value (meaning of the value is specified in LD_SLOT_0) Value range: –2147483648 to 2147483647_D or 80000000 to $7FFFFFFF_H$							
4…7	SLOT_1: DINT or REAL: Load value (meaning of the value is specified in LD_SLOT_1) Value range: –2147483648 to 2147483647_D or 80000000 to $7FFFFFFF_H$							
8	LD_SLOT_1				LD_SLOT_0			
9	EN_ CAPTURE	EN_ SYNC_DN	EN_ SYNC_UP	SET_DQ1	SET_DQ0	TM_ CTRL_DQ1	TM_ CTRL_DQ0	SW_GATE

Byte offset from start address ↓	Bit 7	Bit 6	Bit 5	Bit 4	Bit 3	Bit 2	Bit 1	Bit 0
10	SET_DIR	Reserved					RES_ EVENT	RES_ ERROR
11	Reserved							

Explanations

Control bit/value	Explanations
EN_CAPTURE	Use this bit to enable the Capture function. Resetting this bit resets a set EVENT_CAP in the feedback interface.
EN_SYNC_DN	Use this bit to enable the synchronization of the counter when counting in downward direction with an incremental encoder or pulse encoder. Resetting this bit resets a set EVENT_SYNC in the feedback interface.
EN_SYNC_UP	Use this bit to enable the synchronization of the counter when counting in upward direction with an incremental encoder or pulse encoder. Resetting this bit resets a set EVENT_SYNC in the feedback interface.
LD_SLOT_m	Use this load request to specify the meaning of the value in SLOT_m: • 0000 means: No action, idle • 0001 means: Load counter value • 0010 not permitted • 0011 means: Load start value • 0100 means: Load comparison value 0 • 0101 means: Load comparison value 1 • 0110 means: Load counting low limit • 0111 means: Load counting high limit • 1000 to 1111 not permitted The technology module executes the respective action as soon as LD_SLOT_m changes. If values are loaded simultaneously using LD_SLOT_0 and LD_SLOT_1, the value from SLOT_0 is internally applied first and then the value from SLOT_1 . This can produce unexpected intermediate states.
RES_EVENT	Use this bit to trigger the reset of the saved events in the EVENT_ZERO, EVENT_OFLW, EVENT_UFLW, EVENT_CMP0, EVENT_CMP1 feedback bits.
RES_ERROR	Use this bit to trigger the reset of the saved error states LD_ERROR and ENC_ERROR .
Reserved	Reserve bits must be set to 0.
SET_DIR	Use this bit to specify the count direction for signal type "Pulse (A)". • 0 means: Up • 1 means: Down
SET_DQ0	Use this bit to set digital output DQ0 when TM_CTRL_DQ0 is set to 0. In the case of the function "After set command from CPU until comparison value", SET_DQ0 is effective regardless of TM_CTRL_DQ0 as long as the counter value is not equal to the comparison value.

Control bit/value	Explanations
SET_DQ1	Use this bit to set digital output DQ1 when TM_CTRL_DQ1 is set to 0. In the case of the function "After set command from CPU until comparison value", SET_DQ1 is effective regardless of TM_CTRL_DQ1 as long as the counter value is not equal to the comparison value.
SW_GATE	Use this bit to open and close the software gate when using an incremental encoder or pulse encoder. Together, the software gate and the hardware gate form the internal gate. The technology module only counts when the internal gate is open. • 0 means: Software gate closed • 1 means: Software gate open The digital inputs of the technology module externally control the hardware gate. The hardware gate can be activated by parameter assignment. The software gate cannot be deactivated.
TM_CTRL_DQ0	Use this bit to enable the technological function of digital output DQ0. • 0 means: SET_DQ0 defines the state of DQ0 • 1 means: assigned function defines the state of DQ0
TM_CTRL_DQ1	Use this bit to enable the technological function of digital output DQ1. • 0 means: SET_DQ1 defines the state of DQ1 • 1 means: assigned function defines the state of DQ1

4.3.5.2 Assignment of the feedback interface

The user program receives current values and status information from the technology module by means of the feedback interface.

Feedback interface

The following table shows the assignment of the feedback interface:

Byte offset from start address ↓	Bit 7	Bit 6	Bit 5	Bit 4	Bit 3	Bit 2	Bit 1	Bit 0
0…3	COUNT_VALUE: DINT: Current counter value							
4…7	CAPTURED_VALUE: DINT: The last acquired Capture value							
8...11	MEASURED_VALUE: REAL: Current measured value							
12	Reserved					LD_ERROR	ENC_ ERROR	POWER_ ERROR
13	Reserved		STS_ SW_GATE	STS_ READY	LD_STS_ SLOT_1	LD_STS_SL OT_0	RES_EVEN T_ACK	Reserved
14	STS_DI2	STS_DI1	STS_DI0	STS_DQ1	STS_DQ0	STS_GATE	STS_CNT	STS_DIR
15	STS_M_ INTERVAL	EVENT_ CAP	EVENT_ SYNC	EVENT_ CMP1	EVENT_ CMP0	EVENT_ OFLW	EVENT_ UFLW	EVENT_ ZERO

Explanations

Feedback bit/value	Explanations
CAPTURED_VALUE	This DINT value indicates the last acquired Capture value. The following external signals can trigger the Capture function: • Rising or falling edge of a digital input • Both edges of a digital input The "Frequency of Capture function" parameter specifies whether the function is executed at each configured edge or only once after each enable.
COUNT_VALUE	This DINT value indicates the current counter value.
ENC_ERROR	This bit indicates that one of the following errors has occurred at the encoder signals (retentive) for the respective technology module: • Wire break of digital input A, B or N (with push-pull encoder) • Invalid transition of A/B signals (with incremental encoder) If you have enabled the diagnostic interrupts, the respective diagnostic interrupt is triggered in the event of encoder signal errors. For information on the meaning of the diagnostic interrupts, refer to the manual for the respective technology module. The bit is reset once you have acknowledged the error with RES_ERROR .
EVENT_CAP	This bit indicates that a Capture event has occurred and a counter value has been saved in CAPTURED_VALUE . You reset the status by resetting EN_CAPTURE .
EVENT_CMP0	This bit indicates the saved status that a comparison event (status change) has occurred for the digital output DQ0 based on the selected comparison condition. You reset the status by acknowledgment with RES_EVENT. If the counter value is set to the start value in counting mode, EVENT_CMP0 is not set.
EVENT_CMP1	This bit indicates the saved status that a comparison event (status change) has occurred for the digital output DQ1 based on the selected comparison condition. You reset the status by acknowledgment with RES_EVENT. If the counter value is set to the start value in counting mode, EVENT_CMP1 is not set.
EVENT_OFLW	This bit indicates the saved status that the counter value had an overflow. You reset the status by acknowledgment with RES_EVENT.
EVENT_SYNC	When an incremental or pulse encoder is used, this bit indicates the saved status that the counter was loaded with the start value by an external reference signal (synchronization). You reset the status by resetting EN_SYNC_UP or EN_SYNC_DN .
EVENT_UFLW	This bit indicates the saved status that the counter value had an underflow. You reset the status by acknowledgment with RES_EVENT.
EVENT_ZERO	This bit indicates the saved status that the counter value or position value had a zero crossing. You reset the status by acknowledgment with RES_EVENT. When the "Zero crossing" hardware interrupt is enabled, for system-related reasons it can also be triggered if "0" is outside the configured value range.
LD_ERROR	This bit indicates that an error occurred (latching) during loading via the control interface. The loaded values were not applied. When using an incremental or pulse encoder, one of the following conditions is not fulfilled: • Low counting limit <= counter value <= high counting limit • Low counting limit <= start value <= high counting limit • Low counting limit <= comparison value 0/1 <= high counting limit The bit is reset once you have acknowledged the error with RES_ERROR .
LD_STS_SLOT_0	This bit indicates by a status change (toggling) that the load request for SLOT_0 (LD_SLOT_0) was detected and performed.

Feedback bit/value	Explanations
LD_STS_SLOT_1	This bit indicates by a status change (toggling) that the load request for SLOT_1 (LD_SLOT_1) was detected and performed.
MEASURED_VALUE	This value indicates the current measured value with data type REAL: • Frequency: The mean frequency is calculated from the time profile of the count pulses or position value changes in one measurement interval and returned as a floating-point number in the unit of hertz. • Period: The mean period is calculated from the time profile of the count pulses or position value changes in one measurement interval and returned as a floating-point number in the unit of seconds. • Velocity: The mean velocity is calculated from the time profile of the count pulses or position value changes in one measurement interval and returned as a floating-point number in the configured unit. The measured values are returned as a signed value. The sign indicates whether the counter value went up or down in the relevant time interval. The update time is asynchronous to the opening of the internal gate, i.e. the update time is not started when the gate opens. After the internal gate closes, the last calculated measured value continues to be returned.
POWER_ERROR	This bit indicates that supply voltage L+ is too low. If you have enabled the diagnostic interrupts (Page 77), the diagnostics interrupt "Supply voltage missing" is triggered at a supply voltage error. When supply voltage L+ is available at a sufficient level once again, POWER_ERROR is automatically set to 0.
RES_EVENT_ACK	This bit indicates that the reset of event bit EVENT_SYNC, EVENT_CMP0, EVENT_CMP1, EVENT_OFLW, EVENT_UFLW, EVENT_ZERO is active.
Reserved	Reserved bits are set to 0.
STS_CNT	This bit indicates that at least one count pulse or a position value change has occurred in the last ca. 0.5 s.
STS_DI0	This bit indicates the status of digital input DI0.
STS_DI1	This bit indicates the status of digital input DI1.
STS_DI2	This bit indicates the status of digital input DI2.
STS_DIR	This bit indicates the count direction of the last count pulse or the direction of the last position value change. • 0 means: Down • 1 means: Up
STS_DQ0	This bit indicates the status of digital output DQ0.
STS_DQ1	This bit indicates the status of digital output DQ1.
STS_GATE	This bit indicates the status of the internal gate when using an incremental or pulse encoder. • 0 means: Gate closed • 1 means: Gate open
STS_M_INTERVAL	This bit indicates that at least one count pulse or a position value change was detected in the previous measurement interval.
STS_READY	This bit indicates that the technology module supplies valid user data. The technology module has been started up and configured.
STS_SW_GATE	This bit indicates the status of the software gate. • 0 means: Gate closed • 1 means: Gate open

4.3.6 Isochronous mode

The technology module supports the "Isochronous mode" system function. This system function enables counter values and measured values to be acquired in a defined system cycle.

In isochronous mode, the cycle of the user program, the transmission of the input signals and processing in the technology module are synchronized. The output signals switch immediately if the relevant comparison condition is met. A status change of a digital input immediately triggers the specified reaction of the technology module and the change of the status bit of the digital input in the feedback interface.

Use an OB of type "Synchronous Cycle" (e.g. OB61) in this operating mode. The input and output data are processed in the assigned OB.

The update time for the measured value is synchronized with the system cycle in a suitable ratio and, if necessary, adapted in length. If you set "0", the measured value is updated once per system cycle.

Data processing

The data that was transmitted to the technology module in the current bus cycle via the control interface takes effect when it is processed in the internal technology module cycle. At the time the input data is read in (T_i), the counter value and the measured value as well as status bits are acquired and made available in the feedback interface for retrieval in the current bus cycle.

Isochronous mode parameters

In isochronous mode, the "Filter frequency" parameter can affect the isochronous mode parameters of the sync domain.

Because the isochronous mode parameters are not checked in RUN, overflows can occur if you change the parameters in RUN. To prevent overflows, select the option with the largest time required in the offline parameter assignment.

Additional information

You can find a detailed description of isochronous mode in the following:

- Function manual Isochronous Mode (STEP 7 (TIA Portal) V15.1 or higher) available for download on the Internet (https://support.industry.siemens.com/cs/ww/en/view/109755401)
- Function manual PROFINET with STEP 7 available for download on the Internet (https://support.industry.siemens.com/cs/ww/en/view/49948856)

4.4 Fast Mode

You can use the technology module in Fast Mode for very fast acquisition of the counter value with compressed functionality. A reduced feedback interface but no control interface is available in Fast Mode. This allows you to use a shorter send clock for the CPU.

The scope of functions of the technology module has the following additional restrictions in Fast Mode:

- Parameter change in RUN only possible with data record 128
- Count/position value range: 25 bits
- No measured value available
- No software gate available
- No Capture function available
- No hardware interrupts available
- Combined error message (feedback bit) that is acknowledged automatically

4.4.1 Configuring

Introduction

You configure the technology module and assign its parameters with the configuration software.

The functions of the technology module are controlled and checked by the user program via the feedback interface.

System environment

The technology module can be used in the following system environments:

Applications	Components required	Configuration software	In the user program
Central operation with a CPU 151xSP	• S7-1500 automation system • TM Count 1x24V	STEP 7 (TIA Portal): • Device configuration and parameter setting with hardware configuration	Direct access to feedback interface in the I/O data
Distributed operation with an S7-1500 CPU	• S7-1500 automation system • ET 200SP distributed I/O system • TM Count 1x24V	STEP 7 (TIA Portal): • Device configuration and parameter setting with hardware configuration	
Distributed operation with an S7-300/400 CPU	• S7-300/400 or S7-1200 automation system • ET 200SP distributed I/O system • TM Count 1x24V	STEP 7 (TIA Portal): Device configuration and parameter setting with hardware configuration STEP 7: Device configuration and parameter setting with HSP (up to firmware version V1.2) or GSD file	
Distributed operation with an S7-1200 CPU	• S7-300/400 or S7-1200 automation system • ET 200SP distributed I/O system • TM Count 1x24V	STEP 7 (TIA Portal): Device configuration and parameter setting with hardware configuration	
Distributed operation in a third-party system	• Third-party automation system • ET 200SP distributed I/O system • TM Count 1x24V	Third-party configuration software: Device configuration and parameter setting with GSD file	

Additional information

You can find a detailed description of the counting and measurement functions and their configuration in the following:

- Function manual Counting, Measurement and Position Detection available for download on the Internet (http://support.automation.siemens.com/WW/view/en/59709820)
- Information system of STEP 7 (TIA Portal) under "Using technology functions > Counting, measurement and position input > Counting, measurement and position input (S7-1500)"

Hardware Support Packages (HSP)

STEP 7 (TIA Portal)

If firmware version V1.3 of the module is not yet integrated in your TIA Portal Version V15, you can integrate a corresponding module using HSP0256.

You can find the Hardware Support Packages (HSP) for download on the Internet (https://support.industry.siemens.com/cs/ww/en/view/72341852).

You can also access this download from the menu bar of STEP 7 (TIA Portal): "Options > Support packages > Download from the Internet".

STEP 7

You can find the Hardware Support Packages (HSP) for download on the Internet (https://support.industry.siemens.com/cs/ww/en/view/23183356).

GSD file

You can find the respective GSD file for the ET 200SP distributed I/O system for download on the Internet:

- GSD file for PROFINET IO (http://support.automation.siemens.com/WW/view/en/57138621)
- GSD file for PROFIBUS DP (http://support.automation.siemens.com/WW/view/en/73016883)

4.4.2 Reaction to CPU STOP

You set the response of the technology module to CPU STOP for each channel in the basic parameters of the device configuration.

Table 4- 10 Response of technology module to CPU STOP

Option	Meaning
Continue operation	The technology module remains fully functional. Incoming count pulses are processed. The digital outputs continue to switch according to the parameter assignment.
Output substitute value	The technology module outputs the configured substitute values at the digital outputs until the next CPU STOP-RUN transition. The technology module is returned to its startup state after a STOP-RUN transition: The counter value is set to the start value and the digital outputs switch according to the parameter assignment.
Keep last value	The technology module outputs the values at the digital outputs that were valid when the transition to STOP took place until the next CPU STOP-RUN transition. If a digital output with the function "At comparison value for a pulse duration" is set at CPU stop, the digital output is reset after the pulse duration elapses. The technology module is returned to its startup state after a STOP-RUN transition: The counter value is set to the start value and the digital outputs switch according to the parameter assignment.

4.4.3 Parameter setting

You specify the properties of the technology module using various parameters. Depending on the settings, not all parameters are available. When parameters are assigned in the user program, the parameters are transferred to the module with the "WRREC" instruction and data record 128 (Page 91).

You set the parameters of the module as follows in this operating mode:

Parameter setting using...	Basic procedure
Hardware configuration in STEP 7 (TIA Portal)	1. Insert the module from the hardware catalog under "Technology modules". 2. Set the device configuration and the parameters of the module in the hardware configuration. "Fast Mode" must be set as the operating mode. 3. Download the project to the CPU.
Hardware configuration in STEP 7 with HSP	1. Install the appropriate HSP file. You will then find the module in the hardware catalog under "ET 200SP". 2. Set the device configuration and the parameters in the hardware configuration. 3. Download the project to the CPU.

Parameter setting using...	Basic procedure
Hardware configuration with GSD file for distributed operation on PROFINET IO	1. Install the current PROFINET GSD file. You will then find the module in the hardware catalog under "Other field devices > PROFINET IO > I/O". 2. Set the parameters in the hardware configuration. 3. Download the project to the CPU.
Hardware configuration with GSD file for distributed operation on PROFIBUS DP	1. Install the current PROFIBUS GSD file. You will then find the module in the hardware catalog under "Other field devices > PROFIBUS DP > I/O". 2. Set the parameters in the hardware configuration. The parameters marked with [1] in the following tables are not configurable in the PROFIBUS GSD file. 3. Download the project to the CPU. The parameters marked with [1] in the following tables are downloaded with their default setting. 4. If necessary, set the parameters marked with [1] in the user program using data record 128.

Parameters of the TM Count 1x24V

The following parameter settings are possible:

Table 4- 11 Settable parameters and their default setting

Parameter	Value range	Default setting	Parameter reassignment in RUN	Scope
				HSP for STEP 7 (TIA Portal); HSP for STEP 7; GSD file
Potential group	• Use the potential group of the left module (dark BaseUnit) • Enable new potential group (light BaseUnit)	Use the potential group of the left module (dark BaseUnit)	No	Module
Reaction to CPU STOP[1]	• Output substitute value • Keep last value • Continue operation	Output substitute value	Yes	Channel
Substitute value for DQ0[1]	• 0 • 1	0	Yes	Channel
Substitute value for DQ1[1]	• 0 • 1	0	Yes	Channel
Enable diagnostic interrupt on wire break[2]	• Deactivated • Activated	Deactivated	Yes	Channel
Enable additional diagnostic interrupts	• Deactivated • Activated	Deactivated	Yes	Channel

Parameter	Value range	Default setting	Parameter reassign-ment in RUN	Scope
				HSP for STEP 7 (TIA Portal); HSP for STEP 7; GSD file
Signal type	• Pulse (A) • Pulse (A) and direction (B) • Count up (A), count down (B) • Incremental encoder (A, B phase-shifted) • Incremental encoder (A, B, N)	Pulse (A) and direction (B)	Yes	Channel
Invert direction[1] (counter inputs)	• Deactivated • Activated	Deactivated	Yes	Channel
Signal evaluation for counter inputs	• Single • Double • Quadruple	Single	Yes	Channel
Filter frequency for counter inputs[1]	• 100 Hz • 200 Hz • 500 Hz • 1 kHz • 2 kHz • 5 kHz • 10 kHz • 20 kHz • 50 kHz • 100 kHz • 200 kHz	200 kHz	Yes	Channel
Sensor type	• Sourcing output • Sinking output • Push-pull (sinking and sourcing output)	Sourcing output	Yes	Channel
Reaction to signal N[1]	• No reaction to signal N • Synchronization at signal N	No reaction to signal N	Yes	Channel
Counting high limit[1]	1...33554431	33554431	Yes	Channel
Start value[1]	0...33554431	0	Yes	Channel
Counting low limit[1]	0...33554430	0	Yes	Channel
Reaction to violation of a counting limit	• Stop counting • Continue counting	Continue count-ing	Yes	Channel
Reset when counting limit is violated	• To opposite counting limit • To start value	To opposite counting limit	Yes	Channel

Parameter	Value range	Default setting	Parameter reassign-ment in RUN	Scope
				HSP for STEP 7 (TIA Portal); HSP for STEP 7; GSD file
Reaction to gate start	• Set to start value • Continue with current value	Continue with current value	Yes	Channel
Set function of DI	• Gate start/stop (level-triggered) • Gate start (edge-triggered) • Gate stop (edge-triggered) • Synchronization • Enable synchronization at signal N • Digital input without function	Digital input without function	Yes	Channel
Input delay for digital inputs[1]	• None • 0.05 ms • 0.1 ms • 0.4 ms • 0.8 ms • 1.6 ms • 3.2 ms • 12.8 ms • 20 ms	0.1 ms	Yes	Channel
Select level for DI[1]	• Active with high level • Active with low level	Active with high level	Yes	Channel
Edge selection for DI[1]	• At rising edge • At falling edge	At rising edge	Yes	Channel
Frequency of synchronization[1]	• Once • Periodic	Once	Yes	Channel
Count direction for syn-chronization	• Up • Down • In both directions	Up	Yes	Channel
Set output	• Between comparison value and high limit • Between comparison value and low limit • At comparison value for a pulse duration • Between comparison value 0 and 1 • Digital output without function	DQ0, DQ1: Digital output without function	Yes	Channel
Comparison value 0[1]	0...33554431	0	Yes	Channel

Parameter	Value range	Default setting	Parameter reassignment in RUN	Scope
				HSP for STEP 7 (TIA Portal); HSP for STEP 7; GSD file
Comparison value 1[1]	0...33554431	10	Yes	Channel
Count direction of DQ function[1]	• Up • Down • In both directions	In both directions	Yes	Channel
Pulse duration [ms/10][1]	0...65535	5000 (corresponds to 0.5 s)	Yes	Channel
Hysteresis (in increments)[1]	0...255	0	Yes	Channel

[1] Because the number of parameters is limited to a maximum of 244 bytes per station in the PROFIBUS GSD configuration, the possible parameter assignments are limited. The parameters are preassigned default settings in the module. If your PROFIBUS master supports the "Write/read data record" function, you can set these parameters using data record 128.

[2] When a GSD file is used, this diagnostic interrupt is enabled with the "Enable additional diagnostic interrupts" parameter and is then not separately configurable.

4.4.4 Explanation of parameters

Potential group

A potential group consists of a group of directly adjacent I/O modules within an ET 200SP station that are supplied from a common supply voltage.

A potential group begins with a light BaseUnit, which feeds the required supply voltage for all modules of the potential group. The light BaseUnit interrupts the three self-configuring voltage bars P1, P2 and AUX to the neighboring modules on the left.

All other I/O modules of this potential group are plugged into dark BaseUnits. They take on the potentials of the self-configuring busbars P1, P2 and AUX from the neighboring modules on the left.

A potential group ends with the dark BaseUnit, which is followed by a light BaseUnit or server module in the station configuration.

Signal type

You can select from the following signal types:

Signal type	Meaning
Incremental encoder (A, B phase-shifted)	An incremental encoder with phase-shifted A and B signals is connected.
Incremental encoder (A, B, N)	An incremental encoder with phase-shifted signals A and B and a zero signal N is connected.
Pulse (A) and direction (B)	A pulse encoder (signal A) with direction signal (signal B) is connected.
Pulse (A)	A pulse encoder (signal A) without direction signal is connected.
Count up (A), count down (B)	Signals for counting up (signal A) and down (signal B) are connected.

Invert direction

You can invert the counting direction to adapt it to the process.

The inverting of the direction is configurable and active for the following signal types:

- Incremental encoder (A, B phase-shifted)
- Incremental encoder (A, B, N)

Signal evaluation

With the parameter assignment of the signal evaluation, you specify which edges of the signals are counted.

You can select from the following options:

Signal evaluation	Meaning
Single	The edges of signal A are evaluated during a low level of signal B.
Double	Each edge of signal A is evaluated.
Quadruple	Each edge of signals A and B is evaluated.

The parameter can be assigned with the following signal types:

- Incremental encoder (A, B phase-shifted)
- Incremental encoder (A, B, N)

Filter frequency

By configuring the filter frequency, you suppress interferences at the counting inputs A, B and N.

The selected filter frequency is based on a pulse/break ratio of between around 40:60 and around 60:40. This results in a specific minimum pulse/break time. Signal changes with a duration shorter than the minimum pulse/break time are suppressed.

You can select from the following filter frequencies:

Filter frequency	Minimum pulse/break time
100 Hz	4.0ms
200 Hz	2.0 ms
500 Hz	800 µs
1 kHz	400 µs
2 kHz	200 µs
5 kHz	80 µs
10 kHz	40 µs
20 kHz	20 µs
50 kHz	8.0 µs
100 kHz	4.0 µs
200 kHz	2.0 µs

Reaction to signal N

You use this parameter to specify which reaction to signal N is triggered.

You can select from the following options:

Option	Meaning
No reaction to signal N	The counter is not affected by signal N.
Synchronization at signal N	The counter is set to the start value at signal N. If you select the function "Enable synchronization at signal N" for a digital input, the synchronization depends on the level at the digital input.

Note

You can only select the reaction to signal N if you have selected the "Incremental encoder (A, B, N)" signal type.

Note

If you select "Synchronization at signal N", you can choose the "Enable synchronization at signal N" function for a digital input.

Frequency of synchronization

This parameter is used to define the frequency of the following events:

- Synchronization at signal N
- Synchronization as function of a digital input

You can select from the following options:

Option	Meaning
Once	The counter is only set at the first signal N or the first configured edge of the digital input.
Periodic	The counter is set at each signal N or each configured edge of the digital input.

Count direction of the synchronization

You use this parameter to specify the count direction for which the following functions are enabled:

- Synchronization at signal N
- Synchronization as function of a digital input

You can select from the following options:

Option	Meaning
In both directions	Synchronization takes place regardless of the count direction.
Up	Synchronization only takes place when the counter is counting up.
Down	Synchronization only takes place when the counter is counting down.

Sensor type

With the parameter assignment of the sensor type, you specify how the counter inputs are switched.

You can select from the following options:

Option	Meaning
Sourcing output	The encoder or sensor switches the A, B and N inputs to 24 V DC.
Sinking output	The encoder or sensor switches the A, B and N inputs to M.
Push-pull (sinking and sourcing output)	The encoder or sensor switches the A, B and N inputs to alternately to M and 24 V DC.

"Push-pull" is usually selected when incremental encoders are used. If using 2-wire sensors, such as light barriers or proximity switches, you need to select the corresponding wiring "sourcing output" or "sinking output".

The data sheet of the encoder includes information on whether your incremental encoder is a push-pull encoder.

Note

If you use a push-pull encoder and the sensor type "Push-pull (sinking and sourcing output)" is configured, you can monitor the encoder signals for wire break.

Counting high limit

With the parameter assignment of the counting high limit, you limit the counting range. You can enter a value up to 33554431 (2^{25}-1). You must enter a value above the counting low limit.

Counting low limit

With the parameter assignment of the counting low limit, you limit the counting range. You can enter a value starting with 0. You must enter a value below the counting high limit.

Start value

With the parameter assignment of the start value, you specify the value at which counting is begun and is to continue in the case of defined events. You must enter a value at or within the counting limits.

Reaction to violation of a counting limit

You can configure the following reaction to violation of a counting limit:

Reaction	Meaning
Stop counting	After violation of a counting limit, counting is stopped and the internal gate is closed. To restart counting, you must close and reopen the SW gate or HW gate, if necessary.
Continue counting	Counting is continued with the start value or at the opposite counting limit depending on the additional parameter assignment.

Reset when counting limit is violated

You can reset the counter when a counting limit is violated:

Reset the value	Meaning
To start value	The counter value is set to the start value.
To opposite counting limit	The counter value is set to the opposite counting limit in each case.

Reaction to gate start

You can configure the following reaction to gate start:

Reaction	Meaning
Set to start value	When the gate is opened, the counter value is set to the start value.
Continue with current value	When the gate is opened, counting is continued with the last counter value.

Note

The parameter is only effective when you have configured a HW gate.

Set function of DI

With the parameter assignment of a digital input, you specify which function the digital input triggers when switched.

You can select from the following options:

Function of a digital input	Meaning
Gate start/stop (level-triggered)	The level at the respective digital input opens and closes the HW gate.
Gate start (edge-triggered)	The configured edge at the respective digital input opens the HW gate.
Gate stop (edge-triggered)	The configured edge at the respective digital input closes the HW gate.
Synchronization	The configured edge at the respective digital input sets the counter to the start value.
Enable synchronization at signal N	The active level at the respective digital input enables synchronization of the counter at signal N.
Digital input without function	No technological function is assigned to the respective digital input. You can read the signal status of the digital input via the feedback interface.

Note

Each function, except "Digital input without function", can be used only once per counter and can no longer be selected for the other digital inputs in each case.

Input delay

You use this parameter to suppress signal noise at the digital inputs. Changes to the signal are only detected if they remain stable for longer than the configured input delay time.

Note

If you select the "None" or "0.05 ms" option, you must use shielded cables for connection of the digital inputs.

Note

You configure the input delay under "Behavior of DI0" for all digital inputs together. The input delay is also displayed under "Behavior of DI1".

Select level

You use this parameter to specify the level at which the digital input is active.

You can select from the following options:

Level	Meaning
Active with high level	The respective digital input is active when it is set.
Active with low level	The respective digital input is active when it is not set.

The parameter can be configured for the following functions of a digital input:

- Gate start/stop (level-triggered)
- Enable synchronization at signal N

Edge selection

You use this parameter to specify the edge of the digital input at which the configured function is triggered.

You can select from the following options depending on the function selected:

- At rising edge
- At falling edge

The parameter can be configured for the following functions of a digital input:

- Gate start (edge-triggered)
- Gate stop (edge-triggered)
- Synchronization

Set output

With the parameter assignment of a digital output, you specify the condition upon which the digital output switches.

You can select from the following options:

Function of a digital output	Meaning
Between comparison value and high limit	The respective digital output is active if: Comparison value <= counter value <= counting high limit
Between comparison value and low limit	The respective digital output is active if: Low limit <= counter value <= comparison value
Between comparison value 0 and 1	The digital output DQ1 is active if: Comparison value 0 <= counter value <= comparison value 1
At comparison value for a pulse duration	The respective digital output is active once for the configured time and count direction when the counter value corresponds to the comparison value.
Digital output without function	The respective digital output is set to 0 irrespective of the reaction to CPU STOP.

Note

You can only set the "Between comparison value 0 and 1" function for digital output DQ1 and only if you have selected the "Digital output without function" function for digital output DQ0.

Comparison value 0

With the parameter assignment of the comparison value, you specify the counter value at which the digital output DQ0 switches as a result of the selected comparison event.

You must enter an integer (DINT) that is greater than or equal to the counting low limit. If you use the DQ function "Between comparison value 0 and 1", comparison value 0 must be less than comparison value 1.

Comparison value 1

With the parameter assignment of the comparison value, you specify the counter value at which the digital output DQ1 switches as a result of the selected comparison event.

You must enter an integer (DINT) that is less than or equal to the counting high limit. If you use the DQ function "Between comparison value 0 and 1", comparison value 0 must be less than comparison value 1.

Count direction

You use this parameter to specify the count direction for which the selected functions is valid:

You can select from the following options:

Count direction	Meaning
In both directions	The comparison and switching of the respective digital output takes places regardless of the count direction.
Up	The comparison the switching of the respective digital output only takes place when the counter counts up.
Down	The comparison and switching of the respective digital output only takes place when the counter counts down.

The parameter can be configured for the following functions:

- Between comparison value 0 and 1
- At comparison value for a pulse duration

Pulse duration

With the parameter assignment of the pulse duration for the "At comparison value for a pulse duration" function, you specify how many milliseconds the respective digital output is active.

If you enter "0" and the counter value corresponds to the respective comparison value, the digital output is active until the next count pulse.

Hysteresis (in increments)

With the parameter assignment of the hysteresis, you specify a range around the comparison values. Within the hysteresis range, the digital outputs cannot switch again before the counter value has left this range.

An encoder can stop at a certain position, and slight movements can cause the counter value to fluctuate around this position. If a comparison value or counting limit is within the fluctuation range and a hysteresis is not used, the associated digital output will switch on and off with corresponding frequency. The hysteresis prevents these unwanted switching actions.

Regardless of the hysteresis value, the hysteresis range ends at the low or counting high limit. If you enter "0", the hysteresis is turned off.

4.4.5 Address space

Address space of the technology module

Table 4- 12 Size of input and output addresses of the TM Count 1x24V with Fast Mode

	Inputs	Outputs
Range	4 bytes	0 bytes

4.4.6 Assignment of the feedback interface

The user program receives current values and status information from the technology module by means of the feedback interface.

Feedback interface

The following table shows the assignment of the feedback interface:

Byte offset from start address ↓	Bit 7	Bit 6	Bit 5	Bit 4	Bit 3	Bit 2	Bit 1	Bit 0
0	LS	STS_ READY	Reserved	EXT_F	STS_DI0	STS_DIR	STS_DI1	COUNT_ VALUE
1	COUNT_VALUE: DINT: Current counter value or position value							
2								
3								

Explanation of feedback bits

Feedback bit	Explanations
COUNT_VALUE	This value returns the current counter value in the first 25 bits of a DINT value.
EXT_F	This bit indicates that one of the following errors has occurred at the encoder signals for the technology module: • Load voltage missing • Wire break of digital input A, B or N (with push-pull encoder) • Invalid transition of A/B signals (with incremental encoder) If you have enabled the diagnostic interrupts, the respective diagnostic interrupt is triggered in the event of encoder signal errors. For information on the meaning of the diagnostic interrupts, refer to section Diagnostic alarms (Page 78). The bit is reset automatically as soon as an error no longer exists.
LS	As a life sign, this bit indicates by a status change (toggling) that isochronous mode is functioning and the module has updated the feedback interface in the respective bus cycle. In non-isochronous mode, this bit is set to 0.
STS_DI0	This bit indicates the status of digital input DI0.
STS_DI1	This bit indicates the status of digital input DI1.
STS_DI2	This bit indicates the status of digital input DI2.
STS_DIR	This bit indicates the count direction of the last count pulse. 0 means: Down 1 means: Up
STS_READY	This bit indicates that the technology module supplies valid user data. The technology module has been started up and configured.

4.4.7 Isochronous mode

The technology module supports the "Isochronous mode" system function. Counter values can be acquired in a fixed system cycle with this system function.

In isochronous mode, the cycle of the user program, the transmission of the input signals and processing in the technology module are synchronized. The output signals switch immediately if the relevant comparison condition is met. A status change of a digital input immediately triggers the specified reaction of the technology module and the change of the status bit of the digital input in the feedback interface.

This operating mode is especially well-suited for short send clocks of the CPU starting from 125 µs, because only input data is used.

Use an OB of type "Synchronous Cycle" (e.g. OB61) in this operating mode.

Data processing

At the time the input data is read in (T_i), the counter value and the status bits are acquired and made available in the feedback interface for retrieval in the current bus cycle.

Isochronous mode parameters

In isochronous mode, the "Filter frequency" parameter can affect the isochronous mode parameters of the sync domain.

Because the isochronous mode parameters are not checked in RUN, overflows can occur if you change the parameters in RUN. To prevent overflows, select the option with the largest time required in the offline parameter assignment.

Additional information

You can find a detailed description of isochronous mode in the following:

- Function manual Isochronous Mode (STEP 7 (TIA Portal) V15.1 or higher) available for download on the Internet (https://support.industry.siemens.com/cs/ww/en/view/109755401)
- Function manual PROFINET with STEP 7 available for download on the Internet (https://support.industry.siemens.com/cs/ww/en/view/49948856)

Interrupts/diagnostic messages 5

5.1 Status and error display

LEDs

The following figure shows you the LED displays (status and error displays) of TM Count 1x24V.

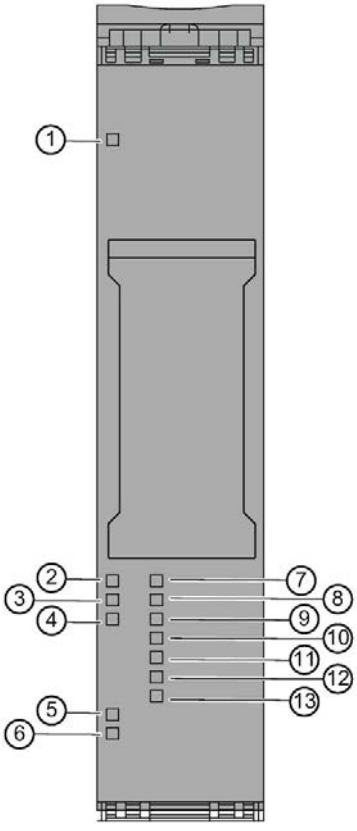

① DIAG (green/red)
② Status A (green)
③ Status B (green)
④ Status N (green)
⑤ 24VDC (green)
⑥ PWR (green)
⑦ Status DI0 (green)
⑧ Status DI1 (green)
⑨ Status of DI2 (green)
⑩ Status DQ0 (green)
⑪ Status DQ1 (green)
⑫ Status UP (green)
⑬ Status DN (green)

Figure 5-1 LED displays of the TM Count 1x24V

Meaning of the LED displays

The following tables explain the meaning of the status and error displays. Remedial measures for diagnostic alarms can be found in section Diagnostic messages (Page 77).

Table 5- 1 Status and error displays DIAG

LED DIAG	Meaning	Remedy
Off	Backplane bus supply of the ET 200SP not OK	Check or switch on the supply voltage on the CPU or on the interface module.
Flashes	Technology module parameters not set	---
On	Technology module parameters set and no module diagnostics	
Flashes	Technology module parameters set and module diagnostics (at least one error is present)	Evaluate the diagnostic alarms and eliminate the error.

Table 5- 2 PWR/24VDC status displays

LEDs		Meaning	Remedy
PWR	24VDC		
Off	Off	Supply voltage missing	• Check the supply voltage. • Check the BaseUnit type and the wiring of the BaseUnit.
On	On	Supply voltage is present and OK	---
On	Off	Short-circuit or overload at the encoder supply or supply voltage too low	• Check the encoder wiring. • Check the loads connected to the encoder supply. • Check the supply voltage.

Channel LEDs

The A, B, N and DIm LEDs indicate the current level of the associated signals. The LEDs of the DQm digital outputs indicate the desired state.

The UP and DN LEDs indicate the logical counting direction.

The flashing frequency of the channel LEDs is limited to approximately 12 Hz. If higher frequencies are present, the channel LEDs will flash at 12 Hz instead of indicating the current status.

Table 5- 3 Status displays A/B/N/DIm/DQm

LEDs A/B/N/DIm/DQm	Meaning
□ Off	Counter input/digital input/digital output at 0 level
■ On	Counter input/digital input/digital output at 1 level

Table 5- 4 Status displays UP/DN

LEDs		Meaning
UP	DN	
□ Off	□ Off	No count pulse has been detected for the last 0.5 s.
■ On	□ Off	The last count pulse has incremented the counter and took place no more than 0.5 s ago.
□ Off	■ On	The last count pulse has decremented the counter and took place no more than 0.5 s ago.

5.2 Diagnostic messages

Enabling of diagnostic interrupts

You enable the diagnostic interrupts in the device configuration with the basic parameters.

The technology module can trigger the following diagnostic interrupts:

Table 5- 5 Possible diagnostic interrupts

Diagnostic interrupt	Monitoring
• Parameter error • Hardware interrupt lost[1] • Channel/component temporarily unavailable • Internal error • Watchdog tripped. Module is defective.	Monitoring is always active. A diagnostic interrupt is triggered each time an error is detected.
• Wire break at digital input A, B or N	Monitoring is active if a push-pull switching encoder has been configured. When an error is detected, a diagnostic interrupt is only triggered if "Enable diagnostic interrupt on wire break" is activated in the device configuration.
• Error • Load voltage missing • Short-circuit / overload at external encoder supply • Error at digital outputs • Supply voltage error[2] • Invalid transition of A/B signals • Overtemperature	Monitoring is always active. When an error is detected, a diagnostic interrupt is only triggered if "Enable additional diagnostic interrupts" is activated in the device configuration.

1 Not available in "Position input for "Motion Control"" technology object" and "Fast Mode" operating modes

2 No longer available as of module version V1.2 This case is then taken into account by diagnostic interrupt "Load voltage missing".

Reactions to a diagnostic interrupt

The following happens when an event occurs that triggers a diagnostic interrupt:

- The DIAG LED flashes red.

  When you have eliminated all errors, the DIAG LED stops flashing red and turns green.
- The S7-1500 CPU interrupts the processing of the user program. The diagnostic interrupt OB (e.g. OB 82) is called. The event that triggered the interrupt is entered in the start information of the diagnostic interrupt OB.
- The S7-1500 CPU remains in RUN, even if no diagnostic interrupt OB is present in the CPU. The technology module continues working unchanged if this is possible despite the error.

You can obtain detailed information on the error event in the error organization block with instruction "RALRM" (Read additional alarm information), in the information system of STEP 7 and in function manual Diagnostics (https://support.industry.siemens.com/cs/ww/en/view/59192926), section "System diagnostics in user program".

If the module is being operated as a distributed module in an ET 200SP system with PROFIBUS DP, you have the option of reading out diagnostic data with the RDREC or RD_REC instruction using data record 0 and 1. You can find the structure of the data records in the manual for the IM 155-6 DP HF interface module available for download on the Internet (https://support.industry.siemens.com/cs/ww/de/view/73098660).

Diagnostic alarms

The display of diagnostics is in plain text in STEP 7 (TIA Portal) in the online and diagnostics view. You can evaluate the error codes with the user program.

The following diagnostics can be signaled:

Table 5- 6 Diagnostic alarms, their meaning and remedies

Diagnostic alarm	Error code	Meaning	Remedy
Error	9_H	• Internal module error occurred • Possible cause: Technology module defective	Replace technology module
Parameter error	10_H	• The received parameter data record is invalid • The configured BaseUnit is not the used BaseUnit	• Check parameter data record • Check BaseUnit
Load voltage missing	11_H	• Missing or insufficient supply voltage L+ • Wiring of supply voltage L+ faulty • Possible cause: BaseUnit type incorrect	• Check BaseUnit type • Check supply voltage L+ on the BaseUnit • Check wiring of supply voltage L+ • Check total consumption of the load group

Diagnostic alarm	Error code	Meaning	Remedy
Hardware interrupt lost	16_H	• Module cannot issue interrupt because a preceding interrupt has not yet been processed • Possible cause: Too many hardware interrupts in too short a time	• Change interrupt processing in the CPU and re-assign technology module parameters correspondingly • Check frequency of interrupts from the process
Channel/component temporarily unavailable	$1F_H$	Firmware update in progress or update was aborted. The module reads no process values in this state.	• Wait for firmware update • If firmware update aborts: – Check minimum firmware version required – Check supply voltage – Repeat firmware update
Internal error	100_H	Technology module defective	Replace technology module
Watchdog tripped. Module is defective.	103_H	Firmware error	Run firmware update
		Technology module defective	Replace technology module
Short-circuit / overload at external encoder supply	$10E_H$	• Error at encoder supply • Possible causes: – Short circuit – Overload	• Check encoder wiring • Check consumers connected to encoder supply
Error at digital outputs	$10F_H$	• Error at digital outputs (LED display DQm lit red) • Possible causes: – Short circuit – Overload	• Check wiring at the digital outputs • Check consumers connected to the digital outputs
Supply voltage error[1]	110_H	• Error at supply voltage L+ • Possible causes: – Low voltage – Wiring of supply voltage L+ faulty	• Check supply voltage L+ on the BaseUnit • Check wiring of supply voltage L+ • Check total consumption of the load group
Invalid transition of A/B signals	500_H	• Time profile of signals A and B of the incremental encoder does not meet certain requirements (relative phase shift of the two signals is too small) • Possible causes: – Signal frequency too high – Encoder faulty – Process wiring faulty	• Check process wiring • Check encoder/sensor • Check parameter assignment
Wire break at digital input A, B or N	505_H	Channel not connected	Connect the channel
		Resistance of encoder circuit too high	• Use a different encoder type or modify the wiring, for example, use shorter cables with larger cross-sections • Check encoders

Diagnostic alarm	Error code	Meaning	Remedy
		Interruption of the line between technology module and encoder	Check process wiring
		Sensor used is sourcing output or sinking output only	Correct parameter assignment
Overtemperature	506_H	Possible causes: • Short-circuit or overload at the digital outputs or output of the encoder supply • Ambient temperature outside specifications • Contamination in the module prevents cooling	• Check process wiring • Improve cooling • Check connected loads

[1] No longer available as of module version V1.2. This case is then taken into account by diagnostic interrupt "Load voltage missing".

5.3 Hardware interrupts

Introduction

For the technology module, you can configure which events are to trigger a hardware interrupt during operation.

What is a hardware interrupt?

The technology module will trigger a hardware interrupt as configured in response to specific events/states. When a hardware interrupt occurs, the CPU interrupts execution of the user program and processes the assigned hardware interrupt OB. The event that triggered the interrupt is entered in the start information of the assigned hardware interrupt OB by the CPU.

Lost hardware interrupt

If an event occurs that is to trigger a hardware interrupt and the preceding event has not yet been processed, another hardware interrupt cannot be triggered. The hardware interrupt is lost and the diagnostic interrupt "Lost hardware interrupt" is triggered.

Enabling of hardware interrupts

A hardware interrupt is triggered when the condition for the change of the respective status or event bit in the feedback interface is met.

You enable the hardware interrupts in the device configuration with the basic parameters. You can configure hardware interrupts to be triggered for the following event types:

- Opening of internal gate (gate start)
- Closing of internal gate (gate stop)
- Overflow (high counting limit violated)
- Underflow (low counting limit violated)
- Comparison event for DQ0 has occurred
- Comparison event for DQ1 has occurred
- Zero crossing[3]
- New Capture value available[1]
- Synchronization of the counter by an external signal
- Direction reversal[2]

[1] Only configurable in Counting mode

[2] Feedback bit STS_DIR is preassigned with "0". If the first counter value change occurs in the *downwards direction* directly after switching on the technology module, no hardware interrupt is triggered.

[3] When the "Zero crossing" hardware interrupt is enabled, for system-related reasons it can also be triggered if "0" is outside the configured value range.

You can activate any combination of events to trigger hardware interrupts.

You can obtain detailed information on the event in the hardware interrupt organization block with instruction "RALRM" (Read additional alarm information) and in the information system of STEP 7.

Which event has triggered the hardware interrupt is entered in the start information of the organization block. The following figure shows the assignment to the bits of the local data double word 8.

LB 8								LB 9								LB 10								LB 11								
31	30	29	28	27	26	25	24	23	22	21	20	19	18	17	16	15	14	13	12	11	10	9	8	7	6	5	4	3	2	1	0	Bit no.
0	0	0	0	0	0	0	0	0	0	0	0	0	0	0	1	0	0	0	0	0	0	0	0	0	0	0	0	X	X	X	X	LD 8

User Structure Identifier (USI)

Event that has triggered the hardware interrupt (EventType):

- 0001_B: Gate start
- 0010_B: Gate stop
- 0011_B: Overflow
- 0100_B: Underflow
- 0101_B: Comparison event for DQ0 has occurred
- 0110_B: Comparison event for DQ1 has occurred
- 0111_B: Zero crossing
- 1000_B: New Capture value available
- 1001_B: Synchronization
- 1010_B: Direction reversal

Channel that has triggered the hardware interrupt (IChannel):
0_B: Channel 0 of the technology module

Figure 5-2 Start information of the organization block

Technical specifications

6

Article number	6ES7138-6AA00-0BA0
General information	
Product type designation	TM Count 1x24V
Firmware version	V1.3
• FW update possible	Yes
usable BaseUnits	BU type A0
Product function	
• I&M data	Yes; I&M0 to I&M3
Engineering with	
• STEP 7 TIA Portal configurable/integrated as of version	V13 (FW V1.0), V14 (V1.2), V15 (FW V1.3) / V13 (FW V1.0), V14 SP1 (V1.2)
• STEP 7 configurable/integrated as of version	As of V5.5 SP3, only up to FW V1.2
• PROFIBUS as of GSD version/GSD revision	GSD Revision 5
• PROFINET as of GSD version/GSD revision	GSDML V2.3
Supply voltage	
Load voltage L+	
• Rated value (DC)	24 V
• permissible range, lower limit (DC)	19.2 V
• permissible range, upper limit (DC)	28.8 V
• Reverse polarity protection	Yes
Input current	
Current consumption, max.	60 mA; without load
Encoder supply	
Number of outputs	1
24 V encoder supply	
• 24 V	Yes; L+ (-0.8 V)
• Short-circuit protection	Yes; electronic/thermal
• Output current, max.	300 mA
Power loss	
Power loss, typ.	1 W

Article number	6ES7138-6AA00-0BA0
Address area	
Occupied address area	
• Inputs	16 byte; 4 bytes in Fast mode
• Outputs	12 byte; 4 bytes for Motion Control, 0 bytes for Fast mode
Digital inputs	
Number of digital inputs	3
Digital inputs, parameterizable	Yes
Input characteristic curve in accordance with IEC 61131, type 3	Yes
Digital input functions, parameterizable	
• Gate start/stop	Yes
• Capture	Yes
• Synchronization	Yes
• Freely usable digital input	Yes
Input voltage	
• Rated value (DC)	24 V
• for signal "0"	-5 ... +5 V
• for signal "1"	+11 to +30V
• permissible voltage at input, min.	-30 V; -5 V continuous, -30 V brief reverse polarity protection
• permissible voltage at input, max.	30 V
Input current	
• for signal "1", typ.	2.5 mA
Input delay (for rated value of input voltage)	
for standard inputs	
– parameterizable	Yes; none / 0.05 / 0.1 / 0.4 / 0.8 / 1.6 / 3.2 / 12.8 / 20 ms
– at "0" to "1", min.	6 µs; for parameterization "none"
– at "1" to "0", min.	6 µs; for parameterization "none"
for counter/technological functions	
– parameterizable	Yes
Cable length	
• shielded, max.	1 000 m
• unshielded, max.	600 m

Article number	6ES7138-6AA00-0BA0
Digital outputs	
Type of digital output	Transistor
Number of digital outputs	2
Short-circuit protection	Yes; electronic/thermal
• Response threshold, typ.	1 A
Limitation of inductive shutdown voltage to	L+ (-33 V)
Controlling a digital input	Yes
Digital output functions, parameterizable	
• Switching tripped by comparison values	Yes
• Freely usable digital output	Yes
Switching capacity of the outputs	
• with resistive load, max.	0.5 A; Per digital output
• on lamp load, max.	5 W
Load resistance range	
• lower limit	48 Ω
• upper limit	12 kΩ
Output voltage	
• for signal "1", min.	23.2 V; L+ (-0.8 V)
Output current	
• for signal "1" rated value	0.5 A; Per digital output
• for signal "1" permissible range, max.	0.6 A; Per digital output
• for signal "1" minimum load current	2 mA
• for signal "0" residual current, max.	0.5 mA
Output delay with resistive load	
• "0" to "1", max.	50 µs
• "1" to "0", max.	50 µs
Switching frequency	
• with resistive load, max.	10 kHz
• with inductive load, max.	0.5 Hz; Acc. to IEC 60947-5-1, DC-13; observe derating curve
• on lamp load, max.	10 Hz
Total current of the outputs	
• Current per module, max.	1 A
Cable length	
• shielded, max.	1 000 m
• unshielded, max.	600 m

Article number	6ES7138-6AA00-0BA0
Encoder	
Connectable encoders	
• 2-wire sensor	Yes
– permissible quiescent current (2-wire sensor), max.	1.5 mA
Encoder signals, incremental encoder (asymmetrical)	
• Input voltage	24 V
• Input frequency, max.	200 kHz
• Counting frequency, max.	800 kHz; with quadruple evaluation
• Cable length, shielded, max.	600 m; depending on input frequency, encoder and cable quality; max. 50 m at 200 kHz
• Signal filter, parameterizable	Yes
• Incremental encoder with A/B tracks, 90° phase offset	Yes
• Incremental encoder with A/B tracks, 90° phase offset and zero track	Yes
• Pulse encoder	Yes
• Pulse encoder with direction	Yes
• Pulse encoder with one impulse signal per count direction	Yes
Encoder signal 24 V	
– permissible voltage at input, min.	-30 V
– permissible voltage at input, max.	30 V
Interface types	
• Source/sink input	Yes
• Input characteristic curve in accordance with IEC 61131, type 3	Yes
Isochronous mode	
Isochronous operation (application synchronized up to terminal)	Yes

Article number	6ES7138-6AA00-0BA0
Interrupts/diagnostics/status information	
Substitute values connectable	Yes; Parameterizable
Alarms	
• Diagnostic alarm	Yes
• Hardware interrupt	Yes
Diagnostic messages	
• Monitoring the supply voltage	Yes
• Wire-break	Yes
• Short-circuit	Yes
• A/B transition error at incremental encoder	Yes
• Group error	Yes
Diagnostics indication LED	
• Monitoring of the supply voltage (PWR-LED)	Yes; green PWR LED
• Channel status display	Yes; Green LED
• for module diagnostics	Yes; green/red DIAG LED
• Status indicator backward counting (green)	Yes
• Status indicator forward counting (green)	Yes
Integrated Functions	
Number of counters	1
Counting frequency (counter) max.	800 kHz; with quadruple evaluation
Counting functions	
• Can be used with TO High_Speed_Counter	Yes
• Continuous counting	Yes
• Counter response parameterizable	Yes
• Hardware gate via digital input	Yes
• Software gate	Yes
• Event-controlled stop	Yes
• Synchronization via digital input	Yes
• Counting range, parameterizable	Yes
Comparator	
– Number of comparators	2
– Direction dependency	Yes
– Can be changed from user program	Yes

Article number	6ES7138-6AA00-0BA0
Position detection	
• Incremental acquisition	Yes
• Suitable for S7-1500 Motion Control	Yes
Measuring functions	
• Measuring time, parameterizable	Yes
• Dynamic measurement period adjustment	Yes
• Number of thresholds, parameterizable	2
Measuring range	
– Frequency measurement, min.	0.04 Hz
– Frequency measurement, max.	800 kHz
– Cycle duration measurement, min.	1.25 µs
– Cycle duration measurement, max.	25 s
Accuracy	
– Frequency measurement	100 ppm; depending on measuring interval and signal evaluation
– Cycle duration measurement	100 ppm; depending on measuring interval and signal evaluation
– Velocity measurement	100 ppm; depending on measuring interval and signal evaluation
Potential separation	
Potential separation channels	
• between the channels and backplane bus	Yes
Isolation	
Isolation tested with	707 V DC (type test)
Decentralized operation	
to SIMATIC S7-300	Yes
to SIMATIC S7-400	Yes
to SIMATIC S7-1200	Yes
to SIMATIC S7-1500	Yes
to standard PROFIBUS master	Yes
to standard PROFINET controller	Yes
Dimensions	
Width	15 mm
Height	73 mm
Depth	58 mm
Weights	
Weight, approx.	45 g

Derating information for total current of outputs

If the digital outputs of the TM Count 1x24V are operated with resistive or inductive loads, you should derate the total current of the loads at the digital outputs of the technology module. The total current is the sum of the load currents at all digital outputs of the module (without encoder supply).

The following derating curve shows the load capacity of the digital outputs depending on the ambient temperature and mounting position under the following conditions:

- Load resistance: 48 Ω (IEC 947-5-1)

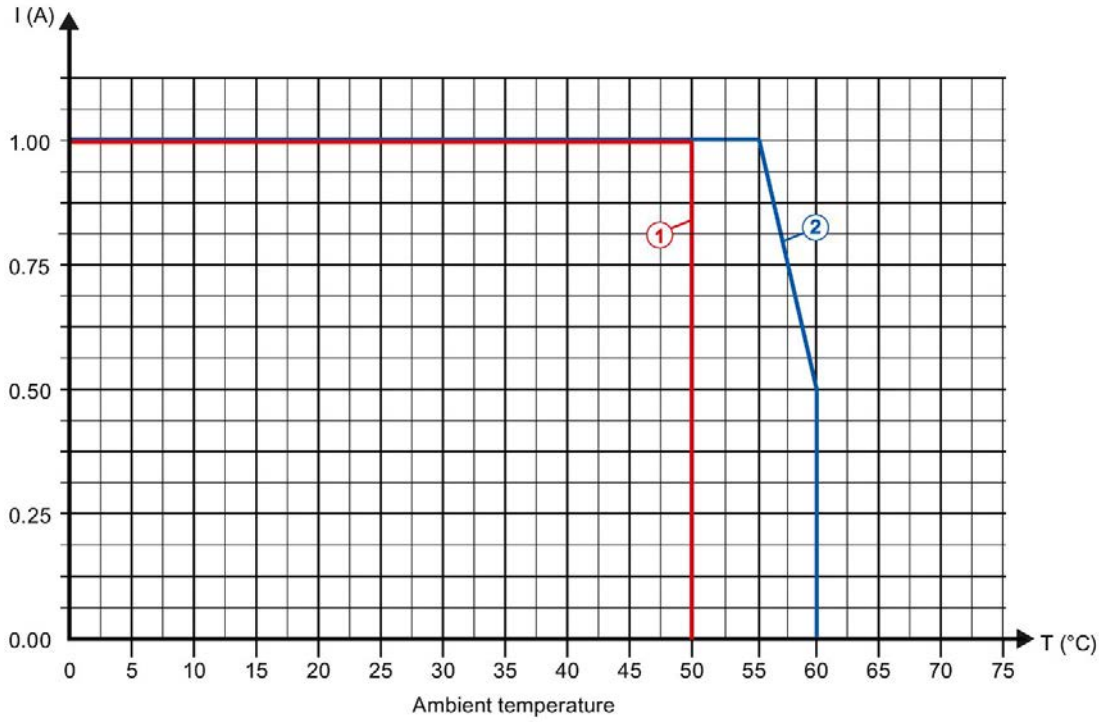

① Vertical installation of the system

② Horizontal installation of the system

Figure 6-1 Total current depending on ambient temperature and mounting position for resistive loads

The following derating curve shows the load capacity of the digital outputs depending on the ambient temperature and mounting position under the following conditions:

- Maximum switching frequency at digital outputs of 0.5 Hz
- Load resistance: 48 Ω (IEC 947-5-1)
- Load inductance: 1150 mH (IEC 947-5-1)

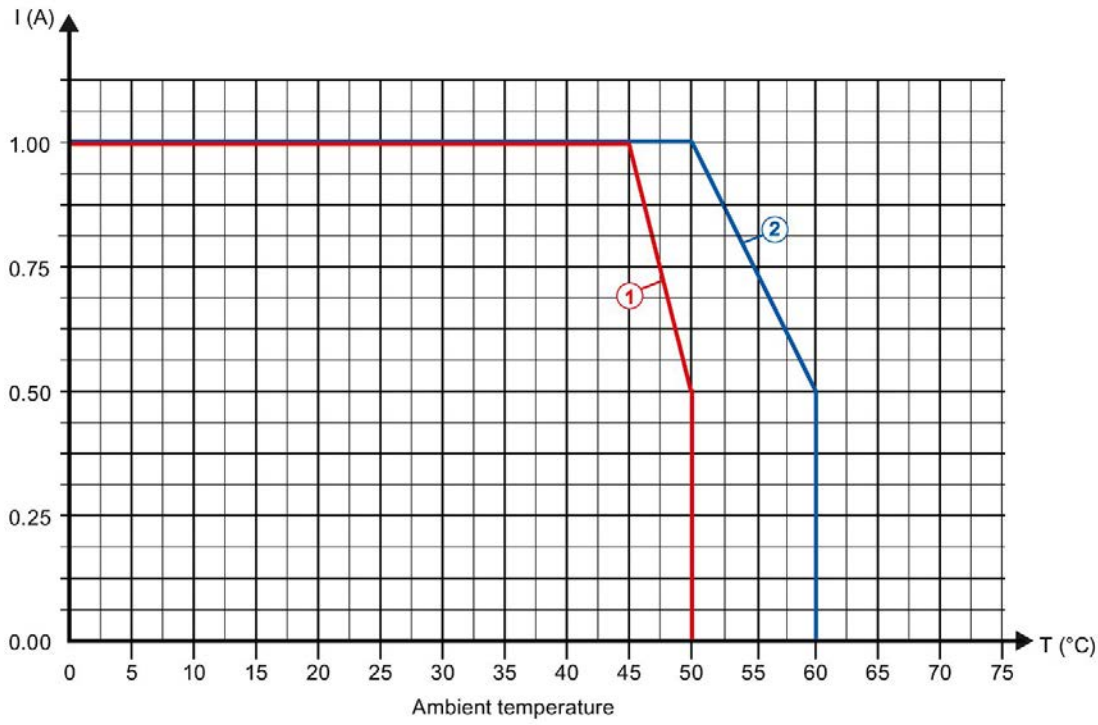

① Vertical installation of the system

② Horizontal installation of the system

Figure 6-2 Total current depending on ambient temperature and mounting position for inductive loads

Note

If the switching frequency is greater than 0.5 Hz or there is greater inductance at the digital outputs, the total current must be reduced further.

Dimension drawing

See ET 200SP BaseUnits (http://support.automation.siemens.com/WW/view/en/58532597/133300) manual

Parameter data record

A

A.1 Parameter assignment and structure of parameter data record

You have the option of reassigning module parameters with the user program while the CPU is in RUN. The parameters are transferred to the module using data record 128, e.g. with the WRREC instruction.

If an error occurs while transferring or validating parameters with the WRREC instruction, the module continues operating with the existing parameter assignment. A corresponding error code is then written to the STATUS output parameter. If no errors occur, the STATUS output parameter contains the length of the actually transferred data.

You can find a description of the WRREC instruction and the error codes in section Parameter validation error (Page 101) or in the online help of STEP 7 (TIA Portal).

Structure of data record 128 for operation with technology object and manual operation

The following table shows you the structure of data record 128 for TM Count 1x24V for operation with technology object and manual operation without technology object. The values in byte 0 to byte 3 are fixed and must not be changed. The value in byte 4 can only be changed by means of new parameter assignment and not in RUN mode of the CPU.

Note

After each writing of data record 128, the module is set to its startup state and the counter value is set to the start value. If "Continue operation" is set for Reaction to CPU STOP, the module is then only set to its startup state when data record 128 has been changed.

Table A- 1 Data record 128: Operating modes "Operating with "Counting and measurement" technology object", "Manual operation (without technology object)"

Bit → / Byte ↓	Bit 7	Bit 6	Bit 5	Bit 4	Bit 3	Bit 2	Bit 1	Bit 0
0...3	**Header**							
0	Major Version = 0				Minor Version = 2			
1	Length of the parameter data = 48							
2	Reserved[2]							
3	Reserved[2]							
4...51	**Counting channel**							
4	**Operating mode**							
4	Reserved[2]				Operating mode:			
					0000_B: Not permitted			
					0001_B: Counting			
					0010_B: Measuring			
					0011 to 1111_B: Not permitted			
5	**Basic parameters**							
5	Reserved[2]					Enable additional diagnostic interrupts[1]	Reaction to CPU STOP:	
							00_B: Output substitute value	
							01_B: Keep last value	
							10_B: Continue operation	
							11_B: Not permitted	

Bit → / Byte ↓	Bit 7	Bit 6	Bit 5	Bit 4	Bit 3	Bit 2	Bit 1	Bit 0
6...7	**Counter inputs**							
6	Sensor type:		Signal evaluation:		Signal type:			
	00_B: Sourcing output		00_B: Single		0000_B: Pulse (A)			
	01_B: Sinking output		01_B: Double		0001_B: Pulse (A) and direction (B)			
	10_B: Push-pull (sinking and sourcing output)		10_B: Quadruple		0010_B: Count up (A), count down (B)			
	11_B: Not permitted		11_B: Not permitted		0011_B: Incremental encoder (A, B phase-shifted)			
					0100_B: Incremental encoder (A, B, N)			
					0101 to 1111_B: Not permitted			
7	Reaction to signal N:		Invert direction[1]	Enable diagnostic interrupt on wire break[1]	Filter frequency[3]:			
	00_B: No reaction to signal N				0000_B: 100 Hz			
					0001_B: 200 Hz			
	01_B: Synchronization at signal N				0010_B: 500 Hz			
					0011_B: 1 kHz			
	10_B: Capture at signal N				0100_B: 2 kHz			
	11_B: Not permitted				0101_B: 5 kHz			
					0110_B: 10 kHz			
					0111_B: 20 kHz			
					1000_B: 50 kHz			
					1001_B: 100 kHz			
					1010_B: 200 kHz			
					1011 to 1111_B: Not permitted			
8...9	**Hardware interrupts[1]**							
8	Reserved[2]			Change of direction	Underflow (low counting limit violated)	Overflow (high counting limit violated)	Gate stop	Gate start
9	Synchronization of the counter by an external signal	New Capture value available	Reserved[2]	Zero crossing	Reserved[2]	Comparison event for DQ1 has occurred	Reserved[2]	Comparison event for DQ0 has occurred

Bit → / Byte ↓	Bit 7	Bit 6	Bit 5	Bit 4	Bit 3	Bit 2	Bit 1	Bit 0
10...15	**Behavior of DQ0/1**							
10	Set output (DQ1):				Set output (DQ0):			
	0000_B: Use by user program				0000_B: Use by user program			
	0001_B: Between comparison value and high limit; Measuring: Measured value >= comparison value				0001_B: Between comparison value and high limit; Measuring: Measured value >= comparison value			
	0010_B: Between comparison value and low limit; Measuring: Measured value <= comparison value				0010_B: Between comparison value and low limit; Measuring: Measured value <= comparison value			
	0011_B: At comparison value for a pulse duration				0011_B: At comparison value for a pulse duration			
	0100_B: Between comparison value 0 and 1				0100_B: Not permitted			
	0101_B: After set command from CPU until comparison value				0101_B: After set command from CPU until comparison value			
	0110_B: Not between comparison value 0 and 1				0110 to 1111_B: Not permitted			
	0111 to 1111_B: Not permitted							
11	Count direction (DQ1):		Count direction (DQ0):		Reserved[2]		Substitute value for DQ1	Substitute value for DQ0
	00_B: Not permitted		00_B: Not permitted					
	01_B: Up		01_B: Up					
	10_B: Down		10_B: Down					
	11_B: In both directions		11_B: In both directions					
12	Pulse duration (DQ0):							
13	WORD: Value range in ms/10: 0 to 65535_D							
14	Pulse duration (DQ1):							
15	WORD: Value range in ms/10: 0 to 65535_D							
16	**Behavior of DI0**							
16	Behavior of counter value after Capture (DI0):	Edge selection (DI0):		Select level (DI0):	Reserved[2]	Set function of DI (DI0):		
		00_B: Not permitted[5]				000_B: Gate start/stop (level-triggered)		
		01_B: At rising edge		0_B: Active with high level		001_B: Gate start (edge-triggered)		
		10_B: At falling edge				010_B: Gate stop (edge-triggered)		
	0_B: Continue counting	11_B: At rising and falling edge		1_B: Active with low level		011_B: Synchronization		
						100_B: Enable synchronization at signal N		
	1_B: Set to start value and continue counting					101_B: Capture		
						110_B: Digital input without function		
						111_B: Not permitted		

Bit → / Byte ↓	Bit 7	Bit 6	Bit 5	Bit 4	Bit 3	Bit 2	Bit 1	Bit 0
17	**Behavior of DI1**: See Byte 16							
18	**Behavior of DI2**: See Byte 16							
19	Frequency of synchro-nization:	Reserved[2]		Frequency of Capture function:	Input delay:			
					0000_B: None			
					0001_B: 0.05 ms			
	0_B: Once			0_B: Once	0010_B: 0.1 ms			
					0011_B: 0.4 ms			
	1_B: Periodic			1_B: Periodic	0100_B: 0.8 ms			
					0101_B: 1.6 ms			
					0110_B: 3.2 ms			
					0111_B: 12.8 ms			
					1000_B: 20 ms			
					1001 to 1111_B: Not permitted			
20...43	**Values**							
20...23	High counting limit: DWORD: Value range: –2147483648 to 2147483647_D or 80000000 to $7FFFFFFF_H$							
24...27	Comparison value 0: Operating mode Counting: DWORD: Value range: –2147483648 to 2147483647_D or 80000000 to $7FFFFFFF_H$; Measuring operating mode: REAL: Floating point number in the configured unit of the measured variable							
28...31	Comparison value 1: Operating mode Counting: DWORD: Value range: –2147483648 to 2147483647_D: or 80000000 to $7FFFFFFF_H$; Measuring operating mode: REAL: Floating point number in the configured unit of the measured variable							
32...35	Start value: DWORD: Value range: –2147483648 to 2147483647_D or 80000000 to $7FFFFFFF_H$							
36...39	Low counting limit: DWORD: Value range: –2147483648 to 2147483647_D or 80000000 to $7FFFFFFF_H$							
40...43	Update time: DWORD: Value range in µs: 0 to 25000000_D							
44	**Counter behavior at limits and gate start**							
44	Reaction to gate start:		Reaction to violation of a counting limit:		Reset when counting limit is violated:			
	00_B: Set to start value		000_B: Stop counting		000_B: To opposite counting limit			
	01_B: Continue with current value		001_B: Continue counting		001_B: To start value			
	10 to 11_B: Not permitted		010 to 111_B: Not permitted		010 to 111_B: Not permitted			

Bit → / Byte ↓	Bit 7	Bit 6	Bit 5	Bit 4	Bit 3	Bit 2	Bit 1	Bit 0
45	**Specify measured value**							
45	Reserved[2)]			Time base for velocity measurement:			Measured variable:	
				000_B: 1 ms			00_B: Frequency	
				001_B: 10 ms			01_B: Period	
				010_B: 100 ms			10_B: Velocity	
				011_B: 1 s			11_B: Not permitted	
				100_B: 60 s/1 min				
				101 to 111_B: Not permitted				
46	Increments per unit:							
47	WORD: Value range: 1 to 65535_D							
48	Set hysteresis range: Value range: 0 to 255_D							
49...51	Reserved[2]							

1 You activate the respective parameter by setting the associated bit to 1.

2 Reserved bits must be set to 0

3 In isochronous mode, the parameter can affect the isochronous mode parameters of the sync domain. Because the isochronous mode parameters are not checked in RUN, overflows can occur if you change the parameter in RUN. To prevent overflows, select the option with the largest time required in the offline parameter assignment.

4 Applies to: Set function of DI = 001_B; 010_B; 011_B; 101_B

Structure of the data record 128 in Fast Mode

The following table shows you the structure of data record 128 for TM Count 1x24V for Fast Mode. The values in byte 0 to byte 3 are fixed and must not be changed.

Table A- 2 Parameter data record 128: "Fast Mode" operating mode

Bit → / Byte ↓	Bit 7	Bit 6	Bit 5	Bit 4	Bit 3	Bit 2	Bit 1	Bit 0
0...3	**Header**							
0	Major Version = 0				Minor Version = 1			
1	Length of the parameter data per channel = 48							
2	Reserved[2]							
3	Reserved[2]							
4	**Operating mode**							
4	Reserved[2]				Operating mode:			
					0000_B: Not permitted			
					0001_B: Counting / Position input			
					0010 to 1111_B: Not permitted			
5	**Basic parameters**							
5	Reserved[2]					Enable additional diagnostic interrupts[1)]	Reaction to CPU STOP:	
							00_B: Output substitute value	
							01_B: Keep last value	
							10_B: Continue operation	
							11_B: Not permitted	

Bit → / Byte ↓	Bit 7	Bit 6	Bit 5	Bit 4	Bit 3	Bit 2	Bit 1	Bit 0
6...7	**Counter inputs** (parameters for incremental and pulse encoders)							
6	Sensor type:		Signal evaluation:		Signal type:			
	00_B: Sourcing output		00_B: Single		0000_B: Pulse (A)			
	01_B: Sinking output		01_B: Double		0001_B: Pulse (A) and direction (B)			
	10_B: Push-pull (sinking and sourcing output)		10_B: Quadruple		0010_B: Count up (A), count down (B)			
	11_B: Not permitted		11_B: Not permitted		0011_B: Incremental encoder (A, B phase-shifted)			
					0100_B: Incremental encoder (A, B, N)			
					0101 to 1111_B: Not permitted			
7	Reaction to signal N:		Invert direction[1]	Enable diagnostic interrupt on wire break[1]	Filter frequency[3]:			
	00_B: No reaction to signal N				0000_B: 100 Hz			
					0001_B: 200 Hz			
	01_B: Synchronization at signal N				0010_B: 500 Hz			
					0011_B: 1 kHz			
	10 to 11_B: Not permitted				0100_B: 2 kHz			
					0101_B: 5 kHz			
					0110_B: 10 kHz			
					0111_B: 20 kHz			
					1000_B: 50 kHz			
					1001_B: 100 kHz			
					1010_B: 200 kHz			
					1011 to 1111_B: Not permitted			
8...9	Reserved[2]							
10...15	**Behavior of a DQ**							
10	Set output (DQ1):				Set output (DQ0):			
	0000_B: Digital output without function				0000_B: Digital output without function			
	0001_B: Between comparison value and high limit				0001_B: Between comparison value and high limit			
	0010_B: Between comparison value and low limit				0010_B: Between comparison value and low limit			
	0011_B: At comparison value for a pulse duration				0011_B: At comparison value for a pulse duration			
	0100_B: Between comparison value 0 and 1				0100_B to 1111_B: Not permitted			
	0101 to 1111_B: Not permitted							
11	Count direction (DQ1):		Count direction (DQ0):		Reserved[2]	Reserved[2]	Substitute value for DQ1	Substitute value for DQ0
	00_B: Reserved		00_B: Reserved					
	01_B: Up		01_B: Up					
	10_B: Down		10_B: Down					
	11_B: In both directions		11_B: In both directions					
12	Pulse duration (DQ0):							
13	UINT: Value range in ms/10: 0 to 65535_D							
14	Pulse duration (DQ1):							
15	UINT: Value range in ms/10: 0 to 65535_D							

Bit → / Byte ↓	Bit 7	Bit 6	Bit 5	Bit 4	Bit 3	Bit 2	Bit 1	Bit 0
16	**Behavior of DI0**							
16	Reserved[2]	Edge selection (DI0):		Select level (DI0):	Reserved[2]	Set function of DI (DI0):		
		00_B: Not permitted[5]				000_B: Gate start/stop (level-triggered)		
		01_B: At rising edge		0_B: Active with high level		001_B: Gate start (edge-triggered)		
		10_B: At falling edge				010_B: Gate stop (edge-triggered)		
		11_B: Not permitted		1_B: Active with low level		011_B: Synchronization[3]		
						100_B: Enable synchronization at signal N		
						101_B: Not permitted		
						110_B: Digital input without function		
						111_B: Not permitted		
17	**Behavior of DI1**: See Byte 16							
18	**Behavior of DI2**: See Byte 16							
19	Frequency of synchronization:	Count direction for synchronization		Reserved[2]	Input delay:			
	0_B: Once	00_B: Not permitted			0000_B: None			
	1_B: Periodic	01_B: Up			0001_B: 0.05 ms			
		10_B: Down			0010_B: 0.1 ms			
		11_B: In both directions			0011_B: 0.4 ms			
					0100_B: 0.8 ms			
					0101_B: 1.6 ms			
					0110_B: 3.2 ms			
					0111_B: 12.8 ms			
					1000_B: 20 ms			
					1001 to 1111_B: Not permitted			
20...43	**Values**							
20...23	High counting limit: DWORD: Value range: 1 to 33554431_D or 1 to $01FFFFFF_H$							
24...27	Comparison value 0: DWORD: Value range: 0 to 33554431_D or 0 to $01FFFFFF_H$							
28...31	Comparison value 1: DWORD: Value range: 0 to 33554431_D or 0 to $01FFFFFF_H$							
32...35	Start value: DWORD: Value range: 0 to 33554431_D or 0 to $01FFFFFF_H$							
36...39	Low counting limit: DWORD: Value range: 0 to 33554430_D or 0 to $01FFFFFE_H$							
40...43	Reserved[2]							

Bit → / Byte ↓	Bit 7	Bit 6	Bit 5	Bit 4	Bit 3	Bit 2	Bit 1	Bit 0
44	**Counter behavior at limits and gate start**							
44	Reaction to gate start:		Reaction to violation of a counting limit:			Reset when counting limit is violated:		
	00_B: Set to start value		000_B: Stop counting			000_B: To opposite counting limit		
	01_B: Continue with current value		001_B: Continue counting			001_B: To start value		
	10 to 11_B: Not permitted		010 to 111_B: Not permitted			010 to 111_B: Not permitted		
45...47	Reserved[2]							
48	Set hysteresis range: Value range: 0 to 255_D:							
49...51	Reserved[2]							

1 You activate the respective parameter by setting the associated bit to 1.

2 Reserved bits must be set to 0

3 In isochronous mode, the parameter can affect the isochronous mode parameters of the sync domain. Because the isochronous mode parameters are not checked in RUN, overflows can occur if you change the parameter in RUN. To prevent overflows, select the option with the largest time required in the offline parameter assignment.

4 Applies to: Set function of DI = 001_B; 010_B; 011_B

A.2 Parameter validation error

If you make the parameter settings in STEP 7 (TIA Portal) or in STEP 7 , the parameter values are checked before they are transferred to the technology module. This process prevents parameter errors.

In other use cases, the technology module checks the transferred parameter data record. If the technology module finds invalid or inconsistent parameter values, it outputs an error code (see below). The new parameter data record is rejected in this case, and work continues with the current parameter values until a valid parameter data record has been transferred.

WRREC

When the CPU is in RUN, you can change the parameter data record with the instruction WRREC (Write Record). In case of errors, the WRREC instruction returns corresponding error codes in the STATUS parameter.

Example:

Let us assume that an invalid value, for example 9, is written to the module for the operating mode with WRREC. As a consequence, the module rejects the entire parameter data record. You can recognize this by evaluating the STATUS output parameter of the WRREC instruction. The STATUS output parameter is output as an ARRAY[1..4] of BYTE data with the value 16#DF80E111:

Example of WRREC STATUS data	Address	Meaning
DF_H	STATUS[1]	Error when writing a data record via PROFINET IO (IEC 61158-6)
80_H	STATUS[2]	Error when reading or writing a data record via PROFINET IO (IEC 61158-6)
$E1_H$	STATUS[3]	Module-specific error
11_H	STATUS[4]	Error code from the table below: The "Operating mode" parameter has an invalid value.

Error codes

The following table shows the module-specific error codes and their meaning for parameter data record 128.

Table A- 3 Error codes for parameter validation

Error code in STATUS parameter (hexadecimal)				Meaning	Remedy
Byte 0	Byte 1	Byte 2	Byte 3		
DF	80	B0	00	Data record number unknown	Enter valid number for data record.
DF	80	B1	01	Length of data record incorrect	Enter valid value for data record length.
DF	80	B2	00	Slot invalid or not accessible	• Check whether module is inserted or removed. • Check assigned values for parameters of the WRREC instruction.
DF	80	E0	01	Wrong version	• Check byte 0. • Enter valid values.
DF	80	E0	02	Error in the header information	• Check byte 1. • Correct the length of the parameter blocks.
DF	80	E1	00	Parameter invalid: No detailed information available	Check all parameter values.
DF	80	E1	11	"Operating mode" parameter invalid	Enter valid parameter value.
DF	80	E1	12	"Reaction to CPU STOP" parameter invalid	Enter valid parameter value.
DF	80	E1	13	"Signal type" parameter invalid	Enter valid parameter value.
DF	80	E1	14	"Sensor type" parameter invalid	Enter valid parameter value.
DF	80	E1	15	"Filter frequency" parameter invalid	Enter valid parameter value.
DF	80	E1	16	"Reaction to signal N" parameter invalid	Enter valid parameter value.
DF	80	E1	17	"Set function of DI" parameter invalid	Enter valid parameter value.
DF	80	E1	18	"Set function of DI" parameter configured the same for DI0 and DI1.	Enter different parameter values for DI0 and DI1.
DF	80	E1	19	• "Edge selection" parameter invalid • "Gate start (edge-triggered)" configured as function for DIm and "At rising and falling edge" • "Gate stop (edge-triggered)" configured as function for DIm and "At rising and falling edge" • "Synchronization" configured as function for DIm and "At rising and falling edge"	• Enter valid parameter value. • Only configure "Gate start (edge-triggered)" as function for DIm together with "At rising edge" or "At falling edge". • Only configure "Gate stop (edge-triggered)" as function for DIm together with "At rising edge" or "At falling edge". • Only configure "Synchronization" as function for DIm together with "At rising edge" or "At falling edge".
DF	80	E1	1A	"Input delay" parameter invalid	Enter valid parameter value.
DF	80	E1	1B	"Set output" parameter invalid	Enter valid parameter value.
DF	80	E1	1C	"Count direction" parameter invalid	Enter valid parameter value.
DF	80	E1	1D	"Reset when counting limit is violated" parameter invalid	Enter valid parameter value.
DF	80	E1	1E	"Reaction to violation of a counting limit" parameter invalid	Enter valid parameter value.
DF	80	E1	20	"Reaction to gate start" parameter invalid	Enter valid parameter value.

Error code in STATUS parameter (hexadecimal)				Meaning	Remedy
Byte 0	Byte 1	Byte 2	Byte 3		
DF	80	E1	21[1,5]	• Low counting limit > comparison value 0 • Low counting limit > comparison value 1	• Low counting limit < comparison value 0 • Low counting limit < comparison value 1
DF	80	E1	22[1,5]	• Counting high limit < comparison value 0 • Counting high limit < comparison value 1	• High counting limit > comparison value 0 • High counting limit > comparison value 1
DF	80	E1	23	• "Start value" parameter invalid • "Low counting limit" parameter invalid	Enter valid parameter value: Start value > low counting limit
DF	80	E1	24	• "Start value" parameter invalid • "High counting limit" parameter invalid	Enter valid parameter value: Start value < high counting limit
DF	80	E1	25	"Update time" parameter invalid	Enter parameter value from range 0 to 25000000_D.
DF	80	E1	26[2]	"Reference speed" parameter invalid	Enter parameter value from range 6.00 to 210000.00_D.
DF	80	E1	27	"Measured variable" parameter invalid	Enter valid parameter value.
DF	80	E1	28	"Time base for velocity measurement" parameter invalid	Enter valid parameter value.
DF	80	E1	29	"Increments per unit" parameter invalid	Enter valid parameter value.
DF	80	E1	2A	• "High counting limit" parameter invalid • "Low counting limit" parameter invalid	Enter valid parameter value: Low counting limit < high counting limit
DF	80	E1	2B[3]	• "Comparison value 0" parameter invalid • "Comparison value 1" parameter invalid	Enter valid parameter value: Comparison value 0 < comparison value 1
DF	80	E1	2C	"Signal evaluation" parameter invalid	Enter valid parameter value.
DF	80	E1	2D	• "Between comparison value 0 and 1" configured for DQ0 • "Not between comparison value 0 and 1" configured for DQ0 • "Between comparison value 0 and 1" configured for DQ1, but "Use by user program" not configured for DQ0 • "Not between comparison value 0 and 1" configured for DQ1, but "Use by user program" not configured for DQ0	• Configure "Between comparison value 0 and 1" only for DQ1 • "Not between comparison value 0 and 1" configured only for DQ1 • Only configure "Between comparison value 0 and 1" for DQ1 when "Use by user program" is configured for DQ0 • Only configure "Not between comparison value 0 and 1" for DQ1 when "Use by user program" is configured for DQ0
DF	80	E1	2E	"Capture" configured for DIm in "Measuring" operating mode	Do not configure "Capture" for DIm in "Measuring" operating mode
DF	80	E1	36[4]	"Counting high limit" parameter invalid	Enter valid parameter value.
DF	80	E1	37[4,5]	• "Comparison value 0" parameter invalid • "Comparison value 1" parameter invalid	Enter valid parameter value.
DF	80	E1	38[4]	"Start value" parameter invalid	Enter valid parameter value.
DF	80	E1	39[4]	"Counting low limit" parameter invalid	Enter valid parameter value.

Error code in STATUS parameter (hexadecimal)				Meaning	Remedy
Byte 0	Byte 1	Byte 2	Byte 3		
DF	80	E1	3A[4]	"Count direction for synchronization" parameter invalid	Enter valid parameter value.
DF	80	E1	F0	Reserved bit is not set to 0.	Set reserved bit to 0.

1 Only for "Counting" operating mode

2 Only for "Position input for technology object "Motion Control"" operating mode

3 Only for DQ1 functions "Between comparison value 0 and 1" and "Not between comparison value 0 and 1"

4 Only for operating mode "Fast Mode"

5 Not for DQm function "Use by user program" or "Digital output without function"

SIEMENS

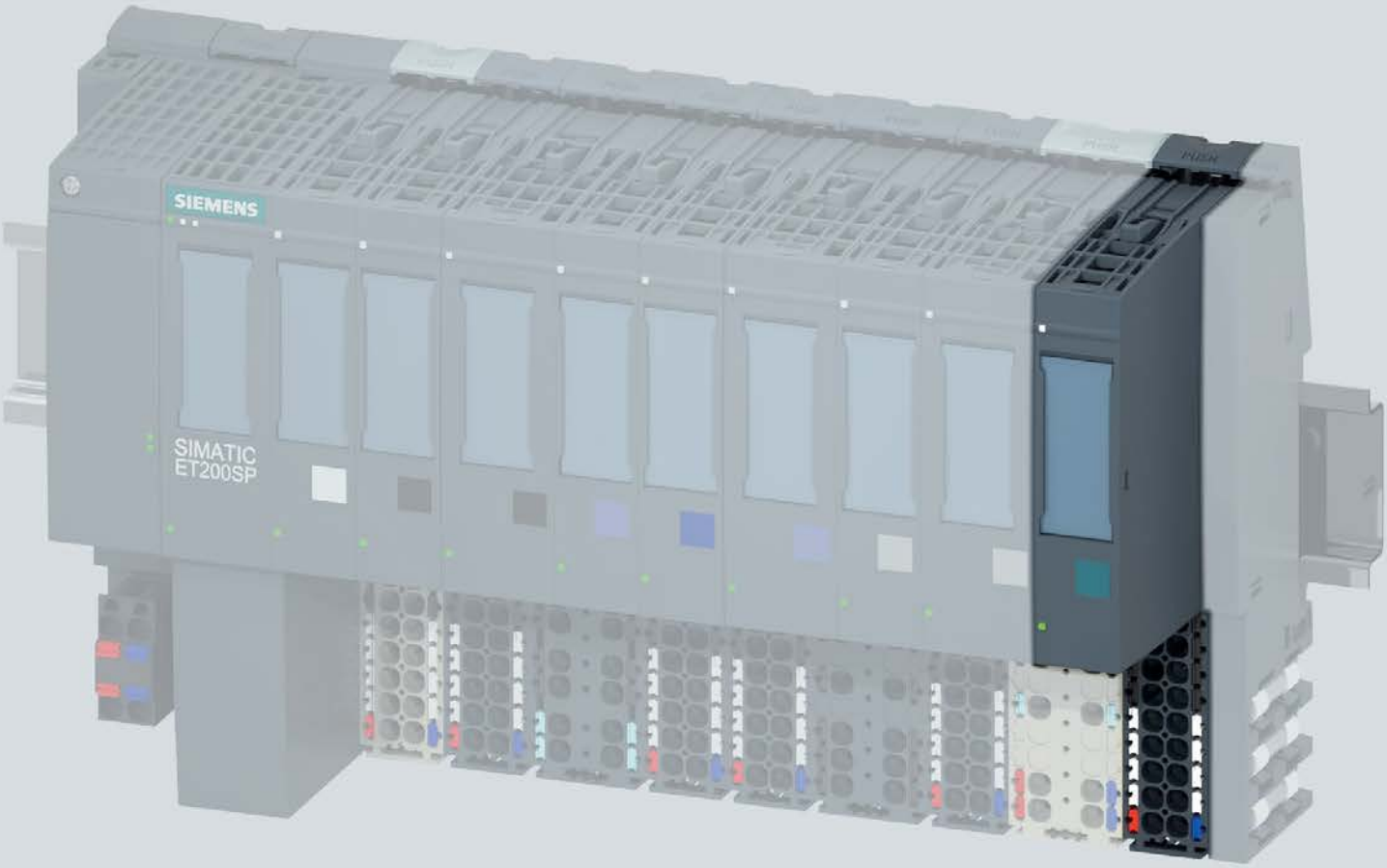

Manual

SIMATIC

ET 200SP

Technology module
TM PosInput 1 (6ES7138-6BA00-0BA0)

Edition 06/2018

support.industry.siemens.com

SIEMENS

SIMATIC

ET 200SP
Technology module TM PosInput 1 (6ES7138-6BA00-0BA0)

Manual

Preface

Documentation guide 1

Product overview 2

Wiring 3

Configuring/address space 4

Interrupts/diagnostic messages 5

Technical specifications 6

Parameter data record A

06/2018

A5E33015755-AD

Legal information

Warning notice system

This manual contains notices you have to observe in order to ensure your personal safety, as well as to prevent damage to property. The notices referring to your personal safety are highlighted in the manual by a safety alert symbol, notices referring only to property damage have no safety alert symbol. These notices shown below are graded according to the degree of danger.

⚠ DANGER

indicates that death or severe personal injury **will** result if proper precautions are not taken.

⚠ WARNING

indicates that death or severe personal injury **may** result if proper precautions are not taken.

⚠ CAUTION

indicates that minor personal injury can result if proper precautions are not taken.

NOTICE

indicates that property damage can result if proper precautions are not taken.

If more than one degree of danger is present, the warning notice representing the highest degree of danger will be used. A notice warning of injury to persons with a safety alert symbol may also include a warning relating to property damage.

Qualified Personnel

The product/system described in this documentation may be operated only by **personnel qualified** for the specific task in accordance with the relevant documentation, in particular its warning notices and safety instructions. Qualified personnel are those who, based on their training and experience, are capable of identifying risks and avoiding potential hazards when working with these products/systems.

Proper use of Siemens products

Note the following:

⚠ WARNING

Siemens products may only be used for the applications described in the catalog and in the relevant technical documentation. If products and components from other manufacturers are used, these must be recommended or approved by Siemens. Proper transport, storage, installation, assembly, commissioning, operation and maintenance are required to ensure that the products operate safely and without any problems. The permissible ambient conditions must be complied with. The information in the relevant documentation must be observed.

Trademarks

All names identified by ® are registered trademarks of Siemens AG. The remaining trademarks in this publication may be trademarks whose use by third parties for their own purposes could violate the rights of the owner.

Disclaimer of Liability

We have reviewed the contents of this publication to ensure consistency with the hardware and software described. Since variance cannot be precluded entirely, we cannot guarantee full consistency. However, the information in this publication is reviewed regularly and any necessary corrections are included in subsequent editions.

Siemens AG
Division Digital Factory
Postfach 48 48
90026 NÜRNBERG
GERMANY

A5E33015755-AD
℗ 05/2018 Subject to change

Copyright © Siemens AG 2018.
All rights reserved

Preface

Purpose of the documentation

This manual includes module-specific information on wiring, diagnostics and the technical specifications of the technology module.

General information regarding the design and commissioning of the ET 200SP is available in the ET 200SP system manual.

The counting and measuring functions as well as the position input of the TM PosInput 1 technology module are described in more detail in the Counting, measurement and position input (http://support.automation.siemens.com/WW/view/en/59709820) function manual.

Conventions

Please observe notes marked as follows:

Note

A note contains important information on the product described in the documentation, on the handling of the product and on the section of the documentation to which particular attention should be paid.

Security information

Siemens provides products and solutions with industrial security functions that support the secure operation of plants, systems, machines and networks.

In order to protect plants, systems, machines and networks against cyber threats, it is necessary to implement – and continuously maintain – a holistic, state-of-the-art industrial security concept. Siemens' products and solutions only form one element of such a concept.

Customer is responsible to prevent unauthorized access to its plants, systems, machines and networks. Systems, machines and components should only be connected to the enterprise network or the internet if and to the extent necessary and with appropriate security measures (e.g. use of firewalls and network segmentation) in place.

Additionally, Siemens' guidance on appropriate security measures should be taken into account. For more information about industrial security, please visit (http://www.siemens.com/industrialsecurity).

Siemens' products and solutions undergo continuous development to make them more secure. Siemens strongly recommends to apply product updates as soon as available and to always use the latest product versions. Use of product versions that are no longer supported, and failure to apply latest updates may increase customer's exposure to cyber threats.

To stay informed about product updates, subscribe to the Siemens Industrial Security RSS Feed under (http://www.siemens.com/industrialsecurity).

Open Source Software

Open-source software is used in the firmware of the product described. Open Source Software is provided free of charge. We are liable for the product described, including the open-source software contained in it, pursuant to the conditions applicable to the product. Siemens accepts no liability for the use of the open source software over and above the intended program sequence, or for any faults caused by modifications to the software.

For legal reasons, we are obliged to publish the original text of the license conditions and copyright notices. Please read the information on this on the Internet (https://support.industry.siemens.com/cs/ww/en/view/109740777).

Table of contents

Preface 3

1 Documentation guide 7

2 Product overview 11

2.1 Properties 11

2.2 Functions 15
2.2.1 Acquisition of encoder signals 15
2.2.1.1 Position input with SSI absolute encoder 15
2.2.1.2 Counting with incremental or pulse encoder 17
2.2.2 Measured value determination 18
2.2.3 Switching the outputs at comparison values 18
2.2.4 Position input for Motion Control 19
2.2.5 Fast Mode 19
2.2.6 Additional functions 20

3 Wiring 21

3.1 SSI encoder signals 23

3.2 RS422 encoder signals 25

3.3 TTL encoder signals 28

4 Configuring/address space 31

4.1 Operating with "Counting and measurement" technology object 31
4.1.1 Configuring 31
4.1.2 Reaction to CPU STOP 32
4.1.3 Parameter setting 33
4.1.3.1 Parameters (SSI absolute encoder) 34
4.1.3.2 Parameters (incremental or pulse encoder) 38
4.1.4 Address space 44
4.1.5 Isochronous mode 44

4.2 Position input for "Motion Control" technology object 46
4.2.1 Configuring 46
4.2.2 Parameter setting 47
4.2.2.1 Parameters (SSI absolute encoder) 47
4.2.2.2 Parameters (incremental or pulse encoder) 50
4.2.3 Address space 51
4.2.4 Isochronous mode 52

4.3 Manual operation (without technology object) 53
4.3.1 Configuring 53
4.3.2 Reaction to CPU STOP 55
4.3.3 Parameter setting 56
4.3.3.1 Parameters (SSI absolute encoder) 57
4.3.3.2 Parameters (incremental or pulse encoder) 61

4.3.4 Address space ... 66
4.3.5 Control and feedback interface ... 66
4.3.5.1 Assignment of the control interface ... 66
4.3.5.2 Assignment of the feedback interface ... 69
4.3.6 Isochronous mode ... 73

4.4 Fast Mode ... 74
4.4.1 Configuring ... 75
4.4.2 Reaction to CPU STOP ... 77
4.4.3 Parameter setting ... 78
4.4.3.1 Parameters (SSI absolute encoder) ... 79
4.4.3.2 Parameters (incremental or pulse encoder) ... 82
4.4.3.3 Explanation of parameters ... 86
4.4.4 Address space ... 97
4.4.5 Assignment of the feedback interface ... 97
4.4.6 Isochronous mode ... 99

5 Interrupts/diagnostic messages ... 100

5.1 Status and error display ... 100

5.2 Diagnostic alarms ... 103

5.3 Hardware interrupts ... 107

6 Technical specifications ... 109

A Parameter data record ... 118

A.1 Parameter assignment and structure of parameter data record ... 118

A.2 Parameter validation error ... 130

Documentation guide

1

The documentation for the SIMATIC ET 200SP distributed I/O system is arranged into three areas.
This arrangement enables you to access the specific content you require.

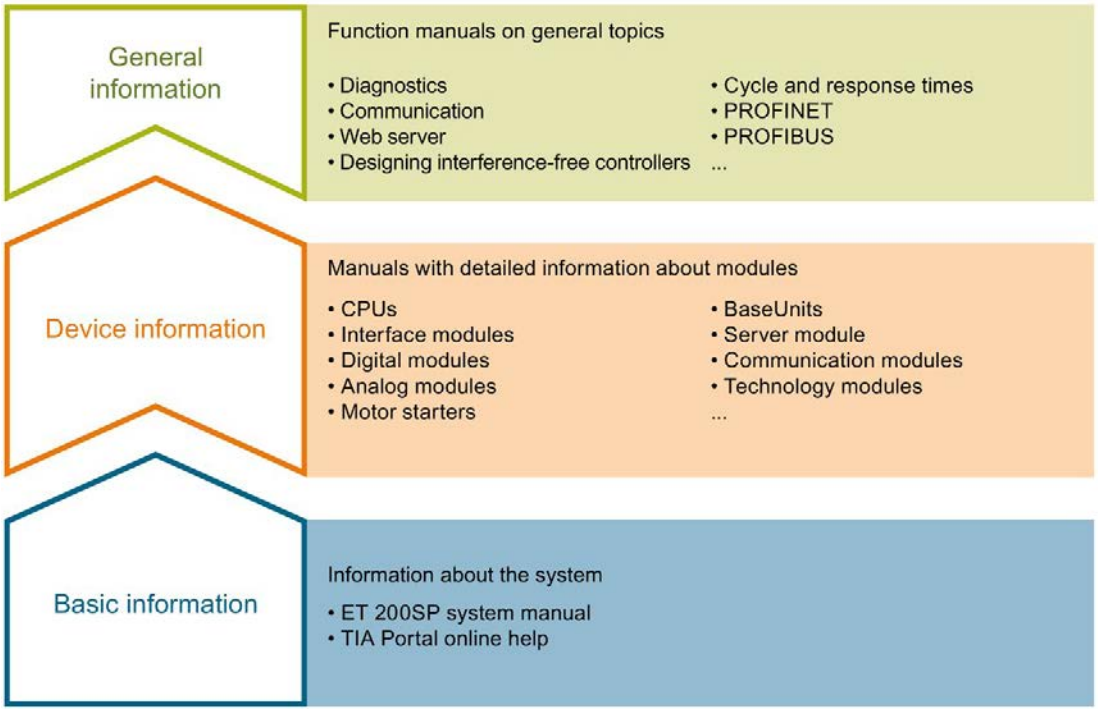

Basic information

The system manual describes in detail the configuration, installation, wiring and commissioning of the SIMATIC ET 200SP. distributed I/O system. The STEP 7 online help supports you in the configuration and programming.

Device information

Product manuals contain a compact description of the module-specific information, such as properties, wiring diagrams, characteristics and technical specifications.

General information

The function manuals contain detailed descriptions on general topics regarding the SIMATIC ET 200SP distributed I/O system, e.g. diagnostics, communication, Web server, motion control and OPC UA.

You can download the documentation free of charge from the Internet (https://support.industry.siemens.com/cs/ww/en/view/109742709).

Changes and supplements to the manuals are documented in a Product Information.

You can download the product information free of charge from the Internet (https://support.industry.siemens.com/cs/us/en/view/73021864).

Manual Collection ET 200SP

The Manual Collection contains the complete documentation on the SIMATIC ET 200SP distributed I/O system gathered together in one file.

You can find the Manual Collection on the Internet (https://support.industry.siemens.com/cs/ww/en/view/84133942).

"mySupport"

With "mySupport", your personal workspace, you make the most of your Industry Online Support.

In "mySupport" you can store filters, favorites and tags, request CAx data and put together your personal library in the Documentation area. Furthermore, your data is automatically filled into support requests and you always have an overview of your current requests.

You need to register once to use the full functionality of "mySupport".

You can find "mySupport" in the Internet (https://support.industry.siemens.com/My/ww/en).

"mySupport" - Documentation

In the Documentation area of "mySupport", you have the possibility to combine complete manuals or parts of them to make your own manual.
You can export the manual in PDF format or in an editable format.

You can find "mySupport" - Documentation in the Internet (http://support.industry.siemens.com/My/ww/en/documentation).

"mySupport" - CAx Data

In the CAx Data area of "mySupport", you can have access the latest product data for your CAx or CAe system.

You configure your own download package with a few clicks.

In doing so you can select:

- Product images, 2D dimension drawings, 3D models, internal circuit diagrams, EPLAN macro files
- Manuals, characteristics, operating manuals, certificates
- Product master data

You can find "mySupport" - CAx Data in the Internet (http://support.industry.siemens.com/my/ww/en/CAxOnline).

Application examples

The application examples support you with various tools and examples for solving your automation tasks. Solutions are shown in interplay with multiple components in the system - separated from the focus in individual products.

You can find the application examples on the Internet (https://support.industry.siemens.com/sc/ww/en/sc/2054).

TIA Selection Tool

With the TIA Selection Tool, you can select, configure and order devices for Totally Integrated Automation (TIA).
This tool is the successor of the SIMATIC Selection Tool and combines the known configurators for automation technology into one tool.
With the TIA Selection Tool, you can generate a complete order list from your product selection or product configuration.

You can find the TIA Selection Tool on the Internet (http://w3.siemens.com/mcms/topics/en/simatic/tia-selection-tool).

SIMATIC Automation Tool

You can use the SIMATIC Automation Tool to run commissioning and maintenance activities simultaneously on various SIMATIC S7 stations as a bulk operation independently of the TIA Portal.

The SIMATIC Automation Tool provides a multitude of functions:

- Scanning of a PROFINET/Ethernet network and identification of all connected CPUs
- Address assignment (IP, subnet, gateway) and station name (PROFINET device) to a CPU
- Transfer of the data and the programming device/PC time converted to UTC time to the module
- Program download to CPU
- Operating mode switchover RUN/STOP
- Localization of the CPU by means of LED flashing
- Reading out CPU error information
- Reading the CPU diagnostic buffer
- Reset to factory settings
- Updating the firmware of the CPU and connected modules

You can find the SIMATIC Automation Tool on the Internet (https://support.industry.siemens.com/cs/ww/en/view/98161300).

PRONETA

With SIEMENS PRONETA (PROFINET network analysis), you analyze the plant network during commissioning. PRONETA features two core functions:

- The topology overview independently scans PROFINET and all connected components.
- The IO check is a fast test of the wiring and the module configuration of a system.

You can find SIEMENS PRONETA on the Internet (https://support.industry.siemens.com/cs/ww/en/view/67460624).

SINETPLAN

SINETPLAN, the Siemens Network Planner, supports you in planning automation systems and networks based on PROFINET. The tool facilitates professional and predictive dimensioning of your PROFINET installation as early as in the planning stage. In addition, SINETPLAN supports you during network optimization and helps you to exploit network resources optimally and to plan reserves. This helps to prevent problems in commissioning or failures during productive operation even in advance of a planned operation. This increases the availability of the production plant and helps improve operational safety.

The advantages at a glance

- Network optimization thanks to port-specific calculation of the network load
- Increased production availability thanks to online scan and verification of existing systems
- Transparency before commissioning through importing and simulation of existing STEP 7 projects
- Efficiency through securing existing investments in the long term and optimal exploitation of resources

You can find SINETPLAN on the Internet (https://www.siemens.com/sinetplan).

Product overview

2

2.1 Properties

Article number

6ES7138-6BA00-0BA0

Firmware version

This manual describes the properties of the module with firmware version V1.3.

View of the module

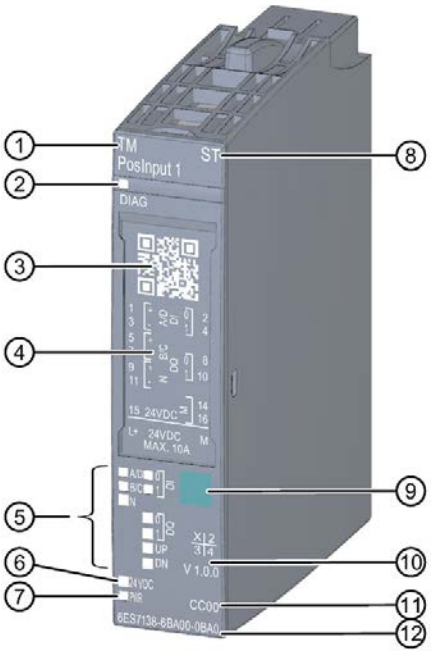

① Module type and designation
② LED for diagnostics
③ 2D matrix code
④ Wiring diagram
⑤ LEDs for channel status
⑥ LED for encoder supply
⑦ LED for supply voltage
⑧ Function class
⑨ Module type color coding
⑩ Function and firmware version
⑪ Color code for selecting the color-coded labels
⑫ Article number

Figure 2-1 View of the TM PosInput 1 module

Properties

The TM PosInput 1 technology module has the following properties:

- Technical properties
  - One channel
  - Interfaces:

    SSI encoder signals D und C or RS422/TTL encoder signals A, B and N

    24 V encoder supply, short-circuit-proof

    Digital inputs signals DI0 and DI1

    Digital output signals DQ0 and DQ1

    Supply voltage L+
  - Count range: 32 bits
  - Channel-by-channel monitoring of encoder signals for wire break, short-circuit and faulty supply voltage
  - Hardware interrupts configurable
  - Input filters for suppression of interferences at encoder inputs and digital inputs can be configured
- Supported encoder/signal types
  - SSI absolute encoder
  - RS422/TTL incremental encoder with N signal
  - RS422/TTL incremental encoder without N signal
  - RS422/TTL pulse encoder with direction signal
  - RS422/TTL pulse encoder without direction signal
  - RS422/TTL pulse encoder with up/down count signal
- Supported system functions
  - Isochronous mode
  - Firmware update
  - Identification data I&M

The module supports the following functions:

Table 2- 1 Version dependencies of the functions

Function	Firmware version of module	Configurable as of			
		STEP 7 (TIA Portal)	STEP 7	GSD	
				PROFINET IO	PROFIBUS DP
Firmware update	V1.0 or higher	V13	V5.5 SP4	X	—
I&M identification data	V1.0 or higher	V13	V5.5 SP4	X	X
Parameter reassignment in RUN	V1.0 or higher	V13	V5.5 SP4	X	X
Isochronous mode	V1.0 or higher	V13	V5.5 SP4	—	—
Counting/measuring	V1.0 or higher	V13	V5.5 SP4 or V5.5 SP3 with HSP0240 V1.0	X	X
Operating with "Counting and measurement" technology object	V1.0 or higher	V13	—	—	—
Position input for "Motion Control" technology object	V1.0 or higher	V13	—	—	—
Central operation on CPU 151xSP	V1.1 or higher	V13 SP1	—	—	—
Fast Mode	V1.2 or higher	V14 SP1 or V14 with HSP0199	V5.6 or V5.5 SP4 with HSP0240 V5.0	X	X
Operating with "Measuring input" technology object	V1.3 or higher	V15 with HSP0256	—	—	—
Position value range of 32 bits	V1.3 or higher	V15 with HSP0256	—	X	X

Accessories

The following accessories can be used with the module and are not included in the scope of delivery:

- Labeling strip
- Color identification labels
- Reference identification labels
- Shield connector

A BaseUnit of the A0 type is required to operate the technology module. You can find an overview of the BaseUnits that you can use with the technology module in the product information for the documentation of the ET 200SP distributed I/O system (http://support.automation.siemens.com/WW/view/en/73021864).

For detailed information on the installation procedure, refer to the ET 200SP Distributed I/O System (http://support.automation.siemens.com/WW/view/en/58649293) system manual.

2.2 Functions

2.2.1 Acquisition of encoder signals

2.2.1.1 Position input with SSI absolute encoder

You can use the TM PosInput 1 technology module with an SSI absolute encoder for position input. The technology module reads the position via a synchronous, serial interface from the SSI absolute encoder and sends it to the controller.

You can switch the digital outputs of the technology module exactly at defined position values, independently of the user program. Position input with an SSI absolute encoder does not involve gate control.

Gray-dual conversion

Gray-code and dual-code SSI absolute encoders are supported.

Range for position value

You can specify a frame length of 10 bits to 40 bits for the SSI absolute encoder. The configurable bit numbers of the LSB and the MSB of the position value in the frame define the value range. The technology module can read in a position value with a maximum length of 32 bits and transfer it to the controller.

Complete SSI frame

Instead of having a measured variable returned, you can choose to have the least significant 32 bit of the current unprocessed SSI frame returned. This provides you with encoder-specific additional bits, such as error bits, in addition to the position value. If the SSI frame is shorter than 32 bits, the complete SSI frame is returned right-aligned and the top unused bits are returned with "0" in the feedback interface.

Capture (Latch)

You can configure the edge of an external reference signal that triggers saving of the current position value as a Capture value. The following external signals can trigger the Capture function:

- Rising or falling edge of a digital input
- Both edges of a digital input

The "Frequency of Capture function" parameter specifies whether the function is executed at each configured edge or only once after each enable.

Measuring input

If you use Position input for Motion Control (Page 19), you can use the "Measuring input" technology object to execute a measuring input function with a hardware digital input.

Hardware interrupts

The technology module can trigger a hardware interrupt in the CPU when a comparison event, zero crossing and/or direction reversal occurs. You can specify which events during operation are to trigger a hardware interrupt.

2.2.1.2 Counting with incremental or pulse encoder

Counting is the detecting and adding up of events. The counters of the technology module detect encoder signals and pulses and evaluate them accordingly. The count direction can be specified using encoder or pulse signals or through the user program.

You can control the counting processes with the digital inputs. In addition, you can read the signal state of the respective digital input via the feedback interface.

You can specify the counter characteristics using the functions described below.

Counting limits

The counting limits define the counter value range used. The counting limits are configurable and can be modified during runtime with the user program.

You can configure the behavior of the counter at the counting limits.

Start value

You can configure a start value within the counting limits. The start value can be modified during runtime with the user program.

Gate control

You can define the time window in which the count signals are acquired with the hardware gate (HW gate) and software gate (SW gate).

Capture (Latch)

You can configure an external reference signal edge that triggers the saving of the current counter value as Capture value. The following external signals can trigger the Capture function:

- Rising or falling edge of a digital input
- Both edges of a digital input
- Rising edge of the N signal at the encoder input

The "Frequency of Capture function" parameter specifies whether the function is executed at each configured edge or only once after each enable.

Measuring input

If you use Position input for Motion Control (Page 19), you can use the "Measuring input" technology object to execute a measuring input function with a hardware digital input.

Hardware interrupts

The technology module can trigger a hardware interrupt in the CPU when a comparison event, zero crossing and/or direction reversal occurs. You can specify which events during operation are to trigger a hardware interrupt.

2.2.2 Measured value determination

The following high-accuracy measurement functions are available (accuracy up to 100 ppm):

- Frequency measurement with the unit of hertz
- Period measurement with the unit of seconds
- Velocity measurement with a flexibly adaptable unit
- Complete SSI frame instead of a measured quantity

Update time

You can configure the interval at which the technology module updates the measured values cyclically as the update time.

Gate control for incremental and pulse encoders

You can define the time window in which the count signals are acquired with the hardware gate (HW gate) and software gate (SW gate).

2.2.3 Switching the outputs at comparison values

The available digital outputs DQ0 and DQ1 can be directly activated/switched by the specified comparison values or via the user program. The comparison values are configurable and can be modified during runtime with the user program. This enables very fast reaction times to be achieved.

Comparison values in the Counting/Position input operating mode

In Counting/Position input operating mode you specify two position or counter values as comparison values depending on the encoder. If the current position or counter value meets the configured comparison condition, the corresponding digital output can be set to directly initiate control processes in the process.

Comparison values in the Measuring mode

You define two comparison values in the Measuring mode. If the current measured value meets the configured comparison condition, the corresponding digital output can be set to directly initiate control processes in the process.

2.2.4 Position input for Motion Control

You can use the technology module for position detection for the following axis technology objects of S7-1500 Motion Control :

- TO_PositioningAxis
- TO_SynchronousAxis
- TO_ExternalEncoder

In this operating mode, you can use the measuring input technology object (TO_MeasuringInput) to execute a measuring input function with hardware digital input DI1.

Additional information

You can find a detailed description of the use of Motion Control and its configuration in the following:

- Function manual S7-1500 Motion Control available for download on the Internet (http://support.automation.siemens.com/WW/view/en/59381279)
- Function manual S7-1500T Motion Control available for download on the Internet (https://support.industry.siemens.com/cs/ww/en/view/109481326)

2.2.5 Fast Mode

You can use the technology module in Fast Mode for very fast acquisition of counter or position value with compressed functionality. A reduced feedback interface but no control interface is available in Fast Mode. This allows you to use a shorter send clock for the CPU.

2.2.6 Additional functions

Synchronization for incremental and pulse encoder

You can configure the edge of an external reference signal that loads the counter with the specified start value. The following external signals can trigger a synchronization:

- Rising or falling edge of a digital input
- Rising edge of signal N at the encoder input
- Rising edge of signal N at the encoder input depending on the level of the assigned digital input

The "Frequency of synchronization" parameter specifies whether the function is executed at each configured edge or only once after each enable.

Hysteresis

You can specify a hysteresis for the comparison values within which a digital output will be prevented from switching again.

Diagnostic interrupt

The technology module can trigger diagnostic interrupts. You enable the diagnostic interrupts in the device configuration.

Input filter

To suppress interference, you can configure an input filter for the RS422/TTL encoder inputs and for the digital inputs.

Isochronous mode

The technology module supports the "Isochronous mode" system function. This system function enables position, counter and measured values to be acquired in a defined system cycle.

Wiring 3

Das TM PosInput 1 is used with a BaseUnit of type A0 (article number 6ES7193-6BPx0-0xA0).

You connect the encoder signals, the digital input and output signals and the encoder supplies to the BaseUnit of the technology module. The supply voltage feed on the light BaseUnit BU...D of the associated potential group supplies the module and the digital outputs, and generates the encoder supply voltage.

BaseUnit

The BaseUnit is not included in the scope of delivery of the module and must be ordered separately.

You can find an overview of the BaseUnits that you can use with the technology module in the product information for the documentation of the ET 200SP distributed I/O system (http://support.automation.siemens.com/WW/view/en/73021864).

You can find information about selecting a suitable BaseUnit in the ET 200SP Distributed I/O System (http://support.automation.siemens.com/WW/view/en/58649293) system manual and ET 200SP BaseUnits (http://support.automation.siemens.com/WW/view/en/58532597/133300) device manual.

You can find information on wiring the BaseUnit, connecting cable shields, etc. in the Connecting section of the ET 200SP Distributed I/O System (http://support.automation.siemens.com/WW/view/en/58649293) system manual.

Supply voltage L+/M

You connect the supply voltage to terminals L+ and M on a light BaseUnit. For a dark BaseUnit, the supply voltage of the module to the left is used. An internal protection circuit protects the technology module from reverse polarity of the supply voltage. The technology module monitors whether the supply voltage is connected.

Encoder supply

For supplying the encoders and sensors connected to the digital inputs, the technology module provides a 24 V DC supply voltage at output 24VDC (terminal 15) with reference to M (terminals 14 and 16). The voltage is monitored for short-circuit and overload.

Digital inputs DI0 and DI1

The digital inputs are used for gate control, synchronization and the Capture function.

The digital inputs are not isolated from each other.

Input delay for digital inputs

In order to suppress noise you can configure an input delay for the digital inputs.

Note

If you select the "None" or "0.05 ms" option, you must use shielded cables for connection of the digital inputs.

Digital outputs DQ0 and DQ1

The digital outputs are not isolated from each other.

The digital outputs are 24 V sourcing outputs in reference to M and can carry a rated load current of 0.5 A. They are protected against overload and short-circuit.

Relays and contactors can be directly connected without an external protective circuit. You can find information on the maximum possible operating frequencies and the inductive loads connected to the digital outputs in section Technical specifications (Page 109).

3.1 SSI encoder signals

SSI encoder signals

The TM PosInput 1 can process SSI encoder signals. These are designated with data and clock and use the RS422 signal standard.

An RS422 encoder signal uses a pair of wires and the information is transmitted as differential voltage. This ensures interference-free transmission of RS422 encoder signals even with high frequencies over long distances. The RS422 wire pairs must be twisted together in the cable.

The SSI encoder signals data and clock are connected via the D and C terminals. The N terminals remain unconnected. The inputs are not isolated from each other. The inputs are isolated from the backplane bus.

Pin assignment of the BaseUnit

The table below shows the pin assignment, using the BaseUnit BU15-P16+A0+2B as an example.

Table 3- 1 Pin assignment of the BaseUnit BU15-P16+A0+2B

Designation	Signal name		View	Signal name		Designation
SSI data signal +D	+A/**D**	1	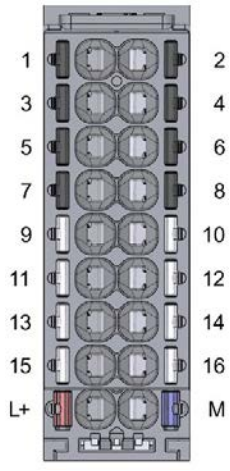	2	DI0	Digital input DI0
SSI data signal -D	-A/**D**	3		4	DI1	Digital input DI1
SSI clock signal +C	+B/**C**	5		6	—	—
SSI clock signal -C	-B/**C**	7		8	DQ0	Digital output DQ0
—	+N	9		10	DQ1	Digital output DQ1
—	-N	11		12	—	—
—	—	13		14	M	Ground for encoder supply, digital inputs and digital outputs
Encoder supply 24 V DC	24VDC	15		16	M	
Supply voltage DC 24 V	L+				M	Ground for supply voltage

Block diagram

You must ground the shields of the cables between encoder and technology module both through the shield terminal on the BaseUnit (shield bracket and terminal) and also on the encoder.

The figure below shows the block diagram of the technology module with one connected SSI absolute encoder.

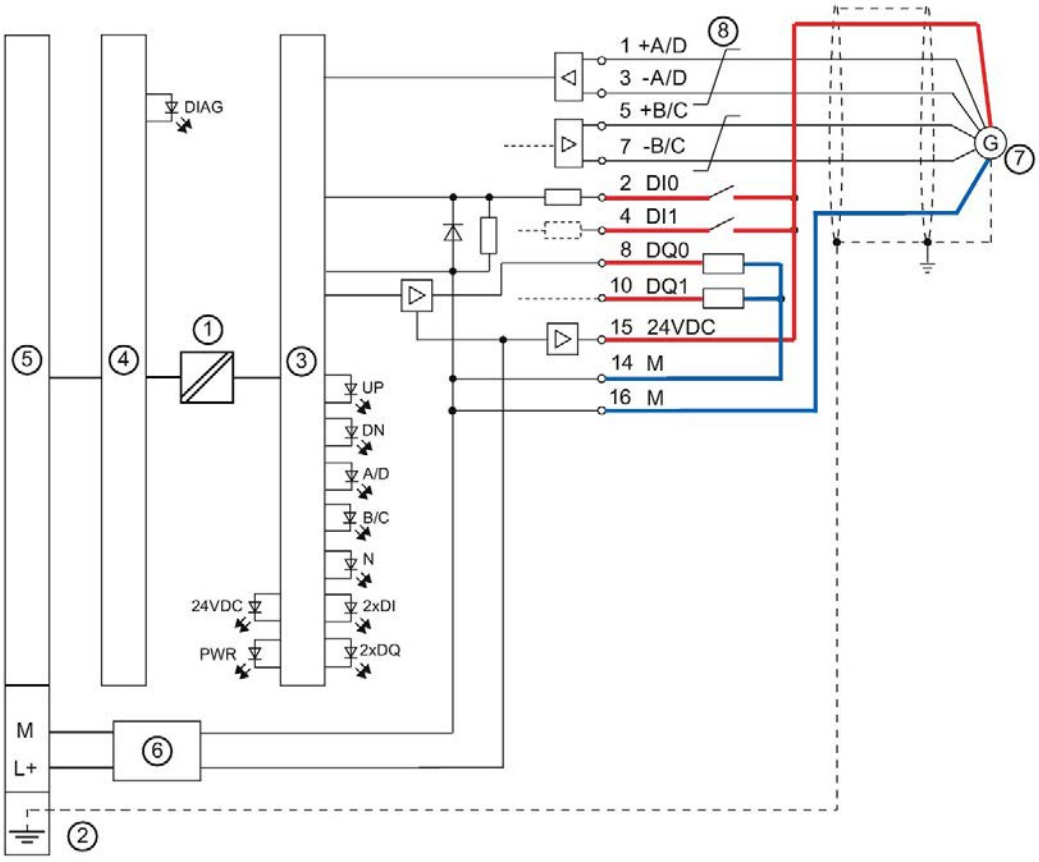

① Electrical isolation
② Shield connection on the BaseUnit
③ Technology
④ Backplane bus interface module of the technology module
⑤ Backplane bus
⑥ Input filter
⑦ SSI absolute encoder
⑧ Twisted in pairs

Figure 3-1 Block diagram with SSI absolute encoder

3.2 RS422 encoder signals

RS422 encoder signals/count signals

The TM PosInput 1 can process encoder signals that use the RS422 signal standard. These counting encoder signals are designated with the letters A, B and N.

An RS422 encoder signal uses a pair of wires and the counter information is transmitted as differential voltage. This ensures interference-free transmission of RS422 encoder signals even with high frequencies over long distances. The RS422 wire pairs must be twisted together in the cable.

You can connect the following encoder types:

- RS422 incremental encoder with N signal:

  The encoder signals A, B and N are connected using the correspondingly marked terminals. A and B are the two incremental signals phase-shifted by 90°. N is the zero mark signal that supplies one pulse per revolution.

- RS422 incremental encoder without N signal:

  The encoder signals A and B are connected using the correspondingly marked terminals. A and B are the two incremental signals phase-shifted by 90°. The N terminals remain unconnected.

- RS422 pulse encoder without direction signal:

  The counting signal is connected to the A terminals. The count direction can be specified via the control interface. The B and N terminals remain unconnected.

- RS422 pulse encoder with direction signal:

  The counting signal is connected to the A terminals. The direction signal is connected to the B terminals. Counting down takes place at a high level of the direction signal. The N terminals remain unconnected.

- RS422 pulse encoder with up/down count signal

  The up counting signal is connected to the A terminals. The down counting signal is connected to the B terminals. The N terminals remain unconnected.

The inputs are not isolated from each other. The inputs are isolated from the backplane bus.

Note

The RS422 signal standard offers greater interference immunity than the TTL signal standard. If your incremental encoder or pulse encoder supports the RS422 **and** the TTL signal standard, we recommend using the RS422 signal standard.

Pin assignment of the BaseUnit

The table below shows the pin assignment, using the BaseUnit BU15-P16+A0+2B as an example.

Table 3- 2 Pin assignment of theBaseUnit BU15-P16+A0+2B

Designation					Signal name		View	Signal name		Designation
RS422 incremental encoder		RS422 pulse encoder								
with signal N	without signal N	with direction signal	without direction signal	up/down						
Encoder signal +A		Counting signal A		Up counting signal +A	+A/D	1	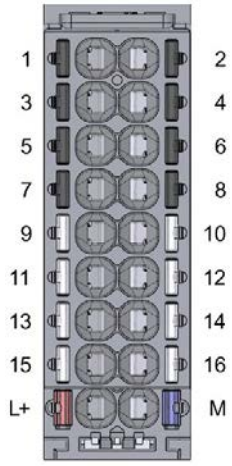	2	DI0	Digital input DI0
Encoder signal -A		Counting signal -A		Up counting signal -A	-A/D	3		4	DI1	Digital input DI1
Encoder signal +B		Direction signal +B	—	Down counting signal +B	+B/C	5		6	—	—
Encoder signal -B		Direction signal -B	—	Down counting signal -B	-B/C	7		8	DQ0	Digital output DQ0
Encoder signal +N	—				+N	9		10	DQ1	Digital output DQ1
Encoder signal -N	—				-N	11		12	—	—
—					—	13		14	M	Ground for encoder supply, digital inputs and digital outputs
Encoder supply 24 V DC					24VDC	15		16	M	
Supply voltage DC 24 V					L+				M	Ground for supply voltage

Block diagram

You must ground the shields of the cables between encoder and technology module both through the shield terminal on the BaseUnit (shield bracket and terminal) and also on the encoder.

The figure below shows the block diagram of the technology module with one connected RS422 incremental encoder.

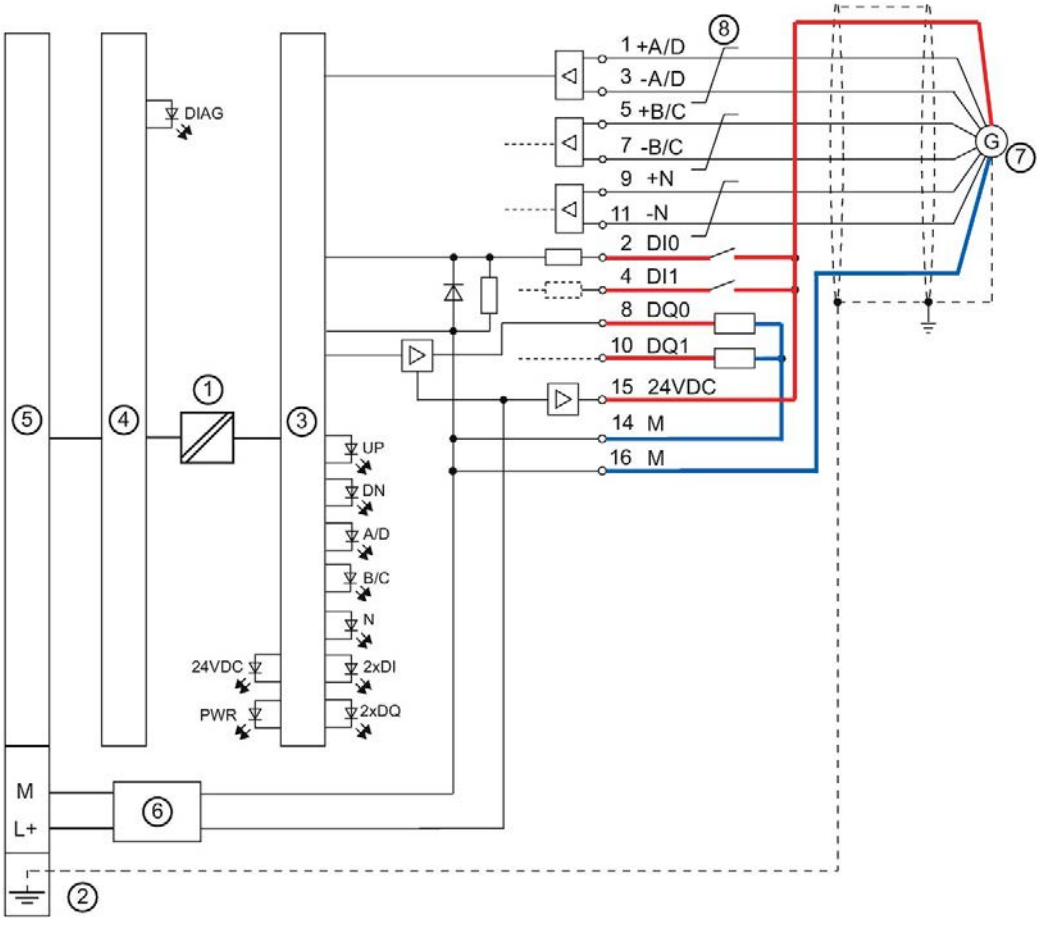

① Electrical isolation
② Shield connection on the BaseUnit
③ Technology
④ Backplane bus interface module of the technology module
⑤ Backplane bus
⑥ Input filter
⑦ RS422 incremental encoder
⑧ Twisted in pairs

Figure 3-2 Block diagram with RS422 incremental encoder

3.3 TTL encoder signals

TTL encoder signals/counting signals

The TM PosInput 1 can process encoder signals that use the TTL signal standard. The counting encoder signals are designated with the letters A, B and N. An encoder signal with TTL standard uses a single cable.

You can connect the following encoder types:

- TTL incremental encoder with N signal:

  The encoder signals A, B and N are connected using the correspondingly marked terminals. A and B are the two incremental signals phase-shifted by 90°. N is the zero mark signal that supplies one pulse per revolution.

- TTL incremental encoder without N signal:

  The encoder signals A and B are connected using the correspondingly marked terminals. A and B are the two incremental signals phase-shifted by 90°. The N terminal remains unconnected.

- TTL pulse encoder without direction signal:

  The counting signal is connected to the A terminal. The count direction can be specified via the control interface. The B and N terminals remain unconnected.

- TTL pulse encoder with direction signal:

  The counting signal is connected to the A terminal. The direction signal is connected to the B terminal. Counting down takes place at a high level of the direction signal. The N terminal remains unconnected.

- TTL pulse encoder with up/down counting signal

  The up counting signal is connected to the A terminal. The down counting signal is connected to the B terminal. The N terminal remains unconnected.

The inputs are not isolated from each other. The inputs are isolated from the backplane bus.

Note

The RS422 signal standard offers greater interference immunity than the TTL signal standard. If your incremental encoder or pulse encoder supports the RS422 **and** the TTL signal standard, we recommend using the RS422 signal standard.

Pin assignment of the BaseUnit

The table below shows the pin assignment, using the BaseUnit BU15-P16+A0+2B as an example.

Table 3- 3 Pin assignment of the BaseUnit BU15-P16+A0+2B

Designation					Signal name		View	Signal name		Designation
TTL incremental encoder		TTL pulse encoder								
with signal N	without signal N	with direction signal	without direction signal	up/down						
Encoder signal A		Counting signal A		Up counting signal A	+A/D	1	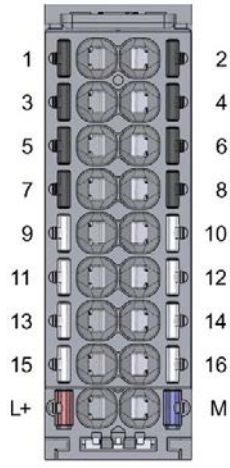	2	DI0	Digital input DI0
—					-A/D	3		4	DI1	Digital input DI1
Encoder signal B		Direction signal B	—	Down counting signal B	+B/C	5		6	—	—
—					-B/C	7		8	DQ0	Digital output DQ0
Encoder signal N	—				+N	9		10	DQ1	Digital output DQ1
—					-N	11		12	—	—
—					—	13		14	M	Ground for encoder supply, digital inputs and digital outputs
Encoder supply 24 V DC					24VDC	15		16	M	
Supply voltage DC 24 V					L+				M	Ground for supply voltage

Block diagram

You must ground the shields of the cables between encoder and technology module both through the shield terminal on the BaseUnit (shield bracket and terminal) and also on the encoder.

The figure below shows the block diagram of the technology module with one connected TTL incremental encoder.

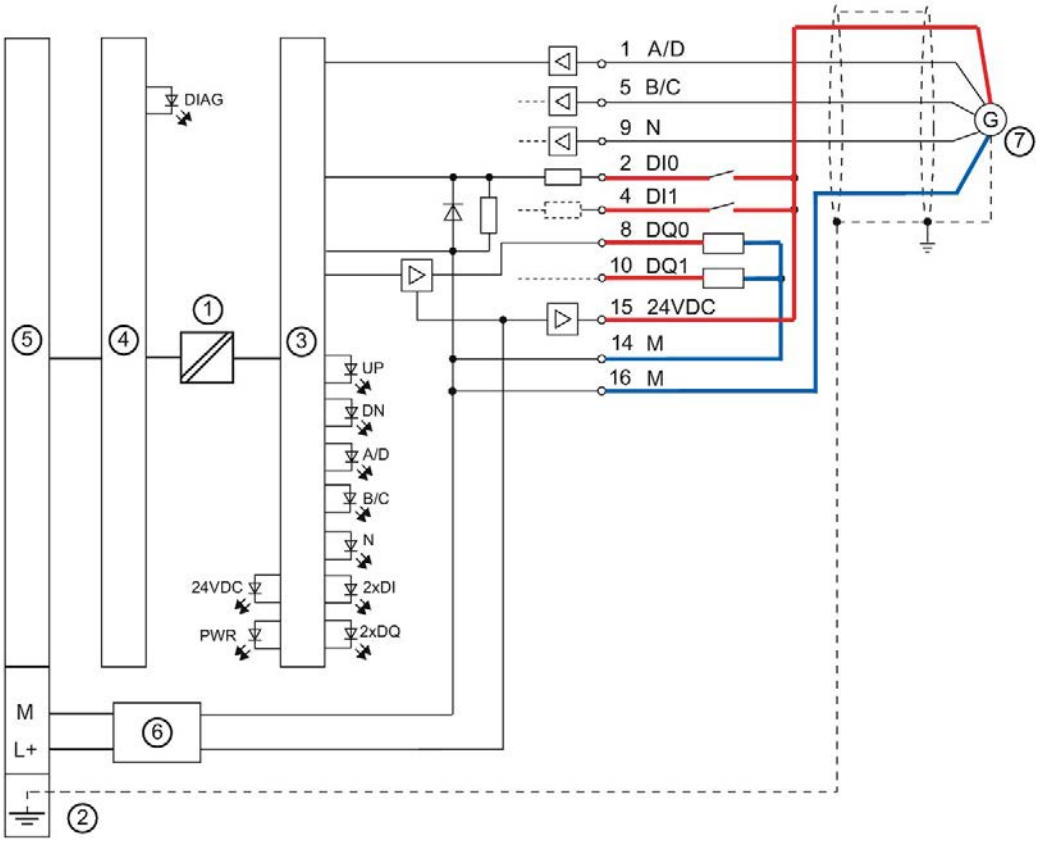

① Electrical isolation
② Shield connection on the BaseUnit
③ Technology
④ Backplane bus interface module of the technology module
⑤ Backplane bus
⑥ Input filter
⑦ TTL incremental encoder

Figure 3-3 Block diagram with TTL incremental encoder

Configuring/address space 4

4.1 Operating with "Counting and measurement" technology object

4.1.1 Configuring

Introduction

You configure the technology module and assign its parameters with STEP 7 (TIA Portal).

The technology object is used to control and monitor the functions of the technology module.

System environment

The technology module can be used in the following system environments:

Applications	Components required	Configuration software	In the user program
Central operation with a CPU 151xSP	• S7-1500 automation system • TM PosInput 1	STEP 7 (TIA Portal): • Device configuration with hardware configuration • Parameter setting with High_Speed_Counter or SSI_Absolute_Encoder technology object	For incremental/pulse encoder: High_Speed_Counter instruction For SSI absolute encoder: SSI_Absolute_Encoder instruction
Distributed operation with an S7-1500 CPU	• S7-1500 automation system • ET 200SP distributed I/O system • TM PosInput 1		

Additional information

You can find a detailed description of the counting and measurement functions and their configuration in the following:

- Function manual Counting, Measurement and Position Detection available for download on the Internet (http://support.automation.siemens.com/WW/view/en/59709820)
- Information system of STEP 7 (TIA Portal) under "Using technology functions > Counting, measurement and position input > Counting, measurement and position input (S7-1500)"

Hardware Support Packages (HSP)

If firmware version V1.3 of the module is not yet integrated in your TIA Portal Version V15, you can integrate a corresponding module using HSP0256.

You can find the Hardware Support Packages (HSP) for download on the Internet (https://support.industry.siemens.com/cs/ww/en/view/72341852).

You can also access this download from the menu bar of STEP 7 (TIA Portal): "Options > Support packages > Download from the Internet".

4.1.2 Reaction to CPU STOP

Reaction to CPU STOP

You set the response of the technology module to CPU STOP in the device configuration with the basic parameters.

Table 4- 1 Reaction of technology module to CPU STOP

Option	Meaning
Continue operation	The technology module remains fully functional. Incoming count pulses are processed or the position value is read in. The digital outputs continue to switch according to the parameter assignment.
Output substitute value	The technology module outputs the configured substitute values at the digital outputs until the next CPU STOP-RUN transition. The technology module is returned to its startup state after a STOP-RUN transition: The counter value is set to the Start value (with incremental encoders or pulse encoders) and the digital outputs switch according to the parameter assignment.
Keep last value	The technology module outputs the values at the digital outputs that were valid when the transition to STOP took place until the next CPU STOP-RUN transition. If a digital output with the "At comparison value for a pulse duration" function is set at CPU STOP, the digital output is reset after the pulse duration elapses. The technology module is returned to its startup state after a STOP-RUN transition: The counter value is set to the Start value (with incremental encoders or pulse encoders) and the digital outputs switch according to the parameter assignment.

4.1.3 Parameter setting

You specify the properties of the technology module using various parameters. Depending on the settings, not all parameters are available. When parameters are assigned in the user program, the parameters are transferred to the module with the "WRREC" instruction and data record 128 (Page 118).

You set the parameters of the module as follows in this operating mode:

1. Insert the module from the hardware catalog under "Technology modules".
2. Set the device configuration in the hardware configuration.
   "Operating with "Counting and measurement" technology object" must be set as the operating mode.
3. Insert the High_Speed_Counter or SSI_Absolute_Encoder technology object from the project tree in folder "Technology objects > Add new object > Counting and measurement".
   You can find information on configuring with a technology object in function manual Counting, Measurement and Position Detection (http://support.automation.siemens.com/WW/view/en/59709820).
4. Open the configuration of the respective technology object, e.g. using the Configuration button in the respective instruction for the technology object.
5. Set the parameters of the technology object.
6. Download the project to the CPU.

4.1.3.1 Parameters (SSI absolute encoder)

Parameters of the TM PosInput 1 with SSI absolute encoder

The following parameter settings are possible in the hardware configuration:

Table 4- 2 Settable parameters and their default setting (SSI absolute encoder)

Parameter	Value range	Default setting	Parameter reassignment in RUN	Scope
				HSP for STEP 7 (TIA Portal)
Potential group	• Use the potential group of the left module (dark BaseUnit) • Enable new potential group (light BaseUnit)	Use the potential group of the left module (dark BaseUnit)	No	Module
Reaction to CPU STOP	• Output substitute value • Keep last value • Continue operation	Output substitute value	Yes	Channel
Enable diagnostic interrupt on wire break	• Deactivated • Activated	Deactivated	Yes	Channel
Enable additional diagnostic interrupts	• Deactivated • Activated	Deactivated	Yes	Channel
Hardware interrupt: New Capture value available	• Deactivated • Activated	Deactivated	Yes	Channel
Hardware interrupt: Direction reversal	• Deactivated • Activated	Deactivated	Yes	Channel
Hardware interrupt: Zero crossing	• Deactivated • Activated	Deactivated	Yes	Channel
Hardware interrupt: Comparison event for DQ0 occurred	• Deactivated • Activated	Deactivated	Yes	Channel
Hardware interrupt: Comparison event for DQ1 occurred	• Deactivated • Activated	Deactivated	Yes	Channel

The following parameter settings are possible in the technology object:

Table 4- 3 Settable parameters and their default setting (SSI absolute encoder)

Parameter	Value range	Default setting	Parameter reassign-ment in RUN	Scope HSP for STEP 7 (TIA Portal)
Frame length	10 bits...40 bits	13 bits	Yes	Channel
Code type	• Gray • Dual	Gray	Yes	Channel
Transmission rate	• 125 kHz • 250 kHz • 500 kHz • 1 MHz • 1.5 MHz • 2 MHz	125 kHz	Yes	Channel
Monoflop time	• Automatically • 16 µs • 32 µs • 48 µs • 64 µs	Automatically	Yes	Channel
Parity	• None • Even • Odd	None	Yes	Channel
Bit number LSB of the position value	0...38	0	Yes	Channel
Bit number MSB of the position value	1...39	12	Yes	Channel
Invert direction (counter inputs)	• Deactivated • Activated	Deactivated	Yes	Channel
Set function of DI	• Capture • Digital input without function	DI0, DI1: Digital input without function	Yes	Channel
Input delay for digital inputs	• None • 0.05 ms • 0.1 ms • 0.4 ms • 0.8 ms • 1.6 ms • 3.2 ms • 12.8 ms • 20 ms	0.1 ms	Yes	Channel

Parameter	Value range	Default setting	Parameter reassignment in RUN	Scope HSP for STEP 7 (TIA Portal)
Edge selection for DI	• At rising edge • At falling edge • At rising and falling edge	At rising edge	Yes	Channel
Frequency of Capture function	• Once • Periodic	Once	Yes	Channel
Comparison value 0	-2147483648...2147483647	0	Yes	Channel
Comparison value 1	-2147483648...2147483647	10	Yes	Channel
Operating mode	• Use position value (SSI absolute value) as reference • Use measured value as reference	Use position value (SSI absolute value) as reference	No	Channel
Set output	• Use by user program • Between comparison value and high limit / measured value >= comparison value • Between comparison value and low limit / measured value <= comparison value • At comparison value for a pulse duration • After set command from CPU until comparison value • Between comparison value 0 and 1 • Not between comparison value 0 and 1	DQ0, DQ1: Between comparison value and high limit	Yes	Channel
Count direction of DQ function	• Up • Down • In both directions	In both directions	Yes	Channel
Pulse duration [ms/10]	0...65535	5000 (corresponds to 0.5 s)	Yes	Channel
Substitute value for DQ0	• 0 • 1	0	Yes	Channel
Substitute value for DQ1	• 0 • 1	0	Yes	Channel
Hysteresis (in increments)	0...255	0	Yes	Channel

Parameter	Value range	Default setting	Parameter reassignment in RUN	Scope HSP for STEP 7 (TIA Portal)
Measured variable	• Frequency • Period • Velocity • Complete SSI frame	Frequency	Yes	Channel
Update time [ms] of measuring function	0...25000	10	Yes	Channel
Time base for velocity measurement	• 1 ms • 10 ms • 100 ms • 1 s • 60 s	60 s	Yes	Channel
Increments per unit	1...65535	1	Yes	Channel

NOTICE

Too high an encoder speed can supply the wrong rotation direction

If an SSI absolute encoder rotates so fast that more than half the value range is covered within one module cycle[1], the velocity and rotation direction are no longer calculated correctly. As a result, the following may function incorrectly:

- DQ functions
- Feedback bits EVENT_OFLW, EVENT_UFLW, EVENT_ZERO, EVENT_CMP0, EVENT_CMP1 and STS_DIR

[1] Non-isochronous mode: 500 µs; isochronous mode: PROFINET cycle time

Note

If you use an SSI absolute encoder whose value range does not correspond to a power of 2, the calculated velocity measurement can be incorrect at the moment of the overflow.

Explanation of parameters

You can find a detailed description of the parameters in function manual Counting, Measurement and Position Detection in sections Basic parameters and Configuring the SSI_Absolute_Encoder available for download on the Internet (http://support.automation.siemens.com/WW/view/en/59709820).

4.1.3.2 Parameters (incremental or pulse encoder)

Parameters of the TM PosInput 1 with incremental or pulse encoder

The following parameter settings are possible in the hardware configuration:

Table 4- 4 Settable parameters and their default setting (incremental or pulse encoder)

Parameter	Value range	Default setting	Parameter reassign-ment in RUN	Scope HSP for STEP 7 (TIA Portal)
Potential group	• Use the potential group of the left module (dark BaseUnit) • Enable new potential group (light BaseUnit)	Use the potential group of the left module (dark BaseUnit)	No	Module
Reaction to CPU STOP	• Output substitute value • Keep last value • Continue operation	Output substitute value	Yes	Channel
Enable diagnostic interrupt on wire break	• Deactivated • Activated	Deactivated	Yes	Channel
Enable additional diagnos-tic interrupts	• Deactivated • Activated	Deactivated	Yes	Channel
Hardware interrupt: New Capture value available	• Deactivated • Activated	Deactivated	Yes	Channel
Hardware interrupt: Syn-chronization of the counter by an external signal	• Deactivated • Activated	Deactivated	Yes	Channel
Hardware interrupt: Gate start	• Deactivated • Activated	Deactivated	Yes	Channel
Hardware interrupt: Gate stop	• Deactivated • Activated	Deactivated	Yes	Channel
Hardware interrupt: Over-flow (high counting limit violated)	• Deactivated • Activated	Deactivated	Yes	Channel
Hardware inter-rupt:Underflow (low count-ing limit violated)	• Deactivated • Activated	Deactivated	Yes	Channel
Hardware interrupt: Direc-tion reversal	• Deactivated • Activated	Deactivated	Yes	Channel
Hardware interrupt: Zero crossing	• Deactivated • Activated	Deactivated	Yes	Channel

Parameter	Value range	Default setting	Parameter reassignment in RUN	Scope
				HSP for STEP 7 (TIA Portal)
Hardware interrupt: Comparison event for DQ0 occurred	• Deactivated • Activated	Deactivated	Yes	Channel
Hardware interrupt: Comparison event for DQ1 occurred	• Deactivated • Activated	Deactivated	Yes	Channel

The following parameter settings are possible in the technology object:

Table 4- 5 Settable parameters and their default setting (incremental or pulse encoder)

Parameter	Value range	Default setting	Parameter reassignment in RUN	Scope HSP for STEP 7 (TIA Portal)
Signal type	• Pulse (A) • Pulse (A) and direction (B) • Count up (A), count down (B) • Incremental encoder (A, B phase-shifted) • Incremental encoder (A, B, N)	Pulse (A) and direction (B)	Yes	Channel
Signal evaluation for counter inputs	• Single • Double • Quadruple	Single	Yes	Channel
Invert direction (counter inputs)	• Deactivated • Activated	Deactivated	Yes	Channel
Filter frequency for counter inputs	• 100 Hz • 200 Hz • 500 Hz • 1 kHz • 2 kHz • 5 kHz • 10 kHz • 20 kHz • 50 kHz • 100 kHz • 200 kHz • 500 kHz • 1 MHz	1 MHz	Yes	Channel
Interface standard	• RS422, symmetrical • TTL (5 V), asymmetrical	RS422, symmetrical	Yes	Channel
Reaction to signal N	• No reaction to signal N • Synchronization at signal N • Capture at signal N	No reaction to signal N	Yes	Channel
Frequency of synchronization	• Once • Periodic	Once	Yes	Channel
Frequency of Capture function	• Once • Periodic	Once	Yes	Channel

Parameter	Value range	Default setting	Parameter reassignment in RUN	Scope
				HSP for STEP 7 (TIA Portal)
Counting high limit	-2147483648...2147483647	2147483647	Yes	Channel
Start value	-2147483648...2147483647	0	Yes	Channel
Counting low limit	-2147483648...2147483647	-2147483648	Yes	Channel
Reaction to violation of a counting limit	• Stop counting • Continue counting	Continue counting	Yes	Channel
Reset when counting limit is violated	• To opposite counting limit • To start value	To opposite counting limit	Yes	Channel
Reaction to gate start	• Set to start value • Continue with current value	Continue with current value	Yes	Channel
Set function of DI	• Gate start/stop (level-triggered) • Gate start (edge-triggered) • Gate stop (edge-triggered) • Synchronization • Enable synchronization at signal N • Capture • Digital input without function	• DI0: Gate start/stop (level-triggered) • DI1: Digital input without function	Yes	Channel
Input delay for digital inputs	• None • 0.05 ms • 0.1 ms • 0.4 ms • 0.8 ms • 1.6 ms • 3.2 ms • 12.8 ms • 20 ms	0.1 ms	Yes	Channel
Edge selection for DI	• At rising edge • At falling edge • At rising and falling edge	At rising edge	Yes	Channel
Select level for DI	• Active with high level • Active with low level	Active with high level	Yes	Channel
Behavior of counter value after Capture with DI	• Continue counting • Set to start value and continue counting	Continue counting	Yes	Channel
Comparison value 0	-2147483648...2147483647	0	Yes	Channel
Comparison value 1	-2147483648...2147483647	10	Yes	Channel

Parameter	Value range	Default setting	Parameter reassignment in RUN	Scope HSP for STEP 7 (TIA Portal)
Operating mode	• Use count value as reference • Use measured value as reference	Use count value as reference	No	Channel
Set output	• Use by user program • Between comparison value and high limit / measured value >= comparison value • Between comparison value and low limit / measured value <= comparison value • At comparison value for a pulse duration • After set command from CPU until comparison value • Between comparison value 0 and 1 • Not between comparison value 0 and 1	DQ0, DQ1: Between comparison value and high limit	Yes	Channel
Count direction of DQ function	• Up • Down • In both directions	In both directions	Yes	Channel
Pulse duration [ms/10]	0...65535	5000 (corresponds to 0.5 s)	Yes	Channel
Substitute value for DQ0	• 0 • 1	0	Yes	Channel
Substitute value for DQ1	• 0 • 1	0	Yes	Channel
Hysteresis (in increments)	0...255	0	Yes	Channel
Measured variable	• Frequency • Period • Velocity	Frequency	Yes	Channel
Update time [ms] of measuring function	0...25000	10	Yes	Channel
Time base for velocity measurement	• 1 ms • 10 ms • 100 ms • 1 s • 60 s	60 s	Yes	Channel
Increments per unit	1...65535	1	Yes	Channel

Explanation of parameters

You can find a detailed description of the parameters in function manual Counting, Measurement and Position Detection in sections Basic parameters and Configuring the High_Speed_Counter available for download on the Internet (http://support.automation.siemens.com/WW/view/en/59709820).

4.1.4 Address space

Address space of the technology module

Table 4- 6 Size of input and output addresses of the TM PosInput 1 when operating with "Counting and measurement" technology object

	Inputs	Outputs
Range	16 bytes	12 bytes

The control and feedback interface is compatible with manual operation (Page 53) and is controlled by the High_Speed_Counter or SSI_Absolute_Encoder instruction.

4.1.5 Isochronous mode

The technology module supports the "Isochronous mode" system function. This system function enables position, counter and measured values to be acquired in a defined system cycle.

In isochronous mode, the cycle of the user program, the transmission of the input signals and processing in the technology module are synchronized. The output signals switch immediately if the relevant comparison condition is met. A status change of a digital input immediately triggers the specified reaction of the technology module and the change of the status bit of the digital input in the feedback interface.

Use an OB of type "Synchronous Cycle" (e.g. OB61) in this operating mode. The High_Speed_Counter or SSI_Absolute_Encoder instruction is called in the assigned OB.

The update time for the measured value is synchronized with the system cycle in a suitable ratio and, if necessary, adapted in length. If you set "0", the measured value is updated once per system cycle.

Data processing

The data that was transmitted to the technology module in the current bus cycle via the control interface takes effect when it is processed in the internal technology module cycle. At the time the input data is read in (T_i), the position or counter value and the measured value as well as status bits are acquired and made available in the feedback interface for retrieval in the current bus cycle.

Isochronous mode parameters

In isochronous mode, the following parameter can affect the isochronous mode parameters of the sync domain.

- Filter frequency
- Frame length
- Transmission rate
- Monoflop time
- Parity

Because the isochronous mode parameters are not checked in RUN, overflows can occur if you change one or more of the indicated parameters in RUN. To prevent overflows, select the option with the largest time required in the offline parameter assignment.

Additional information

You can find a detailed description of isochronous mode in the following:

- Function manual Isochronous Mode (STEP 7 (TIA Portal) V15.1 or higher) available for download on the Internet (https://support.industry.siemens.com/cs/ww/en/view/109755401)
- Function manual PROFINET with STEP 7 available for download on the Internet (https://support.industry.siemens.com/cs/ww/en/view/49948856)

4.2 Position input for "Motion Control" technology object

4.2.1 Configuring

Introduction

You configure the technology module and assign its parameters with STEP 7 (TIA Portal).

The technology object is used to control and monitor the functions of the technology module.

System environment

The technology module can be used in the following system environments:

Applications	Components required	Configuration software	In the user program
Central operation with a CPU 151xSP	• S7-1500 automation system • TM PosInput 1	STEP 7 (TIA Portal): • Device configuration with hardware configuration • Parameter setting with axis and measuring input technology objects	Motion Control instructions
Distributed operation with an S7-1500 CPU	• S7-1500 automation system • ET 200SP distributed I/O system • TM PosInput 1		

Additional information

You can find a detailed description of the use of Motion Control and its configuration in the following:

- Function manual S7-1500 Motion Control available for download on the Internet (https://support.industry.siemens.com/cs/ww/en/view/59381279)
- Function manual S7-1500T Motion Control available for download on the Internet (https://support.industry.siemens.com/cs/ww/en/view/109481326)
- Information system of STEP 7 (TIA Portal) under "Using technology functions > Motion Control > Motion Control (S7-1200, S7-1500)"

You can find a description of configuring the technology module for position detection in the following:

- Function manual Counting, Measurement and Position Detection available for download on the Internet (http://support.automation.siemens.com/WW/view/en/59709820)
- Information system of STEP 7 (TIA Portal) under "Using technology functions > Counting, measurement and position input > Counting, measurement and position input (S7-1500)"

Hardware Support Packages (HSP)

If firmware version V1.3 of the module is not yet integrated in your TIA Portal Version V15, you can integrate a corresponding module using HSP0256.

You can find the Hardware Support Packages (HSP) for download on the Internet (https://support.industry.siemens.com/cs/ww/en/view/72341852).

You can also access this download from the menu bar of STEP 7 (TIA Portal): "Options > Support packages > Download from the Internet".

4.2.2 Parameter setting

You specify the properties of the technology module using various parameters. Depending on the settings, not all parameters are available.

You set the parameters of the module as follows in this operating mode:

1. Insert the module from the hardware catalog under "Technology modules".
2. Set the device configuration and the parameters of the module in the hardware configuration.
   "Position input for "Motion Control" technology object" must be set as the operating mode.
3. Insert the axis technology object and, if necessary, the measuring input technology object from the project tree in folder "Technology objects > Add new object > Motion Control". You can find information on configuring with axis technology objects in function manual S7-1500T Motion Control (https://support.industry.siemens.com/cs/ww/en/view/109481326).
4. Open the configuration of the axis technology object, e.g. using the Configuration button in the respective instruction for the technology object.
5. Set the parameters of the technology objects.
6. Download the project to the CPU.

4.2.2.1 Parameters (SSI absolute encoder)

Parameters of the TM PosInput 1 with SSI absolute encoder

The following parameter settings are possible:

Table 4- 7 Settable parameters and their default setting (SSI absolute encoder)

Parameter	Value range	Default setting	Scope
			HSP for STEP 7 (TIA Portal)
Potential group	• Use the potential group of the left module (dark BaseUnit) • Enable new potential group (light BaseUnit)	Use the potential group of the left module (dark BaseUnit)	Module
Invert direction (counter inputs)	• Deactivated • Activated	Deactivated	Channel
Frame length	10 bits...40 bits	13 bits	Channel
Code type	• Gray • Dual	Gray	Channel

Parameter	Value range	Default setting	Scope
			HSP for STEP 7 (TIA Portal)
Transmission rate	• 125 kHz • 250 kHz • 500 kHz • 1 MHz • 1.5 MHz • 2 MHz	125 kHz	Channel
Monoflop time	• Automatically • 16 µs • 32 µs • 48 µs • 64 µs	Automatically	Channel
Parity	• None • Even • Odd	None	Channel
Bit number LSB of the position value	0...38	0	Channel
Bit number MSB of the position value	1...39	12	Channel
Measuring input	DI1	DI1	Channel
Steps per revolution	1...65535	1	Channel
Number of revolutions[1]	is calculated automatically (read-only)	—	Channel
Reference speed	6.00...210000.00 U/min	3000.00 U/min	Channel
Enable diagnostic interrupt on wire break	• Deactivated • Activated	Deactivated	Channel
Enable additional diagnostic interrupts	• Deactivated • Activated	Deactivated	Channel

[1] STEP 7 (TIA Portal) V15.1 or higher

NOTICE

Too high an encoder speed can falsify a position value

The function of an axis technology object is based on the assumption that an SSI absolute encoder never changes by more than half the value range within one module cycle[1].

Ensure that this condition is always met when configuring your system.

[1] Non-isochronous mode: 500 µs; isochronous mode: PROFINET cycle time

Explanation of parameters

You can find a detailed description of the parameters in function manual Counting, Measurement and Position Detection, section Module parameters (position input for Motion Control) available for download on the Internet (http://support.automation.siemens.com/WW/view/en/59709820).

4.2.2.2 Parameters (incremental or pulse encoder)

Parameters of the TM PosInput 1 with incremental or pulse encoder

The following parameter settings are possible:

Table 4- 8 Settable parameters and their default setting (incremental or pulse encoder)

Parameter	Value range	Default setting	Scope
			HSP for STEP 7 (TIA Portal)
Potential group	• Use the potential group of the left module (dark BaseUnit) • Enable new potential group (light BaseUnit)	Use the potential group of the left module (dark BaseUnit)	Module
Signal type	• Pulse (A) • Pulse (A) and direction (B) • Count up (A), count down (B) • Incremental encoder (A, B phase-shifted) • Incremental encoder (A, B, N)	Pulse (A) and direction (B)	Channel
Invert direction (counter inputs)	• Deactivated • Activated	Deactivated	Channel
Signal evaluation for counter inputs	• Single • Double • Quadruple	Single	Channel
Filter frequency for counter inputs	• 100 Hz • 200 Hz • 500 Hz • 1 kHz • 2 kHz • 5 kHz • 10 kHz • 20 kHz • 50 kHz • 100 kHz • 200 kHz • 500 kHz • 1 MHz	1 MHz	Channel
Interface standard	• RS422, symmetrical • TTL (5 V), asymmetrical	RS422, symmetrical	Channel

Parameter	Value range	Default setting	Scope
			HSP for STEP 7 (TIA Portal)
Signal selection for reference mark 0	• DI0 • Signal N of incremental encoder	DI0	Channel
Measuring input	DI1	DI1	Channel
Increments per revolution / steps per revolution	1...65535	1	Channel
Reference speed	6.00...210000.00 U/min	3000.00 U/min	Channel
Enable diagnostic interrupt on wire break	• Deactivated • Activated	Deactivated	Channel
Enable additional diagnostic interrupts	• Deactivated • Activated	Deactivated	Channel

Explanation of parameters

You can find a detailed description of the parameters in function manual Counting, Measurement and Position Detection, section Module parameters (position input for Motion Control) available for download on the Internet (http://support.automation.siemens.com/WW/view/en/59709820).

4.2.3 Address space

Address space of the technology module

Table 4- 9 Size of input and output addresses of the TM PosInput 1 with position input for "Motion Control" technology object

	Inputs	Outputs
Range	16 bytes	4 bytes

4.2.4 Isochronous mode

The technology module supports the "Isochronous mode" system function. Position and counter values can be acquired in a fixed system cycle with this system function.

In isochronous mode, the cycle of the user program, the transmission of the input signals and processing in the technology module are synchronized. A status change of a digital input immediately triggers the specified reaction of the technology module and the change of the status bit of the digital input in the feedback interface.

Use an OB of type "MC-Servo" in this operating mode. Isochronous mode is needed when using the output cam and cam track technology objects. When the measuring input technology is used in combination with hardware digital input DI1, isochronous mode is not needed.

Data processing

The data that was transmitted to the technology module in the current bus cycle via the control interface takes effect when it is processed in the internal technology module cycle. At the time the input data is read in (T_i), the position or counter value as well as status bits are acquired and made available in the feedback interface for retrieval in the current bus cycle.

Isochronous mode parameters

In isochronous mode, the following parameter can affect the isochronous mode parameters of the sync domain.

- Filter frequency
- Frame length
- Transmission rate
- Monoflop time
- Parity

Because the isochronous mode parameters are not checked in RUN, overflows can occur if you change one or more of the indicated parameters in RUN. To prevent overflows, select the option with the largest time required in the offline parameter assignment.

Additional information

You can find a detailed description of isochronous mode in the following:

- Function manual Isochronous Mode (STEP 7 (TIA Portal) V15.1 or higher) available for download on the Internet (https://support.industry.siemens.com/cs/ww/en/view/109755401)
- Function manual PROFINET with STEP 7 available for download on the Internet (https://support.industry.siemens.com/cs/ww/en/view/49948856)

4.3 Manual operation (without technology object)

4.3.1 Configuring

Introduction

You configure the technology module and assign its parameters with the configuration software.

The functions of the technology module are controlled and checked by the user program via the control and feedback interface.

System environment

The technology module can be used in the following system environments:

Applications	Components required	Configuration software	In the user program
Central operation with a CPU 151xSP	• S7-1500 automation system • TM PosInput 1	STEP 7 (TIA Portal): Device configuration and parameter setting with hardware configuration	Direct access to control and feedback interface in the I/O data
Distributed operation with an S7-1500 CPU	• S7-1500 automation system • ET 200SP distributed I/O system • TM PosInput 1	STEP 7 (TIA Portal): Device configuration and parameter setting with hardware configuration	
Distributed operation with an S7-300/400 CPU	• S7-300/400 automation system • ET 200SP distributed I/O system • TM PosInput 1	STEP 7 (TIA Portal): Device configuration and parameter setting with hardware configuration STEP 7: Device configuration and parameter setting with HSP (up to firmware version V1.2) or GSD file	
Distributed operation with an S7-1200 CPU	• S7-1200 automation system • ET 200SP distributed I/O system • TM PosInput 1	STEP 7 (TIA Portal): Device configuration and parameter setting with hardware configuration	
Distributed operation in a third-party system	• Third-party automation system • ET 200SP distributed I/O system • TM PosInput 1	Third-party configuration software: Device configuration and parameter setting with GSD file	

Additional information

You can find a detailed description of the counting and measurement functions and their configuration in the following:

- Function manual Counting, Measurement and Position Detection available for download on the Internet (http://support.automation.siemens.com/WW/view/en/59709820)
- Information system of STEP 7 (TIA Portal) under "Using technology functions > Counting, measurement and position input > Counting, measurement and position input (S7-1500)"

Hardware Support Packages (HSP)

STEP 7 (TIA Portal)

If firmware version V1.3 of the module is not yet integrated in your TIA Portal Version V15, you can integrate a corresponding module using HSP0256.

You can find the Hardware Support Packages (HSP) for download on the Internet (https://support.industry.siemens.com/cs/ww/en/view/72341852).

You can also access this download from the menu bar of STEP 7 (TIA Portal): "Options > Support packages > Download from the Internet".

STEP 7

The Hardware Support Packages (HSP) supports the technology module up to firmware version V1.2. You can find the HSP for download on the Internet (https://support.industry.siemens.com/cs/ww/en/view/23183356)

GSD file

You can find the respective GSD file for the ET 200SP distributed I/O system for download on the Internet:

- GSD file for PROFINET IO (http://support.automation.siemens.com/WW/view/en/57138621)
- GSD file for PROFIBUS DP (http://support.automation.siemens.com/WW/view/en/73016883)

4.3.2 Reaction to CPU STOP

Reaction to CPU STOP

You set the response of the technology module to CPU STOP in the device configuration with the basic parameters.

Table 4- 10 Reaction of technology module to CPU STOP

Option	Meaning
Continue operation	The technology module remains fully functional. Incoming count pulses are processed or the position value is read in. The digital outputs continue to switch according to the parameter assignment.
Output substitute value	The technology module outputs the configured substitute values at the digital outputs until the next CPU STOP-RUN transition. The technology module is returned to its startup state after a STOP-RUN transition: The counter value is set to the Start value (with incremental encoders or pulse encoders) and the digital outputs switch according to the parameter assignment.
Keep last value	The technology module outputs the values at the digital outputs that were valid when the transition to STOP took place until the next CPU STOP-RUN transition. If a digital output with the "At comparison value for a pulse duration" function is set at CPU STOP, the digital output is reset after the pulse duration elapses. The technology module is returned to its startup state after a STOP-RUN transition: The counter value is set to the Start value (with incremental encoders or pulse encoders) and the digital outputs switch according to the parameter assignment.

4.3.3 Parameter setting

You specify the properties of the technology module using various parameters. Depending on the settings, not all parameters are available. When parameters are assigned in the user program, the parameters are transferred to the module with the "WRREC" instruction and data record 128 (Page 118).

You set the parameters of the module as follows in this operating mode:

Parameter setting using...	Basic procedure
Hardware configuration in STEP 7 (TIA Portal)	1. Insert the module from the hardware catalog under "Technology modules". 2. Set the device configuration and the parameters of the module in the hardware configuration. "Manual operation (without technology object)" must be set as the operating mode. 3. Download the project to the CPU.
Hardware configuration in STEP 7 with HSP	1. Install the appropriate HSP file. You will then find the module in the hardware catalog under "ET 200SP". 2. Set the device configuration and the parameters in the hardware configuration. 3. Download the project to the CPU.
Hardware configuration with GSD file for distributed operation on PROFINET IO	1. Install the current PROFINET GSD file. You will then find the module in the hardware catalog under "Other field devices > PROFINET IO > I/O". 2. Set the parameters in the hardware configuration. You can find information on the respective dependencies of the parameters in function manual Counting, Measurement and Position Detection (http://support.automation.siemens.com/WW/view/en/59709820). 3. Download the project to the CPU.
Hardware configuration with GSD file for distributed operation on PROFIBUS DP	1. Install the current PROFIBUS GSD file. You will then find the module in the hardware catalog under "Other field devices > PROFIBUS DP > I/O". 2. Set the parameters in the hardware configuration. You can find information on the respective dependencies of the parameters in function manual Counting, Measurement and Position Detection (http://support.automation.siemens.com/WW/view/en/59709820). The parameters marked with [1] in the following tables are not configurable in the PROFIBUS GSD file. 3. Download the project to the CPU. The parameters marked with [1] in the following tables are downloaded with their default setting. 4. If necessary, set the parameters marked with [1] in the user program using data record 128.

4.3.3.1 Parameters (SSI absolute encoder)

Parameters of the TM PosInput 1 with SSI absolute encoder

The following parameter settings are possible:

Table 4- 11 Settable parameters and their default setting (SSI absolute encoder)

Parameter	Value range	Default setting	Parameter reassignment in RUN	Scope
				HSP for STEP 7 (TIA Portal); HSP for STEP 7; GSD file
Potential group	• Use the potential group of the left module (dark BaseUnit) • Enable new potential group (light BaseUnit)	Use the potential group of the left module (dark BaseUnit)	No	Module
Operating mode[3]	• Position input • Measuring	Position input	No	Channel
Reaction to CPU STOP[1]	• Output substitute value • Keep last value • Continue operation	Output substitute value	Yes	Channel
Substitute value for DQ[1]	• 0 • 1	DQ0, DQ1: 0	Yes	Channel
Enable diagnostic interrupt on wire break[2]	• Deactivated • Activated	Deactivated	Yes	Channel
Enable additional diagnostic interrupts	• Deactivated • Activated	Deactivated	Yes	Channel
Hardware interrupt: New Capture value available[1]	• Deactivated • Activated	Deactivated	Yes	Channel
Hardware interrupt: Direction reversal[1]	• Deactivated • Activated	Deactivated	Yes	Channel
Hardware interrupt: Zero crossing[1]	• Deactivated • Activated	Deactivated	Yes	Channel
Hardware interrupt: Comparison event for DQ0 occurred[1]	• Deactivated • Activated	Deactivated	Yes	Channel
Hardware interrupt: Comparison event for DQ1 occurred[1]	• Deactivated • Activated	Deactivated	Yes	Channel
Invert direction[1] (position value)	• Deactivated • Activated	Deactivated	Yes	Channel
Frame length	10 bits...40 bits	13 bits	Yes	Channel

Parameter	Value range	Default setting	Parameter reassign-ment in RUN	Scope
				HSP for STEP 7 (TIA Portal); HSP for STEP 7; GSD file
Code type	• Gray • Dual	Gray	Yes	Channel
Transmission rate	• 125 kHz • 250 kHz • 500 kHz • 1 MHz • 1.5 MHz • 2 MHz	125 kHz	Yes	Channel
Monoflop time[1]	• Automatically • 16 µs • 32 µs • 48 µs • 64 µs	Automatically	Yes	Channel
Parity	• None • Even • Odd	None	Yes	Channel
Bit number LSB of the position value	0...38	0	Yes	Channel
Bit number MSB of the position value	1...39	12	Yes	Channel
Set function of DI	• Capture • Digital input without function	DI0, DI1: Digital input without function	Yes	Channel
Input delay for digital inputs[1]	• None • 0.05 ms • 0.1 ms • 0.4 ms • 0.8 ms • 1.6 ms • 3.2 ms • 12.8 ms • 20 ms	0.1 ms	Yes	Channel
Edge selection for DI[1]	• At rising edge • At falling edge • At rising and falling edge	At rising edge	Yes	Channel
Frequency of Capture function[1,4]	• Once • Periodic	Once	Yes	Channel

Parameter	Value range	Default setting	Parameter reassignment in RUN	Scope
				HSP for STEP 7 (TIA Portal); HSP for STEP 7; GSD file
Set output	• Use by user program • Between comparison value and high limit / measured value >= comparison value • Between comparison value and low limit / measured value <= comparison value • At comparison value for a pulse duration • After set command from CPU until comparison value • Between comparison value 0 and 1 • Not between comparison value 0 and 1	DQ0, DQ1: Between comparison value and high limit	Yes	Channel
Comparison value 0[1]	-2147483648...2147483647	0	Yes	Channel
Comparison value 1[1]	-2147483648...2147483647	10	Yes	Channel
Count direction of DQ function[1]	• Up • Down • In both directions	In both directions	Yes	Channel
Pulse duration [ms/10][1]	0...65535	5000 (corresponds to 0.5 s)	Yes	Channel
Hysteresis (in increments)[1]	0...255	0	Yes	Channel
Measured variable	• Frequency • Period • Velocity • Complete SSI frame	Frequency	Yes	Channel
Update time [ms] of the measuring function[1]	0...25000	10	Yes	Channel

Parameter	Value range	Default setting	Parameter reassign-ment in RUN	Scope
				HSP for STEP 7 (TIA Portal); HSP for STEP 7; GSD file
Time base for velocity measurement[1]	• 1 ms • 10 ms • 100 ms • 1 s • 60 s	60 s	Yes	Channel
Increments per unit[1]	1...65535	1	Yes	Channel

[1] Because the number of parameters is limited to a maximum of 244 bytes per station in the PROFIBUS GSD configuration, the possible parameter assignments are limited. The parameters are preassigned default settings in the module. If your PROFIBUS master supports the "Write/read data record" function, you can set these parameters using data record 128.

[2] When a GSD file is used, this diagnostic interrupt is enabled with the "Enable additional diagnostic interrupts" parameter and is then not separately configurable.

[3] When configuring with HSP for STEP 7 or with a GSD file, you determine the operating mode when you select the module name.

[4] Not available with HSP for STEP 7

NOTICE

Too high an encoder speed can supply the wrong rotation direction

If an SSI absolute encoder rotates so fast that more than half the value range is covered within one module cycle[1], the velocity and rotation direction are no longer calculated correctly. As a result, the following may function incorrectly:

- DQ functions
- Feedback bits EVENT_OFLW, EVENT_UFLW, EVENT_ZERO, EVENT_CMP0, EVENT_CMP1 and STS_DIR

[1] Non-isochronous mode: 500 µs; isochronous mode: PROFINET cycle time

Note

If you use an SSI absolute encoder whose value range does not correspond to a power of 2, the calculated velocity measurement can be incorrect at the moment of the overflow.

Explanation of parameters

You can find a detailed description of the parameters in function manual Counting, Measurement and Position Detection, sections Basic parameters and Manual operation available for download on the Internet (http://support.automation.siemens.com/WW/view/en/59709820).

4.3.3.2 Parameters (incremental or pulse encoder)

Parameters of the TM PosInput 1 with incremental or pulse encoder

The following parameter settings are possible:

Table 4- 12 Settable parameters and their default setting (incremental or pulse encoder)

Parameter	Value range	Default setting	Parameter reassignment in RUN	Scope
				HSP for STEP 7 (TIA Portal); HSP for STEP 7; GSD file
Potential group	• Use the potential group of the left module (dark BaseUnit) • Enable new potential group (light BaseUnit)	Use the potential group of the left module (dark BaseUnit)	No	Module
Operating mode[3]	• Counting • Measuring	Counting	No	Channel
Reaction to CPU STOP[1]	• Output substitute value • Keep last value • Continue operation	Output substitute value	Yes	Channel
Substitute value for DQ0[1]	• 0 • 1	0	Yes	Channel
Substitute value for DQ1[1]	• 0 • 1	0	Yes	Channel
Enable diagnostic interrupt on wire break[2]	• Deactivated • Activated	Deactivated	Yes	Channel
Enable additional diagnostic interrupts	• Deactivated • Activated	Deactivated	Yes	Channel
Hardware interrupt: Gate start[1]	• Deactivated • Activated	Deactivated	Yes	Channel
Hardware interrupt: Gate stop[1]	• Deactivated • Activated	Deactivated	Yes	Channel
Hardware interrupt: Overflow (high counting limit violated)[1]	• Deactivated • Activated	Deactivated	Yes	Channel
Hardware interrupt:Underflow (low counting limit violated)[1]	• Deactivated • Activated	Deactivated	Yes	Channel
Hardware interrupt: Direction reversal[1]	• Deactivated • Activated	Deactivated	Yes	Channel

Parameter	Value range	Default setting	Parameter reassign-ment in RUN	Scope
				HSP for STEP 7 (TIA Portal); HSP for STEP 7; GSD file
Hardware interrupt: Comparison event for DQ0 occurred[1]	• Deactivated • Activated	Deactivated	Yes	Channel
Hardware interrupt: Comparison event for DQ1 occurred[1]	• Deactivated • Activated	Deactivated	Yes	Channel
Hardware interrupt: Zero crossing[1]	• Deactivated • Activated	Deactivated	Yes	Channel
Hardware interrupt: New Capture value available[1]	• Deactivated • Activated	Deactivated	Yes	Channel
Hardware interrupt: Synchronization of the counter by an external signal[1]	• Deactivated • Activated	Deactivated	Yes	Channel
Signal type	• Pulse (A) • Pulse (A) and direction (B) • Count up (A), count down (B) • Incremental encoder (A, B phase-shifted) • Incremental encoder (A, B, N)	Pulse (A) and direction (B)	Yes	Channel
Signal evaluation for counter inputs	• Single • Double • Quadruple	Single	Yes	Channel
Filter frequency for counter inputs[1]	• 100 Hz • 200 Hz • 500 Hz • 1 kHz • 2 kHz • 5 kHz • 10 kHz • 20 kHz • 50 kHz • 100 kHz • 200 kHz • 500 kHz • 1 MHz	1 MHz	Yes	Channel
Invert direction (counter inputs)[1]	• Deactivated • Activated	Deactivated	Yes	Channel

Parameter	Value range	Default setting	Parameter reassignment in RUN	Scope
				HSP for STEP 7 (TIA Portal); HSP for STEP 7; GSD file
Reaction to signal N[1]	• No reaction to signal N • Synchronization at signal N • Capture at signal N	No reaction to signal N	Yes	Channel
Frequency of synchronization[1]	• Once • Periodic	Once	Yes	Channel
Frequency of Capture function[1,4]	• Once • Periodic	Once	Yes	Channel
Interface standard	• RS422, symmetrical • TTL (5 V), asymmetrical	RS422, symmetrical	Yes	Channel
Counting high limit[1]	-2147483648...2147483647	2147483647	Yes	Channel
Start value[1]	-2147483648...2147483647	0	Yes	Channel
Counting low limit[1]	-2147483648...2147483647	-2147483648	Yes	Channel
Reaction to violation of a counting limit	• Stop counting • Continue counting	Continue counting	Yes	Channel
Reset when counting limit is violated	• To opposite counting limit • To start value	To opposite counting limit	Yes	Channel
Reaction to gate start	• Set to start value • Continue with current value	Continue with current value	Yes	Channel
Set function of DI	• Gate start/stop (level-triggered) • Gate start (edge-triggered) • Gate stop (edge-triggered) • Synchronization • Enable synchronization at signal N • Capture • Digital input without function	• DI0: Gate start/stop (level-triggered) • DI1: Digital input without function	Yes	Channel
Select level for DI[1]	• Active with high level • Active with low level	Active with high level	Yes	Channel
Edge selection for DI[1]	• At rising edge • At falling edge • At rising and falling edge	At rising edge	Yes	Channel
Behavior of counter value after Capture with DI [1]	• Continue counting • Set to start value and continue counting	Continue counting	Yes	Channel

Parameter	Value range	Default setting	Parameter reassignment in RUN	Scope
				HSP for STEP 7 (TIA Portal); HSP for STEP 7; GSD file
Input delay for digital inputs[1]	• None • 0.05 ms • 0.1 ms • 0.4 ms • 0.8 ms • 1.6 ms • 3.2 ms • 12.8 ms • 20 ms	0.1 ms	Yes	Channel
Set output	• Use by user program • Between comparison value and high limit / measured value >= comparison value • Between comparison value and low limit / measured value <= comparison value • At comparison value for a pulse duration • After set command from CPU until comparison value • Between comparison value 0 and 1 • Not between comparison value 0 and 1	DQ0, DQ1: Between comparison value and high limit	Yes	Channel
Comparison value 0[1]	-2147483648...2147483647	0	Yes	Channel
Comparison value 1[1]	-2147483648...2147483647	10	Yes	Channel
Count direction of DQ function[1]	• Up • Down • In both directions	In both directions	Yes	Channel
Pulse duration [ms/10][1]	0...65535	5000 (corresponds to 0.5 s)	Yes	Channel
Hysteresis (in increments)[1]	0...255	0	Yes	Channel
Measured variable	• Frequency • Period • Velocity	Frequency	Yes	Channel
Update time [ms] of the measuring function[1]	0...25000	10	Yes	Channel

Parameter	Value range	Default setting	Parameter reassignment in RUN	Scope
				HSP for STEP 7 (TIA Portal); HSP for STEP 7; GSD file
Time base for velocity measurement[1]	• 1 ms • 10 ms • 100 ms • 1 s • 60 s	60 s	Yes	Channel
Increments per unit[1]	1...65535	1	Yes	Channel

[1] Because the number of parameters is limited to a maximum of 244 bytes per station in the PROFIBUS GSD configuration, the possible parameter assignments are limited. The parameters are preassigned default settings in the module. If your PROFIBUS master supports the "Write/read data record" function, you can set these parameters using data record 128.

[2] When a GSD file is used, this diagnostic interrupt is enabled with the "Enable additional diagnostic interrupts" parameter and is then not separately configurable.

[3] When configuring with HSP for STEP 7 or with a GSD file, you determine the operating mode when you select the module name.

[4] Not available with HSP for STEP 7

Explanation of parameters

You can find a detailed description of the parameters in function manual Counting, Measurement and Position Detection, sections Basic parameters and Manual operation available for download on the Internet (http://support.automation.siemens.com/WW/view/en/59709820).

4.3.4 Address space

Address space of the technology module

Table 4- 13 Size of input and output addresses of the TM PosInput 1 with manual operation

	Inputs	Outputs
Range	16 bytes	12 bytes

4.3.5 Control and feedback interface

Note

The control and feedback interface is compatible with the control and feedback interface of the TM PosInput 2, TM Count 2x24V and TM Count 1x24V technology modules of the S7-1500 automation system.

4.3.5.1 Assignment of the control interface

The user program uses the control interface to influence the behavior of the technology module.

Control interface

The following table shows the assignment of the control interface:

Byte offset from start address ↓	Bit 7	Bit 6	Bit 5	Bit 4	Bit 3	Bit 2	Bit 1	Bit 0
0…3	SLOT_0: DINT or REAL: Load value (meaning of the value is specified in LD_SLOT_0) Value range: –2147483648 to 2147483647_D or 80000000 to $7FFFFFFF_H$							
4…7	SLOT_1: DINT or REAL: Load value (meaning of the value is specified in LD_SLOT_1) Value range: –2147483648 to 2147483647_D or 80000000 to $7FFFFFFF_H$							

Byte offset from start address ↓	Bit 7	Bit 6	Bit 5	Bit 4	Bit 3	Bit 2	Bit 1	Bit 0
8	LD_SLOT_1				LD_SLOT_0			
9	EN_ CAPTURE	EN_ SYNC_DN	EN_ SYNC_UP	SET_DQ1	SET_DQ0	TM_ CTRL_DQ1	TM_ CTRL_DQ0	SW_GATE
10	SET_DIR	Reserved					RES_ EVENT	RES_ ERROR
11	Reserved							

Explanations

Control bit/value	Explanations
EN_CAPTURE	Use this bit to enable the Capture function. Resetting this bit resets a set EVENT_CAP in the feedback interface.
EN_SYNC_DN	Use this bit to enable the synchronization of the counter when counting in downward direction with an incremental encoder or pulse encoder. Resetting this bit resets a set EVENT_SYNC in the feedback interface.
EN_SYNC_UP	Use this bit to enable the synchronization of the counter when counting in upward direction with an incremental encoder or pulse encoder. Resetting this bit resets a set EVENT_SYNC in the feedback interface.
LD_SLOT_m	Use this load request to specify the meaning of the value in SLOT_m: • 0000 means: No action, idle • 0001 means: Load counter value (for incremental or pulse encoder) • 0010 not permitted • 0011 means: Load start value (for incremental or pulse encoder) • 0100 means: Load comparison value 0 • 0101 means: Load comparison value 1 • 0110 means: Load counting low limit (for incremental or pulse encoder) • 0111 means: Load counting high limit (for incremental or pulse encoder) • 1000 to 1111 not permitted The technology module executes the respective action as soon as LD_SLOT_m changes. If values are loaded simultaneously using LD_SLOT_0 and LD_SLOT_1, the value from SLOT_0 is internally applied first and then the value from SLOT_1 . This can produce unexpected intermediate states.
RES_EVENT	Use this bit to trigger the reset of the saved events in the EVENT_ZERO, EVENT_OFLW, EVENT_UFLW, EVENT_CMP0, EVENT_CMP1 feedback bits.
Reserved	Reserve bits must be set to 0.
RES_ERROR	Use this bit to trigger the reset of the saved error states LD_ERROR and ENC_ERROR .
SET_DIR	Use this bit to specify the count direction for signal type "Pulse (A)". • 0 means: Up • 1 means: Down

Control bit/value	Explanations
SET_DQ0	Use this bit to set digital output DQ0 when TM_CTRL_DQ0 is set to 0. In the case of the function "After set command from CPU until comparison value", SET_DQ0 is effective regardless of TM_CTRL_DQ0 as long as the counter value is not equal to the comparison value.
SET_DQ1	Use this bit to set digital output DQ1 when TM_CTRL_DQ1 is set to 0. In the case of the function "After set command from CPU until comparison value", SET_DQ1 is effective regardless of TM_CTRL_DQ1 as long as the counter value is not equal to the comparison value.
SW_GATE	Use this bit to open and close the software gate when using an incremental encoder or pulse encoder. Together, the software gate and the hardware gate form the internal gate. The technology module only counts when the internal gate is open. • 0 means: Software gate closed • 1 means: Software gate open The digital inputs of the technology module externally control the hardware gate. The hardware gate can be activated by parameter assignment. The software gate cannot be deactivated.
TM_CTRL_DQ0	Use this bit to enable the technological function of digital output DQ0. • 0 means: SET_DQ0 defines the state of DQ0 • 1 means: assigned function defines the state of DQ0
TM_CTRL_DQ1	Use this bit to enable the technological function of digital output DQ1. • 0 means: SET_DQ1 defines the state of DQ1 • 1 means: assigned function defines the state of DQ1

4.3.5.2 Assignment of the feedback interface

The user program receives current values and status information from the technology module by means of the feedback interface.

Feedback interface

The following table shows the assignment of the feedback interface:

Byte offset from start address ↓	Bit 7	Bit 6	Bit 5	Bit 4	Bit 3	Bit 2	Bit 1	Bit 0
0…3	COUNT_VALUE: DINT: Current counter value or position value							
4…7	CAPTURED_VALUE: DINT: The last acquired Capture value							
8...11	MEASURED_VALUE: REAL: Current measured value or DWORD: Complete SSI frame							
12	Reserved					LD_ERROR	ENC_ ERROR	POWER_ ERROR
13	Reserved		STS_SW_ GATE	STS_ READY	LD_STS_ SLOT_1	LD_STS_ SLOT_0	RES_EVEN T_ACK	Reserved
14	Reserved	STS_DI1	STS_DI0	STS_DQ1	STS_DQ0	STS_GATE	STS_CNT	STS_DIR
15	STS_M_ INTERVAL	EVENT_ CAP	EVENT_ SYNC	EVENT_ CMP1	EVENT_ CMP0	EVENT_ OFLW	EVENT_ UFLW	EVENT_ ZERO

Note

Validity of the position value

The position value of an SSI absolute encoder is valid when STS_READY is set to 1 and ENC_ERROR is set to 0. STS_READY is set to 0 while the module starts up.

Explanations

Feedback bit/value	Explanations
CAPTURED_VALUE	This DINT value indicates the last acquired Capture value. The following external signals can trigger the Capture function: • Rising or falling edge of a digital input • Both edges of a digital input The "Frequency of Capture function" parameter specifies whether the function is executed at each configured edge or only once after each enable.
COUNT_VALUE	This DINT value indicates the current counter value or position value. If you use an SSI absolute encoder with a position value length up to 31 bits, the position value is treated as unsigned and as a positive value and can assume values between 0 and $2^{(MSB-LSB+1)}-1$. If you use an SSI absolute encoder with a position value length of 32 bits, the MSB of the position value corresponds to the sign and the position value can assume values between –2147483648 and 2147483647. If you use a 32-bit position value for the comparison function, the position value is interpreted as DINT.
ENC_ERROR	This bit indicates that one of the following errors has occurred at the encoder signals (retentive) for the respective technology module: • Invalid transition of A/B signals (with incremental encoder) • RS422/TTL error • SSI encoder error or SSI frame error (with SSI absolute encoder) If you have enabled the diagnostic interrupts, the respective diagnostic interrupt is triggered in the event of encoder signal errors. For information on the meaning of the diagnostic interrupts, refer to the manual for the respective technology module. The bit is reset once you have acknowledged the error with RES_ERROR .
EVENT_CAP	This bit indicates that a Capture event has occurred and a counter value has been saved in CAPTURED_VALUE . You reset the status by resetting EN_CAPTURE .
EVENT_CMP0	This bit indicates the saved status that a comparison event (status change) has occurred for the digital output DQ0 based on the selected comparison condition. You reset the status by acknowledgment with RES_EVENT. If the counter value is set to the start value in counting mode, EVENT_CMP0 is not set.
EVENT_CMP1	This bit indicates the saved status that a comparison event (status change) has occurred for the digital output DQ1 based on the selected comparison condition. You reset the status by acknowledgment with RES_EVENT. If the counter value is set to the start value in counting mode, EVENT_CMP1 is not set.
EVENT_OFLW	This bit indicates the saved status that the counter value had an overflow. You reset the status by acknowledgment with RES_EVENT.
EVENT_SYNC	When an incremental or pulse encoder is used, this bit indicates the saved status that the counter was loaded with the start value by an external reference signal (synchronization). You reset the status by resetting EN_SYNC_UP or EN_SYNC_DN .
EVENT_UFLW	This bit indicates the saved status that the counter value had an underflow. You reset the status by acknowledgment with RES_EVENT.
EVENT_ZERO	This bit indicates the saved status that the counter value or position value had a zero crossing. You reset the status by acknowledgment with RES_EVENT. When the "Zero crossing" hardware interrupt is enabled, for system-related reasons it can also be triggered if "0" is outside the configured value range.

Feedback bit/value	Explanations
LD_ERROR	This bit indicates that an error occurred (latching) during loading via the control interface. The loaded values were not applied. When using an incremental or pulse encoder, one of the following conditions is not fulfilled: • Low counting limit <= counter value <= high counting limit • Low counting limit <= start value <= high counting limit • Low counting limit <= comparison value 0/1 <= high counting limit When using an SSI absolute encoder, one of the following conditions is not fulfilled: • 0 <= position value <= maximum position value • 0 <= comparison value 0/1 <= maximum position value The bit is reset once you have acknowledged the error with RES_ERROR .
LD_STS_SLOT_0	This bit indicates by a status change (toggling) that the load request for SLOT_0 (LD_SLOT_0) was detected and performed.
LD_STS_SLOT_1	This bit indicates by a status change (toggling) that the load request for SLOT_1 (LD_SLOT_1) was detected and performed.
MEASURED_VALUE	This value indicates the current measured value with data type REAL or the complete SSI frame with data type DWORD: • Frequency: The mean frequency is calculated from the time profile of the count pulses or position value changes in one measurement interval and returned as a floating-point number in the unit of hertz. • Period: The mean period is calculated from the time profile of the count pulses or position value changes in one measurement interval and returned as a floating-point number in the unit of seconds. • Velocity: The mean velocity is calculated from the time profile of the count pulses or position value changes in one measurement interval and returned as a floating-point number in the configured unit. • Complete SSI frame: Instead of a measured quantity, the least significant 32 bits of the unprocessed current SSI frame are returned. This provides you with encoder-specific additional bits, such as error bits, in addition to the position value. If the SSI frame is shorter than 32 bits, the complete SSI frame is returned right-aligned and the top unused bits are returned with "0" in the feedback interface. The measured values are returned as a signed value. The sign indicates whether the counter value or position value went up or down in the relevant time interval. The update time is asynchronous to the opening of the internal gate, i.e. the update time is not started when the gate opens. After the internal gate closes, the last calculated measured value continues to be returned.
POWER_ERROR	This bit indicates that supply voltage L+ is too low. If you have enabled the diagnostic interrupts (Page 103), the diagnostic interrupt "Load voltage missing" is triggered at a supply voltage error. When supply voltage L+ is available at a sufficient level once again, POWER_ERROR is automatically set to 0.
RES_EVENT_ACK	This bit indicates that the reset of event bit EVENT_SYNC, EVENT_CMP0, EVENT_CMP1, EVENT_OFLW, EVENT_UFLW, EVENT_ZERO is active.
Reserved	Reserved bits are set to 0.
STS_CNT	This bit indicates that at least one count pulse or a position value change has occurred in the last ca. 0.5 s.
STS_DI0	This bit indicates the status of digital input DI0.
STS_DI1	This bit indicates the status of digital input DI1.

Feedback bit/value	Explanations
STS_DIR	This bit indicates the count direction of the last count pulse or the direction of the last position value change. • 0 means: Down • 1 means: Up
STS_DQ0	This bit indicates the status of digital output DQ0.
STS_DQ1	This bit indicates the status of digital output DQ1.
STS_GATE	This bit indicates the status of the internal gate when using an incremental or pulse encoder. • 0 means: Gate closed • 1 means: Gate open Note: In order for the counting logic including the gate control to operate correctly, the startup of the technology module must finish correctly at least once with a connected incremental or pulse encoder (STS_READY auf 1). If a connected encoder is not yet ready during the startup, the function of feedback bit STS_GATE is delayed until the encoder for the technology module is available. When the technology module starts up without a connected encoder, the startup does not finish correctly and STS_READY as well as STS_GATE remain set to 0. As soon as an encoder is connected, the startup finishes and STS_GATE functions correctly. An encoder error after a finished startup has no effect on STS_GATE.
STS_M_INTERVAL	This bit indicates that at least one count pulse or a position value change was detected in the previous measurement interval.
STS_READY	This bit indicates that the technology module supplies valid user data. The technology module has been started up and configured.
STS_SW_GATE	This bit indicates the status of the software gate. • 0 means: Gate closed • 1 means: Gate open

4.3.6 Isochronous mode

The technology module supports the "Isochronous mode" system function. This system function enables position, counter and measured values to be acquired in a defined system cycle.

In isochronous mode, the cycle of the user program, the transmission of the input signals and processing in the technology module are synchronized. The output signals switch immediately if the relevant comparison condition is met. A status change of a digital input immediately triggers the specified reaction of the technology module and the change of the status bit of the digital input in the feedback interface.

Use an OB of type "Synchronous Cycle" (e.g. OB61) in this operating mode. The input and output data are processed in the assigned OB.

The update time for the measured value is synchronized with the system cycle in a suitable ratio and, if necessary, adapted in length. If you set "0", the measured value is updated once per system cycle.

Data processing

The data that was transmitted to the technology module in the current bus cycle via the control interface takes effect when it is processed in the internal technology module cycle. At the time the input data is read in (T_i), the position or counter value and the measured value as well as status bits are acquired and made available in the feedback interface for retrieval in the current bus cycle.

Isochronous mode parameters

In isochronous mode, the following parameter can affect the isochronous mode parameters of the sync domain.

- Filter frequency
- Frame length
- Transmission rate
- Monoflop time
- Parity

Because the isochronous mode parameters are not checked in RUN, overflows can occur if you change one or more of the indicated parameters in RUN. To prevent overflows, select the option with the largest time required in the offline parameter assignment.

Additional information

You can find a detailed description of isochronous mode in the following:

- Function manual Isochronous Mode (STEP 7 (TIA Portal) V15.1 or higher) available for download on the Internet (https://support.industry.siemens.com/cs/ww/en/view/109755401)
- Function manual PROFINET with STEP 7 available for download on the Internet (https://support.industry.siemens.com/cs/ww/en/view/49948856)

4.4 Fast Mode

You can use the technology module in Fast Mode for very fast acquisition of counter or position value with compressed functionality. A reduced feedback interface but no control interface is available in Fast Mode. This allows you to use a shorter send clock for the CPU.

The scope of functions of the technology module has the following additional restrictions in Fast Mode:

- Parameter change in RUN only possible with data record 128
- Count/position value range: 25 bits
- No measured value available
- No software gate available
- No complete SSI frame available
- No Capture function available
- No hardware interrupts available
- Combined error message (feedback bit) that is acknowledged automatically

4.4.1 Configuring

Introduction

You configure the technology module and assign its parameters with the configuration software.

The functions of the technology module are controlled and checked by the user program via the feedback interface.

System environment

The technology module can be used in the following system environments:

Applications	Components required	Configuration software	In the user program
Central operation with a CPU 151xSP	• S7-1500 automation system • TM PosInput 1	STEP 7 (TIA Portal): Device configuration and parameter setting with hardware configuration	Direct access to feedback interface in the I/O data
Distributed operation with an S7-1500 CPU	• S7-1500 automation system • ET 200SP distributed I/O system • TM PosInput 1	STEP 7 (TIA Portal): Device configuration and parameter setting with hardware configuration	
Distributed operation with an S7-300/400 CPU	• S7-300/400 automation system • ET 200SP distributed I/O system • TM PosInput 1	STEP 7 (TIA Portal): Device configuration and parameter setting with hardware configuration STEP 7: Device configuration and parameter setting with HSP (up to firmware version V1.2) or GSD file	
Distributed operation with an S7-1200 CPU	• S7-1200 automation system • ET 200SP distributed I/O system • TM PosInput 1	STEP 7 (TIA Portal): Device configuration and parameter setting with hardware configuration	
Distributed operation in a third-party system	• Third-party automation system • ET 200SP distributed I/O system • TM PosInput 1	Third-party configuration software: Device configuration and parameter setting with GSD file	

Additional information

You can find a detailed description of the counting and measurement functions and their configuration in the following:

- Function manual Counting, Measurement and Position Detection available for download on the Internet (http://support.automation.siemens.com/WW/view/en/59709820)
- Information system of STEP 7 (TIA Portal) under "Using technology functions > Counting, measurement and position input > Counting, measurement and position input (S7-1500)"

Hardware Support Packages (HSP)

STEP 7 (TIA Portal)

If firmware version V1.3 of the module is not yet integrated in your TIA Portal Version V15, you can integrate a corresponding module using HSP0256.

You can find the Hardware Support Packages (HSP) for download on the Internet (https://support.industry.siemens.com/cs/ww/en/view/72341852).

You can also access this download from the menu bar of STEP 7 (TIA Portal): "Options > Support packages > Download from the Internet".

STEP 7

The Hardware Support Packages (HSP) supports the technology module up to firmware version V1.2. You can find the HSP for download on the Internet (https://support.industry.siemens.com/cs/ww/en/view/23183356)

GSD file

You can find the respective GSD file for the ET 200SP distributed I/O system for download on the Internet:

- GSD file for PROFINET IO (http://support.automation.siemens.com/WW/view/en/73016883)
- GSD file for PROFIBUS DP (http://support.automation.siemens.com/WW/view/en/57138621)

4.4.2 Reaction to CPU STOP

Reaction to CPU STOP

You set the response of the technology module to CPU STOP in the device configuration with the basic parameters.

Table 4- 14 Reaction of technology module to CPU STOP

Option	Meaning
Continue operation	The technology module remains fully functional. Incoming count pulses are processed or the position value is read in. The digital outputs continue to switch according to the parameter assignment.
Output substitute value	The technology module outputs the configured substitute values at the digital outputs until the next CPU STOP-RUN transition. The technology module is returned to its startup state after a STOP-RUN transition: The counter value is set to the Start value (with incremental encoders or pulse encoders) and the digital outputs switch according to the parameter assignment.
Keep last value	The technology module outputs the values at the digital outputs that were valid when the transition to STOP took place until the next CPU STOP-RUN transition. If a digital output with the "At comparison value for a pulse duration" function is set at CPU STOP, the digital output is reset after the pulse duration elapses. The technology module is returned to its startup state after a STOP-RUN transition: The counter value is set to the Start value (with incremental encoders or pulse encoders) and the digital outputs switch according to the parameter assignment.

4.4.3 Parameter setting

You specify the properties of the technology module using various parameters. Depending on the settings, not all parameters are available. When parameters are assigned in the user program, the parameters are transferred to the module with the "WRREC" instruction and data record 128 (Page 118).

You set the parameters of the module as follows in this operating mode:

Parameter setting using...	Basic procedure
Hardware configuration in STEP 7 (TIA Portal)	1. Insert the module from the hardware catalog under "Technology modules". 2. Set the device configuration and the parameters of the module in the hardware configuration. "Fast Mode" must be set as the operating mode. 3. Download the project to the CPU.
Hardware configuration in STEP 7 with HSP	1. Install the appropriate HSP file. You will then find the module in the hardware catalog under "ET 200SP". 2. Set the device configuration and the parameters in the hardware configuration. 3. Download the project to the CPU.
Hardware configuration with GSD file for distributed operation on PROFINET IO	1. Install the current PROFINET GSD file. You will then find the module in the hardware catalog under "Other field devices > PROFINET IO > I/O". 2. Set the parameters in the hardware configuration. 3. Download the project to the CPU.
Hardware configuration with GSD file for distributed operation on PROFIBUS DP	1. Install the current PROFIBUS GSD file. You will then find the module in the hardware catalog under "Other field devices > PROFIBUS DP > I/O". 2. Set the parameters in the hardware configuration. The parameters marked with [1] in the following tables are not configurable in the PROFIBUS GSD file. 3. Download the project to the CPU. The parameters marked with [1] in the following tables are downloaded with their default setting. 4. If necessary, set the parameters marked with [1] in the user program using data record 128.

4.4.3.1 Parameters (SSI absolute encoder)

Parameters of the TM PosInput 1 with SSI absolute encoder

The following parameter settings are possible:

Table 4- 15 Settable parameters and their default setting (SSI absolute encoder)

Parameter	Value range	Default setting	Parameter reassignment in RUN	Scope
				HSP for STEP 7 (TIA Portal); HSP for STEP 7; GSD file
Potential group	• Use the potential group of the left module (dark BaseUnit) • Enable new potential group (light BaseUnit)	Use the potential group of the left module (dark BaseUnit)	No	Module
Reaction to CPU STOP[1]	• Output substitute value • Keep last value • Continue operation	Output substitute value	Yes	Channel
Substitute value for DQ[1]	• 0 • 1	DQ0, DQ1: 0	Yes	Channel
Enable diagnostic interrupt on wire break[2]	• Deactivated • Activated	Deactivated	Yes	Channel
Enable additional diagnostic interrupts	• Deactivated • Activated	Deactivated	Yes	Channel
Invert direction[1] (position value)	• Deactivated • Activated	Deactivated	Yes	Channel
Frame length	10 bits...40 bits	13 bits	Yes	Channel
Code type	• Gray • Dual	Gray	Yes	Channel
Transmission rate	• 125 kHz • 250 kHz • 500 kHz • 1 MHz • 1.5 MHz • 2 MHz	125 kHz	Yes	Channel
Monoflop time[1]	• Automatically • 16 µs • 32 µs • 48 µs • 64 µs	Automatically	Yes	Channel

Parameter	Value range	Default setting	Parameter reassign-ment in RUN	Scope
				HSP for STEP 7 (TIA Portal); HSP for STEP 7; GSD file
Parity	• None • Even • Odd	None	Yes	Channel
Bit number LSB of the position value	0...38	0	Yes	Channel
Bit number MSB of the position value	1...39	12	Yes	Channel
Set function of DI	Digital input without function	Digital input without function	Yes	Channel
Input delay for digital inputs[1]	• None • 0.05 ms • 0.1 ms • 0.4 ms • 0.8 ms • 1.6 ms • 3.2 ms • 12.8 ms • 20 ms	0.1 ms	Yes	Channel
Set output	• Between comparison value and high limit • Between comparison value and low limit • At comparison value for a pulse duration • Digital output without function	Digital output without function	Yes	Channel
Comparison value 0[1]	0...33554431	0	Yes	Channel
Comparison value 1[1]	0...33554431	10	Yes	Channel
Count direction of DQ function[1]	• Up • Down • In both directions	In both direc-tions	Yes	Channel
Pulse duration [ms/10][1]	0...65535	5000 (corre-sponds to 0.5 s)	Yes	Channel
Hysteresis (in incre-ments)[1]	0...255	0	Yes	Channel

[1] Because the number of parameters is limited to a maximum of 244 bytes per station in the PROFIBUS GSD configuration, the possible parameter assignments are limited. The parameters are preassigned default settings in the module. If your PROFIBUS master supports the "Write/read data record" function, you can set these parameters using data record 128.

[2] When a GSD file is used, this diagnostic interrupt is enabled with the "Enable additional diagnostic interrupts" parameter and is then not separately configurable.

NOTICE
Too high an encoder speed can supply the wrong rotation direction If an SSI absolute encoder rotates so fast that more than half the value range is covered within one module cycle[1], the velocity and rotation direction are no longer calculated correctly. As a result, the following may function incorrectly: • DQ functions • Feedback bit STS_DIR [1] Non-isochronous mode: 500 µs; isochronous mode: PROFINET cycle time

4.4.3.2 Parameters (incremental or pulse encoder)

Parameters of the TM PosInput 1 with incremental or pulse encoder

The following parameter settings are possible:

Table 4- 16 Settable parameters and their default setting (incremental or pulse encoder)

Parameter	Value range	Default setting	Parameter reassign-ment in RUN	Scope
				HSP for STEP 7 (TIA Portal); HSP for STEP 7; GSD file
Potential group	• Use the potential group of the left module (dark BaseUnit) • Enable new potential group (light BaseUnit)	Use the poten-tial group of the left module (dark BaseUnit)	No	Module
Reaction to CPU STOP[1]	• Output substitute value • Keep last value • Continue operation	Output substi-tute value	Yes	Channel
Substitute value for DQ0[1]	• 0 • 1	0	Yes	Channel
Substitute value for DQ1[1]	• 0 • 1	0	Yes	Channel
Enable diagnostic inter-rupt on wire break[2]	• Deactivated • Activated	Deactivated	Yes	Channel
Enable additional diag-nostic interrupts	• Deactivated • Activated	Deactivated	Yes	Channel
Signal type	• Pulse (A) • Pulse (A) and direction (B) • Count up (A), count down (B) • Incremental encoder (A, B phase-shifted) • Incremental encoder (A, B, N)	Pulse (A) and direction (B)	Yes	Channel
Invert direction[1] (counter inputs)	• Deactivated • Activated	Deactivated	Yes	Channel
Signal evaluation for counter inputs	• Single • Double • Quadruple	Single	Yes	Channel

Parameter	Value range	Default setting	Parameter reassignment in RUN	Scope
				HSP for STEP 7 (TIA Portal); HSP for STEP 7; GSD file
Filter frequency for counter inputs[1]	• 100 Hz • 200 Hz • 500 Hz • 1 kHz • 2 kHz • 5 kHz • 10 kHz • 20 kHz • 50 kHz • 100 kHz • 200 kHz • 500 kHz • 1 MHz	1 MHz	Yes	Channel
Reaction to signal N[1]	• No reaction to signal N • Synchronization at signal N	No reaction to signal N	Yes	Channel
Interface standard	• RS422, symmetrical • TTL (5 V), asymmetrical	RS422, symmetrical	Yes	Channel
Counting high limit[1]	1...33554431	33554431	Yes	Channel
Start value[1]	0...33554431	0	Yes	Channel
Counting low limit[1]	0...33554430	0	Yes	Channel
Reaction to violation of a counting limit	• Stop counting • Continue counting	Continue counting	Yes	Channel
Reset when counting limit is violated	• To opposite counting limit • To start value	To opposite counting limit	Yes	Channel
Reaction to gate start	• Set to start value • Continue with current value	Continue with current value	Yes	Channel
Set function of DI	• Gate start/stop (level-triggered) • Gate start (edge-triggered) • Gate stop (edge-triggered) • Synchronization • Enable synchronization at signal N • Digital input without function	Digital input without function	Yes	Channel

Parameter	Value range	Default setting	Parameter reassignment in RUN	Scope
				HSP for STEP 7 (TIA Portal); HSP for STEP 7; GSD file
Input delay for digital inputs[1]	• None • 0.05 ms • 0.1 ms • 0.4 ms • 0.8 ms • 1.6 ms • 3.2 ms • 12.8 ms • 20 ms	0.1 ms	Yes	Channel
Select level for DI[1]	• Active with high level • Active with low level	Active with high level	Yes	Channel
Edge selection for DI[1]	• At rising edge • At falling edge	At rising edge	Yes	Channel
Frequency of synchronization[1]	• Once • Periodic	Once	Yes	Channel
Count direction for synchronization	• Up • Down • In both directions	Up	Yes	Channel
Set output	• Between comparison value and high limit • Between comparison value and low limit • At comparison value for a pulse duration • Between comparison value 0 and 1 • Digital output without function	DQ0, DQ1: Digital output without function	Yes	Channel
Comparison value 0[1]	0...33554431	0	Yes	Channel
Comparison value 1[1]	0...33554431	10	Yes	Channel
Count direction of DQ function[1]	• Up • Down • In both directions	In both directions	Yes	Channel

Parameter	Value range	Default setting	Parameter reassignment in RUN	Scope
				HSP for STEP 7 (TIA Portal); HSP for STEP 7; GSD file
Pulse duration [ms/10][1]	0...65535	5000 (corresponds to 0.5 s)	Yes	Channel
Hysteresis (in increments)[1]	0...255	0	Yes	Channel

[1] Because the number of parameters is limited to a maximum of 244 bytes per station in the PROFIBUS GSD configuration, the possible parameter assignments are limited. The parameters are preassigned default settings in the module. If your PROFIBUS master supports the "Write/read data record" function, you can set these parameters using data record 128.

[2] When a GSD file is used, this diagnostic interrupt is enabled with the "Enable additional diagnostic interrupts" parameter and is then not separately configurable.

4.4.3.3 Explanation of parameters

Potential group

A potential group consists of a group of directly adjacent I/O modules within an ET 200SP station that are supplied from a common supply voltage.

A potential group begins with a light BaseUnit, which feeds the required supply voltage for all modules of the potential group. The light BaseUnit interrupts the three self-configuring voltage bars P1, P2 and AUX to the neighboring modules on the left.

All other I/O modules of this potential group are plugged into dark BaseUnits. They take on the potentials of the self-configuring busbars P1, P2 and AUX from the neighboring modules on the left.

A potential group ends with the dark BaseUnit, which is followed by a light BaseUnit or server module in the station configuration.

Signal type

You can select from the following signal types:

Signal type	Meaning
Incremental encoder (A, B phase-shifted)	An incremental encoder with phase-shifted A and B signals is connected.
Incremental encoder (A, B, N)	An incremental encoder with phase-shifted signals A and B and a zero signal N is connected.
Pulse (A) and direction (B)	A pulse encoder (signal A) with direction signal (signal B) is connected.
Pulse (A)	A pulse encoder (signal A) without direction signal is connected.
Count up (A), count down (B)	Signals for counting up (signal A) and down (signal B) are connected.
Absolute encoder (SSI)	An SSI absolute encoder with signals D and C is connected.

Invert direction

You can invert the counting direction to adapt it to the process.

The inverting of the direction is configurable and active for the following signal types:

- Incremental encoder (A, B phase-shifted)
- Incremental encoder (A, B, N)

Signal evaluation

With the parameter assignment of the signal evaluation, you specify which edges of the signals are counted.

You can select from the following options:

Signal evaluation	Meaning
Single	The edges of signal A are evaluated during a low level of signal B.
Double	Each edge of signal A is evaluated.
Quadruple	Each edge of signals A and B is evaluated.

The parameter can be assigned with the following signal types:

- Incremental encoder (A, B phase-shifted)
- Incremental encoder (A, B, N)

Filter frequency

By configuring the filter frequency, you suppress interferences at the counting inputs A, B and N.

The selected filter frequency is based on a pulse/break ratio of between around 40:60 and around 60:40. This results in a specific minimum pulse/break time. Signal changes with a duration shorter than the minimum pulse/break time are suppressed.

You can select from the following filter frequencies:

Filter frequency	Minimum pulse/break time
100 Hz	4.0ms
200 Hz	2.0 ms
500 Hz	800 µs
1 kHz	400 µs
2 kHz	200 µs
5 kHz	80 µs
10 kHz	40 µs
20 kHz	20 µs
50 kHz	8.0 µs
100 kHz	4.0 µs
200 kHz	2.0 µs
500 kHz	0.8 µs
1 MHz	0.4 µs

Reaction to signal N

You use this parameter to specify which reaction to signal N is triggered.

You can select from the following options:

Option	Meaning
No reaction to signal N	The counter is not affected by signal N.
Synchronization at signal N	The counter is set to the start value at signal N. If you select the function "Enable synchronization at signal N" for a digital input, the synchronization depends on the level at the digital input.

Note

You can only select the reaction to signal N if you have selected the "Incremental encoder (A, B, N)" signal type.

Note

If you select "Synchronization at signal N", you can choose the "Enable synchronization at signal N" function for a digital input.

Frequency of synchronization

This parameter is used to define the frequency of the following events:

- Synchronization at signal N
- Synchronization as function of a digital input

You can select from the following options:

Option	Meaning
Once	The counter is only set at the first signal N or the first configured edge of the digital input.
Periodic	The counter is set at each signal N or each configured edge of the digital input.

Count direction of the synchronization

You use this parameter to specify the count direction for which the following functions are enabled:

- Synchronization at signal N
- Synchronization as function of a digital input

You can select from the following options:

Option	Meaning
In both directions	Synchronization takes place regardless of the count direction.
Up	Synchronization only takes place when the counter is counting up.
Down	Synchronization only takes place when the counter is counting down.

Interface standard

You use this parameter to specify whether the encoder supplies symmetrical signals (RS422) or asymmetrical signals (TTL).

You can select from the following options:

Interface standard	Meaning
RS422, symmetrical	The encoder supplies symmetrical signals according to the RS422 standard.
TTL (5 V), asymmetrical	The encoder supplies asymmetrical 5 V signals according to the TTL standard.

Note

The RS422 standard provides greater interference immunity than the TTL standard. If your incremental or pulse encoder supports the RS422- **and** TTL standards, we recommend using the RS422 standard.

Counting high limit

With the parameter assignment of the counting high limit, you limit the counting range. You can enter a value up to 33554431 (2^{25}-1). You must enter a value above the counting low limit.

Counting low limit

With the parameter assignment of the counting low limit, you limit the counting range. You can enter a value starting with 0. You must enter a value below the counting high limit.

Start value

With the parameter assignment of the start value, you specify the value at which counting is begun and is to continue in the case of defined events. You must enter a value at or within the counting limits.

Reaction to violation of a counting limit

You can configure the following reaction to violation of a counting limit:

Reaction	Meaning
Stop counting	After violation of a counting limit, counting is stopped and the internal gate is closed. To restart counting, you must close and reopen the SW gate or HW gate, if necessary.
Continue counting	Counting is continued with the start value or at the opposite counting limit depending on the additional parameter assignment.

Reset when counting limit is violated

You can reset the counter when a counting limit is violated:

Reset the value	Meaning
To start value	The counter value is set to the start value.
To opposite counting limit	The counter value is set to the opposite counting limit in each case.

Reaction to gate start

You can configure the following reaction to gate start:

Reaction	Meaning
Set to start value	When the gate is opened, the counter value is set to the start value.
Continue with current value	When the gate is opened, counting is continued with the last counter value.

Note

The parameter is only effective when you have configured a HW gate.

Set function of DI

With the parameter assignment of a digital input, you specify which function the digital input triggers when switched.

You can select from the following options:

Function of a digital input	Meaning
Gate start/stop (level-triggered)	The level at the respective digital input opens and closes the HW gate.
Gate start (edge-triggered)	The configured edge at the respective digital input opens the HW gate.
Gate stop (edge-triggered)	The configured edge at the respective digital input closes the HW gate.
Synchronization	The configured edge at the respective digital input sets the counter to the start value.
Enable synchronization at signal N	The active level at the respective digital input enables synchronization of the counter at signal N.
Digital input without function	No technological function is assigned to the respective digital input. You can read the signal status of the digital input via the feedback interface.

Note

Each function, except "Digital input without function", can be used only once per counter and can no longer be selected for the other digital inputs in each case.

Input delay

You use this parameter to suppress signal noise at the digital inputs. Changes to the signal are only detected if they remain stable for longer than the configured input delay time.

Note

If you select the "None" or "0.05 ms" option, you must use shielded cables for connection of the digital inputs.

Note

You configure the input delay under "Behavior of DI0" for all digital inputs together. The input delay is also displayed under "Behavior of DI1".

Select level

You use this parameter to specify the level at which the digital input is active.

You can select from the following options:

Level	Meaning
Active with high level	The respective digital input is active when it is set.
Active with low level	The respective digital input is active when it is not set.

The parameter can be configured for the following functions of a digital input:

- Gate start/stop (level-triggered)
- Enable synchronization at signal N

Edge selection

You use this parameter to specify the edge of the digital input at which the configured function is triggered.

You can select from the following options depending on the function selected:

- At rising edge
- At falling edge

The parameter can be configured for the following functions of a digital input:

- Gate start (edge-triggered)
- Gate stop (edge-triggered)
- Synchronization

Set output

With the parameter assignment of a digital output, you specify the condition upon which the digital output switches.

You can select from the following options:

Function of a digital output	Meaning
Between comparison value and high limit	The respective digital output is active if: Comparison value <= counter value <= counting high limit
Between comparison value and low limit	The respective digital output is active if: Low limit <= counter value <= comparison value
Between comparison value 0 and 1	The digital output DQ1 is active if: Comparison value 0 <= counter value <= comparison value 1
At comparison value for a pulse duration	The respective digital output is active once for the configured time and count direction when the counter value corresponds to the comparison value.
Digital output without function	The respective digital output is set to 0 irrespective of the reaction to CPU STOP.

Note

You can only set the "Between comparison value 0 and 1" function for digital output DQ1 and only if you have selected the "Digital output without function" function for digital output DQ0.

Comparison value 0

With the parameter assignment of the comparison value, you specify the counter value or position value at which the digital output DQ0 switches as a result of the selected comparison event.

You must enter an integer (DINT) that is greater than or equal to the counting low limit. If you use the DQ function "Between comparison value 0 and 1", comparison value 0 must be less than comparison value 1.

Comparison value 1

With the parameter assignment of the comparison value, you specify the counter value or position value at which the digital output DQ1 switches as a result of the selected comparison event.

You must enter an integer (DINT) that is less than or equal to the counting high limit. If you use the DQ function "Between comparison value 0 and 1", comparison value 0 must be less than comparison value 1.

Count direction

You use this parameter to specify the count direction for which the selected functions is valid:

You can select from the following options:

Count direction	Meaning
In both directions	The comparison and switching of the respective digital output takes places regardless of the count direction or whether the position value increases or decreases
Up	The comparison and switching of the respective digital output only takes place when the counter counts up or the position value increases.
Down	The comparison and switching of the respective digital output only takes place when the counter counts down or the position value decreases.

The parameter can be configured for the following functions:

- Between comparison value 0 and 1
- At comparison value for a pulse duration

Pulse duration

With the parameter assignment of the pulse duration for the "At comparison value for a pulse duration" function, you specify how many milliseconds the respective digital output is active.

If you enter "0" and the counter value corresponds to the respective comparison value, the digital output is active until the next count pulse.

Hysteresis (in increments)

With the parameter assignment of the hysteresis, you specify a range around the comparison values. Within the hysteresis range, the digital outputs cannot switch again before the counter value or position value has left this range.

An encoder can stop at a certain position, and slight movements can cause the counter value or position value to fluctuate around this position. If a comparison value or counting limit is within the fluctuation range and a hysteresis is not used, the associated digital output will switch on and off with corresponding frequency. The hysteresis prevents these unwanted switching actions.

Regardless of the hysteresis value, the hysteresis range ends at the low or counting high limit. If you enter "0", the hysteresis is turned off.

Invert direction

You use this parameter to invert the values supplied by the SSI absolute encoder. This allows you to adapt the detected direction of the encoder to the direction of rotation of the motor.

Note

This parameter acts only on the range from the LSB to the MSB of the position value in the frame.

Frame length

With the parameter assignment of the frame length, you specify the number of bits of an SSI frame of the SSI absolute encoder used. You can find the frame length of your SSI absolute encoder in the data sheet of the encoder. Special bits are also included in the frame length. A parity bit does not count in the frame length.

Code type

With the parameter assignment of the code type, you specify whether the encoder supplies Dual code or Gray code.

You can select from the following options:

Code type	Meaning
Gray	The position value supplied by the SSI absolute encoder in Gray code is converted to Dual code.
Dual	The value supplied by the SSI absolute encoder is not converted.

Transmission rate

With the parameter assignment of the transmission rate, you specify the data transmission rate between the technology module and SSI absolute encoder.

The maximum transmission rate depends on the cable length and the technical specifications of the SSI absolute encoder. For additional information, refer to the description of the encoder.

Monoflop time

With the parameter assignment of the monoflop time, you specify the idle time between two SSI frames.

The configured monoflop time must be at least equal to the monoflop time of the SSI absolute encoder used. You can find this value in the technical specifications of the SSI absolute encoder.

Note

If you select the "Automatically" option, the monoflop time automatically adapts to the encoder used.

In isochronous mode, the "Automatically" option corresponds to a monoflop time of 64 µs. If the monoflop time of the utilized SSI absolute encoder is less than 64 µs, you can select the value of the encoder to achieve faster isochronous times.

Parity

With the parameter assignment of the parity, you specify whether the SSI absolute encoder transfers a parity bit.

If, for example, a 25-bit encoder with parity is configured, the technology module reads 26 bits. A parity error is signaled in the feedback interface using bit EXT_F.

Bit number LSB of the position value

You use this parameter to specify the bit number of the LSB (least significant bit) of the position value in the frame of the SSI absolute encoder. In this way, you limit the range in the frame that supplies the position value.

The value must be less than the bit number of the MSB of the position value. The difference between the bit numbers of the MSB and the LSB of the position value must be less than 32.

Note

If you have selected "Gray" as the code type, only the range from the LSB to the MSB of the position value is converted to Dual code.

Bit number MSB of the position value

You use this parameter to specify the bit number of the MSB (most significant bit) of the position value in the frame of the SSI absolute encoder. In this way, you limit the range in the frame that supplies the position value.

The value must be less than the frame length and greater than the bit number of the LSB of the position value. The difference between the bit numbers of the MSB and the LSB of the position value must be less than 32.

Note

If you have selected "Gray" as the code type, only the range from the LSB to the MSB of the position value is converted to Dual code.

4.4.4 Address space

Address space of the technology module

Table 4- 17 Size of input and output addresses of the TM PosInput 1 with Fast Mode

	Inputs	Outputs
Range	4 bytes	0 bytes

4.4.5 Assignment of the feedback interface

The user program receives current values and status information from the technology module by means of the feedback interface.

Feedback interface

The following table shows the assignment of the feedback interface:

Byte offset from start address ↓	Bit 7	Bit 6	Bit 5	Bit 4	Bit 3	Bit 2	Bit 1	Bit 0
0	LS	STS_ READY	Reserved	EXT_F	STS_DI0	STS_DIR	STS_DI1	COUNT_ VALUE
1	COUNT_VALUE: DINT: Current counter value or position value							
2								
3								

Explanations

Feedback bit/value	Explanations
COUNT_VALUE	This value returns the current counter value or position value in the first 25 bits of a DINT value.
EXT_F	This bit indicates that one of the following errors has occurred at the encoder signals for the technology module: • Load voltage missing • Invalid transition of A/B signals (with incremental encoder) • RS422/TTL error • SSI encoder error or SSI frame error (with SSI absolute encoder) If you have enabled the diagnostic interrupts, the respective diagnostic interrupt is triggered in the event of encoder signal errors. For information on the meaning of the diagnostic interrupts, refer to the section Diagnostic alarms (Page 103). The bit is reset automatically as soon as an error no longer exists.
LS	As a life sign, this bit indicates by a status change (toggling) that isochronous mode is functioning and the module has updated the feedback interface in the respective bus cycle. In non-isochronous mode, this bit is set to 0.
Reserved	Reserved bits are set to 0.
STS_DI0	This bit indicates the status of digital input DI0.
STS_DI1	This bit indicates the status of digital input DI1.
STS_DIR	This bit indicates the count direction of the last count pulse or the direction of the last position value change. 0 means: Down 1 means: Up
STS_READY	This bit indicates that the technology module supplies valid user data. The technology module has been started up and configured.

4.4.6 Isochronous mode

The technology module supports the "Isochronous mode" system function. Position and counter values can be acquired in a fixed system cycle with this system function.

In isochronous mode, the cycle of the user program, the transmission of the input signals and processing in the technology module are synchronized. The output signals switch immediately if the relevant comparison condition is met. A status change of a digital input immediately triggers the specified reaction of the technology module and the change of the status bit of the digital input in the feedback interface.

This operating mode is especially well-suited for short send clocks of the CPU starting from 125 µs, because only input data is used.

Use an OB of type "Synchronous Cycle" (e.g. OB61) in this operating mode.

Data processing

At the time the input data is read in (T_i), the position or counter value as well as status bits are acquired and made available in the feedback interface for retrieval in the current bus cycle.

Isochronous mode parameters

In isochronous mode, the following parameter can affect the isochronous mode parameters of the sync domain.

- Filter frequency
- Frame length
- Transmission rate
- Monoflop time
- Parity

Because the isochronous mode parameters are not checked in RUN, overflows can occur if you change one or more of the indicated parameters in RUN. To prevent overflows, select the option with the largest time required in the offline parameter assignment.

Additional information

You can find a detailed description of isochronous mode in the following:

- Function manual Isochronous Mode (STEP 7 (TIA Portal) V15.1 or higher) available for download on the Internet (https://support.industry.siemens.com/cs/ww/en/view/109755401)
- Function manual PROFINET with STEP 7 available for download on the Internet (https://support.industry.siemens.com/cs/ww/en/view/49948856)

Interrupts/diagnostic messages 5

5.1 Status and error display

LEDs

The following figure shows you the LED displays (status and error displays) of TM PosInput 1.

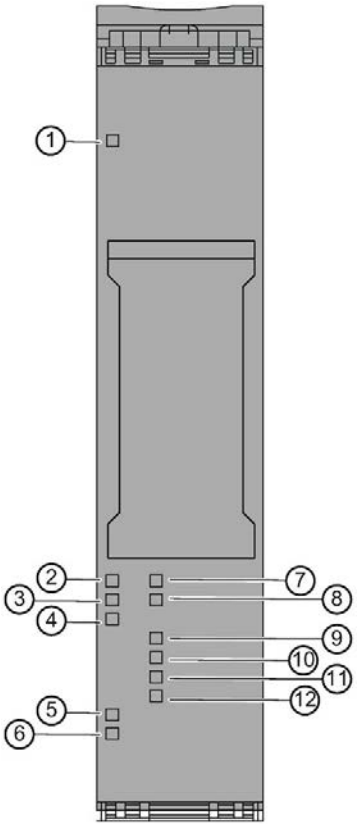

①	DIAG (green/red)	⑦	Status DI0 (green)
②	Status A/D (green)	⑧	Status DI1 (green)
③	Status B/C (green)	⑨	Status DQ0 (green)
④	Status N (green)	⑩	Status DQ1 (green)
⑤	24VDC (green)	⑪	Status UP (green)
⑥	PWR (green)	⑫	Status DN (green)

Figure 5-1 LED displays of the TM PosInput 1

Meaning of the LED displays

The following tables explain the meaning of the status and error displays. Remedial measures for diagnostic alarms can be found in section Diagnostic alarms (Page 103).

Table 5- 1 Status and error displays DIAG

LED DIAG	Meaning	Remedy
□ Off	Backplane bus supply of the ET 200SP not OK	Check the supply voltage or turn it on at the interface module.
☼ Flashes	Technology module parameters not set	---
■ On	Technology module parameters set and no module diagnostics	
☼ Flashes	Technology module parameters set and module diagnostics (at least one error is present)	Evaluate the diagnostic alarms and eliminate the error.

Table 5- 2 PWR/24VDC status displays

LEDs		Meaning	Remedy
PWR	24VDC		
□ Off	□ Off	Supply voltage L+ missing	• Check the supply voltage. • Check the BaseUnit type and the wiring of the BaseUnit.
■ On	■ On	Supply voltage L+ is present and OK	---
■ On	□ Off	Short-circuit or overload at the encoder supply or supply voltage too low	• Check the encoder wiring. • Check the loads connected to the encoder supply. • Check the supply voltage.

Channel LEDs

The A, B, N and DIm LEDs indicate the current level of the associated signals. The LEDs of the DQm digital outputs indicate the desired state.

The flashing frequency of the channel LEDs is limited to approximately 12 Hz. If higher frequencies are present, the channel LEDs will flash at 12 Hz instead of indicating the current status.

If you are using an SSI absolute encoder, the LEDs D and C light up green during the transmission of encoder frames. The LEDs D and C are off when an error has occurred.

Table 5- 3 Status displays A/B/N/DIm/DQm

LEDs A/B/N/DIm/DQm	Meaning
□ Off	Counter input/digital input/digital output at 0 level
■ On	Counter input/digital input/digital output at 1 level

Table 5- 4 Status displays UP/DN

LEDs		Meaning
UP	DN	
□ Off	□ Off	No count pulse has been detected for the last 0.5 s.
■ On	□ Off	The last count pulse has incremented the counter and took place no more than 0.5 s ago.
□ Off	■ On	The last count pulse has decremented the counter and took place no more than 0.5 s ago.

5.2 Diagnostic alarms

Enabling of diagnostic interrupts

You enable the diagnostic interrupts in the device configuration with the basic parameters.

The technology module can trigger the following diagnostic interrupts:

Table 5- 5 Possible diagnostic interrupts

Diagnostic interrupt	Monitoring
• Parameter error • Hardware interrupt lost[1] • Channel/component temporarily unavailable • Internal error • Watchdog tripped. Module is defective.	Monitoring is always active. A diagnostic interrupt is triggered each time an error is detected.
• RS422/TTL error	Monitoring is always active. When an error is detected, a diagnostic interrupt is only triggered if "Enable diagnostic interrupt on wire break" is activated in the device configuration.
• Error • Load voltage missing • Short-circuit / overload at external encoder supply • Error at digital outputs • Supply voltage error[2] • SSI encoder error • Invalid transition of A/B signals • Overtemperature	Monitoring is always active. When an error is detected, a diagnostic interrupt is only triggered if "Enable additional diagnostic interrupts" is activated in the device configuration.

[1] Not available in "Position input for "Motion Control"" technology object" and "Fast Mode" operating modes

[2] No longer available as of module version V1.3. This case is then taken into account by diagnostic interrupt "Load voltage missing".

Reactions to a diagnostic interrupt

The following happens when an event occurs that triggers a diagnostic interrupt:

- The DIAG LED flashes red.

  When you have eliminated all errors, the DIAG LED stops flashing red and turns green.
- The S7-1500 CPU interrupts the processing of the user program. The diagnostic interrupt OB (e.g. OB 82) is called. The event that triggered the interrupt is entered in the start information of the diagnostic interrupt OB.
- The S7-1500 CPU remains in RUN even if no diagnostic interrupt OB is present in the CPU. The technology module continues working unchanged if this is possible despite the error.

You can obtain detailed information on the error event in the error organization block with instruction "RALRM" (Read additional alarm information), in the information system of STEP 7 and in function manual Diagnostics (https://support.industry.siemens.com/cs/ww/en/view/59192926), section "System diagnostics in user program".

If the module is being operated as a distributed module in an ET 200SP system with PROFIBUS DP, you have the option of reading out diagnostic data with the RDREC or RD_REC instruction using data record 0 and 1. You can find the structure of the data records in the manual for the IM 155-6 DP HF interface module available for download on the Internet (https://support.industry.siemens.com/cs/ww/de/view/73098660).

Diagnostic alarms

The display of diagnostics is in plain text in STEP 7 (TIA Portal) in the online and diagnostics view. You can evaluate the error codes with the user program.

The following diagnostics can be signaled:

Table 5- 6 Diagnostic alarms, their meaning and remedies

Diagnostic alarm	Error code	Meaning	Remedy
Error	9_H	• Internal module error occurred • Possible cause: Technology module defective	Replace technology module
Parameter error	10_H	• The received parameter data record is invalid • The configured BaseUnit is not the used BaseUnit	• Check parameter data record • Check BaseUnit
Load voltage missing	11_H	• Missing or insufficient supply voltage L+ • Wiring of supply voltage L+ faulty • Possible cause: BaseUnit type incorrect	• Check BaseUnit type • Check supply voltage L+ on the BaseUnit • Check wiring of supply voltage L+ • Check total consumption of the load group

Diagnostic alarm	Error code	Meaning	Remedy
Hardware interrupt lost	16_H	• Module cannot issue interrupt because a preceding interrupt has not yet been processed • Possible cause: Too many hardware interrupts in too short a time	• Change interrupt processing in the CPU and re-assign technology module parameters correspondingly • Check frequency of interrupts from the process
Channel/component temporarily unavailable	$1F_H$	Firmware update in progress or update was aborted. The module reads no process values in this state.	• Wait for firmware update • If firmware update aborts: – Check minimum firmware version required – Check supply voltage – Repeat firmware update
Internal error	100_H	Technology module defective	Replace technology module
Watchdog tripped. Module is defective.	103_H	Firmware error	Run firmware update
		Technology module defective	Replace technology module
Short-circuit / overload at external encoder supply	$10E_H$	• Error at encoder supply • Possible causes: – Short circuit – Overload	• Check encoder wiring • Check consumers connected to encoder supply
Error at digital outputs	$10F_H$	• Error at digital outputs (LED display DQm lit red) • Possible causes: – Short circuit – Overload	• Check wiring at the digital outputs • Check consumers connected to the digital outputs
Supply voltage error[1]	110_H	• Error at supply voltage L+ • Possible causes: – Low voltage – Wiring of supply voltage L+ faulty	• Check supply voltage L+ • Check wiring of supply voltage L+ on the BaseUnit • Check total consumption of the load group
Invalid transition of A/B signals	500_H	• Time profile of signals A and B of the incremental encoder does not meet certain requirements (relative phase shift of the two signals is too small) • Possible causes: – Signal frequency too high – Encoder faulty – Process wiring faulty	• Check process wiring • Check encoder/sensor • Check parameter assignment

Diagnostic alarm	Error code	Meaning	Remedy
RS422/TTL error	502H	• Error at connection of the RS 422, TTL encoder or SSI absolute encoder • Possible causes: – Wire break – No encoder connected – Cable too long – Short circuit – Overload – External voltage – Overtemperature – Parameter assignment error	• Check process wiring • Check encoder/sensor • Check parameter assignment
SSI encoder error	503H	• Error at SSI absolute encoder connection • Possible causes: – Wire break – Cable too long – Frame error (error of the start bit or stop bit) – Parity error – Parameter assignment error	• Check process wiring • Check SSI absolute encoder • Check parameter assignment
Overtemperature	506H	• Module temperature is too high • Possible causes: – Short-circuit or overload at the digital outputs or output of the encoder supply – Ambient temperature outside specifications – Contamination in the module prevents cooling	• Check process wiring • Improve cooling • Check connected loads

[1] No longer available as of module version V1.3. This case is then taken into account by diagnostic interrupt "Load voltage missing".

5.3 Hardware interrupts

Introduction

For the technology module, you can configure which events are to trigger a hardware interrupt during operation.

What is a hardware interrupt?

The technology module will trigger a hardware interrupt as configured in response to specific events/states. When a hardware interrupt occurs, the CPU interrupts execution of the user program and processes the assigned hardware interrupt OB. The event that triggered the interrupt is entered in the start information of the assigned hardware interrupt OB by the CPU.

Lost hardware interrupt

If an event occurs that is to trigger a hardware interrupt and the preceding event has not yet been processed, another hardware interrupt cannot be triggered. The hardware interrupt is lost and the diagnostic interrupt "Lost hardware interrupt" is triggered.

Enabling of hardware interrupts

A hardware interrupt is triggered when the condition for the change of the respective status or event bit in the feedback interface is met.

You enable the hardware interrupts in the device configuration with the basic parameters. You can configure hardware interrupts to be triggered for the following event types:

- Opening of internal gate (gate start)[1]
- Closing of internal gate (gate stop)[1]
- Overflow (counting high limit violated)[1]
- Underflow (counting low limit violated)[1]
- Comparison event for DQ0 has occurred
- Comparison event for DQ1 has occurred
- Zero crossing[4]
- New Capture value available[2]
- Synchronization of the counter by an external signal[1]
- Direction reversal[3]

[1] Not for SSI absolute encoder

[2] Only configurable in Counting / Position input operating mode

[3] Feedback bit STS_DIR is preassigned with "0". If the first counter value change occurs in the *downwards direction* directly after switching on the technology module, no hardware interrupt is triggered.

[4] When the hardware interrupt is enabled, for system-related reasons it can also be triggered if "0" is outside the configured value range.

You can activate any combination of events to trigger hardware interrupts.

You can obtain detailed information on the event in the hardware interrupt organization block with instruction "RALRM" (Read additional alarm information) and in the information system of STEP 7.

Which event has triggered the hardware interrupt is entered in the start information of the organization block. The following figure shows the assignment to the bits of the local data double word 8.

LB 8								LB 9								LB 10								LB 11								
31	30	29	28	27	26	25	24	23	22	21	20	19	18	17	16	15	14	13	12	11	10	9	8	7	6	5	4	3	2	1	0	Bit no.
0	0	0	0	0	0	0	0	0	0	0	0	0	0	0	1	0	0	0	0	0	0	0	0	0	0	0	0	X	X	X	X	LD 8

User Structure Identifier (USI)

Event that has triggered the hardware interrupt (EventType):

- 0001_B: Gate start
- 0010_B: Gate stop
- 0011_B: Overflow
- 0100_B: Underflow
- 0101_B: Comparison event for DQ0 has occurred
- 0110_B: Comparison event for DQ1 has occurred
- 0111_B: Zero crossing
- 1000_B: New Capture value available
- 1001_B: Synchronization
- 1010_B: Direction reversal

Channel that has triggered the hardware interrupt (IChannel):
0_B: Channel 0 of the technology module

Figure 5-2 Start information of the organization block

Technical specifications

6

Article number	6ES7138-6BA00-0BA0
General information	
Product type designation	TM PosInput 1
Firmware version	V1.3
• FW update possible	Yes
usable BaseUnits	BU type A0
Product function	
• I&M data	Yes; I&M0 to I&M3
Engineering with	
• STEP 7 TIA Portal configurable/integrated as of version	V13 (FW V1.0), V14 (V1.2), V15 (FW V1.3) / V13 (FW V1.0), V14 SP1 (V1.2)
• STEP 7 configurable/integrated as of version	As of V5.5 SP3, only up to FW V1.2
• PROFIBUS as of GSD version/GSD revision	GSD Revision 5
• PROFINET as of GSD version/GSD revision	GSDML V2.3
Supply voltage	
Load voltage L+	
• Rated value (DC)	24 V
• permissible range, lower limit (DC)	19.2 V
• permissible range, upper limit (DC)	28.8 V
• Reverse polarity protection	Yes
Input current	
Current consumption, max.	75 mA; without load
Encoder supply	
Number of outputs	1
24 V encoder supply	
• 24 V	Yes; L+ (-0.8 V)
• Short-circuit protection	Yes; electronic/thermal
• Output current, max.	300 mA
Power loss	
Power loss, typ.	1.9 W
Address area	
Occupied address area	
• Inputs	16 byte; 4 bytes in Fast mode
• Outputs	12 byte; 4 bytes for Motion Control, 0 bytes for Fast mode

Article number	6ES7138-6BA00-0BA0
Digital inputs	
Number of digital inputs	2
Digital inputs, parameterizable	Yes
Input characteristic curve in accordance with IEC 61131, type 3	Yes
Digital input functions, parameterizable	
• Gate start/stop	Yes; only for pulse and incremental encoders
• Capture	Yes
• Synchronization	Yes; only for pulse and incremental encoders
• Freely usable digital input	Yes
Input voltage	
• Rated value (DC)	24 V
• for signal "0"	-5 ... +5 V
• for signal "1"	+11 to +30V
• permissible voltage at input, min.	-30 V; -5 V continuous, -30 V brief reverse polarity protection
• permissible voltage at input, max.	30 V
Input current	
• for signal "1", typ.	2.5 mA
Input delay (for rated value of input voltage)	
for standard inputs	
– parameterizable	Yes; none / 0.05 / 0.1 / 0.4 / 0.8 / 1.6 / 3.2 / 12.8 / 20 ms
– at "0" to "1", min.	6 µs; for parameterization "none"
– at "1" to "0", min.	6 µs; for parameterization "none"
for counter/technological functions	
– parameterizable	Yes
Cable length	
• shielded, max.	1 000 m
• unshielded, max.	600 m

Article number	6ES7138-6BA00-0BA0
Digital outputs	
Type of digital output	Transistor
Number of digital outputs	2
Short-circuit protection	Yes; electronic/thermal
• Response threshold, typ.	1 A
Limitation of inductive shutdown voltage to	L+ (-33 V)
Controlling a digital input	Yes
Digital output functions, parameterizable	
• Switching tripped by comparison values	Yes
• Freely usable digital output	Yes
Switching capacity of the outputs	
• with resistive load, max.	0.5 A; Per digital output
• on lamp load, max.	5 W
Load resistance range	
• lower limit	48 Ω
• upper limit	12 kΩ
Output voltage	
• for signal "1", min.	23.2 V; L+ (-0.8 V)
Output current	
• for signal "1" rated value	0.5 A; Per digital output
• for signal "1" permissible range, max.	0.6 A; Per digital output
• for signal "1" minimum load current	2 mA
• for signal "0" residual current, max.	0.5 mA
Output delay with resistive load	
• "0" to "1", max.	50 µs
• "1" to "0", max.	50 µs
Switching frequency	
• with resistive load, max.	10 kHz
• with inductive load, max.	0.5 Hz; Acc. to IEC 60947-5-1, DC-13; observe derating curve
• on lamp load, max.	10 Hz
Total current of the outputs	
• Current per module, max.	1 A
Cable length	
• shielded, max.	1 000 m
• unshielded, max.	600 m

Article number	6ES7138-6BA00-0BA0
Encoder signals, incremental encoder (symmetrical)	
• Input voltage	RS 422
• Input frequency, max.	1 MHz
• Counting frequency, max.	4 MHz; with quadruple evaluation
• Cable length, shielded, max.	32 m; at 1 MHz
• Signal filter, parameterizable	Yes
• Incremental encoder with A/B tracks, 90° phase offset	Yes
• Incremental encoder with A/B tracks, 90° phase offset and zero track	Yes
• Pulse encoder	Yes
• Pulse encoder with direction	Yes
• Pulse encoder with one impulse signal per count direction	Yes
Encoder signals, incremental encoder (asymmetrical)	
• Input voltage	5 V TTL (push-pull encoders only)
• Input frequency, max.	1 MHz
• Counting frequency, max.	4 MHz; with quadruple evaluation
• Signal filter, parameterizable	Yes
• Incremental encoder with A/B tracks, 90° phase offset	Yes
• Incremental encoder with A/B tracks, 90° phase offset and zero track	Yes
• Pulse encoder	Yes
• Pulse encoder with direction	Yes
• Pulse encoder with one impulse signal per count direction	Yes
Encoder signals, absolute encoder (SSI)	
• Input signal	to RS-422
• Telegram length, parameterizable	10 ... 40 bit
• Clock frequency, max.	2 MHz; 125 kHz, 250 kHz, 500 kHz, 1 MHz, 1.5 MHz or 2 MHz
• Binary code	Yes
• Gray code	Yes
• Cable length, shielded, max.	320 m; Cable length, RS-422 SSI absolute encoders, Siemens type 6FX2001-5, 24 V supply: 125 kHz, 320 meters shielded, max.; 250 kHz, 160 meters shielded, max.; 500 kHz, 60 meters shielded, max.; 1 MHz, 20 meters shielded, max. 1.5 MHz, 10 meters shielded, max.; 2 MHz, 8 meters shielded, max.

Article number	6ES7138-6BA00-0BA0
• Parity bit, parameterizable	Yes
• Monoflop time	16, 32, 48, 64 µs & automatic
• Multiturn	Yes
• Singleturn	Yes
Interface types	
• TTL 5 V	Yes; push-pull encoders only
• RS 422	Yes
Isochronous mode	
Isochronous operation (application synchronized up to terminal)	Yes
Interrupts/diagnostics/status information	
Substitute values connectable	Yes; Parameterizable
Alarms	
• Diagnostic alarm	Yes
• Hardware interrupt	Yes
Diagnostic messages	
• Monitoring the supply voltage	Yes
• Wire-break	Yes
• Short-circuit	Yes
• A/B transition error at incremental encoder	Yes
• Telegram error at SSI encoder	Yes
• Group error	Yes
Diagnostics indication LED	
• Monitoring of the supply voltage (PWR-LED)	Yes; green PWR LED
• Channel status display	Yes; Green LED
• for module diagnostics	Yes; green/red DIAG LED
• Status indicator backward counting (green)	Yes
• Status indicator forward counting (green)	Yes

Article number	6ES7138-6BA00-0BA0
Integrated Functions	
Number of counters	1
Counting frequency (counter) max.	4 MHz; with quadruple evaluation
Counting functions	
• Can be used with TO High_Speed_Counter	Yes; only for pulse and incremental encoders
• Continuous counting	Yes
• Counter response parameterizable	Yes
• Hardware gate via digital input	Yes
• Software gate	Yes
• Event-controlled stop	Yes
• Synchronization via digital input	Yes
• Counting range, parameterizable	Yes
Comparator	
– Number of comparators	2
– Direction dependency	Yes
– Can be changed from user program	Yes
Position detection	
• Incremental acquisition	Yes
• Absolute acquisition	Yes
• Suitable for S7-1500 Motion Control	Yes
Measuring functions	
• Measuring time, parameterizable	Yes
• Dynamic measurement period adjustment	Yes
• Number of thresholds, parameterizable	2
Measuring range	
– Frequency measurement, min.	0.04 Hz
– Frequency measurement, max.	4 MHz
– Cycle duration measurement, min.	0.25 µs
– Cycle duration measurement, max.	25 s
Accuracy	
– Frequency measurement	100 ppm; depending on measuring interval and signal evaluation
– Cycle duration measurement	100 ppm; depending on measuring interval and signal evaluation
– Velocity measurement	100 ppm; depending on measuring interval and signal evaluation

Article number	6ES7138-6BA00-0BA0
Potential separation	
Potential separation channels	
• between the channels and backplane bus	Yes
Isolation	
Isolation tested with	707 V DC (type test)
Ambient conditions	
Ambient temperature during operation	
• horizontal installation, min.	0 °C
• horizontal installation, max.	60 °C; Observe derating
• vertical installation, min.	0 °C
• vertical installation, max.	50 °C; Observe derating
Decentralized operation	
to SIMATIC S7-300	Yes
to SIMATIC S7-400	Yes
to SIMATIC S7-1200	Yes
to SIMATIC S7-1500	Yes
to standard PROFIBUS master	Yes
to standard PROFINET controller	Yes
Dimensions	
Width	15 mm
Height	73 mm
Depth	58 mm
Weights	
Weight, approx.	45 g

Derating information for total current of outputs

If the digital outputs of the TM PosInput 1 are operated with resistive or inductive loads, you should derate the total current of the loads at the digital outputs of the technology module. The total current is the sum of the load currents at all digital outputs of the module (without encoder supply).

The following derating curve shows the load capacity of the digital outputs depending on the ambient temperature and mounting position under the following conditions:

- Load resistance: 48 Ω (IEC 947-5-1)

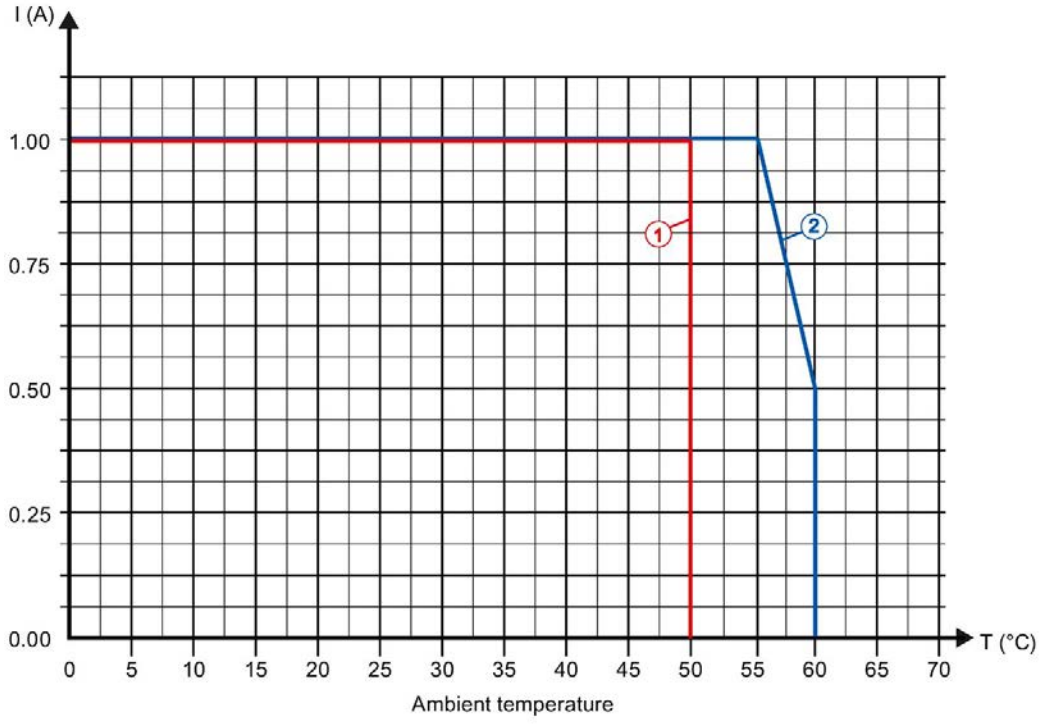

① Vertical installation of the system

② Horizontal installation of the system

Figure 6-1 Total current depending on ambient temperature and mounting position for resistive loads

The following derating curve shows the load capacity of the digital outputs depending on the ambient temperature and mounting position under the following conditions:

- Maximum switching frequency at digital outputs of 0.5 Hz
- Load resistance: 48 Ω (IEC 947-5-1)
- Load inductance: 1150 mH (IEC 947-5-1)

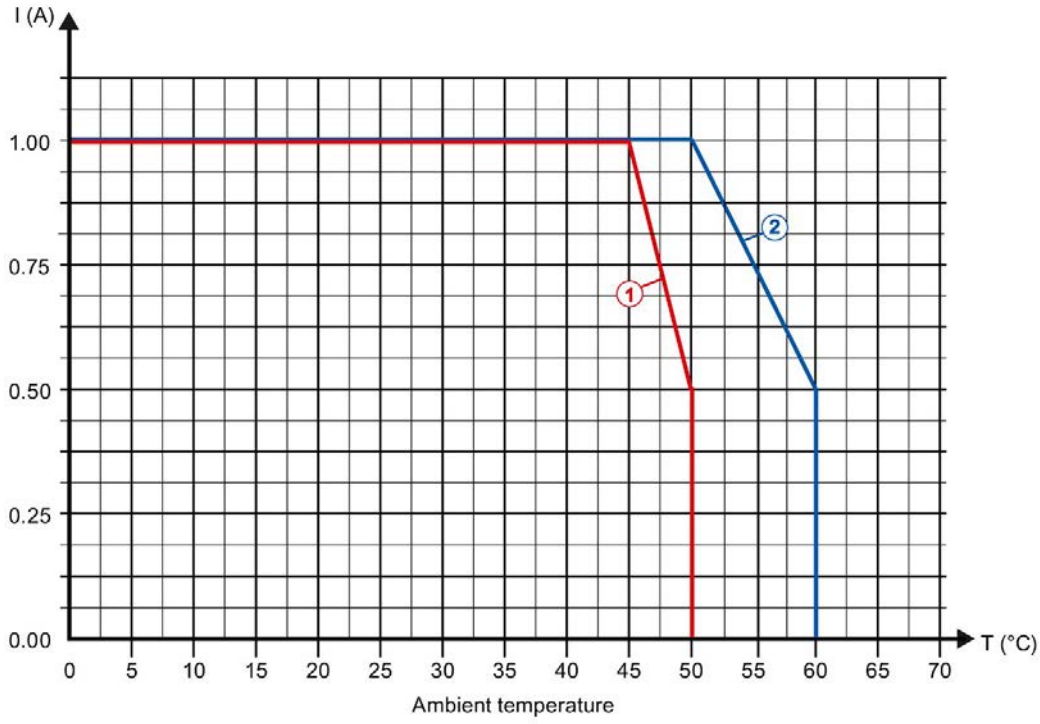

① Vertical installation of the system

② Horizontal installation of the system

Figure 6-2 Total current depending on ambient temperature and mounting position for inductive loads

Note

If the switching frequency is greater than 0.5 Hz or there is greater inductance at the digital outputs, the total current must be reduced further.

Dimension drawing

See ET 200SP BaseUnits (http://support.automation.siemens.com/WW/view/en/58532597/133300) manual

Parameter data record A

A.1 Parameter assignment and structure of parameter data record

You have the option of reassigning module parameters with the user program while the CPU is in RUN. The parameters are transferred to the module using data record 128, e.g. with the WRREC instruction.

If an error occurs while transferring or validating parameters with the WRREC instruction, the module continues operating with the existing parameter assignment. A corresponding error code is then written to the STATUS output parameter. If no errors occur, the STATUS output parameter contains the length of the actually transferred data.

You can find a description of the WRREC instruction and the error codes in section Parameter validation error (Page 130) or in the online help of STEP 7 (TIA Portal).

Structure of data record 128 for operation with technology object and manual operation

The following table shows you the structure of data record 128 for TM PosInput 1 for operation with technology object and manual operation without technology object. The values in byte 0 to byte 3 are fixed and must not be changed. The value in byte 4 can only be changed by means of new parameter assignment and not in RUN mode of the CPU.

Note

After each writing of data record 128, the module is set to its startup state and the counter value is set to the start value. If "Continue operation" is set for Reaction to CPU STOP, the module is then only set to its startup state when data record 128 has been changed.

Table A- 1 Data record 128: Operating modes "Operating with "Counting and measurement" technology object", "Manual operation (without technology object)"

Bit → / Byte ↓	Bit 7	Bit 6	Bit 5	Bit 4	Bit 3	Bit 2	Bit 1	Bit 0
0...3	**Header**							
0	Major Version = 0				Minor Version = 2			
1	Length of the parameter data per channel = 48							
2	Reserved[2]							
3	Reserved[2]							
4	**Operating mode**							
4	Reserved[2]				Operating mode:			
					0000_B: Not permitted			
					0001_B: Counting / Position input			
					0010_B: Measuring			
					0011 to 1111_B: Not permitted			
5	**Basic parameters**							
5	Interface standard:	Reserved[2]				Enable additional diagnostic interrupts[1)]	Reaction to CPU STOP:	
							00_B: Output substitute value	
							01_B: Keep last value	
	0_B: RS422, symmetrical						10_B: Continue operation	
	1_B: TTL (5 V), asymmet-rical						11_B: Not permitted	

Bit → / Byte ↓	Bit 7	Bit 6	Bit 5	Bit 4	Bit 3	Bit 2	Bit 1	Bit 0
6...7	**Counter inputs** (parameters for incremental and pulse encoders)							
6	Reserved[2]		Signal evaluation:		Signal type:			
			00_B: Single		0000_B: Pulse (A)			
			01_B: Double		0001_B: Pulse (A) and direction (B)			
			10_B: Quadruple		0010_B: Count up (A), count down (B)			
			11_B: Not permitted		0011_B: Incremental encoder (A, B phase-shifted)			
					0100_B: Incremental encoder (A, B, N)			
					0101_B: Absolute encoder (SSI)			
					0110 to 1111_B: Not permitted			
7	Reaction to signal N:		Invert direction[1)]	Enable diagnostic interrupt on wire break[1]	Filter frequency[4]:			
	00_B: No reaction to signal N				0000_B: 100 Hz			
	01_B: Synchronization at signal N				0001_B: 200 Hz			
	10_B: Capture at signal N				0010_B: 500 Hz			
	11_B: Not permitted				0011_B: 1 kHz			
					0100_B: 2 kHz			
					0101_B: 5 kHz			
					0110_B: 10 kHz			
					0111_B: 20 kHz			
					1000_B: 50 kHz			
					1001_B: 100 kHz			
					1010_B: 200 kHz			
					1011_B: 500 kHz			
					1100_B: 1 MHz			
					1101 to 1111_B: Not permitted			

Bit → / Byte ↓	Bit 7	Bit 6	Bit 5	Bit 4	Bit 3	Bit 2	Bit 1	Bit 0
6...7	**Counter inputs** (parameters for SSI absolute encoder)							
6	Monoflop time[4]:			Code type:	Signal type:			
	000_B: Automatically			0_B: Gray	0000_B: Pulse (A)			
	001_B: 16 µs			1_B: Dual	0001_B: Pulse (A) and direction (B)			
	010_B: 32 µs				0010_B: Count up (A), count down (B)			
	011_B: 48 µs				0011_B: Incremental encoder (A, B phase-shifted)			
	100_B: 64 µs				0100_B: Incremental encoder (A, B, N)			
	101 to 111_B: Not permitted				0101_B: Absolute encoder (SSI)			
					0110 to 1111_B: Not permitted			
7	Parity[4]:		Invert direction[1]	Enable diagnostic interrupt on wire break[1]	Reserved[2]	Transmission rate[4]:		
	00_B: None					000_B: 125 kHz		
	01_B: Even					001_B: 250 kHz		
	10_B: Odd					010_B: 500 kHz		
	11_B: Not permitted					011_B: 1 MHz		
						100_B: 1.5 MHz		
						101_B: 2 MHz		
						110 to 111_B: Not permitted		
8...9	**Hardware interrupts**[1]							
8	Reserved[2]	Reserved[2]	Reserved[2]	Change of direction	Underflow (low counting limit violated)	Overflow (high counting limit violated)	Gate stop[3]	Gate start[3]
9	Synchronization of the counter by an external signal[3)]	New Capture value available	Reserved[2]	Zero crossing	Reserved[2]	Comparison event for DQ1 has occurred	Reserved[2]	Comparison event for DQ0 has occurred

Bit → / Byte ↓	Bit 7	Bit 6	Bit 5	Bit 4	Bit 3	Bit 2	Bit 1	Bit 0
10...15	**Behavior of a DQ**							
10	Set output (DQ1):				Set output (DQ0):			
	0000_B: Use by user program				0000_B: Use by user program			
	0001_B: Between comparison value and high limit; Measuring: Measured value >= comparison value				0001_B: Between comparison value and high limit; Measuring: Measured value >= comparison value			
	0010_B: Between comparison value and low limit; Measuring: Measured value <= comparison value				0010_B: Between comparison value and low limit; Measuring: Measured value <= comparison value			
	0011_B: At comparison value for a pulse duration				0011_B: At comparison value for a pulse duration			
	0100_B: Between comparison value 0 and 1				0100_B: Not permitted			
	0101_B: After set command from CPU until comparison value				0101_B: After set command from CPU until comparison value			
	0110_B: Not between comparison value 0 and 1				0110 to 1111_B: Not permitted			
	0111 to 1111_B: Not permitted							
11	Count direction (DQ1):		Count direction (DQ0):		Reserved[2]	Reserved[2]	Substitute value for DQ1	Substitute value for DQ0
	00_B: Not permitted		00_B: Not permitted					
	01_B: Up		01_B: Up					
	10_B: Down		10_B: Down					
	11_B: In both directions		11_B: In both directions					
12	Pulse duration (DQ0):							
13	UINT: Value range in ms/10: 0 to 65535_D							
14	Pulse duration (DQ1):							
15	UINT: Value range in ms/10: 0 to 65535_D							
16	**Behavior of DI0**							
16	Behavior of counter value after Capture[3] (DI0):	Edge selection (DI0):		Select level (DI0):	Reserved[2]	Set function of DI (DI0):		
		00_B: Not permitted[5]				000_B: Gate start/stop (level-triggered)[3]		
		01_B: At rising edge		0_B: Active with high level		001_B: Gate start (edge-triggered)[3]		
		10_B: At falling edge				010_B: Gate stop (edge-triggered)[3]		
	0_B: Continue counting	11_B: At rising and falling edge		1_B: Active with low level		011_B: Synchronization[3]		
						100_B: Enable synchronization at signal N[3]		
	1_B: Set to start value and continue counting					101_B: Capture		
						110_B: Digital input without function		
						111_B: Not permitted		

Bit → / Byte ↓	Bit 7	Bit 6	Bit 5	Bit 4	Bit 3	Bit 2	Bit 1	Bit 0
17	**Behavior of DI1**: See Byte 16							
18	Reserved[2]							
19	Frequency of synchro-nization:	Reserved[2]		Frequency of Capture function:	Input delay:			
					0000_B: None			
					0001_B: 0.05 ms			
	0_B: Once			0_B: Once	0010_B: 0.1 ms			
					0011_B: 0.4 ms			
	1_B: Periodic			1_B: Periodic	0100_B: 0.8 ms			
					0101_B: 1.6 ms			
					0110_B: 3.2 ms			
					0111_B: 12.8 ms			
					1000_B: 20 ms			
					1001 to 1111_B: Not permitted			
20...43	**Values**							
20...23	Counting high limit[3]: DINT: Value range: –2147483647 to 2147483647_D or –7FFFFFFF to $7FFFFFFF_H$							
24...27	Comparison value 0: Counting operating mode: DINT: Value range: –2147483648 to 2147483647_D or 80000000 to $7FFFFFFF_H$; Measuring operating mode: REAL: Floating point number in the configured unit of the measured variable							
28...31	Comparison value 1: Counting operating mode: DINT: Value range: –2147483648 to 2147483647_D or 80000000 to $7FFFFFFF_H$; Measuring operating mode: REAL: Floating point number in the configured unit of the measured variable							
32...35	Start value[3]: DINT: Value range: –2147483648 to 2147483647_D or– 80000000 to $7FFFFFFF_H$							
36...39	Counting low limit[3] DINT: Value range: –2147483648 to 2147483646_D or 80000000 to $7FFFFFFE_H$							
40...43	Update time: DINT: Value range in µs: 0 to 25000000_D							
44	**Counter behavior at limits and gate start**							
44	Behavior at gate start[3]:		Reaction to violation of a counting limit[3]:			Reset when counting limit is violated[3]:		
	00_B: Set to start value		000_B: Stop counting			000_B: To opposite counting limit		
	01_B: Continue with current value		001_B: Continue counting			001_B: To start value		
	10 to 11_B: Not permitted		010 to 111_B: Not permitted			010 to 111_B: Not permitted		

Bit → / Byte ↓	Bit 7	Bit 6	Bit 5	Bit 4	Bit 3	Bit 2	Bit 1	Bit 0
45	**Specify measured value**							
45	Reserved[2]			Time base for velocity measurement:			Measured variable:	
				000_B: 1 ms			00_B: Frequency	
				001_B: 10 ms			01_B: Period	
				010_B: 100 ms			10_B: Velocity	
				011_B: 1 s			11_B: Complete SSI frame	
				100_B: 60 s/1 min				
				101 to 111_B: Not permitted				
46	Increments per unit:							
47	UINT: Value range: 1 to 65535_D							
48	Set hysteresis range: Value range: 0 to 255_D:							
49...51	**Parameters for SSI absolute encoder**							
49	Reserved[2]		Frame length[4]: 10 to 40_D: Value range					
50	Reserved[2]		Bit number LSB of the position value: 0 to 38_D: Value range					
51	Reserved[2]		Bit number MSB of the position value: 0 to 39_D: Value range					

1 You activate the respective parameter by setting the associated bit to 1.

2 Reserved bits must be set to 0

3 For signal type "Absolute encoder (SSI)", the following applies: Reserved[2]

4 In isochronous mode, the parameter can affect the isochronous mode parameters of the sync domain. Because the isochronous mode parameters are not checked in RUN, overflows can occur if you change the parameter in RUN. To prevent overflows, select the option with the largest time required in the offline parameter assignment.

5 Applies to: Set function of DI = 001_B; 010_B; 011_B; 101_B

Structure of the data record 128 in Fast Mode

The following table shows you the structure of data record 128 for TM PosInput 1 for Fast Mode. The values in byte 0 to byte 3 are fixed and must not be changed.

Table A- 2 Parameter data record 128: Fast Mode operating mode

Bit → / Byte ↓	Bit 7	Bit 6	Bit 5	Bit 4	Bit 3	Bit 2	Bit 1	Bit 0
0...3	**Header**							
0	Major Version = 0				Minor Version = 1			
1	Length of the parameter data per channel = 48							
2	Reserved[2]							
3	Reserved[2]							
4	**Operating mode**							
4	Reserved[2]				Operating mode:			
					0000_B: Not permitted			
					0001_B: Counting / Position input			
					0010 to 1111_B: Not permitted			
5	**Basic parameters**							
5	Interface standard:	Reserved[2]				Enable additional diagnostic interrupts[1)]	Reaction to CPU STOP:	
							00_B: Output substitute value	
							01_B: Keep last value	
	0_B: RS422, symmetrical						10_B: Continue operation	
	1_B: TTL (5 V), asymmet-rical						11_B: Not permitted	

Bit → / Byte ↓	Bit 7	Bit 6	Bit 5	Bit 4	Bit 3	Bit 2	Bit 1	Bit 0
6...7	**Counter inputs** (parameters for incremental and pulse encoders)							
6	Reserved[2]		Signal evaluation:		Signal type:			
			00_B: Single		0000_B: Pulse (A)			
			01_B: Double		0001_B: Pulse (A) and direction (B)			
			10_B: Quadruple		0010_B: Count up (A), count down (B)			
			11_B: Not permitted		0011_B: Incremental encoder (A, B phase-shifted)			
					0100_B: Incremental encoder (A, B, N)			
					0101_B: Absolute encoder (SSI)			
					0110 to 1111_B: Not permitted			
7	Reaction to signal N:		Invert direction[1]	Enable diagnostic interrupt on wire break[1]	Filter frequency[4]:			
	00_B: No reaction to signal N				0000_B: 100 Hz			
	01_B: Synchronization at signal N				0001_B: 200 Hz			
	10 to 11_B: Not permitted				0011_B: 1 kHz			
					0100_B: 2 kHz			
					0101_B: 5 kHz			
					0110_B: 10 kHz			
					0111_B: 20 kHz			
					1000_B: 50 kHz			
					1001_B: 100 kHz			
					1010_B: 200 kHz			
					1011_B: 500 kHz			
					1100_B: 1 MHz			
					1101 to 1111_B: Not permitted			

Bit → / Byte ↓	Bit 7	Bit 6	Bit 5	Bit 4	Bit 3	Bit 2	Bit 1	Bit 0
6...7	**Counter inputs** (parameters for SSI absolute encoder)							
6	Monoflop time[4]:			Code type:	Signal type:			
	000_B: Automatically			0_B: Gray	0000_B: Pulse (A)			
	001_B: 16 µs			1_B: Dual	0001_B: Pulse (A) and direction (B)			
	010_B: 32 µs				0010_B: Count up (A), count down (B)			
	011_B: 48 µs				0011_B: Incremental encoder (A, B phase-shifted)			
	100_B: 64 µs				0100_B: Incremental encoder (A, B, N)			
	101 to 111_B: Not permitted				0101_B: Absolute encoder (SSI)			
					0110 to 1111_B: Not permitted			
7	Parity[4]:		Invert direction[1]	Enable diagnostic interrupt on wire break[1]	Reserved[2]	Transmission rate[4]:		
	00_B: None					000_B: 125 kHz		
	01_B: Even					001_B: 250 kHz		
	10_B: Odd					010_B: 500 kHz		
	11_B: Not permitted					011_B: 1 MHz		
						100_B: 1.5 MHz		
						101_B: 2 MHz		
						110 to 111_B: Not permitted		
8...9	Reserved[2]							
10...15	**Behavior of a DQ**							
10	Set output (DQ1):				Set output (DQ0):			
	0000_B: Digital output without function				0000_B: Digital output without function			
	0001_B: Between comparison value and high limit				0001_B: Between comparison value and high limit			
	0010_B: Between comparison value and low limit				0010_B: Between comparison value and low limit			
	0011_B: At comparison value for a pulse duration				0011_B: At comparison value for a pulse duration			
	0100_B: Between comparison value 0 and 1				0100_B to 1111_B: Not permitted			
	0101 to 1111_B: Not permitted							
11	Count direction (DQ1):		Count direction (DQ0):		Reserved[2]	Reserved[2]	Substitute value for DQ1	Substitute value for DQ0
	00_B: Reserved		00_B: Reserved					
	01_B: Up		01_B: Up					
	10_B: Down		10_B: Down					
	11_B: In both directions		11_B: In both directions					
12	Pulse duration (DQ0):							
13	UINT: Value range in ms/10: 0 to 65535_D							
14	Pulse duration (DQ1):							
15	UINT: Value range in ms/10: 0 to 65535_D							

Bit → / Byte ↓	Bit 7	Bit 6	Bit 5	Bit 4	Bit 3	Bit 2	Bit 1	Bit 0
16	**Behavior of DI0**							
16	Reserved[2)]	Edge selection (DI0):		Select level (DI0):	Reserved[2]	Set function of DI (DI0):		
		00_B: Not permitted[5]				000_B: Gate start/stop (level-triggered)[3]		
		01_B: At rising edge		0_B: Active with high level		001_B: Gate start (edge-triggered)[3]		
		10_B: At falling edge				010_B: Gate stop (edge-triggered)[3]		
		11_B: Not permitted		1_B: Active with low level		011_B: Synchronization[3]		
						100_B: Enable synchronization at signal N[3]		
						101_B: Not permitted		
						110_B: Digital input without function		
						111_B: Not permitted		
17	**Behavior of DI1**: See Byte 16							
18	Reserved[2]							
19	Frequency of synchronization:	Count direction for synchronization		Reserved[2]	Input delay:			
	0_B: Once	00_B: Not permitted			0000_B: None			
	1_B: Periodic	01_B: Up			0001_B: 0.05 ms			
		10_B: Down			0010_B: 0.1 ms			
		11_B: In both directions			0011_B: 0.4 ms			
					0100_B: 0.8 ms			
					0101_B: 1.6 ms			
					0110_B: 3.2 ms			
					0111_B: 12.8 ms			
					1000_B: 20 ms			
					1001 to 1111_B: Not permitted			
20...43	**Values**							
20...23	Counting high limit[3]: Value range: 1 to 33554431_D or 1 to $01FFFFFF_H$							
24...27	Comparison value 0: Value range: 0 to 33554431_D or 0 to $01FFFFFF_H$							
28...31	Comparison value 1: Value range: 0 to 33554431_D or 0 to $01FFFFFF_H$							
32...35	Start value[3]: Value range: 0 to 33554431_D or 0 to $01FFFFFF_H$							
36...39	Counting low limit[3] Value range: 0 to 33554430_D or 0 to $01FFFFFE_H$							
40...43	Reserved[2]							

Bit → / Byte ↓	Bit 7	Bit 6	Bit 5	Bit 4	Bit 3	Bit 2	Bit 1	Bit 0
44	**Counter behavior at limits and gate start**							
44	Behavior at gate start[3]:		Reaction to violation of a counting limit[3]:			Reset when counting limit is violated[3]:		
	00_B: Set to start value		000_B: Stop counting			000_B: To opposite counting limit		
	01_B: Continue with current value		001_B: Continue counting			001_B: To start value		
	10 to 11_B: Not permitted		010 to 111_B: Not permitted			010 to 111_B: Not permitted		
45...47	Reserved[2)]							
48	Set hysteresis range: Value range: 0 to 255_D:							
49...51	**Parameters for SSI absolute encoder**							
49	Reserved[2]		Frame length[4]: 10 to 40_D: Value range					
50	Reserved[2]		Bit number LSB of the position value: 0 to 38_D: Value range					
51	Reserved[2]		Bit number MSB of the position value: 1 to 39_D: Value range					

1 You activate the respective parameter by setting the associated bit to 1.

2 Reserved bits must be set to 0.

3 For signal type "Absolute encoder (SSI)", the following applies: Reserved[2]

4 In isochronous mode, the parameter can affect the isochronous mode parameters of the sync domain. Because the isochronous mode parameters are not checked in RUN, overflows can occur if you change the parameter in RUN. To prevent overflows, select the option with the largest time required in the offline parameter assignment.

5 Applies to: Set function of DI = 001_B; 010_B; 011_B

A.2 Parameter validation error

If you make the parameter settings in STEP 7 (TIA Portal) or in STEP 7 , the parameter values are checked before they are transferred to the technology module. This process prevents parameter errors.

In other use cases, the technology module checks the transferred parameter data record. If the technology module finds invalid or inconsistent parameter values, it outputs an error code (see below). The new parameter data record is rejected in this case, and work continues with the current parameter values until a valid parameter data record has been transferred.

WRREC

When the CPU is in RUN, you can change the parameter data record with the instruction WRREC (Write Record). In case of errors, the WRREC instruction returns corresponding error codes in the STATUS parameter.

Example:

Let us assume that an invalid value, for example 9, is written to the module for the operating mode with WRREC. As a consequence, the module rejects the entire parameter data record. You can recognize this by evaluating the STATUS output parameter of the WRREC instruction. The STATUS output parameter is output as an ARRAY[1..4] of BYTE data with the value 16#DF80E111:

Example of WRREC STATUS data	Address	Meaning
DF_H	STATUS[1]	Error when writing a data record via PROFINET IO (IEC 61158-6)
80_H	STATUS[2]	Error when reading or writing a data record via PROFINET IO (IEC 61158-6)
$E1_H$	STATUS[3]	Module-specific error
11_H	STATUS[4]	Error code from the table below: The "Operating mode" parameter has an invalid value.

Error codes

The following table shows the module-specific error codes and their meaning for parameter data record 128.

Table A- 3 Error codes for parameter validation (incremental or pulse encoder)

Error code in STATUS parameter (hexadecimal)				Meaning	Remedy
Byte 0	Byte 1	Byte 2	Byte 3		
DF	80	B0	00	Data record number unknown	Enter valid number for data record.
DF	80	B1	01	Length of data record incorrect	Enter valid value for data record length.
DF	80	B2	00	Slot invalid or not accessible	• Check whether module is inserted or removed. • Check assigned values for parameters of the WRREC instruction.
DF	80	E0	01	Wrong version	• Check byte 0. • Enter valid values.
DF	80	E0	02	Error in the header information	• Check byte 1. • Correct the length of the parameter blocks.
DF	80	E1	00	Parameter invalid: No detailed information available	Check all parameter values.
DF	80	E1	11	"Operating mode" parameter invalid	Enter valid parameter value.
DF	80	E1	12	"Reaction to CPU STOP" parameter invalid	Enter valid parameter value.
DF	80	E1	13	"Signal type" parameter invalid	Enter valid parameter value.
DF	80	E1	14	"Sensor type" parameter invalid	Enter valid parameter value.
DF	80	E1	15	"Filter frequency" parameter invalid	Enter valid parameter value.
DF	80	E1	16	"Reaction to signal N" parameter invalid	Enter valid parameter value.
DF	80	E1	17	"Set function of DI" parameter invalid	Enter valid parameter value.
DF	80	E1	18	"Set function of DI" parameter configured the same for DI0 and DI1.	Enter different parameter values for DI0 and DI1.
DF	80	E1	19	• "Edge selection" parameter invalid • "Gate start (edge-triggered)" configured as function for DIm and "At rising and falling edge" • "Gate stop (edge-triggered)" configured as function for DIm and "At rising and falling edge" • "Synchronization" configured as function for DIm and "At rising and falling edge"	• Enter valid parameter value. • Only configure "Gate start (edge-triggered)" as function for DIm together with "At rising edge" or "At falling edge". • Only configure "Gate stop (edge-triggered)" as function for DIm together with "At rising edge" or "At falling edge". • Only configure "Synchronization" as function for DIm together with "At rising edge" or "At falling edge".

Error code in STATUS parameter (hexadecimal)				Meaning	Remedy
Byte 0	Byte 1	Byte 2	Byte 3		
DF	80	E1	1A	"Input delay" parameter invalid	Enter valid parameter value.
DF	80	E1	1B	"Set output" parameter invalid	Enter valid parameter value.
DF	80	E1	1C	"Count direction" parameter invalid	Enter valid parameter value.
DF	80	E1	1D	"Reset when counting limit is violated" parameter invalid	Enter valid parameter value.
DF	80	E1	1E	"Reaction to violation of a counting limit" parameter invalid	Enter valid parameter value.
DF	80	E1	20	"Reaction to gate start" parameter invalid	Enter valid parameter value.
DF	80	E1	21[1,5]	• Low counting limit > comparison value 0 • Low counting limit > comparison value 1	• Low counting limit < comparison value 0 • Low counting limit < comparison value 1
DF	80	E1	22[1,5]	• Counting high limit < comparison value 0 • Counting high limit < comparison value 1	• High counting limit > comparison value 0 • High counting limit > comparison value 1
DF	80	E1	23	• "Start value" parameter invalid • "Low counting limit" parameter invalid	Enter valid parameter value: Start value > low counting limit
DF	80	E1	24	• "Start value" parameter invalid • "High counting limit" parameter invalid	Enter valid parameter value: Start value < high counting limit
DF	80	E1	25	"Update time" parameter invalid	Enter parameter value from range 0 to 25000000_D.
DF	80	E1	26[2]	"Reference speed" parameter invalid	Enter parameter value from range 6.00 to 210000.00_D.
DF	80	E1	27	"Measured variable" parameter invalid	Enter valid parameter value.
DF	80	E1	28	"Time base for velocity measurement" parameter invalid	Enter valid parameter value.
DF	80	E1	29	"Increments per unit" parameter invalid	Enter valid parameter value.
DF	80	E1	2A	• "High counting limit" parameter invalid • "Low counting limit" parameter invalid	Enter valid parameter value: Low counting limit < high counting limit
DF	80	E1	2B[3]	• "Comparison value 0" parameter invalid • "Comparison value 1" parameter invalid	Enter valid parameter value: Comparison value 0 < comparison value 1
DF	80	E1	2C	"Signal evaluation" parameter invalid	Enter valid parameter value.
DF	80	E1	2D	• "Between comparison value 0 and 1" configured for DQ0 • "Not between comparison value 0 and 1" configured for DQ0 • "Between comparison value 0 and 1" configured for DQ1, but "Use by user program" not configured for DQ0 • "Not between comparison value 0 and 1" configured for DQ1, but "Use by user program" not configured for DQ0	• Configure "Between comparison value 0 and 1" only for DQ1 • "Not between comparison value 0 and 1" configured only for DQ1 • Only configure "Between comparison value 0 and 1" for DQ1 when "Use by user program" is configured for DQ0 • Only configure "Not between comparison value 0 and 1" for DQ1 when "Use by user program" is configured for DQ0

Error code in STATUS parameter (hexadecimal)				Meaning	Remedy
Byte 0	Byte 1	Byte 2	Byte 3		
DF	80	E1	2E	"Capture" configured for DIm in "Measuring" operating mode	Do not configure "Capture" for DIm in "Measuring" operating mode
DF	80	E1	36[4]	"Counting high limit" parameter invalid	Enter valid parameter value.
DF	80	E1	37[4,5]	• "Comparison value 0" parameter invalid • "Comparison value 1" parameter invalid	Enter valid parameter value.
DF	80	E1	38[4]	"Start value" parameter invalid	Enter valid parameter value.
DF	80	E1	39[4]	"Counting low limit" parameter invalid	Enter valid parameter value.
DF	80	E1	3A[4]	"Count direction for synchronization" parameter invalid	Enter valid parameter value.
DF	80	E1	F0	Reserved bit is not set to 0.	Set reserved bit to 0.

[1] Only for "Counting" operating mode

[2] Only for "Position input for technology object "Motion Control"" operating mode

[3] Only for DQ1 functions "Between comparison value 0 and 1" and "Not between comparison value 0 and 1"

[4] Only for operating mode "Fast Mode"

[5] Not for DQm function "Use by user program" or "Digital output without function"

The following table shows the module-specific error codes and their meaning for parameter data record 128 when using an SSI absolute encoder.

Table A- 4 Error codes for parameter validation (SSI absolute encoder)

Error code in STATUS parameter (hexadecimal)				Meaning	Remedy
Byte 0	Byte 1	Byte 2	Byte 3		
DF	80	B0	00	Data record number unknown	Enter valid number for data record.
DF	80	B1	01	Length of data record incorrect	Enter valid value for data record length.
DF	80	B2	00	Slot invalid or not accessible	• Check whether module is inserted or removed. • Check assigned values for parameters of the WRREC instruction.
DF	80	E0	01	Wrong version	• Check byte 0. • Enter valid values.
DF	80	E0	02	Error in the header information	• Check byte 1. • Correct the length of the parameter blocks.
DF	80	E1	00	Parameter invalid: No detailed information available	Check all parameter values.
DF	80	E1	11	"Operating mode" parameter invalid	Enter valid parameter value.
DF	80	E1	12	"Reaction to CPU STOP" parameter invalid	Enter valid parameter value.
DF	80	E1	13	"Signal type" parameter invalid	Enter valid parameter value.
DF	80	E1	18	"Set function of DI" parameter configured the same for DI0 and DI1.	Enter different parameter values for DI0 and DI1.
DF	80	E1	19	• "Edge selection" parameter invalid	Enter valid parameter value.
DF	80	E1	1A	"Input delay" parameter invalid	Enter valid parameter value.
DF	80	E1	1B	"Set output" parameter invalid	Enter valid parameter value.
DF	80	E1	1C	"Count direction" parameter invalid	Enter valid parameter value.
DF	80	E1	25	"Update time" parameter invalid	Enter parameter value from range 0 to 25000000_D.
DF	80	E1	26[1]	"Reference speed" parameter invalid	Enter parameter value from range 6.00 to 210000.00_D.
DF	80	E1	27	"Measured variable" parameter invalid	Enter valid parameter value.
DF	80	E1	28	"Time base for velocity measurement" parameter invalid	Enter valid parameter value.
DF	80	E1	29	"Increments per unit" parameter invalid	Enter valid parameter value.
DF	80	E1	2B[2]	• "Comparison value 0" parameter invalid • "Comparison value 1" parameter invalid	Enter valid parameter value: Comparison value 0 < comparison value 1

Error code in STATUS parameter (hexadecimal)				Meaning	Remedy
Byte 0	Byte 1	Byte 2	Byte 3		
DF	80	E1	2D	• "Between comparison value 0 and 1" configured for DQ0 • "Not between comparison value 0 and 1" configured for DQ0 • "Between comparison value 0 and 1" configured for DQ1, but "Use by user program" not configured for DQ0 • "Not between comparison value 0 and 1" configured for DQ1, but "Use by user program" not configured for DQ0	• Configure "Between comparison value 0 and 1" only for DQ1 • "Not between comparison value 0 and 1" configured only for DQ1 • Only configure "Between comparison value 0 and 1" for DQ1 when "Use by user program" is configured for DQ0 • Only configure "Not between comparison value 0 and 1" for DQ1 when "Use by user program" is configured for DQ0
DF	80	E1	2E	"Capture" configured for DIm in "Measuring" operating mode	Do not configure "Capture" for DIm in "Measuring" operating mode
DF	80	E1	2F	"Set function of DI" parameter invalid	Enter valid parameter value.
DF	80	E1	30	"Monoflop time" parameter invalid	Enter valid parameter value.
DF	80	E1	31	"Transmission rate" parameter invalid	Enter valid parameter value.
DF	80	E1	32	"Parity" parameter invalid	Enter valid parameter value.
DF	80	E1	33	"Frame length" parameter invalid	Enter valid parameter value.
DF	80	E1	34	• Bit number LSB of the position value < 0 • Bit number LSB of the position value > Bit number MSB of the position value • (Bit number MSB of the position value) – (Bit number LSB of the position value) >= 31 • Bit number MSB of the position value > Frame length	• Bit number LSB of the position value >= 0 • Bit number LSB of the position value < Bit number MSB of the position value • (Bit number MSB of the position value) – (Bit number LSB of the position value) < 32 • Bit number MSB of the position value <= Frame length
DF	80	E1	35	"0" configured for "Pulse duration" parameter	Enter valid parameter value.
DF	80	E1	37[3]	• "Comparison value 0" parameter invalid • "Comparison value 1" parameter invalid	Enter valid parameter value.
DF	80	E1	F0	Reserved bit is not set to 0.	Set reserved bit to 0.

1 Only for "Position input for "Motion Control"" technology object" operating mode

2 Only for DQ1 functions "Between comparison value 0 and 1" and "Not between comparison value 0 and 1"

3 Only for "Fast Mode" operating mode; not for DQm function "Digital output without function"

SIEMENS

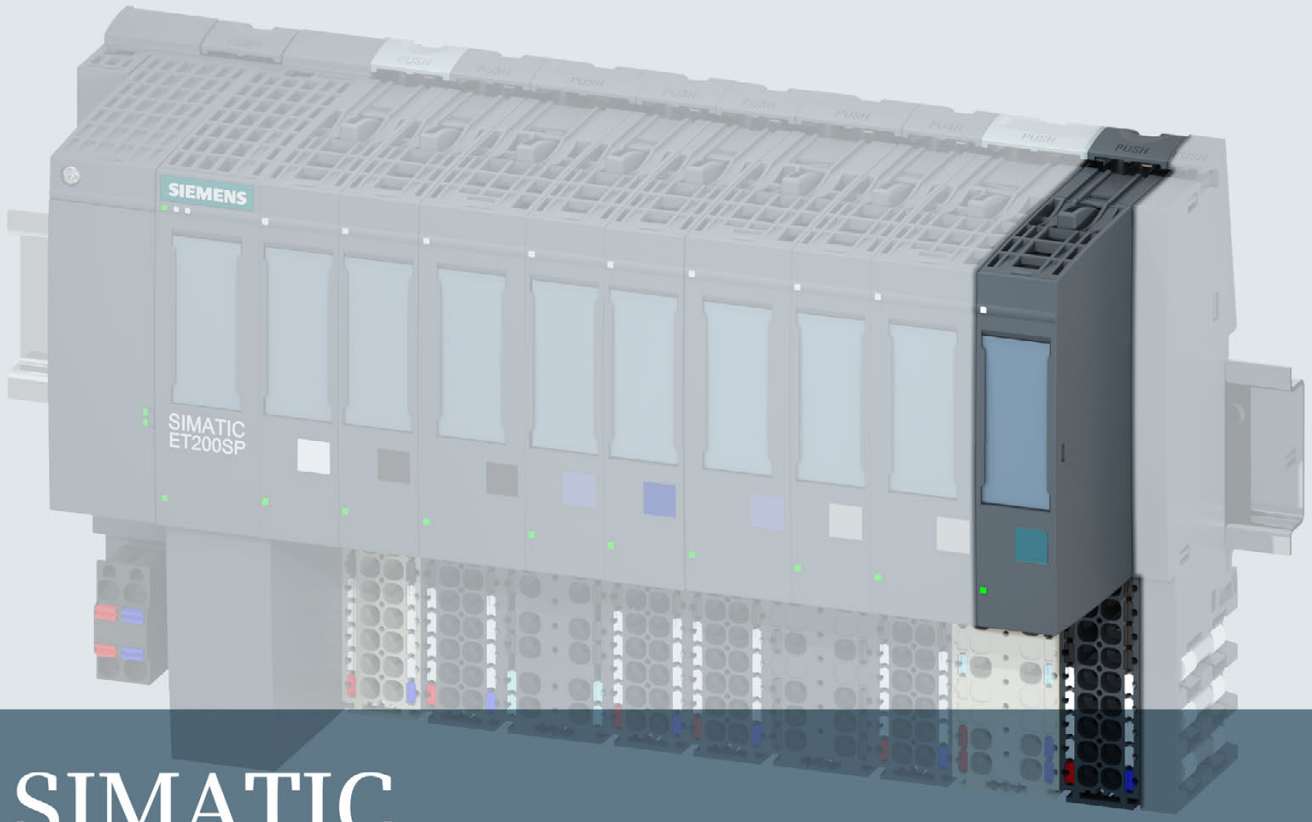

SIMATIC

ET 200SP

Technology Module TM Timer DIDQ 10x24V (6ES7138-6CG00-0BA0)

Device manual

Version 08/2014

Answers for industry.

SIEMENS

SIMATIC

ET 200SP
Technology module
TM Timer DIDQ 10x24V
(6ES7138-6CG00-0BA0)

Manual

Preface

Documentation guide 1

Product overview 2

Connecting 3

Configuring/address space 4

Interrupts/diagnostic messages 5

Technical specifications 6

Parameter data record A

Open Source Software B

08/2014

A5E34301686-AA

Legal information

Warning notice system

This manual contains notices you have to observe in order to ensure your personal safety, as well as to prevent damage to property. The notices referring to your personal safety are highlighted in the manual by a safety alert symbol, notices referring only to property damage have no safety alert symbol. These notices shown below are graded according to the degree of danger.

⚠ DANGER

indicates that death or severe personal injury **will** result if proper precautions are not taken.

⚠ WARNING

indicates that death or severe personal injury **may** result if proper precautions are not taken.

⚠ CAUTION

indicates that minor personal injury can result if proper precautions are not taken.

NOTICE

indicates that property damage can result if proper precautions are not taken.

If more than one degree of danger is present, the warning notice representing the highest degree of danger will be used. A notice warning of injury to persons with a safety alert symbol may also include a warning relating to property damage.

Qualified Personnel

The product/system described in this documentation may be operated only by **personnel qualified** for the specific task in accordance with the relevant documentation, in particular its warning notices and safety instructions. Qualified personnel are those who, based on their training and experience, are capable of identifying risks and avoiding potential hazards when working with these products/systems.

Proper use of Siemens products

Note the following:

⚠ WARNING

Siemens products may only be used for the applications described in the catalog and in the relevant technical documentation. If products and components from other manufacturers are used, these must be recommended or approved by Siemens. Proper transport, storage, installation, assembly, commissioning, operation and maintenance are required to ensure that the products operate safely and without any problems. The permissible ambient conditions must be complied with. The information in the relevant documentation must be observed.

Trademarks

All names identified by ® are registered trademarks of Siemens AG. The remaining trademarks in this publication may be trademarks whose use by third parties for their own purposes could violate the rights of the owner.

Disclaimer of Liability

We have reviewed the contents of this publication to ensure consistency with the hardware and software described. Since variance cannot be precluded entirely, we cannot guarantee full consistency. However, the information in this publication is reviewed regularly and any necessary corrections are included in subsequent editions.

Siemens AG
Industry Sector
Postfach 48 48
90026 NÜRNBERG
GERMANY

A5E34301686-AA
Ⓟ 09/2014 Subject to change

Copyright © Siemens AG 2014.
All rights reserved

Preface

Purpose of the documentation

This manual includes module-specific information on wiring, diagnostics and the technical specifications of the technology module.

General information regarding the design and commissioning of the ET 200SP is available in the ET 200SP system manual.

The "Time-based IO" technology supported by the TM Timer DIDQ 10x24V technology module is described in detail in the function manual High-precision input/output with Time-based IO (http://support.automation.siemens.com/WW/view/en/82527590).

Conventions

Please observe notes marked as follows:

Note

A note contains important information on the product described in the documentation, on the handling of the product and on the section of the documentation to which particular attention should be paid.

Security information

Siemens provides products and solutions with industrial security functions that support the secure operation of plants, solutions, machines, equipment and/or networks. They are important components in a holistic industrial security concept. With this in mind, Siemens' products and solutions undergo continuous development. Siemens recommends strongly that you regularly check for product updates.

For the secure operation of Siemens products and solutions, it is necessary to take suitable preventive action (e.g. cell protection concept) and integrate each component into a holistic, state-of-the-art industrial security concept. Third-party products that may be in use should also be considered. You can find more information about industrial security on the Internet (http://www.siemens.com/industrialsecurity).

To stay informed about product updates as they occur, sign up for a product-specific newsletter. You can find more information on the Internet (http://support.automation.siemens.com).

Open Source Software

Open-source software is used in the firmware of the product described. Open Source Software is provided free of charge. We are liable for the product described, including the open-source software contained in it, pursuant to the conditions applicable to the product. Siemens accepts no liability for the use of the open source software over and above the intended program sequence, or for any faults caused by modifications to the software.

For legal reasons, we are obliged to publish the original text of the license conditions and copyright notices. Please read the information relating to this in the appendix.

Table of contents

Preface 4

1 Documentation guide 7

2 Product overview 9

2.1 Properties 9

2.2 Functions 11
2.2.1 Detection of the input signals 11
2.2.2 Switching the outputs 13
2.2.3 Additional functions 15

3 Connecting 16

3.1 Pin assignment 16

4 Configuring/address space 22

4.1 Configuring 22

4.2 Reaction to CPU STOP 24

4.3 Address space 24

4.4 Parameters 25

4.5 Control and feedback interface 27
4.5.1 Assignment of the control interface 27
4.5.2 Assignment of the feedback interface 30

5 Interrupts/diagnostic messages 33

5.1 Status and error displays 33

5.2 Trigger a diagnostic interrupt 36

5.3 Diagnostic alarms 37

6 Technical specifications 39

A Parameter data record 46

B Open Source Software 51

Documentation guide

1

Introduction

This modular documentation of the SIMATIC products covers diverse topics concerning your automation system.

The complete documentation for the ET 200SP and S7-1500 systems consists of the respective system manuals, function manuals and device manuals.

The STEP 7 information system (TIA Portal) also helps you to configure and program your automation system.

Overview of the documentation for TM Timer DIDQ 10x24V technology module

The following table lists further documentation that you will need when using the TM Timer DIDQ 10x24V technology module.

Table 1- 1 Documentation for TM Timer DIDQ 10x24V technology module

Topic	Documentation	Most important contents
System description	System manual ET 200SP Distributed I/O System (http://support.automation.siemens.com/WW/view/en/58649293)	• Application planning • Installation • Connecting • Commissioning
	S7-1500 Automation System (http://support.automation.siemens.com/WW/view/en/59191792) system manual	
	Device manual Interface Module (http://support.automation.siemens.com/WW/view/en/55683316/133300)	• Connecting • Interrupts, diagnostics, error, and system messages • Technical specifications • Dimension drawing
	Device manual ET 200SP BaseUnits (http://support.automation.siemens.com/WW/view/en/58532597/133300)	Technical specifications
Configuring interference-free controllers	Designing interference-free controllers (http://support.automation.siemens.com/WW/view/en/59193566) Function Manual	• Basics • Electromagnetic compatibility • Lightning protection

Topic	Documentation	Most important contents
Time-based IO	Function manual High-precision input/output with Time-based IO (http://support.automation.siemens.com/WW/view/en/82527590)	• Basics • Configuration • Programming • Diagnostics
Isochronous mode	PROFINET with STEP 7 (http://support.automation.siemens.com/WW/view/en/49948856) function manual	• Benefits • Use • Parameter settings

SIMATIC manuals

All current manuals for the SIMATIC products are available for download free of charge from the Internet (http://www.siemens.com/automation/service&support).

Product overview

2

2.1 Properties

Article number

6ES7138-6CG00-0BA0

View of the module

Figure 2-1 View of the TM Timer DIDQ 10x24V module

Properties

The TM Timer DIDQ 10x24V technology module has the following properties:

- Technical properties
  - 4 Digital inputs and 6 digital outputs
  - Rated output voltage 24V DC
  - Rated output current 0.5 A or 0.1 A (high-speed operation) per digital output
  - 24 V encoder supply output, short-circuit proof
  - Configurable substitute values (per digital output)
  - Configurable diagnostics
  - Configurable input filters for suppression of interference at digital inputs
- Supported encoder/signal types for digital inputs
  - 24 V incremental encoder with A and B signals
  - 24 V pulse encoder with one signal
- Supported functions
  - Time stamp function for inputs and outputs (resolution 1 µs)
  - Counting (counting range 32-bit)
  - Oversampling for inputs and outputs
  - Pulse width modulation
- Supported system functions
  - Isochronous mode
  - Firmware Update
  - Identification data I&M

Accessories

The following accessories can be used with the module and are not included in the product package:

- Labeling strip
- Color identification labels
- Reference identification labels
- Shield connector

A BaseUnit of the A0 type is required to operate the technology module. For an overview of the BaseUnits to be used with the technology module, refer to the product information on the documentation for the ET 200SP Distributed I/O System (http://support.automation.siemens.com/WW/view/en/73021864).

For detailed information on the installation procedure, refer to the ET 200SP Distributed I/O System (http://support.automation.siemens.com/WW/view/en/58649293) system manual.

2.2 Functions

2.2.1 Detection of the input signals

You can configure up to four digital inputs with the technology module. You can evaluate the signals at the digital inputs for the following functions:

Time stamp detection (Timer DI)

The technology module can detect an associated time stamp for an edge at a digital input. The time stamp indicates when the edge was detected in relation to a time base. These time stamps can be used, for example, to calculate a time difference.

The time stamp is based on the "Time-based IO" technology supported by the technology module and requires isochronous mode.

Hardware enable (HW enable)

You can configure a hardware enable by a digital input for the detection of time stamps. A hardware enable defines the time window in which the time stamps are acquired. You can override the hardware enable via the control interface (Page 27) with the respective SETEN bit.

The figure below shows an example for the detection of time stamps at rising and falling edges with enable of the DI2 through the high level of the DI3:

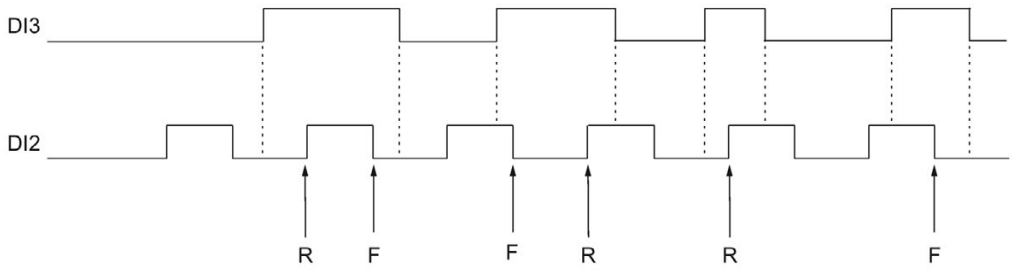

R Associated time stamp detected at rising DI2-edge

F Associated time stamp detected at falling DI2 edge

Counting

Counting refers to the recording and adding up of events. You can configure up to three counters for the technology module. You can use an incremental encoder as well as a pulse encoder at the digital inputs. The two phase-shifted signals from an incremental encoder are evaluated four times. Only the rising or falling edges are counted with the signal of a pulse encoder.

A counter starts at 0, goes up to 2^{32}-1 and starts again at 0 (overflow). The technology module can also count down if an incremental encoder is used. The counter value is returned in the feedback interface (Page 30) as a 32-bit value for each digital input.

Oversampling

The Oversampling function is used by the technology module to detect the status of the respective digital input for each application cycle (for example, OB61) at 32 points in time at regular intervals. The 32 states are returned together in the feedback interface (Page 30) as a 32-bit value.

Oversampling requires isochronous mode. If the OB of the type "Synchronous Cycle" works with a clock different than the send clock, you must use the TIO_SYNC instruction.

The figure below shows an example for Oversampling of DI0:

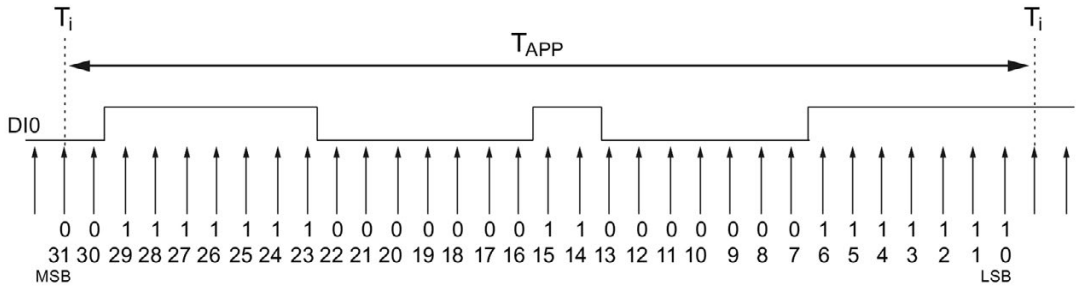

T_{APP} Application cycle

MSB Most significant bit

LSB Least significant bit

2.2.2 Switching the outputs

You can configure up to six digital outputs for the technology module. You can configure the following functions for switching the digital outputs:

Time-controlled switching (Timer DQ)

The use of time stamps enables reproducibility of controlled operations with very accurate time. Using this function, the technology module outputs edges at the respective digital output at precisely defined points in time. For example, you can implement a defined reaction time between input and output in conjunction with a digital input.

The Timer function is based on Time-based IO and requires isochronous mode.

Hardware enable (HW enable)

You can configure a hardware enable by means of a digital input for a Timer digital output. A hardware enable defines the time window in which the respective digital output can be set. The resetting of the digital output is independent of the hardware enable. You can override the hardware enable via the control interface (Page 27) with the respective SETEN bit.

The figure below shows an example for the output of rising and falling edges with enable of the DQ0 through the high level of the DI0:

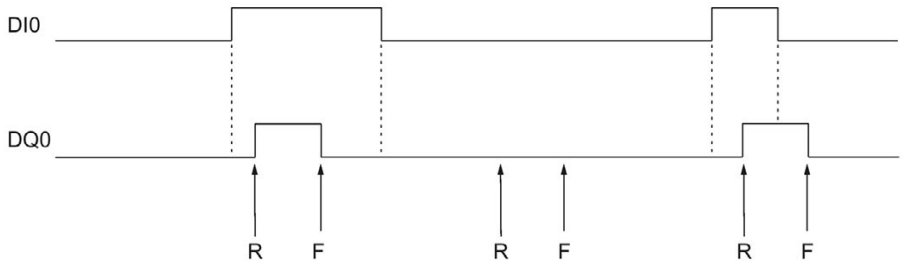

R Specified time of a rising DQ0-edge

F Specified time of a falling DQ0-edge

Pulse width modulation (PWM)

The Pulse width modulation function enables you to specify the time period in the hardware configuration and the pulse-pause ratio in the control interface (Page 27) for the respective digital output. The setpoint for the pulse-pause ratio is a percentage and is evaluated with an accuracy of about 3%.

Oversampling

The Oversampling function is used by the technology module to output 32 states at regular intervals for each application cycle (for example, OB61). This allows up to 32 edges at the respective digital output per application cycle.

The 32 states are sent via the control interface (Page 27) as a 32-bit string for the respective digital output to the technology module.

Oversampling requires isochronous mode. If the OB of the type "Synchronous Cycle" works with a clock different than the send clock, you must use the TIO_SYNC instruction.

The figure below shows an example for Oversampling of DQ0:

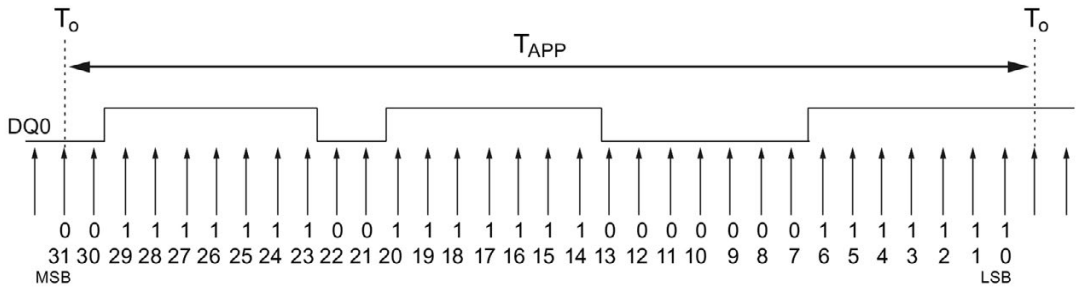

T_{APP} Application cycle

MSB Most significant bit

LSB Least significant bit

Note

When you use the Oversampling function, make sure that the combination of application cycle and the 32-bit output sequence do not result in an output frequency which exceeds the maximum switching frequency for the digital outputs.

2.2.3 Additional functions

Isochronous mode

The technology module supports the system function "isochronous mode" in distributed mode on PROFINET. This system function is required for the following functions of the technology module:

- Time stamp detection (Timer DI)
- Time-controlled switching (Timer DQ)
- Oversampling of digital input
- Oversampling of digital output

In isochronous mode, the cycle of the user program, the transmission of the input signals and processing in the technology module are synchronized.

Data processing

The time stamp, counter values and Oversampling bit string as well as status bits are detected at the time T_i and made available in the feedback interface for retrieval in the current bus cycle. The output of the current Oversampling bit stings is started at the time T_o.

Diagnostic interrupt

The technology module can trigger a diagnostic interrupt (Page 36), among other things, if no supply voltage is available or if there is an error at the digital outputs.

Input filter

To suppress interferences, you can configure an input filter for the digital inputs.

Distributed application

You can use the technology module in a distributed system by means of an interface module in the ET 200SP distributed I/O device. The following applications are possible:

- Distributed operation in an S7-1500 system
- Distributed operation in an S7-300/400 system

Centralized application

You can use the technology module centrally in the ET 200SP distributed I/O system.

Connecting 3

3.1 Pin assignment

The TM Timer DIDQ 10x24V is used with a BaseUnit of the A0 type.

The encoder signals, the digital input and output signals and the encoder supply are connected to the BaseUnit of the technology module. The supply voltage feed on the light BaseUnit BU...D of the associated potential group supplies the module and the digital outputs, and generates the encoder supply voltage.

BaseUnit

The BaseUnit is not included in the product package of the module and must be ordered separately.

For an overview of the BaseUnits to be used with the technology module, refer to the product information on the documentation for the ET 200SP Distributed I/O System (http://support.automation.siemens.com/WW/view/en/73021864).

You can find information about selecting a suitable BaseUnit in the ET 200SP Distributed I/O System (http://support.automation.siemens.com/WW/view/en/58649293) system manual and ET 200SP BaseUnits (http://support.automation.siemens.com/WW/view/en/58532597/133300) device manual.

You can find information on wiring the BaseUnit, connecting cable shields, etc. in the Connecting section of the ET 200SP Distributed I/O System (http://support.automation.siemens.com/WW/view/en/58649293) system manual.

Pin assignment of the BaseUnit

The table below shows the pin assignment, using the BaseUnit BU15-P16+A0+2B as an example.

Table 3- 1 Pin assignment of the BaseUnit BU15-P16+A0+2B

Designation	Signal name		View	Signal name		Designation
Digital input DI0	DI0	1	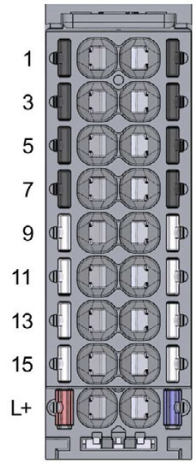	2	DQ0	Digital output DQ0
Digital input DI1	DI1	3		4	DQ1	Digital output DQ1
Digital input DI2	DI2	5		6	DQ2	Digital output DQ2
Digital input DI3	DI3	7		8	DQ3	Digital output DQ3
Ground for encoder supply, digital inputs and digital outputs	M	9		10	DQ4	Digital output DQ4
	M	11		12	DQ5	Digital output DQ5
	M	13		14	M	Ground for encoder supply, digital inputs and digital outputs
24 V encoder supply	24VDC	15		16	M	
DC 24 V supply voltage	L+			M		Ground for supply voltage

Block diagram

When you connect encoders you must, depending on the configured input delay and potential effect of interference, ground the shields of the cables between encoder and technology module both through the shield connection on the BaseUnit (shield connection element and terminal) and at the encoder.

The figure below shows the block diagram of the technology module to which an incremental encoder and a pulse encoder are connected.

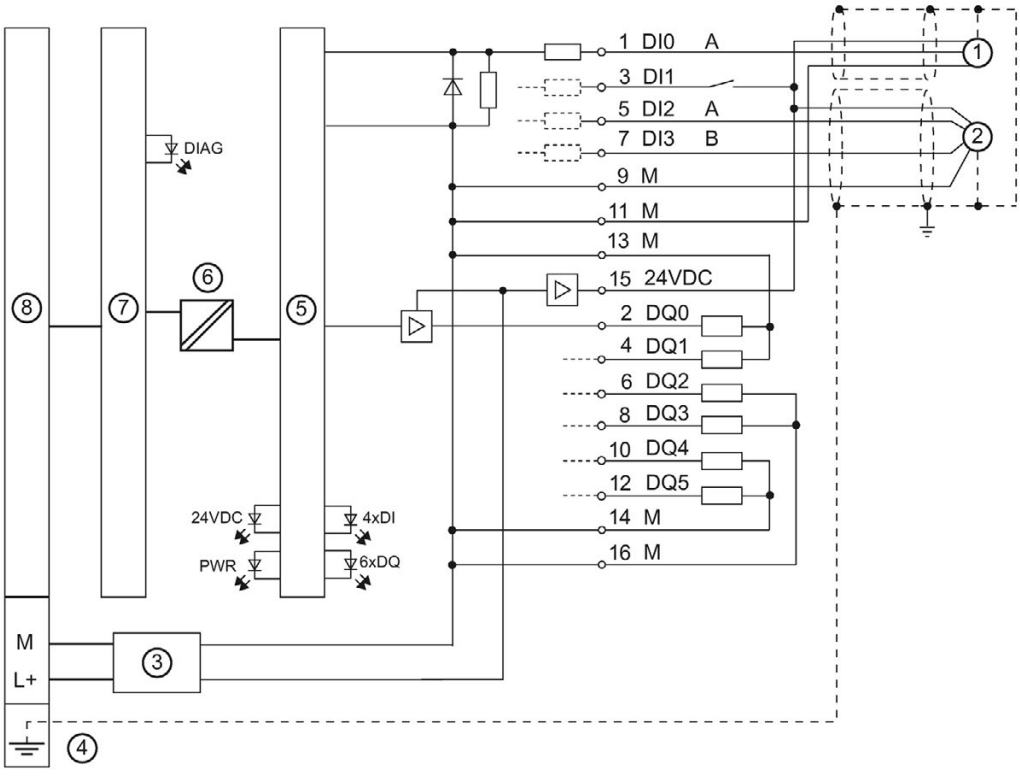

① Pulse encoder with signal A
② Incremental encoder with A and B signals
③ Input filter for supply voltage
④ Shield connection on the BaseUnit
⑤ Technology
⑥ Electrical isolation
⑦ Backplane bus interface module of the technology module
⑧ Backplane bus

Figure 3-1 Block diagram with incremental encoder and pulse encoder

L+/M supply voltage

Connect the supply voltage (DC 24V) to the L+ and M connections. An internal protective circuit protects the technology module against damage due to reversed polarity of the supply voltage. Unexpected conditions can occur at the digital outputs with reversed polarity of the supply voltage. The technology module monitors the connection of the supply voltage.

24VDC encoder supply

To supply the encoders and sensors at the digital inputs, the technology module supplies the DC 24V supply voltage at the 24VDC output with reference to M. Voltage is supplied from the L+/M supply voltage and monitored for short-circuits and overload.

Digital inputs DI0 to DI3

You can use four digital inputs. The technology module can evaluate the edges at the digital inputs for the following functions:

Table 3- 2 Evaluation of the signals at the digital inputs

Evaluation of the signals for ...	Usable digital inputs			
	DI0	DI1	DI2	DI3
Time stamp detection	✓	✓	✓	✓
Hardware enable for time stamp detection	—	—	—	✓
Hardware enable for time-controlled switching	✓	✓	✓	—
Counting with incremental encoder with signals A and B	—	—	✓	✓
Counting with pulse encoder with signal A	✓	✓	✓	—
Oversampling	✓	✓	✓	✓

When you use the counting function, you can connect the following encoder types with 24 V signals to the digital inputs:

- Incremental encoder with signals A and B:

  Signals A and B are connected via the connections of the digital inputs DI2 and DI3. Signals A and B are the two incremental signals phase-shifted by 90°.

- Pulse encoder / sensor with signal A:

  Signal A is connected via the connection of the digital input DI0, DI1 or DI2.

The digital inputs are not electrically isolated from each other or from the digital outputs. The digital inputs are electrically isolated from the backplane bus.

Input filters for digital inputs

You can configure an input filter for each digital input to suppress interference. Signals with a pulse duration below the configured input delay are suppressed.

You can specify the following values for the input delay:

- None
  (input delay of 4 µs, minimum pulse width of 3 µs)
- 0.05 ms
- 0.1 ms (default)
- 0.4 ms
- 0.8 ms

The input delay has the following effect on the functions of the signal evaluation at the digital inputs:

Table 3- 3 Influence of the input delay

Function	Influence of the input delay
Time stamp detection	The detected time stamp is moved by the input delay.
Counting	The counter value that was valid at time T_i minus the input delay is returned.
Oversampling	The detected states are moved together by the input delay.

Note

If you select the "None" or "0.05 ms" option, you have to use shielded cables for connection of the digital inputs. To increase the accuracy of the time stamp function, we recommend the use of shielded cables even for longer input delays. The use of shielded cables limits the jitter to maximum of 1 µs.

Digital outputs DQ0 to DQ5

You can use six digital outputs. The digital outputs can be switched directly at defined points in time or via the user program. Alternatively, you can output pulse width modulation or Oversampling at the respective digital output.

The digital outputs are not electrically isolated from each other or from the digital inputs. The digital outputs are electrically isolated from the backplane bus.

You can use each of the digital outputs as a high-speed output or as a sourcing output:

- High-speed output (default):
  The digital output works as fast push-pull switch and can carry a rated load current of 0.1 A. A push-pull switch is alternately switched to DC 24 V and ground. This makes for very steep edges.
- Sourcing output:
  The digital output works as 24 V sourcing output in reference to M and can carry a rated load current of 0.5 A.

The digital outputs are protected from overload and short-circuit.

NOTICE
Overtemperature from unsuitable loads A high-speed output generates edges that are very steep. This creates very powerful charge reversals for the connected load, which can overheat the load at very high switching frequencies. The connected load must therefore be approved for high input frequencies.

Note

If you use a digital output as sourcing output, the switch-off response / switch-off edge depends on the load. Thus, it is possible that very short pulses cannot be output correctly.

Note

Relays and contactors can be connected direct without external circuitry.

Configuring/address space 4

4.1 Configuring

Introduction

The technology module is configured and assigned parameters with the configuration software.

The technology module functions are controlled and monitored by the user program.

System environment

The technology module can be used in the following system environments:

Table 4- 1 Applications of the technology module with PROFINET IO

Applications	Components required	Configuration software	In the user program
Distributed operation in an S7-1500 system	• S7-1500 automation system • ET 200SP distributed I/O system • TM Timer DIDQ 10x24V	STEP 7 (TIA Portal): Device configuration and parameter settings with hardware configuration (HWCN)	Time stamp functions: TIO instructions TIO_SYNC, TIO_DI and TIO_DQ Counting, PWM and Oversampling: Direct access to the control and feedback interface (Page 27) of the TM Timer DIDQ 10x24V in the I/O data
Central operation in an S7-1500 system	• S7-1500 automation system • ET 200SP distributed I/O system • TM Timer DIDQ 10x24V	STEP 7 (TIA Portal): Device configuration and parameter settings with hardware configuration (HWCN)	Counting and PWM: Direct access to the control and feedback interface of the TM Timer DIDQ 10x24V in the I/O data
Distributed operation in an S7-300/400 system	• S7-300/400 automation system • ET 200SP distributed I/O system • TM Timer DIDQ 10x24V	STEP 7 (TIA Portal): Device configuration and parameter settings with hardware configuration (HWCN) STEP 7: Device configuration and parameter settings with HSP	Time stamp functions*, counting, PWM and Oversampling: Direct access to the control and feedback interface (Page 27) of the TM Timer DIDQ 10x24V in the I/O data

* on request

Additional information

You can find a detailed description of the time stamp functions and their configuration with the TIO instructions TIO_SYNC, TIO_DI and TIO_DQ in:

- High-precision input/output with Time-based IO function manual available as download on the Internet (http://support.automation.siemens.com/WW/view/en/82527590)
- In the STEP 7 (TIA Portal) information system under "Using technology functions > Counting, measurement and position input > Counting, measurement and position input (S7-1500)"

4.2 Reaction to CPU STOP

You set the response of the technology module to CPU STOP for each channel in the basic parameters.

Table 4- 2 Response of the technology module to CPU STOP depending on parameter assignment

Reaction to CPU STOP	Meaning
Output substitute value	The technology module outputs the configured substitute values at the digital outputs until the next CPU STOP-RUN transition. The technology module is returned to its startup state after a STOP-RUN transition: If you are using counters, the counter values are set to 0 and the digital outputs switch according to the parameter assignment and the setpoints.
Keep last value	The technology module outputs the values at the digital outputs that were valid when the transition to STOP took place until the next CPU STOP-RUN transition. The last valid period duration with the last valid pulse-pause ratio is output for a configured pulse width modulation until the next STOP-RUN transition. The technology module is returned to its startup state after a STOP-RUN transition: If you are using counters, the counter values are set to 0 and the digital outputs switch according to the parameter assignment and the setpoints.

4.3 Address space

Address space of the technology module

Table 4- 3 Range of the input addresses and output addresses of the TM Timer DIDQ 10x24V

	Inputs	Outputs
Range	26 bytes	32 bytes

Additional information

A description on how to use the control and feedback interface of TM Timer DIDQ 10x24V can be found in the chapter Control and feedback interface (Page 27).

4.4 Parameters

You can use various parameters to define the properties of the technology module in the hardware configuration. Depending on the settings, not all parameters are available. You can change the parameter assignment in the user program using data record 128 (Page 46).

If you use STEP 7 (TIA Portal), you can find the module in the Hardware catalog under "Technology modules". If you use STEP 7, you can find the module following installation of the corresponding HSP file in the Hardware catalog.

Parameters of the TM Timer DIDQ 10x24V

You can configure the following parameters:

Table 4- 4 Configurable parameters and their defaults

Parameter	Value range	Default setting
Basic parameters		
PWM period for the digital outputs	• 10 ms • 5 ms • 2 ms • 1 ms • 0.5 ms • 0.2 ms	10 ms
Reaction to CPU STOP	• Output substitute value • Keep last value	Output substitute value
Enable diagnostic interrupts	• Disabled • Enabled	Disabled
Channel parameters		
Configuration DQ/DI group (DQ0/DI0 or DQ1/DI1)	• Timer DQ with enable input • Use input/output individually	Timer DQ with enable input
Operating mode of the digital output	• Timer DQ • Oversampling • Pulse width modulation PWM	Timer DQ
Substitute value for the digital output	• 0 • 1	0
High-speed output (0.1 A)	• Disabled • Enabled	Enabled
Invert input or output signal	• Disabled • Enabled	Disabled
HW enable by the digital input	• Level-triggered • Edge-triggered	Level-triggered

Parameter	Value range	Default setting
Level selection for HW enable	• Active with high level • Active with low level	Active with high level
Configuration DQ/DI group (DQ2/DI2/DI3)	• Incremental encoder (A, B phase-shifted) • Timer-DI2 with enable input DI3 • Timer DQ2 with enable input DI2 • Use inputs individually	Incremental encoder (A, B phase-shifted)
Invert counting direction (incremental encoder)	• Disabled • Enabled	Disabled
Operating mode of the digital input	• Counter • Timer-DI • Oversampling	Timer-DI
Input delay for the digital input	• None • 0.05 ms • 0.1 ms • 0.4 ms • 0.8 ms	0.1 ms
Signal evaluation for counters	• At rising edge • At falling edge	At rising edge

4.5 Control and feedback interface

Direct access to the control and feedback interface on the PROFINET is not necessary for distributed operation in a S7-1500 system to use the time stamp functions. The TIO instructions TIO_SYNC, TIO_DI and TIO_DQ are available for this case. You can find a detailed description of the use of the TIO instructions in the High-precision input/output with Time-based IO function manual available as download on the Internet (http://support.automation.siemens.com/WW/view/en/82527590).

Additional information on using the control and feedback interface is available in the section Configuring (Page 22).

4.5.1 Assignment of the control interface

The user program uses the control interface to influence the behavior of the technology module.

Control interface

The following table shows control interface assignment:

Table 4- 5 Control interface of the technology module

Offset to the start address	Parameter	Meaning
Byte 0	—	Bits 6 to 7: Reserved; bits must be set to 0
	SET_DQ (DQ0 ... DQ5)	Bit 5: Set DQ5
		Bit 4: Set DQ4
		Bit 3: Set DQ3
		Bit 2: Set DQ2
		Bit 1: Set DQ1
		Bit 0: Set DQ0
Byte 1	SETEN (DI0 ... DI3, DQ0 ... DQ3)	Bit 7: Override hardware enable for DQ3
		Bit 6: Override hardware enable for DQ2
		Bit 5: Override hardware enable for DQ1
		Bit 4: Override hardware enable for DQ0
		Bit 3: Override hardware enable for DI3
		Bit 2: Override hardware enable for DI2
		Bit 1: Override hardware enable for DI1
		Bit 0: Override hardware enable for DI0
Byte 2	SETEN (DQ4 ... DQ5)	Bits 2 to 7: Reserved; bits must be set to 0
		Bits 0 to 1: Override hardware enable for DQ4 to DQ5

Offset to the start address	Parameter		Meaning		
Byte 3	—		Reserved; bits must be set to 0		
Bytes 4 to 7	TEC_OUT (DQ0)		For DQ operating mode "Timer DQ":	For DQ operating mode "Over-sampling":	For DQ operating mode "Pulse width modulation PWM":
			Byte 0...1: OFF TIME: Starting time stamp of the module for resetting the DQ0	Bytes 0 to 3: 32 states for Over-sampling	Bytes 0 to 2: Reserved; bits must be set to 0
			Bytes 2 to 3: ON TIME: Starting time stamp of the module for setting the DQ0		Byte 3: Pulse-pause ratio for PWM as a per-centage
Bytes 8 to 11	TEC_OUT (DQ1)		See bytes 4 to 7		
Bytes 12 to 15	TEC_OUT (DQ2)				
Bytes 16 to 19	TEC_OUT (DQ3)				
Bytes 20 to 23	TEC_OUT (DQ4)				
Bytes 24 to 27	TEC_OUT (DQ5)				
Byte 28	SEL (DI1)	EDGESEL	Bits 5...7: edge selection for time stamp detection DI1:		
			000_B: Reserved		
			001_B: Rising edges only		
			010_B: Falling edges only		
			011_B: Rising and falling edge (order depending on occurrence)		
			100_B: Reserved		
			101_B: First rising, then falling edge		
			110_B: First falling, then rising edge		
			111_B: Reserved		
		REARM	Bit 4: cyclic time stamp detection for DI1		
	SEL (DI0)	EDGESEL	Bits 0...3: See SEL (DI1)		
		REARM			
Byte 29	SEL (DI3)		See byte 28		
	SEL (DI2)				
Bytes 30 to 31	STW	MSL	Bits 12...15: sign of life counter (Master Sign of Life)		
		—	Bits 1...11: Reserved; bits must be set to 0		
		SYN	Bit 0: Synchronization of the module with the user program		

Notes on the control bits

Control bit	Notes
SEL (DIm)	This value is supplied by the TIO instruction TIO_DI.
SET_DQm	You can use this bit to set the DQm digital output in the DQ operating mode "Timer DQ".
SETEN (DIm/DQm)	You can use this bit to override the hardware enable that is configured for a digital input DIm or digital output DQm.
STW	This value is controlled by the TIO instruction TIO_SYNC. Detailed information is available on request.
TEC_OUT (DQm)	If you use the time stamp function for the respective digital output DQm, the TIO instruction TIO_DQ returns the two output time stamps for the module in this value. If you use the Oversampling function for the respective digital output DQm, you specify the 32 states with this value. If you use pulse width modulation for the respective digital output DQm, you specify the pulse-pause ratio with this value as percentage. The following overview shows how the technology module evaluates the specified percentage.

Pulse-pause ratio for PWM

You specify the setpoint for the pulse-pause ratio as a percentage. The technology module outputs the following pulse-pause ratio in each case:

Setpoint in %	0	1	2	3	4	5	6	7	8	9	10	11	12	13	14	15	16	17	18	19	20	21	22	23
Output value in %	0		3.13			6.25			9.38			12.50				15.63			18.75			21.88		

24	25	26	27	28	29	30	31	32	33	34	35	36	37	38	39	40	41	42	43	44	45	46	47	48	49	50	51
25			28.13			31.25			34.38			37.50				40.63			43.75			46.88			50		

52	53	54	55	56	57	58	59	60	61	62	63	64	65	66	67	68	69	70	71	72	73	74	75	76	77	78	79
53.13			56.25			59.38			62.50				65.63			68.75			71.88			75			78.13		

80	81	82	83	84	85	86	87	88	89	90	91	92	93	94	95	96	97	98	99	100
81.25			84.38			87.50			90.63				93.75			96.88			100	

Additional information

Detailed information about the time stamp function is available from Technical Supporton request.

4.5.2 Assignment of the feedback interface

The user program receives current values and status information from the technology module by means of the feedback interface.

Feedback interface

The following table shows the assignment of the feedback interface:

Table 4- 6 Feedback interface of the technology module

Offset to the start address	Parameter	Meaning		
Byte 0	STS_DI (DI0 ... DI3)	Bits 4 to 7: Reserved		
		Bit 3: Status DI3		
		Bit 2: Status DI2		
		Bit 1: Status DI1		
		Bit 0: Status DI0		
Byte 1	QI (DI0 ... DI3)	Bits 4 to 7: Reserved		
		Bit 3: Quality Information DI3		
		Bit 2: Quality Information DI2		
		Bit 1: Quality Information DI1		
		Bit 0: Quality Information DI0		
Byte 2	QI (DQ0 ... DQ5)	Bits 6 to 7: Reserved		
		Bit 5: Quality Information DQ5		
		Bit 4: Quality Information DQ4		
		Bit 3: Quality Information DQ3		
		Bit 2: Quality Information DQ2		
		Bit 1: Quality Information DQ1		
		Bit 0: Quality Information DQ0		
Byte 3	—	Reserved		
Bytes 4 to 7	TEC_IN (DI0)	For DI operating mode "Timer DI":	For DI operating mode "Incremental encoder (A, B phase-shifted)" or "Counter":	For DI operating mode "Over-sampling":
		Byte 0...1: 2nd TIME/OFF TIME: Second input time stamp of module	Current counter value	Oversampling value
		Byte 2...3: 1st TIME/ON TIME: First input time stamp of module		
Bytes 8 to 11	TEC_IN (DI1)	See bytes 4 to 7		
Bytes 12 to 15	TEC_IN (DI2)			
Bytes 16 to 19	TEC_IN (DI3)			
Byte 20	EN (DI1)	Bit 7: DI1 active as Timer DQ		
	LEC (DI1)	Bit 4...6: Lost edge counter for DI1		
	EN (DI0)	Bit 3: DI0 active as Timer DQ		
	LEC (DI0)	Bit 0...2: Lost edge counter for DI0		

Offset to the start address	Parameter		Meaning
Byte 21	EN (DI3)		See byte 20
	LEC (DI3)		
	EN (DI2)		
	LEC (DI2)		
Byte 22	—		Bits 6 to 7: Reserved
	EN (DQ5)		Bit 5: DQ5 active as Timer DQ
	EN (DQ4)		Bit 4: DQ4 active as Timer DQ
	EN (DQ3)		Bit 3: DQ3 active as Timer DQ
	EN (DQ2)		Bit 2: DQ2 active as Timer DQ
	EN (DQ1)		Bit 1: DQ1 active as Timer DQ
	EN (DQ0)		Bit 0: DQ0 active as Timer DQ
Byte 23	Layout Property		Module-specific value
Bytes 24 to 25	ZSW	SSL	Bits 12...15: sign of life counter (Slave Sign of Life)
		—	Bits 10 to 11: Reserved
		SYNC	Bit 8: Module is synchronized with the user program
		Channel address	Bits 4 to 7 and 9: Number of the respective DI or DQ
		Channel mode	Bits 0 to 3: Operating mode of the respective DI or DQ

Notes on the feedback bits

Table 4- 7 Feedback bits with notes

Feedback bit	Notes
STS_DI (DIm)	This bit indicates the status of respective digital input DIm.
EN (DIm/DQm)	This bit indicates that • The respective digital input is active as Timer DI and, if required, is enabled, or • The respective digital output is active as Timer DQ and, if required, is enabled. For digital inputs and digital outputs with the operating modes "Counter", "Oversampling", "Pulse Width Modulation PWM" and for level-controlled hardware enable, this bit is permanently "0".
Layout Property	This value is a module-specific constant and used by the TIO instructions for the recognition of the technology module.
LEC (DIm)	This value indicates the number of edges at the respective digital input DIm for which no time stamp could be stored. The module can count a maximum of seven edges per application cycle. The counter is reset with each new application cycle.
QI (DIm)	This bit indicates that an error has occurred at the respective digital input. 0 means: Supply voltage L+ not present or too low. 1 means: Supply voltage is present and OK If the diagnostic interrupts are enabled, a diagnostic interrupt is triggered when there is a problem with the L+ supply voltage. Refer to the section Diagnostic alarms (Page 37) for details on the diagnostic interrupts.

Feedback bit	Notes
QI (DQm)	This bit indicates that an error has occurred at the respective digital output. 0 means: Short-circuit, overload or overtemperature 1 means: Supply voltage is present and OK If the diagnostic interrupts are enabled, a diagnostic interrupt is triggered when there is a fault at the digital output. Refer to the section Diagnostic alarms (Page 37) for details on the diagnostic interrupts.
TEC_IN (DIm)	If you use the time stamp function for the respective digital input DIm, this value returns the two input time stamps for the module. The input time stamps are read by the TIO instruction TIO_DI and converted to the TIO_Time. If you use the counting function for the respective digital input DIm, this value returns the current counter value. If you use the Oversampling function for the respective digital input DIm, this value returns the 32 states of the DIm.
ZSW	This value is controlled by the technology module and is used for communication with the TIO instruction TIO_SYNC.

Additional information

Detailed information about the time stamp function is available from Technical Support on request.

Interrupts/diagnostic messages 5

5.1 Status and error displays

LEDs

The figure below shows the LEDs (status and error displays) of the TM Timer DIDQ 10x24V.

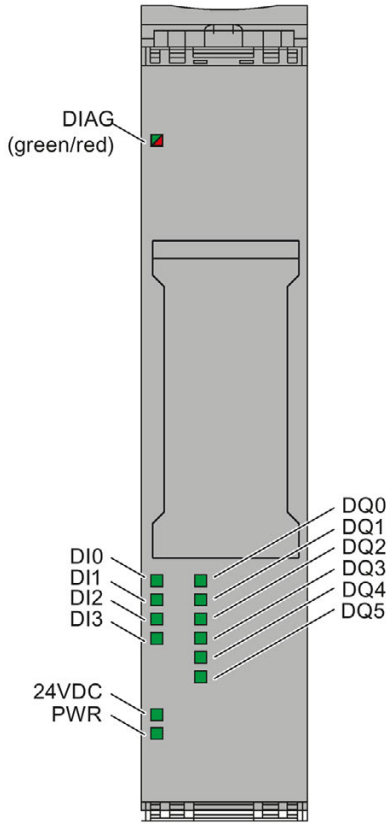

Figure 5-1 LEDs of the TM Timer DIDQ 10x24V

Meaning of the LED displays

The following tables explain the meaning of the status and error displays. Remedial measures for diagnostic alarms can be found in the section Diagnostic alarms (Page 37).

Table 5- 1 Status and error displays DIAG

LED DIAG	Meaning	To correct or avoid errors
□ Off	Backplane bus supply of the ET 200SP not OK	Check or switch on the supply voltage on the interface module or on the CPU.
☼ Flashes	Technology module not configured	—
■ On	Technology module configured but no module diagnostics	
☼ Flashes	Technology module configured and module diagnostics (at least one error pending)	Evaluate the diagnostic alarms and eliminate the error.

Table 5- 2 PWR/24VDC status displays

LEDs		Meaning	To correct or avoid errors
PWR	24VDC		
□ Off	□ Off	No supply voltage	• Check the supply voltage. • Check the BaseUnit type and the wiring of the BaseUnit.
■ On	■ On	Supply voltage is present and OK	—
■ On	□ Off	Short-circuit or overload at the encoder supply or supply voltage too low	• Check the encoder wiring. • Check the loads connected to the encoder supply. • Check the supply voltage.

ChannelLEDs

TheDIm LEDs indicate the current level of the associated signals. The LEDs of the digital outputs DQm indicate the desired state.

The flashing frequency of the channel LEDs is limited to approximately 14 Hz. If higher frequencies are present, the channel LEDs will flash at 14 Hz instead of indicating the current status.

Table 5- 3 Status displays DIm/DQm

LEDs DIm/DQm	Meaning
□ Off	Digital input / digital output at 0 level
■ On	Digital input / digital output at 1 level

5.2 Trigger a diagnostic interrupt

Enabling the diagnostic interrupts

You enable the diagnostic interrupts at the basic parameters.

The technology module can trigger the following diagnostic interrupts:

Table 5- 4 Possible diagnostic interrupts

Diagnostic interrupt	Monitoring
• Internal error • Watchdog tripped. Module is defective.	Monitoring is always active. A diagnostic interrupt is triggered each time an error is detected.
• Error • Load voltage missing • Module temporarily unavailable • Short-circuit or overload at encoder supply • Error at the digital outputs • Supply voltage error • Overtemperature	Monitoring is always active. A detected error only triggers a diagnostic interrupt if "Enable diagnostic interrupts" has been enabled in the device parameters. The diagnostic interrupts are not enabled in the default setting.

Reactions to a diagnostic interrupt

The following happens when an event occurs that triggers a diagnostic interrupt:

- The DIAG LED flashes red.

  Once you have remedied the error, the DIAG LED goes out.
- The S7-1500 CPU interrupts processing of the user program. The diagnostic interrupt OB (e.g. OB 82) is called. The event that triggered the interrupt is entered in the start information of the diagnostic interrupt OB.
- The S7-1500 CPU remains in RUN even if no diagnostic interrupt OB is present in the CPU. The technology module continues working unchanged if this is possible despite the error.

Detailed information on the error event is available with the instruction "RALRM" (read additional interrupt information).

5.3 Diagnostic alarms

Diagnostic alarms

If a diagnostic alarm is pending, the DIAG LED flashes red.

The diagnostics are displayed as plain text in STEP 7 (TIA Portal) in the online and diagnostics view. You can evaluate the error codes with the user program.

The technology module only has one channel as far as diagnostics is concerned. Channel number "0" is therefore displayed for each diagnostic with a few exceptions.

The following diagnostics can be signaled:

Table 5- 5 Diagnostic alarms, their meaning and remedies

Diagnostic alarm	Error code	Meaning	To correct or avoid errors
Error	9_H	• Internal module error occurred • Possible cause: Technology module defective	Replace technology module
Load voltage missing*	11_H	• No technology module L+ supply voltage • Possible cause: BaseUnit type wrong	• Check BaseUnit type • Check the wiring of the supply voltage L+ on the BaseUnit
Module temporarily unavailable*	$1F_H$	• No normal operation of the technology module possible • Possible cause: Technology module is performing a firmware update	Wait until technology module is available again
Internal error	100_H	Technology module defective	Replace technology module
Watchdog tripped. Module is defective.	103_H	Firmware error	Run firmware update
		Technology module defective	Replace technology module
Short-circuit or overload at encoder supply	$10E_H$	• Error at encoder supply • Possible causes: – Short-circuit – Overload	• Check encoder wiring • Check consumers connected to encoder supply
Error at the digital outputs	$10F_H$	• Error at the digital outputs • Possible causes: – Short-circuit – Overload	• Check wiring at the digital outputs • Check consumers connected to the digital outputs

Diagnostic alarm	Error code	Meaning	To correct or avoid errors
Supply voltage error*	110_H	• Error at supply voltage L+ • Possible causes: – Low voltage – Wiring of L+ supply voltage defective	• Check the L+ supply voltage • Check the wiring of the supply voltage L+ on the BaseUnit
Overtemperature	506_H	• Short-circuit or overload at the digital outputs or outputs of the encoder supplies • Ambient temperature outside specifications	• Check process wiring • Improve cooling • Check connected loads

* This diagnostic alarm is displayed with the channel number "32768".

Technical specifications

6

	6ES7138-6CG00-0BA0
Product type designation	TM Timer DIDQ 10x24V
General information	
BaseUnits that can be used	BU type A0
Product function	
I&M data	Yes; I&M 0
Engineering with	
STEP 7 TIA Portal can be configured/integrated as of version	V13 Update 3
STEP 7 can be configured/integrated as of version	V5.5 SP3 / -
Supply voltage	
Load voltage L+	
Rated value (DC)	24 V
Low limit of valid range (DC)	19.2 V
High limit of valid range (DC)	28.8 V
Reverse polarity protection	Yes; against destruction
Input current	
Current consumption, max.	50 mA; without load
Encoder supply	
Number of outputs	1
24 V encoder supply	
24 V	Yes; L+ (-0.8 V)
Short-circuit protection	Yes
Output current, max.	500 mA; note derating
Power loss	
Power loss, typ.	1.5 W
Address area	
Occupied address area	
Inputs	26 bytes
Outputs	32 bytes
Digital inputs	
Number of inputs	4
Digital inputs, configurable	Yes
Input characteristics to IEC 61131, Type 3	Yes

	6ES7138-6CG00-0BA0
Digital input functions, configurable	
Digital input with time stamp	Yes
• Number, max.	4
Counter	Yes
• Number, max.	3
Counter for incremental encoder	Yes
• Number, max.	1
Digital input with oversampling	Yes
• Number, max.	4
Hardware enable for digital input	Yes
• Number, max.	1
Hardware enable for digital output	Yes
• Number, max.	3
Input voltage	
Type of input voltage	DC
Rated value, DC	24 V
For signal "0"	-30 V to +5 V
For signal "1"	+11 V to +30 V
Permitted voltage at input, min.	-30 V
Permitted voltage at input, max.	30 V
Input current	
for signal "1", typ.	2.5 mA
Input delay (at rated value of input voltage)	
Minimum pulse width for program reaction	3 µs; with parameter assignment "none"
For standard inputs	
• Configurable	Yes; none / 0.05 / 0.1 / 0.4 / 0.8 ms)
• at "0" to "1", min.	4 µs
• at "1" to "0", min.	4 µs
Cable length	
Cable length shielded, max.	1000 m; depending on sensor, cable quality and edge slope
Cable length unshielded, max.	600 m; depending on sensor, cable quality and edge slope

	6ES7138-6CG00-0BA0
Digital outputs	
Type of digital output	Transistor
Number of outputs	6
M switching	Yes; with high-speed output
Sourcing	Yes
Digital outputs, configurable	Yes
Short-circuit protection	Yes; electronic/thermal
• Response threshold, typ.	1.7 A with standard output; 0.5 A with high-speed output
Limiting of inductive shutdown voltage to	-0.8 V
Control of a digital input	Yes
Digital output functions, configurable	
Digital output with time stamp	Yes
• Number, max.	6
PWM output	Yes
• Number, max.	6
Digital output with oversampling	Yes
• Number, max.	6
Output switching capacity	
With resistive load, max.	0.5 A; 0.1 A with high-speed output
With lamp load, max.	5 W; 1 W with high-speed output
Load resistance range	
Low limit	48 Ω; 240 Ohm with high-speed output
High limit	12 kΩ
Output voltage	
Type of output voltage	DC
for signal "0", max.	1 V; with high-speed output
for signal "1", min.	23.2 V; L+ (-0.8 V)
Output current	
for signal "1" rated value	0.5 A; 0.1 A with high-speed output, note derating
for signal "1" permissible range, max.	0.6 A; 0.12 A with high-speed output, note derating
for signal "1" minimum load current	2 mA
for signal "0" residual current, max.	0.5 mA
Output delay with resistive load	
"0" to "1", max.	1 µs; for high-speed output, 5 µs with standard output
"1" to "0", max.	1 µs; for high-speed output, 6 µs with standard output

	6ES7138-6CG00-0BA0
Switching frequency	
With resistive load, max.	10 kHz
With lamp load, max.	10 Hz
Total current of outputs	
Max. current per module	3.5 A; note derating
Cable length	
Cable length shielded, max.	1000 m; depending on load and cable quality
Cable length unshielded, max.	600 m; depending on load and cable quality
Encoders	
Supported encoders	
Incremental encoder (asymmetric)	Yes
24 V initiator	Yes
2-wire sensor	Yes
• Permitted quiescent current (2-wire sensor), max.	1.5 mA
Encoder signals, incremental encoders (asymmetrical)	
Input voltage	24 V
Input frequency, max.	50 kHz
Counting frequency, max.	200 kHz; with quadruple evaluation
Cable length shielded, max.	600 m; depends on input frequency, encoder and cable quality; max. 200 m with 50 kHz
Incremental encoder with A/B tracks, phase-shifted by 90°	Yes
Pulse encoder	Yes
24 V encoder signal	
• Permitted voltage at input, min.	-30 V
• Permitted voltage at input, max.	30 V
Interface hardware	
Input characteristics to IEC 61131, Type 3	Yes
Isochronous mode	
Isochronous mode (application synchronized until terminal)	Yes
Bus cycle time (TDP), min.	375 µs
Jitter, max.	1 µs
Interrupts/diagnostics/status information	
Activation of substitute values	Yes
Interrupts	
Diagnostic interrupt	Yes
Diagnostic alarms	
Diagnostics	Yes
Monitoring of supply voltage	Yes
Short-circuit	Yes

	6ES7138-6CG00-0BA0
LED diagnostics display	
Monitoring of supply voltage (PWR LED)	Yes, green PWR LED
For module diagnostics	Yes; green / red DIAG LED
Integrated functions	
Number of counters	3
Counting frequency (counters), max.	200 kHz; with quadruple evaluation
Counting functions	
Continuous counting	Yes
Electrical isolation	
Electrical isolation channels	
Between the channels and the backplane bus	Yes
Permitted potential difference	
Between different circuits	75 V DC / 60 V AC (basic isolation)
Isolation	
Isolation tested with	707 V DC (type test)
Ambient conditions	
Operating temperature	
Horizontal installation, min.	0 °C
Horizontal installation, max.	60 °C; note derating
Vertical installation, min.	0 °C
Vertical installation, max.	50 °C; note derating
Distributed operation	
At SIMATIC S7-300	Yes
At SIMATIC S7-400	Yes
At SIMATIC S7-1500	Yes
Dimensions	
Width	15 mm
Weights	
Weight, approx.	45 g

Derating information for standardized total current of outputs

If the digital outputs of the TM Timer DIDQ 10x24V are operated with resistive loads, you should derate the standardized total current of the loads at the outputs of the technology module. The standardized total current is the standardized total of the mean output currents at all digital outputs and encoder supply related to its nominal current in each case.

The following derating curve shows the load capacity of the digital outputs depending on the ambient temperature and mounting position:

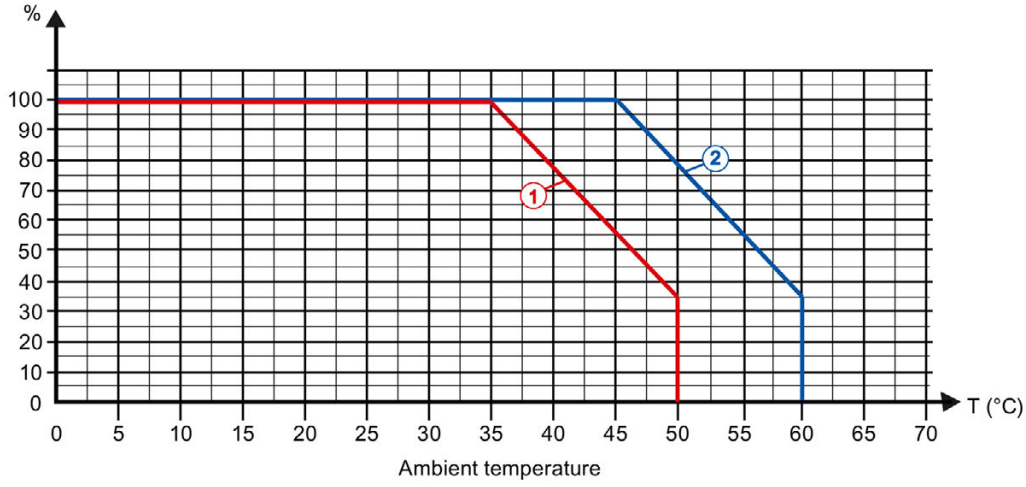

① Vertical installation of the system

② Horizontal installation of the system

Figure 6-1 Standardized total current depending on ambient temperature and mounting position for resistive loads

---

Note

In the following cases, the voltage at the digital inputs and the load current supply L+ must not exceed DC 24 V + 5 %:

- When the system is mounted vertically, as of an ambient temperature of 35 °C
- When the system is mounted horizontally, as of an ambient temperature of 45 °C

Example

The following example shows the calculation of the standardized total current:

Table 6- 1 Calculation of the standardized total current

Digital output	High-speed output (0.1 A)	Output current		
		Nominal value according to parameter assignment	Mean value	Mean value in relation to the nominal value
DQ0	Yes	0.1 A	0.05 A	50 %
DQ1	Yes	0.1 A	0.08 A	80 %
DQ2	No	0.5 A	0.5 A	100 %
DQ3	No	0.5 A	0.1 A	20 %
DQ4	Yes	0.1 A	0.01 A	10 %
DQ5	No	0.5 A	0.15 A	30 %
Encoder supply	—	0.5 A	0.2 A	40 %
Total				330 %
Standardized total current = total / number of outputs = 330 % / 7 outputs				**47 %**

With a standardized total current of 47 % and horizontal mounting of the system, the ambient temperature according to the derating curve may amount to a maximum of approx. 57 °C.

Dimension drawing

See ET 200SP BaseUnits (http://support.automation.siemens.com/WW/view/en/58532597/133300) manual

Parameter data record

A

You may edit the module parameters in RUN. The WRREC instruction is used to transfer the parameters to the module using data record 128.

If errors occur during the transfer or validation of parameters with the WRREC instruction, the module continues operation with the previous parameter assignment. A corresponding error code is then written to the STATUS output parameter. If no errors occur, the STATUS output parameter contains the length of the actually transferred data.

The description of the WRREC instruction and the error codes is available in the STEP 7 online help (TIA Portal).

Structure of data record

The following table shows you the structure of data record 128 for TM Timer DIDQ 10x24V. The values in byte 0 to byte 3 are fixed and may not be changed.

Table A- 1 Parameter data record 128

Bit → / Byte ↓	Bit 7	Bit 6	Bit 5	Bit 4	Bit 3	Bit 2	Bit 1	Bit 0
0...3	Header							
0	Reserved[2)]		Major Version = 0		Minor Version = 1			
1	Length of the parameter data = 36							
2	Reserved[2)]							
3								
4...7	Basic parameters							
4	Reserved[2)]				PWM period for the digital outputs:			
					0000_B: 10 ms			
					0001_B: 5 ms			
					0010_B: 2 ms			
					0011_B: 1 ms			
					0100_B: 0.5 ms			
					0101_B: 0.2 ms			
					0110 to 1111_B: Reserved			
5	Reserved[2)]					Enable diagnostic interrupt[1)]	Reaction to CPU STOP:	
							00_B: Output substitute value	
							01_B: Keep last value	
							10 to 11_B: Reserved	
6	Reserved[2)]							
7								

Bit → / Byte ↓	Bit 7	Bit 6	Bit 5	Bit 4	Bit 3	Bit 2	Bit 1	Bit 0
8...9	**Channel parameters for DI0**							
8	Reserved[2)]		Invert input signal[1]	Reserved[2)]	Operating mode of the digital input:			
					0000_B: Timer-DI			
					0001_B: Reserved			
					0010_B: Oversampling			
					0011_B: Counter			
					0100 to 1111_B: Reserved			
9	Reserved[2)]				Input delay / Filter frequency:			
					0000_B: None			
					0001_B: 0.05 ms			
					0010_B: 0.1 ms			
					0011_B: 0.4 ms			
					0100_B: 0.8 ms			
					0101 to 1110_B: Reserved			
					1111_B: 50 kHz			
10...11	**Channel parameters for DI1:** See bytes 8 and 9							
12...13	**Channel parameters for DI2**							
12	Reserved[2)]		Invert input signal[1]	HW enable with DI3[1]	Operating mode of the digital input:			
					0000_B: Timer-DI			
					0001_B: Reserved			
					0010_B: Oversampling			
					0011_B: Counter			
					0100_B: Incremental encoder (A, B phase-shifted)			
					0101 to 1111_B: Reserved			
13	Reserved[2)]				Input delay / Filter frequency:			
					0000_B: None			
					0001_B: 0.05 ms			
					0010_B: 0.1 ms			
					0011_B: 0.4 ms			
					0100_B: 0.8 ms			
					0101 to 1110_B: Reserved			
					1111_B: 50 kHz			
14...15	**Channel parameters for DI3**							
14	Reserved[2)]		Invert input signal[1]	Reserved[2)]	Operating mode of the digital input:			
					0000_B: Timer-DI			
					0001_B: Reserved			
					0010_B: Oversampling			
					0011 to 1111_B: Reserved			

Bit → / Byte ↓	Bit 7	Bit 6	Bit 5	Bit 4	Bit 3	Bit 2	Bit 1	Bit 0
15	Reserved[2]				Input delay:			
					0000_B: None			
					0001_B: 0.05 ms			
					0010_B: 0.1 ms			
					0011_B: 0.4 ms			
					0100_B: 0.8 ms			
					0101 to 1111_B: Reserved			
16...17	Channel parameters for DQ0							
16	High-speed output (0.1 A)[1]	Substitute value	Invert output signal[1]	HW enable with next digital input[1]	Operating mode of the digital output:			
					0000 to 0111_B: Reserved			
					1000_B: Timer DQ			
					1001_B: Reserved			
					1010_B: Oversampling			
					1011_B: PWM			
					1100 to 1111_B: Reserved			
17	Reserved[2]							
18...19	Channel parameters for DQ1: See bytes 16 and 17							
20...21	Channel parameters for DQ2: See bytes 16 and 17							
22...23	Channel parameters for DQ3							
22	High-speed output (0.1 A)[1]	Substitute value	Invert output signal[1]	Reserved[2]	Operating mode of the digital output:			
					0000 to 0111_B: Reserved			
					1000_B: Timer DQ			
					1001_B: Reserved			
					1010_B: Oversampling			
					1011_B: PWM			
					1100 to 1111_B: Reserved			
23	Reserved[2]							
24...25	Channel parameters for DQ4: See bytes 22 and 23							
26...27	Channel parameters for DQ5: See bytes 22 and 23							
28...39	Reserved[2]							

[1] You enable a specific parameter by setting the corresponding bit to 1.

[2] Must be set to 0.

Counting

The following table shows the properties for counting that you can set in the channel parameters of the respective digital input:

Operating mode for counting	Usable digital inputs	"Invert input signal" set to...	
		0	1
Counter (0011_B)	• DI0 • DI1 • DI2	Counting of **rising** edges	Counting of **falling** edges
Incremental encoder (A, B phase-shifted) (0100_B)	DI2 with DI3 (all bits of the channel parameters for DI3 are set to 0)	Counting direction **not inverted**	Counting direction **inverted**

Hardware enable (HW enable)

You can use a hardware enable by an enable input for the operating modes "Timer DI" and "Timer DQ". You set a hardware enable with bit 4 of the respective channel parameter.

You can set a hardware enable for the following inputs and outputs:

Digital input / digital output	Hardware enable by digital input...
DI2	DI3
DQ0	DI0
DQ1	DI1
DQ2	DI2

You set a hardware enable with the channel parameters of the enable input "Operating mode" and "Invert" signal input:

Operating mode	"Invert input signal" set to...	
	0	1
Oversampling (0010_B)	Hardware enable by **High** level	Hardware enable by **Low** level
Timer DI (0000_B)	When using the SIMOTION control system only	

Input filter

The following overview shows the input filters that can be set for specific operating modes of a digital input:

Table A- 2 Setting options for the input filter

Operating mode of the digital input	Type of input filter	Assignable values
• Timer DI (0000_B) • Oversampling (0010_B)	Input delay	• None • 0.05 ms • 0.1 ms • 0.4 ms • 0.8 ms
• Counter (0011_B) • Incremental encoder (A, B phase-shifted) (0100_B)	Filter frequency	50 kHz (cannot be changed)

Open Source Software

B

For Resellers: In order to avoid infringements of the license conditions by the reseller or the buyer, the instructions and license conditions provided here must be passed on to the buyers.

License Conditions and Disclaimers for Open Source Software and other licensing software

The Open Source software listed below is used in unmodified form or in a form we have modified as well as other license software listed below in the "digital modules, analog modules, technology modules, communication modules and power supply modules of the SIMATIC S7-1500, ET 200SP" Copyright Siemens AG, 2013-2014 (hereinafter referred to as "Product").

Liability for Open Source Software

The Open Source software is provided free of charge. We are liable for the Product including the Open Source software contained in it pursuant to the license conditions applicable to the Product. We explicitly reject any liability for the use of Open Source software beyond the program sequence intended for the Product. Furthermore, any liability for defects resulting from modifications to the Open Source software is excluded.

We do not provide any technical support for the Product if it has been modified.

Please read the license conditions and copyright information of Open Source software as well as other licensing software:

Component	Open Source Software[Yes/No]	Acknowledgements	Copyright Information / File
Dinkumware C/C++ Library - 5.01	NO		LICENSE AND COPYRIGHT INFORMATION FOR COMPONENT DINKUMWARE C/C++ LIBRARY - 5.01
GNU GCC libstdc++ / libsupc++ - 4.4.1	YES		LICENSE AND COPYRIGHT INFORMATION FOR COMPONENT GNU GCC LIBSTDC++ / LIBSUPC++ - 4.4.1
libgcc - 4.4.1	YES		LICENSE AND COPYRIGHT INFORMATION FOR COMPONENT LIBGCC - 4.4.1

Commercial Software: Dinkumware C/C++ Library - 5.01

Enclosed you'll find the license conditions and copyright notices applicable for Commercial Software Dinkumware C/C++ Library - 5.01

License conditions:

1 Copyright (c) 1991-1999 Unicode, Inc. All Rights reserved. This file is provided as-is by Unicode, Inc. (The Unicode Consortium).No claims are made as to fitness for any particular purpose. Nowarranties of any kind are expressed or implied. The recipientagrees to determine applicability of information provided. If thisfile has been provided on optical media by Unicode, Inc., the soleremedy for any claim will be exchange of defective media within 90days of receipt.Unicode, Inc. hereby grants the right to freely use the informationsupplied in this file in the creation of products supporting theUnicode Standard, and to make copies of this file in any form forinternal or external distribution as long as this notice remainsattached.

2 © Copyright William E. Kempf 2001 Permission to use, copy, modify, distribute and sell this software and its documentation for any purpose is hereby granted without fee, provided that the above copyright notice appear in all copies and that both that copyright notice and this permission notice appear in supporting documentation. William E. Kempf makes no representations about the suitability of this software for any purpose. It is provided "as is" without express or implied warranty.

3 Copyright © 1994 Hewlett-Packard CompanyPermission to use, copy, modify, distribute and sell this software and its documentation for any purpose is hereby granted without fee, provided that the above copyright notice appear in all copies and that both that copyright notice and this permission notice appear in supporting documentation. Hewlett-Packard Company makes no representations about the suitability of this software for any purpose. It is provided ``as is'' without express or implied warranty.

Copyrights:

copyright 1992 - 2006 by p.j. plauger and jim brodie. all rights reserved.

copyright 1992-2006 by p.j. plauger. all rights reserved.ip

copyright 1992-2006 by p.j. plauger. portions derived from work copyright 1994 by hewlettpackard company. all rights reserved

Copyright 1992-2006 by dinkumware, ltd. all rights reserved

copyright 1992-2006 by dinkumware, ltd. portions derived from work copyright 2001 by william e. kempf. all rights reserved

copyright 1994 hewlettpackard company

copyright 1994 by hewlettpackard company

copyright william e. kempf 2001

copyright 1989-2006 by p.j. plauger. all rights reserved

copyright (c) by p.j. plauger. all rights reserved.

copyright (c) by dinkumware, ltd. all rights reserved.

copyright (c) unicode, inc. all rights reserved.

(c) copyright william e. kempf 2001

copyright (c) hewlettpackard company

copyright (c) by p.j. plauger. all rights reserved.

copyright 2006 by dinkumware, ltd.

copyright (c) by p.j. plauger, licensed by dinkumware, ltd. all rights reserved.

the dinkum cec++ library reference is copyright (c) by p.j. plauger. this code is protected by copyright. all rights reserved.

the dinkum cc++ library reference is copyright (c) by p.j. plauger. this code is protected by copyright. all rights reserved.

dinkum compleat library, vc++ package (vc++ compilers only) the dinkum compleat library and the dinkum compleat library reference are copyright (c) by p.j. plauger. all rights reserved.

Open Source Software: GNU GCC libstdc++ / libsupc++ - 4.4.1

Enclosed you'll find the license conditions and copyright notices applicable for Open Source Software GNU GCC libstdc++ / libsupc++ - 4.4.1

License conditions:

1 License

There are two licenses affecting GNU libstdc++: one for the code, and one for the documentation.

There is a license section in the FAQ regarding common questions. If you have more questions, ask the FSF or the gcc mailing list.
The Code: GPL

The source code is distributed under the GNU General Public License version 3, with the addition under section 7 of an exception described in the “GCC Runtime Library Exception, version 3.1” as follows (or see the file COPYING.RUNTIME):

GCC RUNTIME LIBRARY EXCEPTION

Version 3.1, 31 March 2009

Copyright (C) 2009 Free Software Foundation, Inc.

Everyone is permitted to copy and distribute verbatim copies of this license document, but changing it is not allowed.

This GCC Runtime Library Exception ("Exception") is an additional permission under section 7 of the GNU General Public License, version 3 ("GPLv3"). It applies to a given file (the "Runtime Library") that bears a notice placed by the copyright holder of the file stating that the file is governed by GPLv3 along with this Exception.

When you use GCC to compile a program, GCC may combine portions of certain GCC header files and runtime libraries with the compiled program. The purpose of this Exception is to allow compilation of non-GPL (including proprietary) programs to use, in this way, the header files and runtime libraries covered by this Exception.

0. Definitions.

A file is an "Independent Module" if it either requires the Runtime Library for execution after a Compilation Process, or makes use of an interface provided by the Runtime Library, but is not otherwise based on the Runtime Library.

"GCC" means a version of the GNU Compiler Collection, with or without modifications, governed by version 3 (or a specified later version) of the GNU General Public License (GPL) with the option of using any subsequent versions published by the FSF.

"GPL-compatible Software" is software whose conditions of propagation, modification and use would permit combination with GCC in accord with the license of GCC.

"Target Code" refers to output from any compiler for a real or virtual target processor architecture, in executable form or suitable for input to an assembler, loader, linker and/or execution phase. Notwithstanding that, Target Code does not include data in any format that is used as a compiler intermediate representation, or used for producing a compiler intermediate representation.

The "Compilation Process" transforms code entirely represented in non-intermediate languages designed for human-written code, and/or in Java Virtual Machine byte code, into Target Code. Thus, for example, use of source code generators and preprocessors need not be considered part of the Compilation Process, since the Compilation Process can be understood as starting with the output of the generators or preprocessors.

A Compilation Process is "Eligible" if it is done using GCC, alone or with other GPL-compatible software, or if it is done without using any work based on GCC. For example, using non-GPL-compatible Software to optimize any GCC intermediate representations would not qualify as an Eligible Compilation Process.

1. Grant of Additional Permission.

You have permission to propagate a work of Target Code formed by combining the Runtime Library with Independent Modules, even if such propagation would otherwise violate the terms of GPLv3, provided that all Target Code was generated by Eligible Compilation Processes. You may then convey such a combination under terms of your choice, consistent with the licensing of the Independent Modules.

2. No Weakening of GCC Copyleft.

The availability of this Exception does not imply any general presumption that third-party software is unaffected by the copyleft requirements of the license of GCC.

Hopefully that text is self-explanatory. If it isn't, you need to speak to your lawyer, or the Free Software Foundation.
The Documentation: GPL, FDL

The documentation shipped with the library and made available over the web, excluding the pages generated from source comments, are copyrighted by the Free Software Foundation, and placed under the GNU Free Documentation License version 1.2. There are no Front-Cover Texts, no Back-Cover Texts, and no Invariant Sections.

For documentation generated by doxygen or other automated tools via processing source code comments and markup, the original source code license applies to the generated files. Thus, the doxygen documents are licensed GPL.

If you plan on making copies of the documentation, please let us know. We can probably offer suggestions.

2 This library is free
software; you can redistribute it and/or modify it under the
terms of the GNU General Public License as published by the
Free Software Foundation; either version 3, or (at your option)
any later version.
This library is distributed in the hope that it will be useful,
but WITHOUT ANY WARRANTY; without even the implied warranty of
MERCHANTABILITY or FITNESS FOR A PARTICULAR PURPOSE. See the
GNU General Public License for more details.
Under Section 7 of GPL version 3, you are granted additional
permissions described in the GCC Runtime Library Exception, version
3.1, as published by the Free Software Foundation.
You should have received a copy of the GNU General Public License and
a copy of the GCC Runtime Library Exception along with this program;
see the files COPYING3 and COPYING.RUNTIME respectively. If not, see
<http://www.gnu.org/licenses/>.

3 // This file is part of the GNU ISO C++ Library. This library is free
// software; you can redistribute it and/or modify it under the
// terms of the GNU General Public License as published by the
// Free Software Foundation; either version 3, or (at your option)
// any later version.
// This library is distributed in the hope that it will be useful,
// but WITHOUT ANY WARRANTY; without even the implied warranty of
// MERCHANTABILITY or FITNESS FOR A PARTICULAR PURPOSE. See the
// GNU General Public License for more details.
// Under Section 7 of GPL version 3, you are granted additional
// permissions described in the GCC Runtime Library Exception, version
// 3.1, as published by the Free Software Foundation.
// You should have received a copy of the GNU General Public License and
// a copy of the GCC Runtime Library Exception along with this program;
// see the files COPYING3 and COPYING.RUNTIME respectively. If not, see
// <http://www.gnu.org/licenses/>.
// (C) Copyright Jeremy Siek 2000. Permission to copy, use, modify,
// sell and distribute this software is granted provided this
// copyright notice appears in all copies. This software is provided
// "as is" without express or implied warranty, and with no claim as
// to its suitability for any purpose.

4 // This file is part of the GNU ISO C++ Library. This library is free
// software; you can redistribute it and/or modify it under the
// terms of the GNU General Public License as published by the
// Free Software Foundation; either version 3, or (at your option)
// any later version.
// This library is distributed in the hope that it will be useful,
// but WITHOUT ANY WARRANTY; without even the implied warranty of
// MERCHANTABILITY or FITNESS FOR A PARTICULAR PURPOSE. See the
// GNU General Public License for more details.
// Under Section 7 of GPL version 3, you are granted additional
// permissions described in the GCC Runtime Library Exception, version
// 3.1, as published by the, 2009 Free Software Foundation.
// You should have received a copy of the GNU General Public License and
// a copy of the GCC Runtime Library Exception along with this program;
// see the files COPYING3 and COPYING.RUNTIME respectively. If not, see
// <http://www.gnu.org/licenses/>.
/*
*
* Copyright (c) 1994
* Hewlett-Packard Company
*
* Permission to use, copy, modify, distribute and sell this software
* and its documentation for any purpose is hereby granted without fee,
* provided that the above copyright notice appear in all copies and
* that both that copyright notice and this permission notice appear
* in supporting documentation. Hewlett-Packard Company makes no
* representations about the suitability of this software for any
* purpose. It is provided "as is" without express or implied warranty.
*
* Copyright (c) 1996,1997
* Silicon Graphics
*
* Permission to use, copy, modify, distribute and sell this software
* and its documentation for any purpose is hereby granted without fee,
* provided that the above copyright notice appear in all copies and
* that both that copyright notice and this permission notice appear
* in supporting documentation. Silicon Graphics makes no
* representations about the suitability of this software for any
* purpose. It is provided "as is" without express or implied warranty.

5 // This file is part of the GNU ISO C++ Library. This library is free
// software; you can redistribute it and/or modify it under the
// terms of the GNU General Public License as published by the
// Free Software Foundation; either version 3, or (at your option)
// any later version.
// This library is distributed in the hope that it will be useful,
// but WITHOUT ANY WARRANTY; without even the implied warranty of
// MERCHANTABILITY or FITNESS FOR A PARTICULAR PURPOSE. See the
// GNU General Public License for more details.
// Under Section 7 of GPL version 3, you are granted additional
// permissions described in the GCC Runtime Library Exception, version
// 3.1, as published by the Free Software Foundation.
// You should have received a copy of the GNU General Public License and
// a copy of the GCC Runtime Library Exception along with this program;
// see the files COPYING3 and COPYING.RUNTIME respectively. If not, see
// <http://www.gnu.org/licenses/>.
/*
*
* Copyright (c) 1996,1997
* Silicon Graphics Computer Systems, Inc.
*
* Permission to use, copy, modify, distribute and sell this software
* and its documentation for any purpose is hereby granted without fee,
* provided that the above copyright notice appear in all copies and
* that both that copyright notice and this permission notice appear
* in supporting documentation. Silicon Graphics makes no
* representations about the suitability of this software for any
* purpose. It is provided "as is" without express or implied warranty.
*
*
* Copyright (c) 1994
* Hewlett-Packard Company
*
* Permission to use, copy, modify, distribute and sell this software
* and its documentation for any purpose is hereby granted without fee,
* provided that the above copyright notice appear in all copies and
* that both that copyright notice and this permission notice appear
* in supporting documentation. Hewlett-Packard Company makes no
* representations about the suitability of this software for any
* purpose. It is provided "as is" without express or implied warranty.

6 This library is free
// software; you can redistribute it and/or modify it under the terms
// of the GNU General Public License as published by the Free Software
// Foundation; either version 3, or (at your option) any later
// version.
// This library is distributed in the hope that it will be useful, but
// WITHOUT ANY WARRANTY; without even the implied warranty of
// MERCHANTABILITY or FITNESS FOR A PARTICULAR PURPOSE. See the GNU
// General Public License for more details.
// Under Section 7 of GPL version 3, you are granted additional
// permissions described in the GCC Runtime Library Exception, version
// 3.1, as published by the Free Software Foundation.
// You should have received a copy of the GNU General Public License and
// a copy of the GCC Runtime Library Exception along with this program;
// see the files COPYING3 and COPYING.RUNTIME respectively. If not, see
// <http://www.gnu.org/licenses/>.
// Copyright (C) 2004 Ami Tavory and Vladimir Dreizin, IBM-HRL.
// Permission to use, copy, modify, sell, and distribute this software
// is hereby granted without fee, provided that the above copyright
// notice appears in all copies, and that both that copyright notice
// and this permission notice appear in supporting documentation. None
// of the above authors, nor IBM Haifa Research Laboratories, make any
// representation about the suitability of this software for any
// purpose. It is provided "as is" without express or implied
// warranty.
/**
* @file splay_tree_.hpp
* Contains an implementation class for splay_tree_.
*/
/*
* This implementation uses an idea from the SGI STL (using a "header" node
* which is needed for efficient iteration). Following is the SGI STL
* copyright.
*
* Copyright (c) 1996,1997
* Silicon Graphics Computer Systems, Inc.
*
* Permission to use, copy, modify, distribute and sell this software
* and its documentation for any purpose is hereby granted without fee,
* provided that the above copyright notice appear in all copies and
* that both that copyright notice and this permission notice appear
* in supporting documentation. Silicon Graphics makes no
* representations about the suitability of this software for any
* purpose. It is provided "as is" without express or implied warranty.
*
*
* Copyright (c) 1994
* Hewlett-Packard Company
*

```
* Permission to use, copy, modify, distribute and sell this software
* and its documentation for any purpose is hereby granted without fee,
* provided that the above copyright notice appear in all copies and
* that both that copyright notice and this permission notice appear
* in supporting documentation. Hewlett-Packard Company makes no
* representations about the suitability of this software for any
* purpose. It is provided "as is" without express or implied warranty.
```

7 This library is free

```
// software; you can redistribute it and/or modify it under the
// terms of the GNU General Public License as published by the
// Free Software Foundation; either version 3, or (at your option)
// any later version.
// This library is distributed in the hope that it will be useful,
// but WITHOUT ANY WARRANTY; without even the implied warranty of
// MERCHANTABILITY or FITNESS FOR A PARTICULAR PURPOSE. See the
// GNU General Public License for more details.
// Under Section 7 of GPL version 3, you are granted additional
// permissions described in the GCC Runtime Library Exception, version
// 3.1, as published by the Free Software Foundation.
// You should have received a copy of the GNU General Public License and
// a copy of the GCC Runtime Library Exception along with this program;
// see the files COPYING3 and COPYING.RUNTIME respectively. If not, see
// <http://www.gnu.org/licenses/>.
/*
* Copyright (c) 1997
* Silicon Graphics Computer Systems, Inc.
*
* Permission to use, copy, modify, distribute and sell this software
* and its documentation for any purpose is hereby granted without fee,
* provided that the above copyright notice appear in all copies and
* that both that copyright notice and this permission notice appear
* in supporting documentation. Silicon Graphics makes no
* representations about the suitability of this software for any
* purpose. It is provided "as is" without express or implied warranty.
```

8 Verbatim copying and distribution of this entire article are permitted worldwide, without royalty, in any medium, provided this notice is preserved.

9 GNU GENERAL PUBLIC LICENSE
Version 3, 29 June 2007

Copyright (C) 2007 Free Software Foundation, Inc. <http://fsf.org/>
Everyone is permitted to copy and distribute verbatim copies
of this license document, but changing it is not allowed.

Preamble

The GNU General Public License is a free, copyleft license for
software and other kinds of works.

The licenses for most software and other practical works are designed
to take away your freedom to share and change the works. By contrast,
the GNU General Public License is intended to guarantee your freedom to
share and change all versions of a program--to make sure it remains free
software for all its users. We, the Free Software Foundation, use the
GNU General Public License for most of our software; it applies also to
any other work released this way by its authors. You can apply it to
your programs, too.

When we speak of free software, we are referring to freedom, not
price. Our General Public Licenses are designed to make sure that you
have the freedom to distribute copies of free software (and charge for
them if you wish), that you receive source code or can get it if you
want it, that you can change the software or use pieces of it in new
free programs, and that you know you can do these things.

To protect your rights, we need to prevent others from denying you
these rights or asking you to surrender the rights. Therefore, you have
certain responsibilities if you distribute copies of the software, or if
you modify it: responsibilities to respect the freedom of others.

For example, if you distribute copies of such a program, whether
gratis or for a fee, you must pass on to the recipients the same
freedoms that you received. You must make sure that they, too, receive
or can get the source code. And you must show them these terms so they
know their rights.

Developers that use the GNU GPL protect your rights with two steps:
(1) assert copyright on the software, and (2) offer you this License
giving you legal permission to copy, distribute and/or modify it.

For the developers' and authors' protection, the GPL clearly explains
that there is no warranty for this free software. For both users' and
authors' sake, the GPL requires that modified versions be marked as
changed, so that their problems will not be attributed erroneously to
authors of previous versions.

Some devices are designed to deny users access to install or run modified versions of the software inside them, although the manufacturer can do so. This is fundamentally incompatible with the aim of protecting users' freedom to change the software. The systematic pattern of such abuse occurs in the area of products for individuals to use, which is precisely where it is most unacceptable. Therefore, we have designed this version of the GPL to prohibit the practice for those products. If such problems arise substantially in other domains, we stand ready to extend this provision to those domains in future versions of the GPL, as needed to protect the freedom of users.

Finally, every program is threatened constantly by software patents. States should not allow patents to restrict development and use of software on general-purpose computers, but in those that do, we wish to avoid the special danger that patents applied to a free program could make it effectively proprietary. To prevent this, the GPL assures that patents cannot be used to render the program non-free.

The precise terms and conditions for copying, distribution and modification follow.

TERMS AND CONDITIONS

0. Definitions.

"This License" refers to version 3 of the GNU General Public License.

"Copyright" also means copyright-like laws that apply to other kinds of works, such as semiconductor masks.

"The Program" refers to any copyrightable work licensed under this License. Each licensee is addressed as "you". "Licensees" and "recipients" may be individuals or organizations.

To "modify" a work means to copy from or adapt all or part of the work in a fashion requiring copyright permission, other than the making of an exact copy. The resulting work is called a "modified version" of the earlier work or a work "based on" the earlier work.

A "covered work" means either the unmodified Program or a work based on the Program.

To "propagate" a work means to do anything with it that, without permission, would make you directly or secondarily liable for infringement under applicable copyright law, except executing it on a computer or modifying a private copy. Propagation includes copying, distribution (with or without modification), making available to the public, and in some countries other activities as well.

To "convey" a work means any kind of propagation that enables other parties to make or receive copies. Mere interaction with a user through a computer network, with no transfer of a copy, is not conveying.

An interactive user interface displays "Appropriate Legal Notices" to the extent that it includes a convenient and prominently visible feature that (1) displays an appropriate copyright notice, and (2) tells the user that there is no warranty for the work (except to the extent that warranties are provided), that licensees may convey the work under this License, and how to view a copy of this License. If the interface presents a list of user commands or options, such as a menu, a prominent item in the list meets this criterion.

1. Source Code.

The "source code" for a work means the preferred form of the work for making modifications to it. "Object code" means any non-source form of a work.

A "Standard Interface" means an interface that either is an official standard defined by a recognized standards body, or, in the case of interfaces specified for a particular programming language, one that is widely used among developers working in that language.

The "System Libraries" of an executable work include anything, other than the work as a whole, that (a) is included in the normal form of packaging a Major Component, but which is not part of that Major Component, and (b) serves only to enable use of the work with that Major Component, or to implement a Standard Interface for which an implementation is available to the public in source code form. A "Major Component", in this context, means a major essential component (kernel, window system, and so on) of the specific operating system (if any) on which the executable work runs, or a compiler used to produce the work, or an object code interpreter used to run it.

The "Corresponding Source" for a work in object code form means all the source code needed to generate, install, and (for an executable work) run the object code and to modify the work, including scripts to control those activities. However, it does not include the work's System Libraries, or general-purpose tools or generally available free programs which are used unmodified in performing those activities but which are not part of the work. For example, Corresponding Source includes interface definition files associated with source files for the work, and the source code for shared libraries and dynamically linked subprograms that the work is specifically designed to require, such as by intimate data communication or control flow between those subprograms and other parts of the work.

The Corresponding Source need not include anything that users can regenerate automatically from other parts of the Corresponding Source.

The Corresponding Source for a work in source code form is that same work.

2. Basic Permissions.

All rights granted under this License are granted for the term of copyright on the Program, and are irrevocable provided the stated conditions are met. This License explicitly affirms your unlimited permission to run the unmodified Program. The output from running a covered work is covered by this License only if the output, given its content, constitutes a covered work. This License acknowledges your rights of fair use or other equivalent, as provided by copyright law.

You may make, run and propagate covered works that you do not convey, without conditions so long as your license otherwise remains in force. You may convey covered works to others for the sole purpose of having them make modifications exclusively for you, or provide you with facilities for running those works, provided that you comply with the terms of this License in conveying all material for which you do not control copyright. Those thus making or running the covered works for you must do so exclusively on your behalf, under your direction and control, on terms that prohibit them from making any copies of your copyrighted material outside their relationship with you.

Conveying under any other circumstances is permitted solely under the conditions stated below. Sublicensing is not allowed; section 10 makes it unnecessary.

3. Protecting Users' Legal Rights From Anti-Circumvention Law.

No covered work shall be deemed part of an effective technological measure under any applicable law fulfilling obligations under article 11 of the WIPO copyright treaty adopted on 20 December 1996, or similar laws prohibiting or restricting circumvention of such measures.

When you convey a covered work, you waive any legal power to forbid circumvention of technological measures to the extent such circumvention is effected by exercising rights under this License with respect to the covered work, and you disclaim any intention to limit operation or modification of the work as a means of enforcing, against the work's users, your or third parties' legal rights to forbid circumvention of technological measures.

4. Conveying Verbatim Copies.

You may convey verbatim copies of the Program's source code as you receive it, in any medium, provided that you conspicuously and appropriately publish on each copy an appropriate copyright notice; keep intact all notices stating that this License and any non-permissive terms added in accord with section 7 apply to the code; keep intact all notices of the absence of any warranty; and give all recipients a copy of this License along with the Program.

You may charge any price or no price for each copy that you convey, and you may offer support or warranty protection for a fee.

5. Conveying Modified Source Versions.

You may convey a work based on the Program, or the modifications to produce it from the Program, in the form of source code under the terms of section 4, provided that you also meet all of these conditions:

a) The work must carry prominent notices stating that you modified it, and giving a relevant date.

b) The work must carry prominent notices stating that it is released under this License and any conditions added under section 7. This requirement modifies the requirement in section 4 to "keep intact all notices".

c) You must license the entire work, as a whole, under this License to anyone who comes into possession of a copy. This License will therefore apply, along with any applicable section 7 additional terms, to the whole of the work, and all its parts, regardless of how they are packaged. This License gives no permission to license the work in any other way, but it does not invalidate such permission if you have separately received it.

d) If the work has interactive user interfaces, each must display Appropriate Legal Notices; however, if the Program has interactive interfaces that do not display Appropriate Legal Notices, your work need not make them do so.

A compilation of a covered work with other separate and independent works, which are not by their nature extensions of the covered work, and which are not combined with it such as to form a larger program, in or on a volume of a storage or distribution medium, is called an "aggregate" if the compilation and its resulting copyright are not used to limit the access or legal rights of the compilation's users beyond what the individual works permit. Inclusion of a covered work in an aggregate does not cause this License to apply to the other parts of the aggregate.

6. Conveying Non-Source Forms.

You may convey a covered work in object code form under the terms of sections 4 and 5, provided that you also convey the machine-readable Corresponding Source under the terms of this License, in one of these ways:

a) Convey the object code in, or embodied in, a physical product (including a physical distribution medium), accompanied by the Corresponding Source fixed on a durable physical medium customarily used for software interchange.

b) Convey the object code in, or embodied in, a physical product (including a physical distribution medium), accompanied by a written offer, valid for at least three years and valid for as long as you offer spare parts or customer support for that product model, to give anyone who possesses the object code either (1) a copy of the Corresponding Source for all the software in the product that is covered by this License, on a durable physical medium customarily used for software interchange, for a price no more than your reasonable cost of physically performing this conveying of source, or (2) access to copy the Corresponding Source from a network server at no charge.

c) Convey individual copies of the object code with a copy of the written offer to provide the Corresponding Source. This alternative is allowed only occasionally and noncommercially, and only if you received the object code with such an offer, in accord with subsection 6b.

d) Convey the object code by offering access from a designated place (gratis or for a charge), and offer equivalent access to the Corresponding Source in the same way through the same place at no further charge. You need not require recipients to copy the Corresponding Source along with the object code. If the place to copy the object code is a network server, the Corresponding Source may be on a different server (operated by you or a third party) that supports equivalent copying facilities, provided you maintain clear directions next to the object code saying where to find the Corresponding Source. Regardless of what server hosts the Corresponding Source, you remain obligated to ensure that it is available for as long as needed to satisfy these requirements.

e) Convey the object code using peer-to-peer transmission, provided you inform other peers where the object code and Corresponding Source of the work are being offered to the general public at no charge under subsection 6d.

A separable portion of the object code, whose source code is excluded from the Corresponding Source as a System Library, need not be included in conveying the object code work.

A "User Product" is either (1) a "consumer product", which means any tangible personal property which is normally used for personal, family, or household purposes, or (2) anything designed or sold for incorporation into a dwelling. In determining whether a product is a consumer product, doubtful cases shall be resolved in favor of coverage. For a particular product received by a particular user, "normally used" refers to a typical or common use of that class of product, regardless of the status of the particular user or of the way in which the particular user actually uses, or expects or is expected to use, the product. A product is a consumer product regardless of whether the product has substantial commercial, industrial or non-consumer uses, unless such uses represent the only significant mode of use of the product.

"Installation Information" for a User Product means any methods, procedures, authorization keys, or other information required to install and execute modified versions of a covered work in that User Product from a modified version of its Corresponding Source. The information must suffice to ensure that the continued functioning of the modified object code is in no case prevented or interfered with solely because modification has been made.

If you convey an object code work under this section in, or with, or specifically for use in, a User Product, and the conveying occurs as part of a transaction in which the right of possession and use of the User Product is transferred to the recipient in perpetuity or for a fixed term (regardless of how the transaction is characterized), the Corresponding Source conveyed under this section must be accompanied by the Installation Information. But this requirement does not apply if neither you nor any third party retains the ability to install modified object code on the User Product (for example, the work has been installed in ROM).

The requirement to provide Installation Information does not include a requirement to continue to provide support service, warranty, or updates for a work that has been modified or installed by the recipient, or for the User Product in which it has been modified or installed. Access to a network may be denied when the modification itself materially and adversely affects the operation of the network or violates the rules and protocols for communication across the network.

Corresponding Source conveyed, and Installation Information provided, in accord with this section must be in a format that is publicly documented (and with an implementation available to the public in source code form), and must require no special password or key for unpacking, reading or copying.

7. Additional Terms.

"Additional permissions" are terms that supplement the terms of this License by making exceptions from one or more of its conditions. Additional permissions that are applicable to the entire Program shall be treated as though they were included in this License, to the extent that they are valid under applicable law. If additional permissions apply only to part of the Program, that part may be used separately under those permissions, but the entire Program remains governed by this License without regard to the additional permissions.

When you convey a copy of a covered work, you may at your option remove any additional permissions from that copy, or from any part of it. (Additional permissions may be written to require their own removal in certain cases when you modify the work.) You may place additional permissions on material, added by you to a covered work, for which you have or can give appropriate copyright permission.

Notwithstanding any other provision of this License, for material you add to a covered work, you may (if authorized by the copyright holders of that material) supplement the terms of this License with terms:

a) Disclaiming warranty or limiting liability differently from the terms of sections 15 and 16 of this License; or

b) Requiring preservation of specified reasonable legal notices or author attributions in that material or in the Appropriate Legal Notices displayed by works containing it; or

c) Prohibiting misrepresentation of the origin of that material, or requiring that modified versions of such material be marked in reasonable ways as different from the original version; or

d) Limiting the use for publicity purposes of names of licensors or authors of the material; or

e) Declining to grant rights under trademark law for use of some trade names, trademarks, or service marks; or

f) Requiring indemnification of licensors and authors of that material by anyone who conveys the material (or modified versions of it) with contractual assumptions of liability to the recipient, for any liability that these contractual assumptions directly impose on those licensors and authors.

All other non-permissive additional terms are considered "further restrictions" within the meaning of section 10. If the Program as you received it, or any part of it, contains a notice stating that it is governed by this License along with a term that is a further restriction, you may remove that term. If a license document contains a further restriction but permits relicensing or conveying under this License, you may add to a covered work material governed by the terms of that license document, provided that the further restriction does not survive such relicensing or conveying.

If you add terms to a covered work in accord with this section, you must place, in the relevant source files, a statement of the additional terms that apply to those files, or a notice indicating where to find the applicable terms.

Additional terms, permissive or non-permissive, may be stated in the form of a separately written license, or stated as exceptions; the above requirements apply either way.

8. Termination.

You may not propagate or modify a covered work except as expressly provided under this License. Any attempt otherwise to propagate or modify it is void, and will automatically terminate your rights under this License (including any patent licenses granted under the third paragraph of section 11).

However, if you cease all violation of this License, then your license from a particular copyright holder is reinstated (a) provisionally, unless and until the copyright holder explicitly and finally terminates your license, and (b) permanently, if the copyright holder fails to notify you of the violation by some reasonable means prior to 60 days after the cessation.

Moreover, your license from a particular copyright holder is reinstated permanently if the copyright holder notifies you of the violation by some reasonable means, this is the first time you have received notice of violation of this License (for any work) from that copyright holder, and you cure the violation prior to 30 days after your receipt of the notice.

Termination of your rights under this section does not terminate the licenses of parties who have received copies or rights from you under this License. If your rights have been terminated and not permanently reinstated, you do not qualify to receive new licenses for the same material under section 10.

9. Acceptance Not Required for Having Copies.

You are not required to accept this License in order to receive or run a copy of the Program. Ancillary propagation of a covered work occurring solely as a consequence of using peer-to-peer transmission to receive a copy likewise does not require acceptance. However, nothing other than this License grants you permission to propagate or modify any covered work. These actions infringe copyright if you do not accept this License. Therefore, by modifying or propagating a covered work, you indicate your acceptance of this License to do so.

10. Automatic Licensing of Downstream Recipients.

Each time you convey a covered work, the recipient automatically receives a license from the original licensors, to run, modify and propagate that work, subject to this License. You are not responsible for enforcing compliance by third parties with this License.

An "entity transaction" is a transaction transferring control of an organization, or substantially all assets of one, or subdividing an organization, or merging organizations. If propagation of a covered work results from an entity transaction, each party to that transaction who receives a copy of the work also receives whatever licenses to the work the party's predecessor in interest had or could give under the previous paragraph, plus a right to possession of the Corresponding Source of the work from the predecessor in interest, if the predecessor has it or can get it with reasonable efforts.

You may not impose any further restrictions on the exercise of the rights granted or affirmed under this License. For example, you may not impose a license fee, royalty, or other charge for exercise of rights granted under this License, and you may not initiate litigation (including a cross-claim or counterclaim in a lawsuit) alleging that any patent claim is infringed by making, using, selling, offering for sale, or importing the Program or any portion of it.

11. Patents.

A "contributor" is a copyright holder who authorizes use under this License of the Program or a work on which the Program is based. The work thus licensed is called the contributor's "contributor version".

A contributor's "essential patent claims" are all patent claims owned or controlled by the contributor, whether already acquired or hereafter acquired, that would be infringed by some manner, permitted by this License, of making, using, or selling its contributor version, but do not include claims that would be infringed only as a consequence of further modification of the contributor version. For purposes of this definition, "control" includes the right to grant patent sublicenses in a manner consistent with the requirements of this License.

Each contributor grants you a non-exclusive, worldwide, royalty-free patent license under the contributor's essential patent claims, to make, use, sell, offer for sale, import and otherwise run, modify and propagate the contents of its contributor version.

In the following three paragraphs, a "patent license" is any express agreement or commitment, however denominated, not to enforce a patent (such as an express permission to practice a patent or covenant not to sue for patent infringement). To "grant" such a patent license to a party means to make such an agreement or commitment not to enforce a patent against the party.

If you convey a covered work, knowingly relying on a patent license, and the Corresponding Source of the work is not available for anyone to copy, free of charge and under the terms of this License, through a publicly available network server or other readily accessible means, then you must either (1) cause the Corresponding Source to be so available, or (2) arrange to deprive yourself of the benefit of the patent license for this particular work, or (3) arrange, in a manner consistent with the requirements of this License, to extend the patent license to downstream recipients. "Knowingly relying" means you have actual knowledge that, but for the patent license, your conveying the covered work in a country, or your recipient's use of the covered work in a country, would infringe one or more identifiable patents in that country that you have reason to believe are valid.

If, pursuant to or in connection with a single transaction or arrangement, you convey, or propagate by procuring conveyance of, a covered work, and grant a patent license to some of the parties receiving the covered work authorizing them to use, propagate, modify or convey a specific copy of the covered work, then the patent license you grant is automatically extended to all recipients of the covered work and works based on it.

A patent license is "discriminatory" if it does not include within the scope of its coverage, prohibits the exercise of, or is conditioned on the non-exercise of one or more of the rights that are specifically granted under this License. You may not convey a covered work if you are a party to an arrangement with a third party that is in the business of distributing software, under which you make payment to the third party based on the extent of your activity of conveying the work, and under which the third party grants, to any of the parties who would receive the covered work from you, a discriminatory patent license (a) in connection with copies of the covered work

conveyed by you (or copies made from those copies), or (b) primarily for and in connection with specific products or compilations that contain the covered work, unless you entered into that arrangement, or that patent license was granted, prior to 28 March 2007.

Nothing in this License shall be construed as excluding or limiting any implied license or other defenses to infringement that may otherwise be available to you under applicable patent law.

12. No Surrender of Others' Freedom.

If conditions are imposed on you (whether by court order, agreement or otherwise) that contradict the conditions of this License, they do not excuse you from the conditions of this License. If you cannot convey a covered work so as to satisfy simultaneously your obligations under this License and any other pertinent obligations, then as a consequence you may not convey it at all. For example, if you agree to terms that obligate you to collect a royalty for further conveying from those to whom you convey the Program, the only way you could satisfy both those terms and this License would be to refrain entirely from conveying the Program.

13. Use with the GNU Affero General Public License.

Notwithstanding any other provision of this License, you have permission to link or combine any covered work with a work licensed under version 3 of the GNU Affero General Public License into a single combined work, and to convey the resulting work. The terms of this License will continue to apply to the part which is the covered work, but the special requirements of the GNU Affero General Public License, section 13, concerning interaction through a network will apply to the combination as such.

14. Revised Versions of this License.

The Free Software Foundation may publish revised and/or new versions of the GNU General Public License from time to time. Such new versions will be similar in spirit to the present version, but may differ in detail to address new problems or concerns.

Each version is given a distinguishing version number. If the Program specifies that a certain numbered version of the GNU General Public License "or any later version" applies to it, you have the option of following the terms and conditions either of that numbered version or of any later version published by the Free Software Foundation. If the Program does not specify a version number of the GNU General Public License, you may choose any version ever published by the Free Software Foundation.

If the Program specifies that a proxy can decide which future versions of the GNU General Public License can be used, that proxy's public statement of acceptance of a version permanently authorizes you to choose that version for the Program.

Later license versions may give you additional or different permissions. However, no additional obligations are imposed on any author or copyright holder as a result of your choosing to follow a later version.

15. Disclaimer of Warranty.

THERE IS NO WARRANTY FOR THE PROGRAM, TO THE EXTENT PERMITTED BY APPLICABLE LAW. EXCEPT WHEN OTHERWISE STATED IN WRITING THE COPYRIGHT
HOLDERS AND/OR OTHER PARTIES PROVIDE THE PROGRAM "AS IS" WITHOUT WARRANTY
OF ANY KIND, EITHER EXPRESSED OR IMPLIED, INCLUDING, BUT NOT LIMITED TO,
THE IMPLIED WARRANTIES OF MERCHANTABILITY AND FITNESS FOR A PARTICULAR
PURPOSE. THE ENTIRE RISK AS TO THE QUALITY AND PERFORMANCE OF THE PROGRAM
IS WITH YOU. SHOULD THE PROGRAM PROVE DEFECTIVE, YOU ASSUME THE COST OF
ALL NECESSARY SERVICING, REPAIR OR CORRECTION.

16. Limitation of Liability.

IN NO EVENT UNLESS REQUIRED BY APPLICABLE LAW OR AGREED TO IN WRITING
WILL ANY COPYRIGHT HOLDER, OR ANY OTHER PARTY WHO MODIFIES AND/OR CONVEYS
THE PROGRAM AS PERMITTED ABOVE, BE LIABLE TO YOU FOR DAMAGES, INCLUDING ANY
GENERAL, SPECIAL, INCIDENTAL OR CONSEQUENTIAL DAMAGES ARISING OUT OF THE
USE OR INABILITY TO USE THE PROGRAM (INCLUDING BUT NOT LIMITED TO LOSS OF
DATA OR DATA BEING RENDERED INACCURATE OR LOSSES SUSTAINED BY YOU OR THIRD
PARTIES OR A FAILURE OF THE PROGRAM TO OPERATE WITH ANY OTHER PROGRAMS),
EVEN IF SUCH HOLDER OR OTHER PARTY HAS BEEN ADVISED OF THE POSSIBILITY OF
SUCH DAMAGES.

17. Interpretation of Sections 15 and 16.

If the disclaimer of warranty and limitation of liability provided
above cannot be given local legal effect according to their terms,
reviewing courts shall apply local law that most closely approximates
an absolute waiver of all civil liability in connection with the
Program, unless a warranty or assumption of liability accompanies a
copy of the Program in return for a fee.

END OF TERMS AND CONDITIONS

How to Apply These Terms to Your New Programs

If you develop a new program, and you want it to be of the greatest
possible use to the public, the best way to achieve this is to make it
free software which everyone can redistribute and change under these terms.

To do so, attach the following notices to the program. It is safest
to attach them to the start of each source file to most effectively
state the exclusion of warranty; and each file should have at least
the "copyright" line and a pointer to where the full notice is found.

<one line to give the program's name and a brief idea of what it does.>
Copyright (C) <year> <name of author>

This program is free software: you can redistribute it and/or modify
it under the terms of the GNU General Public License as published by
the Free Software Foundation, either version 3 of the License, or
(at your option) any later version.

This program is distributed in the hope that it will be useful,
but WITHOUT ANY WARRANTY; without even the implied warranty of
MERCHANTABILITY or FITNESS FOR A PARTICULAR PURPOSE. See the
GNU General Public License for more details.

You should have received a copy of the GNU General Public License
along with this program. If not, see <http://www.gnu.org/licenses/>.

Also add information on how to contact you by electronic and paper mail.

If the program does terminal interaction, make it output a short
notice like this when it starts in an interactive mode:

<program> Copyright (C) <year> <name of author>
This program comes with ABSOLUTELY NO WARRANTY; for details type `show w'.
This is free software, and you are welcome to redistribute it
under certain conditions; type `show c' for details.

The hypothetical commands `show w' and `show c' should show the appropriate
parts of the General Public License. Of course, your program's commands
might be different; for a GUI interface, you would use an "about box".

You should also get your employer (if you work as a programmer) or school, if any, to sign a "copyright disclaimer" for the program, if necessary. For more information on this, and how to apply and follow the GNU GPL, see <http://www.gnu.org/licenses/>.

The GNU General Public License does not permit incorporating your program into proprietary programs. If your program is a subroutine library, you may consider it more useful to permit linking proprietary applications with the library. If this is what you want to do, use the GNU Lesser General Public License instead of this License. But first, please read <http://www.gnu.org/philosophy/why-not-lgpl.html>.

10 Disclaimer and Copyright</h2>
Revised 16 February, 2004 © Copyright Ami Tavory and Vladimir Dreizin, IBM-HRL, 2004, and Benjamin Kosnik, Red Hat, 2004.
Permission to use, copy, modify, sell, and distribute this software is hereby granted without fee, provided that the above copyright notice appears in all copies, and that both that copyright notice and this permission notice appear in supporting documentation.
None of the above authors, nor IBM Haifa Research Laboratories, Red Hat, or both, make any representation about the suitability of this software for any purpose. It is provided "as is" without express or implied warranty.<

11 # This file file be copied and used freely without restrictions. It can
be used in projects which are not available under the GNU Public License
but which still want to provide support for the GNU gettext functionality.
Please note that the actual code is *not* freely available.

12 This is free software; see the source for copying conditions. There is NO warranty; not even for MERCHANTABILITY or FITNESS FOR A PARTICULAR PURPOSE.

13 Free Software Foundation, Inc.
This file is free software; the Free Software Foundation gives unlimited permission to copy and/or distribute it, with or without modifications, as long as this notice is preserved.
This program is distributed in the hope that it will be useful, but WITHOUT ANY WARRANTY, to the extent permitted by law; without even the implied warranty of MERCHANTABILITY or FITNESS FOR A PARTICULAR PURPOSE.

14 This file is free software; the Free Software Foundation gives unlimited permission to copy and/or distribute it, with or without modifications, as long as this notice is preserved.

15 Permission to use, copy, modify, sell, and distribute this software is hereby granted without fee, provided that the above copyright notice appears in all copies, and that both that copyright notice and this permission notice appear in supporting documentation. None of the above authors, nor IBM Haifa Research Laboratories, make any representation about the suitability of this software for any purpose. It is provided "as is" without express or implied warranty.

16 This configure script is free software; the Free Software Foundation
gives unlimited permission to copy, distribute and modify it.

17 This Makefile.in is free software; the Free Software Foundation
gives unlimited permission to copy and/or distribute it,
with or without modifications, as long as this notice is preserved.
This program is distributed in the hope that it will be useful,
but WITHOUT ANY WARRANTY, to the extent permitted by law; without
even the implied warranty of MERCHANTABILITY or FITNESS FOR A
PARTICULAR PURPOSE.

18 Distributed under the Boost
Software License, Version 1.0. (See accompanying file
LICENSE_1_0.txt or copy at http:www.boost.org/LICENSE_1_0.txt)

Boost Software License - Version 1.0 - August 17th, 2003

Permission is hereby granted, free of charge, to any person or organization
obtaining a copy of the software and accompanying documentation covered by
this license (the "Software") to use, reproduce, display, distribute,
execute, and transmit the Software, and to prepare derivative works of the
Software, and to permit third-parties to whom the Software is furnished to
do so, all subject to the following:

The copyright notices in the Software and this entire statement, including
the above license grant, this restriction and the following disclaimer,
must be included in all copies of the Software, in whole or in part, and
all derivative works of the Software, unless such copies or derivative
works are solely in the form of machine-executable object code generated by
a source language processor.

THE SOFTWARE IS PROVIDED "AS IS", WITHOUT WARRANTY OF ANY KIND, EXPRESS OR
IMPLIED, INCLUDING BUT NOT LIMITED TO THE WARRANTIES OF MERCHANTABILITY,
FITNESS FOR A PARTICULAR PURPOSE, TITLE AND NON-INFRINGEMENT. IN NO EVENT
SHALL THE COPYRIGHT HOLDERS OR ANYONE DISTRIBUTING THE SOFTWARE BE LIABLE
FOR ANY DAMAGES OR OTHER LIABILITY, WHETHER IN CONTRACT, TORT OR OTHERWISE,
ARISING FROM, OUT OF OR IN CONNECTION WITH THE SOFTWARE OR THE USE OR OTHER
DEALINGS IN THE SOFTWARE.

Copyrights:

C) Copyright Jeremy Siek 2000

Copyright 1994 Hewlett-Packard Company

Copyright 1998 by Information Technology Industry Council

Copyright © 2007 Free Software Foundation, Inc

Copyright (C) Microsoft Corporation 1984-2002

Copyright (C) 1994, 1995, 1996, 1997, 1998, 1999, 2000, 2001, 2002, 2003, 2004, 2005 Free Software Foundation, Inc.

Copyright (C) 1994, 1995, 1996, 1997, 1998, 1999, 2000, 2001, 2002, 2003, 2004, 2005, 2006, 2007, 2009 Free Software Foundation

Copyright (C) 1994, 1995, 1996, 1997, 1998, 1999, 2000, 2001, 2002, 2003, 2004, 2005, 2006, 2007, 2009 Free Software Foundation, Inc.

Copyright (C) 1994, 1995, 1996, 1997, 1998, 1999, 2000, 2001, 2002, 2009 Free Software Foundation

Copyright (C) 1994, 1995, 1996, 1997, 1998, 1999, 2000, 2001, 2009 Free Software Foundation

Copyright (C) 1994, 1995, 1996, 1998, 1999, 2000, 2001, 2004, 2009 Free Software Foundation

Copyright (C) 1994, 1996, 1997, 1998, 1999, 2000, 2001, 2002, 2007, 2009 Free Software Foundation

Copyright (C) 1994, 1996, 1997, 1998, 1999, 2000, 2001, 2002, 2007, 2009 Free Software Foundation

Copyright (C) 1994, 1996, 1997, 1998, 1999, 2000, 2001, 2002, 2007, 2009 Free Software Foundation

Copyright (C) 1994, 1996, 1997, 1998, 1999, 2000, 2001, 2002, 2009 Free Software Foundation

Copyright (C) 1994, 1999, 2000, 2003, 2005, 2009 Free Software Foundation, Inc.

Copyright (C) 1994, 1999, 2000, 2003, 2009 Free Software Foundation, Inc.

Copyright (C) 1994, 1999, 2001, 2002, 2003, 2009 Free Software Foundation, Inc.

Copyright (C) 1994, 1999, 2001, 2003, 2009 Free Software Foundation, Inc.

Copyright (C) 1995, 1996, 1997, 1998, 1999, 2000, 2001, 2002, 2003, 2004, 2005, 2006, 2007, 2008, 2009 Free Software Foundation

Copyright (C) 1996, 1997, 1998, 1999, 2000, 2001, 2002, 2003, 2004, 2005 Free Software Foundation, Inc.

Copyright (C) 1996, 1997, 1998, 1999, 2000, 2001, 2002, 2003, 2004, 2005, 2006, 2007, 2009 Free Software Foundation

Copyright (C) 1996, 1997, 1998, 1999, 2000, 2001, 2002, 2003, 2004, 2005 Free Software Foundation, Inc.

Copyright (C) 1996, 1997, 2000, 2001, 2003, 2005 Free Software Foundation, Inc.

Copyright (C) 1996, 1998, 2000, 2001, 2002, 2003, 2004, 2005 Free Software Foundation, Inc.

Copyright (C) 1997, 1998, 1999, 2000, 2001, 2002, 2003, 2004, 2005, 2006, 2007, 2009 Free Software Foundation, Inc.

Copyright (C) 1997, 1998, 1999, 2000, 2001, 2002, 2003, 2004, 2005, 2006, 2007, 2009 Free Software Foundation, Inc.

Copyright (C) 1997, 1998, 1999, 2000, 2001, 2002, 2003, 2004, 2005, 2006, 2007, 2008, 2009 Free Software Foundation, Inc.

Copyright (C) 1997, 1998, 1999, 2000, 2001, 2002, 2003, 2004, 2005 2006, 2007, 2009 Free Software Foundation, Inc.

Copyright (C) 1997, 1998, 1999, 2000, 2001, 2002, 2003, 2004, 2005, 2006, 2007, 2008, 2009 Free Software Foundation, Inc.

Copyright (C) 1997, 1998, 1999, 2000, 2001, 2002, 2003, 2004, 2005, 2006, 2007, 2008, 2009 Free Software Foundation, Inc.

Copyright (C) 1997, 1998, 1999, 2000, 2001, 2002, 2003, 2004, 2005, 2006, 2007, 2009 Free Software Foundation, Inc.

Copyright (C) 1997, 1998, 1999, 2000, 2001, 2002, 2003, 2004, 2005, 2006, 2008, 2009 Free Software Foundation, Inc.

Copyright (C) 1997, 1998, 1999, 2000, 2001, 2002, 2003, 2004, 2005, 2006, 2009 Free Software Foundation, Inc.

Copyright (C) 1997, 1998, 1999, 2000, 2001, 2002, 2003, 2004, 2005, 2009 Free Software Foundation, Inc.

Copyright (C) 1997, 1998, 1999, 2000, 2001, 2002, 2003, 2004, 2005, 2006, 2007, 2008, 2009 Free Software Foundation, Inc.

Copyright (C) 1997, 1998, 1999, 2000, 2001, 2002, 2003, 2004, 2005, 2006, 2009 Free Software Foundation, Inc.

Copyright (C) 1997, 1998, 1999, 2000, 2001, 2002, 2003, 2004, 2005, 2006, 2009 Free Software Foundation, Inc.

Copyright (C) 1997, 1998, 1999, 2000, 2001, 2002, 2003, 2004, 2005, 2009 Free Software Foundation, Inc.

Copyright (C) 1997, 1998, 1999, 2000, 2001, 2002, 2003, 2004, 2009 Free Software Foundation, Inc.

Copyright (C) 1997, 1998, 1999, 2000, 2001, 2002, 2003, 2005, 2009 Free Software Foundation, Inc.

Copyright (C) 1997, 1998, 1999, 2000, 2001, 2002, 2003, 2008, 2009 Free Software Foundation, Inc.

Copyright (C) 1997, 1998, 1999, 2000, 2001, 2002, 2003, 2009 Free Software Foundation, Inc.

Copyright (C) 1997, 1998, 1999, 2000, 2001, 2002, 2004, 2005, 2006, 2007, 2008, 2009 Free Software Foundation, Inc.

Copyright (C) 1997, 1998, 1999, 2000, 2001, 2002, 2004, 2005, 2006, 2009 Free Software Foundation, Inc.

Copyright (C) 1997, 1998, 1999, 2000, 2001, 2002, 2004, 2005, 2009 Free Software Foundation, Inc.

Copyright (C) 1997, 1998, 1999, 2000, 2001, 2002, 2004, 2006, 2009 Free Software Foundation, Inc.

Copyright (C) 1997, 1998, 1999, 2000, 2001, 2002, 2004, 2009 Free Software Foundation

Copyright (C) 1997, 1998, 1999, 2000, 2001, 2002, 2005, 2006, 2009 Free Software Foundation, Inc.

Copyright (C) 1997, 1998, 1999, 2000, 2001, 2002, 2005, 2009 Free Software Foundation, Inc.

Copyright (C) 1997, 1998, 1999, 2000, 2001, 2002, 2009 Free Software Foundation, Inc.

Copyright (C) 1997, 1998, 1999, 2000, 2001, 2002, 2009 Free Software Foundation, Inc.

Copyright (C) 1997, 1998, 1999, 2000, 2001, 2004, 2005, 2006, 2009 Free Software Foundation, Inc.

Copyright (C) 1997, 1998, 1999, 2000, 2001, 2004, 2005, 2009 Free Software Foundation, Inc.

Copyright (C) 1997, 1998, 1999, 2000, 2001, 2004, 2009 Free Software Foundation

Copyright (C) 1997, 1998, 1999, 2000, 2002, 2003, 2004, 2006, 2009 Free Software Foundation, Inc.

Copyright (C) 1997, 1998, 1999, 2000, 2002, 2003, 2004, 2009 Free Software Foundation, Inc.

Copyright (C) 1997, 1998, 1999, 2000, 2002, 2007, 2009 Free Software Foundation, Inc.

Copyright (C) 1997, 1998, 1999, 2000, 2003, 2009 Free Software Foundation, Inc.

Copyright (C) 1997, 1998, 1999, 2000, 2004, 2007, 2009 Free Software Foundation

Copyright (C) 1997, 1998, 1999, 2000, 2004, 2009 Free Software Foundation

Copyright (C) 1997, 1998, 1999, 2001, 2002, 2005, 2008, 2009 Free Software Foundation, Inc.

Copyright (C) 1997, 1998, 1999, 2001, 2002, 2009 Free Software Foundation, Inc.

Copyright (C) 1997, 1998, 1999, 2002, 2004, 2009 Free Software Foundation, Inc.

Copyright (C) 1997, 1998, 1999, 2002, 2009 Free Software Foundation, Inc.

Copyright (C) 1997, 1998, 1999, 2003, 2005, 2009 Free Software Foundation, Inc.

Copyright (C) 1997, 1998, 1999, 2003, 2009 Free Software Foundation, Inc.

Copyright (C) 1997, 1998, 1999, 2007, 2009 Free Software Foundation, Inc.

Copyright (C) 1997, 1998, 2009, 1999, 2000, 2001, 2002, 2003, 2004, 2005, 2006 Free Software Foundation, Inc.

Copyright (C) 1997, 1999, 2000, 2001, 2003, 2005 Free Software Foundation, Inc.

Copyright (C) 1997, 1999, 2000, 2001, 2004, 2009 Free Software Foundation, Inc.

Copyright (C) 1997, 1999, 2001, 2002, 2005, 2009 Free Software Foundation, Inc.

Copyright (C) 1997, 2000, 2001, 2003, 2004, 2005 Free Software Foundation, Inc.

Copyright (C) 1997-1999, 2001, 2009 Free Software Foundation, Inc.

Copyright (C) 1997-1999, 2009 Free Software Foundation, Inc.

Copyright (C) 1998, 1999 Greg Colvin and Beman Dawes

Copyright (C) 1998, 1999, 2000, 2001, 2002, 2003, 2004, 2005, 2006, 2007, 2009 Free Software Foundation, Inc.

Copyright (C) 1998, 1999, 2003, 2004, 2009 Free Software Foundation, Inc.

Copyright (C) 1998, 1999, 2003, 2009 Free Software Foundation, Inc.

Copyright (C) 1999, 2000, 2001, 2002, 2003, 2004, 2005, 2006, 2007, 2008, 2009 Free Software Foundation, Inc.

Copyright (C) 1999, 2000, 2001, 2002, 2003, 2004, 2005, 2006, 2007, 2008, 2009 Free Software Foundation

Copyright (C) 1999, 2000, 2001, 2002, 2003, 2004, 2005, 2006, 2007, 2009 Free Software Foundation, Inc.

Copyright (C) 1999, 2000, 2001, 2002, 2003, 2004, 2005, 2006, 2007, 2008, 2009 Free Software Foundation, Inc.

Copyright (C) 1999, 2000, 2001, 2002, 2003, 2004, 2005, 2006, 2007, 2009 Free Software Foundation, Inc.

Copyright (C) 1999, 2000, 2001, 2002, 2003, 2004, 2005, 2006, 2009 Free Software Foundation

Copyright (C) 1999, 2000, 2001, 2002, 2003, 2004, 2005, 2009 Free Software Foundation, Inc.

Copyright (C) 1999, 2000, 2001, 2002, 2003, 2004, 2009 Free Software Foundation

Copyright (C) 1999, 2000, 2001, 2002, 2003, 2004, 2009 Free Software Foundation, Inc.

Copyright (C) 1999, 2000, 2001, 2002, 2003, 2005, 2009 Free Software Foundation

Copyright (C) 1999, 2000, 2001, 2002, 2003, 2005, 2009 Free Software Foundation, Inc.

Copyright (C) 1999, 2000, 2001, 2002, 2003, 2006, 2009 Free Software Foundation, Inc.

Copyright (C) 1999, 2000, 2001, 2002, 2003, 2009 Free Software Foundation

Copyright (C) 1999, 2000, 2001, 2002, 2004, 2005, 2009 Free Software Foundation, Inc.

Copyright (C) 1999, 2000, 2001, 2003, 2004, 2005, 2009 Free Software Foundation, Inc.

Copyright (C) 1999, 2000, 2001, 2003, 2009 Free Software Foundation

Copyright (C) 1999, 2000, 2001, 2004, 2005, 2009 Free Software Foundation, Inc.

Copyright (C) 1999, 2000, 2002, 2003, 2004, 2005, 2009 Free Software Foundation, Inc.

Copyright (C) 1999, 2000, 2002, 2003, 2005, 2009 Free Software Foundation

Copyright (C) 1999, 2000, 2002, 2003, 2009 Free Software Foundation

Copyright (C) 1999, 2000, 2002, 2003, 2009 Free Software Foundation, Inc.

Copyright (C) 1999, 2000, 2003, 2009 Free Software Foundation

Copyright (C) 1999, 2000, 2003, 2009 Free Software Foundation, Inc.

Copyright (C) 1999, 2000, 2009 Free Software Foundation, Inc.

Copyright (C) 1999, 2001, 2002, 2003, 2004, 2005, 2006, 2009 Free Software Foundation

Copyright (C) 1999, 2001, 2002, 2003, 2004, 2005, 2006, 2009 Free Software Foundation, Inc.

Copyright (C) 1999, 2001, 2002, 2003, 2004, 2005, 2009 Free Software Foundation, Inc.

Copyright (C) 1999, 2001, 2002, 2003, 2004, 2009 Free Software Foundation

Copyright (C) 1999, 2001, 2002, 2005, 2006, 2009 Free Software Foundation, Inc.

Copyright (C) 1999, 2001, 2003, 2004, 2009 Free Software Foundation

Copyright (C) 1999, 2001, 2003, 2007, 2009 Free Software Foundation, Inc.

Copyright (C) 1999, 2001, 2003, 2009 Free Software Foundation

Copyright (C) 1999, 2001, 2003, 2009 Free Software Foundation, Inc.

Copyright (C) 1999, 2001, 2004, 2005, 2009 Free Software Foundation, Inc.

Copyright (C) 1999, 2002, 2003, 2004, 2005, 2009 Free Software Foundation, Inc.

Copyright (C) 1999, 2002, 2003, 2004, 2009 Free Software Foundation, Inc.

Copyright (C) 1999, 2002, 2003, 2005, 2009 Free Software Foundation, Inc.

Copyright (C) 1999, 2002, 2003, 2009 Free Software Foundation, Inc.

Copyright (C) 1999, 2002, 2004, 2005, 2009 Free Software Foundation, Inc.

Copyright (C) 1999, 2002, 2009 Free Software Foundation, Inc.

Copyright (C) 1999, 2003, 2004, 2005, 2009 Free Software Foundation, Inc.

Copyright (C) 1999, 2003, 2005, 2009 Free Software Foundation

Copyright (C) 1999, 2003, 2005, 2009 Free Software Foundation, Inc.

Copyright (C) 1999, 2003, 2009 Free Software Foundation

Copyright (C) 1999, 2003, 2009 Free Software Foundation, Inc.

Copyright (C) 1999, 2004, 2005, 2009 Free Software Foundation, Inc.

Copyright (C) 1999, 2007, 2009 Free Software Foundation, Inc.

Copyright (C) 1999, 2009 Free Software Foundation, Inc.

Copyright (C) 1999-2001, 2002, 2003, 2004, 2005, 2009 Free Software Foundation, Inc.

Copyright (C) 1999-2001, 2002, 2003, 2009 Free Software Foundation, Inc.

Copyright (C) 2000, 2001, 2002 Free Software Foundation

Copyright (C) 2000, 2001, 2002 Free Software Foundation

Copyright (C) 2000, 2001, 2002, 2003, 2004, 2005, 2006, 2007, 2008, 2009 Free Software Foundation, Inc.

Copyright (C) 2000, 2001, 2002, 2003, 2004, 2005, 2006, 2007, 2008, 2009 Free Software Foundation, Inc.

Copyright (C) 2000, 2001, 2002, 2003, 2004, 2005, 2006, 2007, 2008, 2009 Free Software Foundation, Inc.

Copyright (C) 2000, 2001, 2002, 2003, 2004, 2005, 2006, 2007, 2009 Free Software Foundation, Inc.

Copyright (C) 2000, 2001, 2002, 2003, 2004, 2005, 2006, 2007, 2009 Free Software Foundation

Copyright (C) 2000, 2001, 2002, 2003, 2004, 2005, 2006, 2007, 2009 Free Software Foundation, Inc.

Copyright (C) 2000, 2001, 2002, 2003, 2004, 2005, 2006, 2009 Free Software Foundation

Copyright (C) 2000, 2001, 2002, 2003, 2004, 2005, 2006, 2009 Free Software Foundation, Inc.

Copyright (C) 2000, 2001, 2002, 2003, 2004, 2005, 2009 Free Software Foundation, Inc.

Copyright (C) 2000, 2001, 2002, 2003, 2004, 2006, 2007, 2009 Free Software Foundation, Inc.

Copyright (C) 2000, 2001, 2002, 2003, 2004, 2009 Free Software Foundation

Copyright (C) 2000, 2001, 2002, 2003, 2005, 2009 Free Software Foundation

Copyright (C) 2000, 2001, 2002, 2003, 2006, 2009 Free Software Foundation, Inc.

Copyright (C) 2000, 2001, 2002, 2003, 2007, 2009 Free Software Foundation

Copyright (C) 2000, 2001, 2002, 2003, 2009 Free Software Foundation

Copyright (C) 2000, 2001, 2002, 2003, 2009 Free Software Foundation, Inc.

Copyright (C) 2000, 2001, 2002, 2009 Free Software Foundation, Inc.

Copyright (C) 2000, 2001, 2003, 2004, 2005, 2006, 2009 Free Software Foundation, Inc.

Copyright (C) 2000, 2001, 2003, 2004, 2005, 2009 Free Software Foundation, Inc.

Copyright (C) 2000, 2001, 2003, 2004, 2009 Free Software Foundation, Inc.

Copyright (C) 2000, 2001, 2003, 2005, 2009 Free Software Foundation, Inc.

Copyright (C) 2000, 2001, 2003, 2009 Free Software Foundation, Inc.

Copyright (C) 2000, 2001, 2004, 2005, 2009 Free Software Foundation, Inc.

Copyright (C) 2000, 2001, 2005, 2006, 2009 Free Software Foundation, Inc.

Copyright (C) 2000, 2001, 2009 Free Software Foundation

Copyright (C) 2000, 2002, 2003, 2004, 2006, 2007, 2009 Free Software Foundation, Inc.

Copyright (C) 2000, 2002, 2003, 2004, 2009 Free Software Foundation

Copyright (C) 2000, 2002, 2003, 2005, 2009 Free Software Foundation

Copyright (C) 2000, 2002, 2003, 2009 Free Software Foundation

Copyright (C) 2000, 2002, 2003, 2009 Free Software Foundation, Inc.

Copyright (C) 2000, 2002, 2004, 2005, 2008, 2009 Free Software Foundation, Inc.

Copyright (C) 2000, 2002, 2004, 2005, 2009 Free Software Foundation, Inc.

Copyright (C) 2000, 2002, 2005, 2008, 2009 Free Software Foundation, Inc.

Copyright (C) 2000, 2002, 2005, 2009 Free Software Foundation, Inc.

Copyright (C) 2000, 2002, 2006, 2009 Free Software Foundation, Inc.

Copyright (C) 2000, 2002, 2009 Free Software Foundation, Inc.

Copyright (C) 2000, 2003, 2004, 2005, 2009 Free Software Foundation, Inc.

Copyright (C) 2000, 2003, 2004, 2009 Free Software Foundation

Copyright (C) 2000, 2003, 2004, 2009 Free Software Foundation, Inc.

Copyright (C) 2000, 2003, 2009 Free Software Foundation

Copyright (C) 2000, 2003, 2009 Free Software Foundation, Inc.

Copyright (C) 2000, 2005, 2009 Free Software Foundation, Inc.

Copyright (C) 2000, 2009 Free Software Foundation, Inc.

Copyright (C) 2001 Free Software Foundation, Inc.

Copyright (C) 2001 Free Software Foundation, Inc Benjamin Kosnik <bkoz@redhat.com>, 2001.

Copyright (C) 2001, 2002, 2003 Peter Dimov

Copyright (C) 2001, 2002, 2003, 2004, 2005, 2006, 2006, 2007, 2008, 2009 Free Software Foundation, Inc.

Copyright (C) 2001, 2002, 2003, 2004, 2005, 2006, 2007, 2008, 2009 Free Software Foundation, Inc.

Copyright (C) 2001, 2002, 2003, 2004, 2005, 2006, 2007, 2008, 2009 Free Software Foundation, Inc.

Copyright (C) 2001, 2002, 2003, 2004, 2005, 2006, 2007, 2008, 2009 Free Software Foundation

Copyright (C) 2001, 2002, 2003, 2004, 2005, 2006, 2007, 2008, 2009 Free Software Foundation, Inc.

Copyright (C) 2001, 2002, 2003, 2004, 2005, 2006, 2007, 2009 Free Software Foundation

Copyright (C) 2001, 2002, 2003, 2004, 2005, 2006, 2007, 2009 Free Software Foundation, Inc.

Copyright (C) 2001, 2002, 2003, 2004, 2005, 2006, 2008, 2009 Free Software Foundation, Inc.

Copyright (C) 2001, 2002, 2003, 2004, 2005, 2006, 2009 Free Software Foundation

Copyright (C) 2001, 2002, 2003, 2004, 2005, 2006, 2009 Free Software Foundation, Inc.

Copyright (C) 2001, 2002, 2003, 2004, 2005, 2006, 2009 Free Software Foundation

Copyright (C) 2001, 2002, 2003, 2004, 2005, 2009 Free Software Foundation, Inc.

Copyright (C) 2001, 2002, 2003, 2004, 2005, 2009 Free Software Foundation

Copyright (C) 2001, 2002, 2003, 2004, 2005, 2009 Free Software Foundation, Inc.

Copyright (C) 2001, 2002, 2003, 2004, 2008, 2009 Free Software Foundation, Inc.

Copyright (C) 2001, 2002, 2003, 2004, 2009 Free Software Foundation

Copyright (C) 2001, 2002, 2003, 2004, 2009 Free Software Foundation, Inc.

Copyright (C) 2001, 2002, 2003, 2005 Free Software Foundation, Inc.

Copyright (C) 2001, 2002, 2003, 2005, 2006, 2009 Free Software Foundation

Copyright (C) 2001, 2002, 2003, 2005, 2007, 2009 Free Software Foundation, Inc.

Copyright (C) 2001, 2002, 2003, 2005, 2009 Free Software Foundation

Copyright (C) 2001, 2002, 2003, 2005, 2009 Free Software Foundation, Inc.

Copyright (C) 2001, 2002, 2003, 2006, 2009 Free Software Foundation, Inc.

Copyright (C) 2001, 2002, 2003, 2009 Free Software Foundation

Copyright (C) 2001, 2002, 2003, 2009 Free Software Foundation, Inc.

Copyright (C) 2001, 2002, 2004, 2005, 2006, 2009 Free Software Foundation, Inc.

Copyright (C) 2001, 2002, 2004, 2005, 2007, 2008, 2009 Free Software Foundation, Inc.

Copyright (C) 2001, 2002, 2004, 2005, 2008 Free Software Foundation, Inc.

Copyright (C) 2001, 2002, 2004, 2005, 2009 Free Software Foundation

Copyright (C) 2001, 2002, 2004, 2005, 2009 Free Software Foundation, Inc.

Copyright (C) 2001, 2002, 2004, 2006, 2009 Free Software Foundation, Inc.

Copyright (C) 2001, 2002, 2004, 2009 Free Software Foundation, Inc.

Copyright (C) 2001, 2002, 2005, 2007, 2009 Free Software Foundation, Inc.

Copyright (C) 2001, 2002, 2005, 2008, 2009 Free Software Foundation, Inc.

Copyright (C) 2001, 2002, 2005, 2009 Free Software Foundation, Inc.

Copyright (C) 2001, 2002, 2009 Free Software Foundation, Inc.

Copyright (C) 2001, 2003, 2004, 2005, 2009 Free Software Foundation, Inc.

Copyright (C) 2001, 2003, 2004, 2009 Free Software Foundation, Inc.

Copyright (C) 2001, 2003, 2005 Free Software Foundation, Inc.

Copyright (C) 2001, 2003, 2005, 2009 Free Software Foundation

Copyright (C) 2001, 2003, 2007, 2009 Free Software Foundation, Inc.

Copyright (C) 2001, 2003, 2009 Free Software Foundation

Copyright (C) 2001, 2003, 2009 Free Software Foundation

Copyright (C) 2001, 2003, 2009 Free Software Foundation, Inc.

Copyright (C) 2001, 2004, 2005, 2008, 2009 Free Software Foundation, Inc.

Copyright (C) 2001, 2004, 2005, 2009 Free Software Foundation, Inc.

Copyright (C) 2001, 2004, 2009 Free Software Foundation, Inc.

Copyright (C) 2001, 2005, 2009 Free Software Foundation, Inc.

Copyright (C) 2001, 2007, 2009 Free Software Foundation, Inc.

Copyright (C) 2001, 2008, 2009 Free Software Foundation, Inc.

Copyright (C) 2001, 2009 Free Software Foundation

Copyright (C) 2001, 2009 Free Software Foundation, Inc.

Copyright (C) 2002 Peter Dimov

Copyright (C) 2002, 2003, 2004, 2005, 2006, 2007, 2008, 2009 Free Software Foundation, Inc.

Copyright (C) 2002, 2003, 2004, 2005, 2006, 2007, 2008, 2009 Free Software Foundation, Inc.

Copyright (C) 2002, 2003, 2004, 2005, 2006, 2007, 2008, 2009 Free Software Foundation

Copyright (C) 2002, 2003, 2004, 2005, 2006, 2007, 2009 Free Software Foundation, Inc.

Copyright (C) 2002, 2003, 2004, 2005, 2007, 2009 Free Software Foundation, Inc.

Copyright (C) 2002, 2003, 2004, 2005, 2009 Free Software Foundation

Copyright (C) 2002, 2003, 2004, 2005, 2009 Free Software Foundation, Inc.

Copyright (C) 2002, 2003, 2004, 2007, 2009 Free Software Foundation, Inc.
Copyright (C) 2002, 2003, 2005 Free Software Foundation, Inc.
Copyright (C) 2002, 2003, 2005, 2009 Free Software Foundation, Inc.
Copyright (C) 2002, 2003, 2007, 2009 Free Software Foundation, Inc.
Copyright (C) 2002, 2003, 2009 Free Software Foundation
Copyright (C) 2002, 2003, 2009 Free Software Foundation, Inc.
Copyright (C) 2002, 2004, 2005, 2007, 2009 Free Software Foundation, Inc.
Copyright (C) 2002, 2004, 2005, 2009 Free Software Foundation, Inc.
Copyright (C) 2002, 2004, 2006, 2008, 2009 Free Software Foundation, Inc.
Copyright (C) 2002, 2004, 2009 Free Software Foundation
Copyright (C) 2002, 2004, 2009 Free Software Foundation, Inc.
Copyright (C) 2002, 2005, 2007, 2009 Free Software Foundation, Inc.
Copyright (C) 2002, 2007, 2009 Free Software Foundation, Inc.
Copyright (C) 2002, 2009 Free Software Foundation
Copyright (C) 2002, 2009 Free Software Foundation, Inc.
Copyright (C) 2003 Free Software Foundation, Inc.
Copyright (C) 2003, 2004, 2005 Free Software Foundation, Inc.
Copyright (C) 2003, 2004, 2005, 2006, 2007, 2008, 2009 Free Software Foundation
Copyright (C) 2003, 2004, 2005, 2006, 2007, 2008, 2009 Free Software Foundation, Inc.
Copyright (C) 2003, 2004, 2005, 2006, 2007, 2008, 2009 Free Software Foundation, Inc.
Copyright (C) 2003, 2004, 2005, 2006, 2007, 2009 Free Software Foundation, Inc.
Copyright (C) 2003, 2004, 2005, 2006, 2007, 2009 Free Software Foundation
Copyright (C) 2003, 2004, 2005, 2006, 2007, 2009 Free Software Foundation, Inc.
Copyright (C) 2003, 2004, 2005, 2006, 2009 Free Software Foundation, Inc.
Copyright (C) 2003, 2004, 2005, 2006, 2009 Free Software Foundation
Copyright (C) 2003, 2004, 2005, 2006, 2009 Free Software Foundation, Inc.
Copyright (C) 2003, 2004, 2005, 2007, 2008, 2009 Free Software Foundation, Inc.
Copyright (C) 2003, 2004, 2005, 2007, 2009 Free Software Foundation
Copyright (C) 2003, 2004, 2005, 2009 Free Software Foundation, Inc.
Copyright (C) 2003, 2004, 2005, 2009 Free Software Foundation, Inc.
Copyright (C) 2003, 2004, 2006, 2009 Free Software Foundation, Inc.
Copyright (C) 2003, 2004, 2009 Free Software Foundation, Inc.
Copyright (C) 2003, 2004, 2009 Free Software Foundation
Copyright (C) 2003, 2004, 2009 Free Software Foundation, Inc.
Copyright (C) 2003, 2005, 2006, 2009 Free Software Foundation, Inc.

Copyright (C) 2003, 2005, 2006, 2009 Free Software Foundation, Inc.

Copyright (C) 2003, 2005, 2009 Free Software Foundation

Copyright (C) 2003, 2005, 2009 Free Software Foundation, Inc.

Copyright (C) 2003, 2006, 2009 Free Software Foundation, Inc.

Copyright (C) 2003, 2007, 2009 Free Software Foundation, Inc.

Copyright (C) 2003, 2009 Free Software Foundation, Inc.

Copyright (C) 2003, 2009 Free Software Foundation

Copyright (C) 2003, 2009 Free Software Foundation, Inc.

Copyright (C) 2004 Ami Tavory and Vladimir Dreizin, IBM-HRL.

Copyright (C) 2004, 2005 Free Software Foundation, Inc.

Copyright (C) 2004, 2005, 2006, 2007, 2008, 2009 Free Software Foundation, Inc.

Copyright (C) 2004, 2005, 2006, 2007, 2008, 2009 Free Software Foundation, Inc.

Copyright (C) 2004, 2005, 2006, 2007, 2008, 2009 Free Software Foundation, Inc.

Copyright (C) 2004, 2005, 2006, 2007, 2008, 2009 Free Software Foundation

Copyright (C) 2004, 2005, 2006, 2007, 2008, 2009 Free Software Foundation, Inc.

Copyright (C) 2004, 2005, 2006, 2007, 2009 Free Software Foundation

Copyright (C) 2004, 2005, 2006, 2007, 2009 Free Software Foundation, Inc.

Copyright (C) 2004, 2005, 2006, 2008, 2009 Free Software Foundation, Inc.

Copyright (C) 2004, 2005, 2006, 2009 Free Software Foundation

Copyright (C) 2004, 2005, 2006, 2009 Free Software Foundation, Inc.

Copyright (C) 2004, 2005, 2007, 2009 Free Software Foundation

Copyright (C) 2004, 2005, 2007, 2009 Free Software Foundation, Inc.

Copyright (C) 2004, 2005, 2008, 2009 Free Software Foundation, Inc.

Copyright (C) 2004, 2005, 2009 Free Software Foundation

Copyright (C) 2004, 2005, 2009 Free Software Foundation, Inc.

Copyright (C) 2004, 2006, 2008, 2009 Free Software Foundation, Inc.

Copyright (C) 2004, 2006, 2009 Free Software Foundation, Inc.

Copyright (C) 2004, 2007, 2009 Free Software Foundation, Inc.

Copyright (C) 2004, 2008, 2009 Free Software Foundation, Inc.

Copyright (C) 2004, 2009 Free Software Foundation

Copyright (C) 2004, 2009 Free Software Foundation, Inc.

Copyright (C) 2005 Free Software Foundation, Inc.

Copyright (C) 2005, 2006, 2007, 2008, 2009 Free Software Foundation, Inc.

Copyright (C) 2005, 2006, 2007, 2008, 2009 Free Software Foundation

Copyright (C) 2005, 2006, 2007, 2008, 2009 Free Software Foundation, Inc.

Copyright (C) 2005, 2006, 2007, 2009 Free Software Foundation

Copyright (C) 2005, 2006, 2007, 2009 Free Software Foundation, Inc.

Copyright (C) 2005, 2006, 2008, 2009 Free Software Foundation, Inc.

Copyright (C) 2005, 2006, 2009 Free Software Foundation, Inc.

Copyright (C) 2005, 2006, 2009 Free Software Foundation, Inc.

Copyright (C) 2005, 2007, 2009 Free Software Foundation, Inc.

Copyright (C) 2005, 2008, 2009 Free Software Foundation

Copyright (C) 2005, 2009 Free Software Foundation

Copyright (C) 2005, 2009 Free Software Foundation, Inc.

Copyright (C) 2006 Free Software Foundation, Inc.

Copyright (C) 2006, 2007, 2008, 2009 Free Software Foundation, Inc.

Copyright (C) 2006, 2007, 2008, 2009 Free Software Foundation

Copyright (C) 2006, 2007, 2008, 2009 Free Software Foundation, Inc.

Copyright (C) 2006, 2007, 2009 Free Software Foundation

Copyright (C) 2006, 2007, 2009 Free Software Foundation, Inc.

Copyright (C) 2006, 2008, 2009 Free Software Foundation, Inc.

Copyright (C) 2006, 2009 Free Software Foundation, Inc.

Copyright (C) 2006, 2009 Free Software Foundation

Copyright (C) 2006, 2009 Free Software Foundation

Copyright (C) 2006, 2009 Free Software Foundation, Inc.

Copyright (C) 2006-2007, 2009 Free Software Foundation, Inc.

Copyright (C) 2007, 2008, 2009 Free Software Foundation, Inc.

Copyright (C) 2007, 2008, 2009 Free Software Foundation

Copyright (C) 2007, 2008, 2009 Free Software Foundation, Inc.

Copyright (C) 2007, 2009 Free Software Foundation, Inc.

Copyright (C) 2007, 2009 Free Software Foundation

Copyright (C) 2007, 2009 Free Software Foundation, Inc.

Copyright (C) 2008, 2009 Free Software Foundation, Inc.

Copyright (C) 2008, 2009 Free Software Foundation

Copyright (C) 2008, 2009 Free Software Foundation, Inc.

Copyright (C) 2009 Free Software Foundation

Copyright (C) 2009 Free Software Foundation, Inc.

Copyright (c) 1994 Hewlett-Packard Company

Copyright (c) 1996 Silicon Graphics Computer Systems, Inc.

Copyright (c) 1996,1997 Silicon Graphics

Copyright (c) 1996,1997 Silicon Graphics Computer Systems, Inc.

Copyright (c) 1996-1997 Silicon Graphics Computer Systems, Inc.

Copyright (c) 1996-1998 Silicon Graphics Computer Systems, Inc.

Copyright (c) 1996-1999 Silicon Graphics Computer Systems, Inc.

Copyright (c) 1997 Silicon Graphics Computer Systems, Inc.

Copyright (c) 1997-1999 Silicon Graphics Computer Systems, Inc.

Copyright (c) 1998 Silicon Graphics Computer Systems, Inc.

Copyright (c) 2001, 2002, 2003 Peter Dimov and Multi Media Ltd.

Copyright 2008 FSF

Copyright Ami Tavory and Vladimir Dreizin, IBM-HRL, 2004, and Benjamin Kosnik, Red Hat, 2004.

Copyright © 1999 The Open Group/The Institute of Electrical and Electronics Engineers, Inc.

Copyright © 1999 ISO

Copyright © 2000 Addison Wesley Longman, Inc.

Copyright © 2000 Addison Wesley, Inc.

Copyright © 2002 OOPSLA

Copyright © 2004, 2005, 2006, 2007 Free Software Foundation, Inc

Copyright © 2004, 2005, 2006, 2007 Free Software Foundation, Inc

Copyright © 2007 FSF

Copyright © 2007 Free Software Foundation, Inc.

Open Source Software: libgcc - 4.4.1

Enclosed you'll find the license conditions and copyright notices applicable for Open Source Software libgcc - 4.4.1

License conditions:

1 GCC is free software; you can redistribute it and/or modify it under the terms of the GNU General Public License as published by the Free Software Foundation; either version 3, or (at your option) any later version.
GCC is distributed in the hope that it will be useful, but WITHOUT ANY WARRANTY; without even the implied warranty of MERCHANTABILITY or FITNESS FOR A PARTICULAR PURPOSE. See the GNU General Public License for more details.
Under Section 7 of GPL version 3, you are granted additional permissions described in the GCC Runtime Library Exception, version 3.1, as published by the Free Software Foundation.
You should have received a copy of the GNU General Public License and a copy of the GCC Runtime Library Exception along with this program; see the files COPYING3 and COPYING.RUNTIME respectively. If not, see <http://www.gnu.org/licenses/>.

GCC RUNTIME LIBRARY EXCEPTION

Version 3.1, 31 March 2009

Copyright (C) 2009 Free Software Foundation, Inc. <http://fsf.org/>

Everyone is permitted to copy and distribute verbatim copies of this license document, but changing it is not allowed.

This GCC Runtime Library Exception ("Exception") is an additional permission under section 7 of the GNU General Public License, version 3 ("GPLv3"). It applies to a given file (the "Runtime Library") that bears a notice placed by the copyright holder of the file stating that the file is governed by GPLv3 along with this Exception.

When you use GCC to compile a program, GCC may combine portions of certain GCC header files and runtime libraries with the compiled program. The purpose of this Exception is to allow compilation of non-GPL (including proprietary) programs to use, in this way, the header files and runtime libraries covered by this Exception.

0. Definitions.

A file is an "Independent Module" if it either requires the Runtime Library for execution after a Compilation Process, or makes use of an interface provided by the Runtime Library, but is not otherwise based on the Runtime Library.

"GCC" means a version of the GNU Compiler Collection, with or without modifications, governed by version 3 (or a specified later version) of the GNU General Public License (GPL) with the option of using any subsequent versions published by the FSF.

"GPL-compatible Software" is software whose conditions of propagation, modification and use would permit combination with GCC in accord with the license of GCC.

"Target Code" refers to output from any compiler for a real or virtual target processor architecture, in executable form or suitable for input to an assembler, loader, linker and/or execution phase. Notwithstanding that, Target Code does not include data in any format that is used as a compiler intermediate representation, or used for producing a compiler intermediate representation.

The "Compilation Process" transforms code entirely represented in non-intermediate languages designed for human-written code, and/or in Java Virtual Machine byte code, into Target Code. Thus, for example, use of source code generators and preprocessors need not be considered part of the Compilation Process, since the Compilation Process can be understood as starting with the output of the generators or preprocessors.

A Compilation Process is "Eligible" if it is done using GCC, alone or with other GPL-compatible software, or if it is done without using any work based on GCC. For example, using non-GPL-compatible Software to optimize any GCC intermediate representations would not qualify as an Eligible Compilation Process.

1. Grant of Additional Permission.

You have permission to propagate a work of Target Code formed by combining the Runtime Library with Independent Modules, even if such propagation would otherwise violate the terms of GPLv3, provided that all Target Code was generated by Eligible Compilation Processes. You may then convey such a combination under terms of your choice, consistent with the licensing of the Independent Modules.

2. No Weakening of GCC Copyleft.

The availability of this Exception does not imply any general presumption that third-party software is unaffected by the copyleft requirements of the license of GCC.

GNU GENERAL PUBLIC LICENSE

Version 3, 29 June 2007

Copyright © 2007 Free Software Foundation, Inc. <http://fsf.org/>

Everyone is permitted to copy and distribute verbatim copies of this license document, but changing it is not allowed.
Preamble

The GNU General Public License is a free, copyleft license for software and other kinds of works.

The licenses for most software and other practical works are designed to take away your freedom to share and change the works. By contrast, the GNU General Public License is intended to guarantee your freedom to share and change all versions of a program--to make sure it remains free software for all its users. We, the Free Software Foundation, use the GNU General Public License for most of our software; it applies also to any other work released this way by its authors. You can apply it to your programs, too.

When we speak of free software, we are referring to freedom, not price. Our General Public Licenses are designed to make sure that you have the freedom to distribute copies of free software (and charge for them if you wish), that you receive source code or can get it if you want it, that you can change the software or use pieces of it in new free programs, and that you know you can do these things.

To protect your rights, we need to prevent others from denying you these rights or asking you to surrender the rights. Therefore, you have certain responsibilities if you distribute copies of the software, or if you modify it: responsibilities to respect the freedom of others.

For example, if you distribute copies of such a program, whether gratis or for a fee, you must pass on to the recipients the same freedoms that you received. You must make sure that they, too, receive or can get the source code. And you must show them these terms so they know their rights.

Developers that use the GNU GPL protect your rights with two steps: (1) assert copyright on the software, and (2) offer you this License giving you legal permission to copy, distribute and/or modify it.

For the developers' and authors' protection, the GPL clearly explains that there is no warranty for this free software. For both users' and authors' sake, the GPL requires that modified versions be marked as changed, so that their problems will not be attributed erroneously to authors of previous versions.

Some devices are designed to deny users access to install or run modified versions of the software inside them, although the manufacturer can do so. This is fundamentally incompatible with the aim of protecting users' freedom to change the software. The systematic pattern of such abuse occurs in the area of products for individuals to use, which is precisely where it is most unacceptable. Therefore, we have designed this version of the GPL to prohibit the practice for those products. If such problems arise substantially in other domains, we stand ready to extend this provision to those domains in future versions of the GPL, as needed to protect the freedom of users.

Finally, every program is threatened constantly by software patents. States should not allow patents to restrict development and use of software on general-purpose computers, but in those that do, we wish to avoid the special danger that patents applied to a free program could make it effectively proprietary. To prevent this, the GPL assures that patents cannot be used to render the program non-free.

The precise terms and conditions for copying, distribution and modification follow.
TERMS AND CONDITIONS

0. Definitions.

“This License” refers to version 3 of the GNU General Public License.

“Copyright” also means copyright-like laws that apply to other kinds of works, such as semiconductor masks.

“The Program” refers to any copyrightable work licensed under this License. Each licensee is addressed as “you”. “Licensees” and “recipients” may be individuals or organizations.

To “modify” a work means to copy from or adapt all or part of the work in a fashion requiring copyright permission, other than the making of an exact copy. The resulting work is called a “modified version” of the earlier work or a work “based on” the earlier work.

A “covered work” means either the unmodified Program or a work based on the Program.

To “propagate” a work means to do anything with it that, without permission, would make you directly or secondarily liable for infringement under applicable copyright law, except executing it on a computer or modifying a private copy. Propagation includes copying, distribution (with or without modification), making available to the public, and in some countries other activities as well.

To “convey” a work means any kind of propagation that enables other parties to make or receive copies. Mere interaction with a user through a computer network, with no transfer of a copy, is not conveying.

An interactive user interface displays “Appropriate Legal Notices” to the extent that it includes a convenient and prominently visible feature that (1) displays an appropriate copyright notice, and (2) tells the user that there is no warranty for the work (except to the extent that warranties are provided),

that licensees may convey the work under this License, and how to view a copy of this License. If the interface presents a list of user commands or options, such as a menu, a prominent item in the list meets this criterion.

1. Source Code.

The “source code” for a work means the preferred form of the work for making modifications to it. “Object code” means any non-source form of a work.

A “Standard Interface” means an interface that either is an official standard defined by a recognized standards body, or, in the case of interfaces specified for a particular programming language, one that is widely used among developers working in that language.

The “System Libraries” of an executable work include anything, other than the work as a whole, that (a) is included in the normal form of packaging a Major Component, but which is not part of that Major Component, and (b) serves only to enable use of the work with that Major Component, or to implement a Standard Interface for which an implementation is available to the public in source code form. A “Major Component”, in this context, means a major essential component (kernel, window system, and so on) of the specific operating system (if any) on which the executable work runs, or a compiler used to produce the work, or an object code interpreter used to run it.

The “Corresponding Source” for a work in object code form means all the source code needed to generate, install, and (for an executable work) run the object code and to modify the work, including scripts to control those activities. However, it does not include the work's System Libraries, or general-purpose tools or generally available free programs which are used unmodified in performing those activities but which are not part of the work. For example, Corresponding Source includes interface definition files associated with source files for the work, and the source code for shared libraries and dynamically linked subprograms that the work is specifically designed to require, such as by intimate data communication or control flow between those subprograms and other parts of the work.

The Corresponding Source need not include anything that users can regenerate automatically from other parts of the Corresponding Source.

The Corresponding Source for a work in source code form is that same work.

2. Basic Permissions.

All rights granted under this License are granted for the term of copyright on the Program, and are irrevocable provided the stated conditions are met. This License explicitly affirms your unlimited permission to run the unmodified Program. The output from running a covered work is covered by this License only if the output, given its content, constitutes a covered work. This License acknowledges your rights of fair use or other equivalent, as provided by copyright law.

You may make, run and propagate covered works that you do not convey, without conditions so long as your license otherwise remains in force. You may convey covered works to others for the sole purpose of having them make modifications exclusively for you, or provide you with facilities for running those works, provided that you comply with the terms of this License in conveying all material for which you do not control copyright. Those thus making or running the covered works for you must do so exclusively on your behalf, under your direction and control, on terms that prohibit them from making any copies of your copyrighted material outside their relationship with you.

Conveying under any other circumstances is permitted solely under the conditions stated below. Sublicensing is not allowed; section 10 makes it unnecessary.

3. Protecting Users' Legal Rights From Anti-Circumvention Law.

No covered work shall be deemed part of an effective technological measure under any applicable law fulfilling obligations under article 11 of the WIPO copyright treaty adopted on 20 December 1996, or similar laws prohibiting or restricting circumvention of such measures.

When you convey a covered work, you waive any legal power to forbid circumvention of technological measures to the extent such circumvention is effected by exercising rights under this License with respect to the covered work, and you disclaim any intention to limit operation or modification of the work as a means of enforcing, against the work's users, your or third parties' legal rights to forbid circumvention of technological measures.

4. Conveying Verbatim Copies.

You may convey verbatim copies of the Program's source code as you receive it, in any medium, provided that you conspicuously and appropriately publish on each copy an appropriate copyright notice; keep intact all notices stating that this License and any non-permissive terms added in accord with section 7 apply to the code; keep intact all notices of the absence of any warranty; and give all recipients a copy of this License along with the Program.

You may charge any price or no price for each copy that you convey, and you may offer support or warranty protection for a fee.

5. Conveying Modified Source Versions.

You may convey a work based on the Program, or the modifications to produce it from the Program, in the form of source code under the terms of section 4, provided that you also meet all of these conditions:

a) The work must carry prominent notices stating that you modified it, and giving a relevant date.
b) The work must carry prominent notices stating that it is released under this License and any conditions added under section 7. This requirement modifies the requirement in section 4 to “keep intact all notices”.
c) You must license the entire work, as a whole, under this License to anyone who comes into possession of a copy. This License will therefore apply, along with any applicable section 7 additional terms, to the whole of the work, and all its parts, regardless of how they are packaged. This License gives no permission to license the work in any other way, but it does not invalidate such permission if you have separately received it.
d) If the work has interactive user interfaces, each must display Appropriate Legal Notices; however, if the Program has interactive interfaces that do not display Appropriate Legal Notices, your work need not make them do so.

A compilation of a covered work with other separate and independent works, which are not by their nature extensions of the covered work, and which are not combined with it such as to form a larger program, in or on a volume of a storage or distribution medium, is called an “aggregate” if the compilation and its resulting copyright are not used to limit the access or legal rights of the compilation's users beyond what the individual works permit. Inclusion of a covered work in an aggregate does not cause this License to apply to the other parts of the aggregate.

6. Conveying Non-Source Forms.

You may convey a covered work in object code form under the terms of sections 4 and 5, provided that you also convey the machine-readable Corresponding Source under the terms of this License, in one of these ways:

a) Convey the object code in, or embodied in, a physical product (including a physical distribution medium), accompanied by the Corresponding Source fixed on a durable physical medium customarily used for software interchange.
b) Convey the object code in, or embodied in, a physical product (including a physical distribution medium), accompanied by a written offer, valid for at least three years and valid for as long as you offer spare parts or customer support for that product model, to give anyone who possesses the object code either (1) a copy of the Corresponding Source for all the software in the product that is covered by this License, on a durable physical medium customarily used for software interchange, for a price no more than your reasonable cost of physically performing this conveying of source, or (2) access to copy the Corresponding Source from a network server at no charge.
c) Convey individual copies of the object code with a copy of the written offer to provide the Corresponding Source. This alternative is allowed only occasionally and noncommercially, and only if you received the object code with such an offer, in accord with subsection 6b.

d) Convey the object code by offering access from a designated place (gratis or for a charge), and offer equivalent access to the Corresponding Source in the same way through the same place at no further charge. You need not require recipients to copy the Corresponding Source along with the object code. If the place to copy the object code is a network server, the Corresponding Source may be on a different server (operated by you or a third party) that supports equivalent copying facilities, provided you maintain clear directions next to the object code saying where to find the Corresponding Source. Regardless of what server hosts the Corresponding Source, you remain obligated to ensure that it is available for as long as needed to satisfy these requirements.
e) Convey the object code using peer-to-peer transmission, provided you inform other peers where the object code and Corresponding Source of the work are being offered to the general public at no charge under subsection 6d.

A separable portion of the object code, whose source code is excluded from the Corresponding Source as a System Library, need not be included in conveying the object code work.

A “User Product” is either (1) a “consumer product”, which means any tangible personal property which is normally used for personal, family, or household purposes, or (2) anything designed or sold for incorporation into a dwelling. In determining whether a product is a consumer product, doubtful cases shall be resolved in favor of coverage. For a particular product received by a particular user, “normally used” refers to a typical or common use of that class of product, regardless of the status of the particular user or of the way in which the particular user actually uses, or expects or is expected to use, the product. A product is a consumer product regardless of whether the product has substantial commercial, industrial or non-consumer uses, unless such uses represent the only significant mode of use of the product.

“Installation Information” for a User Product means any methods, procedures, authorization keys, or other information required to install and execute modified versions of a covered work in that User Product from a modified version of its Corresponding Source. The information must suffice to ensure that the continued functioning of the modified object code is in no case prevented or interfered with solely because modification has been made.

If you convey an object code work under this section in, or with, or specifically for use in, a User Product, and the conveying occurs as part of a transaction in which the right of possession and use of the User Product is transferred to the recipient in perpetuity or for a fixed term (regardless of how the transaction is characterized), the Corresponding Source conveyed under this section must be accompanied by the Installation Information. But this requirement does not apply if neither you nor any third party retains the ability to install modified object code on the User Product (for example, the work has been installed in ROM).

The requirement to provide Installation Information does not include a requirement to continue to provide support service, warranty, or updates for a work that has been modified or installed by the recipient, or for the User Product in which it has been modified or installed. Access to a network may be denied when the modification itself materially and adversely affects the operation of the network or violates the rules and protocols for communication across the network.

Corresponding Source conveyed, and Installation Information provided, in accord with this section must be in a format that is publicly documented (and with an implementation available to the public in source code form), and must require no special password or key for unpacking, reading or copying.

7. Additional Terms.

Additional permissions" are terms that supplement the terms of this License by making exceptions from one or more of its conditions. Additional permissions that are applicable to the entire Program shall be treated as though they were included in this License, to the extent that they are valid under applicable law. If additional permissions apply only to part of the Program, that part may be used separately under those permissions, but the entire Program remains governed by this License without regard to the additional permissions.

When you convey a copy of a covered work, you may at your option remove any additional permissions from that copy, or from any part of it. (Additional permissions may be written to require their own removal in certain cases when you modify the work.) You may place additional permissions on material, added by you to a covered work, for which you have or can give appropriate copyright permission.

Notwithstanding any other provision of this License, for material you add to a covered work, you may (if authorized by the copyright holders of that material) supplement the terms of this License with terms:

a) Disclaiming warranty or limiting liability differently from the terms of sections 15 and 16 of this License; or
b) Requiring preservation of specified reasonable legal notices or author attributions in that material or in the Appropriate Legal Notices displayed by works containing it; or
c) Prohibiting misrepresentation of the origin of that material, or requiring that modified versions of such material be marked in reasonable ways as different from the original version; or
d) Limiting the use for publicity purposes of names of licensors or authors of the material; or
e) Declining to grant rights under trademark law for use of some trade names, trademarks, or service marks; or
f) Requiring indemnification of licensors and authors of that material by anyone who conveys the material (or modified versions of it) with contractual assumptions of liability to the recipient, for any liability that these contractual assumptions directly impose on those licensors and authors.

All other non-permissive additional terms are considered “further restrictions” within the meaning of section 10. If the Program as you received it, or any part of it, contains a notice stating that it is governed by this License along with a term that is a further restriction, you may remove that term. If a license document contains a further restriction but permits relicensing or conveying under this License, you may add to a covered work material governed by the terms of that license document, provided that the further restriction does not survive such relicensing or conveying.

If you add terms to a covered work in accord with this section, you must place, in the relevant source files, a statement of the additional terms that apply to those files, or a notice indicating where to find the applicable terms.

Additional terms, permissive or non-permissive, may be stated in the form of a separately written license, or stated as exceptions; the above requirements apply either way.

8. Termination.

You may not propagate or modify a covered work except as expressly provided under this License. Any attempt otherwise to propagate or modify it is void, and will automatically terminate your rights under this License (including any patent licenses granted under the third paragraph of section 11).

However, if you cease all violation of this License, then your license from a particular copyright holder is reinstated (a) provisionally, unless and until the copyright holder explicitly and finally terminates your license, and (b) permanently, if the copyright holder fails to notify you of the violation by some reasonable means prior to 60 days after the cessation.

Moreover, your license from a particular copyright holder is reinstated permanently if the copyright holder notifies you of the violation by some reasonable means, this is the first time you have received notice of violation of this License (for any work) from that copyright holder, and you cure the violation prior to 30 days after your receipt of the notice.

Termination of your rights under this section does not terminate the licenses of parties who have received copies or rights from you under this License. If your rights have been terminated and not permanently reinstated, you do not qualify to receive new licenses for the same material under section 10.

9. Acceptance Not Required for Having Copies.

You are not required to accept this License in order to receive or run a copy of the Program. Ancillary propagation of a covered work occurring solely as a consequence of using peer-to-peer transmission to receive a copy likewise does not require acceptance. However, nothing other than this License grants you permission to propagate or modify any covered work. These actions infringe copyright if you do not accept this License. Therefore, by modifying or propagating a covered work, you indicate your acceptance of this License to do so.

10. Automatic Licensing of Downstream Recipients.

Each time you convey a covered work, the recipient automatically receives a license from the original licensors, to run, modify and propagate that work, subject to this License. You are not responsible for enforcing compliance by third parties with this License.

An “entity transaction” is a transaction transferring control of an organization, or substantially all assets of one, or subdividing an organization, or merging organizations. If propagation of a covered work results from an entity transaction, each party to that transaction who receives a copy of the work also receives whatever licenses to the work the party's predecessor in interest had or could give under the previous paragraph, plus a right to possession of the Corresponding Source of the work from the predecessor in interest, if the predecessor has it or can get it with reasonable efforts.

You may not impose any further restrictions on the exercise of the rights granted or affirmed under this License. For example, you may not impose a license fee, royalty, or other charge for exercise of rights granted under this License, and you may not initiate litigation (including a cross-claim or counterclaim in a lawsuit) alleging that any patent claim is infringed by making, using, selling, offering for sale, or importing the Program or any portion of it.

11. Patents.

A “contributor” is a copyright holder who authorizes use under this License of the Program or a work on which the Program is based. The work thus licensed is called the contributor's “contributor version”.

A contributor's “essential patent claims” are all patent claims owned or controlled by the contributor, whether already acquired or hereafter acquired, that would be infringed by some manner, permitted by this License, of making, using, or selling its contributor version, but do not include claims that would be infringed only as a consequence of further modification of the contributor version. For purposes of this definition, “control” includes the right to grant patent sublicenses in a manner consistent with the requirements of this License.

Each contributor grants you a non-exclusive, worldwide, royalty-free patent license under the contributor's essential patent claims, to make, use, sell, offer for sale, import and otherwise run, modify and propagate the contents of its contributor version.

In the following three paragraphs, a “patent license” is any express agreement or commitment, however denominated, not to enforce a patent (such as an express permission to practice a patent or covenant not to sue for patent infringement). To “grant” such a patent license to a party means to make such an agreement or commitment not to enforce a patent against the party.

If you convey a covered work, knowingly relying on a patent license, and the Corresponding Source of the work is not available for anyone to copy, free of charge and under the terms of this License, through a publicly available network server or other readily accessible means, then you must either (1) cause the Corresponding Source to be so available, or (2) arrange to deprive yourself of the benefit of the patent license for this particular work, or (3) arrange, in a manner consistent with the requirements of this License, to extend the patent license to downstream recipients. “Knowingly relying” means you have actual knowledge that, but for the patent license, your conveying the covered work in a country, or your recipient's use of the covered work in a country, would infringe one or more identifiable patents in that country that you have reason to believe are valid.

If, pursuant to or in connection with a single transaction or arrangement, you convey, or propagate by procuring conveyance of, a covered work, and grant a patent license to some of the parties receiving the covered work authorizing them to use, propagate, modify or convey a specific copy of the covered work, then the patent license you grant is automatically extended to all recipients of the covered work and works based on it.

A patent license is “discriminatory” if it does not include within the scope of its coverage, prohibits the exercise of, or is conditioned on the non-exercise of one or more of the rights that are specifically granted under this License. You may not convey a covered work if you are a party to an arrangement with a third party that is in the business of distributing software, under which you make payment to the third party based on the extent of your activity of conveying the work, and under which the third party grants, to any of the parties who would receive the covered work from you, a discriminatory patent license (a) in connection with copies of the covered work conveyed by you (or copies made from those copies), or (b) primarily for and in connection with specific products or compilations that contain the covered work, unless you entered into that arrangement, or that patent license was granted, prior to 28 March 2007.

Nothing in this License shall be construed as excluding or limiting any implied license or other defenses to infringement that may otherwise be available to you under applicable patent law.

12. No Surrender of Others' Freedom.

If conditions are imposed on you (whether by court order, agreement or otherwise) that contradict the conditions of this License, they do not excuse you from the conditions of this License. If you cannot convey a covered work so as to satisfy simultaneously your obligations under this License and any other pertinent obligations, then as a consequence you may not convey it at all. For example, if you agree to terms that obligate you to collect a royalty for further conveying from those to whom you convey the Program, the only way you could satisfy both those terms and this License would be to refrain entirely from conveying the Program.

13. Use with the GNU Affero General Public License.

Notwithstanding any other provision of this License, you have permission to link or combine any covered work with a work licensed under version 3 of the GNU Affero General Public License into a single combined work, and to convey the resulting work. The terms of this License will continue to apply to the part which is the covered work, but the special requirements of the GNU Affero General Public License, section 13, concerning interaction through a network will apply to the combination as such.

14. Revised Versions of this License.

The Free Software Foundation may publish revised and/or new versions of the GNU General Public License from time to time. Such new versions will be similar in spirit to the present version, but may differ in detail to address new problems or concerns.

Each version is given a distinguishing version number. If the Program specifies that a certain numbered version of the GNU General Public License “or any later version” applies to it, you have the option of following the terms and conditions either of that numbered version or of any later version published by the Free Software Foundation. If the Program does not specify a version number of the GNU General Public License, you may choose any version ever published by the Free Software Foundation.

If the Program specifies that a proxy can decide which future versions of the GNU General Public License can be used, that proxy's public statement of acceptance of a version permanently authorizes you to choose that version for the Program.

Later license versions may give you additional or different permissions. However, no additional obligations are imposed on any author or copyright holder as a result of your choosing to follow a later version.

15. Disclaimer of Warranty.

THERE IS NO WARRANTY FOR THE PROGRAM, TO THE EXTENT PERMITTED BY APPLICABLE LAW. EXCEPT WHEN OTHERWISE STATED IN WRITING THE COPYRIGHT HOLDERS AND/OR OTHER PARTIES PROVIDE THE PROGRAM “AS IS” WITHOUT WARRANTY OF ANY KIND, EITHER EXPRESSED OR IMPLIED, INCLUDING, BUT NOT LIMITED TO, THE IMPLIED WARRANTIES OF MERCHANTABILITY AND FITNESS FOR A PARTICULAR PURPOSE. THE ENTIRE RISK AS TO THE QUALITY AND PERFORMANCE OF THE PROGRAM IS WITH YOU. SHOULD THE PROGRAM PROVE DEFECTIVE, YOU ASSUME THE COST OF ALL NECESSARY SERVICING, REPAIR OR CORRECTION.

16. Limitation of Liability.

IN NO EVENT UNLESS REQUIRED BY APPLICABLE LAW OR AGREED TO IN WRITING WILL ANY COPYRIGHT HOLDER, OR ANY OTHER PARTY WHO MODIFIES AND/OR CONVEYS THE PROGRAM AS PERMITTED ABOVE, BE LIABLE TO YOU FOR DAMAGES, INCLUDING ANY GENERAL, SPECIAL, INCIDENTAL OR CONSEQUENTIAL DAMAGES ARISING OUT OF THE USE OR INABILITY TO USE THE PROGRAM (INCLUDING BUT NOT LIMITED TO LOSS OF DATA OR DATA BEING RENDERED INACCURATE OR LOSSES SUSTAINED BY YOU OR THIRD PARTIES OR A FAILURE OF THE PROGRAM TO OPERATE WITH ANY OTHER PROGRAMS), EVEN IF SUCH HOLDER OR OTHER PARTY HAS BEEN ADVISED OF THE POSSIBILITY OF SUCH DAMAGES.

17. Interpretation of Sections 15 and 16.

If the disclaimer of warranty and limitation of liability provided above cannot be given local legal effect according to their terms, reviewing courts shall apply local law that most closely approximates an absolute waiver of all civil liability in connection with the Program, unless a warranty or assumption of liability accompanies a copy of the Program in return for a fee.

END OF TERMS AND CONDITIONS
How to Apply These Terms to Your New Programs

If you develop a new program, and you want it to be of the greatest possible use to the public, the best way to achieve this is to make it free software which everyone can redistribute and change under these terms.

To do so, attach the following notices to the program. It is safest to attach them to the start of each source file to most effectively state the exclusion of warranty; and each file should have at least the “copyright” line and a pointer to where the full notice is found.

<one line to give the program's name and a brief idea of what it does.>
Copyright (C) <year> <name of author>

This program is free software: you can redistribute it and/or modify
it under the terms of the GNU General Public License as published by
the Free Software Foundation, either version 3 of the License, or
(at your option) any later version.

This program is distributed in the hope that it will be useful,
but WITHOUT ANY WARRANTY; without even the implied warranty of
MERCHANTABILITY or FITNESS FOR A PARTICULAR PURPOSE. See the
GNU General Public License for more details.

You should have received a copy of the GNU General Public License
along with this program. If not, see <http://www.gnu.org/licenses/>.

Also add information on how to contact you by electronic and paper mail.

If the program does terminal interaction, make it output a short notice like this when it starts in an interactive mode:

<program> Copyright (C) <year> <name of author>
This program comes with ABSOLUTELY NO WARRANTY; for details type `show w'.
This is free software, and you are welcome to redistribute it
under certain conditions; type `show c' for details.

The hypothetical commands `show w' and `show c' should show the appropriate parts of the General Public License. Of course, your program's commands might be different; for a GUI interface, you would use an “about box”.

You should also get your employer (if you work as a programmer) or school, if any, to sign a “copyright disclaimer” for the program, if necessary. For more information on this, and how to apply and follow the GNU GPL, see <http://www.gnu.org/licenses/>.

The GNU General Public License does not permit incorporating your program into proprietary programs. If your program is a subroutine library, you may consider it more useful to permit linking proprietary applications with the library. If this is what you want to do, use the GNU Lesser General Public License instead of this License. But first, please read <http://www.gnu.org/philosophy/why-not-lgpl.html>.

2 This configure script is free software; the Free Software Foundation
gives unlimited permission to copy, distribute and modify it.

Copyrights:

Copyright (C) 2003 Free Software Foundation, Inc.

Copyright (C) 2005, 2006, 2009 Free Software Foundation

Copyright (C) 2007, 2009 Free Software Foundation, Inc.

Copyright (C) 2008, 2009 Free Software Foundation, Inc.

Copyright 1997, 1998, 1999, 2000, 2001, 2002, 2003, 2004, 2005, 2006, 2007, 2008, 2009 Free Software Foundation, Inc.

SIEMENS

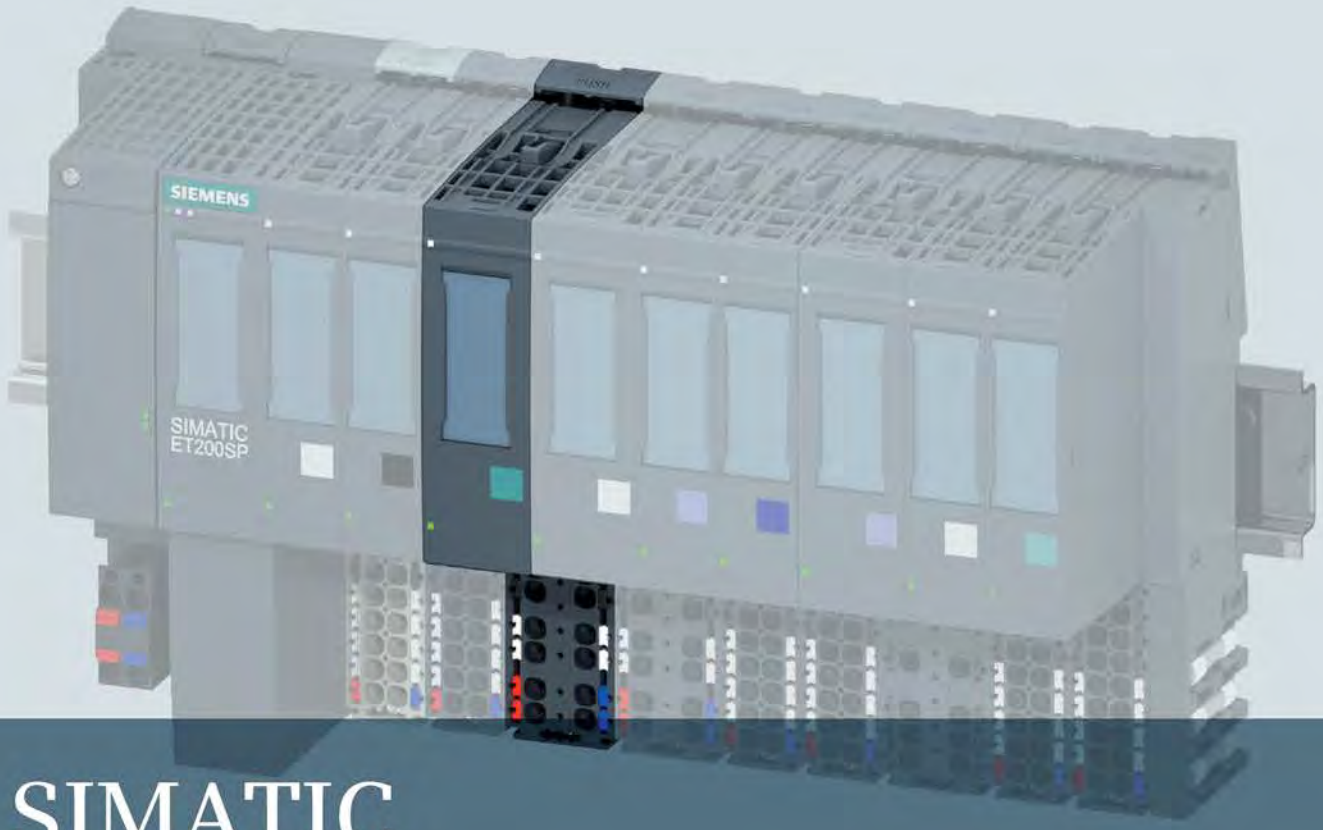

SIMATIC

ET 200SP

Technology Module TM Pulse 2x24V (6ES7138-6DB00-0BB1)

Manual

Version 09/2015

Answers for industry.

SIEMENS

SIMATIC

ET 200SP
Technology module TM Pulse 2x24V (6ES7138-6DB00-0BB1)

Manual

Preface

Documentation guide 1

Product overview 2

Modes and Functions 3

Connecting 4

Configuring 5

Program control and feedback interface 6

Interrupts/diagnostic messages 7

Technical specifications 8

Parameter data record A

Open Source Software B

09/2015

A5E35061186-AA

Legal information

Warning notice system

This manual contains notices you have to observe in order to ensure your personal safety, as well as to prevent damage to property. The notices referring to your personal safety are highlighted in the manual by a safety alert symbol, notices referring only to property damage have no safety alert symbol. These notices shown below are graded according to the degree of danger.

⚠ DANGER

indicates that death or severe personal injury **will** result if proper precautions are not taken.

⚠ WARNING

indicates that death or severe personal injury **may** result if proper precautions are not taken.

⚠ CAUTION

indicates that minor personal injury can result if proper precautions are not taken.

NOTICE

indicates that property damage can result if proper precautions are not taken.

If more than one degree of danger is present, the warning notice representing the highest degree of danger will be used. A notice warning of injury to persons with a safety alert symbol may also include a warning relating to property damage.

Qualified Personnel

The product/system described in this documentation may be operated only by **personnel qualified** for the specific task in accordance with the relevant documentation, in particular its warning notices and safety instructions. Qualified personnel are those who, based on their training and experience, are capable of identifying risks and avoiding potential hazards when working with these products/systems.

Proper use of Siemens products

Note the following:

⚠ WARNING

Siemens products may only be used for the applications described in the catalog and in the relevant technical documentation. If products and components from other manufacturers are used, these must be recommended or approved by Siemens. Proper transport, storage, installation, assembly, commissioning, operation and maintenance are required to ensure that the products operate safely and without any problems. The permissible ambient conditions must be complied with. The information in the relevant documentation must be observed.

Trademarks

All names identified by ® are registered trademarks of Siemens AG. The remaining trademarks in this publication may be trademarks whose use by third parties for their own purposes could violate the rights of the owner.

Disclaimer of Liability

We have reviewed the contents of this publication to ensure consistency with the hardware and software described. Since variance cannot be precluded entirely, we cannot guarantee full consistency. However, the information in this publication is reviewed regularly and any necessary corrections are included in subsequent editions.

Siemens AG
Division Digital Factory
Postfach 48 48
90026 NÜRNBERG
GERMANY

A5E35061186-AA
℗ 08/2015 Subject to change

Copyright © Siemens AG 2015.
All rights reserved

Preface

Purpose of the documentation

This manual includes module-specific information on wiring, diagnostics and the technical specifications of the technology module.

General information regarding the design and commissioning of the ET 200SP is available in the ET 200SP system manual.

Conventions

Please observe notes marked as follows:

Note

A note contains important information on the product described in the documentation, on the handling of the product, and on the section of the documentation to which particular attention should be paid.

Security information

Siemens provides products and solutions with industrial security functions that support the secure operation of plants, solutions, machines, equipment and/or networks. They are important components in a holistic industrial security concept. With this in mind, Siemens' products and solutions undergo continuous development. Siemens recommends strongly that you regularly check for product updates.

For the secure operation of Siemens products and solutions, it is necessary to take suitable preventive action (e.g. cell protection concept) and integrate each component into a holistic, state-of-the-art industrial security concept. Third-party products that may be in use should also be considered. You can find more information about industrial security on the Internet (http://www.siemens.com/industrialsecurity).

To stay informed about product updates as they occur, sign up for a product-specific newsletter. You can find more information on the Internet (https://support.industry.siemens.com/cs/?lc=en-US).

Open source software

Open source software is used in the firmware of the product described. Open source software is provided free of charge. We are liable for the product described, including the open source software contained in it, pursuant to the conditions applicable to the product. Siemens accepts no liability for the use of the open source software over and above the intended program sequence, or for any faults caused by modifications to the software.

For legal reasons, we are obliged to publish the original text of the license conditions and copyright notices. Please read the information relating to this in the "Open Source Software (Page 142)" appendix.

Table of contents

Preface 4
1 Documentation guide 8
2 Product overview 10
2.1 Properties 10
3 Modes and Functions 14
3.1 Overview 14
3.2 Pulse output (single pulse) mode 17
3.3 Pulse width modulation (PWM) mode 25
3.4 Pulse train mode 36
3.5 On/Off-delay mode 46
3.6 Frequency output mode 57
3.7 DC motor mode 65
3.8 Function: High-speed output 74
3.9 Function: Sequence counter 75
3.10 Function: Current measurement 76
3.11 Function: Current control 78
3.12 Function: Dither PWM output 82
3.13 Function: Isochronous mode 86
3.14 Function: Direct control of DQ digital outputs 87
4 Connecting 91
4.1 Pin assignment, sensor, load, and power wiring 91
5 Configuring 98
5.1 Configuration software 98
5.2 Configuration overview 99
5.3 Required I/O address space 100
5.4 TIA portal Device configuration 101
5.4.1 TIA Portal Device configuration 101
5.4.2 General information 102
5.4.3 Potential group 102
5.4.4 Channel configuration: (4 A) single or (2 A) dual channel operation 102

5.4.5 Channel parameters 103
5.4.5.1 Operating mode 103
5.4.5.2 Reaction to CPU STOP 103
5.4.5.3 Diagnostics 105
5.4.5.4 Parameter (Channel parameters) 106
5.4.6 I/O addresses....109

6 Program control and feedback interface 110

6.1 TM Pulse 2x24V control interface....110

6.2 SLOT parameter handling (control interface) 113

6.3 TM Pulse 2x24V feedback interface....115

7 Interrupts/diagnostic messages 117

7.1 Status and error displays 117

7.2 Parameter validation errors 120

7.3 Error detection and diagnostics 122

8 Technical specifications.... 125

8.1 Programming reference 131

A Parameter data record.... 138

B Open Source Software 142

Index.... 196

Documentation guide 1

Introduction

This modular documentation of a SIMATIC product covers automation system topics.

The complete documentation for the ET 200SP system consists of the respective system manuals, function manuals, and device manuals.

The STEP 7 information system (TIA Portal online Help) also helps you configure and program your automation system.

Overview of the documentation for TM Pulse 2x24V technology module

The following table lists further documentation that you will need when using the TM Pulse 2x24V technology module.

Table 1- 1 Documentation for TM Pulse 2x24V technology module

Topic	Documentation	Most important contents
System description	System manual ET 200SP Distributed I/O System (https://support.industry.siemens.com/cs/mdm/58649293?c=76156021003&t=1&s=BaseUnit&lc=en-US)	• Application planning • Installation • Connecting • Commissioning
	Device manuals Interface Module (https://support.industry.siemens.com/cs/products?dtp=Manual&pnid=14034&lc=en-US)	• Connecting • Interrupts, diagnostics, error, and system messag-es • Technical specifications • Dimension drawing
	Device manual for the ET 200SP BaseUnit 6ES7-193-6B20-0BB1 compatible with the TM Pulse 2x24V module. ET 200SP BaseUnits (https://support.industry.siemens.com/cs/mdm/59753521?c=72851856267&t=1&s=ET 200SP BaseUnit&lc=en-US)	Technical specifications

Topic	Documentation	Most important contents
Configuring interference-free controllers	SIMATIC S7-1500, ET 200MP, ET 200SP, ET 200AL Designing interference-free controllers (https://support.industry.siemens.com/cs/mdm/59193566?t=1&s=Designing interference free controllers function manual&lc=en-US) Function Manual	• Basics • Electromagnetic compatibility • Lightning protection
Isochronous mode	SIMATIC PROFINET with STEP 7 (https://support.industry.siemens.com/cs/mdm/49948856?c=73850691339&t=1&s=PROFINET with STEP 7 V13 SP1&lc=en-US) Function manual	• Benefits • Use • Parameter settings

SIMATIC manuals

All current manuals for the SIMATIC products are available for download free of charge from the Internet (https://support.industry.siemens.com/cs/?lc=en-US).

Product overview

2

2.1 Properties

Article number

6ES7138-6DB00-0BB1

View of the module

Figure 2-1 View of the TM Pulse 2x24V module

Properties

The TM Pulse 2x24V technology module has the following properties:

- 2 pulse output channels with up to 2 A output current per channel
  - One-channel operation: The two channels are merged together into one logical channel and are connected in parallel to generate pulse signals with up to 4 A output current.
  - Two-channel operation: The two channels can work independently of each other.
- Programmable pulse timing.

Pulse timing	Minimum		Maximum	
	High-speed disabled	High-speed enabled	High-speed disabled	High-speed enabled
Pulse duration	10 µs [1]	1.5 µs [1]	85,000,000 µs (85 s)	
Period duration	100 µs	10 µs		
On-delay	0 µs			
Off-delay				
Frequency	0.02 Hz		10 kHz	100 kHz

[1] A smaller value is possible but not guaranteed for Pulse train, PWM, On/Off-delay, and DC motor modes

Parallel mode	Maximum pulse output current	
	High-speed disabled	High-speed enabled
Disabled	2 A (two channels)	100 mA (two channels)
Enabled	4 A (one channel)	Not allowed

- You can configure DI0.0 (Channel 0) and DI1.0 (Channel 1) digital inputs as hardware enable inputs that start the output pulse sequence, or as inputs directly usable by your program and independent of the pulse generation. In DC motor mode, you can stop the motor by using the digital inputs for external stop control.
- If you configure one channel 4 A operation, the two output channels are connected in parallel. Only Channel 0 is parameterized to control the parallel connection and only DI0.0 is available as a digital input/hardware enable.
- Each channel's digital output provides two load connections:
  - All modes except DC motor mode use a single unipolar output connection (DQn.A).
  - In DC motor, connect a load between the bipolar output connections (DQn.A and DQn.B). For example, a channel output can drive a DC motor in both directions by reversing the voltage polarity. Note that not all functions are available in DC motor mode; for example, current measurement and current control are not allowed.
- Digital outputs have integrated protection diodes to prevent voltage overstress due to inductive kickback. No external protection diodes are required for inductive loads.

Operating modes

- Pulse output: output a single pulse with variable pulse duration and On-delay.
- Pulse width modulation (PWM):
  - Output a frequency with a defined period duration and variable ratio of pulse width to period duration (duty cycle).
  - PWM can vary current in the driven loads. You can use PWM mode to control temperature in a heating resistor or the force from a coil in a proportional valve.
- Pulse train: output a train of pulses with an assigned pulse quantity, period duration, ratio of pulse width to period duration (duty cycle), and On-delay.
- On/Off-delay: the pulse output follows the signal at the DIn.0 digital input after an assigned On-delay and Off-delay.
- Frequency output: output pulses at a variable frequency with a fixed pulse width to pulse period duty cycle of 50%.
- DC motor: drive a motor in both directions with a bipolar PWM output. You can assign a digital input as an "External stop" signal, for the motor.

Functions

- Sequence counter: count completed output sequences and provide a feedback signal. The sequence counter can count short output sequences that are too fast for your program to monitor. For example, the counter is useful when the output sequence is faster than your program's cycle time and the output sequence is triggered by the DI digital input. The sequence counter is limited to 4 bits (count range 0 to 15).
- The sequence counter is available only for:
  - Pulse output and Pulse train modes.
    Without hardware enable, the counter is set to 1 after completion of the output sequence.
    With hardware enable, the counter is incremented after every completed output sequence.
  - On/Off-delay mode.
    The counter is incremented with each positive and negative edge at the DQn.A digital output.
- Current measurement: for Pulse train and PWM modes.
- Current control: PID loop control for proportional current control in PWM mode.
- Dithering: superimpose a dither signal on the PWM output to prevent valve sticking and improve proportional valve control.
- Direct control of the digital output by your control program.

- Programmable output response to CPU/master STOP condition.
- Error detection and diagnostics:
  - Missing or under voltage L+ supply voltage
  - Short-circuit/overload of a digital output
  - Short-circuit/under voltage of a sensor power supply
  - Over temperature error
  - Parameterization fault
  - Module/firmware error

Configuration

TM Pulse 2x24V configuration software options:

- TIA Portal V13 + SP1 with HSP 0131 (Hardware Support Package from the Internet)
- STEP 7 version V5.5 + SP4 with HSP 0240
- GSD file links:
  - PROFIBUS GSD files (https://support.industry.siemens.com/cs/document/73016883?dti=0&lc=en-US)
  - PROFINET GSD files (https://support.industry.siemens.com/cs/document/57138621?dti=0&lc=en-US)

Firmware update

Firmware updates can be downloaded to the memory of the TM Pulse 2x24V module by means of the STEP 7 TIA Portal software or the HW Config software.

Accessories

The following accessories can be used with the module and are not included in the product package:

- Labeling strip
- Color identification labels
- Reference identification labels

A BaseUnit of the B1 type is required to operate the technology module. For an overview of the BaseUnits to be used with the technology module, refer to the product information on the documentation for the ET 200SP Distributed I/O System (https://support.industry.siemens.com/cs/document/73021864?dti=0&lc=en-US).

For detailed information on the installation procedure, refer to the system manual for the ET 200SP Distributed I/O System (https://support.industry.siemens.com/cs/document/58649293?dti=0&lc=en-US).

Modes and Functions 3

3.1 Overview

Modes and functions

The TM Pulse 2x24V has two channels. You can assign a different mode for each channel.

Configuration of the operating mode is made using the TIA Portal or HW Config.

You can select one of six operating modes:

- Pulse output (single pulse)
- PWM
- Pulse train
- On/Off-delay
- Frequency output
- DC motor (PWM: forward and reverse rotation)

In addition to the operating mode, the TM Pulse 2x24V has the following functions:

- If enabled, the high-speed output option lets you generate a 1.5 µs minimum pulse duration at a current of 100 mA and a non-high-speed mode (high-speed mode disabled) with a minimum pulse duration of 10 µs and a maximum current of 2 A (two channels) or 4 A (one channel).
- The Sequence counter counts completed output sequences and provides a feedback signal.
- Current measurement for PWM and Pulse train modes
- Current control for the output current in PWM mode
- Dithering: superimpose a dithering signal on the PWM output to improve proportional valve control.
- You can directly control digital outputs with your control program, with separate control for each channel.
- Parallel connection of both channels creates one logical channel that can drive a 4 A output current.
- You can configure the response to CPU/master STOP. The outputs are put in the state that you assign for the control program STOP condition.

- The TM Pulse 2x24V provides module diagnostics and channel error detection.

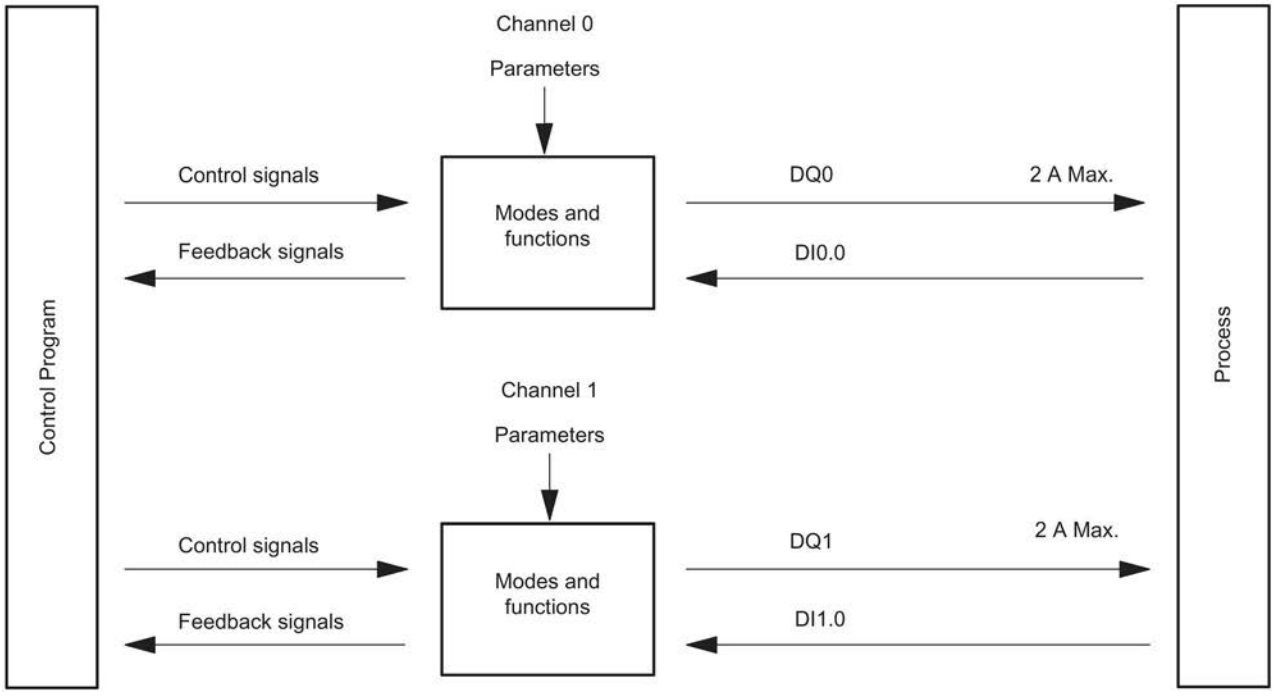

Figure 3-1 Dual channel operation

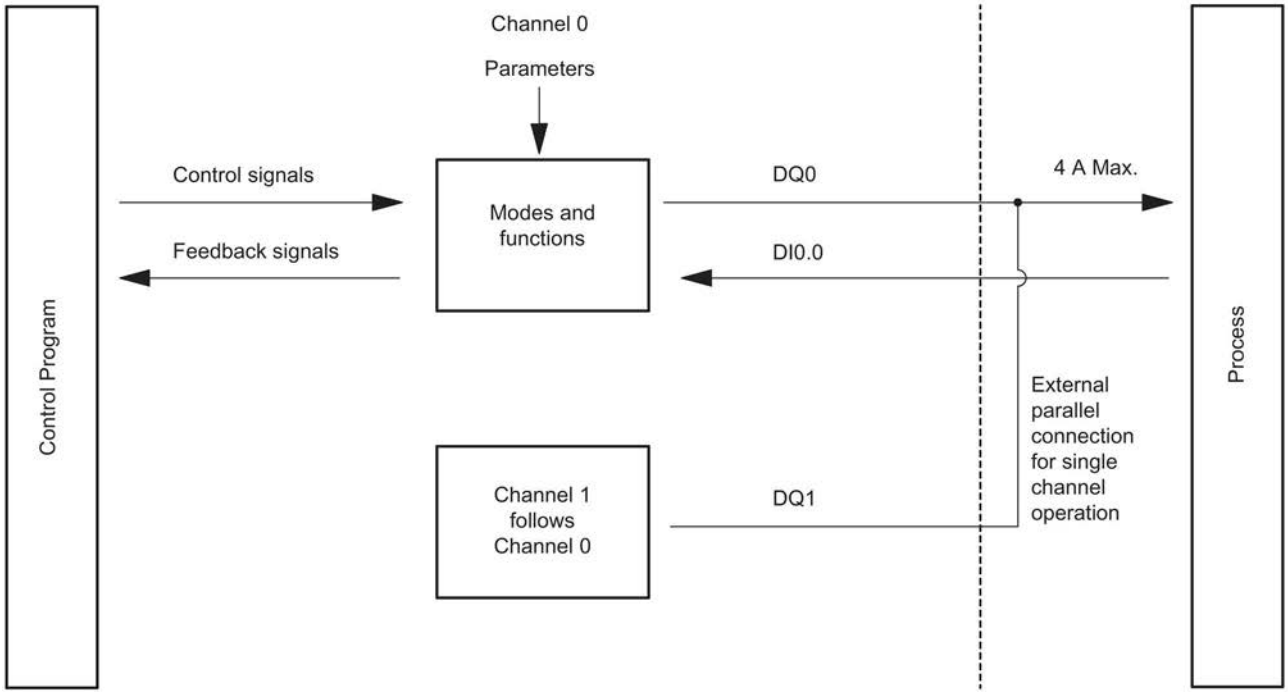

Figure 3-2 Single channel operation

Interfaces to the control program and the process under control

The TM Pulse 2x24V has the following I/O BaseUnit pin connections to the process under control:

Channel 0:

- DI0.0 (digital input 0)
- DQ0.A and DQ0.B (digital output 0)
  - Two connections are provided for each channel output (DQ0.A and DQ0.B). Load wiring depends on a channel's mode assignment.

Channel 1:

- DI1.0 (digital input 1)
- DQ1.A and DQ1.B (digital output 1)

You can find a table of configuration parameters in the "Parameter assignment and structure of the parameter data records (Page 138)" section.

You can modify and monitor the modes and functions with your control program using control and feedback signals. These parameters are listed in the "Control and feedback interface (Page 110)" section.

You will find the following in the "Modes and functions" section:

- Operation descriptions
- The relevant parameters
- The relevant control and feedback signals

The "Description of operations" for modes and functions applies to both channels. The terms DIn.0, DQn.A, and DQn.B are used in descriptions that are true for both channels.

3.2 Pulse output (single pulse) mode

Definition

After the assigned On-delay time expires, the TM Pulse 2x24V outputs a pulse at the DQn.A digital output (output sequence) for the pulse duration that you set.

Pulse diagram

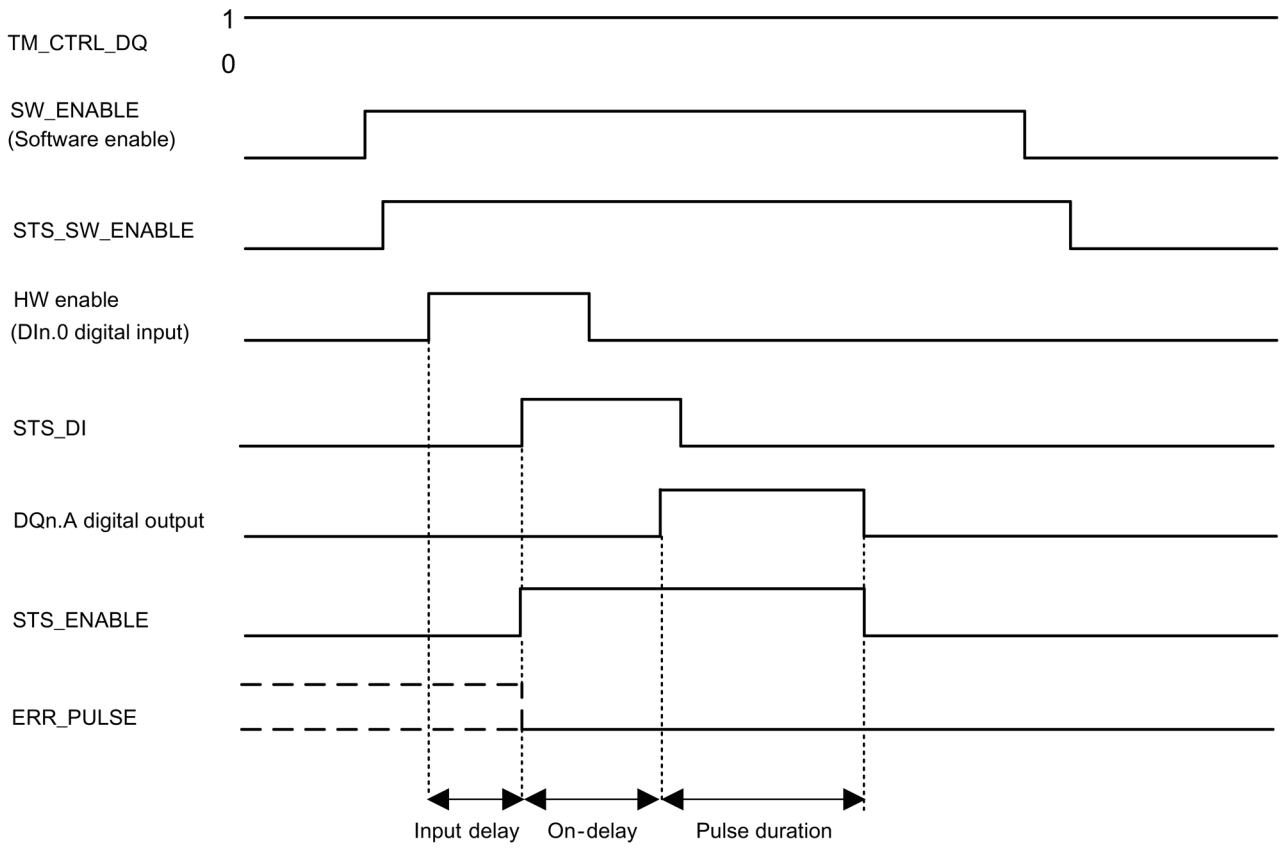

Figure 3-3 Pulse output mode output sequence using optional HW enable signal to start the output sequence

The timing diagram above has the "Function DI" parameter set to "HW enable". The other option is to set "Function DI" to "Input". If the "Function DI" parameter is set to "Input", then the On-delay phase starts at the rising edge of SW_ENABLE.

Starting the output sequence

Your control program must issue the enable for the output sequence, using the software enable (SW_ENABLE 0 → 1).

The STS_SW_ENABLE feedback bit indicates that a software enable is pending in the TM Pulse 2x24V.

You can also set the DIn.0 digital input of a TM Pulse 2x24V channel to be a hardware enable (HW enable) with the "Function DI" parameter. The input delay (noise filter) of the hardware enable can be set using the "Input delay" parameter.

If you want to use the hardware enable, it has to be combined with the software enable. When the software enable has been enabled, the output sequence starts at the first positive edge of the hardware enable. Further positive edges of the hardware enable during the current output sequence are ignored. When the HW enable goes high (positive edge) and remains high for the input delay time, the On-delay is started and the STS_ENABLE is set. After the On-delay expires, the pulse is output with the assigned pulse duration. The output sequence finishes with the end of the pulse and STS_ENABLE is cleared.

If you reduce the pulse duration to a time that has already expired, then the ERR_PULSE signal indicates a pulse output error and the output sequence stops. To resume the pulse output, you must restart the output sequence after an ERR_PULSE error occurs. The next time the output sequence starts, TM Pulse 2x24V clears the ERR_PULSE feedback bit.

Note

TM_CTRL_DQ technology module output control signal

- If TM_CTRL_DQ = 1, then the TM Pulse 2x24V module has control and produces pulse sequences at the DQn.A outputs.
- If TM_CTRL_DQ = 0, then the CPU has control and your program can set DQn.A/DQn.B outputs directly with the SET_DQA/SET_DQB control bits.

Canceling the output sequence

Disabling the software enable (SW_ENABLE = 1 → 0) cancels the current output sequence and the last period duration is not completed. STS_ENABLE and the DQn.A digital output are immediately reset to 0.

You must restart the output sequence to begin new pulse output.

Truth Table

Software enable SW_ENABLE	Function DI parameter	Hardware enable (DIn.0 digital input)	DQn.A digital output (when TM_CTRL_DQ = 1)	STS_ENABLE	Output Sequence
1	HW_ENABLE	0 → 1 and remains 1 during the input delay. Only active for the first positive edge, additional positive edges are ignored and no start occurs.	0, if On-delay > 0 1, if On-delay = 0	0 → 1	Start
0 → 1	Input	Not used	0, if On-delay > 0 1, if On-delay = 0	0 → 1	Start
0	HW_ENABLE or Input	Any status	0	0	Terminate
1	HW_ENABLE or Input	Any status	0, if On-delay is not expired or if the pulse duration is expired. 1, if On-delay is expired and pulse duration is not expired.		-
0 → 1	HW_ENABLE	0	0	0	-

Setting and changing the pulse duration

Your control program can set the pulse duration directly with the control interface field OUTPUT_VALUE as a DWord number value in microseconds:

- High-speed output enabled, from 2 µs to 85,000,000 µs
- High-speed output disabled, from 10 µs to 85,000,000 µs

If you change the pulse duration when an output sequence is running, the pulse time already elapsed is subtracted from the new pulse duration and the pulse output continues.

Reducing the pulse duration

If you have reduced the pulse duration to a time that is less than the pulse time already elapsed, then the output sequence is terminated. STS_ENABLE and the DQn.A digital output are cleared, and the ERR_PULSE status bit is set. At the next output sequence, the ERR_PULSE status bit is cleared.

Setting and changing the On-delay

- **Permanent update**

  The On-delay can be controlled permanently using the control interface. The MODE_SLOT bit has to be 1 (permanent-update); LD_SLOT must have the value 2 (for On-delay). Set the On-delay as a value between 0 µs and 85,000,000 µs in the control interface field SLOT.

- **Single Update**

  Set the On-delay as a value between 0 µs and 85,000,000 µs in the configuration parameters. Alternatively, you can do a single update using the control interface. MODE_SLOT has to be 0 (single-update); LD_SLOT has to have the value 2 (for On-delay). Set the On-delay as a value between 0 µs and 85,000,000 µs in the control interface field SLOT.

If you change the On-delay value during the output sequence, then the new On-delay is activated on the next output sequence.

For more details about the use of the SLOT value, see SLOT parameter handling (Page 113)

Using the Sequence counter

The Sequence counter counts completed pulse output sequences and provides the count value variable SEQ_CNT in the feedback interface. The sequence counter can count short output sequences that are too fast to be monitored by your program. See Sequence counter (Page 75) for details.

Isochronous mode

General information is available in Function: Isochronous mode (Page 86).

Isochronous mode does not have any influence on the functionality of Pulse output operating mode.

If you want to synchronize the output sequence with T_o, then set the Function DI parameter to "Input" and the Pulse output sequence starts at T_o.

Pulse output parameters

Pulse output parameter	Meaning	Value Range	Default
Mode	0 = Set the Pulse output operating mode.	0 = Pulse output 1 = Pulse width modulation 2 = Pulse train 3 = On/Off-delay 4 = Frequency output 5 = DC Motor	1
High-speed output [1]	The output supports higher frequencies at smaller loads when enabled.	0 = Disabled 1 = Enabled	Disabled
Function DI	You can use the DIn.0 digital input as an input or as a hardware enable. The signal at DIn.0 is interpreted by the TM Pulse 2x24V, after noise filtering by the input delay, as the start of the output sequence.	0 = Input 1 = HW enable	Input
Input delay	DIn.0: a digital input must be stable over the delay time (signal noise suppression).	0 = Off (4 µs) 1 = 0.05 ms 2 = 0.1 ms 3 = 0.4 ms 4 = 0.8 ms 5 = 1.6 ms 6 = 3.2 ms 7 = 12.8 ms 8 = 20 ms	0.1 ms
On-delay	The time from the start of the output sequence to the output of the pulse. You can change the On-delay in your control program using the SLOT parameter.	0 µs to 85,000,000 µs	0 µs

[1] Only if the module is configured as "2 channels (2 A)"

Control and feedback signals for Pulse output mode

Control interface: Offset to the start address		Parameter	Meaning				
Channel 0	Channel 1 [1]						
Bytes 0 to 3	Bytes 12 to 15	OUTPUT_VALUE (DWord)	Pulse duration: the time that the DQn.A digital output remains set after the On-delay time expires. If you violate the lower or upper limit of the range, then ERR_OUT_VAL is returned in the feedback interface and the last valid value is used.				
			High-speed output disabled:	**High-speed output enabled:**			
			10 µs to 85,000,000 µs	2 µs to 85,000,000 µs			
Bytes 4 to 7	Bytes 16 to 19	SLOT (DWord)	The On-delay can be changed before the start of the output sequence. See MODE_SLOT.				
			0 µs to 85,000,000 µs				
Byte 8	Byte 20	LD_SLOT	Interpretation of the value SLOT: all other values not listed below are invalid and produce the error ERR_LD (in single-update mode) or ERR_SLOT_VAL (in permanent-update mode).				
			Bit 3	**Bit 2**	**Bit 1**	**Bit 0**	
			0	0	0	0	Idle state; nothing is done with the value
			0	0	1	0	On-delay in µs
Byte 8: Bit 4	Byte 20: Bit 4	MODE_SLOT	**Bit 4**	Mode for use of the field SLOT.			
			0	Single-update mode			
			1	Permanent-update mode			
Byte 9: Bit 0	Byte 21: Bit 0	SW_ENABLE	**Bit 0**	Software enable: Start/enable and terminate/disable the output sequence.			
			0	Output disabled/terminated			
			0 → 1	Starts output sequence on positive edge when "Function DI" = "Input"			
			1	Enable output sequence, when start is dependent on HW enable with "Function DI" = "HW enable"			
Byte 9: Bit 1	Byte 21: Bit 1	TM_CTRL_DQ	**Bit 1**	Set DQn.A output source: Select either CPU program or module's output sequence.			
			0	DQn.A and DQn.B are controlled by the CPU (your program logic) using the SET_DQA and SET_DQB control bits.			
			1	DQn.A is controlled by the module's pulse output sequence. DQn.B is always 0.			
Byte 9: Bit 3	Byte 21: Bit 3	SET_DQA	**Bit 3**	Controls the value of the digital output DQn.A, if TM_CTRL_DQ is cleared.			
			0	0 on DQn.A			
			1	1 on DQn.A			
Byte 9: Bit 4	Byte 21: Bit 4	SET_DQB	**Bit 4**	Controls the value of the digital output DQn.B, if TM_CTRL_DQ and SET_DQA are cleared.			
			0	0 on DQn.B			
			1	1 on DQn.B			
Byte 10: Bit 0	Byte 22: Bit 0	RES_ERROR	**Bit 0**	Reset pending errors (ERR_LD, ERR_DQA, ERR_DQB, and ERR_24V).			
			0	Reset of errors is not active			
			1	Reset of errors is active			

[1] Only if the module is configured as "2 channels (2 A)" and not "1 channel (4 A)".

Note: All bytes and bits not described in the table above are reserved and should be 0.

Feedback interface: Offset to the start address		Parameter	Meaning	
Channel 0	Channel 1[1]			
Byte 0: Bit 0	Byte 8: Bit 0	ERR_PWR	**Bit 0**	Indicates under voltage on the Power supply. Note that the bit is not set if the voltage is not present.
			0	PWR is not under voltage
			1	PWR is detected, but under voltage
Byte 0: Bit 1	Byte 8: Bit 1	ERR_24V	**Bit 1**	Indicates a short-circuit or overload on the output 24 V DC. You must set the RES_ERROR (control interface) to reset this error.
			0	No short-circuit on 24 V DC
			1	Short-circuit on 24 V DC
Byte 0: Bit 2	Byte 8: Bit 2	ERR_LD	**Bit 2**	Indicates an error while loading a value using the field SLOT (only in "single-update" SLOT mode).
			0	No load error pending.
			1	Load error pending: you must set the RES_ERROR (control interface) to reset this error and be able to use the SLOT again.
Byte 0: Bit 3	Byte 8: Bit 3	ERR_PULSE	**Bit 3**	Indicates a pulse output error.
			0	No pulse output error
			1	Pulse output error
Byte 0: Bit 4	Byte 8: Bit 4	ERR_DQA	**Bit 4**	Indicates a short-circuit on the output DQn.B. You must set RES_ERROR (control interface) to reset this error.
			0	No short-circuit on DQn.A
			1	Short-circuit on DQn.A
Byte 0: Bit 5	Byte 8: Bit 5	ERR_DQB	**Bit 5**	Indicates a short-circuit on the output DQn.B or an attempt to set both DQs manually using SET_DQA, SET_DQB, and TM_CTRL_DQ. You must set RES_ERROR (control interface) to reset this error.
			0	No short-circuit on DQn.B
			1	Short-circuit on DQn.B, or attempt to set both DQn.A and DQn.B
Byte 0: Bit 6	Byte 8: Bit 6	ERR_OUT_VAL	**Bit 6**	Indicates that an invalid value is detected in OUTPUT_VALUE.
			0	OUTPUT_VALUE is valid.
			1	OUTPUT_VALUE is not valid. This bit is reset automatically when a valid value is read by the module.
Byte 0: Bit 7	Byte 8: Bit 7	ERR_SLOT_VAL	**Bit 7**	Indicates that an invalid value is detected in SLOT (only in "permanent-update" SLOT mode).
			0	SLOT value is valid.
			0 → 1	SLOT value is not valid. This bit is reset automatically when a valid value is read by the module.
Byte 1: Bit 2	Byte 9: Bit 2	STS_LD_SLOT	**Bit 2**	Toggle acknowledge bit for each action of the SLOT in "single-update" SLOT mode. Each toggle of this bit means a successful LD_SLOT action.
Byte 1: Bit 4	Byte 9: Bit 4	STS_READY	**Bit 4**	Indicates the module is ready and parameterized.
			0	Module is not parameterized
			1	Module is parameterized
Byte 1: Bit 5	Byte 9: Bit 5	STS_SW_ENABLE	**Bit 5**	Indicates the status of SW_ENABLE (control interface).
			0	SW_ENABLE cleared
			1	SW_ENABLE set
Byte 2: Bit 0	Byte 8: Bit 0	STS_ENABLE	**Bit 0**	Indicates an output sequence is running.
			0	Output sequence not running
			1	Output sequence running

Feedback interface: Offset to the start address		Parameter	Meaning	
Channel 0	Channel 1[1]			
Byte 2: Bit 1	Byte 10: Bit 1	STS_DQA	**Bit 1**	Indicates the signal level at the DQn.A digital output.
			0	0 on DQn.A digital output
			1	1 on DQn.A digital output
Byte 2: Bit 2	Byte 10: Bit 2	STS_DQB	**Bit 2**	Indicates the signal level at the DQn.B digital output.
			0	0 on DQn.B digital output
			1	1 on DQn.B digital output
Byte 2: Bit 3	Byte 10: Bit 3	STS_DI	**Bit 3**	Indicates the signal level at the DIn.0 digital input.
			0	0 on DIn.0 digital input
			1	1 on DIn.0 digital input
Byte 3: Bit 0 to 3	Byte 11: Bit 0 to 3	SEQ_CNT	Sequence counter is incremented after completion of an output sequence	
			With SW_ENABLE: 0 to 1	
			With HW enable: 0 to 15	
Word 3	Word 7	Reserved	Read as 0	

[1] Only if the module is configured as "2 channels (2 A)" and not "1 channel (4 A)".

Note: All bytes and bits not described in the table above are reserved and are read as 0.

Input and output signals for Pulse output mode

Input and output signals	Meaning	Value range	Channel 0 BaseUnit pin number	Channel 1 BaseUnit pin number
Input signal				
HW enable	You can select the HW enable with the "Function DI" parameter and select the input delay with the "Input delay" parameter. The signal at DIn.0 is interpreted by the TM Pulse 2x24V, after noise filtering by the input delay, as the start of the output sequence.	0 = HW enable cleared 1 = HW enable issued 0 → 1 = Start of the output sequence after the input delay, dependent on the software enable (SW_ENABLE)	3	4
Output signal				
Pulse at the DQn.A digital output	A pulse is output at the DQn.A digital output for the set pulse duration.	0 = no pulse 1 = pulse	9	10

See also Pin assignment and load/sensor wiring (Page 91)

3.3 Pulse width modulation (PWM) mode

Definition

You control the pulse width duty cycle with the control interface field OUTPUT_VALUE. The TM Pulse 2x24V generates continuous pulses based on this value. The OUTPUT_VALUE control interface field determines the duty cycle (pulse duration/period duration) for PWM. The period duration can be adjusted.

After expiration of the assigned On-delay, the DQn.A output pulses begin (output sequence).

In PWM mode, you can enable current control using the internal PID loop function to control the output load current. When the current control option is enabled, the TM Pulse 2x24V control of the duty cycle and the OUTPUT_VALUE control interface field is used to assign the target current as the ratio of target current/reference current.

Pulse diagram

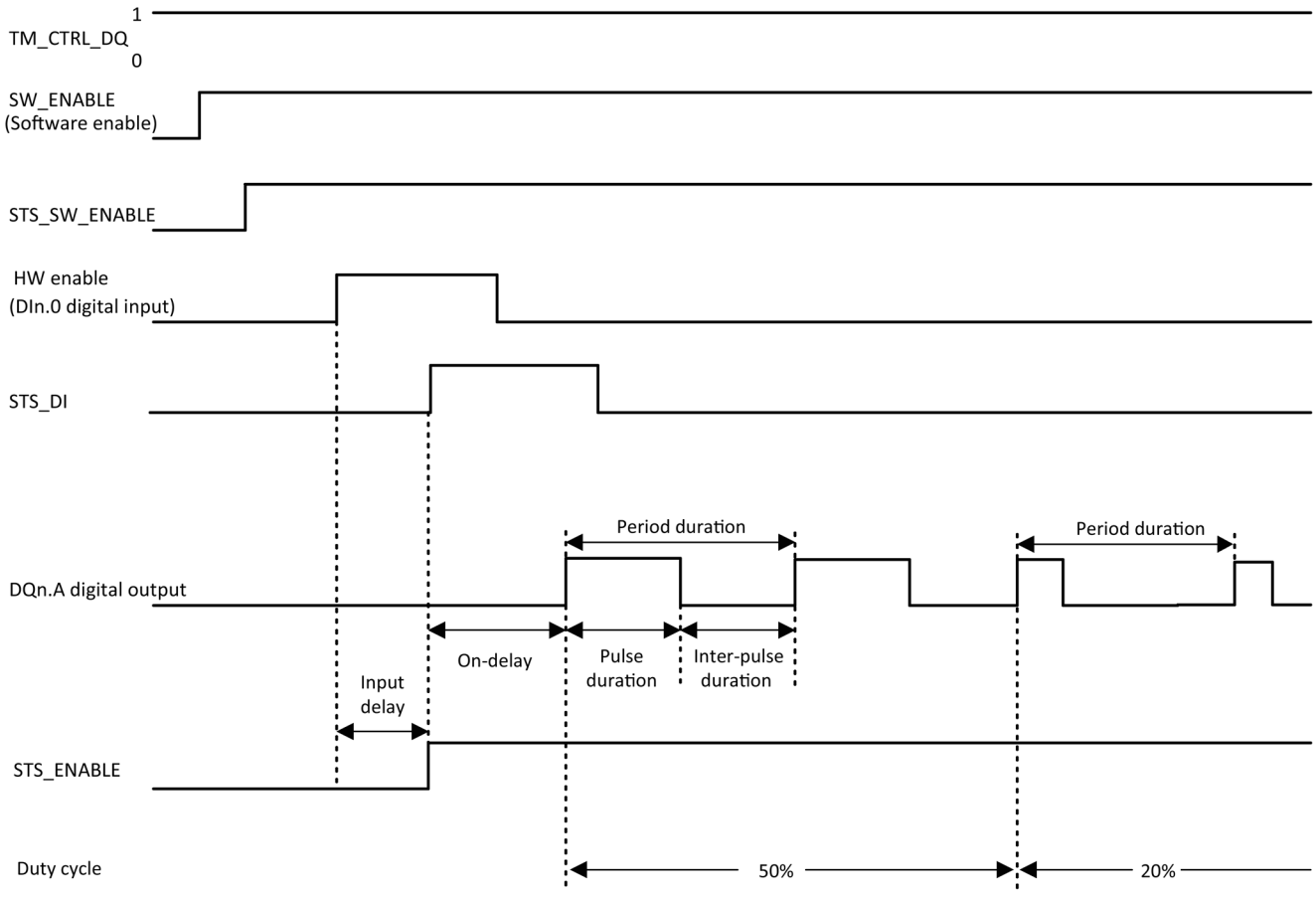

Figure 3-4 PWM output sequence

The timing diagram above has the "Function DI" parameter set to "HW_ENABLE". The other option is to set "Function DI" to "Input". If the "Function DI" parameter is set to "Input", then the On-delay phase starts at the rising edge of SW_ENABLE.

Starting the output sequence

Your control program must issue the enable for the output sequence, using the software enable (SW_ENABLE 0 → 1).

The STS_SW_ENABLE feedback bit indicates the software enable pending at the TM Pulse 2x24V.

You can also assign the DIn.0 digital input of the TM Pulse 2x24V as a HW enable with the "Function DI" parameter. The input delay (noise filter) of the hardware enable can be set using the parameter "Input Delay".

If you want to use the hardware enable, it has to be combined with the software enable. When the software enable has been enabled, the output sequence starts at the first positive edge of the hardware enable. Further positive edges of the hardware enable during the current output sequence are ignored by the TM Pulse 2x24V. The hardware enable option is not supported for isochronous mode.

When the enable is issued (positive edge) and remains high for the input delay time, the On-delay is started and the STS_ENABLE set. The PWM pulse train is output on expiration of the On-delay. The output sequence runs continuously as long as SW_ENABLE is set.

Note

Technology Module TM_CTRL output control signal

- If TM_CTRL_DQ = 1, then the TM Pulse 2x24V module has control and produces pulse sequences at the DQn.A outputs.
- If TM_CTRL_DQ = 0, then the CPU has control and your program can set DQn.A/DQn.B outputs directly with the SET_DQA/SET_DQB control bits.

Canceling the output sequence

Disabling the software enable (SW_ENABLE = 1 → 0) cancels the current output sequence and the last period duration is not completed. STS_ENABLE and the DQn.A digital output are immediately reset to 0.

You must restart the output sequence to begin new pulse output.

Truth table

Software enable SW_ENABLE	Function DI parameter	Hardware enable (DIn.0 digital input)	Digital output DQn.A (when TM_CTRL_DQ = 1)	STS_ENABLE	Output sequence
1	HW_ENABLE	0 → 1 and remains 1 during the input delay. Only active for the first positive edge, additional positive edges are ignored and no start occurs.	0, if On-delay > 0 1, if On-delay = 0	0 → 1	Start
0 → 1	Input	Not used	0, if On-delay > 0 1, if On-delay = 0	0 → 1	Start
0	HW_ENABLE or Input	Any state	0	0	Terminate

Software enable SW_ENABLE	Function DI parameter	Hardware enable (DIn.0 digital input)	Digital output DQn.A (when TM_CTRL_DQ = 1)	STS_ENABLE	Output sequence
1	HW_ENABLE or Input	Any state	0, if On-delay is not expired or you are in the interpulse time 1, if On-delay is expired and during the pulse duration		-
0 → 1	HW_ENABLE	0	0	0	-

Minimum pulse duration and minimum interpulse duration

The minimum pulse duration and minimum interpulse duration are superimposed on the proportional output characteristic.

You assign the minimum pulse duration and minimum interpulse duration using the "Minimum pulse duration" parameter; they always have the same value.

- A pulse duration calculated by the TM Pulse 2x24V that is shorter than the minimum pulse duration is suppressed.
- A pulse duration calculated by the TM Pulse 2x24V that is longer than the period duration minus the minimum interpulse duration is set to the period duration value (duty cycle 1,000‰).

Note

PWM current control and minimum pulse duration

If current control is activated by the current control bit in the parametrization record, then the parametrized minimum pulse duration and minimum interpulse period are ignored.

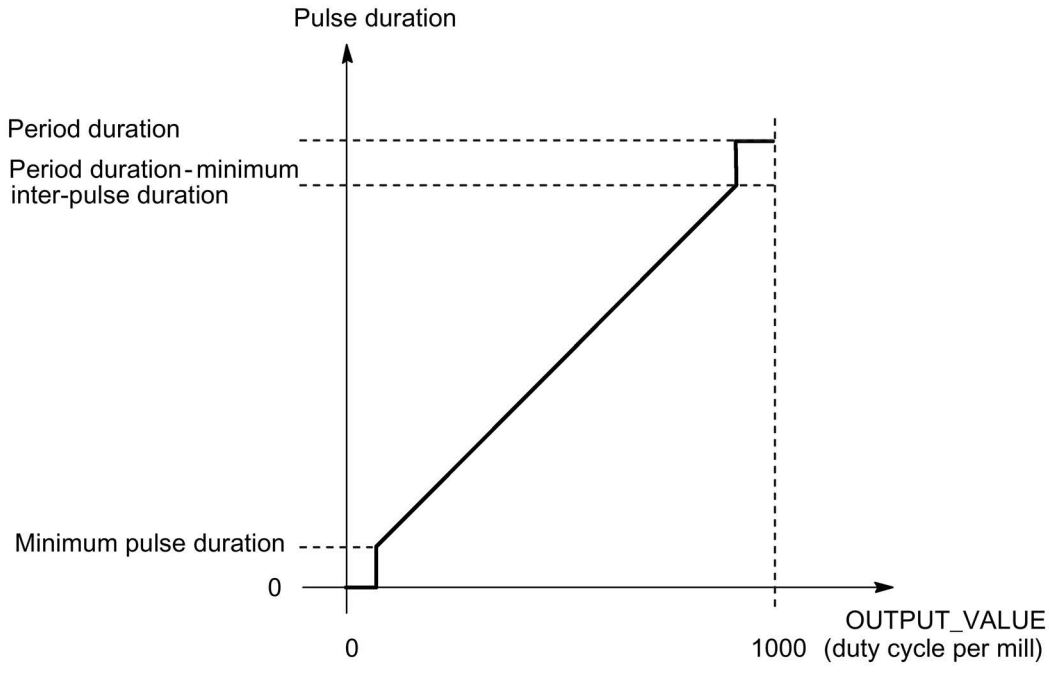

Figure 3-5 Modulation of the Pulse duration

Note

If Dithering is activated without current control, then the minimum pulse duration and minimum inter-pulse period are used by the module. In this case, the superimposed Dithering is reduced so the effective pulse duration fits in the allowed range.

Setting and changing the pulse duty cycle

OUTPUT_VALUE assigns the duty cycle for the current period duration. You select the range of the OUTPUT_VALUE control interface field with the "Output format" parameter.

- "Per 100 (%)" output format: Value range between 0 and 100
  Pulse duration = (OUTPUT_VALUE/100) x period duration.
- "Per 1,000 (‰)" output format: Value range between 0 and 1,000
  Pulse duration = (OUTPUT_VALUE/1,000) x period duration.
- "Per 10,000" output format: Value range between 0 and 10,000
  Pulse duration = (OUTPUT_VALUE/10,000) x period duration.
- "S7 analog output" output format: Value range between 0 and 27,648
  Pulse duration = (OUTPUT_VALUE/27,648) x period duration.

You assign OUTPUT_VALUE directly with your control program. A new OUTPUT_VALUE is applied at the next rising edge of the output.

When the current control option is enabled, the TM Pulse 2x24V module takes control of the duty cycle and the OUTPUT_VALUE control interface field is used to assign the target current as a ratio of target current/reference current. See the Current control (Page 78) function for details.

Setting and changing the period duration

- Permanent update
  The period duration is controlled permanently using the control interface. The MODE_SLOT bit has to be set ("1" means permanent update); LD_SLOT has to have the value 1 ("1" means Period duration).
  Set the period value in the field SLOT. The unit is always microseconds.
  - High-speed output **enabled**: between 10 µs and 85,000,000 µs in the field SLOT.
  - High- speed output **disabled**: between 100 µs and 85,000,000 µs in the field SLOT.
- Single Update
  Set the period duration in the configuration parameters. Alternatively, perform a single update using the control interface. MODE_SLOT has to be cleared ("0" means single-update); LD_SLOT has to have the value 1 ('1' means Period duration). Set the period duration value in the field SLOT. The unit is always microseconds.
  - High-speed output **enabled**: between 10 µs and 85,000,000 µs in the parameters.
  - High-speed output **disabled**: between 100 µs and 85,000,000 µs in the parameters.

The new period duration is applied with the next rising edge of the output.

For more details about SLOT parameter handling, see "Slot parameter handling (control interface) (Page 113)".

Isochronous mode

General information is available in the "Function: Isochronous mode (Page 86)" topic.

In isochronous mode, the output sequence is synchronized with the moment T_O. The period duration is coordinated to the application cycle (the synchronous cycle, a multiple of the PROFINET cycle). It is possible that your assigned period duration cannot be implemented exactly. The configured value of the period duration is adjusted by the TM Pulse 2x24V to the application cycle based on a calculation algorithm. The calculation is performed to minimize the difference between the assigned and calculated period duration. In the most unfavorable case, the deviation amounts to half the application cycle. The table below shows examples.

Application cycle T_{CAC} [1]	Assigned period duration $T_{Setpoint}$	$T_{CAC} \setminus T_{Actual}$	Calculated actual period duration T_{Actual} [1]	
10 ms (10000 µs)	5000 µs	2:1	5000 µs	
10 ms (10000 µs)	2000 µs	5:1	2000 µs	
10 ms (10000 µs)	3000 µs	3:1	3333 µs	Next possible value is used as actual value
10 ms (10000 µs)	1800 µs	6:1	1666 µs	Next possible value is used as actual value
10 ms (10000 µs)	6000 µs	2:1	5000 µs	Next possible value is used as actual value
10 ms (10000 µs)	12000 µs	1:1	10000 µs	Next possible value is used as actual value
10 ms (10000 µs)	16000 µs	1:2	20000 µs	Next possible value is used as actual value
10 ms (10000 µs)	26000 µs	1:3	30000 µs	Next possible value is used as actual value

[1] The calculated actual period duration and the application cycle time always have an integer ratio (1:1, 1:2, 1:3, ..., 2:1, 3:1, ...) rounded down to the next possible value.

The timing between the digital output and the application cycle is shown below. The DQ duty cycle (On/Off) ratio is shown in the examples at 50%.

- Example 1: The period duration 10000 µs is equal to the application cycle time 10 ms (10000 µs).

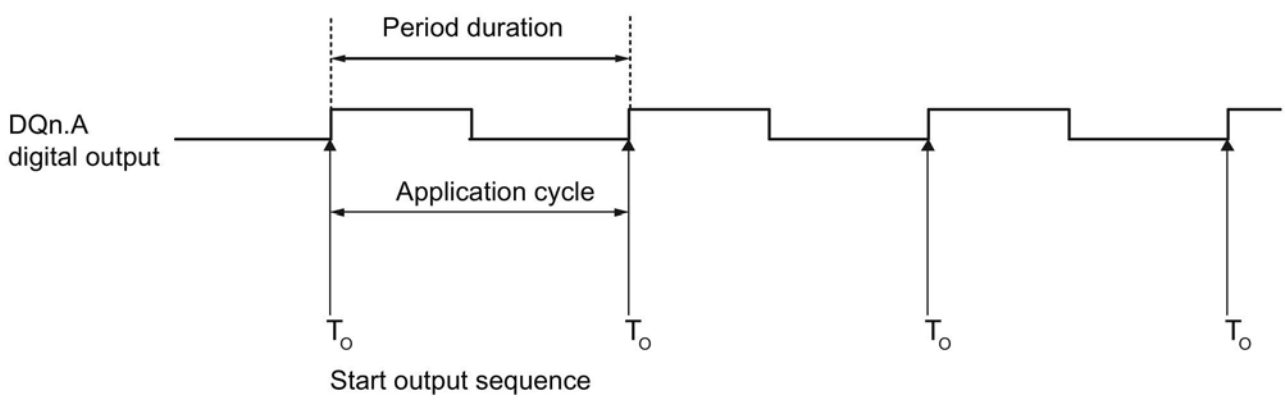

- Example 2: The period duration 3333 µs is less than the application cycle time 10 ms (10000 µs).

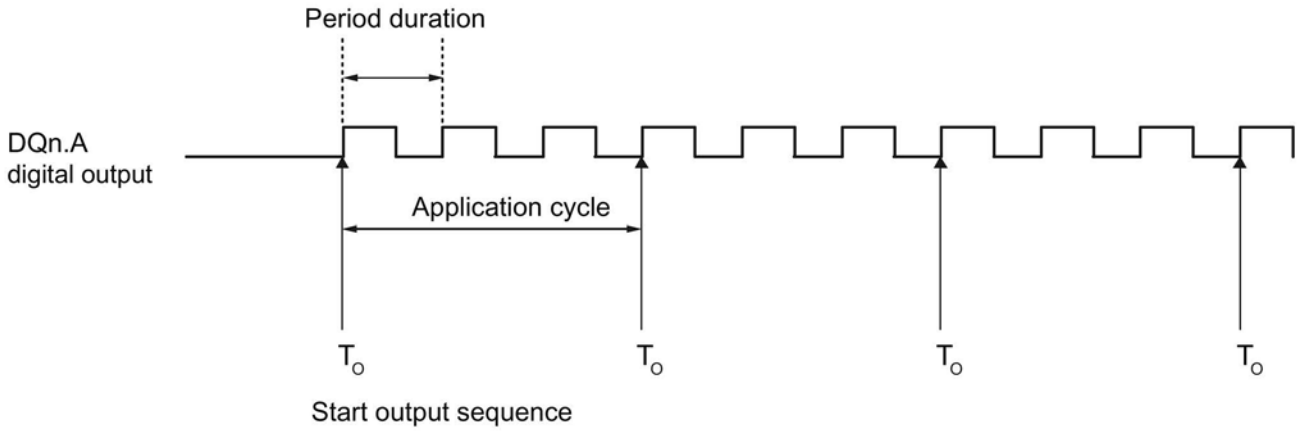

- Example 3: The period duration 30000 µs is greater than the application cycle time 10 ms (10000 µs)

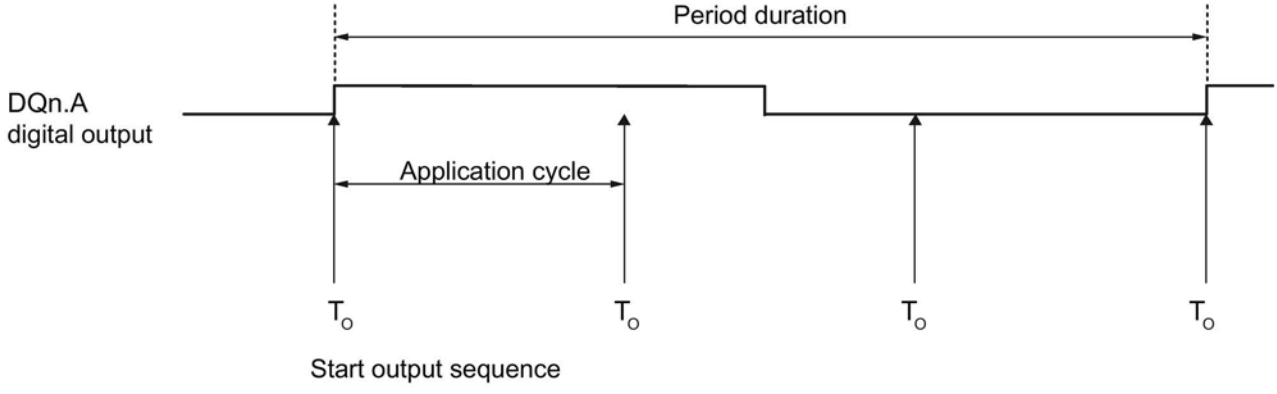

Note

Isochronous PWM operation

On-delay is not used by the module (always considered as zero) and the parameter "Function DI" is always "Input". Only the software-enable SW_ENABLE 0 → 1 is used to start the output sequence.

Setting the minimum pulse duration and minimum inter-pulse duration

You assign the minimum pulse duration and the minimum inter-pulse duration as a DWord number value between 0 and 85,000,000 µs using the "Minimum pulse duration" channel parameter configuration.

The unit is always microseconds. This value can only be changed using the configuration parameter record.

Setting and changing the On-delay

- Permanent update
  The On-delay can be controlled permanently using the control interface. The MODE_SLOT bit has to be set (permanent update); LD_SLOT must have the value 2 (for On-delay). Set the On-delay as a value between 0 µs and 85,000,000 µs in the field SLOT. The unit is always microseconds.
- Single update
  Set the On-delay as a value between 0 µs and 85,000,000 µs in the configuration parameters. The unit is always microseconds. Alternatively, perform a single update using the control interface. MODE_SLOT has to be cleared (single-update); LD_SLOT must have the value 2 (for On-delay). Set the On-delay as a value between 0 µs and 85,000,000 µs in the field SLOT.

If you change the On-delay value during the output sequence, then the new On-delay is activated at the next output sequence. For more details about the use of the SLOT parameter see SLOT parameter handling (Page 113).

Current measurement

Current measurement is available in PWM mode. Your control program can use current measurement for control and diagnostic purposes.

For more information, refer to Function: Current measurement (Page 76).

Current control

Current measurement is available in PWM mode. Your control program can use current measurement for control and diagnostic purposes.

For more information, refer to Function: Current control (Page 78).

Parameters of PWM operating mode

Parameter	Meaning	Value range	Default
Operating mode	1 = Set the PWM operating mode.	0 = Pulse output 1 = Pulse width modulation 2 = Pulse train 3 = On/Off-delay 4 = Frequency output 5 = DC Motor	1
High-speed output [1]	The output supports higher frequencies.	0 = disabled 1 = enabled	Disabled
Function DI	You can use the DIn.0 digital input as an input or as a hardware enable. The signal at DIn.0 is interpreted by the TM Pulse 2x24V, after noise filtering by the input delay, as the start of the output sequence.	0 = Input 1 = HW enable	Input
Output format	Defines the format of the ratio value (duty cycle).	0 = S7 analog format 1 = Per 100 (%) 2 = per 1,000 3 = Per 10,000	Per 100 (%)
Input delay	DIn.0 digital input must be stable over the delay time (signal noise suppression).	0 = Off (4 µs) 1 = 0.05 ms 2 = 0.1 ms 3 = 0.4 ms 4 = 0.8 ms 5 = 1.6 ms 6 = 3.2 ms 7 = 12.8 ms 8 = 20 ms	0.1 ms
Minimum pulse duration	Minimum pulse duration and minimum inter-pulse duration.	0 µs and 85,000,000 µs	0 µs
Period	Period duration of the output pulse cycle in µs. You can change the period duration in your control program with the control interface SLOT field.	• High-speed output disabled 100 µs to 85,000,000 µs • High-speed output enabled 10 µs to 85,000,000 µs	2,000,000 µs
On-delay	The time from the start of the output sequence to the output of the pulses. You can change the On-delay in your control program with the control interface SLOT field.	0 µs and 85,000,000 µs	0 µs

[1] Only if the module is configured as "2 channels (2 A)" and not "1 channel (4 A)".

Control and feedback signals for PWM mode

Control interface Offset to the start address		Parameter	Meaning				
Channel 0	Channel 1 [1]						
Bytes 0 to 3	Bytes 12 to 15	OUTPUT_VALUE (DWord)	The OUTPUT_VALUE determines the duty cycle (pulse duration/period duration ratio) within a period (pulse width modulation). The period duration can be adjusted. The new output value is applied at the next rising edge of the output. When the current control option is enabled, the TM Pulse 2x24V module takes control of the duty cycle and the OUTPUT_VALUE control interface field is used to assign the target current as a ratio of target current/reference current. See the Current control function for details. UDInt data type: Only 2 least significant bytes are used For channel 0: bytes 2 and 3 For channel 1: bytes 14 and 15				
			Output format	"Per 100": value range is 0 to 100			
				"Per 1000": value range is 0 to 1,000			
				"Per 10000": value range is 0 to 10,000			
				"S7 analog output": value range is 0 to 27,648			
Bytes 4 to 7	Bytes 16 to 19	SLOT (DWord)	Your program can change the parameters shown in the byte 8 LD_SLOT table below, before the start of the output sequence using the SLOT and MODE_SLOT parameters.				
			0 µs to 85,000,000 µs				
Byte 8	Byte 20	LD_SLOT	Interpretation of the value SLOT: all other values not listed below are invalid and produce the error ERR_LD (in single-update mode) or ERR_SLOT_VAL (in permanent-update mode).				
			Bit 3	Bit 2	Bit 1	Bit 0	Parameter
			0	0	0	0	Idle state; nothing is done with the value
			0	0	0	1	Period in µs
			0	0	1	0	On-delay in µs
			0	1	0	1	Dither ramp in ms
			0	1	1	0	Dither amplitude in per mill
			0	1	1	1	Dither period in µs
Byte 8: Bit 4	Byte 20: Bit 4	MODE_SLOT	Bit 4	Mode for use of the field SLOT.			
			0	Single-update mode			
			1	Permanent-update mode			
Byte 9: Bit 0	Byte 21: Bit 0	SW_ENABLE	Bit 0	Software enable: start and terminate the output sequence.			
			0	Output canceled			
			0 → 1	Starts output sequence on positive edge when "Function DI" = "Input".			
			1	Enable output sequence, when start is dependent on HW enable with "Function DI" = "HW enable".			
Byte 9: Bit 1	Byte 21: Bit 1	TM_CTRL_DQ	Bit 1	Set DQn.A output source: Selects either CPU program or module's output sequence.			
			0	DQn.A and DQn.B are controlled by the CPU (in your program) using the SET_DQA and SET_DQB control bits.			
			1	DQn.A is controlled by the module's pulse output sequence. DQn.B is always 0 for TM_CTRL_DQ = 1.			
Byte 9: Bit 3	Byte 21: Bit 3	SET_DQA	Bit 3	Controls the value of the digital output DQn.A, if TM_CTRL_DQ = 0.			
			0	0 on DQn.A			
			1	1 on DQn.A			

Control interface Offset to the start address		Parameter	Meaning	
Channel 0	Channel 1 [1]			
Byte 9: Bit 4	Byte 21: Bit 4	SET_DQB	**Bit 4**	Controls the value of the digital output DQn.B, if TM_CTRL_DQ = 0 and if SET_DQA is cleared.
			0	0 on DQn.B
			1	1 on DQn.B
Byte 10: Bit 0	Byte 22: Bit 0	RES_ERROR	**Bit 0**	Reset pending errors (ERR_LD, ERR_DQA, ERR_DQB, and ERR_24V).
			0	Reset of errors is not active
			1	Reset of errors is active

[1] Only if the module is configured as "2 channels (2 A)" and not "1 channel (4 A)"

Note: All bytes and bits not described in the table above are reserved and should be 0.

Feedback interface: Offset to the start address		Parameter	Meaning	
Channel 0	Channel 1 [1]			
Byte 0: Bit 0	Byte 8: Bit 0	ERR_PWR	**Bit 0**	Indicates under voltage on the Power supply. Note that the bit is not set if the voltage is not present.
			0	PWR is not under voltage
			1	PWR is detected, but under voltage
Byte 0: Bit 1	Byte 8: Bit 1	ERR_24V	**Bit 1**	Indicates a short-circuit or overload on the output 24 V DC. You must set the RES_ERROR (control interface), to reset this error.
			0	No short-circuit on 24 V DC
			1	Short-circuit on 24 V DC
Byte 0: Bit 2	Byte 8: Bit 2	ERR_LD	**Bit 2**	Indicates an error while loading a value using the field SLOT (only in "single-update" SLOT-mode).
			0	No load error pending
			1	Load error pending: you must set the RES_ERROR (control interface) to reset this error and be able to use SLOT again.
Byte 0: Bit 4	Byte 8: Bit 4	ERR_DQA	**Bit 4**	Indicates a short-circuit on the output DQn.A. You must set RES_ERROR (control interface) to reset this error.
			0	No short-circuit on DQn.A
			1	Short-circuit on DQn.A
Byte 0: Bit 5	Byte 8: Bit 5	ERR_DQB	**Bit 5**	Indicates a short-circuit on the output DQn.B or an attempt to set both DQn.A and DQn.B manually using SET_DQA, SET_DB, and TM_CTRL_DQ. You must set RES_ERROR (control interface) to reset this error.
			0	No short-circuit on DQn.B
			1	Short-circuit on DQn.B, or attempt to set both DQn.A and DQn.B
Byte 0: Bit 7	Byte 8: Bit 7	ERR_SLOT_VAL	**Bit 7**	Indicates that an invalid value is detected in SLOT (only in "permanent-update" SLOT-mode).
			0	SLOT value is valid
			0 → 1	SLOT value is not valid
Byte 1: Bit 2	Byte 9: Bit 2	STS_LD_SLOT	**Bit 2**	Toggle acknowledge bit for each action of SLOT in "single-update" SLOT-mode. Each toggle of this bit means a successful LD_SLOT action.
Byte 1: Bit 4	Byte 9: Bit 4	STS_READY	**Bit 4**	Indicates the module is ready and parameterized.
			0	Module is not parameterized
			1	Module is parameterized

Feedback interface: Offset to the start address		Parameter	Meaning	
Channel 0	Channel 1 [1]			
Byte 1: Bit 5	Byte 9: Bit 5	STS_SW_ENABLE	**Bit 5**	Indicates the status of SW_ENABLE (control interface).
			0	SW_ENABLE cleared
			1	SW_ENABLE set
Byte 2: Bit 0	Byte 8: Bit 0	STS_ENABLE	**Bit 0**	Indicates an output sequence is running.
			0	Output sequence not running
			1	Output sequence running
Byte 2: Bit 1	Byte 10: Bit 1	STS_DQA	**Bit 1**	Indicates the signal level at the DQn.A digital output.
			0	0 on DQn.A digital output
			1	1 on DQn.A digital output
Byte 2: Bit 2	Byte 10: Bit 2	STS_DQB	**Bit 2**	Indicates the signal level at the DQn.B digital output.
			0	0 on DQn.B digital output
			1	1 on DQn.B digital output
Byte 2: Bit 3	Byte 10: Bit 3	STS_DI	**Bit 3**	Indicates the signal level at the DIn.0 digital input.
			0	0 on DIn.0 digital input
			1	1 on DIn.0 digital input
Byte 3: Bit 0 to 3	Byte 11: Bit 0 to 3	SEQ_CNT	Sequence counter = 0. The sequence counter is not used in pulse width modulation mode.	
Word 2	Word 6	MEASURED_CURRENT	S7 Analog format positive value 0 to 32,767: • 2 Ampere channel output: Full scale value 27,648; means 2,000 mA • 4 Ampere channel output: Full scale value 27,648; means 4,000 mA • 32,767 means no valid current measurement available; for example, during the very first PWM period.	
Word 3	Word 7	Reserved	Read as 0	

[1] Only if the module is configured as "2 channels (2 A)" and not "1 channel (4 A)"

Note: All bytes and bits not described in the table above are reserved and are read as 0.

Input and output signals for PWM operating mode

Input and output signal	Meaning	Value range	Channel 0 BaseUnit pin number	Channel 1 BaseUnit pin number
Input signal				
HW enable Note: HW enable not supported for PWM in isochronous mod	You can select the HW enable with the "Function DI" parameter and select the input delay with the "Input delay" parameter. The signal at the DIn.0 digital input is interpreted by the TM Pulse 2x24V, after noise filtering by the input delay, as the start of the output sequence.	0 = HW enable cleared 1 = HW enable issued 0 → 1 = Start of the output sequence after the input delay; dependent on the software enable (SW_ENABLE)	3	4
Output signal				
Pulse at the DQn.A digital output	A pulse is output at the DQn.A digital output for the set duty cycle and period duration.	0 = no pulse 1 = pulse	9	10

See also Pin assignment and load/sensor wiring (Page 91)

3.4 Pulse train mode

Definition

On expiration of the assigned On-delay, the TM Pulse 2x24V outputs the number of pulses you assigned as a pulse train (output sequence). The period duration and pulse duration can be adjusted.

Pulse diagram

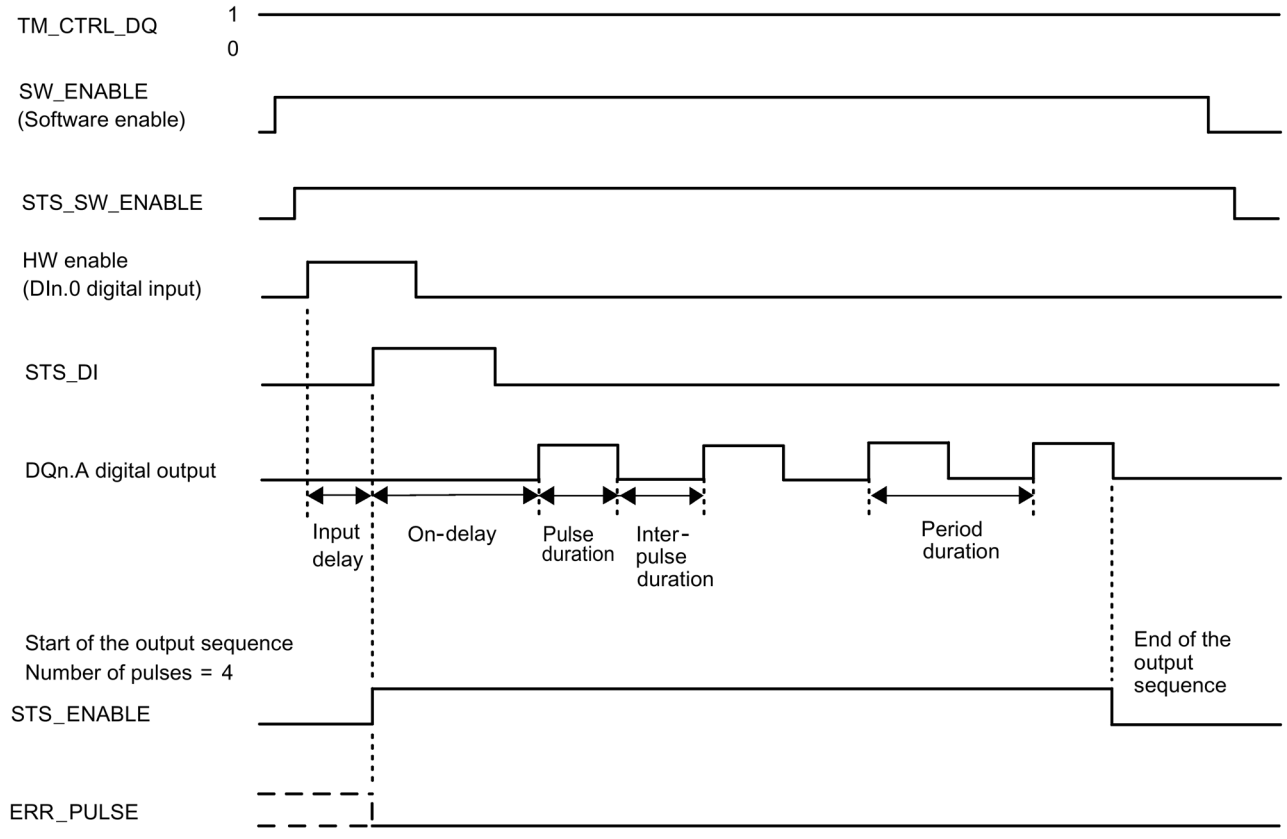

Figure 3-6 Output sequence of the pulse train

The timing diagram above has the "Function DI" parameter set to "HW enable". The other option is to set "Function DI" to "Input". If the "Function DI" parameter is set to "Input", then the On-delay phase starts at the rising edge of SW_ENABLE.

Starting the output sequence

Your control program must issue the enable for the output sequence, using the software enable (SW_ENABLE 0 → 1).

The STS_SW_ENABLE feedback bit indicates the software enable pending at the TM Pulse 2x24V.

You can also set the DIn.0 digital input of the TM Pulse 2x24V as a HW enable with the "Function DI" parameter. The input delay of the hardware enable can be set using the parameter "Input Delay".

If you want to use the hardware enable, it has to be combined with the software enable. When SW_ENABLE has been enabled, the output sequence starts at the first positive edge of the hardware enable. Further positive edges of the hardware enable during the current output sequence are ignored by the TM Pulse 2x24V. When the software enable has been issued, a positive edge of the hardware enable (detected after the input delay) starts the next output sequence.

When the enable is issued (positive edge) and remains high for the input delay (noise filter) time, the On-delay is started and STS_ENABLE is set. On expiration of the On-delay, the pulse train is output with the assigned pulse duration. The output sequence finishes with the end of the pulse and STS_ENABLE is cleared.

If you change the number of pulses during the output sequence to a value that has already been reached in the sequence, then the bit ERR_PULSE indicates a pulse output error

The next time the output sequence starts, the TM Pulse 2x24V clears the ERR_PULSE feedback bit.

Note

TM_CTRL_DQ technology module output control signal

- If TM_CTRL_DQ = 1, then the TM Pulse 2x24V module has control and produces pulse sequences at the DQn.A output.
- If TM_CTRL_DQ = 0, then the CPU has control and your program can set DQn.A/DQn.B outputs directly with the SET_DQA/SET_DQB control bits.

Canceling the output sequence

Disabling the software enable (SW_ENABLE = 1 → 0) during the On-delay or pulse train cancels the current output sequence and the last period duration is not completed. STS_ENABLE and the DQn.A digital output are immediately reset to 0.

You must restart the output sequence to begin a new pulse output.

Truth table

Software enable SW_ENABLE	Function DI parameter	Hardware enable (DIn.0 digital input)	Digital output DQn.1 (when TM_CTRL_DQ = 1)	STS_ENABLE	Output sequence
1	HW_ENABLE	0 → 1 and remains 1 during the input delay. Only active for the first positive edge, additional positive edges are ignored and no start occurs.	0, if On-delay > 0 1, if On-delay = 0	0 → 1	Start
0 → 1	Input	Not used	0, if On-delay > 0 1, if On-delay = 0	0 → 1	Start
0	HW_ENABLE or Input	Any status	0	0	Cancel
1	HW_ENABLE or Input	Any status	0, if On-delay is not expired or you are in the inter-pulse time or the output sequence is over 1, if On-delay is expired and during the pulse duration		-
0 → 1	HW_ENABLE	0	0	0	-

Setting and changing the number of pulses

Your control program can set the pulse count directly with the control interface parameter OUTPUT_VALUE.

Set the number of pulses directly as a DWord number value between 1 to 4,294,967,295 (2^{32}-1).

If you change the number of pulses, the new value takes effect immediately whether the On-delay is expired or not.

- If the new number of pulses has not yet been reached in the current output sequence, then the new number of pulses will be used in the current output sequence.
- If the number of pulses is reduced to a number that is less than the current number of pulses already output, then the output sequence is terminated, STS_ENABLE and the DQn.A digital output are cleared, ERR_PULSE is set. At the next start of an output sequence, ERR_PULSE is cleared.
- If the number of pulses is zero the output sequence is terminated, STS_ENABLE and the DQn.A digital output are cleared, and ERR_PULSE is set. At the next start of an output sequence, ERR_PULSE is cleared.

Setting and changing the period duration

- Permanent update
  The period duration can be controlled permanently using the control interface. The MODE_SLOT bit has to be set ('1' means permanent update); LD_SLOT has to have the value 1 (for Period duration). Set the period duration as a DWord number value of microseconds in the parameter field SLOT.
  - High-speed output **enabled** (see parameters): between 10 µs and 85,000,000 µs.
  - High-speed output **disabled** (see parameters): between 100 µs and 85,000,000 µs.
- Single update
  Set the period duration in the configuration parameters. Alternatively, you can do a single update using the control interface. MODE_SLOT has to be 0 (single-update); LD_SLOT has to have the value 1 (for Period duration). Set the period duration as a DWord number value of microseconds in the parameter field SLOT.
  - High-speed output **enabled** (see parameters): between 10 µs and 85,000,000 µs.
  - High-speed output **disabled** (see parameters): between 100 µs and 85,000,000 µs.

Setting and changing the On-delay

- Permanent update
  The On-delay can be controlled permanently using the control interface. MODE_SLOT bit has to be set ('1' means permanent update); LD_SLOT must be the value 2 (for On-delay). Set the On-delay as a value between 0 µs and 85,000,000 µs in the parameter field SLOT.
- Single update
  Set the On-delay as a value between 0 µs and 85,000,000 µs in the configuration parameters. Alternatively, perform a single update using the control interface. MODE_SLOT has to be cleared ("0" means single update); LD_SLOT must be the value 2 (for On-delay). Set the On-delay as a value between 0 µs and 85,000,000 µs in the field SLOT.
- If you change the On-delay value during the output sequence, then the new On-delay is activated at the next output sequence.

For more details about the use of the SLOT parameter, see the SLOT parameter handling (Page 113).

Setting and changing the duty cycle

The range of the duty cycle parameter is selected using the "Output format" parameter. The TM Pulse 2x24V uses this assigned duty cycle value to calculate the pulse duration. If the number value you assign exceeds the upper limit, then a duty cycle of 100% of the period duration is used and this action does not cause an error.

- Output format "Per 100 (%)": Value range 0 to 100
  - Pulse duration = (duty cycle/100) x period duration.
- Output format "Per 1000": Value range 0 to 1,000
  - Pulse duration = (duty cycle/1,000) x period duration.
- Output format "Per 10000": Value range 0 to 10,000
  - Pulse duration = (duty cycle/10,000) x period duration.
- Output format "S7 analog output": Value range 0 to 27,648
  - Pulse duration = (duty cycle/27,648) x period duration.

Update the duty cycle

- Permanent update
  The duty cycle can be controlled permanently using the control interface. MODE_SLOT bit has to be set ("1" means permanent update); LD_SLOT must be the value 4 (for duty cycle). Set the duty cycle as a value in the control interface field SLOT. The unit depends on the assigned output format.
- Single update
  Set the duty cycle in the configuration parameters. Alternatively, perform a single update using the control interface. MODE_SLOT has to be cleared ("0" means single update); LD_SLOT must be the value 4 (for duty cycle). Set the duty cycle as a value in the control interface field SLOT.
- The unit depends on the assigned output format. If you change the duty cycle value during the output sequence, then the new duty cycle is activated at the next output sequence.

For more details about the use of the SLOT parameter, see SLOT parameter handling (Page 113).

Isochronous mode

General information is available in Function: Isochronous mode (Page 86).

Isochronous mode does not have any influence on the functionality of Pulse train operating mode.

If you want to synchronize the output sequence with T_o, then set the Function DI parameter to "Input" and the Pulse train output sequence starts at T_o.

Current measurement

Current measurement is available in Pulse train mode. Your control program can use current measurement for control and diagnostic purposes.

For more information, refer to Function: Current measurement (Page 76).

Parameters for Pulse train operating mode

Parameter	Meaning	Value range	Default
Operating mode	2 = Set the "Pulse train" operating mode.	0 = Pulse output 1 = Pulse width modulation 2 = Pulse train 3 = On/Off-delay 4 = Frequency output 5 = DC motor	1
High-speed output [1]	The output supports higher frequencies (see pulse duration range).	0 = disabled 1 = enabled	Disabled
Function DI	You can use the DIn.0 digital input as an input or as a hardware enable. The signal at DIn.0 is interpreted by the TM Pulse 2x24V, after noise filtering by the input delay, as the start of the output sequence.	• Input • HW enable	Input
Output format	Defines the format of the duty cycle ratio value.	0 = S7 analog format 1 = Per 100 (%) 2 = Per 1,000 3 = Per 10,000	Per 100 (%)
Input delay	DIn.0 digital input must be stable over the delay time (signal noise suppression).	0 = Off (4 µs) 1 = 0.05 ms 2 = 0.1 ms 3 = 0.4 ms 4 = 0.8 ms 5 = 1.6 ms 6 = 3.2 ms 7 = 12.8 ms 8 = 20 ms	0.1 ms
Period	Period duration of the output sequence: You can change the period duration in your control program using the control interface field SLOT.	• High-speed output disabled 100 µs to 85,000,000 µs • High-speed output enabled 10 µs to 85,000,000 µs	2,000,000 µs

Parameter	Meaning	Value range	Default
On-delay	The time from the start of the output sequence to the output of the pulse train. You can change the On-delay in your control program using the SLOT parameter.	0 µs to 85,000,000 µs	0 µs
Duty-cycle	The pulse duration results from the duty cycle and the period duration. The format of the duty cycle is determined by the parameter "Output format". You can change the duty-cycle in your control program using the control interface field SLOT.	Output format: minimum to maximum • Per 100: 0 to 100 • Per 1000: 0 to 1,000 • Per 10000: 0 to 10,000 • S7 analog output: 0 to 27,648	50%

[1] Only if the module is configured as "2 channels (2 A)" and not "1 channel (4 A)".

Control and feedback signals for Pulse train operating mode

Control interface Offset to the start address		Parameter	Meaning				
Channel 0	Channel 1 [1]						
Bytes 0 to 3	Bytes 12 to 15	OUTPUT_VALUE (DWord)	Assign the number of pulses to the OUTPUT_VALUE as a DWord number value 0 to 4,294,967,295 (2^{32}-1).				
Bytes 4 to 7	Bytes 16 to 19	SLOT (DWord)	The On-delay, period duration, and duty cycle can be changed before the start of the output sequence. See SLOT parameter handling (Page 113).				
			0 µs to 85,000,000 µs				
Byte 8	Byte 20	LD_SLOT	Interpretation of the value SLOT: All other values not listed below are invalid and produce the error ERR_LD (in single-update mode) or ERR_SLOT_VAL (in permanent-update mode).				
			Bit 3	**Bit 2**	**Bit 1**	**Bit 0**	
			0	0	0	0	Idle-state; nothing is done with the value
			0	0	0	1	Period duration in microseconds
			0	0	1	0	On-delay in microseconds
			0	1	0	0	Duty cycle in the format defined by the parameter "Output format"
Byte 8: Bit 4	Byte 20: Bit 4	MODE_SLOT	**Bit 4**	Mode for use of the field SLOT.			
			0	Single-update mode			
			1	Permanent-update mode			
Byte 9: Bit 0	Byte 21: Bit 0	SW_ENABLE	**Bit 0**	Software enable: Start/enable and terminate/disable the output sequence when "Function DI" = "Input".			
			0	Output disabled/terminated			
			0 → 1	Starts output sequence on positive edge when "Function DI" = "Input"			
			1	Enable output sequence, when start is dependent on HW enable with "Function DI" = "HW enable"			
Byte 9: Bit 1	Byte 21: Bit 1	TM_CTRL_DQ	**Bit 1**	Set DQn.A output source: Selects either CPU program or module's output sequence.			
			0	DQn.A and DQn.B are controlled by the CPU (in your program) using the SET_DQA and SET_DQB control bits			
			1	DQn.A is controlled by the module's pulse output sequence. DQn.B is always 0			
Byte 9: Bit 3	Byte 21: Bit 3	SET_DQA	**Bit 3**	Controls the value of the digital output DQn.A, if TM_CTRL_DQ is cleared.			
			0	0 on DQn.A			
			1	1 on DQn.A			
Byte 9: Bit 4	Byte 21: Bit 4	SET_DQB	**Bit 4**	Controls the value of the digital output DQn.B, if TM_CTRL_DQ is cleared and if SET_DQA is cleared.			
			0	0 on DQn.B			
			1	1 on DQn.B			
Byte 10: Bit 0	Byte 22: Bit 0	RES_ERROR	**Bit 0**	Reset pending errors (ERR_LD, ERR_DQA, ERR_DQB, and ERR_24V).			
			0	Reset of errors is not active			
			1	Reset of errors is active			

[1] Only if the module is configured as "2 channels (2 A)" and not "1 channel (4 A)"

Note: All bytes and bits not described in the table above are reserved and should be 0.

Feedback interface: Offset to the start address		Parameter	Meaning	
Channel 0	Channel 1 [1]			
Byte 0: Bit 0	Byte 8: Bit 0	ERR_PWR	**Bit 0**	Indicates under voltage on the Power supply. Note that the bit is not set if the voltage is not present.
			0	PWR is not under voltage
			1	PWR is detected, but under voltage
Byte 0: Bit 1	Byte 8: Bit 1	ERR_24V	**Bit 1**	Indicates a short-circuit or overload on the output 24 V DC. You must set the RES_ERROR (control interface) to reset this error.
			0	No short-circuit on 24 V DC
			1	Short-circuit on 24 V DC
Byte 0: Bit 2	Byte 8: Bit 2	ERR_LD	**Bit 2**	Indicates an error while loading a value using the field SLOT (only in "single-update" SLOT-mode).
			0	No load error pending
			1	Load error pending: you must set the RES_ERROR (control interface) to reset this error and be able to use the SLOT again.
Byte 0: Bit 3	Byte 8: Bit 3	ERR_PULSE	**Bit 3**	Indicates a pulse output error.
			0	No pulse output error
			1	Pulse output error
Byte 0: Bit 4	Byte 8: Bit 4	ERR_DQA	**Bit 4**	Indicates a short-circuit on the output DQn.A. You must set RES_ERROR (control interface) to reset this error.
			0	No short-circuit on DQn.A
			1	Short-circuit on DQn.A
Byte 0: Bit 5	Byte 8: Bit 5	ERR_DQB	**Bit 5**	Indicates a short-circuit on the output DQn.B or an attempt to set both DQs manually using SET_DQA, SET_DQB, and TM_CTRL_DQ. You must set RES_ERROR (control interface) to reset this error.
			0	No short-circuit on DQn.B
			1	Short-circuit on DQn.B, or attempt to set both DQn.A and DQn.B
Byte 0: Bit 7	Byte 8: Bit 7	ERR_SLOT_VAL	**Bit 7**	Indicates that an invalid value is detected in SLOT (only in "permanent-update" SLOT-mode).
			0	SLOT value is valid
			1	SLOT value is not valid
Byte 1: Bit 2	Byte 9: Bit 2	STS_LD_SLOT	**Bit 2**	Toggle acknowledge bit for each action of the SLOT in "single-update" SLOT-mode. Each toggle of this bit means a successful LD_SLOT action.
Byte 1: Bit 4	Byte 9: Bit 4	STS_READY	**Bit 4**	Indicates the module is ready and parameterized.
			0	Module is not parameterized
			1	Module is parameterized
Byte 1: Bit 5	Byte 9: Bit 5	STS_SW_ENABLE	**Bit 5**	Indicates the status of SW_ENABLE (control interface).
			0	SW_ENABLE cleared
			1	SW_ENABLE set
Byte 2: Bit 0	Byte 8: Bit 0	STS_ENABLE	**Bit 0**	Indicates an output sequence is running.
			0	Output sequence not running
			1	Output sequence running
Byte 2: Bit 1	Byte 10: Bit 1	STS_DQA	**Bit 1**	Indicates the signal level at the DQn.A digital output.
			0	0 at the DQn.A digital output
			1	1 at the DQn.A digital output

Feedback interface: Offset to the start address		Parameter	Meaning	
Channel 0	Channel 1 [1]			
Byte 2: Bit 2	Byte 10: Bit 2	STS_DQB	**Bit 2**	Indicates the signal level at the DQn.B digital output.
			0	0 at the DQn.B digital output
			1	1 at the DQn.B digital output
Byte 2: Bit 3	Byte 10: Bit 3	STS_DI	**Bit 3**	Indicates the signal level at the DIn.0 digital input.
			0	Signal 0 at the DIn.0 digital input
			1	Signal 1 at the DIn.0 digital input
Byte 3: Bit 0 to 3	Byte 11: Bit 0 to 3	SEQ_CNT	Sequence counter: is incremented after completion of an output sequence.	
			With SW_ENABLE: 0 to 1	
			With HW enable: 0 to 15	
Word 2	Word 6	MEASURED_CURRENT	S7 Analog format positive value 0 to 32,767: • 2 Ampere output: Full scale value 27,648, means 2,000 mA • 4 Ampere output: Full scale value 27,648, means 4,000 mA • 32,767 means no valid current measurement available; for example, during the very first period	
Word 3	Word 7	Reserved	Read as 0	

[1] Only if the module is configured as "2 channels (2 A)" and not "1 channel (4 A)"

Note: All bytes and bits not described in the table above are reserved and are read as 0.

Input and output signals for Pulse train operating mode

Input and output signal	Meaning	Value range	Channel 0 BaseUnit pin number	Channel 1 BaseUnit pin number
Input signal				
HW enable	You can select the HW enable with the "Function DI" parameter and select the input delay with the "Input delay" parameter. The signal of the DIn.0 digital input is interpreted by the TM Pulse 2x24V, after filtering by the input delay, as the start of the output sequence.	0 = HW enable cleared 1 = HW enable issued 0 → 1 = Start of the output sequence; dependent on the software enable (SW_ENABLE)	3	4
Output Signal				
Pulse train at the DQn.A digital output	Pulses are output at the DQn.A digital output for the set pulse duration.	0 = no pulse 1 = pulse	9	10

See also Pin assignment and load/sensor wiring (Page 91)

3.5 On/Off-delay mode

Definition

The signal pending at the TM Pulse 2x24V DIn.0 digital input is output with an assigned On/Off-delay at the DQn.A digital output.

Pulse diagram

SW_ENABLE is set, while DIn.0 digital input = 0:

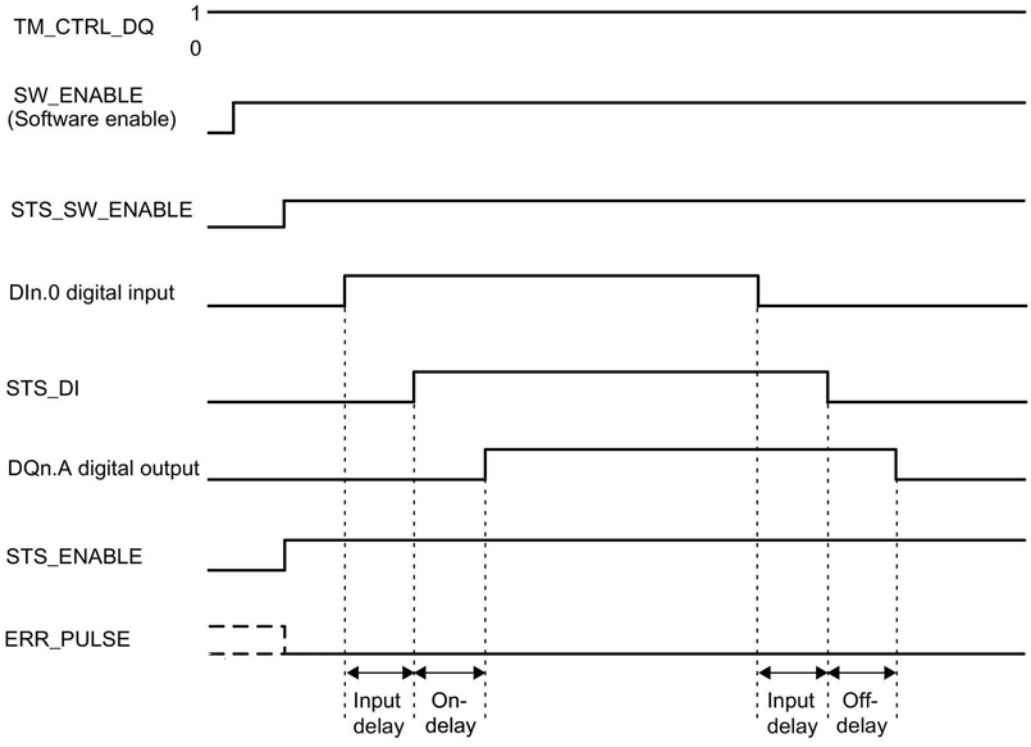

Figure 3-7 Output sequence On/Off-delay (at the start DIn.0 digital input = 0)

SW_ENABLE is set, while DIn.0 digital input = 1:

If SW_ENABLE is set while DIn.0 digital input = 1, the first edge of a digital input (falling edge) is ignored.

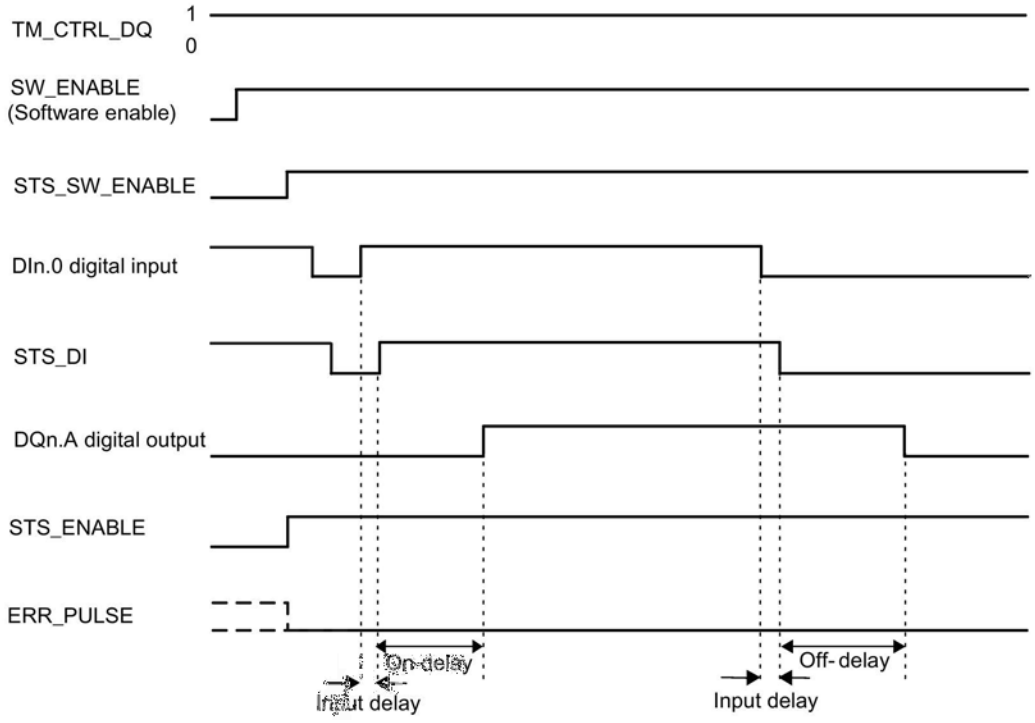

Figure 3-8 Output sequence On/Off-delay (at the start DIn.0 digital input = 1)

Starting the output sequence

Your control program must issue the enable for the output sequence, using the software enable (SW_ENABLE 0 → 1).

The STS_SW_ENABLE feedback bit indicates the software enable pending at the TM Pulse 2x24V.

- When the DIn.0 digital input goes high (positive edge) and remains high for the input delay time, the On-delay is started. After the On-delay expires, the DQn.A digital output is set.
- When the DIn.0 digital input goes low for the input delay time, the Off-delay is started. After the Off-delay expires, the DQn.A digital output is cleared.
- If the TM Pulse 2x24V recognizes a pulse duration or inter-pulse duration at the DIn.0 digital input shorter than the input delay time, then the input is ignored and the DQn.A digital output is unchanged.
- If the TM Pulse 2x24V recognizes a pulse duration or inter-pulse duration at the DIn.0 digital input longer than the input delay time, but too short to produce the parameterized pulse duration or inter-pulse duration, then the ERR_PULSE bit is set and the DQn.A digital output is unchanged.
- At the next edge of the DIn.0 digital input, the TM Pulse 2x24V clears the ERR_PULSE feedback bit

---

Note

TM_CTRL_DQ technology module output control signal

- If TM_CTRL_DQ = 1, then the TM Pulse 2x24V module has control and produces pulse sequences at the DQn.A output.
- If TM_CTRL_DQ = 0, then the CPU has control and your program can set DQn.A/DQn.B outputs directly with the SET_DQA/SET_DQB control bits.

Canceling the output sequence

Disabling the software enable (SW_ENABLE = 1 → 0) during the On-delay or pulse cancels the current output sequence and the last period duration is not completed. STS_ENABLE and the DQn.A digital output are immediately reset to 0.

You must restart the output sequence to begin new pulse output.

Truth Table

Software enable SW_ENABLE	DIn.0 digital input	DQn.A digital output (when TM_CTRL_DQ = 1)	STS_ENABLE	Output sequence
1	0 → 1 and remains 1 during the input delay	0, if On-delay > 0 1, if On-delay = 0	1	Start
1	1 → 0	1, if Off-delay > 0 0, if Off-delay = 0	1	Start
0	Any status	0	0	Cancel
1	Any status	0, if On-delay is not expired or if Off-delay is expired 1, if On-delay is expired and Off-delay is not expired	1	-
0 → 1	0	0	1	-

Minimum pulse duration/minimum interpulse duration of the DQn.A digital output

The minimum pulse duration/minimum interpulse duration of the DQn.A digital output is 1.5 µs (high-speed active) and 10 µs (high-speed inactive). Note that lower values are possible but not guaranteed because this is hardware dependent.

Make sure you take this into consideration when you set the On/Off-delay and the pulse duration/interpulse duration of the DIn.0 digital input. Otherwise, the response at the DQn.A digital output is not guaranteed.

The pulse duration of the DIn.0 digital input is too short

Case 1: The DIn.0 pulse duration < input delay time: The DIn.0 pulse is filtered out and ignored (no error occurs).

Case 2: The TM Pulse 2x24V detects a DIn.0 pulse duration that is too short if: DIn.0 pulse duration + Off-delay time ≤ On-delay (error is set)

Case 3: The TM Pulse 2x24V detects a DIn.0 pulse duration that is too short if: DIn.0 pulse duration + Off-delay time + minimum DQ pulse duration < On-delay time (error is set) .

Response of the TM Pulse 2x24V to a pulse duration that is too short:

- ERR_PULSE is set.
- The current On-delay is cleared.
- The Off-delay is not started.
- The signal level at the DQn.A digital output remains at 0.

ERR_PULSE is cleared at the next positive edge on the DIn.0 digital input.

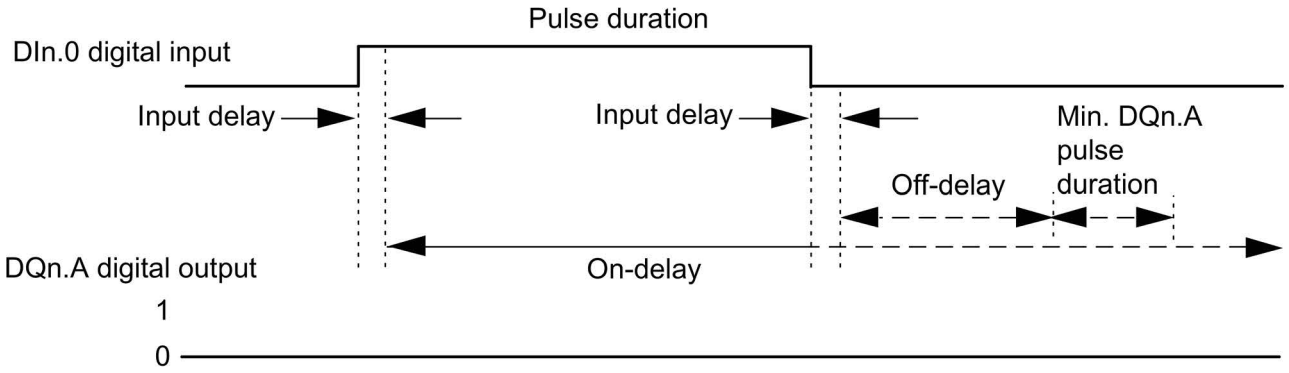

Figure 3-9 DIn.0 pulse duration too short

The interpulse duration of the DIn.0 digital input is too short

The TM Pulse 2x24V detects an interpulse duration that is too short on the positive edge on the DIn.0 digital input if:

Interpulse duration + On-delay ≤ Off-delay.

- Case 1: Interpulse duration < input delay time: The DIn.0 input interpulse is filtered out and ignored (no error occurs).
- Case 2: Interpulse duration + On-delay time ≤ Off-delay time (error is set).
- Case 3: Interpulse duration + On-delay time < Off-delay time + minimum inter-pulse duration (error is set).

Response of the TM Pulse 2x24V to an interpulse duration that is too short:

- ERR_PULSE is set.
- The current Off-delay is cleared.
- The On-delay is not started.
- The signal level at the DQn.A digital output remains at 1.

ERR_PULSE is cleared with the next negative edge on the DIn.0 digital input.

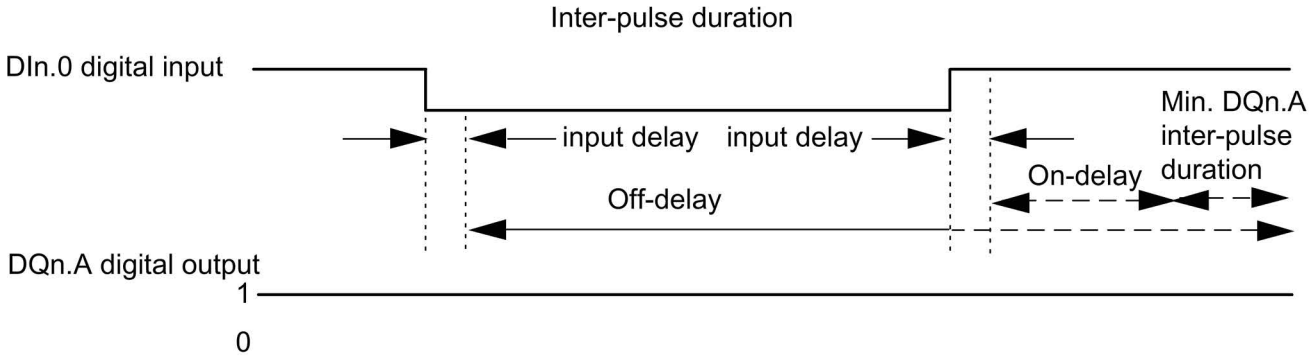

Figure 3-10 DIn.0 inter-pulse duration too short

Retriggering the current On-delay

The TM Pulse 2x24V starts a new On-delay on the positive edge on the DIn.0 digital input if:

On-delay > pulse duration + inter-pulse duration

This clears the current Off-delay.

The DQn.A digital output is only set if signal level 1 is present on the DIn.0 digital input longer than the On-delay. This enables you to filter rapid pulses.

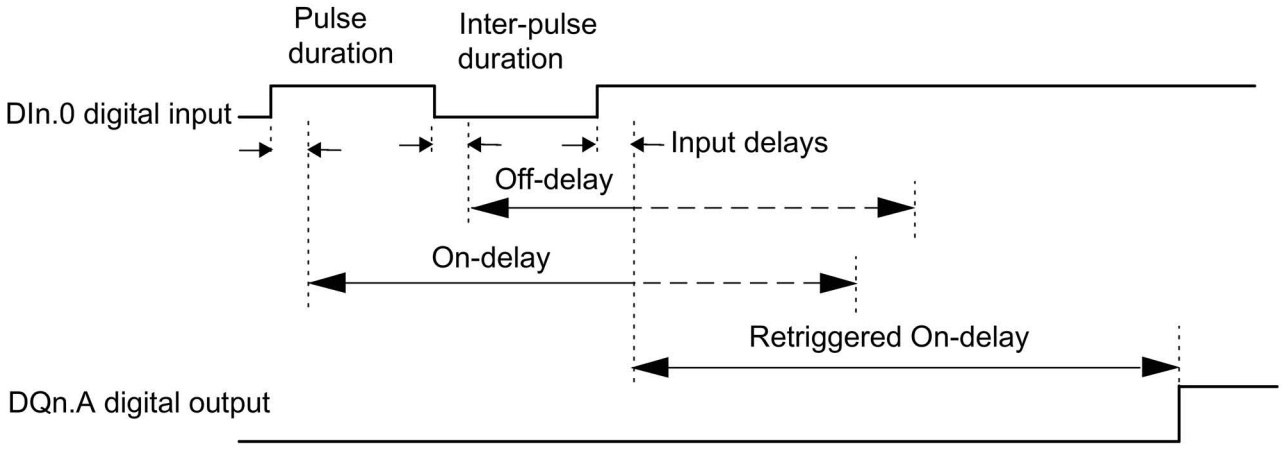

Figure 3-11 DIn.0 retriggering the current On-delay

Retriggering the current Off-delay

The TM Pulse 2x24V starts a new Off-delay on the negative edge on the DIn.0 digital input if:

Off-delay > pulse duration + inter-pulse duration

The DQn.A digital output is only cleared if signal level 0 is present on the Dn.0I digital input longer than the Off-delay.

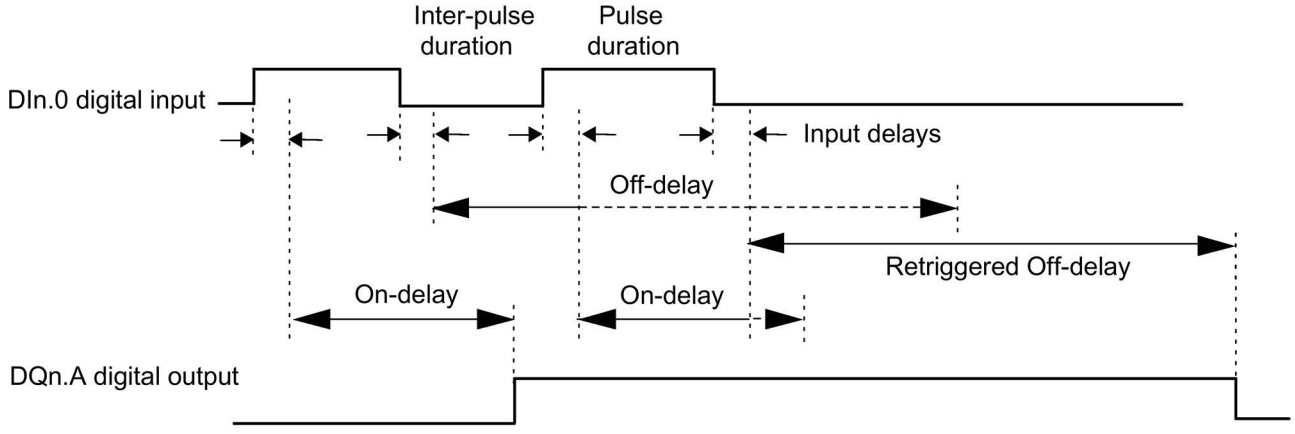

Figure 3-12 Retriggering the current Off-delay

Setting and changing the OUTPUT_VALUE (On-delay)

- You set the On-delay OUTPUT_VALUE directly using your control program to assign a value.
- The unit is always microseconds. Possible range: between 0 µs and 85,000,000 µs. If an invalid value is assigned by your program, the module will send back error ERR_OUT_VAL in the feedback interface and continue using the last valid value.
- The new On-delay value is activated with the next positive edge on the DIn.0 digital input.

Setting and changing the Off-delay

- Permanent update
  The Off-delay can be controlled permanently using the control interface. MODE_SLOT bit has to be set (permanent update); LD_SLOT must be the value 3 (for Off-delay). Set the Off-delay as a value between 0 µs and 85,000,000 µs in the field SLOT. The unit is always microseconds.
- Single update
  Set the Off-delay as a value between 0 µs and 85,000,000 µs in the configuration parameters. Alternatively, perform a single update using the control interface. MODE_SLOT has to be cleared (single-update); LD_SLOT must be the value 3 (for Off-delay). Set the Off-delay as a value between 0 µs and 85,000,000 µs in the field SLOT.

If you change the Off-delay value during the output sequence, the new Off-delay is activated at the next negative edge on the DIn.0 digital input.
For more details about the use of the SLOT parameter, see SLOT parameter handling (Page 113).

Isochronous mode

General information is available in Function: Isochronous mode (Page 86).

Isochronous mode does not have any influence on the functionality of On/Off-delay operating mode.

Parameters for On/Off-delay operating mode

Parameter	Meaning	Value Range	Default
Mode	3 = Set the "On/Off-delay" operating mode.	0 = Pulse output 1 = Pulse width modulation 2 = Pulse train 3 = On/Off-delay 4 = Frequency output 5 = DC-Motor	1
High Speed Output [1]	The output supports higher frequencies.	0 = disabled 1 = enabled	Disabled
Function DI	You can only use the DIn.0 digital input as an input.	0 = Input 1 = reserved (do not use)	Input
Input Delay	DI digital input must be stable over the delay time (signal noise suppression).	0 = Off (4 µs) 1 = 0.05 ms 2 = 0.1 ms 3 = 0.4 ms 4 = 0.8 ms 5 = 1.6 ms 6 = 3.2 ms 7 = 12.8 ms 8 = 20 ms	0.1 ms
Off-delay	The time from the falling edge of the DIn.0 digital input to the falling edge of the DQn.A. You can change the Off-delay in your control program using the SLOT parameter.	0 µs to 85,000,000 µs	0 µs

[1] Only if the module is configured as "2 channels (2 A)" and not "1 channel (4 A)".

Control and feedback signals for On/Off-delay operating mode

Control interface Offset to the start address		Parameter	Meaning				
Channel 0	Channel 1 [1]						
Bytes 0 to 3	Bytes 12 to 15	OUTPUT_VALUE (DWord)	On-delay				
			0 µs to 85,000,000 µs				
Bytes 4 to 7	Bytes 16 to 19	SLOT (DWord)	The Off-delay can be changed anytime, but only takes effect on the next falling edge of the DIn.0 digital input.				
			0 µs to 85,000,000 µs				
Byte 8	Byte 20	LD_SLOT	Interpretation of the value SLOT: All other values not listed below are invalid and produce the error ERR_LD (in single-update mode) or ERR_SLOT_VAL (in permanent-update mode).				
			Bit 3	**Bit 2**	**Bit 1**	**Bit 0**	
			0	0	0	0	Idle-state; nothing is done with the value
			0	0	1	1	Off-delay in microseconds
Byte 8: Bit 4	Byte 20: Bit 4	MODE_SLOT	**Bit 4**	Mode for use of the field SLOT.			
			0	Single-update mode			
			1	Permanent-update mode			
Byte 9: Bit 0	Byte 21: Bit 0	SW_ENABLE	**Bit 0**	Software enable: Start and terminate the output sequence.			
			0	Output canceled			
			0 → 1	Starts output sequence on positive edge			
Byte 9: Bit 1	Byte 21: Bit 1	TM_CTRL_DQ	**Bit 1**	Set DQn.A output source: Selects either CPU program or module's output sequence.			
			0	DQn.A and DQn.B are controlled by the CPU (in your program) using the SET_DQA and SET_DQB control bits.			
			1	DQn.A is controlled by the module's pulse output sequence. DQn.B is always 0 for TM_CTRL = 1.			
Byte 9: Bit 3	Byte 21: Bit 3	SET_DQA	**Bit 3**	Controls the value of the digital output DQn.A, if TM_CTRL_DQ is cleared.			
			0	0 on DQn.A			
			1	1 on DQn.A			
Byte 9: Bit 4	Byte 21: Bit 4	SET_DQB	**Bit 4**	Controls the value of the digital output DQn.B, if TM_CTRL_DQ is cleared and if SET_DQA is cleared.			
			0	0 on DQn.B			
			1	1 on DQn.B			
Byte 10: Bit 0	Byte 22: Bit 0	RES_ERROR	**Bit 0**	Reset pending errors (ERR_LD, ERR_DQA, ERR_DQB, and ERR_24V).			
			0	Reset of errors is not active			
			1	Reset of errors is active			

[1] Only if the module is configured as "2 channels (2 A)" and not "1 channel (4 A)"

Note: All bytes and bits not described in the table above are reserved and should be 0.

Feedback interface: Offset to the start address		Parameter	Meaning	
Channel 0	Channel 1 [1]			
Byte 0: Bit 0	Byte 8: Bit 0	ERR_PWR	**Bit 0**	Indicates under voltage on the Power supply. Note that the bit is not set if the voltage is not present.
			0	PWR is not under voltage.
			1	PWR is detected, but under voltage.
Byte 0: Bit 1	Byte 8: Bit 1	ERR_24V	**Bit 1**	Indicates a short-circuit or overload on the output 24 V DC. You must set the RES_ERROR (control interface), to reset this error and be able to use the SLOT again.
			0	No short-circuit on 24 V DC
			1	Short-circuit on 24 V DC
Byte 0: Bit 2	Byte 8: Bit 2	ERR_LD	**Bit 2**	Indicates an error while loading a value using the field SLOT (only in "single-update" SLOT-mode).
			0	No load error pending.
			1	Load error pending: you must set the RES_ERROR (control interface) to reset this error and be able to use the SLOT again.
Byte 0: Bit 3	Byte 8: Bit 3	ERR_PULSE	**Bit 3**	Indicates a pulse output error.
			0	No pulse output error
			1	Pulse output error
Byte 0: Bit 4	Byte 8: Bit 4	ERR_DQA	**Bit 4**	Indicates a short-circuit on the output DQn.A. You must set RES_ERROR (control interface) to reset this error.
			0	No short-circuit on DQn.A
			1	Short-circuit on DQn.A
Byte 0: Bit 5	Byte 8: Bit 5	ERR_DQB	**Bit 5**	Indicates a short-circuit on the output DQn.B or an attempt to set both DQn.A and DQn.B manually using SET_DQA, SET_DB, and TM_CTRL_DQ. You must set RES_ERROR (control interface) to reset this error.
			0	No short-circuit on DQn.B
			1	Short-circuit on DQn.B or attempt to set both DQn.A and DQn.B
Byte 0: Bit 6	Byte 8: Bit 6	ERR_OUT_VAL	**Bit 6**	Indicates that an invalid value is detected in OUTPUT_VALUE.
			0	OUTPUT_VALUE is valid
			1	OUTPUT_VALUE is not valid
Byte 0: Bit 7	Byte 8: Bit 7	ERR_SLOT_VAL	**Bit 7**	Indicates that an invalid value is detected in SLOT (only in "permanent-update" SLOT-mode).
			0	SLOT value is valid
			0 → 1	SLOT value is not valid
Byte 1: Bit 2	Byte 9: Bit 2	STS_LD_SLOT	**Bit 2**	Toggle acknowledge bit for each action of the SLOT in "single-update" SLOT-mode. Each toggle of this bit means a successful LD_SLOT action.
Byte 1: Bit 4	Byte 9: Bit 4	STS_READY	**Bit 4**	Indicates the module is ready and parameterized.
			0	Module is not parameterized
			1	Module is parameterized
Byte 1: Bit 5	Byte 9: Bit 5	STS_SW_ENABLE	**Bit 5**	Indicates the status of SW_ENABLE (control interface).
			0	SW_ENABLE cleared
			1	SW_ENABLE set

Feedback interface: Offset to the start address		Parameter	Meaning	
Channel 0	Channel 1 [1]			
Byte 2: Bit 0	Byte 8: Bit 0	STS_ENABLE	**Bit 0**	Indicates an output sequence is running.
			0	Pulse output is not running
			1	Pulse output is running
Byte 2: Bit 1	Byte 10: Bit 1	STS_DQA	**Bit 1**	Indicates the signal level at the DQn.A digital output.
			0	0 at the DQn.A digital output
			1	1 at the DQn.A digital output
Byte 2: Bit 2	Byte 10: Bit 2	STS_DQB	**Bit 2**	Indicates the signal level at the DQn.B digital output.
			0	0 at the DQn.B digital output
			1	1 at the DQn.B digital output
Byte 2: Bit 3	Byte 10: Bit 3	STS_DI	**Bit 3**	Indicates the signal level at the DIn.0 digital input.
			0	0 at the DIn.0 digital input
			1	1 at the DIn.0 digital input
Byte 3: Bit 0 to 3	Byte 11: Bit 0 to 3	SEQ_CNT	Counts rising and falling edges of DQn.A output	
Word 3	Word 7	Reserved	Read as 0	

[1] Only if the module is configured as "2 channels (2 A)" and not "1 channel (4 A)"

Note: All bytes and bits not described in the table above are reserved and are read as 0.

Input and output signals for On/Off-delay operating mode

Input and Output Signals	Meaning	Value Range	Channel 0 BaseUnit pin number	Channel 1 BaseUnit pin number
Input signal				
DIn.0 Digital input	The signal of the DIn.0 digital input is output with an On/Off-delay on DQn.A digital output.	0 = no pulse 1 = pulse	3	4
Output signal				
Pulse at the DQn.A digital output	The signal of the DIn.0 digital input is output with an On/Off-delay on the DQn.A digital output.	0 = no signal 1 = signal	9	10

See also Pin assignment and load/sensor wiring (Page 91)

3.6 Frequency output mode

Definition

This mode allows you to assign a frequency value at high frequencies more precisely than PWM period and Period duration.

A square wave signal with an assigned frequency and a constant duty cycle of 50% is produced at the digital output of the TM Pulse 2x24V.

The output sequence is started after expiration of the configured On-delay on the DQn.A digital output.

Pulse diagram

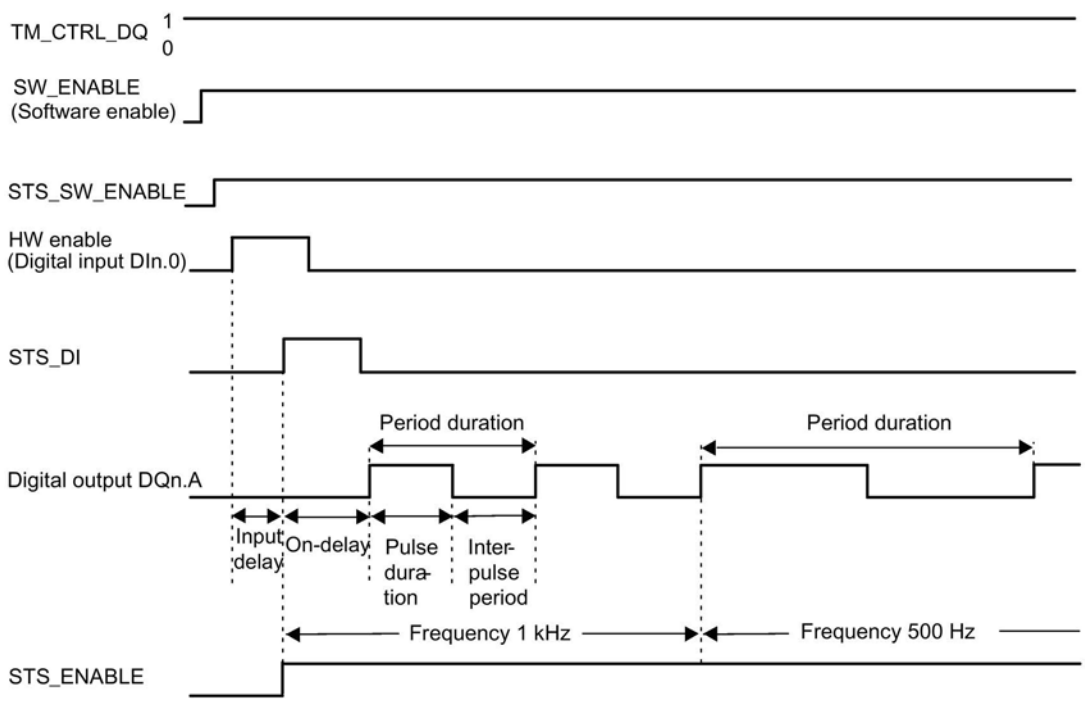

Figure 3-13 Frequency output - output sequence

The timing diagram above has the "Function DI" parameter set to "HW enable". The other option is to set "Function DI" to "Input". If the "Function DI" parameter is set to "Input", then the On-delay phase starts at the rising edge of SW_ENABLE.

Starting the output sequence

Your control program must issue the enable for the output sequence, using the software enable (SW_ENABLE 0 → 1).

The STS_SW_ENABLE feedback bit indicates the software enable pending at the TM Pulse 2x24V.

You can also set the DIn.0 digital input of the TM Pulse 2x24V as a HW enable with the "Function DI" parameter.

If you want to use the hardware enable, it has to be combined with the software enable. When SW_ENABLE has been enabled, the output sequence starts at the first positive edge of the hardware enable. Further positive edges of the hardware enable during the current output sequence are ignored by the TM Pulse 2x24V.

When the enable is issued (positive edge) and remains high for the time of the input delay (noise filter), the On-delay is started and the STS_ENABLE set. The frequency sequence is output on expiration of the On-delay. The output sequence runs continuously as long as SW_ENABLE is set.

Note

TM_CTRL_DQ technology module output control signal

- If TM_CTRL_DQ = 1, then the TM Pulse 2x24V module has control and produces pulse sequences at the DQn.A output.
- If TM_CTRL_DQ = 0, then the CPU has control and your program can set DQn.A/DQn.B outputs directly with the SET_DQA/SET_DQB control bits.

Canceling the output sequence

Disabling the software enable (SW_ENABLE = 1 → 0) during the On-delay or frequency output cancels the current output sequence and the last period duration is not completed. STS_ENABLE and the DQn.A digital output are immediately reset to 0.

You must restart the output sequence to begin new pulse output.

Truth table

Software enable SW_ENABLE	Function DI parameter	Hardware enable (DIn.0 digital input)	DQn.A digital output (when TM_CTRL_DQ = 1)	STS_ENABLE	Output sequence
1	HW_ENABLE	0 → 1 and remains 1 during the input delay. Only active for the first positive edge, additional positive edges are ignored and no start occurs.	0, if On-delay > 0 1, if On-delay = 0	0 → 1	Start
0 → 1	Input	Not used	0, if On-delay > 0 1, if On-delay = 0	0 → 1	Start
0	HW_ENABLE or Input	Any status	0	0	Cancel
1	HW_ENABLE or Input	Any status	0, if On-delay is not expired or you are in the inter-pulse time 1, if On-delay is expired and during the pulse duration		-
0 → 1	HW_ENABLE	0	0	0	-

Setting and changing the output value (Frequency)

You set the OUTPUT_VALUE directly using your control program in the control interface. The value is in real format and the unit is always "Hz". The possible range is dependent on the parameter "High Speed Output" as follows:

- High Speed Output disabled
  - Frequency (OUTPUT_VALUE): 0.02 Hz to 10,000 Hz
- High Speed Output enabled
  - Frequency (OUTPUT_VALUE): 0.02 Hz to 100,000 Hz

The new frequency value is applied at the next rising edge of the output.

Output frequency accuracy

The configured output frequency is output with an accuracy of +/- 100 ppm at the DQn.A digital output.

Setting and changing the On-delay

- Permanent update
  The On-delay can be controlled permanently using the control interface. MODE_SLOT bit has to be set (permanent-update); LD_SLOT must be the value 2 (for On-delay). Set the On-delay as a value between 0 µs and 85,000,000 µs in the field SLOT. The unit is always microseconds.
- Single update
  Set the On-delay as a value between 0 µs and 85,000,000 µs in the configuration parameters, the unit is always microseconds. Alternatively, perform a single update using the control interface. MODE_SLOT has to be cleared (single-update); LD_SLOT must be the value 2 (for On-Delay). Set the On-delay as a value between 0 µs and 85,000,000 µs in the field SLOT.

If you change the On-delay value during the output sequence, the new On-delay is activated at the next output sequence.

For more details about the use of the SLOT parameter, see Slot parameter handling (Page 113).

Isochronous mode

General information is available in the "Function: Isochronous mode (Page 86)" topic.

Isochronous mode does not have any influence on the functionality of Frequency output operating mode.

If you want to synchronize the output sequence with T_o, then set the Function DI parameter to "Input" and the frequency output sequence starts at T_o.

Parameters of Frequency output operating mode

Parameter	Meaning	Value range	Default
Mode	4 = Set the Frequency output operating mode.	0 = Pulse output 1 = Pulse width modulation 2 = Pulse train 3 = On/Off-delay 4 = Frequency output 5 = DC Motor	1
High Speed Output [1]	The output supports higher frequencies.	0 = disabled 1 = enabled	Disabled
Function DI	You can use the DIn.0 digital input as an input or as a hardware enable.	0 = Input 1 = HW enable	Input
Input delay	DIn.0 digital input must be stable over the delay time (signal noise suppression).	0 = Off (4 µs) 1 = 0.05 ms 2 = 0.1 ms 3 = 0.4 ms 4 = 0.8 ms 5 = 1.6 ms 6 = 3.2 ms 7 = 12.8 ms 8 = 20 ms	0.1 ms
On-delay	The time from the start of the output sequence to the output of the pulses. You can change the On-delay in your control program using SLOT parameter.	0 µs to 85,000,000 µs	0 µs

[1] Only if the module is configured as "2 channels (2 A)" and not "1 channel (4 A)".

Control and feedback signals for Frequency output operating mode

Control interface Offset to the start address		Parameter	Meaning				
Channel 0	Channel 1 [1]						
Bytes 0 to 3	Bytes 12 to 15	OUTPUT_VALUE (Real)	DQn.A digital output frequency as a real number. The unit is always Hz. If you violate the lower or upper limit of the range, the TM Pulse 2x24V will work with the last valid value and the error ERR_OUT_VAL is activated.				
			High-speed output disabled				High-speed output enabled
			0.02 Hz to 10,000 Hz				0.02 Hz to 100,000 Hz
Bytes 4 to 7	Bytes 16 to 19	SLOT (DWord)	The On-delay can be changed before the start of the output sequence. See MODE_SLOT.				
			0 µs to 85,000,000 µs				
Byte 8	Byte 20	LD_SLOT	Interpretation of the value SLOT: All other values not listed below are invalid and produce the error ERR_LD (in single-update mode) or ERR_SLOT_VAL (in permanent-update mode).				
			Bit 3	Bit 2	Bit 1	Bit 0	
			0	0	0	0	Idle-state; nothing is done with the value
			0	0	1	0	On-delay in microseconds

Control interface Offset to the start address		Parameter	Meaning	
Channel 0	Channel 1 [1]			
Byte 8: Bit 4	Byte 20: Bit 4	MODE_SLOT	**Bit 4**	Mode for use of the field SLOT.
			0	Single-update mode
			1	Permanent-update mode
Byte 9: Bit 0	Byte 21: Bit 0	SW_ENABLE	**Bit 0**	Software enable: Start/enable and terminate/disable the output sequence.
			0	Output disabled/terminated
			0 → 1	Starts output sequence on positive edge when "Function DI" = "Input"
			1	Enable output sequence, when start is dependent on HW enable with "Function DI" = "HW enable"
Byte 9: Bit 1	Byte 21: Bit 1	TM_CTRL_DQ	**Bit 1**	Set DQn.A output source: Selects either CPU program or module's output sequence.
			0	DQn.A and DQn.B are controlled by the CPU (in your program) using the SET_DQA and SET_DQB control bits.
			1	DQn.A is controlled by the module's pulse output sequence. DQn.B is always 0.
Byte 9: Bit 3	Byte 21: Bit 3	SET_DQA	**Bit 3**	Controls the value of the digital output DQn.A, if TM_CTRL_DQ is cleared.
			0	0 on DQn.A
			1	1 on DQn.A
Byte 9: Bit 4	Byte 21: Bit 4	SET_DQB	**Bit 4**	Controls the value of the digital output DQn.B, if TM_CTRL_DQ is cleared and if SET_DQA is cleared.
			0	0 on DQn.B
			1	1 on DQn.B
Byte 10: Bit 0	Byte 22: Bit 0	RES_ERROR	**Bit 0**	Reset pending errors (ERR_LD, ERR_DQA, ERR_DQB, and ERR_24V).
			0	Reset of errors is not active
			1	Reset of errors is active

[1] Only if the module is configured as "2 channels (2 A)" and not "1 channel (4 A)"

Note: All bytes and bits not described in the table above are reserved and should be 0.

Feedback interface: Offset to the start address		Parameter	Meaning	
Channel 0	Channel 1[1]			
Byte 0: Bit 0	Byte 8: Bit 0	ERR_PWR	**Bit 0**	Indicates under voltage on the Power supply. Note that the bit is not set if the voltage is not present.
			0	PWR is not under voltage
			1	PWR is detected, but under voltage
Byte 0: Bit 1	Byte 8: Bit 1	ERR_24V	**Bit 1**	Indicates a short-circuit or overload on the output 24 V DC. You must set the RES_ERROR (control interface), to reset this error.
			0	No short-circuit on 24 V DC
			1	Short-circuit on 24 V DC
Byte 0: Bit 2	Byte 8: Bit 2	ERR_LD	**Bit 2**	Indicates an error while loading a value using the field SLOT (only in "single-update" SLOT-mode).
			0	No load error pending
			1	Load error pending; you must set the RES_ERROR (control interface) to reset this error and be able to SLOT again.
Byte 0: Bit 4	Byte 8: Bit 4	ERR_DQA	**Bit 4**	Indicates a short-circuit on the output DQn.A. You must set RES_ERROR (control interface) to reset this error.
			0	No short-circuit on DQn.A
			1	Short-circuit on DQn.A
Byte 0: Bit 5	Byte 8: Bit 5	ERR_DQB	**Bit 5**	Indicates a short-circuit on the output DQn.B or an attempt to set both DQn.A and DQn.B manually using SET_DQA,SET_DB, and TM_CTRL_DQ. You must set RES_ERROR (control interface) to reset this error.
			0	No short-circuit on DQn.B
			1	Short-circuit on DQn.B or attempt to set both DQn.A and DQn.B
Byte 0: Bit 6	Byte 8: Bit 6	ERR_OUT_VAL	**Bit 6**	Indicates that an invalid value is detected in OUTPUT_VALUE.
			0	OUTPUT_VALUE is valid
			1	OUTPUT_VALUE is not valid
Byte 0: Bit 7	Byte 8: Bit 7	ERR_SLOT_VAL	**Bit 7**	Indicates that an invalid value is detected in SLOT (only in "permanent-update" SLOT-mode).
			0	SLOT value is valid
			0 → 1	SLOT value is not valid
Byte 1: Bit 2	Byte 9: Bit 2	STS_LD_SLOT	**Bit 2**	Toggle acknowledge bit for each action of the SLOT in "single-update" SLOT-mode. Each toggle of this bit means a successful LD_SLOT action.
Byte 1: Bit 4	Byte 9: Bit 4	STS_READY	**Bit 4**	Indicates the module is ready and parameterized.
			0	Module is not parameterized
			1	Module is parameterized
Byte 1: Bit 5	Byte 9: Bit 5	STS_SW_ENABLE	**Bit 5**	Indicates the status of SW_ENABLE (control interface).
			0	SW_ENABLE cleared
			1	SW_ENABLE set
Byte 2: Bit 0	Byte 8: Bit 0	STS_ENABLE	**Bit 0**	Indicates an output sequence is running
			0	Pulse output is not running
			1	Pulse output is running
Byte 2: Bit 1	Byte 10: Bit 1	STS_DQA	**Bit 1**	Indicates the signal level at the DQn.A digital output.
			0	0 at the DQn.A digital output
			1	1 at the DQn.A digital output

Feedback interface: Offset to the start address		Parameter	Meaning	
Channel 0	Channel 1[1]			
Byte 2: Bit 2	Byte 10: Bit 2	STS_DQB	**Bit 2**	Indicates the signal level at the DQn.B digital output.
			0	0 on DQn.B digital output
			1	1 on DQn.B digital output
Byte 2: Bit 3	Byte 10: Bit 3	STS_DI	**Bit 3**	Indicates the signal level at the DIn.0 digital input.
			0	0 on DIn.0 digital input
			1	1 on DIn.0 digital input
Byte 3: Bit 0 to 3	Byte 11: Bit 0 to 3	SEQ_CNT	Sequence counter = 0. The sequence counter is not used in frequency output mode.	
Word 3	Word 7	Reserved	Read as 0	

[1] Only if the module is configured as "2 channels (2 A)" and not "1 channel (4 A)"

Note: All bytes and bits not described in the table above are reserved and are read as 0.

Input and output signals for Frequency output operating mode

Input and Output Signals	Meaning	Value Range	Channel 0 BaseUnit pin number	Channel 1 BaseUnit pin number
Input signal				
HW enable	You can select the HW enable with the "Function DI" parameter and select the input delay with the "Input delay" parameter. The signal of the DIn.0 digital input is interpreted by the TM Pulse 2x24V, after noise filtering by the input delay, as the start of the output sequence.	0 = HW enable cleared 1 = HW enable issued 0 → 1 = Start of the output sequence after the input delay; dependent on the software enable (SW_ENABLE)	3	4
Output signal				
Pulse at the DQn.A digital output	A pulse is output at the DQn.A digital output for the assigned frequency.	0 = no pulse 1 = pulse	9	10

See also Pin assignment and load/sensor wiring (Page 91)

3.7 DC motor mode

Definition

Each channel has an A and a B output for connection to your DC motor load. The bipolar output switch and pulse width modulation lets your assign rotation direction and output voltage duty cycle.

You can use the two channels for 2 A per channel maximum or use a parallel connection that provides a single channel 4 A maximum.

Two channel motor load connection:

- Channel 0: motor connected between DQ0.A and DQ0.B
- Channel 1: motor connected between DQ1.A and DQ1.B

Single channel motor load connection

- 4 A Channel 0: motor connected between DQ0.A and DQ0.B.
  DQ0.A and DQ1.A are connected together; DQ0.B and DQ1.B are connected together.

For more details concerning the connection, see the Connecting chapter (Page 91)of this manual.

Motor rotate

Rotation direction

- Forward during high phase of the PWM signal: DQn.A is 1 and DQn.B is 0.
- Backward during high phase of the PWM signal: DQn.A is 0 and DQn.B is 1.
- Forward/Backward during low phase of the PWM signal: DQn.A is 0 and DQn.B is 0.

Motor stop

The motor can be stopped using an external signal connected to the DIn.0 digital input or using the signal SW_ENABLE in the control interface. Configure the "Function DI" accordingly.

Function DI setting:

- "HW enable" starts the motor on the rising edge of DI and stops the motor on the falling edge of DI.
- "External stop" starts the motor on the rising edge on SW_ENABLE and stops the motor on the rising edge on DI, or the falling edge of SW_ENABLE.
- "Input" starts the motor on the rising edge of SW_ENABLE and stops the motor on the falling edge of SW_ENABLE (DI has no effect on the control of the motor).

You control the output pulse width duty cycle with the control interface field OUTPUT_VALUE. The TM Pulse 2x24V generates continuous pulses based on this value. The OUTPUT_VALUE determines the duty cycle (pulse duration/period duration) within a period for pulse width modulation. The period duration can be adjusted.

After expiration of the assigned On-delay, the DQn.A and DQn.B output pulses begin (output sequence).

High-speed mode, current measurement, and current control are not available in DC motor mode.

Starting the output sequence

Your control program must issue the enable for the output sequence, using the software enable (SW_ENABLE 0 → 1).

The STS_SW_ENABLE feedback bit indicates the software enable pending at the TM Pulse 2x24V.

You can also assign the DIn.0 digital input of the TM Pulse 2x24V as a HW enable with the "Function DI" parameter. The input delay (noise filter) of the hardware enable can be set using the parameter "Input Delay".

If you want to use the hardware enable, it has to be combined with the software enable. When SW_ENABLE has been enabled, the output sequence starts at the first positive edge of the hardware enable. Further positive edges of the hardware enable during the current output sequence are ignored by the TM Pulse 2x24V. The hardware enable option is not supported for isochronous mode.

When the enable is issued (positive edge) and remains high for the input delay time, the On-delay is started and the STS_ENABLE set. The PWM pulse train is output on expiration of the On-delay. The output sequence runs continuously as long as SW_ENABLE is set.

Canceling the output sequence

- Using the SW_ENABLE signal: Disabling the software enable (SW_ENABLE = 1→0) cancels the current output sequence and the last period duration is not completed. STS_ENABLE and the DQn.A and DQn.B digital outputs are immediately set to 1 (motor stop).

You must restart the output sequence to begin new pulse output.

- Using the digital input DIn.0:
  - If "Function DI" is parameterized as "HW_ENABLE": a falling edge on DIn.0 will stop the output sequence with the same behavior as using the SW_ENABLE.
  - If "Function DI" is parameterized as "External stop": a rising edge on DIn.0 will stop the sequence with the same behavior as using the SW_ENABLE.

Truth table

Software enable SW_ENABLE	Function DI parameter	Hardware enable (DIn.0 digital input)	Digital output DQn.A and DQn.B		STS_ENABLE	Output sequence
1	HW_ENABLE	0 → 1 and remains 1 during the input delay. Only active for the first positive edge, additional positive edges are ignored and no start occurs.	If On-delay > 0: DQn.A: 0 DQn.B: 0		0 → 1	Start
			If On-delay = 0:			
			Forward: DQn.A: 1 DQn.B: 0	Backward: DQn.A: 0 DQn.B: 1		
0 → 1	Input or External stop	Any state	If On-delay > 0 DQn.A: 0 DQn.B: 0		0 → 1	Start
			If On-delay = 0			
			Forward: DQn.A: 1 DQn.B: 0	Backward: DQn.A: 0 DQn.B: 1		
0	HW_ENABLE or Input or External stop	Any state	DQn.A: Tri-state DQn.B: Tri-state		0	Cancel
1	Input	Any state	If On-delay is not expired or during interpulse time: DQn.A: 0 DQn.B: 0			-
			If On-delay is expired and during the pulse duration:			
			Forward: DQn.A: 1 DQn.B: 0	Backward: DQn.A: 0 DQn.B: 1		
1	HW_ENABLE	0	DQn.A: Tri-state DQn.B: Tri-state		1 → 0	Stop
1	External stop	0 → 1	DQn.A: Tri-state DQn.B: Tri-state		1 → 0	Stop
0 → 1	HW_ENABLE	0	DQn.A: Tri-state DQn.B: Tri-state		0	-

Setting and changing the pulse duty cycle and rotation direction

OUTPUT_VALUE assigns the duty cycle and the direction for the current period duration.

OUTPUT_VALUE is given as an S7 analog value, the sign gives the direction of the motor rotation ("+" means forward, "-" means backwards). The possible range is -27648 to +27648.

Only the two least significant bytes of OUTPUT_VALUE are used, the two other bytes are ignored. A value of the two least significant bytes higher than +27648 will be interpreted as a value of +27648 (100% forward). A value of the two least significant bytes below -27648 will be interpreted as a value of -27648 (100% backward).

Before changing the rotation direction, it is recommended that the OUTPUT_VALUE is first set to 0 long enough, to first stop the motor. Note that the TM Pulse 2x24V module does not override our duty cycle assignment in order to protect the motor. If a ramp-up or ramp-down is required by the motor, this ramp has to be implemented in the automation program and transmitted to the module by controlling the value of the field OUTPUT_VALUE accordingly.

- "S7 analog output" output format: Value range between -27,648 and +27,648. The sign determines the motor rotation direction.
- Pulse duration = (OUTPUT_VALUE/27,648) x period duration.

You assign OUTPUT_VALUE directly with your control program. A new OUTPUT_VALUE is applied at the next rising edge of the output.

Setting and changing the period duration

- Permanent update
  The period duration is controlled permanently using the control interface. The MODE_SLOT bit has to be set ("1" means permanent update); LD_SLOT has to have the value 1 ("1" means Period duration).
  Set the period duration value in the field SLOT between 100 µs and 85,000,000 µs.
- Single update
  Set the period duration in the configuration parameters. Alternatively, perform a single update using the control interface. MODE_SLOT has to be cleared ("0" means single-update); LD_SLOT has to have the value 1 ('1' means Period duration).
  Set the period duration value in the field SLOT between 100 µs and 85,000,000 µs.

The new period duration is applied with the next rising edge of the output.

For more details about SLOT parameter handling, see "Slot parameter handling (control interface)".

Isochronous mode

General information is available in the "Function: Isochronous mode" topic.

In isochronous mode, the output sequence is synchronized with the moment T_O. The period duration is coordinated to the application cycle (the synchronous cycle, a multiple of the PROFINET cycle). The behavior in the DC-motor mode is the same than the behavior in the operating mode PWM. Please refer to the corresponding chapter in this manual. Only the differences are listed below:

- During the "pulse duration phase" (high phase), the status of the outputs is as follows:
  - In forward direction: DQn.A is 1 and DQn.B is 0
  - In backward direction: DQn.A is 0 and DQn.B is 1
- During the "interpulse duration phase" (low phase), the status of the outputs is as follows:
  - DQn.A is 0 and DQn.B is 0
- The parameter "Function DI" can be parameterized as "External stop" in isochronous mode to use the rising edges on the DIn.0 to stop the motor. Note that if "Function DI" is parameterized as "HW_ENABLE" in isochronous mode which is not supported, it will be interpreted as "External stop" by the TM Pulse 2x24V module.

Setting and changing the On-delay

- Permanent update
  The On-delay can be controlled permanently using the control interface. The MODE_SLOT bit has to be set (permanent update); LD_SLOT must have the value 2 (for On-delay). Set the On-delay as a value between 0 µs and 85,000,000 µs in the field SLOT. The unit is always microseconds.
- Single update
  Set the On-delay as a value between 0 µs and 85,000,000 µs in the configuration parameters. The unit is always microseconds. Alternatively, perform a single update using the control interface. MODE_SLOT has to be cleared (single-update); LD_SLOT must have the value 2 (for On-delay). Set the On-delay as a value between 0 µs and 85,000,000 µs in the field SLOT.

If you change the On-delay value during the output sequence, then the new On-delay is activated at the next output sequence. For more details about the use of the SLOT parameter see SLOT parameter handling.

Parameters for DC motor operating mode

Parameter	Meaning	Value range	Default
Operating mode	5 = Set the DC motor operating mode.	0 = Pulse output 1 = Pulse width modulation 2 = Pulse train 3 = On/Off-delay 4 = Frequency output 5 = DC Motor	1
Function DI	You can use the DIn.0 digital input as an input, for HW_ENABLE, or External stop signal. The signal at DIn.0 is interpreted by the TM Pulse 2x24V, after noise filtering by the input delay. If HW_ENABLE is used in non-isochronous mode, a rising edge on DIn.0 starts the output sequence (If SW_ENABLE is set) and a falling edge on DIn.0 stops the output sequence. If HW_ENABLE is used in isochronous mode, it will be interpreted by the module as External stop. If External Stop is used, the output sequence starts with the rising edge of SW_ENABLE and stops with the rising edge of DIn.0.	0 = Input 1 = HW enable 2 = External stop	Input
Output format	Defines the format of the ratio value (duty cycle).	0 = S7 analog format	S7 analog format
Input delay	DIn.0 digital input must be stable over the delay time (signal noise suppression).	0 = Off (4 µs) 1 = 0.05 ms 2 = 0.1 ms 3 = 0.4 ms 4 = 0.8 ms 5 = 1.6 ms 6 = 3.2 ms 7 = 12.8 ms 8 = 20 ms	0.1 ms
Period	Period duration of the output pulse cycle in µs. You can change the period duration in your control program with the control interface SLOT field.	100 µs to 85,000,000 µs	1000 µs
On-delay	The time from the start of the output sequence to the output of the pulses. You can change the On-delay in your control program with the control interface SLOT field.	0 µs to 85,000,000 us	0 µs

Control and feedback signals for DC motor mode

Control interface Offset to the start address		Parameter	Meaning				
Channel 0	Channel 1 [1]						
Bytes 0 to 3	Bytes 12 to 15	OUTPUT_VALUE (DWord)	The OUTPUT_VALUE determines the duty cycle (pulse duration/period duration ratio) within a period (PWM). The period duration can be adjusted. The new output value is applied at the next rising edge of the output. The OUTPUT_VALUE sign indicates direction of rotation (positive for forward) and (negative for backward). S7 analog output format: value range is -27,648 to +27,648 DInt data type: Only 2 least significant bytes are used For channel 0: bytes 2 and 3 For channel 1: bytes 14 and 15				
Bytes 4 to 7	Bytes 16 to 19	SLOT (DWord)	Your program can change the On-delay and Period duration before the start of the output sequence using the SLOT and MODE_SLOT parameters.				
			0 µs to 85,000,000 µs				
Byte 8	Byte 20	LD_SLOT	Interpretation of the value SLOT: All other values not listed below are invalid and produce the error ERR_LD (in single-update mode) or ERR_SLOT_VAL (in permanent-update mode).				
			Bit 3	**Bit 2**	**Bit 1**	**Bit 0**	
			0	0	0	0	Idle-state; nothing is done with the value
			0	0	0	1	Period in µs
			0	0	1	0	On-delay in µs
Byte 8: Bit 4	Byte 20: Bit 4	MODE_SLOT	**Bit 4**	Mode for use of the field SLOT.			
			0	Single-update mode			
			1	Permanent-update mode			
Byte 9: Bit 0	Byte 21: Bit 0	SW_ENABLE	**Bit 0**	Software enable: Start and terminate the output sequence.			
			0	Output canceled			
			0 → 1	Starts output sequence on positive edge when "Function DI" = "Input" or "Function DI" = "External stop".			
			1	Enable output sequence, when start is dependent on HW enable with "Function DI" = "HW enable"			
Byte 9: Bit 1	Byte 21: Bit 1	TM_CTRL_DQ	**Bit 1**	The outputs are always controlled by the module in DC-motor mode. This bit is ignored.			
			X	Don't care: No effect on the outputs.			
Byte 9: Bit 3	Byte 21: Bit 3	SET_DQA	**Bit 3**	Controls the value of the digital output DQn.A, if TM_CTRL_DQ = 0.			
			X	Don't care: No effect on the outputs.			
Byte 9: Bit 4	Byte 21: Bit 4	SET_DQB	**Bit 4**	Controls the value of the digital output DQn.B, if TM_CTRL_DQ = 0.			
			X	Don't care: No effect on the outputs.			
Byte 10: Bit 0	Byte 22: Bit 0	RES_ERROR	**Bit 0**	Reset pending errors (ERR_LD, ERR_DQA, ERR_DQB, and ERR_24V).			
			0	Reset of errors is not active			
			1	Reset of errors is active			

[1] Only if the module is configured as "2 channels (2 A)" and not "1 channel (4 A)"

Note: All bytes and bits not described in the table above are reserved and should be 0.

Feedback interface: Offset to the start address		Parameter	Meaning	
Channel 0	Channel 1 [1]			
Byte 0: Bit 0	Byte 8: Bit 0	ERR_PWR	**Bit 0**	Indicates under voltage on the Power supply. Note that the bit is not set if the voltage is not present.
			0	PWR is not under voltage
			1	PWR is detected, but under voltage
Byte 0: Bit 1	Byte 8: Bit 1	ERR_24V	**Bit 1**	Indicates a short-circuit or overload on the output 24 V DC. You must set the RES_ERROR (control interface), to reset this error.
			0	No short-circuit on 24 V DC
			1	Short-circuit on 24 V DC
Byte 0: Bit 2	Byte 8: Bit 2	ERR_LD	**Bit 2**	Indicates an error while loading a value using the field SLOT (only in "single-update" SLOT-mode).
			0	No load error pending
			1	Load error pending: you must set the RES_ERROR (control interface) to reset this error and be able to use SLOT again.
Byte 0: Bit 4	Byte 8: Bit 4	ERR_DQA	**Bit 4**	Indicates a short-circuit on the output DQn.A. You must set RES_ERROR (control interface) to reset this error.
			0	No short-circuit on DQn.A
			1	Short-circuit on DQn.A
Byte 0: Bit 5	Byte 8: Bit 5	ERR_DQB	**Bit 5**	Indicates a short-circuit on the output DQn.B. You must set RES_ERROR (control interface) to reset this error.
			0	No short-circuit on DQn.B
			1	Short-circuit on DQn.B
Byte 0: Bit 7	Byte 8: Bit 7	ERR_SLOT_VAL	**Bit 7**	Indicates that an invalid value is detected in SLOT (only in "permanent-update" SLOT-mode).
			0	SLOT value is valid
			0 → 1	SLOT value is not valid
Byte 1: Bit 2	Byte 9: Bit 2	STS_LD_SLOT	**Bit 2**	Toggle acknowledge bit for each action of SLOT in "single-update" SLOT-mode. Each toggle of this bit means a successful LD_SLOT action.
Byte 1: Bit 4	Byte 9: Bit 4	STS_READY	**Bit 4**	Indicates the module is ready and parameterized.
			0	Module is not parameterized
			1	Module is parameterized
Byte 1: Bit 5	Byte 9: Bit 5	STS_SW_ENABLE	**Bit 5**	Indicates the status of SW_ENABLE (control interface).
			0	SW_ENABLE cleared
			1	SW_ENABLE set
Byte 2: Bit 0	Byte 8: Bit 0	STS_ENABLE	**Bit 0**	Indicates an output sequence is running.
			0	Output sequence not running
			1	Output sequence running
Byte 2: Bit 1	Byte 10: Bit 1	STS_DQA	**Bit 1**	Indicates the signal level at the DQn.A digital output.
			0	0 on DQn.A digital output
			1	1 on DQn.A digital output
Byte 2: Bit 2	Byte 10: Bit 2	STS_DQB	**Bit 2**	Indicates the signal level at the DQn.B digital output.
			0	0 on DQn.B digital output
			1	1 on DQn.B digital output

Feedback interface: Offset to the start address		Parameter	Meaning	
Channel 0	Channel 1 [1]			
Byte 2: Bit 3	Byte 10: Bit 3	STS_DI	Bit 3	Indicates the signal level at the DIn.0 digital input.
			0	0 on DIn.0 digital input
			1	1 on DIn.0 digital input
Byte 3: Bit 0 to 3	Byte 11: Bit 0 to 3	SEQ_CNT	Sequence counter = 0. The sequence counter is not used in PWM mode.	
Word 3	Word 7	Reserved	Read as 0	

[1] Only if the module is configured as "2 channels (2 A)" and not "1 channel (4 A)"

Note: All bytes and bits not described in the table above are reserved and are read as 0.

Input and output signals for DC motor operating mode

Input and output signal	Meaning	Value range	Channel 0 BaseUnit pin number	Channel 1 BaseUnit pin number
Input signal				
HW enable /External stop Note: HW enable not supported for PWM in isochronous mode	You can select the interpretation of the digital input signal on the output sequence with the "Function DI" parameter and select the input delay with the "Input delay" parameter. The signal at the DIn.0 digital input is interpreted by the TM Pulse 2x24V, after noise filtering by the input delay, as the start of the output sequence.	Function DI = "HW_ENABLE": 0 = HW enable cleared 1 = HW enable issued 0→1 = Start of the output sequence after the input delay, dependent on the software enable (SW_ENABLE) 1→0 = Stop of the output sequence after the input delay, dependent on the software enable (SW_ENABLE). Function DI = External stop: 0→1 = Stop of the output sequence after the input delay; dependent on the software enable (SW_ENABLE)	3	4
Output signal				
Pulse at the DQn.A and DQn.B digital outputs	A pulse is output at the DQn.A and DQn.B digital outputs for the assigned duty cycle and period duration.	**No pulse or interpulse period:** DQn.A is 0 V and DQn.B is 0 V **Pulse duration in forward direction:** DQn.A is 24 V and DQn.B is 0 V **Pulse duration in backward direction:** DQn.A is 0 V and DQn.B is 24 V	9 (DQ0.A) 11 (DQ0.B)	10 (DQ1.A) 12 (DQ1.B)

See also Pin assignment and load/sensor wiring

3.8 Function: High-speed output

High-speed mode improves the signal timing of the DQ digital outputs. The switching edges have less delay, variation, jitter, and smaller rise/fall times.

High-speed mode is designed to produce more precise timing for pulse signals, but provides less maximum load current.

High-speed output is only available in dual channel operation; it is not available in single channel operation.

You can use the STEP 7 (TIA Portal) or STEP 7 hardware configuration to select "High-speed output (0.1 A)" option for each channel separately. Also, you can change the parameter assignment at runtime with your program using data record 128 (Page 138).

STEP 7 (TIA Portal) and STEP 7 assist you during parameter assignment, by disabling keyboard input for invalid parameters and range checking your value assignments. Depending on previous parameter selections, other options will be disabled. For example, if you select the single channel operation (the parallel connection of the two output channels), then the parameter options for Channel 1 and high-speed output are disabled.

High-speed output option is available for these operation modes:

- Pulse output
- PWM
- Pulse train
- On/Off-delay
- Frequency output

High-speed output is not available in DC motor mode.

High-speed output option

Pulse timing	Minimum		Maximum	
	High-speed disabled	High-speed enabled	High-speed disabled	High-speed enabled
Pulse duration	10 µs	1.5 µs	85,000,000 µs	
Period duration	100 µs	10 µs		
On-delay	0 µs			
Off-delay				
Frequency	0.02 Hz		10 kHz	100 kHz

High-speed output load current

Parallel mode (single channel operation)	Maximum pulse output load current	
	High-speed disabled	High-speed enabled
Disabled	2 A (Two channels)	100 mA (Two channels)
Enabled	4 A (One channel)	Not allowed

3.9 Function: Sequence counter

The TM Pulse 2x24V has a sequence counter for each channel that counts completed output sequences. Successfully completed and unsuccessfully completed output sequences are counted.
You can monitor the completion of an output sequence with the sequence counter SEQ_CNT variable in the feedback interface (Page 115).

The counter has a width of 4 bits. After a count overflow, the counter jumps back to 0.

Function of the sequence counter

The sequence counter has the following function in the individual operating modes:

- Pulse output and pulse train
  - Function DI configuration is set to "Input": the counter is set to 1 after completion of the output sequence (range 0 to 1).
  - Function DI configuration is set to "HW enable": the counter is incremented after every completed output sequence (range 0 to 15).
- On/Off-delay
  - The counter is incremented, with each edge (positive and negative) at the DQ output (range 0 to 15).
- PWM, frequency output, and DC motor
  - The counter does not have any function.

When the software enable (SW_ENABLE = 0) occurs, the counter is reset to 0.

Application options

The sequence counter can be used for:

- Detecting (counting) very short pulse sequences
- Counting of output sequences controlled with the hardware enable

3.10 Function: Current measurement

Principle of operation

Your program logic can use load current measurements with a control loop for proportional control of the energy transferred to an inductive or resistive load. The current measurements are provided in the feedback interface (Page 115) MEASURED_CURRENT value in SIMATIC S7 analog value format.

Current measurement is possible:

- For PWM and Pulse train operating modes and if the high-speed output option is inactive
  - When there is no pulse output (at STS_ENABLE = 0), 7FFFH is supplied as the measured value.
  - The measured value is valid at (STS_ENABLE = 1) after the first period duration. The returned current measurement value is a mean value of measured values sampled over the duration of at least one period. If Dithering is active, then the mean value is sampled over the duration of the entire Dither period.

Current measurement is not possible and returns a MEASURED_CURRENT value of 0:

- For all other operating modes or if the high-speed output option is active.

Note

In order for the current measurement to work correctly, do not connect a freewheeling diode (snubber/suppressor diode) to the output load.

Measuring range and measured value

- **Channel configuration is 2 channels (2 A)** (the parallel channel connection is deactivated).
  - A measured mean current of 2 A corresponds to the SIMATIC S7 analog value of 27,648 ($6C00_H$).
  - Measurements of current are possible up to a SIMATIC S7 analog value of 32,511 ($7EFF_H$) which corresponds to a current of 2.37 A.
  - Currents exceeding 2 A may only occur briefly.
- **Channel configuration is 1 channel (4 A)** (the parallel channel connection is activated).
  - A measured mean current of 4 A corresponds to the SIMATIC S7 analog value of 27,648.
  - Measurements of current are possible up to a SIMATIC S7 analog value of 32,511 which corresponds to a current of 4.74 A.
  - Currents exceeding 4 A may only occur briefly.

Output current limit diagnostic message

If diagnostics are enabled and the module is in PWM or PTO mode, then an over current diagnostic error will be reported when the module senses the current to be higher 2.37 A (4.74 A in single channel mode).

Current measurement accuracy

Current measurement accuracy is ±2% of the full scale 27,648 measuring range

- ±40 mA in dual channel mode
- ±80 mA in single channel mode

The current measurement accuracy degrades above 3 kHz pulse frequency to -2% +5% accuracy, when driving resistive loads at a frequency of 10 kHz.

Note

2% current measurement accuracy is only possible, if the period duration is not changed during the measurement process.

3.11 Function: Current control

Current control (PWM mode only)

In PWM mode, the TM Pulse 2x24V module can use a proportional-integral-derivative (PID) algorithm to control output current. The target value of the current (set point) is determined by your program and the module controls the duty cycle of the PWM output to follow the set point, with a response that is based on the assigned PID parameters.

The set point and the measured value of the load current are compared by the PID controller. If the resulting difference (error) is outside a symmetrical dead band, a reaction is calculated by adding the selected proportional, integral and/or derivative parts. The manipulated value is limited by the defined high/low limits and finally the output pulse duration time (duty cycle) is modified, depending on the PWM period duration.

Assign the reference current value to the current measured in the channel's DQn.A output load when the output is continuously in the high (On) state.

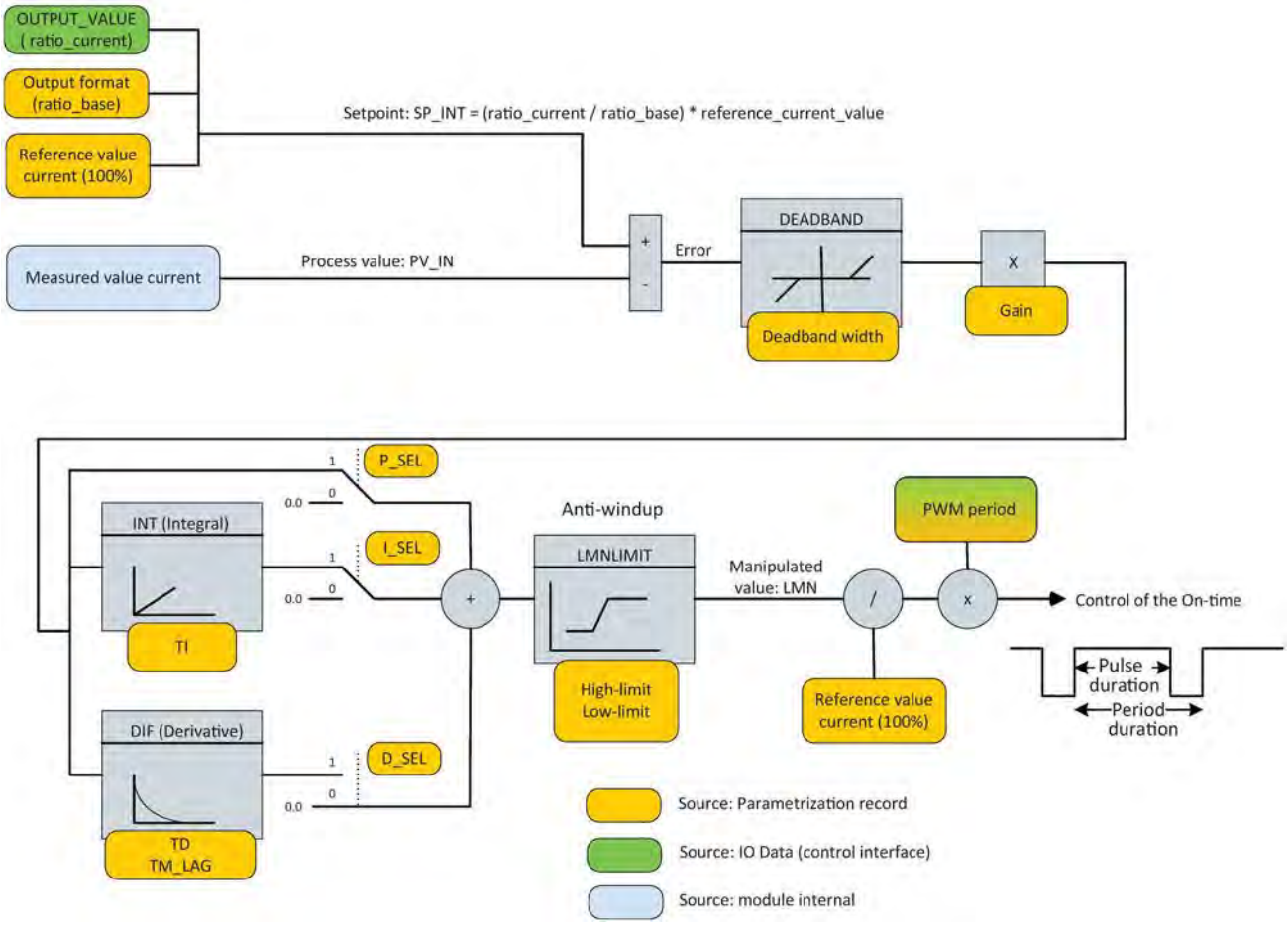

Figure 3-14 Current control PID function

For more information about this PID control method, refer to the CONT_C instruction topic in TIA Portal online help.

Setting up current control

In order to use the current control feature, the module must be parametrized correctly and the set point (target value of the current) must to be controlled by the user program. In addition, your program can also read the limit-reached flags.

PID parameters

The PID parameters can be set in TIA Portal device configuration or by your program writing parametrization record (record 128) in the module. See the parametrization record description (Page 138) for details.

- **Current Control**: "1" activates the PID controller. Limitations: Current control can only be activated if the selected mode of operation is PWM and the high-speed output is disabled.
  All the following parameters have no effect, if current control is disabled.
- **P_Sel, I_Sel, D_Sel**: defines the PID control calculation. The proportional, integral, and derivative parts can be enabled ("1") or disabled ("0") in the device configuration.
- **Reference value current (mA)**: The reference value is used to define the maximum set point and the high and low limits of the controlled current. Typically, the maximum current can be measured in PWM mode with current control disabled and a duty cycle set to 100%. The value measured can be set as a reference for the current control. The maximum value is 4000 mA for single channel operation (parallel channel connection enabled) and 2000 mA per channel for dual channel operation (parallel connection disabled).
- **Dead band width (µA)**: A dead band is applied to the output current deviation from the set point current. The "Dead band width" is half of the size of the dead band. The dead band is symmetrical: For example, if the dead band width = 1500 µA, then the dead band is from -1500 µA to +1500 µA .
- **High limit (S7 analog value)**: The manipulated value is always restricted to a high limit and low limit. The "High limit" parameter assigns the high limit in S7 analog format, relative to the reference value current. A value higher or equal than 27648 means 100% of the reference value current. The High limit value must be higher than the Low limit.

  High limit example:

  – The reference current is set to 1000 mA which should be the load current measured with 100% duty cycle.

  – If the high limit is 20000, this means the maximum current the controller will drive is 20000/27648 * 1000 mA = 723.4 mA that is equivalent to a duty cycle of 72.34%.

  – If the controller calculates a control value higher than 72.34%, it will drive 72.34% and never go higher than that value.

- **Low limit (S7 analog value):** The manipulated value is always restricted to a high limit and low limit. The "Low limit" parameter assigns the low limit in S7 analog format, relative to the reference value of the current. A value higher or equal to 27648 is not allowed. The Low limit value must be lower than the High limit.
  Low limit example:
  - The reference current is set to 1000 mA which should be the load current measured with 100% duty cycle.
  - If the low limit is 100, this means the minimum current the controller will drive is 100/27648 * 1000 mA = 3.6 mA that is equivalent to a duty cycle of 0.36%.
  - If the controller calculates a control value below 0.36%, it will drive 0.36% and never go lower than that value.
- **Gain:** The proportional gain parameter assigns the amplification factor for the P part of the PID algorithm.
- **TI (s)**: The integration time parameter determines the time interval of the integral action. If TI is smaller than the controller cycle time, TI will be set internally to the controller cycle time.
- **TD (s)**: The derivative time parameter determines the time interval of the derivative action. If TD is smaller than the controller cycle time, TI will be set internally to the controller cycle time.
- **TM_LAG (s)**: Time lag of the derivative action. The algorithm of the D-action contains a delay of TM_LAG. If TM_LAG is smaller than half the controller cycle time, TI will be set internally to half the controller cycle time.

Set point control

Your program controls the target value of the output current by setting the control interface field OUTPUT_VALUE. The output format is selected in the parametrization record (see parameter "output format"). For example, if the output format "per 100" is selected, writing the value 60 in OUTPUT_VALUE means the target current value is 60% of the reference current value (see parameter "reference value current").

Limit reached flags

The limit reached flags are available in the feedback interface.

QLMN_HLM: "1" means the manipulated value is at the high limit.

QLMN_LLM: "1" means the manipulated value is at the low limit.

For more information about the PID control parameters, refer to the CONT_C instruction topic in TIA portal online help.

Controller cycle time

The internal controller cycle time depends on the configured automation system and on the PWM period. The controller cannot control the current faster than the parametrized PWM period, as the measured current is averaged over an entire PWM period.

If Dithering is active simultaneously with current control, the PID controller uses the Dither period duration as the internal controller cycle time.

Resetting the PID current controller

The internal data of the current controller are reset in the following cases:

- SW_ENABLE (see control interface) is low.
- A new parametrization record is sent to the module.

See also

TM Pulse 2x24V feedback interface (Page 115)

3.12 Function: Dither PWM output

Dither overview

The Dither function creates a vibration in a proportional valve when the desired valve position is controlled with current supplied from the PWM output. The vibration is induced by superimposing the dither current fluctuation around the target current, in a PWM output load (valve coil).

The dither vibration improves the accuracy and linearity of proportional control valves. You can enable and configure the Dither function to minimize valve control problems caused by static friction, stiction, and hysteresis.

Dither parameters

The dither parameters can be set in the TIA Portal device configuration or in the parameterization record (record 128) sent by the program to the module. See the Parameterization record (Page 138) description for details. Some dither parameters can be changed during operation by using the slot mechanism in the control interface for calibration purposes. It is recommended to restart the PWM output sequence after such a parameter change.

- Dither: "1" enables the dither feature. In addition to enabling "Dither" in the module's PWM configuration, you must set the DITHER bit in the Control interface (Page 110) to start the Dither signal.
- Dither amplitude (‰): Assign the amplitude ratio of the superimposed dither signal in a per mill ratio. The allowed range is 0 to 500‰ duty cycle. If a higher value is assigned, then 500‰ is used by the module.

  For example: if the dither amplitude is set to 100‰ and the duty cycle in PWM mode is set to 50%, then the effective duty cycle of the signal will vary periodically between 40% and 60%.

  The dither amplitude is adapted (reduced) dynamically by the module if the calculated effective duty cycle is higher than 100% or lower than 0%, so that the dither signal remains symmetrical.

  For example, if the dither amplitude is set to 100‰ and the duty cycle in PWM mode is set to 95%, the effective duty cycle of the signal will vary periodically between 90% and 100%. The dither amplitude is always corrected to remain symmetrical. The dither amplitude will return to the assigned value, as soon as the output signal allows enough duty cycle margin for the superimposed Dither duty cycle variation to be symmetrical.

- **Dither period (µs)**: Assign the period duration in microseconds for the superimposed dither signal. The allowed range is from (4 x PWM period) to 100,000 µs. Also, the Dither period must be greater than 2 ms. If a value less than 2 ms or less than (4 x PWM period) is parametrized, then an error occurs (see parameter validation (Page 120) for ERR_SLOT_VAL and ERR_LD). If a Dither period higher than 100 ms is assigned, the module will use the value 100 ms. The Dither period used by the module can only be an even multiple of the PWM period. The module will use the nearest possible value to the assigned Dither period.
- **Dither ramps**: The dither ramp parameter is one double-word made of two different words. The low word is the dither ramp-up time and the high word is the dither ramp-down time.
  - **Dither ramp-up time (ms):** Assign the time in milliseconds for the duty cycle to rise from 0% to 100%. The allowed range is 0 ms to 30,000 ms. If a higher value is assigned, then 30,000 ms is used by the module.
    The effective ramp-up time is dependent on the dither amplitude and the nominal value of the duty cycle.
    For example: if your nominal value of the duty cycle is 50% and the dither amplitude is 100‰, the effective duty cycle will vary between 40% and 60%, the ramp-up time from 50% to 60% will be 100‰ x Dither ramp-up time.
  - **Dither ramp-down time (ms):** Assign the time in milliseconds for the duty cycle to fall from 100% to 0%. The allowed range is 0 ms to 30,000 ms. If a higher value is assigned, then 30,000 ms is used by the module.
    The effective ramp-down time is dependent on the Dither amplitude and the nominal value of the duty cycle.
    For example: if your nominal value of the duty cycle is 50% and the dither amplitude is 100‰, the effective duty cycle will vary between 40% and 60%, the ramp-down time from 50% to 40% will be 100‰ x Dither ramp-down time.

Note

Changing parameters during Dither output

If the PWM period is changed during operation using the slot mechanism, so that the dither period is less than (4 x PWM period), then dither current is deactivated and feedback bit STS_DITHER = 0, until a valid combination of Dither and PWM periods is assigned.

If you change parameter values using the SLOT mechanism during dither output, then you should restart the output sequence.

Note

PWM with dithering in isochronous mode

For best results, set the dither period duration to an integral even-numbered multiple of the application cycle.

Example: If the application cycle is 1ms, then the minimal optimal dither period is 2ms. The next optimal values are 4ms, 6ms, ...

Dither starting and stopping

The ramp-up of the dither current starts as soon as the bit DITHER is set in the control interface and the current Dither period has ended and a new Dither period starts. The feedback interface provides an acknowledge bit STS_DITHER in the feedback interface that goes high when the ramp-up phase is started (by setting the DITHER bit when the output sequence is running) and goes low when the ramp-down phase is over or the output sequence is stopped. The ramp-down starts when the bit DITHER is cleared in the control interface and the current Dither period has ended and a new Dither period starts.

Example 1: No dither (Dither bit = 0)

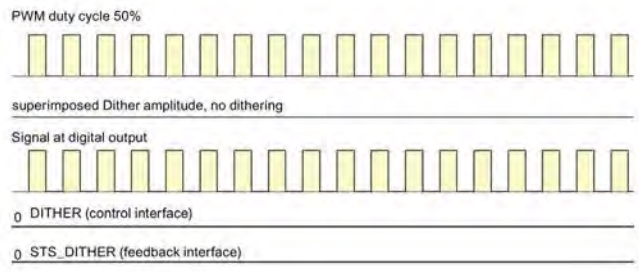

Example 2: Dither with no ramp (Dither period = 6 x PWM period)

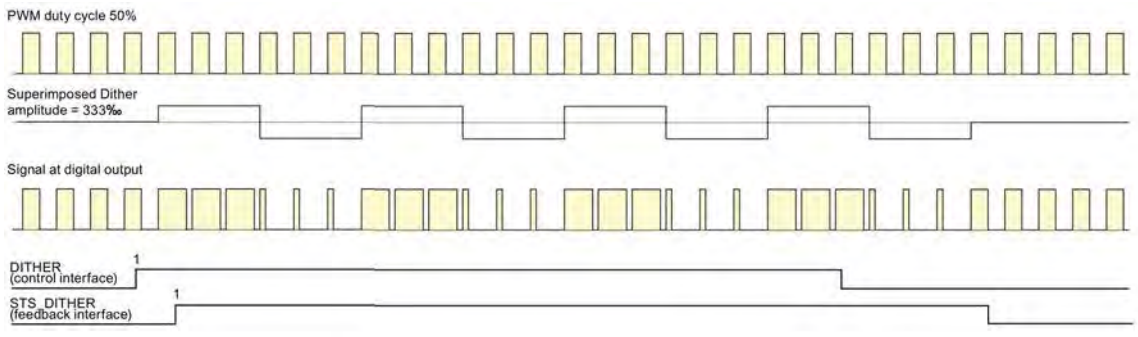

Example 3: Dither with ramp-up

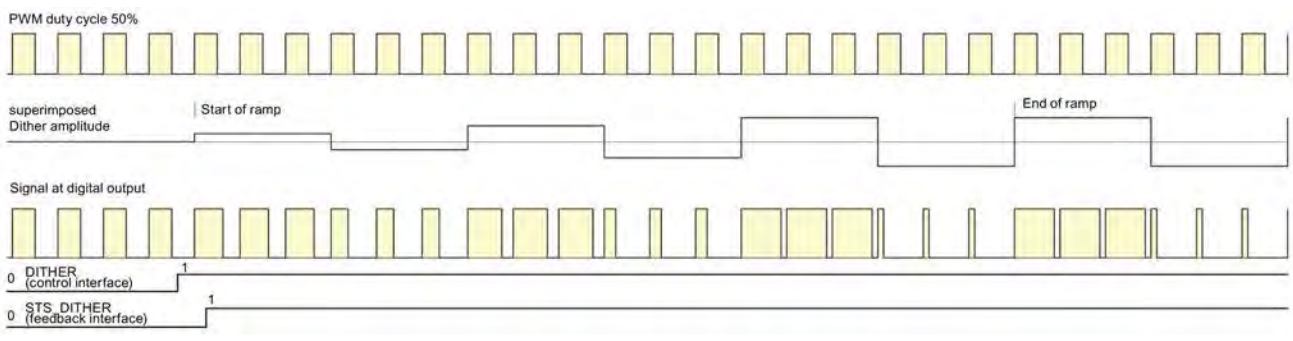

Example 4: Dither with ramp-down

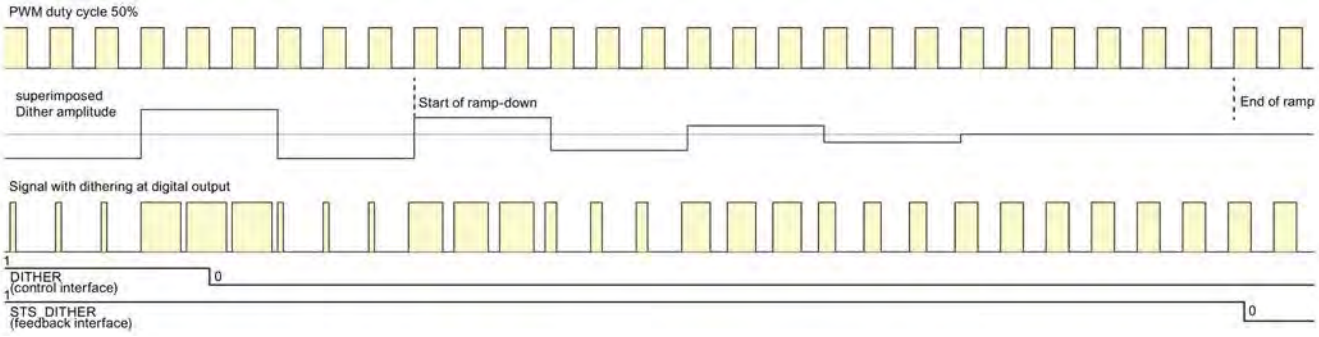

3.13 Function: Isochronous mode

Note

For basic information on isochronous mode, refer to the SIMATIC PROFINET with STEP 7 (https://support.industry.siemens.com/cs/mdm/49948856?c=73850691339&t=1&s=PROFINET in STEP 7&lc=en-US) manual.

Requirements

You will require the following for the TM Pulse 2x24V in isochronous mode:

- A CPU that supports isochronous mode
- An IM (interface module) that supports isochronous mode
- Engineering software, such as TIA portal or STEP 7, to parameterize isochronous mode

Response of the TM Pulse 2x24V

Depending on the system parameter assignment, the TM Pulse 2x24V works in either non-isochronous or isochronous mode.

In isochronous mode

- The output sequences are started at the moment T_O, when only the software enable is used.
- Data communication between the PROFINET controller and TM Pulse 2x24V is isochronous to the cycle.
- All 12 bytes of a channel's control interface are consistent (24 bytes for both channels).
- All 8 bytes of a channel's feedback interface are consistent (16 bytes for both channels).
- In the PWM operating mode, the period duration is synchronized to the application cycle time (PROFINET). See the PWM chapter (Page 25) for details.

3.14 Function: Direct control of DQ digital outputs

Definition

You can directly set the TM Pulse 2x24V DQ digital outputs with your control program. Select the DQ direct control function, by clearing the Technology Module output control bit (TM_CTRL_DQ = 0), in the control interface.

Direct control of a digital output can support you when commissioning an automation control system.

If you select direct control of the DQ during a pulse output sequence, the sequence will continue to run in the background, so that when the module gets control again (by setting TM_CTRL_DQ = 1), the output sequence continues.

You assign the state of a digital output DQn.A and DQn.B with the SET_DQA and SET_DQB control bits.

You cannot use the Direct control function to set both DQn.A and DQn.B outputs high on the same channel. If an attempt to do so occurs, then error ERR_DQB is set in the feedback interface and only the DQn.A output is set high.

When you set TM_CTRL_DQ = 1, you deselect the direct control of digital output function. If the output sequence is still running (STS_ENABLE still active), then the TM Pulse 2x24V module regains control of a channel's DQn.A and DQn.B outputs.

Note

TM_CTRL_DQ technology module output control signal

- If TM_CTRL_DQ = 1, then the TM Pulse 2x24V module has control and produces pulse sequences at the DQn.A and DQn.B outputs. DQn.B is always 0 except in DC motor mode.
- If TM_CTRL_DQ = 0, then the CPU has control and your program can set DQ outputs directly with the SET_DQA/SET_DQB control bits. In DC motor mode, it is not possible to control the DQn.A and DQn.B outputs manually; TM_CTRL_DQ, SET_DQA, and SET_DQB have no effect.

Pulse diagram

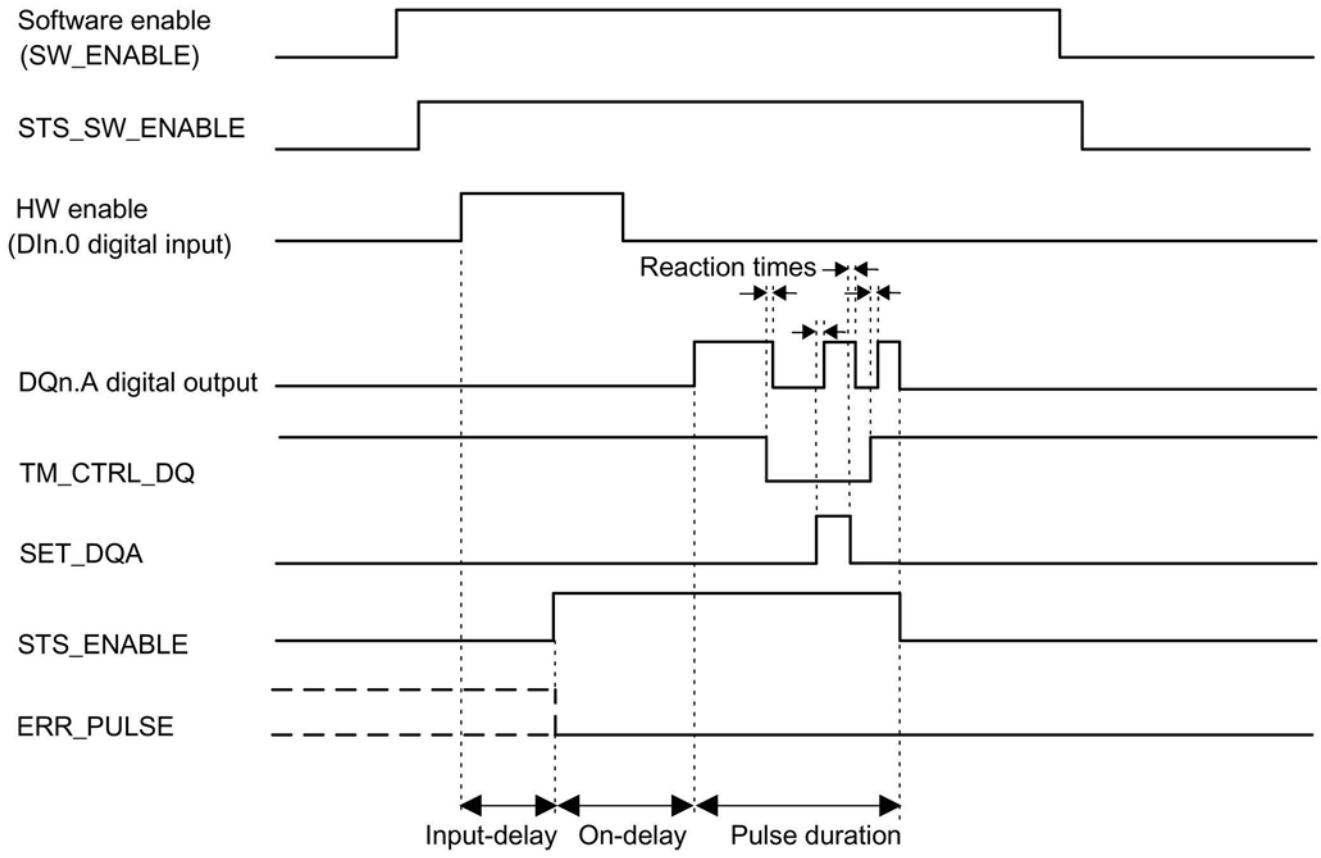

Figure 3-15 Direct control of DQ timing during Pulse output mode

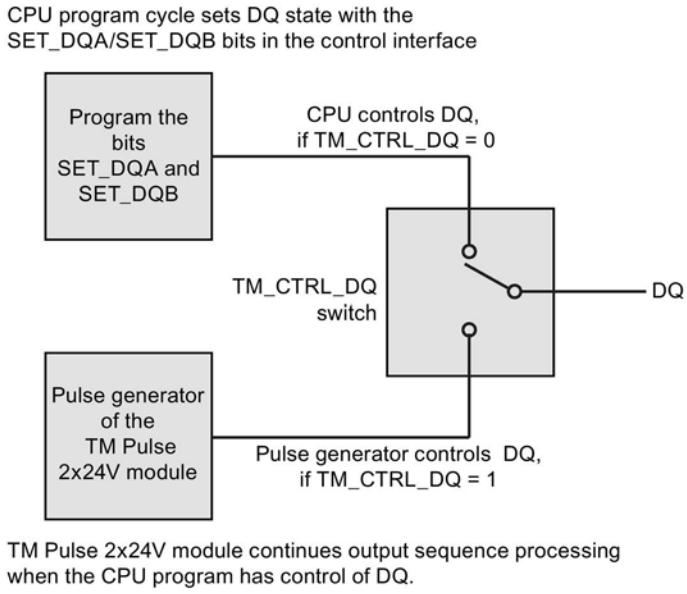

Figure 3-16 TM_CTRL_DQ output switch

Control and feedback signals

Control interface Offset to the start address		Parameter	Meaning	
Channel 0	Channel 1			
Byte 9: Bit 0	Byte 21: Bit 0	SW_ENABLE	**Bit 0**	Software enable: Start and terminate the output sequence.
			0	Output canceled.
			0 → 1 1	Starts output sequence on positive edge; may be dependent on the hardware enable.
Byte 9: Bit 1	Byte 21: Bit 1	TM_CTRL_DQ	**Bit 1**	Set DQ output source: Selects either PLC program or module's output sequence.
			0	DQn.A and DQn.B are controlled by the PLC program using SET_DQA and SET_DQB.
			1	DQn.A is controlled by the module's pulse output sequence.
Byte 9: Bit 3	Byte 21: Bit 3	SET_DQA	**Bit 3**	Controls the value of the digital output DQn.A, if TM_CTRL_DQ is cleared.
			0	0V on DQn.A
			1	24V on DQn.A
Byte 9: Bit 4	Byte 21: Bit 4	SET_DQB	**Bit 4**	Controls the value of the digital output DQn.B, if TM_CTRL_DQ is cleared and if SET_DQA is cleared.
			0	0V on DQn.B
			1	24V on DQn.B

Feedback interface: Offset to the start address		Parameter	Meaning	
Channel 0	Channel 1			
Byte 0: Bit 4	Byte 8: Bit 4	ERR_DQA	**Bit 4**	Indicates a short-circuit on the output DQn.A. You must set RES_ERROR (control interface) to reset this error.
			0	No short- circuit on DQn.A
			1	Short-circuit on DQn.A
Byte 0: Bit 5	Byte 8: Bit 5	ERR_DQB	**Bit 5**	Indicates a short-circuit on the output DQn.B or an attempt to set both DQn.A and DQn.B manually using SET_DQA,SET_DB, and TM_CTRL_DQ. You must set RES_ERROR (control interface) to reset this error.
			0	No short-circuit on DQn.B
			1	Short-circuit on DQn.B or attempt to set both DQn.A and DQn.B
Byte 2: Bit 1	Byte 10: Bit 1	STS_DQA	**Bit 1**	Indicates the signal level at the DQn.A digital output.
			0	Signal 0 at the DQn.A digital output
			1	Signal 1 at the DQn.A digital output
Byte 2: Bit 2	Byte 10: Bit 2	STS_DQB	**Bit 2**	Indicates the signal level at the DQn.B digital output.
			0	Signal 0 at the DQn.B digital output
			1	Signal 1 at the DQn.B digital output

States of DQ bits				
TM_CTRL_DQ	SET_DQA	SET_DQB	Reaction at DQn.A	Reaction at DQn.B
0	0	0	0	0
0	1	0	1	0
0	1	1	1	0 (ERR_DQB is set)
0	0	1	0	1
1	Don't care	Don't care	State controlled by pulse processing	State controlled by pulse processing

Note

Setting both DQn.A and DQn.B to the 1 state not allowed

You cannot set both DQn.A and DQn.B to 1 at the same time. If SET_DQA and SET_DQB are set high and TM_CTRL_DQ is low, only output DQn.A will go high and an error bit ERR_DQB is set in the feedback interface. This error must be acknowledged in the control interface by using the RES_ERROR bit.

Connecting 4

4.1 Pin assignment, sensor, load, and power wiring

The TM Pulse 2x24V must use the B1 type BaseUnit.

Digital inputs, digital outputs, 24 V DC sensor power outputs and an external 24 V DC power source are connected to the BaseUnit of the technology module.

BaseUnit

The BaseUnit is not included in the TM Pulse 2x24V product package and must be ordered separately.

For an overview of the BaseUnits to be used with the technology module, refer to the product information on the documentation for the ET 200SP Distributed I/O System (http://support.automation.siemens.com/WW/view/en/73021864).

You can find information about selecting a suitable BaseUnit in the ET 200SP Distributed I/O System (http://support.automation.siemens.com/WW/view/en/58649293) system manual and ET 200SP BaseUnits (http://support.automation.siemens.com/WW/view/en/58532597/133300) device manual.

Pin assignment of the BaseUnit

The table below shows the pin assignment, using the BaseUnit BU20-P12+A0+4B (6ES7193-6BP20-0BB1). For this BaseUnit, the TM Pulse module's L+ pins are always isolated from adjacent modules. The L+ voltage from adjacent modules are connected together through a bypass in the BaseUnit.

Table 4- 1 Pin assignment of the BaseUnit BU20-P12+A0+4B

Designation	Pin name		View	Pin name		Designation
24 V DC supply output for sensor power	24VDC	1		2	24VDC	24VDC supply output for sensor power
Channel 0 digital input	DI0.0	3		4	DI1.0	Channel 1 digital input
Channel 0 ground for digital inputs	M	5		6	M	Channel 1 ground for digital inputs
Channel 0 ground for digital outputs	M	7		8	M	Channel1 ground for digital outputs
Channel 0 digital output A	DQ0.A	9		10	DQ1.A	Channel 1 digital output A
Channel 0 digital output B	DQ0.B	11		12	DQ1.B	Channel 1 digital output B
External 24VDC supply input for digital output and sensor power	L+	13		14	M	Ground for supply voltage
External 24VDC supply input for digital output and sensor power. Pins 13 and 15 are connected internally.	L+	15		16	M	Ground for supply voltage Pins 14 and 16 are connected internally.

24 V DC sensor power output

To power digital input sensors, the technology module supplies 24 V DC with reference to M. The 24 V DC supply is monitored for short-circuits and overload conditions.

L+ external power supply

Connect an external 24 V DC power to the L+ and M connections to supply power for the TM Pulse 2x24V module, output loads, and sensors. An internal protection circuit protects the technology module against damage due to reversed polarity of the supply voltage.

Unexpected conditions can occur at the digital outputs when L+ is connected to the supply voltage and M is disconnected from the supply voltage return, due to a wire break. The technology module monitors the connection of the supply voltage.

WARNING

Supply voltage M connections

Connect both the M potential pins to the power supply return with separate wires. If one wire breaks, then the other wire maintains the electrical connection from M to the power supply return

If the electrical connection between the M potential and the power supply return is broken, then unexpected conditions can occur and the digital outputs may go high even though your program is not setting a high state.

Note

L+ and M isolation on TM Pulse 2x24V module using BaseUnit type B1

The L+ and M connections on the type B1 BaseUnit are electrically isolated, from adjacent BaseUnits plugged in on the left-side or right-side. The L+ and M power bus passes through the type B1 BaseUnit (with no connections) and extends the power bus to connect left-side and right-side BaseUnits.

DI0.0 and DI1.0 digital inputs

The digital inputs are not electrically isolated from each other or from the digital outputs. The digital inputs are electrically isolated from the ET 200SP system bus.

When you connect input signals, depending on the configured input delay and the potential effect of interference, ground the shield on both ends of a cable that connects sensor to BaseUnit pin.

Note

Electromagnetic interference shielding for inputs

Input connections on the type B1 BaseUnit used by the TM Pulse 2x24V module do not have shield ground connections. You must connect cable shields to electrical ground at the DIN rail or the system cabinet.

Input noise filter for digital inputs

You can configure an input delay for each digital input to suppress interference. Signals must have a steady state during the configured input delay before a signal is accepted as a valid input state.

You can assign the following values for the input delay:

- Off (means input delay of 4 µs and requires a minimum pulse width of 3 µs)
- 0.05 ms
- 0.1 ms (default)
- 0.4 ms
- 0.8 ms
- 1.6 ms
- 3.2 ms
- 12.8 ms
- 20 ms

The input delay that you assign affects the detection time of input signals. The detected state change is always offset in time by the assigned input delay time.

Note

For input delay settings of "Off" or "0.05 ms" and longer wire lengths, use shielded cables at digital input connections. Shielding improves input response accuracy.

Digital outputs of channel 0 (DQ0.A, DQ0.B) and channel 1 (DQ1.A, DQ1.B)

- The digital outputs are not electrically isolated from each other or from the digital inputs. The digital outputs are electrically isolated from the ET 200SP system bus.
- The digital outputs are protected from overload and short-circuit.
- DQ0.B and DQ1.B are only used in DC motor mode or directly controlled by a SET_DQB bit in the control interface.
- Digital outputs have integrated protection diodes to prevent voltage overstress due to inductive kickback. No external protection diodes are required for inductive loads.

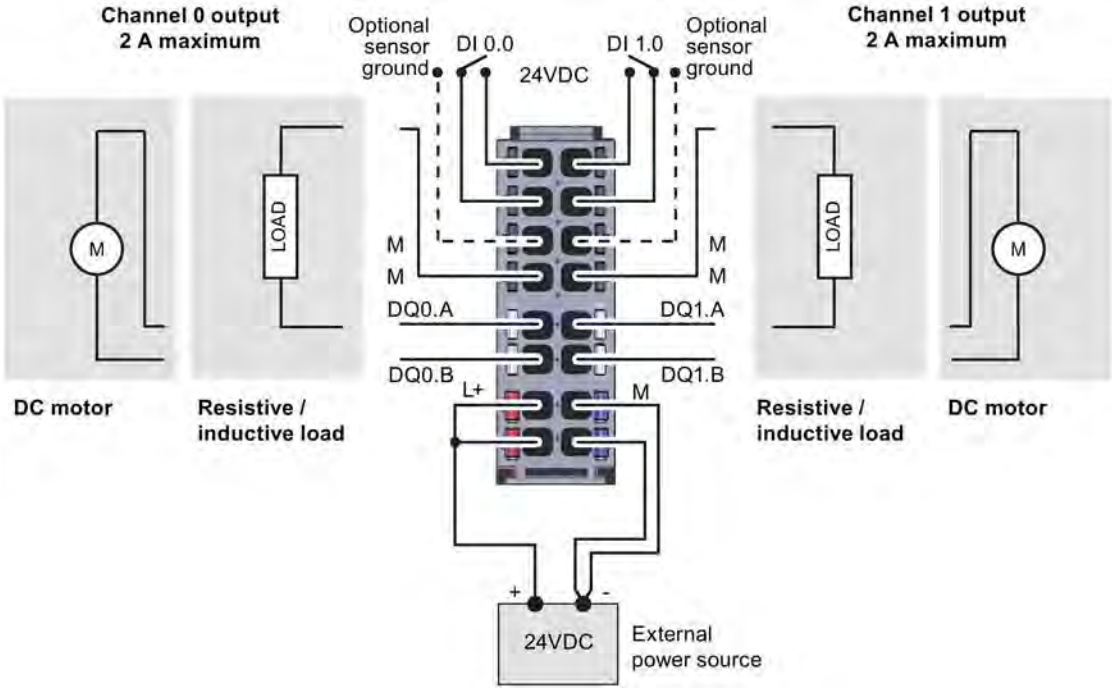

Figure 4-1 Dual channel wiring

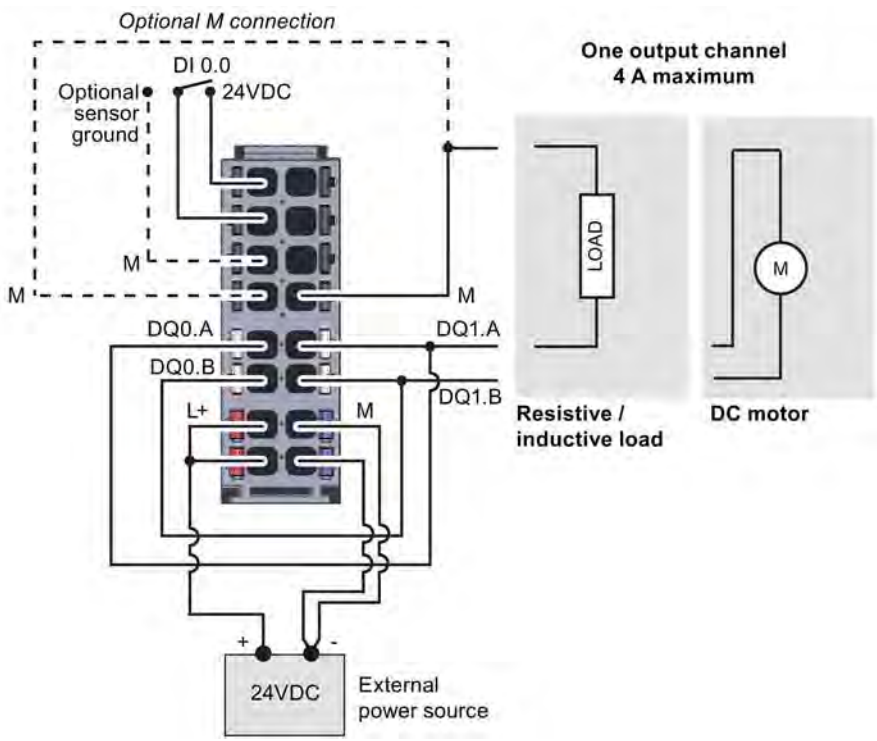

Figure 4-2 Single channel with parallel connection wiring

WARNING

Supply voltage M connections

Connect both the M potential pins to the power supply return with separate wires. If one wire breaks, then the other wire maintains the electrical connection from M to the power supply return

If the electrical connection between the M potential and the power supply return is broken, then unexpected conditions can occur at the digital outputs.

Note

Load wiring resistance

In single channel mode with parallel connected wiring, the wires from DQ0.A and DQ1.A must have equal resistance (length and size) for proper current sharing between the two outputs. Also, the wiring for DQ0.B and DQ1.B must have equal resistance when using DC motor mode.

Maximum current is limited and current measurement errors occur if the wiring does not have equal resistance.

Note

Excessive temperature from unsuitable loads

A high-speed output generates edges that are very steep. This creates very powerful charge reversals for the connected load, which can overheat the load at very high switching frequencies.

The connected load must therefore be approved for high input frequencies. See Function: High-speed output (Page 74) topic for details.

Note

The digital output switch-off response / switch-off edge depends on the load. Thus, it is possible that very short pulses cannot be output correctly.

Note

Relays and contactors can be connected direct without external circuitry.

Configuring 5

5.1 Configuration software

Introduction

The TM Pulse 2x24V module is configured and assigned parameters with the configuration software.

The module's pulse output sequences are controlled and monitored by your program.

System environment

The technology module can be used in the following system environments:

Table 5- 1 Applications of the technology module with PROFINET I/O

Applications	Components required	Configuration software	In your program
Decentralized operation in an S7-1500 system	• S7-1500 automation system • ET 200SP decentralized I/O system • TM Pulse 2x24v	STEP 7 (TIA Portal): Device configuration and parameter settings with hardware configuration (HWCN)	Direct access to the control and feedback interface (Page 110) of the TM Pulse 2x24V in the I/O data
Centralized or decentralized operation in an ET 200SP system	• ET 200SP automation system • TM Pulse 2x24v	STEP 7 (TIA Portal): Device configuration and parameter settings with hardware configuration (HWCN)	Direct access to the control and feedback interface of the TM Pulse 2x24V in the I/O data
Decentralized operation in an S7-300/400 system	• S7-300/400 automation system • ET 200SP decentralized I/O system • TM Pulse 2x24V	STEP 7 (TIA Portal): Device configuration and parameter settings with hardware configuration (HWCN) STEP 7: Device configuration and parameter settings with HSP	Direct access to the control and feedback interface of the TM Pulse 2x24V in the I/O data
Decentralized operation in a PROFINET controller or PROFIBUS master	PROFINET controller • ET 200SP decentralized I/O system • TM Pulse 2x24V	Engineering system with GSD file	Direct access to the control and feedback interface of the TM Pulse 2x24V in the I/O data

5.2 Configuration overview

You can use the STEP 7 (TIA Portal) or STEP 7 hardware configuration to set these parameters. Also, you can change the parameter assignment at runtime with your program using data record 128.

STEP 7 (TIA Portal) and STEP 7 assist you during parameter assignment by disabling keyboard input for invalid parameters and range checking your value assignments. Depending on previous parameter selections, other options will be disabled. For example, if you select the one channel operation (the parallel connection of the two output channels), then the parameter options for channel two and high-speed output are disabled.

When you make a runtime parameter assignment that uses the WRREC (Write Record) instruction to modify data record 128, you must ensure that you do not attempt to write an invalid record data. WRREC execution with invalid data fails and returns error code. For example, if you are using one channel operation and include parameter data for two channels, then the record length is too long and WRREC execution fails. In addition, you must follow the parameter validation rules (Page 120).

If you use STEP 7 (TIA Portal), you can find the module in the Hardware catalog under "Technology Modules". If you use STEP 7, you can find the module following installation of the corresponding HSP file in the Hardware catalog.

STEP 7 has two entries for Technology Module - Pulse output, with one entry for "TM Pulse 2x24V 2x2A" and one entry for "TM Pulse 2x24V 1x4A.

The following table shows how a channel's "Parameter" group is affected by mode selection.

Table 5- 2 Channel parameters and mode selection: ✓ means the parameter is available for configuration

Channel "Parameter" group	Pulse output mode	PWM mode	Pulse train mode	On/Off delay mode	Frequency output mode	DC motor mode
[1] High-speed output (.1 A)	✓	✓	✓	✓	✓	
HW enable option on DIn.0 input	✓	✓ [3]	✓		✓	✓ [3]
Input delay	✓	✓	✓	✓	✓	✓
Output format	✓	✓	✓	✓	✓	✓
Minimum pulse duration		✓ [4]				
Period duration		✓	✓			✓
On delay	✓	✓ [3]	✓		✓	✓ [3]
Off delay				✓		
Duty cycle			✓			
[2] Current control		✓				
Activate P (Proportional)		✓				
Activate I (Integral)		✓				
Activate D (Derivative)		✓				
Reference value current		✓				
Dead band width		✓				
High limit S7 analog		✓				
Low limit S7 analog		✓				
Gain		✓				
Integration time		✓				
Derivative action time		✓				

Channel "Parameter" group	Pulse output mode	PWM mode	Pulse train mode	On/Off delay mode	Frequency output mode	DC motor mode
Time lag		✓				
Dithering		✓				
Dither ramp up time		✓				
Dither ramp down time		✓				
Dither amplitude		✓				
Dither period		✓				

[1] High speed output is not available for the one channel (4 A) configuration that uses a parallel connection of the two (2 A) channels.

[2] In PWM mode, you can enable either High-speed or Current control, but not both options at once.

[3] Parameter is disabled in isochronous mode.

[4] Parameter is disabled when current control is active

5.3 Required I/O address space

Address space of the technology module

Table 5- 3 TM Pulse 2x24V I/O address space usage

Function	Bytes per channel	Total I/O bytes Single channel (4 A)	Total I/O bytes Dual channel (2 A)
Program control of module operation	12 output bytes (Q addresses)	12 output bytes	24 output bytes
Feedback module status to control program	8 input bytes (I addresses)	8 input bytes	16 input bytes

Additional information

A description on how to use the control and feedback interface of TM Pulse 2x24V can be found in the chapter Program control and feedback interface (Page 110).

5.4 TIA portal Device configuration

5.4.1 TIA Portal Device configuration

Drag the TM Pulse 2x24V module from the hardware catalog and drop it in a rack image. The example rack below uses the TM Pulse 2x24V module in a decentralized I/O system where it is possible to enable and configure isochronous mode. When you click on the TM Pulse 2x24V image in a rack, a blue line highlights the module and you can set parameters that appear on the Properties tab.

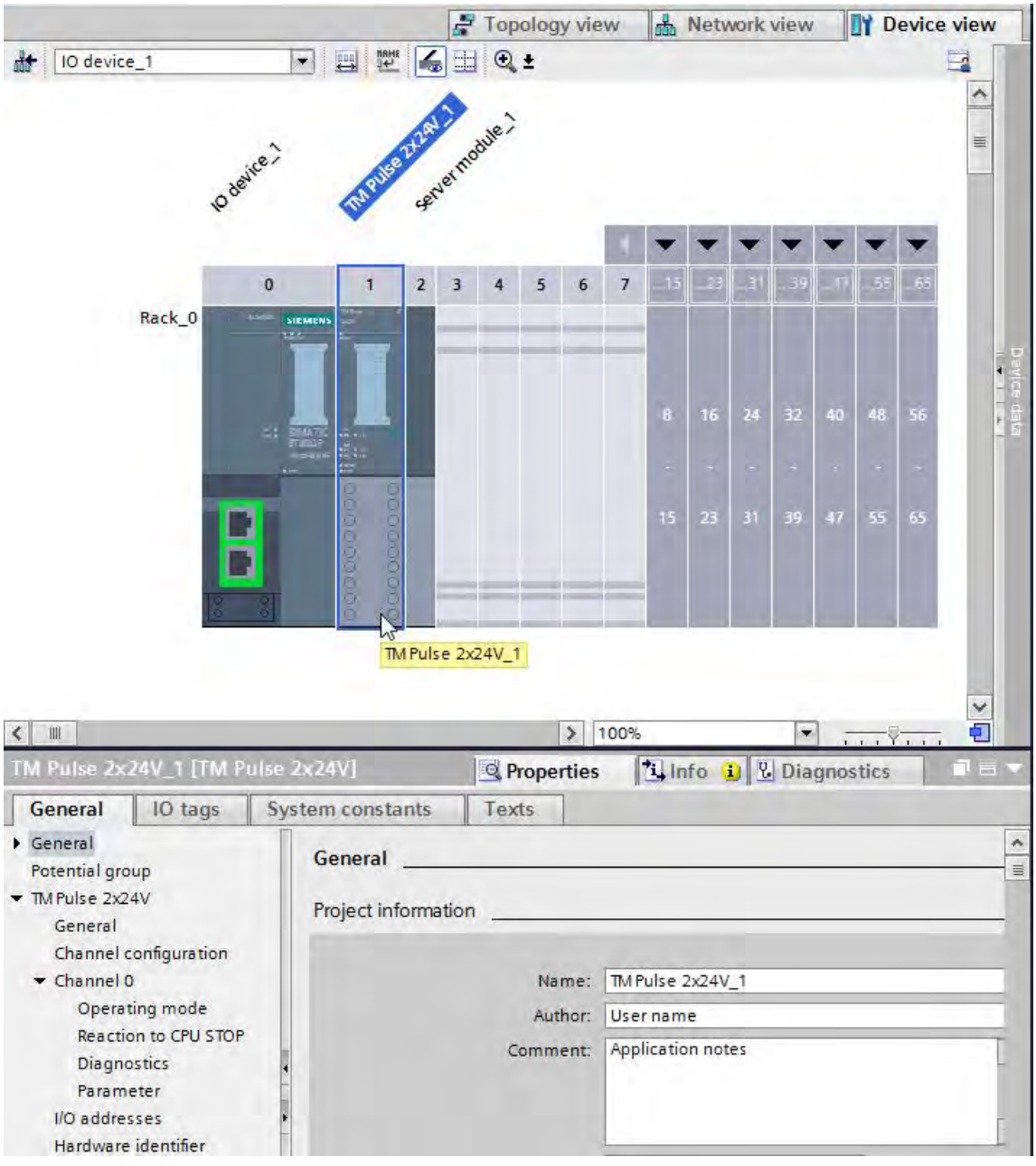

5.4.2 General information

Enter the general project and identification & maintenance information.

5.4.3 Potential group

The Potential group parameters are disabled for the type B1 BaseUnit used by the TM Pulse 2x24V. The TM Pulse 2x24V module is isolated from the other BaseUnit potential groups on the right and on the left of the TM Pulse 2x24V module. Therefore, the TM Pulse 2x24V requires an external supply.

5.4.4 Channel configuration: (4 A) single or (2 A) dual channel operation

Select the channel configuration:

- Two separate channels with 2 ampere maximum output current per channel. The high-speed option (100mA maximum current) is allowed.
- One logical channel where the two output channels connected in parallel to provide 4 ampere maximum output current. The high-speed option is not allowed.

1 channel (4 A) operation

If the "1 channel (4 A)" option is selected, then the TM Pulse 2x24V operates as a single-channel module. All parameter assignments and operations using the control interface must use Channel 0 addresses. Feedback signals are only provided for Channel 0.

The control and feedback interface is reduced to only one channel. Channel 1 cannot be configured or operated.

The current measurement adds the measured values of both channels together. This results in a measuring range up to 4 A.

The measured value of the current is supplied as a SIMATIC S7 analog value in the feedback interface. A current of 4 A corresponds to the SIMATIC S7 analog value of 27,648.

See also Pin assignment and load/sensor wiring (Page 91)

5.4.5 Channel parameters

5.4.5.1 Operating mode

Select an operating mode.

- Pulse output (single pulse)
- Pulse width modulation PWM
- Pulse train
- On/Off-delay
- Frequency output
- DC motor

5.4.5.2 Reaction to CPU STOP

You can configure the reaction of the TM Pulse 2x24V to the failure of a higher-level controller differently for each channel.

Table 5- 4 Reaction to CPU/Master STOP options for all modes except DC motor

Response to CPU/master STOP	Channel-specific response and status of the TM Pulse 2x24V
DQ substitute a value	• Output of the channel-specific, substitute value that you assigned. • STS_ENABLE goes to the 0 state. • Terminate the current output sequence.
Continue working mode	The current output sequence is continued.

Reaction to CPU/Master STOP options for DC motor mode

For DC motor mode, there are no configuration options for the reaction to CPU STOP. The outputs always behave as follows.

Both DQs (DQn.A and Dn.B) go to tri-state (high impedance state) when the CPU goes to STOP.

Substitute values

If you select the "DQ substitute a value" option as a reaction to CPU STOP, then you must configure the substitute value (0 or 1) for the DQn.A and DQn.B outputs.

Each channel has two outputs (A and B). A resistive or inductive load is wired to a channel's A output, so you must assign a substitute value to the DQn.A output. A reversible direction DC motor load is wired to a channel's A and B outputs, so you must assign substitute values to the DQn.A and DQn.B outputs.

You cannot set both substitute values of one channel to the high state (DQn.A and DQn.B). If you do so, an error code is returned to the parameterization attempt. See the Parameter validation errors (Page 120) topic for details.

Startup

To start a new output sequence after CPU/master STOP with STS_SW_ENABLE set, first reset SW_ENABLE. Keep SW_ENABLE reset until STS_SW_ENABLE is also reset.

If the "Continue working mode" option is used, then during a change from CPU-/Master-STOP to RUN (startup), the CPU/Master cannot clear the outputs.

Possible solution: In the part of your program that is executed during startup, set the "Software enable" (SW_ENABLE = 1) control bit.

Modified parameter assignment

The status assumed by the TM Pulse 2x24V at CPU/master STOP remains even in the case of parameter assignment or configuration of the ET 200SP station. This occurs, for example, at POWER ON of the CPU/master, or the IM 155-6, or at the resumption of DP transfer.

In "Continue working mode", however, and after loading changed parameters or configuration of the ET 200SP station to the CPU/master, the TM Pulse 2x24V terminates the process. As a result, the TM Pulse 2x24V does the following:

- Resets the DQ digital output.
- Resets STS_ENABLE
- Terminates the current output sequence.

5.4.5.3 Diagnostics

Module monitoring is always active. A detected error only triggers a diagnostic alarm if the diagnostics type is enabled in the Diagnostics check boxes.

TM Pulse 2x24V diagnostics

Diagnostic type	TM Pulse 2x24V module error	Default option
Group diagnostics	• Supply voltage error • Short-circuit on 24 V DC sensor supply	Disabled
Diagnostics DQA	Short-circuit of DQn.A digital output	Disabled
Diagnostics DQB	Short-circuit of DQn.B digital output	Disabled

When a TM Pulse 2x24V error event triggers a diagnostic alarm, the following happens:

- The DIAG light flashes red when a diagnostics alarm is pending. Once you have remedied the error, the DIAG light goes out.
- The diagnostics are displayed as plain text in the STEP 7 (TIA Portal) online and diagnostics view.
- Options for the reaction of a CPU running your control program
  - CPU goes to STOP and interrupts processing of your program. The diagnostic interrupt OB (for example, OB 82) is called. The event that triggered the interrupt is written in the start information of the diagnostic interrupt OB.
  - CPU remains in RUN even if no diagnostic interrupt OB is present in the CPU. The technology module continues working unchanged if this is possible, while the error exists.
- Detailed information on the error event is available through execution of the RALRM (read alarm information) program instruction.

Note

Error message details

The Diagnostics information provided through OB 82 and RALRM does not indicate which channel has an error.

The alternative error information provided by the feedback interface ERR_xxx bits does indicate which channel has an error.

See also Error detection and diagnostics (Page 122)

5.4.5.4 Parameter (Channel parameters)

The different operating modes restrict the configuration to a subset of these parameters and options.

Channel parameters

High-speed output

- Enabled
  - High-speed (0.1 A) option single channel output limit is 0.1 A.
  - 1 channel (4 A) parallel channel connection is not possible.
  - PWM mode current control is not possible.
- Disabled
  - Single channel output limit is 2 A

Function DI (digital input)

- Input: DIn.0 functions as a digital input
- HW enable: DIn.0 functions as a Hardware enable for the pulse output sequence.
  The HW enable option is available for these modes.
  - Pulse output
  - PWM (not available for isochronous mode)
  - Pulse train
  - Frequency output
  - DC motor (not available for isochronous mode)
- External stop (DC motor only)

See also Function: High-speed output (Page 74)

Input delay

A digital input state change must remain stable over the input delay time, before the state change is accepted and processed. The input delay time provides noise filtering for the input wiring.

- Off (4 µs)
- 0.05 ms
- 0.1 ms (default value)
- 0.4 ms
- 1.6 ms
- 3.2 ms
- 12.8 ms
- 20 ms

Output format

Set the format and value range for ratio variables like duty cycle.

Output format options	Value range
• S7 analog output	0 to 27,648 -27648 to 27648 (in DC motor mode)
• Per 100	0 to 100
• Per 1000	0 to 1000
• Per 10000	0 to 10000

Minimum pulse duration

Assign the minimum pulse duration that you allow in µs.

Period duration

Assign the period duration in µs.

Actual period duration

This read-only field is displayed only when isochronous mode is enabled. The period duration value that is displayed is the actual isochronous compatible period duration that is calculated from the value you entered in the Period duration parameter.

On-delay

Assign the On-delay in µs

Pulse timing	Minimum		Maximum	
	High-speed disabled	High-speed enabled	High-speed disabled	High-speed enabled
Pulse duration	10 µs	1.5 µs	85,000,000 µs	
Period duration	100 µs	10 µs		
On-delay	0 µs	0 µs		

Dither parameters

- Dither ramp-up time: 0 ms to 30,000 ms.
- Dither ramp-down time: 0 ms to 30,000 ms.
- Dither amplitude: 0 to 500‰
- Dither period: From (4 x PWM period) to 100,000 µs. Also, the Dither period must be greater than 2 ms.

Current control

- Enabled
- Disabled

Current control parameters

If current control is enabled, then the following parameters are available for modification.

- **Activate P**: Enable/disable the proportional part in the PID algorithm
- **Activate I**: Enable/disable the integral part in the PID algorithm
- **Activate D**: Enable/disable the derivative part in the PID algorithm
- **Reference value current**: The reference value is used to define the maximum set point and the high and low limits of the controlled current. Typically, the maximum current can be measured in PWM mode with current control disabled and a duty cycle set to 100%. The value measured can be set as a reference for the current control. The maximum value is 4000mA for single channel operation (parallel channel connection enabled) and 2000mA per channel for dual channel operation (parallel connection disabled).
- **Deadband width**: A dead band is applied to the output current deviation from the set point current. The "Deadband width" determines the size of the dead band. The dead band is symmetrical: Actual dead band value range = -Deadband width to +Deadband width.
- **High limit S7 analog**: The manipulated value is always restricted to a high limit and low limit. The "High limit" parameter assigns the high limit in S7 analog format, relative to the reference value current. A value higher or equal than 27648 means 100% of the reference value current. The High limit value must be higher than the Low limit.
- **Low limit S7 analog**: The manipulated value is always restricted to a high limit and low limit. The "Low limit" parameter assigns the low limit in S7 analog format, relative to the reference value of the current. A value higher or equal than 27648 is not allowed. The Low limit value must be lower than the High limit.
- **Gain**: The proportional gain parameter assigns the amplification factor for the P part of the PID algorithm.
- **Integration time**: The proportional gain parameter assigns the amplification factor for the P part of the PID algorithm.
- **Derivative action time**: The derivative time parameter determines the time interval of the derivative action. If TD is smaller than the controller cycle time, TI will be set internally to the controller cycle time.
- **Time lag**: Time lag of the derivative action. The algorithm of the D-action contains a delay of TM_LAG. If TM_LAG is smaller than half the controller cycle time, TI will be set internally to half the controller cycle time.

5.4.6 I/O addresses

You can assign the base addresses for the control interface (12 output Q byte addresses/channel) and the feedback interface (8 input I byte addresses/channel). Your program logic uses the values stored in these addresses to control the TM Pulse 2x24V output and read feedback signals from the module.

I/O addresses

Output addresses

Start address: Assign a starting address to 12 bytes (Q addresses) for a channel's control interface.

End address: The control interface end address is a calculated read-only field.

Input addresses

Start address: Assign a starting address to 8 bytes (I addresses) for a channel's feedback interface.

End address: The feedback interface end address is a calculated read-only field.

Isochronous mode

The Isochronous mode checkbox is only displayed if your system hardware supports isochronous mode.

Organization block

Accept the default OB assignment or select a different OB. If isochronous mode is enabled and the Organization block (OB 61) "Synchronous cycle" is assigned, then TM Pulse 2x24V PWM operation in a decentralized I/O system becomes coordinated with bus master PROFINET cycles.

In isochronous mode, the PWM output sequence is synchronized with the moment T_o. The period duration is coordinated to the application cycle (the synchronous cycle, a multiple of the PROFINET cycle).

Process image

Accept the default assignment or assign a different Process image partition.

Program control and feedback interface 6

6.1 TM Pulse 2x24V control interface

Your program uses this interface to control the behavior of the technology module.

Control interface

The following table shows control interface assignment for one channel:

Bit → / Byte↓	7	6	5	4	3	2	1	0
00	OUTPUT_VALUE							
01								
02								
03								
04	SLOT							
05								
06								
07								
08	Reserved[1]			MODE_SLOT	LD_SLOT			
09	Reserved[1]		DITHER	SET_DQB	SET_DQA	Reserved[1]	TM_CTRL_DQ	SW_ENABLE
10	Reserved[1]							RES_ERROR
11	Reserved[1]							

[1] Must be set to 0

Control interface parameters

Two use cases are possible while using TM Pulse 2x24V module.

Case 1: Only the main parameter OUTPUT_VALUE is controlled every program scan cycle by your program logic. All the other parameters required for the output sequence are fixed.

Case 2: The main parameter OUTPUT_VALUE and another parameter SLOT are controlled every program scan cycle by your program logic. All other parameters required for the output sequence are fixed.

Other parameters required for the output sequence are defined prior to the start of an output sequence using one of two possible methods.

- TIA portal device configuration, STEP 7 hardware configuration, or WRREC execution modifies the parameterization data record.
- Use the Control interface in single-update mode and before switching to the permanent-update mode (case 2 only) with the assigned LD_SLOT value selecting the control parameter.

OUTPUT_VALUE

The interpretation of the value in OUTPUT_VALUE depends on the mode setting. The OUTPUT_VALUE is always updated. If an invalid value is detected (outside the allowed range), then the error flag ERR_OUT_VAL is set until a valid value is detected. During the error condition, the invalid value is ignored and the module continues with the last valid OUTPUT_VALUE.

Note that PWM ratio values are not checked. If a ratio value is higher than the format allows, then a ratio of 100% is used by the module.

When the PWM current control option is activated, the TM Pulse 2x24V module takes control of the duty cycle and the OUTPUT_VALUE control interface field is used to assign the target current as a ratio of target current/reference current.

Mode	OUTPUT_VALUE meaning	Data type
Pulse output	Pulse duration High-speed disabled: 10 µs to 85,000,000 µs High-speed enabled: 2 µs to 85,000,000 µs	UDInt
PWM	Current control disabled: Duty cycle Current control enabled: Ratio current	UDInt: Only 2 least significant bytes are used For channel 0: bytes 2 and 3 For channel 1: bytes 14 and 15
Pulse train	Number of pulses	UDInt
On/Off delay	On-delay in microseconds	UDInt
Frequency output	Frequency in Hz	Real
DC motor	Duty cycle	DInt: Only 2 least significant bytes are used For channel 0: bytes 2 and 3 For channel 1: bytes 14 and 15

SLOT, MODE_SLOT, and LD_SLOT

The TM Pulse 2x24V module has a SLOT field in the control interface for each channel that allows several parameters to be single-updated, or one parameter to be permanently controlled (in addition to OUTPUT_VALUE). The interaction of SLOT, MODE_SLOT, and LD_SLOT is described in the SLOT parameter handling (Page 113) topic.

SW_ENABLE

If 0 → 1, then activate the output sequence. For some output modes, you can configure HW_ENABLE (hardware enable) to combine with SW_ENABLE (software enable) and trigger an output sequence with a hardware signal.

TM_CTRL_DQ

- If 1, then outputs are controlled by the module and produce the pulse sequences.
- If 0, then the outputs are controlled directly by your program through SET_DQA and SET_DQB assignments
  Note: This bit has no effect in DC motor mode

SET_DQA

- If 1, then set the output A to 1, when TM_CTRL_DQ is inactive.
- If 0, then set the output A to 0, when TM_CTRL_DQ is inactive.
  Note: This bit has no effect in DC motor mode.

SET_DQB

- If 1, then set output B to 1, when TM_CTRL_DQ is inactive and SET_DQA is 0.
- If 0, then set the output B to 0, when TM_CTRL_DQ is inactive.
  Note: This bit has no effect in DC motor mode

DITHER

- Activates the start (rising edge on DITHER) of the dithering function and begins dithering ramp-up, if a ramp-up is configured.
- Activates the end (falling edge on DITHER) of the superimposed dithering and begins dithering ramp-down, if a ramp-down is configured.

RES_ERROR

Resets the error flags ERR_LD, ERR_DQA, ERR_DQB, and ERR_24V in the feedback interface.

See also

Parameter data record (Page 138)

6.2 SLOT parameter handling (control interface)

SLOT and MODE_SLOT

SLOT has the following modes.

- **Single-update mode** (MODE_SLOT = 0)
  Use this mode if some parameters have to be changed sometimes, prior to starting the output sequence. Using the SLOT parameter is an alternative to sending a new parameterization record to the module. A pulse operation change made with the SLOT parameter does not reset the module. A pulse operation change made by sending a new parameterization record does reset the module.
  - The value in SLOT is used each time the value in LD_SLOT changes.
  - An acknowledge bit is toggled in the feedback interface STS_LD_SLOT.
  - The interpretation of the SLOT is defined by the value of LD_SLOT (see the following table).
  - If the LD_SLOT value is invalid, a parameter error is triggered ERR_LD, and the user has to reset the error using the RES_ERROR control bit to reactivate SLOT.
  - The changes done in this mode can be read back from the module in the parameterization record.
  - The changes done in this mode are not permanently stored in the CPU. A restart of the CPU resets the parameters to the values specified in the hardware configuration.
- **Permanent-update mode** (MODE_SLOT = 1)
  Use this mode, if in addition to the main controlled parameter, another parameter has to be controlled continuously by the program.
  - The value in SLOT is transferred each module cycle.
  - No acknowledge bit is available.
  - The interpretation of SLOT is defined by the value of LD_SLOT (see the following table).
  - If the value in SLOT is not valid, then the error ERR_SLOT_VAL occurs. The error is automatically reset once a valid value is loaded. Note that the ratio values are not checked, if the value is higher than the format allows, a ratio of 100% will be used by the module.
  - Using this mode, the value is not updated in the parameterization record. If LD_SLOT is changed in this mode, the last valid value controlled previously is retained.
  - The permanent update mode can be stopped by setting LD_SLOT to 0 and MODE_SLOT to 0. By stopping permanent update mode, changes made to parameters during permanent update mode are retained.

Interpretation of SLOT parameter value

The value written to the SLOT parameter is interpreted as shown in the following table, depending on the LD_SLOT value and operating mode.

LD_SLOT	SLOT value meaning	Valid modes for SLOT value use	SLOT Data type
0	No action / idle state	All modes	
1	Period duration	PWM Pulse train DC motor	UDInt
2	On-delay	Pulse output PWM Pulse train Frequency output DC motor	UDInt
3	Off-delay	On/Off-delay	UDInt
4	Duty cycle (On-ratio)	Pulse train	UDInt: Only 2 least significant bytes are used. For channel 0: bytes 6 and 7 For channel 1: bytes 18 and 19
5	Dither ramp (includes ramp-up time and ramp-down time)	PWM	UDInt
6	Dither amplitude	PWM	UDInt
7	Dither period	PWM	UDInt

6.3 TM Pulse 2x24V feedback interface

Your program receives current values and status information from the technology module by means of the feedback interface.

Feedback interface

The following table shows the assignment of the feedback interface for one channel

Bit → / Byte ↓	7	6	5	4	3	2	1	0
00	ERR_SLOT_VAL	ERR_OUT_VAL	ERR_DQB	ERR_DQA	ERR_PULSE	ERR_LD	ERR_24V	ERR_PWR
01	Reserved		STS_SW_ENABLE	STS_READY	Reserved	STS_LD_SLOT	Reserved	
02	Reserved			STS_DITHER	STS_DI	STS_DQB	STS_DQA	STS_ENABLE
03	Reserved				SEQ_CNT			
04	MEASURED_CURRENT							
05								
06	Reserved						QLMN_HLM	QLMN_LLM
07	Reserved							

Feedback parameters

Table 6- 1 Status feedback

Feedback parameter	Meaning	Value range
STS_READY	Module is parameterized correctly, running, and delivering valid data.	0: Not ready 1: Ready
STS_SW_ENABLE	Current state of the software enable	0: SW_ENABLE is not active 1: Recognized SW_ENABLE
STS_LD_SLOT	Toggle acknowledge bit for each action of the SLOT in single-update SLOT-mode.	Each toggle of this bit indicates a successful LD_SLOT action.
STS_ENABLE	Output sequence is active.	0: No output sequence running 1: Output sequence running
STS_DQA	State of digital output DQn.A	0: DQn.A is not active 1: DQn.A is active
STS_DQB	State of digital output DQn.B	0: DQn.B is not active 1: DQn.B is active
STS_DI	DIn.0: State of digital input	0: DIn.0 is not active 1: DIn.0 is active
STS_DITHER	Dithering state	0: Dithering inactive 1: Dithering active with ramp-up phase started and ramp-down not complete.
SEQ_CNT	Counts completed output sequences	0 to 15

Feedback parameter	Meaning	Value range
MEASURED_CURRENT	S7 analog value	0 to 32,767 27,648 means 4 A for "1 channel (4 A)" 27,648 means 2 A for "2 channels (2 A)"
QLMN_LLM	The low limit of the manipulated value has been reached.	0: Low limit not reached 1: Low limit reached
QLMN_HLM	The high limit of the manipulated value has been reached.	0: High limit not reached 1: High limit reached

Table 6- 2 Error feedback

Feedback parameter	Meaning	Value range
ERR_PWR	24 V DC present, but is not in the correct range.	0: No error 1: Error
ERR_24V	Short-circuit/overload, in the 24 V DC sensor supply output.	0: No error 1: Error
ERR_LD	Error while loading a parameter value using single-update mode.	0: No error 1: Error
ERR_PULSE	Pulse duration reduced to smaller than the minimum allowed value during operation.	0: No error 1: Error
ERR_DQA	Short-circuit/overload on the digital output DQn.A detected	0: No error 1: Error
ERR_DQB	Short-circuit/overload on the digital output DQn.B or attempt to manually set both DQn.A and DQn.B high.	0: No error 1: Error
ERR_OUT_VAL	The value in OUTPUT_VALUE is not valid.	0: No error 1: Error
ERR_SLOT_VAL	The value in SLOT is not valid where MODE_SLOT = 1 (permanent update)	0: No error 1: Error

Interrupts/diagnostic messages

7

7.1 Status and error displays

TM Pulse 2x24V front view

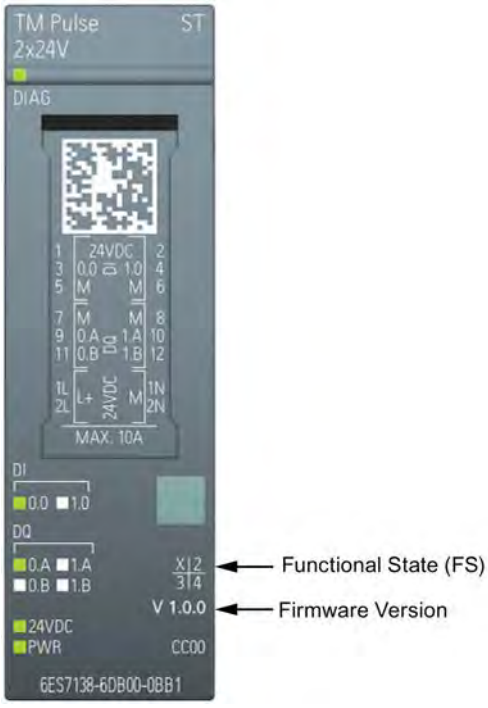

LED status display

The following tables explain the meaning of the status and error displays. Refer to Error correction and diagnostics (Page 122) for details.

Table 7- 1 DIAG LED

DIAG LED	Meaning	To correct or avoid errors
□ Off	Backplane bus supply of the ET 200SP not OK	Check or switch On the supply voltage of the head station. Ensure the TM Pulse2x24V is correctly inserted in the BaseUnit.
Flashes green	Technology Module not configured	
■ On green	Technology Module configured and no module error exists	
Flashes red	Technology Module configured and module diagnostics (at least one error pending) Note:	Evaluate the diagnostic alarms and eliminate the error.

Note

The DIAG LED only shows an error if the Diagnostic alarm is activated during device configuration. By default, the Diagnostic alarm is not activated.

Table 7- 2 PWR and 24 V DC LED status

LEDs		Meaning	To correct or avoid errors
PWR	24 V DC		
□ Off	□ Off	No supply voltage	• Check the external 24 V DC power supply voltage connected between L+ and M.
■ On green	■ On green	Supply voltage is present and OK	
■ On green	□ Off	Short-circuit or overload at the sensor supply or supply voltage too low	• Check sensor wiring. • Check the loads connected to the sensor supply. • Check the supply voltage.

Channel status LEDs

The LEDs for DI digital inputs and DQ digital outputs indicate the digital state of the associated channel signals.
The LEDs of the digital outputs DQ indicate the desired state.

- DIn.0 digital inputs
  - 0.0 - Channel 0 input
  - 1.0 - Channel 1 input
- DQn.A and DQn.B digital outputs
  - 0.A and 0.B - Channel 0 outputs
  - 1.A and 1.B - Channel 1 outputs

The flashing frequency of the channel LEDs is limited to approximately 12 Hz. If higher frequencies are present, the channel LEDs will flash at 12 Hz instead of indicating the actual status.

Table 7- 3 Status displays DI digital inputs and DQ digital outputs

LED status	Meaning
□ Off	Digital input / digital output is at 0 level.
■ On green	Digital input / digital output is at 1 level.

7.2 Parameter validation errors

If the TM Pulse 2x24V parameter record is modified with an incorrect parameter value, then the module returns the error codes shown in the following table.

During TIA Portal Device configuration, parameter values are verified before transfer to the module. This prevents parameter errors during the static TIA Portal Device configuration.

You can modify the parameter data record during runtime with the WRREC (Write Record) program instruction.

For example, an illegal mode value is written to the module by WRREC execution. After execution the WRREC STATUS output is an ARRAY[1..4] of BYTE data with the value 16#DF80E111.

Example WRREC STATUS data	Address	Meaning
DF_H	STATUS[1]	Write data record error
80_H	STATUS[2]	Error according to IEC 61158-6
$E1_H$	STATUS[3]	Module specific error
11_H	STATUS[4]	Module error code from row 1 in the following table: Mode parameter has an incorrect reserved value.

Error code	Parameter	Validation criteria	Mode
11_H	Mode	Reserved value	All modes
12_H	Reaction to CPU STOP	Reserved value	All modes
$1A_H$	Input delay	Reserved value	All modes
$1B_H$	Period duration	Greater than maximum	PWM Pulse train DC motor
$1C_H$	On-delay	Greater than maximum	Pulse output PWM Frequency output DC motor
$1D_H$	Minimum pulse duration	Greater than maximum	PWM
$1E_H$	Off-delay	Greater than maximum	On/Off-delay
20_H	Reference value current	Greater than maximum	PWM
21_H	Period duration	Lower than minimum	PWM Pulse train DC motor
22_H	Dithering	Not disabled	Pulse output Pulse train On/Off-delay Frequency output DC motor
23_H	High-speed output	Not disabled	DC motor All modes with parallel connection
24_H	Current control	Not disabled	Pulse output Pulse train On/Off-delay Frequency output DC motor
25_H	Current control and high-speed output	Both enabled	PWM

Error code	Parameter	Validation criteria	Mode
26_H	Function DI	HW enable activated	On/Off-delay
27_H	Low limit and High limit	High limit <= Low limit	PWM with current control
28_H	Dithering period	Period is lower than 4 times the PWM period or lower than 2 ms.	PWM with dithering
29_H	Substitue values DQA and DQB	Substitute values DQA and DQB are both 1.	All modes

7.3 Error detection and diagnostics

Feedback interface ERR bits

Your program can access power supply error and output load status directly, through a channel's feedback interface.

Channel 0 address	Channel 1 address	Feedback bit	Meaning	Value range
Byte 0: Bit 0	Byte 8: Bit 0	ERR_PWR	Indicates under voltage on the power supply. Note that the bit is not set, if the voltage is not present.	0 = PWR is not in under voltage 1 = PWR is detected but in under voltage
Byte 0: Bit 1	Byte 8: Bit 1	ERR_24V	Indicates a short-circuit or under voltage condition on the 24V sensor power supply.	0 = 24 V DC sensor supply working normally 1 = 24 V DC sensor supply short-circuit or under voltage
Byte 0: Bit 2	Byte 8: Bit 2	ERR_LD	Indicates an error occurred when loading a parameter value through the SLOT field using the single-update method.	0 = No SLOT single-update error 1 = SLOT single-update error
Byte 0: Bit 3	Byte 8: Bit 3	ERR_PULSE	Indicates a pulse output error in the Pulse output, On/Off-delay, and Pulse train modes	0 = No pulse output error 1 = Pulse output error
Byte 0: Bit 4	Byte 8: Bit 4	ERR_DQA	Indicates a short-circuit or overload of DQn.A digital output.	0 = No DQn.A digital output short-circuit or overload 1 = DQn.A digital output short-circuit or overload
Byte 0: Bit 5	Byte 8: Bit 5	ERR_DQB	Indicates a short-circuit, overload of DQn.B digital output. Also, indicates an attempt to set one channel's DQn.A and DQn.B to the high state (using SET_DQA, SET_DQB, and TM_CTRL_DQ).	0 = No DQn.B digital output short-circuit or overload 1 = DQn.B digital output short-circuit, overload, or attempt to set DQn.A and DQn.B high.
Byte 0: Bit 6	Byte 8: Bit 6	ERR_OUT_VAL	Indicates the value in OUTPUT_VALUE is not valid	0 = No OUTPUT_VALUE error 1 = Error in OUTPUT_VALUE
Byte 0: Bit 7	Byte 8: Bit 7	ERR_SLOT_VAL	The value in SLOT is not valid (when MODE_SLOT = permanent update)	0 = No SLOT value error 1 = SLOT value error

Note

If an output short-circuit occurs, the digital output is able to briefly supply a current substantially higher than the rated value.

Diagnostic alarms

When a TM Pulse 2x24V error event triggers a diagnostic alarm, the following happens:

- The DIAG light flashes red when a diagnostics alarm is pending. Once you have remedied the error, the DIAG light changes to green.
- The diagnostics are displayed as plain text in the STEP 7 (TIA Portal) online and diagnostics view.
- Options for the reaction of a CPU running your control program
  - CPU goes to STOP and interrupts processing of the user program. The diagnostic interrupt OB (for example, OB 82) is called. The event that triggered the interrupt is written in the start information of the diagnostic interrupt OB.
  - CPU remains in RUN even if no diagnostic interrupt in present in the CPU. The technology module continues working unchanged if this is possible, while the error exists.
- Detailed information on the error event is available through execution of the RALRM (read alarm information) program instruction

Diagnostic configuration options

If a short-circuit or overload occurs on the 24 V DC sensor supply or digital output, the TM Pulse 2x24V generates a diagnostic message for the connected CPU/master. During the TM Pulse 2x24V device configuration, you must enable a channel's Group diagnostics and Diagnostics DQA / Diagnostics DQB parameters to enable the corresponding diagnostic messages.

See also TIA portal Diagnostics configuration (Page 105)

Configuration parameter	Meaning	Default
Group diagnostics	When Group diagnostics is enabled, the TM Pulse 2x24V generates a diagnostic message for the CPU/master in the following cases: • Supply voltage error • Short-circuit on 24 V DC sensor supply • Over-temperature	Disabled
Diagnostics DQA	The TM Pulse 2x24V detects a short-circuit/overload on the DQn.A digital output when Diagnostics DQA is enabled.	Enabled
Diagnostics DQB	The TM Pulse 2x24V detects a short-circuit/overload of the DQn.B digital output when Diagnostics DQB is enabled.	Enabled

Diagnostic alarms

Diagnostic alarm	Error Code	Meaning	To correct or avoid errors
Class A diagnostics (cannot be deactivated by user)			
Internal error	100_H	Technology Module is defective	Replace Technology Module
Watchdog tripped	103_H	Firmware Error, Technology Module is defective.	Run firmware update. If the problem remains, replace Technology Module.
Parametrization Fault	010_H	Possible causes: • The received parametrization record is not valid. • The configured BaseUnit is not the actual BaseUnit.	• Check the parametrization record. • Check the BaseUnit.
Module temporarily not available	$01F_H$	Possible causes: • Firmware-update is currently running. • Firmware-update has been interrupted.	• Wait for the end of the firmware update • Retry firmware update
Class B diagnostics (can be deactivated by user)			
No supply voltage	011_H	No L+ supply voltage for the technology module	Connect L+ supply voltage to the Technology Module.
Short-circuit or overload at the 24 V DC sensor supply	$10E_H$	Error on 24 V DC sensor supply Possible causes: • Short-circuit • Overload	• Correct wiring to 24 V DC. • Check loads connected to 24 V DC.
Error at the digital outputs	$10F_H$	Error at the digital outputs Possible causes: • Short-circuit • Overload	• Correct wiring at the digital outputs. • Check loads connected to the digital outputs.
Supply voltage error	110_H	Error at L+ supply voltage Possible causes: • Low voltage • Wiring of L+ supply voltage defective	• Check the L+ supply voltage. • Check the wiring of L+ supply voltage.
Over temperature	506_H	Possible causes: • Short-circuit or overload at the digital outputs • Ambient temperature outside specifications	• Correct process wiring • Improve cooling • Check connected loads

Technical specifications

8

	6ES7138-6DB00-0BB1
Product type designation	TM Pulse 2x24 V
General information	
Firmware version	V1.0
• FW update possible	Yes
usable BaseUnits	BU type B1
Color code for module-specific color identification plate	CC40
Product function	
I&M data	Yes; I&M 0
Isochronous mode	Yes
Engineering with	
STEP 7 TIA Portal configurable/integrated as of version	V13 SP1
STEP 7 configurable/integrated as of version	V5.5 SP4 and higher
PROFIBUS as of GSD version/GSD revision	GSD Revision 5
PROFINET as of GSD version/GSD revision	GSDML V2.31
Supply voltage	
Load voltage L+	
Rated value (DC)	24 V
permissible range, lower limit (DC)	19,2 V
permissible range, upper limit (DC)	28,8 V
Short-circuit protection	Yes
Reverse polarity protection	Yes; against destruction
Input current	
Current consumption, max.	70 mA; without load
Encoder supply	
Number of outputs	2; A common 24V encoder supply for both channels
24 V encoder supply	
24 V	Yes; L+ (-0.8 V)
Short-circuit protection	Yes; per module, electronic
Output current, max.	300 mA
Power loss	
Power loss, typ.	1,7 W

	6ES7138-6DB00-0BB1
Address area	
Occupied address area	
Inputs	16 byte; 8 per channel
Outputs	24 byte; 12 per channel
Digital inputs	
Number of digital inputs	2; 1 per channel
Digital inputs, parameterizable	Yes
Input characteristic curve in accordance with IEC 61131, type 3	Yes
Digital input functions, parameterizable	
Freely usable digital input	Yes
HW enable for digital output	Yes
Input voltage	
Type of input voltage	DC
Rated value (DC)	24 V
for signal "0"	-30 to +5V
for signal "1"	+11 to +30V
permissible voltage at input, min.	-30 V
permissible voltage at input, max.	30 V
Input current	
for signal "1", typ.	2,5 mA
Input delay (for rated value of input voltage)	
for standard inputs	
• parameterizable	Yes; none / 0.05 / 0.1 / 0.4 / 0.8 / 1.6 / 3.2 / 12.8 / 20 ms
• at "0" to "1", min.	4 µs; for parameterization "none"
• at "1" to "0", min.	4 µs; for parameterization "none"
Cable length	
shielded, max.	1000 m; Depending on load and cable quality
unshielded, max.	600 m; Depending on load and cable quality
Digital outputs	
Type of digital output	P- and M-switching
Number of digital outputs	2; 1 per channel
Current-sinking	Yes
Current-sourcing	Yes
Digital outputs, parameterizable	Yes
Short-circuit protection	Yes; electronic/thermal
• Response threshold, typ.	6.8 A with Standard output, 2 A with High Speed output

	6ES7138-6DB00-0BB1
Limitation of inductive shutdown voltage to	-0.8 V
Controlling a digital input	Yes
Accuracy of pulse duration	±100 ppm ±0.5 µs with High Speed output, ±100 ±100 ppm ±9 µs with Standard output
minimum pulse duration	1,5 µs; With High Speed output, 10 µs with Standard output
Digital output functions, parameterizable	
Freely usable digital output	Yes
PWM output	Yes
• Number, max.	2; 1 per channel
• Cycle duration, parameterizable	Yes; Max. 85 s
• ON period, min.	0 %
• ON period, max.	100 %
• Resolution of the duty cycle	0,0036 %; For S7 analog format, min. 20 ns
Connection of a proportional valve	Yes
Dithering	Yes
• Frequency adjustable	Yes
• Amplitude adjustable	Yes
Current measurement	Yes
Current control	Yes
Connection of a DC motor	Yes
ON-delay	Yes
OFF-delay	Yes
Frequency output	Yes
Pulse train	Yes
Pulse output	Yes
Switching capacity of the outputs	
with resistive load, max.	2 A
on lamp load, max.	10 W; 1 W with High Speed output
Load resistance range	
lower limit	12 Ω; 240 ohm with High Speed output
upper limit	12 kΩ
Output voltage	
Type of output voltage	DC
for signal "0", max.	1 V
for signal "1", min.	23,2 V; L+ (-0.8 V)
Output current	
for signal "1" rated value	2 A; 0.1 A with High Speed output, observe derating

	6ES7138-6DB00-0BB1
Output delay with resistive load	
"0" to "1", typ.	0 µs; With High Speed output, 4.5 µs with Standard output
"0" to "1", max.	0,8 µs; With High Speed output, 9 µs with Standard output
"1" to "0", typ.	0 µs; With High Speed output, 4.5 µs with Standard output
"1" to "0", max.	0,8 µs; With High Speed output, 9 µs with Standard output
Parallel switching of 2 outputs	
for uprating	Yes
Switching frequency	
with resistive load, max.	100 kHz; With High Speed output, 10 kHz with standard output
with inductive load, max.	100 kHz; With High Speed output, 10 kHz with standard output
on lamp load, max.	10 Hz
Total current of the outputs	
Current per channel, max.	2 A
Current per group, max.	4 A
Current per module, max.	4 A
Cable length	
shielded, max.	1000 m; Depending on load and cable quality
unshielded, max.	600 m; Depending on load and cable quality
Isochronous mode	
Isochronous operation (application synchronized up to terminal)	Yes
Bus cycle time (TDP), min.	250 µs; with 1 channel configuration, 375 µs with 2 channel configuration
Jitter, max.	1 µs; typically ±
Interrupts/diagnostics/status information	
Substitute values connectable	Yes; Parameterizable
Alarms	
Diagnostic alarm	Yes
Diagnostic messages	
Diagnostics	Yes
Monitoring the supply voltage	Yes
Short-circuit	Yes
Diagnostics indication LED	
Monitoring of the supply voltage (PWR-LED)	Yes; green PWR LED
Channel status display	Yes
for module diagnostics	Yes; green/red DIAG LED

	6ES7138-6DB00-0BB1
Potential separation	
Potential separation digital inputs	
between the channels and backplane bus	Yes
Potential separation digital outputs	
between the channels and backplane bus	Yes
Potential separation channels	
between the channels	No
between the channels and backplane bus	Yes
Permissible potential difference	
between different circuits	75 V DC/60 V AC (base isolation)
Isolation	
Isolation tested with	707 V DC (type test)
Ambient conditions	
Ambient temperature during operation	
horizontal installation, max.	60 °C; Observe derating
vertical installation, max.	50 °C; Observe derating
Decentralized operation	
to SIMATIC S7-300	Yes
to SIMATIC S7-400	Yes
to SIMATIC S7-1200	Yes
to SIMATIC S7-1500	Yes
to standard PROFIBUS master	Yes
to standard PROFINET controller	Yes
Dimensions	
Width	20 mm
Weights	
Weight, approx.	50 g

Ambient temperature output current derating information

Use the following graphs to find the maximum output current, when operating at higher loads and temperatures.

The output current derating for single channel (4 A) is twice (2x) the derating of the dual channel (2 A per channel) values shown in the derating graphs.

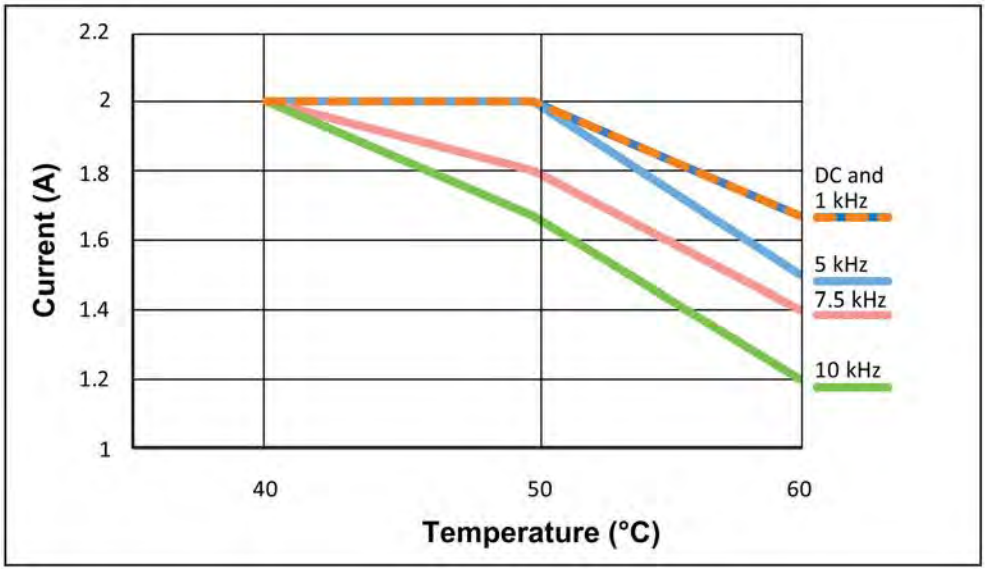

Figure 8-1 Maximum output current temperature derating for DC and 90%/10% duty cycle

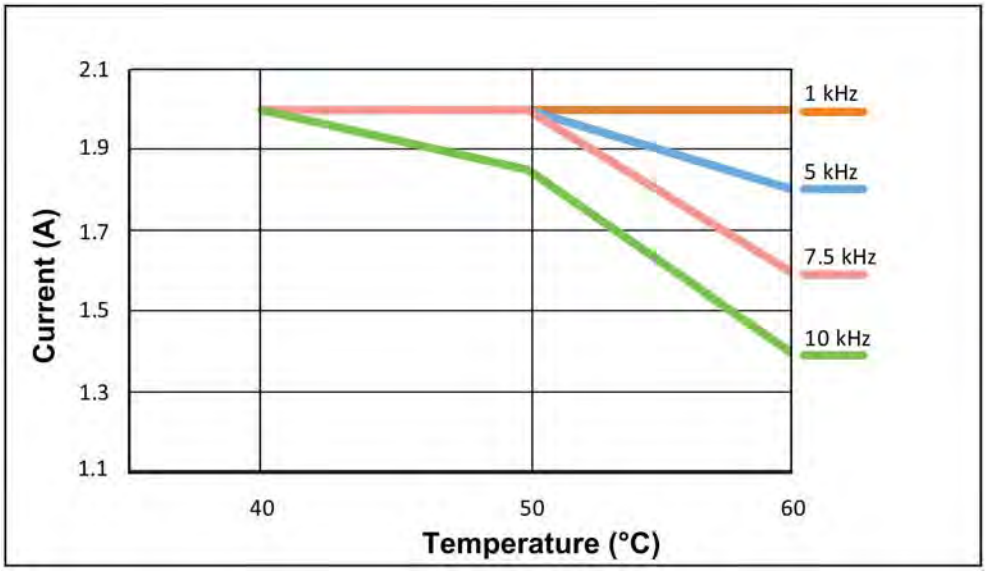

Figure 8-2 Maximum output current temperature derating for 50% duty cycle

BaseUnit technical specifications

Refer to the user manual for ET 200SP BaseUnits (http://support.automation.siemens.com/WW/view/en/58532597/133300)

8.1 Programming reference

Control interface: 2 channels, 24 output bytes (Q addresses)

CPU input address		Description
Channel 0	Channel 1[1]	
DWord 0	DWord 12	Depending on the mode: • Pulse output mode: Pulse duration in µs • PWM mode: Duty cycle On-ratio (Number range set by Output format configuration) – "Per 100": 0 to 100 – "Per 1000": 0 to 1,000 – "Per 10000": 0 to 10,000 – "S7 analog output": 0 to 27,648 • PWM mode with current control: Target current is assigned as a ratio of target current/reference current • Pulse train mode: Number of pulses to output as a DWord number value between 1 to 4,294,967,295 (2^{32}-1) • On/Off-delay mode: Off-delay in µs • Frequency output mode: Output frequency in Hz
DWord 4	DWord 16	SLOT value: Behavior depends on operating mode, MODE_SLOT(1 bit), and LD_SLOT (four bits).
Byte 8: Bits 0 to 3	Byte 20: Bits 0 to 3	LD_SLOT value controls interpretation of SLOT value. • 0 = No action / idle state • 1 = Period duration µs (PWM, Pulse train, and DC motor) • 2 = On-delay µs (Pulse output, PWM, Pulse train, Frequency output, and DC motor) • 3 = Off-delay µs (On/Off-delay) • 4 = Duty cycle On-ratio (Pulse train) • 5 = Dither ramp-up time and ramp-down time (PWM) • 6 = Dither amplitude (PWM) • 7 = Dither period (PWM)
Byte 8: Bit 4	Byte 20: Bit 4	MODE_SLOT value controls the SLOT update process. • 0 = single update (SLOT changed sometimes, prior to output sequence) • 1= permanent update (SLOT controlled continuously)

CPU input address		Description
Channel 0	Channel 1[1]	
Byte 9: Bit 0	Byte 21: Bit 0	SW_ENABLE: Transition from 0 → 1 and remaining 1 during the input delay starts the output sequence. Only active for the first positive edge, additional positive edges are ignored and no start occurs.
Byte 9: Bit 1	Byte 21: Bit 1	TM_CTRL_DQ: Set DQ output source: Selects either CPU program or module's output sequence. • 0 = DQn.A and DQn.B are controlled by the CPU (in your program) using the SET_DQA and SET_DQB control bits. • 1 = DQn.A and DQn.B are controlled by the module's output sequence.
Byte 9: Bit 2	Byte 21: Bit 2	SET_DQA: Controls the value of the digital output DQn.A, if TM_CTRL_DQ = 0 • 0 = 0V on DQn.A • 1 = 24V on DQn.A
Byte 9: Bit 3	Byte 21: Bit 3	SET_DQB: Controls the value of the digital output DQn.B, if TM_CTRL_DQ = 0 • 0 = 0V on DQn.B • 1 = 24V on DQn.B
Byte 10: Bit 0	Byte 22: Bit 0	RES_ERROR: Reset pending errors (ERR_LD, ERR_DQA, ERR_DQB, and ERR_24V). • 0 = Reset of errors is not active. • 1 = Reset of errors is active.

[1] Only if the module is configured as "2 channels (2 A)" and not "1 channel (4 A)"

Feedback Interface: 2 channels, 16 input bytes (I addresses)

CPU output address		Description
Channel 0	Channel 1[1]	
Byte 0: Bit 0	Byte 8: Bit 0	ERR_PWR: 1 = 24 V DC present, but is not in the correct range. 0 = no error
Byte 0: Bit 1	Byte 8: Bit 1	ERR_24V: 1 = Short-circuit/overload, in the 24 V DC sensor supply output. 0 = no error
Byte 0: Bit 2	Byte 8: Bit 2	ERR_LD: 1 = Error while loading a parameter value using single-update mode. 0 = no error
Byte 0: Bit 3	Byte 8: Bit 3	ERR_PULSE: 1 = Pulse duration reduced to smaller than the minimum allowed during operation. 0 = No error
Byte 0: Bit 4	Byte 8: Bit 4	ERR_DQA: 1 = Short-circuit/overload on the digital output DQn.A. 0 = no error
Byte 0: Bit 5	Byte 8: Bit 5	ERR_DQB: 1 = Short-circuit/overload on the digital output DQn.B or attempt to set both DQn.A and DQn.B to high. 0 = no error
Byte 0: Bit 6	Byte 8: Bit 6	ERR_OUT_VAL: 1 = The value in OUTPUT_VALUE is not valid. 0 = no error
Byte 0: Bit 7	Byte 8: Bit 7	ERR_SLOT_VAL: 1 = The value in SLOT is not valid where MODE_SLOT = 1 (permanent update). 0 = no error
Byte 1: Bit 2	Byte 9: Bit 2	STS_LD_SLOT: Toggle acknowledge bit for each action of the SLOT in single-update SLOT-mode Each toggle of this bit means a successful LD_SLOT action.
Byte 1: Bit 4	Byte 9: Bit 4	STS_READY: 1 = Module is parameterized correctly, running, and delivering valid data. 0 = not ready
Byte 1: Bit 5	Byte 9: Bit 5	ST_SW_ENABLE: 1 = SW_ENABLE active. 0 = SW_ENABLE not active
Byte 2: Bit 0	Byte 10: Bit 0	STS_ENABLE: 1 = Output sequence running. 0 = No output sequence running
Byte 2: Bit 1	Byte 10: Bit 1	STS_DQA: 1 = DQn.A output active. 0 = DQn.A output not active.
Byte 2: Bit 2	Byte 10: Bit 2	STS_DQB: 1 = DQn.B output active. 0 = DQn.B output not active.
Byte 2: Bit 3	Byte 10: Bit 3	STS_DI: 1 = DIn.0 digital input active. 0 = DIn.0 digital input not active.

CPU output address		Description
Channel 0	Channel 1[1]	
Byte 3: Bit 0 to 3	Byte 11: Bit 0 to 3	SEQ_CNT: Sequence counter: Is incremented after completion of an output sequence (Range 0 to 15)
Word 4	Word 12	MEASURED_CURRENT: Current measurement uses a SIMATIC S7 analog value. Full-scale value depends on module configuration, as 2 channel (2 A) or 1 channel (4 A). • 2 channel (2 A): 0 to 32767 corresponds with 0 to 2.4 A • 1 channel (4 A): 0 to 32767 corresponds with 0 to 4.8 A
Byte 6: Bit 0	Byte 14: Bit 0	QLMN_LLM: The low limit of the manipulated value has been reached.
Byte 6: Bit 1	Byte 14: Bit 1	QLMN_HLM: The high limit of the manipulated value has been reached.

[1] Only if the module is configured as "2 channels (2 A)" and not "1 channel (4 A)"

Note

If the TM Pulse 2x24V external supply voltage is interrupted, then, 16#00000000 is returned as feedback value (substitute value).

Controlling the different operating modes

You select an output channel's operating mode during device configuration. Configuration data is stored in parameter data record 128.
The following table shows the program variables that the different operating modes use.

Program control variable	Notes
Software enable	
SW_ENABLE	Transition from 0 → 1 and remaining 1 during the input delay starts the output sequence. Only active for the first positive edge, additional positive edges are ignored and no start occurs. You must always issue the software enable in your control program. If you don't use a HW enable, the output sequence will be started by the positive edge of the software enable. If you reset the software enable, the current output sequence will be terminated.
Direct control of the digital output	
TM_CTRL_DQ	• If TM_CTRL_DQ = 1, then the TM Pulse 2x24V module has control and produces pulse sequences at the DQ outputs. • If TM_CTRL_DQ = 0, then the CPU has control and your program can set outputs DQn.A and DQn.B directly with the SET_DQA and SET_DQB control bits
SET_DQA SET_DQB	These control bits set/reset a channel's DQn.A and DQn.B outputs while TM_CTRL_DQ = 0. Note: You cannot set a channel's DQn.A and DQn.B to high at the same time. Otherwise, error ERR_DQB is set and only DQn.A is set high.
Pulse output operating mode	
Pulse duration	Assign the pulse duration directly with the control interface parameter OUTPUT_VALUE, as a DWord number value in µs.
On-delay	The time from the start of the output sequence to the start of the DQ output pulse. Assign the On-delay in µs with control interface parameter SLOT, after setting up MODE_SLOT (0 or 1) and LD_SLOT = 2.

Program control variable	Notes
PWM operating mode	
Duty cycle or Target current (current control enabled)	**Current control disabled**: PWM: OUTPUT_VALUE assigns the duty cycle (On/Off ratio) for the current period duration. You select the range of the OUTPUT_VALUE control interface field with the "Output format" configuration. • Output format "Per 100 (%)": Value range between 0 and 100 Pulse duration = (OUTPUT_VALUE/100) x period duration. • Output format "Per 1,000": Value range between 0 and 1,000 Pulse duration = (OUTPUT_VALUE/1,000) x period duration. • Output format "Per 10,000": Value range between 0 and 10,000 Pulse duration = (OUTPUT_VALUE/10,000) x period duration. • "S7 analog output" output format: Value range between 0 and 27,648 Pulse duration = (OUTPUT_VALUE/27,648) x period duration. **Current control enabled:** OUTPUT_VALUE assigns the target current as a ratio of target current/reference current. The reference current value is used to define the maximum set point and the high and low limits of the controlled current. Typically, the maximum current can be measured in PWM mode with current control disabled and a duty cycle set to 100%. The value measured can be set as a reference for the current control. The maximum value is 4000 mA for single channel operation (parallel channel connection enabled) and 2000 mA per channel for dual channel operation (parallel connection disabled).
Period duration	The Period duration of an output PWM cycle. Assign the period duration value in µs with control interface parameter SLOT, after setting up MODE_SLOT (0 or 1) and LD_SLOT = 1. When you assign the period duration, take into account the minimum pulse duration configuration and the response time of the control element connected to the DQ digital output.
On-delay	The time from the start of the output sequence to the start of the DQ output pulse. Assign the On-delay in µs with control interface parameter SLOT, after setting up MODE_SLOT (0 or 1) and LD_SLOT = 2.
Pulse train operating mode	
Number of pulses	Number of pulses that are output at the DQ digital output on expiration of the On-delay. Your control program can set the pulse count directly with the control interface parameter (OUTPUT_VALUE). Set the number of pulses directly as a DWord number value between 0 to 4,294,967,295 (2^{32}-1).
Period duration	The Period duration of an output pulse cycle. Assign the period duration in µs with control interface parameter SLOT, after setting up MODE_SLOT (0 or 1) and LD_SLOT = 1. When you assign the period duration take into account the minimum pulse duration configuration and the response time of the control element connected to the DQ digital output.
Duty cycle	Assign the duty cycle with control interface parameter SLOT, after setting up MODE_SLOT (0 or 1) and LD_SLOT = 4. The range of the duty cycle parameter is selected using the "Output format" configuration. If the number value you assign exceeds the upper limit, then a duty cycle of 100% of the period duration is used and this action does not cause an error. • Output format "Per 100 (%)": Value range 0 to 100 Pulse duration = (duty cycle/100) x period duration. • Output format "Per 1000": Value range 0 to 1,000 Pulse duration = (duty cycle/1,000) x period duration. • Output format "Per 10000": Value range 0 to 10,000 Pulse duration = (duty cycle/10,000) x period duration. • Output format "S7 analog output": Value range 0 to 27,648 Pulse duration = (duty cycle/27,648) x period duration.

Program control variable	Notes
On/Off-delay operating mode	
On-delay	The time between a positive edge of the DIn.0 digital input and DQn.A digital output (DQ follows DI state). Assign the On-delay in µs directly using the OUTPUT_VALUE control interface field.
Off-delay	The time between a negative edge of the DIn.0 digital input and its output on the DQn.A digital output (DQ follows DI state). Assign the Off-delay in µs with control interface parameter SLOT, after setting up MODE_SLOT (0 or 1) and LD_SLOT = 3.
Frequency output operating mode	
Output frequency	Frequency output at the digital output DQ. Assign the frequency in real format as Hz using the OUTPUT_VALUE control interface field. The possible range is dependent on the "High Speed Output" configuration. • High Speed Output disabled Frequency (OUTPUT_VALUE): 0.02 Hz to 10,000 Hz • High Speed Output enabled Frequency (OUTPUT_VALUE): 0.02Hz to 100,000Hz
On-delay	The time from the start of the output sequence to the output of the frequency. Assign the On-delay in µs with control interface parameter SLOT, after setting up MODE_SLOT (0 or 1) and LD_SLOT = 2.
DC motor operating mode	
OUTPUT_VALUE	The OUTPUT_VALUE determines the duty cycle (pulse duration/period duration ratio) within a period (PWM). The period duration can be adjusted. The new output value is applied at the next rising edge of the output. The sign indicates direction of rotation (positive for forward) and (negative for backward). S7 analog output format: value range is -27,648 to +27,648 DInt data type: Only 2 least significant bytes are used For channel 0: bytes 2 and 3 For channel 1: bytes 14 and 15
On-delay	The time from the start of the output sequence to the output of the frequency. Assign the On-delay in µs with control interface parameter SLOT, after setting up MODE_SLOT (0 or 1) and LD_SLOT = 2.
If "Function DI" is parameterized as "External stop":	A rising edge on DIn.0 will stop the output sequence and stop the DC motor.

Device configuration (Assignments stored in parameter data record 128)

Parameters	Value Range	Default
Channel configuration	• 2 channels (2 A) • 1 channel (4 A)	2 channels (2 A)
Channel (0 and 1)		
Reaction to CPU STOP	• Continue working mode • DQ substitute a value	DQ substitute a value
Substitute value DQA	0 or 1	0
Substitute value DQB	0 or 1	0
Group diagnostics	Disable/enable	Disabled
Diagnostics DQA		Disabled
Diagnostics DQB		Disabled
Operating mode	• Pulse output • PWM • Pulse train • On/Off-delay • Frequency output • DC motor	PWM
High-speed output (0.1 A)	Disable/enable	Disabled
Current control (for PWM mode only)	Disable/enable	Disabled
Function DI HW enable option available for Pulse output, Pulse train, Frequency output and DC motor modes.	• Input • HW enable • External stop (DC motor only)	Input
Activate P	P-SEL: Add Proportional term for current control	Enabled
Activate I	I-SEL: Add Integral term for current control	Enabled
Activate D	D-SEL: Add Derivative term for current control	Disabled
Input delay	• Off (4µs) • 0.05 ms • 0.1 ms • 0.4 ms • 0.8 ms • 1.6 ms • 3.2 ms • 12.8 ms • 20 ms	0.1 ms
Output format: PWM and Pulse train modes DC motor mode, (only S7 analog output format is possible)	• S7 analog output format • Per 100 • Per 1000 • Per 10000	Per 100

Parameters	Value Range			Default
Output format (in the "Frequency output" operating mode)	1 Hz			1 Hz
Dithering (PWM mode only): Superimpose dithering waveform on PWM output sequence.	Disable/enable			Disabled
	Minimum		Maximum	
	High-speed **disabled**	High-speed **enabled**		
DWord: Minimum pulse duration for PWM and DC motor modes	10 µs	1.5 µs	85,000,000 µs	0
DWord: Period duration for PWM, Pulse train, and DC motor modes	100 µs	10 µs		2,000,000 µs
DWord: On-delay for all modes except On/Off-delay	0 µs	0 µs		0
DWord: Value depends on mode				
PWM: Dither ramp	Low word: Dither ramp-up time 0 to 30000 ms High word: Dither ramp-down 0 to 30000 ms			0 ms 0 ms
Pulse train: Duty cycle	S7 analog output format: 0 to 27648			13824 (50%)
	Per 100 format: 0 to100			50 (50%)
	Per 1000 format: 0 to 1000			500 (50%)
	Per 10000 format: 0 to 10000			5000 (50%)
On/Off delay: Off delay	0 to 85,000,000 µs			0
DWord: Dither amplitude for PWM only	0 to 500 ‰ (per mill)			50 ‰
DWord: Dither period for PWM only	From (4 times the PWM period µs) to 100000 µs (must be higher than 2000 µs)			50000 µs
Word: Reference value current for PWM with current control only	• 0 mA to 2000 mA for "2 channels (2 A)" operation • 0 mA to 4000 mA for "1 channel (4 A)" operation to 4000 mA for "1 channel (4 A)" operation			0 mA
Word: Dead band width (µA) for current control	0 µA to 65535 µA			0 µA
Word: High current limit for current control	S7-analog value relative to the reference value current: Range is 1 to 65535 (>= 27648 means 100%)			27648
Word: Low current limit for current control	S7-analog value relative to the reference value current: Range 0 to 27647 (Low limit must be less than the High limit)			0
Gain for current control	Real value (DWord size)			2.0 s
TI: Integration time (s) for current control	Real value (DWord size)			20.0 s
TD: Derivative action time (s) for current control	Real value (DWord size)			10 .0 s
TM LAG: Time lag of the derivative action (s)	Real value (DWord size)			2.0 s

Parameter data record A

The TM Pulse 2x24V parameter data record is modified and stored for you by the TIA portal when you perform a Device configuration, successful configuration block compilation, and download a new configuration block to the system hardware.

You may also directly edit the module parameters with the CPU in RUN mode. The WRREC instruction is used to transfer parameters to the module using data record 128.

If errors occur during the transfer or validation of parameters with the WRREC instruction, the module continues operation with the previous parameter assignment. A corresponding error code is then written to the STATUS output parameter. If no errors occur, the STATUS output parameter contains the length of the data actually transferred.

The description of the WRREC instruction and the error codes is available in the STEP 7 online help (TIA Portal).

Structure of data record 128

The following table shows you the structure of data record 128 for the TM Pulse 2x24V. The values in byte 0 to byte 3 are fixed and may not be changed. Default values are indicated in bold font.

- A total of 108 bytes (4 header bytes + 2(52 channel bytes) is required for the 2 channel configuration (parallel connection disabled).
- A total of 56 byes (4 header bytes + 52 channel bytes) is required for the 1 channel configuration (parallel connection enabled).
- Bytes 4 to 55 are the channel 0 parameters
- Bytes 56 to 107 are the channel 1 parameters.
- Channel 1 parameters use the same data structure as channel 0. Add a 52 byte offset to the channel 0 byte numbers, to determine the channel 1 byte numbers.

Table A- 1 Header and channel 0 basic configuration

Bit → / Byte ↓	7	6	5	4	3	2	1	0
0 to 3	**Header**							
0	Reserved[1]		Major version = 0		Minor version = 1			
1	Channel parameter data length = 52 bytes							
2	Reserved[1]							
3								
4 to 55	**Channel 0 parameters**							
4	Current control	Dithering	High-speed output		Mode			
	0$_B$: Disabled	**0**$_B$: Disabled	**00**$_B$: Disabled					
	1$_B$: Enabled (not if High-speed mode is enabled)	1$_B$: Enabled	01$_B$: Enabled Not allowed for "1 channel (4A)" configuration that connects the two channels in parallel.					
			10$_B$-11$_B$: Reserved					
					0: Pulse output			
					1: PWM (Pulse width modulation)			
					2: Pulse train			
					3: On/Off-delay			
					4: Frequency output			
					5: DC motor			
5	PID loop calculation for current control			Reserved[1]		Diagnostic interrupt	Reaction to CPU STOP	
	P-SEL: Add Proportional term	I-SEL: Add Integral term	D-SEL: Add Derivative term			**0**$_B$: Disabled	**00**$_B$: DQ substitute a value	
						1$_B$: Enabled	01$_B$: Reserved	
	0$_B$: Disabled	0$_B$: Disabled	**0**$_B$: Disabled				10$_B$: Continue working mode	
	1$_B$: Enabled	**1**$_B$: Enabled	1$_B$: Enabled				11$_B$: Reserved	
6	Reserved[1]		Input delay				Function DI	
			0$_H$: Off (4 µs)				**00**$_B$: Input	
			1$_H$: 0.05 ms00				01$_B$:HW enable	
			2$_H$: 0.1 ms				10$_B$:External stop (DC motor mode only)	
			3$_H$: 0.4 ms					
			4$_H$: 0.8 ms					
			5$_H$: 1.6 ms					
			6$_H$: 3.2 ms					
			7$_H$: 12.8 ms					
			8$_H$: 20 ms					
			9$_H$ to F$_H$ Reserved					

Bit → / Byte ↓	7	6	5	4	3	2	1	0
7	Reserved[1]		Output format		Diagnos-tics DQB	Diagnostics DQA	Substitute value DQB	Substitute value DQA
			Bits 5 and 4	PWM or Pulse train / Fre-quency output / DC motor	0_B: Disa-ble	0_B: Disable	0_B: 0 V	0_B: 0 V
					1_B: Ena-ble	1_B: Enable	1_B: 24V	1_B: 24V
			00_B	S7 Ana-log format / Re-served / **S7 Analog format**				
			01_B	**Per 100** (%) / **1 Hz** / Re-served				
			10_B	Per 1,000 / Re-served / Re-served				
			11_B	Per 10,000 / Re-served / Re-served				

[1] Must be set to 0.

Table A- 2 Channel 0 Word, DWord, and Real values configuration

Byte	Channel 0 mode and variable usage	Value range
8 to 11	**Minimum pulse duration DWord**	
	PWM (only if current-control is inactive)	Minimum pulse duration: Default value = **0 µs**
	Pulse output, Pulse train, On/Off-delay, and Frequency output	Reserved
12 to 15	**Period duration DWord**	
	PWM, Pulse train	Period duration: High-speed disabled: 100 µs to 85,000,000 µs High-speed enabled: 10 µs to 85,000,000 µs Default value = **2,000,000 µs**
	DC motor	Period duration: 100 µs to 85,000,000 µs Default value = 1000 µs
	Pulse output, On/Off-delay, and Frequency output	Reserved
16 to19	**On-delay DWord**	
	Pulse output, PWM, Pulse Train, Frequency output, and DC motor	On-delay: **0 µs** to 85,000,000 µs
	On/Off-delay	Reserved
20 to 23	**Value DWord**	
	PWM	Dithering ramp times (2 bytes each): • Ramp-up time (low word): **0 ms** to 30,000 ms • Ramp-down time (high word): **0 ms** to 30,000 ms
	Pulse train	Duty cycle %: 0 to 27648, Default = **50** (50%)
	On/Off-delay	Off-delay: **0 µs** to 85,000,000 µs
	Pulse output, Frequency output, and DC motor	Reserved

Byte	Channel 0 mode and variable usage	Value range
24 to 27	**Dither amplitude DWord**	
	PWM	Dither amplitude (per mil): 0 to 500 the default value is **50**.
	Pulse output, Pulse train, On/Off-delay, Frequency output, and DC motor	Reserved
28 to 31	**Dither period DWord**	
	PWM	Dither period: Valid from ((4 x PWM period) AND (> 2000)) µs to 100,000 µs. The default value is **50,000 µs**.
	Pulse output, Pulse train, On/Off-delay, Frequency output, and DC motor	Reserved
32 to 55	**PWM mode only: Current control parameters**	
32 to 33	Reference value current (mA)	Word size: **0 mA** to 2000 mA for "2 channels (2 A)" operation **0 mA** to 4000 mA for "1 channel (4 A)" operation
34 to 35	Dead band width (µA)	Word size: **0 µA** to 65535 µA
36 to 37	High limit - S7-analog value relative to the reference value current	Word size: 1 to 65535 (>= **27648** means 100%)
38 to 39	Low limit - S7-analog value relative to the reference value current	Word size: **0** to 27647 (because Low limit must be less than the High limit)
40 to 43	Gain	Real (DWord size): Default value = **2.0 s**
44 to 47	TI: Integration time (s)	Real (DWord size): Default value = **20.0 s**
48 to 51	TD: Derivative action time (s)	Real (DWord size): Default value = **10.0 s**
52 to 55	TM LAG: Time lag of the derivative action (s)	Real (DWord size): Default value = **2.0 s**

Open Source Software

B

For Resellers: In order to avoid infringements of the license conditions by the reseller or the buyer, the instructions and license conditions provided here must be passed on to the buyers.

License Conditions and Disclaimers for Open Source Software and other licensing software

The Open Source software listed below is used in unmodified form or in a form we have modified as well as other license software listed below in the "digital modules, analog modules, technology modules, communication modules and power supply modules of the SIMATIC S7-1500, ET 200MP", ET 200SP Copyright Siemens AG, 2013-2014 (hereinafter referred to as "Product").

Liability for Open Source Software

The Open Source software is provided free of charge. We are liable for the Product including the Open Source software contained in it pursuant to the license conditions applicable to the Product. We explicitly reject any liability for the use of Open Source software beyond the program sequence intended for the Product. Furthermore, any liability for defects resulting from modifications to the Open Source software is excluded.

We do not provide any technical support for the Product if it has been modified.

Please read the license conditions and copyright information of Open Source software as well as other licensing software:

Component	Open Source Software[Yes/No]	Acknowledgements	Copyright Information / File
Dinkumware C/C++ Library - 5.01	NO		LICENSE AND COPYRIGHT INFORMATION FOR COMPONENT DINKUMWARE C/C++ LIBRARY - 5.01
GNU GCC libstdc++ / libsupc++ - 4.4.1	YES		LICENSE AND COPYRIGHT INFORMATION FOR COMPONENT GNU GCC LIBSTDC++ / LIBSUPC++ - 4.4.1
libgcc - 4.4.1	YES		LICENSE AND COPYRIGHT INFORMATION FOR COMPONENT LIBGCC - 4.4.1

Commercial Software: Dinkumware C/C++ Library - 5.01

Enclosed you'll find the license conditions and copyright notices applicable for Commercial Software Dinkumware C/C++ Library - 5.01

License conditions:

1 Copyright (c) 1991-1999 Unicode, Inc. All Rights reserved. This file is provided as-is by Unicode, Inc. (The Unicode Consortium).No claims are made as to fitness for any particular purpose. No warranties of any kind are expressed or implied. The recipient agrees to determine applicability of information provided. If this file has been provided on optical media by Unicode, Inc., the sole remedy for any claim will be exchange of defective media within 90 days of receipt.Unicode, Inc. hereby grants the right to freely use the information supplied in this file in the creation of products supporting the Unicode Standard, and to make copies of this file in any form for internal or external distribution as long as this notice remains attached.

2 © Copyright William E. Kempf 2001 Permission to use, copy, modify, distribute and sell this software and its documentation for any purpose is hereby granted without fee, provided that the above copyright notice appear in all copies and that both that copyright notice and this permission notice appear in supporting documentation. William E. Kempf makes no representations about the suitability of this software for any purpose. It is provided "as is" without express or implied warranty.

3 Copyright © 1994 Hewlett-Packard Company Permission to use, copy, modify, distribute and sell this software and its documentation for any purpose is hereby granted without fee, provided that the above copyright notice appear in all copies and that both that copyright notice and this permission notice appear in supporting documentation. Hewlett-Packard Company makes no representations about the suitability of this software for any purpose. It is provided ``as is'' without express or implied warranty.

Copyrights:

copyright 1992 - 2006 by p.j. plauger and jim brodie. all rights reserved.

copyright 1992-2006 by p.j. plauger. all rights reserved.ip

copyright 1992-2006 by p.j. plauger. portions derived from work copyright 1994 by hewlettpackard company. all rights reserved

Copyright 1992-2006 by dinkumware, ltd. all rights reserved

copyright 1992-2006 by dinkumware, ltd. portions derived from work copyright 2001 by william e. kempf. all rights reserved

copyright 1994 hewlett-packard company

copyright 1994 by hewlett-packard company

copyright william e. kempf 2001

copyright 1989-2006 by p.j. plauger. all rights reserved

copyright (c) by p.j. plauger. all rights reserved.

copyright (c) by dinkumware, ltd. all rights reserved.

copyright (c) unicode, inc. all rights reserved.

(c) copyright william e. kempf 2001

copyright (c) hewlettpackard company

copyright (c) by p.j. plauger. all rights reserved.

copyright 2006 by dinkumware, ltd.

copyright (c) by p.j. plauger, licensed by dinkumware, ltd. all rights reserved.

the dinkum cec++ library reference is copyright (c) by p.j. plauger. this code is protected by copyright. all rights reserved.

the dinkum cc++ library reference is copyright (c) by p.j. plauger. this code is protected by copyright. all rights reserved.

dinkum complete library, vc++ package (vc++ compilers only) the dinkum compleat library and the dinkum compleat library reference are copyright (c) by p.j. plauger. all rights reserved.

Open Source Software: GNU GCC libstdc++ / libsupc++ - 4.4.1

Enclosed you'll find the license conditions and copyright notices applicable for Open Source Software GNU GCC libstdc++ / libsupc++ - 4.4.1

License conditions:

1 License

There are two licenses affecting GNU libstdc++: one for the code, and one for the documentation.

There is a license section in the FAQ regarding common questions. If you have more questions, ask the FSF or the gcc mailing list.
The Code: GPL

The source code is distributed under the GNU General Public License version 3, with the addition under section 7 of an exception described in the “GCC Runtime Library Exception, version 3.1” as follows (or see the file COPYING.RUNTIME):

GCC RUNTIME LIBRARY EXCEPTION

Version 3.1, 31 March 2009

Copyright (C) 2009 Free Software Foundation, Inc.

Everyone is permitted to copy and distribute verbatim copies of this license document, but changing it is not allowed.

This GCC Runtime Library Exception ("Exception") is an additional permission under section 7 of the GNU General Public License, version 3 ("GPLv3"). It applies to a given file (the "Runtime Library") that bears a notice placed by the copyright holder of the file stating that the file is governed by GPLv3 along with this Exception.

When you use GCC to compile a program, GCC may combine portions of certain GCC header files and runtime libraries with the compiled program. The purpose of this Exception is to allow compilation of non-GPL (including proprietary) programs to use, in this way, the header files and runtime libraries covered by this Exception.

0. Definitions.

A file is an "Independent Module" if it either requires the Runtime Library for execution after a Compilation Process, or makes use of an interface provided by the Runtime Library, but is not otherwise based on the Runtime Library.

"GCC" means a version of the GNU Compiler Collection, with or without modifications, governed by version 3 (or a specified later version) of the GNU General Public License (GPL) with the option of using any subsequent versions published by the FSF.

"GPL-compatible Software" is software whose conditions of propagation, modification and use would permit combination with GCC in accord with the license of GCC.

"Target Code" refers to output from any compiler for a real or virtual target processor architecture, in executable form or suitable for input to an assembler, loader, linker and/or execution phase. Notwithstanding that, Target Code does not include data in any format that is used as a compiler intermediate representation, or used for producing a compiler intermediate representation.

The "Compilation Process" transforms code entirely represented in non-intermediate languages designed for human-written code, and/or in Java Virtual Machine byte code, into Target Code. Thus, for example, use of source code generators and preprocessors need not be considered part of the Compilation Process, since the Compilation Process can be understood as starting with the output of the generators or preprocessors.

A Compilation Process is "Eligible" if it is done using GCC, alone or with other GPL-compatible software, or if it is done without using any work based on GCC. For example, using non-GPL-compatible Software to optimize any GCC intermediate representations would not qualify as an Eligible Compilation Process.

1. Grant of Additional Permission.

You have permission to propagate a work of Target Code formed by combining the Runtime Library with Independent Modules, even if such propagation would otherwise violate the terms of GPLv3, provided that all Target Code was generated by Eligible Compilation Processes. You may then convey such a combination under terms of your choice, consistent with the licensing of the Independent Modules.

2. No Weakening of GCC Copyright.

The availability of this Exception does not imply any general presumption that third-party software is unaffected by the copyright requirements of the license of GCC.

Hopefully that text is self-explanatory. If it isn't, you need to speak to your lawyer, or the Free Software Foundation.
The Documentation: GPL, FDL

The documentation shipped with the library and made available over the web, excluding the pages generated from source comments, are copyrighted by the Free Software Foundation, and placed under the GNU Free Documentation License version 1.2. There are no Front-Cover Texts, no Back-Cover Texts, and no Invariant Sections.

For documentation generated by doxygen or other automated tools via processing source code comments and markup, the original source code license applies to the generated files. Thus, the doxygen documents are licensed GPL.

If you plan on making copies of the documentation, please let us know. We can probably offer suggestions.

2 This library is free
software; you can redistribute it and/or modify it under the
terms of the GNU General Public License as published by the
Free Software Foundation; either version 3, or (at your option)
any later version.
This library is distributed in the hope that it will be useful,
but WITHOUT ANY WARRANTY; without even the implied warranty of
MERCHANTABILITY or FITNESS FOR A PARTICULAR PURPOSE. See the
GNU General Public License for more details.
Under Section 7 of GPL version 3, you are granted additional
permissions described in the GCC Runtime Library Exception, version
3.1, as published by the Free Software Foundation.
You should have received a copy of the GNU General Public License and
a copy of the GCC Runtime Library Exception along with this program;
see the files COPYING3 and COPYING.RUNTIME respectively. If not, see
<http://www.gnu.org/licenses/>.

3 // This file is part of the GNU ISO C++ Library. This library is free
// software; you can redistribute it and/or modify it under the
// terms of the GNU General Public License as published by the
// Free Software Foundation; either version 3, or (at your option)
// any later version.
// This library is distributed in the hope that it will be useful,
// but WITHOUT ANY WARRANTY; without even the implied warranty of
// MERCHANTABILITY or FITNESS FOR A PARTICULAR PURPOSE. See the
// GNU General Public License for more details.
// Under Section 7 of GPL version 3, you are granted additional
// permissions described in the GCC Runtime Library Exception, version
// 3.1, as published by the Free Software Foundation.
// You should have received a copy of the GNU General Public License and
// a copy of the GCC Runtime Library Exception along with this program;
// see the files COPYING3 and COPYING.RUNTIME respectively. If not, see
// <http://www.gnu.org/licenses/>.
// (C) Copyright Jeremy Siek 2000. Permission to copy, use, modify,
// sell and distribute this software is granted provided this
// copyright notice appears in all copies. This software is provided
// "as is" without express or implied warranty, and with no claim as
// to its suitability for any purpose.

4 // This file is part of the GNU ISO C++ Library. This library is free
// software; you can redistribute it and/or modify it under the
// terms of the GNU General Public License as published by the
// Free Software Foundation; either version 3, or (at your option)
// any later version.
// This library is distributed in the hope that it will be useful,
// but WITHOUT ANY WARRANTY; without even the implied warranty of
// MERCHANTABILITY or FITNESS FOR A PARTICULAR PURPOSE. See the
// GNU General Public License for more details.
// Under Section 7 of GPL version 3, you are granted additional
// permissions described in the GCC Runtime Library Exception, version
// 3.1, as published by the, 2009 Free Software Foundation.
// You should have received a copy of the GNU General Public License and
// a copy of the GCC Runtime Library Exception along with this program;
// see the files COPYING3 and COPYING.RUNTIME respectively. If not, see
// <http://www.gnu.org/licenses/>.
/*
*
* Copyright (c) 1994
* Hewlett-Packard Company
*
* Permission to use, copy, modify, distribute and sell this software
* and its documentation for any purpose is hereby granted without fee,
* provided that the above copyright notice appear in all copies and
* that both that copyright notice and this permission notice appear
* in supporting documentation. Hewlett-Packard Company makes no
* representations about the suitability of this software for any
* purpose. It is provided "as is" without express or implied warranty.
*
* Copyright (c) 1996,1997
* Silicon Graphics
*
* Permission to use, copy, modify, distribute and sell this software
* and its documentation for any purpose is hereby granted without fee,
* provided that the above copyright notice appear in all copies and
* that both that copyright notice and this permission notice appear
* in supporting documentation. Silicon Graphics makes no
* representations about the suitability of this software for any
* purpose. It is provided "as is" without express or implied warranty.

5 // This file is part of the GNU ISO C++ Library. This library is free
// software; you can redistribute it and/or modify it under the
// terms of the GNU General Public License as published by the
// Free Software Foundation; either version 3, or (at your option)
// any later version.
// This library is distributed in the hope that it will be useful,
// but WITHOUT ANY WARRANTY; without even the implied warranty of
// MERCHANTABILITY or FITNESS FOR A PARTICULAR PURPOSE. See the
// GNU General Public License for more details.
// Under Section 7 of GPL version 3, you are granted additional
// permissions described in the GCC Runtime Library Exception, version
// 3.1, as published by the Free Software Foundation.
// You should have received a copy of the GNU General Public License and
// a copy of the GCC Runtime Library Exception along with this program;
// see the files COPYING3 and COPYING.RUNTIME respectively. If not, see
// <http://www.gnu.org/licenses/>.
/*
*
* Copyright (c) 1996,1997
* Silicon Graphics Computer Systems, Inc.
*
* Permission to use, copy, modify, distribute and sell this software
* and its documentation for any purpose is hereby granted without fee,
* provided that the above copyright notice appear in all copies and
* that both that copyright notice and this permission notice appear
* in supporting documentation. Silicon Graphics makes no
* representations about the suitability of this software for any
* purpose. It is provided "as is" without express or implied warranty.
*
*
* Copyright (c) 1994
* Hewlett-Packard Company
*
* Permission to use, copy, modify, distribute and sell this software
* and its documentation for any purpose is hereby granted without fee,
* provided that the above copyright notice appear in all copies and
* that both that copyright notice and this permission notice appear
* in supporting documentation. Hewlett-Packard Company makes no
* representations about the suitability of this software for any
* purpose. It is provided "as is" without express or implied warranty.

6 This library is free
// software; you can redistribute it and/or modify it under the terms
// of the GNU General Public License as published by the Free Software
// Foundation; either version 3, or (at your option) any later
// version.
// This library is distributed in the hope that it will be useful, but
// WITHOUT ANY WARRANTY; without even the implied warranty of
// MERCHANTABILITY or FITNESS FOR A PARTICULAR PURPOSE. See the GNU
// General Public License for more details.
// Under Section 7 of GPL version 3, you are granted additional
// permissions described in the GCC Runtime Library Exception, version
// 3.1, as published by the Free Software Foundation.
// You should have received a copy of the GNU General Public License and
// a copy of the GCC Runtime Library Exception along with this program;
// see the files COPYING3 and COPYING.RUNTIME respectively. If not, see
// <http://www.gnu.org/licenses/>.
// Copyright (C) 2004 Ami Tavory and Vladimir Dreizin, IBM-HRL.
// Permission to use, copy, modify, sell, and distribute this software
// is hereby granted without fee, provided that the above copyright
// notice appears in all copies, and that both that copyright notice
// and this permission notice appear in supporting documentation. None
// of the above authors, nor IBM Haifa Research Laboratories, make any
// representation about the suitability of this software for any
// purpose. It is provided "as is" without express or implied
// warranty.
/**
* @file splay_tree_.hpp
* Contains an implementation class for splay_tree_.
*/
/*
* This implementation uses an idea from the SGI STL (using a "header" node
* which is needed for efficient iteration). Following is the SGI STL
* copyright.
*
* Copyright (c) 1996,1997
* Silicon Graphics Computer Systems, Inc.
*
* Permission to use, copy, modify, distribute and sell this software
* and its documentation for any purpose is hereby granted without fee,
* provided that the above copyright notice appear in all copies and
* that both that copyright notice and this permission notice appear
* in supporting documentation. Silicon Graphics makes no
* representations about the suitability of this software for any
* purpose. It is provided "as is" without express or implied warranty.
*
*
* Copyright (c) 1994
* Hewlett-Packard Company
*

```
* Permission to use, copy, modify, distribute and sell this software
* and its documentation for any purpose is hereby granted without fee,
* provided that the above copyright notice appear in all copies and
* that both that copyright notice and this permission notice appear
* in supporting documentation. Hewlett-Packard Company makes no
* representations about the suitability of this software for any
* purpose. It is provided "as is" without express or implied warranty.
```

7 This library is free

```
// software; you can redistribute it and/or modify it under the
// terms of the GNU General Public License as published by the
// Free Software Foundation; either version 3, or (at your option)
// any later version.
// This library is distributed in the hope that it will be useful,
// but WITHOUT ANY WARRANTY; without even the implied warranty of
// MERCHANTABILITY or FITNESS FOR A PARTICULAR PURPOSE. See the
// GNU General Public License for more details.
// Under Section 7 of GPL version 3, you are granted additional
// permissions described in the GCC Runtime Library Exception, version
// 3.1, as published by the Free Software Foundation.
// You should have received a copy of the GNU General Public License and
// a copy of the GCC Runtime Library Exception along with this program;
// see the files COPYING3 and COPYING.RUNTIME respectively. If not, see
// <http://www.gnu.org/licenses/>.
/*
* Copyright (c) 1997
* Silicon Graphics Computer Systems, Inc.
*
* Permission to use, copy, modify, distribute and sell this software
* and its documentation for any purpose is hereby granted without fee,
* provided that the above copyright notice appear in all copies and
* that both that copyright notice and this permission notice appear
* in supporting documentation. Silicon Graphics makes no
* representations about the suitability of this software for any
* purpose. It is provided "as is" without express or implied warranty.
```

8 Verbatim copying and distribution of this entire article are permitted worldwide, without royalty, in any medium, provided this notice is preserved.

9 GNU GENERAL PUBLIC LICENSE
Version 3, 29 June 2007

Copyright (C) 2007 Free Software Foundation, Inc. <http://fsf.org/>
Everyone is permitted to copy and distribute verbatim copies
of this license document, but changing it is not allowed.

Preamble

The GNU General Public License is a free, copyright license for software and other kinds of works.

The licenses for most software and other practical works are designed to take away your freedom to share and change the works. By contrast, the GNU General Public License is intended to guarantee your freedom to share and change all versions of a program--to make sure it remains free software for all its users. We, the Free Software Foundation, use the GNU General Public License for most of our software; it applies also to any other work released this way by its authors. You can apply it to your programs, too.

When we speak of free software, we are referring to freedom, not price. Our General Public Licenses are designed to make sure that you have the freedom to distribute copies of free software (and charge for them if you wish), that you receive source code or can get it if you want it, that you can change the software or use pieces of it in new free programs, and that you know you can do these things.

To protect your rights, we need to prevent others from denying you these rights or asking you to surrender the rights. Therefore, you have certain responsibilities if you distribute copies of the software, or if you modify it: responsibilities to respect the freedom of others.

For example, if you distribute copies of such a program, whether gratis or for a fee, you must pass on to the recipients the same freedoms that you received. You must make sure that they, too, receive or can get the source code. And you must show them these terms so they know their rights.

Developers that use the GNU GPL protect your rights with two steps: (1) assert copyright on the software, and (2) offer you this License giving you legal permission to copy, distribute and/or modify it.

For the developers' and authors' protection, the GPL clearly explains that there is no warranty for this free software. For both users' and authors' sake, the GPL requires that modified versions be marked as changed, so that their problems will not be attributed erroneously to authors of previous versions.

Some devices are designed to deny users access to install or run modified versions of the software inside them, although the manufacturer can do so. This is fundamentally incompatible with the aim of protecting users' freedom to change the software. The systematic pattern of such abuse occurs in the area of products for individuals to use, which is precisely where it is most unacceptable. Therefore, we have designed this version of the GPL to prohibit the practice for those products. If such problems arise substantially in other domains, we stand ready to extend this provision to those domains in future versions of the GPL, as needed to protect the freedom of users.

Finally, every program is threatened constantly by software patents. States should not allow patents to restrict development and use of software on general-purpose computers, but in those that do, we wish to avoid the special danger that patents applied to a free program could make it effectively proprietary. To prevent this, the GPL assures that patents cannot be used to render the program non-free.

The precise terms and conditions for copying, distribution and modification follow.

TERMS AND CONDITIONS

0. Definitions.

"This License" refers to version 3 of the GNU General Public License.

"Copyright" also means copyright-like laws that apply to other kinds of works, such as semiconductor masks.

"The Program" refers to any copyrightable work licensed under this License. Each licensee is addressed as "you". "Licensees" and "recipients" may be individuals or organizations.

To "modify" a work means to copy from or adapt all or part of the work in a fashion requiring copyright permission, other than the making of an exact copy. The resulting work is called a "modified version" of the earlier work or a work "based on" the earlier work.

A "covered work" means either the unmodified Program or a work based on the Program.

To "propagate" a work means to do anything with it that, without permission, would make you directly or secondarily liable for infringement under applicable copyright law, except executing it on a computer or modifying a private copy. Propagation includes copying, distribution (with or without modification), making available to the public, and in some countries other activities as well.

To "convey" a work means any kind of propagation that enables other parties to make or receive copies. Mere interaction with a user through a computer network, with no transfer of a copy, is not conveying.

An interactive user interface displays "Appropriate Legal Notices" to the extent that it includes a convenient and prominently visible feature that (1) displays an appropriate copyright notice, and (2) tells the user that there is no warranty for the work (except to the extent that warranties are provided), that licensees may convey the work under this License, and how to view a copy of this License. If the interface presents a list of user commands or options, such as a menu, a prominent item in the list meets this criterion.

1. Source Code.

The "source code" for a work means the preferred form of the work for making modifications to it. "Object code" means any non-source form of a work.

A "Standard Interface" means an interface that either is an official standard defined by a recognized standards body, or, in the case of interfaces specified for a particular programming language, one that is widely used among developers working in that language.

The "System Libraries" of an executable work include anything, other than the work as a whole, that (a) is included in the normal form of packaging a Major Component, but which is not part of that Major Component, and (b) serves only to enable use of the work with that Major Component, or to implement a Standard Interface for which an implementation is available to the public in source code form. A "Major Component", in this context, means a major essential component (kernel, window system, and so on) of the specific operating system (if any) on which the executable work runs, or a compiler used to produce the work, or an object code interpreter used to run it.

The "Corresponding Source" for a work in object code form means all the source code needed to generate, install, and (for an executable work) run the object code and to modify the work, including scripts to control those activities. However, it does not include the work's System Libraries, or general-purpose tools or generally available free programs which are used unmodified in performing those activities but which are not part of the work. For example, Corresponding Source includes interface definition files associated with source files for the work, and the source code for shared libraries and dynamically linked subprograms that the work is specifically designed to require, such as by intimate data communication or control flow between those subprograms and other parts of the work.

The Corresponding Source need not include anything that users can regenerate automatically from other parts of the Corresponding Source.

The Corresponding Source for a work in source code form is that same work.

2. Basic Permissions.

All rights granted under this License are granted for the term of copyright on the Program, and are irrevocable provided the stated conditions are met. This License explicitly affirms your unlimited permission to run the unmodified Program. The output from running a covered work is covered by this License only if the output, given its content, constitutes a covered work. This License acknowledges your rights of fair use or other equivalent, as provided by copyright law.

You may make, run and propagate covered works that you do not convey, without conditions so long as your license otherwise remains in force. You may convey covered works to others for the sole purpose of having them make modifications exclusively for you, or provide you with facilities for running those works, provided that you comply with the terms of this License in conveying all material for which you do not control copyright. Those thus making or running the covered works for you must do so exclusively on your behalf, under your direction and control, on terms that prohibit them from making any copies of your copyrighted material outside their relationship with you.

Conveying under any other circumstances is permitted solely under the conditions stated below. Sublicensing is not allowed; section 10 makes it unnecessary.

3. Protecting Users' Legal Rights From Anti-Circumvention Law.

No covered work shall be deemed part of an effective technological measure under any applicable law fulfilling obligations under article 11 of the WIPO copyright treaty adopted on 20 December 1996, or similar laws prohibiting or restricting circumvention of such measures.

When you convey a covered work, you waive any legal power to forbid circumvention of technological measures to the extent such circumvention is effected by exercising rights under this License with respect to the covered work, and you disclaim any intention to limit operation or modification of the work as a means of enforcing, against the work's users, your or third parties' legal rights to forbid circumvention of technological measures.

4. Conveying Verbatim Copies.

You may convey verbatim copies of the Program's source code as you receive it, in any medium, provided that you conspicuously and appropriately publish on each copy an appropriate copyright notice; keep intact all notices stating that this License and any non-permissive terms added in accord with section 7 apply to the code; keep intact all notices of the absence of any warranty; and give all recipients a copy of this License along with the Program.

You may charge any price or no price for each copy that you convey, and you may offer support or warranty protection for a fee.

5. Conveying Modified Source Versions.

You may convey a work based on the Program, or the modifications to produce it from the Program, in the form of source code under the terms of section 4, provided that you also meet all of these conditions:

a) The work must carry prominent notices stating that you modified it, and giving a relevant date.

b) The work must carry prominent notices stating that it is released under this License and any conditions added under section 7. This requirement modifies the requirement in section 4 to "keep intact all notices".

c) You must license the entire work, as a whole, under this License to anyone who comes into possession of a copy. This License will therefore apply, along with any applicable section 7 additional terms, to the whole of the work, and all its parts, regardless of how they are packaged. This License gives no permission to license the work in any other way, but it does not invalidate such permission if you have separately received it.

d) If the work has interactive user interfaces, each must display Appropriate Legal Notices; however, if the Program has interactive interfaces that do not display Appropriate Legal Notices, your work need not make them do so.

A compilation of a covered work with other separate and independent works, which are not by their nature extensions of the covered work, and which are not combined with it such as to form a larger program, in or on a volume of a storage or distribution medium, is called an "aggregate" if the compilation and its resulting copyright are not used to limit the access or legal rights of the compilation's users beyond what the individual works permit. Inclusion of a covered work in an aggregate does not cause this License to apply to the other parts of the aggregate.

6. Conveying Non-Source Forms.

You may convey a covered work in object code form under the terms of sections 4 and 5, provided that you also convey the machine-readable Corresponding Source under the terms of this License, in one of these ways:

a) Convey the object code in, or embodied in, a physical product (including a physical distribution medium), accompanied by the Corresponding Source fixed on a durable physical medium customarily used for software interchange.

b) Convey the object code in, or embodied in, a physical product (including a physical distribution medium), accompanied by a written offer, valid for at least three years and valid for as long as you offer spare parts or customer support for that product model, to give anyone who possesses the object code either (1) a copy of the Corresponding Source for all the software in the product that is covered by this License, on a durable physical medium customarily used for software interchange, for a price no more than your reasonable cost of physically performing this conveying of source, or (2) access to copy the Corresponding Source from a network server at no charge.

c) Convey individual copies of the object code with a copy of the written offer to provide the Corresponding Source. This alternative is allowed only occasionally and noncommercially, and only if you received the object code with such an offer, in accord with subsection 6b.

d) Convey the object code by offering access from a designated place (gratis or for a charge), and offer equivalent access to the Corresponding Source in the same way through the same place at no further charge. You need not require recipients to copy the Corresponding Source along with the object code. If the place to copy the object code is a network server, the Corresponding Source may be on a different server (operated by you or a third party) that supports equivalent copying facilities, provided you maintain clear directions next to the object code saying where to find the Corresponding Source. Regardless of what server hosts the Corresponding Source, you remain obligated to ensure that it is available for as long as needed to satisfy these requirements.

e) Convey the object code using peer-to-peer transmission, provided you inform other peers where the object code and Corresponding Source of the work are being offered to the general public at no charge under subsection 6d.

A separable portion of the object code, whose source code is excluded from the Corresponding Source as a System Library, need not be included in conveying the object code work.

A "User Product" is either (1) a "consumer product", which means any tangible personal property which is normally used for personal, family, or household purposes, or (2) anything designed or sold for incorporation into a dwelling. In determining whether a product is a consumer product, doubtful cases shall be resolved in favor of coverage. For a particular product received by a particular user, "normally used" refers to a typical or common use of that class of product, regardless of the status of the particular user or of the way in which the particular user actually uses, or expects or is expected to use, the product. A product is a consumer product regardless of whether the product has substantial commercial, industrial or non-consumer uses, unless such uses represent the only significant mode of use of the product.

"Installation Information" for a User Product means any methods, procedures, authorization keys, or other information required to install and execute modified versions of a covered work in that User Product from a modified version of its Corresponding Source. The information must suffice to ensure that the continued functioning of the modified object code is in no case prevented or interfered with solely because modification has been made.

If you convey an object code work under this section in, or with, or specifically for use in, a User Product, and the conveying occurs as part of a transaction in which the right of possession and use of the User Product is transferred to the recipient in perpetuity or for a fixed term (regardless of how the transaction is characterized), the Corresponding Source conveyed under this section must be accompanied by the Installation Information. But this requirement does not apply if neither you nor any third party retains the ability to install modified object code on the User Product (for example, the work has been installed in ROM).

The requirement to provide Installation Information does not include a requirement to continue to provide support service, warranty, or updates for a work that has been modified or installed by the recipient, or for the User Product in which it has been modified or installed. Access to a network may be denied when the modification itself materially and adversely affects the operation of the network or violates the rules and protocols for communication across the network.

Corresponding Source conveyed, and Installation Information provided, in accord with this section must be in a format that is publicly documented (and with an implementation available to the public in source code form), and must require no special password or key for unpacking, reading or copying.

7. Additional Terms.

"Additional permissions" are terms that supplement the terms of this License by making exceptions from one or more of its conditions. Additional permissions that are applicable to the entire Program shall be treated as though they were included in this License, to the extent that they are valid under applicable law. If additional permissions apply only to part of the Program, that part may be used separately under those permissions, but the entire Program remains governed by this License without regard to the additional permissions.

When you convey a copy of a covered work, you may at your option remove any additional permissions from that copy, or from any part of it. (Additional permissions may be written to require their own removal in certain cases when you modify the work.) You may place additional permissions on material, added by you to a covered work, for which you have or can give appropriate copyright permission.

Notwithstanding any other provision of this License, for material you add to a covered work, you may (if authorized by the copyright holders of that material) supplement the terms of this License with terms:

a) Disclaiming warranty or limiting liability differently from the terms of sections 15 and 16 of this License; or

b) Requiring preservation of specified reasonable legal notices or author attributions in that material or in the Appropriate Legal Notices displayed by works containing it; or

c) Prohibiting misrepresentation of the origin of that material, or requiring that modified versions of such material be marked in reasonable ways as different from the original version; or

d) Limiting the use for publicity purposes of names of licensors or authors of the material; or

e) Declining to grant rights under trademark law for use of some trade names, trademarks, or service marks; or

f) Requiring indemnification of licensors and authors of that material by anyone who conveys the material (or modified versions of it) with contractual assumptions of liability to the recipient, for any liability that these contractual assumptions directly impose on those licensors and authors.

All other non-permissive additional terms are considered "further restrictions" within the meaning of section 10. If the Program as you received it, or any part of it, contains a notice stating that it is governed by this License along with a term that is a further restriction, you may remove that term. If a license document contains a further restriction but permits relicensing or conveying under this License, you may add to a covered work material governed by the terms of that license document, provided that the further restriction does not survive such relicensing or conveying.

If you add terms to a covered work in accord with this section, you must place, in the relevant source files, a statement of the additional terms that apply to those files, or a notice indicating where to find the applicable terms.

Additional terms, permissive or non-permissive, may be stated in the form of a separately written license, or stated as exceptions; the above requirements apply either way.

8. Termination.

You may not propagate or modify a covered work except as expressly provided under this License. Any attempt otherwise to propagate or modify it is void, and will automatically terminate your rights under this License (including any patent licenses granted under the third paragraph of section 11).

However, if you cease all violation of this License, then your license from a particular copyright holder is reinstated (a) provisionally, unless and until the copyright holder explicitly and finally terminates your license, and (b) permanently, if the copyright holder fails to notify you of the violation by some reasonable means prior to 60 days after the cessation.

Moreover, your license from a particular copyright holder is reinstated permanently if the copyright holder notifies you of the violation by some reasonable means, this is the first time you have received notice of violation of this License (for any work) from that copyright holder, and you cure the violation prior to 30 days after your receipt of the notice.

Termination of your rights under this section does not terminate the licenses of parties who have received copies or rights from you under this License. If your rights have been terminated and not permanently reinstated, you do not qualify to receive new licenses for the same material under section 10.

9. Acceptance Not Required for Having Copies.

You are not required to accept this License in order to receive or run a copy of the Program. Ancillary propagation of a covered work occurring solely as a consequence of using peer-to-peer transmission to receive a copy likewise does not require acceptance. However, nothing other than this License grants you permission to propagate or modify any covered work. These actions infringe copyright if you do not accept this License. Therefore, by modifying or propagating a covered work, you indicate your acceptance of this License to do so.

10. Automatic Licensing of Downstream Recipients.

Each time you convey a covered work, the recipient automatically receives a license from the original licensors, to run, modify and propagate that work, subject to this License. You are not responsible for enforcing compliance by third parties with this License.

An "entity transaction" is a transaction transferring control of an organization, or substantially all assets of one, or subdividing an organization, or merging organizations. If propagation of a covered work results from an entity transaction, each party to that transaction who receives a copy of the work also receives whatever licenses to the work the party's predecessor in interest had or could give under the previous paragraph, plus a right to possession of the Corresponding Source of the work from the predecessor in interest, if the predecessor has it or can get it with reasonable efforts.

You may not impose any further restrictions on the exercise of the rights granted or affirmed under this License. For example, you may not impose a license fee, royalty, or other charge for exercise of rights granted under this License, and you may not initiate litigation (including a cross-claim or counterclaim in a lawsuit) alleging that any patent claim is infringed by making, using, selling, offering for sale, or importing the Program or any portion of it.

11. Patents.

A "contributor" is a copyright holder who authorizes use under this License of the Program or a work on which the Program is based. The work thus licensed is called the contributor's "contributor version".

A contributor's "essential patent claims" are all patent claims owned or controlled by the contributor, whether already acquired or hereafter acquired, that would be infringed by some manner, permitted by this License, of making, using, or selling its contributor version, but do not include claims that would be infringed only as a consequence of further modification of the contributor version. For purposes of this definition, "control" includes the right to grant patent sublicenses in a manner consistent with the requirements of this License.

Each contributor grants you a non-exclusive, worldwide, royalty-free patent license under the contributor's essential patent claims, to make, use, sell, offer for sale, import and otherwise run, modify and propagate the contents of its contributor version.

In the following three paragraphs, a "patent license" is any express agreement or commitment, however denominated, not to enforce a patent (such as an express permission to practice a patent or covenant not to sue for patent infringement). To "grant" such a patent license to a party means to make such an agreement or commitment not to enforce a patent against the party.

If you convey a covered work, knowingly relying on a patent license, and the Corresponding Source of the work is not available for anyone to copy, free of charge and under the terms of this License, through a publicly available network server or other readily accessible means, then you must either (1) cause the Corresponding Source to be so available, or (2) arrange to deprive yourself of the benefit of the patent license for this particular work, or (3) arrange, in a manner consistent with the requirements of this License, to extend the patent license to downstream recipients. "Knowingly relying" means you have actual knowledge that, but for the patent license, your conveying the covered work in a country, or your recipient's use of the covered work in a country, would infringe one or more identifiable patents in that country that you have reason to believe are valid.

If, pursuant to or in connection with a single transaction or arrangement, you convey, or propagate by procuring conveyance of, a covered work, and grant a patent license to some of the parties receiving the covered work authorizing them to use, propagate, modify or convey a specific copy of the covered work, then the patent license you grant is automatically extended to all recipients of the covered work and works based on it.

A patent license is "discriminatory" if it does not include within the scope of its coverage, prohibits the exercise of, or is conditioned on the non-exercise of one or more of the rights that are specifically granted under this License. You may not convey a covered work if you are a party to an arrangement with a third party that is in the business of distributing software, under which you make payment to the third party based on the extent of your activity of conveying the work, and under which the third party grants, to any of the parties who would receive the covered work from you, a discriminatory patent license (a) in connection with copies of the covered work

conveyed by you (or copies made from those copies), or (b) primarily for and in connection with specific products or compilations that contain the covered work, unless you entered into that arrangement, or that patent license was granted, prior to 28 March 2007.

Nothing in this License shall be construed as excluding or limiting any implied license or other defenses to infringement that may otherwise be available to you under applicable patent law.

12. No Surrender of Others' Freedom.

If conditions are imposed on you (whether by court order, agreement or otherwise) that contradict the conditions of this License, they do not excuse you from the conditions of this License. If you cannot convey a covered work so as to satisfy simultaneously your obligations under this License and any other pertinent obligations, then as a consequence you may not convey it at all. For example, if you agree to terms that obligate you to collect a royalty for further conveying from those to whom you convey the Program, the only way you could satisfy both those terms and this License would be to refrain entirely from conveying the Program.

13. Use with the GNU Affero General Public License.

Notwithstanding any other provision of this License, you have permission to link or combine any covered work with a work licensed under version 3 of the GNU Affero General Public License into a single combined work, and to convey the resulting work. The terms of this License will continue to apply to the part which is the covered work, but the special requirements of the GNU Affero General Public License, section 13, concerning interaction through a network will apply to the combination as such.

14. Revised Versions of this License.

The Free Software Foundation may publish revised and/or new versions of the GNU General Public License from time to time. Such new versions will be similar in spirit to the present version, but may differ in detail to address new problems or concerns.

Each version is given a distinguishing version number. If the Program specifies that a certain numbered version of the GNU General Public License "or any later version" applies to it, you have the option of following the terms and conditions either of that numbered version or of any later version published by the Free Software Foundation. If the Program does not specify a version number of the GNU General Public License, you may choose any version ever published by the Free Software Foundation.

If the Program specifies that a proxy can decide which future versions of the GNU General Public License can be used, that proxy's public statement of acceptance of a version permanently authorizes you to choose that version for the Program.

Later license versions may give you additional or different permissions. However, no additional obligations are imposed on any author or copyright holder as a result of your choosing to follow a later version.

15. Disclaimer of Warranty.

THERE IS NO WARRANTY FOR THE PROGRAM, TO THE EXTENT PERMITTED BY APPLICABLE LAW. EXCEPT WHEN OTHERWISE STATED IN WRITING THE COPYRIGHT
HOLDERS AND/OR OTHER PARTIES PROVIDE THE PROGRAM "AS IS" WITHOUT WARRANTY
OF ANY KIND, EITHER EXPRESSED OR IMPLIED, INCLUDING, BUT NOT LIMITED TO,
THE IMPLIED WARRANTIES OF MERCHANTABILITY AND FITNESS FOR A PARTICULAR
PURPOSE. THE ENTIRE RISK AS TO THE QUALITY AND PERFORMANCE OF THE PROGRAM
IS WITH YOU. SHOULD THE PROGRAM PROVE DEFECTIVE, YOU ASSUME THE COST OF
ALL NECESSARY SERVICING, REPAIR OR CORRECTION.

16. Limitation of Liability.

IN NO EVENT UNLESS REQUIRED BY APPLICABLE LAW OR AGREED TO IN WRITING
WILL ANY COPYRIGHT HOLDER, OR ANY OTHER PARTY WHO MODIFIES AND/OR CONVEYS
THE PROGRAM AS PERMITTED ABOVE, BE LIABLE TO YOU FOR DAMAGES, INCLUDING ANY
GENERAL, SPECIAL, INCIDENTAL OR CONSEQUENTIAL DAMAGES ARISING OUT OF THE
USE OR INABILITY TO USE THE PROGRAM (INCLUDING BUT NOT LIMITED TO LOSS OF
DATA OR DATA BEING RENDERED INACCURATE OR LOSSES SUSTAINED BY YOU OR THIRD
PARTIES OR A FAILURE OF THE PROGRAM TO OPERATE WITH ANY OTHER PROGRAMS),
EVEN IF SUCH HOLDER OR OTHER PARTY HAS BEEN ADVISED OF THE POSSIBILITY OF
SUCH DAMAGES.

17. Interpretation of Sections 15 and 16.

If the disclaimer of warranty and limitation of liability provided
above cannot be given local legal effect according to their terms,
reviewing courts shall apply local law that most closely approximates
an absolute waiver of all civil liability in connection with the
Program, unless a warranty or assumption of liability accompanies a
copy of the Program in return for a fee.

END OF TERMS AND CONDITIONS

How to Apply These Terms to Your New Programs

If you develop a new program, and you want it to be of the greatest
possible use to the public, the best way to achieve this is to make it
free software which everyone can redistribute and change under these terms.

To do so, attach the following notices to the program. It is safest
to attach them to the start of each source file to most effectively
state the exclusion of warranty; and each file should have at least
the "copyright" line and a pointer to where the full notice is found.

<one line to give the program's name and a brief idea of what it does.>
Copyright (C) <year> <name of author>

This program is free software: you can redistribute it and/or modify
it under the terms of the GNU General Public License as published by
the Free Software Foundation, either version 3 of the License, or
(at your option) any later version.

This program is distributed in the hope that it will be useful,
but WITHOUT ANY WARRANTY; without even the implied warranty of
MERCHANTABILITY or FITNESS FOR A PARTICULAR PURPOSE. See the
GNU General Public License for more details.

You should have received a copy of the GNU General Public License
along with this program. If not, see <http://www.gnu.org/licenses/>.

Also add information on how to contact you by electronic and paper mail.

If the program does terminal interaction, make it output a short
notice like this when it starts in an interactive mode:

<program> Copyright (C) <year> <name of author>
This program comes with ABSOLUTELY NO WARRANTY; for details type `show w'.
This is free software, and you are welcome to redistribute it
under certain conditions; type `show c' for details.

The hypothetical commands `show w' and `show c' should show the appropriate
parts of the General Public License. Of course, your program's commands
might be different; for a GUI interface, you would use an "about box".

You should also get your employer (if you work as a programmer) or school, if any, to sign a "copyright disclaimer" for the program, if necessary. For more information on this, and how to apply and follow the GNU GPL, see <http://www.gnu.org/licenses/>.

The GNU General Public License does not permit incorporating your program into proprietary programs. If your program is a subroutine library, you may consider it more useful to permit linking proprietary applications with the library. If this is what you want to do, use the GNU Lesser General Public License instead of this License. But first, please read <http://www.gnu.org/philosophy/why-not-lgpl.html>.

10 Disclaimer and Copyright</h2>
Revised 16 February, 2004 © Copyright Ami Tavory and Vladimir Dreizin, IBM-HRL, 2004, and Benjamin Kosnik, Red Hat, 2004.
Permission to use, copy, modify, sell, and distribute this software is hereby granted without fee, provided that the above copyright notice appears in all copies, and that both that copyright notice and this permission notice appear in supporting documentation.
None of the above authors, nor IBM Haifa Research Laboratories, Red Hat, or both, make any representation about the suitability of this software for any purpose. It is provided "as is" without express or implied warranty.<

11 # This file file be copied and used freely without restrictions. It can
be used in projects which are not available under the GNU Public License
but which still want to provide support for the GNU gettext functionality.
Please note that the actual code is *not* freely available.

12 This is free software; see the source for copying conditions. There is NO warranty; not even for MERCHANTABILITY or FITNESS FOR A PARTICULAR PURPOSE.

13 Free Software Foundation, Inc.
This file is free software; the Free Software Foundation gives unlimited permission to copy and/or distribute it, with or without modifications, as long as this notice is preserved.
This program is distributed in the hope that it will be useful, but WITHOUT ANY WARRANTY, to the extent permitted by law; without even the implied warranty of MERCHANTABILITY or FITNESS FOR A PARTICULAR PURPOSE.

14 This file is free software; the Free Software Foundation gives unlimited permission to copy and/or distribute it, with or without modifications, as long as this notice is preserved.

15 Permission to use, copy, modify, sell, and distribute this software is hereby granted without fee, provided that the above copyright notice appears in all copies, and that both that copyright notice and this permission notice appear in supporting documentation. None of the above authors, nor IBM Haifa Research Laboratories, make any representation about the suitability of this software for any purpose. It is provided "as is" without express or implied warranty.

16 This configure script is free software; the Free Software Foundation
gives unlimited permission to copy, distribute and modify it.

17 This Makefile.in is free software; the Free Software Foundation
gives unlimited permission to copy and/or distribute it,
with or without modifications, as long as this notice is preserved.
This program is distributed in the hope that it will be useful,
but WITHOUT ANY WARRANTY, to the extent permitted by law; without
even the implied warranty of MERCHANTABILITY or FITNESS FOR A
PARTICULAR PURPOSE.

18 Distributed under the Boost
Software License, Version 1.0. (See accompanying file
LICENSE_1_0.txt or copy at http:www.boost.org/LICENSE_1_0.txt)

Boost Software License - Version 1.0 - August 17th, 2003

Permission is hereby granted, free of charge, to any person or organization
obtaining a copy of the software and accompanying documentation covered by
this license (the "Software") to use, reproduce, display, distribute,
execute, and transmit the Software, and to prepare derivative works of the
Software, and to permit third-parties to whom the Software is furnished to
do so, all subject to the following:

The copyright notices in the Software and this entire statement, including
the above license grant, this restriction and the following disclaimer,
must be included in all copies of the Software, in whole or in part, and
all derivative works of the Software, unless such copies or derivative
works are solely in the form of machine-executable object code generated by
a source language processor.

THE SOFTWARE IS PROVIDED "AS IS", WITHOUT WARRANTY OF ANY KIND,
EXPRESS OR
IMPLIED, INCLUDING BUT NOT LIMITED TO THE WARRANTIES OF
MERCHANTABILITY,
FITNESS FOR A PARTICULAR PURPOSE, TITLE AND NON-INFRINGEMENT. IN NO
EVENT
SHALL THE COPYRIGHT HOLDERS OR ANYONE DISTRIBUTING THE SOFTWARE
BE LIABLE
FOR ANY DAMAGES OR OTHER LIABILITY, WHETHER IN CONTRACT, TORT OR
OTHERWISE,
ARISING FROM, OUT OF OR IN CONNECTION WITH THE SOFTWARE OR THE USE
OR OTHER
DEALINGS IN THE SOFTWARE.

Copyrights:

C) Copyright Jeremy Siek 2000

Copyright 1994 Hewlett-Packard Company

Copyright 1998 by Information Technology Industry Council

Copyright © 2007 Free Software Foundation, Inc

Copyright (C) Microsoft Corporation 1984-2002

Copyright (C) 1994, 1995, 1996, 1997, 1998, 1999, 2000, 2001, 2002, 2003, 2004, 2005 Free Software Foundation, Inc.

Copyright (C) 1994, 1995, 1996, 1997, 1998, 1999, 2000, 2001, 2002, 2003, 2004, 2005, 2006, 2007, 2009 Free Software Foundation

Copyright (C) 1994, 1995, 1996, 1997, 1998, 1999, 2000, 2001, 2002, 2003, 2004, 2005, 2006, 2007, 2009 Free Software Foundation, Inc.

Copyright (C) 1994, 1995, 1996, 1997, 1998, 1999, 2000, 2001, 2002, 2009 Free Software Foundation

Copyright (C) 1994, 1995, 1996, 1997, 1998, 1999, 2000, 2001, 2009 Free Software Foundation

Copyright (C) 1994, 1995, 1996, 1998, 1999, 2000, 2001, 2004, 2009 Free Software Foundation

Copyright (C) 1994, 1996, 1997, 1998, 1999, 2000, 2001, 2002, 2007, 2009 Free Software Foundation

Copyright (C) 1994, 1996, 1997, 1998, 1999, 2000, 2001, 2002, 2007, 2009 Free Software Foundation

Copyright (C) 1994, 1996, 1997, 1998, 1999, 2000, 2001, 2002, 2007, 2009 Free Software Foundation

Copyright (C) 1994, 1996, 1997, 1998, 1999, 2000, 2001, 2002, 2009 Free Software Foundation

Copyright (C) 1994, 1999, 2000, 2003, 2005, 2009 Free Software Foundation, Inc.

Copyright (C) 1994, 1999, 2000, 2003, 2009 Free Software Foundation, Inc.

Copyright (C) 1994, 1999, 2001, 2002, 2003, 2009 Free Software Foundation, Inc.

Copyright (C) 1994, 1999, 2001, 2003, 2009 Free Software Foundation, Inc.

Copyright (C) 1995, 1996, 1997, 1998, 1999, 2000, 2001, 2002, 2003, 2004, 2005, 2006, 2007, 2008, 2009 Free Software Foundation

Copyright (C) 1996, 1997, 1998, 1999, 2000, 2001, 2002, 2003, 2004, 2005 Free Software Foundation, Inc.

Copyright (C) 1996, 1997, 1998, 1999, 2000, 2001, 2002, 2003, 2004, 2005, 2006, 2007, 2009 Free Software Foundation

Copyright (C) 1996, 1997, 1998, 1999, 2000, 2001, 2002, 2003, 2004, 2005 Free Software Foundation, Inc.

Copyright (C) 1996, 1997, 2000, 2001, 2003, 2005 Free Software Foundation, Inc.

Copyright (C) 1996, 1998, 2000, 2001, 2002, 2003, 2004, 2005 Free Software Foundation, Inc.

Copyright (C) 1997, 1998, 1999, 2000, 2001, 2002, 2003, 2004, 2005, 2006, 2007, 2009 Free Software Foundation, Inc.

Copyright (C) 1997, 1998, 1999, 2000, 2001, 2002, 2003, 2004, 2005, 2006, 2007, 2009 Free Software Foundation, Inc.

Copyright (C) 1997, 1998, 1999, 2000, 2001, 2002, 2003, 2004, 2005, 2006, 2007, 2008, 2009 Free Software Foundation, Inc.

Copyright (C) 1997, 1998, 1999, 2000, 2001, 2002, 2003, 2004, 2005 2006, 2007, 2009 Free Software Foundation, Inc.

Copyright (C) 1997, 1998, 1999, 2000, 2001, 2002, 2003, 2004, 2005, 2006, 2007, 2008, 2009 Free Software Foundation, Inc.

Copyright (C) 1997, 1998, 1999, 2000, 2001, 2002, 2003, 2004, 2005, 2006, 2007, 2008, 2009 Free Software Foundation, Inc.

Copyright (C) 1997, 1998, 1999, 2000, 2001, 2002, 2003, 2004, 2005, 2006, 2007, 2009 Free Software Foundation, Inc.

Copyright (C) 1997, 1998, 1999, 2000, 2001, 2002, 2003, 2004, 2005, 2006, 2008, 2009 Free Software Foundation, Inc.

Copyright (C) 1997, 1998, 1999, 2000, 2001, 2002, 2003, 2004, 2005, 2006, 2009 Free Software Foundation, Inc.

Copyright (C) 1997, 1998, 1999, 2000, 2001, 2002, 2003, 2004, 2005, 2009 Free Software Foundation, Inc.

Copyright (C) 1997, 1998, 1999, 2000, 2001, 2002, 2003, 2004, 2005, 2006, 2007, 2008, 2009 Free Software Foundation, Inc.

Copyright (C) 1997, 1998, 1999, 2000, 2001, 2002, 2003, 2004, 2005, 2006, 2009 Free Software Foundation, Inc.

Copyright (C) 1997, 1998, 1999, 2000, 2001, 2002, 2003, 2004, 2005, 2006, 2009 Free Software Foundation, Inc.

Copyright (C) 1997, 1998, 1999, 2000, 2001, 2002, 2003, 2004, 2005, 2009 Free Software Foundation, Inc.

Copyright (C) 1997, 1998, 1999, 2000, 2001, 2002, 2003, 2004, 2009 Free Software Foundation, Inc.

Copyright (C) 1997, 1998, 1999, 2000, 2001, 2002, 2003, 2005, 2009 Free Software Foundation, Inc.

Copyright (C) 1997, 1998, 1999, 2000, 2001, 2002, 2003, 2008, 2009 Free Software Foundation, Inc.

Copyright (C) 1997, 1998, 1999, 2000, 2001, 2002, 2003, 2009 Free Software Foundation, Inc.

Copyright (C) 1997, 1998, 1999, 2000, 2001, 2002, 2004, 2005, 2006, 2007, 2008, 2009 Free Software Foundation, Inc.

Copyright (C) 1997, 1998, 1999, 2000, 2001, 2002, 2004, 2005, 2006, 2009 Free Software Foundation, Inc.

Copyright (C) 1997, 1998, 1999, 2000, 2001, 2002, 2004, 2005, 2009 Free Software Foundation, Inc.

Copyright (C) 1997, 1998, 1999, 2000, 2001, 2002, 2004, 2006, 2009 Free Software Foundation, Inc.

Copyright (C) 1997, 1998, 1999, 2000, 2001, 2002, 2004, 2009 Free Software Foundation

Copyright (C) 1997, 1998, 1999, 2000, 2001, 2002, 2005, 2006, 2009 Free Software Foundation, Inc.

Copyright (C) 1997, 1998, 1999, 2000, 2001, 2002, 2005, 2009 Free Software Foundation, Inc.

Copyright (C) 1997, 1998, 1999, 2000, 2001, 2002, 2009 Free Software Foundation, Inc.

Copyright (C) 1997, 1998, 1999, 2000, 2001, 2002, 2009 Free Software Foundation, Inc.

Copyright (C) 1997, 1998, 1999, 2000, 2001, 2004, 2005, 2006, 2009 Free Software Foundation, Inc.

Copyright (C) 1997, 1998, 1999, 2000, 2001, 2004, 2005, 2009 Free Software Foundation, Inc.

Copyright (C) 1997, 1998, 1999, 2000, 2001, 2004, 2009 Free Software Foundation

Copyright (C) 1997, 1998, 1999, 2000, 2002, 2003, 2004, 2006, 2009 Free Software Foundation, Inc.

Copyright (C) 1997, 1998, 1999, 2000, 2002, 2003, 2004, 2009 Free Software Foundation, Inc.

Copyright (C) 1997, 1998, 1999, 2000, 2002, 2007, 2009 Free Software Foundation, Inc.

Copyright (C) 1997, 1998, 1999, 2000, 2003, 2009 Free Software Foundation, Inc.

Copyright (C) 1997, 1998, 1999, 2000, 2004, 2007, 2009 Free Software Foundation

Copyright (C) 1997, 1998, 1999, 2000, 2004, 2009 Free Software Foundation

Copyright (C) 1997, 1998, 1999, 2001, 2002, 2005, 2008, 2009 Free Software Foundation, Inc.

Copyright (C) 1997, 1998, 1999, 2001, 2002, 2009 Free Software Foundation, Inc.

Copyright (C) 1997, 1998, 1999, 2002, 2004, 2009 Free Software Foundation, Inc.

Copyright (C) 1997, 1998, 1999, 2002, 2009 Free Software Foundation, Inc.

Copyright (C) 1997, 1998, 1999, 2003, 2005, 2009 Free Software Foundation, Inc.

Copyright (C) 1997, 1998, 1999, 2003, 2009 Free Software Foundation, Inc.

Copyright (C) 1997, 1998, 1999, 2007, 2009 Free Software Foundation, Inc.

Copyright (C) 1997, 1998, 2009, 1999, 2000, 2001, 2002, 2003, 2004, 2005, 2006 Free Software Foundation, Inc.

Copyright (C) 1997, 1999, 2000, 2001, 2003, 2005 Free Software Foundation, Inc.

Copyright (C) 1997, 1999, 2000, 2001, 2004, 2009 Free Software Foundation, Inc.

Copyright (C) 1997, 1999, 2001, 2002, 2005, 2009 Free Software Foundation, Inc.

Copyright (C) 1997, 2000, 2001, 2003, 2004, 2005 Free Software Foundation, Inc.

Copyright (C) 1997-1999, 2001, 2009 Free Software Foundation, Inc.

Copyright (C) 1997-1999, 2009 Free Software Foundation, Inc.

Copyright (C) 1998, 1999 Greg Colvin and Beman Dawes

Copyright (C) 1998, 1999, 2000, 2001, 2002, 2003, 2004, 2005, 2006, 2007, 2009 Free Software Foundation, Inc.

Copyright (C) 1998, 1999, 2003, 2004, 2009 Free Software Foundation, Inc.

Copyright (C) 1998, 1999, 2003, 2009 Free Software Foundation, Inc.

Copyright (C) 1999, 2000, 2001, 2002, 2003, 2004, 2005, 2006, 2007, 2008, 2009 Free Software Foundation, Inc.

Copyright (C) 1999, 2000, 2001, 2002, 2003, 2004, 2005, 2006, 2007, 2008, 2009 Free Software Foundation

Copyright (C) 1999, 2000, 2001, 2002, 2003, 2004, 2005, 2006, 2007, 2009 Free Software Foundation, Inc.

Copyright (C) 1999, 2000, 2001, 2002, 2003, 2004, 2005, 2006, 2007, 2008, 2009 Free Software Foundation, Inc.

Copyright (C) 1999, 2000, 2001, 2002, 2003, 2004, 2005, 2006, 2007, 2009 Free Software Foundation, Inc.

Copyright (C) 1999, 2000, 2001, 2002, 2003, 2004, 2005, 2006, 2009 Free Software Foundation

Copyright (C) 1999, 2000, 2001, 2002, 2003, 2004, 2005, 2009 Free Software Foundation, Inc.

Copyright (C) 1999, 2000, 2001, 2002, 2003, 2004, 2009 Free Software Foundation

Copyright (C) 1999, 2000, 2001, 2002, 2003, 2004, 2009 Free Software Foundation, Inc.

Copyright (C) 1999, 2000, 2001, 2002, 2003, 2005, 2009 Free Software Foundation

Copyright (C) 1999, 2000, 2001, 2002, 2003, 2005, 2009 Free Software Foundation, Inc.

Copyright (C) 1999, 2000, 2001, 2002, 2003, 2006, 2009 Free Software Foundation, Inc.

Copyright (C) 1999, 2000, 2001, 2002, 2003, 2009 Free Software Foundation

Copyright (C) 1999, 2000, 2001, 2002, 2004, 2005, 2009 Free Software Foundation, Inc.

Copyright (C) 1999, 2000, 2001, 2003, 2004, 2005, 2009 Free Software Foundation, Inc.

Copyright (C) 1999, 2000, 2001, 2003, 2009 Free Software Foundation

Copyright (C) 1999, 2000, 2001, 2004, 2005, 2009 Free Software Foundation, Inc.

Copyright (C) 1999, 2000, 2002, 2003, 2004, 2005, 2009 Free Software Foundation, Inc.

Copyright (C) 1999, 2000, 2002, 2003, 2005, 2009 Free Software Foundation

Copyright (C) 1999, 2000, 2002, 2003, 2009 Free Software Foundation

Copyright (C) 1999, 2000, 2002, 2003, 2009 Free Software Foundation, Inc.

Copyright (C) 1999, 2000, 2003, 2009 Free Software Foundation

Copyright (C) 1999, 2000, 2003, 2009 Free Software Foundation, Inc.

Copyright (C) 1999, 2000, 2009 Free Software Foundation, Inc.

Copyright (C) 1999, 2001, 2002, 2003, 2004, 2005, 2006, 2009 Free Software Foundation

Copyright (C) 1999, 2001, 2002, 2003, 2004, 2005, 2006, 2009 Free Software Foundation, Inc.

Copyright (C) 1999, 2001, 2002, 2003, 2004, 2005, 2009 Free Software Foundation, Inc.

Copyright (C) 1999, 2001, 2002, 2003, 2004, 2009 Free Software Foundation

Copyright (C) 1999, 2001, 2002, 2005, 2006, 2009 Free Software Foundation, Inc.

Copyright (C) 1999, 2001, 2003, 2004, 2009 Free Software Foundation

Copyright (C) 1999, 2001, 2003, 2007, 2009 Free Software Foundation, Inc.

Copyright (C) 1999, 2001, 2003, 2009 Free Software Foundation

Copyright (C) 1999, 2001, 2003, 2009 Free Software Foundation, Inc.

Copyright (C) 1999, 2001, 2004, 2005, 2009 Free Software Foundation, Inc.

Copyright (C) 1999, 2002, 2003, 2004, 2005, 2009 Free Software Foundation, Inc.

Copyright (C) 1999, 2002, 2003, 2004, 2009 Free Software Foundation, Inc.

Copyright (C) 1999, 2002, 2003, 2005, 2009 Free Software Foundation, Inc.

Copyright (C) 1999, 2002, 2003, 2009 Free Software Foundation, Inc.

Copyright (C) 1999, 2002, 2004, 2005, 2009 Free Software Foundation, Inc.

Copyright (C) 1999, 2002, 2009 Free Software Foundation, Inc.

Copyright (C) 1999, 2003, 2004, 2005, 2009 Free Software Foundation, Inc.

Copyright (C) 1999, 2003, 2005, 2009 Free Software Foundation

Copyright (C) 1999, 2003, 2005, 2009 Free Software Foundation, Inc.

Copyright (C) 1999, 2003, 2009 Free Software Foundation

Copyright (C) 1999, 2003, 2009 Free Software Foundation, Inc.

Copyright (C) 1999, 2004, 2005, 2009 Free Software Foundation, Inc.

Copyright (C) 1999, 2007, 2009 Free Software Foundation, Inc.

Copyright (C) 1999, 2009 Free Software Foundation, Inc.

Copyright (C) 1999-2001, 2002, 2003, 2004, 2005, 2009 Free Software Foundation, Inc.

Copyright (C) 1999-2001, 2002, 2003, 2009 Free Software Foundation, Inc.

Copyright (C) 2000, 2001, 2002 Free Software Foundation

Copyright (C) 2000, 2001, 2002 Free Software Foundation

Copyright (C) 2000, 2001, 2002, 2003, 2004, 2005, 2006, 2007, 2008, 2009 Free Software Foundation, Inc.

Copyright (C) 2000, 2001, 2002, 2003, 2004, 2005, 2006, 2007, 2008, 2009 Free Software Foundation, Inc.

Copyright (C) 2000, 2001, 2002, 2003, 2004, 2005, 2006, 2007, 2008, 2009 Free Software Foundation, Inc.

Copyright (C) 2000, 2001, 2002, 2003, 2004, 2005, 2006, 2007, 2009 Free Software Foundation, Inc.

Copyright (C) 2000, 2001, 2002, 2003, 2004, 2005, 2006, 2007, 2009 Free Software Foundation

Copyright (C) 2000, 2001, 2002, 2003, 2004, 2005, 2006, 2007, 2009 Free Software Foundation, Inc.

Copyright (C) 2000, 2001, 2002, 2003, 2004, 2005, 2006, 2009 Free Software Foundation

Copyright (C) 2000, 2001, 2002, 2003, 2004, 2005, 2006, 2009 Free Software Foundation, Inc.

Copyright (C) 2000, 2001, 2002, 2003, 2004, 2005, 2009 Free Software Foundation, Inc.

Copyright (C) 2000, 2001, 2002, 2003, 2004, 2006, 2007, 2009 Free Software Foundation, Inc.

Copyright (C) 2000, 2001, 2002, 2003, 2004, 2009 Free Software Foundation

Copyright (C) 2000, 2001, 2002, 2003, 2005, 2009 Free Software Foundation

Copyright (C) 2000, 2001, 2002, 2003, 2006, 2009 Free Software Foundation, Inc.

Copyright (C) 2000, 2001, 2002, 2003, 2007, 2009 Free Software Foundation

Copyright (C) 2000, 2001, 2002, 2003, 2009 Free Software Foundation

Copyright (C) 2000, 2001, 2002, 2003, 2009 Free Software Foundation, Inc.

Copyright (C) 2000, 2001, 2002, 2009 Free Software Foundation, Inc.

Copyright (C) 2000, 2001, 2003, 2004, 2005, 2006, 2009 Free Software Foundation, Inc.

Copyright (C) 2000, 2001, 2003, 2004, 2005, 2009 Free Software Foundation, Inc.

Copyright (C) 2000, 2001, 2003, 2004, 2009 Free Software Foundation, Inc.

Copyright (C) 2000, 2001, 2003, 2005, 2009 Free Software Foundation, Inc.

Copyright (C) 2000, 2001, 2003, 2009 Free Software Foundation, Inc.

Copyright (C) 2000, 2001, 2004, 2005, 2009 Free Software Foundation, Inc.

Copyright (C) 2000, 2001, 2005, 2006, 2009 Free Software Foundation, Inc.

Copyright (C) 2000, 2001, 2009 Free Software Foundation

Copyright (C) 2000, 2002, 2003, 2004, 2006, 2007, 2009 Free Software Foundation, Inc.

Copyright (C) 2000, 2002, 2003, 2004, 2009 Free Software Foundation

Copyright (C) 2000, 2002, 2003, 2005, 2009 Free Software Foundation

Copyright (C) 2000, 2002, 2003, 2009 Free Software Foundation

Copyright (C) 2000, 2002, 2003, 2009 Free Software Foundation, Inc.

Copyright (C) 2000, 2002, 2004, 2005, 2008, 2009 Free Software Foundation, Inc.

Copyright (C) 2000, 2002, 2004, 2005, 2009 Free Software Foundation, Inc.

Copyright (C) 2000, 2002, 2005, 2008, 2009 Free Software Foundation, Inc.

Copyright (C) 2000, 2002, 2005, 2009 Free Software Foundation, Inc.

Copyright (C) 2000, 2002, 2006, 2009 Free Software Foundation, Inc.

Copyright (C) 2000, 2002, 2009 Free Software Foundation, Inc.

Copyright (C) 2000, 2003, 2004, 2005, 2009 Free Software Foundation, Inc.

Copyright (C) 2000, 2003, 2004, 2009 Free Software Foundation

Copyright (C) 2000, 2003, 2004, 2009 Free Software Foundation, Inc.

Copyright (C) 2000, 2003, 2009 Free Software Foundation

Copyright (C) 2000, 2003, 2009 Free Software Foundation, Inc.

Copyright (C) 2000, 2005, 2009 Free Software Foundation, Inc.

Copyright (C) 2000, 2009 Free Software Foundation, Inc.

Copyright (C) 2001 Free Software Foundation, Inc.

Copyright (C) 2001 Free Software Foundation, Inc Benjamin Kosnik <bkoz@redhat.com>, 2001.

Copyright (C) 2001, 2002, 2003 Peter Dimov

Copyright (C) 2001, 2002, 2003, 2004, 2005, 2006, 2006, 2007, 2008, 2009 Free Software Foundation, Inc.

Copyright (C) 2001, 2002, 2003, 2004, 2005, 2006, 2007, 2008, 2009 Free Software Foundation, Inc.

Copyright (C) 2001, 2002, 2003, 2004, 2005, 2006, 2007, 2008, 2009 Free Software Foundation, Inc.

Copyright (C) 2001, 2002, 2003, 2004, 2005, 2006, 2007, 2008, 2009 Free Software Foundation

Copyright (C) 2001, 2002, 2003, 2004, 2005, 2006, 2007, 2008, 2009 Free Software Foundation, Inc.

Copyright (C) 2001, 2002, 2003, 2004, 2005, 2006, 2007, 2009 Free Software Foundation

Copyright (C) 2001, 2002, 2003, 2004, 2005, 2006, 2007, 2009 Free Software Foundation, Inc.

Copyright (C) 2001, 2002, 2003, 2004, 2005, 2006, 2008, 2009 Free Software Foundation, Inc.

Copyright (C) 2001, 2002, 2003, 2004, 2005, 2006, 2009 Free Software Foundation

Copyright (C) 2001, 2002, 2003, 2004, 2005, 2006, 2009 Free Software Foundation, Inc.

Copyright (C) 2001, 2002, 2003, 2004, 2005, 2006, 2009 Free Software Foundation

Copyright (C) 2001, 2002, 2003, 2004, 2005, 2009 Free Software Foundation, Inc.

Copyright (C) 2001, 2002, 2003, 2004, 2005, 2009 Free Software Foundation

Copyright (C) 2001, 2002, 2003, 2004, 2005, 2009 Free Software Foundation, Inc.

Copyright (C) 2001, 2002, 2003, 2004, 2008, 2009 Free Software Foundation, Inc.

Copyright (C) 2001, 2002, 2003, 2004, 2009 Free Software Foundation

Copyright (C) 2001, 2002, 2003, 2004, 2009 Free Software Foundation, Inc.

Copyright (C) 2001, 2002, 2003, 2005 Free Software Foundation, Inc.

Copyright (C) 2001, 2002, 2003, 2005, 2006, 2009 Free Software Foundation

Copyright (C) 2001, 2002, 2003, 2005, 2007, 2009 Free Software Foundation, Inc.

Copyright (C) 2001, 2002, 2003, 2005, 2009 Free Software Foundation

Copyright (C) 2001, 2002, 2003, 2005, 2009 Free Software Foundation, Inc.

Copyright (C) 2001, 2002, 2003, 2006, 2009 Free Software Foundation, Inc.

Copyright (C) 2001, 2002, 2003, 2009 Free Software Foundation

Copyright (C) 2001, 2002, 2003, 2009 Free Software Foundation, Inc.

Copyright (C) 2001, 2002, 2004, 2005, 2006, 2009 Free Software Foundation, Inc.

Copyright (C) 2001, 2002, 2004, 2005, 2007, 2008, 2009 Free Software Foundation, Inc.

Copyright (C) 2001, 2002, 2004, 2005, 2008 Free Software Foundation, Inc.

Copyright (C) 2001, 2002, 2004, 2005, 2009 Free Software Foundation

Copyright (C) 2001, 2002, 2004, 2005, 2009 Free Software Foundation, Inc.

Copyright (C) 2001, 2002, 2004, 2006, 2009 Free Software Foundation, Inc.

Copyright (C) 2001, 2002, 2004, 2009 Free Software Foundation, Inc.

Copyright (C) 2001, 2002, 2005, 2007, 2009 Free Software Foundation, Inc.

Copyright (C) 2001, 2002, 2005, 2008, 2009 Free Software Foundation, Inc.

Copyright (C) 2001, 2002, 2005, 2009 Free Software Foundation, Inc.

Copyright (C) 2001, 2002, 2009 Free Software Foundation, Inc.

Copyright (C) 2001, 2003, 2004, 2005, 2009 Free Software Foundation, Inc.

Copyright (C) 2001, 2003, 2004, 2009 Free Software Foundation, Inc.

Copyright (C) 2001, 2003, 2005 Free Software Foundation, Inc.

Copyright (C) 2001, 2003, 2005, 2009 Free Software Foundation

Copyright (C) 2001, 2003, 2007, 2009 Free Software Foundation, Inc.

Copyright (C) 2001, 2003, 2009 Free Software Foundation

Copyright (C) 2001, 2003, 2009 Free Software Foundation

Copyright (C) 2001, 2003, 2009 Free Software Foundation, Inc.

Copyright (C) 2001, 2004, 2005, 2008, 2009 Free Software Foundation, Inc.

Copyright (C) 2001, 2004, 2005, 2009 Free Software Foundation, Inc.

Copyright (C) 2001, 2004, 2009 Free Software Foundation, Inc.

Copyright (C) 2001, 2005, 2009 Free Software Foundation, Inc.

Copyright (C) 2001, 2007, 2009 Free Software Foundation, Inc.

Copyright (C) 2001, 2008, 2009 Free Software Foundation, Inc.

Copyright (C) 2001, 2009 Free Software Foundation

Copyright (C) 2001, 2009 Free Software Foundation, Inc.

Copyright (C) 2002 Peter Dimov

Copyright (C) 2002, 2003, 2004, 2005, 2006, 2007, 2008, 2009 Free Software Foundation, Inc.

Copyright (C) 2002, 2003, 2004, 2005, 2006, 2007, 2008, 2009 Free Software Foundation, Inc.

Copyright (C) 2002, 2003, 2004, 2005, 2006, 2007, 2008, 2009 Free Software Foundation

Copyright (C) 2002, 2003, 2004, 2005, 2006, 2007, 2009 Free Software Foundation, Inc.

Copyright (C) 2002, 2003, 2004, 2005, 2007, 2009 Free Software Foundation, Inc.

Copyright (C) 2002, 2003, 2004, 2005, 2009 Free Software Foundation

Copyright (C) 2002, 2003, 2004, 2005, 2009 Free Software Foundation, Inc.

Copyright (C) 2002, 2003, 2004, 2007, 2009 Free Software Foundation, Inc.
Copyright (C) 2002, 2003, 2005 Free Software Foundation, Inc.
Copyright (C) 2002, 2003, 2005, 2009 Free Software Foundation, Inc.
Copyright (C) 2002, 2003, 2007, 2009 Free Software Foundation, Inc.
Copyright (C) 2002, 2003, 2009 Free Software Foundation
Copyright (C) 2002, 2003, 2009 Free Software Foundation, Inc.
Copyright (C) 2002, 2004, 2005, 2007, 2009 Free Software Foundation, Inc.
Copyright (C) 2002, 2004, 2005, 2009 Free Software Foundation, Inc.
Copyright (C) 2002, 2004, 2006, 2008, 2009 Free Software Foundation, Inc.
Copyright (C) 2002, 2004, 2009 Free Software Foundation
Copyright (C) 2002, 2004, 2009 Free Software Foundation, Inc.
Copyright (C) 2002, 2005, 2007, 2009 Free Software Foundation, Inc.
Copyright (C) 2002, 2007, 2009 Free Software Foundation, Inc.
Copyright (C) 2002, 2009 Free Software Foundation
Copyright (C) 2002, 2009 Free Software Foundation, Inc.
Copyright (C) 2003 Free Software Foundation, Inc.
Copyright (C) 2003, 2004, 2005 Free Software Foundation, Inc.
Copyright (C) 2003, 2004, 2005, 2006, 2007, 2008, 2009 Free Software Foundation
Copyright (C) 2003, 2004, 2005, 2006, 2007, 2008, 2009 Free Software Foundation, Inc.
Copyright (C) 2003, 2004, 2005, 2006, 2007, 2008, 2009 Free Software Foundation, Inc.
Copyright (C) 2003, 2004, 2005, 2006, 2007, 2009 Free Software Foundation, Inc.
Copyright (C) 2003, 2004, 2005, 2006, 2007, 2009 Free Software Foundation
Copyright (C) 2003, 2004, 2005, 2006, 2007, 2009 Free Software Foundation, Inc.
Copyright (C) 2003, 2004, 2005, 2006, 2009 Free Software Foundation, Inc.
Copyright (C) 2003, 2004, 2005, 2006, 2009 Free Software Foundation
Copyright (C) 2003, 2004, 2005, 2006, 2009 Free Software Foundation, Inc.
Copyright (C) 2003, 2004, 2005, 2007, 2008, 2009 Free Software Foundation, Inc.
Copyright (C) 2003, 2004, 2005, 2007, 2009 Free Software Foundation
Copyright (C) 2003, 2004, 2005, 2009 Free Software Foundation, Inc.
Copyright (C) 2003, 2004, 2005, 2009 Free Software Foundation, Inc.
Copyright (C) 2003, 2004, 2006, 2009 Free Software Foundation, Inc.
Copyright (C) 2003, 2004, 2009 Free Software Foundation, Inc.
Copyright (C) 2003, 2004, 2009 Free Software Foundation
Copyright (C) 2003, 2004, 2009 Free Software Foundation, Inc.
Copyright (C) 2003, 2005, 2006, 2009 Free Software Foundation, Inc.

Copyright (C) 2003, 2005, 2006, 2009 Free Software Foundation, Inc.
Copyright (C) 2003, 2005, 2009 Free Software Foundation
Copyright (C) 2003, 2005, 2009 Free Software Foundation, Inc.
Copyright (C) 2003, 2006, 2009 Free Software Foundation, Inc.
Copyright (C) 2003, 2007, 2009 Free Software Foundation, Inc.
Copyright (C) 2003, 2009 Free Software Foundation, Inc.
Copyright (C) 2003, 2009 Free Software Foundation
Copyright (C) 2003, 2009 Free Software Foundation, Inc.
Copyright (C) 2004 Ami Tavory and Vladimir Dreizin, IBM-HRL.
Copyright (C) 2004, 2005 Free Software Foundation, Inc.
Copyright (C) 2004, 2005, 2006, 2007, 2008, 2009 Free Software Foundation, Inc.
Copyright (C) 2004, 2005, 2006, 2007, 2008, 2009 Free Software Foundation, Inc.
Copyright (C) 2004, 2005, 2006, 2007, 2008, 2009 Free Software Foundation, Inc.
Copyright (C) 2004, 2005, 2006, 2007, 2008, 2009 Free Software Foundation
Copyright (C) 2004, 2005, 2006, 2007, 2008, 2009 Free Software Foundation, Inc.
Copyright (C) 2004, 2005, 2006, 2007, 2009 Free Software Foundation
Copyright (C) 2004, 2005, 2006, 2007, 2009 Free Software Foundation, Inc.
Copyright (C) 2004, 2005, 2006, 2008, 2009 Free Software Foundation, Inc.
Copyright (C) 2004, 2005, 2006, 2009 Free Software Foundation
Copyright (C) 2004, 2005, 2006, 2009 Free Software Foundation, Inc.
Copyright (C) 2004, 2005, 2007, 2009 Free Software Foundation
Copyright (C) 2004, 2005, 2007, 2009 Free Software Foundation, Inc.
Copyright (C) 2004, 2005, 2008, 2009 Free Software Foundation, Inc.
Copyright (C) 2004, 2005, 2009 Free Software Foundation
Copyright (C) 2004, 2005, 2009 Free Software Foundation, Inc.
Copyright (C) 2004, 2006, 2008, 2009 Free Software Foundation, Inc.
Copyright (C) 2004, 2006, 2009 Free Software Foundation, Inc.
Copyright (C) 2004, 2007, 2009 Free Software Foundation, Inc.
Copyright (C) 2004, 2008, 2009 Free Software Foundation, Inc.
Copyright (C) 2004, 2009 Free Software Foundation
Copyright (C) 2004, 2009 Free Software Foundation, Inc.
Copyright (C) 2005 Free Software Foundation, Inc.
Copyright (C) 2005, 2006, 2007, 2008, 2009 Free Software Foundation, Inc.
Copyright (C) 2005, 2006, 2007, 2008, 2009 Free Software Foundation
Copyright (C) 2005, 2006, 2007, 2008, 2009 Free Software Foundation, Inc.

Copyright (C) 2005, 2006, 2007, 2009 Free Software Foundation

Copyright (C) 2005, 2006, 2007, 2009 Free Software Foundation, Inc.

Copyright (C) 2005, 2006, 2008, 2009 Free Software Foundation, Inc.

Copyright (C) 2005, 2006, 2009 Free Software Foundation, Inc.

Copyright (C) 2005, 2006, 2009 Free Software Foundation, Inc.

Copyright (C) 2005, 2007, 2009 Free Software Foundation, Inc.

Copyright (C) 2005, 2008, 2009 Free Software Foundation

Copyright (C) 2005, 2009 Free Software Foundation

Copyright (C) 2005, 2009 Free Software Foundation, Inc.

Copyright (C) 2006 Free Software Foundation, Inc.

Copyright (C) 2006, 2007, 2008, 2009 Free Software Foundation, Inc.

Copyright (C) 2006, 2007, 2008, 2009 Free Software Foundation

Copyright (C) 2006, 2007, 2008, 2009 Free Software Foundation, Inc.

Copyright (C) 2006, 2007, 2009 Free Software Foundation

Copyright (C) 2006, 2007, 2009 Free Software Foundation, Inc.

Copyright (C) 2006, 2008, 2009 Free Software Foundation, Inc.

Copyright (C) 2006, 2009 Free Software Foundation, Inc.

Copyright (C) 2006, 2009 Free Software Foundation

Copyright (C) 2006, 2009 Free Software Foundation

Copyright (C) 2006, 2009 Free Software Foundation, Inc.

Copyright (C) 2006-2007, 2009 Free Software Foundation, Inc.

Copyright (C) 2007, 2008, 2009 Free Software Foundation, Inc.

Copyright (C) 2007, 2008, 2009 Free Software Foundation

Copyright (C) 2007, 2008, 2009 Free Software Foundation, Inc.

Copyright (C) 2007, 2009 Free Software Foundation, Inc.

Copyright (C) 2007, 2009 Free Software Foundation

Copyright (C) 2007, 2009 Free Software Foundation, Inc.

Copyright (C) 2008, 2009 Free Software Foundation, Inc.

Copyright (C) 2008, 2009 Free Software Foundation

Copyright (C) 2008, 2009 Free Software Foundation, Inc.

Copyright (C) 2009 Free Software Foundation

Copyright (C) 2009 Free Software Foundation, Inc.

Copyright (c) 1994 Hewlett-Packard Company

Copyright (c) 1996 Silicon Graphics Computer Systems, Inc.

Copyright (c) 1996,1997 Silicon Graphics

Copyright (c) 1996,1997 Silicon Graphics Computer Systems, Inc.

Copyright (c) 1996-1997 Silicon Graphics Computer Systems, Inc.

Copyright (c) 1996-1998 Silicon Graphics Computer Systems, Inc.

Copyright (c) 1996-1999 Silicon Graphics Computer Systems, Inc.

Copyright (c) 1997 Silicon Graphics Computer Systems, Inc.

Copyright (c) 1997-1999 Silicon Graphics Computer Systems, Inc.

Copyright (c) 1998 Silicon Graphics Computer Systems, Inc.

Copyright (c) 2001, 2002, 2003 Peter Dimov and Multi Media Ltd.

Copyright 2008 FSF

Copyright Ami Tavory and Vladimir Dreizin, IBM-HRL, 2004, and Benjamin Kosnik, Red Hat, 2004.

Copyright © 1999 The Open Group/The Institute of Electrical and Electronics Engineers, Inc.

Copyright © 1999 ISO

Copyright © 2000 Addison Wesley Longman, Inc.

Copyright © 2000 Addison Wesley, Inc.

Copyright © 2002 OOPSLA

Copyright © 2004, 2005, 2006, 2007 Free Software Foundation, Inc

Copyright © 2004, 2005, 2006, 2007 Free Software Foundation, Inc

Copyright © 2007 FSF

Copyright © 2007 Free Software Foundation, Inc.

Open Source Software: libgcc - 4.4.1

Enclosed you'll find the license conditions and copyright notices applicable for Open Source Software libgcc - 4.4.1

License conditions:

1 GCC is free software; you can redistribute it and/or modify it under the terms of the GNU General Public License as published by the Free Software Foundation; either version 3, or (at your option) any later version.
GCC is distributed in the hope that it will be useful, but WITHOUT ANY WARRANTY; without even the implied warranty of MERCHANTABILITY or FITNESS FOR A PARTICULAR PURPOSE. See the GNU General Public License for more details.
Under Section 7 of GPL version 3, you are granted additional permissions described in the GCC Runtime Library Exception, version 3.1, as published by the Free Software Foundation.
You should have received a copy of the GNU General Public License and a copy of the GCC Runtime Library Exception along with this program; see the files COPYING3 and COPYING.RUNTIME respectively. If not, see <http://www.gnu.org/licenses/>.

GCC RUNTIME LIBRARY EXCEPTION

Version 3.1, 31 March 2009

Copyright (C) 2009 Free Software Foundation, Inc. <http://fsf.org/>

Everyone is permitted to copy and distribute verbatim copies of this license document, but changing it is not allowed.

This GCC Runtime Library Exception ("Exception") is an additional permission under section 7 of the GNU General Public License, version 3 ("GPLv3"). It applies to a given file (the "Runtime Library") that bears a notice placed by the copyright holder of the file stating that the file is governed by GPLv3 along with this Exception.

When you use GCC to compile a program, GCC may combine portions of certain GCC header files and runtime libraries with the compiled program. The purpose of this Exception is to allow compilation of non-GPL (including proprietary) programs to use, in this way, the header files and runtime libraries covered by this Exception.

0. Definitions.

A file is an "Independent Module" if it either requires the Runtime Library for execution after a Compilation Process, or makes use of an interface provided by the Runtime Library, but is not otherwise based on the Runtime Library.

"GCC" means a version of the GNU Compiler Collection, with or without modifications, governed by version 3 (or a specified later version) of the GNU General Public License (GPL) with the option of using any subsequent versions published by the FSF.

"GPL-compatible Software" is software whose conditions of propagation, modification and use would permit combination with GCC in accord with the license of GCC.

"Target Code" refers to output from any compiler for a real or virtual target processor architecture, in executable form or suitable for input to an assembler, loader, linker and/or execution phase. Notwithstanding that, Target Code does not include data in any format that is used as a compiler intermediate representation, or used for producing a compiler intermediate representation.

The "Compilation Process" transforms code entirely represented in non-intermediate languages designed for human-written code, and/or in Java Virtual Machine byte code, into Target Code. Thus, for example, use of source code generators and preprocessors need not be considered part of the Compilation Process, since the Compilation Process can be understood as starting with the output of the generators or preprocessors.

A Compilation Process is "Eligible" if it is done using GCC, alone or with other GPL-compatible software, or if it is done without using any work based on GCC. For example, using non-GPL-compatible Software to optimize any GCC intermediate representations would not qualify as an Eligible Compilation Process.

1. Grant of Additional Permission.

You have permission to propagate a work of Target Code formed by combining the Runtime Library with Independent Modules, even if such propagation would otherwise violate the terms of GPLv3, provided that all Target Code was generated by Eligible Compilation Processes. You may then convey such a combination under terms of your choice, consistent with the licensing of the Independent Modules.

2. No Weakening of GCC Copyright.

The availability of this Exception does not imply any general presumption that third-party software is unaffected by the copyright requirements of the license of GCC.

GNU GENERAL PUBLIC LICENSE

Version 3, 29 June 2007

Copyright © 2007 Free Software Foundation, Inc. <http://fsf.org/>

Everyone is permitted to copy and distribute verbatim copies of this license document, but changing it is not allowed.
Preamble

The GNU General Public License is a free, copyright license for software and other kinds of works.

The licenses for most software and other practical works are designed to take away your freedom to share and change the works. By contrast, the GNU General Public License is intended to guarantee your freedom to share and change all versions of a program--to make sure it remains free software for all its users. We, the Free Software Foundation, use the GNU General Public License for most of our software; it applies also to any other work released this way by its authors. You can apply it to your programs, too.

When we speak of free software, we are referring to freedom, not price. Our General Public Licenses are designed to make sure that you have the freedom to distribute copies of free software (and charge for them if you wish), that you receive source code or can get it if you want it, that you can change the software or use pieces of it in new free programs, and that you know you can do these things.

To protect your rights, we need to prevent others from denying you these rights or asking you to surrender the rights. Therefore, you have certain responsibilities if you distribute copies of the software, or if you modify it: responsibilities to respect the freedom of others.

For example, if you distribute copies of such a program, whether gratis or for a fee, you must pass on to the recipients the same freedoms that you received. You must make sure that they, too, receive or can get the source code. And you must show them these terms so they know their rights.

Developers that use the GNU GPL protect your rights with two steps: (1) assert copyright on the software, and (2) offer you this License giving you legal permission to copy, distribute and/or modify it.

For the developers' and authors' protection, the GPL clearly explains that there is no warranty for this free software. For both users' and authors' sake, the GPL requires that modified versions be marked as changed, so that their problems will not be attributed erroneously to authors of previous versions.

Some devices are designed to deny users access to install or run modified versions of the software inside them, although the manufacturer can do so. This is fundamentally incompatible with the aim of protecting users' freedom to change the software. The systematic pattern of such abuse occurs in the area of products for individuals to use, which is precisely where it is most unacceptable. Therefore, we have designed this version of the GPL to prohibit the practice for those products. If such problems arise substantially in other domains, we stand ready to extend this provision to those domains in future versions of the GPL, as needed to protect the freedom of users.

Finally, every program is threatened constantly by software patents. States should not allow patents to restrict development and use of software on general-purpose computers, but in those that do, we wish to avoid the special danger that patents applied to a free program could make it effectively proprietary. To prevent this, the GPL assures that patents cannot be used to render the program non-free.

The precise terms and conditions for copying, distribution and modification follow.
TERMS AND CONDITIONS

0. Definitions.

“This License refers to version 3 of the GNU General Public License.

“Copyright also means copyright-like laws that apply to other kinds of works, such as semiconductor masks.

“The Program refers to any copyrightable work licensed under this License. Each licensee is addressed as “you”. “Licensees” and “recipients” may be individuals or organizations.

To “modify” a work means to copy from or adapt all or part of the work in a fashion requiring copyright permission, other than the making of an exact copy. The resulting work is called a “modified version” of the earlier work or a work “based on” the earlier work.

A “covered work” means either the unmodified Program or a work based on the Program.

To “propagate” a work means to do anything with it that, without permission, would make you directly or secondarily liable for infringement under applicable copyright law, except executing it on a computer or modifying a private copy. Propagation includes copying, distribution (with or without modification), making available to the public, and in some countries other activities as well.

To “convey” a work means any kind of propagation that enables other parties to make or receive copies. Mere interaction with a user through a computer network, with no transfer of a copy, is not conveying.

An interactive user interface displays “Appropriate Legal Notices” to the extent that it includes a convenient and prominently visible feature that (1) displays an appropriate copyright notice, and (2) tells the user that there is no warranty for the work (except to the extent that warranties are provided),

that licensees may convey the work under this License, and how to view a copy of this License. If the interface presents a list of user commands or options, such as a menu, a prominent item in the list meets this criterion.

1. Source Code.

The “source code” for a work means the preferred form of the work for making modifications to it. “Object code” means any non-source form of a work.

A “Standard Interface” means an interface that either is an official standard defined by a recognized standards body, or, in the case of interfaces specified for a particular programming language, one that is widely used among developers working in that language.

The “System Libraries” of an executable work include anything, other than the work as a whole, that (a) is included in the normal form of packaging a Major Component, but which is not part of that Major Component, and (b) serves only to enable use of the work with that Major Component, or to implement a Standard Interface for which an implementation is available to the public in source code form. A “Major Component”, in this context, means a major essential component (kernel, window system, and so on) of the specific operating system (if any) on which the executable work runs, or a compiler used to produce the work, or an object code interpreter used to run it.

The “Corresponding Source” for a work in object code form means all the source code needed to generate, install, and (for an executable work) run the object code and to modify the work, including scripts to control those activities. However, it does not include the work's System Libraries, or general-purpose tools or generally available free programs which are used unmodified in performing those activities but which are not part of the work. For example, Corresponding Source includes interface definition files associated with source files for the work, and the source code for shared libraries and dynamically linked subprograms that the work is specifically designed to require, such as by intimate data communication or control flow between those subprograms and other parts of the work.

The Corresponding Source need not include anything that users can regenerate automatically from other parts of the Corresponding Source.

The Corresponding Source for a work in source code form is that same work.

2. Basic Permissions.

All rights granted under this License are granted for the term of copyright on the Program, and are irrevocable provided the stated conditions are met. This License explicitly affirms your unlimited permission to run the unmodified Program. The output from running a covered work is covered by this License only if the output, given its content, constitutes a covered work. This License acknowledges your rights of fair use or other equivalent, as provided by copyright law.

You may make, run and propagate covered works that you do not convey, without conditions so long as your license otherwise remains in force. You may convey covered works to others for the sole purpose of having them make modifications exclusively for you, or provide you with facilities for running those works, provided that you comply with the terms of this License in conveying all material for which you do not control copyright. Those thus making or running the covered works for you must do so exclusively on your behalf, under your direction and control, on terms that prohibit them from making any copies of your copyrighted material outside their relationship with you.

Conveying under any other circumstances is permitted solely under the conditions stated below. Sublicensing is not allowed; section 10 makes it unnecessary.

3. Protecting Users' Legal Rights From Anti-Circumvention Law.

No covered work shall be deemed part of an effective technological measure under any applicable law fulfilling obligations under article 11 of the WIPO copyright treaty adopted on 20 December 1996, or similar laws prohibiting or restricting circumvention of such measures.

When you convey a covered work, you waive any legal power to forbid circumvention of technological measures to the extent such circumvention is effected by exercising rights under this License with respect to the covered work, and you disclaim any intention to limit operation or modification of the work as a means of enforcing, against the work's users, your or third parties' legal rights to forbid circumvention of technological measures.

4. Conveying Verbatim Copies.

You may convey verbatim copies of the Program's source code as you receive it, in any medium, provided that you conspicuously and appropriately publish on each copy an appropriate copyright notice; keep intact all notices stating that this License and any non-permissive terms added in accord with section 7 apply to the code; keep intact all notices of the absence of any warranty; and give all recipients a copy of this License along with the Program.

You may charge any price or no price for each copy that you convey, and you may offer support or warranty protection for a fee.

5. Conveying Modified Source Versions.

You may convey a work based on the Program, or the modifications to produce it from the Program, in the form of source code under the terms of section 4, provided that you also meet all of these conditions:

a) The work must carry prominent notices stating that you modified it, and giving a relevant date.
b) The work must carry prominent notices stating that it is released under this License and any conditions added under section 7. This requirement modifies the requirement in section 4 to “keep intact all notices”.
c) You must license the entire work, as a whole, under this License to anyone who comes into possession of a copy. This License will therefore apply, along with any applicable section 7 additional terms, to the whole of the work, and all its parts, regardless of how they are packaged. This License gives no permission to license the work in any other way, but it does not invalidate such permission if you have separately received it.
d) If the work has interactive user interfaces, each must display Appropriate Legal Notices; however, if the Program has interactive interfaces that do not display Appropriate Legal Notices, your work need not make them do so.

A compilation of a covered work with other separate and independent works, which are not by their nature extensions of the covered work, and which are not combined with it such as to form a larger program, in or on a volume of a storage or distribution medium, is called an “aggregate” if the compilation and its resulting copyright are not used to limit the access or legal rights of the compilation's users beyond what the individual works permit. Inclusion of a covered work in an aggregate does not cause this License to apply to the other parts of the aggregate.

6. Conveying Non-Source Forms.

You may convey a covered work in object code form under the terms of sections 4 and 5, provided that you also convey the machine-readable Corresponding Source under the terms of this License, in one of these ways:

a) Convey the object code in, or embodied in, a physical product (including a physical distribution medium), accompanied by the Corresponding Source fixed on a durable physical medium customarily used for software interchange.
b) Convey the object code in, or embodied in, a physical product (including a physical distribution medium), accompanied by a written offer, valid for at least three years and valid for as long as you offer spare parts or customer support for that product model, to give anyone who possesses the object code either (1) a copy of the Corresponding Source for all the software in the product that is covered by this License, on a durable physical medium customarily used for software interchange, for a price no more than your reasonable cost of physically performing this conveying of source, or (2) access to copy the Corresponding Source from a network server at no charge.
c) Convey individual copies of the object code with a copy of the written offer to provide the Corresponding Source. This alternative is allowed only occasionally and noncommercially, and only if you received the object code with such an offer, in accord with subsection 6b.

d) Convey the object code by offering access from a designated place (gratis or for a charge), and offer equivalent access to the Corresponding Source in the same way through the same place at no further charge. You need not require recipients to copy the Corresponding Source along with the object code. If the place to copy the object code is a network server, the Corresponding Source may be on a different server (operated by you or a third party) that supports equivalent copying facilities, provided you maintain clear directions next to the object code saying where to find the Corresponding Source. Regardless of what server hosts the Corresponding Source, you remain obligated to ensure that it is available for as long as needed to satisfy these requirements.
e) Convey the object code using peer-to-peer transmission, provided you inform other peers where the object code and Corresponding Source of the work are being offered to the general public at no charge under subsection 6d.

A separable portion of the object code, whose source code is excluded from the Corresponding Source as a System Library, need not be included in conveying the object code work.

A “User Product” is either (1) a “consumer product”, which means any tangible personal property which is normally used for personal, family, or household purposes, or (2) anything designed or sold for incorporation into a dwelling. In determining whether a product is a consumer product, doubtful cases shall be resolved in favor of coverage. For a particular product received by a particular user, “normally used” refers to a typical or common use of that class of product, regardless of the status of the particular user or of the way in which the particular user actually uses, or expects or is expected to use, the product. A product is a consumer product regardless of whether the product has substantial commercial, industrial or non-consumer uses, unless such uses represent the only significant mode of use of the product.

“Installation Information” for a User Product means any methods, procedures, authorization keys, or other information required to install and execute modified versions of a covered work in that User Product from a modified version of its Corresponding Source. The information must suffice to ensure that the continued functioning of the modified object code is in no case prevented or interfered with solely because modification has been made.

If you convey an object code work under this section in, or with, or specifically for use in, a User Product, and the conveying occurs as part of a transaction in which the right of possession and use of the User Product is transferred to the recipient in perpetuity or for a fixed term (regardless of how the transaction is characterized), the Corresponding Source conveyed under this section must be accompanied by the Installation Information. But this requirement does not apply if neither you nor any third party retains the ability to install modified object code on the User Product (for example, the work has been installed in ROM).

The requirement to provide Installation Information does not include a requirement to continue to provide support service, warranty, or updates for a work that has been modified or installed by the recipient, or for the User Product in which it has been modified or installed. Access to a network may be denied when the modification itself materially and adversely affects the operation of the network or violates the rules and protocols for communication across the network.

Corresponding Source conveyed, and Installation Information provided, in accord with this section must be in a format that is publicly documented (and with an implementation available to the public in source code form), and must require no special password or key for unpacking, reading or copying.

7. Additional Terms.

Additional permissions" are terms that supplement the terms of this License by making exceptions from one or more of its conditions. Additional permissions that are applicable to the entire Program shall be treated as though they were included in this License, to the extent that they are valid under applicable law. If additional permissions apply only to part of the Program, that part may be used separately under those permissions, but the entire Program remains governed by this License without regard to the additional permissions.

When you convey a copy of a covered work, you may at your option remove any additional permissions from that copy, or from any part of it. (Additional permissions may be written to require their own removal in certain cases when you modify the work.) You may place additional permissions on material, added by you to a covered work, for which you have or can give appropriate copyright permission.

Notwithstanding any other provision of this License, for material you add to a covered work, you may (if authorized by the copyright holders of that material) supplement the terms of this License with terms:

a) Disclaiming warranty or limiting liability differently from the terms of sections 15 and 16 of this License; or
b) Requiring preservation of specified reasonable legal notices or author attributions in that material or in the Appropriate Legal Notices displayed by works containing it; or
c) Prohibiting misrepresentation of the origin of that material, or requiring that modified versions of such material be marked in reasonable ways as different from the original version; or
d) Limiting the use for publicity purposes of names of licensors or authors of the material; or
e) Declining to grant rights under trademark law for use of some trade names, trademarks, or service marks; or
f) Requiring indemnification of licensors and authors of that material by anyone who conveys the material (or modified versions of it) with contractual assumptions of liability to the recipient, for any liability that these contractual assumptions directly impose on those licensors and authors.

All other non-permissive additional terms are considered “further restrictions” within the meaning of section 10. If the Program as you received it, or any part of it, contains a notice stating that it is governed by this License along with a term that is a further restriction, you may remove that term. If a license document contains a further restriction but permits relicensing or conveying under this License, you may add to a covered work material governed by the terms of that license document, provided that the further restriction does not survive such relicensing or conveying.

If you add terms to a covered work in accord with this section, you must place, in the relevant source files, a statement of the additional terms that apply to those files, or a notice indicating where to find the applicable terms.

Additional terms, permissive or non-permissive, may be stated in the form of a separately written license, or stated as exceptions; the above requirements apply either way.

8. Termination.

You may not propagate or modify a covered work except as expressly provided under this License. Any attempt otherwise to propagate or modify it is void, and will automatically terminate your rights under this License (including any patent licenses granted under the third paragraph of section 11).

However, if you cease all violation of this License, then your license from a particular copyright holder is reinstated (a) provisionally, unless and until the copyright holder explicitly and finally terminates your license, and (b) permanently, if the copyright holder fails to notify you of the violation by some reasonable means prior to 60 days after the cessation.

Moreover, your license from a particular copyright holder is reinstated permanently if the copyright holder notifies you of the violation by some reasonable means, this is the first time you have received notice of violation of this License (for any work) from that copyright holder, and you cure the violation prior to 30 days after your receipt of the notice.

Termination of your rights under this section does not terminate the licenses of parties who have received copies or rights from you under this License. If your rights have been terminated and not permanently reinstated, you do not qualify to receive new licenses for the same material under section 10.

9. Acceptance Not Required for Having Copies.

You are not required to accept this License in order to receive or run a copy of the Program. Ancillary propagation of a covered work occurring solely as a consequence of using peer-to-peer transmission to receive a copy likewise does not require acceptance. However, nothing other than this License grants you permission to propagate or modify any covered work. These actions infringe copyright if you do not accept this License. Therefore, by modifying or propagating a covered work, you indicate your acceptance of this License to do so.

10. Automatic Licensing of Downstream Recipients.

Each time you convey a covered work, the recipient automatically receives a license from the original licensors, to run, modify and propagate that work, subject to this License. You are not responsible for enforcing compliance by third parties with this License.

An “entity transaction” is a transaction transferring control of an organization, or substantially all assets of one, or subdividing an organization, or merging organizations. If propagation of a covered work results from an entity transaction, each party to that transaction who receives a copy of the work also receives whatever licenses to the work the party's predecessor in interest had or could give under the previous paragraph, plus a right to possession of the Corresponding Source of the work from the predecessor in interest, if the predecessor has it or can get it with reasonable efforts.

You may not impose any further restrictions on the exercise of the rights granted or affirmed under this License. For example, you may not impose a license fee, royalty, or other charge for exercise of rights granted under this License, and you may not initiate litigation (including a cross-claim or counterclaim in a lawsuit) alleging that any patent claim is infringed by making, using, selling, offering for sale, or importing the Program or any portion of it.

11. Patents.

A “contributor” is a copyright holder who authorizes use under this License of the Program or a work on which the Program is based. The work thus licensed is called the contributor's “contributor version”.

A contributor's “essential patent claims” are all patent claims owned or controlled by the contributor, whether already acquired or hereafter acquired, that would be infringed by some manner, permitted by this License, of making, using, or selling its contributor version, but do not include claims that would be infringed only as a consequence of further modification of the contributor version. For purposes of this definition, “control” includes the right to grant patent sublicenses in a manner consistent with the requirements of this License.

Each contributor grants you a non-exclusive, worldwide, royalty-free patent license under the contributor's essential patent claims, to make, use, sell, offer for sale, import and otherwise run, modify and propagate the contents of its contributor version.

In the following three paragraphs, a “patent license” is any express agreement or commitment, however denominated, not to enforce a patent (such as an express permission to practice a patent or covenant not to sue for patent infringement). To “grant” such a patent license to a party means to make such an agreement or commitment not to enforce a patent against the party.

If you convey a covered work, knowingly relying on a patent license, and the Corresponding Source of the work is not available for anyone to copy, free of charge and under the terms of this License, through a publicly available network server or other readily accessible means, then you must either (1) cause the Corresponding Source to be so available, or (2) arrange to deprive yourself of the benefit of the patent license for this particular work, or (3) arrange, in a manner consistent with the requirements of this License, to extend the patent license to downstream recipients. “Knowingly relying” means you have actual knowledge that, but for the patent license, your conveying the covered work in a country, or your recipient's use of the covered work in a country, would infringe one or more identifiable patents in that country that you have reason to believe are valid.

If, pursuant to or in connection with a single transaction or arrangement, you convey, or propagate by procuring conveyance of, a covered work, and grant a patent license to some of the parties receiving the covered work authorizing them to use, propagate, modify or convey a specific copy of the covered work, then the patent license you grant is automatically extended to all recipients of the covered work and works based on it.

A patent license is “discriminatory” if it does not include within the scope of its coverage, prohibits the exercise of, or is conditioned on the non-exercise of one or more of the rights that are specifically granted under this License. You may not convey a covered work if you are a party to an arrangement with a third party that is in the business of distributing software, under which you make payment to the third party based on the extent of your activity of conveying the work, and under which the third party grants, to any of the parties who would receive the covered work from you, a discriminatory patent license (a) in connection with copies of the covered work conveyed by you (or copies made from those copies), or (b) primarily for and in connection with specific products or compilations that contain the covered work, unless you entered into that arrangement, or that patent license was granted, prior to 28 March 2007.

Nothing in this License shall be construed as excluding or limiting any implied license or other defenses to infringement that may otherwise be available to you under applicable patent law.

12. No Surrender of Others' Freedom.

If conditions are imposed on you (whether by court order, agreement or otherwise) that contradict the conditions of this License, they do not excuse you from the conditions of this License. If you cannot convey a covered work so as to satisfy simultaneously your obligations under this License and any other pertinent obligations, then as a consequence you may not convey it at all. For example, if you agree to terms that obligate you to collect a royalty for further conveying from those to whom you convey the Program, the only way you could satisfy both those terms and this License would be to refrain entirely from conveying the Program.

13. Use with the GNU Affero General Public License.

Notwithstanding any other provision of this License, you have permission to link or combine any covered work with a work licensed under version 3 of the GNU Affero General Public License into a single combined work, and to convey the resulting work. The terms of this License will continue to apply to the part which is the covered work, but the special requirements of the GNU Affero General Public License, section 13, concerning interaction through a network will apply to the combination as such.

14. Revised Versions of this License.

The Free Software Foundation may publish revised and/or new versions of the GNU General Public License from time to time. Such new versions will be similar in spirit to the present version, but may differ in detail to address new problems or concerns.

Each version is given a distinguishing version number. If the Program specifies that a certain numbered version of the GNU General Public License “or any later version” applies to it, you have the option of following the terms and conditions either of that numbered version or of any later version published by the Free Software Foundation. If the Program does not specify a version number of the GNU General Public License, you may choose any version ever published by the Free Software Foundation.

If the Program specifies that a proxy can decide which future versions of the GNU General Public License can be used, that proxy's public statement of acceptance of a version permanently authorizes you to choose that version for the Program.

Later license versions may give you additional or different permissions. However, no additional obligations are imposed on any author or copyright holder as a result of your choosing to follow a later version.

15. Disclaimer of Warranty.

THERE IS NO WARRANTY FOR THE PROGRAM, TO THE EXTENT PERMITTED BY APPLICABLE LAW. EXCEPT WHEN OTHERWISE STATED IN WRITING THE COPYRIGHT HOLDERS AND/OR OTHER PARTIES PROVIDE THE PROGRAM “AS IS” WITHOUT WARRANTY OF ANY KIND, EITHER EXPRESSED OR IMPLIED, INCLUDING, BUT NOT LIMITED TO, THE IMPLIED WARRANTIES OF MERCHANTABILITY AND FITNESS FOR A PARTICULAR PURPOSE. THE ENTIRE RISK AS TO THE QUALITY AND PERFORMANCE OF THE PROGRAM IS WITH YOU. SHOULD THE PROGRAM PROVE DEFECTIVE, YOU ASSUME THE COST OF ALL NECESSARY SERVICING, REPAIR OR CORRECTION.

16. Limitation of Liability.

IN NO EVENT UNLESS REQUIRED BY APPLICABLE LAW OR AGREED TO IN WRITING WILL ANY COPYRIGHT HOLDER, OR ANY OTHER PARTY WHO MODIFIES AND/OR CONVEYS THE PROGRAM AS PERMITTED ABOVE, BE LIABLE TO YOU FOR DAMAGES, INCLUDING ANY GENERAL, SPECIAL, INCIDENTAL OR CONSEQUENTIAL DAMAGES ARISING OUT OF THE USE OR INABILITY TO USE THE PROGRAM (INCLUDING BUT NOT LIMITED TO LOSS OF DATA OR DATA BEING RENDERED INACCURATE OR LOSSES SUSTAINED BY YOU OR THIRD PARTIES OR A FAILURE OF THE PROGRAM TO OPERATE WITH ANY OTHER PROGRAMS), EVEN IF SUCH HOLDER OR OTHER PARTY HAS BEEN ADVISED OF THE POSSIBILITY OF SUCH DAMAGES.

17. Interpretation of Sections 15 and 16.

If the disclaimer of warranty and limitation of liability provided above cannot be given local legal effect according to their terms, reviewing courts shall apply local law that most closely approximates an absolute waiver of all civil liability in connection with the Program, unless a warranty or assumption of liability accompanies a copy of the Program in return for a fee.

END OF TERMS AND CONDITIONS
How to Apply These Terms to Your New Programs

If you develop a new program, and you want it to be of the greatest possible use to the public, the best way to achieve this is to make it free software which everyone can redistribute and change under these terms.

To do so, attach the following notices to the program. It is safest to attach them to the start of each source file to most effectively state the exclusion of warranty; and each file should have at least the “copyright” line and a pointer to where the full notice is found.

<one line to give the program's name and a brief idea of what it does.>
Copyright (C) <year> <name of author>

This program is free software: you can redistribute it and/or modify
it under the terms of the GNU General Public License as published by
the Free Software Foundation, either version 3 of the License, or
(at your option) any later version.

This program is distributed in the hope that it will be useful,
but WITHOUT ANY WARRANTY; without even the implied warranty of
MERCHANTABILITY or FITNESS FOR A PARTICULAR PURPOSE. See the
GNU General Public License for more details.

You should have received a copy of the GNU General Public License
along with this program. If not, see <http://www.gnu.org/licenses/>.

Also add information on how to contact you by electronic and paper mail.

If the program does terminal interaction, make it output a short notice like this when it starts in an interactive mode:

<program> Copyright (C) <year> <name of author>
This program comes with ABSOLUTELY NO WARRANTY; for details type `show w'.
This is free software, and you are welcome to redistribute it
under certain conditions; type `show c' for details.

The hypothetical commands `show w' and `show c' should show the appropriate parts of the General Public License. Of course, your program's commands might be different; for a GUI interface, you would use an “about box”.

You should also get your employer (if you work as a programmer) or school, if any, to sign a “copyright disclaimer” for the program, if necessary. For more information on this, and how to apply and follow the GNU GPL, see <http://www.gnu.org/licenses/>.

The GNU General Public License does not permit incorporating your program into proprietary programs. If your program is a subroutine library, you may consider it more useful to permit linking proprietary applications with the library. If this is what you want to do, use the GNU Lesser General Public License instead of this License. But first, please read <http://www.gnu.org/philosophy/why-not-lgpl.html>.

2 This configure script is free software; the Free Software Foundation
gives unlimited permission to copy, distribute and modify it.

Copyrights:

Copyright (C) 2003 Free Software Foundation, Inc.

Copyright (C) 2005, 2006, 2009 Free Software Foundation

Copyright (C) 2007, 2009 Free Software Foundation, Inc.

Copyright (C) 2008, 2009 Free Software Foundation, Inc.

Copyright 1997, 1998, 1999, 2000, 2001, 2002, 2003, 2004, 2005, 2006, 2007, 2008, 2009 Free Software Foundation, Inc.

Index

B

BaseUnit wiring, 91

C

Channel status LEDs, 117
Configuration
  channel configuration 1 (4 A) or 2 (2 A) channels), 102
  control system hardware/software options, 98
  diagnostics options, 105
  general parameters, 102
  I/O address space usage, 100
  I/O addresses, 109
  operating mode, 103
  overview, 99
  Parameter (channel parameters), 106
  potential group, 102
  reaction to CPU STOP, 103
  TIA Portal module selection, 101
Control interface, 110
Current control function, 78
  dithering and cycle time, 81
  limit reached flags, 80
  PID function diagram, 78
  PID parameters, 79
  resetting the PID controller, 81
  set point control, 80
Current measurement function, 76
  accuracy, 77

D

DC motor mode, 65
  control and feedback signals of PWM mode, 71
  input and output signals of PWM mode, 73
  isochronous mode, 69
  parameters of DC motor mode, 70
  setting and changing the period duration, 68
  setting and changing the pulse duty cycle and rotation direction, 68
  truth table, 67
DIAG LEDs, 117
Diagnostics
  error detection and diagnostics, 122
  options, 105
Direct control of a digital output, 87
Dither PWM output function, 82
  amplitude, 82
  example diagrams, 84
  period, 83
  ramp-up and ramp-down, 83

E

Errors
  error detection and diagnostics, 122
  parameter validation, 120

F

Feedback interface, 115
Firmware version, 117
Frequency output mode, 57
  control and feedback signals, 61
  input and output signals, 64
  isochronous mode, 60
  on-delay, 60
  output value (frequency), 59
  parameters, 61
  truth table, 59
Functional state (FS), 117
Functions
  current control, 78
  current measurement, 76
  direct control of a digital output, 87
  dither PWM output, 82
  high-speed output, 74
  isochronous mode, 86
  overview, 14
  sequence counter, 75

H

High-speed output function, 74

I

I/O address configuration, 109

I/O address space usage, 100
Interfaces
    control, 110
    feedback, 115
    SLOT, 113
isochronous mode
    Pulse output (single pulse) mode, 20
Isochronous mode
    DC motor mode, 69
    frequency output mode, 60
    On/Off-delay mode, 53
    overview, 86
    pulse width modulation (PWM) mode, 29

L

LD_SLOT, 113
LED status display, 117
Load wiring, 91

M

MODE_SLOT, 113
Modes
    DC motor, 65
    Frequency output, 57
    On/Off-delay, 46
    overview, 14
    pulse output (single pulse), 17
    pulse train, 36
    pulse width modulation (PWM), 25

O

On/Off-delay mode, 46
    control and feedback signals, 54
    input and output signals, 56
    isochronous mode, 53
    minimum pulse duration, 49
    Off-delay, 52
    On-delay, 52
    parameters, 53
    retriggering Off-delay, 52
    retriggering On-delay, 51
    truth table, 49
Open source software, 142
Overview
    TM Pulse 2x24V, 10

P

Parameter data record, 138
Parameter validation errors, 120
PID parameters, 79
Pin assignment, 91
Potential group, 102
Power source wiring, 91
Programming reference, 131
Pulse output (single pulse) mode, 17
    control and feedback signals, 22
    input and output signals, 24
    On-delay, 20
    parameters, 21
    pulse duration, 19
    sequence counter, 20
    truth table, 19
Pulse train mode, 36
    control and feedback signals, 43
    current measurement, 41
    duty cycle, 40
    input and output signals, 45
    on-delay, 39
    period duration, 39
    pulse count, 38
    truth table, 38
Pulse width modulation (PWM) mode, 25
    control and feedback signals, 33
    current control, 31
    current measurement, 31
    duty cycle, 28
    input and output signals, 35
    isochronous mode, 29
    minimum pulse duration, 27
    On-delay, 31
    parameters, 32
    period duration, 28
    setting the minimum pulse duration, 31
    truth table, 26

R

Reaction to CPU STOP, 103
Record 128 (module parameters), 138

S

sensor wiring, 91
Sequence counter, 75
SLOT, 113

T

Technical specifications
    ambient temperature derating, 130
    hardware/software, 125
    programming reference, 131
TM Pulse 2x24V overview, 10
TM_CTRL_DQ signal, 87
Truth table
    DC motor mode, 67
    frequency output mode, 59
    On/Off-delay mode, 49
    pulse output (single pulse) mode, 19
    pulse train mode, 38
    Pulse width modulation (PWM) mode, 26

W

Wiring, 91
WRREC parameter write errors, 120

SIEMENS

Weighing systems

Electronic weighing system SIWAREX WP321

Manual

Introduction 1

Safety instructions 2

Description 3

Application planning 4

Mounting 5

Connecting 6

Commissioning 7

Scale parameters and functions 8

Messages 9

Command lists 10

Communication in SIMATIC S7-300/400/1200/1500 11

Technical specifications 12

Accessories 13

Appendix A

ESD guidelines B

List of abbreviations C

7MH4138-6AA00-0BA0

09/2018
A5E33715669A-AC

Legal information

Warning notice system

This manual contains notices you have to observe in order to ensure your personal safety, as well as to prevent damage to property. The notices referring to your personal safety are highlighted in the manual by a safety alert symbol, notices referring only to property damage have no safety alert symbol. These notices shown below are graded according to the degree of danger.

⚠ DANGER
indicates that death or severe personal injury **will** result if proper precautions are not taken.

⚠ WARNING
indicates that death or severe personal injury **may** result if proper precautions are not taken.

⚠ CAUTION
indicates that minor personal injury can result if proper precautions are not taken.

NOTICE
indicates that property damage can result if proper precautions are not taken.

If more than one degree of danger is present, the warning notice representing the highest degree of danger will be used. A notice warning of injury to persons with a safety alert symbol may also include a warning relating to property damage.

Qualified Personnel

The product/system described in this documentation may be operated only by **personnel qualified** for the specific task in accordance with the relevant documentation, in particular its warning notices and safety instructions. Qualified personnel are those who, based on their training and experience, are capable of identifying risks and avoiding potential hazards when working with these products/systems.

Proper use of Siemens products

Note the following:

⚠ WARNING
Siemens products may only be used for the applications described in the catalog and in the relevant technical documentation. If products and components from other manufacturers are used, these must be recommended or approved by Siemens. Proper transport, storage, installation, assembly, commissioning, operation and maintenance are required to ensure that the products operate safely and without any problems. The permissible ambient conditions must be complied with. The information in the relevant documentation must be observed.

Trademarks

All names identified by ® are registered trademarks of Siemens AG. The remaining trademarks in this publication may be trademarks whose use by third parties for their own purposes could violate the rights of the owner.

Disclaimer of Liability

We have reviewed the contents of this publication to ensure consistency with the hardware and software described. Since variance cannot be precluded entirely, we cannot guarantee full consistency. However, the information in this publication is reviewed regularly and any necessary corrections are included in subsequent editions.

Siemens AG
Division Process Industries and Drives
Postfach 48 48
90026 NÜRNBERG
GERMANY

Document order number: A5E33715669A
Ⓟ 09/2018 Subject to change

Copyright © Siemens AG 2014 - 2018.
All rights reserved

Table of contents

1 Introduction....9
1.1 Purpose of this documentation....9
1.2 Document history....10
1.3 Product compatibility....10
1.4 Checking the consignment....11
1.5 Security information....11
1.6 Transportation and storage....12
1.7 Basic knowledge required....12
2 Safety instructions....13
2.1 General safety instructions....13
3 Description....15
3.1 Product overview....15
3.2 Area of application....15
3.3 System integration in SIMATIC....15
3.4 Customer benefits....16
3.5 Scope of delivery....17
4 Application planning....19
4.1 Functions....19
4.2 Parameter assignment options....19
4.2.1 Parameter assignment with the PC....19
4.2.2 Parameter assignment with the SIMATIC Panel....20
5 Mounting....21
5.1 Safety notices for installation....21
5.2 Safety information according to FM and UL....21
5.3 Installation guideline....22
5.4 EMC-compliant setup....22
5.4.1 Introduction....22
5.4.2 Possible effects of interference....23
5.4.3 Coupling mechanisms....23
5.4.4 Five basic rules for securing EMC....23
5.5 Mounting on the SIMATIC ET 200SP....24
5.6 Configuration of the hardware in SIMATIC....25

6 Connecting....27

6.1 24 V connection....27

6.2 Connecting the load cells....27

6.3 Shield connection....30

6.4 Connection of RS485 serial interface....31

6.5 Connection of Siebert display via RS485....32

7 Commissioning....33

7.1 Factory-set parameters....33

7.2 Commissioning tools....33

7.3 5-minute quick start with the operator panel and the Ready-for-Use software....34
7.3.1 Start....34
7.3.2 Factory setting of the parameters....35
7.3.3 Selecting the calibration method....36
7.3.4 Defining the calibration weights....37
7.3.5 Setting calibration points....38
7.3.6 Calibrating the scale automatically....39
7.3.7 Performing the automatic calibration....40
7.3.8 Checking the scale following calibration....40

7.4 Fast commissioning (Quick Start) with SIWATOOL....41
7.4.1 Service with the SIWATOOL program....41
7.4.2 Establish communication to SIWAREX WP321....41
7.4.3 Calibration....42
7.4.3.1 Selecting the calibration method....42
7.4.3.2 Calibration with calibration weight....43
7.4.3.3 Automatic calibration (without calibration weight)....47
7.4.4 Receive all data....51

7.5 Service with the SIWATOOL program....52
7.5.1 Windows and functions of SIWATOOL....53
7.5.2 Offline parameter assignment....53
7.5.3 Online parameter assignment....54
7.5.4 Available help options....54
7.5.5 Entering parameters with SIWATOOL....54

8 Scale parameters and functions....57

8.1 Parameters and functions....57

8.2 DR 2 command code....57

8.3 DR 3 calibration parameters....57
8.3.1 Scale name....60
8.3.2 Unit of weight....60
8.3.3 Gross identifier....60
8.3.4 Maximum weighing range....60
8.3.5 Calibration weights 0, 1, 2 and calibration digits 0, 1, 2....60
8.3.6 Scale interval....61
8.3.7 Automatic zero adjustment....61
8.3.8 Decimal places for process values....61

8.3.9 Maximum tare load....61
8.3.10 Maximum negative zeroing limit....61
8.3.11 Maximum positive zeroing limit....61
8.3.12 Standstill range....62
8.3.13 Standstill time....62
8.3.14 Standstill waiting time....62
8.3.15 Low-pass filter limit frequency....63
8.3.16 Low-pass filter number....63
8.3.17 Mean value filter depth....64

8.4 Calibration procedure....64
8.4.1 Calibration with calibration weights....64
8.4.2 Automatic calibration....67

8.5 DR 4 Output of calculated calibration digits....67
8.5.1 Calibration digits 0, 1, 2 (calculated)....68

8.6 DR 5 zeroing memory....68
8.6.1 Effective tare weight - from specification....69
8.6.2 Effective tare weight (semi-automatic)....69
8.6.3 Zero weight (semi-automatic)....69
8.6.4 Current zero tracking weight....70
8.6.5 Dead load....70

8.7 DR 6 limit value settings....70
8.7.1 Limit reference....71
8.7.2 Limit value 1 ON, limit value 2 ON, limit value 1 OFF, limit value 2 OFF....72
8.7.3 Limit value "Empty" ON....72
8.7.4 Delay time for limits....73

8.8 DR 9 module information....73

8.9 DR 10 load cell parameters....74
8.9.1 Selection of the sampling rate....75
8.9.2 Number of support points....76
8.9.3 Load cell characteristic value....77
8.9.4 Rated load of a load cell....77

8.10 DR 13 RS485 parameters....77
8.10.1 RS485 protocol....78
8.10.2 RS485 baud rate....78
8.10.3 RS485 character parity....78
8.10.4 Decimal place for Siebert indicator....79

8.11 DR 14 SIMATIC interface parameters....79
8.11.1 Selection of process value 1, 2....80

8.12 DR 15 manual tare specification....80
8.12.1 Specification of tare weight....81

8.13 DR 30 current process values....81
8.13.1 Gross process weight....83
8.13.2 Net process weight....83
8.13.3 Tare process weight....83
8.13.4 Gross / net weight....84
8.13.5 Gross / net weight with increased resolution (x 10)....84
8.13.6 Tare weight....84

8.13.7 Refresh counter for process values....84

8.14 DR 31 advanced current process values....84
8.14.1 Unfiltered digit value....85
8.14.2 Filtered digit value....85
8.14.3 Refresh counter for process values....85

8.15 DR 32 Message display....85
8.15.1 Error bytes 0 to 7....88

8.16 DR 34 ASCII main display value....88
8.16.1 Content of main display as ACII string....88

9 Messages....91

9.1 Message types....91

9.2 Message paths....91

9.3 Evaluating messages with the help of SIWATOOL....92

9.4 Detecting messages with the help of FB SIWA....92

9.5 Message list....92
9.5.1 System status message list....92
9.5.2 Technology error message list....93
9.5.3 Data and operating errors message list....93
9.5.4 Messages by LEDs on the module....94

10 Command lists....95

11 Communication in SIMATIC S7-300/400/1200/1500....97

11.1 General information....97

11.2 Structure of the program "Ready for use"....97

11.3 Advantages of task sharing....97

11.4 Hardware configuration of the electronic weighing system....98

11.5 Calling of function block....100

11.6 Working with the function block....101

11.7 I/O interface of function block....104

11.8 Error codes of function block....104

11.9 Diagnostics messages....105

11.10 Diagnostics interrupts....105

11.11 Hardware interrupts....106

12 Technical specifications....109

12.1 Technical specifications....109

12.2 Electrical, EMC and climatic requirements....111

12.3 Reliability....114

12.4 Approvals....114

13 Accessories....117

A Appendix....119

A.1 Technical support....119

B ESD guidelines....121

B.1 ESD Guidelines....121

C List of abbreviations....123

C.1 List of abbreviations....123

Index....125

Introduction 1

1.1 Purpose of this documentation

These instructions contain all information required to commission and use the device. Read the instructions carefully prior to installation and commissioning. In order to use the device correctly, first review its principle of operation.

The instructions are aimed at persons mechanically installing the device, connecting it electronically, configuring the parameters and commissioning it, as well as service and maintenance engineers.

⚠ CAUTION
To prevent injury, read the manual before use.

1.2 Document history

The most important changes in the documentation when compared with the respective previous edition are given in the following table.

Manual edition	Note
09/2018	• Section "Safety instructions (Page 13)" revised • Section "Mounting (Page 21)" revised • Section "Scale parameters and functions (Page 57)" revised – DR 3 (Page 57): "Limit frequency of low-pass filter 2" and "Order no. low pass filter 2" new • Data types renamed as follows: FLOAT --> REAL USHORT --> UINT SHORT --> INT LONG --> DINT CHAR --> STRING
09/2017	• "Introduction" section and Safety instructions (Page 13): revised • Section Connection of Siebert display via RS485 (Page 32): Graphic enhanced • Section Automatic calibration (without calibration weight) (Page 47): revised • Section Scale parameters and functions (Page 57): – Calibration procedure (Page 64): revised – DR 3 (Page 57) and DR 6 (Page 70): revised – DR 10 (Page 74): New "Selection of sampling rate" tag – DR 14 (Page 79): revised – DR 32 (Page 85): revised • Section Technology error message list (Page 93): revised • Section Communication in SIMATIC S7-300/400/1200/1500 (Page 97): revised • Section Reliability (Page 114): new • Section Approvals (Page 114): RoHS new

1.3 Product compatibility

The following table describes compatibility between manual edition, device revision, and the engineering system.

Manual edition	Comment	Device revision	Engineering system
09/2018	New characteristics	FW: 1.3.0 HW: FS 1 or higher	STEP 7 TIA Portal V14 or higher
09/2017	New characteristics	FW: 1.2.0 HW: until FS 3	STEP 7 TIA Portal V14 or higher

1.4 Checking the consignment

1. Check the packaging and the delivered items for visible damage.
2. Report any claims for damages immediately to the shipping company.
3. Retain damaged parts for clarification.
4. Check the scope of delivery by comparing your order to the shipping documents for correctness and completeness.

⚠ WARNING
Using a damaged or incomplete device Risk of explosion in hazardous areas. • Do not use damaged or incomplete devices.

1.5 Security information

Siemens provides products and solutions with industrial security functions that support the secure operation of plants, systems, machines, and networks.

In order to protect plants, systems, machines and networks against cyber threats, it is necessary to implement – and continuously maintain – a holistic, state-of-the-art industrial security concept. Siemens' products and solutions only form one element of such a concept.

Customer is responsible to prevent unauthorized access to its plants, systems, machines and networks. Systems, machines and components should only be connected to the enterprise network or the internet if and to the extent necessary and with appropriate security measures (e.g. use of firewalls and network segmentation) in place.

Additionally, Siemens' guidance on appropriate security measures should be taken into account. For more information about industrial security, please visit:

http://www.siemens.com/industrialsecurity.

Siemens' products and solutions undergo continuous development to make them more secure. Siemens strongly recommends to apply product updates as soon as available and to always use the latest product versions. Use of product versions that are no longer supported, and failure to apply latest updates may increase customer's exposure to cyber threats.

To stay informed about product updates, subscribe to the Siemens Industrial Security RSS Feed under

http://www.siemens.com/industrialsecurity.

1.6 Transportation and storage

To guarantee sufficient protection during transport and storage, observe the following:

- Keep the original packaging for subsequent transportation.
- Devices/replacement parts should be returned in their original packaging.
- If the original packaging is no longer available, ensure that all shipments are properly packaged to provide sufficient protection during transport. Siemens cannot assume liability for any costs associated with transportation damages.

NOTICE
Insufficient protection during storage The packaging only provides limited protection against moisture and infiltration. • Provide additional packaging as necessary.

Special conditions for storage and transportation of the device are listed in Technical specifications (Page 109).

1.7 Basic knowledge required

Knowledge of weighing technology as well as general knowledge of the SIMATIC system including the TIA Portal are necessary in order to understand the manual.

Safety instructions 2

2.1 General safety instructions

WARNING

Non-compliance with warning notes or non-qualified handling of the system

Failure to observe the warning notes or handling of the device/system by non-qualified personnel can result in serious injury or damage to property. This means only qualified personnel are permitted to handle this device/system.

WARNING

Permission for installation in machines

Start-up/commissioning is absolutely prohibited until it has been ensured that the machine in which the component described here is to be installed fulfills the regulations/specifications of Machinery Directive 89/392/EEC.

Note

The specifications of the manual for the SIMATIC ET 200SP system apply for configuration, installation and commissioning in the SIMATIC environment. This chapter includes additional information on hardware configuration, installation and preparation for operation of the SIWAREX WP321.

The safety notes must be observed.

Note

The device was developed, manufactured, tested and documented in compliance with the relevant safety standards. The device does usually not pose any risks of material damage or personal injury.

Safety notices when using the device according to Hazardous Locations (HazLoc)

If you use the device under HazLoc conditions you must also keep to the following safety notices in addition to the general safety notices for protection against explosion:

This equipment is suitable for use in Class I, Zone 2, Group IIC or non-hazardous locations only.

This equipment is suitable for use in Class I, Division 2, Groups A, B, C and D or non-hazardous locations only.

Description 3

3.1 Product overview

SIWAREX WP321 is a versatile and flexible weighing module that can be operated as a static weighing instrument.

The electronic weighing system can be used in SIMATIC ET 200SP and uses all features of a modern automation system, such as integrated communication, operation and monitoring, the diagnostics system as well as the configuration tools in the TIA Portal or SIMATIC STEP, WinCC flexible and PCS7.

3.2 Area of application

The electronic weighing system described here is the perfect solution for applications in which signals from weighing or force sensors are acquired and processed. The SIWAREX WP321 is a very accurate electronic weighing system with high measuring speed.

It can be used in almost all industrial weighing applications not requiring official calibration. Use in potentially explosive atmospheres (with Ex interface SIWAREX IS) it's also possible.

3.3 System integration in SIMATIC

The electronic weighing system described here is a technology module for SIMATIC ET 200SP. It can be used as desired in the configuration of the automation solution, including the weighing application. You can create optimal solutions for small and medium-sized plants by combining the suitable SIMATIC modules. You can create customized or industry-specific solutions in no time with the help of the configuration package available under the "Ready for use" application for SIMATIC.

Solutions are possible with S7-300, S7-1200 as well as S7-1500 CPUs. TIA Portal, Step 7 Classic or PCS7 can be used as the configuration software.

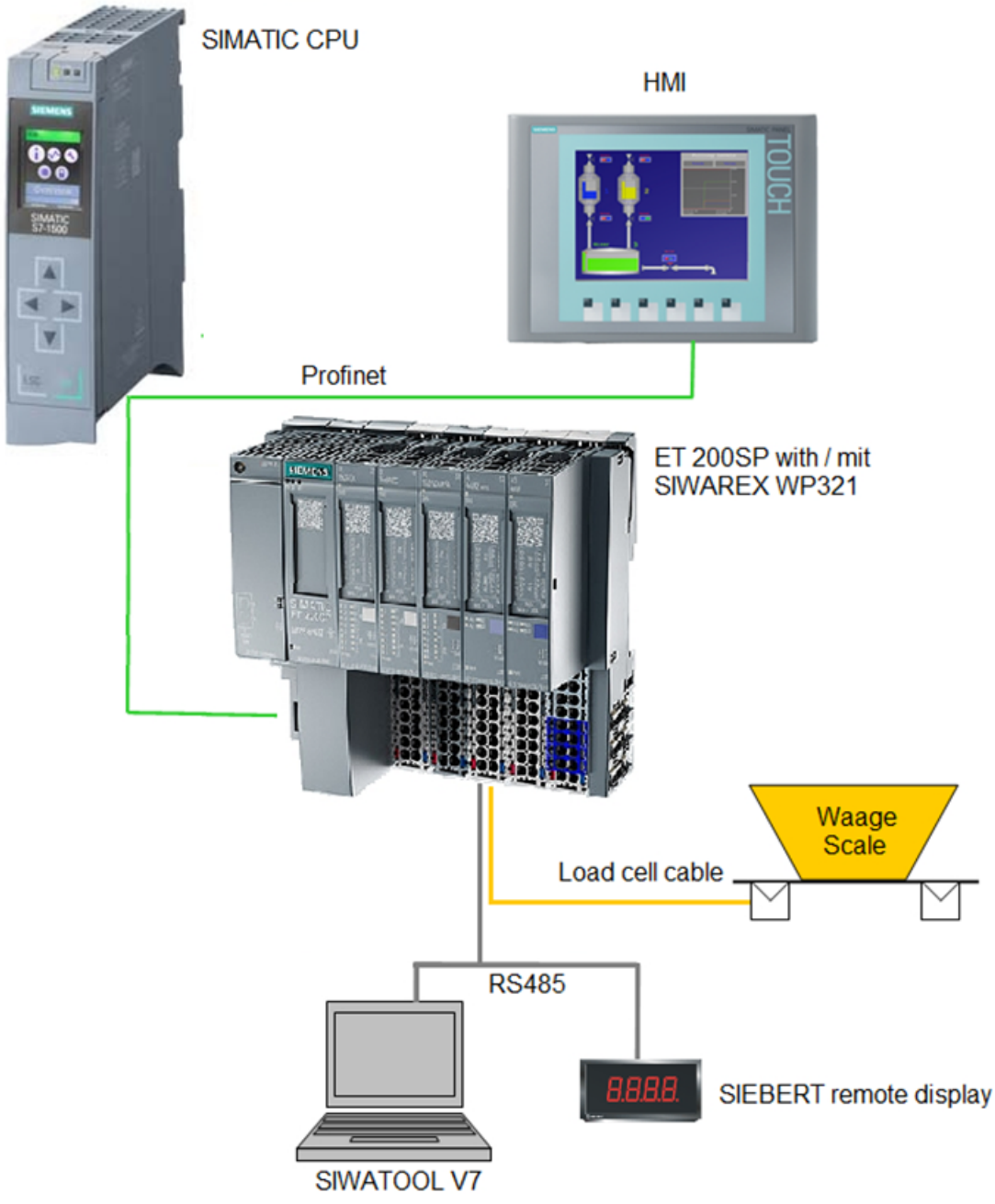

Figure 3-1 System overview

3.4 Customer benefits

The electronic weighing system described here is characterized by decisive advantages:

- Uniform design technology and consistent communication in SIMATIC ET 200SP
- Parameter assignment by means of an operator panel, STEP7 user program or PC
- Uniform configuration option in the SIMATIC TIA Portal, SIMATIC STEP7 or PCS7

- Measuring of weight with a resolution of up to +/- 2 million parts
- High accuracy 0.05%
- High measuring rate of 100/120/600 Hz
- Limit monitoring
- Flexible adaptation to varying requirements
- Easy calibration of the scales using the SIWATOOL program
- Automatic calibration is possible without the need for calibration weights
- Module replacement is possible without recalibrating the scales
- Use in Ex Zone 2 / ATEX approval
- Intrinsically safe load cell supply for Ex Zone 1 (SIWAREX IS option)
- Diagnostics functions

3.5 Scope of delivery

The scope of supply consists of the SIWAREX WP321 weighing module. Required accessories → Accessories (Page 117)

Note

The SIWAREX WP321 configuration package is required for configuration of the SIWAREX WP321 electronic weighing system → Accessories (Page 117). The configuration package is not included in the scope of delivery of the module.

Application planning 4

4.1 Functions

The primary task of the electronic weighing system is the measurement and registration of the current weight value. The integration in SIMATIC gives you the option to process the weight value directly in the PLC (**P**rogrammabel**L**ogic **C**ontroller).

The SIWAREX WP321 is calibrated at the factory. This allows for automatic calibration of the scale without the need for calibration weights and replacement of modules without the need for recalibrating the scale.

A PC for setting the parameters of the electronic weighing system can be connected via the RS485 interface.

The SIWAREX WP321 electronic weighing system can also be used in potentially explosive atmospheres (Zone 2). The load cells are supplied intrinsically safe in Zone 1 applications when you use the optional Ex interface SIWAREX IS.

4.2 Parameter assignment options

4.2.1 Parameter assignment with the PC

You can set the scale parameters with the convenience of the familiar Windows interface by using the "SIWATOOL" PC parameter assignment software.

You can use the program for commissioning the scale without any knowledge of automation technology. When servicing is required, you can analyze and test the processes in the scale independently of the automation system or Operator Panel with the help of the PC. You can read out the diagnostic buffer from the SIWAREX module to assist you in the event analysis.

The figure below illustrates the structure of the individual program windows.

Figure 4-1 SIWATOOL overview

SIWATOOL does not only offer support when you set the scale but also when you analyze the diagnostic buffer that can be saved after being read out of the module together with the parameters. The display of the current scale status can be configured.

You can switch between several languages in the program.

You require an RS485/USB converter (see Accessories (Page 117)).

4.2.2 Parameter assignment with the SIMATIC Panel

SIWAREX WP321 parameters can be assigned using a SIMATIC Panel connected to the SIMATIC CPU. The "Ready-for-use" application software is used for this.

Mounting 5

5.1 Safety notices for installation

Safety notices

When installing the device, keep to the safety notices listed below.

⚠ WARNING
If a device is operated in an ambient temperature of more than 50 °C, the temperature of the device housing may be higher than 70 °C. The device must therefore be installed so that it is only accessible to service personnel or users that are aware of the reason for restricted access and the required safety measures at an ambient temperature higher than 50 °C.

⚠ WARNING
If the device is installed in a cabinet, the inner temperature of the cabinet corresponds to the ambient temperature of the device.

Safety notices on use in hazardous areas

General safety notices relating to protection against explosion

⚠ WARNING
EXPLOSION HAZARD Replacing components may impair suitability for Class 1, Division 2 or Zone 2.

⚠ WARNING
Substitution of components may impair suitability of the equipment.

5.2 Safety information according to FM and UL

Safety information for use according to FM and UL

If you use the device under FM conditions you must also keep to the following safety notices in addition to the general safety notices for protection against explosion:

WARNING

Substitution of components may impair suitability for Division 2.

WARNING

Do not remove or replace while circuit is live when a flammable or combustible atmosphere is present.

WARNING

Explosion hazard

Do not disconnect equipment when a flammable or combustible atmosphere is present.

WARNING

EXPLOSION HAZARD

The device is designed for operation in closed housing or control cabinet. The inner service temperature of the enclosure/control cabinet corresponds to the ambient temperature of the module. Use cables with a maximum permitted operating temperature of at least 20 °C higher than the maximum ambient temperature.

5.3 Installation guideline

When assembling the SIMATIC components together with the electronic weighing system described here, the setup, installation and wiring guidelines for the SIMATIC ET 200SP must be observed (see system manual "SIMATIC ET 200SP, ET 200SP distributed I/O system", order no.: A5E03576848).

This manual describes additional installation and wiring aspects specific to the electronic weighing system.

5.4 EMC-compliant setup

5.4.1 Introduction

The electronic weighing system described here was developed for use in industrial environments and complies with high EMC requirements. It ensures safe operation even in harsh environmental conditions. Nevertheless, you should still carry out EMC planning before installing your devices in order to determine any sources of interference and include them in your considerations.

EMC

EMC (electromagnetic compatibility) describes the capability of electrical equipment to operate without errors in a given electromagnetic environment, without being subject to external influence and without influencing external devices in any way.

5.4.2 Possible effects of interference

Electromagnetic interferences can influence the electronic weighing system described here in various ways:

- Electromagnetic fields having a direct influence on the system
- Interferences transported by communication cables
- Interferences having an effect via process cables
- Interferences entering the system via the power supply and/or protective ground

Interferences can impair the fault-free functioning of the electronic weighing system.

5.4.3 Coupling mechanisms

Depending on the propagation medium (conducted or non-conducted) and the distance between the interference source and the device, interferences can enter the faulty device through four different coupling mechanisms:

- Electrical coupling
- Capacitive coupling
- Inductive coupling
- Radiation coupling

5.4.4 Five basic rules for securing EMC

Observe these five basic rules to secure EMC.

Rule 1: Large area grounding contact

- When installing the devices, make sure that the surfaces of inactive metal parts are properly bonded to chassis ground (see following sections).
- Bond all inactive metal parts to chassis ground, ensuring large area and low-impedance contact (large cross-sections).
- When using screw connections on varnished or anodized metal parts, support contact with special contact washers or remove the protective insulating finish on the points of contact.

- Wherever possible, avoid the use of aluminum parts for ground bonding. Aluminum oxidizes very easily and is therefore less suitable for ground bonding.
- Provide a central connection between chassis ground and the ground/protective conductor system.

Rule 2: Proper cable routing

- Organize your wiring system into cable groups (high-voltage/power supply/signal/measurement/data cables).
- Always route high-voltage and data cables in separate ducts or in separate bundles.
- Install the measurement cables as close as possible to grounded surfaces (e.g. supporting beans, metal rails, steel cabinet walls).

Rule 3: Fixing the cable shielding

- Ensure proper fixation of the cable shielding.
- Always use shielded data cables. Always connect both ends of the data cable shielding to ground on a large area.
- Keep unshielded cable ends as short as possible.
- Always use metal/metalized connector housings only for shielded data cables.

Rule 4: Special EMC measures

- All inductors that are to be controlled should be connected with suppressors.
- For cabinet lighting in the immediate range of your controller, use interference suppressed fluorescent lamps.

Rule 5: Homogeneous reference potential

- Create a homogeneous reference potential and ground all electrical equipment.
- Use sufficiently dimensioned equipotential bonding conductors if potential differences exist or are expected between your system components. Equipotential bonding is absolutely mandatory for applications in hazardous areas.

5.5 Mounting on the SIMATIC ET 200SP

The electronic weighing system described here is a module of the SIMATIC ET 200SP series and can be directly connected to the automation system's bus system. The 15 mm wide module has very low installation and cabling requirements.

The module is snapped onto the ET 200SP base unit (BU). You must use base units of type A0 (→ Accessories (Page 117)).

The load cells, power supply and serial interfaces are connected via the terminal box.

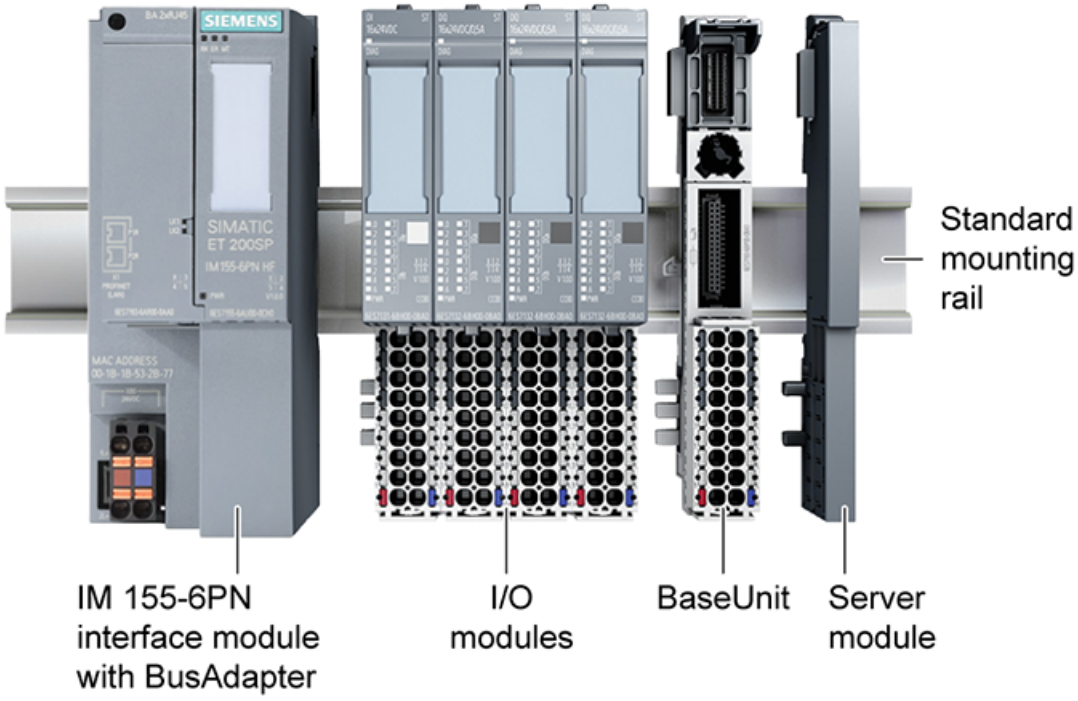

Figure 5-1 Installation of the I/O or SIWAREX modules

5.6 Configuration of the hardware in SIMATIC

A station has a maximum width of 1 m, and you can use up to 64 modules depending on the type of PN head-end, or up to 15 modules with the Profibus version. Observe the system conditions when planning the configuration.

Each SIWAREX electronic weighing system requires 16 bytes of the I/O area. Address assignment is carried out in the TIA Portal or in the SIMATIC Manager during hardware configuration.

Connecting

6

All external connections are made via the terminal box.

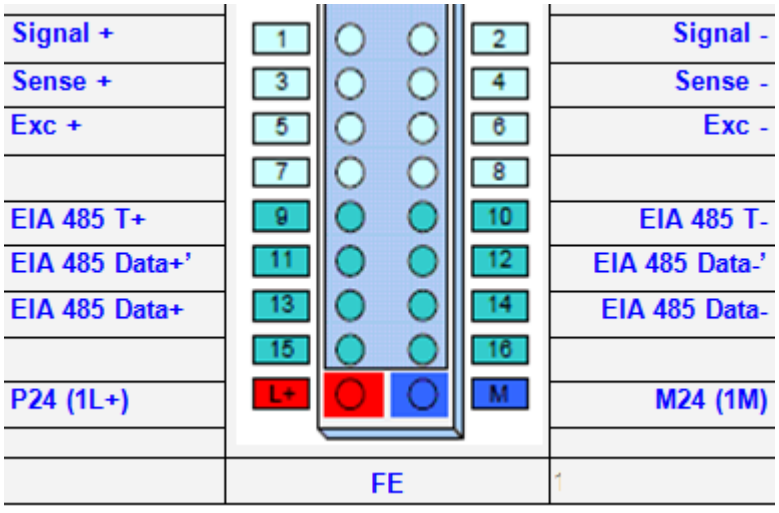

Figure 6-1 SIWAREX WP321 process terminals on the base unit

6.1 24 V connection

The 24 V DC supply voltage is connected by means of the corresponding terminals on the base unit.

Table 6-1 Connection of the 24 V supply

Labeling	Function
L +	+24 V voltage supply
M	Ground voltage supply

6.2 Connecting the load cells

Pickups can be connected to the SIWAREX WP321 electronic weighing system which are equipped with strain gauges (full bridge) and meet the following requirements.

- Characteristic value 1 to 4 mV/V
- A supply voltage of 5 V is permitted

The power supply for the load cells is 4.85 V.

The following condition must be met in order to check the maximum possible number of load cells which can be connected to a WP321:

- Scale operation without Ex interface: (input resistance of load cell) / (number of load cells) > 40 Ohm
- Scale operation without Ex interface: (input resistance of load cell) / (number of load cells) > 50 Ohm

Connection with 4-wire or 6-wire system

The connection versions are shown in the following two figures.

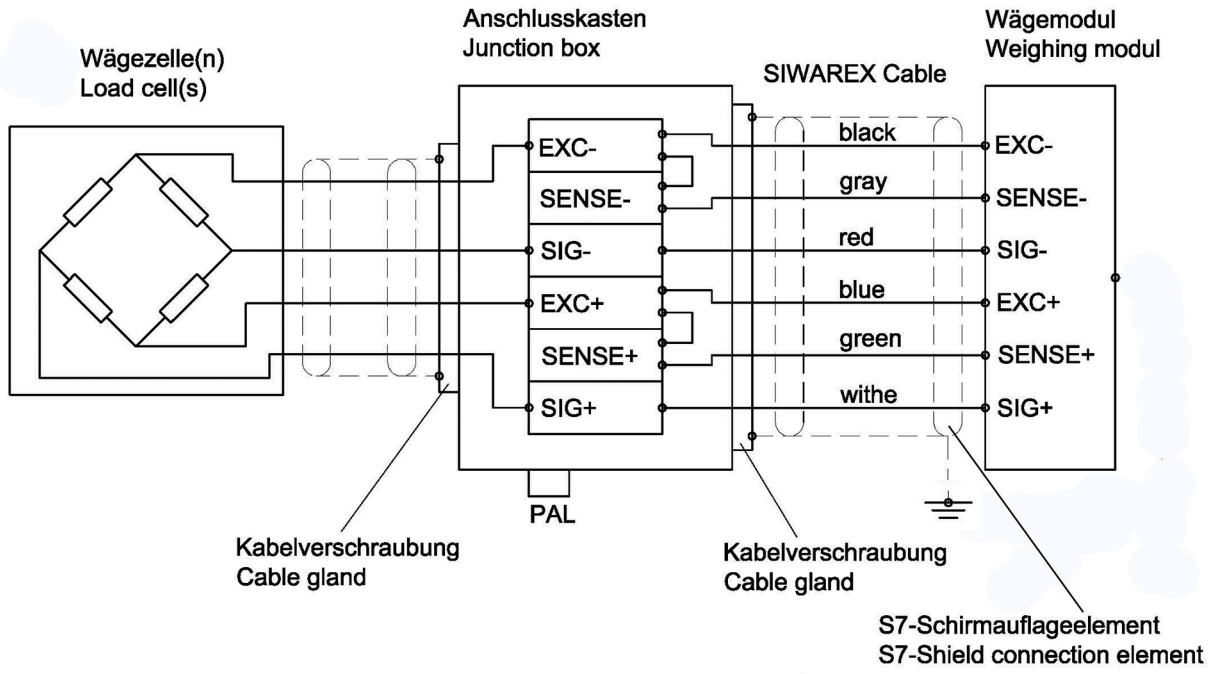

Figure 6-2 Connection of DMS load cell with 4-wire system

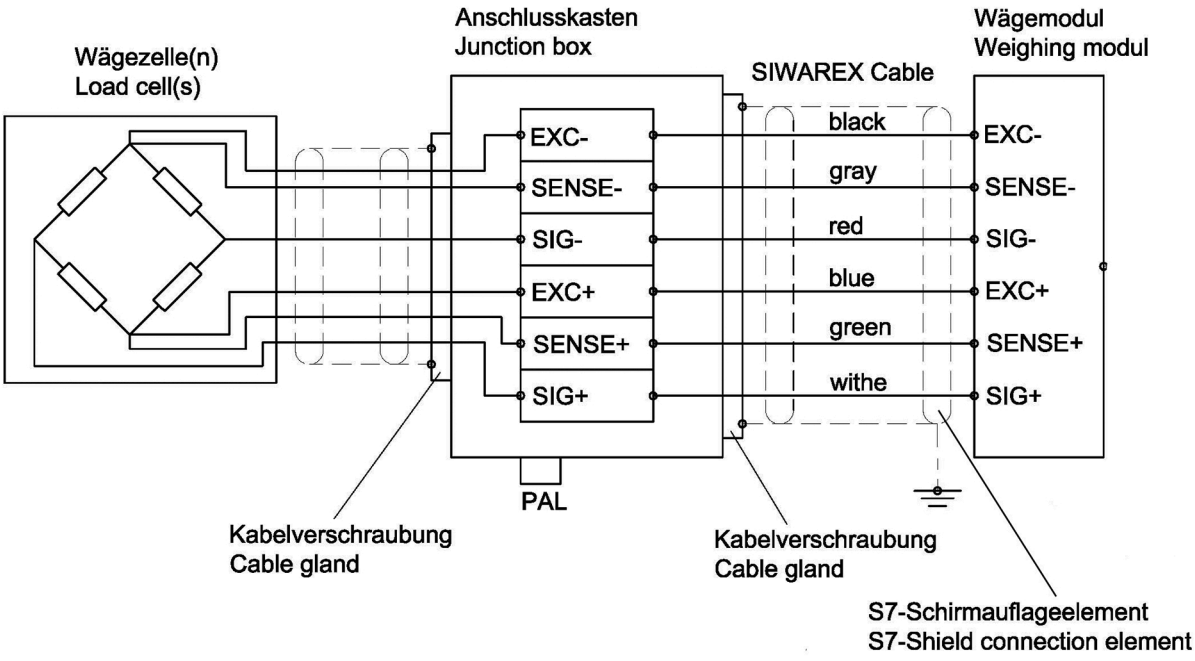

Figure 6-3 Connection of load cell with 6-wire system

Observe the following rules for connection of analog (DMS) load cells

1. The use of a junction box (SIWAREX JB junction box) is required when more than one load cell is connected (the load cells must be connected in parallel). If the distance of a load cell to the SIWAREX WP321 or the junction box is greater than the available length of the load cell connection cable, use the SIWAREX EB extension box.
2. The cable shield is always applied at the cable gland of the junction box (SIWAREX JB) or the extension box. If there is a risk of equipotential bonding through the cable shield, connect a equipotential equalization conductor parallel to the load cell cable.

3. Twisted wire pairs that are also shielded are required for the specified cables:
   - Sensor cable (+) and (-)
   - Measuring voltage cable (+) and (-)
   - Supply voltage cable (+) and (-)

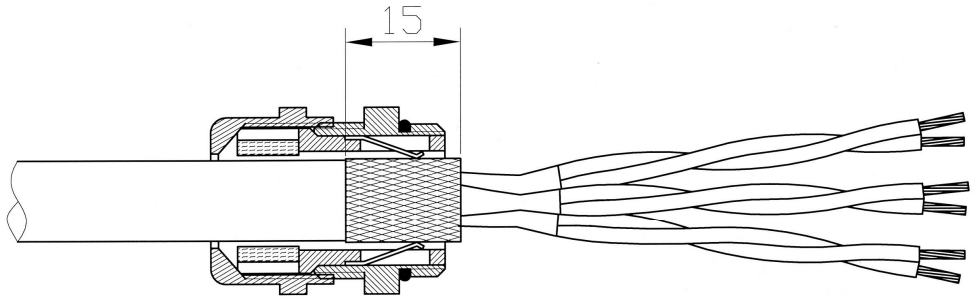

Figure 6-4 Shielding in the screw gland

We recommended that you use the cables listed in chapter Accessories (Page 117).

4. The shield must be applied to the ground in close proximity to the SIWAREX WP321. The maximum distance between the SIWAREX WP321 and the load cell is relevant when you use the recommended cables.

Labeling	Function	Connection pin
Sig-	Measurement cable load cell -	2
Sig+	Measurement cable load cell -	1
Sen-	Sensor cable load cell -	4
Sen+	Sensor cable load cell +	3
Exc-	Supply load cell -	6
Exc+	Supply load cell +	5

6.3 Shield connection

Make sure you observe the correct design of the shield support for the shielded cables. It is the only way to ensure immunity of the system.

A cable is shielded to attenuate the effects of magnetic, electrical and electromagnetic interference on the cable. Interference currents on cable shielding are diverted to ground by conductive isolation rails. To avoid interference as a result of these currents, it is imperative to provide a low-impedance connection to the ground.

Only use cables equipped with a shielding braid. Shielding density must be at least 80%.

Figure 6-5 Shield connection and shield terminal

6.4 Connection of RS485 serial interface

The following devices can be connected to the serial interface:

- Siebert display type S102 (connections: see chapter Connection of Siebert display via RS485 (Page 32))
- PC with RS485/USB converter (see accessories) for use of SIWATOOL

Table 6-2 Termination of RS485 serial interface

Labeling	Function	Connection pin
RS485: T+	RS485 termination +: Is used at the physical end of the bus for inserting termination jumpers	9
RS485: T-	RS485 termination -: Is used at the physical end of the bus for inserting termination jumpers	10
RS485: D+'	RS485 data line +': Is used at the physical end of the bus for inserting termination jumpers and in between for looping through the bus cables	11
RS485: D-'	RS485 data line -': Is used at the physical end of the bus for inserting termination jumpers and in between for looping through the bus cables	12
RS485: D+	RS485 data cable +	13
RS485: D-	RS485 data cable -	14

If a SIWAREX WP321 module is connected to SIWATOOL or a Siebert display, insert wire jumpers between the T+ and D+' terminals and between the T- and D-' terminals.

6.5 Connection of Siebert display via RS485

A Siebert display S102 with the order no. S102-W6/14/0R-000/0B-SM can be connected to the RS485 interface of the weighing module. Connect a 24 V DC supply to the Siebert display. Connect the latter to the RS485 interface of the weighing module as shown in the figure below.

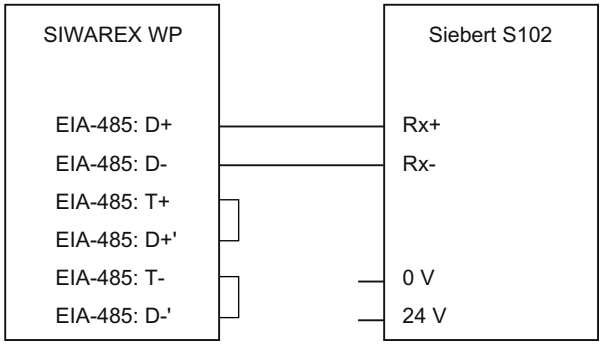

Figure 6-6 Connection of Siebert display S102

The RS485 interface in the DR 13 of the SIWAREX WP is set as follows:

- RS485 protocol: Siebert display S102
- Baud rate: 9600 bps
- Character parity: Even

The S102 is set as follows:

Table 6-3 Settings of Siebert display S102

Menu item	Setting	Meaning	
1 Interface	485	RS485 interface	
9 Station address	01	Address meaning:	
		Address	**Weight value**
		01	Weight
		02	Total
		03	Net
		04	Tare
t Timeout	2	e.g. timeout after 2 seconds	
C	0.0	No decimal point	
F Segment test	----*	No segment test when switching on	
	8.8.8	Segment test when switching on	

Commissioning 7

Commissioning essentially comprises:

- Checking the scale construction
- Specifying the parameters
- Calibration
- Verifying the envisaged functionality

7.1 Factory-set parameters

The electronic weighing system described here is provided with factory-set parameters. The parameters have been provided for a typical 100 kg scale based on three load cells. Parameters which can be entered in % or time are preset in such a way that they provide good results for most applications.

With these default parameters, commissioning can be carried out in 5 minutes (see chapter 5-minute quick start with the operator panel and the Ready-for-Use software (Page 34)).

7.2 Commissioning tools

Commission the electronic weighing system using the following alternatives:

- Touch panel und SIWAREX WP321 function block in S7-300/400/1200 or 1500
  A free example project is available for download online at TIA Portal project "Ready-for-use" for SIWAREX WP321 (https://support.industry.siemens.com/cs/ww/en/view/94109373).
- Commissioning with SIWATOOL V7
  SIWATOOL V7 is included in the WP configuration package available for purchase, Accessories (Page 117). To communicate between SIWAREX WP and SIWATOOL V7, use an additional interface converter USB/RS485.

Use SIWATOOL V7 to commission the scale without SIMATIC expertise with a standard PC. Backup files can also be created and loaded. In the event of a fault, additional SIWATOOL diagnostics functions enable fast analysis of the cause.

7.3 5-minute quick start with the operator panel and the Ready-for-Use software

7.3.1 Start

The 5 minutes of quick start is performed in this example with a TP700 Comfort Panel connected directly to the electronic weighing system. The Panel communicates directly over MODBUS TCP/IP or via the SIMATIC S7-1200 CPU.

To carry out the quick start, select the "1.0 Setup" function in the main menu and then "1.2 Quick Start". You will be guided through the individual tasks for setting the most important parameters.

The remaining parameters are factory-set in such a way that they can be used in most cases without any changes.

You can download the HMI software used below as free TIA Portal project "Ready-for-use" for SIWAREX WP321 (https://support.industry.siemens.com/cs/ww/en/view/94109373).

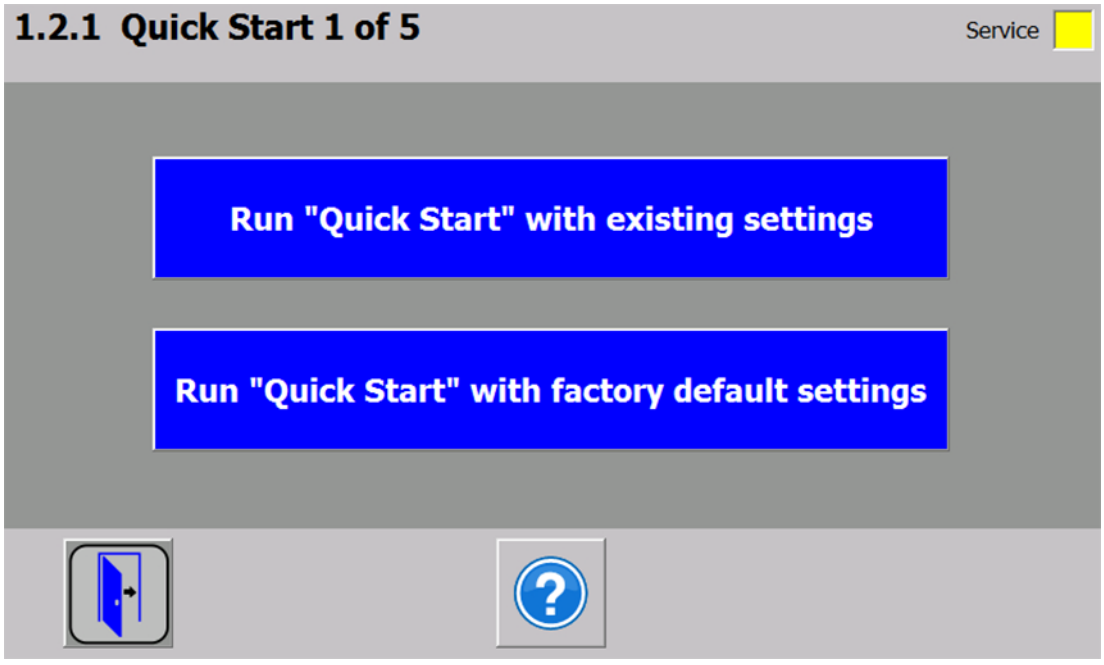

Figure 7-1 Quick start step 1

7.3.2 Factory setting of the parameters

The quick start is based on the factory setting of the parameters. Therefore, the previous parameter settings must be reset prior to the quick setup. Service mode must be switched on first. Resetting to the factory setting can then be carried out.

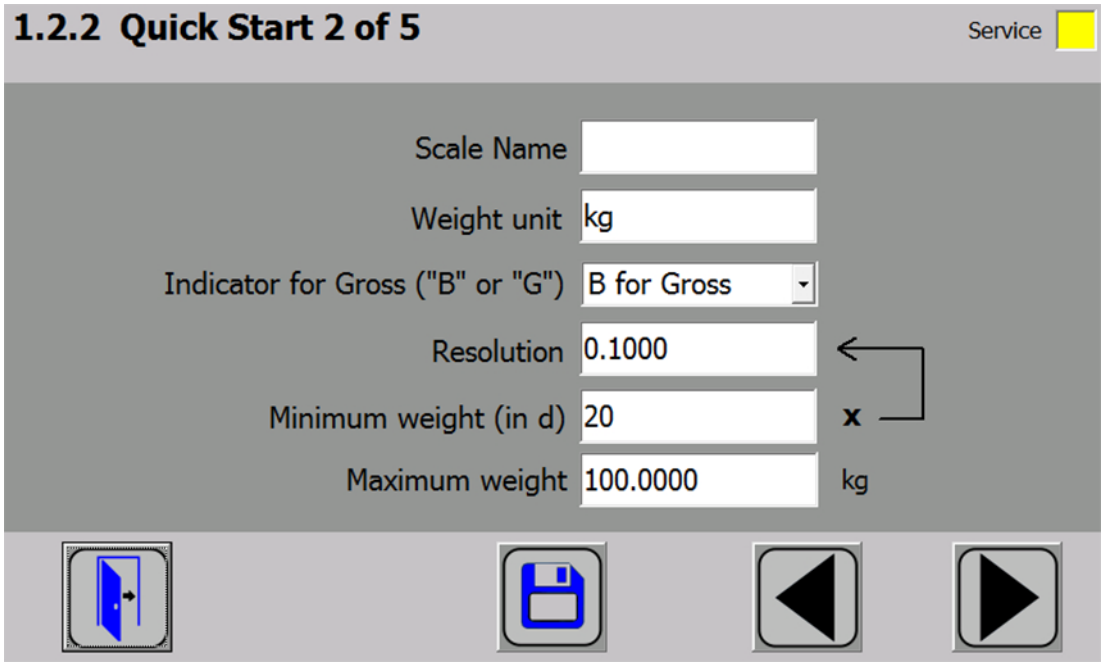

Figure 7-2 Quick start step 2

7.3.3 Selecting the calibration method

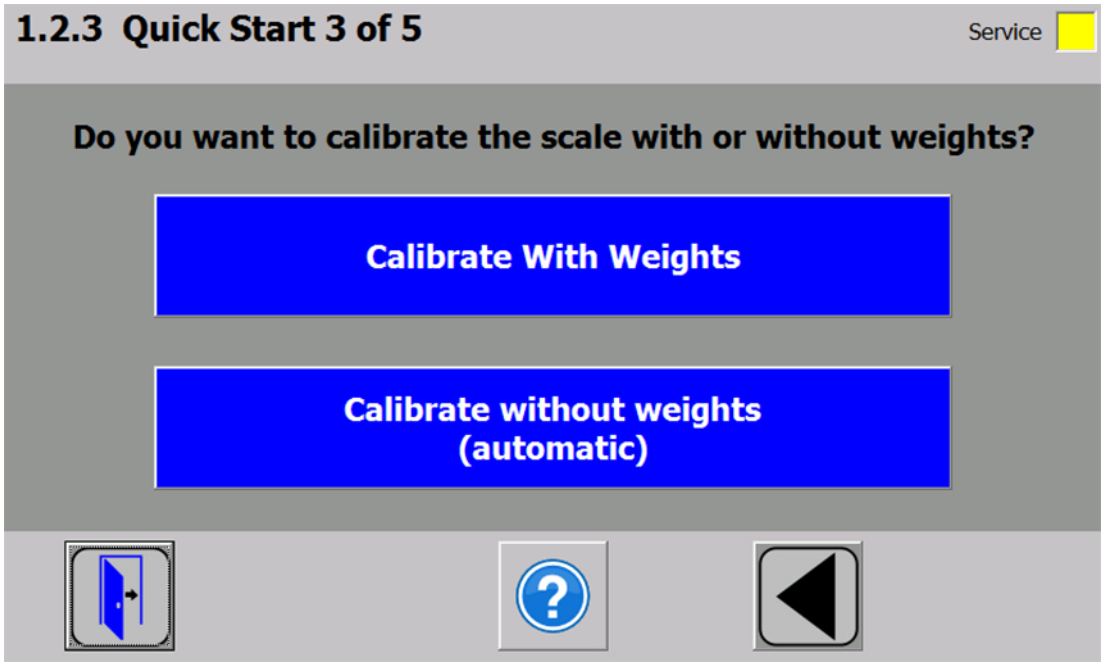

Figure 7-3 Quick start step 3

The module can always be calibrated in two different ways:

- Using reference weights: in the case of a calibration with weights, mechanical influences of the scale construction are also partially taken into account.
- Without weights, using the technical specifications of the connected load cell(s): in the case of automatic calibration, the accuracy of the scale is influenced by the mechanical properties to a greater extent than with calibration using reference weights.

With both methods, make sure that the mechanical properties of the scale are flawless prior to calibration.

7.3.4 Defining the calibration weights

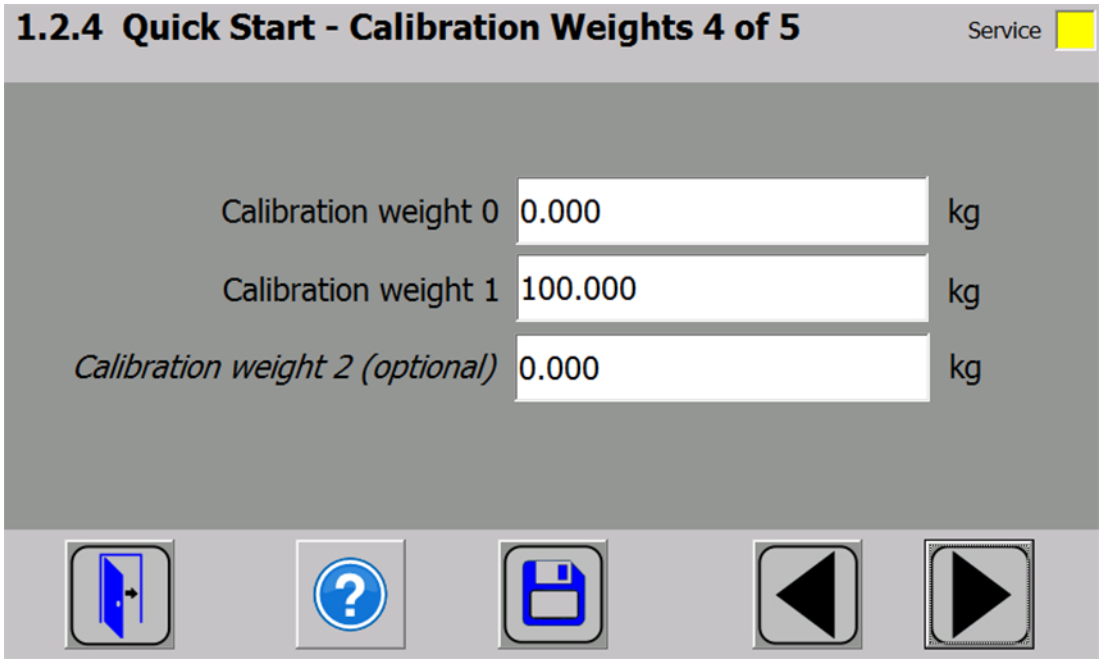

Figure 7-4 Quick start step 4a

In step 4 you enter the calibration weights which are to be positioned on the scale during the calibration. If the scale is not empty and the current contents are known, you can define an "Calibration weight 0" with the current contents of the scale. With an empty scale, this parameter remains as 0 kg. "Calibration weight 1" usually defines the first reference point of the scale characteristic. A further reference point ("Calibration weight 2") can also be set in addition. This is optional, and may not be necessary depending on the mechanical properties of the scale.

Note that the interval between the calibration weights must be at least 2% of the nominal load of the scale. With a 1 000 kg scale, a calibration weight of at least 20 kg must therefore be used.

7.3.5 Setting calibration points

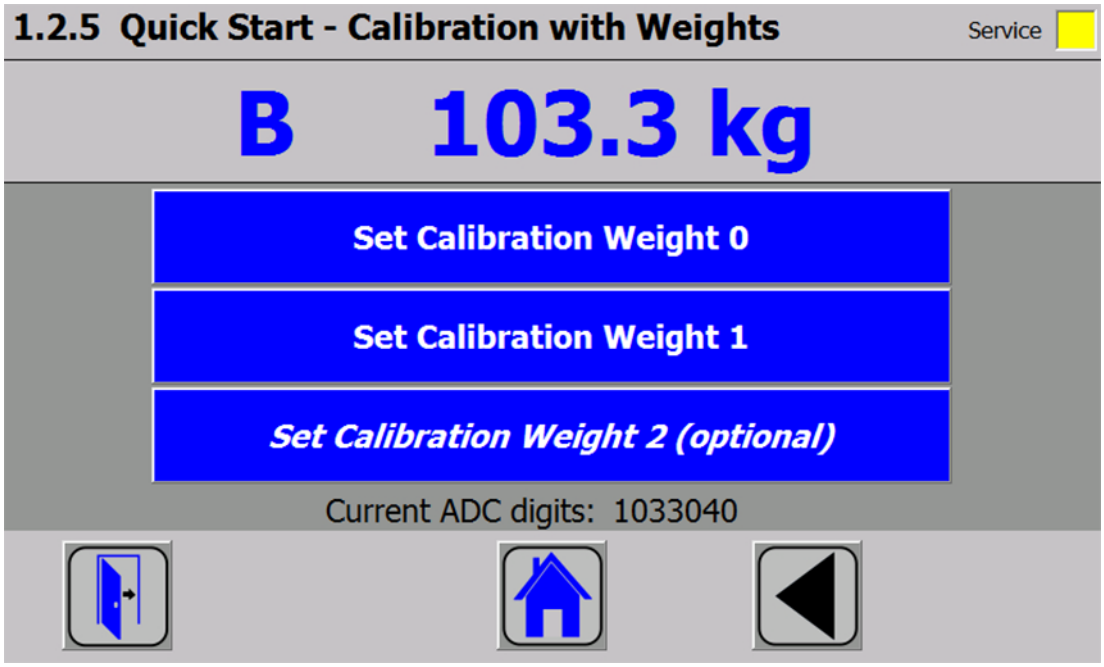

Figure 7-5 Quick start step 5a

Carry out the calibration commands at the end of the quick start:

1. Carry out the "Set calibration weight 0" command. The "Calibration weight 0" defined in step 4 is now visible in the display.
2. Place the "Calibration weight 1" defined in step 4 on the scale construction, and execute the "Set calibration weight 1" command.
3. If an "Calibration weight 2" was selected:
   Place "Calibration weight 2" defined in step 4 on the scale construction, and execute the "Set calibration weight 2" command.
4. Calibration of the scale is now complete. Return to the start screen by clicking on the house icon.

7.3.6 Calibrating the scale automatically

The scale can also be calibrated without weights. To do this, it is necessary to enter data specific to the load cells. In addition, it is essential that the scale is empty.

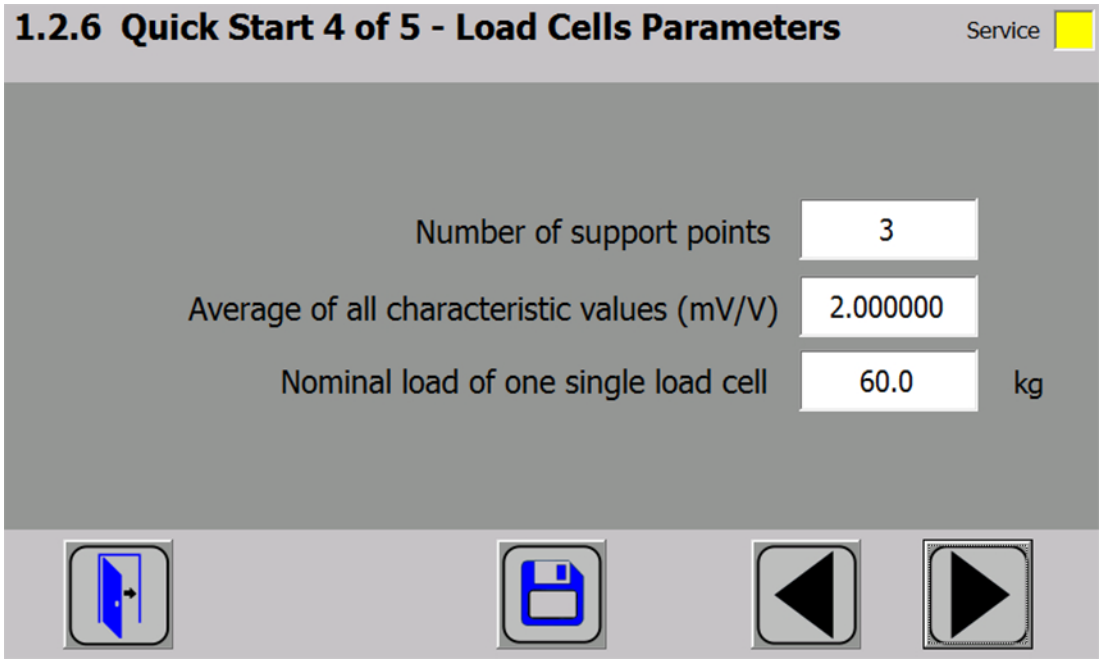

Figure 7-6 Quick start step 4b

The number of points of support corresponds with a silo, for example, to the number of clamps or feet of the silo. A quadratic platform scale with a load cell at each corner has 4 support points. The characteristic values of the individual load cells are required to calculate the average characteristic value of the cells.

The equation for the calculation is as follows:
(characteristic of cell 1 + characteristic of cell 2 + characteristic of cell n) / n

If the exact characteristic values are unknown, it is permissible to also use rounded-off numbers (e.g. 1.0 mV/V, 2.0 mV/V). The nominal load of an individual load cell (not the nominal load of the complete scale!) must subsequently be defined.

7.3.7 Performing the automatic calibration

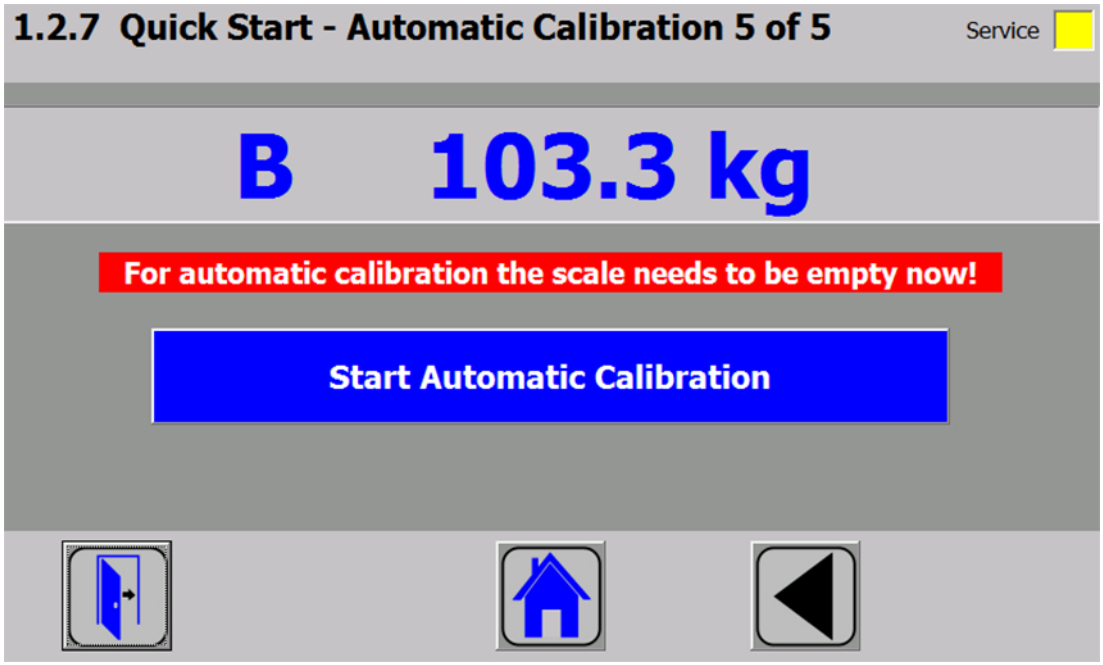

Figure 7-7 Quick start step 5b

Subsequently enter the "Perform automatic calibration" command with the scale empty. The scale is calibrated directly, and clicking on the house icon returns you to the start screen.

7.3.8 Checking the scale following calibration

If the scale is only used for company-internal purposes, a simple check is sufficient.

Perform the following steps:

1. The scale is unloaded and shows "0 kg".
2. Place a known reference weight on the scale.
   Check the displayed value.
3. If a second known reference weight is available, place it on the scale in addition.
   Check whether the scale displays the sum of the reference weights.
4. Remove the reference weights from the scale.
   Check that the display is "0 kg" again.

7.4 Fast commissioning (Quick Start) with SIWATOOL

7.4.1 Service with the SIWATOOL program

You can use the SIWATOOL program to commission the scale independent of the SIMATIC automation system. The program is included in the configuration package.

Install the SIWATOOL program (SIWATOOL folder) on your PC for commissioning.

The SIWATOOL program is described in the sectionService with the SIWATOOL program (Page 52).

You require an RS485-USB converter from Siemens in order to connect the PC to the SIWAREX (see section Accessories (Page 117)). You can then connect the RS485 interface of the SIWAREX to the USB port of the PC.

- Close the RS485-USB converter proposed by Siemens (see section Accessories (Page 117)) at the base unit of SIWAREX WP321 as follows:

RS485-USB converter	Base unit of SIWAREX WP321
Terminal A	Terminal 13 (D+)
Terminal B	Terminal 14 (D-)
Terminal X	-
-	Bridge between terminals 9 (T+) and 11 (D+‘)
-	Bridge between terminals 10 (T-) and 12 (D-‘)

7.4.2 Establish communication to SIWAREX WP321

- After starting the SIWATOOL program, select the SIWAREX WP321 from the "Device selection" window.

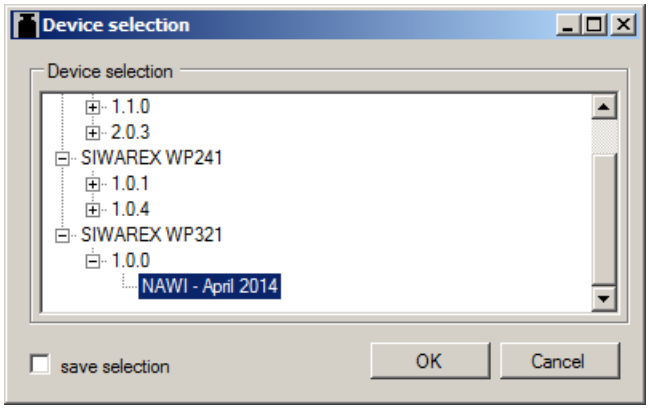

Figure 7-8 SIWATOOL: Device selection window

- Select the menu command "Communication" > "Choose interface".

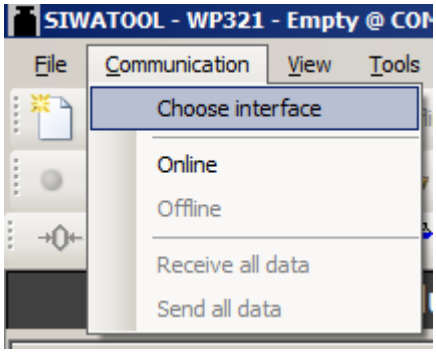

- Select the COM port of your PC used for the RS485-USB converter (for example: COM3).

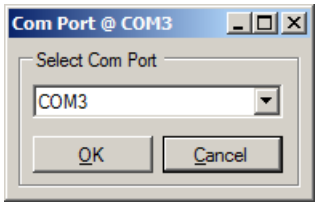

Figure 7-9 SIWATOOL: Select Com port window

- Click on the "Online" button

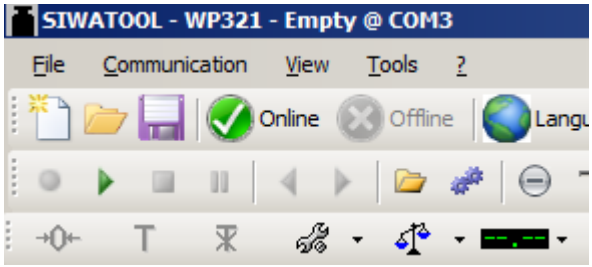

⇒ The communication to SIWAREX WP321 is established.

7.4.3 Calibration

7.4.3.1 Selecting the calibration method

You can calibrate the SIWAREX module in two different ways:

- Calibration with calibration weight (Page 43) When calibrating with calibration weights, mechanical influences of the scale construction are also taken into account.
- Automatic calibration (without calibration weight) (Page 47) When calibrating without calibration weights, the technical specifications of the connected load cell(s) are taken into account. With automatic calibration, the accuracy of the scale depends on the mechanical properties of the scale.

With both methods, make sure that the mechanical properties of the scale are flawless prior to calibration.

7.4.3.2 Calibration with calibration weight

Define calibration parameters

- Enter the marked and described calibration parameters.

	Calibration Parameter (DR3)	
	Info	
	Basic Parameters	
	Scale name	
①	**Weight unit**	kg
	Letter for gross weight	B for Gross
	Minimum weight (in d)	20
②	**Maximum weight**	100.0
③	**Resolution d**	0.1
	Calibration	
	Calibration weight 0	0.0
④	**Calibration weight 1**	100.0
	Calibration weight 2	0.0
	Calibration digits 0 (real)	0
	Calibration digits 1 (real)	2000000
	Calibration digits 2 (real)	0
	Additional Parameters	

① The defined weight unit applies to all weight specifications. You can specify a string with up to 4 digits as the weight unit, e.g.: t, kg, lbs.

② Exceeding the maximum weight (= maximum material to be weighed) is indicated in DS30, status 1-2, at parameter "Max 9e". If the maximum weight is exceeded, this bit is set to TRUE.

③ The resolution d is used for the weight display in the SIWATOOL program. You can set the resolution d in accordance with EN 45501 (0.0001 to 50).

④ Calibration weight 1 and its corresponding calibration digits define the characteristic curve of the scale.
Use a minimum calibration weight as calibration weight 1, with a load cell characteristic value of:

- 1 mV/V: 4 % of the total rated load of all load cells
- 2 mV/V: 2 % of the total rated load of all load cells
- 4 mV/V: 1 % of the total rated load of all load cells

Example

Number of load cells: 3

Nominal load of one single load cell: 100 kg

Load cell characteristic value: 2 mV/V

Use the following **minimum calibration weight** for calibration:

2 % x 3 x 100 kg = 6 kg

Figure 7-10 SIWATOOL: Calibration parameters for calibration with calibration weight

Send calibration parameters

- Send the calibration parameters set on your PC to SIWAREX.
- Select "Service mode on" in the Service menu. The calibration parameter (DR3) can only be sent and the calibration commands executed with service mode switched on.

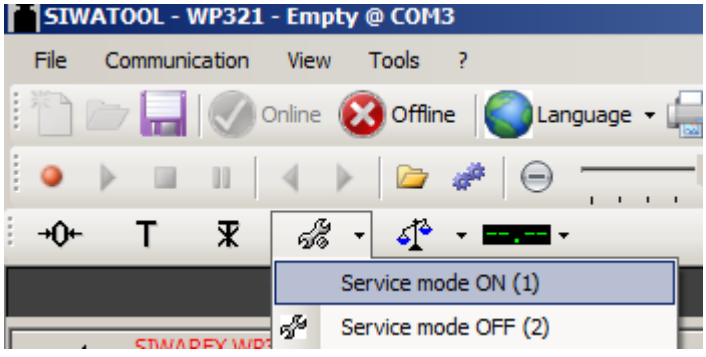

⇒ After switching on service mode, the following red wrench icon is displayed in the SIWATOOL next to the weight value.

Figure 7-11 SIWATOOL: Symbol for service mode

NOTICE
Parameters overwritten It is not possible to send or receive individual parameters within a data record. The complete data record must initially be received for every change to parameters within it. The desired parameter can then be edited and the data record sent again. If not all the data can be received from the scale before the parameter change, the active offline parameters in the scale can be overwritten by the "Send data record" function. Therefore, proceed as follows: 1. Select the "Receive data record" function. 2. Change the parameters. 3. Select the "Send data record" function.

- Right-click on "Calibration parameter (DR3)" and select "Send data record".

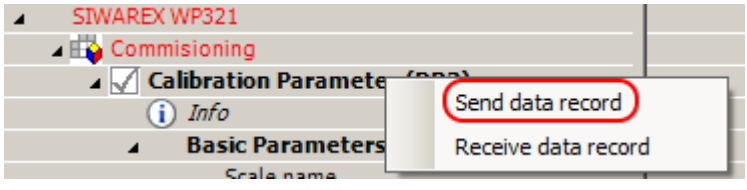

Figure 7-12 SIWATOOL calibration parameters: Send data record

⇒ All parameter settings in DR3 are identical between PC and SIWAREX. All calibration parameters (DR3) are shown in black.

Assign calibration weight

- After sending the calibration parameters to SIWAREX, select "Set Calibration Point 0" in the Service menu with an empty scale. Empty scale means only the mechanical dead load (e.g. empty container) rests on the load cells.

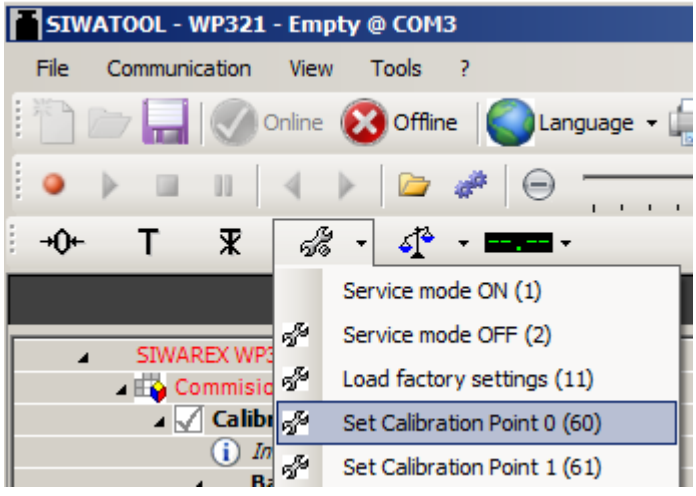

- Place the previously defined "Calibration weight 1" on the scale
- Select "Set Calibration Point 1" in the Service menu.

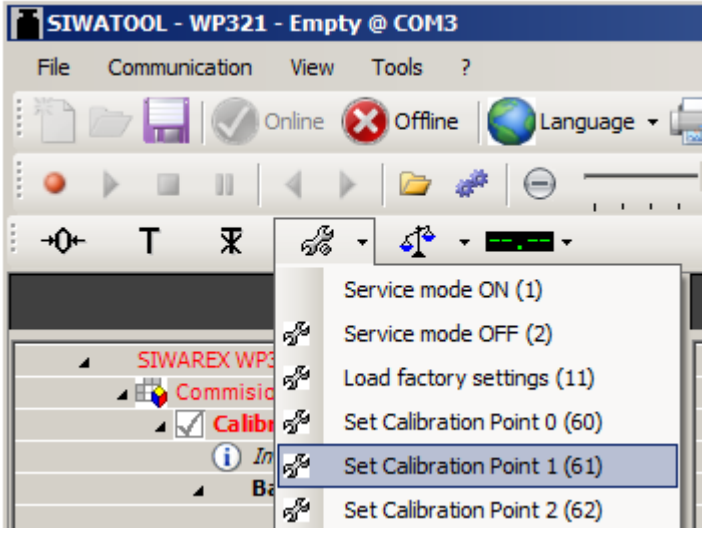

- Select "Service mode off" in the Service menu.

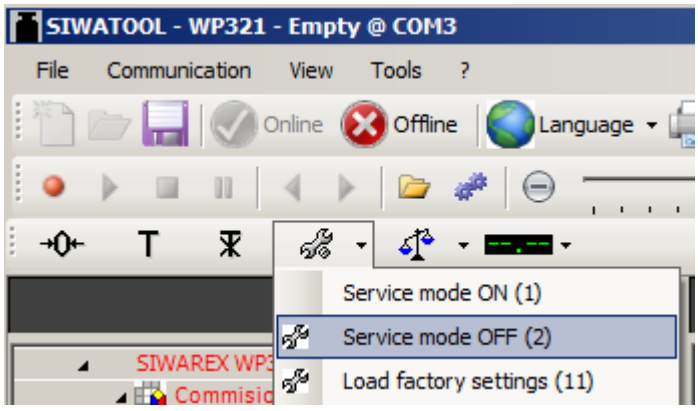

⇒ The calibration is finished and the correct weight value is now displayed in the SIWATOOL program.

Receiving calibration parameters

During the calibration, the SIWAREX internally changes its calibration digits. This means that SIWATOOL now has obsolete parameter values. Obsolete calibration parameters are marked in red.

The calibration parameter (DR3) must be read back in order once again obtain the calibration digits in the SIWATOOL which are consistent with the SIWAREX.

Figure 7-13 SIWATOOL: Obsolete calibration parameters

- Right-click on "Calibration parameter (DR3)" and select "Receive data record".

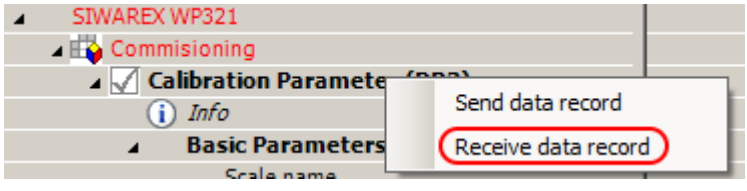

Figure 7-14 SIWATOOL calibration parameters: Receive data record

Checking the scale following calibration

If the scale is to be used for business purposes only, check it as follows:

1. The scale is unloaded and the display shows "0 kg".
2. Place one or more known test weights on the scale. To check other weight points of the scale in addition to the calibration weight, do not use the calibration weight.
3. Check the displayed weight value in the SIWATOOL program.
4. Remove the test weights from the scale.
5. Check that the display of the scale is 0 kg again.

7.4.3.3 Automatic calibration (without calibration weight)

The scale can also be calibrated without a weight. To do this, the parameters marked in bold in DR3 / basic parameters are checked or entered, and the data specific to the load cells are specified in DR10.

Requirement:

The scale is empty.

Procedure

- Enter the marked and described calibration parameters.

	Calibration Parameter (DR3)		
	Info		
	Basic Parameters		
	Scale name		
①	**Weight unit**	kg	kg
	Gross indicator	B for Gross	B for Gross
	Minimum weight (in d)	20	20
②	**Maximum weight**	100.0	100.0
③	**Resolution d**	0.1	0.1
	Calibration		
④	**Calibration weight 0**	0.0	0.0

① The defined weight unit applies to all weight specifications. You can specify a string with up to 4 digits as the weight unit, e.g.: t, kg, lbs.

② Exceeding the maximum weight (= maximum material to be weighed) is indicated in DS30, status 1-2, at parameter "Max 9e". If the maximum weight is exceeded, this bit is set to TRUE.

③ The resolution d is used for the weight display in the SIWATOOL program. You can set the resolution d in accordance with EN 45501 (0.0001 to 50).

④ If the scale is not empty during automatic calibration, but the material weight on the scale is known (e.g. after conversion to SIWAREX WP321), the known material weight can be specified as calibration weight 0. This means the material weight is taken into account during automatic calibration.

NOTE: If the specified material weight is incorrect (old electronic weighing system was not calibrated correctly, for example), the weighing result of SIWAREX WP321 will be distorted or incorrect!

Figure 7-15 SIWATOOL: Calibration parameters for automatic calibration (without calibration weight)

Send calibration parameters

- Send the calibration parameters set on your PC to SIWAREX.
- Select "Service mode on" in the Service menu. The calibration parameter (DR3) can only be sent and the calibration commands executed with service mode switched on.

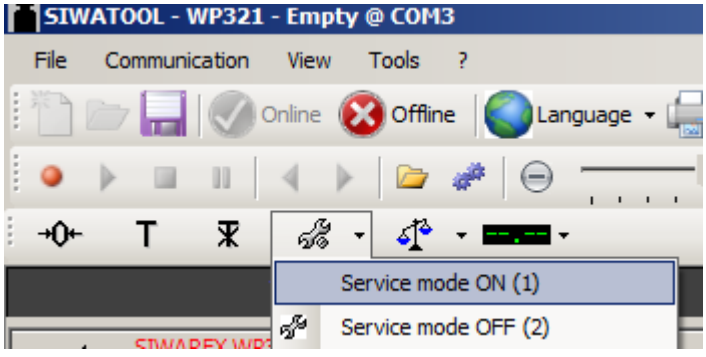

⇒ After switching on service mode, the following red wrench icon is displayed in the SIWATOOL next to the weight value.

Figure 7-16 SIWATOOL: Symbol for service mode

NOTICE
Parameters overwritten It is not possible to send or receive individual parameters within a data record. The complete data record must initially be received for every change to parameters within it. The desired parameter can then be edited and the data record sent again. If not all the data can be received from the scale before the parameter change, the active offline parameters in the scale can be overwritten by the "Send data record" function. Therefore, proceed as follows: 1. Select the "Receive data record" function. 2. Change the parameters. 3. Select the "Send data record" function.

- Right-click on "Calibration parameter (DR3)" and select "Send data record".

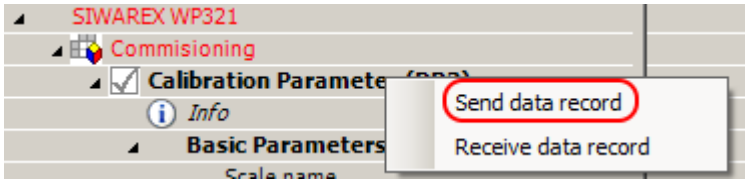

Figure 7-17 SIWATOOL calibration parameters: Send data record

⇒ All parameter settings in DR3 are identical between PC and SIWAREX. All calibration parameters (DR3) are shown in black.

Defining load cell parameters

- Enter the marked and described load cell parameters (DR10) in DS10.

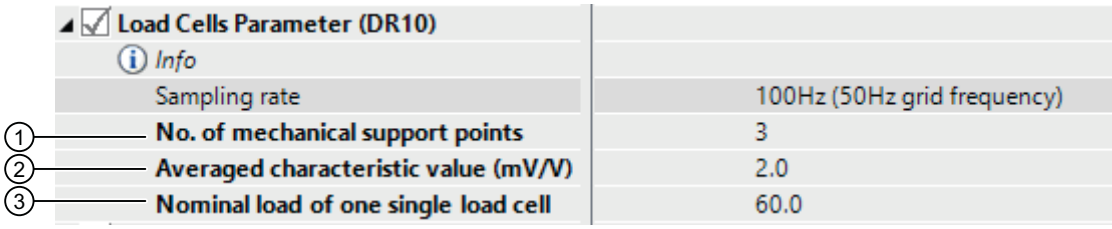

① The No. of mechanical support points corresponds with a silo, for example, to the number of clamps or feet of the silo. A quadratic platform scale with a load cell at each corner has four support points.

② Averaged characteristic value (mV/V) This parameter is the mean value of the characteristic values of all connected load cells (for example, Identifier = 2.018 mV/V). You can obtain the exact characteristic value of a load cell from its test report or read it directly at the load cell. If the characteristic values of the individual load cells are unknown, you can assume the value "1.0" for 1 mV/V load cells, the value "2.0" for 2 mV/V load cells, etc.

③ Specify the Nominal load of one single load cell.

Figure 7-18 SIWATOOL load cell parameters (DR10)

- Right-click on "Load cells parameter (DR10)" and select "Send data record".

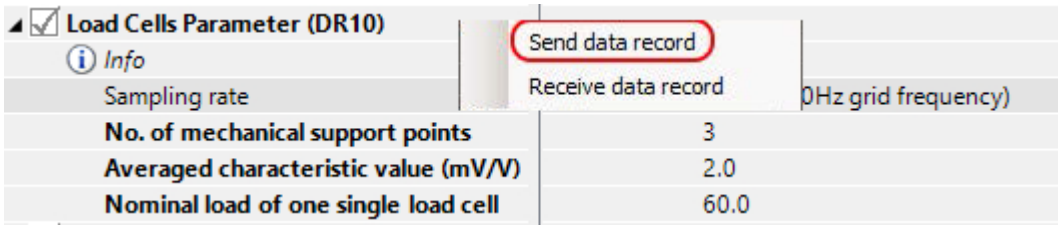

Figure 7-19 SIWATOOL load cell parameters: Send data record

⇒ All parameter settings in DR10 are identical between PC and SIWAREX. All load cell parameters (DR10) are shown in black.

NOTICE

Parameters overwritten

It is not possible to send or receive individual parameters within a data record. The complete data record must initially be received for every change to parameters within it. The desired parameter can then be edited and the data record sent again.

If not all the data can be received from the scale before the parameter change, the active offline parameters in the scale can be overwritten by the "Send data record" function. Therefore, proceed as follows:

1. Select the "Receive data record" function.
2. Change the parameters.
3. Select the "Send data record" function.

Run automatic calibration

- After sending the calibration parameters to SIWAREX, select "Automatic calibration" in the Service menu with an empty scale. Empty scale means only the mechanical dead load (e.g. empty container) rests on the load cells.

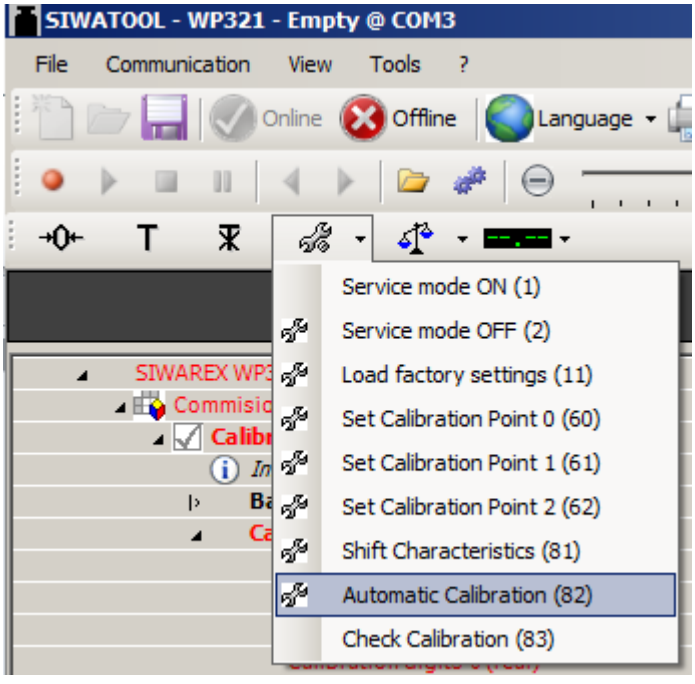

- Select "Service mode off" in the Service menu.

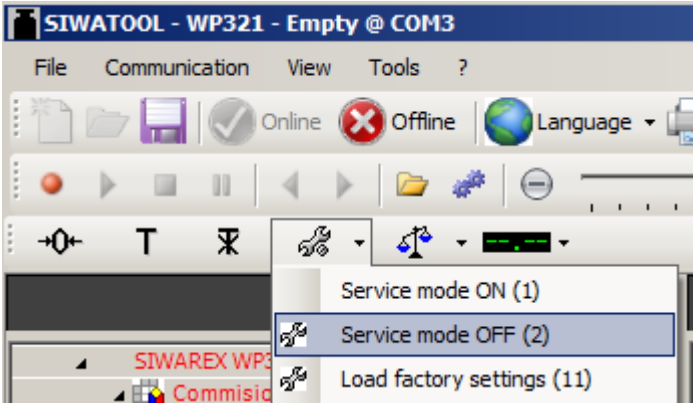

⇒ The calibration is finished and the correct weight value is now displayed in the SIWATOOL program.

Receiving calibration parameters

During the calibration, the SIWAREX internally changes its calibration digits. This means that SIWATOOL now has obsolete parameter values. Obsolete calibration parameters are marked in red.

The calibration parameter (DR3) must be read back in order once again obtain the calibration digits in the SIWATOOL which are consistent with the SIWAREX.

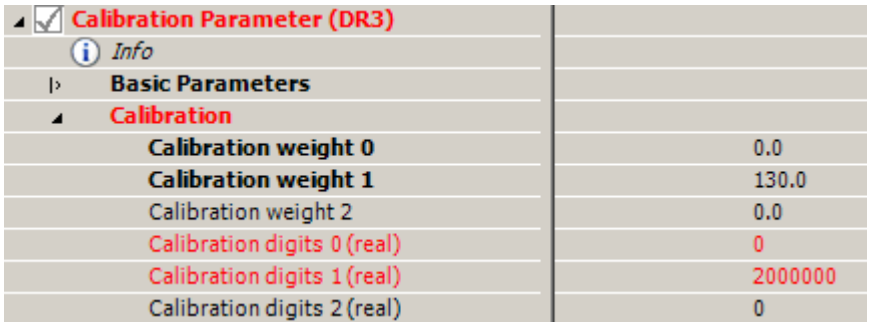

Figure 7-20 SIWATOOL: Obsolete calibration parameters

- Right-click on "Calibration parameter (DR3)" and select "Receive data record".

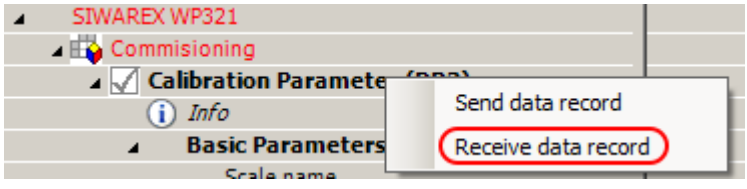

Figure 7-21 SIWATOOL calibration parameters: Receive data record

Checking the scale following calibration

If the scale is to be used for business purposes only, check it as follows:

1. The scale is unloaded and the display shows "0 kg".
2. Place one or more known test weights on the scale. To check other weight points of the scale in addition to the calibration weight, do not use the calibration weight.
3. Check the displayed weight value in the SIWATOOL program.
4. Remove the test weights from the scale.
5. Check that the display of the scale is 0 kg again.

7.4.4 Receive all data

- Activate the "Receive all data" function in the "Communication" menu.

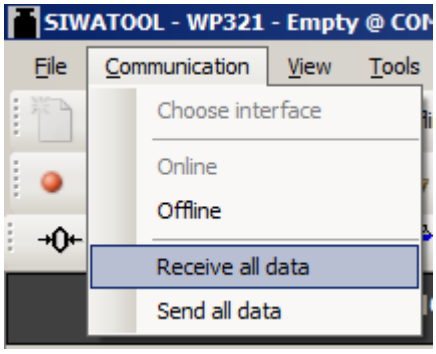

⇒ All parameters can be saved as a backup file on the hard disk. If a module is replaced, the backup file can be downloaded to the new module within a few seconds. The new module is right back to the calibrated state - without repeated calibration.

7.5 Service with the SIWATOOL program

You can use the SIWATOOL program to commission the scale independently of the SIMATIC automation system. You require an RS485/USB converter in order to connect the PC to the SIWAREX (see section Accessories (Page 117)). You can then connect the RS485 interface of the SIWAREX to the USB port of the PC.

The SIWATOOL program is included in the configuration package.

Install SIWATOOL for commissioning (part of the SIWAREX WP321 configuration package, see section Accessories (Page 117)) on your PC.

7.5.1 Windows and functions of SIWATOOL

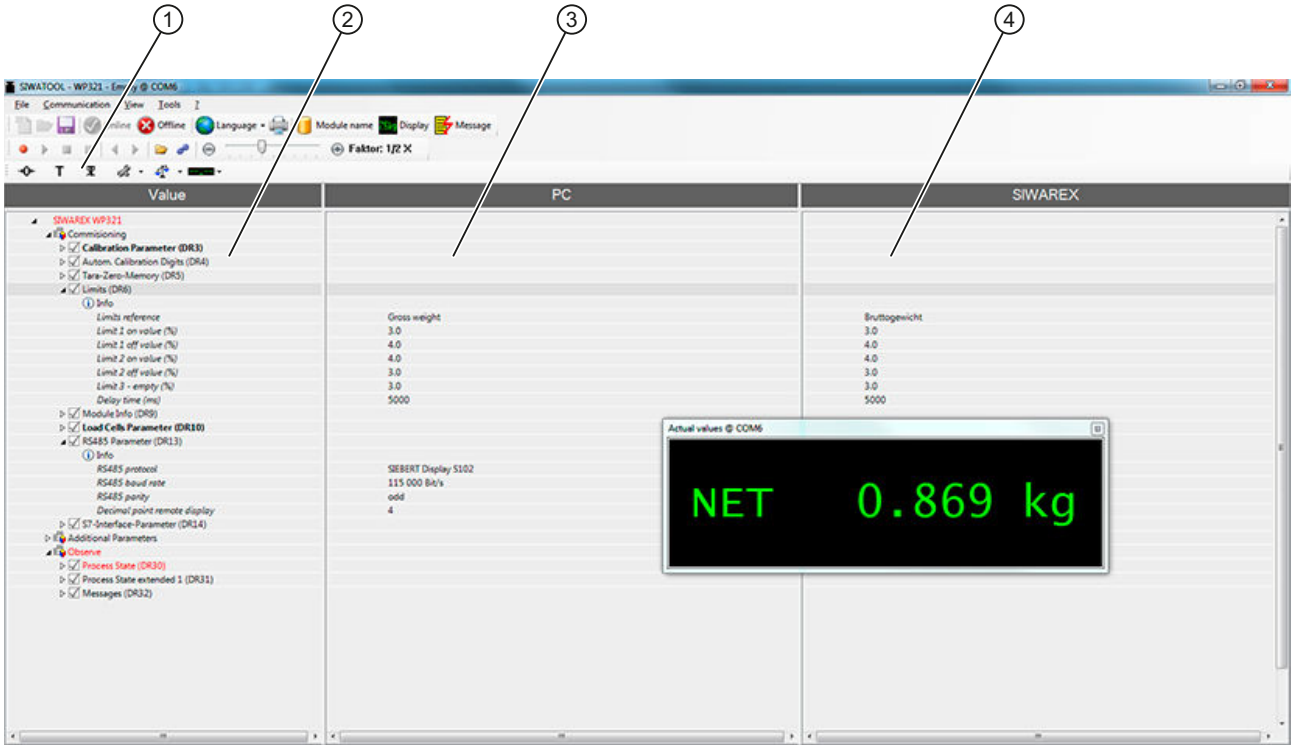

① Control elements for SIWATOOL and operation of the scale

② Parameter list of the SIWATOOL module

③ Offline values of the SIWAREX module

④ Online values of the connected SIWAREX module

Figure 7-22 Layout of the SIWATOOL user interface

For sending, receiving and transferring, select the corresponding data record and call the command list with a right mouse click.

The complete data record (all parameters of the data record) is always transferred, not just individual parameters.

Parameters marked in bold are relevant for typical application cases.

7.5.2 Offline parameter assignment

All scale parameters can be edited and saved without an electronic weighing system.

This reduces the setup time. You can thus prepare the parameters for several scales in your office, and subsequently transfer them to the electronic weighing system during setup.

Data from one scale currently in operation can be exported and used to set up another scale.

7.5.3 Online parameter assignment

To switch to online mode, connect the PC to the SIWAREX module via an RS485/USB converter. Set the appropriate interface in the communication menu.

You can change all parameters in the SIWAREX module in online mode. The message window shows the current contents of the message buffer of the SIWAREX module. The current process values are displayed in the "Online" column.

For test purposes, you can send various commands to the SIWAREX module. Differences between the online/offline data are marked in red by SIWATOOL. This affects both the associated data record and the individual parameter.

In order to archive data, all data can be exported from the SIWAREX module and saved as a file or printed.

Note

You can edit all data in the SIWAREX module in online mode. The changes are not automatically imported to the corresponding scale data block in the SIMATIC CPU.

To download the data to the SIWAREX module, select the data record with a right mouse click and send it explicitly to the SIWAREX module.

Online parameter trends can be recorded and played back using the recorder function located at the top right-hand edge of SIWATOOL. You can use the "Configure recorder" button to select the data records to be recorded and to set the save parameters. The playback speed can be set using a slider.

7.5.4 Available help options

SIWATOOL offers various help options for operation:

- Info card
  You can select the "Info" item directly underneath the individual data records in the navigation tree. This info card explains how the data record influences the scale behavior.
- Tooltip
  If you move the mouse over a button or parameter, a corresponding help text is displayed.
- Help
  Click on the menu option "Help" to call up the SIWATOOL help. The Help can be opened separately.

7.5.5 Entering parameters with SIWATOOL

There is a defined procedure for handling parameters. The current parameters in the SIWAREX module are displayed in the right-hand window, while the parameter values on the PC are displayed in the left-hand window. The new parameter value is entered first in the left-hand window. If several parameters of the data record are to be changed, they are entered consecutively. The data record is subsequently selected in the tree view and sent to the SIWAREX modules using the right mouse button.

Parameters are always changed as complete data records, rather than individually.

Scale parameters and functions 8

8.1 Parameters and functions

All parameters are set to default values in the factory. You can restore the configuration to factory settings using the "Load factory settings" command.

The scales are ready for operation with the default parameter settings. You do not need to re-enter all parameters. The advantage of this solution is that you can decide the default values to be retain and the parameters that need to be adapted for your application.

All parameters are divided into data records (DR). The data records are organized in steps (tasks) to be implemented during commissioning or during the process.

The scale functions governed by the parameters are also described in the parameter description below.

First, the parameters of a given data record are displayed in a table. The detailed parameter description for the parameters of this data record then follows.

When it receives new parameters, the SIWAREX module runs a validation check. In the event of a parameter assignment error, the data record is not applied (not saved) by the SIWAREX module and a data/operator error is reported.

8.2 DR 2 command code

DR 2 is a special data record used to transfer commands to the SIWAREX module by SIWATOOL.

8.3 DR 3 calibration parameters

The calibration parameters need to be checked and if necessary modified for all scales.

The scale is basically defined by calibration parameters and calibration operation.

Procedure

- Check all parameters and modify them as required.
- Transfer the DR 3 data record from SIWATOOL to the scale.
- Calibrate the scale.
- Transfer the DR 3 data record from the scale to SIWATOOL.

Table 8-1 Assignment of data record 3

Variable	Note	Type	Length (bytes)	Rw	Default	Min.	Max.
Data record number	Contains no. of data record	UINT	2	r	3	-	-
Length	Data record length information	UINT	2	r	124	-	-
Application	Information on which application the DR belongs to	UINT	2	r	201	-	-
Version identifier	Information on the current data record version	UINT	2	r	1	1	65 635
Scale name header	Maximum length and actual length of string for scale name	UBYTE[2]	2	rw	12,12	-	-
Scale name (Page 60)	Scale name specified by user	STRING[12]	12	rw	" "	-	-
Weight unit header	Maximum length and actual length of string for weight unit (for example, g, kg, t, ...)	UBYTE[2]	2	rw	04,04	-	-
Unit of weight (Page 60)[1)]	Weight unit	STRING[4]	4	rw	"kg••"	-	-
Gross identifier header	Maximum length and actual length of string for weight unit	UBYTE[2]	2	rw	02,02	-	-
Gross identifier (Page 60)	Abbreviation of gross (B or G), only one byte is used!	STRING[2]	2	rw	"B"	"B"	"G"
Reserve	Reserve	UINT	8	rw	0	-	-
Maximum weighing range (Page 60) [1)]	Maximum weight	REAL	4	rw	100	> wb_min* ZIF.step	maximum number range
Calibration weights 0, 1, 2 and calibration digits 0, 1, 2 (Page 60)	Calibration weight 0[1)] (usually the zero point)	REAL	4	rw	0	1	9 999 999
	Calibration weight 1[1)]	REAL	4	rw	100	1	9 999 999
	Calibration weight 2	REAL	4	rw	0	1	9 999 999
	Calibration digits 0 determined during calibration with calibration weight 0	DINT	4	rw	0	-3 999 999	+3 999 999
	Calibration digits 1 determined during calibration with calibration weight 1	DINT	4	rw	2 000 000	0	+3 999 999
	Calibration digits 2 determined during calibration with calibration weight 2	DINT	4	rw	0	0	+3 999 999
Scale interval (Page 61) [1)]	Resolution weighing range 1 (1*10**k, 2*10**k, 5*10**k]; k: -3 … 2)	REAL	4	rw	0.1	0.001	50
Reserve	Bit 1: Reserve	BIT	2	rw	0	0	1
Reserve	Bit 2: Reserve	BIT	0	rw	0	0	1

Variable	Note	Type	Length (bytes)	Rw	Default	Min.	Max.
Automatic zero adjustment (Page 61)	Automatic zero tracking (zero tracking device) 0: Autom. zeroing off 1: Autom. zeroing on	BIT	0	rw	0	0	1
Reserve (13 bits)	Bit 3: Reserve	BIT	0	rw	0	0	1
Decimal places for process values (Page 61)	0: No rounding 1: Rounding to 1 decimal place 2: Rounding to 2 decimal places 3: Rounding to 3 decimal places 4: Rounding to 4 decimal places 5: Rounding to 5 decimal places 6: Rounding to 6 decimal places	UINT	2	rw	0	0	6
Maximum tare load (Page 61)	Range of subtractive tare unit [in % of max. weighing range]	REAL	4	rw	0	0	250
Reserve	Reserve	REAL	8	rw	1.0	0	100.0
Maximum negative zeroing limit (Page 61)	Negative range of semi-automatic zeroing device [in % of max. weighing range]	REAL	4	rw	1	0	100.0
Maximum positive zeroing limit (Page 61)	Positive range of semi-automatic zeroing device [in % of max. weighing range]	REAL	4	rw	3.0	0	100.0
Standstill range (Page 62)	Standstill range (in d)	REAL	4	rw	0.1	0	maximum number range+
Standstill time (Page 62)	Standstill time 1 in ms	TIME	4	rw	2 000	10	10 000
Standstill waiting time (Page 62)	Waiting time until standstill. 0: standstill-dependent scale command, if there is no standstill, immediately rejected. > 0: Maximum waiting time until command is executed	TIME	4	rw	2 000	0	10 000
Limit frequency low pass filter 1 (Page 63)	Low-pass filter cut-off frequency: 0: Filter disabled	REAL	4	rw	1	0.01	200
Order no. low pass filter 1 (Page 63)	Filter number	UINT	2	rw	4	0	4
Reserve	Reserve	UINT	2	rw	0	-	-

Variable	Note	Type	Length (bytes)	Rw	Default	Min.	Max.
Limit frequency low pass filter 2 (Page 63)	Low-pass filter limit frequency: 0: Filter disabled	REAL	4	rw	0	0.01	200
Order no. low pass filter 2 (Page 63)	Filter number	UINT	2	rw	4	0	4
Mean value filter depth (Page 64)	Filter for digit values, Permissible filter depth: 0 … 250	UINT	2	rw	10	0	500

[1] Parameter for calculation of calibration points

8.3.1 Scale name

You can select any name, but it may not exceed 12 characters. You can enter any designation.

8.3.2 Unit of weight

A string with up to four digits can be specified as the unit of weight, e.g.: t, kg, lbs. The defined unit of weight applies to all weight specifications. Entries are not be converted if the unit of weight has changed. Entries must be left-aligned.

8.3.3 Gross identifier

The gross identifier specifies the letter, B (for brutto) or G (for gross), to be used in the display for gross weights.

8.3.4 Maximum weighing range

The weight can only be used with the defined scale interval below the maximum weight (+ 9 d, d = scale interval). The maximum weight is defined during commissioning. Exceeding the maximum weight is indicated in the status (DR30).

The maximum weight depends on the number and type of load cells used.

8.3.5 Calibration weights 0, 1, 2 and calibration digits 0, 1, 2

The calibration weights and corresponding calibration digits define the characteristic curve of the scales. A detailed description can be found in section Calibration procedure (Page 64).

8.3.6 Scale interval

The scale interval for the weighing range can be defined in accordance with EN 45501 (0.0001 to 50).

8.3.7 Automatic zero adjustment

If required, you can carry out semi-automatic zeroing of the scale using the "Zeroing" command.

The automatic adjustment sets the scale to zero without a further command in the event of slow zero drifting. Slow drift is assumed if the OIML R76 criteria are met.

Note

If this function is enabled, the scale may eventually read zero after a slow drift even if they are fully loaded. The function can, however, be limited by specifying a maximum and minimum weight for zeroing.

8.3.8 Decimal places for process values

This parameter is used to specify the number of decimal places to which the process values are to be rounded. This value decouples the main display of the weight values from the values used in the control software.

8.3.9 Maximum tare load

The weighing module accepts any external tare specification which is less than the maximum tare load (percentage of maximum weighing range). Tare commands are also accepted provided that the current gross weight is less than the configured maximum tare load.

8.3.10 Maximum negative zeroing limit

Zeroing defines the current weight of the scales as zero.

You can limit the effect of the zeroing function. The limitation is based not on the current gross weight, but rather on the weight which the scales would display had there been no zeroing (time of scale calibration).

8.3.11 Maximum positive zeroing limit

You can limit the effect of the zeroing function. The limitation is based not on the current weight, but rather on the weight which the scales would display had there been no zeroing (time of scale calibration).

8.3.12 Standstill range

Standstill monitoring checks whether the scales are correctly balanced. Scale standstill is registered if the weight changes by less than a specified fluctuation in d (standstill value) over a specified time (standstill time). Standstill monitoring is used in static scale mode (commands: zeroing, taring). The diagram below illustrates how standstill monitoring works.

The current weight can only be registered in legal trade applications if standstill is reached.

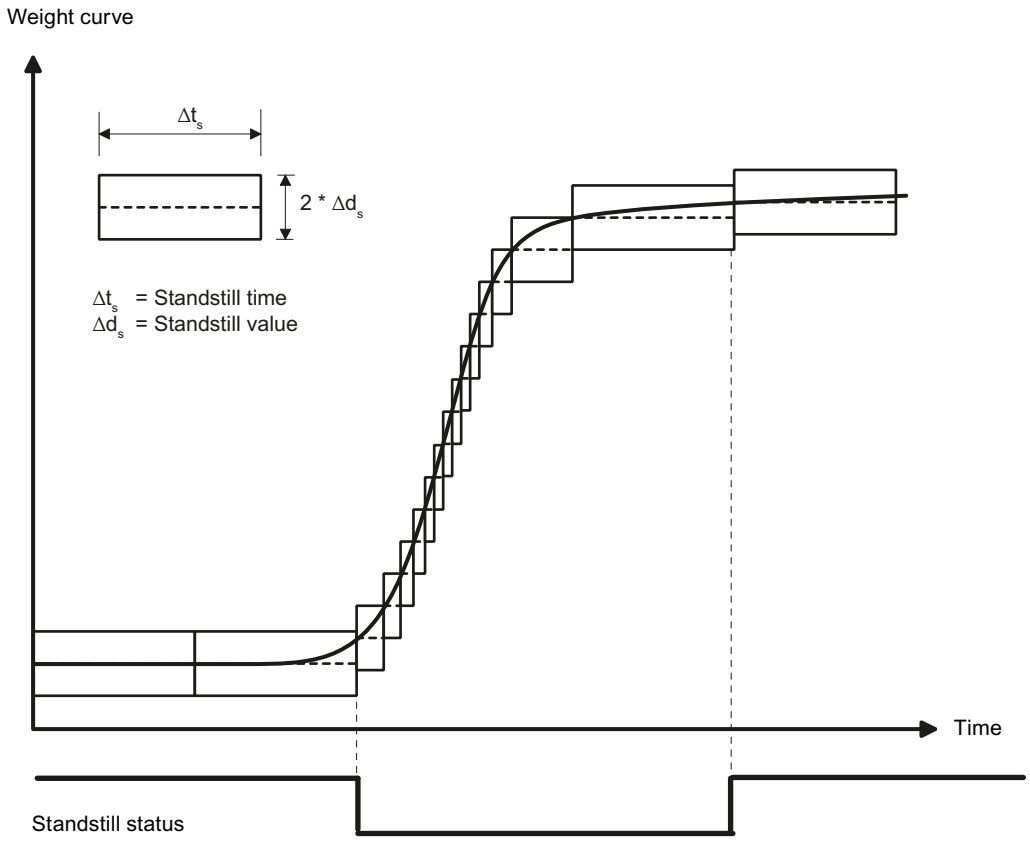

Figure 8-1 Standstill monitoring

8.3.13 Standstill time

Standstill monitoring checks whether the scales are correctly balanced. Scale standstill is registered if the weight changes by less than a specified fluctuation in d (standstill value) over a specified time (standstill time). Standstill monitoring is used in static scale mode (with the following commands: zeroing, taring).

8.3.14 Standstill waiting time

Standstill waiting time is a maximum waiting time for standstill on execution of a command which depends on standstill (taring, zeroing). A technology message is generated if the command cannot be executed during the standstill waiting time because there is no standstill.

If the standstill waiting time is equal to zero, a command requiring standstill is rejected immediately if there is no standstill.

8.3.15 Low-pass filter limit frequency

There is a critically damped low-pass filter for suppressing faults. The diagram below shows the step response of the filter (f_g = 2 Hz). The entry "0" means that the filter is switched off. The setting range of the limit frequency is 0.01 to 50.0 Hz.

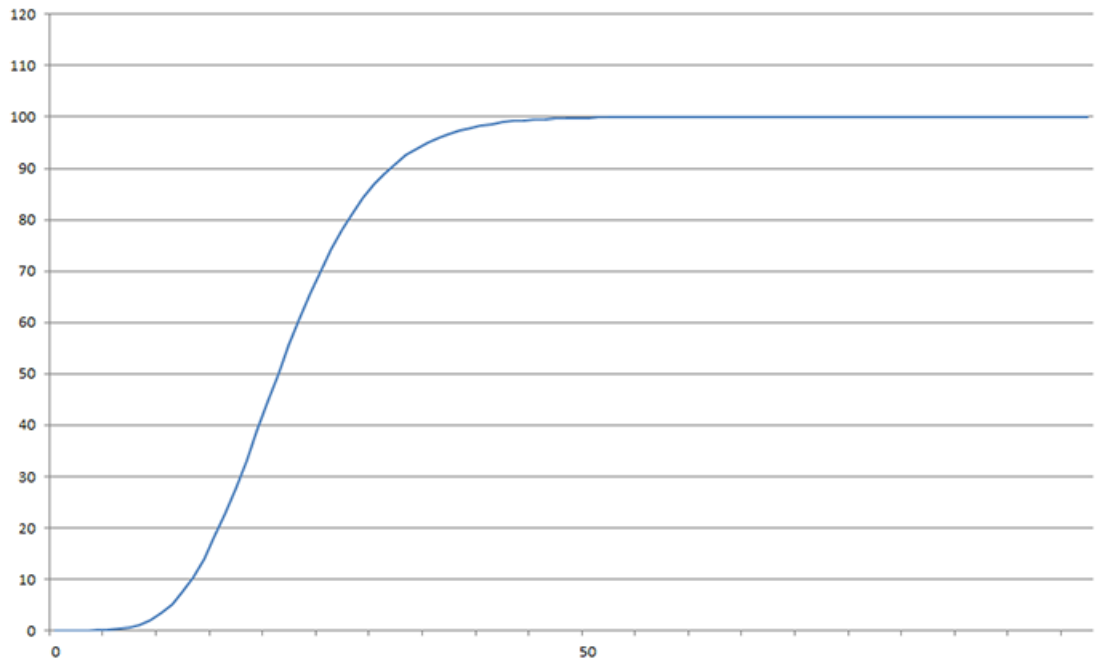

Figure 8-2 Step response of the digital low-pass filter when f_g = 2 Hz

When you define the limit frequency, it is extremely important for the suppression of faults. Defining the limit frequency defines the "speed" of the scale's response to changes in the measured value.

A value of 5 Hz, for example, results in a relatively rapid response to a change in weight. A value of 0.5 Hz, for example, makes the scale "slower".

Note

Process values filtered with low-pass filter 1 are available at the SIMATIC I/O (DR 14) and in the DR 30. Process values filtered with low-pass filter 2 can only be set to the SIMATIC I/O with the corresponding selection in DR 14.

8.3.16 Low-pass filter number

The number of the filter defines the effect of damping. The values 2 and 4 can be set. The higher the selected filter number, the higher the effect.

8.3.17 Mean value filter depth

The mean value filter is used to steady the weight against random interference. The weight is the mean value of n (n = max. 250) weights which are recorded by the weighing module every 10 ms, e.g. when n = 10, the mean of 10 weights is calculated. Every 10 ms, the oldest value is discarded and the newest value included in the calculation.

8.4 Calibration procedure

8.4.1 Calibration with calibration weights

The incoming analog measured value from the load cells is converted into a digital value in an analog-to-digital converter. A weight is calculated using this digital value. This weight is then used by all weighing module functions for messages and for determining the status.

The characteristic curve of the measuring system must be defined before the weight can be calculated from the digital value. In the simplest case, the characteristic curve is defined with points 0 and 1. The first working point (point 0) is defined by the empty scale (no load) at their own weight. The load cells return a voltage measurement to the weighing module as a result of the weight of the scales themselves. Following analog-to-digital conversion of the measured voltage, the zero point is assigned to the digital value (calibration digits for the zero point).

If the scales are loaded with a defined standard weight (e.g. 50% of the measuring range), the new digital value returned by the analog-to-digital converter is assigned the standard weight.

The characteristic curve can also be determined with a third point, which must be higher than point 1.

Make sure that the difference between two calibration weights is at least 40 000 digits, as the calibration command may otherwise be rejected.

The calibration procedure involves the following steps:

- Activation of service mode using the "Service mode on" command.
- Define the calibration weight and other parameters of the DR 3 data record.
- Transfer the DR 3 data record to the scales.
- Trigger "Adjustment weight 0 valid" for empty scales.
- Load the scale with the defined standard weight.
- Trigger "Adjustment weight 1 valid".
- Transfer data record DR 3 from the scale to SIWATOOL and save the data on a data medium.

You must follow the correct calibration sequence with increasing calibration weights.

Example

Zero point = 0.0 kg (always)	equals 326348 digits
Calibration weight 1 = 100 kg	equals 1324765 digits

Load cell characteristic value	Calibration digit 1 (ca.) when rated load is
1 mV/V	500 000
2 mV/V	1 000 000
4 mV/V	2 000 000

This defines the characteristic curve and the scale can now calculate weights for the full measuring range.

The diagram below illustrates the relationship between calibration digits and the calibration weight.

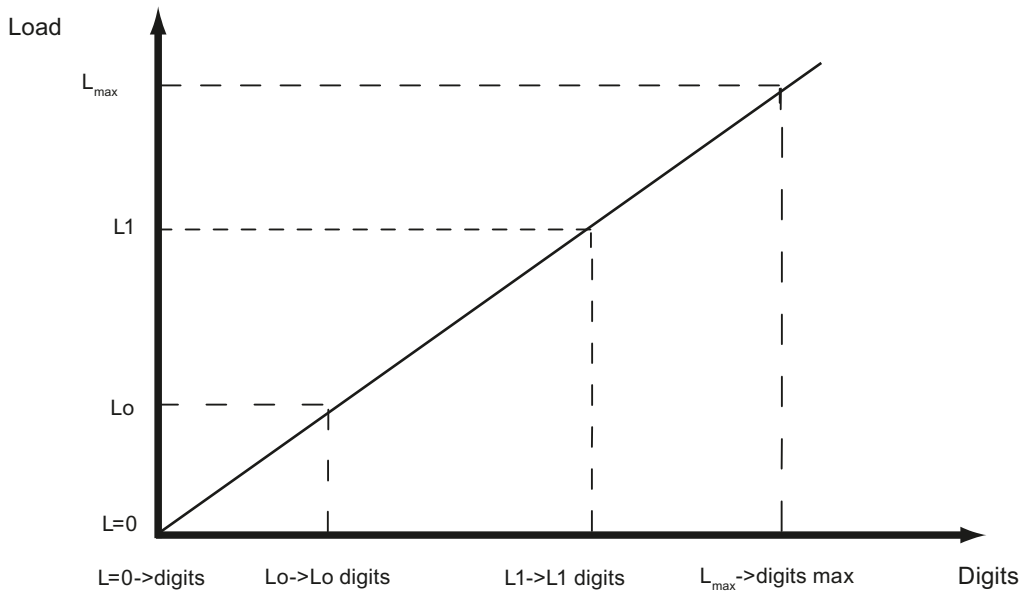

Figure 8-3 Calibration digits and calibration weight

Load	Comment	Load	Digits
L=0	Load cells empty		Approx. 0
Lo	Calibration weight 0 "Zero point"	0 kg	e.g. 70 682 for calibration point 0
L1	Calibration weight 1	e.g. 60 kg	e.g. 308 452 for calibration digits 1
L_{max}	Rated load of the load cell(s)	e.g. 100 kg	1 000 000
L_{max} +10 %	Rated weight + approximately 10%	e.g. approximately 110 kg	1 090 000

You do not need to perform calibration if the calibration digits and the calibration weights are known to the weighing module described here. They are simply sent to SIWAREX by data record DR 3 and the scale is ready for use immediately.

The SIWATOOL program facilitates rapid calibration.

Following commissioning and calibration, all data records must be read from the weighing module and saved as a scale file.

Identical scales can be put into operation immediately. Connect the PC to the new scale and enable the "Send all data records" function in service mode. This transfers the parameters for

calibration weights and calibration digits, and the characteristic curve is determined immediately. The same applies when you change a weighing module.

Note

Two working points are usually sufficient for determining the scale's characteristic curve. An additional working point is only required for non-linear systems.

Specification of negative calibration points is not possible. However, the characteristic can also be used in the negative range down to -2 000 000 digits. To achieve this, the characteristic curve generated in the positive range is extended into the negative range.

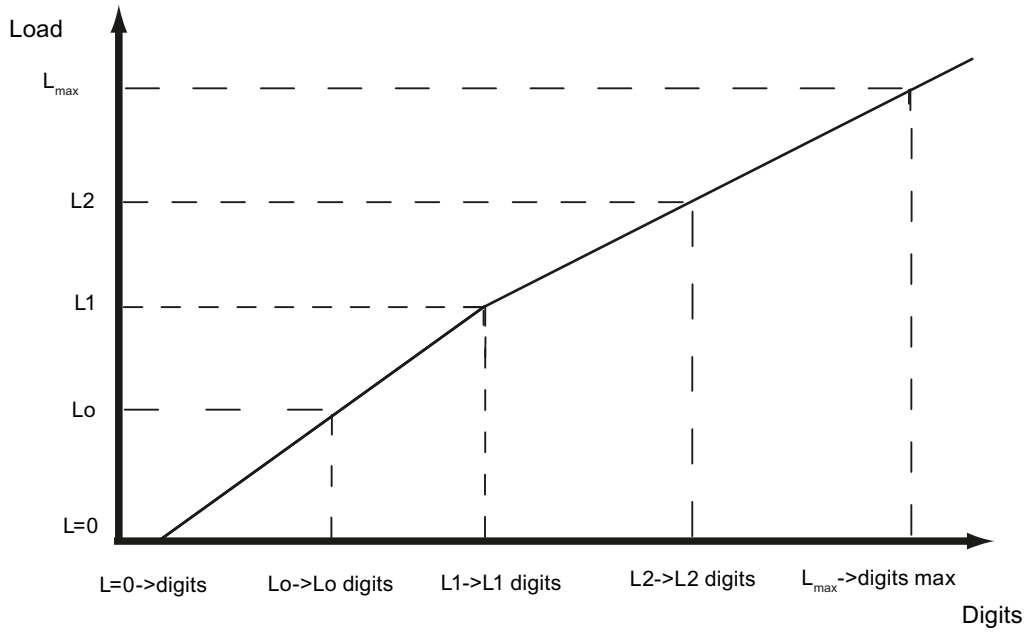

Figure 8-4 Linearizing the scale's characteristic curve

Load	Comment	Load	Digits
L=0	Load cells empty		Approx. 0
Lo	Calibration weight 0 "Zero point"	0 kg	e.g. 76 082 for calibration point 0
L1	Calibration weight 1	e.g. 60 kg	e.g. 386 452 for calibration digits 1
L2	Calibration weight 2	e.g. 80 kg	e.g. 451 367 for calibration digits 2
L_{max}	Rated load of the load cell(s)	e.g. 100 kg	1 000 000
L_{max} +10 %	Rated weight + approximately 10%	e.g. approximately 110 kg	1 090 000

8.4.2 Automatic calibration

Scales can be rapidly commissioned with automatic calibration. The accuracy of the scale greatly depends on the entered parameters and the mechanical properties of the scale. However, you achieve the best level of accuracy for the scales by using calibration weights.

During initial commissioning with automatic calibration, you must reset the module using the "Load factory settings" command.

Subsequently specify the basic parameters in DR 3 and the load cell parameters in data record 10. See also the section: Automatic calibration (without calibration weight) (Page 47). Command 82 "Perform automatic calibration" then uses this data and the currently applied dead load to calculate the characteristic curve of the scale. The characteristic curve is active immediately.

Note

The characteristic curve data in data record 3 active prior to execution of command 82 is directly overwritten.

Automatic calibration requires the following criteria:

- Correct mechanical installation of the scale
- Scale is empty (only mechanical installation (= dead load) present on the cells) or the material weight in/on the scale is known (e.g. after conversion to WP321).
- Load cells are evenly loaded
- There are no shunt circuits

8.5 DR 4 Output of calculated calibration digits

Date record DR 4 outputs the digits calculated from automatic scale calibration.

This data record cannot be sent to the scale.

Table 8-2 Assignment of data record 4

Variable	Note	Type	L	Rw	Default	Min.	Max.
Data record number	Contains no. of data record	UINT	2	r	4	-	-
Length	Data record length information	UINT	2	r	28	-	-
Application	Information about which application the DR belongs to	UINT	2	r	201	-	-
Version identifier	Information on the current data record version	UINT	2	r	1	1	65635

Variable	Note	Type	L	Rw	Default	Min.	Max.
Calibration digits 0, 1, 2 (calculated) (Page 68)	Calibration digits 0 (calculated): Calibration digits calculated in "Automatic Calibration"	DINT	4	r	?		
	Calibration digits 1 (calculated): Calibration digits calculated in "Automatic Calibration"	DINT	4	r	0		
	Calibration digits 2 (calculated): Calibration digits calculated in "Automatic Calibration"	DINT	4	r	0		
Reserve 1	Reserve	INT	2	r	0	-	-
Reserve 2	Reserve	UINT	2	r	0	-	-
Reserve 3	Reserve	REAL	4	r	0	-	-

8.5.1 Calibration digits 0, 1, 2 (calculated)

The calculation is based on the parameters from DR 3 and DR 10 identified by bold font and is activated by the command no. 82.

8.6 DR 5 zeroing memory

Data record DR 5 displays the current values in the tare memory and the zeroing memory.

Procedure

- Check all parameters
- Transfer the data record to the scale

Table 8-3 Assignment of data record 5

Variable	Note	Type	L	Rw	Default	Min.	Max.
Data record number	Contains no. of data record	UINT	2	r	5	-	-
Length	Data record length information	UINT	2	r	40	-	-
Application	Information about which application the DR belongs to	UINT	2	r	201	-	-
Version identifier	Information on the current data record version	UINT	2	r	1	1	65635

Variable	Note	Type	L	Rw	Default	Min.	Max.
Effective tare weight - from specification (Page 69)	Current tare weight from specification as process value	REAL	4	rw	0	0	Depends on specification in DR 3
Effective tare weight (semi-automatic) (Page 69)	Current tare weight from semi-automatic mode as process value	REAL	4	rw	0	0	Depends on specification in DR 3
Reserve	Reserve	REAL	4	rw	0	-	-
Zero weight (semi-automatic) (Page 69)	Current zeroing weight (affected by zeroing)	REAL	4	rw	0	Depends on specification in DR 3	Depends on specification in DR 3
Current zero tracking weight (Page 70)	Zero point correction weight affected by automatic zeroing	REAL	4	rw	0	Depends on specification in DR 3	Depends on specification in DR 3
Dead load (Page 70)	Dead load determined during calibration	REAL	4	r	0	Depends on specification in DR 3	Depends on specification in DR 3
Reserve 1	Reserve	INT	2	rw	0	-	-
Reserve 2	Reserve	UINT	2	rw	0	-	-
Reserve 3	Reserve	REAL	4	rw	0	-	-

8.6.1 Effective tare weight - from specification

A tare weight can be specified in data record DR 15. You activate the specified tare weight with a command (see command 1013). From this point on, the activated tare weight is factored into the weight calculations. The "Delete tare" command deactivates the active tare weight. This does not delete the specification in data record DR 15.

8.6.2 Effective tare weight (semi-automatic)

The corresponding command (see command 1011) applies the current gross weight as the active tare weight. From this point on, the activated tare weight is factored into the weight calculations. The "Delete tare" command deactivates the active tare weight.

8.6.3 Zero weight (semi-automatic)

The zero weight command (see command 1001) entered by the user sets the current gross weight to "Zero" provided it is within the defined zero setting limits. The current gross weight is saved as the zero weight. The zeroing weight must be within the specified range (usually +3 / -1 % of the set zero point).

8.6.4 Current zero tracking weight

The current zero tracking weight is recorded in this parameter if automatic zero tracking is activated.

8.6.5 Dead load

The characteristic curve of the scales is determined during calibration. When there is no load, the main display returns "0". The dead load is the weight of the empty scales, i.e. the weight of the scales themselves.

8.7 DR 6 limit value settings

The switch-on and switch-off values for the limits are configured in data record DR 6.

Procedure

- Check all parameters and modify them as required
- Transfer the data record to the scale

Table 8-4 Assignment of data record 6

Variable	Note	Type	L	Rw	Default	Min.	Max.
Data record number	Contains no. of data record	UINT	2	r	6	-	-
Length	Data record length information	UINT	2	r	60	-	-
Application	Information on which application the DR belongs to	UINT	2	r	201	-	-
Version identifier	Information on the current data record version	UINT	2	r	1	1	65 635
Limit reference (Page 71)	Reference value for limits 0: Gross weight in % of max. weighing range 1: Net weight in % of max. weighing range 2: Gross weight, absolute 3: Net weight, absolute	UINT	2	rw	0	0	1
Reserve	Reserve	UINT	2	rw	0	0	-
Limit value 1 ON (Page 72)	Switch-on point for Limit 1	REAL	4	rw	0	maximum number range	maximum number range
Reserve	Reserve	TIME	4	rw	0	0	maximum number range+

Variable	Note	Type	L	Rw	Default	Min.	Max.
Limit value 1 OFF (Page 72)	Switch-off point for Limit 1	REAL	4	rw	0	maximum number range	maximum number range
Reserve	Reserve	TIME	4	rw	0	0	maximum number range+
Limit value 2 ON (Page 72)	Switch-on point for Limit 2	REAL	4	rw	0	maximum number range	maximum number range
Reserve	Reserve	TIME	4	rw	0	0	maximum number range+
Limit value 2 OFF (Page 72)	Switch-off point for Limit 2	REAL	4	rw	0	maximum number range	maximum number range
Reserve	Reserve	TIME	4	rw	0	0	maximum number range+
Limit value "Empty" ON (Page 72)	Limit value "empty" ON With limit reference 0 and 1: Based on the gross weight in % of max. weighing range With limit reference 2 and 3: in relation to absolute gross weight	REAL	4	rw	0	maximum number range	maximum number range
Delay time for limits (Page 73)	Uniform delay time for limits in ms	TIME	4	rw	0	0	maximum number range+
Reserve	Reserve	UINT	2	rw	0	-	-
Reserve	Reserve	UINT	2	rw	0	-	-
Reserve	Reserve	REAL	4	rw	0	-	-

8.7.1 Limit reference

Value	Limit values relate to
0	Gross weight in % of max. weighing range
1	Net weight in % of max. weighing range
2	Absolute gross weight
3	Absolute net weight

The limit value "Empty" always relates to gross weight zero.

8.7.2 Limit value 1 ON, limit value 2 ON, limit value 1 OFF, limit value 2 OFF

The switch-on and switch-off points can be specified separately for each limit as a percentage of the measuring range or as absolutely values (based on "Limit reference" parameter setting). This allows both minimum and maximum value violation monitoring with hysteresis. A delay time for switch-on and switch-off can also be specified. Either the current net weight or the current gross weight can be selected as the reference value for limits 1 and 2. Negative limits are only possible with input of absolute values. Negative limits as percentage are rejected.

Maximum value monitoring is implemented with the following specifications:

- Switch-on value > switch-off value

Minimum value monitoring is implemented with the following specification:

- Switch-on value < switch-off value

The diagram below illustrates the function of limit values 1 and 2.

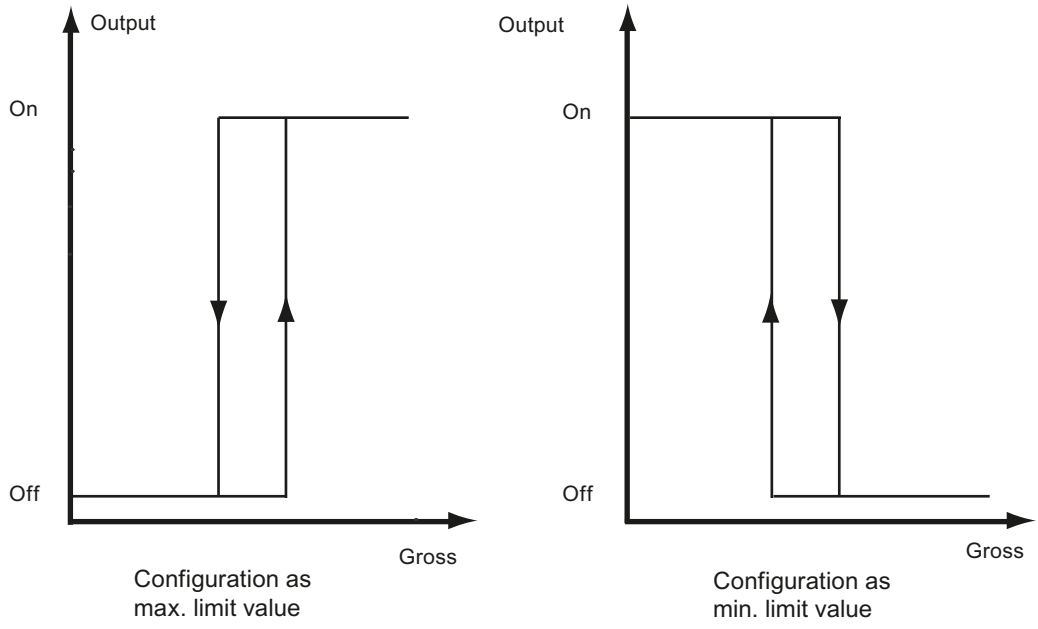

Figure 8-5 Limit value configuration

8.7.3 Limit value "Empty" ON

The value for the empty range is a limit value below which the weighing module registers and returns the status "empty". The values are entered as a percentage of the measuring range. The "Empty" limit always refers to the current gross weight in the scale.

The setting, whether absolute or a percentage, also affects the "Empty" limit.

8.7.4 Delay time for limits

If the weight reaches the specified switch value, a delay time (defined in ms) is launched. Once the delay time is over, the limit switch changes status provided the weight still reaches the specified switch value.

This delay time applies to the switch-on and switch-off values 1 and 2 and to the switch-on limit for the empty value. The empty value does not have a switch-off delay.

8.8 DR 9 module information

No entries can be made in data record DR 9. This data record provides information on the inner workings of the SIWAREX module. This information is used to identify the module at the manufacturer plant (e.g. in the event of repairs). The entries in the data record are of no importance to the user for operation.

Table 8-5 Assignment of data record 9

Variable	Note	Type	L	Rw	Default	Min.	Max.
Data record number	Contains no. of data record	UINT	2	r	9	-	-
Length	Data record length information	UINT	2	r	68	-	-
Application	Information about which application the DR belongs to	UINT	2	r	201	-	-
Version identifier	Information on the current data record version	UINT	2	r	1	1	65635
Order number - header	Maximum and current string length for the order number	UBYTE[2]	2	r	16,16	-	-
Order number	Order number of the module 7MH ..	STRING[16]	16	r	"7MH …"	-	-
Serial number - header	String header	UBYTE[2]	2	r	12,12	-	-
Serial number	Serial number " XXX00001"	STRING[12]	12	r	" "	-	-
Firmware type - header	String header	UBYTE[2]	2	r	2.2	-	-
Firmware type	Reference V - Release B - Test etc.	STRING[2]	2	r	'V '	-	-
FW version - 1st digit	Version 1.	UINT	2	r	1	-	-
FW version - 2nd digit	Version 2.	UINT	2	r	0	-	-
FW version - 3rd digit	Version 3.	UINT	2	r	0	-	-

Variable	Note	Type	L	Rw	Default	Min.	Max.
Hardware version number	ES hardware version number (e.g. 03)	UINT	2	r	1	-	-
OS version header	String header	UBYTE[2]	2	r	2.2	-	-
OS version (loader) - designation	Reference V - Release B - Test etc.	STRING[2]	2	r	'V '	-	-
OS version (loader) - designation	e.g. version n	UINT	2	r	'V '	-	-
Reserve	Reserve	UINT	6	r	0	-	-
Reserve 4	0	REAL	4	r	0	-	-

8.9 DR 10 load cell parameters

The parameters of the analog load cells must be checked prior to the automatic calibration and modified if necessary. Only the parameters identified by bold font and asterisk (*) need be entered.

Procedure

- Check the parameters and modify them as required
- Transfer the data record to the scale
- Adjust the scales

Table 8-6 Assignment of data record 10

Variable	Note	Type	L	Rw	Default	Min.	Max.
Data record number	Contains no. of data record	UINT	2	r	10	-	-
Length	Data record length information	UINT	2	r	44	-	-
Application	Information about which application the DR belongs to	UINT	2	r	201	-	-
Version identifier	Information on the current data record version	UINT	2	r	1	1	65635
Reserve		UINT	2	rw	1	1	6
Selection of the sampling rate (Page 75)	Parameter code 0: Sampling rate 100 Hz (preferably with line frequency of 50 Hz) Parameter code 1: 120 Hz (preferably with line frequency of 60 Hz) Parameter code 2: 600 Hz for fast measurements	UINT	2	rw	0	0	1
Number of support points (Page 76) [1)]	Number of support points	UINT	2	rw	0	0	8
Reserve		UINT	2	rw	0	0	0

Variable	Note	Type	L	Rw	Default	Min.	Max.
Load cell characteristic value (Page 77) [1]	Characteristic value of the load cell (n) [mV/V], the mean value is used if there is more than one cell.	REAL	4	rw	2	> 0.1	10
Reserve		REAL	4	rw	0		
Rated load of a load cell (Page 77) [1]	Rated load of a load cell	REAL	4	rw	60	-	-
Reserve	Reserve	REAL	4	rw	0	-	-
Reserve	Reserve	REAL	4	rw	0	-	-
Reserve	Reserve	INT	2	rw	0	-	-
Reserve	Reserve	UINT	2	rw	0	-	-
Reserve	Reserve	REAL	4	rw	0	-	-

[1] Parameter for calculation of calibration points with theoretical calibration

8.9.1 Selection of the sampling rate

For better suppression of interferences, set the measuring rate and the line frequency as follows:

Measuring rate	Line frequency
100 Hz	50 Hz (parameter code 0)
120 Hz	60 Hz (parameter code 1)

Interferences can be caused by the power supply grid.

For fast measurements, you can select a measuring rate of 600 Hz (parameter code 2) as of firmware V1.2.0.

The setting has an effect on the frequency response of the signal path.

The following diagrams show the frequency response:

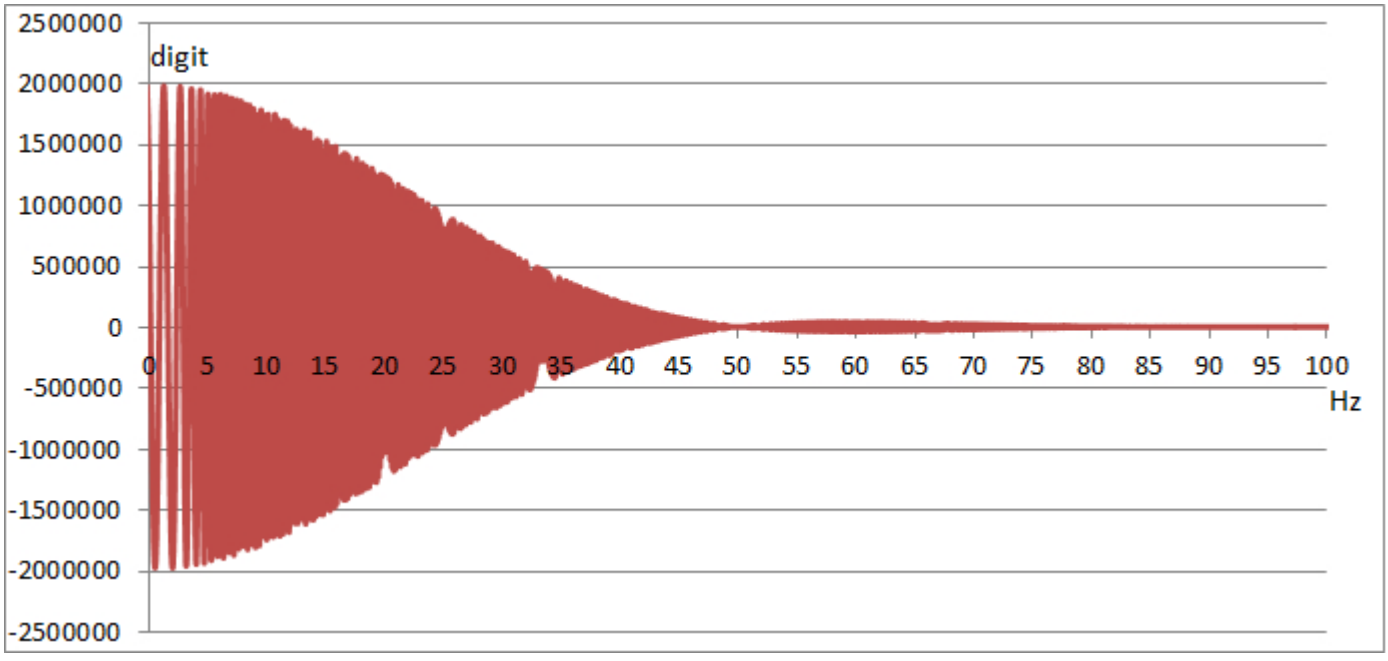

Figure 8-6 Signal behavior SIWAREX WP321: Sampling rate 50 Hz (unfiltered)

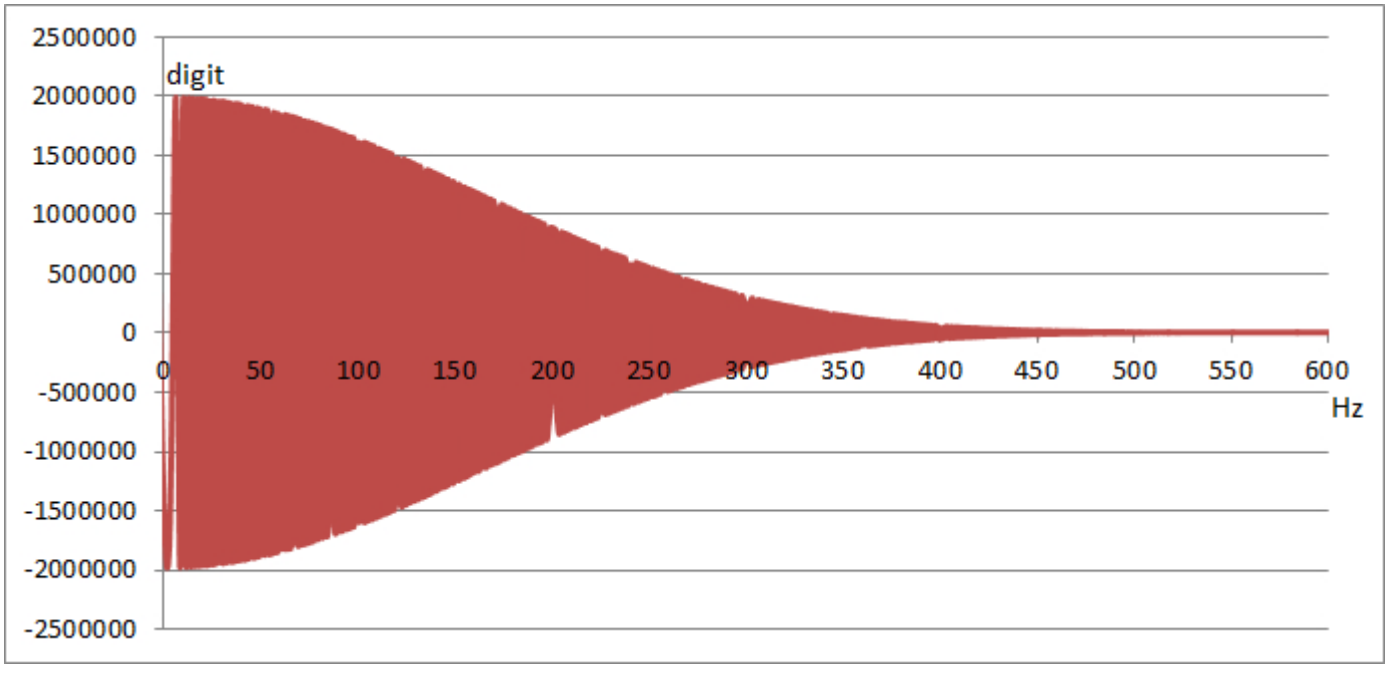

Figure 8-7 Signal behavior SIWAREX WP321: Sampling rate 600 Hz (unfiltered)

8.9.2 Number of support points

If no anchor points are used, the number of support points is equal to the number of load cells.

If anchor points are used in addition to load cells, the number of support points is equal to the total number of load cells and fixed support points.

8.9.3 Load cell characteristic value

The load cell characteristic value is required to correctly interpret the output voltage from the load cell. This specification is also necessary for determining load cell overload. The exact value can be entered if the measurement log for the load cell is available. The mean value can be entered if there is more than one load cell.

Example

Characteristic value = 2.018 mV/V

8.9.4 Rated load of a load cell

The rated load of a load cell is required for checking the maximum weighing range of the scales. The rated load is entered in the specified units of weight.

8.10 DR 13 RS485 parameters

The parameters which define the response of the RS485 interface are specified in data record DR 13. If the interface is not used, the default values can be retained.

Procedure

- Check the parameters and modify them as required
- Transfer the data record to the scale

Table 8-7 Assignment of data record 13

Variable	Note	Type	L	Rw	Default	Min.	Max.
Data record number	Contains no. of data record	UINT	2	r	13	-	-
Length	Data record length information	UINT	2	r	24	-	-
Application	Information about which application the data record belongs to	UINT	2	r	201	-	-
Version identifier	Information on the current data record version	UINT	2	r	1	1	65635
RS485 protocol (Page 78)	0: No protocol 2: SIEBERT display	UINT	2	rw	1	0	2
RS485 baud rate (Page 78)	0: 9 600 bps 1: 19 200 bps 2: 38 400 bps 3: 57 600 bps 4:115 000 bps	UINT	2	rw	3	0	6
RS485 character parity (Page 78)	Character parity 0: Even 1: Odd	BIT	2	rw	0	0	1
Bit 1		BIT	0	rw	0	0	1
Bit 2		BIT	0	rw	0	0	1

Variable	Note	Type	L	Rw	Default	Min.	Max.
Reserve (13 bits)	Reserve	BIT	0	rw	0	0	1
Reserve	Reserve	UINT	2	rw	20	1	255
Decimal place for Siebert indicator (Page 79)	Decimal place for Siebert display	INT	2	rw	0	-	-
Reserve	Reserve	UINT	2	rw	0	-	-
Reserve	Reserve	REAL	4	rw	0	-	-

8.10.1 RS485 protocol

This parameter defines the protocol for communication via the RS485 interface. The SIWATOOL program does not require any presettings.

Value	Protocol
0	No communication/protocol
2	SIEBERT display

8.10.2 RS485 baud rate

This parameter defines the baud rate for the RS485 interface.

Value	Baud rate
0	9 600 bps
1	19 200 bps
2	38 400 bps
3	57 600 bps
4	115 000 bps

8.10.3 RS485 character parity

This parameter defines the character parity for the RS485 interface.

Value	Character parity
0	Even (for digital load cells from Mettler-Toledo)
1	Odd (for digital load cells from Wipotec)

8.10.4 Decimal place for Siebert indicator

A fixed decimal place must be specified if a Siebert indicator is used. The following values are permitted: 0 ... 4

8.11 DR 14 SIMATIC interface parameters

The parameters which define the response of the SIMATIC interface are specified in data record DR 14. It is possible to define the process values to be output on the basis of the I/O area.

Procedure

- Check the parameters and modify them as required
- Transfer the data record to the scale

Table 8-8 Assignment of data record 14

Variable	Note	Type	L	Rw	Default	Min.	Max.
Data record number	Contains no. of data record	UINT	2	r	14	-	-
Length	Data record length information	UINT	2	r	16	-	-
Application	Information on which application the DR belongs to	UINT	2	r	201	-	-
Version identifier	Information on the current data record version	UINT	2	r	1	1	65 635
Selection of process value 1, 2 (Page 80)	Code for the selection of the process variable to be updated	UINT	2	rw	4	0	10
Selection of process value 1, 2 (Page 80)	Code for the selection of the process variable to be updated	UINT	2	rw	3	0	10
Reserve 1	Reserve	INT	2	rw	0	0	-
Reserve 2	Reserve	UINT	2	rw	0	0	-

8.11.1 Selection of process value 1, 2

Read the current process values to the SIMATIC CPU with the DR 30 and DR 31 data records and the FB SIWA function block. The transfer of a larger data record is based on "acyclic services". It may take several SIMATIC CPU cycles and therefore have a negative effect on system performance.

The I/O interface of the SIWAREX module is the best option if a process value is to be rapidly transferred to the SIMATIC CPU as soon as it is created in the SIWAREX module. Data is applied cyclically by FB321 and provided as a tag in the scales data block.

The relevant code from the table below must be entered to define the tag for output via the I/O interface.

Table 8-9 Selection table for process value 1,2

Process value	Decimal code	From DR	Format
No process selected	0	-	-
Gross process (after low-pass filter 1)	1	30	REAL
Net process (after low-pass filter 1)	2	30	REAL
Tare process	3	30	REAL
G/N weight (after low-pass filter 1)	4	30	REAL
G/N weight_x10	5	30	REAL
Unfiltered digit value	9	31	DINT
filtered digit value (after low-pass filter 1)	10	31	DINT
Refresh counter	12	30	UINT
Async. Error bits (32-bit): bits 0..15: operator error Bits 16..31: technology error	15	32	DINT
Gross process (after low-pass filter 2)	7	-	REAL
Net process (after low-pass filter 2)	8	-	REAL
Filtered digit value (after low-pass filter 2)	11	-	DINT

8.12 DR 15 manual tare specification

Data recorder DR 15 is used for an external specification of a tare weight.

Procedure

- Enter the tare weight
- Transfer the data record to the scale
- Enable the tare weight using command 1013

Table 8-10 Assignment of data record 15

Variable	Note	Type	L	Rw	Default	Min.	Max.
Data record number	Contains no. of data record	UINT	2	r	15	-	-
Length	Data record length information	UINT	2	r	16	-	-
Application	Information about which application the DR belongs to	UINT	2	r	201	-	-
Version identifier	Information on the current data record version	UINT	2	r	1	1	65635
Specification of tare weight (Page 81)	Tare specification memory (manual tare value)	REAL	4	rw	0	0	Depends on specification in DR 3
Reserve	Reserve	REAL	4	rw	0	0	-

8.12.1 Specification of tare weight

You can enter a tare weight. If a tare weight is to be applied, it must be enabled with the corresponding command. The tare weight must not exceed the maximum tare load specified in data record DR 3.

8.13 DR 30 current process values

Current states and process values in the scales can be monitored using process values and advanced process values from data record DR 31. Monitoring selected data during commissioning is extremely useful as it helps you to optimize parameters.

Procedure

- Read data record DR 30 cyclically or on a time-triggered basis
- Display/analyze the required tags

It is not always necessary to cyclically read data record DR 30. If the relevant process tags have already been selected in data record DR 14 (→ DR 14 SIMATIC interface parameters

(Page 79)), they are immediately transferred via the I/O interface. In this case, these tags and all status bits and messages are accessible without data record communication.

Table 8-11 Assignment of data record 30

Variable	Note	Type	L	Rw	Default	Min.	Max.
Data record number	Contains no. of data record	UINT	2	r	30	-	-
Length	Data record length information	UINT	2	r	44	-	-
Application	Information on which application the data record belongs to	UINT	2	r	201	-	-
Version identifier	Information on the current data record version	UINT	2	r	1	1	255
1/4d zero	Set if gross is less than ± 0.25e	BIT	2	r	0	-	-
9e max	Set if the weight has exceeded the gross weighing range by more than 9 display steps (d)	BIT	0	r	0	-	-
Tared	Set if tare memory is not equal to zero	BIT	0	r	0	-	-
Manual tare set (pT)	Set if the tare memory is assigned an external specified value	BIT	0	r	0	-	-
Reserve		BIT	0	r	0	-	-
Waiting for standstill	Set if module is waiting for standstill to execute command	BIT	0	r	0	-	-
Standstill	Set if standstill condition is met	BIT	0	r	0	-	-
Reserve		BIT	0	r	0	-	-
Empty	Set if "Empty" condition is met	BIT	0	r	0	-	-
Limit value 1	Limit value 1 has responded	BIT	0	r	0	-	-
Limit value 2	Limit value 2 has responded	BIT	0	r	0	-	-
Reserve (5 bits)		BIT	0	r	0	-	-
DS32 error status change	Is set interface-specific with each DS32 change	BIT	2	r	0	-	-
Reserved (7 bits)		BIT	0	r	0	-	-
Calibrated	SIWAREX is calibrated	BIT	0	r	0	-	-
Service mode	Service mode is enabled	BIT	0	r	0	-	-
Reserve (3 bits)		BIT	0	r	0	-	-
SIMATIC connection inactive	Set if no connection to the SIMATIC exists on the part of the application	BIT	0	r	0	-	-
Startup	Startup has taken place (is deleted again after 5 seconds)	BIT	0	r	0	-	-
Fault status	Operating fault	BIT	0	r	0	-	-

Variable	Note	Type	L	Rw	Default	Min.	Max.
Gross process weight (Page 83)	Gross weight (process value)	REAL	4	r	0	-	-
Net process weight (Page 83)	Net weight (process value)	REAL	4	r	0	-	-
Tare process weight (Page 83)	Tare weight (process value)	REAL	4	r	0	-	-
Gross / net weight (Page 84)	Gross or net weight	REAL	4	r	0	-	-
Gross / net weight with increased resolution (x 10) (Page 84)	Legal trade G/N weight with 10x resolution	REAL	4	r	0	-	-
Refresh counter for process values (Page 84)	Cycle counter incremented by 1 if weight values have been changed	UINT	2	r	0	-	-
Operating time (hours)	Total operating time of the module (hours)	UINT	2	r	0	-	-
Operating time (minutes)	Total operating time of the module (minutes)	UINT	2	r	0	-	-
Reserve 3	Reserve	REAL	4	r	0	-	-

8.13.1 Gross process weight

The current gross weight. Values are rounded as specified in data record DR 3 with the "Decimal places for process values" (Page 61) parameter.

8.13.2 Net process weight

The current net weight. Values are rounded as specified in data record DR 3 with the "Decimal places for process values" (Page 61) parameter.

8.13.3 Tare process weight

The current tare weight. Values are rounded as specified in data record DR 3 with the "Decimal places for process values" (Page 61) parameter.

8.13.4 Gross / net weight

The current weight for the main display. The resolution corresponds to the scale interval (Page 61) specified in data record DR 3.

8.13.5 Gross / net weight with increased resolution (x 10)

The current weight for the main display in higher resolution. The resolution corresponds to the scale interval specified in data record DR 3 x 10.

8.13.6 Tare weight

The current tare weight (scale interval from DR 3). The resolution corresponds to the scale interval specified in data record DR 3.

8.13.7 Refresh counter for process values

Measured values are calculated every 10 ms in the SIWAREX module. A counter is incremented by 1 each time. Once the counter reaches the value 65536, it starts again from zero. The counter can be used as a time stamp for data record DR 30.

8.14 DR 31 advanced current process values

Current states and process values in the scales can be monitored using advanced process values and process values (DR 30). This data is not required for standard operation of the scales.

Monitoring selected data during trial operation is extremely useful as it helps you to optimize parameters.

Procedure

- Read data record DR 31
- Display/analyze the required tags

Table 8-12 Assignment of data record 31

Variable	Note	Type	L	Rw	Default	Min.	Max.
Data record number	Contains no. of data record	UINT	2	r	31	-	-
Length	Data record length information	UINT	2	r	24	-	-
Application	Information about which application the data record belongs to	UINT	2	r	201	-	-
Version identifier	Information on the current data record version	UINT	2	r	1	1	65635

Variable	Note	Type	L	Rw	Default	Min.	Max.
Unfiltered digit value (Page 85)	Unfiltered digit value of AD converters / digital load cells	DINT	4	r	0	-	-
Filtered digit value (Page 85)	Filtered digit value of AD converters or digital load cells after dig. filter 1	DINT	4	r	0	-	-
Reserve 1		INT	2	r	0	-100	100
Refresh counter for process values (Page 85)	Refresh counter incremented by 1 if weight values have been changed	UINT	2	r	0	-	-
Reserve 2		REAL	4	r	0	-	-

8.14.1 Unfiltered digit value

The unfiltered digit value is the internal measured value immediately before filtering.

8.14.2 Filtered digit value

The filtered digit value is the internal measured value immediately after filtering.

8.14.3 Refresh counter for process values

Measured values are calculated every 10 ms in the SIWAREX module. A counter is incremented by 1 each time. Once the counter reaches the value 65536, it starts again from zero. The counter can be used as a time stamp for data record DR 31.

8.15 DR 32 Message display

Data record 32 indicates all pending message bits. The bit "Error status changed" is present in the status bits of the DR30. If this bit is set, the message area of the DR32 has been changed.

The DR32 indicates which message has been newly added or deleted. The data record is automatically read by the SIMATIC FB in the event of an error. Following successful reading, the status bit is reset in DR30.

Table 8-13 Assignment of data record 32

Variable	Note	Type	L	Rw	Default	Min.	Max.
Data record number	Contains no. of data record	UINT	2	r	32	-	-
Length	Data record length information	UINT	2	r	26	-	-

Variable	Note	Type	L	Rw	De-fault	Min.	Max.
Application	Information about which application the data record belongs to	UINT	2	r	101	-	-
Version identi-fier	Information on the current data record version	UINT	2	r	1	1	65635
1000	Operator error	BIT		r	0	0	1
Reserve	-	BIT		r	0	0	1
1104	Undervoltage	BIT		r	0	0	1
Reserve	-	BIT		r	0	0	1
1105	Overload	BIT		r	0	0	1
1106	Underload	BIT		r	0	0	1
1002	RAM error	BIT		r	0	0	1
1102	ADC error	BIT		r	0	0	1
1005	Hardware interrupt lost	BIT		r	0	0	1
1003	Checksum error data	BIT		r	0	0	1
Reserve	-	BIT		r	0	0	1
1004	Checksum error program	BIT		r	0	0	1
Reserve	-	BIT		r	0	0	1
1001	RESET / restart following error (watch-dog)	BIT		r	0	0	1
Reserve	-	BIT		r	0	0	1
Reserve	-	BIT		r	0	0	1
2000	Technology error	BIT		r	0	0	1
2001	Taring or zeroing timeout	BIT		r	0	0	1
Reserve (3 bits)	-	BIT		r	0	0	1
2005	Cold restart after voltage recovery	BIT		r	0	0	1
Reserve (10 bits)		BIT		r	0	0	1
5000	Data or operating error exists	BIT		r	0	0	1
5001	Command code or data record unknown	BIT		r	0	0	1
Reserve	-	BIT		r	0	0	1
5003	Leaving calibration mode not possible	BIT		r	0	0	1
5004	Command or data transmission only available in service mode	BIT		r	0	0	1
5005	Command or data transmission not pos-sible because service mode is active	BIT		r	0	0	1
5006	Command or data transmission not pos-sible because BUSY	BIT		r	0	0	1
5007	Command or data transmission not pos-sible because module is faulty or ODIS is active	BIT		r	0	0	1
Reserve	-	BIT		r	0	0	1
Reserve	-	BIT		r	0	0	1

Variable	Note	Type	L	Rw	De-fault	Min.	Max.
5101	Command is not permissible in this operating state	BIT		r	0	0	1
5102	Command not possible because not at standstill	BIT		r	0	0	1
5104	Command not possible because range is exceeded	BIT		r	0	0	1
5105	Load cell parameter not plausible	BIT		r	0	0	1
Reserve		BIT		r	0	0	1
5107	Shifting characteristic not possible	BIT		r	0	0	1
7000	Permitted number range violated	BIT		r	0	0	1
Reserve	-	BIT		r	0	0	1
Reserve	-	BIT		r	0	0	1
7002	Specifications of string lengths not plausible	BIT		r	0	0	1
Reserve	-	BIT		r	0	0	1
Reserve	-	BIT		r	0	0	1
7006	Command only possible in test field	BIT		r	0	0	1
7007	The calibration weights or calibration digits are not plausible	BIT		r	0	0	1
7008	Zeroing/zero setting or tare parameter not plausible	BIT		r	0	0	1
7009	Standstill range / standstill wait time not plausible	BIT		r	0	0	1
7010	Scale interval / rounding not plausible	BIT		r	0	0	1
7011	Filter parameter not plausible	BIT		r	0	0	1
7014	Time input not plausible	BIT		r	0	0	1
Reserve	-	BIT		r	0	0	1
Reserve	-	BIT		r	0	0	1
7019	RS485 parameter error	BIT		r	0	0	1
Reserve	-	UINT	2	r	0	-	-
Reserve	-	UINT	2	r	0	-	-
Reserve	-	UINT	2	r	0	-	-

8.15.1 Error bytes 0 to 7

In these areas, messages are represented by bits. A set bit means that the corresponding message is activated. The message bit is set following a data or operator error and automatically reset approximately 3 seconds later.
Message bits are analyzed by the operator panel message system.

The data/operator errors (error numbers 1xxx) are present in the first two bytes. These are followed by two bytes with technology errors (error numbers 2xxx) and six bytes with data and operator errors (error numbers 5xxx and 7xxx).

8.16 DR 34 ASCII main display value

The ASCII weight corresponds to the value on the main display of the scales and can be used for a supplementary display as well as the main display.

Table 8-14 Assignment of data record 34

Variable	Note	Type	L	Rw	Default	Min.	Max.
Data record number	Contains no. of data record	UINT	2	r	34	-	-
Length	Data record length information	UINT	2	r	26	-	-
Application	Information about which application the DR belongs to	UINT	2	r	201	-	-
Version identi-fier	Information on the current data re-cord version	UINT	2	r	1	1	65635
ASCII display string header	Maximum length and actual length of string	UBYTE[2]	2	r	16,2	-	-
Content of main display as ACII string (Page 88)	For display of the weight value and other current values (see below)	STRING[16]	16	r	" "	-	-

8.16.1 Content of main display as ACII string

The following values can be displayed:

Variable	Command
Switch on increased resolution	701
Current tare weight	705
Gross/net display	710
Net process value	714
Gross process value	715
Serial number	871
Firmware version	875

Below are some display examples. Commands are used to toggle the display values.

The values to be displayed are suppressed if a fault is present.

	Value designation		Blank	Display value									Unit of weight (from DR 3)
	N: Net, B/G: Gross, T: Tare, pT: Preset tare, S: Sum, ...												
Weight (Tare ≠ 0)	N	•	•	•	•	•	2	2	0	,	5	0	•kg•
Neg. weight (Tare = 0)	B	•	•	•	•	•	•	-	0	,	0	3	•t••

	Value designation		Blank	Display value									Unit of weight (from DR 3)
	N: Net, B/G: Gross, T: Tare, pT: Preset tare, S: Sum, ...												
Weight in increased resolution	•	•	•	•	•	•	1	0	,	0	0	3	HIGH
Operator error	B	•	•	•	•	•	•	I	r	r	o	r	****
Tare display activated (pt)	p	T	•	•	•	•	•	5	0	,	5	0	•kg•
Tare display activated	T	•	•	•	•	•	•	5	0	,	5	0	•kg•

Messages 9

9.1 Message types

The messages in the electronic weighing system described here are divided into three types.

System status messages

System status messages can be generated spontaneously at any time by an unexpected event. They include internal and external hardware problems which can occur spontaneously during weighing.

Data and operating errors

The data and operating errors are always a response to a command due to a plausibility check.

These are data errors if a plausibility error has been detected in a data packet which was sent to the module and receipt of the packet has been rejected by the module.

These are operating errors if the module cannot execute the sent command in its current operating state.

Technology errors

Technology errors occur spontaneously due to the process flow of a weighing.

Status bits, on the other hand, are not messages. The status displays describe the status of the scale during normal operation and can be monitored or evaluated at any time.

9.2 Message paths

You can read out the messages using different paths. You define the path for forwarding and processing of messages during configuration.

The messages are processed for two basic purposes:

- For display or recording on an operator panel for the operator
- For linking in the control software to control specific reactions in the process.

The following message paths are possible:

- Output of the message buffer to the SIWATOOL program (takes place automatically)
- Output by means of function block as bit field in Scale data block
- Certain operating errors can be transmitted as diagnostic interrupts to the SIMATIC CPU and evaluated by OB82

9.3 Evaluating messages with the help of SIWATOOL

The electronic weighing system has a message buffer that can hold up to 10 entries. If the number of messages in the message buffer exceeds 10, the oldest entry is overwritten. The message buffer can be read out at any time with the help of SIWATOOL (menu item "Read out all data records") and saved together with the scale parameters. This facilitates the detection, analysis and correction of errors in the system.

9.4 Detecting messages with the help of FB SIWA

All messages of the SIWAREX module can be completely detected and processed in the controller with the help of the SIWAREX WP321 function block. The messages can be evaluated directly in a signaling system by means of a bit signaling area in the scale data block. The message texts are stored in the signaling system. The message text is output when a bit becomes "1".

9.5 Message list

The message list is an overview of all messages that the SIWAREX module can generate. A message can be quickly identified by the message code (number).

9.5.1 System status message list

Operator error (code 1000 to 1999)	Error code	Description and remedy
1000 operating error exists	1000	Group message, at least one operating error exists.
1001 Watchdog	1001	Watchdog, error is displayed for at least 10 seconds. A serious error has occurred in the function of SIWAREX, e.g. program error, severe electromagnetic influence on device, etc. Contact the SIWAREX Support if the error occurs multiple times.
1002 RAM error	1002	RAM error. An error has occurred in the memory; the memory content is no longer correct. The module must be switched off. If the error occurs again, SIWAREX is defective.
1003 Checksum incorrect parameter	1003	Checksum error at parameter. Critical error because the parameters are no longer safe.
1004 Checksum incorrect program	1004	Checksum error program code. Critical error because the program is no longer safe.
1102 ADU error	1102	AD converter error when reading in the measured value. If the error occurs again, make sure that the EMC recommendations are observed (chapter EMC-compliant setup (Page 22)).
1104 Undervoltage	1104	Undervoltage at sensor cables
1105 Overload	1105	Overload of scale (ca. 110%)
1106 Underload	1106	Underload of scale (ca. -10%)

9.5.2 Technology error message list

Technology error (code 2000 to 4999)	Error code	Description and remedy
2000 Technology error exists	2000	Group message, at least one technology error exists
2001 Taring/zeroing timeout	2001	Taring of scale or set to zero is not possible because a standstill was not reached during the standstill time. The command was discarded.
2005 Reboot after power reset	2005	Reboot after voltage recovery or FW update

9.5.3 Data and operating errors message list

Data and command errors (code 5000 to 8999)	Error code	Description and remedy
5000 Data or comand error exists	5000	Group error, a bit is set in the data and operating error bits
5001 Data record or comand unknown	5001	Command code or data record is not known with current application
5003 Cannot exit service mode	5003	Cannot exit service mode; calibration incomplete
5004 Command or data transfer only permitted in service mode	5004	Activation of service mode is required to execute command or transmit data
5005 Command or data transmission not possible because service mode is active	5005	Command can currently not be executed because service mode is active
5006 Command or data transfer not possible while BUSY	5006	Command can currently not be executed because module is BUSY (data record or command transmission already active, …)
5007 Command or data transmission not possible because module is faulty or SIMATIC CPU stop	5007	Command can currently not be executed because of a problem or SIMATIC CPU stop
5101 Command is not permissible in this operating state	5101	Command is not permissible in the current operating state
5102 Comand not possible while not standstill	5102	Scale command (set to zero, tare, log, …) cannot be executed because standstill is missing.
5104 Command not possible while limit exceeded	5104	Command (e.g. set to zero, tare, calibrate command) cannot be executed because the permitted range has been exceeded.
5105 Load cell parameters not plausible	5105	Load cell parameters in data record DR 10(a) or data record DR 11(d) not plausible (number, supporting points, load specifications, etc.).
5107 Calibration charcteristic shift not possible	5107	Characteristic cannot be moved due to possibility of range violation.
7000 Permitted number range violated	7000	The permitted number range, such as for weight values, was violated.
7002 Length of ASCII string not plausible	7002	The string header in a specified string variable is not plausible.
7007 Calibration weights / Calibration digits not plausible	7007	Specifications for calibration weights or digits in data record DR 3 are incorrect (minimum distance, reversal of incline).
7008 Zeroing or tare parameter not plausible	7008	The specifications (data record DR 3) or tare specifications (data record DR 15) are not plausible.
7009 Standstill range / standstill wait time	7009	Standstill range or standstill wait time are not plausible.

Data and command errors (code 5000 to 8999)	Error code	Description and remedy
7010 Scale interval / rounding	7010	Resolution or selection for rounding to decimal places is not plausible.
7011 Filter parameters	7011	Specification of filter parameters is not plausible.

9.5.4 Messages by LEDs on the module

The LEDs on the front of the SIWAREX module signal the following status and error messages.

Item	Color	Labeling	Function
Line 1			
H1	red	**DIAG**	System fault
H2	Green		Ready
H11	yellow		Limit 1 responded
H12	yellow		Service mode
H13	yellow		Limit 2 responded
H14			Not used
H15	yellow	**{E}**	Empty message
H16			Not used
H17	Green		Standstill triggered
H18			Not used
H19	Green	**0**	¼ d zero status
H20			Not used
H21		**Max**	Weighing range exceeded
H22			Not used
H23	Green	**LC**	Load cell(s) ready for operation (LED off = load cells faulty)
H24			Not used
H25	yellow	**Rx/Tx**	EIA-RS485 communication active
H26			Not used
H40	Green	**PRW**	Status of local 24 V supply

Command lists

10

The commands for the electronic weighing system described here can be transmitted by several interfaces:

- From the operator panel via the controller to the SIWAREX module
- From SIWATOOL direct to the SIWAREX module

A data or command error is signaled if a command cannot be executed or if the sent data record is rejected.

Command code	Command	Description	Service
1... 99	Service commands		
1	Service mode On	Turn on service mode	x
2	Service mode Off	Turn off service mode	x
11	Load factory setting	The command resets the SIWAREX to the "Ex factory" status: - All parameters and saved data are loaded with the default values. - All message buffers are reset.	x
60	Set Calibration Point 0	Set Calibration Point 0 / save values for calibration point 0.	x
61	Set Calibration Point 1	Set Calibration Point 1 / save values for calibration point 1.	x
62	Set Calibration Point 2	Set Calibration Point 2 / save values for calibration point 2.	x
81	Characteristic shift	Move calibration characteristic. The command defines the current weight of the scale as the new zero point (0 kg) and shifts the complete characteristic without changing the gradient. The command can be used, for example, in order to compensate parts used for mounting calibration weights on the scale at the end of the calibration.	x
82	Perform automatic calibration	Calculating the scale characteristic curve with reference to the load cell from data record 10. The calculated characteristic curve is entered directly in data record 3 and 4, and thus activated immediately after executing the command.	x
83	Perform calibration check	The command calculates the theoretical digital values in relation to the calibration weights using the load cell parameters from data record 10 and the adjustment weights 0, 1 and 2 from data record 3. The output of these theoretical digits is made in data record 4. The function can be used to check the plausibility of adjustment digits in data record 3, which have been determined in a legal-for-trade calibration.	
700 … 899	HMI display switching		

Command code	Command	Description	Service
701	Increased resolution	Activate increased resolution on main display (x 10)	x
705	Display current tare weight	Display current tare weight on main display	x
710	Activate standard display	Activate standard display gross/net	x
711	G/N display	Display gross/net weight on main display	x
712	N display		
713	G display		
714	N process value	Display net process weight on main display	x
715	B process value	Display gross process weight on main display	x
871	Show serial number	The serial number of the module is displayed	
875	Display FW version	Show firmware version in current display	x
1000 …	**Basic functions for weighing commands**		
1001	Set to zero	Set to zero	x
1011	Tare	Tare	x
1012	Delete tare	Delete current tare weight	x
1013	Tare specification valid	Activate specification of tare weight	x
1016	S7 tare specification valid	Activate specification of S7 tare weight	

The following commands can be triggered in the scale data block SCALE_DB in the area CMD1 to CMD3:

Table 10-1 Command groups of the SIWAREX WP321

Command group	Description
1 ... 99	Commands are forwarded from the FB_SIWA via data record DR 2 to the module (scale commands, weighing commands, log commands). The meaning of the commands corresponds to the command list.
2000 + X	Reading of a data record, X corresponds to the data record number. Example: Data record 3 transmitted by SIWAREX module to the SIMATIC CPU → 2000 + 3 = command code 2003
4000 + X	Writing of a data record, X corresponds to the data record number. Example: Data record 3 transmitted by SIMATIC CPU to the SIWAREX module → 4000 + 3 = command code 4003
7001	Read all data records from SIWAREX into CPU (only for SIMATIC FB)
7002	Write all data records 3, 4, 5, 6, 10, 13, 14 and 15 from CPU into SIWAREX (module must be in service mode, only for SIMATIC FB)

Additional information on transmission of commands from the control program by means of the SIMATIC interface is available in chapter Communication in SIMATIC S7-300/400/1200/1500 (Page 97).

Communication in SIMATIC S7-300/400/1200/1500 11

11.1 General information

A SIWAREX WP321 occupies 16 bytes each in the I/O areas of the CPU. Communication between SIWAREX and SIMATIC CPU is supported by the FB.

Table 11-1 Memory requirements of the function block

	FB 1, WP321DR
Read weight and status	YES
Send commands	YES
Send parameters	YES
Main memory requirements in CPU	11 600 byte + n x 1 232 byte
Load memory requirements in CPU	138 788 byte + n x 28 470 byte

n = number of WP321 modules

The function block described above including HMI configuring can be downloaded as a predefined example project ("Ready-for-use") from the Siemens Customer Support.

11.2 Structure of the program "Ready for use"

There is one program for Step 7 Classic and another for TIA Portal. The two programs each consist of two parts:

- STEP 7 software for the SIMATIC CPU
- WinCC project (integrated in SIMATIC Manager)

All messages are saved as bit information. The message system can thus directly access the bit fields and display the message texts.

11.3 Advantages of task sharing

The weight is calculated in the SIWAREX module like in a separate electronic weighing system. However, thanks to integration in SIMATIC, it is possible to directly transfer the weight value to the PLC program. This results in sensible sharing of tasks: the weighing functions are performed in the SIWAREX module, while interlocking and signal linking are performed in the PLC.

SIWAREX "Ready for use" takes over the task of a standardized program in the SIMATIC S7.

An FB handle several tasks:

- It controls communication between the SIMATIC CPU and the SIWAREX module
- It transfers commands and adjustment values to the SIWAREX module according to the process trend
- It prepares the scale data for visualization

11.4 Hardware configuration of the electronic weighing system

The SIWAREX WP321 module can be found in the directory PLC/SIMATIC S7-1200/ technology modules/weighing modules of the hardware catalog.

The following basic properties of the module are defined during hardware configuration in the TIA Portal. Note that the SIWAREX WP321 module is always completely in the process image of the CPU.

- Installation location of the module
- Address in I/O area
- Diagnostics interrupts
- Hardware interrupts
- I&M (Identification & Maintenance) data

The electronic weighing system occupies 16 bytes in the input/output area.

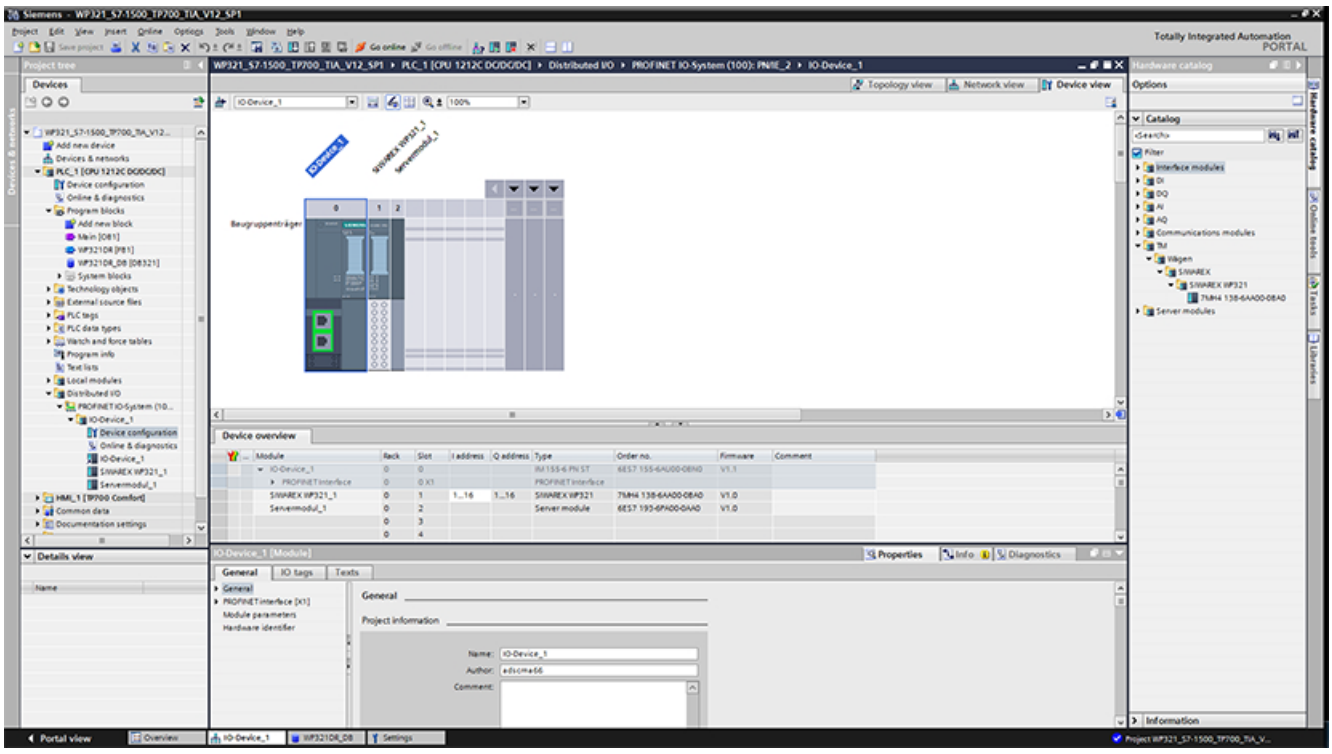

Figure 11-1 Hardware configuration in the TIA Portal

TIA Portal automatically assigns a separate I/O start address and a HW ID for every SIWAREX present in the project. These two parameters are relevant for calling the function block, and can be obtained from the properties of the respective module.

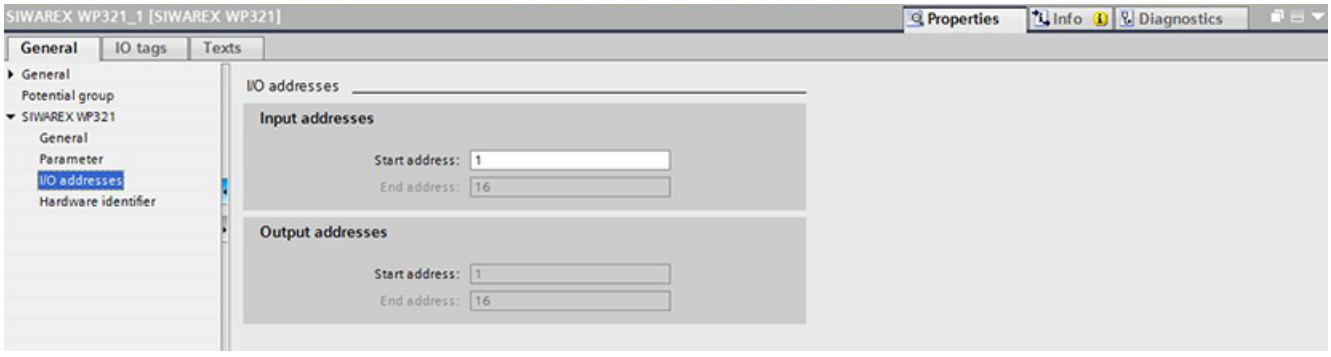

Figure 11-2 Start address of module in TIA Portal

Diagnostics interrupts can be optionally enabled or deactivated in the module properties. The configuration scope for diagnostics and hardware interrupts depends on the SIMATIC CPU used (S7-300, S7-400, S7-1200 or S7-1500) → Diagnostics interrupts (Page 105) and Hardware interrupts (Page 106)

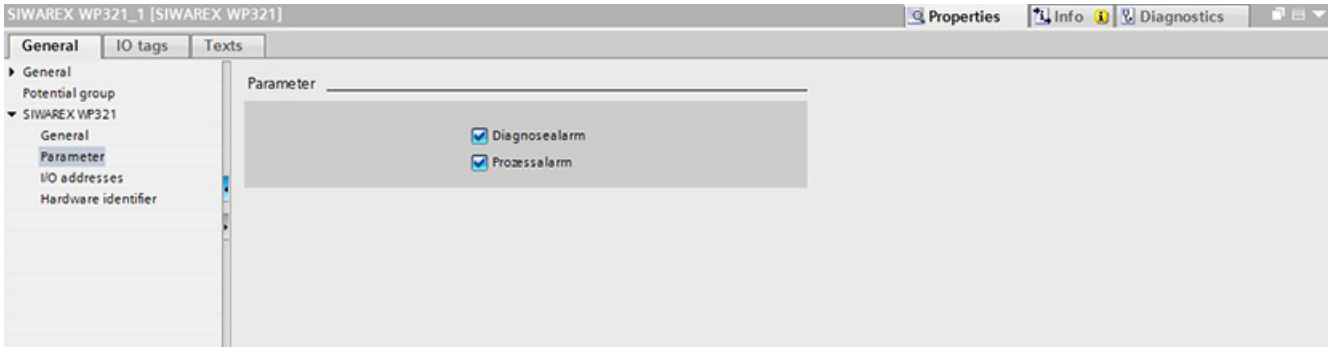

Figure 11-3 Configuration of interrupts in TIA Portal

Figure 11-4 HW ID of module in TIA Portal (up to TIA Portal V14)

11.5 Calling of function block

This description is based on use of the WP321DR block with data record communication and the following data:

- **Start address** SIWAREX WP321: 1 (see → Hardware configuration of the electronic weighing system (Page 98))
- **HW ID** SIWAREX WP321: 280 (see → Hardware configuration of the electronic weighing system (Page 98))
- **Instance data block number** of SIWAREX WP321 function block: DB321

The function block can be integrated at the desired position in the user program using drag and drop. Calling of the FB must be carried out cyclically in the control program.

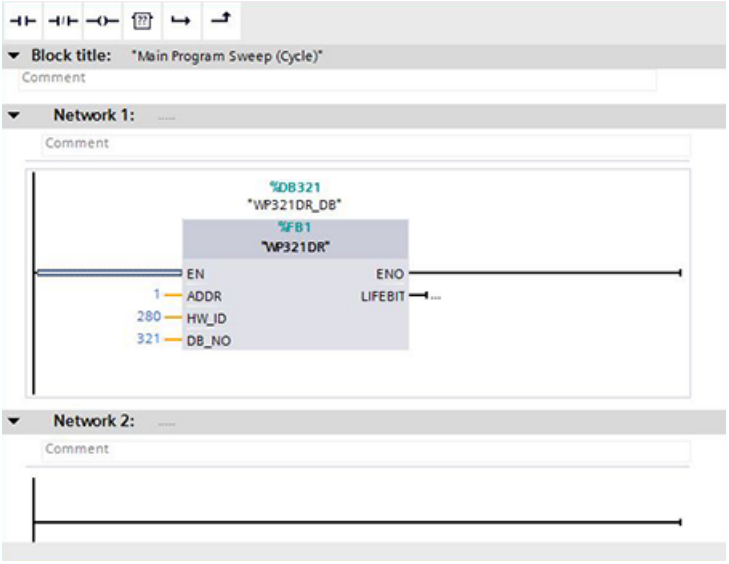

Figure 11-5 Calling WP321 DR block (V1.x and V2.x) in the user program

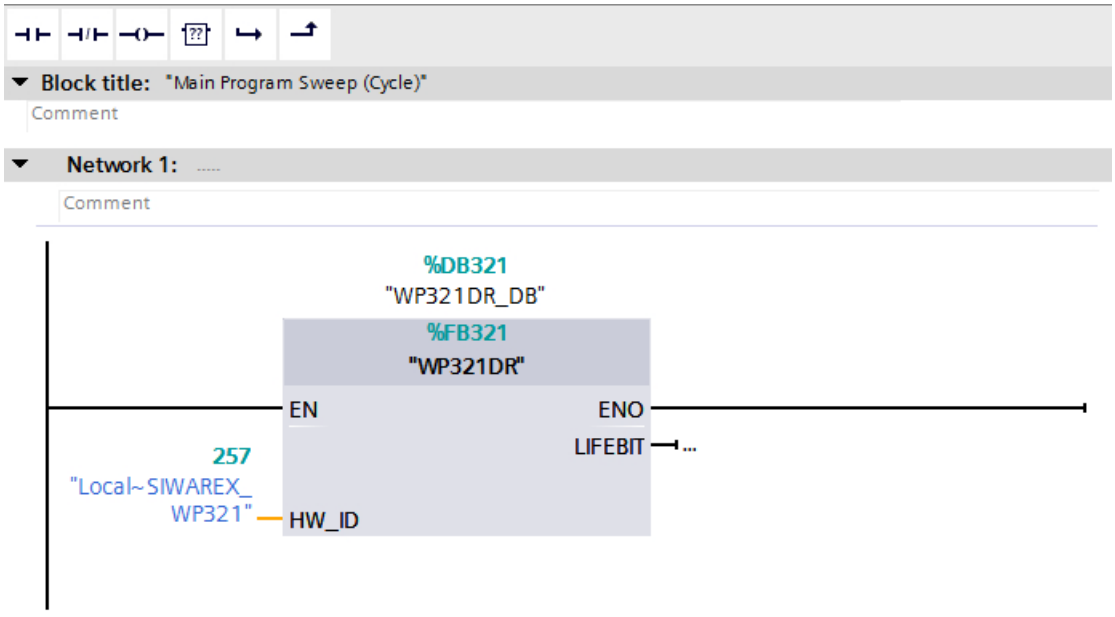

Figure 11-6 Calling WP321 DR block (V3.x) in the user program

Function block parameter	Description
ADDR	Start address WP321 (see → Hardware configuration of the electronic weighing system (Page 98))
HW_ID	HW ID WP321 (see → Hardware configuration of the electronic weighing system (Page 98))
DB_NO	Number of FB-internal instance DB
LIFEBIT	Optional status bit can be used to monitor communication

The generated instance DB (WP321 in this case) contains all data records of the WP321 as well as all parameters required to exchange data between CPU and weighing module.

A separate FB call must be made in the user program for each weighing module. In this manner, each scale receives its own instance DB which provides the respective scale parameters. The input and output parameters of the FB must be matched to the respective WP321 for each call.

11.6 Working with the function block

Data records in SIWAREX weighing modules

All parameters in SIWAREX weighing modules are structured in data records. These data records must be considered as connected packages and can only be respectively read into the CPU or written to the SIWAREX as complete packages. Reading or writing of a single parameter within a data record is not possible. You can find a description of all data records and their parameters in chapter → Scale parameters and functions (Page 57).

Reading and writing of data records is performed using special command codes which can be sent with three command mailboxes handled according to priority within the instance DB:

WP321DR_DB

	Name	Data type	Offset	Start value
13	s_CMD1	Struct	446.0	
14	i_CMD_CODE	Int	0.0	0
15	bo_CMD_TRIGGER	Bool	2.0	false
16	bo_CMD_InProgress	Bool	2.1	false
17	bo_CMD_FinishedOK	Bool	2.2	false
18	bo_CMD_FinishedError	Bool	2.3	false
19	s_CMD2	Struct	450.0	
20	i_CMD_CODE	Int	0.0	0
21	bo_CMD_TRIGGER	Bool	2.0	false
22	bo_CMD_InProgress	Bool	2.1	false
23	bo_CMD_FinishedOK	Bool	2.2	false
24	bo_CMD_FinishedError	Bool	2.3	false
25	s_CMD3	Struct	454.0	
26	i_CMD_CODE	Int	0.0	0
27	bo_CMD_TRIGGER	Bool	2.0	false
28	bo_CMD_InProgress	Bool	2.1	false
29	bo_CMD_FinishedOK	Bool	2.2	false
30	bo_CMD_FinishedError	Bool	2.3	false
31	s_CMD_curr	Struct	458.0	
32	i_CMD_CODE	Int	0.0	0
33	bo_CMD_TRIGGER	Bool	2.0	false
34	bo_CMD_InProgress	Bool	2.1	false
35	bo_CMD_FinishedOK	Bool	2.2	false
36	bo_CMD_FinishedError	Bool	2.3	false
37	bo_CMD_ERR	Bool	462.0	false

Figure 11-7 CMD command mailboxes

As shown in the graphics, a command mailbox always consists of a command code (Int) and four bits (Bool). A command is set by entering the desired command code in the "i_CMD_CODE" parameter and setting the respective command trigger "bo_CMD_TRIGGER". The status bits "bo_CMD_InProgress" (command being processed), "bo_CMD_FinishedOk" (command finished without errors) and "bo_CMD_FinishedError" (command rejected or finished with error) can be evaluated in the user program.

In addition, the three command mailboxes are managed and processed according to priority. CMD1 has the highest priority, CMD3 has the lowest priority. If all three command mailboxes are triggered simultaneously by the user program, for example, the function block initially processes CMD1, then CMD2, and finally CMD3. Cyclic triggering of command mailbox 3 is also interrupted by intermediate sending of a command in mailbox 2 or 1 for processing of the respective command.

Note

Cyclic triggering of the CMD1 command mailbox makes it impossible to send commands in mailbox 2 or 3.

A summary of all existing command codes can be found in chapter →Command lists (Page 95).

The following equation for generation of a corresponding command code applies to the reading of data records from the SIWAREX to the data block:

Command code = 2000 + X (X = desired data record number)

The following equation for generation of a corresponding command code applies to the writing of data records from the data block to the SIWAREX:

Command code = 4000 + X (X = desired data record number)

Example

The following example clarifies the actions with command mailboxes and data records:

"Calibration weight" is to be set to a value of 60.5 by the CPU. Since "Calibration weight" is a parameter of data record 3 (see chapter → Scale parameters and functions (Page 57)), service mode must first be activated. This is possible using command code "1" (see chapter → Command lists (Page 95)).

The variable "i_CMD_CODE" must therefore be assigned the value "1" and the associated "bo_CMD_TRIGGER" set to TRUE. Subsequently, the module is directly in service mode (DIAG LED flashes green):

i_CMD_CODE = 1

bo_CMD_TRIGGER = TRUE

Since only complete data records can be read or written, it is recommendable to now read data record 3 into the CPU. This is carried out using command code 2003 (see chapter → Command lists (Page 95)):

i_CMD_CODE = 2003

bo_CMD_TRIGGER = TRUE

All current data from data record 3 are now present in the data block. The calibration weight is then set as desired to a value of 60.5:

CALIBRATION_WEIGHT = 60.5

The modified data record 3 must now be written into the SIWAREX again. This is carried out using command code 4003 (see chapter → Command lists (Page 95)):

i_CMD_CODE = 4003

bo_CMD_TRIGGER = TRUE

The new calibration weight is now present in the SIWAREX and can be used. Service mode for the module should subsequently be switched off again using the command "2".

This procedure for reading and writing data records or parameters is identical for all data records.

11.7 I/O interface of function block

The following scale parameters are available cyclically in the data block in the controller without special reading of data records or can be sent to the scale without sending of data records:

Table 11-2 I/O data of the function block

Parameter (read)	Meaning
SCALE_STATUS_1 (UINT)	Bytes 0 & 1 of the scale status (→ DR 30 current process values (Page 81))
SCALE_STATUS_2 (UINT)	Bytes 2 & 3 of the scale status (→ DR 30 current process values (Page 81))
Process value 1	Selection → Selection of process value 1, 2 (Page 80)
Process value 2	Selection → Selection of process value 1, 2 (Page 80)
Parameter (write)	
S7 tare specification	Specified value for tare weight. The value is applied by using the "Tare specification valid (1016)" command.

11.8 Error codes of function block

Table 11-3 Statuses/errors when working with the function block

Error bit	Error description
bo_ApplIDError	Address module does not match the function block
bo_ApplIDDRError	Data record does not match the inserted module
bo_SFBError	Runtime error during transmission of data record
bo_RdPerError	Reading of I/O data failed
bo_LifeBitError	SIWAREX no longer responds
bo_StartUpError	Command was sent although StartUp is still TRUE
bo_WrongFW	Data record version does not match the firmware
bo_InvalidCMD	An invalid command code was sent
bo_DataOperationError	Synchronous data operation error has occurred
bo_StartUp	Startup synchronization of module running
bo_InvalidHW_ID	An invalid hardware ID was created at the function block call ("HW_ID" input).

Note

If execution of the function block is faulty, the variables shown do not correspond to the actual status in the module.

11.9 Diagnostics messages

The DIAG LED flashes red when a diagnostics message is present. Diagnostics messages are displayed as plain text in STEP 7 (TIA Portal) by means of online and diagnostics views. You can evaluate the error codes by means of the user program.

The following diagnostics messages can be signaled:

Table 11-4 Diagnostics messages

Diagnostics message	Error code	Meaning	Remedy
Fault	9H	Internal module fault, defective	Replace technology module
Load voltage missing	11H	L+ for technology module missing	Check supply voltage on BaseUnit
Hardware interrupt lost	16H	Technology module cannot send an interrupt because the previous interrupt has not yet been processed	Change interrupt processing in the CPU, change technology module parameter settings.
Module temporarily not available	1FH	Normal operation of module not possible because, for example, a FW update is being carried out.	Wait until the module assumes normal operation.
Undervoltage	02H	Undervoltage of sense lines	Voltage drop up to the load cell is too large. Find out why.
Load high	07H	Upper limit for sensor voltage exceeded	Eliminate scale overload
Underload	08H	Lower limit for sensor voltage fallen below	Check mechanics of the scale, check the wiring of the sensor.
Checksum error in parameter	0DH	The checksum for the integrity of the parameters is incorrect	Download factory setting of the parameters.
Checksum error program	0EH	The checksum for the integrity of the parameters is incorrect	Download firmware again, replace module

11.10 Diagnostics interrupts

The enable for triggering of diagnostics interrupts is possible for all SIMATIC CPUs (S7-300, S7-400, S7-1200, S7-1500) and is assigned in the device configuration.

The diagnostics interrupts can be evaluated to detect fault events in the SIMATIC CPU.

Fault events (operating faults) are signaled by a diagnostics interrupt to the S7 CPU if the diagnostics interrupt is enabled (in the HW Config). You can evaluate the diagnostics messages using the local data of OB82. Contrary to the S7-1200 and S7-1500, the CPUs of the S7-300 and S7-400 systems enter the stop status following a diagnostics interrupt if the OB82 is not loaded.

You can find detailed information with the "RALARM" instruction (read interrupt status).

11.11 Hardware interrupts

You can configure which events during operation are to trigger a hardware interrupt for the SIWAREX module. Based on the configuration, the SIWAREX module triggers a hardware interrupt for specific events/limits. When a hardware interrupt occurs, the CPU interrupts execution of the user program and processes the associated hardware interrupt OB. The event that triggered the interrupt is entered by the CPU into the start information of the associated hardware interrupt OB.

Activation of the hardware interrupts

For the device configuration of the SIWAREX module, activate the hardware interrupts in the TIA Portal under "Parameters".

Lost hardware interrupt

When an event that triggers a hardware interrupt occurs and a previous event of the same kind has not yet been processed, no further hardware interrupt is triggered. The hardware interrupt is lost. This may lead to the "Hardware interrupt lost" diagnostics interrupt, depending on the parameterization.

No hardware interrupts are activated by default. One result of triggering a hardware interrupt is that the following two variables are entered in the start information of the associated hardware interrupt OB:

- EventType: One byte with a set bit
- IChannel: Number of the channel that triggered the hardware interrupt

Table 11-5 Table of event bits

Hardware interrupt	Event type bit
Limit 1 OFF → ON 0	0
Limit 1 ON → OFF 1	1
Limit 2 OFF → ON 2	2
Limit 2 ON → OFF 3	3

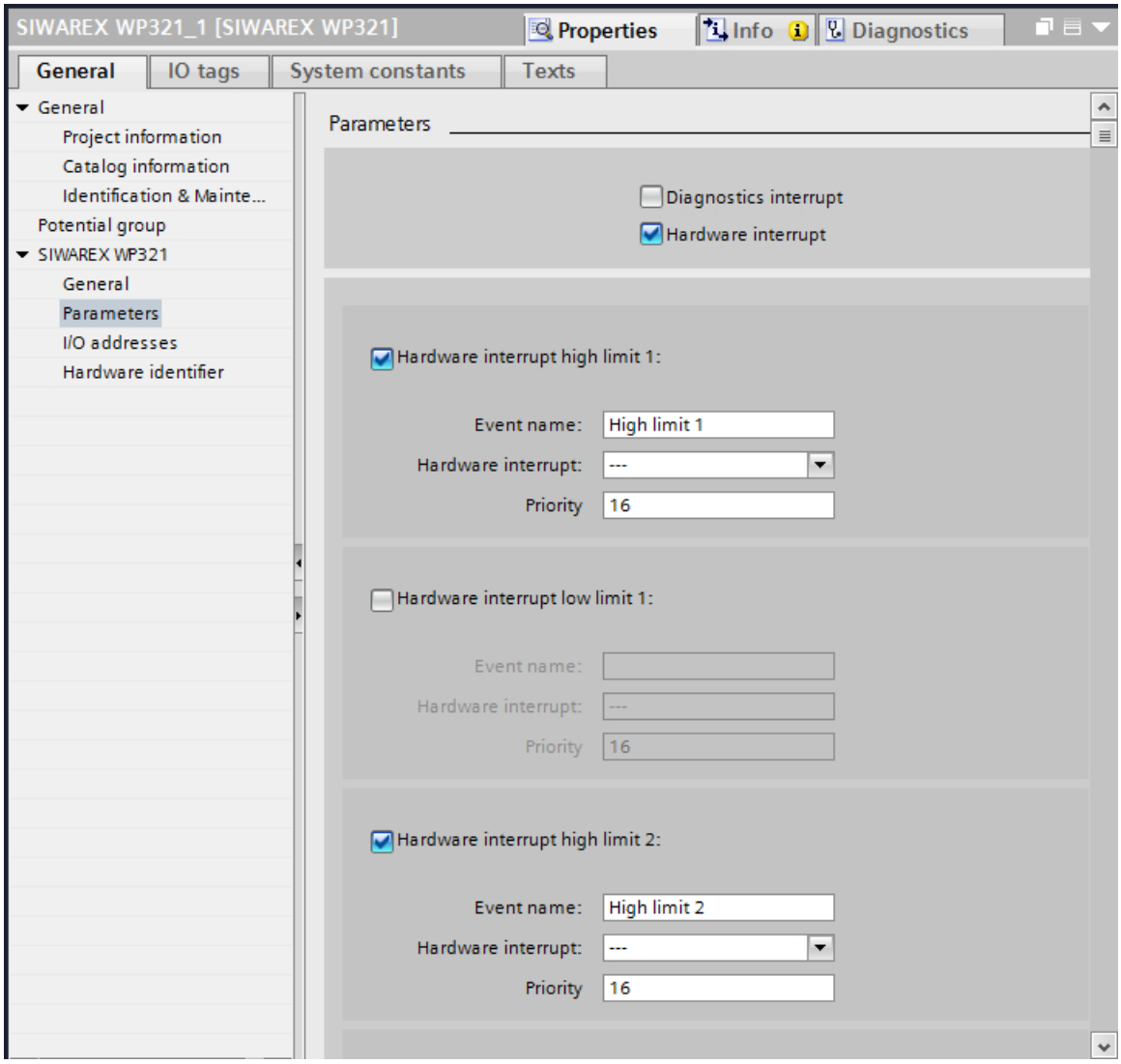

Figure 11-8 Configuration of hardware interrupts for S7-1500

Technical specifications 12

12.1 Technical specifications

24 V power supply

Note

A protective extra-low voltage (to EN 60204-1) is to be ensured by system power supply.

Rated voltage	24 V DC
Static low / high limits	19.2 V DC / 28.8 V DC
Dynamic low / high limits	18.5 V DC / 30.2 V DC
Non-periodic overvoltages	35 V DC for 500 ms with a recovery time of 50 s
Maximum current consumption	100 mA with 24 V DC
Typical power consumption of the module	2 W

Power supply from SIMATIC S7 backplane bus

Power consumption from SIMATIC S7 backplane bus	Typically 20 mA

Analog load cell interface connection

Error limit to DIN1319-1 at 20 °C +10 K	≤ 0.05% v.E.[1)]
Accuracy according to OIML R76 (no approval for measurements requiring verification)	
• Class	III and IV
• Resolution (d=e)	3000d
• Error percentage pi	0.4
• Step voltage	0.5 µV/e
Accuracy delivery state[2)]	typ. 0.1% v.E.
Sampling rate	100/120/600 Hz (depending on parameterization)
Input signal resolution	± 2 000 000 (for cells with 4 mV/V)
Measuring range	± 4 mV/V
Common mode voltage range	0.25 to 4.75 V
DMS supply[3)]	4.85 V DC ±2 %
Short-circuit and overload protection	Yes
Connection	6-wire
Sensor voltage monitoring	≤ 4 V
min. DMS input resistance	

• without Ex-i interface SIWAREX IS	40 Ω
• with Ex-i interface SIWAREX IS	50 Ω
min. DMS output resistance	4 100 Ω
Temperature coefficient range	≤ ± 5 ppm/K v. E.
Temperature coefficient zero point	≤ ± 0.1 µV/K
Linearity error	≤ 0.01%
Measured value filtering	Low pass
Electrical isolation	500 V AC
50 Hz / 60 Hz noise suppression CMRR	> 80 dB
Input resistance	
• Signal cable	typ. $4*10^6$ Ω
• Sensor cable	typ. $2*10^6$ Ω

[1] Relative accuracy! (Absolute accuracy is only achieved by calibration on-site with calibration standard)
[2] Accuracy for module replacement or theoretical calibration decisive
[3] Value valid at sensor; voltage drops on cables are compensated up to 5 V

Cable length

Maximum cable length	500 m with SIWAREX cable, → Accessories (Page 117).

RS485 interface

Standard	EIA-485
Baud rate	up to 115 kbps*
Data bits	7 or 8
Parity	even | odd | none
Stop bits	1 or 2
Terminating resistors (can be activated)	390 Ω / 220 Ω / 390 Ω
Electrical isolation	500 V AC
Transfer protocol	ASCII for remote display from Siebert
Cable length	≤ 115 kbps max. 1 000 m (fieldbus cable 2-wire, shielded, e.g. 6XV1830-0EH10)

Dimensions and weights

Dimensions	
• Width	15 mm
• Weight, approx.	31 g

Mechanical requirements and data

Testing	Standards	Test values
Vibrational load during operation	IEC 61131-2 IEC 60068-2-6 Test Fc	• 5 to 8.4 Hz: 3.5 mm out. • 8.4 to 150 Hz: 9.8 m/s^2 (=1G)
Shock load during operation	IEC 61131-2 IEC 60068-2-27 Test Ea	• 150 m/s^2 (approx. 15 g), half sine
Vibration load during transport	IEC 60068-2-6 Test Fc	• 5 to 8.4 Hz: 3.5 mm out. • 8.4 Hz to 500 Hz: 9.8 m/s^2
Shock load during transport	IEC 60068-2-27: Test Ea	• 250 m/s^2 (25G), half sine
Free fall	IEC 61131-2 IEC 60068-2-31: Test Ec, procedure 1	• In product packaging: 300 mm drop height • In shipping package: 1.0 m drop height

12.2 Electrical, EMC and climatic requirements

Electrical protection and safety requirements

Fulfilled requirement	Standards	Comments
Safety regulations	IEC 61010-1 IEC 61131-2; UL 508 CSA C22.2 No.142 IEC 61010-2-201 FM3611	
Protection class	IEC 61140	Module is operated with protective extra-low voltage. The protective conductor connection serves only a functional earth to dissipate interference currents
IP rating	IP 20 to IEC 60529	• Protection against contact with standard probe • Protection against solid bodies with diameters greater than 12.5 mm • No special protection against water

Fulfilled requirement	Standards	Comments
Air gaps and creepage distances	IEC 60664 IEC 61131-2 IEC 61010-1 UL 508 CSA C22.2 No. 145 EN 50156-1	• Overvoltage category II • Pollution degree 2
Isolation stability	IEC 61131-2 CSA C22.2, No. 142 UL508	Test voltage: 500 V AC or 707 V DC

Electromagnetic compatibility

Table 12-1 Interference emission (industrial area): EN 61000-6-4

Comments	Standard	Limits
Emission of radio interferences (electromagnetic fields)	Class A industrial environment: EN 61000-6-4 IEC/CISPR 16-2-3: 2008	• 30 ... 230 MHz, 40 dB (µV/m) Q • 230 ... 1 000 MHz, 47 dB (µV/m) Q
Emission on power supply cables 24 V	Class A: Industrial environment: EN 61000-6-4 IEC/CISPR 16-2-1: 2010; EN 55016-2-1: 2009	Class A: Industrial environment • 0.15 ... 0.5 MHz, 79 dB (µV) Q • 0.15 ... 0.5 MHz, 66 dB (µV) M • 0.5 ... 30 MHz, 73 dB (µV) Q • 0.5 ... 30 MHz, 60 dB (µV) M

Table 12-2 Interference immunity (industrial environment): EN 61000-6-2

Comments	Standard	Severity class
Burst pulses on power supply cables	EN45501 OIML R 76 EN 61000-4-4 NAMUR NE21	• 1 kV • 1 min. per priority
Burst pulses on data and signal cables	EN 61000-4-4 NAMUR NE21 EN 61326	• 2.0 kV, opt. 2.4 kV • 5/50 ns / 5 kHz
Electrostatic discharge (ESD)	EN 61000-4-2 NAMUR NE21 EN 61326 EN 45501	• 6 kV direct/indirect • ≥ 10 discharges pos/neg • < 1 s repeat time
Electrostatic air discharge (ESD)	EN 61000-4-2 NAMUR NE21 EN 61326 EN 45501	8 kV

Comments	Standard	Severity class
Surge on power supply cables	EN 61000-4-5 IEC 61131-2 NAMUR NE21 EN 61326	• 1 kV symmetric[1)] • 2 kV asymmetric [1)] • 1.2/50 µs (8/20) µs pos./neg. • Internal generator resistance: 2 Ω
Surge on data and signal cables	EN 61000-4-5 IEC 61131-2 NAMUR NE21 EN 61326	• 2 kV asymmetric
HF irradiation amplitude modulated	IEC61000-4-3 NAMUR NE21 OIML R76 EN 45501*3	• 80 to 2 000 MHz: 20 V/m
HF irradiation, cell phone frequencies	IEC 61000-4-3	• 900 MHz (± 5 MHz) • 1.89 Ghz (± 10 MHz) • 20 V/m
HF voltage on data, signal and power supply cables 0.15 to 80 MHz	IEC 61000-4-6 NAMUR NE21 EN 61326 OIML R 76	• 10 kHz to 80 MHz: 10 V_{rms} • Mod.: 80% AM with 1 kHz

1) An external protection element has to be installed to meet the requirement (e.g.: Blitzductor VT AD24V, Dehn&Söhne)

2) ◂Not applicable for shielded cables and symmetric ports

NOTICE
Radio interference is possible This is a device of class A. The device may cause radio interference in residential areas. Implement appropriate measures (e.g.: use in 8MC cabinets) to prevent radio interference.

Ambient conditions

The use of SIWAREX WP321 is intended under the following conditions in SIMATIC ET 200SP.

Table 12-3 Operating conditions to IEC 60721

Mode	IEC60721-3-3 • Class 3M3, stationary use, weather-proofed	
Storage/transport	IEC 60721-3-2 class 2M2 without precipitation	
Contaminant concentration	SO_2: < 0.5 ppm H_2S: < 0.1 ppm;	RH < 60%, no condensation

Table 12-4 Climatic requirements

Comments	Ambient conditions	Application areas
Operating temperature:		
• Horizontal installation in S7	-25 ... +60 °C	The S7 standard modules may not be operated at temperatures below 0 °C.
• Vertical installation in S7	-25 ... +50 °C	
Storage and transport temperature	-40 ... +85 °C	
Relative humidity	5 ... 95 %	No condensation; corresponds to relative humidity (RH) stress level 2 to DIN IEC 61131-2
Air pressure during operation	IEC 60068-2-13	1 080 ... 795 hPa (operation) (-1 000 ... +2 000 m above sea level)
Air pressure during transport and storage	IEC 60068-2-13	1 080 to 660 hPa (storage) (-1 000 to +3 500 m above sea level)

12.3 Reliability

Mean Time Between Failure (MTBF)

The MTBF calculation results in the following value:

Table 12-5 MTBF

Electronic Weighing System	MTBF in years
SIWAREX WP321	107 years @TA = 40 °C

12.4 Approvals

NOTICE

Safety guidelines for applications in hazardous areas

For applications in hazardous areas, read the safety instructions in the document "Product Information - Use of SIWAREX Modules in a Zone 2 Hazardous Area (https://support.industry.siemens.com/cs/ww/en/)".

Note

The current approvals for your device can be found on the nameplate.

	→ CE approval (https://support.industry.siemens.com/cs/ww/de/view/102423743/en)
	→ UL approval USA (https://support.industry.siemens.com/cs/ww/de/view/19248974/en) → UL approval Canada (https://support.industry.siemens.com/cs/ww/de/view/89339055/en)
	→ FM approval (https://support.industry.siemens.com/cs/ww/de/view/109476227/en)
	→ ATEX certificate (https://support.industry.siemens.com/cs/de/de/view/22750040/en)
	→ IECEx certificate (https://support.industry.siemens.com/cs/ww/de/view/109476230/en)
	→ EAC certificate (https://support.industry.siemens.com/cs/ww/de/view/109476219/en)
	→ Tick mark for Australia and New Zealand
	→ KCC approval
	→ The modules are RoHS-compliant according to EU Directive 2016/65/EU

Accessories

13

Table 13-1 Essential accessories

Ordering data	
Description	**Article No.**
BaseUnit type A0, essential accessories	
• For opening a new potential group	
BU15P-16+A0+2D[1] or BU15P-16+A10+2D[1]	6ES7193-6BP00-0DA0 6ES7193-6BP20-0DA0
• For continuing the potential group	
BU15P-16+A0+2B[1] BU15P-16+A10+2B[1]	6ES7193-6BP00-0BA0 6ES7193-6BP20-0BA0
Shield connection	6ES7193-6SC00-1AM0

[1] FM-certified

Table 13-2 Optional accessories

Ordering data	
Description	**Article No.**
Configuration Package SIWAREX WP321 for TIA-Portal • SIWATOOL program for adjustment of scales during commissioning • Software "Ready for use" This contains the SIMATIC S7 blocks for operation with SIMATIC 300 und S7-1500 and a project for SIMATIC Operator Panel KTP600 • Manuals in several languages	7MH4138-1AK01
Configuration Package SIWAREX WP321 for PCS7 V8.1 • Function block for CFC • Faceplate • PC configuration software SIWATOOL • Device manuals	7MH4138-1AK61
SIWAREX WP321 manual in various languages	Free download from the Internet
SIWAREX WP321 "Ready for use"	Free download from the Internet
RS485/USB converter Commercially available converter with FTDI chip, e.g. USB-Nano-485 from CTI (http://www.cti-shop.com/RS485-Konverter/USB-Nano-485)	

Ordering data	
Description	**Article No.**
Digital remote display The digital remote displays can be connected directly to the SIWAREX WP321 through the RS485 interface. Suitable remote display: S102 Siebert Industrieelektronik GmbH Postfach 1180 D-66565 Eppelborn, Germany Tel.: 06806/980-0 Fax: 06806/980-999 Internet: Siebert (http://www.siebert-group.com) Detailed information can be obtained from the manufacturer.	
SIWAREX JB junction box For parallel connection of load cells	7MH4 710-1BA
SIWAREX EB extension box For extending load cell cables	7MH4 710-2AA
Ex interface, type SIWAREX IS With ATEX approval for intrinsically-safe connection of load cells, including manual, suitable for the load cell groups SIWAREX CS, U, M, FTA, and P	
• With short-circuit current < 199 mA DC	7MH4 710-5BA
• With short-circuit current < 137 mA DC	7MH4 710-5CA
Cable (optional)	
Cable Li2Y 1 x 2 x 0.75 ST + 2 x (2 x 0.34 ST) - CY • To connect SIWAREX CS, U, M, P, A, WP321 to the junction box (JB), extension box (EB) or Ex interface (Ex-I) or between two JBs, for fixed laying • Occasional bending is possible • 10.8 mm outer diameter • For ambient temperature -20 to +70 °C	7MH4 702-8AG
Cable Li2Y 1 x 2 x 0.75 ST + 2 x (2 x 0.34 ST) - CY, blue sheath • To connect junction box (JB) or extension box (EB) in hazardous area and Ex interface (Ex-I), for fixed laying • Occasional bending is possible, blue PVC insulating sheath, approx. 10.8 mm outer diameter • For ambient temperature -20 to +70 °C	7MH4 702-8AF

Appendix A

A.1 Technical support

Technical Support

If this documentation does not provide complete answers to any technical questions you may have, contact Technical Support at:

- Support request (http://www.siemens.com/automation/support-request)
- More information about our Technical Support is available at Technical support (http://www.siemens.com/automation/csi/service)

Internet Service & Support

In addition to our documentation, Siemens provides a comprehensive support solution at:

- Service&Support (http://www.siemens.com/automation/service&support)

Personal contact

If you have additional questions about the device, please contact your Siemens personal contact at:

- Partner (http://www.automation.siemens.com/partner)

In order to find the contact for your product, select under 'All Products and Branches' the path 'Automation Technology > Sensor Systems'.

Documentation

You can find documentation on various products and systems at:

- Instructions and manuals Instructions and manuals (https://support.industry.siemens.com/cs/ww/en/ps/17781/man)

See also

Process instrumentation catalog (http://www.siemens.com/processinstrumentation/catalogs)

SIWAREX support

- E-mail (mailto:hotline.siwarex@siemens.com)
- Phone: +49 (721) 595-2811 CET 8:00 to 17:00

ESD guidelines

B

B.1 ESD Guidelines

Definition of ESD

All electronic modules are equipped with large-scale integrated ICs or components. Due to their design, these electronic elements are highly sensitive to overvoltage, and thus to any electrostatic discharge.

The electrostatic sensitive components/modules are commonly referred to as ESD devices. This is also the international abbreviation for such devices.

ESD modules are identified by the following symbol:

NOTICE
ESD devices can be destroyed by voltages well below the threshold of human perception. These static voltages develop when you touch a component or electrical connection of a device without having drained the static charges present on your body. The electrostatic discharge current may lead to latent failure of a module, that is, this damage may not be significant immediately, but in operation may cause malfunction.

Electrostatic charging

Anyone who is not connected to the electrical potential of their surroundings can be electrostatically charged.

The figure below shows the maximum electrostatic voltage which may build up on a person coming into contact with the materials indicated. These values correspond to IEC 801-2 specifications.

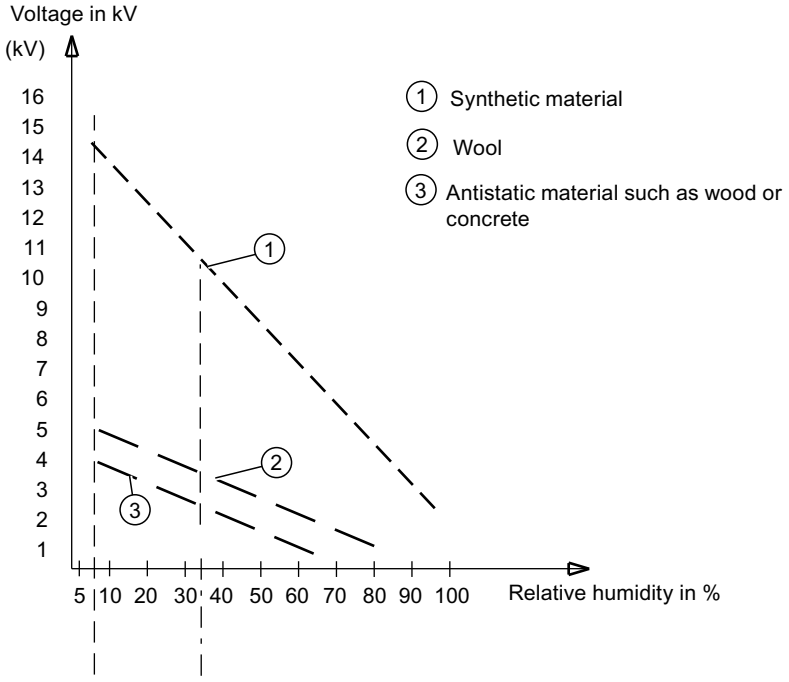

Figure B-1 Electrostatic voltages which an operator can be subjected to

Basic protective measures against electrostatic discharge

- Ensure good equipotential bonding:
  When handling electrostatic sensitive devices, ensure that your body, the workplace and packaging are grounded. This prevents electrostatic charge.
- Avoid direct contact:
  As a general rule, only touch electrostatic sensitive devices when this is unavoidable (e.g. during maintenance work). Handle the modules without touching any chip pins or PCB traces. In this way, the discharged energy can not affect the sensitive devices.
  Discharge your body before you start taking any measurements on a module. Do so by touching grounded metallic parts. Always use grounded measuring instruments.

List of abbreviations

C

C.1 List of abbreviations

ASCII	American Standard Code for Information Interchange
B	Gross weight
CPU	Central processor, in this case SIMATIC CPU
DB	Data block
FB	SIMATIC S7 function block
HMI	Human machine interface (e.g. SIMATIC Operator Panel)
HW	Hardware
NAWI	Non-automatic weighing instrument
NAW	Non-automatic scales
OIML	Organisation Internationale de Metrologie Legale
OP	Operator Panel (SIMATIC)
PC	Personal computer
pT	Preset tare (predefined tare weight with manual taring)
RAM	Random access memory
PLC	Programmable logic controller
STEP 7	Programming device software for SIMATIC S7
T	Tare weight
TM	Technology module
TP	Touch Panel (SIMATIC)
UDT	Universal Data Type (S7)
WRP	Write protection
LC	Load cell(s)
NR	Numerical range

Index

C

Customer Support Hotline, 119

D

Documentation
    Edition, 10

E

ESD guidelines, 121

G

Guidelines
    ESD guidelines, 121

H

History, 10
Hotline, 119

I

Internet, 119

M

MTBF, 114

R

Reliability, 114

S

Safety notices
    for installation, 21
    Use in hazardous areas, 21
Scope of delivery, 11
Service, 119
Support, 119

SIEMENS

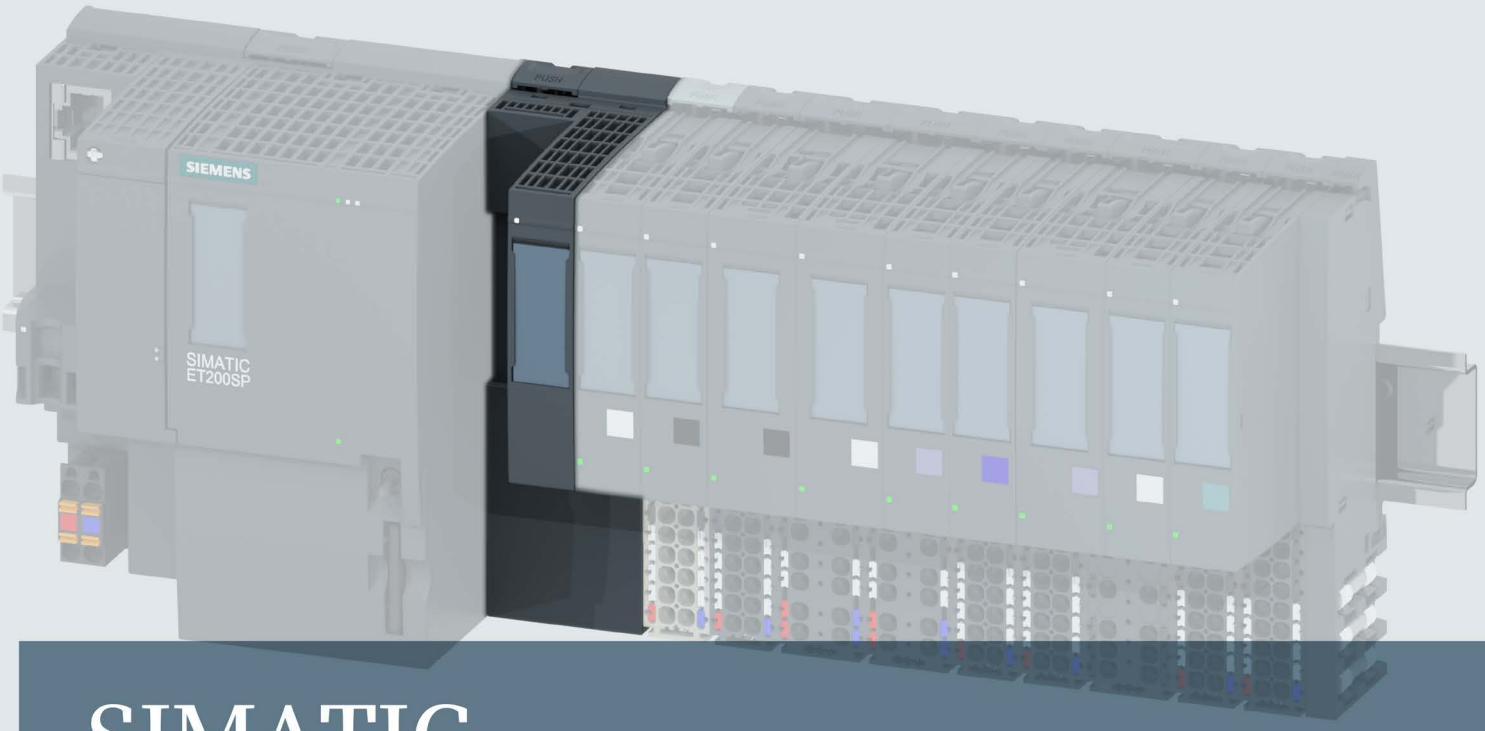

SIMATIC

ET 200SP

Communication module CM DP (6ES7545-5DA00-0AB0)

Manual

Edition 12/2014

Answers for industry.

SIEMENS

SIMATIC

ET 200SP
Communication module CM DP
(6ES7545-5DA00-0AB0)

Manual

Preface

ET 200SP Documentation Guide 1

Product overview 2

Wiring 3

Programming 4

Diagnostics, error and system alarms 5

Technical specifications 6

Dimension drawing A

12/2014

A5E33619758-AB

Legal information

Warning notice system

This manual contains notices you have to observe in order to ensure your personal safety, as well as to prevent damage to property. The notices referring to your personal safety are highlighted in the manual by a safety alert symbol, notices referring only to property damage have no safety alert symbol. These notices shown below are graded according to the degree of danger.

⚠ DANGER

indicates that death or severe personal injury **will** result if proper precautions are not taken.

⚠ WARNING

indicates that death or severe personal injury **may** result if proper precautions are not taken.

⚠ CAUTION

indicates that minor personal injury can result if proper precautions are not taken.

NOTICE

indicates that property damage can result if proper precautions are not taken.

If more than one degree of danger is present, the warning notice representing the highest degree of danger will be used. A notice warning of injury to persons with a safety alert symbol may also include a warning relating to property damage.

Qualified Personnel

The product/system described in this documentation may be operated only by **personnel qualified** for the specific task in accordance with the relevant documentation, in particular its warning notices and safety instructions. Qualified personnel are those who, based on their training and experience, are capable of identifying risks and avoiding potential hazards when working with these products/systems.

Proper use of Siemens products

Note the following:

⚠ WARNING

Siemens products may only be used for the applications described in the catalog and in the relevant technical documentation. If products and components from other manufacturers are used, these must be recommended or approved by Siemens. Proper transport, storage, installation, assembly, commissioning, operation and maintenance are required to ensure that the products operate safely and without any problems. The permissible ambient conditions must be complied with. The information in the relevant documentation must be observed.

Trademarks

All names identified by ® are registered trademarks of Siemens AG. The remaining trademarks in this publication may be trademarks whose use by third parties for their own purposes could violate the rights of the owner.

Disclaimer of Liability

We have reviewed the contents of this publication to ensure consistency with the hardware and software described. Since variance cannot be precluded entirely, we cannot guarantee full consistency. However, the information in this publication is reviewed regularly and any necessary corrections are included in subsequent editions.

Siemens AG
Division Digital Factory
Postfach 48 48
90026 NÜRNBERG
GERMANY

A5E33619758-AB
℗ 12/2014 Subject to change

Copyright © Siemens AG 2014.
All rights reserved

Preface

Purpose of the documentation

This manual supplements the system manual ET 200SP distributed I/O system (http://support.automation.siemens.com/WW/view/en/58649293).

Functions that generally relate to the system are described in this system manual.

The information provided in this manual and in the system/function manuals supports you in commissioning the ET 200SP distributed I/O system.

Conventions

STEP 7: In this documentation, "STEP 7" is used as a synonym for all versions of the configuration and programming software "STEP 7 (TIA Portal)".

Please also observe notes marked as follows:

Note

A note contains important information on the product described in the documentation, on the handling of the product or on the section of the documentation to which particular attention should be paid.

Security information

Siemens provides products and solutions with industrial security functions that support the secure operation of plants, solutions, machines, equipment and/or networks. They are important components in a holistic industrial security concept. With this in mind, Siemens' products and solutions undergo continuous development. Siemens recommends strongly that you regularly check for product updates.

For the secure operation of Siemens products and solutions, it is necessary to take suitable preventive action (e.g. cell protection concept) and integrate each component into a holistic, state-of-the-art industrial security concept. Third-party products that may be in use should also be considered. You can find more information about industrial security on the Internet (http://www.siemens.com/industrialsecurity).

To stay informed about product updates as they occur, sign up for a product-specific newsletter. You can find more information on the Internet (http://support.automation.siemens.com).

Table of contents

Preface 4
1 ET 200SP Documentation Guide 6
2 Product overview 8
2.1 Properties 8
2.2 Operating and display elements 11
3 Wiring 12
3.1 Pin assignment 12
3.2 Block diagram 13
4 Programming 14
5 Diagnostics, error and system alarms 16
5.1 Status and error displays 16
5.2 DP slave diagnostics 18
5.3 Standard diagnostics 20
5.4 Device-specific diagnostics with DP-V1 22
6 Technical specifications 25
6.1 Technical specifications 25
A Dimension drawing 28
A.1 Dimension drawing of the CM DP communication module 28

ET 200SP Documentation Guide

1

The documentation for the SIMATIC ET 200SP distributed I/O system is arranged into three areas.
This arrangement enables you to access the specific content you require.

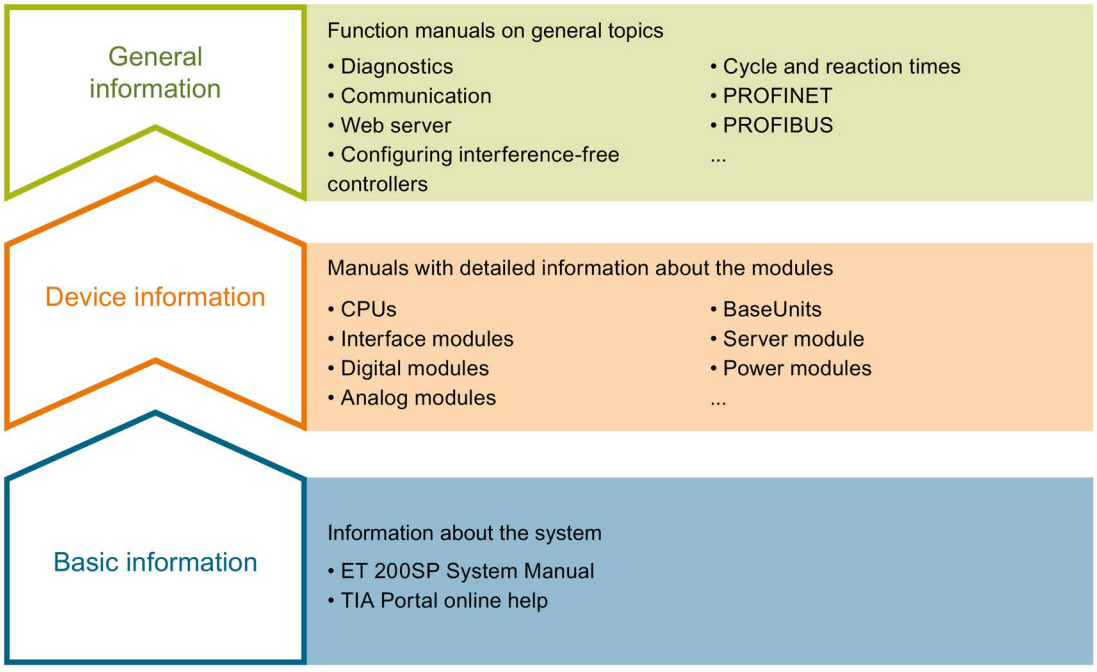

Basic information

The system manual describes in detail the configuration, installation, wiring and commissioning of the SIMATIC ET 200SP. distributed I/O system. The STEP 7 online help supports you in the configuration and programming.

Device information

Product manuals contain a compact description of the module-specific information, such as properties, terminal diagrams, characteristics and technical specifications.

General information

The function manuals contain detailed descriptions on general topics regarding the SIMATIC ET 200SP distributed I/O system, e.g. diagnostics, communication, Web server, designing interference-free controllers.

You can download the documentation free of charge from the Internet (http://w3.siemens.com/mcms/industrial-automation-systems-simatic/en/manual-overview/tech-doc-et200/Pages/Default.aspx).

Changes and supplements to the manuals are documented in a Product Information.

Manual Collection ET 200SP

The Manual Collection contains the complete documentation on the SIMATIC ET 200SP distributed I/O system gathered together in one file.

You can find the Manual Collection on the Internet (http://support.automation.siemens.com/WW/view/en/84133942).

My Documentation Manager

The My Documentation Manager is used to combine entire manuals or only parts of these to your own manual.
You can export the manual as PDF file or in a format that can be edited later.

You can find the My Documentation Manager on the Internet (http://support.automation.siemens.com/WW/view/en/38715968).

Applications & Tools

Applications & Tools supports you with various tools and examples for solving your automation tasks. Solutions are shown in interplay with multiple components in the system - separated from the focus in individual products.

You can find Applications & Tools on the Internet (http://support.automation.siemens.com/WW/view/en/20208582).

CAx Download Manager

The CAx Download Manager is used to access the current product data for your CAx or CAe systems.

You configure your own download package with a few clicks.

In doing so you can select:

- Product images, 2D dimension drawings, 3D models, internal circuit diagrams, EPLAN macro files
- Manuals, characteristics, operating manuals, certificates
- Product master data

You can find the CAx Download Manager on the Internet (http://support.automation.siemens.com/WW/view/en/42455541).

TIA Selection Tool

With the TIA Selection Tool, you can select, configure and order devices for Totally Integrated Automation (TIA).
This tool is the successor of the SIMATIC Selection Tool and combines the known configurators for automation technology into one tool.
With the TIA Selection Tool, you can generate a complete order list from your product selection or product configuration.

You can find the TIA Selection Tool on the Internet (http://w3.siemens.com/mcms/topics/en/simatic/tia-selection-tool).

Product overview

2

2.1 Properties

Article number

6ES7545-5DA00-0AB0

View of the module

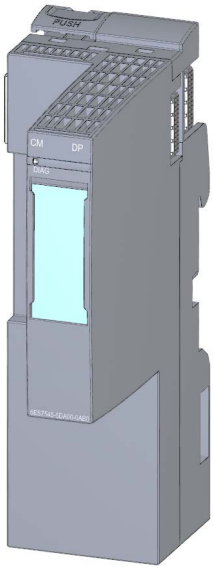

Figure 2-1 View of the CM DP communication module

Properties

The communication module CM DP can be used with the ET 200SP CPUs. You insert the communication module to the right next to the CPU.

The communication module has the following properties:

- Technical properties
  - Connects the CPU of the ET 200SP distributed I/O system with PROFIBUS DP
  - Bus connection via RS485 interface
- Supported functions
  - Operation as DP master or DP slave
  - Enable/disable DP slave
  - Diagnostics requirements
  - Identify the bus topology in a DP master system
  - Identification data I&M 0
  - Time-of-day synchronization
  - Line diagnostics
  - S7 services

Supported communication services

The communication module supports the following communication services:

- PROFIBUS DP-Master, as of STEP 7 V13, Update 3
  - PROFIBUS DP according to IEC 61158 and 61784 DPV1, DP master for DP slaves according to PROFIBUS DP and DPV1 standard
- PROFIBUS DP slave, as of STEP 7 V13, SP1
  - PROFIBUS DP according to IEC 61158 and 61784 DPV1, DP slave and I-slave

---

Note

DP master or DP slave

Note however: The CM DP only supports alternative operation as DP master or DP slave.

Maximum configuration as DP Master

Table 2- 1 General characteristics of DP mode

Feature	Explanation/values
Number of operable DP slaves	125
Max. size of the input area over all DP slaves	8 KB
Max. size of the output area via all DP slaves	8 KB
Maximum number of inputs per DP slave	244 bytes
Maximum number of outputs per DP slave	244 bytes
Max. size of the consistency area for a module	128 bytes

Note

Setting the PROFIBUS DP address on the communication module CM DP

The communication module CM DP does not have a DIP switch. You set the PROFIBUS DP address via STEP 7 (TIA Portal). You can find more information on this topic in the STEP 7 online help.

Accessories

A detailed list of the available accessories can be found in the system manual ET 200SP distributed I/O system (http://support.automation.siemens.com/WW/view/en/58649293).

Additional information

You can obtain detailed information on the topic of PROFIBUS in the function manual PROFIBUS (http://support.automation.siemens.com/WW/view/de/59193579/0/en)

2.2 Operating and display elements

Operating and connection elements

The following figure shows the operating and connection elements of the CM DP communication module.

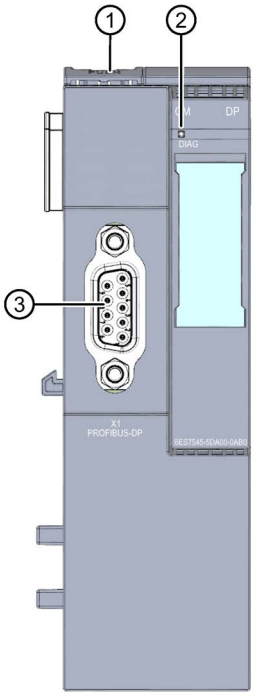

① Mounting rail release
② DIAG LED
③ DP interface

Figure 2-2 Operating and display elements of the communication module CM DP

Wiring 3

3.1 Pin assignment

PROFIBUS DP with RS485 interface

The following table shows the signal names and the designations of the pin assignment for the PROFIBUS DP interface.

Table 3- 1 Pin assignment PROFIBUS DP with RS485 interface

View	Signal name		Designation
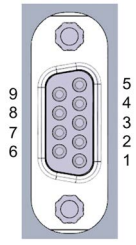	1	-	-
	2	-	-
	3	RxD/TxD-P	Data line B
	4	RTS	Request To Send
	5	M5V2	DP data reference potential (from station)
	6	P5V2	Supply plus (from station)
	7	-	-
	8	RxD/TxD-N	Data line A
	9	-	-

3.2 Block diagram

The following figure shows the block diagram of the CM DP communication module.

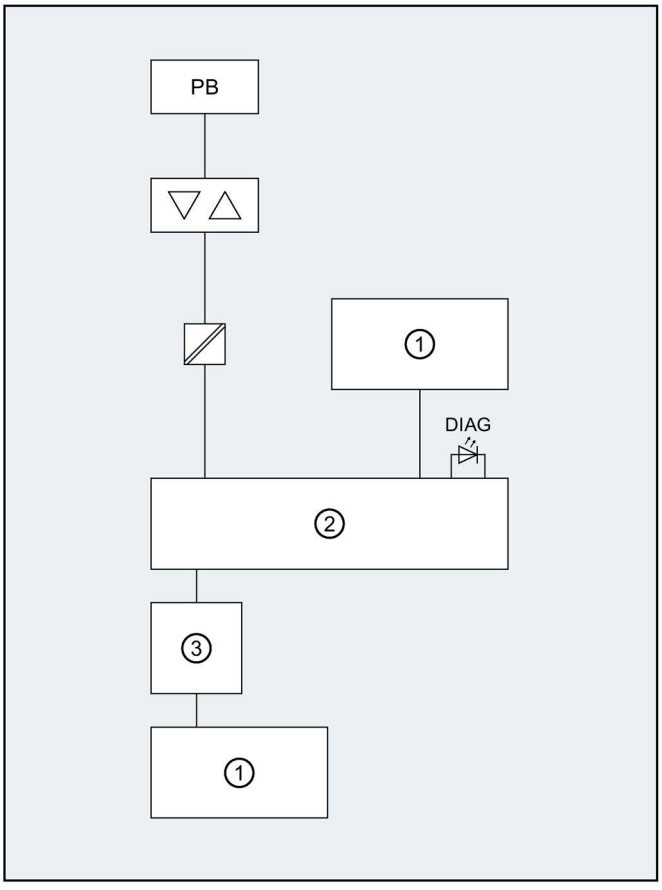

①	Backplane bus	PB	PROFIBUS interface
②	ET 200SP PROFIBUS interface and backplane bus transmission	DIAG	LED diagnostics (green/red)
③	Internal power supply		

Figure 3-1 Block diagram of the CM DP

Programming 4

Instructions

Pre-written instructions are available as an interface in your STEP 7 user program for communication services.

Table 4- 1 Instructions for PROFIBUS DP

Instructions	Meaning when used with CM DP	
	DP master	DP slave (I-slave)
DPSYC_FR	Synchronize DP slaves/Freeze inputs (SYNC/FREEZE instruction)	-
DPNRM_DG	Read diagnostics data of a DP slave	-
DP_TOPOL	Determine topology for DP master system	-
WRREC	Write data record of a DP slave	-
RDREC	Read data record of a DP slave	-
GETIO	Read process image of a DP standard slave	Read process image
SETIO	Transfer process image of a DP standard slave	Transfer process image
GETIO_PART	Read process image area of a DP standard slave	Read process image area
SETIO_PART	Transfer process image area of a DP standard slave	Transfer process image area
D_ACT_DP	Enable/disable DP slaves	-
DPRD_DAT	Read consistent data of a module (user data)	
DPWR_DAT	Write consistent data of a module	
RALRM	Event-driven reading of alarm information (diagnostics, pull/plug, hardware interrupt) as well as DPV1-specific interrupts (update, status, vendor-specific interrupt)	Event-driven reading of interrupt information (diagnostic interrupt)

Read the documentation for the instructions in the STEP 7 online help

Calling instructions for distributed I/O

Multiple calls are required for the instructions of the distributed I/O.

The duration of the call processing is dependent on the load, bus cycle time and transmission rate. Timeouts may occur if these instructions are called in a loop within a cycle.

Exceptions:

- Only one call is necessary for the RALRM instruction "Receive interrupt".

Program blocks for DPV1 (according to PNO standard) [1]:

- "Read data record from a DP slave" RDREC instruction is functionally equivalent to SFC59 (write record)
- "Write data record to a DP slave" WRREC instruction is functionally equivalent to SFC58 (read record)
- "Read interrupt information from a DP slave" RALRM instruction call is made within an interrupt OB

[1] PNO: PROFIBUS user organization

Diagnostics, error and system alarms 5

5.1 Status and error displays

Introduction

Diagnostics by means of LEDs is an initial tool for error localization. In order to localize errors still further, you usually evaluate the display of the module status in STEP 7 or the diagnostics buffer of the CPU. The buffer contains plain text information on the error that has occurred. For example, you will find the number of the relevant error OB in the plain text information.

LED display

The figure below shows the LED display on the CM DP communication module.

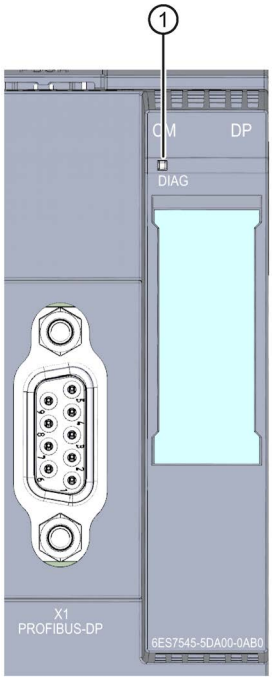

① DIAG (green/red)

Figure 5-1 LED display on the CM DP communication module

Meaning of the DIAG LED display on the communication module

The CM DP communication module has an LED for monitoring the diagnostics.

DIAG LED

Table 5- 1 DIAG LED fault display

DIAG LED	Meaning
Flashes	Module parameters not assigned
On	Module parameters assigned and no diagnostics
Flashes	Diagnostics of subordinate modules (as of firmware version V1.7)

Additional information

You can find more information on diagnostics in the Diagnostics function manual (http://support.automation.siemens.com/WW/view/de/59192926/0/en) for diagnostic options that are available for SIMATIC systems S7-1500, ET 200MP, ET 200SP and ET 200AL.

5.2 DP slave diagnostics

DP V1 slave: Diagnostic interrupt

Transmission of diagnostic data is made as a diagnostic interrupt. Diagnostic interrupts must be acknowledged by the DP master.

Supported diagnostic functions

The CM DP supports the following blocks of the DP diagnostics:

- Standard diagnostics (6 bytes)
- Identifier-related diagnostics (2...17 bytes depending on the number of configured transfer areas)
- Module status (5...35 bytes depending on the number of configured transfer areas)
- Diagnostic interrupt (8 bytes, if any)

User program (DP master)

The "DPNRM_DG" instruction is used to read the diagnostic data of a DP slave (DP single diagnostics) in the DP master.

The diagnostic interrupts for DP V1 slaves are periodically evaluated in the user program of the master via the "RALRM" instruction.

You can find the required parameter assignment for the instruction in the STEP 7 online help.

The following is a structural overview of the diagnostic data.

Overview of standard diagnostics

Standard diagnostics	
Byte	Meaning
0	Station status 1
1	Station status 2
2	Station status 3
3	Master address
4...5	Manufacturer ID of the slave

Overview of device-specific diagnostics

The device-specific diagnostics data depends on the protocol variant in which the DP slave is operated:

- **DP-V1 slave**

Table 5- 2 Overview of device-specific diagnostics of the CM DP for DP V1 slaves

Device-specific diagnostics		
Byte	**Meaning**	
0	Header	
1	Variant Interrupt type	Variant Status type
2	Slot number	
3	Variant Interrupt specifier	Variant Status specifier
4...62	Module-specific diagnostic data	

5.3 Standard diagnostics

Standard diagnostics

The coding of the standard diagnostic bytes is explained below.

Byte 0: Station status 1

Table 5- 3 Structure of station status byte 1

Bit no.	Name	Explanation
7	Master_Lock	The DP slave was configured by a different DP master. The DP slave can only be accessed read-only by the DP master configured as productive. This bit is set by the DP master when its bus address does not match the configured address.
6	Parameter_Fault	The most recently received parameter frame was corrupt or not permitted. This bit is set by the DP slave. Remedy: Check the parameter assignment with respect to invalid parameters.
5	Invalid_Slave_Response	This bit is set by the DP master if an implausible response has been received by the DP slave.
4	Service_Not_Supported	This bit is set by the DP master if a function is called by the master that is not supported by the DP slave. Remedy: Disable the parameter assignment of the required function at the master.
3	Ext_Diag	This bit is set by the slave. • Bit =1: Diagnostic data is available in the diagnostic area specific to the slave. The diagnostic data can be evaluated in the user program of the master. • Bit =0: A status message can be available in the diagnostic area specific to the slave. The status message can be evaluated in the user program of the master.
2	Slave_Config_Check_Fault	The configuration data sent by the DP master is rejected by the DP slave. Cause: Configuration error. Remedy: Change the configuration.
1	Station_Not_Ready	The DP slave is not yet ready for productive data exchange. This is a temporary condition and cannot be influenced by the DP master.
0	Station_Non_Existent	The DP slave is not responding on the bus. This bit is set by the DP master 1 (the slave permanently sets this bit to 0). If the bit is set, the diagnostic bits contain the status of the last diagnostic alarm or the initial value.

Byte 1: Station status 2

Table 5- 4 Structure of station status byte 2

Bit no.	Name	Explanation
7	Deactivated	The DP slave was shown as inactive in the local parameter set and will not be cyclically queried.
6	Reserved	- Reserved -
5	Sync_Mode	The DP slave is in SYNC mode. The bit is set by the slave.
4	Freeze_Mode	The DP slave is in FREEZE mode. The bit is set by the slave.
3	Watchdog_On	The watchdog is activated on the DP slave. The bit is set by the slave.
2	Status_From_Slave	Bit =1: The diagnostics comes from the DP slave. The bit is permanently set by the slave to 1.
1	Static_Diag	Static diagnostics If the DP slave sets this bit, the DP master must fetch the diagnostic data from the DP slave until the DP slave resets this bit. The DP slave sets this bit, for example, if it cannot perform data transfer.
0	Parameter_Request	The DP slave sets this bit when it has to be re-parameterized and configured. If bit 0 and bit 1 are both set, bit 0 has the higher priority.

Byte 2: Station status 3

Table 5- 5 Structure of station status byte 3

Bit no.	Name	Explanation
7	Ext_Data_Overflow	If this bit is set, there is more diagnostic information than is specified in the diagnostics data. This data cannot be viewed.
6...0	Reserved	- Reserved -

Byte 3: Master address

The address of the DP master that has configured this DP slave is entered in the "Master_Add" byte.

If the DP slave was not configured by a DP master, the DP slave sets address 255 in this byte.

Bytes 4 and 5: Manufacturer ID of the slave ("Ident_Number")

The manufacturer ID ("Ident_Number") for the DP slave type is entered in the bytes 4 and 5. This identifier can be used to identify the slave.

The most significant part of the value is in byte 5.

5.4 Device-specific diagnostics with DP-V1

Device-specific diagnostics

The device-specific diagnostics of DP V1 slaves is available in two variants:

- Interrupt type
- Status type

The two variants differ in the coding of byte 1, bit 7 of the device-specific diagnostic data. The distinction is component-specific.

Byte 0: Header

The two most significant bits have the value 00. This identifies the "Module-specific diagnostic data" block as a whole (see bytes 4...62).

The remaining six bits indicate the length of the data block including byte 0.

Byte 1: "Interrupt type" variant

Table 5- 6 Structure of byte 1 of the device-specific diagnostics ("Interrupt type" variant)

Bit no.	Meaning	
7	Value	Meaning
	0	Interrupt
6...0	Alarm_Type	
	0	- Reserved -
	1	Diagnostic interrupt
	2	Process interrupt
	3	Pull interrupt
	4	Plug interrupt
	5	Status interrupt
	6	Update interrupt
	7...31	- Reserved -
	32...126	Manufacturer-specific
	127	- Reserved -

Older status interrupts can be overwritten by newer ones when status interrupts occur in rapid succession.

Byte 1: "Status type" variant

Table 5- 7 Structure of byte 1 of the device-specific diagnostics ("Status type" variant)

Bit no.	Meaning	
7	Value	Meaning
	1	Status message
6...0	Status_Type	
	0	- Reserved -
	1	Status message
	2	Module_Status (see also bytes 4...62)
	3...31	- Reserved -
	32...126	Vendor-specific
	127	- Reserved -

Byte 2: Slot number

Slot number (1...n) of the slave module

0 is the placeholder for the overall device.

Byte 3: "Interrupt specifier" variant

Table 5- 8 Structure of byte 3 of the device-specific diagnostics ("Interrupt specifier" variant)

Bit no.	Meaning	
7...3	Seq_No	Unique identification of an alarm message
2	Add_Ack	If this bit is set, the DP V1 master indicates that this interrupt expects an acknowledgment in the form of a WRITE job.
1...0	Alarm_Specifier	
	0	No further distinction
	1	Interrupt appears, slot is disrupted The slot generates an interrupt due to an error.
	2	Interrupt disappears, slot is OK The slot generates an interrupt and indicates that there is no other error.
	3	Interrupt disappears, slot is still disrupted The slot generates an interrupt and indicates that errors remain.

Byte 3: "Status specifier" variant

Table 5- 9 Structure of byte 3 of the device-specific diagnostics ("Status specifier" variant)

Bit no.	Meaning	
7...2	- Reserved -	
1...0	Status_Specifier	
	0	No further distinction
	1	Status appears
	2	Status disappears
	3	- Reserved -

Bytes 4...62: Module-specific diagnostic data: General coding

This byte contains data with module-specific information that is described in the respective module documentation. The particular module is identified by the slot (byte 2).

Bytes 4...62: Module-specific diagnostics for "Status type" and "Modul_Status"

In the case of the "Status type" variant of device-specific diagnostics from DP V1 slaves (see byte 1, bit 7) and the "Module_Status" setting (see byte 1, bits 0...6) two status bits are provided here for each slot (= module). Unneeded bits are set to 0.

Table 5- 10 Structure of the bytes for the module-specific diagnostic data

Byte	Bit assignment							
Bit	7	6	5	4	3	2	1	0
4	Module status 4		Module status 3		Module status 2		Module status 1	
5	Module status 8		Module status 7		Module status 6		Module status 5	
...	...		...		...		...	
62	Module status 236		Module status 235		Module status 234		Module status 233	

The respective status bits are coded as follows:

Table 5- 11 Meaning of the values of the status bits

Value	Meaning
00	Data valid
01	Data invalid - error (e.g. short-circuit)
10	Data invalid - wrong module
11	Data invalid - no module plugged

Technical specifications

6

6.1 Technical specifications

Technical specifications of the CM DP (6ES7545-5DA00-0AB0) communication module

	6ES7545-5DA00-0AB0
Product type designation	ET 200SP, CM DP
General information	
Hardware version	FS01
HW functional status	FS01
Engineering with	
STEP 7 TIA Portal can be configured/integrated as of version	V13 Update 3
Installation type/mounting	
Rack mounting possible	No
Rail mounting possible	Yes; standard DIN rail
Supply voltage	
Type of supply voltage	24 VDC
Rated value (DC)	24 V
Valid range low limit (DC)	19.2 V
Valid range high limit (DC)	28.8 V
Reverse polarity protection	Yes
Interfaces	
Number of interfaces PROFIBUS	1
1. interface	
Interface hardware	
• RS 485	Yes
Protocols	
• SIMATIC communication	Yes
• PROFIBUS DP master	Yes
• PROFIBUS DP slave	Yes
Interface hardware	
RS 485	
Transmission rate, max.	12 Mbps
Max. cable length	100 m

	6ES7545-5DA00-0AB0
Protocols	
PROFIBUS DP master	
Services	
• PG/OP communication	Yes
• S7 routing	Yes
• Data record routing	Yes
• Isochronous mode	No
• Constant bus cycle time	No
• Number of DP slaves	125
• Activation/deactivation of DP slaves	Yes
PROFIBUS DP slave	
Transmission rate, max.	12 Mbps
Automatic baud rate search	Yes
Address area, max.	120
User data per address area, max.	128 bytes
Services	
• PG/OP communication	Yes, only with active interface
• Routing	Yes, only with active interface
• S7 communication	Yes, only with active interface
• Direct data exchange (data exchange broadcast)	Yes, no subscriber possible - only passive publisher
• DPV1	Yes
Transfer memory	
• Inputs	244 bytes
• Outputs	244 bytes
Interrupts/diagnostics/status information	
Diagnostic alarms	
Diagnostics	Yes
Diagnostic indicator LED	
For module diagnostics	Yes; green/red DIAG LED
Electrical isolation	
Between backplane bus and interface	Yes
Ambient conditions	
Ambient temperature in operation	
Horizontal installation, min.	0 °C
Horizontal installation, max.	60 °C
Vertical installation, min.	0 °C
Vertical installation, max.	50 °C

	6ES7545-5DA00-0AB0
Dimensions	
Width	35 mm
Height	117 mm
Depth	75 mm
Weights	
Weight, approx.	80 g

Dimension drawing

A

A.1 Dimension drawing of the CM DP communication module

This section contains a dimension drawing of the module mounted on a mounting rail. Observe the dimensions when installing in cabinets, control rooms, etc.

Dimension drawing of the CM DP communication module

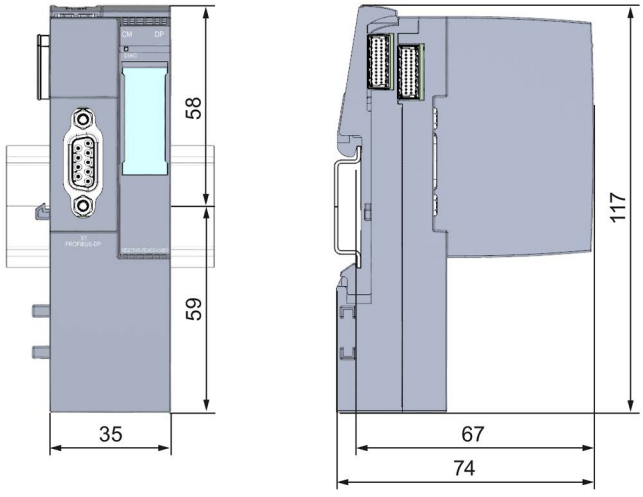

Figure A-1 Dimension drawing CM DP

SIEMENS

SIMATIC

ET 200SP
CM PtP communication module
(6ES7137-6AA00-0BA0)

Manual

Preface

Documentation guide 1

Product overview 2

Connecting 3

Parameters/address space 4

Programming 5

Error and system messages 6

Technical specifications 7

Dimensional drawing A

01/2013

A5E03790792-01

Legal information

Warning notice system

This manual contains notices you have to observe in order to ensure your personal safety, as well as to prevent damage to property. The notices referring to your personal safety are highlighted in the manual by a safety alert symbol, notices referring only to property damage have no safety alert symbol. These notices shown below are graded according to the degree of danger.

⚠ DANGER
indicates that death or severe personal injury **will** result if proper precautions are not taken.

⚠ WARNING
indicates that death or severe personal injury **may** result if proper precautions are not taken.

⚠ CAUTION
indicates that minor personal injury can result if proper precautions are not taken.

NOTICE
indicates that property damage can result if proper precautions are not taken.

If more than one degree of danger is present, the warning notice representing the highest degree of danger will be used. A notice warning of injury to persons with a safety alert symbol may also include a warning relating to property damage.

Qualified Personnel

The product/system described in this documentation may be operated only by **personnel qualified** for the specific task in accordance with the relevant documentation, in particular its warning notices and safety instructions. Qualified personnel are those who, based on their training and experience, are capable of identifying risks and avoiding potential hazards when working with these products/systems.

Proper use of Siemens products

Note the following:

⚠ WARNING
Siemens products may only be used for the applications described in the catalog and in the relevant technical documentation. If products and components from other manufacturers are used, these must be recommended or approved by Siemens. Proper transport, storage, installation, assembly, commissioning, operation and maintenance are required to ensure that the products operate safely and without any problems. The permissible ambient conditions must be complied with. The information in the relevant documentation must be observed.

Trademarks

All names identified by ® are registered trademarks of Siemens AG. The remaining trademarks in this publication may be trademarks whose use by third parties for their own purposes could violate the rights of the owner.

Disclaimer of Liability

We have reviewed the contents of this publication to ensure consistency with the hardware and software described. Since variance cannot be precluded entirely, we cannot guarantee full consistency. However, the information in this publication is reviewed regularly and any necessary corrections are included in subsequent editions.

Siemens AG
Industry Sector
Postfach 48 48
90026 NÜRNBERG
GERMANY

A5E03790792-01
Ⓟ 01/2013 Technical data subject to change

Copyright © Siemens AG 2013.
All rights reserved

Preface

Purpose of the documentation

This documentation provides important information on installing, wiring and commissioning the ET 200SP point-to-point communications module.

This device manual complements the system manual ET 200SP distributed I/O system (http://support.automation.siemens.com/WW/view/en/58649293). General functions of the ET 200SP are described in the system manual ET 200SP distributed I/O system (http://support.automation.siemens.com/WW/view/en/58649293).

Conventions

This documentation contains figures of the described device. The figures may differ slightly from the devices supplied.

Please also observe notes marked as follows:

Note

A note contain important information on the product described in the documentation, on the handling of the product and on the section of the documentation to which particular attention should be paid.

Note on IT security

Siemens offers IT security mechanisms for its automation and drive product portfolio in order to support the safe operation of the plant/machine. We recommend that you inform yourself regularly on the IT security developments regarding your products. You can find information on this on the Internet (http://support.automation.siemens.com).

You can register for a product-specific newsletter here.

For the safe operation of a plant/machine, however, it is also necessary to integrate the automation components into an overall IT security concept for the entire plant/machine, which corresponds to the state-of-the-art IT technology. You can find information on this on the Internet (http://www.siemens.com/industrialsecurity).

Products used from other manufacturers should also be taken into account here.

Copyright notice for the open-source software used

Open-source software is used in the firmware of the product described. The open-source software is provided free of charge. We are liable for the product described, including the open-source software contained in it, pursuant to the conditions applicable to the product. Siemens accepts no liability for the use of the open source software over and above the intended program sequence, or for any faults caused by modifications to the software.

For legal reasons, we are obliged to publish the original text of the following copyright notices.

© Copyright William E. Kempf 2001
Permission to use, copy, modify, distribute and sell this software and its documentation for any purpose is hereby granted without fee, provided that the above copyright notice appear in all copies and that both that copyright notice and this permission notice appear in supporting documentation. William E. Kempf makes no representations about the suitability of this software for any purpose. It is provided "as is" without express or implied warranty.

Copyright © 1994 Hewlett-Packard Company
Permission to use, copy, modify, distribute and sell this software and its documentation for any purpose is hereby granted without fee, provided that the above copyright notice appear in all copies and that both that copyright notice and this permission notice appear in supporting documentation. Hewlett-Packard Company makes no representations about the suitability of this software for any purpose. It is provided ``as is'' without express or implied warranty.

Table of contents

Preface 3

1 Documentation guide 7

2 Product overview 9

2.1 Properties 9

2.2 Accessories 10

2.3 Functions 11

2.4 Properties of the interfaces 13

2.4.1 Properties of the RS232 interface 13

2.4.2 Properties of the RS422/485 interface 15

3 Connecting 17

3.1 RS232 and RS422/485 interface of the communication module 17

3.2 Installation guidelines 18

4 Parameters/address space 19

4.1 Parameter assignment 19

4.2 Reaction to CPU STOP 19

4.3 Address space 20

5 Programming 21

6 Error and system messages 23

7 Technical specifications 25

A Dimensional drawing 29

Documentation guide 1

Introduction

This modular documentation of the SIMATIC products covers diverse topics concerning your automation system.

The complete documentation for the S7-1500 and ET 200SP automation systems consists of system manuals, function manuals and manuals.

The STEP 7 information system (Online Help) also helps you configure and program your automation system.

Overview of the documentation provided for the CM PtP communication module (ET 200SP)

The following table lists additional references that you will need when using the CM PtP communication module.

Table 1- 1 Documentation for the CM PtP communication module

Topic	Documentation	Key content
System description	System Manual S7 -1500 Automation System (http://support.automation.siemens.com/WW/view/en/59191792) System Manual ET 200SP distributed I/O system (http://support.automation.siemens.com/WW/view/en/58649293)	• Application planning • Installation • Connecting • Addressing • Commissioning • Maintenance
	Device manual Interface module (http://support.automation.siemens.com/WW/view/en/55683316/133300)	• Connecting • Interrupt, error and system messages • Technical specifications • Dimensional drawing
	Function manual EMC/EMI compatible installation of control systems (http://support.automation.siemens.com/WW/view/en/59193566)	• Basics • Electromagnetic compatibility • Lightning protection
Point-to-point communication	Function manual CM PtP - Configurations for point-to-point connections (http://support.automation.siemens.com/WW/view/en/59057093)	• Basic information • Data transmission functions • Diagnostics functions

SIMATIC Manuals

All current manuals for the SIMATIC products are available for download free of charge on the Internet (http://www.siemens.com/automation/service&support).

Product overview

2

2.1 Properties

Order number

6ES7137-6AA00-0BA0

View of the module

Figure 2-1 View of CM PtP (without BaseUnit)

Properties

The communication module has the following properties:

- Technical properties
  - RS232 interface (via BaseUnit)
  - RS422/485 interface (via BaseUnit)
  - short-circuit proof
  - electrically disconnected
  - Protocols: 3964(R), Modbus master (RTU), Modbus slave (RTU), Freeport and USS with instructions
- Supported system functions
  - Firmware update
  - Identification data I&M0
  - Parameter re-assignment in CPU RUN mode (using instructions)
  - Diagnostic interrupts

Additional information

Additional information on the properties of the CM PtP can be found in the function manual CM PtP - Configurations for point-to-point connections (http://support.automation.siemens.com/WW/view/en/59057093).

You can find additional information on the design of the ET 200SP and the associated modules in the system manual ET 200SP distributed I/O system (http://support.automation.siemens.com/WW/view/en/58649293).

2.2 Accessories

ET 200SP accessories

Accessories and spare parts for ET 200SP can be found in the System Manual ET 200SP distributed I/O system (http://support.automation.siemens.com/WW/view/en/58649293).

Online catalog

Additional order numbers for ET 200SP can be found on the Internet (http://www.siemens.com/industrymall) in the online catalog and online ordering system.

2.3 Functions

Introduction

The communication module allows you to exchange data between your own and other programmable controllers or computers by means of a point-to-point connection, and to connect various devices from a variety of manufacturers.

Functionality of the CM PtP

The CM PtP communication module offers the following functionality:

- RS232 and RS422/485 interface
- Data transmission rate: 300 to 115200 bps
- Maximum frame length: 2 kbyte
- Transmission protocols: Freeport, 3964(R) and Modbus

Note

The USS protocol can be implemented with instructions included in STEP 7 (TIA Portal).

Hardware components of a point-to-point connection

You require certain hardware components for a point-to-point connection with the CM PtP.

Components	Function
Automation system	... contains the CPU and PROFINET interface, and the central I/O, if applicable, and executes the user program.
ET 200SP Distributed I/O System	... contains the distributed I/O.
Interface module (IM)	... connects the distributed I/O system ET 200SP to PROFINET IO and supports all ET 200SP I/O modules.
CM PtP communication module	... communicates with a communication partner (point-to-point) by means of the interface.
BaseUnit (6ES7193-6BP00-0xA0)	... connects the communication module with the I/O system and the supply voltage.
Server module	... completes the setup of the ET 200SP

System environment

The communication module can be used in the following system environments:

Applications	Components required	Configuration
Distributed operation in an S7-1500 system	• CPU 151x • IM 155-6 • CM PtP • Power supply (optional)	STEP 7 (TIA Portal)
Distributed operation in an S7-300/400 system	• CPU 31x / CPU 41x • IM 155-6 • CM PtP • BaseUnit	STEP 7 (TIA Portal) STEP 7 with integration of a GSD file
Distributed operation in a third-party automation system	• Third-party automation system • IM 155-6 • CM PtP	GSD file imported to/installed in the engineering system [1)]

[1)] Information on using the communication module in a third-party system is available in the programming and operating manual CM PtP operation with PROFINET controller (http://support.automation.siemens.com/WW/view/en/59062563).

Additional information

Information on configuration and programming of the CM PtP communications module is available in the function manual CM PtP - Configurations for point-to-point connections (http://support.automation.siemens.com/WW/view/en/59057093) and in the information system of the TIA Portal.

2.4 Properties of the interfaces

Interfaces of the CM PtP

The CM PtP has the following interfaces, which are connected by means of the associated BaseUnit (see RS232 and RS422/485 interface of the communication module (Page 17) for assignment):

- RS232 interface
- RS422/485 interface

2.4.1 Properties of the RS232 interface

Definition - RS232 interface

The RS232 interface is a voltage interface used for serial data transmission.

Properties - RS232 interface

The RS232 interface has the following properties and meets the following requirements:

Type	Voltage interface
BaseUnit terminals	Terminals connected to the electronics module (see RS232 and RS422/485 interface of the communication module (Page 17) for assignment)
RS232 signals	TXD, RXD, RTS, CTS, DTR, DSR, RI, DCD, GND; all signals isolated against the backplane bus and load voltage
Max. data transmission rate	115.2 kbps
max. cable length	15 m, cable type LIYCY 9 x 0.14
Standard	DIN 66020, DIN 66259, EIA-RS 232C, CCITT V.24/V.28

RS232 signals

The table below shows the meaning of the individual RS232 accompanying signals.

Table 2- 1 Signals of the RS232 interface

Signal	Designation	Meaning
TXD	Transmit Data	Transmit data; transmit cable logically held to "1" by communication module in idle state.
RXD	Receive Data	Receive data; receive cable logically held to "1" by communication partner in idle state.
RTS	Request To Send	Request to send RTS set to "ON": Communication module ready to send; signals to the communication partner that there is data ready to send RTS set to "OFF": Communication module does not send
CTS	Clear To Send	Clear to send CTS set to "ON": Signals "clear to send" to the communication partner CTS set to "OFF": Signals "Not clear to send" to the communication partner
DTR	Data Terminal Ready	DTR set to "ON": Communications module switched on, ready for operation DTR set to "OFF": Communications module not switched on, not ready for operation
DSR	Data Set Ready	DSR set to "ON": Communication partner signals "ready for operation" DSR set to "OFF": Communication partner not switched on, not ready for operation
RI	Ring Indicator	Incoming call when connecting a modem
DCD	Data Carrier Detect	Carrier signal when connecting a modem. The communication partner signals with a high level that it detects incoming data on the cable.

2.4.2 Properties of the RS422/485 interface

Definition - RS422/485 interface

The RS422/485 (X27) interface is a differential voltage interface for serial data transmission.

Properties - RS422/485 interface

The RS422/485 (X27) interface has the following properties and meets the following requirements:

Type	Differential voltage interface
BaseUnit terminals	Terminals connected to the electronics module (see RS232 and RS422/485 interface of the communication module (Page 17) for assignment)
RS422 signals:	T (A), R (A), T (B), R (B), GND; all signals are isolated against the backplane bus and the load voltage
RS485 signals:	R/T (A), R/T (B), GND; all signals isolated against backplane bus and load voltage
Max. data transmission rate:	115.2 kbps
Max. cable length:	1200 m; cable type LIYCY 3 x 2 x 0.14. T(A)/T(B) and R(A)/R(B) twisted in pairs.
Standard:	DIN 66259 Parts 1 and 3, EIA-RS422/485, CCITT V.11

Connecting 3

3.1 RS232 and RS422/485 interface of the communication module

Pin assignment

Table 3- 1 RS232 connection

Terminal assignment of the communication module BaseUnit	Pin	Designation	Input/output	Meaning
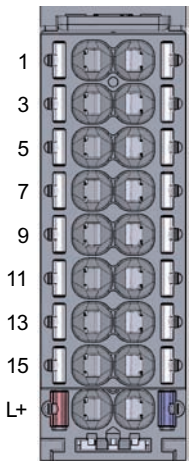	1	TXD Transmit Data	Output	Transmit data
	2	RXD Receive Data	Input	Receive data
	3	RTS Request To Send	Output	Request to send
	4	CTS Clear To Send	Input	Clear to send
	5	DTR Data Terminal Ready	Output	Data terminal ready
	6	DSR Data Set Ready	Input	Data set ready
	7	DCD Data Carrier Detect	Input	Received signal level
	8	RI Ring Indicator	Input	Incoming call
	9+10	PE Ground	-	GND functional ground (isolated)
Front view				

Table 3- 2 RS422/485 connection

Terminal assignment of the communication module BaseUnit	Pin	Designation	Input/output	Meaning
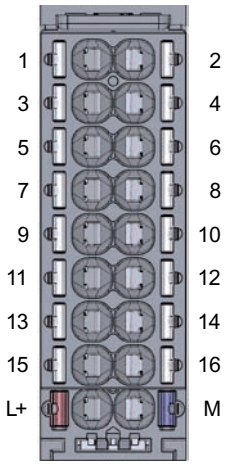	11	T (A) -	Output	Send data (four-wire mode)
	12	R (A) - T(A)/R(A)	Input Input/output	Receive data (four-wire mode) Receive/send data (two-wire mode)
	13	T (B) +	Output	Send data (four-wire mode)
	14	R (B) + T(B)/R(B)	Input Input/output	Receive data (four-wire mode) Receive/send data (two-wire mode)
	15+16	PE Ground	-	GND functional ground (isolated)
Front view				

Note

Ensure the power supply is disconnected before you wire the communication module.

Additional information

Information on connecting the modules can be found in the ET 200SP distributed I/O system (http://support.automation.siemens.com/WW/view/en/58649293) system manual.

3.2 Installation guidelines

To take into consideration

The general installation guidelines must be taken into consideration (see function manual EMC/EMI compatible installation of control systems (http://support.automation.siemens.com/WW/view/en/59193566)).

The cable shield must be installed on a grounding rail to maintain the EMC values (electromagnetic compatibility).

Parameters/address space 4

4.1 Parameter assignment

Introduction

You configure and assign the parameters of the communication module with STEP 7 (TIA Portal V12 or later) or with STEP 7 with integration of a GSD file.

Additional information

The device manual of the communication module is supplemented by the function manual CM PtP - Configurations for point-to-point connections (http://support.automation.siemens.com/WW/view/en/59057093) and the TIA Portal information system.

There you will find information on the following topics:

- Operating modes
- Receive buffer
- Data flow control
- Transmission integrity
- Data transmission - protocol specific
- Programming/configuring in STEP 7 (TIA Portal)
- Module-specific instructions
- Diagnostics

4.2 Reaction to CPU STOP

Ongoing transmissions are aborted when the higher-level control (CPU) goes to STOP.

Frames in the receive buffer are retained. With a corresponding configuration in the properties dialog of the communication module, you can automatically clear the receive buffer on the communication module during CPU startup.

4.3 Address space

Address space of the communication module

The input addresses of the communications module total 8 bytes. The input addresses are automatically assigned for each communications module when you specify the device configuration in STEP 7 (TIA Portal). Output addresses are not required.

Hardware identification (not freely configurable)

The hardware identification (HW ID) is automatically assigned for each communications module when you specify the device configuration in STEP 7 (TIA Portal).

The hardware ID is issued along with the diagnostic messages to localize the module. In addition, the HW identification is required for S7-1500 at the communication instructions in order to identify the communication module. For S7-300/400, the communication module is identified by the start address of the input data.

Programming 5

Overview of the instructions

Communication between the CPU, the communication module and a communication partner takes place by means of special instructions and protocols that support the corresponding communication modules. The instructions process the exchange of data between the CPU and the communication module. They must be called cyclically from the user program. Data transmission takes place asynchronously across several cycles.

The transmission protocols are implemented on the communication module. The protocol is used to adapt the interface of the communication module to the interface of the communication partner.

Instruction	Meaning
Port_Config	You use the Port_Config instruction to dynamically assign basic interface parameters.
Send_Config	You use the Send_Config (send configuration) instruction to dynamically assign serial send parameters of a protocol.
Receive_Config	You use the Receive_Config (receive configuration) instruction to dynamically assign serial receive parameters of a protocol.
P3964_Config	You use the P3964_Config (protocol configuration) instruction to dynamically assign the parameters of the 3964(R) procedure.
Send_P2P	You use the Send_P2P instruction to send data to a communication partner.
Receive_P2P	You use the Receive_P2P instruction to receive data from a communication partner.
Receive_Reset	You use the Receive_Reset instruction to delete the receive buffer of the communication module.
Signal_Get	You use the Signal_Get instruction to read the RS232 accompanying signals.
Signal_Set	You use the Signal_Set instruction to set the RS232 accompanying signals.
Get_Features	You use the Get_Features instruction to read expanded functions supported by the communication module.
Set_Features	You use the Set_Features instruction to set expanded functions supported by the communication module.
USS_Port_Scan	You use the USS_Port_Scan instruction to communicate using the USS.
USS_Drive_Control	You use the USS_Drive_Control instruction to exchange data with a drive.
USS_Read_Param	You use the USS_Read_Param instruction to read parameters from the drive.
USS_Write_Param	You use the USS_Write_Param instruction to change parameters in the drive.
Modbus_Comm_Load	The instruction Modbus_Comm_Load allows you to configure the port of the communication module for Modbus RTU.

Instruction	Meaning
Modbus_Master	The instruction Modbus_Master allows you to communicate as Modbus master by means of the PtP port.
Modbus_Slave	The instruction Modbus_Slave allows you to communicate as Modbus slave by means of the PtP port.

The instructions are part of STEP 7 (TIA Portal). The instructions are available in the "Instructions" task card under Communication > Communication processor.

Additional information

Additional information on programming the communication modules can be found in the function manual CM PtP - Configurations for point-to-point connections (http://support.automation.siemens.com/WW/view/en/59057093).

Error and system messages

6

LED displays of the communication module

The figure below shows the LED displays of the CM PtP communication module.

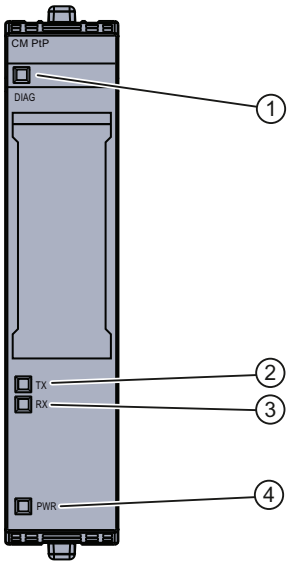

① LED display DIAG
② LED display TX
③ LED display RX
④ LED display PWR

Figure 6-1 View of CM PtP (without BaseUnit)

Meaning of DIAG LED display

LED DIAG	Meaning	Solution
■ On	CM configured and ready for operation	---
☼ Flashes	CM in startup, parameters not assigned yet	---
☼ Flashes	Error information; diagnostic interrupt (break)	Evaluate the diagnostics data and eliminate the error. [1)]

1) Information on communication module startup and diagnostics is available in the CM PtP - Configurations for point-to-point connections (http://support.automation.siemens.com/WW/view/en/59057093) function manual

Meaning of the TXD/RXD LED displays

LED		Meaning	Solution
TX	RX		
☼ Flashes	□ Off	Interface is transmitting	---
□ Off	☼ Flashes	Interface is receiving	---

Meaning of PWR LED display

LED PWR	Meaning	Solution
■ On	Power ON (supply voltage present)	---
□ Off	Power OFF (supply voltage missing)	Check the voltage supply of the load group

Additional information

Information on communication module startup and diagnostics is available in the CM PtP - Configurations for point-to-point connections (http://support.automation.siemens.com/WW/view/en/59057093) function manual.

Technical specifications

7

Technical specifications of the CM PtP communication module

	6ES7137-6AA00-0BA0
Product type designation	ET 200SP CM PtP
General information	
• I&M data	Yes: I&M 0
Engineering with	
STEP 7 TIA Portal can be configured/integrated as of version	V12.0 / V12.0
STEP 7 can be configured/integrated as of version	V5.5 SP2 or higher with a GSD file
PROFIBUS as of GSD version/GSD revision	- / -
PROFINET as of GSD version/GSD revision	V2.3
Installation type/mounting	
• Rail mounting possible	Yes; standard - DIN rail
Supply voltage	
Voltage type of supply voltage	24 V DC
• Rated value (DC)	24 V
• Low limit of valid range (DC)	19.2 V
• High limit of valid range (DC)	28.8 V
• Reverse polarity protection	Yes
Input current	
• Current consumption (rated value)	29 mA
Power loss	
• Power loss, typ.	0.7 W
Address area	
Occupied address area	
• Inputs	8 bytes

	6ES7137-6AA00-0BA0
Interfaces	
1. Interface	
Interface hardware	
• RS 232	Yes
• RS 422	Yes
• RS 485	Yes
Interface hardware	
RS 232	
• Transmission rate, max.	115.2 kbps
• Max. cable length	15 m
RS-232 accompanying signals	RTS, CTS, DTR, DSR, RI, DCD
RS 485	
• Transmission rate, max.	115.2 kbps
• Max. cable length	1200 m
RS 422	
• Transmission rate, max.	115.2 kbps
• Max. cable length	1200 m
• 4-wire full duplex connection	Yes
• 4-wire multipoint connection	Yes
Protocols	
Integrated protocols	
Freeport	
• Frame length, max.	2 kbyte
• Bits per character	7 or 8
• Number of stop bits	1 or 2 bits
• Parity	None, even, odd, always 1, always 0, any
3964 (R)	
• Frame length, max.	2 kbyte
• Bits per character	7 or 8
• Number of stop bits	1 or 2 bits
• Parity	None, even, odd, always 1, always 0, any
Modbus RTU master	
Address area	1 to 247, extended 1 to 65,535
• Max. number of slaves	32

	6ES7137-6AA00-0BA0
Modbus RTU slave	
Address area	1 to 247, extended 1 to 65,535
Frame buffer	
• Buffer memory for frames	4 kbyte
• Number of frames which can be buffered	255
Interrupts/diagnostics/status information	
Interrupts	
• Diagnostic interrupt	Yes
• Hardware interrupt	No
Diagnostic messages	
Diagnostics	Yes
• Wire break	Yes
Diagnostics display LED	
• Monitoring of supply voltage	Yes; green PWR-LED
• For module diagnostics	Yes; green/red DIAG-LED
• Receive RxD	Yes; green LED
• Send TxD	Yes; green LED
Electrical isolation	
• between backplane bus and interface	Yes
Permitted potential difference	
Between the different circuits	75 V DC / 60 V AC (Basic insulation)
Insulation	
Insulation tested with	707 V DC (Type Test)
Ambient conditions	
Operating temperature	
• Horizontal installation, min.	0 °C
• Horizontal installation, max.	60 °C
• Vertical installation, min.	0 °C
• Vertical installation, max.	50 °C
Distributed operation	
• At SIMATIC S7-300	Yes
• At SIMATIC S7-400	Yes
• At SIMATIC S7-1200	No
• At SIMATIC S7-1500	Yes
• At Standard Profinet Controller	Yes

	6ES7137-6AA00-0BA0
Dimensions	
• Width	15 mm
• Height	73 mm
• Depth	58 mm
Weights	
• Weight, approx.	30 g

Additional general technical specifications for SIMATIC ET 200SP can be found in the system manual S7-1500 Automation System (http://support.automation.siemens.com/WW/view/en/59191792).

Dimensional drawing

A

In this appendix, you will find the dimensional drawing of the communication module, inserted into a BaseUnit and mounted on a DIN rail. You have to consider the dimensions during installation in control cabinets, control rooms, etc (BaseUnit: 6ES7193-6BP00-0xA0).

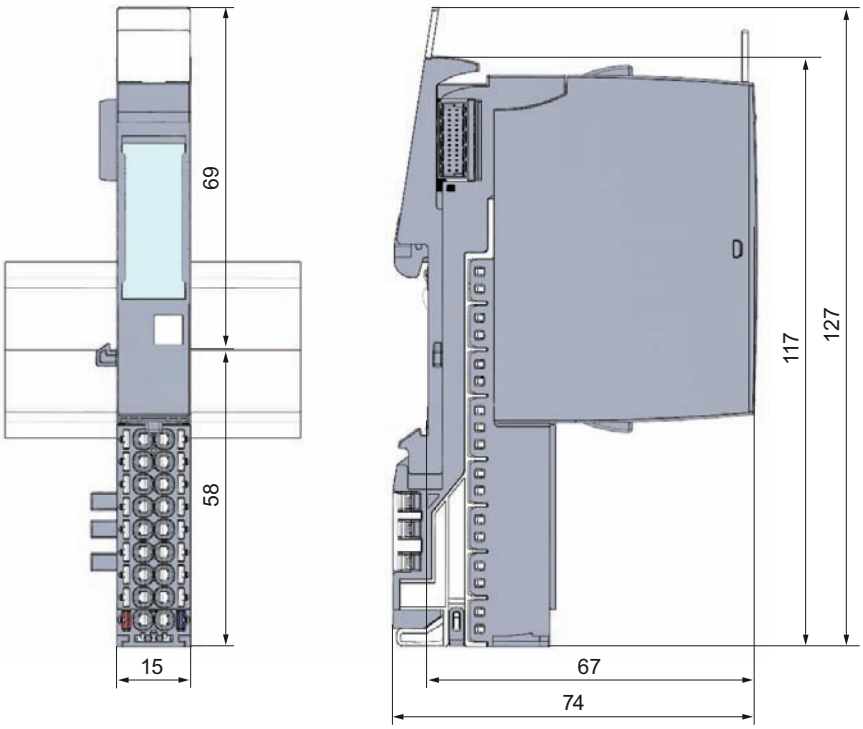

Figure A-1 Dimensional drawing of the CM PtP communication module

SIEMENS

SIMATIC NET

ET 200SP - Industrial Ethernet CP 154xSP-1

Operating Instructions

Preface

Application and functions 1

LEDs and connectors 2

Installation, wiring, commissioning 3

Configuration 4

Program blocks 5

Diagnostics and maintenance 6

Technical specifications 7

Approvals A

Dimension drawings B

Accessories C

Documentation references D

CP 1542SP-1
CP 1542SP-1 IRC
CP 1543SP-1

02/2018
C79000-G8976-C426-04

Legal information

Warning notice system

This manual contains notices you have to observe in order to ensure your personal safety, as well as to prevent damage to property. The notices referring to your personal safety are highlighted in the manual by a safety alert symbol, notices referring only to property damage have no safety alert symbol. These notices shown below are graded according to the degree of danger.

⚠ DANGER

indicates that death or severe personal injury **will** result if proper precautions are not taken.

⚠ WARNING

indicates that death or severe personal injury **may** result if proper precautions are not taken.

⚠ CAUTION

indicates that minor personal injury can result if proper precautions are not taken.

NOTICE

indicates that property damage can result if proper precautions are not taken.

If more than one degree of danger is present, the warning notice representing the highest degree of danger will be used. A notice warning of injury to persons with a safety alert symbol may also include a warning relating to property damage.

Qualified Personnel

The product/system described in this documentation may be operated only by **personnel qualified** for the specific task in accordance with the relevant documentation, in particular its warning notices and safety instructions. Qualified personnel are those who, based on their training and experience, are capable of identifying risks and avoiding potential hazards when working with these products/systems.

Proper use of Siemens products

Note the following:

⚠ WARNING

Siemens products may only be used for the applications described in the catalog and in the relevant technical documentation. If products and components from other manufacturers are used, these must be recommended or approved by Siemens. Proper transport, storage, installation, assembly, commissioning, operation and maintenance are required to ensure that the products operate safely and without any problems. The permissible ambient conditions must be complied with. The information in the relevant documentation must be observed.

Trademarks

All names identified by ® are registered trademarks of Siemens AG. The remaining trademarks in this publication may be trademarks whose use by third parties for their own purposes could violate the rights of the owner.

Disclaimer of Liability

We have reviewed the contents of this publication to ensure consistency with the hardware and software described. Since variance cannot be precluded entirely, we cannot guarantee full consistency. However, the information in this publication is reviewed regularly and any necessary corrections are included in subsequent editions.

Siemens AG
Division Process Industries and Drives
Postfach 48 48
90026 NÜRNBERG
GERMANY

C79000-G8976-C426-04
℗ 02/2018 Subject to change

Copyright © Siemens AG 2016 - 2018.
All rights reserved

Preface

Validity of this manual

This document contains information on the following modules:

- **CP 1542SP-1**
  Article number **6GK7542-6UX00-0XE0**
  Hardware version 1
  Firmware version V2.0
  Communications processor for connecting a SIMATIC ET 200SP CPU to Industrial Ethernet
- **CP 1542SP-1 IRC**
  Article number **6GK7542-6VX00-0XE0**
  Hardware version 1
  Firmware version V2.0
  Communications processor for connecting a SIMATIC ET 200SP CPU via Industrial Ethernet to a control room (TCSB, ST7, DNP3, IEC 60870-5-104)
- **CP 1543SP-1**
  Article number **6GK7543-6WX00-0XE0**
  Hardware version 1
  Firmware version V2.0
  Communications processor for connecting a SIMATIC ET 200SP CPU to Industrial Ethernet, Security

Figure 1 CP 1542SP-1 with plugged in BusAdapter (here BA 2xRJ45)

On the front of the module at the right edge, the hardware version is printed as a placeholder "X". If the printed text is, for example, "X 2 3 4", "X" would be the placeholder for hardware product version 1.

Directly below, you will find the firmware version of the CP as it shipped.

The MAC address is printed on the front at the bottom left, above the connectors for the power supply:

- 00:1B:1B:xx:xx:01 (interface)

- 00:1B:1B:xx:xx:02 (port X1P1)
- 00:1B:1B:xx:xx:03 (port X1P2)

Product names, terms and abbreviations/acronyms

Below you will find abbreviations and product names used often in this manual.

- **CP / module / device**

  When the property being described is valid in the current context for all three CP types or if the CP type being used is clear from the context, these terms will be used instead of the full product name.

  If information in the running text applies only to a certain CP type. the full module name is specified.

- **TCSB**

  Control center software "TeleControl Server Basic"

- **Telecontrol server**

  PC with installed software "TeleControl Server Basic"

- **ES**

  Engineering station - PC with the STEP 7 project

Purpose of the manual

This manual describes the properties of this module and supports you when installing and commissioning it.

The required configuration steps are described as an overview and there are explanations of the relationship between firmware functions and configuration.

You will also find information about the diagnostics options of the device.

Required experience

To install, commission and operate the CP, you require experience in the following areas:

- Automation engineering
- Setting up the SIMATIC ET 200SP
- SIMATIC STEP 7 Professional

New in this issue

- New firmware version with the following new functions, among others:

  New functions for the CP 1542SP-1 IRC:

  – SINAUT ST7 telecontrol protocol
  – Remote maintenance via SINEMA Remote Connect
  – Extended CP diagnostics

New functions for the CP 1543SP-1:

- Remote maintenance via SINEMA Remote Connect
- Configurable e-mails
- Extended CP diagnostics

- Editorial revision

Replaced edition

Edition 01/2017

Current manual release on the Internet

You will also find the current version of this manual on the Internet pages of Siemens Industry Online Support under at the following addresses:

- CP 1542SP-1 / CP 1543SP-1
  Link: (https://support.industry.siemens.com/cs/ww/en/ps/22144/man)
- CP 1542SP-1 IRC
  Link: (https://support.industry.siemens.com/cs/ww/en/ps/22143/man)

Cross references

In this manual there are often cross references to other sections.

To be able to return to the initial page after jumping to a cross reference, some PDF readers support the command <Alt>+<Left arrow>.

Sources of information and other documentation

You will find an overview of further reading and references in the Appendix of this manual.

License conditions

Note

Open source software

Read the license conditions for open source software carefully before using the product.

You will find license conditions in the following document on the supplied data medium:

- OSS_CP-ET200SP_99.pdf

Security information

Siemens provides products and solutions with industrial security functions that support the secure operation of plants, systems, machines and networks.

In order to protect plants, systems, machines and networks against cyber threats, it is necessary to implement – and continuously maintain – a holistic, state-of-the-art industrial security concept. Siemens' products and solutions constitute one element of such a concept.

Customers are responsible for preventing unauthorized access to their plants, systems, machines and networks. Such systems, machines and components should only be connected to an enterprise network or the internet if and to the extent such a connection is

necessary and only when appropriate security measures (e.g. firewalls and/or network segmentation) are in place.

Additionally, Siemens' guidance on appropriate security measures should be taken into account. For additional information on industrial security measures that may be implemented, please visit
Link: (http://www.siemens.com/industrialsecurity)

Siemens' products and solutions undergo continuous development to make them more secure. Siemens strongly recommends that product updates are applied as soon as they are available and that the latest product versions are used. Use of product versions that are no longer supported, and failure to apply the latest updates may increase customers' exposure to cyber threats.

To stay informed about product updates, subscribe to the Siemens Industrial Security RSS Feed under
Link: (http://www.siemens.com/industrialsecurity)

Firmware

The firmware is signed and encrypted. This ensures that only firmware created by Siemens can be downloaded to the device.

Recycling and disposal

The product is low in pollutants, can be recycled and meets the requirements of the WEEE directive 2012/19/EU "Waste Electrical and Electronic Equipment".

Do not dispose of the product at public disposal sites. For environmentally friendly recycling and the disposal of your old device contact a certified disposal company for electronic scrap or your Siemens contact.

Keep to the local regulations.

You will find information on returning the product on the Internet pages of Siemens Industry Online Support:
Link: (https://support.industry.siemens.com/cs/ww/en/view/109479891)

SIMATIC NET glossary

Explanations of many of the specialist terms used in this documentation can be found in the SIMATIC NET glossary.

You will find the SIMATIC NET glossary here:

- SIMATIC NET Manual Collection or product DVD

  The DVD ships with certain SIMATIC NET products.

- On the Internet under the following address:

  Link: (https://support.industry.siemens.com/cs/ww/en/view/50305045)

Training, Service & Support

You will find information on training, service and support in the multilanguage document "DC_support_99.pdf" on the Internet pages of Siemens Industry Online Support:

Link: (https://support.industry.siemens.com/cs/ww/en/view/38652101)

Table of contents

Preface 3

1 Application and functions 11

1.1 Components of the product 11

1.2 Application 11

1.3 Communications services 12

1.4 Other services and properties 13

1.5 Telecontrol communication of the CP 1542SP-1 IRC 14

1.6 Security functions (CP 1542SP-1 IRC, CP 1543SP-1) 16

1.7 Connection to SINEMA RC 19

1.8 Configuration limits and performance data 21

1.9 Requirements for use 23
1.9.1 Hardware requirements 23
1.9.2 Software requirements 24

1.10 Configuration examples 25

2 LEDs and connectors 33

2.1 LEDs 33

2.2 Power supply 34

2.3 Connector for the BusAdapter 35

3 Installation, wiring, commissioning 37

3.1 Important notes on using the device 37
3.1.1 Notes on use in hazardous areas 37
3.1.2 Notes on use in hazardous areas according to ATEX / IECEx 38
3.1.3 Notes on use in hazardous areas according to UL HazLoc 39
3.1.4 General notices on use in hazardous areas according to FM 39

3.2 Installing the CP 40

3.3 Connecting the CP 44

3.4 Commissioning the CP 44

4 Configuration 47

4.1 Security recommendations 47

4.2 Configuration in STEP 7 51

4.3 Ethernet interface 52
4.3.1 IPv6 52
4.3.2 Advanced options 52

4.4 DNS configuration 53

4.5 Time-of-day synchronization ... 53

4.6 SNMP ... 55

4.7 Telecontrol (CP 1542SP-1 IRC) ... 56
4.7.1 Address and authentication information ... 56
4.7.2 Communication types ... 57
4.7.3 SINAUT ST7 PG routing ... 59
4.7.4 Telecontrol via SINEMA RC ... 60
4.7.5 Ethernet interface > CP identification ... 61
4.7.6 Ethernet interface (X1) > Advanced options ... 61
4.7.7 Partner stations ... 65
4.7.7.1 Partner configuration ... 65
4.7.7.2 Addressing of single and redundant communications partners ... 69
4.7.7.3 Partner for inter-station communication ... 69
4.7.8 Communication with the CPU ... 70
4.7.8.1 Communication with the CPU ... 70
4.7.8.2 CP diagnostics ... 72
4.7.9 Subscriber numbers ... 73
4.7.10 Security (CP 1542SP-1 IRC) ... 73
4.7.11 Creating telecontrol connections for the ST7 communication ... 73
4.7.12 Data points ... 79
4.7.12.1 Data point configuration ... 79
4.7.12.2 Datapoint types ... 86
4.7.12.3 Time stamp of the "ST7" protocol ... 92
4.7.12.4 Status IDs of the data points ... 93
4.7.12.5 "General" tab ... 95
4.7.12.6 Configuration of the data point index ... 96
4.7.12.7 Process image, type of transmission, event classes ... 97
4.7.12.8 Read cycle ... 100
4.7.12.9 ST7 objects ... 101
4.7.12.10 "Trigger“ tab ... 102
4.7.12.11 Threshold value trigger ... 103
4.7.12.12 Analog value preprocessing ... 105
4.7.12.13 Command output ... 111
4.7.12.14 Partner stations ... 116

4.8 Security ... 117
4.8.1 Security user ... 117
4.8.2 Security parameters of the CP 1542SP-1 IRC ... 118
4.8.2.1 CP identification ... 118
4.8.2.2 MSC authentication ... 118
4.8.2.3 DNP3 security options ... 119
4.8.3 Firewall ... 121
4.8.3.1 Pre-check of messages by the MAC firewall. ... 121
4.8.3.2 Settings for online security diagnostics and downloading to station with the firewall activated ... 121
4.8.3.3 Notation for the source IP address (advanced firewall mode) ... 122
4.8.3.4 Firewall settings for S7 connections via a VPN tunnel ... 122
4.8.4 Log settings - Filtering of the system events ... 122
4.8.5 E-mail configuration ... 123
4.8.6 VPN ... 123
4.8.6.1 VPN (Virtual Private Network) ... 123
4.8.6.2 Creating a VPN tunnel for S7 communication between stations ... 125

4.8.6.3 VPN communication with SOFTNET Security Client (engineering station) 126
4.8.6.4 Establishment of VPN tunnel communication between the CP and SCALANCE M 127
4.8.6.5 CP as passive subscriber of VPN connections 127
4.8.6.6 SINEMA Remote Connect 128
4.8.7 SNMP 130
4.8.8 Certificate manager 132
4.9 Messages (e-mail) 133
5 Program blocks 137
5.1 Program blocks for OUC 137
5.2 Changing the IP parameters during runtime 139
5.3 MODBUS blocks 140
6 Diagnostics and maintenance 141
6.1 Diagnostics options 141
6.2 Online security diagnostics via port 8448 (CP 1542SP-1 IRC, CP 1543SP-1) 144
6.3 Diagnostics with SNMP 144
6.4 Web server of the CPU 147
6.5 Processing status of the telecontrol e-mails 149
6.6 Downloading firmware 151
6.7 Module replacement 153
7 Technical specifications 155
A Approvals 157
B Dimension drawings 161
C Accessories 163
C.1 BusAdapter 163
C.2 Router SCALANCE M 165
D Documentation references 167
Index 171

Application and functions 1

1.1 Components of the product

The following components are supplied with the product:

- CP 154xSP-1
- Plug for the socket of the power supply (24VDC) of the CP
- DVD with documentation and license texts

A BusAdapter for the Ethernet connection of the CP does not ship with the product.

1.2 Application

Application of the CP variants

The CP is used to connect the ET 200SP to Industrial Ethernet via a copper cable or fiber-optic cable. It can be used as an additional Ethernet interface of the CPU for S7 communication.

For the Ethernet connection, the CP requires a BusAdapter. The BusAdapter is not supplied with the CP. For information on the compatible BusAdapters, refer to the section BusAdapter (Page 163).

The three CP types are intended for the following communication tasks:

- **CP 1542SP-1**

  The CP 1542SP-1 allows the ET 200SP a further Ethernet connection.

- **CP 1543SP-1**

  The CP 1543SP-1 has Security functions for network security, such as a firewall and VPN. This makes protected access to the ET 200SP possible.

- **CP 1542SP-1 IRC**

  The CP 1542SP-1 IRC supports telecontrol communication for connecting the ET 200SP CPU to a control center. One of the following telecontrol protocols can be used as an alternative:

  – TeleControl Basic

    For connection of the ET 200SP CPU to a control center with telecontrol server (TCSB)

  – ST7

    For connection of the ET 200SP CPU to a control center with SINAUT ST7

  – DNP3

    For connection of the ET 200SP CPU to DNP3 master

  – IEC 60870-5-104

    For connection of the ET 200SP CPU to IEC master

1.3 Communications services

Communications services

The following communications services are supported:

- **S7 communication and PG/OP communication with the following functions:**
  - PUT/GET as client and server for data exchange with S7 stations
  - USEND/URCV for uncoordinated data exchange with a remote partner
  - BSEND/BRCV for exchanging large volumes of data with a partner
  - PG functions
  - Operator control and monitoring functions (HMI)

  For S7 communication, the CP requires a fixed IP address.
- **S7 routing**
  - Routing of S7 connections via the backplane bus and the CPU to other S7 stations
- **SINEMA Remote Connect (SINEMA RC)**

  As of firmware version V2.0, the following CP types support SINEMA RC with software version V1.3:
  - CP 1542SP-1 IRC
  - CP 1543SP-1

  See section Connection to SINEMA RC (Page 19).

  For the manual, see /9/ (Page 169).
- **Open User Communication (OUC)**

  OUC via program blocks with the following protocols:
  - TCP/IP
  - ISO-on-TCP
  - UDP

  The CP 1543SP-1 supports Secure OUC.

  You will find the program blocks supported by the three CP types in the section Program blocks (Page 137).
- **E-mail using program blocks**
- **HTTP / HTTPS**

  Via HTTP / HTTPS you can access the Web server of the CPU.

For telecontrol communication of the CP 1542SP-1 IRC, see section Telecontrol communication of the CP 1542SP-1 IRC (Page 14).

For information on the Security functions of the CP 1543SP-1, refer to the section Security functions (CP 1542SP-1 IRC, CP 1543SP-1) (Page 16).

1.4 Other services and properties

Further services and properties of the CP

- **IP configuration**
  - Address types

    The CP supports IP addresses according to IPv4 and IPv6.
  - Addressing

    The IP address, the subnet mask and the address of a gateway can be set manually in the configuration. As an alternative, the IP address can be obtained using program blocks.
  - DHCP: As an alternative, the IP address can be obtained from a DHCP server.
  - DCP (Discovery and Configuration Protocol) is supported.
- **Time-of-day synchronization**
  - NTP

    The CP can synchronize its time of day via NTP.

    Only CP 1543SP-1: If the Security functions are enabled, the secure method NTP (secure) can be used.
  - Time from partner (only CP 1542SP-1 IRC)

    If telecontrol communication is enabled, the CP can also obtain its time of day via from the communications partner.

    UTC time is used for TeleControl Basic and DNP3.

    The local time of the partner PC is used for ST7 and IEC.

    The time of day of the CP can be read by the CPU using a PLC tag. For information on the format of the time stamp of the data frames, refer to the section Datapoint types (Page 86).

  For more detailed information, refer to section Time-of-day synchronization (Page 53).
- **SNMP**

  As SNMP agent, the CP supports queries via SNMPv1.

  The CP 1543SP-1 also supports SNMPv3.

  For more detailed information, refer to section SNMP (Page 55).
- **E-mail**

  The CP 1542SP-1 IRC and CP 1543SP-1 support sending e-mails.

1.5 Telecontrol communication of the CP 1542SP-1 IRC

Telecontrol protocols

In addition to the communications services named above, the CP 1542SP-1 IRC supports the following telecontrol protocols for communication with a master station:

- **TeleControl Basic ***

  Proprietary protocol for telecontrol applications. The IP-based protocol is used to connect the CP to the application TCSB.

  TCSB is installed on a PC in the master station, the telecontrol server. Via the OPC-DA or OPC-UA server of TCSB, an OPC client can access the process data of the CP.

  TCSb is supported as of the following version: V3.0 + SP3

  For the TCSB manual, see /4/ (Page 168).

- **ST7**

  Proprietary protocol for telecontrol applications in the SINAUT ST7 system. The protocol is used to connect the CP to ST7 control centers.

  The SINAUT ST7 supports the following functions, among others:

  – Communication with the master station

  – Communication with other stations

  – MSC transmission protocol

    Under SINAUT S7, the CP uses the following variants of the MSC transmission protocol on OSI layer 3:

    - MSC (default setting)

    - MSCsec when security requirements are higher ("Security" activated)

  – Communication using mobile wireless

    Communication via a mobile wireless network combined with the Internet is made possible by a SCALANCE M router. The SCALANCE M product series provides various VPN routers with IPsec, encryption software and their own firewall.

    You will find a list of routers in the appendix Router SCALANCE M (Page 165).

- **DNP3 ***

  The CP functions as a DNP3 station (Outstation).

  Communication is based on the DNP3 SPECIFICATION Version 2.11 (2007/2009).

  You will find a detailed overview of the attributes and properties of the DNP3 protocol that are supported by the CP in the DNP3 device profile; see
  Link: (https://support.industry.siemens.com/cs/ww/en/ps/22143/man)

  You will find the supported object groups and variations in the section Datapoint types (Page 86).

  Communications partner (DNP3) can be:

  – SIMATIC PCS 7 TeleControl
  – SIMATIC WinCC TeleControl
  – SIMATIC WinCC OA
  – A TIM module with DNP3 capability (TIM 3V IE DNP3 / TIM 4R IE DNP3)

    For the manual of the TIM module see /6/ (Page 168).
  – Third-party systems that support the DNP3 specification named above.

- **IEC 60870-5-104 ***

  The CP functions as a substation (slave).

  Communication is based on the specification IEC 60870-5 Part 104 (2006).

  You will find a detailed overview of the attributes and properties of the IEC specification that are supported by the CP in the IEC device profile; see
  Link: (https://support.industry.siemens.com/cs/ww/en/ps/22143/man)

  You will find the supported IEC type identifiers as in the section Datapoint types (Page 86).

  Communications partner (IEC master) can be:

  – SIMATIC PCS 7 TeleControl
  – SIMATIC WinCC TeleControl
  – SIMATIC WinCC OA
  – Third-party systems that support the IEC specification named above.

***** Optional telecontrol via SINEMA Remote Connect; see section Connection to SINEMA RC (Page 19).

Further properties of the CP 1542SP-1 IRC

- **Data point configuration**

  The process values are configured as data points for the communication.

  No program blocks need to be programmed for the CP 1542SP-1 IRC to transfer user data between the station and communications partner.

  The data areas in the memory of the CPU intended for communication with the partner are configured for the specific data points in the CP. Each data point addresses a PLC tag or element in a data block of the CPU.

  The data points can be processed individually in the control system.

- **Messages / e-mail**

  With configurable events in the process image of the CPU, the CP 1542SP-1 IRC can send messages as e-mails. The data sent by e-mail is configured using PLC tags.

- **Send buffer**

  CP 1542SP-1 IRC saves the values of data points configured as an event in the send buffer. It transmits the data from the send buffer spontaneously or bundled to the communications partner.

  The data is not saved retentively. It is lost in the event of a power failure.

- **Analog value processing**

  Analog values can be preprocessed on the CP 1542SP-1 IRC according to various methods.

1.6 Security functions (CP 1542SP-1 IRC, CP 1543SP-1)

Security functions are available for the following CP types:

- CP 1543SP-1
- CP 1542SP-1 IRC

The security functions are enabled in the configuration of the CP.

For information on the security functions of Open User Communication, refer to the section Program blocks (Page 137).

Note

Recommendation for critical security plants

Refer to the information in the section Security recommendations (Page 47).

CP 1543SP-1

With Industrial Ethernet Security, individual devices, automation cells or network segments of an Ethernet network can be protected. The data transfer via the CP 1543SP-1 can be protected from the following attacks by a combination of different security measures:

- Data espionage
- Data manipulation
- Unauthorized access

Secure underlying networks can be operated via additional Ethernet/PROFINET interfaces of the CPU.

As a result of using the CP, as a security module, the following security functions are accessible to the ET 200SP station on the interface to the Ethernet network:

- Firewall

  The firewall protects the device with:

  – IP firewall with stateful packet inspection (layer 3 and 4)

  – Firewall also for "non-IP" Ethernet frames according to IEEE 802.3 (layer 2)

  – Limitation of the transmission speed to restrict flooding and DoS attacks ("Define IP packet filter rules")

- Certificates

  Certificates are used for the secure authentication of the communications partners.

- VPN

  The following alternatives can be used:

  – Secured communication via IPsec tunnels

    VPN communication allows the establishment of secure IPsec tunnels for communication with one or more security modules. The CP can be grouped together with other modules to form VPN groups during configuration. IPsec tunnels are created between all security modules of a VPN group.

  – Remote maintenance via SINEMA Remote Connect

    It is not necessary and not possible to create a VPN group for communication via a SINEMA RC server. The SINEMA RC Server manages the communication between the devices and the security mechanisms (OpenVPN).

    For information on communication via SINEMA Remote Connect, see section Telecontrol via SINEMA RC (Page 60).

- Logging

  Sending of events can be enabled for monitoring. The events can be read out using STEP 7 or sent to a Syslog server.

- **Encrypted e-mails**

  For secure transfer of information with encrypted e-mails, you can use the following as an alternative:

  – SSL/TLS

  – STARTTLS

  For information on the configuration, see section E-mail configuration (Page 123).

- **NTP (secure)**

  For secure transfer during time-of-day synchronization

- **SNMPv3**

  For secure transmission of network analysis information safe from eavesdropping

For information on configuring the security functions, refer to the section Security (Page 117).

You will find further information on the functionality and configuration of the security functions in the information system of STEP 7 and in the manual /5/ (Page 168).

CP 1542SP-1 IRC

The CP supports the following security functions:

- **Encrypted e-mails**

  For secure transfer of information with encrypted e-mails, you can use the following as an alternative:

  – SSL/TLS

  – STARTTLS

  For information on the configuration, see section E-mail configuration (Page 123).

- **Certificates**

  Certificates are used for the secure authentication of the communications partners.

- **Secure telecontrol communication**

The telecontrol protocols provide the following Security functions:

- **TeleControl Basic**

  As an integrated security function, the telecontrol protocol encrypts the data for transfer between the CP and telecontrol server. The interval for the key exchange between the CP and telecontrol server can be set.

  The telecontrol password is used to authenticate the CP on the telecontrol server.

  If the security functions are enabled, the CP can process telecontrol communication via SINEMA Remote Connect.

- **SINAUT ST7**

  The transmission protocols that can be used by the CP for telecontrol communication via the ST7 protocol support the following security functions:

  – MSC

    The MSC protocol supports authentication of the communications partners and simple encryption of data. A user name and a password are included in the encryption. A tunnel is established between the MSC station and MSC master station.

  – MSCsec

    In addition to MSC, with MSCsec, the shared automatically generated key is renewed between the communications partners at configurable intervals.

- **DNP3**

  The CP supports authentication according to the "Secure Authentication V5" specification.

  If the security functions are enabled, the CP can process telecontrol communication via SINEMA Remote Connect.

- **IEC 60870-5-104**

  If the security functions are enabled, the CP can process telecontrol communication via SINEMA Remote Connect.

For information on communication via SINEMA Remote Connect, see section Connection to SINEMA RC (Page 19).

1.7 Connection to SINEMA RC

Communication via SINEMA Remote Connect is supported by:

- CP 1543SP-1
- CP 1542SP-1 IRC

Communication via SINEMA Remote Connect (SINEMA RC)

The "SINEMA RC Server" application provides end-to-end connection management of distributed networks via the Internet. This also includes secure remote access to lower-level stations. Communication between SINEMA RC Server and the remote devices takes place via a VPN tunnel with consideration of the stored access rights.

SINEMA RC uses OpenVPN for encryption of the data. The center of the communication is SINEMA RC Server via which communication runs between the subscribers and that manages the configuration of the communications system.

SCALANCE M routers, which you can use for the connection, also support OpenVPN and connection to SINEMA Remote Connect.

For the CP firmware version required for communication via SINEMA RC see section Communications services (Page 12).

The CP can also handle telecontrol communication via the SINEMA RC server.

Parameter groups

You configure communication via SINEMA RC and telecontrol communication via SINEMA RC in two parameter groups:

- Communication via SINEMA RC:

  > "Security > VPN"

- Telecontrol communication via SINEMA RC:

  > "Communication types"

  For information on the supported protocols and configuration, see section Telecontrol via SINEMA RC (Page 60).

Applications

The following application options of the CP result from the combination of the parameters for telecontrol communication and SINEMA RC:

- (1) No telecontrol and no SINEMA RC (CP for network separation only)
- (2) CP only for remote maintenance via SINEMA RC
- (3) CP for telecontrol communication only
- (4) CP uses telecontrol communication, but SINEMA RC only for remote maintenance.
- (5) CP uses SINEMA RC for telecontrol communication and remote maintenance.

The table provides an overview of the applications with the respective parameter settings.

- "On" means that the parameter is activated.
- "Off" means that the parameter is deactivated.

Table 1- 1 Use cases and parameters to be activated

Use case	Parameter settings (Parameters abbreviated) *		
	SRC	TC	TC-SRC
(1)	Off	Off	Off
(2)	On	Off	Off
(3)	Off	On	Off
(4)	On	On	Off
(5)	On	On	On

* Explanation of the parameter abbreviations:

SRC - Security > VPN (activated) > "VPN connection type":
"Automatic OpenVPN configuration via SINEMA Remote Connect Server"

TC - Communication types > Telecontrol communication enabled

TC-SRC - Communication types >
"Activate telecontrol communication via SINEMA Remote Connect"

1.8 Configuration limits and performance data

Number of CPs per station

In each ET 200SP station, up to three special modules can be plugged in and configured; this allows a maximum of two CP 154xSP-1 modules.

For details of the permitted special modules and the slot rules, refer to section Installing the CP (Page 40).

Connection resources

Connection resources - valid for all CP variants

Number of connections via Industrial Ethernet, maximum of 32 in total, of which:

- S7: Max. 16
- TCP/IP: Max. 32
- ISO-on-TCP: Max. 32
- UDP: Max. 32

Also:

- Online connections of the engineering station (STEP 7): Max. 2
- TCP connections for HTTP

  For HTTP access upp to 12 TCP connection resources are available that are used by one or more Web browsers to display data of the CP.
- PG/OP connections (HMI): In total maximum of 16,
  of which:
  - Connection resources for PG connections: Max. 16
  - Connection resources for OP connections: Max. 16

CP 1543SP-1

Security functions of the CP 1543SP-1

- **VPN tunnel (IPsec)**

  A maximum of four **IPsec** tunnels can be established for secure communication with other security modules.

- **Firewall rules**

  The maximum number of firewall rules in advanced firewall mode is limited to 256. The firewall rules are divided up as follows:

  – Maximum 226 rules with individual addresses

  – Maximum 30 rules with address ranges or network addresses (e.g. 140.90.120.1 - 140.90.120.20 or 140.90.120.0/16)

  – Maximum 128 rules with limitation of the transmission speed ("Bandwidth limitation")

- **E-mail (via message editor)**

  Up to 10 e-mails to be sent can be configured.

  Maximum number of characters that can be transferred per e-mail: 256 ASCII characters including any value sent at the same time

CP 1542SP-1 IRC

Telecontrol functions of the CP 1542SP-1 IRC

- **Telecontrol connections**

  – TeleControl Basic

    A connection can be established to a single or redundant telecontrol server.

  – SINAUT ST7

    The CP can establish up to eight ST7 connections, of which maximum:

    - 8 individual connections with partners

    - 4 redundant connections with partners

    - 8 connections for inter-station communication between ST7 stations

    - A combination of the three options

  – DNP3 / IEC 60870-5-104

    Connections to up to four single or redundant masters can be established.

- **E-mail (via message editor)**

  Up to 10 e-mails to be sent can be configured.

  Maximum number of characters that can be transferred per e-mail: 256 ASCII characters including any value sent at the same time

- **Frame memory (send buffer)**

  The CP has a frame memory (send buffer) for the values of data points configured as an event.

  The volume of the send buffer is divided equally among all configured communications partners. The size of the send buffer can be configured in STEP 7, refer to the section Communication with the CPU (Page 70).

  The maximum size of the send buffer with the respective remote control protocol is:

  – TeleControl Basic

    64000 events

  – SINAUT ST7

    32000 events

  – DNP3

    100000 events

  – IEC 60870-5-104

    100000 events

  You will find details of how the send buffer works such as storing events as well as the options for transferring the data in the section Process image, type of transmission, event classes (Page 97).

- **Data points**

  The data to be transferred by the CP is assigned to various data points in the STEP 7 configuration. The size of the user data per data point depends on the data type of the relevant data point. You will find details in the section Data point configuration (Page 79).

  The maximum number of configurable data points is 500.

1.9 Requirements for use

1.9.1 Hardware requirements

Bus adapter

To connect to the Ethernet network, the CP requires a BusAdapter. A BusAdapter does not ship with the CP.

The CP supports the following BusAdapter:

- BA 2xRJ45
- BA 2xFC
- BA 2xSCRJ
- BA SCRJ/RJ45
- BA SCRJ/FC

You can find further details on the BusAdapters in the appendix BusAdapter (Page 163) and the manual /3/ (Page 168).

CPUs and other components of the ET 200SP

The CP supports operation in stations that contain one of the following CPUs:

- CPU 1510SP-1 PN

  Article number: 6ES7510-1DJ01-0AB0
- CPU 1510SP F-1 PN

  Article number: 6ES7510-1SJ01-0AB0
- CPU 1512SP-1 PN

  Article number: 6ES7512-1DK01-0AB0
- CPU 1512SP F-1 PN

  Article number: 6ES7512-1SK01-0AB0

Further parts and modules that are also required to set up the ET 200SP station, such as rails, I/O modules or cabling are not listed here. See also /3/ (Page 168) for information on this.

Components of the communications partner

Components required by the communications partners of the CP 1542SP-1 IRC are not listed here. You will find references to other products (e.g. TCSB) in the list of references in the appendix of the manual.

1.9.2 Software requirements

Configuration software

To configure the entire functionality of the CP firmware version described in this document, the following configuration tool is required:

- STEP 7 Professional V15

Software for online functions

To use the online functions, the following software is required:

- STEP 7 in the version specified above.

CPU firmware

To use the CP, a CPU 151xSP with a firmware version ≥ V2.0 is required.

1.10 Configuration examples

Below you will find configuration examples for the use of the three CP types.

CP 1542SP-1 - Network separation

The CP is used in the ET 200SP to operate lower-level networks separately or to achieve separation from the higher-level network.

The ET 200SP can be expanded flexibly with further Ethernet interfaces via the CP. The network separation allows the setting up of identical machines with the same IP address. The CP takes over the communication and relieves the CPU.

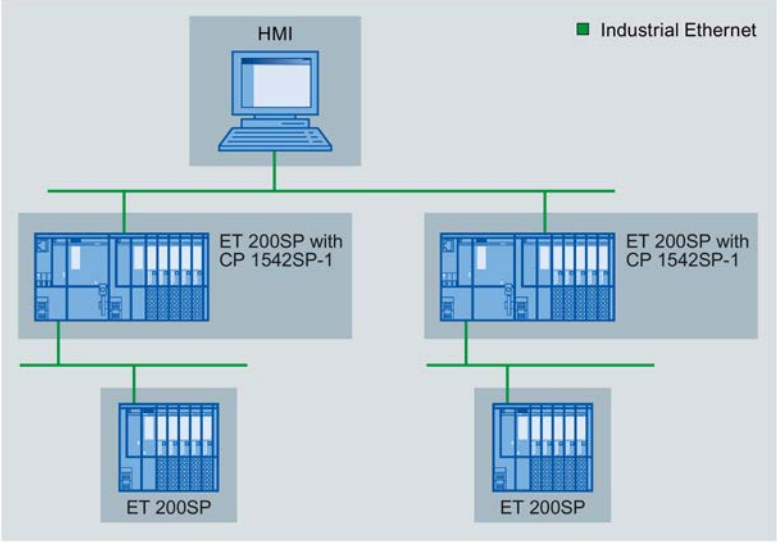

Figure 1-1 Configuration example of an ET 200SP with CP 1542SP-1

CP 1543SP-1 - Cell protection with security functions

The CP communicates encrypted with communications partners in the connected network. The firewall monitors the access to the ET 200SP and therefore protects lower-level networks. This avoids data loss, disruptions of production and damage to machines.

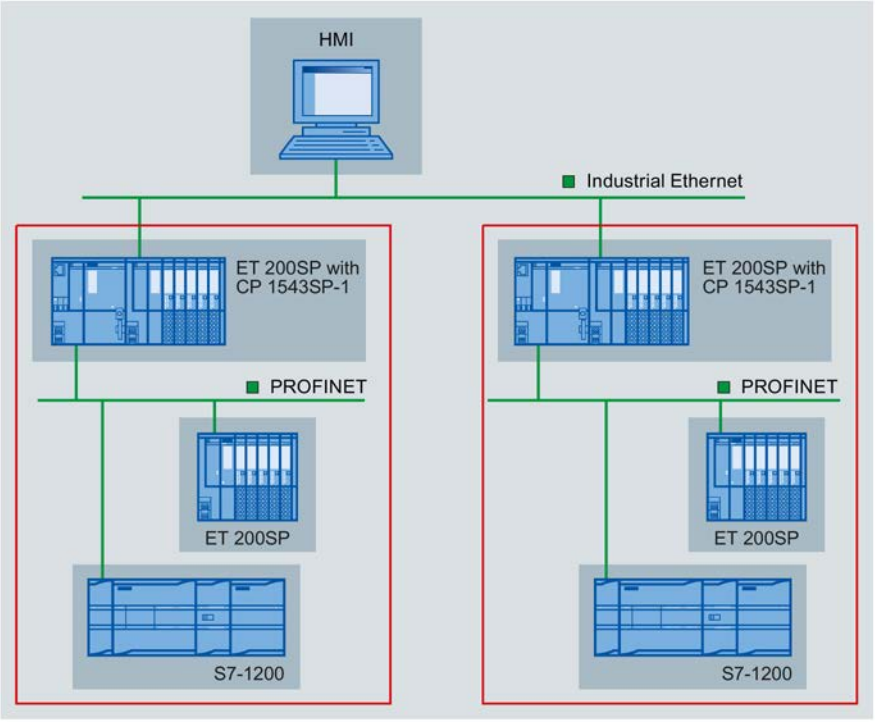

Figure 1-2 Configuration example of an ET 200SP with CP 1543SP-1

CP 1542SP-1 IRC - Connection to control centers

By using the CP the ET 200SP can be used as a remote terminal unit. The following protocols can be used for telecontrol communication:

- TeleControl Basic
- SINAUT ST7
- IEC 60870-5-104
- DNP3

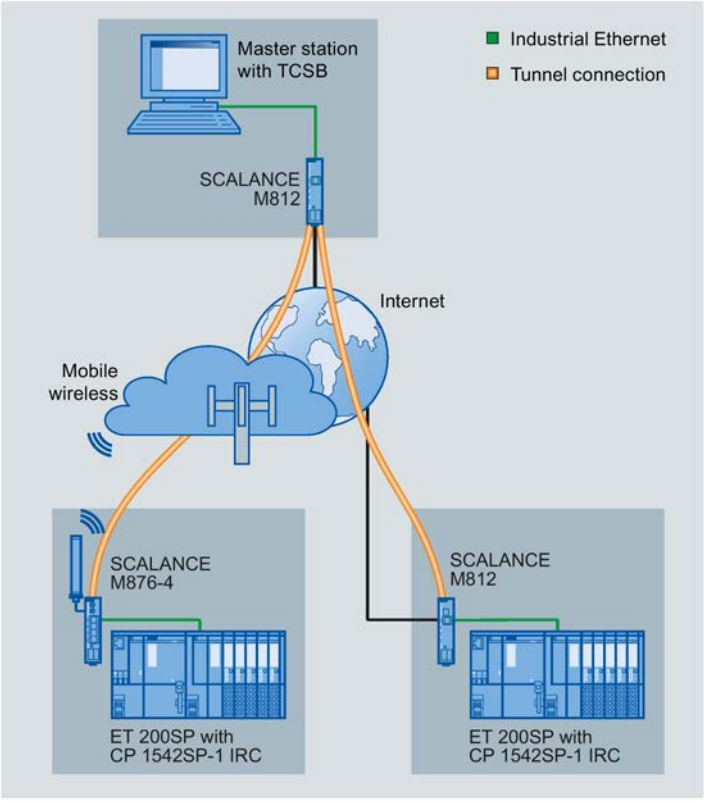

Figure 1-3 Configuration example of an ET 200SP with CP 1542SP-1 IRC; protocol: TeleControl Basic

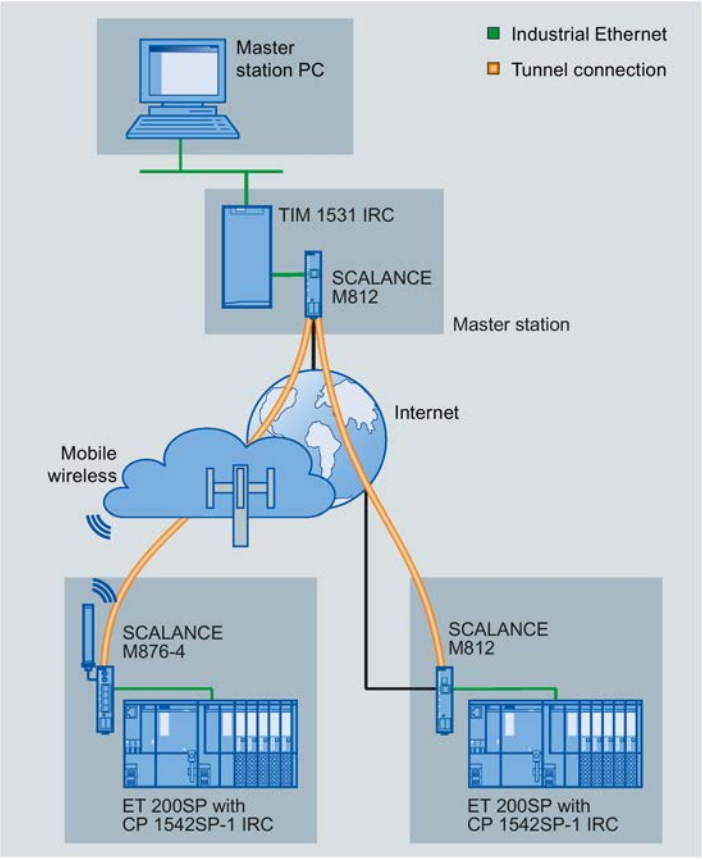

Figure 1-4 Configuration example of an ET 200SP with CP 1542SP-1 IRC; protocol: ST7

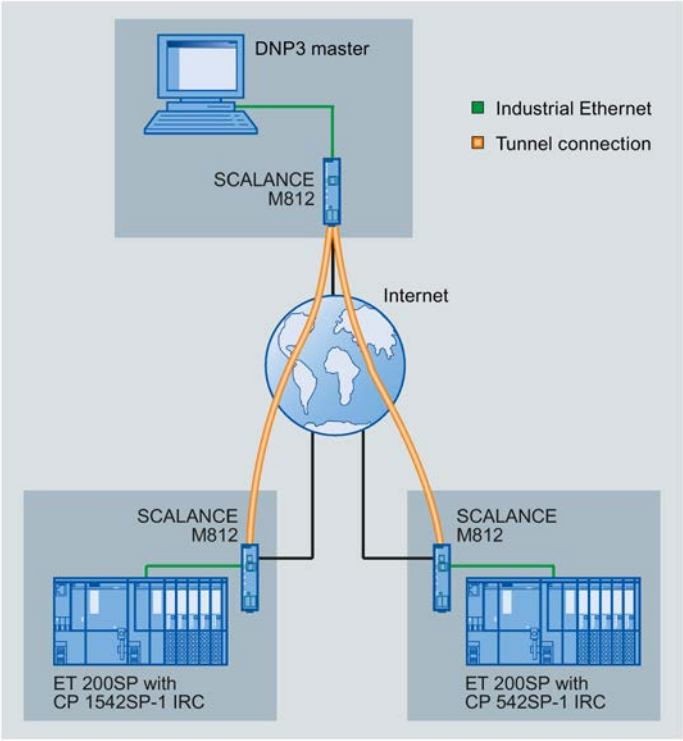

Figure 1-5 Configuration example of an ET 200SP with CP 1542SP-1 IRC; protocol: DNP3

A configuration with which the protocol IEC 60870-5-104 is used could look similar.

Telecontrol via SINEMA Remote Connect

The following figure shows a configuration in which the CP 1542SP-1 IRC communicates with the master station via a SINEMA Remote Connect Server. In this example, the CP uses the protocol IEC 60870-5-104.

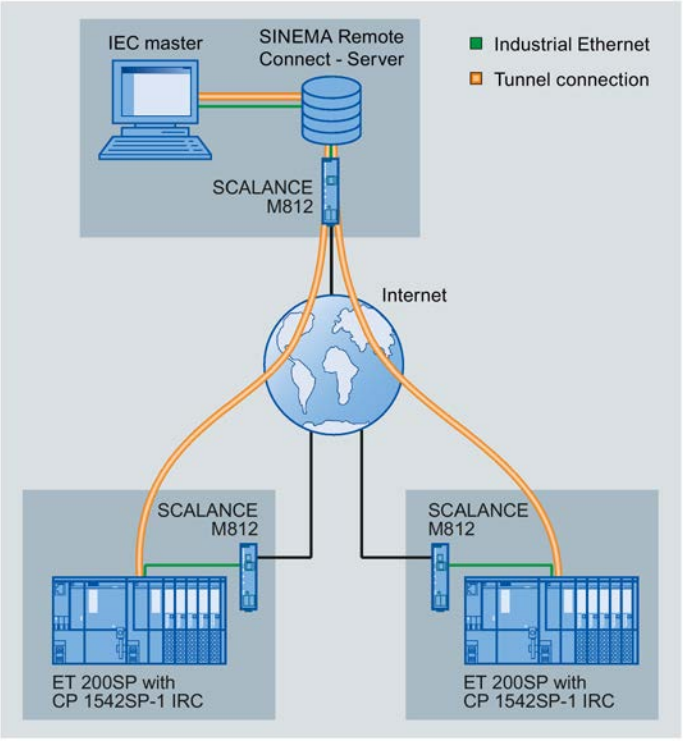

Figure 1-6 Configuration example of an ET 200SP with CP 1542SP-1 IRC for telecontrol communication via SINEMA RC

Remote maintenance with SINEMA RC

The following figure shows the connection of different stations with Security CP to an engineering station via SINEMA Remote Connect - Server.

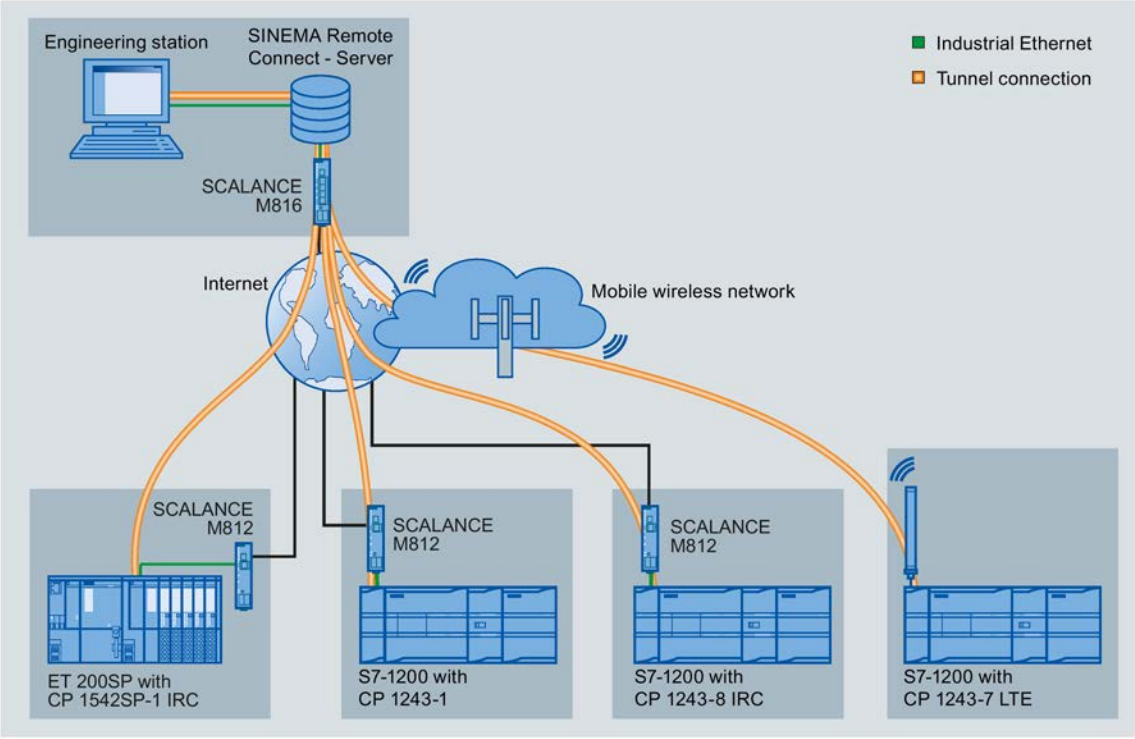

Figure 1-7 Connection of stations to engineering station via SINEMA RC

LEDs and connectors

2

2.1 LEDs

Meaning of the LED displays of the CP

The CP has the following light emitting diodes (LEDs) on the front:

LED name	Meaning
PWR	Power supply
RN	Operating mode
ER	Error
MT	Maintenance

Table 2- 1 Legend for the following tables

Symbol	● ● ●	○	☼ ☼ ☼	-
Meaning / LED status	ON (LED lit)	OFF	LED flashes	Any

Table 2- 2 Meaning of the LED displays of the CP

PWR (green)	RN (green)	ER (red)	MT (yellow)	Meaning
○	○	○	○	No supply voltage on the CP or supply voltage too low
●	●	●	●	CP startup
●	●	○	○	CP in RUN mode
●	-	☼	○	Error. LED display with the following events: • Duplicate IP address • Bus adapter not plugged in or pulled • No telecontrol connection (CP 1542SP-1 IRC)
●	☼	☼	☼	Error: CP defective
●	☼	○	○	Missing configuration data
●	●	○	☼	Firmware update running
●	●	○	●	There is a maintenance request from the CP. Example: • End of the firmware update

LEDs of the bus adapter

Every port of a bus adapter has an LED "LKx" that informs about the connection status with Ethernet and the frame traffic of the port.

Table 2- 3 Meaning of the LED displays of the bus adapters

LK (green)	Meaning
○	No Ethernet connection. Possible causes: • No physical connection to the network • Port disabled in the configuration
☼	LED flashing test
●	There is an Ethernet connection between the port and communications partner.

2.2 Power supply

External power supply required

The connector for the external 24 VDC power supply is located on the front of the CP.

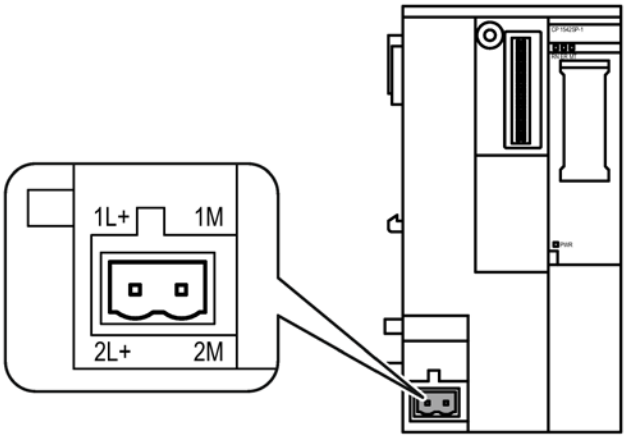

Figure 2-1 Power supply of the CP

Connector X80 is intended for connection to a single or redundant power supply. The power supply is connected to the CP with the supplied plug-in terminal block. The terminal block is plugged in to the socket X80 of the CP.

For information on installing and connecting up, refer to the sections Installing the CP (Page 40) and Connecting the CP (Page 44).

Reverse polarity protection

The plug-in terminal block for connector X80 is designed so that it can only be plugged in in one position. This provides constructional reverse polarity protection.

The connector X80 also has electronic reverse polarity protection.

You will find further data on the power supply in section Technical specifications (Page 155).

2.3 Connector for the BusAdapter

Operation of the device only with BusAdapter

For connecting to Ethernet the CP requires a BusAdapter. A BusAdapter does not ship with the CP.

The slot is on the front of the device:

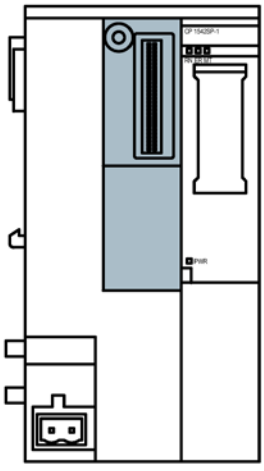

Figure 2-2 Front of the CP, the slot for the bus adapter is marked gray.

You will find the bus adapters supported by the CP in section BusAdapter (Page 163).

For information on installing and connecting up, refer to the sections Installing the CP (Page 40) and Connecting the CP (Page 44).

You will find the pinout of the Ethernet interface in section BusAdapter (Page 163). You will find further technical specifications of the bus adapter in the manual /3/ (Page 168).

Installation, wiring, commissioning 3

3.1 Important notes on using the device

Safety notices on the use of the device

Note the following safety notices when setting up and operating the device and during all associated work such as installation, connecting up or replacing the device.

Overvoltage protection

NOTICE
Protection of the external power supply If power is supplied to the module or station over longer power cables or networks, the coupling in of strong electromagnetic pulses onto the power supply cables is possible. This can be caused, for example by lightning strikes or switching of higher loads. The connector of the external power supply is not protected from strong electromagnetic pulses. To protect it, an external overvoltage protection module is necessary. The requirements of EN61000-4-5, surge immunity tests on power supply lines, are met only when a suitable protective element is used. A suitable device is, for example, the Dehn Blitzductor BVT AVD 24, article number 918 422 or a comparable protective element. Manufacturer: DEHN+SOEHNE GmbH+Co.KG Hans Dehn Str.1 Postfach 1640 D-92306 Neumarkt, Germany

3.1.1 Notes on use in hazardous areas

⚠ WARNING
EXPLOSION HAZARD Do not open the device when the supply voltage is turned on.

⚠ WARNING
The device may only be operated in an environment with pollution degree 1 or 2 (see IEC 60664-1).

WARNING

The equipment is designed for operation with Safety Extra-Low Voltage (SELV) by a Limited Power Source (LPS).

This means that only SELV / LPS complying with IEC 60950-1 / EN 60950-1 / VDE 0805-1 must be connected to the power supply terminals, or the power supply unit for the equipment power supply must comply with NEC Class 2, as described by the National Electrical Code (r) (ANSI / NFPA 70).

If the equipment is connected to a redundant power supply (two separate power supplies), both must meet these requirements.

WARNING

EXPLOSION HAZARD

Do not connect or disconnect cables to or from the device when a flammable or combustible atmosphere is present.

WARNING

EXPLOSION HAZARD

Replacing components may impair suitability for Class 1, Division 2 or Zone 2.

WARNING

When used in hazardous environments corresponding to Class I, Division 2 or Class I, Zone 2, the device must be installed in a cabinet or a suitable enclosure.

WARNING

DIN rail

In the ATEX and IECEx area of application only the Siemens DIN rail 6ES5 710-8MA11 may be used to mount the modules.

3.1.2 Notes on use in hazardous areas according to ATEX / IECEx

WARNING

Requirements for the cabinet/enclosure

To comply with EU Directive 94/9 (ATEX95), the enclosure or cabinet must meet the requirements of at least IP54 in compliance with EN 60529.

WARNING

Cable

If the cable or conduit entry point exceeds 70 °C or the branching point of conductors exceeds 80 °C, special precautions must be taken. If the equipment is operated in an air ambient in excess of 50 °C, only use cables with admitted maximum operating temperature of at least 80 °C.

WARNING

Take measures to prevent transient voltage surges of more than 40% of the rated voltage. This is the case if you only operate devices with SELV (safety extra-low voltage).

3.1.3 Notes on use in hazardous areas according to UL HazLoc

WARNING

EXPLOSION HAZARD

You may only connect or disconnect cables carrying electricity when the power supply is switched off or when the device is in an area without inflammable gas concentrations.

This equipment is suitable for use in Class I, Division 2, Groups A, B, C and D or non-hazardous locations only.

This equipment is suitable for use in Class I, Zone 2, Group IIC or non-hazardous locations only.

3.1.4 General notices on use in hazardous areas according to FM

WARNING

EXPLOSION HAZARD

You may only connect or disconnect cables carrying electricity when the power supply is switched off or when the device is in an area without inflammable gas concentrations.

This equipment is suitable for use in Class I, Division 2, Groups A, B, C and D or non-hazardous locations only.

This equipment is suitable for use in Class I, Zone 2, Group IIC or non-hazardous locations only.

WARNING

EXPLOSION HAZARD

The equipment is intended to be installed within an ultimate enclosure. The inner service temperature of the enclosure corresponds to the ambient temperature of the module. Use installation wiring connections with admitted maximum operating temperature of at least 30 ºC higher than maximum ambient temperature.

3.2 Installing the CP

NOTICE

Install and remove the CP only when the power is off.

Switch off the power supply of the ET 200SP and the CP before you install or remove modules. Installing and removing modules with the power supply on can lead to damage to the modules and to loss of data.

Note

Note the installation guidelines

When installing and connecting up the CP note the instructions in the manual /3/ (Page 168).

NOTICE

Installation location - Dependency of the temperature range

The module must be installed so that its upper and lower ventilation slits are not covered, allowing adequate ventilation. Above and below the modules, there must be a clearance of 25 mm to allow air to circulate and prevent overheating.

Note the dependency of the permitted temperature range on the installation location:

- Horizontal installation of the rack (DIN rail) means vertical position of the CP.
- Vertical installation of the rack (DIN rail) means horizontal position of the CP.

You will find the permitted temperature ranges in the section Technical specifications (Page 155).

Installation of the rack	Installation position of the CP
Horizontal installation of the rack	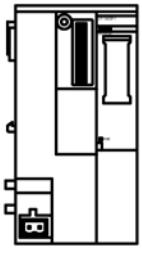

Installation of the rack	Installation position of the CP
Vertical installation of the rack	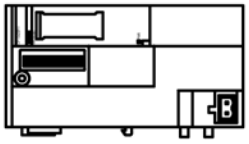

Slot rules

The CPU always occupies slot 1. In an ET 200SP you can plug in up to three of the following modules in slots 2 ... 4 (see figure) to the right of the CPU:

- CMs
- CPs
- BusAdapter Send

Of these three modules, up to two CP 154xSP-1 modules can be plugged in. These two CPs can be of the same type or different.

The CM DP can only be plugged in directly next to the CPU.

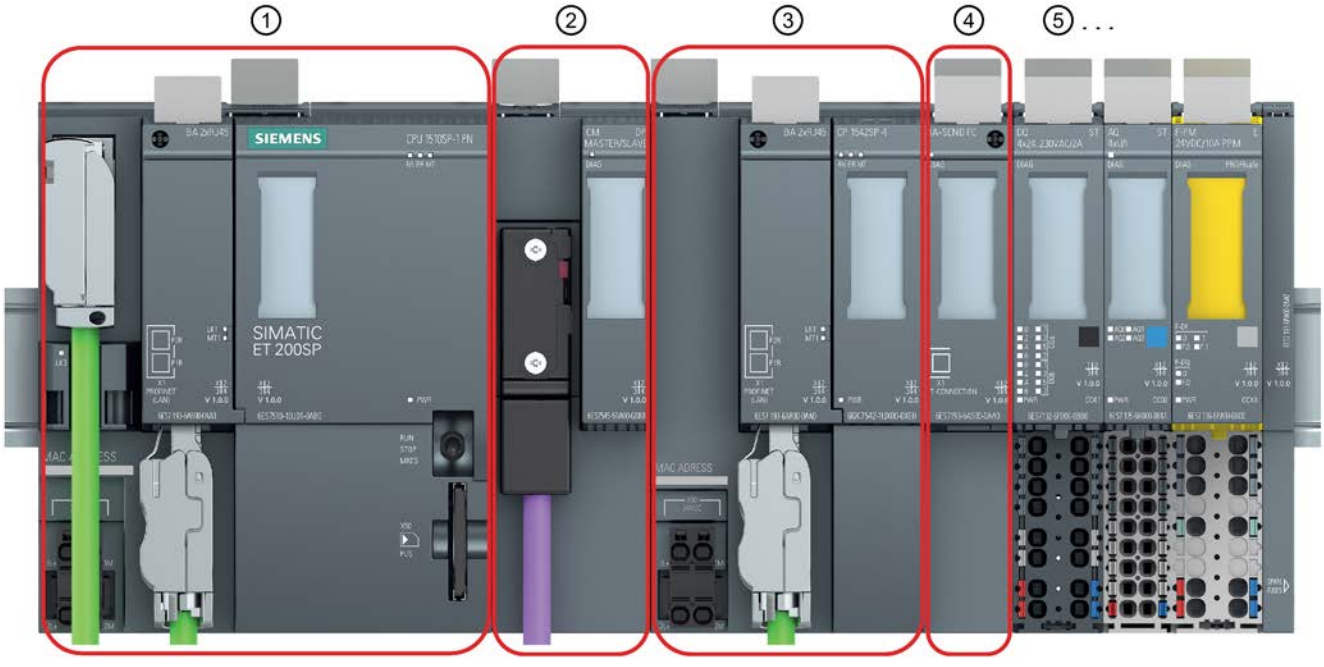

1. Slot 1 - only permitted for the CPU.
2. Slot 2 - for CM / CP / BusAdapter Send *
   If you use a PROFIBUS CM, you must plug this in directly beside the CPU in slot 1.
3. Slot 3 - for CM / CP / BusAdapter Send *
4. Slot 4 - for CM / CP / BusAdapter Send *
5. Slot 5 ff for IO modules

* If you use a BusAdapter Send, this must be plugged in to the slot directly beside the IO modules.

Figure 3-1 Slots of the ET 200SP

Installation on a DIN rail

Note

Protecting the modules from slipping on the DIN rail

If you install the modules in an area with mechanical load, use suitable clamping devices at both ends of the device group to secure the modules on the DIN rail, e.g. Siemens and retainer 8WA1808.

The end retainers prevent the modules separating under mechanical load.

When using the device in the areas of application ATEX or IECEx, note the information on the DIN rai in section Notes on use in hazardous areas (Page 37).

The ET 200SP system is suitable for installation on a mounting rail according to EN 60715 (35 × 7.5 mm or 35 × 15 mm)

1. Hang the CPU / the interface module on the mounting rail.
2. Tilt the CPU / the interface module to the back until the mounting rail release audibly locks in place.
3. Hang the CP to the right next to the CPU.
4. Tilt the CP to the back until the mounting rail release audibly locks in place.
5. Move the CP to the left until it audibly locks in place in the CPU.
6. Mount the other base units and modules accordingly.

   See manual /3/ (Page 168) for information on this.

Plugging in the bus adapter

NOTICE
Touching the plug-in contacts Do not touch the plug-in contacts when no bus adapter is plugged in.

1. Connect the appropriate cable to the bus adapter if you use a bus adapter with optical or direct electrical or optical connection (without plug).
2. Plug the bus adapter into the slot of the CP.

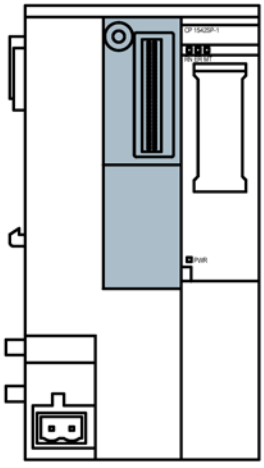

Figure 3-2 Front of the CP, the slot for the bus adapter is marked gray.

3. Screw the bus adapter to the CP.

   The securing screw is located at the top left on the front of the bus adapter.

   To do this use a screwdriver with 3 to 3.5 mm blade width or a suitable Torx screwdriver (T15).

   The maximum tightening torque is 0.25 Nm.
4. Plug the connector of the connecting cable into the socket of the bus adapter if you use a bus adapter with plug.

For information on plugging in the bus adapter and fitting cables see also the manual /3/ (Page 168).

Removal from the DIN rail

Follow the steps below to remove a CP from the DIN rail:

1. Turn off the power supply to the entire station including the CP and CPU.
2. Activate the mounting rail release of the modules to be moved (CPU, CPs) and move them parallel to the left until they are released from the remaining module group (free space approx. 16 mm).

   Press the locking slide marked "PUSH" on the top of a module down to be able to move the module in the DIN rail.
3. Activate the mounting rail release on the CP and move it to the right until it is released from the CPU (free space approx. 8 mm).
4. While holding the mounting rail release on the CP, swing the CP out of the mounting rail.

3.3 Connecting the CP

Order of the work

NOTICE
Connection only with power off Connect the CP only when the power is off. Refer to the information in the system manual, see /2/ (Page 168).

The bus adapter is already connected to the relevant cable, see section Installing the CP (Page 40).

1. Connect the external power supply to the terminal block of connector X80.

   Use the same power supply as the CPU.

2. Turn the power supply on only after the CP has been completely wired and connected.

Power supply at connector X80

You will find the location of the connector X80 four the power supply to the CP in section Power supply (Page 34). There, you will also find notes on reverse polarity protection..

The 2-terminal plug-in terminal block has the following pin assignment for the socket:

Terminal	Assignment
1L+ / 2L+	24 VDC
1M / 2M	Ground

The two terminals 1L+/L2+ and 1M/2m of the terminal block are each bridged internally so that you can connect either a single or a redundant power supply.

Connectable cable cross-section

- Without wire end ferrule 0.2 .. 2.5 mm^2 / AWG 24 .. 13
- With wire end ferrule 0.25 .. 1.5 mm^2 / AWG 24 .. 16
- With TWIN wire end ferrule: 0.5 .. 1.0 mm^2 / AWG 20 .. 17

You will find information about the power consumption and further technical details of the connectors in section Technical specifications (Page 155).

3.4 Commissioning the CP

Requirement: Configuration prior to commissioning

A prerequisite for full commissioning of the module is the completeness of the STEP 7 project data.

Commissioning the module

The remaining steps in commissioning involve downloading the STEP 7 project data.

The STEP 7 project data of the CP is transferred when you load to the station. To load the station, connect the engineering station on which the project data is located to the CPU.

You will find more detailed information on loading in the following sections of the STEP 7 information system:

Note

Time synchronization for telecontrol via SINEMA RC

When using SINEMA Remote Connect for telecontrol communication, set the CPU time manually during commissioning; see note in section Telecontrol via SINEMA RC (Page 60).

Configuration 4

4.1 Security recommendations

Observe the following security recommendations to prevent unauthorized access to the system.

Note

Security functions of the CP types

Depending on the supported function, the following notes do not apply to every CP type described in this manual.

General

- You should make regular checks to make sure that the device meets these recommendations and other internal security guidelines if applicable.
- Evaluate your plant as a whole in terms of security. Use a cell protection concept with suitable products.
- Do not connect the device directly to the Internet. Operate the device within a protected network area.
- Keep the firmware up to date. Check regularly for security updates of the firmware and use them.
- Check regularly for new features on the Siemens Internet pages.
  - You can find information on Industrial Security here:
    Link: (http://www.siemens.com/industrialsecurity)
  - You can find information on security in industrial communication here:
    Link: (http://w3.siemens.com/mcms/industrial-communication/en/ie/industrial-ethernet-security/Seiten/industrial-security.aspx)
  - You can find a publication on the topic of network security (6ZB5530-1AP02-0BA5) here:
    Link:
    (http://w3app.siemens.com/mcms/infocenter/content/en/Pages/order_form.aspx?nodeKey=key_518693&infotype=brochures)
    Enter the following filter: 6ZB5530

Physical access

Restrict physical access to the device to qualified personnel.

Network attachment

Do not connect the PC directly to the Internet. If a connection from the CP to the Internet is required, arrange for suitable protection before the CP, for example a SCALANCE S with firewall or use the CP 1543SP-1.

Security functions of the product

Use the options for security settings in the configuration of the product. These includes among others:

- Protection levels

  Configure a protection level of the CPU.

  You will find information on this in the information system of STEP 7.

- Disabling the bus adapter ports

  In the configuration disable a port of the bus adapter being used that is not required.

- Security function of the communication
  - Enable the security functions of the CP and set up the firewall.

    If you connect to public networks, you should use the firewall. Think about the services you want to allow access to the station via public networks. By limiting the "transmission speed" via IP packet filter rules in the firewall, you make use of the possibility of restricting flooding and DoS attacks.
  - Use the secure protocol variants NTP (secure) and SNMPv3.
  - Use the security functions of the telecontrol protocols, e.g. the DNP3 security options.
  - Use the secure Open User Communication (Secure OUC) via the appropriate program blocks.
  - Leave access to the Web server of the CPU (CPU configuration) and to the Web server of the CP disabled.

- Protection of the passwords for access to program blocks

  Protect the passwords stored in data blocks for the program blocks from being viewed. You will find information on the procedure in the STEP 7 information system in the topic "Know-how protection".

- Logging function

  Enable the function in the security configuration and check the logged events regularly for unauthorized access.

Passwords

- Define rules for the use of devices and assignment of passwords.
- Regularly update the passwords to increase security.
- Only use passwords with a high password strength. Avoid weak passwords for example "password1", "123456789" or similar.

- Make sure that all passwords are protected and inaccessible to unauthorized personnel.

  See also the preceding section for information on this.
- Do not use one password for different users and systems.

Protocols

Secure and non-secure protocols

- Only activate protocols that you require to use the system.
- Use secure protocols when access to the device is not prevented by physical protection measures.

  The NTP protocol provides a secure alternative with NTP (secure).

Table: Meaning of the column titles and entries

The following table provides you with an overview of the open ports on this device.

- **Protocol / function**

  Protocols that the device supports.
- **Port number (protocol)**

  Port number assigned to the protocol.
- **Default of the port**
  - Open

    The port is open at the start of the configuration.
  - Closed

    The port is closed at the start of the configuration.
- **Port status**
  - Open

    The port is always open and cannot be closed.
  - Open after configuration

    The port is open if it has been configured.
  - Open (login, when configured)

    As default the port is open. After configuring the port, the communications partner needs to log in.
  - Closed after configuration

    The port is closed because the CP is always client for this service.
- **Authentication**

  Specifies whether or not the protocol authenticates the communications partner during access.

Table 4- 1 Server ports

Protocol / function	Port number (protocol)	Default of the port	Port status	Authentication
DHCP	68 (UDP)	Closed	Open after configuration (while the CP obtains a new address)	No
S7 and online connections	102 (TCP)	Open	Open after configuration *	No
Online diagnostics (CP 1543SP-1)	8448 (TCP)	Closed	Open after configuration	No
Communication via SINEMA RC (CP 1542SP-1 IRC / CP 1543SP-1)	8448 (TCP)	Closed	Open after configuration	Yes
DNP3	20000 (TCP/UDP) can be set	Closed	Open after configuration	Yes, when security is enabled.
IEC 60870-5-104	2404 (TCP) can be set	Closed	Open after configuration	No
HTTP	80 (TCP)	Closed	Open after configuration	Yes
HTTPS	443 (TCP)	Closed	Open after configuration	Yes
SNMP	161 (UDP)	Open	Open after configuration	Yes (with SNMPv3)

* For information on avoiding opening the port during diagnostics, see section Online security diagnostics via port 8448 (CP 1542SP-1 IRC, CP 1543SP-1) (Page 144).

Ports of communications partners and routers

Make sure that you enable the required client ports in the corresponding firewall on the communications partners of the CP and in intermediary routers.

These can be:

- TeleControl Basic / 55097 (TCP) - can be set
- ST7 with MSC protocol / 26382 (TCP) - can be set
- DHCP / 67, 68 (UDP)
- SMTP / 25 (TCP)
- STARTTLS / 587 (TCP)
- SSL/TLS / 465 (TCP)
- NTP / 123 (UDP)
- DNS / 53 (UDP)
- SINEMA RC Auto-configuration / 443 (TCP) - can be set
- SINEMA RC and OpenVPN / 1194 (UDP) - can be set in SINEMA RC

4.2 Configuration in STEP 7

Configuration in STEP 7

You configure the modules and networks in SIMATIC STEP 7. You will find the required version in the section Software requirements (Page 24). You can configure a maximum of two CP 154xSP-1 for an ET 200SP.

You will find comprehensive information on configuration in the Information system of STEP 7 and in the following sections.

Overview of configuration of the CP

Follow the steps below when configuring:

1. Create a STEP 7 project.
2. Insert the required SIMATIC stations from the following catalog directory:

   Controller > SIMATIC ET200 CPU > ET 200SP CPU
3. Insert the CPs and the input and output modules from the following catalog directory into the stations.

   Distributed I/O > ET 200SP
4. Create an Ethernet network.
5. Connect the stations to the Ethernet subnet.
6. Configure the inserted CPs.

   When the device view of the CP is open, you can find the BusAdapters in a separate catalog directory.
7. Optional: Create the program blocks for the Open User Communication.
8. Save and compile the project.

Here you will find information on individual parameter groups in the following sections. You will find information on parameters not described in this manual in the information system of STEP 7.

Details on the parameters of the telecontrol communication of the CP 1542SP-1 IRC can be found in the section Telecontrol (CP 1542SP-1 IRC) (Page 56).

Details on the parameters of the security functions can be found in the section Security (Page 117).

Loading and saving the configuration data

When you load the station, the project data of the station including the configuration data of the CP is stored on the CPU. You will find information on loading the station in the STEP 7 information system.

4.3 Ethernet interface

Configure the generally available parameters just as for every other Ethernet interface:

- General data (name etc.)
- Addresses and possibly routers
- Port settings
- Access to the Web server

See also

Changing the IP parameters during runtime (Page 139)

4.3.1 IPv6

Configuring the Ethernet addresses

If you configure additional IPv6 addresses ("Manual configuration" option), make sure that the two addresses belong to different subnets.

Note

Communication via IPv6

If you want to use IPv6 addresses and connect the CP to the Internet, make sure that the router connected to the Internet and the providers of the Internet services used (e.g. e-mail) also support IPv6 addresses.

You will find information on configuration in the STEP 7 information system.

4.3.2 Advanced options

Protocol-specific transmission settings of the CP 1542SP-1 IRC

For information on the protocol-specific parameter groups, see section Ethernet interface (X1) > Advanced options (Page 61).

BA ... (BusAdapter)

Here, you configure the settings of the network connection via the BusAdapter that you configured in the device view of the CP. BusAdapter "BA 2xRJ45" is used by default.

If you do not use both ports of the BusAdapter, you can disable one of the two ports.

4.4 DNS configuration

DNS server

A DNS server may be required when the module itself, a communications partner, or for example an e-mail server should be reachable via the host name (FQDN).

If you specify the address of a device as FQDN, you need to configure a DNS server. In this case, the IP address of the device is determined via the configured DNS server.

4.5 Time-of-day synchronization

You will find the parameter group for time-of-day synchronization in the following location:

- CP 1542SP-1

  At the Ethernet interface
- CP 1543SP-1

  If the security functions are enabled, under "Security"
- CP 1542SP-1 IRC

  Depending on the telecontrol protocol:
  - TeleControl Basic / DNP3 / IEC

    At the Ethernet interface
  - ST7

    Under the parameter group "Communication with the CPU"

Procedure for time-of-day synchronization

Note

Recommendation for setting the time

With Ethernet connections, synchronization with an external clock is recommended at intervals of approximately 10 seconds. This achieves as small a deviation as possible between the internal time and the UTC time.

With telecontrol functions, particularly in the case of transmission via mobile wireless networks, a larger update interval is usually pertinent.

Note

Consistent time-of-day synchronization via NTP / NTP (secure)

Both the CPU and CP can have the time of day synchronized using NTP.

If you enable time-of-day synchronization for both modules, use the same NTP server, if possible, in order to retain a consistent time of day within the station.

Forwarding time of day is only supported by CP 1542SP-1 IRC.

The time-of-day synchronization procedures of the respective CP types are described below.

CP 1542SP-1

- NTP

  You configure the addresses of the NTP server(s), the synchronization interval and the "Accept time from non-synchronized NTP servers" option.

CP 1543SP-1

Note

Ensuring a valid time of day

If you use security functions, a valid time of day is extremely important. It is recommended to use the NTP (secure) method.

- NTP

  See above for information on parameters.

- NTP (secure)

  The secure method NTP (secure) uses authentication with symmetrical keys according to the hash algorithms MD5 or SHA-1.

  In the global security settings, you can create and manage additional NTP servers also of the type NTP (secure).

CP 1542SP-1 IRC

The configurable procedures depend on the Telecontrol protocol used.

TeleControl Basic / DNP3 / IEC

- NTP

  See above for information on parameters.

- Time from partner

  The CP sets its clock using the time of day that it receives with the data transferred by the communications partner.

ST7

With the ST7 protocol, the time source can be selected:

- None

  The time of the CP is not synchronized.

- From NTP server

  See above for information on parameters.

- From WAN

  The CP obtains its time via the WAN network to which it is connected.

  A prerequisite for CP clock synchronization is that a suitable time-of-day master forwards the time of day to the WAN network.

Forwarding time of day

The CP 1542SP-1 IRC provides the CPU with the option of taking its time of day from the CP using a PLC tag. See section Communication with the CPU (Page 70) for information on this.

Note

No time-of-day synchronization of the CPU when the time is taken from the CP

When the CPU takes the time from the CP using a PLC tag, disable the CPU's own time-of-day synchronization.

Observe the special note when using telecontrol via SINEMA RC; see section Telecontrol via SINEMA RC (Page 60).

4.6 SNMP

"SNMP" parameter group

- "**Enable SNMP**" parameter group

  Releases the function of the SNMP agent on the CP.

Note

If the security functions are enabled for the CP 1543SP-1 you will find the parameter group "SNMP" in "Security".

Scope of performance of the CPs

The CPs support the following SNMP version:

- **CP 1542SP-1, CP 1542SP-1 IRC**
  - SNMPv1
- **CP 1543SP-1**
  - SNMPv1
  - SNMPv3 (with activated Security functions)

Traps are not supported by the CP.

You will find detailed information about the supported functions in the section Diagnostics with SNMP (Page 144).

4.7 Telecontrol (CP 1542SP-1 IRC)

Telecontrol-specific parameter groups of the CP 1542SP-1 IRC

In this section, you will find only the description of the specific parameter groups of the CP 1542SP-1 IRC for telecontrol communication.

You can find some parameter groups in the section Security (Page 117).

Data points

Configured data points are required to transfer the process data and for some options of the parameter groups "Partner stations" and "Communication with the CPU".

The data areas in the memory of the CPU intended for communication with the partner are configured for the specific data points in the CP. Each data point addresses a PLC tag or element in a data block of the CPU.

For more detailed information, refer to section Data points (Page 79).

4.7.1 Address and authentication information

Address and authentication information of the telecontrol protocols

Depending on the telecontrol protocol used, the communications partners require the following address and authentication information that needs to be configured:

- TeleControl Basic

  The telecontrol server requires:

  – Project number

  – Station number

  – Telecontrol password (for authentication)

  You will find the parameters in the parameter group "Security > CP identification".

  – IP address (in the "Ethernet interface“ parameter group)

  Since the CP always establishes the connection to the telecontrol server, the IP address of the CP does not need to be configured in TCSB.

- ST7

  The subscriber number is unique as addressing parameter for every ST7 subscriber in a STEP 7 project. The following subscribers require a subscriber number:

  – Communications module (TIM, CP)

    Configuration in the "Subscriber numbers" parameter group

  – CPU

    The local CPU that is assigned to the CP receives a subscriber number as the end point of an ST7 connection.

    Configuration in the "Subscriber numbers" parameter group

  – Application of the master station PC

    The ST7 application that you configure in the PC station of the master station.

    Configuration in the telecontrol connection: "Network data" editor > "Telecontrol" tab.

  When the MSC protocol is used, the ST7 master station requires a unique user name and a unique password from each MSC station. You will find the parameters in the parameter group "Security > MSC identification".

- DNP3 / IEC

  The master requires:

  – Station address (parameter group "Ethernet interface > CP identification")

  – IP address and port number of the CP ("Ethernet interface" parameter group)

Address information required by the CP

You will find information about the address information of the communications partner required by the CP in section Partner stations (Page 65).

Addressing the data

The process data to be transferred is configured as data points.

4.7.2 Communication types

The parameter group does not exist for the CP 1542SP-1, since the communications services supported by this CP are always enabled.

In this parameter group, you enable the communication types you want to use for the particular CP..

To minimize the risk of unauthorized access to the station via Ethernet, you need to enable the communications services that the CP will execute individually.

You can leave all options disabled if you do not need them, for example if you only use the CP for Open User Communication.

The Open User Communication does not exist in the parameter group because these communications services are not configured but programmed using program blocks.

"Communication types" parameter group

Note

Full telecontrol functionality only with enabled security functions

For the following functions, you need to enable the security functions:

- Sending e-mails using the telecontrol functions (message editor)
- Use of the "TeleControl Basic" (general) protocol
- Use of the DNP3 security functions (Secure Authentication)
- Use of certificates
- Use of remote maintenance via SINEMA Remote Connect

- **Enable telecontrol communication**

  Only with the CP 1542SP-1 IRC

  Enables telecontrol communication on the CP. The following protocols can be used as alternatives:

  – **TeleControl Basic ***

    Enables communication with the telecontrol server.

  – **ST7**

    Enables telecontrol communication via the ST7 protocol.

  – **DNP3 ***

    Enables communication with up to four DNP3 masters.

  – **IEC 60870-5-104 ***

    Enables communication with up to four IEC masters.

  * For information on telecontrol communication via SINEMA Remote Connect, see section Telecontrol via SINEMA RC (Page 60).

Note

Loss of configuration data when changing the telecontrol protocol

If you change the protocol on a configured module, protocol-specific configuration data is lost. This includes the following:

- Partner configuration
- Data point configuration
- Configured messages (e-mails)
- Configured time-of-day synchronization

- **Enable online functions**

  Enables access to the CPU for the online functions via the CP (diagnostics, loading project data etc.). If the function is enabled, the engineering station can access the CPU via the CP.

  If the option is disabled, you have no access to the CPU via the CP with the online functions. Online diagnostics of the CPU with a direct connection to the interface of the CPU however remains possible.

- **Enabling S7 communication**

  Enables the functions of S7 communication with a SIMATIC S7, S7 routing and PG routing on the CP.

  If you configure S7 connections to the relevant station, and these run via the CP, you will need to enable this option.

4.7.3 SINAUT ST7 PG routing

PG routing between telecontrol modules

PG routing is supported between the modules listed in the table and via the specified media.

A requirement for the CPs is that the options "S7 communication" and "Online functions" are enabled in the "Communication types" parameter group.

Module Medium (protocol)	TIM 1531 IRC	TIM 4R-IE	TIM 3V-IE / TIM 3V-IE Advanced	CP 1243-8 IRC	CP 1542SP-1 IRC
TIM 1531 IRC	Ethernet (S7) Ethernet (MSC) RS-232	Ethernet (S7) Ethernet (MSC) -	Ethernet (S7) Ethernet (MSC) -	Ethernet (S7)	Ethernet (S7)
TIM 4R-IE	Ethernet (S7) Ethernet (MSC) -	Ethernet (S7) Ethernet (MSC) RS-232	Ethernet (S7) Ethernet (MSC) RS-232	-	-
TIM 3V-IE	Ethernet (S7) Ethernet (MSC) -	Ethernet (S7) Ethernet (MSC) RS-232	Ethernet (S7) Ethernet (MSC) RS-232	-	-
CP 1243-8 IRC	Ethernet (S7)	-	-	-	-
CP 1542SP-1 IRC	Ethernet (S7)	-	-	-	-

"RS-232" means communication via dedicated line or dialup network.

See the performance data and the configuration limits for the number of supported connections.

4.7.4 Telecontrol via SINEMA RC

For information on possible applications of communication via SINEMA Remote Connect, see section Connection to SINEMA RC (Page 19).

Requirements

Configure the SINEMA Remote Connect - Server before configuring the CP (not in STEP 7). The CP and the communication partner of the CP must be configured in the SINEMA RC Server.

Supported telecontrol protocols

The following protocols support communication via SINEMA Remote Connect:

- TeleControl Basic
- DNP3
- IEC 60870-5-104

Configuration of the telecontrol communication via SINEMA Remote Connect

Follow the steps below when configuring the CP for use of telecontrol communication via SINEMA RC:

1. In the "Communication types" parameter group activate telecontrol communication and select the protocol.

   The option for communication via SINEMA RC is not yet visible.

2. Change to the "Security" parameter group and enable the security functions.

   (In the "Communication types" parameter group the SINEMA RC option appears disabled and grayed out)

3. Open the "Security > VPN" parameter group and enable VPN.
4. For the parameter "VPN connection type" select the option "Automatic OpenVPN configuration via SINEMA Remote Connect Server" if this is not preset.

   (In the "Communication types" parameter group the SINEMA RC option becomes usable.)

5. Change to the "Communication types" parameter group and enable the option "Telecontrol communication via SINEMA Remote Connect".
6. Create the remaining configuration of the SINEMA RC connection of the CP under "Security > VPN".

   For information on the configuration, see section SINEMA Remote Connect (Page 128).

Manual setting the time of day during commissioning

Note

Time synchronization for telecontrol via SINEMA RC

When using SINEMA Remote Connect for telecontrol communication, the communication module needs the current time for authentication on the SINEMA RC Server. The module receives the time from the CPU or from an NTP server before the connection is established for the first time.

Recommendation:

During commissioning, set the time of the CPU manually at least once using the STEP 7 online functions. This is necessary especially if you have configured the "Time from partner" option for the time synchronization. In this way, you ensure that the CPU has a valid time of day when the station starts up and that the CP can exchange the required certificates with the SINEMA RC Server.

4.7.5 Ethernet interface > CP identification

DNP3 / IEC

- Station address

  The master requires the station address as address information from every CP in the DNP3 or IEC network.

4.7.6 Ethernet interface (X1) > Advanced options

MSC protocol settings (ST7)

The parameter group is available only when using the ST7 protocol and for one MSC master station.

You configure the user name and password for the authentication with the MSC protocol in the security functions.

TCP connection monitoring

The settings made here apply to all TCP connections of the CP.

Special feature with the protocols TeleControl Basic, DNP3 and IEC:
With these three protocols, you have the option of overwriting the value configured here for individual communications partners; see below.

- **TCP connection monitoring time**

  If there is no data traffic within the connection monitoring time, the CP sends a keepalive to the communications partner.

  Permitted range: 1 ... 65535 s. Default setting: 180

  The monitoring time is configured for the Ethernet interface as the default for all TCP connections. The default value can be adapted individually for each connection in "Partner stations", compare section Partner stations (Page 65). The function can only be disabled by entering 0 (zero) for the partners.

- **TCP keepalive monitoring time**

  After sending a keepalive, the CP expects a reply from the communications partner within the keepalive monitoring time. If the CP does not receive a reply within the configured time, it terminates the connection.

  Permitted range: 1 ... 65535 s. Default setting: 10

  The monitoring time is configured for the Ethernet interface as the default for all TCP connections. The default value can be adapted individually for each connection in "Partner stations". The function can only be disabled by entering 0 (zero) for the partners.

Transmission settings - TeleControl Basic

- **Connection establishment delay**

  Basic value for the wait time until the next connection establishment following an unsuccessful attempt to establish a connection. After every 3 attempts, the basic value is doubled up to a maximum of 900 s.

  Permitted range: 10 ... 300. Default setting: 10

  Example: The basic value 20 results in the following wait times: 3 x 20 s, 3 x 40 s, 3 x 80 s etc. up to max. 3 x 900 s.

- **Send monitoring time**

  Time (seconds) for the arrival of the acknowledgment from the communications partner (Telecontrol server) after sending spontaneous frames. The time is started after sending an unsolicited frame. If no acknowledgement has been received from the partner when the connection monitoring time elapses, the frame is repeated up to three times. After three unsuccessful attempts, the connection is terminated and re-established.

  Permitted range: 1 ... 65535. Default setting: 5

- **Key exchange interval**

  Here, you enter the interval in hours after which the key is exchanged again between the CP and the communications partner (TCSB V3). The key is a security function of the telecontrol protocol used by the CP and TCSB V3.

  Permitted range: 0 ... 65535. Default setting: 8

  If you enter 0 (zero), the function is disabled.

Transmission settings - ST7

- **Send conditional spontaneous frames as blocks**

  Specifies the form in which data is sent with the Transmission mode "Conditional spontaneous":

  – Option enabled

    Transfer as individual data frames

  – Option disabled

    Several data frames as block

  The transmission mode (Spontaneous / Conditional spontaneous) of the data to be sent is set in the "Trigger" tab of the data point. With this option, you specify whether data of events is sent immediately or following a delay.

- **Max. allowed disruption time**

  Tolerance time (s) for a detected connection disruption

  If there is still a disruption on the connection when the set time has elapsed, the disruption is signaled to all connection partners of the disrupted station.

  Default setting: 0. Permitted range: 0...255. If you enter 0 (zero), the function is disabled.

Transmission settings - DNP3

You will find information on the permitted ranges of the functions and defaults in the tooltips of STEP 7.

- **Disturbance bit**

  The disturbance bit can be used as bit 1.6 (IIN1.6) of the "Internal Indication Bytes" to indicate to the master when the CPU is in STOP mode.

- **Max. time between Select and Operate**
- **Frame repetitions**
- **Connection confirmation**
- **Connection monitoring time**
- **Transfer mode "Unsolicited"**
- **Max. number of unsolicited frames**
- **Monitoring time for unsolicited frames**
- **Buffer for class 1 / 2 / 3 events**

  Here, for each of the three event classes you specify the number of events after which the stored events are sent to the communications partner.

  Permitted range: 1 ... 255.

- **Delay time class 1 / 2 / 3 events**

  Here, for each of the three event classes you specify the maximum time in seconds the events can be stored in the send buffer before they are sent to the communications partner.

  Permitted range: 0 ... 255.

  If you enter 0 (zero), the function is disabled.

You will find details of how the send buffer works (storing and sending events) as well as the options for transferring data in the section Process image, type of transmission, event classes (Page 97).

Transmission settings - IEC

Note

Settings on the master

When configuring the monitoring times t_1 and t_2 make sure that you make the corresponding settings on the master so that there are no unwanted error messages or connection aborts.

You will find information on the permitted ranges of the functions and defaults in the tooltips of STEP 7.

- **Max. time between Select and Operate**
- **Monitoring time for connection establishment (t_0)**
- **Frame monitoring time (t_1)**

  Monitoring time for the acknowledgement of frames sent by the CP by the communications partner. The monitoring time applies to all frames sent by the CP in I, S and U format.

  If the partner does not send an acknowledgment during the monitoring time, the CP terminates the connection to the partner.

- **Monitoring time for S and U frames (t_2)**

  Monitoring time for the acknowledgment of data frames of the master by the CP.

  After receiving data from the master, the CP acknowledges the received data alternatively:

  – If the CP sends data to the master itself within t_2, it acknowledges the data frames received from the master during t_2 at the same time along with the sent data frame (I format).

  – The CP sends an acknowledgment frame (S format) to the master at the latest when t_2 elapses.

  The value of t_2 should be less than that of t_1.

- **Idle time for test frames (t_3)**

  Monitoring time during which the CP has not received any frames from the master.

  When t_3 elapses, the CP sends a test/control frame (U format) to the master.

  This parameter is intended for longer times without data traffic.

- **Difference between send sequence number N(S) and receive sequence number N(R)**

  Maximum number of unacknowledged data frames (I-APDUs) as maximum difference between send sequence number N(S) and receive sequence number N(R).

  When k is reached and t_1 has not yet elapsed, the CP does not send any frames until all the frames sent have been acknowledged by the master.

  When k is reached and t_1 has elapsed, the TCP connection is terminated.

- **Max. number of unacknowledged data frames**

  Maximum number of received data frames (I-APDUs), after which the oldest frame received from the master must be acknowledged.

Acknowledgment mechanism for the IEC protocol

With each sent data frame, the CP sends a continuous send sequence number. The data frame remains initially stored in the send buffer.

When it receives the data frame, the master sends the send sequence number from this or (if several frames are received) the last frame as an acknowledgement to the CP. The CP saves the send sequence number returned by the master as a receive sequence number and uses it as an acknowledgement.

Frames whose send sequence number is equal to or lower than the current receive sequence number are evaluated as having been successfully transferred and are deleted from the send buffer of the CP.

Recommendations of the specification:

- w should not be higher than 2/3 of k.
- Recommended value for k: 12
- Recommended value for w: 8

4.7.7 Partner stations

4.7.7.1 Partner configuration

The STEP 7 configuration of the communications partners of the CP (telecontrol server, DNP3 or IEC master) and the connections to the partners is not possible and not necessary.

Address information of the communications partners

For the communications partners of the CP, the following information is required during the configuration of the CP:

- TeleControl Basic
  - Partner IP address

    See section AUTOHOTSPOT for information on this.
  - Partner port (port number of the listener port of TCSB)
- DNP3 / IEC
  - Master station address

    Station address specified on the master

    With the IEC protocol the Master station address is not evaluated.
  - Partner IP address

    IP address of the master

    For the addressing of redundant partners, see section Addressing of single and redundant communications partners (Page 69).
  - Partner port

"Partner stations" (only with DNP3 / IEC)

- **Listener port**

  CP's own listener port

"Telecontrol server" / "Partner"

- **Activate partner**

  Enable the option to be able to use the partners configured later for the communication.

  In "TeleControl Basic" the telecontrol server is always enabled as a partner.
- **Partner number**

  The partner number is always signed by STEP 7.
- **Station address / Master station address**

  The station address of the telecontrol server is assigned automatically by the system if telecontrol communication is enabled.

"Connection to partner"

You will find information on the permitted ranges and defaults in the tooltips of STEP 7.

- **Partner IP address**

  IP address or host name (FQDN) of the telecontrol server. This can, for example, also be the FQDN of a DynDNS service.

- **Connection monitoring**

  When the function is enabled, the connection to the communications partner is monitored by sending keepalive frames.

  The TCP connection monitoring time is set for all TCP connections of the CP in the parameter group of the Ethernet interface, see also the section Ethernet interface (X1) > Advanced options (Page 61). These settings apply to all TCP connections of the CP.

  Here in the parameter group "Partner stations" the globally set monitoring time can also be set separately for this partner. The value set here overwrites the global value for this partner that was set in the "Ethernet interface (X1) > Advanced options > TCP connection monitoring" parameter group.

- **TCP connection monitoring time**

  Only with TCP: If there is no data traffic within the connection monitoring time, the CP sends a keepalive to the communications partner.

  The monitoring time is configured for the Ethernet interface as the default for all TCP connections. The default value can be adapted individually for each connection in "Partner stations" and this overwrites the global value for this partner that was set in the parameter group "Ethernet interface".

  The function can be disabled by entering 0 (zero) for the individual partners.

- **TCP keepalive monitoring time**

  Only with TCP: After sending a keepalive, the CP expects a reply from the communications partner within the keepalive monitoring time. If the CP does not receive a reply within the configured time, it terminates the connection.

  The monitoring time is configured for the Ethernet interface as the default for all TCP connections. The default value can be adapted individually for each connection in "Partner stations".

  The function can be disabled by entering 0 (zero) for the individual partners.

- **Connection mode**

  In the "Permanent" connection mode, there is a permanent connection to the communications partner.

- **Connection establishment**

  Specifies the communications partner that establishes the connection (always the CP).

- **Partner port**

  Port number of the communications partner

"Connection to redundant partner" (only with DNP3 / IEC)

- **Redundancy mode**

  Enable the option if the communications partner is a redundant master.

For information on the other parameters see above.

"Advanced settings"

- **Partner monitoring time (only with DNP3 / IEC)**

  If the CP does not receive a sign of life from the communications partner within the configured time, the CP interprets this as a fault/error on the partner. If you enter 0, the function is deactivated.

- **Report partner status (connection to partner)**

  If the function is enabled, the CP signals the status of the connection to the communications partner to the CPU.

  – Bit 0 of "PLC tag for partner status" (data type WORD) is set to 1 if the partner can be reached.

  – Bit 1 is set to 1 if all the paths to the remote partner are OK (useful with redundant paths).

  – Bits 2-3 indicate the status of the send buffer (frame memory).
  The following values are possible:

  - 0: Send buffer OK

  - 1: Send buffer threatening to overflow (more than 80 % full).

  - 3: Send buffer has overflowed (fill level 100 % reached).

  As soon as the fill level drops below 50%, bits 2 and 3 are reset to 0.

  Bits 4 to 15 of the PLC tags are not used and do not need to be evaluated in the program.

DNP3-specific settings

- **DNP3 level**

  DNP3 conformity level supported by the partner.

- **Event transmission mode**

  Mode with which the frames in the send buffer of the CP (events) are transferred:

  – Chronological transfer of individual frames

  or

  – Block-by-block transfer of the frames of a data point

4.7.7.2 Addressing of single and redundant communications partners

Addressing the telecontrol server

- **Addressing of a single telecontrol server**

  Configure the IP address of the telecontrol server or the DSL router when connecting via the Internet.

  When using a DynDNS service with the host name (FQDN) can be specified.

- **Addressing of the TCSB redundancy group by the stations using one IP address**

  In the LAN in the master station to which the TCSB server PCs and the DSL router (e.g. SCALANCE M) are connected, the Network Load Balancing (NLB) of the computer operating system will assign a common virtual IP address to the two server PCs.

  This IP address is configured depending on the network setup:

  – If a CP without a DSL router is connected, the virtual address assigned by the NLB must be configured in the CP as the IP address of the telecontrol server.

  – If a DSL router is used, only one IP address will be configured to address the redundant telecontrol server in the stations, the public address of the DSL router.

    Set the port forwarding (TCP) on the DSL router so that the public IP address (external network) is led to the virtual IP address of the TCSB server PCs (internal network). Only the public IP address is reachable from the Internet. The station does not therefore receive any information telling it which of the two computers of the redundancy group it is connected to.

Addressing redundant DNP3 or IEC masters

For each master specify the master station address and the IP address being used.

4.7.7.3 Partner for inter-station communication

Only when using the "TeleControl Basic" protocol

Inter-station communication

In this table, you specify the S7 stations and CPs with which the current station will use inter-station communication. Connections for inter-station communication run via the telecontrol server.

Partner

The partner number is assigned by the system. It is required during data point configuration to assign data points to their communications partners.

For inter-station communication, the partner is addressed with the parameters "Project", "Station" and "Slot".

Project

Here, enter the project number of the CP in the partner station. (Parameter group "Security > CP identification" on the partner)

Station

Here, enter the station number of the CP in the partner station. (Parameter group "Security > CP identification" on the partner)

Slot

Here, enter the slot number of the CP in the partner station via which the connection will be established.

Frame memory

Activate the option for enabling inter-station communication.

The frames are stored in the send buffer (frame memory) of the CP if the connection is disturbed. Note that the capacity of the frame memory is shared by all communications partners.

Access ID

The access ID displayed here is formed from the hexadecimal values of project number, station number and slot. The parameter of the type DWORD is allocated as follows:

- Bits 0 - 7: Slot
- Bits 8 - 20: Station number
- Bits 21 - 31: Project number

4.7.8 Communication with the CPU

4.7.8.1 Communication with the CPU

Communication with the CPU

Using the first three parameters you specify the CPU access by the CP in the CPU scan cycle. You will find the structure of the CPU scan cycle in the section Read cycle (Page 100).

The fourth parameter "Frame memory size" decides the size of the send buffer on the CP for frames of data points that are configured as an event.

- **Cycle pause time**

  Wait time between two scan cycles of the CPU memory area

- **Max. number of write jobs**

  Maximum number of write jobs to the CPU memory area within a CPU scan cycle

- **Max. number of read jobs**

  Maximum number of low-priority read jobs from the CPU memory area within a CPU scan cycle.

- **Frame memory size**

  Here, you set the size of the frame memory for events (send buffer).

  The size of the frame memory is divided equally among all configured communications partners. You will find the size of the frame memory in the section Configuration limits and performance data (Page 21).

  You will find details of how the send buffer works (storing and sending events) as well as the options for transferring data in the section Process image, type of transmission, event classes (Page 97).

Watchdog bit

- **CP monitoring**

  Via the watchdog bit the CPU can be informed of the status of the telecontrol communication of the CP.

CP time of day

- **CP time to CPU**

  Using this function, the CP can make its time of day available to the CPU.

  You will find details in the STEP 7 information system.

4.7.8.2 CP diagnostics

CP diagnostics

With the parameter group, you have the option of reading out advanced diagnostics data from the CP using PLC tags.

- **Enable advanced CP diagnostics**

  Enable the option to be able to use advanced CP diagnostics.

  If the option is enabled, at least the "Diagnostics trigger tag" must be configured.

  The following PLC tags for the individual items of diagnostics data can be enabled selectively.

- **Diagnostics trigger tag**

  If the PLC tag (BOOL) from the user program of the CPU is set to 1, the CP updates the values of the PLC tags that can then be configured for the advanced diagnostics.

  After writing the current values to the following PLC tags, the CP sets the "Diagnostics trigger tag" to 0 signaling the CPU that the updated values can be read from the PLC tags.

  Note
  Fast setting of the diagnostics trigger variable

  Triggers must not be set faster than a minimum interval of 500 milliseconds.

- **Frame memory overflow warning**

  PLC tag (data type byte) for the send buffer overflow pre-warning. Bit 0 is set to 1 in the following situations:

  – TeleControl Basic / DNP3 / IEC: The fill level of the send buffer has reached 80%.
  – ST7 : The fill level of the send buffer has reached 90%.

- **Frame memory size**

  PLC tag (data type DWord) for the occupation of the send buffer. The number of saved frames is displayed.

- **Current IP address**

  PLC tag (data type String) for the current IP address of the CP.

- **Date of last successful logon to TCSB**

  Only for TeleControl Basic

  PLC tag (data type DTL) for the date on which the CP last logged in to the telecontrol server.

- **Date of last unsuccessful logon to TCSB**

  Only for TeleControl Basic

  PLC tag (data type DTL) for the date on which the CP was last unable to log in to the telecontrol server.

- **TeleService status**

  Only for TeleControl Basic

  The PLC tag (BOOL) indicates whether a TeleService session is active:

  – 0 = No TeleService session active

  – 1 = TeleService session active

- **VPN IPsec status**

  Connection to SINEMA Remote Connect

  The PLC tag (BOOL) indicates whether an OpenVPN tunnel to SINEMA RC is established:

  – 0 = No tunnel established

  – 1 = Tunnel established

4.7.9 Subscriber numbers

Subscriber numbers

Here you assign the subscriber numbers of the CPU and the CP.

The subscriber number is unique for every subscriber in an ST7 network. For the meaning of the subscriber numbers, see section Address and authentication information (Page 56).

- CPU subscriber number

  Subscriber number of the local CPU of the station

- CP subscriber number

  Subscriber number of the CP

4.7.10 Security (CP 1542SP-1 IRC)

For information on the parameters, see section Security parameters of the CP 1542SP-1 IRC (Page 118).

4.7.11 Creating telecontrol connections for the ST7 communication

Single and redundant connections

For ST7 communication of a communication module, you need to create at least one telecontrol connection in the "Network data" editor.

If two subscribers can be reached via different networks, to establish path redundancy for modules with multiple ST7 capable interfaces you create a maximum of two connections

between the two subscribers. You specify redundant connections in the "Connection path" table (see below).

Not all communication modules have serial interfaces or only one Ethernet port with ST7 capability. These modules cannot use redundant paths.

Opening the editor "Network data" > "Telecontrol" tab

To open the editor, follow the steps below:

1. Open the network view of the project.

   On the right you will find the collapsed "Network data" editor.

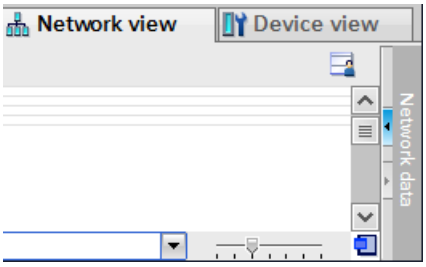

2. Open the "Network data" editor using the arrow symbol.

   The editor is displayed with several tabs, on the left the "Network overview" tab.

3. Expand the editor until the "Telecontrol" tab appears.

   In this tab you configure the telecontrol connections.

Creating telecontrol connections for the ST7 communication of the module

For communication between two ST7 subscribers, you require a telecontrol connection. To create the connection, follow the steps below:

1. In the "Starting point" box, click on a free row in the "Telecontrol" tab.

   The drop-down list shows the configurable starting points that can use the ST7 protocol:

   – S7 stations: Assigned CPU

   – PC stations: Application (e.g. ST7cc / ST7sc)

   For connections between an application on the master station PC and an S7 station, always select the application as the starting point because it can only be selected in the list of starting points.

2. Select the starting point of the connection by double-clicking.

   The connection will then be included in the list of telecontrol connections.

   The name of the connection is preset, but you can change it.

3. Now in the "Endpoint" box select the connection partner from the drop-down list.

Boxes with a missing or bad configuration are shown on a red background, in the example the representation "TC_Connection_3".

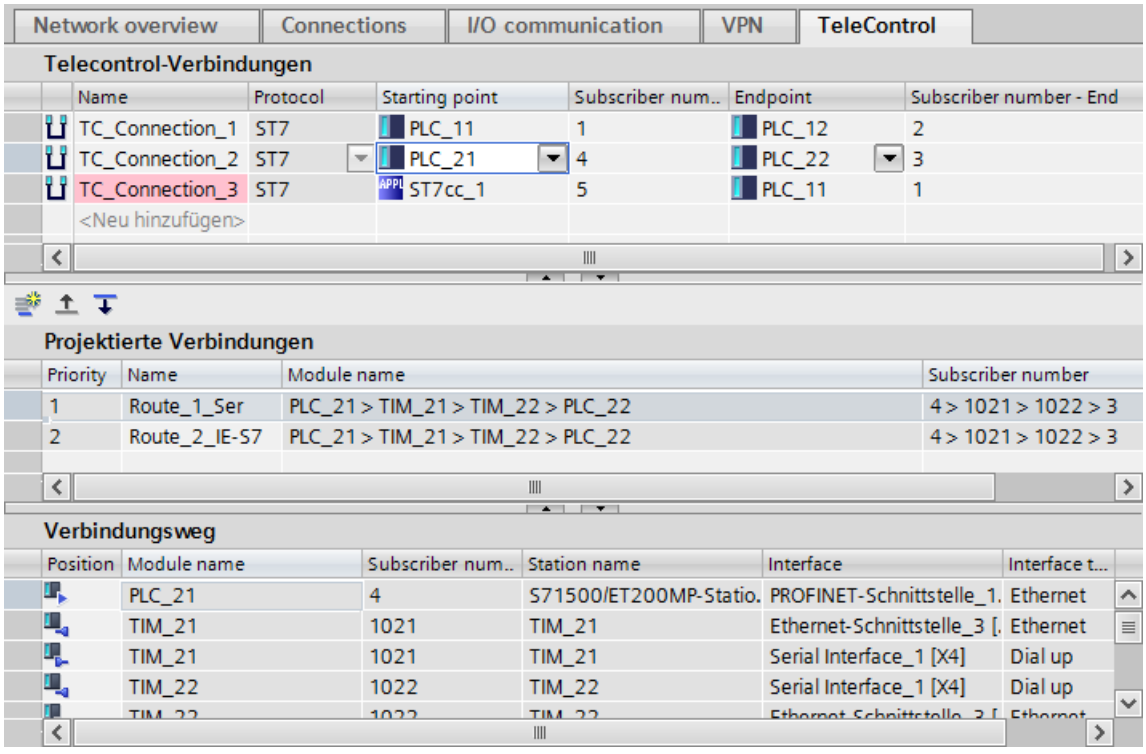

Figure 4-1 "Network data" editor, "Telecontrol" tab

Specification of the connection sequence

Then specify the connection sequence of the created telecontrol connection.

1. Above the second table "Configured connection paths" click the paths symbol .

   The dialog "Add connection paths" opens and the possible connection path are searched for.

2. Select one of the possible connection paths in the top table.

   The connection path(s) are shown with details in the second table.

   – If several connections are displayed in the upper table, you can select one or two redundant connections.

   – If no connection is displayed in the upper table, there is a configuration error in the corresponding stations or networks.

     In this case, close the dialog with the "Close" button and complete the configration.

3. If you want to choose the selected connection path as a "configured connection" click on "Add".

   "Information" in the lower part of the dialog shows whether the connection was added or it is already configured.

4. Close the dialog with the "Close" button if the configured connections correspond to the demands of the project.

   The connection details of every configured connection are displayed in the lower table "Connection path".

The "Configured connection paths" and "Connection path" tables

"Configured connection paths" table

This table shows the configured connections (connection paths) of a telecontrol connection.

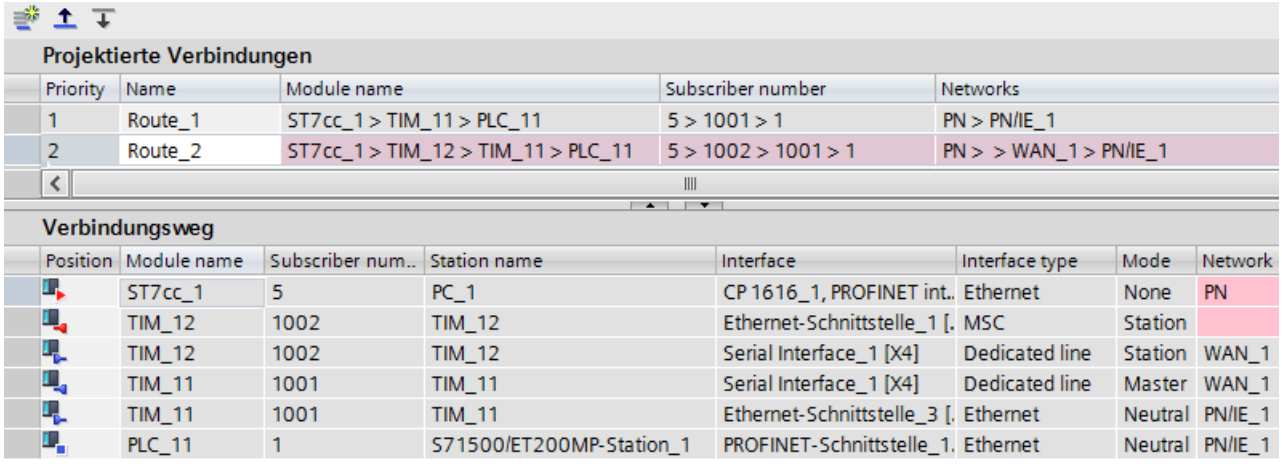

Projektierte Verbindungen

Priority	Name	Module name	Subscriber number	Networks
1	Route_1	ST7cc_1 > TIM_11 > PLC_11	5 > 1001 > 1	PN > PN/IE_1
2	Route_2	ST7cc_1 > TIM_12 > TIM_11 > PLC_11	5 > 1002 > 1001 > 1	PN > > WAN_1 > PN/IE_1

Verbindungsweg

Position	Module name	Subscriber num..	Station name	Interface	Interface type	Mode	Network
	ST7cc_1	5	PC_1	CP 1616_1, PROFINET int..	Ethernet	None	PN
	TIM_12	1002	TIM_12	Ethernet-Schnittstelle_1 [.	MSC	Station	
	TIM_12	1002	TIM_12	Serial Interface_1 [X4]	Dedicated line	Station	WAN_1
	TIM_11	1001	TIM_11	Serial Interface_1 [X4]	Dedicated line	Master	WAN_1
	TIM_11	1001	TIM_11	Ethernet-Schnittstelle_3 [.	Ethernet	Neutral	PN/IE_1
	PLC_11	1	S71500/ET200MP-Station_1	PROFINET-Schnittstelle_1.	Ethernet	Neutral	PN/IE_1

Figure 4-2 Redundant connection with incorrectly configured connection path (Route_2)

Connections shown on a red background are invalid.

In the example the PC station was connected via the PC CP to the MSC network between TIM_11 and TIM_12 which is not allowed.

"Connection path" table

When checking the configured connections. the "Connection path" table supports you.

For every configured connection, the detailed connection path is shown here.

The "Position" column shows a station symbol with a symbol for the connection point (starting point, node, endpoint). Based on the color of the symbols for the connection endpoint you can recognize connections that are not permitted.

- Blue symbols for the connection point: Valid connections
- Red symbols for the connection point: Invalid connections

Bad connections

In the example the connection path "Route_2" was originally created from the application "ST7cc_1" (PC_1) via the MSC network to TIM_12. This continued via the dedicated line network from TIM_12 to TIM_11.

A connection path from the application via an MSC network or via modules with ST7 capability is not permitted.

The connection of the PC station to the MSC network was deleted in the meantime, so that the connection points "ST7cc_1" and "TIM_12" are invalid and their symbols are red.

Redundant telecontrol connections

When different networks between two subscribers have been created in the network configuration the different connection paths are shown in the "Add connection paths" table.

If you only want to use one connection, select only this connection in the table and click "Add".

If you only want to establish a redundant connection, select two connection paths in the table and click "Add". You specify the main and substitute paths between the subscribers after closing the dialog using the "Configured connections" table.

Main and substitute path of a redundant connection

When you have created two connection paths for a telecontrol connection, the first of the two is the main path and the second the substitute path. This is displayed in the "Priority" column of the "Configured connections" table.

You can change the priority of the two connection paths later, i.e. the specification of the main and substitute path. The arrow keys serve this purpose:

Delete invalid or redundant connections

If you have non-permitted or unwanted redundant connections you need to delete one connection. Follow the steps outlined below:

1. To delete a connection in the table "Configured connections", select the connection you do not need.
2. Delete the connection using the shortcut menu "Delete".

Rules for connection configuration

Note the following rules for connection configuration:

- A connection via an inconsistent network is invalid. Examples:
  - Subscriber with incompatible modems
  - Incompatible settings of two modems in a connection
  - Incompatible settings between modem and network parameters
  - Connections via nodes that are not configured as node stations.
- Two connections to one partner (endpoint) via the same interface of a module (start point) are not permitted.
- An MSC connection can only run via the first Ethernet interface [X1] of a TIM or via the serial interface of a module with the setting "IP-based".
- Connections between a PC application and a module can only be of the Network type "Neutral" (S7 connections).
- For connections between a redundant PC application and a module, you need to create two connections.

  For a redundant ST7cc control center, in STEP 7 create two PC stations each with an ST7cc application (see below).

  Only in this way can you configure a connection from each application.
- A connection via a network in which two MD3 modems communicate with each other and that are configured with 1200 bps / half duplex / AT mode is invalid.

Connections to redundant control centers and other properties

If you select a connection in the table "Telecontrol connections" at the top in the "Network data" editor, three parameter groups are displayed in the "Properties" tab of the Inspector window. Here you can check and, if necessary, correct the connection configuration and configure the following properties:

- General

  Here, you will find the basic properties of a telecontrol connection.

  You can change the subscriber number of the connection starting point and endpoint. This affects the configuration data of the subscriber.

- Redundant ST7cc/sc

  If you use a redundant control center in your project (e.g. ST7cc or ST7sc), you must first create two PC stations with CP and application and connect these to the communication module via Ethernet.

  Then you create a telecontrol connection from the application of a PC station (start point) and the communication module (end point).

  Only afterwards do you create the connection to the second application in the redundancy group in this telecontrol connection.

  – Add redundant ST7cc/cc partner

    Activate the option for the selected telecontrol connection between application and module.

  – Redundant application

    Select the second application from the "Redundant application" drop-down list.

- Destination subscriber properties

  The parameter group relates to the destination subscriber that was configured as the endpoint of the connection.

  – General request supervision time

    This is the maximum time that may be required by a destination subscriber (communication module capable of ST7) to respond fully to a general request (GR).

    If the GR response has not arrived completely at the requesting partner when the supervision time has expired, a message is entered in the diagnostics buffer of the module.

    The general request supervision time is 900 seconds.

  – Frames to destination subscriber with time stamp

    Regardless of the configuration all frames are sent to the destination subscriber with a time stamp.

4.7.12 Data points

4.7.12.1 Data point configuration

Data point-related communication with the CPU

No program blocks need to be programmed for telecontrol modules with data point configuration to transfer user data between the station and communications partner.

The data areas in the memory of the CPU intended for communication with the communications partner are configured data point-related on the module. Each data point is linked to a PLC tag or the tag of a data block.

Requirement: Created PLC tags and/or data blocks (DBs)

PLC tags or DBs must first be created on the CPU to allow configuration of the data points.

The PLC tags for data point configuration can be created in the standard tag table or in a user-defined tag table. All PLC tags intended to be used for data point configuration must have the attribute "Visible in HMI".

Address areas of the PLC tags are input, output or bit memory areas on the CPU.

Note

Number of PLC tags

Remember the maximum possible number of PLC tags the can be used for data point configuration in the section Configuration limits and performance data (Page 21).

The formats and S7 data types of the PLC tags that are compatible with the protocol-specific data point types of the module can be found in the section Datapoint types (Page 86).

Access to the memory areas of the CPU

The values of the PLC tags or DBs referenced by the data points are read and transferred to the communications partner by the module.

Data received from the communications partner is written by the module to the CPU via the PLC tags or DBs.

Configuring the data points and messages in STEP 7

You configure the data points in STEP 7 in the data point and message editor. You can open both editors alternatively as follows:

- Selecting the communication module

  Shortcut menu "Open the data point and messages editor"

- Via the project navigation:

  Project > directory of the relevant station > Local modules > required communication module

  By double-clicking on the entry, the data point or message editor opens.

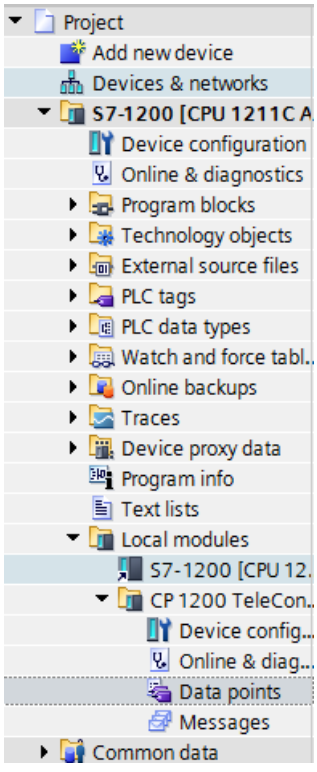

Figure 4-3 Configuring data points and messages

After opening the editor window using the two entries to the right above the table, you can switch over between the data point and message editor.

Figure 4-4 Switching over between the two editors

Creating obects

With the data point or message editor open, create a new object (data point / message) by double clicking "<Add object>" in the first table row with the grayed out entry.

A preset name is written in the cell. You can change the name to suit your purposes but it must be unique within the module.

		Name	PLC tag
1		DataPoint	"Tag_1-BI"
2		DataPoint_1	"Tag_2-BQ"
3		DataPoint_2	"Tag_1-BI"

Figure 4-5 Data point table

You configure the remaining properties of every object using the drop-down lists of the other table columns and using the parameter boxes shown at the bottom of the screen.

Assigning data points to their data source

After creating it, you assign a new data point to its data source. Depending on the data type of the data point a PLC tag can serve as the data source.

For the assignment you have the following options:

- Click on the table symbol in the cell of the "PLC tag" column.

  All configured PLC tags and the tags of the created data blocks are displayed. Select the required data source with the mouse or keyboard.

- Click the symbol ...

  A selection list of the configured PLC Tags and the blocks is displayed. From the relevant table, select the required data source.

- In the name box of the PLC tag, enter part of the name of the required data source.

  All configured PLC tags and tags of the data blocks whose names contain the letters you have entered are displayed.

  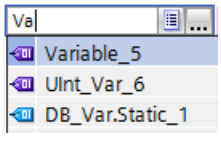

  Select the required data source.

Note

Assignment of parameter values to PLC tags

The mechanisms described here also apply when you need to assign the value of a parameter to a PLC tag. The input boxes fro the PLC tag (e.g.: PLC tag for partner status support the functions described here for selecting the PLC tag.

Arranging and copying objects

As with many other programs in the data point or message editor you can also arrange the columns, sort the table according to your requirements and copy and insert objects.

- Arrange columns

  If you click on a column header with the left mouse button pressed, you can move the column.

- Sorting objects

  If you click briefly with the left mouse button on a column header, you can sort the objects of the table in ascending or descending order according to the entries in this column. The sorting is indicated by an arrow in the column header.

  After sorting in descending order of a column the sorting can be turned off by clicking on the column header again.

- Adapting the column width

  You can reach this function with the following actions:

  – Using the shortcut menu that opens when you click on a column header with the right mouse key.

    "Optimize width", "Optimize width of all columns"

  – If you move the cursor close to the limit of a column header, the following symbol appears:

    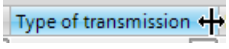

    When it does, click immediately on the column header. The column width adapts itself to the broadest entry in this column.

- Showing / hiding columns

  You call this function using the shortcut menu that opens when you click on a column header with the right mouse key.

- Copying, pasting, cutting and deleting objects

  If you click in a parameter box of an object in the table with the right mouse key, you can use the functions named with the shortcut menu (copy, paste, cut, delete).

  You can paste cut or copied objects within the table or in the first free row below the table.

Exporting and importing data points

To simplify the engineering of larger plants, you can export the data points of a configured module and import them into other modules in the project. This is an advantage particularly in projects with many identical or similar stations or data point modules.

The export / import function is available when you select the module for example in the network or device view and select the relevant shortcut menu.

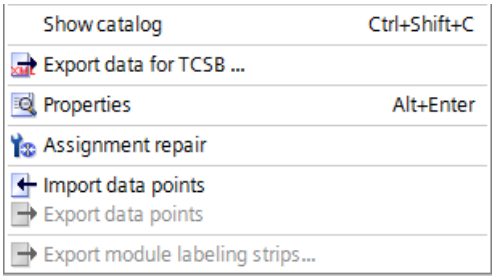

Figure 4-6 Shortcut menu of the module

When it is exported the data point information of a module is written to a CSV file.

Export

When you call the export function, the export dialog opens. Here, you select the module or modules of the project whose data point information needs to be exported. When necessary, you can export the data points of all modules of the project together.

In the export dialog, you can select the storage location in the file directory. When you export the data of a module you can also change the preset file name.

When you export from several modules, the files are formed with preset names made up of the station name and module name.

The file itself contains the following information in addition to the data point information:

- Module name
- Module type
- CPU name
- CPU type

Editing the export files

You can edit the data point information in an exported CSV file. This allows you to use this file as a configuration template for many other stations.

If you have a project with many stations of the same type, you can copy the CSV file with the data points of a fully configured module for other as yet unconfigured stations and adapt individual parameters to the particular station. This saves you having to configure the data points for every module in STEP 7. Instead, you simply import the copied and adapted CSV file to the other modules of the same type. When you import this file into another module, the changed parameter values of the CSV file are adopted in the data point configuration of this module.

The lines of the CSV file have the following content:

- Line 1: ,Name,Type,

  This line must not be changed.
- Line 2: PLC,<CPU name>, <CPU type>,

  Meaning: PLC (designation of the station class), CPU name, CPU type

  Only the elements <CPU name> and <CPU type> may be changed.

  The CPU type must correspond exactly to the name of the CPU in the catalog.
- Line 3: Module,<module name>,<module type>,

  Meaning: Module (Designation of the module class), module type, module name

  Only the elements <module name> and <module type> may be changed.

  Be careful when changing the module names if you want to import data points into several modules (see below).

  The module type must correspond exactly to the name of the module in the catalog.
- Line 4: Parameter names (English) of the data points

  This line must not be changed.
- Lines 5..n: Values of the parameters according to line 4 of the individual data points

  You can change the parameter values for the particular station.

Importing into a module

Before importing the data points make sure that the PLC tags required for the data points have been created.

Note that when you import a CSV file all the data points existing on the module will be deleted and replaced by the imported data points.

Select a module and select the import function from the shortcut menu of the module. The import dialog opens in which you select the required CSV file in the file directory.

If the information on the assignment of the individual data points to the relevant PLC tags matches the assignment in the original module, the data points will be assigned to the corresponding PLC tags.

When you import data points into a module, but some required PLC tags have not yet been created in the CPU, the corresponding data point information cannot be assigned. In this case, you can subsequently create missing PLC tags and them assign them the imported data point information. The "Assignment repair" function is available for this (see below).

If the names of the PLC tags in the module into which the import is made have different names than in the module that exported, the corresponding data points cannot be assigned to your PLC tags.

Importing into several modules

You can import the data points from several modules into the modules of a different project. To do this in the import dialog select all the required CSV files with the control key.

Before importing the data points, make sure that the respective stations have been created with CPUs of the same name, modules of the same name and PLC tags of the same name.

When you import the corresponding stations of the project are searched for based on the module names in the CSV files. If a target station does not exist in the project or the module has a different name, the import of the particular CSV file will be ignored.

Restrictions for the import of data points

In the following situations the import of data points will be aborted:

- An attribute required by the module is missing in the CSV file to be imported.

  Example: If a data point to be imported uses a time trigger, the import will be aborted if no time-of-day synchronization was configured for the module.

- The telecontrol protocol used by the module differs from that of the original module.

Only when importing into several modules:

- The import is aborted when a module or CPU name is different from the data in the CSV file.

Note:
Modules with the same telecontrol protocol are compatible with each other:

- TeleControl Basic

  All SIMATIC NET modules with the TeleControl Basic protocol:

  CP 1243-1, CP 1242-7 GPRS V2, CP 1243-7 LTE, CP 1542SP-1 IRC

- ST7

  CP 1243-8 IRC, CP 1542SP-1 IRC, ST7 TIM

- DNP3

  CP 1243-1, CP 1243-8 IRC, TIM modules capable of DNP3

- IEC

  CP 1243-1, CP 1243-8 IRC

Data points can be imported and exported between compatible modules.

Assignment repair

If you have named the PLC tags in a station into which you want to import differently from the station from which the CSV file was exported, the assignment between data point and PLC tag is lost when you import.

You then have the option to either rename the existing PLC tags appropriately or add missing PLC tags. You can then repair the assignment between unassigned data points and PLC tags. This function is available either via the shortcut menu of the module (see above) or with the following icon to the upper left in the data point editor:

If a PLC tag with a matching name is found for a data point by the repair function, the assignment is restored. However the data type of the tag is not checked.

After the assignment repair make sure that you check whether the newly assigned PLC tags are correct.

Character set for data point names

When you create a data point, a preset name "DataPoint_n" is adopted. In the data point table and in the "General" tab of the data point you can change the name of the data point.

When assigning names only ASCII characters from the band 0x20 ... 0x7e (no. 32-126) may be used with the exceptions listed below.

Forbidden characters:

- . ' [ ] / \ |
  period, apostrophe, square brackets, slash, back slash, vertical line (pipe)

4.7.12.2 Datapoint types

Supported data point types of the CP 1542SP-1 IRC

During the configuration of the user data to be transferred by the CP 1542SP-1 IRC, each data point is assigned a protocol-specific data point type. The data point types along with the compatible S7 data types are listed below. They are grouped according to format (memory requirements).

Note

Effect of the change of arrays for data points

If an array is modified later, the data point must be recreated.

TeleControl Basic: Data point types

Table 4- 2 Supported data point types and compatible S7 data types

Format (memory requirements)	Data point type	Direction	S7 data types	Operand area
Bit	Digital input	in	Bool	I, Q, M, DB
	Digital output	in	Bool	Q, M, DB
Byte	Digital input	in	Byte, Char, USInt	I, Q, M, DB
	Digital output	out	Byte, Char, USInt	Q, M, DB
Integer with sign (16 bits)	Analog input	in	Int	I, Q, M, DB
	Analog output	out	Int	Q, M, DB
Counter (16 bits)	Counter input	in	Word, UInt	I, Q, M, DB
Integer with sign (32 bits)	Analog input	in	DInt	Q, M, DB
	Analog output	out	DInt	Q, M, DB
Counter (32 bits)	Counter input	in	UDInt, DWord	I, Q, M, DB
Floating-point number with sign (32 bits)	Analog input	in	Real	Q, M, DB
	Analog output	out	Real	Q, M, DB
Floating-point number with sign (64 bits)	Analog input	out	LReal	Q, M, DB
	Analog output	out	LReal	Q, M, DB
Block of data (1 .. 64 bytes)	Data	in / out	ARRAY [1)]	DB
	Data	in / out	ARRAY [1)]	DB

[1)] For the possible formats of the ARRAY data type, refer to the following section.

Block of data (ARRAY)

With the ARRAY data type, contiguous memory areas up to a size of 64 bytes can be transferred. The following S7 data types are compatible components of ARRAY:

- Byte, USInt (total of up to 64 per data block)
- Char (total of up to 64 per data block)
- Int, UInt, Word (total of up to 32 per data block)
- DInt, UDInt, DWord (total of up to 16 per data block)

Time stamp in UTC format

Time stamps are output by the OPC server applications in UTC format (48 bits) and contain milliseconds.

Data point types of the "ST7" protocol

The direction of the data transfer is specified in the "Data point type" column:

- Monitoring direction

  The objects (right column) for the monitoring direction have the abbreviation "_S".
- Control direction

  The objects (right column) for the control direction have the abbreviation "_R".

Table 4- 3 Supported data point types and compatible S7 data types

Format (memory requirements)	Data point type	S7 data type	Operand area	Number of data points per object	Object
Bit	Digital input	Bool	I, Q, M, DB	8	Bin08X_S
	Digital output	Bool	Q, M, DB	8	Bin08X_R
Byte	Digital input	Byte, USInt	I, Q, M, DB	4	Bin04B_S
	Digital output	Byte, USInt	Q, M, DB	4	Bin04B_R
	Command output	Byte, USInt	Q, M, DB	1	Cmd01B_R
Integer with sign (16 bits)	Analog input	Int	I, M, DB	4	Ana04W_S
	Mean value input	Int	I, M, DB	4	Mean04W_S
	Analog output	Int	Q, M, DB	4	Ana04W_R
	Mean value output	Int	Q, M, DB	4	Mean04W_R
	Setpoint output [1)]	Int	Q, M, DB	1	Set01W_R
Counter (16 bits)	Counter input	UInt, Word	I, Q, M, DB	1	Cnt01D_S
	Counter input	UInt, Word	I, Q, M, DB	4	Cnt04D_S
Floating-point number (32 bits)	Analog input	Real	M, DB	4	Ana04R_S
	Analog output	Real	Q, M, DB	4	Ana04R_R
Block of data (4 .. 48 bytes)	Data input	ARRAY [1...12] of DInt / UDInt / DWord / Real [2)]	DB	12	Dat12D_S
	Data output		DB	12	Dat12D_R
	Parameter output [1)]		DB	12	Par12D_R

[1)] See below, section "1: Mirroring back"

[3)] See below, section "2: Block of data"

1: Mirroring back

The mirroring back function using the "Value monitoring" parameter can be configured for the following data point types:

- Setpoint Output
- Parameter Output

The local values of the data points of this type can be monitored for changes and the changes transferred to the master with the "Value monitoring" function.

A change to a local value can be caused by, for example, manual operator input on site.

To allow the value resulting from local events or interventions to be transferred to the master station, a mirroring back channel is generated for the relevant data point with the "Value monitoring" function via which the locally changed value is mirrored back.

Remember that to use the mirror back function, you need to interconnect the local values in the controller with the relevant PLC tag of the data point.

2: Block of data

With the ARRAY data type, blocks of data from contiguous memory areas up to a size of 4 .. 48 bytes can be transferred.

Compatible components of ARRAY are DInt, UDint, DWord or Real. The components within an array must be of the same type.

Format of the time stamp

For information on the format of the time stamp, see section Time stamp of the "ST7" protocol (Page 92).

Data point types of the "DNP3" protocol

Table 4- 4 Supported data point types, DNP3 object groups, variants and compatible S7 data types

Format (memory requirements)	Data point type	DNP3 object group [variations]	Direction	S7 data types		Operand area
				CP	TIM	
Bit	Binary Input	**1** [1, 2]	in	Bool	Bool	I, Q, M, DB
	Binary Input Event	**2** [1, 2]	in	Bool	Bool	I, Q, M, DB
	Binary Output [1)]	**10** [2]	out	Bool	Bool	Q, M, DB
	Binary Output Event [1)]	**11** [1, 2]	out	Bool	Bool	Q, M, DB
	Binary Command	**12** [1]	out	Bool	-	Q, M, DB
			in / out	-	Byte	
Integer (16 bits)	Counter Static	**20** [2]	in	UInt, Word	-	I, Q, M, DB
	Counter Static		out	-	Word	Q, M, DB
	Frozen Counter [2)]	**21** [2, 6]	in	UInt, Word	Word	I, Q, M, DB
	Counter Event	**22** [2, 6]	in	UInt, Word	Word	I, Q, M, DB
	Frozen Counter Event [3)]	**23** [2, 6]	in	UInt, Word	Word	I, Q, M, DB
	Analog Input	**30** [2]	in	Int	Int	I, Q, M, DB

Format (memory requirements)	Data point type	DNP3 object group [variations]	Direction	S7 data types		Operand area
				CP	TIM	
	Analog Input Event	**32** [2]	in	Int	Int	I, Q, M, DB
	Analog Output Status [4]	**40** [2]	out	Int	Int	Q, M, DB
	Analog Output	**41** [2]	out	Int	Int	Q, M, DB
	Analog Output Event [4]	**42** [2, 4]	out	Int	Int	Q, M, DB
Integer (32 bits)	Counter Static	**20** [1]	in	DWord	DWord	I, Q, M, DB
			out			Q, M, DB
	Frozen Counter [2]	**21** [1, 5]	in	DWord	DWord	I, Q, M, DB
			out			Q, M, DB
	Counter Event	**22** [1, 5]	in	DWord	DWord	I, Q, M, DB
			out			Q, M, DB
	Frozen Counter Event [3]	**23** [1, 5]	in	DWord	DWord	I, Q, M, DB
			out			Q, M, DB
	Analog Input	**30** [1]	in	DInt	-	Q, M, DB
	Analog Input Event	**32** [1]	in	DInt	-	Q, M, DB
	Analog Output Status [4]	**40** [1, 3]	out	DInt	DWord	Q, M, DB
	Analog Output	**41** [1]	out	DInt	DWord	Q, M, DB
	Analog Output Event [4]	**42** [1]	out	DInt	DWord	Q, M, DB
Floating-point number (32 bits)	Analog Input	**30** [5]	in	Real	-	Q, M, DB
	Analog Input Event	**32** [5, 7]	in	Real	-	Q, M, DB
	Analog Output Status [4]	**40** [3]	out	Real	-	Q, M, DB
	Analog Output	**41** [3]	out	Real	-	Q, M, DB
	Analog Output Event [4]	**42** [5, 7]	out	Real	-	Q, M, DB
Floating-point number (64 bits)	Analog Input	**30** [6]	in	LReal	-	Q, M, DB
	Analog Input Event	**32** [6, 8]	in	LReal	-	Q, M, DB
	Analog Output	**41** [4]	out	LReal	-	Q, M, DB
	Analog Output Event [4]	**42** [6, 8]	out	LReal	-	Q, M, DB
Block of data (1...64 bytes) [5]	Octet String / Octet String Output	**110** [-]	in, out	[5]	[5]	DB
	Octet String Event [5]	**111** [-]	in, out	[5]	[5]	DB

[1] This object group can be configured in the Data point editor of STEP 7 using the substitute object group 12.

[2] This object group can be configured in the Data point editor of STEP 7 using the substitute object group 20.

[3] This object group can be configured in the Data point editor of STEP 7 using the substitute object group 22.

[4] This object group can be configured in the Data point editor of STEP 7 using the substitute object group 41.

[5] With these data point types, contiguous memory areas up to a size of 64 bytes can be transferred. All S7 data types with a size between 1 and 64 bytes are compatible.

Explanation of the table footnotes [1], [2], [3], [4]: Configuring data points using substitute object groups

The initial data point types of the following object groups can be configured using the substitute object groups listed above:

- 10 [2]
- 11 [1, 2]
- 21 [1, 2, 5, 6]
- 23 [1, 2, 5, 6]
- 40 [1, 2, 3]
- 42 [1, 2, 4, 5, 6, 7, 8]

To configure in the DNP3 CP, use the specified substitute object group.

Assign each data point on the master using the configurable data point index in STEP 7. The data point of the DNP3 CP is then assigned to the corresponding data point on the master.

Example of configuring the data point Binary Output (10 [2])
The data point is configured as follows:
On the DNP3 CP as Binary Command (12 [1])
On the master as Binary Output (10 [2])

With the data point types Binary Output Event (11) and Analog Output Event (42), you also need to enable mirroring back; refer to the next section.

Configuration of mirroring back for output events (object groups 11 and 42)

You first create the data point types Binary Output Event (object group 11) and Analog Output Event (object group 42) as described above as data points of the object groups 12 or 41.

The local values of these two object groups can be monitored for changes and the changes transferred to the master. A change to a local value can be caused by, for example, manual operator input on site.

To allow the value resulting from local events or interventions to be transferred to the master, the data point in question requires a channel for mirroring back. You configure this mirroring back function using the "Value monitoring" option in data point configuration, "General" tab.

Remember that to use the mirror back function, you need to interconnect the local values in the controller with the relevant PLC tag of the data point.

Time stamp of the data with the DNP3 protocol in UTC format

Time stamps are transferred in UTC format (48 bits) and contain milliseconds.

Data point types of the "IEC 60870-5" protocol

Table 4- 5 Supported data point types, IEC types and compatible S7 data types

Format (memory requirements)	Data point type	IEC type	Direction	S7 data types	Operand area
Bit	Single-point information	<1>	in	Bool	I, Q, M, DB
	Single-point information with time tag CP56Time2a [1]	<30>	in	Bool	I, Q, M, DB
	Single command	<45>	out	Bool	Q, M, DB
	Single command with time tag CP56Time2a [1]	<58>	out	Bool	Q, M, DB
Byte	Step position information	<5>	in	Byte, USInt	I, Q, M, DB
	Step position information with time tag CP56Time2a [1]	<32>	in	Byte, USInt	I, Q, M, DB
Integer (16 bits)	Measured value, normalized value	<9>	in	Int	I, Q, M, DB
	Measured value, normalized value with time tag CP56Time2a [1]	<34>	in	Int	I, Q, M, DB
	Measured value, scaled value	<11>	in	Int	I, Q, M, DB
	Measured value, scaled value with time tag CP56Time2a [1]	<35>	in	Int	I, Q, M, DB
	Set point command, normalised value	<48>	out	Int	Q, M, DB
	Set point command, scaled value	<49>	out	Int	Q, M, DB
	Set point command, normalised value with time tag CP56Time2a [1]	<61>	out	Int	Q, M, DB
	Set point command, scaled value with time tag CP56Time2a [1]	<62>	out	Int	Q, M, DB
Integer (32 bits)	Bitstring of 32 bits	<7>	in	UDInt, DWord	I, Q, M, DB
	Bitstring of 32 bits with time tag CP56Time2a [1]	<33>	in	UDInt, DWord	I, Q, M, DB
	Integrated totals	<15>	in	UDInt, DWord	I, Q, M, DB
	Integrated totals with time tag CP56Time2a [1]	<37>	in	UDInt, DWord	I, Q, M, DB
	Bitstring of 32 bits	<51>	out	UDInt, DWord	Q, M, DB
	Bitstring of 32 bits with time tag CP56Time2a - control direction [1]	<64>	out	UDInt, DWord	Q, M, DB
Floating-point number (32 bits)	Measured value, short floating point number	<13>	in	Real	Q, M, DB
	Measured value, short floating point number with time tag CP56Time2a [1]	<36>	in	Real	Q, M, DB
	Set point command, short floating point number	<50>	out	Real	Q, M, DB
	Set point command, short floating point with time tag CP56Time2a [1]	<63>	out	Real	Q, M, DB
Block of data (1...2 Bit) [2]	Double-point information	<3>	in	[2]	DB
	Double-point information with time tag CP56Time2a [1]	<31>	in	[2]	DB
	Double command	<46>	out	[2]	DB

Format (memory requirements)	Data point type	IEC type	Direction	S7 data types	Operand area
	Regulating step command	<47>	out	2)	DB
	Double command with time tag CP56Time2a 1) 2)	<59>	out	2)	DB
	Regulating step command with time tag CP56Time2a 1) 2)	<60>	out	2)	DB
Block of data (1...32 Bit) 3)	Bitstring of 32 bits 3)	<7>	in	3)	DB
	Bitstring of 32 bits with time tag CP56Time2a 1) 3)	<33>	in	3)	DB
	Bitstring of 32 bits 3)	<51>	out	3)	DB
	Bitstring of 32 bits with time tag CP56Time2a - control direction 1) 3)	<64>	out	3)	DB

1) For the format of the time stamp, see the following section.

2) For these data point types, create a data block with an array of precisely 2 bool.

3) With these data point types, contiguous memory areas up to a size of 32 bits can be transferred. Only the S7 Bool data type is compatible.

Time stamp of the data with the IEC protocol

Time stamps are transferred according to the IEC specification in the "CP56Time2a" format. Note that only the first 3 bytes for milliseconds and minutes are transferred.

4.7.12.3 Time stamp of the "ST7" protocol

Time stamp of the ST7 frames

The values of the data points are transferred by the communications moduel with a time stamp, see also section Creating telecontrol connections for the ST7 communication (Page 73), subsection "Connections to redundant control centers and other properties".

Format of the time stamp

The ST7 time stamp is coded in BCD format. The exception is the half byte (nibble) with the time status.

The structure of 8 bytes is assigned as follows:

Table 4- 6 Assignment of the structure of the time stamp

Byte no.	Content	
	High nibble	Low nibble
0	Year * 10	Year * 1
1	Month * 10	Month * 1
2	Day * 10	Day * 1
3	Hour * 10	Hour * 1
4	Minute * 10	Minute * 1
5	Second * 10	Second * 1
6	Millisecond * 100	Millisecond * 10
7	Millisecond * 1	Time status

Table 4- 7 The assignment of the half byte "time status" (low nibble of byte 7)

Bit No.	Value	Meaning
0	0	Time is invalid
	1	Time is valid
1	0	Standard time
	1	Daylight saving time
2		*Not used*
3		*Not used*

4.7.12.4 Status IDs of the data points

Status IDs of data points

The status IDs od the data points listed below are transferred for each data point in each frame. They differ slightly in the three protocol types.

For the meaning of the status bits, see below. The "Meaning" (2nd table row) relates to the "bit status" (3rd table row).

Generation of events if a data point status changes

With data points that were configured as an event, the change to the status bit of the status identifiers described below also leads to an event being generated.

Example: If the value of the status "RESTART" of a data point configured as an event changes form 1 (value not yet updated) to 0 (value updated) when the station starts up, this causes an event to be generated.

Status IDs - TeleControl Basic

The status bits are converted to the OPC quality code as follows by TCSB.

- Quality = BAD, If:

  NON_EXISTENT or OVER_RANGE = 1
- Quality = UNCERTAIN, If:

  RESTART or CARRY or SB = 1
- Quality = GOOD, If:

  Bits 1, 2, 3, 5 and 6 = 0

Table 4- 8 Bit assignment of status byte 0

Bit	7	6	5	4	3	2	1	0
Flag name	-	NON_ EXISTENT	SB	LOCAL_ FORCED	CARRY	OVER_ RANGE	RESTART	ONLINE
Meaning	-	Data point does not exist or S7 address unreachable	Substitute value	*(Bit is not set)*	Counted value over-flow before reading the value	Limit value of the ana-log value prepro-cessing overshot / undershot	Value not yet updated after start	Value is valid, CPU in RUN
Bit status	*(always 0)*	1	1	*(irrelevant)*	1	1	1	1

Status IDs - TeleControl Basic

The status IDs can be evaluated by the master. They correspond to the following elements of the specification:

OBJECT FLAGS - DNP3 Specification, Volume 6, Data Object Library - Part 1

Table 4- 9 Bit assignment of the status byte

Bit	7	6	5	4	3	2	1	0
Flag name	-	-	-	LOCAL_ FORCED	DISCONTI NUITY	OVER_ RANGE	RESTART	ONLINE
Meaning	-	-	-	Local opera-tor control	Counted value over-flow before reading the value	Limit value of the analog value prepro-cessing over-shot / undershot	Value not updated after start	Value is invalid
Bit status	*(always 0)*	*(always 0)*	*(always 0)*	1	1	1	1	1

Status IDs - IEC

The status IDs can be evaluated by the master. They correspond to the following elements of the specification:

Quality descriptor - IEC 60870 Part 5-101

Table 4- 10 Bit assignment of the status byte

Bit	7	6	5	4	3	2	1	0
Flag name	-	-	SB substituted	-	CY carry	OV overflow	NT not topical	IV invalid
Meaning	-	-	Substitute value	-	Counted value over-flow before reading the value	Value range exceeded, analog value	Value not updated	Value is valid
Bit status	*(always 0)*	*(always 0)*	1	*(always 0)*	1	1	1	0

4.7.12.5 "General" tab

"General" tab

Not all of the following parameters are supported by all protocols.

General parameters

- Data point index

  With the TeleControl Basic, DNP3 and IEC protocols, the index is an addressing parameter for a data point. Below you will find the rules for configuring in the section Configuration of the data point index (Page 96).

  In ST7 a data point is addressed by the object number and the channel (see below).

- Type of transmission

  The type of transmission determines whether the value of the data point is only saved in the image memory or also in the send buffer of the CP. See section Process image, type of transmission, event classes (Page 97) for information on this.

- Read cycle

  Prioritizes the reading or writing of the data point value in the scan cycle of the CPU; see section Read cycle (Page 100).

  The fast cycle is suitable for data to be acquired quickly (alarms, contact changeover messages) and ST7 data points for the 1-out-of-n check. They are read in every cycle.

DNP3- and IEC-specific parameters

- Value monitoring

  If the option is enabled, the value of the PLC tag of the output data point is monitored for changes.

  If the value of the PLC tag is changed, for example by manual operator input on site, an event is generated and the changed value is transferred to the communications partner (mirrored back).

  Remember that to use the mirror back function, you need to interconnect the local values in the controller with the PLC tag of the data point.

- Response to general request

  Enables the data point for the response to a general request. If the function is disabled, the value of the data point is not sent to the communications partner following a general request.

- Assignment to group request

  Assigns the data point to a station group for group requests. If a group request is sent to this group by the master, the value of the data point is sent to the master.

ST7-specific parameters

- High priority

  If the option is enabled, the transfer has higher priority (important process data). The values of the data point are transferred before those of lower priority data points.

- Object number

  The object number must be unique and the maximum permitted number of data points per SINAUT object must not be exceeded. Refer to the column "Number of data points per SINAUT object" in the section Datapoint types (Page 86).

- Object channel

  The object channel is the channel of the corresponding SINAUT object.

- Partner object number

  Object number of the data point on the partner

  Per object number, you need to specify a unique object number of the communications partner.

  This must result in unique pairs of "Object number" and "Partner object number".

4.7.12.6 Configuration of the data point index

Configuration of the data point index

Below you will find the rules for configuring the data point index for the various protocols.

TeleControl Basic

Within a CP, the indexes of the data point classes must comply with the following rules:

- Input

  The index of an input data point must be unique throughout all data point types (digital inputs, analog inputs etc.).

- Output

  The index of an output data point must be unique throughout all data point types (digital inputs, analog inputs etc.).

Note

Index for data points with inter-station communication

Note that for inter-station communication with a CP in another S7 station, the indexes of the two corresponding data points (data point pair) must be identical on the sending and receiving CP.

For information on the configuration, see section Partner stations (Page 116).

DNP3

On a CP, data point indexes must be unique within each of the following object groups:

- Binary Input / Binary Input Event
- Binary Output / Binary Command
- Counter / Counter Event
- Analog Input / Analog Input Event
- Analog Output
- Octet String / Octet String Event

Indexes of two data points in different object groups can be identical.

IEC

The data point indexes must be unique in a CP.

Data point indexes assigned twice are indicated as errors in the consistency check and prevent the project being compiled.

4.7.12.7 Process image, type of transmission, event classes

Saving the data point values

The values of data points are generally stored in the image memory of the CP.

Events are also stored in the send buffer and can be transferred unsolicited.

Data points are configured as a static value or as an event using the "Type of transmission" parameter (see below).

The image memory, the process image of the CP

The image memory is the process image of the communications module. All the current values of the configured data points are stored in the image memory. New values of a data point overwrite the last stored value in the image memory.

The values are only transferred under the following conditions:

- After a query by the communications partner; see "Transfer after call" in the "Types of transmission" section below.
- Along with a data frame from the send buffer that needs to be transferred immediately.

The send buffer

The send buffer of the CP is the memory for the individual values of data points that are configured as an event. The maximum number is divided equally among all configured and enabled communications partners. You configure the size of the send buffer with the parameter "Frame memory size", see the section Communication with the CPU (Page 70).

If the connection to a communications partner is interrupted, the individual values of the events are retained in the buffer. When the connection returns, the buffered values are sent. The frame memory operates chronologically; in other words, the oldest data is sent first (FIFO principle).

If a data frame was transferred to the communications partner, the transferred data is deleted from the send buffer.

If data cannot be transferred for a longer period of time and the send buffer is threatening to overflow, the protocol-dependent response is as follows:

- Telecontrol Basic, ST7

  The forced image mode

  If the send buffer reaches a certain fill level, the module changes to the forced image mode. The fill level for changing to the forced image mode is:

  – Telecontrol Basic: 80% occupation of the send buffer

  – ST7: 90% occupation of the send buffer

  New values of data points configured as an event are no longer added to the send buffer in forced image mode. Rather, they overwrite older existing values in the image memory.

  When the connection to the communications partner returns, the module changes back to the send buffer mode as soon as the fill level of the send buffer has fallen below 50%.

- DNP3 / IEC

  If the fill level of the send buffer reaches 100%, no more values are saved until the fill level falls below 100% again.

Static values and events

The following relationship exists between the memory areas of the CP and the "Type of transmission":

- **Static value (no event)**

  Static values are entered in the image memory (process image of the CP).

  With DNP3 and IEC, static values correspond to the following classes:

  – DNP3: Class 0

  – IEC: Class 2

- **Event**

  The values of data points configured as an event are also entered in the image memory.

  The values of events are entered in the send buffer of the communications module in addition.

  With DNP3 and IEC, events correspond to the following classes:

  – DNP3: Class 1 / 2 / 3

  – IEC: Class 1

A data point is configured as a static value or as an event using the "Type of transmission" parameter (see below).

Type of transmission

The following types of transmission are possible:

- **Transfer after call (class 0)**

  The current value of the data point is entered as static value in the image memory of the CP. New values of a data point overwrite the last stored value in the image memory.

  After being called by the communications partner, the current value at the time is transferred.

- **Triggered (events)**

  The values of data points configured as an event are entered in the image memory and also in the send buffer of the CP.

  The values of events are saved in the following situations:

  – The configured trigger conditions are fulfilled (data point configuration > "Trigger" tab, see below)

  – The value of a status bit of the status identifiers of the data point changes; see also the section Status IDs of the data points (Page 93).

    Example:
    When the value of a data point configured as an event is updated during startup of the station by reading the CPU data for the first time, the status "RESTART" of this data point changes (bit status change 1 → 0). This leads to the generation of an event.

  Events can be transmitted spontaneously; see below (Time of transmission).

Event classes with the "Triggered" type of transmission

Depending on the protocol used the following event classes are available:

- **TeleControl Basic / ST7**

  – **Every value triggered**

    Each value change is entered in the send buffer in chronological order.

  – **Current value triggered**

    Only the last, current value is entered in the send buffer. It overwrites the value stored there previously.

- DNP3

  The evaluation of the following classification must be handled by the master.

  - Event class 1

    Class according to DNP3 protocol: Class 1

    Each value change is entered in the send buffer in chronological order.

  - Event class 2

    Class according to DNP3 protocol: Class 2

    Each value change is entered in the send buffer in chronological order.

  - Event class 3

    Class according to DNP3 protocol: Class 3

    Only the current value at the time the trigger condition is met is entered in the send buffer and overwrites the last value stored there.

- IEC

  Both of the following event classes correspond to the user data class 1 of the IEC protocol

  - Every value triggered

    Each value change is entered in the send buffer in chronological order.

  - Current value triggered

    Only the current value at the time the trigger condition is met is entered in the send buffer and overwrites the last value stored there.

For the possible trigger types, see section "Trigger“ tab (Page 102).

4.7.12.8 Read cycle

Priority of the data points

The cyclic reading of the values of input data points from their assigned PLC tags on the CPU can be prioritized.

Less important input data points do not need to be read in every CPU scan cycle. Important input data points, on the other hand, can be prioritized for updating in every CPU scan cycle.

You can prioritize the data points in STEP 7 in the data point configuration in the "General" tab with the "Read cycle" parameter. There you will find the two following options for input data points:

- Fast cycle
- Normal cycle

The data points are read according to the method described below.

Structure of the CPU scan cycle

The cycle (including the pause) with which the CP scans the memory area of the CPU is made up of the following phases:

- **High-priority read jobs**

  The values of input data points with the scan priority "High-priority" are read in every scan cycle.

- **Low priority read jobs**

  Some of the values of input data points with the scan priority "Low-priority" are read in every scan cycle.

  The number of values read per cycle is specified for the CP in the "Communication with the CPU" parameter group with the "Max. number of read jobs" parameter. The values that exceed this value and can therefore not be read in one cycle are then read in the next or one of the following cycles.

- **Write jobs**

  In every cycle, the values of a certain number of unsolicited write jobs are written to the CPU. The number of values written per cycle is specified for the CP in the "Communication with the CPU" parameter group with the "Max. number of write jobs" parameter. The values whose number exceeds this value are then written in the next or one of the following cycles.

- **Cycle pause time**

  This is the waiting time between two scan cycles. It is used to reserve adequate time for other processes that access the CPU via the backplane bus of the station.

4.7.12.9 ST7 objects

Objects of TD7 software

The telecontrol communication of modules that use the SINAUT ST7 telecontrol protocol is handled by the TD7 software.

The data to be transferred is configured with SINAUT objects.

Data objects

The sending and receiving of process data is configured with the aid of standardized data objects. According to the two transmission directions, these are divided into:

- **Send objects (.._S)**

  Data objects for acquiring and sending data

  Their names have the ending "_S" (send).

- **Receive objects (.._R)**

  The data objects for receiving and outputting data

  Their names have the ending "_R" (receive).

The data objects are available in the Data point editor and are configured for the communication between the partners.

Object channels

The send and receive channels of the data objects are responsible for the processing of an individual process value, for example for processing and sending an analog value or receiving and outputting a command byte.

Each data object contains one or more send or receive channels. The number and type of send and receive channels per data object cannot be modified. The data object "Ana04W_S", for example, has 4 send channels of the type "send analog value".

If objects have multiple channels of the same type, not all channels need to be activated if they are not required.

4.7.12.10 "Trigger“ tab

Trigger

Data points are configured as a static value or as an event using the "Type of transmission" parameter:

Saving the value of a data point configured as an event

Saving the value of a data point configured as an event in the send buffer (frame memory) can be triggered by various trigger types:

- **Threshold value trigger**

  The value of the data point is saved when this reaches a certain threshold. The threshold is calculated as the difference compared with the last stored value, refer to the section Threshold value trigger (Page 103).

- **Time trigger**

  The value of the data point is saved at configurable intervals or at a specific time of day.

- **Event trigger (Trigger tag)**

  The value of the data point is saved when a configurable trigger signal is fired. For the trigger signal, the edge change (0 → 1) of a trigger tag is evaluated that is set by the user program. When necessary, a separate trigger tag can be configured for each data point.

  Resetting the trigger tag in the bit memory area / DB:

  If the memory area of a trigger tag is in the bit memory or in a data block, the CP resets the trigger variable itself to 0 (zero) as soon as the value of the data point has been transferred. This can take up to 500 milliseconds.

Note

Fast setting of triggers

Triggers must not be set faster than a minimum interval of 500 milliseconds. This also applies to hardware triggers (input area).

Note

Hardware trigger

You need to reset hardware triggers via the user program.

Time of transmission of a triggered data point (event)

With the DNP3 and IEC protocols, the spontaneous transmission of events depends on whether spontaneous sending or asymmetric communication is possible in the network. With DNP3, spontaneous sending of the module over the "Transmission mode" parameter can be enabled in the transfer settings of the Ethernet interface.

With the TeleControl Basic and ST7 protocols, you define the time using the "Transmission mode" parameter.

Transmission mode

You determine whether TeleControl Basic and ST7 values are sent immediately or following a delay with the transmission mode of a data point ("Trigger" tab):

- Spontaneous (unsolicited - direct transfer)

  The value is transferred immediately.

- Conditional spontaneous (buffered transfer)

  The value is transferred only when one of the following conditions is fulfilled:

  – The communications partner queries the station.

  – The value of another event with the transmission mode "Spontaneous" is transferred.

  – The fill level of the send buffer has reached 80% (TeleControl Basic) or 90% (ST7) of its maximum capacity.

4.7.12.11 Threshold value trigger

Note

Threshold value trigger: Calculation only after "Analog value preprocessing"

Note that the analog value preprocessing is performed before the check for a configured threshold value and before calculating the threshold value.

This affects the value that is configured for the threshold value trigger.

Note

No Threshold value trigger if Mean value generation is configured

If mean value generation is configured, no threshold value trigger can be configured for the analog value event involved.

For the time sequence of the analog value preprocessing refer to the section Analog value preprocessing (Page 105).

Threshold value trigger

Function

If the process value deviates by the amount of the threshold value, the process value is saved.

Two methods are used to calculate the threshold value deviation:

- **Absolute method**

  With binary and counter values as well as with analog values with configured mean value generation, the absolute method is used to calculate the threshold value deviation.

- **Integrative method**

  With analog values without configured mean value generation, the integrating method is used to calculate the threshold value deviation.

  In the integration threshold value calculation, it is not the absolute value of the deviation of the process value from the last stored value that is evaluated but rather the integrated deviation.

Absolute method

For each binary value a check is made to determine whether the current (possibly smoothed) value is outside the threshold value band. The current threshold value band results from the last saved value and the amount of the configured threshold value:

- Upper limit of the threshold value band: Last saved value + threshold value
- Lower limit of the threshold value band: Last saved value - threshold value

As soon as the process value reaches the upper or lower limit of the threshold value band, the value is saved. The newly saved value serves as the basis for calculating the new threshold value band.

Integrative method

The integration threshold value calculation works with a cyclic comparison of the integrated current value with the last stored value. The calculation cycle in which the two values are compared is 500 milliseconds.
(Note: The calculation cycle must not be confused with the scan cycle of the CPU memory areas).

The deviations of the current process value are totaled in each calculation cycle. The trigger is set only when the totaled value reaches the configured value of the threshold value trigger and a new process value is entered in the send buffer.

The method is explained based on the following example in which a threshold value of 2.0 is configured.

Table 4- 11 Example of the integration calculation of a threshold value configured with 2.0

Time [s] (calculation cycle)	Process value stored in the send buffer	Current process value	Absolute deviation from the stored value	Integrated deviation
0	**20.0**	**20.0**	0	0
0.5		20.3	+0.3	0.3
1.0		19.8	-0.2	0.1
1.5		20.2	+0.2	0.3
2.0		20.5	+0.5	0.8
2.5		20.3	+0.3	1.1
3.0		20.4	+0.4	1.5
3.5	**20.5**	**20.5**	+0.5	**2.0**
4.0		20.4	-0.1	-0.1
4.5		20.1	-0.4	-0.5
5.0		19.9	-0.6	-1.1
5.5		20.1	-0.4	-1.5
6.0	**19.9**	**19.9**	-0.6	**-2.1**

With the changes in the process value shown in the example, the threshold value trigger configured with 2.0 fires twice:

- At the time 3.5 s: The value of the integrated deviation is at 2.0. The new process value stored in the send buffer is 20.5.
- At the time 6.0 s: The value of the integrated deviation is at 2.1. The new process value stored in the send buffer is 19.9.

In this example, if a deviation of the process value of approximately 0.5 should fire the trigger, then with the behavior of the process value shown here a threshold value of approximately 1.5 ... 2.5 would need to be configured.

4.7.12.12 Analog value preprocessing

CPs with data point configuration support analog value preprocessing. For analog value data points, some or all of the functions described below can be configured.

Requirements and restrictions

You will find the requirements for the configuration of the preprocessing options and restrictions in the section relating to the particular function.

Note

Restrictions due to configured triggers

The analog value preprocessing options "Error suppression time", "Limit value calculation" and "Smoothing" are not performed if no threshold value trigger is configured for the relevant data point. In these cases, the read process value of the data point is entered in the image memory of the CP before the preprocessing cycle of the threshold value calculation (500 ms) elapses.

Sequence of the analog value preprocessing options

The values of analog inputs configured as an event are processed on the CPU according to the following scheme:

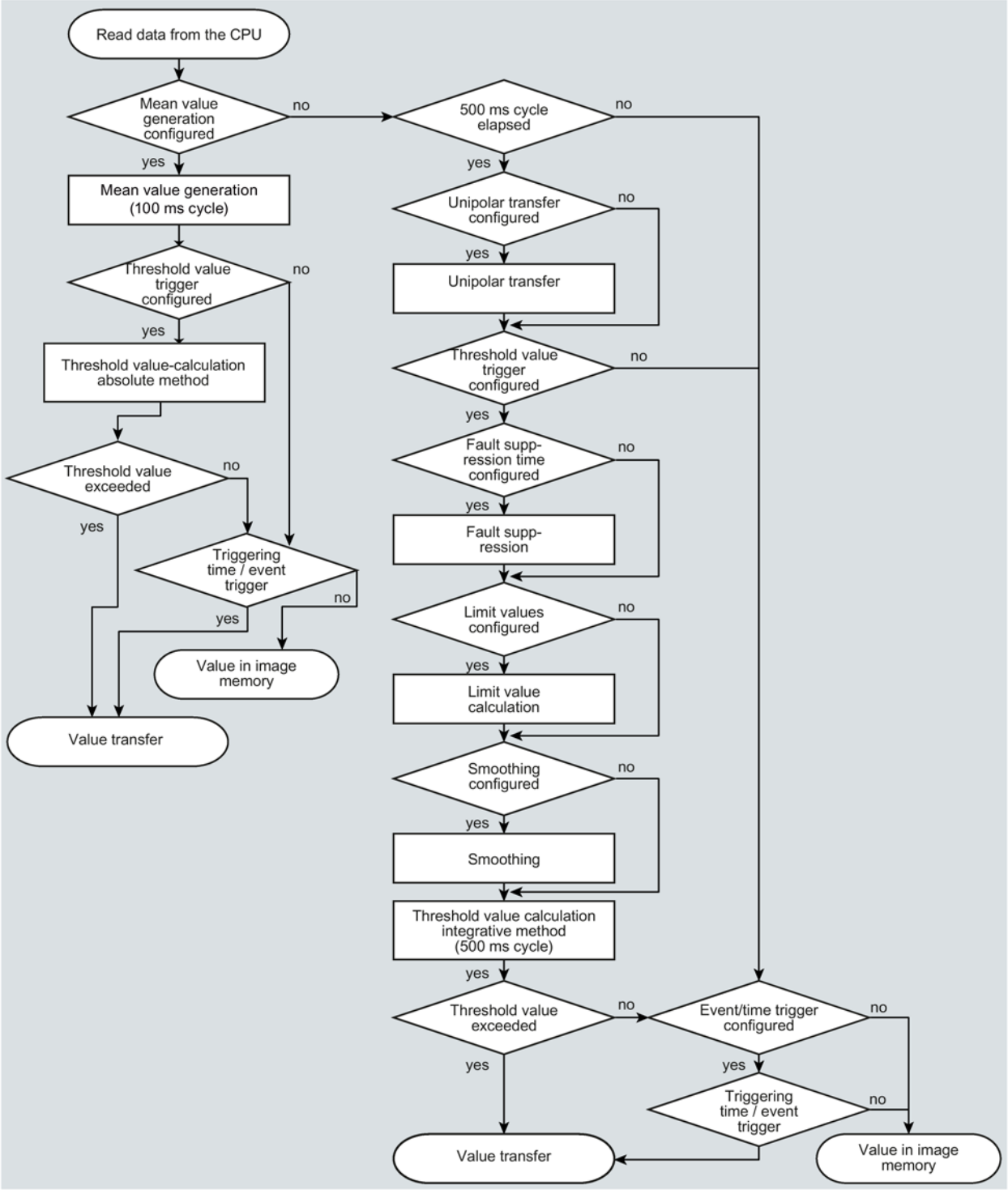

Figure 4-7 Sequence of the analog value preprocessing

The 500 millisecond cycle is started by the integrative threshold value calculation. In this cycle, the values are saved even when the following preprocessing options are enabled:

- Unipolar transfer
- Fault suppression time
- Limit value calculation
- Smoothing

Mean value generation

Note

Restricted preprocessing options if mean value generation is configured

If you configure mean value generation for an analog value event, the following preprocessing options are not available:

- Unipolar transfer
- Fault suppression time
- Smoothing

Function

With this parameter, acquired analog values are transferred as mean values.

If mean value generation is active, it makes sense to configure a time trigger..

The current values of an analog data point are read in a 100 millisecond cycle and totaled. The number of read values per time unit depends on the read cycle of the CPU and the CPU scan cycle of the CP.

The mean value is calculated from the accumulated values as soon as the transfer is triggered by a trigger. Following this, the accumulation starts again so that the next mean value can be calculated.

The mean value can also be calculated if the transmission of the analog value message is triggered by a request from the communications partner. The duration of the mean value calculation period is then the time from the last transmission (for example triggered by the trigger) to the time of the request. Once again, the accumulation restarts so that the next mean value can be calculated.

Input modules: Overflow range / underflow range

As soon as a value is acquired in the overflow or underflow range, mean value generation is stopped. The value 32767 / $7FFF_h$ or -32768 / 8000_h is saved as an invalid mean value for the current mean value calculation period and sent with the next message.

The calculation of a new mean value is then started. If the analog value remains in the overflow or underflow range, one of the two values named is again saved as an invalid mean value and sent when the next message is triggered.

Note

Fault suppression time > 0 configured

If you have configured an error suppression time and then enable mean value generation, the value of the error suppression time is grayed out but no longer used. If mean value generation is enabled, the error suppression time is set to 0 (zero) internally.

Unipolar transfer

Restrictions

Unipolar transfer cannot be configured at the same time as mean value generation. Enabling unipolar transfer has no effect when mean value generation is activated.

Function

With unipolar transfer, negative values are corrected to zero. This can be desirable if values from the underrange should not be transferred as real measured values.

Exception: With process data from input modules, the value -32768 / 8000_h for wire break of a live zero input is transferred.

With a software input, on the other hand, all values lower than zero are corrected to zero.

Fault suppression time

Requirements for the function

Configuration of the threshold trigger for this data point

Restrictions

The fault suppression time cannot be configured at the same time as mean value generation. A configured value has no effect when mean value generation is activated.

Function

A typical use case for this parameter is the suppression of peak current values when starting up powerful motors that would otherwise be signaled to the control center as a disruption.

The transmission of an analog value in the overflow ($7FFF_h$) or underflow range (8000_h) is suppressed for the specified time. The value $7FFF_H$ or 8000_H is only sent after the fault suppression time has elapsed, if it is still pending.

If the value returns to the measuring range before the fault suppression time elapses, the current value is transferred.

Input modules

The suppression is adjusted to analog values that are acquired directly by the S7 analog input modules as raw values. These modules return the specified values for the overflow or underflow range for all input ranges (also for live zero inputs).

An analog value in the overflow range (32767 / $7FFF_h$) or underflow range (-32768 / 8000_h) is not transferred for the duration of the fault suppression time. This also applies to live zero inputs. The value in the overflow/underflow range is only sent after the fault suppression time has elapsed, if it is still pending.

Recommendation for finished values that were preprocessed by the CPU:

If the CPU makes preprocessed finished values available in bit memory or in a data block, suppression is only possible or useful if these finished values also adopt the values listed above 32767 / $7FFF_h$ or -32768 / 8000_h in the overflow or underflow range. If this is not the case, the parameter should not be configured for preprocessed values.

For finished values preprocess in the CPU, the limits for the overflow and underflow can be freely assigned.

Smoothing factor

Requirements for the function

Configuration of the threshold trigger for this data point

Restrictions

The smoothing factor cannot be configured at the same time as mean value generation. A configured value has no effect when mean value generation is activated.

Function

Analog values that fluctuate quickly can be evened out using the smoothing function.

The smoothing factors are calculated according to the following formula as with S7 analog input modules.

$$y_n = \frac{x_n + (k-1)\ y_{n-1}}{k}$$

where
y_n = smoothed value in the current cycle n
y_{n-1} = smoothed value in the previous cycle n-1
x_n = acquired value in the current cycle n
k = smoothing factor

The following values can be configured for the module as the smoothing factor.

- 1 = No smoothing
- 4 = Weak smoothing
- 32 = Medium smoothing
- 64 = Strong smoothing

Set limit value 'low' / Set limit value 'high'

Requirements for the function

- Configuration of the threshold trigger for this data point
- PLC tag in the bit memory operand area or data area

  The analog value data point must be linked to a PLC tag in the bit memory or data area (data block). For PLC tags of hardware modules (input operand area) limit value configuration is not possible.

The configuration of limit values is pointless for measured values that have already been preprocessed on the CPU.

Function

In these two input boxes, you can set a limit value in the direction of the start of the measuring range or in the direction of the end of the measuring range. You can also evaluate the limit values, for example as the start or end of the measuring range.

Status identifier "OVER_RANGE"

If a limit value is overshot or undershot, the status identifier "OVER_RANGE" of the data point is set. This status identifiers are described in the section Status IDs of the data points (Page 93).

The "OVER_RANGE" bit of the status identifier of the data point is set as follows when the relevant analog value is transferred:

- Limit value 'high':
  - If the limit value is exceeded: OVER_RANGE = 1
  - If the value then falls below the limit value: OVER_RANGE = 0
- Limit value 'low':
  - If the value falls below the limit value: OVER_RANGE = 1
  - If the value then exceeds the limit value: OVER_RANGE = 0

Configuration of the limit value

The limit value is configured as a whole decimal number. The range of values is based on the range of values of the raw value of analog input modules.

Range	Raw value (16 bits) of the PLC tag		Module output [mA]			Measuring range [%]
	Decimal	Hexadecimal	0 .. 20 (unipolar)	-20 .. +20 (bipolar)	4 .. 20 (life zero)	
Overflow	32767	7FFF	> 23.515	> 23.515	> 22.810	> 117.593
Overrange	32511 ... 27649	7EFF ... 6C01	23.515 ... 20.001	23.515 ... 20.001	22.810 ... 20.001	117.593 ... 100.004
Nominal range (unipolar / life zero)	27648 ... 0	6C00 ... 0000	20 ... 0		20 ... 4	100 ... 0

Range	Raw value (16 bits) of the PLC tag		Module output [mA]			Measuring range [%]
	Decimal	Hexadecimal	0 .. 20 (unipolar)	-20 .. +20 (bipolar)	4 .. 20 (life zero)	
Nominal range (bipolar)	27648 ... 0 ... -27648	6C00 ... 0000 9400		20 ... 0 ... -20		100 ... 0 ... -100
Underrange (unipolar / life zero)	-1 ... -4864	FFFF ... ED00	-0.001 ... -3.518		3.999 ... 1.185	-0.004 ... -17.59
Underrange (bipolar)	-27649 ... -32512	93FF ... 8100		-20.001 ... -23.516		-100.004 ... -117.593
Undershoot / wire break	-32768	8000	< -3.518		< 1.185	< -17.593

Note

Evaluation of the value even when the option is disabled

If you enable one or both options and configure a value and then disable the option later, the grayed out value is nevertheless evaluated.

To disable the two options, delete the previously configured values limit values from the input boxes and then disable the relevant option.

Recommendation for quickly fluctuating analog values:

If the analog value fluctuates quickly, it may be useful to smooth the analog value first if limit values are configured.

4.7.12.13 Command output

Processing options of command outputs

Parameters

Special output options can be enabled for command outputs in stations which process commands from a central station or a master. The two output options can be enabled alternatively:

- LATCH_ON/OFF

  The function permanently latches a command output to the value 0 or 1.

  Note:
  The latched value is only canceled by a new command. Alternatively, the command can be reset by the user program.

- PULSE_ON/OFF

  The function evaluates the number and length of the signals (pulses) of commands from a master station.

Data point types

The output options can be configured dependent on the protocol for the following data point types:

- ST7

  Command output (Cmd01B_R)

- IEC

  Single command

- DNP3

  Binary Command Output

Reference to specifications

The output options correspond to the following parts of the specification:

- IEC

  Qualifier of command - IEC 60870-5-101, Part 1

- DNP3

  Control Code, Operation Type field (OP Type) - Volume 6, Part 2, Objects

Protocol-dependent processing

ST7

- LATCH_ON/OFF

  The function latches the value of a command as described above.

- PULSE_ON/OFF

  The function evaluates the "command output time" for a single pulse (see below).

IEC

- LATCH_ON/OFF

  The function latches the value of a command as described above.

- PULSE_ON/OFF

  The function is coded by the master via a "Qualifier of command". The following codings are evaluated by the communication module in the station:

  – QU (Type 1.1) <1> short pulse duration

    Corresponding parameter for the module: "Short pulse duration"

  – QU (Type 1.1) <2> long pulse duration

    Corresponding parameter for the module: "Long pulse duration"

  – S/E (Type 6) <0> execute

    Corresponding parameter for the module: "Command execution mode"

  – S/E (Type 6) <1> select

    Corresponding parameter for the module: "Command execution mode"

  For parameter assignment see below.

DNP3

The two functions are encoded by the master via the control code of the object.

- LATCH_ON/OFF

  The function latches the value of a command as described above.

- PULSE_ON/OFF

  The function evaluates the number of pulses and duration.

  The master sends a "Control Code" to the station with the "PULSE_ON" function with information on the "Count", "On-time" and "Off-time". The data point of the communication module in the station evaluates this information via the parameters "Max. pulse duration", "Pulse duration replacement time" and "Max. number of pulses".

The following encodings of the control code are evaluated by the data point:

Table 4- 12 DNP3 Control Codes

Receipt of:			Reaction of data point upon activation of:	
Control Code	Trip-Close Code	Operation Type field	PULSE_ON / OFF	LATCH_ON / OFF
0x01	NUL	PULSE_ON	The output is set to 1 for the "Max. pulse duration".	The command is rejected.
0x03	NUL	LATCH_ON	The command is rejected.	The output is set permanently to 1.
0x04	NUL	LATCH_OFF	The command is rejected.	The output is set permanently to 0.
0x41	CLOSE	PULSE_ON	The output is set permanently to 1.	The command is rejected.
0x81	TRIP	PULSE_ON	The output is set permanently to 0.	The command is rejected.

The clear field (CR) is not evaluated.

The count field is always = 1.

Parameter

Name:	**Max. number of pulses**
Range of values:	• DNP3: 0 ... 255 • ST7 and IEC: Fixed assignment with "1"
Default:	1
Explanation:	Monitors the number of pulses sent by the master (Count). If the number of pulses received from the master exceeds the value configured here, the command is discarded. If 0 (zero) is set, the monitoring is disabled.

Name:	**Max. pulse duration (s)** (DNP3 only)
Range of values:	0 ... 65535
Default:	0
Explanation:	Monitors the pulse duration transmitted by the master with the command (On-time). If the pulse duration sent by the master exceeds the value configured here, the command is discarded by the communication module if no "Pulse duration replacement time" has been configured. When the "Max. pulse duration" is exceeded and "Pulse duration replacement time" is configured, the pulse duration sent by the master is checked for the "Pulse duration replacement time". If the value is 0 (zero), no "Max. pulse duration" is checked.

Name:	**Pulse duration replacement time (s)** (DNP3 only)
Range of values:	0 ... 65535
Default:	0
Explanation:	Replacement value for the pulse duration If the pulse duration received from the master exceeds the value configured in “Max pulse duration“. If the value is 0 (zero), no replacement value is used. If the ""Max. pulse duration" and "Pulse duration replacement time" are both configured with zero, each command is discarded.

Name:	**Short pulse duration (s)** (IEC only)
Range of values:	0 ... 65535
Default:	0

Explanation:	Commands from the master with the Qualifier of command = <1> (short pulse duration) are output by the communication module for the duration configured here. If "Short pulse duration" is configured with the value 0 (zero), commands are discarded by the module with the Qualifier of command of <1>.

Name:	**Long pulse duration (s)** (IEC only)
Range of values:	0 ... 65535
Default:	0
Explanation:	Commands from the master with the Qualifier of command = <2> (long pulse duration) are output by the communication module for the duration configured here. If "Long pulse duration" is configured with the value 0 (zero), commands are discarded by the module with the Qualifier of command of <2>.

Name:	**Command output time (s)** (ST7 only)
Range of values:	0 ... 65535
Default:	0
Explanation:	Period for which the command is output. The duration is valid for all 8 channels of the SINAUT object. When the time expires, the output is automatically reset. With zero, a set command output is not automatically reset. In this case, you need to reset the output via the user program.

Name:	**Command execution mode** (IEC only)
Range of values:	• Execute directly • Select and operate

Default: Execute directly

Explanation:

- Execute directly

  The command is transferred immediately to the CPU.
- Select and operate

  (select and execute)

  The command is transferred to the communication module after selection in the master station.

  The communication module acknowledges receipt of the selection ASDU with the Qualifier "S/E (Type 6) <1> select".

  After receiving the acknowledgment the master sends the execute command with the Qualifier "S/E (Type 6) <1> execute". Only then does the communication module transfer the command to the CPU.

4.7.12.14 Partner stations

Partner of the data point

Enable the partner or partners with which the selected data point will exchange data using the check box: ☑

You can configure or change the partners in the overview table or in the "Partner stations" tab of the CP. The data is applied in the data point editor.

With the TeleControl Basic protocol, you can choose between the telecontrol server or a partner for inter-station communication (S7 station) as partner.

With the ST7 protocol, only those partners to which a telecontrol connection was configured can be selected.

Enabling the partner for data points - TeleControl Basic

Enable the partner with which the selected data point will exchange data.

A communications can be configured. The telecontrol server and an S7 station cannot be selected as the partner for a data point at the same time.

The communications partner may be:

- The telecontrol server

  Since the telecontrol server is always enabled as a communications partner of the CP, it is adopted as default in this tab.

  The option "Telecontrol server enabled" is selected and grayed out.
- An S7 station

  The station must be reachable via the "TeleControl Basic" protocol.

  You specify the communications partners of the CP in the "Partner stations" parameter group.

Activate one of the two options.

- **Telecontrol server enabled**

  Only the telecontrol server is a communications partner of the data point.

- **Partner for inter-station communication**

  Only the S7 station is a communications partner of the data point.

Partner number (inter-station communication)

Specify the partner CP for inter-station communication for the selected data point by selecting the required partner from the drop-down list. The access ID of the relevant partner is shown in brackets.

The partners you specified in the "Partner stations" > "Partner for inter-station communication" can be selected.

Data point index

Index of the corresponding data point on the communications partner.

Note:

- The data pair of the sending and receiving CP must have an identical data point index. A receiving data point of CP 2 corresponds to a sending data point of CP 1 with the same data point index.
- For the opposite communications direction, a second pair of data points must be created: A sending data point of CP 2 corresponds to the receiving data point of CP 1. Once again, both have an identical data point index.

4.8 Security

The parameters and their configurability depend on the CP type and the telecontrol protocol used.

For information on individual functions, see section Application and functions (Page 11).

To be able to configure the security functions, you need to create a security user; see section Security user (Page 117).

4.8.1 Security user

Creating a security user

You need the relevant configuration rights to be able to configure security functions. For this purpose, you need to create at least one security user with the corresponding rights.

Navigate to the global security settings > "User and roles" > "Users" tab.

1. Create a user with the associated parameters such as authentication mode, session duration, etc.
2. Assign this user the role "NET Standard" or "NET Administrator" in the area below "Assigned roles".

After logging on, this user can make the necessary settings in the STEP 7 project.

In the future, continue to log on as this user when working on security parameters.

4.8.2 Security parameters of the CP 1542SP-1 IRC

4.8.2.1 CP identification

TeleControl Basic

- Project number

  The project number is the same for all telecontrol CPs in a STEP 7 project. TCSB evaluates project numbers from 1 ... 2000. If you change the project number, this parameter is changed for all CPs in the STEP 7 project.

- Station number

  For each station with a telecontrol CP, an individual station number is configured. TCSB evaluates station numbers from 1 ... 8000.

- Telecontrol password

  Password for the authentication of the CP on the telecontrol server. 8 ... 29 characters of the ASCII character set 0x20...0x7e. The password can be the same for all CPs of the STEP 7 project.

  The same password is configured in the "TCSB" application for this station.

4.8.2.2 MSC authentication

MSC authentication - Ethernet interface

When using the ST7 protocol, the authentication data for the "MSC / MSCsec" protocol must be configured for the CP as MSC station.

Parameter

- User name

  User name for communication using MSC

- Password

  Password for communication using MSC

The user name and password must be different for every MSC station in the network.

4.8.2.3 DNP3 security options

Authentication and key exchange with the DNP3 protocol

If the Security functions are enabled, the master and station (CP) authenticate themselves with a secret key, the pre-shared key.

With the help of the common pre-shared key, after the first connection establishment between master and DNP CP session keys are agreed that are then renewed cyclically. Renewal of the session keys is normally initiated by the master. The criteria for renewing the key are specified in the following parameters.

- Authentication requests before key exchange
- Key exchange interval

As soon as one of these conditions is met, the session key is renewed.

DNP3 security options

- **Enable DNP3 security options**

  Method with which the CP authenticates itself to the master.

  – Disabled

    Non-secure authentication. If this option is selected the CP logs on only using its station address.

  – Enabled

    Secure authentication. If this option is selected, the CP and master use the DNP3 Security mechanisms. The parameters are configured as follows.

- **IKE mode**

  Selection of the mode for key exchange (IKE)

  – The Main Mode is the default mode.

  – The Aggressive Mode is somewhat faster but transfers the identity unencrypted.

- **Security statistics**

  Specifies whether the statistics of security events are sent to the master. Security events are authentication requests to the CP. If the option is enabled, authentication requests with date, time and result are saved on the CP and sent to the master for further evaluation.

- **SHA-1 interlock**

  Setting to select whether the CP may use the secure hash algorithm SHA-1 if "SHA-256" was configured as the Secure hash algorithm and the master does not support SHA-256. Meaning of the options:

  – SHA-1 mode allowed

    The CP can use SHA-1 if the master does not support SHA-256.

  – SHA-1 mode not allowed

    The CP may not use SHA-1.

    Note: If the master does not support SHA-256, no connection will be established if this option is selected.

- **Secure hash algorithm**

  Selection of the Secure Hash Algorithm (SHA). Possible selections:

  – SHA-1

  – SHA-256

- **Key wrap algorithm**

  Selection of the Advanced Encryption Standard (AES). Possible selections:

  – AES-128

  – AES-256

- **Key length**

  Length of the pre-shared key in bytes

  The following lengths are used depending on the key wrap algorithm.

  – For AES-128: 16 bytes

  – For AES-256: 32 bytes

- Max. number of key exchange requests

  The function is disabled.

- **Authentication requests before key exchange**

  Maximum number of authentication requests of the CP with the master before the session key is renewed.

  If you enter 0 (zero), the function is deactivated and the session key is renewed only depending on the key exchange interval.

  Recommendation: Set the number for the CP twice as high as for the master.

- **Key exchange interval**

  Period after which the session key is exchanged again between the CP and the master.

  If you enter 0 (zero), the function is deactivated and the key will never be renewed.

  The interval must be matched up on both communications partners.

- **Authentication timeout**

  Maximum waiting (seconds) time for the response from the master to an authentication request of the CP.

  Exceeding the wait time is evaluated as an error by the CP. In this case, the CP generates a Security event and sends this to the master.

  Range of values: 1 ... 65535

- **Pre-shared key**

  The pre-shared key of the CP must be identical to the pre-shared key that the master uses.

  The key must have the key length configured above (2 characters per byte).

  The pre-shared key can be configured in two ways:

  – Manual configuration

    Enter the pre-shared key manually as a hexadecimal value.

  – Import as file

    Import the pre-shared key from the file system of the engineering station if the pre-shared key was generated by the master or another system.

4.8.3 Firewall

4.8.3.1 Pre-check of messages by the MAC firewall.

Each incoming or outgoing frame initially runs through the MAC firewall (layer 2). If the frame is discarded at this level, it will not be checked by the IP firewall (layer 3). This means that with suitable MAC firewall rules, IP communication can be restricted or blocked.

4.8.3.2 Settings for online security diagnostics and downloading to station with the firewall activated

Setting the firewall for online functions

With the security functions enabled, follow the steps outlined below:

1. In the global security settings (see project tree), select the entry "Firewall > Services > Define services for IP rules".
2. Select the "ICMP" tab.
3. Insert a new entry of the type "Echo Reply" and another of the type "Echo Request".
4. Now select the CP in the S7 station.
5. Enable the advanced firewall mode in the local security settings of the CP in the "Security > Firewall" parameter group.
6. Open the "IP rules" parameter group.

7. In the table, insert a new IP rule for the previously created global services as follows:
   - Action: Allow; "From external -> To station " with the globally created "Echo request" service
   - Action: Allow; "From station -> to external" with the globally created "Echo reply" service
8. For the IP rule for the Echo Request, enter the IP address of the engineering station in "Source IP address". This ensures that only ICMP frames (ping) from your engineering station can pass through the firewall.

4.8.3.3 Notation for the source IP address (advanced firewall mode)

If you specify an address range for the source IP address in the advanced firewall settings of the CP, make sure that the notation is correct:

- Separate the two IP addresses only using a hyphen.

  Correct: 192.168.10.0-192.168.10.255
- Do not enter any other characters between the two IP addresses.

  Incorrect: 192.168.10.0 - 192.168.10.255

If you enter the range incorrectly, the firewall rule will not be used.

4.8.3.4 Firewall settings for S7 connections via a VPN tunnel

IP rules in advanced firewall mode

If you set up configured connections (S7, OUC) with a VPN tunnel between the CP and a communications partner, you will need to adapt the local firewall settings of the CP:

In advanced firewall mode ("Security > Firewall > IP rules") select the action "Allow*" for both communications directions of the VPN tunnel.

4.8.4 Log settings - Filtering of the system events

Communications problems if the value for system events is set too high

If the value for filtering the system events is set too high, you may not be able to achieve the maximum performance for the communication. The high number of output error messages can delay or prevent the processing of the communications connections.

In "Security > Log settings > Configure system events", set the "Level:" parameter to the value "3 (Error)" to ensure the reliable establishment of the communications connections.

4.8.5 E-mail configuration

Requirements and necessary information

Note the following requirements in the CP configuration for the transfer of e-mails:

- The security functions are enabled.
- The time of the CP is synchronized.

For the configuration, you require the data of the SMTP server and the user account:

- Server address, port number, user name, password, e-mail address of the sender (CP)

E-mail configuration

- **No configuration**

  As default, the sending of e-mails is disabled.

- **Activate SMTP**

  Enable this option if you want to use the sending of unencrypted e-mails via SMTP port 25.

- **Enable SSL/TLS**

  If your e-mail service provider only supports encrypted transfer, enable this option. Select the protocol via the port number:

  – Port no. 587

    When using STARTTLS the CP sends encrypted e-mails.

  – Port no. 465

    When using SSL/TLS (SMTPS) the CP sends encrypted e-mails.

  Ask your e.mail service provider which option is supported.

  If you want to use an Internet connection with an IPv6 infrastructure, note the information in the section IPv6 (Page 52).

4.8.6 VPN

4.8.6.1 VPN (Virtual Private Network)

VPN - IPsec

Virtual Private Network (VPN) is a technology for secure transportation of confidential data in public IP networks, for example the Internet. With VPN, a secure connection (IPsec tunnel) is set up and operated between two secure IT systems or networks via a non-secure network.

The IPsec tunnel forwards all data even from protocols of higher layers (HTTP, FTP, etc.).

The data traffic between two network components is transported unrestricted through another network. This allows entire networks to be connected together via a neighboring or intermediate network.

Properties

- VPN forms a logical subnet that is embedded in a neighboring (assigned) network. VPN uses the usual addressing mechanisms of the assigned network, however in terms of the data, it transports its own frames and therefore operates independent of the rest of this network.
- VPN allows communication of the VPN partners with the assigned network.
- VPN is based on tunnel technology and can be individually configured.
- Communication between the VPN partners is protected from eavesdropping or manipulation by using passwords, public keys or a digital certificate (authentication).

Areas of application

- Local area networks can be connected together securely via the Internet ("site-to-site" connection).
- Secure access to a company network ("end-to-site" connection)
- Secure access to a server ("end-to-end" connection)
- Communication between two servers without being accessible to third parties (end-to-end or host-to-host connection)
- Ensuring information security in networked automation systems
- Securing the computer systems including the associated data communication within an automation network or secure remote access via the Internet
- Secure remote access from a PC/programming device to automation devices or networks protected by security modules via public networks.

Cell protection concept

With Industrial Ethernet Security, individual devices or network segments of an Ethernet network can be protected:

- Access to individual devices and network segments protected by security modules is allowed.
- Secure connections via non-secure network structures becomes possible.

Due to the combination of different security measures such as firewall, NAT/NAPT routers and VPN via IPsec tunnels, security modules protect against the following:

- Data espionage
- Data manipulation
- Unwanted access

4.8.6.2 Creating a VPN tunnel for S7 communication between stations

Requirements

To allow a VPN tunnel to be created for S7 communication between two S7 stations or between an S7 station and an engineering station with a security CP (for example CP 1628), the following requirements must be met:

- The two stations have been configured.
- The CPs in both stations must support the security functions.
- The Ethernet interfaces of the two stations must be networked.

Note

Communication also possible via an IP router

Communication between the two stations is also possible via an IP router. To use this communications path, however, you need to make further settings.

Procedure

To create a VPN tunnel, you need to work through the following steps:

1. Creating a security user

   If the security user has already been created: Log on as this user.
2. Enable the "Activate security features" option
3. Creating the VPN group and assigning security modules
4. Configure the properties of the VPN group
5. Configure local VPN properties of the two CPs

You will find a detailed description of the individual steps in the following paragraphs of this section.

Enable security functions

After logon, enable the "Activate security features" option on both CPs under "Security".

You now have the security functions available for both CPs.

Creating the VPN group and assigning security modules

1. In the global security settings, navigate to "VPN groups" > "Add new VPN group".
2. Double-click on the entry "Add new VPN group", to create a VPN group.

   Result: A new VPN group is displayed below the selected entry.

3. Double-click on the "VPN groups" > "Assign module to a VPN group" entry.
4. Assign the security modules between which VPN tunnels will be established to the VPN group.

Note

Current date and current time on the CP for VPN connections

To establish a VPN connection and for the associated recognition of the certificates to be exchanged, the current date and the current time are required on both stations.

Configure the properties of the VPN group

1. Double-click on the newly created VPN group.

   Result: The properties of the VPN group are displayed under "Authentication".
2. Enter a name for the VPN group. Configure the settings of the VPN group in the properties.

   These properties define the default settings of the VPN group that you can change at any time.

Note

Specifying the VPN properties of the CPs

You specify the VPN properties of the CPs in the "Security" > "Firewall" > "VPN" parameter group of the relevant module.

Result

You have created a VPN tunnel. The firewalls of the CPs are activated automatically: The "Activate firewall" check box is selected by default when you create a VPN group. You cannot disable the option.

Download the configuration to all modules that belong to the VPN group.

4.8.6.3 VPN communication with SOFTNET Security Client (engineering station)

VPN tunnel communication works only if the internal node is disabled

Under certain circumstances the establishment of VPN tunnel communication between SOFTNET Security ClientSOFTNET Security Client and the CP fails.

SOFTNET Security Client also attempts to establish VPN tunnel communication to a lower-level internal node. This communication establishment to a non-existing node prevents the required communication being established to the CP.

To establish successful VPN tunnel communication to the CP, you need to disable the internal node.

Use the procedure for disabling the node as explained below only if the described problem occurs.

Disable the node in the SOFTNET Security Client tunnel overview:

1. Remove the checkmark in the "Enable active learning" check box.

   The lower-level node initially disappears from the tunnel list.
2. In the tunnel list, select the required connection to the CP.
3. With the right mouse button, select "Enable all members" in the shortcut menu.

   The lower-level node appears again temporarily in the tunnel list.
4. Select the lower-level node in the tunnel list.
5. With the right mouse button, select "Delete entry" in the shortcut menu.

Result: The lower-level node is now fully disabled. VPN tunnel communication to the CP can be established.

4.8.6.4 Establishment of VPN tunnel communication between the CP and SCALANCE M

Create a VPN tunnel between the CP and a SCALANCE M router as described for the stations.

VPN tunnel communication will only be established if you have selected the check box "Perfect Forward Secrecy" in the global security settings of the created VPN group ("VPN groups > Authentication").

If the check box is not selected, the CP rejects establishment of the tunnel.

4.8.6.5 CP as passive subscriber of VPN connections

Setting permission for VPN connection establishment with passive subscribers

If the CP is connected to another VPN subscriber via a gateway, you need to set the permission for VPN connection establishment to "Responder".

This is the case in the following typical configuration:

VPN subscriber (active) ⇔ gateway (dyn. IP address) ⇔ Internet ⇔ gateway (fixed IP address) ⇔ CP (passive)

Configure the permission for VPN connection establishment for the CP as a passive subscriber as follows:

1. In STEP 7, go to the devices and network view.
2. Select the CP.
3. Open the parameter group "VPN“ in the local security settings.
4. For each VPN connection with the CP as a passive VPN subscriber, change the default setting "Initiator/Responder" to the setting "Responder".

4.8.6.6 SINEMA Remote Connect

Remote maintenance with SINEMA Remote Connect (SINEMA RC)

The application "SINEMA Remote Connect" (SINEMA RC) is available for remote maintenance purposes.

SINEMA RC uses OpenVPN for encryption of the data. The center of the communication is SINEMA RC Server via which communication runs between the subscribers and that manages the configuration of the communications system.

Preparatory steps

Execute the following steps before start configuring the SINEMA RC connection of the module in STEP 7. They are the prerequisite for a consistent STEP 7 project.

- Configuration of SINEMA Remote Connect - Server

  Configure SINEMA RC - Server as necessary (not in STEP 7). The communication module and its communication partners must be configured in the SINEMA RC Server.

- Exporting the CA certificate (optional)

  If you want to use the server certificate as authentication method of the communication module during connection establishment, export the CA certificate from SINEMA RC - Server. Then import the CA certificate from SINEMA RC - Server to the engineering station.

  Alternatively, you can use the fingerprint of the server certificate as authentication method of the communication module.

Note

Recommended authentication method:

The recommended authentication method is the one using the CA certificate. The certificate is valid for 10 years.

The fingerprint, on the other hand, is derived from the server certificate. Its validity may be significantly shorter.

Configuration of SINEMA Remote Connect

Importing your own certificate

1. Navigate to the parameter group "Security > Certificate manager".
2. Open the certificate selection with a double-click on the first free table row of the local certificate manager.
3. Select the CA certificate of SINEMA RC - Server.

Then navigate to the parameter group "Security > VPN".

VPN > General

1. Activate VPN
2. For the parameter "VPN connection type", select the option "Automatic OpenVPN configuration via SINEMA Remote Connect Server" if you wish to use communication via SINEMA Remote Connect.

   If you select "Internet Key Exchange (IKE) ...", you can use communication via IPsec tunnels.

SINEMA Remote Connect Server

Enter the address and port number of the server.

Server Verification

Here you select the authentication method of the communication module during connection establishment.

- CA Certificate

  Under "CA certificate" select the CA certificate from SINEMA RC - Server that was previously imported and activated in the local certificate manager.

  The module generally checks the CA certificate of the server and its validity period. The two options cannot be changed.

- Fingerprint

  When you select this authentication method, you enter the fingerprint of the server certificate of SINEMA RC - Server.

Authentication

- Device ID

  Enter the device ID generated for the module in SINEMA RC.

- Device password

  Enter the device password of the module configured in SINEMA RC.

  Max. number of characters: 127

Optional settings

The connection establishment is configured in the "Security > VPN > Optional settings" parameter group with the parameter "Connection type".

- **Update interval**

  With this parameter you set the interval at which the CP queries the configuration on the SINEMA RC Server.

  Note that with the setting 0 (zero) changes to the configuration of the SINEMA RC Server may result in the CP no longer being capable of establishing a connection to the SINEMA RC Server.

- **"Connection type"**

  The two options of the parameter have the following effect on the connection establishment:

  – Auto

    The module establishes a connection to the SINEMA RCServer. The OpenVPN connection is retained until the connection parameters are changed by the SINEMA Remote Connect Server. If the connection is interrupted, the CP automatically re-establishes the connection.

    If the connection parameters are changed by the SINEMA Remote Connect Server, the CP requests the new connection data after the update interval configured above has elapsed.

  – PLC trigger

    The option is intended for sporadic communication of the module via the SINEMA RC Server.

    You can use this option when you want to establish temporary connections between the module and a PC. The temporary connections are established via a PLC tag and can be used in servicing situations, for example.

- **PLC tag for connection establishment**

  If the option "PLC trigger" is selected, the module establishes a connection when the PLC tag (Bool) changes to the value 1. During operation the PLC tag can be set when necessary, for example using an HMI panel.

  When the PLC tag is reset to 0, the connection is terminated again.

4.8.7 SNMP

SNMP

You will find the range of functions of the device for SNMP in the section Diagnostics with SNMP (Page 144).

If the security functions are enabled, you have the following selection and setting options.

SNMP

- "Enable SNMP"

  If the option is enabled, communication via SNMP is released on the device. As default, SNMPv1 is enabled.

  If the option is disabled, queries from SNMP clients are not replied to either via SNMPv1 or via SNMPv3.

- "Use SNMPv1"

  Enables the use of SNMPv1 for the device. For information on the configuration of the required community strings see below (SNMPv1).

- "Use SNMPv3"

  Enables the use of SNMPv3 for the device. For information on the configuration of the required algorithms see below (SNMPv3).

SNMPv1

The community strings need to be sent along with queries to the device via SNMPv1.

Note the use of lowercase letters with the preset community strings!

- "Reading community string"

  The string is required for read access.

  Leave the preset string "public" or configure a string.

- "Allow write access"

  If the option is enabled write access to the device is released and the corresponding community string can be edited.

- "Writing community string"

  The string is required for write access and can also be used for read access.

  Leave the preset string "private" or configure a string.

Note

Security of the access

For security reasons, change the preset and generally known strings "public" and "private".

SNMPv3

The algorithms need to be configured for encrypted access to the device via SNMPv3.

- "Authentication algorithm"

  Select the authentication method to be used from the drop-down list.

- "Encryption algorithm"

  Select the encryption method to be used from the drop-down list.

User management

In the user management that you will find in the global security settings, assign the various users their role.

Below the properties of the roles you can see the rights list of the particular role, for example the various types of access using SNMP. For new roles, you can freely configure individual rights.

You will find information on users, roles and the password policy in the information system of STEP 7.

4.8.8 Certificate manager

If the security functions are enabled, the certificates for all security modules involved are generated in the STEP 7 project, for example to allow communication via VPN connections.

Certificates generated by STEP 7 such as SSL certificates or VPN group certificates are automatically assigned to the corresponding modules and do not need to be assigned using the local security settings.

The local certificate manager

Certificates that were imported via the certificate manager in the global security settings are not automatically assigned to the corresponding modules. Imported certificates must be included in the list of trustworthy partner certificates manually via the "Certificate manager" entry in the local security settings. When assigning a CA certificate the module is also assigned the certificates derived from it.

Adding certificates

Via the local certificate manager, assign certificates of the partners to the CP for certain services, e.g. secure sending of e-mails.

1. To do this, click the table cell "Add new".
2. Click on the button on a white background "...".
3. In the certificate list that opens, you can either add a new certificate using the "Add" button or select an existing certificate of the project using the check mark symbol.

   You can recognize the properties of the displayed certificates in the global certificate manager.

Certificates for the CP 1542SP-1 IRC

Requirement in the global security settings

For the secure sending of e-mails, import the certificate of the e-mail service provider into the certificate manager.

Assign the certificate in the CP configuration

Select the following certificate in the CP configuration:

- Table "Trustworthy client certificates":

  The certificate of the e-mail service provider

Certificates for the CP 1543SP-1

Before certificates can be referenced in the program blocks for Secure Communication, these certificates must be assigned to the Security module as device certificates via the local certificate manager.

Requirement in the global security settings

To be able to assign the CP certificate of a communications partner, you need to first import the certificates of the partner in the global certificate manager (Global security settings).

To make the assigned certificate known to the partner module, this certificate must be entered in the list of trustworthy partner certificates after import.

Assign the certificates in the CP configuration

Select the following certificates in the CP configuration:

- Table "Device certificates":

  The device certificate of the CP generated by STEP 7
- Table "Certificates of the partner devices":

  The imported certificate of the partner

4.9 Messages (e-mail)

Validity

The function is supported by:

- CP 1542SP-1 IRC
- CP 1543SP-1

Configuring e-mails

If important events occur, the CP can send e-mails to communications partners.

Note

E-mails via the message editor

The following information applies to e-mails configured with the message editor.

Sending e-mails via OUC program blocks is not affected.

For information on opening the message editor, see section Data point configuration (Page 79).

Requirements

Note the following requirements in the CP configuration for the transfer of e-mails:

- The security functions are enabled.
- The time of the CP is synchronized.
- Configuring the "E-mail configuration" parameter group (see "Security" parameter group)

You require the recipient addresses to configure the messages.

Trigger: Triggering e-mail transfer

Using the "Trigger" parameter group in the message table, you configure which of the following events triggers the sending of the e-mail:

- CPU changes to STOP.
- CPU changes to RUN.
- The connection to the partner is interrupted.
- The connection to the partner is re-established.
- The trigger signal of a PLC tag is sent.

  For the trigger signal to send the e-mail, the edge change (0 → 1) of a trigger bit is evaluated that is set by the user program. When necessary, a separate trigger bit can be configured for each e-mail.

  If the memory area of the trigger bit is in the bit memory or in a data block, the trigger bit is reset to zero (FALSE) when the e-mail is sent. For other memory areas, you need to reset the trigger bit with the user program.

With the "TeleControl Basic" protocol, the following events can be configured as the trigger of an e-mail:

- Connection establishment to the partner has failed.
- A TeleService session has started.
- A TeleService session has ended.

Enable identifier for processing status

If this option is enabled in STEP 7, a status is output on the CP that provides information about the processing status of the sent message. The status is written to a PLC tag of the type DWORD or UDInt. Select this tag via the "PLC tag for processing status" box.

If there are problems delivering messages, you can determine the status, for example via the Web server of the CPU, by displaying the value of the PLC tag there.

For information on the significance of the individual statuses, see section Processing status of the telecontrol e-mails (Page 149).

Include value: Transfer the value of a PLC tag with a message

If you enable the option "Include value" in the "Trigger" parameter group, the CP sends a value for the placeholder $$ from the memory area of the CPU in the message. To do this enter "$$" as a placeholder for the value to be sent in the message text.

Select a PLC tag whose value will be integrated in the message. The value is entered in the message text instead of the placeholder $$.

$$ can be a placeholder for data point types with a simple data type up to a size of 32 bits.

Program blocks

5

5.1 Program blocks for OUC

Program blocks for Open User Communication (OUC)

Connections of Open User Communication are not configured.

For TCP / UDP / ISO-on-TCP communication via Ethernet, the blocks of Open User Communication (OUC) listed below are used. For this, create a suitable program blocks. You will find details on the program blocks in the information system of STEP 7.

Note

Program block versions

Note that in STEP 7 you cannot use different versions of a program block in a station.

Program blocks

Together with the three CP types, the following OUC blocks with the specified minimum version are available to the CPU:

- **TSEND_C V3.0 / TRCV_C V3.0**

  Compact blocks for:

  – Connection establishment/termination and sending data

  – Connection establishment/termination and receiving data

As an alternative, use:

- **TCON V4.0 / TDISCON V2.1**

  Connection establishment / connection termination

- **TUSEND V4.0 / TURCV V4.0**

  Sending and receiving data via UDP

- **TSEND V4.0 / TRCV V4.0**

  Sending and receiving data via TCP or ISOonTCP

- **TMAIL_C V4.0**

  Sending e-mails

  To transfer encrypted e-mails with this block, the precise time of day is required on the CP. Configure the time-of-day synchronization.

For changing configuration data of the CP during runtime:

- T_CONFIG V1.0

  Program-controlled configuration of the IP parameters

  See section Changing the IP parameters during runtime (Page 139) for information on this.

The program block can be found in STEP 7 in the "Instructions > Communication > Open User Communication" window.

Connection descriptions in system data types (SDTs)

For the connection description, the blocks listed above use the parameter CONNECT (or MAIL_ADDR_PARAM with TMAIL_C). The connection description is stored in a data block whose structure is specified by the system data type (SDT).

Creating an SDT for the data blocks

Create the SDT required for every connection description as a data block (global DB).

The SDT type is not created by selecting an entry from the "Data type" drop-down list in the declaration table of the block, but by entering the name manually in the "Data type" box, for example "TCON_IP_V4". The corresponding SDT is then created with its parameters.

SDTs

Depending on the CP-specific security functions, the three CP types support the following SDTs:

- SDTs for all three CP types
  - TCON_IP_V4

    For transferring data via TCP or UDP
  - TADDR_Param

    For transferring data via UDP
  - TCON_IP_RFC

    For transferring data via ISO-on-TCP (direct communication between two SIMATIC S7 stations)
  - TMail_V4

    For transferring e-mails addressing the e-mail server using an IPv4 address
  - TMail_V6

    For transferring e-mails addressing the e-mail server using an IPv6 address
  - TMail_FQDN

    For transferring e-mails addressing the e-mail server using its name (FQDN)

- SDT for CP 1542SP-1 IRC and CP 1543SP-1
  - TMail_V4_SEC

    For secure transfer of e-mails addressing the e-mail server using an IPv4 address
  - TMail_V6_SEC

    For secure transfer of e-mails addressing the e-mail server using an IPv6 address
  - TMail_QDN_SEC

    For secure transfer of e-mails addressing the e-mail server using the host name
- SDT only for CP 1543SP-1
  - TCON_IP_V4_SEC

    For the secure transfer of data via TCP

You will find the description of the SDTs with their parameters in the STEP 7 information system under the relevant name of the SDT.

Connection establishment and termination

Connections are established using the program block TCON. Note that a separate program block TCON must be called for each connection.

A separate connection must be established for each communications partner even if identical blocks of data are being sent.

After a successful transfer of the data, a connection can be terminated. A connection is also terminated by calling "TDISCON".

Note

Connection abort

If an existing connection is aborted by the communications partner or due to disturbances on the network, the connection must also be terminated by calling TDISCON. Make sure that you take this into account in your programming.

5.2 Changing the IP parameters during runtime

Changing the IP address during runtime

As of STEP 7 V14, you can change the following address parameters of the CP programatically during runtime with T_CONFIG:

- IP address
- Subnet mask
- Router address

Note

Changing the IP parameters with a dynamic IP address

Note the effects of program-controlled changes to the IP parameters if the CP obtains a dynamic IP address from the Internet service provider: In this case, the CP can no longer be reached by communications partners.

Note

Requirement in the CP configuration

To be able to change the IP parameters programatically, the option "IP address is set directly at the device" must be enabled in the configuration of the IP address of the Ethernet interface of the CP.

Program blocks

Program-controlled changing of the IP parameters is supported by program blocks. The program blocks access address data stored in a suitable system data type (SDT).

Apart from the address parameters of the CP, with T_CONFIG the address parameters of DNS servers (IF_CONF_DNS) and NTP servers (IF_CONF_NTP) can also be changed program controlled.

The following program blocks and system data types can be used:

- T_CONFIG

  Together with the following SDTs:

  – IF_CONF_V4
  – IF_CONF_V6
  – IF_CONF_NTP
  – IF_CONF_DNS

You can find detailed information on the blocks and SDTs in the STEP 7 information system.

5.3 MODBUS blocks

MODBUS (TCP)

All three CP types support the program blocks for MODBUS (TCP) for the S7-1500-CPU as of V4.0:

- MB_CLIENT
- MB_SERVER

You can find detailed information in the STEP 7 information system.

Diagnostics and maintenance 6

6.1 Diagnostics options

The following diagnostics options are available.

LEDs of the module

For information on the LED displays, refer to the section LEDs (Page 33).

STEP 7: The "Diagnostics" tab in the Inspector window

Here, you can obtain the following information about the online status of the selected module.

STEP 7: Diagnostics functions in the "Online > Online and diagnostics" menu

Using the online functions, you can read diagnostics information from the CP from an engineering station on which the project with the CP is stored.

If you want to operate online diagnostics with the station via the CP, you need to select the type of communication "Enable online functions"; see section Communication types (Page 57).

"Diagnostics" group

The diagnostics pages are divided into the following groups:

- General

  This group displays general information on the module.

- Diagnostic status

  This group displays status information of the module from the view of the CPU.

  – Device-specific events

    Information on internal module events are displayed for modules with security or telecontrol functions.

- Ethernet interface

  Address and statistical information

- **Industrial Remote Communication**

  For the CP 1542SP-1 IRC, you receive telecontrol-specific information here. The group has the following diagnostics pages:

  – Partner

    Information about the address settings of the partner, connection statistics, configuration data of the partner and other diagnostics information.

  – Data point list

    Various information on the data points such as configuration data, value, connection status etc.

  – Protocol diagnostics

    With the button "Enable protocol trace", the frames received and sent by the module are logged for several seconds.

    With the function "Disable protocol trace", the logging is stopped and the data is written to a log file.

    With the function "Save", you can save the log file on the engineering station and then analyze it.

- **Time of day**

  Information on the time on the device

- **Security**

  This group is available for modules with security functions.

  For CP 1542SP-1 IRC, only the parameter groups "Status" and "SINEMA RC - Automatic VPN configuration" are available.

  – Status

    This diagnostics page displays the most important security settings, the time of day, and data relating to the configuration.

  – System log

    You can start logging system entries on this diagnostics page if a connection to a SCALANCE S module is established. You can save the entries.

  – Audit log

    You can start logging the log data of the module on this diagnostics page. You can save the entries.

  – Communication status

    This diagnostics page shows the states of the known security modules of the VPN groups, their endpoints and the tunnel properties.

  – SINEMA RC - automatic VPN configuration

    This diagnostics page shows the status of the automatic OpenVPN configuration and the OpenVPN connections.

"Functions" group

- Firmware update

  For a description, see section Downloading firmware (Page 151).

- Assign IP address
- Assign PROFINET device name
- Save service data

  The function is used for logging of internal module processes in situations in which you cannot eliminate unexpected or unwanted behavior of the module yourself.

  The log file is created with the "Save service data" button. The data is saved in a file with the format "*.dmp" that can be evaluated by the Siemens hotline.

Web server of the CPU

Via the CP you can access the Web server of the CPU and the information available there. For access, refer to the section Web server of the CPU (Page 147).

SNMP

For information on the functions, refer to the section Diagnostics with SNMP (Page 144).

Diagnostics e-mail

Validity: CP 1542SP-1 IRC / CP 1543SP-1

The two CPs can send a diagnostics e-mail if configurable events occur, for example a partner cannot be reached or CPU STOP.

The configuration is described in section Messages (e-mail) (Page 133).

Telecontrol diagnostics

Validity: CP 1542SP-1 IRC

- Partner status

  The CP can signal the status of the connection to the communications partner to the CPU via a PLC tag.

  For information on the configuration, see section Partner configuration (Page 65).

- CP diagnostics

  The CP can store extended diagnostic data in PLC tags.

  For information on the configuration, see section CP diagnostics (Page 72).

You can display the states of the PLC tags via the Web server of the CPU or via a watch table, for example.

6.2 Online security diagnostics via port 8448 (CP 1542SP-1 IRC, CP 1543SP-1)

Security diagnostics without opening port 102

If you want to perform security diagnostics without opening port 102, follow the steps below:

1. Select the CP in STEP 7.
2. Open the "Online & diagnostics" shortcut menu.
3. In the parameter group "Security" click the "Connect online" button.

In this way you perform the security diagnostics via port 8448.

See also

Settings for online security diagnostics and downloading to station with the firewall activated (Page 121)

6.3 Diagnostics with SNMP

Requirement

The requirement for using SNMP is the enabling of the function in the configuration, see section SNMP (Page 55).

SNMP (Simple Network Management Protocol)

SNMP is a protocol for diagnostics and managing networks and nodes in the network. To transmit data, SNMP uses the connectionless UDP protocol.

The information on the properties of SNMP-compliant devices is entered in MIB files (MIB = Management Information Base).

You will find detailed information on SNMP and the Siemens Automation MIB in the manual /7/ (Page 169).

Scope of performance of the CPs

The CPs support the following SNMP version:

- **CP 1542SP-1, CP 1542SP-1 IRC**
  - SNMPv1
- **CP 1543SP-1**
  - SNMPv1
  - SNMPv3 (with activated Security functions)

  For information on configuring SNMPv3, see section SNMP (Page 130).

Traps are not supported by the CP.

Supported MIBs in SNMPv1

The CPs support the following MIBs:

- **MIB II (acc. to RFC1213)**

  The CP supports the following groups of MIB objects:
  - System
  - Interfaces
  - IP
  - ICMP
  - TCP
  - UDP
  - SNMP
- **LLDP MIB**
- **Siemens Automation MIB**

  Note the rights for writing to the MIB objects, see the next section (SNMPv3).

Supported MIB objects in SNMPv3

If SNMPv3 is enabled, the CP returns the contents of the following MIB objects:

- **MIB II (acc. to RFC1213)**

  The CP supports the following groups of MIB objects:

  – System

  – Interfaces

  The "Interfaces" MIB object provides status information about the CP interfaces.

  – IP (IPv4/IPv6)

  – ICMP

  – TCP

  – UDP

  – SNMP

  The following groups of the standard MIB II are not supported:

  – Adress Translation (AT)

  – EGP

  – Transmission

- **LLDP MIB**
- **Siemens Automation MIB**

  Note that write access is permitted only for the following MIB objects of the "System" group:

  – sysContact

  – sysLocation

  – sysName

  A set sysName is sent as the host name using DHCP option 12 to the DHCP server to register with a DNS server.

  For all other MIB objects and groups, only read access is possible for security reasons.

Access rights using community names (SNMPv1)

TCP uses the following community strings to control the permissions for access to the SNMP agent:

Table 6- 1 Access rights in the SNMP agent

Type of access	Community string *)
Read access	public
Read and write access	private

*) Note the use of lowercase letters!

6.4 Web server of the CPU

The Web server of the CPU

The CPU has a Web server which you can access from an engineering station using HTTP/HTTPS via the CP.

The Web server of the CPU provides a wide variety of functions for diagnostics and service purposes, for example, loading firmware files. You will find detailed information in the system manual /2/ (Page 168) and in the information system of STEP 7 in the topic and under the heading "Web server".

Requirements for access to the Web server

Permitted web browsers

You will find the Web browsers supported on the engineering station for access to the Web server of the CPU in the STEP 7 information system under the heading "Web server".

Requirements in the CPU configuration

1. Open the corresponding project on the engineering station.
2. Select the CPU of the station involved in STEP 7.
3. Select the "Web server" entry.
4. In the parameter group "General", select the "Enable Web server for this interface" option.
5. In the user management create a user with suitable rights on the CPU.

   To load firmware you need to assign this user the right to perform firmware updates in the access level.

   The user name and password are required later for access.
6. Configuration of the option "Allow access only using HTTPS" in the parameter group "General"

   Depending on whether you want to access the Web server using HTTP or HTTPS, the configuration of the parameter differs:

   – "Allow access only using HTTPS" enabled

     Connection establishment is possible only using HTTPS.

   – "Allow access only using HTTPS" disabled

     Connection establishment is possible using HTTP and HTTPS.

Additional requirements in the configuration of the CP 1543SP-1

Activate the firewall in the "Security" parameter group.

Depending on the protocol used you need to make the following further settings in the parameter group of the firewall "From external to station".

- With connection establishment using HTTP
  - Enable the "Allow HTTP" option.
  - Enable the "Allow HTTPS" option
    Reason: There is a switch to HTTPs after authentication on the Web server.
- With connection establishment using HTTPS
  - Disable the "Allow HTTP" option
  - Enable the "Allow HTTPS" option.

Establishing a connection to the Web server

Follow the steps below to connect to the Web server of the CPU from the engineering station.

These two variants are described in the following sections.

Connection establishment with HTTP

1. Connect the PC on which the new firmware file is located to the CP via the Ethernet interface.
2. Enter the address of the CP in the address box of your web browser:
   http://<IP address>
3. Press the Enter key.

   The start page of the Web server opens.
4. Click on the "Download certificate" entry at the top right of the window.

   The "Certificate" dialog opens.
5. Download the certificate to your PC by clicking the "Install certificate ..." button.

   The certificate is loaded on your PC.

   You will find information on downloading a certificate in the help of your Web browser and in the STEP 7 information system under the keyword "Certificates for Web server".

When the connection has changed to the secure mode HTTPS ("https://<IP address>/..." in the address box of the Web server), you can work with the Web server to, for example, download a firmware file (see the following section).

If you terminate the connection to the Web server, the next time you can log in with the Web server without downloading the certificate using HTTP.

Connection establishment with HTTPS

1. Connect the PC on which the new firmware is located to the CP or CPU via the Ethernet interface.
2. Enter the address of the CP in the address box of your web browser:
   https://<IP address>
3. Press the Enter key.

   The start page of the Web server opens.

You can work with the Web server.

Downloading firmware files via the Web server of the CPU

Requirement: The new firmware file is stored on your engineering station.

1. Log in on the start page of the Web server.
2. After logging in, select the entry "Module status" in the navigation panel of the Web server.
3. Select the CP in the module list.
4. Select the "Firmware" tab lower down in the window.
5. Browse for the firmware file on your PC using the "Browse..." button and download the file to the station using the "Run update" button.

Refer to the information on the duration of the firmware update in the section Downloading firmware (Page 151).

6.5 Processing status of the telecontrol e-mails

Configuration of the processing status of telecontrol e-mails (CP 1542SP-1 IRC)

The following status identifiers apply to e-mails configured with the message editor of the CP 1542SP-1 IRC, see also section Messages (e-mail) (Page 133).

E-mails sent via program blocks of Open User Communication return a different status via the block (see block help).

Processing status of the telecontrol e-mails

The meaning of the status of the "PLC tag for processing status" is as follows:

Table 6- 2 Meaning of the status ID output in hexadecimal format

Status	Meaning
0000	Transfer completed free of errors
82xx	Other error message from the e-mail server Apart from the leading "8", the message corresponds to the three-digit error number of the SMTP protocol.
8401	No channel available. Possible cause: There is already an e-mail connection via the CP. A second connection cannot be set up at the same time.
8403	No TCP/IP connection could be established to the SMTP server.
8405	The SMTP server has denied the login request.
8406	An internal SSL error or a problem with the structure of the certificate was detected by the SMTP client.
8407	Request to use SSL was denied.
8408	The client could not obtain a socket for creating a TCP/IP connection to the mail server.
8409	It is not possible to write via the connection. Possible cause: The communications partner reset the connection or the connection aborted.
8410	It is not possible to read via the connection. Possible cause: The communications partner terminated the connection or the connection was aborted.
8411	Sending the e-mail failed. Cause: There was not enough memory space for sending.
8412	The configured DNS server could not resolve specified domain name.
8413	Due to an internal error in the DNS subsystem, the domain name could not be resolved.
8414	An empty character string was specified as the domain name.
8415	An internal error occurred in the cURL module. Execution was aborted.
8416	An internal error occurred in the SMTP module. Execution was aborted.
8417	Requests to SMTP on a channel already being used or invalid channel ID. Execution was aborted.
8418	Sending the e-mail was aborted. Possible cause: Execution time exceeded.
8419	The channel was interrupted and cannot be used before the connection is terminated.
8420	Certificate chain from the server could not be verified with the root certificate of the CP.
8421	Internal error occurred. Execution was stopped.
8450	Action not executed: Mailbox not available / unreachable. Try again later.
84xx	Other error message from the e-mail server Apart from the leading "8", the message corresponds to the three-digit error number of the SMTP protocol.
8500	Syntax error: Command unknown. This also includes the error of having a command chain that is too long. The cause may be that the e-mail server does not support the LOGIN authentication method. Try sending e-mails without authentication (no user name).
8501	Syntax error. Check the following configuration data: Alarm configuration > E-mail data (Content): • Recipient address ("To" or "Cc").
8502	Syntax error. Check the following configuration data: Alarm configuration > E-mail data (Content): • Email address (sender)

Status	Meaning
8535	SMTP authentication incomplete. Check the "User name" and "Password" parameters in the CP configuration.
8550	SMTP server cannot be reached. You have no access rights. Check the following configuration data: • CP configuration > E-mail configuration: – User name – Password – Email address (sender) • Alarm configuration > E-mail data (Content): – Recipient address ("To" or "Cc").
8554	Transfer failed
85xx	Other error message from the e-mail server Apart from the leading "8", the message corresponds to the three-digit error number of the SMTP protocol.

6.6 Downloading firmware

New firmware versions of the CP

If a new firmware version is available for the CP, you will find this on the Internet pages of Siemens Industry Online Support:

Link: (https://support.industry.siemens.com/cs/ww/en/ps/22144/dl)

Link: (https://support.industry.siemens.com/cs/ww/en/ps/22143/dl)

There are three different ways of loading a new firmware file on the CP:

- Saving the firmware file on the memory card of the CPU

  You will find a description of the procedure for loading on the memory card of the CPU on the Internet page of Industry Online Support shown above.

- Loading the firmware with the online functions of STEP 7 via Ethernet / Internet

  You will find the description below.

- Downloading the firmware via the Web server of the CPU

  You will find the description in the section Web server of the CPU (Page 147).

Note

Duration of the firmware update

Downloading a new firmware file can take several minutes.

Note that the procedure takes longer the larger the station due to I/O modules.

Always wait until the completion of the firmware update can be recognized from the LEDs (LED pattern "Maintenance demanded" - End of the firmware update).

Loading the firmware with the online functions of STEP 7 via Ethernet / Internet

Requirements:

- The CP or the CPU can be reached via the IP address.
- The engineering station and the CP are located in the same subnet.
- The new firmware file is stored on your engineering station.
- The engineering station is connected to the network.
- The relevant STEP 7 project is open on the engineering station.

Procedure:

1. Select the CP or the CPU of the station whose CP you want to update with new firmware.
2. Enable the online functions using the "Connect online" icon.
3. In the "Connect online" dialog, select the Ethernet interface in the "Type of PG/PC interface" list box.
4. Select the slot of the CP or the CPU.

   Both methods are possible.
5. Click on "Start search" to search for the module in the network and to specify the connection path.

   When the module is found it is displayed in the table.
6. Connect using the "Connect" button.

   The "Connect online" wizard guides you through the remaining steps in installation.
7. In the network view, select the CP and select the "Online & Diagnostics" shortcut menu (right mouse button).
8. In the navigation panel of the Online & Diagnostics view, select the entry "Functions > Firmware update".
9. Using the "Browse" button (parameter group "Firmware loader"), search for the new firmware file in the file system of the engineering station.
10. Start the firmware download with the "Start update" button when the correct version of the signed firmware is displayed in the "Status" output box.

You will find further information on the online functions in the STEP 7 information system.

6.7 Module replacement

CAUTION

Read the system manual "SIMATIC ET 200SP Distributed I/O System"

Prior to installation, connecting up and commissioning, read the relevant sections in the system manual "SIMATIC ET 200SP Distributed I/O System" refer to the documentation in the Appendix.

When installing and connecting up, keep to the procedures described in the system manual "SIMATIC ET 200SP Distributed I/O System".

Make sure that the power supply is turned off when installing/uninstalling the devices.

Module replacement

The STEP -7 project data of the CP is stored on the local CPU. If there is a fault on the device, this allows simple replacement of the CP without needing to download the project data to the station again.

When the station starts up again, the new CP reads the project data from the CPU.

Technical specifications 7

Technical specifications		
Article numbers	CP 1542SP-1	6GK7542-6UX00-0XE0
	CP 1542SP-1 IRC	6GK7542-6VX00-0XE0
	CP 1543SP-1	6GK7543-6WX00-0XE0
Attachment to Industrial Ethernet		
Quantity	1	
Design	Slot for bus adapter	
Properties	For information on the properties of the BusAdapters and the permissible cable lengths, see /3/ (Page 168).	
Electrical data		
External power supply (X80), design	Socket Terminal block for socket	Two terminals with reverse polarity protection 2 x two terminal for single or redundant power supply
Power supply (external)	• Type of voltage • Permitted low limit • Permitted high limit	• 24 VDC • 19.2 V • 28.8 V
Current consumption	• From 24 VDC (external) • From backplane bus (3.3 V)	• 250 mA (typ.) • 4 mA (typ.)
Maximum Inrush current	(Rated value)	12 A
Effective power loss	(typical)	6 W
Overvoltage category according to IEC / EN 60664-1	Category I	
Permitted ambient conditions		
Ambient temperature	During operation with the rack installed horizontally	0 .. + 60 °C
	During operation with the rack installed vertically	0 .. + 50 °C
	During storage	-40 .. +70 °C
	During transportation	-40 .. +70 °C
Relative humidity	During operation	≤ 95 % at 25 °C, no condensation
Design, dimensions and weight		
Module format	Compact module ET 200SP	
Degree of protection	IP20	
Weight • Without bus adapter • With bus adapter 2xRJ45	 • 180 g • 230 g	

Technical specifications	
Dimensions (W x H x D)	60 x 117 x 74 mm
Installation options	DIN rail (35 mm)
Mean Time Between Failures (MTBF)	
• At + 40 °C • At + 60 °C	• 56.87 years • 24.78 years
Product functions	You will find additional properties and performance data in the section Application and functions (Page 11).

Approvals

A

Approvals issued

Note

Issued approvals on the type plate of the device

The specified approvals apply only when the corresponding mark is printed on the product. You can check which of the following approvals have been granted for your product by the markings on the type plate.

Scope of validity of the approvals

The approvals listed below are valid for the CP.

The tests required for the approvals were performed with a plugged-in bus adapter.

The bus adapters have their own approvals, that are not listed here.

EC declaration of conformity

The CP meets the requirements and safety objectives of the following EU directives and it complies with the harmonized European standards (EN) for programmable logic controllers which are published in the official documentation of the European Union.

- **2014/34/EU (ATEX explosion protection directive)**

  Directive of the European Parliament and the Council of 26 Febrary 2014 on the approximation of the laws of the Member States concerning equipment and protective systems intended for use in potentially explosive atmospheres, official journal of the EU L96, 29/03/2014, pages. 309-356

- **2014/30/EU (EMC)**

  EMC directive of the European Parliament and of the Council of February 26, 2014 on the approximation of the laws of the member states relating to electromagnetic compatibility.; official journal of the EU L96, 29/03/2014, pages. 79-106

- **2011/65/EU (RoHS)**

  Directive of the European Parliament and of the Council of 8 June 2011 on the restriction of the use of certain hazardous substances in electrical and electronic equipment, official journal of the EC L174, 01/07/2011, page 88-110

The EC Declaration of Conformity is available for all responsible authorities at:

Siemens Aktiengesellschaft
Division Process Industries and Drives
Process Automation
DE-76181 Karlsruhe
Germany

You will find the EC Declaration of Conformity on the Internet at the following address:

Link: (https://support.industry.siemens.com/cs/ww/en/ps/)

> Certificate type: "EC declaration of conformity"

IECEx

The CP meet the requirements of explosion protection according to IECEx.

IECEx classification: Ex nA IIC T4 Gc

IECEx certificate: IECEx DEK 14.0025X

The CP meets the requirements of the following standards:

- IEC 60079-0

  Hazardous areas - Part 0: Equipment - General requirements

- EN 60079-15

  Explosive atmospheres - Part 15: Equipment protection by type of protection 'n'

You can see the current versions of the standards in the IECEx certificate that you will find on the Internet at the following address:

Link: (https://support.industry.siemens.com/cs/ww/en/ps/)

The conditions must be met for the safe deployment of the CP according to the section Notes on use in hazardous areas according to ATEX / IECEx (Page 38).

You should also note the information in the document "Use of subassemblies/modules in a Zone 2 Hazardous Area" that you will find on the Internet at the following address:

Link: (https://support.industry.siemens.com/cs/ww/en/view/78381013)

ATEX

The CP meets the requirements of the EC directive 2014/34/EU "Equipment and Protective Devices for Use in Potentially Explosive Atmospheres".

Applied standards:

- EN 60079-0

  Hazardous areas - Part 0: Equipment - General requirements

- EN 60079-15

  Explosive atmospheres - Part 15: Equipment protection by type of protection 'n'

The current versions of the standards can be seen in the EC Declaration of Conformity, see above.

ATEX approval: II 3 G Ex nA IIC T4 Gc

Test number: KEMA 07ATEX0145 X

Observe the conditions for safe usage of the CP according to the section Notes on use in hazardous areas according to ATEX / IECEx (Page 38).

You should also note the information in the document "Use of subassemblies/modules in a Zone 2 Hazardous Area" that you will find on the Internet at the following address:

Link: (https://support.industry.siemens.com/cs/ww/en/view/78381013)

EMC

The CP meets the requirements of the EC Directive 2014/30/EU "Electromagnetic Compatibility" (EMC directive).

Applied standards:

- EN 61000-6-4

  Electromagnetic compatibility (EMC) - Part 6-4: Generic standards - Emission standard for industrial environments

- EN 61000-6-2

  Electromagnetic compatibility (EMC) - Part 6-2: Generic standards - Immunity for industrial environments

RoHS

The CP meets the requirements of the EC directive 2011/65/EU on the restriction of the use of certain hazardous substances in electrical and electronic equipment.

Applied standard:

- EN 50581:2012

c(UL)us

Applied standards:

- Underwriters Laboratories, Inc.: UL 61010-1 (Safety Requirements for Electrical Equipment for Measurement, Control, and Laboratory Use - Part 1: General Requirements)
- IEC/UL 61010-2-201 (Safety requirements for electrical equipment for measurement, control and laboratory use. Particular requirements for control equipment)
- Canadian Standards Association: CSA C22.2 No. 142 (Process Control Equipment)

Report / UL file: E85972 (NRAG, NRAG7)

cULus Hazardous (Classified) Locations

Underwriters Laboratories, Inc.: CULUS Listed E223122 IND. CONT. EQ. FOR HAZ. LOC.

Applied standards:

- ANSI ISA 12.12.01
- CSA C22.2 No. 213-M1987

APPROVED for Use in:

- Cl. 1, Div. 2, GP. A, B, C, D T4
- Cl. 1, Zone 2, GP. IIC T4

Ta: Refer to the temperature class on the type plate of the CP

Report / UL file: E223122 (NRAG, NRAG7)

Observe the conditions for safe usage of the CP according to the section Notes on use in hazardous areas according to UL HazLoc (Page 39).

FM

Factory Mutual Approval Standard Class Number 3600, 3611, 3810, ANSI/ISA-61010-1

Equipment rating:
Class I, Division 2, Group A, B, C, D, Temperature Class T4, Ta = 60 °C
Class I, Zone 2, Group IIC, Temperature Class T4, Ta = 60 °C

Ta: Refer to the temperature class on the type plate of the CP

Observe the conditions for safe usage of the CP according to the section General notices on use in hazardous areas according to FM (Page 39).

Australia - RCM

The CP meets the requirements of the AS/NZS 2064 standards (Class A).

Marking for the customs union

EAC (Eurasian Conformity)

Customs union of Russia, Belarus and Kazakhstan

Declaration of the conformity according to the technical regulations of the customs union (TR CU)

MSIP 요구사항 - For Korea only

Registration Number: MSIP REI S7M ET200SP

A급 기기(업무용 방송통신기자재)

이 기기는 업무용(A급) 전자파 적합기기로서 판매자 또는 사용자는 이 점을 주의하시기 바라며, 가정 외의 지역에서 사용하는것을 목적으로 합니다.

Current approvals

SIMATIC NET products are regularly submitted to the relevant authorities and approval centers for approvals relating to specific markets and applications.

If you require a list of the current approvals for individual devices, consult your Siemens contact or check the Internet pages of Siemens Industry Online Support:

Link: (http://support.automation.siemens.com/WW/view/en/45605894)

Dimension drawings

B

All dimensions in the dimension drawings are in millimeters.

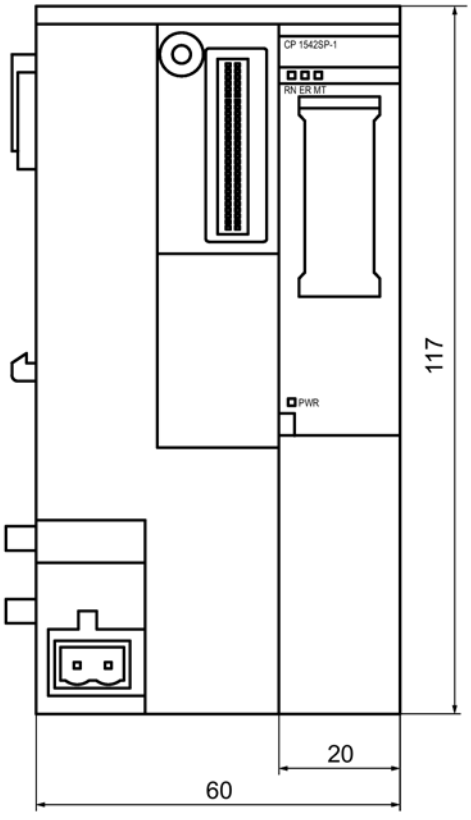

Figure B-1 Front view of the CP

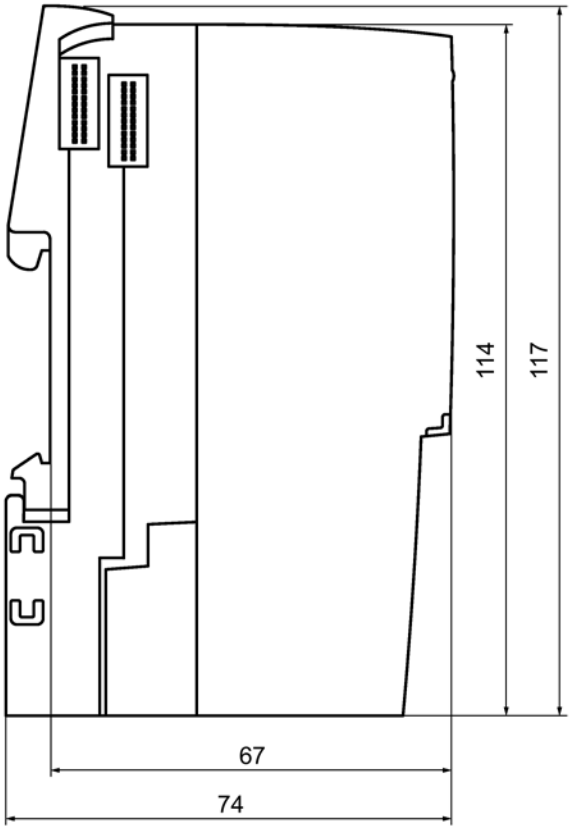

Figure B-2 Side view (left) of the CP

Accessories

C

C.1 BusAdapter

Compatible BusAdapter

To connect to the Ethernet network, the CP requires a BusAdapter. A BusAdapter does not ship with the CP.

Figure C-1 Example of a bus adapter, here BA SCRJ/RJ45

The CP supports the following bus adapters:

- BA 2×RJ45

  PROFINET bus adapter with the following connectors:

  – 2 x Ethernet jack RJ-45

  Article number: 6ES7193-6AR00-0AA0

- BA 2xFC

  PROFINET bus adapter with the following connectors:

  – 2 x direct connection of the bus cable (FastConnect)

  Article number: 6ES7193-6AF00-0AA0

- BA 2xSCRJ

  PROFINET bus adapter with the following connectors:

  – 2 x fiber-optic cable POF/PCF

  Article number: 6ES7193-6AP00-0AA0

- BA SCRJ/RJ45

  PROFINET bus adapter, media converter FO - copper with the following connectors:

  – 1 x fiber-optic cable POF/PCF

  – 1 x Ethernet jack RJ-45

  Article number: 6ES7193-6AP20-0AA0

- BA SCRJ/FC

  PROFINET bus adapter, media converter FO - copper with the following connectors:

  – 1 x fiber-optic cable POF/PCF

  – 1 x direct connection of the bus cable (FastConnect)

  Article number: 6ES7193-6AP40-0AA0

You will find further details in the manual /2/ (Page 168) and in the Siemens Industry Mall in Link: (https://mall.industry.siemens.com).

Pinout of the Ethernet interface

The table below shows the pin assignment of the Ethernet interface. The pin assignment corresponds to the Ethernet standard 802.3-2005, 100BASE-TX version.

Table C- 1 Pin assignment of the Ethernet interface

View of the RJ-45 jack	Pin	Signal name	Assignment
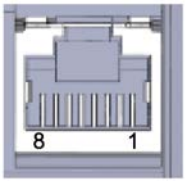	1	TD	Transmit Data +
	2	TD_N	Transmit Data -
	3	RD	Receive Data +
	4	GND	Ground
	5	GND	Ground
	6	RD_N	Receive Data -
	7	GND	Ground
	8	GND	Ground

C.2 Router SCALANCE M

Routers for IP-based communication

To connect a communications module to IP-based infrastructure networks, the following routers are available:

- SCALANCE M812

  ADSL router for wired IP communication via the Internet, VPN, firewall, NAT, 1 RJ-45 Ethernet interface,1 digital input, 1 digital output, ADSL2T or ADSL2+

  – ADSL2T (analog phone connection - Annex A)
    Article number: 6GK5812-1AA00-2AA2

  – ADSL2+ (ISDN connection - Annex B)
    Article number: 6GK5812-1BA00-2AA2

- SCALANCE M816

  ADSL router for wired IP communication via the Internet, VPN, firewall, NAT, 1 RJ-45 Ethernet interface with 4-port switch,1 digital input, 1 digital output, ADSL2T or ADSL2+

  – ADSL2T (analog phone connection - Annex A)
    Article number: 6GK5816-1AA00-2AA2

  – ADSL2+ (ISDN connection - Annex B)
    Article number: 6GK5816-1BA00-2AA2

- SCALANCE M826-2

  SHDSL router for IP communication via 2- and 4-wire cables, ITU-T standard G.991.2 / SHDSL.biz, SHDSL topology: Point-to point, bonding, line bridge mode; routing mode with VPN, firewall, NAT, 1 Ethernet interface with 4-port switch, 1 digital input, 1 digital output
  Article number 6GK5826-2AB00-2AB2

- SCALANCE M874-2

  2.5G router for wireless IP communication via 2.5G mobile phone, VPN, firewall, NAT, 1 RJ45 Ethernet interface with 2-port switch, SMA antenna connector, 1 digital input, 1 digital output
  Article number: 6GK5874-2AA00-2AA2

- SCALANCE M874-3

  3G router for wireless IP communication via 3G mobile phone HSPA+, VPN, firewall, NAT, 1 RJ45 Ethernet interface with 2-port switch, SMA antenna connector, 1 digital input, 1 digital output
  Article number: 6GK5874-3AA00-2AA2

- SCALANCE M876-3

  3G router for wireless IP communication via 3G mobile phone HSPA+/EV-DO, VPN, firewall, NAT, 1 RJ45 Ethernet interface with 4-port switch, SMA antenna connector, antenna diversity,1 digital input, 1 digital output
  Note network provider approvals!

  – International version
    Article number: 6GK5876-3AA02-2BA2

  – Version for Korea
    Article number: 6GK5876-3AA02-2EA2

- SCALANCE M876-4

  4G router for wireless IP communication via LTE mobile phone, VPN, firewall, NAT, 1 RJ45 Ethernet interface with 4-port switch, 2 SMA antenna connectors, MIMO technology, 1 digital input, 1 digital output

  – Version for Europe
    Article number: 6GK5876-4AA00-2BA2

  – Version for North America
    Article number: 6GK5876-4AA00-2DA2

Information on the devices can be found on the Internet pages of Siemens Industry Online Support:
Link: (https://support.industry.siemens.com/cs/ww/en/ps/15982)

Documentation references

D

Where to find Siemens documentation

- Article numbers

  You will find the article numbers for the Siemens products of relevance here in the following catalogs:

  – SIMATIC NET - Industrial Communication / Industrial Identification, catalog IK PI

  – SIMATIC - Products for Totally Integrated Automation and Micro Automation, catalog ST 70

  You can request the catalogs and additional information from your Siemens representative. You will also find the product information in the Siemens Industry Mall at the following address:

  Link: (https://mall.industry.siemens.com)

- Manuals on the Internet

  You will find SIMATIC NET manuals on the Internet pages of Siemens Industry Online Support:

  Link: (https://support.industry.siemens.com/cs/ww/en/ps/15247/man)

  Go to the required product in the product tree and make the following settings:

  Entry type “Manuals”

- Manuals on the data medium

  You will find manuals of SIMATIC NET products on the data medium that ships with many of the SIMATIC NET products.

/1/

SIMATIC
CP 1542SP-1, CP 1542SP-1 IRC, CP 1543SP-1
Operating instructions
Siemens AG
Link: (https://support.industry.siemens.com/cs/ww/en/ps/22144/man)
Link: (https://support.industry.siemens.com/cs/ww/en/ps/22143/man)

/2/

SIMATIC
ET 200SP - Distributed I/O System
system manual
Siemens AG
Link: (http://support.automation.siemens.com/WW/view/en/58649293)

/3/

SIMATIC
ET 200SP
Manual Collection
Siemens AG
Link: (https://support.industry.siemens.com/cs/ww/en/view/84133942)

/4/

SIMATIC NET
TeleControl Server Basic (Version V3)
Operating Instructions
Siemens AG
Link: (https://support.industry.siemens.com/cs/ww/en/ps/15918/man)

/5/

SIMATIC NET
Industrial Ethernet Security
Security basics and applications
Configuration manual
Siemens AG
Link: (https://support.industry.siemens.com/cs/ww/en/ps/15326/man)

/6/

SIMATIC NET
TIM DNP3
System manual
Siemens AG
Link: (https://support.industry.siemens.com/cs/ww/en/ps/15940/man)

/7/

SIMATIC NET
Diagnostics and configuration with SNMP
Diagnostics manual
Siemens AG
Link: (https://support.industry.siemens.com/cs/ww/en/ps/15392/man)

/8/

SIMATIC NET
Industrial Ethernet / PROFINET
System manual
Siemens AG

- Industrial Ethernet
  Link: (https://support.industry.siemens.com/cs/ww/de/view/27069465)
- Passive network components
  Link: (https://support.industry.siemens.com/cs/ww/en/view/84922825)

/9/

SIMATIC NET
SINEMA Remote Connect - Server
Operating Instructions
Siemens AG
Link: (https://support.industry.siemens.com/cs/ww/en/ps/21816/man)

/10/

SIMATIC NET
SINAUT ST7
System Manual
- Volume 1: Station control system
- Band 2: Software (STEP 7 V5)
- Volume 3: Software (STEP 7 Professional)
Siemens AG
Link: (https://support.industry.siemens.com/cs/ww/en/ps/21771/man)

/10/

Index

A

Abbreviations/acronyms, 4
Article number, 3
Assign - IP address, 143

B

BusAdapter, 35

C

Conditional spontaneous, 103
Connection resources, 21
CPU firmware, 24
Cross references (PDF), 5

D

Data buffering, 23
Data points - Configuration, 79
Disposal, 6
DNP3
    Device profile, 15
    Protocol, 15
DNS server - program-controlled change, 139

E

E-mail
    Configuration, 133
    Quantity, 22
Engineering station, 4
Ethernet interface
    Assignment, 164

F

Firewall, 17
Firmware version, 3
Forwarding time of day, 55
Frame memory, 23

G

Gateway, 127
General request supervision time, 78
Glossary, 6

H

Hardware product version, 3

I

IEC 60870-5-104
    Device profile, 15
    Protocol, 15
Image memory, 97
Inter-station communication, 14, 96
IP address - program-controlled change, 139
IP_CONF_V4, 139
IPsec, 123
IPv4, 13
IPv6, 13

M

MAC address, 3
MIB, 144
Mirroring back, 90
MODBUS (TCP), 140

N

NTP, 54
NTP (secure), 54
NTP server - program-controlled change, 139
IPsec tunnel,

O

Online diagnostics, 59, 141
Online functions, 143
OUC (Open User Communication), 137

P

Passive VPN connection establishment, 127
Port 8448, 144
Power supply, 34
Pre-shared key (DNP3), 119
Product name, 4

R

Recycling, 6
Redundant telecontrol connections, 76
Replacing a module, 153

S

S7 connections - enable, 58
Safety notices, 37
Security diagnostics without port 102, 144
Security functions, 18
Send buffer, 23, 97
Service & Support, 6
SIMATIC NET glossary, 6
SINEMA Remote Connect, 12
Slot rules, 41
SMTPS, 123
SNMP, 13, 144
SNMPv3, 18, 130
Spontaneous, 103
STARTTLS, 123
STEP 7 version, 24
Subscriber number, 73

T

T_CONFIG, 139
TC_CONFIG, 139
TCSB, 4
TeleControl Basic, 14
Telecontrol server, 4
Time stamp, 78, 87, 92
TLS, 123
Training, 6
Transmission mode, 103
Trigger tag - resetting, 102
TSCB
    Version, 14

V

Virtual IP address, 69
VPN, 22, 123

SIEMENS

Manual

SIMATIC

ET 200SP

Communication module IO-Link Master
CM 4xIO-Link (6ES7137-6BD00-0BA0)

Edition 10/2017

support.industry.siemens.com

SIEMENS

SIMATIC

ET 200SP
Communication module
IO-Link Master CM 4xIO-Link
(6ES7137-6BD00-0BA0)

Manual

Preface

Documentation guide 1

Product overview 2

Connecting 3

Parameters/address space 4

Diagnostic alarms 5

Technical specifications 6

Parameter data record A

10/2017

A5E03856846-AD

Legal information

Warning notice system

This manual contains notices you have to observe in order to ensure your personal safety, as well as to prevent damage to property. The notices referring to your personal safety are highlighted in the manual by a safety alert symbol, notices referring only to property damage have no safety alert symbol. These notices shown below are graded according to the degree of danger.

⚠ DANGER

indicates that death or severe personal injury **will** result if proper precautions are not taken.

⚠ WARNING

indicates that death or severe personal injury **may** result if proper precautions are not taken.

⚠ CAUTION

indicates that minor personal injury can result if proper precautions are not taken.

NOTICE

indicates that property damage can result if proper precautions are not taken.

If more than one degree of danger is present, the warning notice representing the highest degree of danger will be used. A notice warning of injury to persons with a safety alert symbol may also include a warning relating to property damage.

Qualified Personnel

The product/system described in this documentation may be operated only by **personnel qualified** for the specific task in accordance with the relevant documentation, in particular its warning notices and safety instructions. Qualified personnel are those who, based on their training and experience, are capable of identifying risks and avoiding potential hazards when working with these products/systems.

Proper use of Siemens products

Note the following:

⚠ WARNING

Siemens products may only be used for the applications described in the catalog and in the relevant technical documentation. If products and components from other manufacturers are used, these must be recommended or approved by Siemens. Proper transport, storage, installation, assembly, commissioning, operation and maintenance are required to ensure that the products operate safely and without any problems. The permissible ambient conditions must be complied with. The information in the relevant documentation must be observed.

Trademarks

All names identified by ® are registered trademarks of Siemens AG. The remaining trademarks in this publication may be trademarks whose use by third parties for their own purposes could violate the rights of the owner.

Disclaimer of Liability

We have reviewed the contents of this publication to ensure consistency with the hardware and software described. Since variance cannot be precluded entirely, we cannot guarantee full consistency. However, the information in this publication is reviewed regularly and any necessary corrections are included in subsequent editions.

Siemens AG
Division Digital Factory
Postfach 48 48
90026 NÜRNBERG
GERMANY

A5E03856846-AD
℗ 11/2017 Subject to change

Copyright © Siemens AG 2013 - 2017.
All rights reserved

Preface

Purpose of the documentation

This manual supplements the ET 200SP distributed I/O system (http://support.automation.siemens.com/WW/view/en/58649293) system manual. It describes functions that generally affect the ET 200SP distributed I/O system.

The information provided in this manual and in the system manual and function manuals supports you in commissioning the ET 200SP distributed I/O system.

Conventions

Please also observe notes marked as follows:

Note

A note contains important information on the product described in the documentation, on the handling of the product or on the section of the documentation to which particular attention should be paid.

Security information

Siemens provides products and solutions with industrial security functions that support the secure operation of plants, systems, machines and networks.

In order to protect plants, systems, machines and networks against cyber threats, it is necessary to implement – and continuously maintain – a holistic, state-of-the-art industrial security concept. Siemens' products and solutions constitute one element of such a concept.

Customers are responsible for preventing unauthorized access to their plants, systems, machines and networks. Such systems, machines and components should only be connected to an enterprise network or the internet if and to the extent such a connection is necessary and only when appropriate security measures (e.g. firewalls and/or network segmentation) are in place.

For additional information on industrial security measures that may be implemented, please visit (https://www.siemens.com/industrialsecurity).

Siemens' products and solutions undergo continuous development to make them more secure. Siemens strongly recommends that product updates are applied as soon as they are available and that the latest product versions are used. Use of product versions that are no longer supported, and failure to apply the latest updates may increase customers' exposure to cyber threats.

To stay informed about product updates, subscribe to the Siemens Industrial Security RSS Feed under (https://www.siemens.com/industrialsecurity).

Table of contents

Preface 4

1 Documentation guide 6

2 Product overview 10

2.1 Properties 10

2.2 Functions 13

2.3 Replacement of the IO-Link Master CM 4xIO-Link communication module with an electronic coding element type H 13

2.4 Time-based IO 15

2.5 Reset communication module to factory settings 16

3 Connecting 17

3.1 Wiring and block diagram 17

4 Parameters/address space 21

4.1 Parameters 21

4.2 Declaration of parameters 23

4.3 Address space 25

5 Diagnostic alarms 28

5.1 Status and error displays 28

5.2 Diagnostic alarms 31

6 Technical specifications 32

A Parameter data record 36

A.1 Parameter assignment and structure of parameter data set 36

Documentation guide

1

The documentation for the SIMATIC ET 200SP distributed I/O system is arranged into three areas.
This arrangement enables you to access the specific content you require.

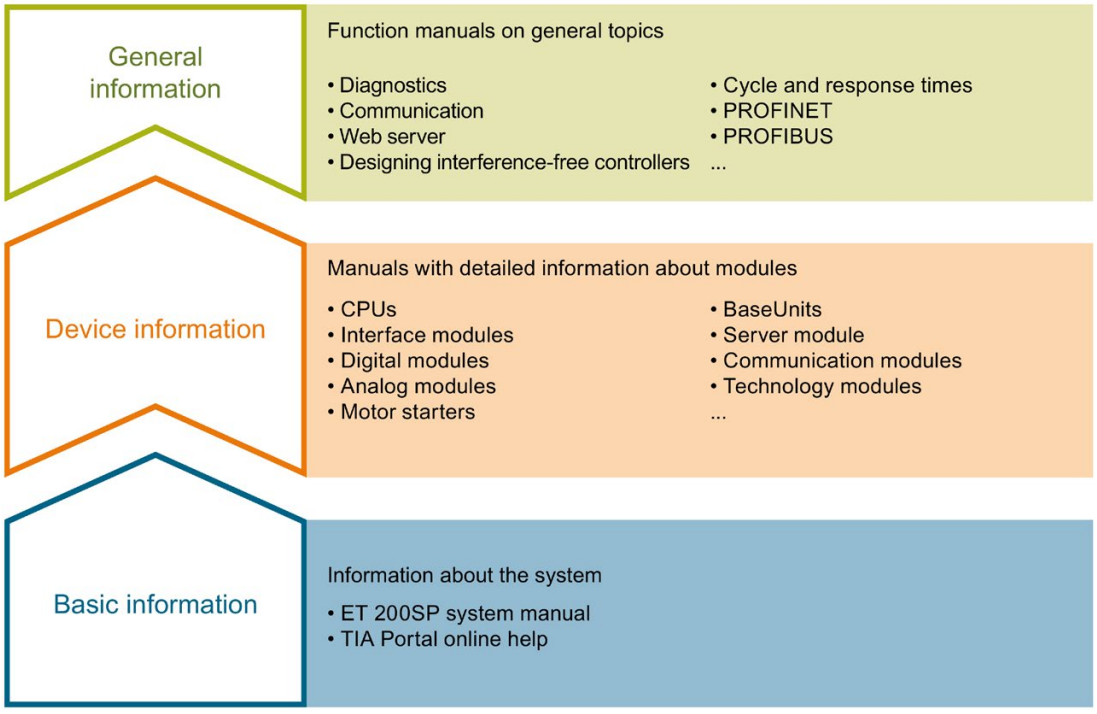

Basic information

The system manual describes in detail the configuration, installation, wiring and commissioning of the SIMATIC ET 200SP. distributed I/O system. The STEP 7 online help supports you in the configuration and programming.

Device information

Product manuals contain a compact description of the module-specific information, such as properties, wiring diagrams, characteristics and technical specifications.

General information

The function manuals contain detailed descriptions on general topics regarding the SIMATIC ET 200SP distributed I/O system, e.g. diagnostics, communication, Web server, motion control and OPC UA.

You can download the documentation free of charge from the Internet (https://support.industry.siemens.com/cs/ww/en/view/109742709).

Changes and supplements to the manuals are documented in a Product Information.

You can download the product information free of charge from the Internet (https://support.industry.siemens.com/cs/us/en/view/73021864).

Manual Collection ET 200SP

The Manual Collection contains the complete documentation on the SIMATIC ET 200SP distributed I/O system gathered together in one file.

You can find the Manual Collection on the Internet (http://support.automation.siemens.com/WW/view/en/84133942).

"mySupport"

With "mySupport", your personal workspace, you make the most of your Industry Online Support.

In "mySupport" you can store filters, favorites and tags, request CAx data and put together your personal library in the Documentation area. Furthermore, your data is automatically filled into support requests and you always have an overview of your current requests.

You need to register once to use the full functionality of "mySupport".

You can find "mySupport" in the Internet (https://support.industry.siemens.com/My/ww/en).

"mySupport" - Documentation

In the Documentation area of "mySupport", you have the possibility to combine complete manuals or parts of them to make your own manual.
You can export the manual in PDF format or in an editable format.

You can find "mySupport" - Documentation in the Internet (http://support.industry.siemens.com/My/ww/en/documentation).

"mySupport" - CAx Data

In the CAx Data area of "mySupport", you can have access the latest product data for your CAx or CAe system.

You configure your own download package with a few clicks.

In doing so you can select:

- Product images, 2D dimension drawings, 3D models, internal circuit diagrams, EPLAN macro files
- Manuals, characteristics, operating manuals, certificates
- Product master data

You can find "mySupport" - CAx Data in the Internet (http://support.industry.siemens.com/my/ww/en/CAxOnline).

Application examples

The application examples support you with various tools and examples for solving your automation tasks. Solutions are shown in interplay with multiple components in the system - separated from the focus in individual products.

You can find the application examples on the Internet (https://support.industry.siemens.com/sc/ww/en/sc/2054).

TIA Selection Tool

With the TIA Selection Tool, you can select, configure and order devices for Totally Integrated Automation (TIA).
This tool is the successor of the SIMATIC Selection Tool and combines the known configurators for automation technology into one tool.
With the TIA Selection Tool, you can generate a complete order list from your product selection or product configuration.

You can find the TIA Selection Tool on the Internet (http://w3.siemens.com/mcms/topics/en/simatic/tia-selection-tool).

SIMATIC Automation Tool

You can use the SIMATIC Automation Tool to run commissioning and maintenance activities simultaneously on various SIMATIC S7 stations as a bulk operation independently of the TIA Portal.

The SIMATIC Automation Tool provides a multitude of functions:

- Scanning of a PROFINET/Ethernet network and identification of all connected CPUs
- Address assignment (IP, subnet, gateway) and station name (PROFINET device) to a CPU
- Transfer of the data and the programming device/PC time converted to UTC time to the module
- Program download to CPU
- Operating mode switchover RUN/STOP
- Localization of the CPU by means of LED flashing
- Reading out CPU error information
- Reading the CPU diagnostic buffer
- Reset to factory settings
- Updating the firmware of the CPU and connected modules

You can find the SIMATIC Automation Tool on the Internet (https://support.industry.siemens.com/cs/ww/en/view/98161300).

PRONETA

With SIEMENS PRONETA (PROFINET network analysis), you analyze the plant network during commissioning. PRONETA features two core functions:

- The topology overview independently scans PROFINET and all connected components.
- The IO check is a fast test of the wiring and the module configuration of a system.

You can find SIEMENS PRONETA on the Internet (https://support.industry.siemens.com/cs/ww/en/view/67460624).

SINETPLAN

SINETPLAN, the Siemens Network Planner, supports you in planning automation systems and networks based on PROFINET. The tool facilitates professional and predictive dimensioning of your PROFINET installation as early as in the planning stage. In addition, SINETPLAN supports you during network optimization and helps you to exploit network resources optimally and to plan reserves. This helps to prevent problems in commissioning or failures during productive operation even in advance of a planned operation. This increases the availability of the production plant and helps improve operational safety.

The advantages at a glance

- Network optimization thanks to port-specific calculation of the network load
- Increased production availability thanks to online scan and verification of existing systems
- Transparency before commissioning through importing and simulation of existing STEP 7 projects
- Efficiency through securing existing investments in the long term and optimal exploitation of resources

You can find SINETPLAN on the Internet (https://www.siemens.com/sinetplan).

Product overview

2

2.1 Properties

Article number

6ES7137-6BD00-0BA0

View of the module

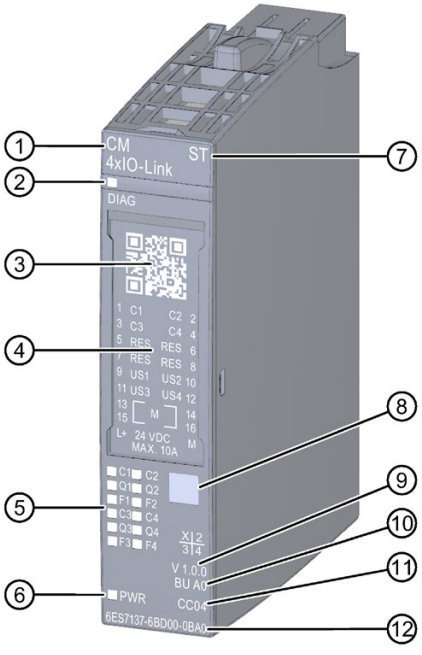

① Module type and name
② LED for diagnostics
③ QR code
④ Connection diagram
⑤ LEDs for status and error displays
⑥ LED for supply voltage
⑦ Function class
⑧ Color coding module type
⑨ Function and firmware version
⑩ BU type
⑪ Color code for selecting the color-coded labels
⑫ Article number

Figure 2-1 View of the IO-Link Master CM 4xIO-Link communication module

Properties

The module has the following technical properties:

- IO-Link master according to IO-Link specification V1.1
- Serial communication module with 4 ports (channels)
- Data transmission rate COM1 (4.8 kbaud), COM2 (38.4 kbaud), COM3 (230.4 kbaud)
- SIO mode (standard IO mode)
- Suitable for connecting up to 4 IO-Link devices (3-wire connection) or 4 standard actuators or encoders
- Programmable diagnostics function by port
- Automatic backup of the master and device parameters via electronic coding element

The module supports the following functions:

Table 2- 1 Version dependencies of the module functions

Function	Firmware version of the module
Firmware update	V1.0 or higher
Identification and maintenance data (I&M)	V1.0 or higher
PROFIenergy	V1.0 or higher
IO-Link port configuration with S7-PCT	V1.0 or higher
Module replacement with automatic data recovery without engineering for IO-Link master and IO-Link device	V1.0 or higher
Time-based IO (time stamping)	V2.0 or higher
Variable address range of I/O data with up to 32-byte inputs and 32-byte outputs	V2.0 or higher
Variable address range of I/O data with up to 144-byte inputs and 128-byte outputs	V2.1 or higher
IO-Link port configuration without S7-PCT	V2.2 or higher
Master Backup with function block IO_LINK_MASTER	V2.2 or higher
PortQualifierInformation (PQI)	V2.2 or higher

The module can be used with the following engineering tools:

Table 2- 2 Engineering tools depending on the firmware version of the module

Firmware version of the module	S7-PCT	STEP 7 (TIA Portal)	STEP 7 V5.5	GSD file
V1.0 (in PROFINET station)	V3.0 or higher	V12 SP1 or higher	As of V5.5 SP3 with HSP0231 as of V1.0	X
V1.0.3 (in PROFIBUS station)	V3.1 or higher	V13 or higher	As of V5.5 SP3 with HSP0231 as of V1.0	X
V2.0	V3.2 or higher	As of V13 (Time-based IO only with CPU S7-1500)	As of V5.5 SP3 with HSP0231 as of V1.0 (without Time-based IO)	X (without time-based IO)
V2.1	As of V3.3 and SupportedModules.xml V1.2	As of V13 SP1 with HSP0136 as of V1.0 (Time-based IO only with CPU S7-1500)	As of V5.5 SP4 with HSP0231 as of V4.0 (without Time-based IO)	X (without time-based IO)
V2.2	V3.5 or higher	V15 or higher (without time-based IO)	V5.5 SP4 or higher with HSP0231, V4.1 or higher (without time-based IO)	X (without time-based IO)

Accessories/spare parts

The following accessories / replacement parts are available for the module and are not included in the scope of delivery:

- Labeling strips
- Color-coded labels
- Reference identification label
- Electronic coding element type H

See also

You can find more information on accessories in the ET 200SP Distributed I/O System (http://support.automation.siemens.com/WW/view/en/58649293) system manual in the Accessories/Spare parts section.

2.2 Functions

IO-Link is a point-to-point connection between a master and a device. Both conventional and intelligent sensors/actuators can be used as devices at the IO-Link via unshielded standard cables using proven 3-wire technology. IO-Link is backward compatible with conventional digital sensors and actuators. The circuit state and data channel are designed in proven 24 V DC technology.

Reference

Additional information can be found in the IO-Link System (http://support.automation.siemens.com/WW/view/en/65949252) function manual.

2.3 Replacement of the IO-Link Master CM 4xIO-Link communication module with an electronic coding element type H

If you remove the communication module from the BaseUnit, part of the electronic coding element remains in the BaseUnit. The parameters of the IO-Link Master CM 4xIO-Link and of the IO-Link devices are stored in this part. A newly inserted (but not yet configured) IO-Link master takes over the parameters from the electronic coding element.

CAUTION

Removal and insertion

Plugging in the IO-Link Master CM 4xIO-Link communication module when the load is switched on can result in dangerous conditions in your plant.

The ET 200SP distributed I/O system may be damaged as a result.

The IO-Link Master CM 4xIO-Link communication module should only be plugged in or pulled out when the load is switched off.

Master Backup

In addition to saving the parameters in the electronic coding element, you can back up the parameters of your module, firmware version V2.2 or higher, with the function block "IO_LINK_MASTER".

The "IO_LINK_MASTER" function block is used to read all relevant IO-Link device and IO-Link master parameters. These can be stored retentively at a central location, such as in a data block in the IO controller.

The status of the IO-Link devices or IO-Link ports stored in the IO-Link master can be restored with the "IO_LINK_MASTER" function block.
As a result, the IO-Link ports and the IO-Link master are configured with the values stored in the master backup.

A typical application is restoring the parameters after replacement of the IO-Link master.

Note

Availability

Note that the Master Backup function is available only for IO-Link devices that are specified for the IO-Link Standard as of V1.1.

You will find further information on the Master Backup functions in section "Master backup" of chapter "Integration into the automation system" of the IO-Link System (https://support.industry.siemens.com/cs/ww/en/view/65949252) function manual.

Reference

For more information on the topic of "Coding element", refer to the Changing the type of an I/O module chapter of the ET 200SP distributed I/O system (http://support.automation.siemens.com/WW/view/en/58649293) system manual.

2.4 Time-based IO

Time-based IO ensures that signals are output with a precisely defined response time. A combination of inputs and outputs allows, for example, passing products to be measured precisely or liquids to be dosed optimally.

As of firmware version V2.0.0, the IO-Link master supports the Time-based IO function. You configure the connected IO-Link devices with time stamp functionality as normal with the SIMATIC S7 Port Configuration Tool (S7-PCT). In the "Ports" tab in S7-PCT, set the necessary parameters in the "Operating mode" section:

- IO-Link_Time_based_IO_IN
- IO-Link_Time_based_IO_OUT
- IO-Link_Time_based_IO_INOUT

The Time-based IO function can be used for IO-Link master with 32 bytes I/O data. Larger I/O data ranges are not supported by Time-based IO.

Note

Time stamp function

The time stamp function requires defined address assignment (mapping).

If the address area you require is already occupied, you must modify the user data arrangement of the IO-Link devices in the address space of the IO-Link master.

The "High-precision input/output with Time-based IO" function manual describes how to move user data in the address space.

Reference

You can find more information about Time-based IO in the High-precision input/output with Time-based IO (http://support.automation.siemens.com/WW/view/en/82527590) function manual.

2.5 Reset communication module to factory settings

Effects of resetting to the factory settings

Use the "Reset to factory settings" function to restore the parameter assignments of your IO-Link Master CM 4xIO-Link communication module made with S7-PCT to the factory state.

After a "Reset to factory settings", the parameters of the IO-Link Master CM 4xIO-Link communication module are assigned as follows:

- The ports are in DI mode
- The ports are mapped to the relative addresses 0.0 ... 0.3
- The PortQualifier is disabled
- I&M data 1 to 3 is deleted
- The electronic coding element (if it exists) is deleted

Note

The device parameters are deleted and the factory state is restored.

You should reset a removed IO-Link Master CM 4xIO-Link communication module to the factory settings before you place it in storage.

Procedure

To perform a "Reset to factory settings", proceed as described in the S7-PCT online help.

Connecting 3

3.1 Wiring and block diagram

This section includes the block diagram of the communication module IO-Link Master CM 4xIO-Link with the terminal assignments for 3-wire and 5-wire connection of IO-Link devices or 2-wire and 3-wire connection in DI or DQ operating mode.

You can use and combine the different wiring options for all channels.

You can find information on wiring the BaseUnit in the system manual Distributed I/O System ET 200SP (https://support.industry.siemens.com/cs/ww/en/view/58649293).

NOTICE
Internal encoder supply Use only the supply voltage (US_n/M) made available by the IO-Link Master CM 4xIO-Link communication module to supply the IO-Link device (L+/L-).

Wiring: 3-wire and 5-wire connection of IO-Link devices

The following figure shows an example of the terminal assignment of the communication module IO-Link Master CM 4xIO-Link on the BaseUnit BU type A0 without AUX terminals (3-wire and 5-wire connection of IO-Link devices).

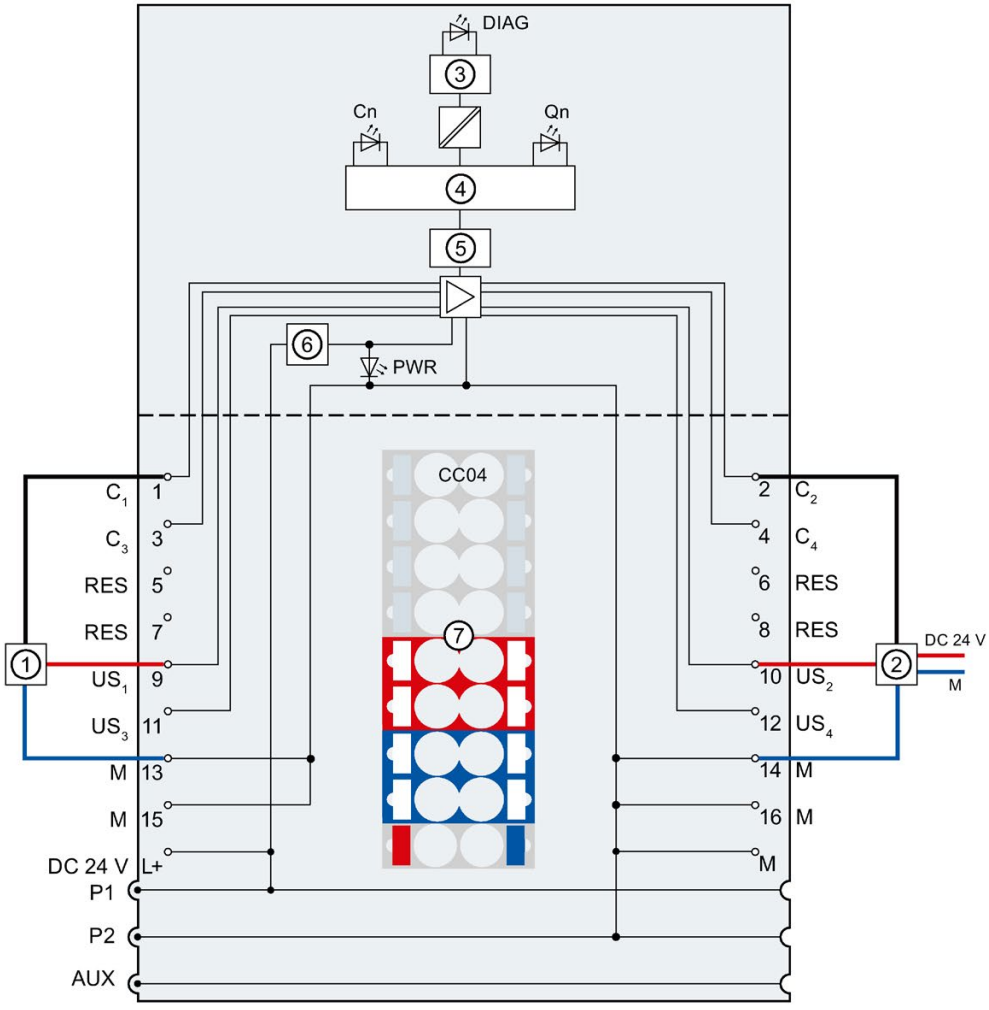

①	3-wire connection	P1, P2, AUX	Internal self-assembling voltage buses Connection to left (dark-colored BaseUnit) Connection to left interrupted (light-colored BaseUnit)
②	5-wire connection	C_n	Communication signal, DI, DQ
③	Backplane bus interface	RES	Reserved, must not be assigned
④	Microprocessor	US_n	Supply voltage (positive)
⑤	IO-Link circuitry	DIAG	Error or diagnostics LED (green, red)
⑥	Polarity reversal protection	Cn	LED port status IO-Link mode (green)
⑦	Color-coded label with color code CC04 (optional)	Qn	LED port status SIO mode
24 V DC	Supply voltage L+ (infeed for light-colored BaseUnit only)	Fn	LED port error
M	Ground	PWR	Power LED (green)

Figure 3-1 Block diagram and terminal assignment for 3-wire and 5-wire connection of IO-Link devices

Wiring: 2-wire and 3-wire connection in DI operating mode

The following figure shows an example of the terminal assignment of the communication module IO-Link Master CM 4xIO-Link on the BaseUnit BU type A0 with AUX terminals (2-wire and 3-wire connection) in DI operating mode.

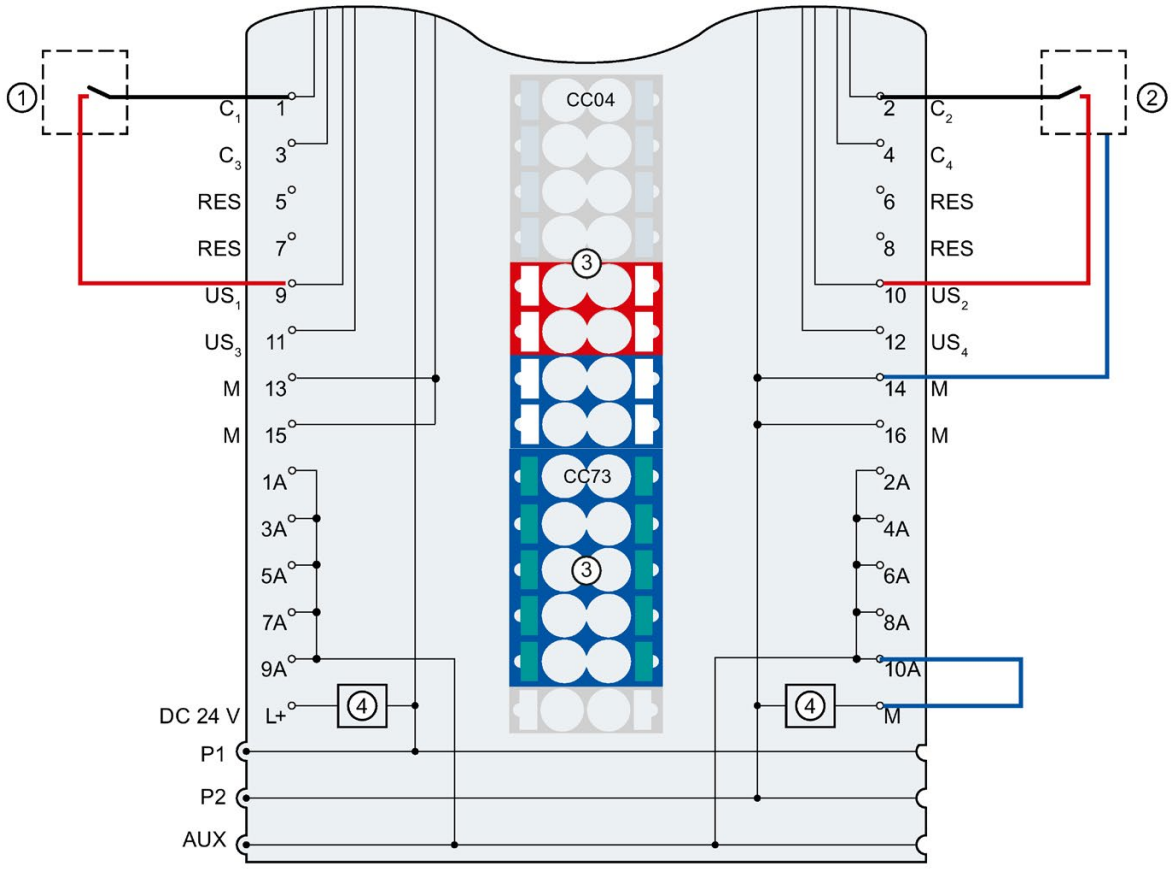

①	2-wire connection	1 A to 10 A	AUX terminals
②	3-wire connection	PE (AUX)	Protective conductor connection
③	Color-coded labels with color code CC04 and CC73 (optional)	P1, P2, AUX	Internal self-assembling voltage buses Connection to left (dark-colored BaseUnit) Connection to left interrupted (light-colored BaseUnit)
④	Filter connection supply voltage (only when light-colored BaseUnit is present)	C_n	Communication signal, DI, DQ
24 V DC	Supply voltage L+ (infeed for light-colored BaseUnit only)	RES	Reserved, must not be assigned
M	Ground	US_n	Supply voltage (positive)

Figure 3-2 Terminal assignment for 2-wire and 3-wire connection in DI operating mode

Wiring: 2-wire and 3-wire connection in DQ operating mode

The following figure shows an example of the terminal assignment of the communication module IO-Link Master CM 4xIO-Link on the BaseUnit BU type A0 with AUX terminals (2-wire and 3-wire connection) in DQ operating mode.

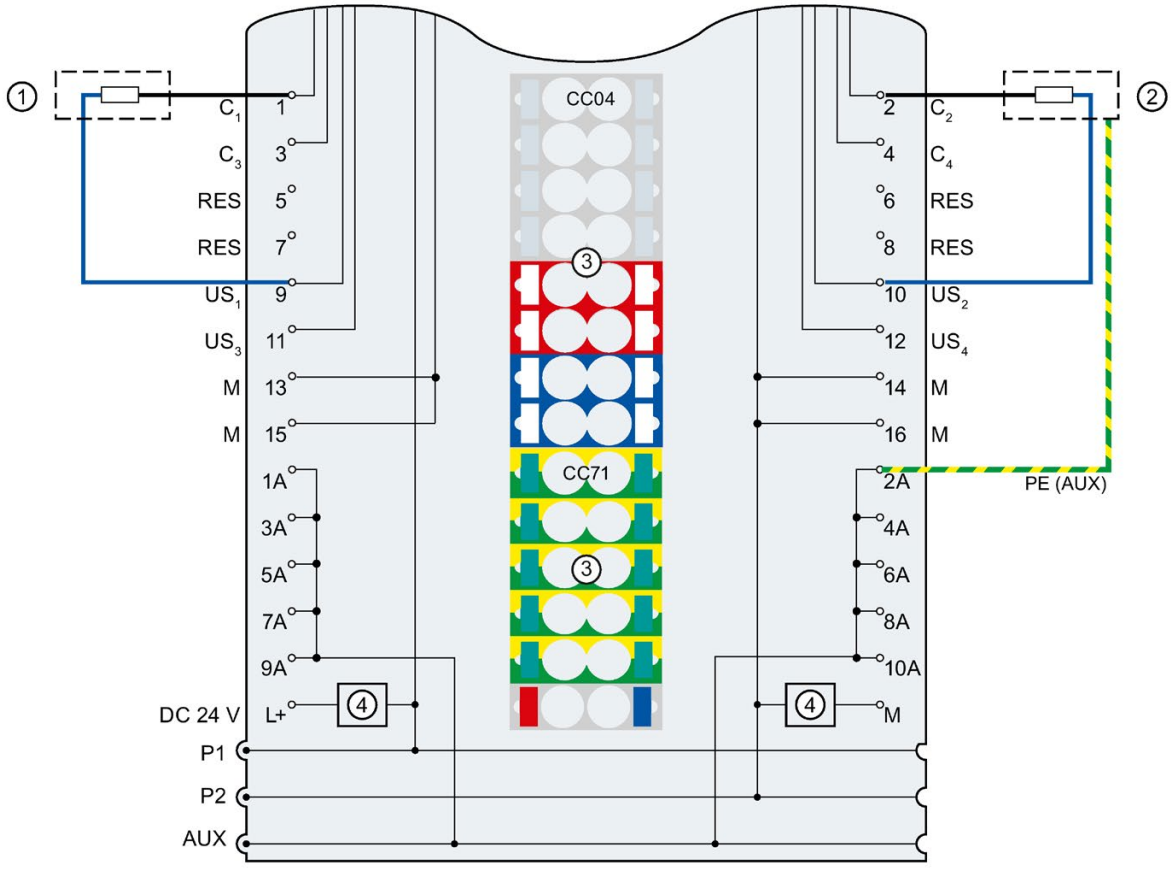

①	2-wire connection	1 A to 10 A	AUX terminals
②	3-wire connection	PE (AUX)	Protective conductor connection
③	Color-coded labels with color code CC04 and CC71 (optional)	P1, P2, AUX	Internal self-assembling voltage buses Connection to left (dark-colored BaseUnit) Connection to left interrupted (light-colored BaseUnit)
④	Filter connection supply voltage (only when light-colored BaseUnit is present)	C_n	Communication signal, DI, DQ
24 V DC	Supply voltage L+ (infeed for light-colored BaseUnit only)	RES	Reserved, must not be assigned
M	Ground	US_n	Supply voltage (positive)

Figure 3-3 Terminal assignment for 2-wire and 3-wire connection in DQ operating mode

Parameters/address space 4

4.1 Parameters

Parameters (GSD file)

The following table shows the general parameters for the IO-Link Master CM 4xIO-Link communication module.

Table 4- 1 General parameters (GSD file)

Parameters	Value range	Default	Configuration in RUN	Efficiency range
Diagnostics				
Diagnostics: No supply voltage L+	• disable • enable	disable	Yes	Module
Diagnostics port 1	• disable • enable	disable	Yes	Port (channel)
Diagnostics port 2	• disable • enable	disable	Yes	Port (channel)
Diagnostics port 3	• disable • enable	disable	Yes	Port (channel)
Diagnostics port 4	• disable • enable	disable	Yes	Port (channel)
Potential group	• Use potential group of the left module (dark-colored BaseUnit) • Enable new potential group (light-colored BaseUnit)	Use potential group of the left module (dark-colored BaseUnit)	No	Module
Master parameter				
PortQualifier Information (PQI)	• Disable • Enable	Enable	No	Module
Port configuration without P7-PCT	• Disable • Enable	Disable	No	Module

The following table shows the port parameters for the IO-Link Master CM 4xIO-Link communication module.

Table 4- 2 Port parameter (GSD file)

Parameters	Value range	Default
Port configuration		
Operating mode	• IO-Link Autostart • IO-Link manual • DI • DQ • Deactivated	IO-Link Autostart
Length of input data	depending on the selected I/O type*	depending on the selected I/O type*
Length of output data	depending on the selected I/O type*	depending on the selected I/O type*
VendorID**	Manufacturer ID of the connected IO-Link devices	0
DeviceID**	Device ID of the connected IO-Link devices	0
Test level / Data storage**	• Identical type (V1.0) without Backup&Restore • Type-compatible (V1.1) without Backup&Restore • Type-compatible (V1.1) with Backup&Restore • Type-compatible (V1.1) with Restore	Type-compatible (V1.1) with Backup&Restore

* Ensure that you do not exceed the maximum length of the input and output data for all ports.
Example:
You have selected the configuration 32I/32O. You have assigned 16 bytes of input data to the first port.
You can still assign a total of 16 bytes of input data to the remaining three ports.

** Only effective if you use the "IO-Link Manual" port mode.

Reference

Additional information on the VendorID and DeviceID can be found on the Internet (https://support.industry.siemens.com/cs/ww/en/view/109748852).

4.2 Declaration of parameters

Diagnostics: No supply voltage L+

Enabling the diagnostic alarm for missing or insufficient supply voltage L+.

Diagnostics port

This parameter allows the enabling of the diagnostics for the selected port.
The possible diagnostics are dependent on the IO-Link device used. Additional information about the diagnostic interrupts can be found in the description of the utilized IO-Link device.

Potential group

With the "Potential group" parameter, you specify whether the module is inserted on a light-colored or dark-colored BaseUnit.

A potential group always starts with an I/O module that is inserted on a light-colored BaseUnit. All modules inserted to the right of this on dark-colored BaseUnits belong to the same potential group, because the dark-colored BaseUnits are supplied via the light-colored BaseUnits.

The potential group ends with a new light-colored BaseUnit or the end of the station.

PortQualifierInformation

This parameter enables the PortQualifierInformation (PQI).
The PQI provides information on the port and IO-Link device status.

Port configuration without P7-PCT

This parameter enables the port configuration without S7-PCT for the module.

Operating mode

This parameter specifies in which mode the selected port is to be operated.
You can select from the following options:

- IO-Link Autostart
- IO-Link manual
- DI
- DQ
- Deactivated

IO-Link Autostart

The connected IO-Link device starts automatically (Plug&Play functionality). The IO-Link device is immediately available to you and operational.

IO-Link manual

The connected IO-Link devices are **not** started automatically.
You must store the VendorID and DeviceID of the connected IO-Link devices in STEP 7.
In addition, you can select the test level for the data storage:

- Identical type (V1.0) without Backup&Restore
- Type-compatible (V1.1) without Backup&Restore
- Type-compatible (V1.1) with Backup&Restore
- Type-compatible (V1.1) with Restore

The VendorID and DeviceID can be found on the Internet (https://support.industry.siemens.com/cs/ww/en/view/109748852).

DI

The port operates as standard digital input.

DQ

The port operates as standard digital output.

Deactivated

The port is deactivated.

4.3 Address space

Configuration options of the communication module IO-Link Master CM 4xIO-Link

The size of the input and output addresses of the IO-Link Master CM 4xIO-Link communication module with firmware version V1.0 is 32 bytes in each case. As of firmware version V2.0, the modules support a variable address space for I/O data.

As of firmware version V2.2, you can configure the port directly in STEP 7.

The following table provides an overview of the configuration options of the supported address areas for I/O data:

Module configuration/ supported address space for I/O data	IO-Link master with firmware V1.0	IO-Link master with firmware V2.0	IO-Link master with firmware V2.1	IO-Link master with firmware V2.2
1 byte input/1 byte output		X	X	
2-byte inputs/2-byte outputs		X	X	
4-byte inputs/4-byte outputs				X*
8-byte inputs/0-byte outputs				X
8-byte inputs/8-byte outputs		X	X	X
12-byte inputs/8-byte outputs				X
12-byte inputs/12-byte outputs				
16-byte inputs/16-byte outputs		X	X	X
20-byte inputs/16-byte outputs				X
32-byte inputs/32-byte outputs	X	X	X	X
36-byte inputs/32-byte outputs				X
64-byte inputs/64-byte outputs			X	X
68-byte inputs/64-byte outputs				X
144-byte inputs**/128-byte outputs			X	X

* No PortQualifierInformation is transferred with this configuration.

** The 144-byte input address range covers additional quality information (PortQualifier) in addition to the 128-byte process data.

Note

Use of the IO-Link Master CM 4xIO-Link with I/O data > 32 bytes

IM 155-6 PN HF/ST interface modules with firmware versions up to V3.0 only support I/O data up to 32 bytes. If you are using IO-Link Master CM 4xIO-Link with I/O data > 32 bytes, you need the IM 155-6 PN HF/ST interface module with firmware version as of V3.1.

Port configuration

With a IO-Link Master CM 4xIO-Link as of firmware version V2.2, you can commission the IO-Link port of the IO-Link master and the connected IO-Link devices in two different ways:

- Port configuration without S7-PCT
- Port configuration with S7-PCT

Port configuration without S7-PCT

Requirements

You have activated the "Port configuration without S7-PCT" check box in the configuration of the IO-Link master in STEP 7.

Procedure

You configure the IO-Link master directly in STEP 7:

- Activate the diagnostics
- Configuration of the I/O data lengths for each port
- Activate the PortQualifierInformation (PQI)
- Port mode:
  - Operation in "IO-Link Autostart" mode (default)
  - Operation in "IO-Link Manual" mode
  - Operated as DI
  - Operated as DQ
  - Deactivated

Port configuration with S7-PCT

Requirements

You have deactivated the "Port configuration without S7-PCT" check box in the configuration of the IO-Link master in STEP 7.

Procedure

You configure the IO-Link master with the Port Configuration Tool S7-PCT, V3.2 or higher.

PortQualifierInformation (PQI)

You can activate the PortQualifierInfortion (PQI) for your IO-Link master, firmware version V2.2 or higher.

Note

PortQualifierInformation (PQI)

If you have activated the PortQualifierInformation (PQI), these are always transferred with the size 1 byte together with the input data of the IO-Link device.

The following figure shows the structure of the PQI byte.
Activate a parameter by setting the corresponding bit to "1".

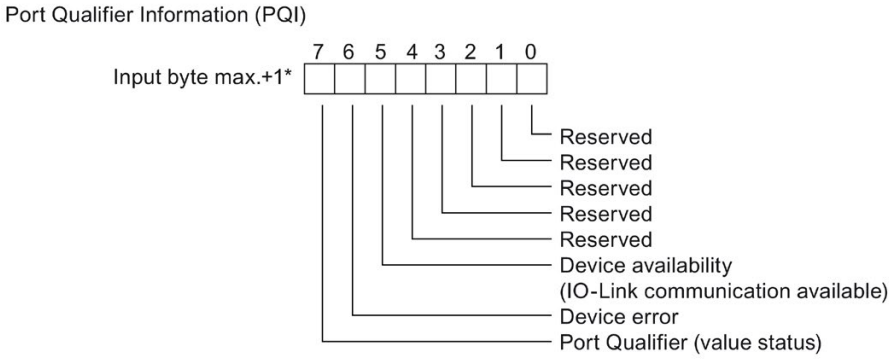

* The PQI byte is always located after the last input byte of the port. Depending on the configuration, the PQI byte is therefore located in the process image of the inputs at byte 2, 3, 4, 5, 8, 9, 16, 17, 32 or 33.

Figure 4-1 Structure of the PQI byte

Reference

For more information, please refer to the IO-Link system (http://support.automation.siemens.com/WW/view/en/65949252) function manual.

Diagnostic alarms

5

5.1 Status and error displays

LED display

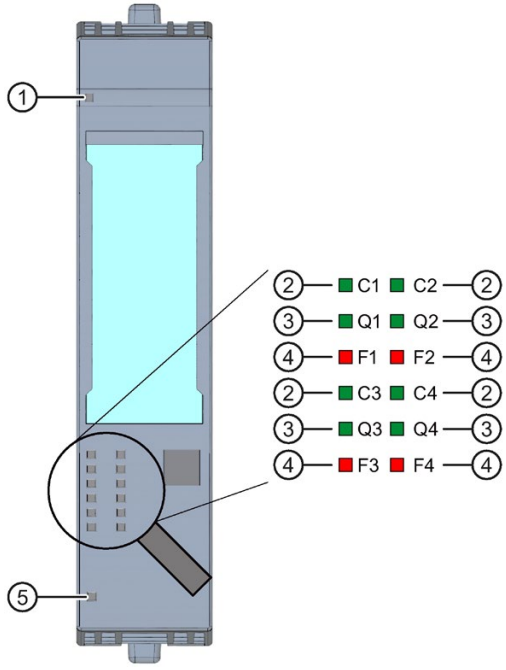

①	Diagnostics (DIAG)	(green/red)
②	Port status / IO-Link status (Cn)	(green)
③	Channel status in SIO mode (Qn)	(green)
④	Port error (Fn)	(red)
⑤	Supply voltage L+ (PWR)	(green)

n - Channel number

Figure 5-1 LED display

Meaning of the LED displays

The following tables show the meaning of the status and error displays. Remedial measures for diagnostic alarms can be found in the Diagnostic alarms (Page 31) chapter.

LED DIAG

Table 5- 1 DIAG LED fault display

DIAG	Meaning
Off	Backplane bus supply of the ET 200SP not OK
Flashes	Module is not configured
On	Module parameterized and no module diagnostics
Flashes	Module parameterized and module diagnostics

Cn LEDs

Table 5- 2 Status displays of C1, C2, C3 and C4 LEDs

C1, C2, C3 or C4	Meaning
Off	Port disabled or in SIO mode
Flashes	Port in IO-Link mode, device not connected or port not connected with the configured device
On	Port in IO-Link mode, device not connected

Qn LEDs

Table 5- 3 Status displays of Q1, Q2, Q3 and Q4 LEDs

Q1, Q2, Q3 or Q4	Meaning
Off	Process signal = 0 in SIO mode, deactivated or in IO-Link mode
On	Process signal = 1 in SIO mode

Fn LEDs

Table 5- 4 F1, F2, F3 and F4 LED error displays

F1, F2, F3 or F4	Meaning
☐ Off	No error
■ On	Error

LED PWR

Table 5- 5 Status display of the PWR LED

PWR	Meaning
☐ Off	Supply voltage L+ missing
■ On	Supply voltage L+ present

5.2 Diagnostic alarms

For each diagnostics event, a diagnostic alarm is issued and the DIAG LED flashes red on the communication module. You can read out the diagnostics alarms, for example, in the diagnostics buffer of the CPU. You can evaluate the error codes with the user program.

Table 5- 6 Error types

Diagnostic alarm	Error code	Meaning (IO-Link error code)	IO-Link master	IO-Link device
Short-circuit	1_H	• Short-circuit in the process cables on the IO-Link device (1804_H)	X	
		• Short-circuit on IO device (7710_H)		X
Undervoltage	2_H	• Supply voltage too low (5111_H, 5112_H)		X
Overvoltage	3_H	• Supply voltage too high (5110_H)		X
Overheating	5_H	• Temperature exceeded on master (1805_H)	X	
		• Temperature exceeded on device (4000_H, 4210_H)		X
Wire break	6_H	• No IO-Link device connected • There is a break in the signal line to the IO-Link device • IO-Link device cannot communicate due to another error (1800_H)	X	
Overflow	7_H	• Process tag range exceeded ($8C10_H$) • Measuring range exceeded ($8C20_H$)		X
Underflow	8_H	• Process tag range too low ($8C30_H$)		X
Error	9_H	• All IO-Link error codes which are not listed here are mapped to this PROFIBUS DP error		X
Configuration error	10_H	• Incorrect device (1802_H) • Vendor ID and Device ID not defined (1817_H) • Process data length of the IO-Link device exceeded (1818_H) • No cycle time configured (1819_H) • Cannot configure IO-Link master (1882_H, 1883_H) • Storage error (1886_H) • Process data length exceeded (1887_H) • PQI not supported (1889_H)	X	
		• Device was not configured correctly (6320_H, 6321_H, 6350_H)		X
Supply voltage missing	11_H	• L+ supply voltage for device missing (1806_H) • L+ supply voltage for device too low (<20 V) (1807_H)	X	
Defective fuse	12_H	• Fuse on device is defective (5101_H)		X
Safety shutdown	19_H	• Serious error (master has to be replaced) (1880_H)	X	
External fault	$1A_H$	• Error in data storage (1809_H, $180A_H$, $180B_H$, $180C_H$, $180D_H$) • More than 6 errors are pending simultaneously on the IO-Link device (1808_H) • Consistency error in electronic coding element (1885_H) • Process data length exceeded (1887_H)	X	

Technical specifications

6

Technical specifications of the IO-Link Master CM 4xIO-Link communication module

Article number	6ES7137-6BD00-0BA0
General information	
Product type designation	CM 4 x IO-Link ST, PU 1
Firmware version	V2.2
• FW update possible	Yes
usable BaseUnits	BU type A0
Color code for module-specific color identification plate	CC04
Product function	
• I&M data	Yes; I&M0 to I&M3
Engineering with	
• STEP 7 TIA Portal configurable/integrated as of version	STEP 7 V15 or higher
• STEP 7 configurable/integrated as of version	STEP 7 V5.5 or higher
• PROFIBUS as of GSD version/GSD revision	One GSD file each, Revision 3 and 5 and higher
• PROFINET as of GSD version/GSD revision	GSDML V2.3
Supply voltage	
Type of supply voltage	24 V DC
Rated value (DC)	24 V
permissible range, lower limit (DC)	19.2 V; 20.5 V if IO-Link is used, as the supply voltage for IO-Link devices has to be at least 20 V at the master.
permissible range, upper limit (DC)	28.8 V
Reverse polarity protection	Yes
Input current	
Current consumption, max.	45 mA; without load
Encoder supply	
Number of outputs	4
Output current	
• Rated value	200 mA; Per channel
24 V encoder supply	
• Short-circuit protection	Yes

Article number	6ES7137-6BD00-0BA0
Power loss	
Power loss, typ.	1 W
Digital outputs	
Cable length	
• unshielded, max.	20 m; Also applies for shielded cables
IO-Link	
Number of ports	4
• of which simultaneously controllable	4
IO-Link protocol 1.0	Yes
IO-Link protocol 1.1	Yes
Transmission rate	4.8 kBaud (COM1); 38.4 kBaud (COM2), 230.4 kBaud (COM3)
Cycle time, min.	2 ms; dynamic, depending on user data length
Size of process data, input per port	32 byte; max.
Size of process data, input per module	144 byte; max.
Size of process data, output per port	32 byte; max.
Size of process data, output per module	128 byte; max.
Memory size for device parameter	2 kbyte; for each port
Master backup	Yes
Configuration without S7-PCT	Yes
Cable length unshielded, max.	20 m
Operating modes	
• IO-Link	Yes
• DI	Yes
• DQ	Yes; max. 100 mA per channel
Time Based IO	
– TIO IO-Link IN	No; Only for PROFINET and configuration as version with FW V2.0 or V2.1
– TIO IO-Link OUT	No; Only for PROFINET and configuration as version with FW V2.0 or V2.1
– TIO IO-Link IN/OUT	No; Only for PROFINET and configuration as version with FW V2.0 or V2.1
Connection of IO-Link devices	
• Port type A	Yes
• Port type B	Yes; 24 V DC via external terminal
• via three-wire connection	Yes
Isochronous mode	
Isochronous operation (application synchronized up to terminal)	No; Only for PROFINET and configuration as version with FW V2.0 or V2.1

Article number	6ES7137-6BD00-0BA0
Interrupts/diagnostics/status information	
Alarms	
• Diagnostic alarm	Yes; The port diagnosis is available in the IO-Link mode only.
Diagnostic messages	
• Monitoring the supply voltage	Yes
• Wire-break	Yes
• Short-circuit	Yes
• Group error	Yes
Diagnostics indication LED	
• Monitoring of the supply voltage (PWR-LED)	Yes; green PWR LED
• Channel status display	Yes; one green LED for channel status Qn (SIO mode) and port status Cn (IO-Link mode) per channel
• for channel diagnostics	Yes; red Fn LED
• for module diagnostics	Yes; green/red DIAG LED
Potential separation	
Potential separation channels	
• between the channels	No
• between the channels and backplane bus	Yes
• between the channels and the power supply of the electronics	No
Isolation	
Isolation tested with	707 V DC (type test)
Dimensions	
Width	15 mm
Height	73 mm
Depth	58 mm
Weights	
Weight, approx.	30 g

Overview of the response time

The following figure shows the response time for IO-Link without Time-based IO.

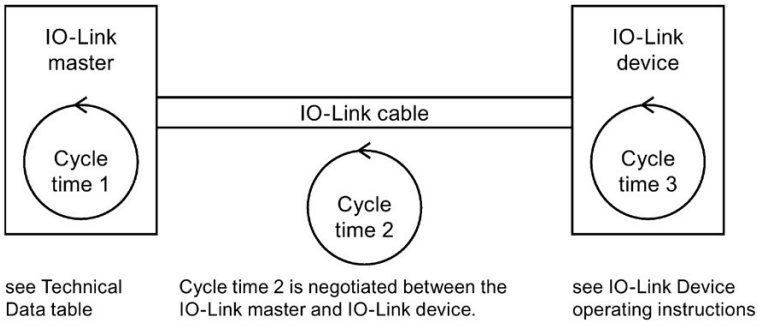

Figure 6-1 Cycle time for IO-Link without Time-based IO

Dimensional drawing

See manual ET 200SP BaseUnits (http://support.automation.siemens.com/WW/view/en/58532597/133300)

Parameter data record A

A.1 Parameter assignment and structure of parameter data set

The data record of the module has an identical structure, regardless of whether you configure the module with PROFIBUS DP or PROFINET IO. With data record 128, you can reconfigure the module in your user program regardless of your programming.

The following describes the structure of data record 128 as of firmware version V2.2.

Configuration in the user program

You can configure the modules in runtime.

Changing parameters in RUN

The "WRREC" instruction is used to transfer the parameters to the module using data record 128. The parameters set in STEP 7 are not changed in the CPU, which means that the parameters set in STEP 7 will be valid again after a restart.

Output parameter STATUS

If errors occur when transmitting parameters with the "WRREC" instruction, the module continues operation with the previous parameter assignment. The STATUS output parameter contains a corresponding error code.

You will find a description of the "WRREC" instruction and the error codes in the STEP 7 online help.

Error message

The module always checks all the values of the transferred data record. Only if all the values were transferred without errors does the module apply the values from the data record.

The instruction WRREC for writing data records returns corresponding error codes when errors occur in the parameter STATUS.

The following table shows the module-specific error codes and their meaning for the parameter data record 128:

Table A- 1 Error message

Error code	Meaning
$80B1_H$	Error in data length
$80E0_H$	Error in header information
$80E1_H$	Parameter error

Structure of data record 128

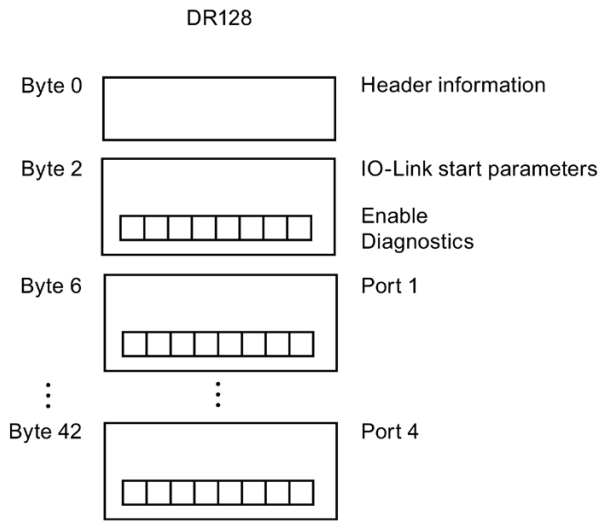

Figure A-1 Structure of data record 128

Header information

The figure below shows the structure of the header information.

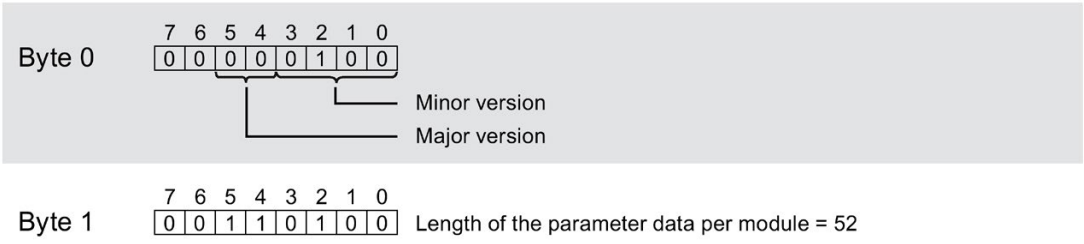

Figure A-2 Header information

IO-Link start parameters

The following figure shows the structure of the IO-Link start parameter.
Activate a parameter by setting the corresponding bit to "1".

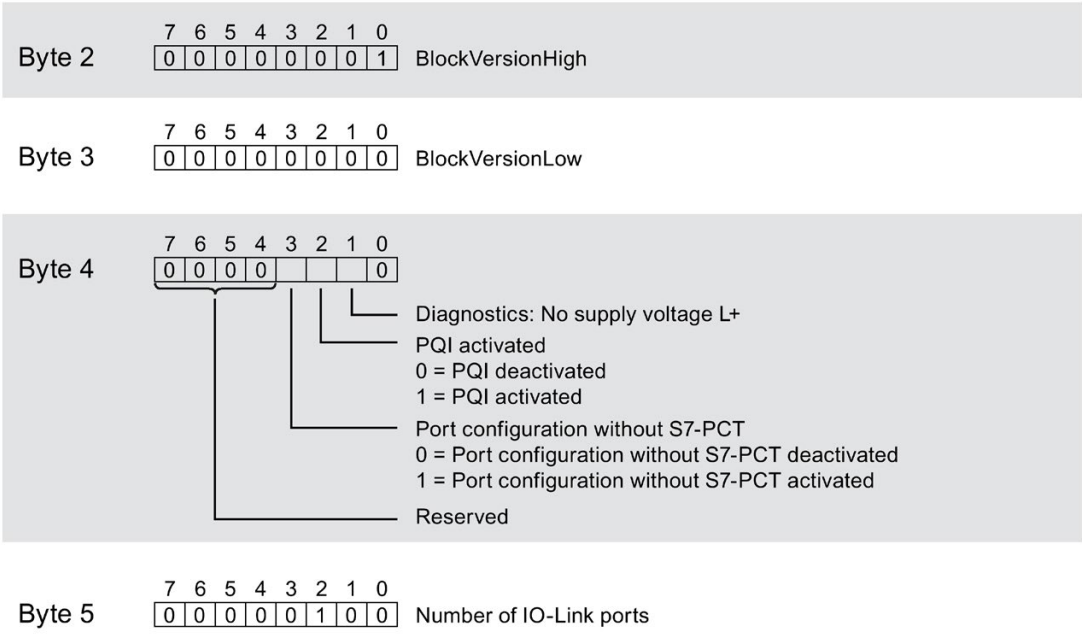

Figure A-3 IO-Link start parameters

Port parameter

The following figure shows an extract from the structure of the port parameter.
Activate a parameter by setting the corresponding bit to "1".

If you have selected IO-Link Manual operating mode, you must enter the Vendor ID (byte x+5 and x+6) and Device ID (byte x+7 to x+10) yourself.
You can find the Vendor ID and Device ID in the IODD of the IO-Link device being used.

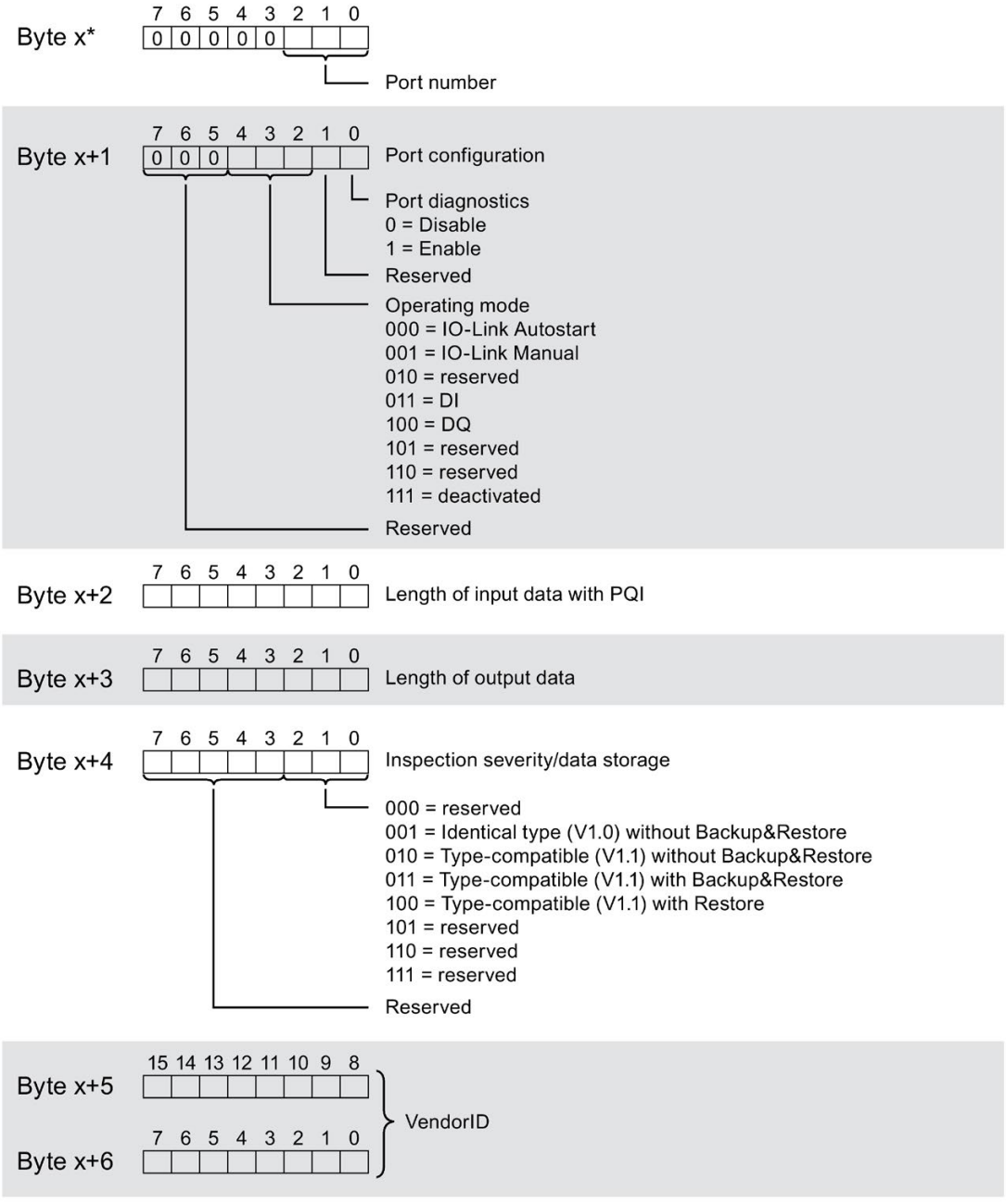

* x = 6 + ((port number-1) x 12); port numbers = 1 to 4.

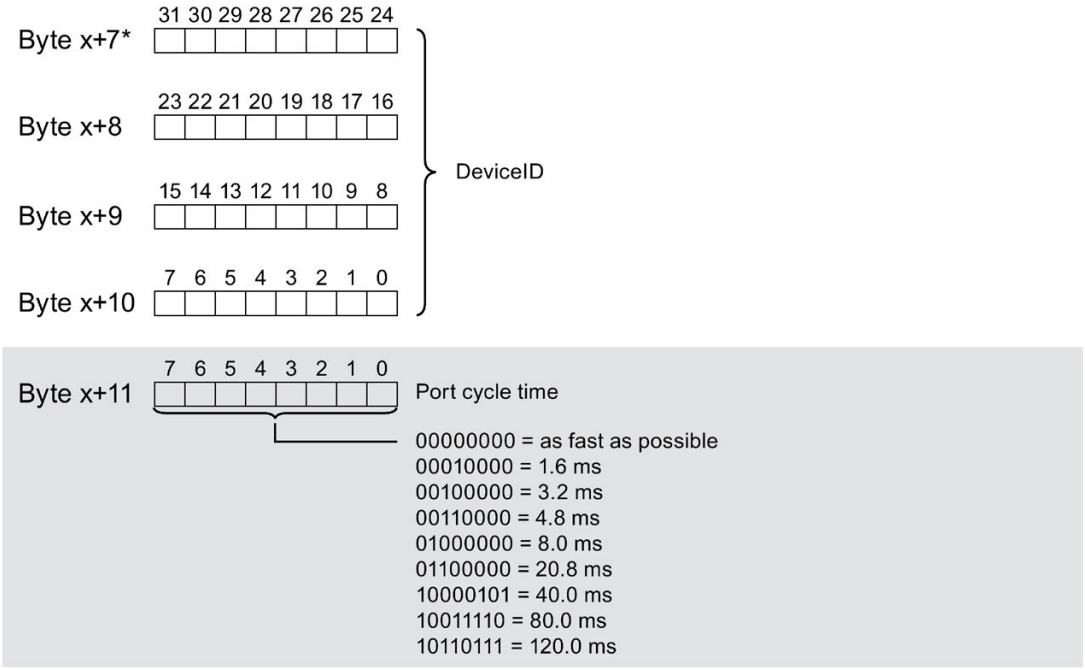

* x = 6 + ((port number-1) x 12); port numbers = 1 to 4.

Figure A-4 Port parameter

SIEMENS

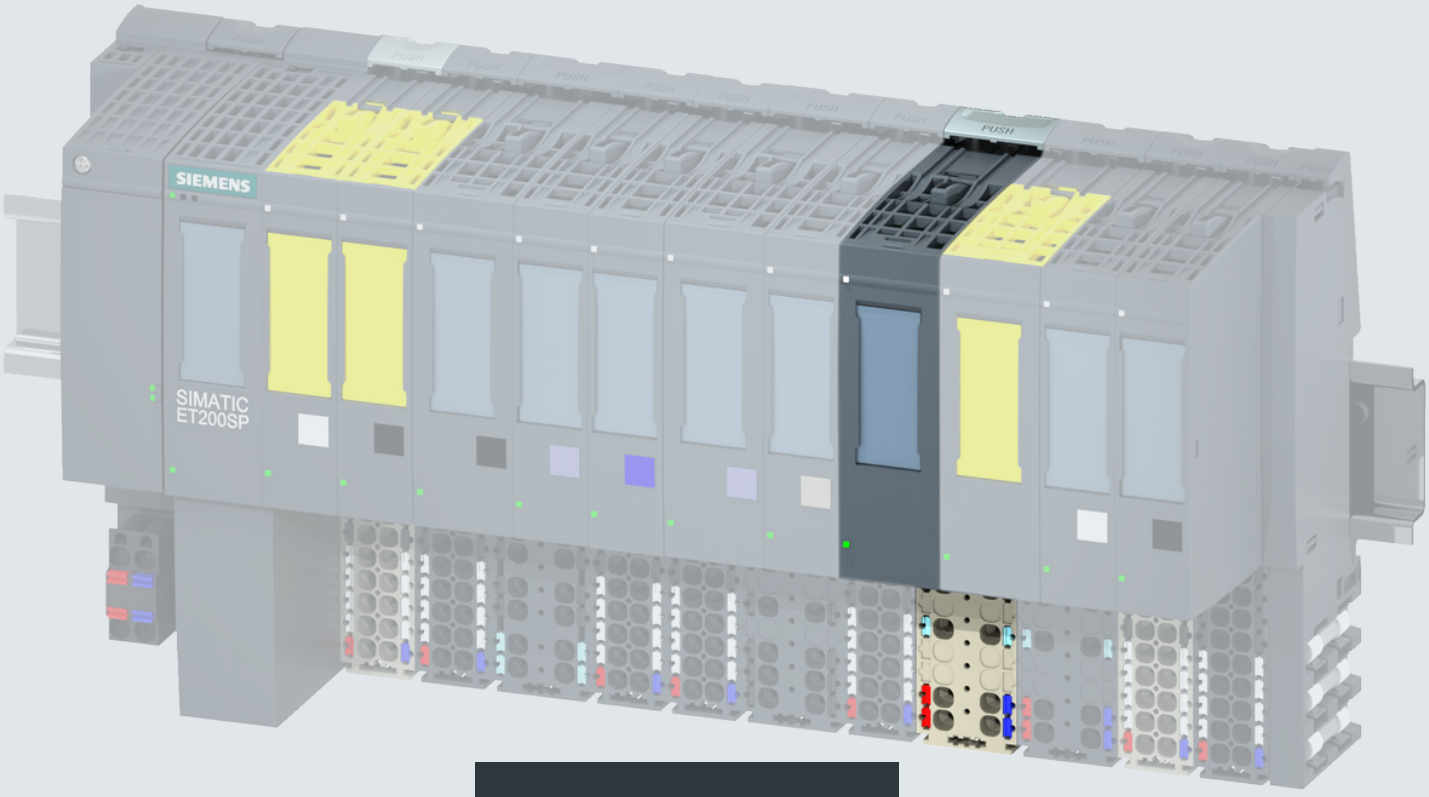

Manual

SIMATIC

ET 200SP

AS-Interface Master CM AS-i Master ST
3RK7137-6SA00-0BC1

Edition 07/2017

siemens.com

SIEMENS

SIMATIC

ET 200SP
AS-Interface master CM AS-i Master ST (3RK7137-6SA00-0BC1)

Manual

Foreword

Documentation guide 1

Safety instructions 2

Product overview 3

Connection 4

Configuring 5

Parameter assignment/addressing 6

Data exchange between the user program and AS-i slaves 7

Alarms, faults and system events 8

Using the command interface 9

Technical data 10

AS-Interface Protocol Implementation Conformance Statements A

Readme Open Source Software B

Data sets C

List of abbreviations D

07/2017

A5E02655262020A/RS-AD/004

Legal information

Warning notice system

This manual contains notices you have to observe in order to ensure your personal safety, as well as to prevent damage to property. The notices referring to your personal safety are highlighted in the manual by a safety alert symbol, notices referring only to property damage have no safety alert symbol. These notices shown below are graded according to the degree of danger.

⚠ DANGER

indicates that death or severe personal injury **will** result if proper precautions are not taken.

⚠ WARNING

indicates that death or severe personal injury **may** result if proper precautions are not taken.

⚠ CAUTION

indicates that minor personal injury can result if proper precautions are not taken.

NOTICE

indicates that property damage can result if proper precautions are not taken.

If more than one degree of danger is present, the warning notice representing the highest degree of danger will be used. A notice warning of injury to persons with a safety alert symbol may also include a warning relating to property damage.

Qualified Personnel

The product/system described in this documentation may be operated only by **personnel qualified** for the specific task in accordance with the relevant documentation, in particular its warning notices and safety instructions. Qualified personnel are those who, based on their training and experience, are capable of identifying risks and avoiding potential hazards when working with these products/systems.

Proper use of Siemens products

Note the following:

⚠ WARNING

Siemens products may only be used for the applications described in the catalog and in the relevant technical documentation. If products and components from other manufacturers are used, these must be recommended or approved by Siemens. Proper transport, storage, installation, assembly, commissioning, operation and maintenance are required to ensure that the products operate safely and without any problems. The permissible ambient conditions must be complied with. The information in the relevant documentation must be observed.

Trademarks

All names identified by ® are registered trademarks of Siemens AG. The remaining trademarks in this publication may be trademarks whose use by third parties for their own purposes could violate the rights of the owner.

Disclaimer of Liability

We have reviewed the contents of this publication to ensure consistency with the hardware and software described. Since variance cannot be precluded entirely, we cannot guarantee full consistency. However, the information in this publication is reviewed regularly and any necessary corrections are included in subsequent editions.

Siemens AG
Division Digital Factory
Postfach 48 48
90026 NÜRNBERG
GERMANY

3ZX1012-0RK71-6AC1
℗ 07/2017 Subject to change

Copyright © Siemens AG 2013.
All rights reserved

Foreword

Purpose of the documentation

This device manual supplements the "ET 200SP Distributed I/O System" System Manual. Functions that pertain generally to the ET 200SP can be found in the "ET 200SP distributed I/O system (http://support.automation.siemens.com/WW/view/en/58649293/0/en)" System Manual.

The information provided in this device manual and the system manual enables you to commission the ET 200SP distributed I/O system.

Table of contents

Foreword 5

1 Documentation guide 11

2 Safety instructions 13

3 Product overview 15

3.1 Characteristics of the CM AS-i Master ST 15

3.2 Operating modes of the CM AS-i Master ST 19

3.3 Firmware update 21

4 Connection 25

4.1 Terminal assignment 25

4.2 Schematic circuit diagram 27

5 Configuring 29

5.1 Requirements 29

5.2 Basic configuration of the CM AS-i Master ST 30

5.3 Configuration of the AS-i slaves 31
5.3.1 Configuration of the AS-i slaves in STEP 7 31
5.3.2 Configuration of the AS-i slaves using the "SET" button 34
5.3.3 Configuration of the AS-i slaves via the control panel in the TIA Portal 36
5.3.4 Configuration of the AS-i slaves using the PLC program 36

5.4 Online functions in the TIA Portal 37
5.4.1 Switching from one operating mode to another 37
5.4.2 Applying the slave configuration 38
5.4.3 Setting the address of an AS-i slave 39

5.5 Variable configuration 39
5.5.1 Option handling 39
5.5.1.1 DS 131 Activate/deactivate optional slaves 40
5.5.1.2 DS 131 Read status of option handling 41
5.5.2 AS-i proxy slave 42

6 Parameter assignment/addressing 43

6.1 Parameters 43

6.2 Explanation of the parameters 44

6.3 Address space 44

7 Data exchange between the user program and AS-i slaves 45

7.1 Access to AS-Interface 45

7.2 Transmitting AS-i digital values 46
7.2.1 I/O addresses when configuring AS-i slaves in STEP 7 46

7.2.2 I/O addresses without configuration of the AS-i slaves in STEP 7 ... 50
7.2.3 Special characteristics of AS-i Safety slaves ... 55

7.3 AS-i analog values and transparent / digital values more than 4 bits in length are transferred ... 56
7.3.1 Accessing AS-i analog data via the process image ... 58
7.3.2 Accessing AS-i analog data via acyclic services ... 58

8 Alarms, faults and system events ... 61

8.1 Overview ... 61

8.2 Diagnostics in STEP 7 ... 62

8.3 LED statuses ... 63
8.3.1 Arrangement of the LEDs on the CM AS-i Master ST ... 63
8.3.2 Meaning of the LEDs ... 64

8.4 Diagnostic messages ... 69
8.4.1 Alarms ... 69
8.4.2 Possible response to the diagnostic interrupt ... 69
8.4.3 Error messages ... 70

8.5 Replacing a defective AS-i slave / automatic address programming ... 74

8.6 Duplicate address detection ... 76

8.7 Diagnosis via the web server ... 79

8.8 Fault indications/fault remedies ... 80

8.9 Data records for diagnostics ... 82
8.9.1 DS 92 Diagnostic data record (FW V1.1 and higher) ... 82
8.9.2 DS 96 Read AS-i master error counters and status messages (FW V1.1 and higher) ... 86
8.9.3 DS 97 Read and reset AS-i master error counters (FW V1.1 and higher) ... 89
8.9.4 DS 150 to DS 153 Read AS-i error counters ... 89
8.9.4.1 DS 150 Read AS-i slave error counters 1/1A to 16/16A ... 92
8.9.4.2 DS 151 Read AS-i slave error counters 16/16A to 31/31A ... 93
8.9.4.3 DS 152 Read AS-i slave error counters 1B to 16B ... 94
8.9.4.4 DS 153 Read AS-i slave error counters 16B to 31B ... 95
8.9.5 DS 154 Delete AS-i error counters (from FW V1.1) ... 96

9 Using the command interface ... 97

9.1 Introduction ... 97

9.2 Command interface with SIMATIC S7 ... 97

9.3 Command interface with controllers of other manufacturers ... 98

9.4 Description of the AS-i commands ... 103
9.4.1 No. 00: Set_Permanent_Parameter ... 107
9.4.2 No. 01: GET_Permanent_Parameter ... 108
9.4.3 No. 02: Write_Parameter ... 109
9.4.4 No. 03: Read_Parameter ... 110
9.4.5 No. 04: Store_Actual_Parameters ... 111
9.4.6 No. A5: Set_Permanent_Configuration ... 112
9.4.7 No. A6: Get_Permanent_Configuration ... 113
9.4.8 No. 07: Store_Actual_Configuration ... 114
9.4.9 No. A8: Read_Actual_Configuration ... 115

9.4.10 No. A9: Set_LPS 116
9.4.11 No. 0A: SET_Offline_Mode 117
9.4.12 No. 08: Set_Auto_Address_Enable 118
9.4.13 No. 0C: Set_Operation_Mode 119
9.4.14 No. 0D: Change_AS-i-Slave_Address 120
9.4.15 No. 0F: Read_Status 121
9.4.16 No. B0: Get_LPS, Get_LAS, Get_LDS, Get_Flags 122
9.4.17 No. B9: Read_overall_configuration 125
9.4.18 No. BA: Write_overall_configuration 131
9.4.19 No. 3C: Set_PI 138
9.4.20 No. 33: AS-i Parameter Echolist 141
9.4.21 No. 44: Read_Write_CTT2_String 142
9.4.22 No. 14: Read_Version 144
9.4.23 No. 17: Read ID_Code 144
9.4.24 No. 37: Read_ID1-Code 145
9.4.25 No. 3F: Write ID1-Code 145
9.4.26 No. 38: Read_ID2-Code 146
9.4.27 No. 18: Read_IO-Code 146
9.4.28 No. BE: Get_LPF 147
9.4.29 No. 40: Write_Parameter_String 148
9.4.30 No. 41: Read_String 149
9.4.31 No. 42: Read_String 150
9.4.32 No. 43: Read_String 151
9.4.33 No. CA: Read_Error_Counter 152
9.4.34 No. CB: Read_and_Delete_AS-i-Master_Error_Counter 155
9.4.35 No. CC: Read_AS-i_error_counter 156
9.4.36 No. CD: Read_and_delete_AS-i_Slave_error_counter 157
9.4.37 No. 13: Activate_ground fault detection (reset EFD) 158
9.4.38 No. D0: Set_Configuration_Online 159
9.4.39 No. D1: AS-i-Slave_ID1_schreiben_mit_Zieladresse (Write ID1 code with destination address) 160

10 Technical data 161

10.1 Technical data in Siemens Industry Online Support 161

A AS-Interface Protocol Implementation Conformance Statements 163

A.1 AS-Interface Protocol Implementation Conformance Statement (PICS) 163

B Readme Open Source Software 167

B.1 Read_me OSS 167

C Data sets 171

C.1 DS 100 Switch duplicate address detection on/off 171

C.2 DS 100 Read setting for duplicate address detection 172

C.3 DS 101 Read version identifier 172

D List of abbreviations 173

D.1 List of abbreviations 173

Glossary 175
Index..... 181

Documentation guide

1

The following paragraph gives you an overview of the additional documentation you need to use the CM AS-i Master ST.

The documentation for the SIMATIC ET 200SP distributed I/O system is subdivided into three areas.

This enables you to access the required content quickly.

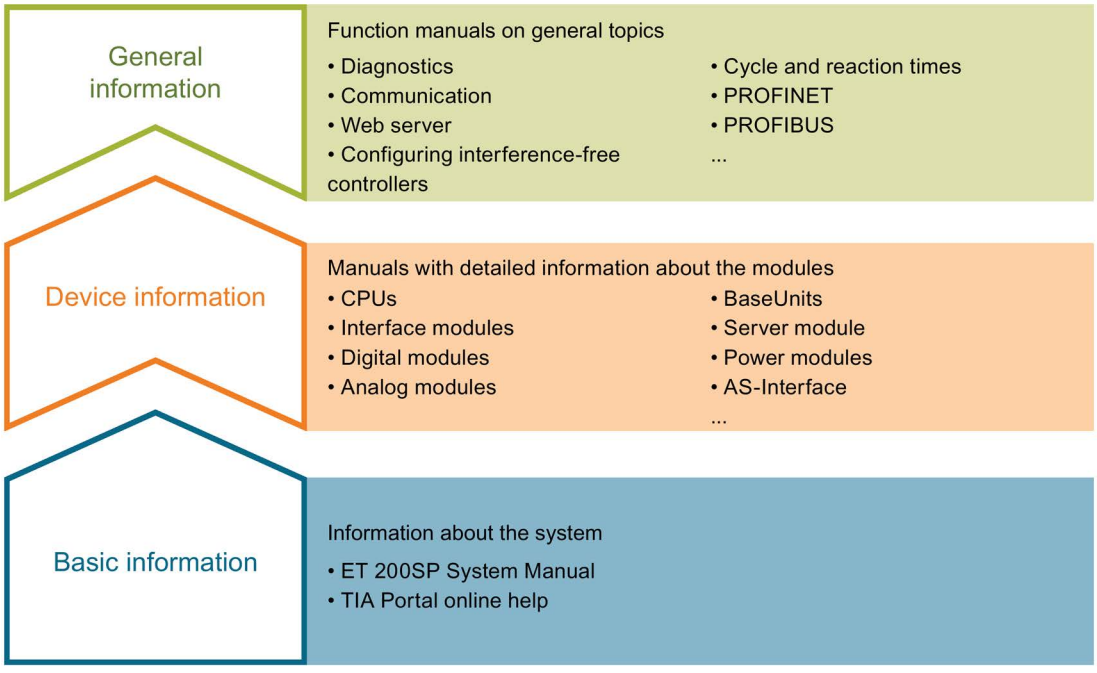

Basic information

The System Manual describes configuration, assembly, wiring and commissioning of the SIMATIC ET 200SP distributed I/O system. The *STEP 7* online help supports you with configuration and programming.

Device information

Manuals contain a compact description of the module-specific information, such as properties, connection diagrams, characteristics and technical specifications.

General information

The Function Manuals contain detailed descriptions on topics relating to the SIMATIC ET 200SP environment, such as configuring diagnostics, communications, web servers and controllers for problem-free operation.

The following paragraph gives you an overview of the additional documentation you need to use the CM AS-i Master ST.

Documentation for the ET 200SP distributed I/O system with the CM AS-i master ST

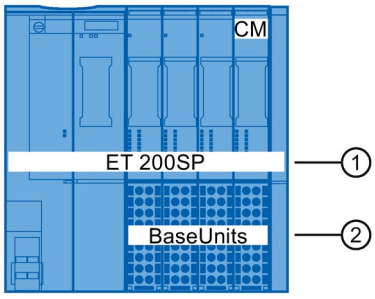

Figure 1-1 Example of a system structure

Table 1- 1 Documentation for the ET 200SP distributed I/O system with the CM AS-i master ST

No.	Component	Documentation	Most important contents
①	System	SIMATIC ET 200SP ET 200SP distributed I/O system (http://support.automation.siemens.com/WW/view/en/58649293/0/en) SIMATIC distributed I/O (http://w3.siemens.com/mcms/industrial-automation-systems-simatic/en/manual-overview/tech-doc-et200/Pages/Default.aspx)	• Application planning • Installation • Connecting • Commissioning • Technical specifications
②	BaseUnits	SIMATIC ET 200SP BaseUnits (https://support.industry.siemens.com/cs/ww/en/view/59753521)	• Connecting • Technical specifications

Safety instructions 2

Important safety instructions

WARNING

Failure to observe this information may result in death, severe injury, and serious property damage.

For use in Pollution Degree 2 Environment.

WARNING

Failure to observe this information may result in death, severe injury, and serious property damage.

When used in hazardous hazardous environments corresponding to Class I, Division 2 or Class I, Zone 2, the device must be installed in a cabinet or a suitable enclosure. To comply with EU Directive 94/9 (ATEX 95), this enclosure must meet the requirements of at least IP54 in compliance with EN 60529.

WARNING

Explosion Hazard; failure to observe this information may result in death, severe injury, and serious property damage.

Do not disconnect equipment when a flammable or combustible atmosphere is present.

WARNING

Explosion hazard; failure to observe this information may result in death, severe injury, and serious property damage.

Do not disconnect while circuit is live unless area is known to be non-hazardous.

WARNING

Explosion hazard; failure to observe this information may result in death, severe injury, and serious property damage.

Substitution of components may impair suitability for class I, division 2 or zone 2.

WARNING

Explosion hazard; failure to observe this information may result in death, severe injury, and serious property damage.

Do not open when energized.

WARNING

Failure to observe this information may result in death, severe injury, and serious property damage.

The equipment is designed for operation with Safety Extra-Low Voltage (SELV) by a Limited Power Source (LPS).

This means that only SELV / LPS complying with IEC 60950-1, EN 60950-1, VDE 0805-1 must be connected to the power supply terminals.

The power supply unit for the equipment power supply must comply with NEC Class 2, as described by the National Electrical Code (r) (ANSI / NFPA 70).

WARNING

Failure to observe this information may result in death, severe injury, and serious property damage.

Provisions shall be made to prevent the rated voltage from being exceeded by transient disturbances of more than 40 %. This criteria is fulfilled if supples are derived from SELV (Safety Extra-Low Voltage) only.

CAUTION

Failure to observe this information may result in property damage and bodily injury

This equipment is suitable for use in Class I, Division 2, Groups A, B, C, and D or non-hazardous locations only.

CAUTION

Failure to observe this information may result in property damage and bodily injury

This equipment is suitable for use in Class I, Zone 2, Group IIC or non-hazardous locations only.

Product overview 3

3.1 Characteristics of the CM AS-i Master ST

Article number

3RK7137-6SA00-0BC1

Brief introduction to AS-Interface

AS-Interface or Actuator-Sensor-Interface (AS-i for short) is a fieldbus system for industrial use that is used to transmit digital and analog signals between a controller and machine or process in real-time. The system can be used for standard signals as well as for safety-related signals.

AS-Interface is designed to connect actuators and sensors to the controller as easily, flexibly and efficiently as possible.

The system consists of an AS-i master and up to 62 AS-i slaves that are simply plugged onto the yellow AS-i flat ribbon cable at any point or connected via terminals. The AS-i cable can be up to 100 m long with free choice of topology. A length of up to 200 m is possible with an additional extension plug. The system can be extended beyond that through the use of repeaters.

In addition, an AS-i power supply unit is connected to the cable such that the slaves and their connected sensors are supplied with operating voltage without additional cabling. Actuators are usually supplied with voltage by means of a 24 V cable, because they generally need more power than sensors.

A typical digital AS-i slave has up to 4 inputs and 4 outputs. The slaves are installed directly in the plant as close as possible to the sensors or actuators so that the connecting cables can be kept very short. The insulation displacement method is the preferred method for connection to the AS-i flat ribbon cable so that assembly can be completed without errors in the least amount of time. For safety-related signals, safety slaves and modules are available for safety-related processing of signals. In addition, analog slaves and complete switchgear with integrated AS-i slave are offered.

The default voltage fed in from the AS-i power supply unit is 30 V DC. As a result, sensors with a rated voltage of 24 V can be used without any problems despite the voltage drop on a longer AS-i cable. Because the AS-i cable transmits both operating DC voltage and modulated communication signals, the AS-i power supply unit contains a data decoupling unit for separating the two voltage waveforms.

A standard power supply can be used in place of the easy-to-use AS-i power supply if the AS-i cable is connected via a separate data decoupling module. When a standard power supply with 24 V DC is used, it must be ensured that the connected AS-i components and sensors are designed for operation with the corresponding lower voltage.

You will find further information on the Internet at: AS-Interface (http://www.siemens.com/as-interface).

Use of the module

The CM AS-i Master ST module is a communication module for use in the SIMATIC ET 200SP Distributed I/O System.

The CM AS-i Master ST features a 20 mm wide ET 200SP module housing. A BaseUnit (BU) is required for use in the ET 200SP. The CM AS-i Master ST can be plugged into C0-type BaseUnits (BU).

You can plug several CM AS-i Master ST modules into one SIMATIC ET 200SP station. Each CM AS-i Master with firmware version V1.0 occupies 32 bytes of I/O address space. From firmware version V1.1 onwards, the CM AS-i Master ST supports up to 288 bytes of I/O address space. The number of possible AS-i master modules depends on the maximum address space of the utilized Interface Module (IM) of the ET 200SP or the utilized ET 200SP CPU.

In a SIMATIC ET 200SP station with an IM 155-6 PN ST standard interface module and a maximum address space of 256 bytes, up to eight CM AS-i Master ST modules can be plugged in (when the I/O address space is configured as 32 bytes).

Significantly more modules can be plugged into a SIMATIC ET 200SP station with High Feature Interface Module IM 156-6 PN HF and a maximum address space of 1440 bytes.

If the ET 200SP contains other modules, the available address space is reduced and the maximum number of AS-i master modules is reduced accordingly. The maximum number of modules can be increased by shortening the I/O address space of the CM AS-i Master ST module.

For further information, see the ET 200SP System Manual (https://support.industry.siemens.com/cs/ww/en/view/84133942).

The CM AS-i Master ST module can generally be combined with all ET 200SP interface modules. Any exceptions to this are documented in the delivery release product announcement(s) of the interface module.

The CM AS-i Master ST module (Firmware V1.1 and higher) can generally be combined with all ET 200SP CPU modules (Firmware V1.8 and higher). Any exceptions to this are documented in the delivery release product announcement(s) for a CPU module.

The interface modules und CPU modules differ, among other things, in terms of the maximum number of I/O modules, the length of the I/O process image in the station and the length of the I/O process image for each I/O module. The technical specifications of the interface modules and CPU modules can limit the selection of possible parameters of the CM AS-i Master ST module. Note, in particular, that the length of the I/O process image of the CM AS-i Master ST module must be selected in such a way that the maximum length of the I/O process image of the interface module or CPU module is not exceeded.

View of the module

Figure 3-1 View of the CM AS-i Master ST

Properties

- Technical properties
  - AS-i master acc. to AS-Interface Specification 3.0
  - Transmission of digital I/O values to cyclic process image
  - Transmission of analog I/O values in the cyclic process image (Firmware V1.1 and higher) or via acyclic data record communication.
  - Configuration button can be connected to terminals
- Supported functions
  - I&M identification data
  - Firmware update
  - Configuration of the AS-i master and AS-i slaves via data records (Read / Write or command interface)

The module can be used with the following engineering versions:

Table 3- 1 Version dependence of the CM AS-i Master ST engineering versions

Firmware version of the module	*STEP 7* (TIA portal)	*STEP 7* V5.5	GSD file
V1.0	V12 and higher	V5.5 SP3 HF5 and higher	X
V1.1	V13 SP1 and higher	V5.5 SP3 HF5 and higher	X

For additional information, see product announcement for: CM AS-i Master ST (https://support.industry.siemens.com/cs/ww/en/view/72865595)

Table 3- 2 Version dependence of the CM AS-i Master ST functions

Function	Firmware version of the module
Configuring in *STEP 7* (TIA Portal) V12 and higher	V1.0 and higher
GSD file (PROFIBUS)	V1.0 and higher
GSD file (PROFINET)	V1.0 and higher
Access via command data records	V1.0 and higher
Structure of the process image: 32 bytes	V1.0 and higher
Transmission of digital I/O values in the cyclic process image	V1.0 and higher
Transmission of analog I/O values via data record transfer	V1.0 and higher
Firmware update	V1.0 and higher
Duplicate address detection	V1.0 and higher
Automatic address programming with manual writing of the ID1 code	V1.0 and higher
Write ID1 code to AS-i address "0"	V1.0 and higher
Configuring in *STEP 7* (TIA Portal) V13 SP1 and higher	V1.1 and higher
Status information for all slaves of the AS-i master system (TIA Portal)	V1.1 and higher
Detailed, device-specific diagnostics (TIA Portal)	V1.1 and higher
Configuring in *STEP 7* V5.5 and higher	V1.1 and higher
Option handling	V1.1 and higher
Proxy slave	V1.1 and higher
Structure of the process image: Up to 288 bytes, adjustable length	V1.1 and higher
Transmission of analog I/O values via process data	V1.1 and higher
Variable address area for I/O data	V1.1 and higher
Automatic address programming with automatic writing of the ID1 code	V1.1 and higher
AS-i slave_ID1_write_with_target_address	V1.1 and higher
Automatic duplicate address detection for AS-i voltage of either 24 V or 30 V	V1.1 and higher

Accessories

The following components can be used with the module:

- Labeling strips
- Reference identification label

3.2 Operating modes of the CM AS-i Master ST

The AS-i master has two operating modes:

- "Configuration mode"
- "Protected operation"

"Configuration mode"

"Configuration mode" can be used for commissioning an AS-i installation. You can also use "configuration mode" for productive operation. The AS-i bus configuration is not defined in this case. This means that error messages for a change of bus configuration are not possible.

You switch the AS-i master from "protected operation" to "configuration mode" in *STEP 7*. The "CM" LED (Configuration Mode) then lights up green.

In "configuration mode", the AS-i master can exchange data with every AS-i slave that is connected to the AS-i cable. This does not apply to AS-i slaves with the address "0". The AS-i master immediately detects and activates newly added AS-i slaves and includes them in cyclic data exchange. The digital process data of the connected AS-i slaves are stored according to a fixed scheme in the process image starting from a configurable start address. See "Special characteristics of AS-i Safety slaves (Page 55)". The digital process image for the inputs of non-existent slaves is filled with the substitute value "0". Analog process data can only be accessed by means of data record communication.

In "configuration mode", configuration errors of AS-i slaves are not signaled to the higher-level station via an alarm and are not indicated by the "DIAG" LED.

"Protected operation"

In "protected operation", the AS-i master only exchanges data with the configured AS-i slaves. In case of changes to the bus configuration, error messages are automatically generated if diagnostics is enabled. See "Parameter assignment/addressing (Page 43)".

You can configure in one of the following ways:

- Configuration of the AS i slaves in the *STEP 7* project (Configuration of the AS-i slaves in STEP 7 (Page 31))
- Applying the slave configuration with the online "ACTUAL → CONF" function in *STEP 7* (Applying the slave configuration (Page 38))
- Calling the command interface in the SIMATIC user program with the following commands:
  - No. 07: Store_Actual_Configuration (Page 114)
  - No. BA: Write_overall_configuration (Page 131)
- Using the connected "SET" button (Configuration of the AS-i slaves using the "SET" button (Page 34))

If you have configured the AS-i slave in the *STEP 7* project, the changeover to "protected operation" occurs automatically.

Changeover between "configuration mode" and "protected operation"

You can change between "configuration mode" and "protection operation" in one of the following ways:

- By switching the operating mode using the "Online functions in the TIA Portal (Page 37)".
- By calling the command interface in the user program of SIMATIC with command "No. 0C: Set_Operation_Mode (Page 119)".
- Using the connected "SET" button (Configuration of the AS-i slaves using the "SET" button (Page 34)).

Changeover is not possible if the AS-i slaves have been configured in the *STEP 7* project and the CPU is in RUN operating mode.

3.3 Firmware update

Performing a firmware update

Information about updating the firmware can be found in the ET 200SP System Manual.

Note

Following a firmware update, mark the current firmware version on the housing of the CM AS-i Master ST.

Current firmware updates are available on the Internet for download (https://support.industry.siemens.com/cs/ww/en/view/108742051).

Pay careful attention to the information on performing the firmware update contained in the download entry.

LED behavior during a firmware update

During a firmware update, the LEDs exhibit the following behavior:

- DIAG flashes red
- PWR is lit green
- Remaining AS-i LEDs are off

Note

Supply voltage during a firmware update

The AS-i voltage and the supply voltage of the ET 200SP station must not be switched off during a firmware update.

LED behavior after a successfully completed firmware update

When the TIA Portal is used, an error-free firmware update is indicated by the message that the firmware was successfully transferred.

Note

Confirming a message after an error-free firmware update

You must confirm the message using the button before you continue. Without confirmation, the LED status remains unchanged so that the firmware update is incomplete and must be repeated.

When *STEP 7* V5.5 (classic) is used, there is no concluding message and the LED status changes autonomously.

If the firmware is updated without errors, the LED status is updated:

- DIAG flashes red until the AS-i voltage is switched off and back on again
- PWR is lit green
- Remaining AS-i LEDs are lit

WARNING

Required intermediate step for firmware update of a CM AS-i Master ST with FW V1.0 using an ET 200SP CPU.

Failure to perform this step causes the CM AS-i Master ST to become permanently inoperable.

If you want to perform an update to a higher firmware version for a CM AS-i Master ST module with FW V1.0 and are using an ET 200SP configuration with an ET 200SP CPU in place of an interface module (IM), you must always perform the following intermediate step:

After the update of the LED status, the CM AS-i master ST module must be removed from the ET 200SP BaseUnit. Instead of removing the module, it is also sufficient to switch off the AS-i voltage and the 24 V voltage of the ET 200SP. A TIA Portal error message appears approximately one minute after the module has been removed indicating that online access to the module is no longer possible. Confirm the error message. Then plug the module onto the BaseUnit again or switch the voltages back on.

Now repeat the firmware update. In this case, the intermediate step described here can be skipped.

The intermediate step is not required for:

- Firmware update of a CM AS-i Master ST module with active FW V1.1 or higher
- Use of an ET 200SP configuration with a PROFINET interface module (IM) and PROFINET connection to a released SIMATIC CPU
- Use of an ET 200SP configuration with a PROFIBUS interface module (IM) and PROFIBUS connection to a released SIMATIC CPU.

Note

For operation of the CM AS-i Master ST module in an ET 200SP configuration with an ET 200SP CPU in place of an interface module (IM), the following minimum requirements of the firmware and software versions apply:

- CM AS-i Master ST with FW V1.1 or higher, and
- ET 200SP CPU with FW V1.8 or higher (CPU 1510SP-1 PN, CPU 1510SP F-1 PN, CPU 1512SP-1 PN, CPU 1512SP F-1 PN, Open Controller CPU 1515SP PC)
- Configuration with *STEP 7* V13 SP 1 Update 4 or higher

Note

Restart after a firmware update

Following a firmware update, the AS-i voltage must be switched off and back on again in order for the new firmware to be activated.

Wait for the LED status to update before performing the restart. Otherwise the firmware update is not complete and must be repeated.

LED behavior in the event of an error during a firmware update

If an error occurs during the firmware update, the LEDs assume the following status:

- DIAG flashes red
- PWR is lit green
- Remaining AS-i LEDs indicate the status of the AS-i and are not relevant here.

In this case, switch the AS-i voltage off and back on again and repeat the firmware update.

Connection 4

4.1 Terminal assignment

Requirements

For connecting, you require a BaseUnit:

- Type C0 (light BaseUnit, e.g., item number 6ES7193-6BP20-0DC0)

Note that, within a BaseUnit group for AS-i consisting of light and dark BaseUnits, only the AS-i modules CM AS-i Master ST and F-CM AS-i Safety ST may be combined. Other I/O module types of the ET 200SP must always be separated from the BaseUnit group for AS-i using light BaseUnits.

Exception:

BaseUnits with power busbars without connection to the terminals of the plug-in I/O module can be used within a BaseUnit group for AS-i. These BaseUnits include the following dark BaseUnits with 20 mm width:

- BU20-P12+A0+4B (BU type B1)
- BU20-P12+A0+0B (BU type D0)
- BU20-P8+A4+0B (BU type F0)

NOTICE
Make sure that external voltage from adjacent BaseUnits cannot under any circumstances be connected to the AS-i modules.

⚠ WARNING
Connection of the BaseUnit only to safety extra-low voltage with limiting of output voltage to max. 40 V under fault condition **Failure to observe this information may result in death, severe injury, and serious property damage.** Connect the BaseUnit only to an AS-i power supply unit that meets the conditions indicated in Section "Schematic circuit diagram (Page 27)", "Power supply units for AS-Interface". Connection to a higher voltage may result in death, severe injury, and serious property damage.

General terminal assignment

Table 4- 1 Terminal assignment of the CM AS-i Master ST

Terminal	Assignment	Description
1	SET1	Connection of the "SET" button (optional),
2	SET2	see "Configuration of the AS-i slaves using the "SET" button (Page 34)"
3	RES	Reserved
4	RES	Reserved
5	RES	Reserved
6	RES	Reserved
1L, 2L [1)]	ASI+	Connection of the AS-i cable, positive polarity
1N, 2N [1)]	ASI-	Connection of the AS-i cable, negative polarity

1) The terminals are connected through in the BaseUnit.

Connecting an external "SET" button

You can connect a "SET" button to terminals "SET1" and "SET2" of the AS-i master. This enables you to apply the ACTUAL configuration of the connected AS-i slaves as the CONFIGURED configuration. This function is activated by closing the button contact on the SET1 and SET2 terminals.

The maximum cable length between the terminal and "SET" button is 0.5 m.

Use two wires routed in parallel for connecting the button (not included in the scope of delivery).

See also

"ET 200SP Distributed I/O System" System Manual
(http://support.automation.siemens.com/WW/view/en/58649293/0/en)

"ET 200SP BaseUnits" Manual
(http://support.automation.siemens.com/WW/view/en/59753521/0/en)

4.2 Schematic circuit diagram

Schematic circuit diagram

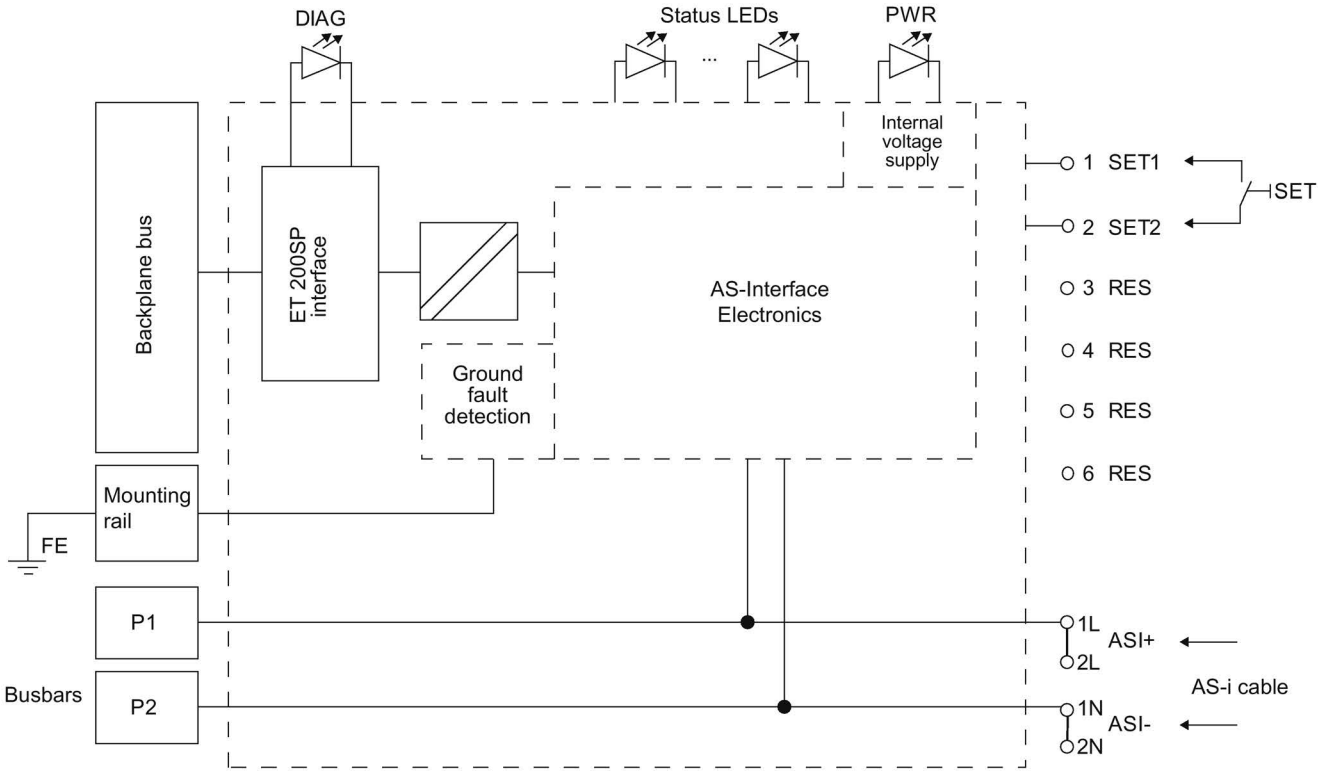

Figure 4-1 Circuit diagram of the CM AS-i Master ST

1L, 2L are connected through in the BaseUnit.

1N, 2N are connected through in the BaseUnit.

Connection to power busbars

The following are connected via the CM AS-i Master ST:

- 1L and power busbar P1
- 1N and power busbar P2

The maximum permitted current here is 4 A. For a conducted current of 4 A, the reduced ambient temperature range applies:

- Max. 55 °C for a horizontally mounted rail
- Max. 50 °C for a vertically mounted rail

If safety-related signals are to be processed on the AS-i cable, you can arrange a dark BaseUnit type C1 to the right of the light BaseUnit type C0 with the CM AS-i Master ST module and plug a safety-related F-CM AS-i Safety ST module onto this dark BaseUnit. The AS-i cable is continued from the light BaseUnit to the dark BaseUnit via the power busbars so that the F-CM AS-i Safety ST module is connected to the AS-i network of the master without additional wiring.

It is not permitted to transmit the AS-i voltage from the connecting terminals on the front of the dark BaseUnit because a current draw of this type may cause an overload in the modules.

Connect the AS-i cable with AS-i power supply unit and AS-i slaves only to terminals 1L, 2L (ASI+) and 1N, 2N (ASI-) of the light BaseUnit.

You can find additional information on safety-related processing in the "Fail-safe module F-CM AS-i Safety ST (https://support.industry.siemens.com/cs/ww/en/view/90265988)" manual.

Power supply units supported for AS-Interface

A connected power supply unit must have the following properties:

- Rated output voltage 30 V DC (AS-Interface Standard) or 24 V DC (AS-i Power24V)
- PELV/SELV (Protective/Safety Extra-Low Voltage) standard
- Residual ripple < 250 mVpp
- Limiting of output voltage to max. 40 V in the event of a fault

The Siemens power supply units for AS-Interface meet these requirements (see operating instructions of the power supply unit).

Use an AS-Interface power supply unit (with integrated data decoupling) or a combination of a standard power supply unit and a data decoupling module.

When AS-i Power24V is used, there are limitations on the cable length (max. 50 m AS-i cable) and usability of AS-i components and connected sensors/actuators due to the reduced voltage.

Additional notes:

- AS-Interface System Manual (http://support.automation.siemens.com/WW/view/en/26250840/0/en)
- FAQ "Compatibility for AS-i Power24V" (http://support.automation.siemens.com/WW/view/en/42806066)

Power supply

The CM AS-i Master ST is fully powered from the AS-i voltage. Only the internal backplane bus interface for the ET 200SP station (including the DIAG LED) is powered from the operating voltage of the ET 200SP station.

If the operating voltage of the ET 200SP station fails, the communication between the AS-i master and AS-i slaves continues without interruption, in which case the outputs of the AS-i slave are reset to zero.

Configuring 5

5.1 Requirements

Introduction

You configure the ET 200SP station and its CM AS-i Master ST and assign their parameters using *STEP 7* or the configuration software of another manufacturer.

Configuring the CM AS-i Master ST

Configuring in *STEP 7* or another configuration software is required in order to use the CM AS-i Master ST in an ET 200SP. A distinction is made here between the necessary basic configuration of the AS-i master and the optional configuration of the AS-i slaves.

You can configure the module using *STEP 7* or with a GSD file. Version dependencies:

Table 3-1 Version dependence of the CM AS-i Master ST engineering versions (Page 17)

Note

CM AS-i Master ST in the hardware catalog of *STEP 7*

If the CM AS-i Master ST module in the applicable firmware version is not listed in the hardware catalog of *STEP 7* , you will need a "Hardware Support Package". You can install this HSP from the Internet using the corresponding function in *STEP 7*.

Further information can be found in the documentation and in the online help for *STEP 7*.

Installing the HSP in *STEP 7* V5.5 (classic)	"HW Config" > "Options" menu > "Install HW Updates"
Installing the HSP in *STEP 7* V13 (TIA Portal):	"Options" menu > "Support packages"

You can find additional information on the HSP and download it in Internet (https://support.industry.siemens.com/cs/ww/en/view/108742051).

Download the GSD file from the internet:

PROFINET GSD file (https://support.industry.siemens.com/cs/ww/en/view/57138621)

PROFIBUS GSD file (https://support.industry.siemens.com/cs/ww/en/view/73016883)

Observe the *STEP 7* online help or the documentation of the configuration software manufacturer.

Configuring the AS-i system requires two steps:

1. Basic configuration of the AS-i master (Basic configuration of the CM AS-i Master ST (Page 30))
2. Configuration of the AS-i slaves

Configuring the AS-i slaves includes defining the slave modules and, if necessary, assigning the slave operating parameters.

See also

Configuration of the AS-i slaves in STEP 7 (Page 31)

Configuration of the AS-i slaves using the "SET" button (Page 34)

Configuration of the AS-i slaves via the control panel in the TIA Portal (Page 36)

Configuration of the AS-i slaves using the PLC program (Page 36)

Characteristics of the CM AS-i Master ST (Page 15)

5.2 Basic configuration of the CM AS-i Master ST

The following is carried out as a result of the basic configuration:

- The AS-i master is made known with the system.
- The length of the cyclic process image is made known (length can be set in FW V1.1 and higher).
- The operating parameters of the AS-i master are assigned.

Procedure

The basic configuration is performed by inserting the AS-i master module into the project of the configuration software.

Change the operating parameters according to their use. You will find information on operating parameters in the Sections:

- Parameters (Page 43)
- Explanation of the parameters (Page 44)

Should the need arise, you can change the size of the process image to be transferred as follows:

- In *STEP 7* in the "Properties" dialog of the AS-i master
- When the GSD file is used, by selecting the respective module variant from the GSD selection list

Further information on the process image:

- Address space (Page 44)

See also

Configuration of the AS-i slaves in STEP 7 (Page 31)

5.3 Configuration of the AS-i slaves

5.3.1 Configuration of the AS-i slaves in STEP 7

During configuration of the AS-i slaves, you specify the stations that the AS-i master is to communicate with in *STEP 7*.

Configuration in *STEP 7* provides the following advantages:

- AS-i slaves are displayed graphically in the network view along with their AS-i addresses (*STEP 7* (TIA Portal)) or displayed as a list (*STEP 7* V5.5 and higher).
- The assigned I/O addresses of an AS-i slave are displayed in the Properties window of the AS-i slave.
- The slave parameters can be configured in the *STEP 7* user interface.
- The configuration of the slaves is stored in the *STEP 7* project, which makes documentation easier.
- The configuration data is stored in the PLC and transferred automatically when the AS-i master is replaced.
- During power-up, the AS-i master switches automatically to "protected operation".
- The diagnostic status of the slave is displayed in *STEP 7* (TIA portal) in the network view as a symbol (currently only in combination with S7-300 / S7-400 CPU).

Note

If you do not configure any AS-i slaves in *STEP 7* or if you configure using a GSD file, AS-Interface uses the CONFIGURED configuration saved in the AS-i master. The following sections describe how you can create the CONFIGURED configuration:

- Configuration of the AS-i slaves using the "SET" button (Page 34)
- Configuration of the AS-i slaves via the control panel in the TIA Portal (Page 36)
  This does not apply when configuring with a GSD file.
- Configuration of the AS-i slaves using the PLC program (Page 36)

Procedure

You activate configuration of the AS-i slaves in *STEP 7* as follows:

- In *STEP 7* (TIA Portal): by connecting at least one AS-i slave to the AS-i master over an AS-i network in the network view.
- In *STEP 7* V5.5: by inserting at least one AS-i slave in the configuration table of the AS-i master (FW V1.1 and higher).

When the AS-i slaves are configured in *STEP 7*, configuration is not possible using the "SET" button, via the online function or the PLC program.

This configuration switches the AS-i master automatically to "protected operation".

Option 1: Selection from the hardware catalog

To configure the AS-i slaves, open the hardware catalog in *STEP 7*.

STEP 7 (TIA Portal):

In *STEP 7* (TIA Portal), you will find the AS-i slaves under "Field devices".

1. Select a module from the hardware catalog.
2. Drag the module to the network view.
3. Connect the AS-i interface of the module (yellow square in the slave symbol) to the AS-i interface of the AS-i master (yellow square in the master) or directly to the yellow line of the AS-i subnet. When a connection is made to the AS-i subnet, a free AS-i address is automatically assigned in the configuration.

   You can change this AS-i address in the properties dialog of the AS-i slave in the "AS-Interface" area.

STEP 7 V5.5:

1. Open the "Object properties" dialog of the CM AS-i Master ST in the ET 200SP. To do so, select "Object properties" in the shortcut menu.
2. Click the "Slave configuration" tab (FW V1.1 and higher) in the "Properties..." dialog of the CM AS-i Master ST (FW V1.1 and higher) to open it.
3. Double-click the desired AS-i address (1A, B, 2A, B, etc.) to open the "Configuration" of the AS-i slave.
4. Click the "Select" button to open the "Slave selection dialog".
5. Select a slave in this dialog.

   Alternatively: Select a slave from the "Module" list box.

Option 2: Reading out an existing AS-i configuration

If an AS-i cable with AS-i slaves is connected to the AS-i master, you can transfer the connected slaves to the configuration of *STEP 7*. The connected AS-i slaves must have addresses other than "0".

Procedure:

1. Switch on the AS-i voltage.
2. Compile the project and download it to the station.
3. *STEP 7* (TIA Portal):
   - Right click the AS-i master.
   - Select "Hardware detection" in the shortcut menu.

   STEP 7 V5.5:
   - Select the ET 200SP.
   - Open the "Properties" dialog of the CM AS-i Master ST by double-clicking the slot of the CM AS-i Master ST, for example.
   - Change to the "Options AS-i slaves" tab.
   - Click the "Upload to PG" button.

4. The detected slaves are applied as universal slaves in the project.

   Note

   Automatic reading out of article numbers is not possible.

   Slave addresses already present in the project are not overwritten. If you want to transfer a slave address that is already present, you must delete the existing slave in the hardware detection before the readout.

5. You can now edit the slaves applied to the project as if you had taken them directly from the hardware catalog.

The following basic types are available:

- Siemens AS-i slave
- Universal slave with the following forms:
  - AS-i F Slave Universal for safety-related applications
  - AS-i Standard Slave Universal, for configuring with standard address or extended address (A/B slaves)
  - Universal AS-i Proxy Slave

The article numbers for the slaves are only saved in the offline project. Comparison of the article numbers in the offline project with those of the slaves on the AS-i cable is not performed. The AS-i master uses the configuration data of the slave profile (IO.ID.ID2) and ID1 code of the AS-i slave for comparison of the actual status with the configured status.

Configuring the properties of Siemens AS-i slaves

When you use an AS-i slave from Siemens, you select the slave directly from the hardware catalog.

This selection offers the following properties:

- The device type is represented in *STEP 7* (TIA Portal) using an image.
- The meaning of the slave parameters is displayed as text.
- The underlying slave profile is already set. The IO, ID and ID2 identifiers do not need to be entered.

Parameter bits that are irrelevant for the Siemens slave are set to the default value "1". They cannot be changed.

The ID1 code is preassigned according to the factory setting of the Siemens slave. If you change the ID1 code of the slave, you must also change the setting in the slave configuration.

See also the command "No. D1: AS-i-Slave_ID1_schreiben_mit_Zieladresse (Write ID1 code with destination address) (Page 160)".

Configuring the properties of universal AS-i slaves

When configuring with the universal AS-i slave or universal AS-i F slave, you must make the following settings:

- Profile identification of the AS-i slave (IO, ID, ID2)
- Parameters of the AS-i slave

You will find the profile identification, the ID1 code, and the meaning of the AS-i slave parameters in the documentation for the AS-i slave.

The I/O assignment of the slave is shown, depending on the specified profile identification, in the "Configuration" section.

See also

Applying the slave configuration (Page 38)

No. 07: Store_Actual_Configuration (Page 114)

5.3.2 Configuration of the AS-i slaves using the "SET" button

Functional principle

You can connect a "SET" button to terminals "SET1" and "SET2" of the AS-i master. This supports the teaching procedure for the connected AS-i slaves. This function is activated by closing the button contact on the SET1 and SET2 terminals.

Behavior in "configuration mode" and in "protected operation"

Table 5- 1 "Configuration mode"/"Protected operation"

Mode of the CM AS-i Master ST	Behavior of the "CM" LED
"Configuration mode"	The "CM" LED lights up.
"Protected operation"	The "CM" LED does not light up.

When the AS-i master is in "configuration mode", the AS-i master is configured automatically when the "SET" button is pressed. Configuration is carried out as follows:

1. The CM AS-i Master ST saves the AS-i slave configuration present on the AS-i cable as the CONF configuration in non-volatile memory.
2. The AS-i master then switches over to "protected operation".

If the AS-i master is in "protected operation", it will switch to "configuration mode" when the "SET" button is pressed.

The "SET" button is only activated when the CPU is in "STOP" state or after disconnecting the bus from the IM module of the ET 200SP.

Requirements

Ensure the following states exist:

1. The CPU is in "STOP" state or the bus is disconnected from the IM module of the ET 200SP.
2. The AS-i master and all AS-i slaves are connected to the AS-Interface and supplied with voltage.
3. No AS-i slave with address 0 is connected to AS-Interface. The AS-i slaves have unique addresses that differ from one another.

Procedure

1. Check whether the AS-i master is in "configuration mode". (The "CM" LED lights up.)

   If the "CM" LED does not light up, switch the AS-i master to "configuration mode" by pressing the "SET" button once.
2. Press the "SET" button. This configures the AS-i master. In so doing, the ACTUAL configuration detected is saved as the CONF configuration in non-volatile memory in the CM AS-i Master ST. At the same time, the AS-i master switches over to "protected operation". The "CM" LED goes out.

Note

Parameter setting when configuring with the "SET" button

If no AS-i slaves are connected, all internal lists are set to default values. In particular, the following are set: all AS-i parameters = F_{Hex} and bit "AutoAdress_Enable = 1".

When configuring is performed using the "SET" button, the parameter value in the volatile memory of the AS-i master for each slave applied to the CONF configuration is saved as a non-volatile parameter. For slaves that are not present, the default value F_H is applied to the non-volatile memory. This corresponds to the function of the No. 00: Set_Permanent_Parameter (Page 107) command.

Note

The existing configuration can be overwritten using the "SET" button

Note regarding the CM AS-i Master ST:

A configuration of AS-i slaves specified using *STEP 7* and downloaded to the S7 station is transferred to the AS-i master again during S7 station start-up or after station recovery of the head module. Any configuration implemented using the "SET" button will be overwritten.

When configuring with the "SET" button, if no slaves are connected to AS-Interface, the CONFIGURED configuration in the master is deleted along with the profile definition for proxy slaves (see Section "AS-i proxy slave (Page 42)"). The AS-i voltage must be present.

See also

Terminal assignment (Page 25)

5.3.3 Configuration of the AS-i slaves via the control panel in the TIA Portal

You can also execute the functionality of the "SET" button described in Section "Configuration of the AS-i slaves using the "SET" button (Page 34)" via the control panel in *STEP 7*.

When configuring the AS-i slaves over the control panel in TIA Portal, if no slaves are connected to AS-Interface, the CONFIGURED configuration in the master is deleted along with the profile definition for proxy slaves (see Section "AS-i proxy slave (Page 42)"). The AS-i voltage must be present.

5.3.4 Configuration of the AS-i slaves using the PLC program

You can use the PLC program to completely define the configuration of the AS-i slaves.

The command interface of the AS-i master is available for this. You use the No. BA: Write_overall_configuration (Page 131) command to specify the CONF configuration of the AS-i slaves in the AS-i master, similarly as when configuring the slave in the TIA Portal.

The No. 07: Store_Actual_Configuration (Page 114) command allows you to save the ACTUAL configuration as the CONF configuration in the AS-i master, similarly as when using the "SET" button for this.

5.4 Online functions in the TIA Portal

5.4.1 Switching from one operating mode to another

In *STEP 7* "Online" > "Diagnostics", you can switch between "protected operation" and "configuration mode" under "Functions". There are two buttons:

- "Configuration mode"
- "Protected operation"

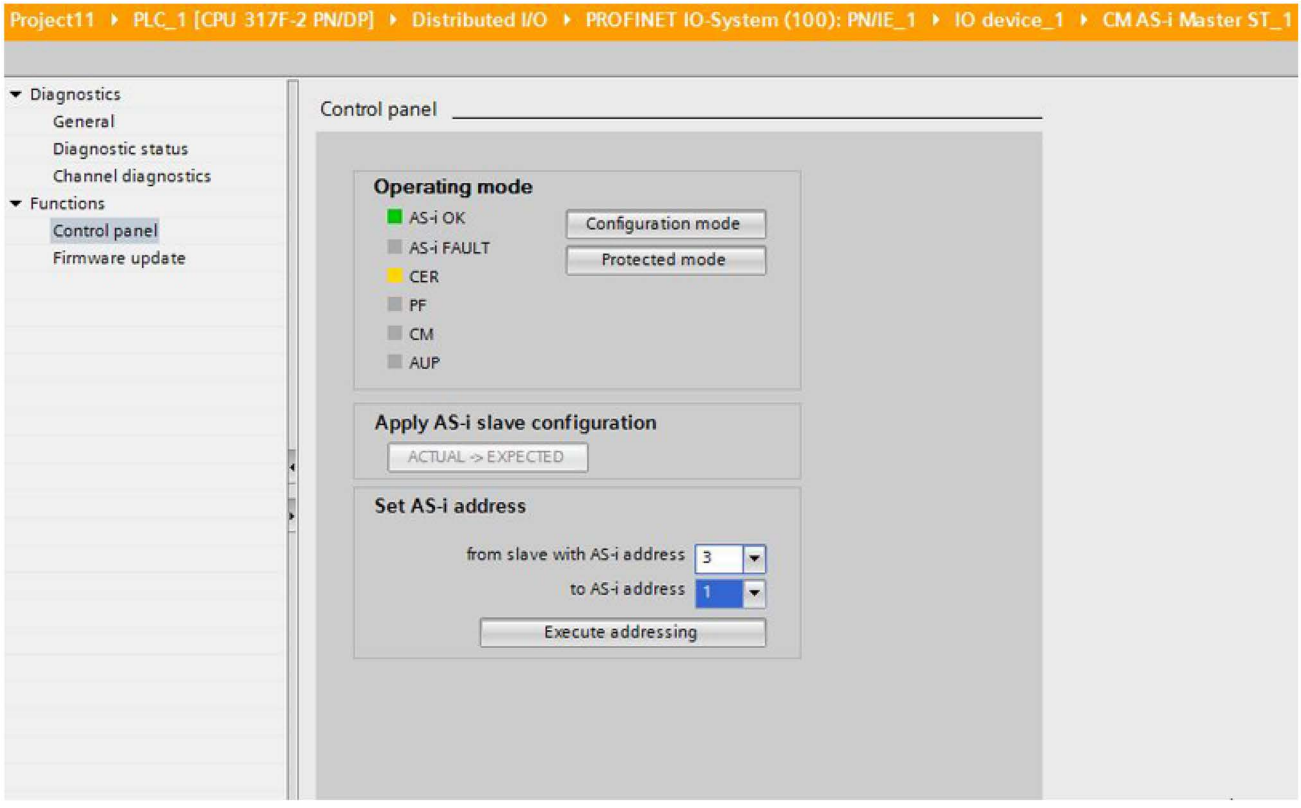

The LEDs on the AS-i master and in *STEP 7* indicate the current operating mode of the AS-i master. You will find additional information in Section "Meaning of the LEDs (Page 64)".

The operating mode can only be switched when the CPU is in "STOP" state.

Note

Online functions

The online functions can only be performed when at least the basic configuration has been completed and the configuration has been loaded into the ET 200SP station.

5.4.2 Applying the slave configuration

Application

This step is only necessary if AS-i slaves have not been configured in *STEP 7* and the configuration of the AS-i slaves is not performed using the "SET" button.

If AS-i slaves have already been configured in *STEP 7* and the slave configuration has been downloaded to the AS-i master, the system deactivates the function for applying the slave configuration. It is then no longer possible for this function to be called.

Requirements

The following requirements must be satisfied to do this:

- The CPU is in "STOP" state.
- The AS-i master and all AS-i slaves are connected to the AS-Interface and supplied with voltage.
- No AS-i slave with address 0 is connected to AS-Interface. The AS-i slaves have unique addresses that differ from one another.
- The AS-i master is in "configuration mode".

Applying the slave configuration

The "ACTUAL → CONF" button in the "Online" > "Diagnostics" window can be used to apply the configuration of slaves connected to the master.

The following data of the AS-i slaves is saved in non-volatile memory in the AS-i master:

- AS-i addresses
- The slave profile for each AS-i slave: IO code, ID code, ID2 code
- ID1 code for each AS-i slave

It is not possible to apply the slave configuration via the "ACTUAL -> CONF" button if AS-i slaves have already been configured in *STEP 7* and downloaded to the AS-i master or if the CPU is in "RUN" state. You reactivate the function "ACTUAL → CONF" by reloading the AS-i master in *STEP 7* with the basic configuration only - that is, without configured AS-i slaves.

Note

Parameter setting when applying the slave configuration

When configuring is performed using the "ACTUAL→CONF" button, the parameter value in the volatile memory of the AS-i master for each slave applied to the CONF configuration is saved as a non-volatile parameter. For slaves that are not present, the default value F_H is applied to the non-volatile memory. This corresponds to the function of the No. 00: Set_Permanent_Parameter (Page 107) command.

5.4.3 Setting the address of an AS-i slave

In the "Online" > "Diagnostics" window, you can assign a new address to an AS-i slave using a selection menu and the "Execute addressing" button. Only free AS-i addresses are available here.

5.5 Variable configuration

Option handling and proxy slaves can be combined.

5.5.1 Option handling

A machine consists of a basic configuration and several expansion stages. The overall configuration is configured in the *STEP 7* project. The slaves that belong to an expansion stage are configured as optional slaves. When the system is commissioned, the user program (PLC) defines which expansion stages are installed. The configuration in *STEP 7* remains unchanged.

You can use option handling to activate and deactivate AS-i slaves that you have defined in HW Config in the user program during operation.

You configure the AS-i slaves in the AS-i master as described in Section "Configuration of the AS-i slaves in STEP 7 (Page 31)":

1. Activate option handling.

   STEP 7 (TIA Portal):

   – Select "Options > Option handling" in the slave properties dialog.

   – Select the "Option handling" check box.

   STEP 7 V5.5:

   – Select the "Slave configuration" tab in the "Properties..." dialog of the CM AS-i Master ST.

   – Double-click the desired AS-i address (1A, B, 2A, B, etc.) to open the "Configuration" of the AS-i slave.

   – Select the "Option handling" check box.

   This activates the option handling for this slave.

2. Activate the slave using the user program (PLC).

   You can also deactivate the slave in the user program.

The AS-i master treats an optional slave that is not activated like a slave that is not configured. The AS-i master treats an activated optional slave like a slave that is configured without option handling.

Procedure

1. Define the AS-i slaves in *STEP 7* (TIA Portal) > Network view or in *STEP 7* V5.5 > "HW Config".
2. Specify whether option handling is enabled for each AS-i slave.
3. In the user program, you can activate or deactivate AS-i slaves for which option handling is activated during runtime. To do this, a combination of 2 bits must be set or reset in data record DS 131.

Note

Option handling and safe AS-i slaves

When data record DS 131 is written to the CM AS-i Master ST module, the signals of the safety-related slaves on the same bus are reset. Before transferring the option data record DS 131, ensure that the system is in an operating state in which a safety signal reset will not adversely affect the course of operation. Before restarting, error acknowledgement or reintegration must be performed for the safe AS-i inputs and, where applicable, the safe AS-i outputs. The correct procedure for the fail-safe evaluation system used must be observed.

See also

DS 131 Activate/deactivate optional slaves (Page 40)

DS 131 Read status of option handling (Page 41)

No. D0: Set_Configuration_Online (Page 159)

5.5.1.1 DS 131 Activate/deactivate optional slaves

Description

By writing this data record, you activate or deactivate slaves configured as optional on the AS-i bus.

Table 5- 2 Structure of DS 131 write

Byte	Meaning							
	Bit 7	Bit 6	Bit 5	Bit 4	Bit 3	Bit 2	Bit 1	Bit 0
0 … 1	Reserved							
2 … 9	List of slaves to be activated							
	Bit = 0	No action						
	Bit = 1	The slave will be activated.						
10 ... 17	List of slaves to be deactivated							
	Bit = 0	The slave will not be deactivated.						
	Bit = 1	The slave will be deactivated.						

Note

Identical entries in each list

If a "1" is entered for an AS-i slave in both lists, the slave will be deactivated.

Note

Activated/deactivated status of the optional slaves

The activated/deactivated status of the optional slaves is stored in non-volatile memory of the master and is retained even if a new configuration is downloaded to the master. The status of an optional slave is set to deactivated if the slave is not set as optional in a configuration.

If a configuration contains slaves without option handling, the status stored internally in the master for these slaves is reset (bit = 0).

See also

Address space (Page 44)

Option handling (Page 39)

5.5.1.2 DS 131 Read status of option handling

Description

The current status of the slaves configured as optional is returned by reading this data record.

Table 5- 3 Structure of DS 131 read

Byte	Meaning							
	Bit 7	Bit 6	Bit 5	Bit 4	Bit 3	Bit 2	Bit 1	Bit 0
0 … 1	Reserved							
2 … 9	List of activated, optional slaves							
	Bit = 0	The optional slave is deactivated or the optional slave is not an optional slave.						
	Bit = 1	The optional slave is activated.						
10 ... 17	List of configured, optional slaves							
	Bit = 0	The slave is not configured as an optional slave or it is not contained in the configuration.						
	Bit = 1	The slave is configured as an optional slave.						

If a slave is configured as not optional, then the associated bit in the list of activated optional slaves in the non-volatile memory of the master is reset to the value 0.

See also

Option handling (Page 39)

5.5.2 AS-i proxy slave

Description

A proxy slave is used to represent any given slave. This means you define the I/O addresses in the PLC program in advance. You define the slave itself at runtime.

Procedure

- Configure a proxy slave in "*STEP 7* > HW Config" with the associated digital and / or analog I/O addresses. You can then use these I/O addresses in the user program to access the data of the proxy slave once you have defined the slave profile at runtime.

  To do this, select the proxy slave from the universal AS-i slaves in the hardware catalog.
- At runtime, specify in the PLC program which slave type should be operated under this address.
- You define the slave profile of the proxy slave by changing the overall configuration ("No. D0: Set_Configuration_Online (Page 159)" command). In this case, the AS-i branch is not reset.
- The slave type defined in the user program is retained in the CM AS-i Master ST module, even after the power supply has been switched off.
- The slave type of a proxy slave defined in the user program is retained in the CM AS-i Master ST module, even after the hardware configuration has been reloaded into the station.

Applications

- Variable machine configurations that can be changed at runtime.
- Flexible expansion of the system in the future, without the need to specify the actual type of slave beforehand.

Parameter assignment/addressing 6

6.1 Parameters

Parameters of the AS-i master

Table 6- 1 Assignable parameters and their default setting (GSD file)

Parameters	Value range	Default
Diagnostic interrupt in case of errors in AS-i configuration	• Enable • Disable	Enable
Diagnostic interrupt in case of AS-i cable fault	• Enable • Disable	Enable
Automatic address programming	• Enable • Disable	Enable
Ground-fault monitoring activated	• Enable • Disable	Enable
Automatic ID1 code assignment (Firmware V1.1 and higher)	• Enable • Disable	Disable
Duplicate address detection[1)]	• Enable for AS-i voltage 24 V • Enable for AS-i voltage 30 V • Disable	Disable

1) This parameter is divided into "Deactivate duplicate address detection" and "Duplicate address detection for 24 V" depending on the GSD variant.

6.2 Explanation of the parameters

Diagnostic interrupt if AS-i configuration error:

With this parameter, you specify whether AS-i configuration errors will be signaled to the higher-level system. The following are signaled as a configuration error:

- A surplus slave
- A missing slave
- A slave of the wrong type

Diagnostic interrupt if AS-i cable fault:

This parameter is used to specify whether faults concerning the AS-i cable should be reported to the higher-level system. Possible AS-i cable faults are:

- Ground fault
- Insufficient AS-i voltage
- Peripheral fault of an AS-i slave

Automatic address programming:

When a defective AS-i slave is being replaced, you use this parameter to specify whether the configured AS-i address will be automatically assigned to the new device.

For details on this functionality, see Section "Replacing a defective AS-i slave / automatic address programming (Page 74)"

Ground-fault monitoring activated:

This parameter is used to specify whether ground faults on the AS-i cable should be detected by the AS-i master. Deactivate this setting if you are using an external unit for ground fault detection.

Automatic ID1 code assignment:

When you activate this parameter, in the case of automatic address programming the ID1 code of a slave is written to the value specified during configuring.

Duplicate address detection:

The duplicate address detection function can identify inadvertent duplicate addressing. When you activate it, you must select the AS-i line voltage in use.

This parameter is divided into "Deactivate duplicate address detection" and "Duplicate address detection for 24 V" depending on the GSD variant.

6.3 Address space

The assignment of the address space is described in the following Section:

Data exchange between the user program and AS-i slaves (Page 45)

Data exchange between the user program and AS-i slaves 7

7.1 Access to AS-Interface

The distributed I/O system communicates with the AS-i slaves via the CM AS-i Master ST. The AS-i communication objects are mapped onto a continuous data area for input and output data.

What's new in firmware V1.1 and higher

The following options are available as of firmware V1.1:

- You can design the process image flexibly according to your needs.
- You can reduce the length of the reserved I/O area (depending on the configuration software version).

Designing the process image flexibly.

You can design the process image in the following way:

- Reduce or increase the process image (default length 32 bytes):
  - If the AS-i slaves are configured in STEP 7: the length can be set in steps in the range 4 ... 288 bytes. In this case, the maximum length of the process image depends on the ET 200SP interface module (IM) or ET 200SP CPU used.
  - If the AS-i slaves are not configured in STEP 7 length can be set to 16 or 32 bytes
- Variable division of the process image if AS-i slaves are configured in STEP 7:
  - Analog values and digital values can be mapped in one process image.
  - The slave address is not bound to a specific position in the process image.
  - The number of bits per slave can vary. For example, the digital input data of the slave at address 1 can be one bit long and the analog data of the slave at address 5 can be two bytes long.

Length of the reserved I/O area can be reduced

If your configuration contains fewer AS-i slaves, you may reduce the length of the reserved I/O area (depending on the configuration software version). This reduces the volume of data to be transmitted on PROFIBUS or PROFINET.

You set the length of the I/O area in *STEP 7* (TIA Portal) in the properties of the AS-i master. This does not change the assignment of the slave address to the offset.

This means: When the length is reduced, the higher AS-i bus addresses can no longer be addressed.

Address overview

In the Properties dialog box of module CM AS-i master ST under "I/O Addresses", you can call up an address overview in which the I/O addresses are assigned to the AS-i slaves (as of TIA Portal V14 SP1 extended for any configuration)

7.2 Transmitting AS-i digital values

A missing or failed digital slave results in the substitute value 0 in the input data. In the output direction, the non-assigned values have no effect.

Refer to the information about display of transparent values / digital values in Section Accessing AS-i analog data via the process image (Page 58).

7.2.1 I/O addresses when configuring AS-i slaves in STEP 7

Process image transmission time

The time it takes to transmit a process image depends on its size:

- If the length of the process image is set to up to 32 bytes, the I/O data in the ET 200SP station are transmitted within 1 backplane bus cycle. This setting results in the shortest transmission time on the backplane bus.
- If the length of the process image is set to more than 32 bytes, the I/O data of the CM AS-i master°ST in the ET 200SP station are transmitted in several consecutive backplane bus cycles. Data consistency is maintained from the point of view of the IM or the CPU. Division into several backplane bus cycles is performed automatically by the ET 200SP system. The number of required backplane bus cycles is automatically determined and depends on the set length of the process image. In this case, the maximum length of the process image depends on the ET 200SP interface module (IM) or ET 200SP CPU used. For more detailed information, see the technical data of the IM or CPU.

CM AS-i Master ST with configured AS-i slaves

If you configure the AS-i slaves as described in Section "Configuration of the AS-i slaves in STEP 7 (Page 31)", you will set the I/O addresses of the slaves using the Properties dialog box of the AS-i slave. The I/O address can be set individually in the area of the defined process image of the AS-i master. The input/output bits x.4 to x.7 in the first byte of the process image of the AS-i°master cannot be used for AS-i slaves. The process image can contain input/output data of digital and analog slaves. The bit length of a slave depends on the configured profile.

If the option "Reserve 4 bits length" is activated, 4 input bits and 4 output bits will be reserved for the slave. In this case, the real I/O data of the AS-i slave fall within the 4 bit range as described in Table 7-6 "Standard assignment table for inputs/outputs of digital AS-i slaves" in SectionI/O addresses without configuration of the AS-i slaves in STEP 7 (Page 50).

Arrangement of the AS-i slaves in the process image (Sort)

In TIA Portal V14 SP1 and higher, the arrangement of the AS-i slaves in the process image can be sorted automatically. 3 options are offered in the Properties of the AS-i master under "I/O Addresses > Arrangement":

- Sort - CLASSIC:
  The digital inputs/outputs of the slaves are sorted into the process image as described in Table 7-1 "Bit assignment per digital slave (CLASSIC sorting)", starting from the set start address of module CM AS-i master ST. CLASSIC sorting is the same as that described in SectionI/O addresses without configuration of the AS-i slaves in STEP 7 (Page 50).
  After the digital inputs/outputs, the analog inputs/outputs are sorted into the process image. The status information (EFD, CM, CFGOK, DIAG) is displayed if the option "Process image for status information" (FW V1.1 and higher) is activated, see Table 7-3 "Overview of status information".
- Sort - LINEAR:
  The digital inputs/outputs of the slaves are sorted into the process image as described in Table 7-2 "Bit assignment per digital slave (LINEAR sorting)": The digital inputs/outputs of the slaves with a standard address or A address are mapped in bits 0 ... 3, whereas the digital inputs/outputs of the slaves with a B address are mapped in bits 4 ... 7.
  After the digital inputs/outputs, the analog inputs/outputs are sorted into the process image. The status information (EFD, CM, CFGOK, DIAG) is displayed if the option "Process image for status information" (FW V1.1 and higher) is activated, see Table 7-3 "Overview of status information".
- Packing:
  Address usage for the inputs/outputs of the slaves is optimized, i.e. all gaps are eliminated and the length of the I/O area is adapted. You can see the selected I/O addresses directly in the address overview of the I/O addresses in the configuration of the CM AS-i master ST.

Table 7- 1 Bit assignment per digital slave (CLASSIC sorting)

Byte number [1]		Bit 7 … 4				Bit 3 … 0			
		Bit 3	Bit 2	Bit 1	Bit 0	Bit 3	Bit 2	Bit 1	Bit 0
n+0		Reserved				Slave 1 or 1A			
n+1		Slave 2 or 2A				Slave 3 or 3A			
n+2		Slave 4 or 4A				Slave 5 or 5A			
n+3		Slave 6 or 6A				Slave 7 or 7A			
n+4		Slave 8 or 8A				Slave 9 or 9A			
n+5		Slave 10 or 10A				Slave 11 or 11A			
n+6		Slave 12 or 12A				Slave 13 or 13A			
n+7		Slave 14 or 14A				Slave 15 or 15A			
n+8		Slave 16 or 16A				Slave 17 or 17A			
n+9		Slave 18 or 18A				Slave 19 or 19A			
n+10		Slave 20 or 20A				Slave 21 or 21A			
n+11		Slave 22 or 22A				Slave 23 or 23A			
n+12		Slave 24 or 24A				Slave 25 or 25A			
n+13		Slave 26 or 26A				Slave 27 or 27A			
n+14		Slave 28 or 28A				Slave 29 or 29A			
n+15		Slave 30 or 30A				Slave 31 or 31A			
n+16	FW V1.0	Reserved				Slave 1B			
	FW V1.1 and higher	EFD	CM	CFGOK	DIAG				
n+17		Slave 2B				Slave 3B			
n+18		Slave 4B				Slave 5B			
n+19		Slave 6B				Slave 7B			
n+20		Slave 8B				Slave 9B			
n+21		Slave 10B				Slave 11B			
n+22		Slave 12B				Slave 13B			
n+23		Slave 14B				Slave 15B			
n+24		Slave 16B				Slave 17B			
n+25		Slave 18B				Slave 19B			
n+26		Slave 20B				Slave 21B			
n+27		Slave 22B				Slave 23B			
n+28		Slave 24B				Slave 25B			
n+29		Slave 26B				Slave 27B			
n+30		Slave 28B				Slave 29B			
n+31		Slave 30B				Slave 31B			
		Bit 3	Bit 2	Bit 1	Bit 0	Bit 3	Bit 2	Bit 1	Bit 0

1) n = Start address

Table 7- 2 Bit assignment per digital slave (LINEAR sorting)

Byte number [1]		Bit 7 … 4				Bit 3 … 0			
		Bit 3	Bit 2	Bit 1	Bit 0	Bit 3	Bit 2	Bit 1	Bit 0
n+0	FW V1.0	Reserved				Reserved			
	FW V1.1 and higher					EFD	CM	CFGOK	DIAG
n+1		Slave 1B				Slave 1 or 1A			
n+2		Slave 2B				Slave 2 or 2A			
n+3		Slave 3B				Slave 3 or 3A			
n+4		Slave 4B				Slave 4 or 4A			
n+5		Slave 5B				Slave 5 or 5A			
n+6		Slave 6B				Slave 6 or 6A			
n+7		Slave 7B				Slave 7 or 7A			
n+8		Slave 8B				Slave 8 or 8A			
n+9		Slave 9B				Slave 9 or 9A			
n+10		Slave 10B				Slave 10 or 10A			
n+11		Slave 11B				Slave 11 or 11A			
n+12		Slave 12B				Slave 12 or 12A			
n+13		Slave 13B				Slave 13 or 13A			
n+14		Slave 14B				Slave 14 or 14A			
n+15		Slave 15B				Slave 15 or 15A			
n+16		Slave 16B				Slave 16 or 16A			
n+17		Slave 17B				Slave 17 or 17A			
n+18		Slave 18B				Slave 18 or 18A			
n+19		Slave 19B				Slave 19 or 19A			
n+20		Slave 20B				Slave 20 or 20A			
n+21		Slave 21B				Slave 21 or 21A			
n+22		Slave 22B				Slave 22 or 22A			
n+23		Slave 23B				Slave 23 or 23A			
n+24		Slave 24B				Slave 24 or 24A			
n+25		Slave 25B				Slave 25 or 25A			
n+26		Slave 26B				Slave 26 or 26A			
n+27		Slave 27B				Slave 27 or 27A			
n+28		Slave 28B				Slave 28 or 28A			
n+29		Slave 29B				Slave 29 or 29A			
n+30		Slave 30B				Slave 30 or 30A			
n+31		Slave 31B				Slave 31 or 31A			
		Bit 3	Bit 2	Bit 1	Bit 0	Bit 3	Bit 2	Bit 1	Bit 0

1) n = Start address

Status information in input process image

To provide a quick summary diagnosis, the following status information can optionally be transferred to a selectable address in the input process image (FW V1.1 and higher).

Table 7- 3 Overview of status information

EFD	0 = No ground fault detected 1 = Ground fault detected
CM	0 = Master in protected operation 1 = Master in configuration mode
CFGOK	0 = Configuration not OK or slave exists with address 0 1 = Configuration OK
DIAG	0 = No diagnostics pending 1 = Diagnostics pending. This information is set for the following events: -The AS-i master is in "offline" mode. - The AS-i voltage is not OK. - Multiple addressing was detected. - An I/O error was detected. - A configuration error was detected. - A slave with address 0 exists.

7.2.2 I/O addresses without configuration of the AS-i slaves in STEP 7

I/O addresses of the slaves in the process image

If you configure according to Sections "Configuration of the AS-i slaves using the "SET" button (Page 34)" to "Configuration of the AS-i slaves using the PLC program (Page 36)", the I/O addresses of digital slaves in the process image of the AS-i master are located at a fixed position according to the following table. The I/O data of analog slaves can be accessed via a data record.

Input data and output data of the AS-i slaves are exchanged with the controller via an I/O area of 16 or 32 bytes. As a result, the digital values of up to 62 AS-i slaves are transmitted. In doing so, 4 bits are assigned to each digital slave. The offset for accessing this data depends on the AS-i address of the AS-i slave.

In a project in which the AS-i slaves are not configured in STEP 7, the standard length of the process image is 32 bytes. In firmware V1.1 and higher, the length can be set to 16 or 32 bytes.

In an I/O address area of 16 bytes, you can only assign standard addresses or A addresses for slaves. In an I/O address area of 32 bytes, you can also assign B addresses for slaves.

Table 7- 4 Bit assignment per digital slave

Byte number [1]		Bit 7 … 4				Bit 3 … 0			
		Bit 3	Bit 2	Bit 1	Bit 0	Bit 3	Bit 2	Bit 1	Bit 0
n+0		Reserved				Slave 1 or 1A			
n+1		Slave 2 or 2A				Slave 3 or 3A			
n+2		Slave 4 or 4A				Slave 5 or 5A			
n+3		Slave 6 or 6A				Slave 7 or 7A			
n+4		Slave 8 or 8A				Slave 9 or 9A			
n+5		Slave 10 or 10A				Slave 11 or 11A			
n+6		Slave 12 or 12A				Slave 13 or 13A			
n+7		Slave 14 or 14A				Slave 15 or 15A			
n+8		Slave 16 or 16A				Slave 17 or 17A			
n+9		Slave 18 or 18A				Slave 19 or 19A			
n+10		Slave 20 or 20A				Slave 21 or 21A			
n+11		Slave 22 or 22A				Slave 23 or 23A			
n+12		Slave 24 or 24A				Slave 25 or 25A			
n+13		Slave 26 or 26A				Slave 27 or 27A			
n+14		Slave 28 or 28A				Slave 29 or 29A			
n+15		Slave 30 or 30A				Slave 31 or 31A			
n+16	FW V1.0	Reserved				Slave 1B			
	FW V1.1 and higher	EFD	CM	CFGOK	DIAG				
n+17		Slave 2B				Slave 3B			
n+18		Slave 4B				Slave 5B			
n+19		Slave 6B				Slave 7B			
n+20		Slave 8B				Slave 9B			
n+21		Slave 10B				Slave 11B			
n+22		Slave 12B				Slave 13B			
n+23		Slave 14B				Slave 15B			
n+24		Slave 16B				Slave 17B			
n+25		Slave 18B				Slave 19B			
n+26		Slave 20B				Slave 21B			
n+27		Slave 22B				Slave 23B			
n+28		Slave 24B				Slave 25B			
n+29		Slave 26B				Slave 27B			
n+30		Slave 28B				Slave 29B			
n+31		Slave 30B				Slave 31B			
		Bit 3	Bit 2	Bit 1	Bit 0	Bit 3	Bit 2	Bit 1	Bit 0

1) n = Start address

Status information for process image with 32 bytes

For a process image that is 32 bytes long, the following information is transferred in byte n+16 (FW V1.1 and higher):

Table 7- 5 Status information in byte n+16 for a process image that is 32 bytes long:

Bit 7: EFD	0 = No ground fault detected 1 = Ground fault detected
Bit 6: CM	0 = Master in protected operation 1 = Master in configuration mode
Bit 5: CFGOK	0 = Configuration not OK or slave exists with address 0 1 = Configuration OK
Bit 4: DIAG	0 = No diagnostics pending 1 = Diagnostics pending. This information is set for the following events: -The AS-i master is in "offline" mode. - The AS-i voltage is not OK. - Multiple addressing was detected. - An I/O error was detected. - A configuration error was detected. - A slave with address 0 exists.

The status information provides a quick summary diagnosis.

If a process image is 16 bytes long, only the first 16 bytes (byte n to byte n+15) are transferred.

Bit assignment of the process image

In a project in which the AS-i slaves are not configured in STEP 7, 4 bits of digital input data and 4 bits of digital output data are assigned to the process image. I/O bits that are not assigned by the slave contain the substitute value 0. The assignment of the process image depends on the AS-i slave type. For digital slaves with up to 4-bit inputs and 4-bit outputs, the following standard assignment table applies:

Table 7- 6 Standard assignment table for inputs/outputs of digital AS-i slaves

IO code	Number	Input process image				Output process image			
(Hex value)	Inputs/ outputs	Bit 3	Bit 2	Bit 1	Bit 0	Bit 3	Bit 2	Bit 1	Bit 0
0	4 DI	IN 3	IN 2	IN 1	IN 0	-	-	-	-
1	3 DI / 1 DQ	-	IN 2	IN 1	IN 0	OUT 0	-	-	-
2	4 DI / 1 DQ	IN 3	IN 2	IN 1	IN 0	OUT 0	-	-	-
3	2 DI / 2 DQ	-	-	IN 1	IN 0	OUT 1	OUT 0	-	-
4	4 DI / 2 DQ	IN 3	IN 2	IN 1	IN 0	OUT 1	OUT 0	-	-
5	1 DI / 3 DQ	-	-	-	IN 0	OUT 2	OUT 1	OUT 0	-
6	4 DI / 3 DQ	IN 3	IN 2	IN 1	IN 0	OUT 2	OUT 1	OUT 0	-
7	4 DI/4 DQ	IN 3	IN 2	IN 1	IN 0	OUT 3	OUT 2	OUT 1	OUT 0
8	4 DQ	-	-	-	-	OUT 3	OUT 2	OUT 1	OUT 0
9	1 DI / 3 DQ	IN 0	-	-	-	-	OUT 2	OUT 1	OUT 0
A	1 DI / 4 DQ	IN 0	-	-	-	OUT 3	OUT 2	OUT 1	OUT 0
B	2 DI / 2 DQ	IN 1	IN 0	-	-	-	-	OUT 1	OUT 0
C	2 DI / 4 DQ	IN 1	IN 0	-	-	OUT 3	OUT 2	OUT 1	OUT 0
D	3 DI / 1 DQ	IN 2	IN 1	IN 0	-	-	-	-	OUT 0
E	3 DI / 4 DQ	IN 2	IN 1	IN 0	-	OUT 3	OUT 2	OUT 1	OUT 0

Information about the table:

DI: Digital input
DQ: Digital output

The actual numbering of the inputs/outputs of the AS-i slaves depends on the manufacturer of the slave.

In the case of slaves with extended addressing (A/B slaves), column "Bit 3" of the output process image is not assigned data. Exception: In the case of slaves with profile IO.ID.ID2 = 7.A.7, "Bit 3" of the output process image is also assigned.

In particular, the table does not apply to slaves of Combined Transaction Type (CTT) with profiles 6.0, 7.3, 7.4, 7.5.5, 7.A.5, 7.A.8, 7.A.9, 7.A.A, B.A.5 (IO.ID or IO.ID.ID2), see data sheet of slave. For assignment of safety slaves (profile 0.B and 7.B), see Section 7.2.3 "Special characteristics of AS-i Safety Slaves".

Configuration example

The following graphic shows an example of addressing 4 digital slaves. In the example, you configure the start addresses n = 40 for the I/O data in *STEP 7*.

The bits with a gray background are relevant for the user program. The bits with a white background are not relevant for the user program, because AS-i slave bits are not assigned here.

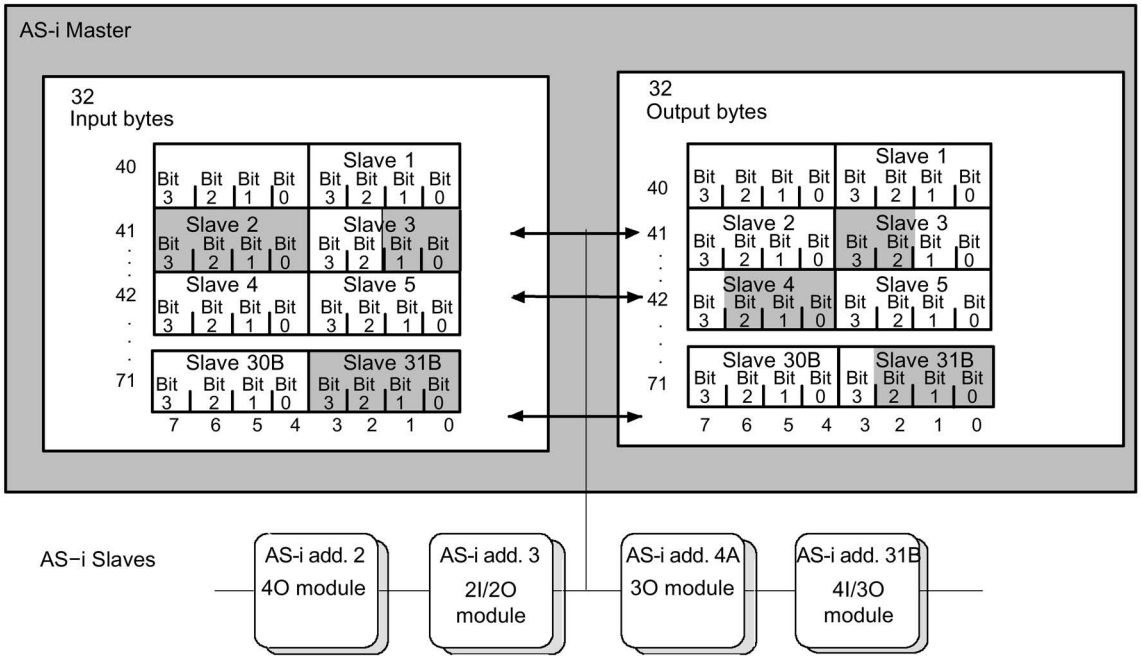

Figure 7-1 Example of addressing 4 digital slaves

The AS-i slave with address 3 and with two inputs and two outputs, referred to as a 2I/2O module, occupies bits 0 and 1 in input byte 41 and bits 2 and 3 in output byte 41 in the graphic, for example.

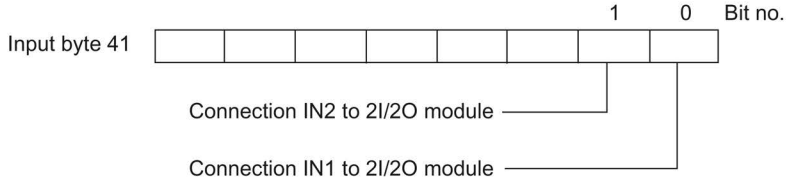

Figure 7-2 Example to show assignment of the AS-i connections of the 2I/2O modules to the data bits of the input bytes for slave with address 3

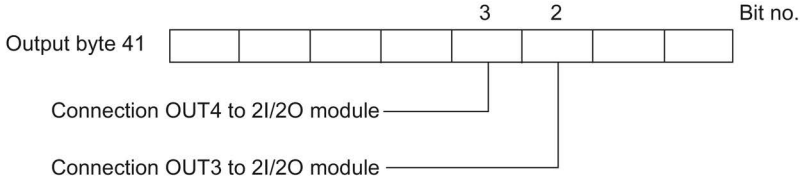

Figure 7-3 Example to show assignment of the AS-i connections of the 2I/2O modules to the data bits of the output bytes for slave with address 3

7.2.3 Special characteristics of AS-i Safety slaves

The AS-i master performs a non-safe evaluation for the data of safe input slaves. The evaluation is represented in the process image of a Safety input slave as follows:

Table 7- 7 Input process image of a Safety input slave

Bit 3	Bit 2	Bit 1	Bit 0	Meaning
0	0	0	0	All contacts are open.
0	0	0	1	F-IN1 is closed.
0	1	0	0	F-IN2 is closed.
0	1	0	1	F-IN1 and F-IN2 are closed.

In addition, the AS-i master evaluates in a non-safe manner how a safe AS-i output is to be addressed. The information is in the input process image of the standard controller:

Table 7- 8 Input process image of the control unit for a safe AS-i output.

Bit 3	Bit 2	Bit 1	Bit 0	Meaning
0	0	0	0	The safe AS-i output is controlled with status OFF position.
1	1	1	1	The safe AS-i output is controlled with status ON position.

Note

This involves a non-safe evaluation of the safe signals for diagnostic purposes.

Non-safe evaluation must not be used for safety-related switching.

See also

List of abbreviations (Page 173)

7.3 AS-i analog values and transparent / digital values more than 4 bits in length are transferred

The following information only applies to AS-i slaves whose data is stored as analog values or as transparent or digital values more than 4 bits in length.

Note

The CM AS-i Master ST does not support the transmission of analog values in accordance with AS-i Slave Profile 7.1 / 7.2. Transmission of analog values must be implemented in the software for these slaves.

Analog interface between the CPU and the CM AS-i Master ST

In the user program, you use the process image (Firmware V1.1 and higher) or data records to access I/O data of analog slaves.

For more detailed information, refer to Section "Accessing AS-i analog data via the process image (Page 58)".

Representation of the analog values or the transparent values

The analog values are to be interpreted as 16-bit values in two's complement.

The transparent/digital values must be interpreted as two independent bytes.

In the case of AS-i slave profiles for transparent/digital data, the AS-i master passes through the data of the AS-i slave to the controller without interpreting the content.

For universal AS-i slaves, the following is displayed in the "Configuration" field in *STEP 7*:

- Information about the number of channels
- Information about the resolution
- Information about the data frame of transparent I/O data

In the documentation for the respective AS-i slave, you will find further information about:

- Value range
- Measuring range
- Accuracy of analog slaves
- Meaning of transparent data

Special cases in analog value transfer

- In the input direction, the AS-i master sends a substitute value in the event of a slave failure or AS-i communication error:
  - For slaves with analog transmission, the AS-i master always supplies the substitute value $7FFF_H$, if the slave fails after power-up of the master.

    "Transparent" mode exception:

    For slaves according to the following profiles, the AS-i master supplies the substitute value 0000_H:

    7.3.0 to 7.3.3 (Type CTT1, output slave 16 DO in "Transparent" mode)

    7.3.8 to 7.3.A (Type CTT1, input slave 16 DI in "Transparent" mode)

    7.A.A (CTT3, 8 DI / 8 DO slave with A/B address)

    7.A.8 (ID1 = 3, 4, 5) (Type CTT4, max. 16 DI slave with A/B address)

    7.A.5, 7.5.5 and B.A.5, if you have transparent input (Type CTT2)

    6.0.x where x = 2 … 7 (Type CTT5, in "Transparent" mode)
- In the output direction, the AS-i master sends logic "0" to all slaves in the event of a failure or in "STOP" state.
- If the AS-i master or the communication between the AS-i master and PLC fails, data record access to the analog values or transparent/digital input values is not possible. Note that the analog input values and transparent/digital input values are not updated in your user program in this case, and ensure a substitute value processing via the program.

NOTICE
Behavior in the event of a slave failure If the slave fails prior to or during the power-up of the AS-i master, the substitute value $7FFF_H$ may also be supplied. That is, the input bits of these transparent or digital slaves have the substitute value 1. For this reason, check whether the diagnostic data of these slaves indicate a slave failure and, if required, ensure an appropriate substitute value processing via the program.

Special characteristics of combined transaction type slaves

When using slaves in accordance with CTT 1 to 5, all or some I/O bits are used for special transfer functions in the process image for AS-i digital values. For further details, please refer to the documentation of the respective AS-i slave.

The following applies to these protocol bits:

- In the input direction, the AS-i master sets the value "0".
- In the output direction, the AS-i master ignores the bits.

7.3.1 Accessing AS-i analog data via the process image

If you assigned I/O addresses to the analog slaves when configuring, you can access the AS-i analog values with word commands (Firmware V1.1 and higher).

Analog and transparent I/O addresses for configured AS-i slaves

The analog and transparent I/O addresses of an AS-i slave can be freely assigned within the overall process image of the CM AS-i Master ST. This is regardless of the size of the process image. If you only require a few analog inputs and outputs in the process image and want to save space, you can change the length of the I/O data of an AS-i slave. If the set length is less than the actual length of the I/O data of the AS-i slaves, you cannot access the data at addresses greater than the set length via the process image. You can also deactivate the process image for analog inputs/outputs. Please also see the description of the options "Sorting" and "Packing" in Section I/O addresses when configuring AS-i slaves in STEP 7 (Page 46).

Access to analog I/O data is also possible via data records independent of the process image. You can find more detailed information on this in Section "Accessing AS-i analog data via acyclic services (Page 58)".

7.3.2 Accessing AS-i analog data via acyclic services

Representation of the analog values in the data records

Analog values are transferred in the data records numbered from 140 to 147.

- You access the analog input values using system functions for reading data records.
- You output analog values using system functions for writing data records.

In combination with SIMATIC S7, system function blocks SFB 52 "RDREC" and SFB 53 "WRREC" enable this.

Access to analog data via acyclic services can also be selected, for example, if there is a need to save I/O address space in SIMATIC S7.

NOTICE
Simultaneous write access via cyclic and acyclic services not possible Simultaneous write access to analog data of a slave is not permissible with different process values either via cyclic or acyclic services. If both services are used the analog output values that are output via cyclic and acyclic services to the same slave address must be synchronized with each other via the user program.

You can use data record lengths ranging from 2 bytes to 240 bytes for each data record number. For each slave address, an area of 8 bytes is available to address 4 analog channels.

The table below shows which data record is used by each AS-i slave to transfer the analog values. The subsequent table shows the assignment of analog values to the respective analog slaves.

The tables are applicable to analog inputs and analog outputs.

Table 7- 9 Access to analog values via data records

AS-I address of the slave	Start addresses for analog values in the data record							
	DS 140	DS 141	DS 142	DS 143	DS 144	DS 145	DS 146	DS 147
1	0	—	—	—	—	—	—	—
2	8	—	—	—	—	—	—	—
3	16	—	—	—	—	—	—	—
4	24	—	—	—	—	—	—	—
5	32	0	—	—	—	—	—	—
6	40	8	—	—	—	—	—	—
7	48	16	—	—	—	—	—	—
8	56	24	—	—	—	—	—	—
9	64	32	0	—	—	—	—	—
10	72	40	8	—	—	—	—	—
11	80	48	16	—	—	—	—	—
12	88	56	24	—	—	—	—	—
13	96	64	32	0	—	—	—	—
14	104	72	40	8	—	—	—	—
15	112	80	48	16	—	—	—	—
16	120	88	56	24	—	—	—	—
17	128	96	64	32	0	—	—	—
18	136	104	72	40	8	—	—	—
19	144	112	80	48	16	—	—	—
20	152	120	88	56	24	—	—	—
21	160	128	96	64	32	0	—	—
22	168	136	104	72	40	8	—	—
23	176	144	112	80	48	16	—	—
24	184	152	120	88	56	24	—	—
25	192	160	128	96	64	32	0	—
26	200	168	136	104	72	40	8	—
27	208	176	144	112	80	48	16	—
28	216	184	152	120	88	56	24	—
29	224	192	160	128	96	64	32	0
30	232	200	168	136	104	72	40	8
31	—	208	176	144	112	80	48	16

Examples / notes on reading this table:

The subsequent table shows the assignment of analog values to the respective analog slaves.

For additional information, refer to the operating instructions of the slaves.

Table 7- 10 Address range for the analog values of an AS-i slave

Byte no. (start address + offset)	Analog value channel
Start address + 0	Channel 1 / high byte
Start address + 1	Channel 1 / low byte
Start address + 2	Channel 2 / high byte
Start address + 3	Channel 2 / low byte
Start address + 4	Channel 3 / high byte
Start address + 5	Channel 3 / low byte
Start address + 6	Channel 4 / high byte
Start address + 7	Channel 4 / low byte

Analog A/B slaves with 2 channels only reserve half the address range. A slaves occupy bytes 0 to 3 and B slaves bytes 4 to 7.

Examples of the configuration:

1. Configuration:

   Analog slaves have the AS-i addresses 1 to 6.

   You use data record 140 and enter 48 as data record length.

2. Configuration:

   1 analog slave with AS-i address 7 is used.

   You use data record 141 and enter 24 as data record length. Only bytes 16 to 23 are relevant.

3. Configuration:

   The full address range for 31 analog slaves is used.

   You use data record 140 and enter 224 as data record length. You can then address analog slaves 1 to 28.

   For the remaining analog slaves 29 to 31, you use data record 147 in a second job and enter 24 as data record length.

4. Configuration:

   Analog slaves have the addresses 29 to 31.

   You use data record 147 and enter 24 as data record length.

Mixed access:

- Configuration:

  You want to access slaves 1 to 12 using I/O commands and slaves 13 to 31 using data records.

  You use data record 143 for slaves 13 to 31.

Alarms, faults and system events 8

8.1 Overview

Diagnostics options

The following diagnostics options are available for the AS-i master:

- LEDs on the module
- Diagnostics in *STEP 7*:
  - Online presentation of the network and device view
  - Diagnostic buffer
- Alarm messages in user program
- Creation of user-specific web pages via the web server of a connected SIMATIC controller

You will find information on the LEDs in Section "Meaning of the LEDs (Page 64)".

The diagnostic possibilities in *STEP 7* and in the user program are described in the following sections.

8.2 Diagnostics in STEP 7

Diagnostics in STEP 7

For diagnostics of the AS-i master and the AS-i slave, use the "Go online" function to switch *STEP 7* to "Online" status.

If you have configured AS-i slaves in *STEP 7*, the diagnostic information about slaves can be displayed in *STEP 7*.

The diagnostics of the AS-i slaves in STEP 7 V13 SP1 (TIA Portal) are not displayed via the online network view function. The information of the AS-i master is displayed symbolically in the device view. The status of these devices will also be displayed to the right of the device in the project navigation by means of a symbol. For an explanation of the different status symbols, please refer to the relevant tool tip.

STEP 7 offers several possibilities for requesting the diagnostic information of the AS-i master:

- Special diagnostic symbols indicate the status of the AS-i master in the network view of the device configuration. Red symbols signal an error, and green symbols indicate that the devices are OK.
- In *STEP 7* V13 SP1 (TIA Portal), you can call up information about the status of the AS-i master and AS-i slaves. To do so, open the diagnostics as follows:
  - Select the AS-i master.
  - Select "Online & diagnostics" in the shortcut menu.
  - In the "Online & diagnostics" view, select "Detailed diagnostics > Error overview".

    Here you see the current status of every AS-i slave address.

  To analyze sporadic errors, you can read out the error counter for the AS-i network.

  Diagnostics are also available in *STEP 7* V5.5 HSP 2092 V3.0 and higher.
- The control panel of the AS-i master can also be called up in this display. This shows the status of the LEDs.
- All the relevant events are stored in the diagnostic buffer of the CPU. You can display the diagnostic buffer in the "Online & Diagnostics" window for a selected CPU.

8.3 LED statuses

8.3.1 Arrangement of the LEDs on the CM AS-i Master ST

Introduction

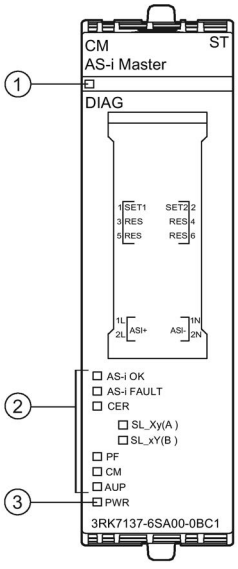

① DIAG (green/red)
② Status LEDs (AS-Interface)
③ PWR (green)

Figure 8-1 Arrangement of the LEDs on the CM AS-i Master ST

8.3.2 Meaning of the LEDs

Meaning of the LEDs

The tables below explain the status and fault indications. Remedies for the diagnostic messages are in Section "Diagnostic messages (Page 69)".

"PWR" LED

Table 8- 1 Meaning of the "PWR" LED

PWR	Meaning
□ OFF	The AS-i voltage is not provided (terminals L+, M).
■ Green ON	The AS-i voltage is provided (terminals L+, M).

"DIAG" LED

Table 8- 2 Meaning of the DIAG LED

DIAG	Meaning
□ OFF	The supply voltage for the interface module of the ET 200SP is not provided.
✳ Green flashes	The AS-i master parameters have not been assigned.
■ Green ON	The AS-i master parameters have been assigned and are error-free. No diagnostic message of the AS-i master is pending.
✳ Red flashes	The AS-i master parameters have been assigned and the AS-i master signals diagnostic errors for the AS-i master or an AS-i slave or an active firmware update.

"AS-i OK" LED

Table 8- 3 Meaning of the AS-i OK LED

AS-i OK	Meaning
☐ OFF	An error has occurred (see AS-i FAULT LED) or the AS-i master is offline. This means: No I/O data exchange is taking place, e.g., during power-up.
■ Green ON	The AS-i bus is fault-free. I/O data exchange takes place.

"AS-i FAULT" LED

Table 8- 4 Meaning of the AS-i FAULT LED

AS-i FAULT	Meaning
☐ Red OFF	No AS-i cable faults have occurred. The AS-i master is in "Offline" mode.
■ Red ON	The AS-i bus has failed, e.g. the supply voltage for AS-Interface is too low, ground fault.
* Red "flashes"	A fault has occurred, e.g. a duplicate address or parameterization error has been detected.

"PF" LED

This LED indicates peripheral faults.

Table 8- 5 Meaning of the "PF" LED

PF	Meaning
Red OFF	No peripheral fault is being signaled.
Red ON	At least one AS-i slave is signaling a peripheral fault. Refer to the operating instructions for the respective slave for the meaning of the peripheral fault, e.g., overload at the standard outputs and/or overload of the sensor power supply of the standard inputs.

Firmware update (Page 21)

"CER" LED

This LED indicates configuration errors. It lights when the slave configuration detected on the AS-i cable does not match the CONFIGURED configuration in the AS-i master.

Table 8- 6 Meaning of the "CER" LED

CER	Meaning
Yellow OFF	No AS-i configuration error.
Yellow ON	Failure of an AS-i slave: • A configured AS-i slave is not present on the AS-i cable. • An excess slave not configured beforehand is present on the AS-i cable. • A connected slave has different configuration data (IO, ID, ID1, ID2) than the slave configured in the AS-i master. • A slave with address "0" is in "Configuration mode" on the AS-i bus.

"CM" LED

This LED indicates the operating status (Configuration Mode).

Table 8- 7 Meaning of the "CM" LED

CM	Meaning
☐ Green OFF	The AS-i master is in "protected operation".
■ Green ON	The AS-i master is in "configuration mode".
✻ Green flashes	During a firmware update: Errors have occurred during the firmware update.

"AUP" LED

This LED indicates whether automatic address programming is possible or not.

Table 8- 8 Meaning of the "AUP" LED

AUP	Meaning
☐ Green OFF	Automatic address programming is not possible. This LED is always off in configuration mode.
■ Green ON	When the AS-i master is in "protected operation", this LED indicates that automatic address programming of an AS-i slave is possible. Automatic address programming makes it easier to replace a defective AS-i slave on the AS-i cable. For more detailed information, refer to Section "Replacing a defective AS-i slave / automatic address programming (Page 74)".

"SL_Xy(A)" and "SL_xY(B)" LEDs

These LEDs indicate the slave addresses to which an error is signaled. The following states are taken into account:

- The slave has failed.
- The slave is an excess slave.
- The slave type is incorrect.
- Double addressing detected.

The following diagram shows the indication sequence:

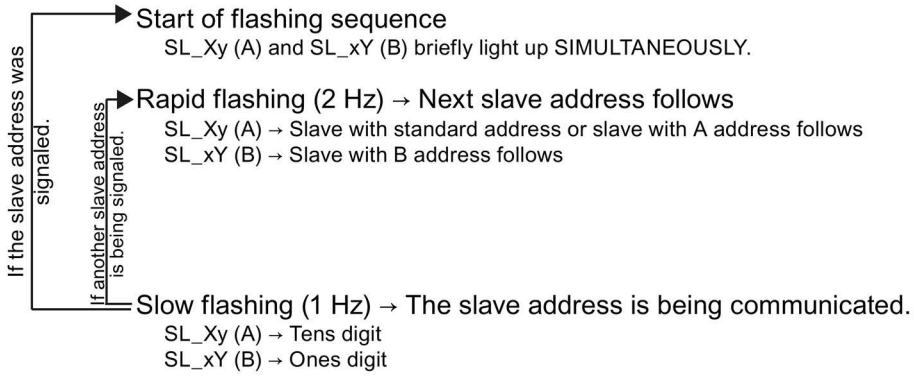

Figure 8-2 Indication sequence

Example: Slave 15 and 21B have failed

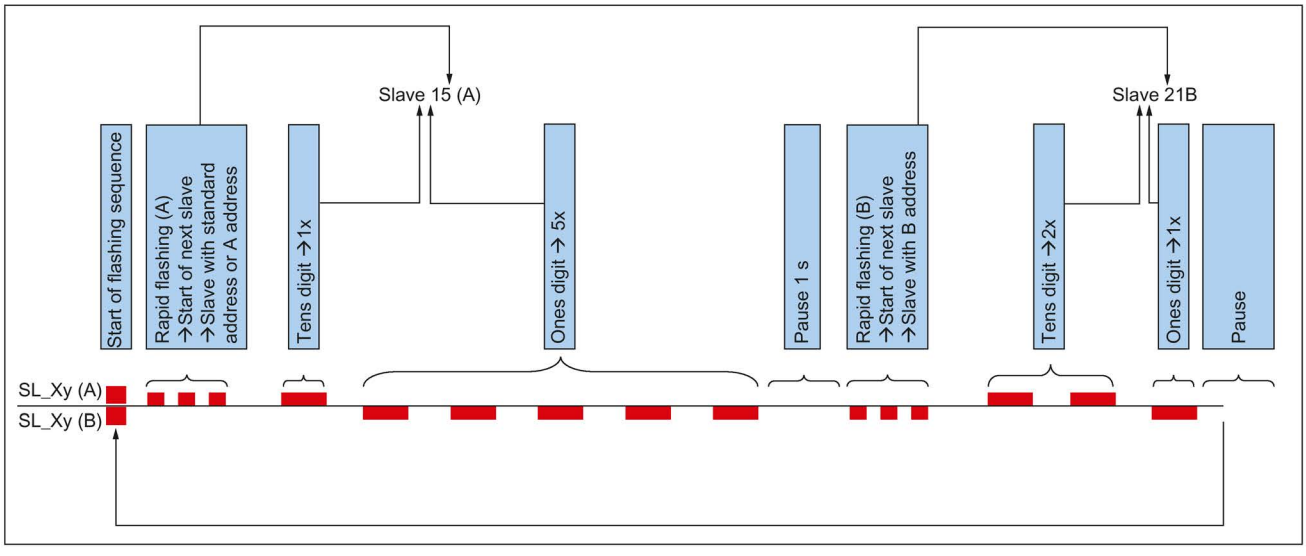

Figure 8-3 Example: Slave 15 and 21B have failed

8.4 Diagnostic messages

8.4.1 Alarms

The AS-i master sends a diagnostic interrupt request to the CPU in the following situations:

- The AS-i master has detected a problem, e.g. failure of a slave (incoming event).
- The problem was rectified or no longer exists (outgoing event).

If there is no OB 82 in the user program, a CPU of the S7-300 / S7-400 product range will switch to "STOP".

If an OB 82 exists, the operating system responds to an incoming event by calling the OB 82. The S7 CPU then interrupts the cyclic user program and enters the event in the system diagnostic buffer as a "Module fault" message.

Some diagnostic information is made available to the user in the local data of the OB 82, e.g.: Which module triggered the interrupt? What type of error has occurred?

Following execution of the OB 82, the S7 CPU continues the cyclic program from the point of interruption.

When parameterizing the CM AS-i Master ST, you can specify whether and in what cases a diagnostics interrupt should be triggered.

See Section "Parameter assignment/addressing (Page 43)"

See Section "Fault indications/fault remedies (Page 80)" for a list of possible error cases.

8.4.2 Possible response to the diagnostic interrupt

Diagnostic events of the AS-i master and all AS-i slaves are signaled by means of OB82, e.g. No voltage on AS-Interface, peripheral fault

---

Note

Diagnostic buffer

Please note that OB 82 is only called for the first error event. If an error caused by an AS-i slave is already active, subsequent AS-i slave errors will only be noted in the diagnostic buffer of the CPU.

The cause of the interrupt can be determined by reading out data records with diagnostic data during execution of the OB 82 block or during cyclic program execution. See Section "Data records for diagnostics (Page 82)".

8.4.3 Error messages

AS-i-specific faults

The following AS-i-specific faults are possible:

Channel / Fault type	Fault		Cause	Remedial measures
	No.	Message		
0400_H	1024	AS-i slave failed	An AS-i slave on an A address or a slave with standard address has failed. The channel number of the message shows the address of the affected AS-i slave. Possible causes: • The slave is defective. • There is a break in the cable • An overload of the sensor supply at the input slave or an overload of the actuator supply • Overload at the output for some slaves	Check: • AS-i slave • Connecting cables • Overload • EMC environment • Connected sensors and actuators
0401_H	1025	AS-i slave on B address failed	An AS-i slave on a B address has failed. The channel number of the message shows the address of the affected AS-i slave. Possible causes: • The slave is defective. • The cable is interrupted. • An overload of the sensor supply at the input slave or an overload of the actuator supply • Overload at the output for some slaves	Check: • AS-i slave • Connecting cables • Overload • EMC environment • Connected sensors and actuators

Channel / Fault type	Fault		Cause	Remedial measures
	No.	Message		
0402_H	1026	Peripheral fault in AS-i slave	An AS-i slave on an A address or a slave with a standard address signals a peripheral fault. The channel number of the message shows the address of the affected AS-i slave. Possible cause: • An overload at the output of a digital slave or an overload at the actuator • Measuring range exceeded for analog input slaves • Overload of the sensor supply at the input slave (only for some slave types) • Group fault message for M200D motor starters	Note the information in the manual for the AS-i slave. Check: • Slave • Overload • Connected sensors and actuators
0403_H	1027	Peripheral fault in AS-i slave on B address	An AS-i slave on a "B" address signals a peripheral fault. The channel number of the message shows the address of the affected AS-i slave. Possible cause: • An overload at the output of a digital slave or an overload at the actuator • Measuring range exceeded for analog input slaves • Overload of the sensor supply at the input slave (only for some slave types) • Group fault message for M200D motor starters	Note the information in the manual for the AS-i slave. Check: • Slave • Overload • Connected sensors and actuators
0404_H	1028	AS-i address used multiple times	Multiple AS-i slaves with the same profile and address are located on the AS-i bus. The affected slaves have a standard address or A address. The channel number of the message shows the address of the affected AS-i slave.	Change the addresses of the AS-i slaves to addresses that are unique in the network.
0405_H	1029	AS-i B address used multiple times	Multiple AS-i slaves with the same profile and address are located on the AS-i bus. The affected slaves have a B address. The channel number of the message shows the address of the affected AS-i slave.	Change the addresses of the AS-i slaves to addresses that are unique in the network.

Channel / Fault type	Fault		Cause	Remedial measures
	No.	Message		
0406_H	1030	No or erroneous voltage on the AS-i cable	The AS-i master has detected insufficient voltage on the AS-i cable. Data exchange on the AS-Interface has been stopped.	Check: • Voltage • Polarity on AS-i cable • Power supply
0407_H	1031	AS-i configuration error (CER)	The ACTUAL configuration of the AS-i slaves on the AS-i cable differs from the CONFIGURED configuration saved in the AS-i master. Possible causes of short-term failures: • High levels of electromagnetic interference are affecting the AS-i installation. Other possible causes: • The functional ground connection to the AS-i power supply unit or AS-i data decoupling module is not connected to ground potential. • Protected operation: A configured slave has failed or there is an excess slave on the bus. • Configuration mode: A slave with address "0" has been detected on the bus.	Check: • AS-i slave failure • Overload • Excess slave • Incorrect address • Incorrect slave type • EMC environment Remove the electromagnetic interference.
0408_H	1032	Ground fault on AS-i cable	A ground fault is present between AS-i+ and ground or between AS-i- and ground. Possible consequences: • Disruption of communication • Slave failure • Configuration error • Hazard as a result of secondary faults	Check: • Insulation fault on AS-i cable • Sensor/actuator cable Ensure that the ground fault is rectified.
$040A_H$	1034	Excess AS-i slave	There is an unconfigured AS-i slave with a default address or an A address on the AS-i bus. The channel number of the message shows the address of the affected AS-i slave.	Change the CONFIGURED configuration in the AS-i master or remove the AS-i slave.
$040B_H$	1035	Excess AS-i slave at B address	On the AS-i bus there is an unconfigured AS-i slave with a B address. The channel number of the message indicates the B address of the affected AS-i slave	Change the CONFIGURED configuration in the AS-i master or remove the AS-i slave.

Channel / Fault type	Fault		Cause	Remedial measures
	No.	Message		
$040C_H$	1036	Incorrect AS-i slave	On the AS-i bus there is an incorrect AS-i slave with a default address or an A address. The channel number of the message shows the address of the AS-i slave involved.	• Use the correct slave type. • Set the ID1 code on the slave in accordance with the CONFIGURED configuration.
$040D_H$	1037	Incorrect AS-i slave at B address	There is an incorrect AS-i slave with a B address on the AS-i bus. The channel number indicates the B address of the affected slave.	• Use the correct slave type. • Set the ID1 code on the slave in accordance with the CONFIGURED configuration.

8.5 Replacing a defective AS-i slave / automatic address programming

Automatic address programming after failure of one or more AS-i slaves - replacement of AS-i slave

The "Automatic address programming" function allows you to easily replace defective AS-i slaves.

Note

Automatic address programming

Automatic address programming is only possible if the AS-i master is operating in "protected operation" and **one or more** AS-i slaves have failed.

If several AS-i slaves have failed, you must uniquely identify the failed slaves in the configuration using the slave profile:

- IO code
- ID code
- ID2 code
- ID1 code

The automatic address programming function also supports slaves with the "CTT5" profile (multi-address slaves) and AS-i devices that contain multiple internal slave addresses. This requires each internal slave to have different identifications (IO code, ID code, ID2 code, and ID1 code).

Note

The automatic address programming function does not work if two identical slaves have failed.

Examples of devices with multiple internal slave addresses which support automatic address programming:

- Module K60 with 8DI/2DO (3RK2400-1HQ00-0AA3)
- Motor Starter M200D AS-i Standard (3RK1325-...).

If no address has yet been assigned to these devices (delivery state), only **one** address "0" is visible on the bus. The device automatically suppresses the other internal "0" addresses.

Note

Exceptions

The automatic address programming function is not available for the following devices, because the identifications of each internal slave are identical (IO code, ID code, ID2 code, and ID1 code).

- Module K60 with 8 DI (3RK1200-0DQ00-0AA3, 3RK2200-0DQ00-0AA3, 3RK2200-1DQ00-1AA3)
- Safety-related module K45 with 4 F-DI (3RK1205-0CQ00-0AA3).

Detection of a defective AS-i slave

An illuminated "AUP" LED signals the following in "protected operation":

- Slave failure was detected:
  - Exactly **one** slave has failed, or
  - A device containing multiple different slaves has failed, **or**
  - Multiple slaves or devices have failed, each of the failed slaves having a different configuration
- Automatic address programming by the AS-i master is possible.

If an AS-i slave fails, the AS-i master indicates the address of the failed slave via the "SL_Xy (A)" and "SL_xY (B)" LEDs.

If a device with multiple internal slave addresses fails, the AS-i master indicates the failure of multiple slaves.

Replacement of a defective AS-i slave

- Replace the defective AS-i slave with an **identical** AS-i slave with address "0" (setting in delivery state).
- Replace the defective AS-I device containing multiple internal slave addresses with an identical AS-i device with address "0" on all internal slaves (setting in delivery state).

  Note

  Replacement of a defective AS-i slave

  Only one address "0" may be configured on the bus at any one time. If you want to replace several slaves or devices, you must replace them one after the other with the AS-i master switched on.

For the new slave or device, the AS-i master programs the address or addresses of the original failed device.

The LEDs "AUP" and "CER" go out once all slaves have been correctly replaced.

8.6 Duplicate address detection

To ensure that the AS-Interface system functions correctly, all the AS-i slaves must have a unique AS-i address on the bus.

If the same AS-i address is assigned to one or more slaves, this incorrect assignment is referred to herein as a duplicate address.

Note

For slaves without cyclic data communication, the duplicate address detection function of the CM AS-i master ST cannot be executed.

Duplicate addresses where slave types are different and where the states at the inputs are different.

As part of standard operation, the AS-i master monitors the data exchange for errors and thus often excludes slaves with a duplicate address automatically from the cyclic data exchange. This is the case for duplicate addresses in which the slave types are different (profile identification IO code, ID code, ID2 code, and ID1 code) and duplicate addresses for slaves having a different status at their inputs.

In "protected operation", this fault condition is displayed on the AS-i master as a configuration error with the relevant AS-i address and the affected slaves detect a communication error.

Duplicate addresses where the slave types are identical and where the states at the inputs are identical or there are no inputs.

The duplicate address detection function of the CM AS-i Master ST also detects cases of slaves with duplicate address in which the cyclic data exchange is not excluded by standard mechanisms. Such cases include duplicate addresses in which the slave types are identical (profile identification, IO code, ID code, ID2 code, and ID1 code) and in which the slaves either have the same status at their inputs or have no inputs (output slaves).

When a duplicate address is detected, the AS-i master signals a duplicate address error and automatically resets the output data of the address concerned to "0" so that the outputs of the affected slaves are switched off. Communication with the affected slaves is not interrupted, i.e. the slaves do not signal a communication error.

Note

System behavior according to AS-i specification

If you connect a slave with duplicate address to the AS-i cable while the bus is operating, the added slave is initially excluded from cyclic data communication and its LEDs indicate a communication error. According to the specification, the AS-i master does not activate an AS-i slave until its address is recognized as a new address on the bus, e.g., when a power-up of the bus takes place. If the bus contains an active slave, no further automatic slave activation occurs on the same address during operation, even if an additional slave with the same address (duplicate address) is added.

However, manual activation of the the slave can be initiated via the command interface by writing parameters to the slave address.

For physical reasons, the duplicate address detection function of the CM AS-i Master ST cannot detect a duplicate address during cyclic data exchange in every configuration. Therefore, like for any AS-i system, it is essential to ensure when assigning AS-i addresses that each AS-i slave contains a unique AS-i address on the bus, e.g., by using addressing device 3RK1904-32AB02.

The duplicate address detection function can assist in identifying inadvertent duplicate addressing.

The duplicate address detection of the CM AS-i Master ST from firmware V1.1 and higher has been optimized for an AS-i cable length up to 100 m without branches.

The duplicate address detection function of firmware V1.0 is designed for shorter cable lengths.

The duplicate address detection function can be used in the specified and additional configurations, but it cannot be guaranteed that duplicate addresses will be uniquely detected in every case.

For configurations with an AS-i repeater, the duplicate address detection function does not work due to the separation of the cable into multiple segments.

Enabling the duplicate address detection function

For the CM AS-i master ST with firmware V1.1 and higher, the duplicate address detection function is activated in the configuration via HW Config or the GSD setting. After a start or restart of the CM AS-i Master ST V1.1 and higher, the setting is accepted from HW Config or the GSD setting.

For the CM AS-i master ST with firmware V1.0 and higher, the duplicate address detection function is deactivated when the AS-i master is switched on and can be set by writing data record DS 100, see Section "DS 100 Switch duplicate address detection on/off (Page 171)". The activation status is saved in volatile memory of the AS-i master. After a startup or restart of the CM AS-i Master ST V1.0, the duplicate address detection function must be activated via the user program, if required.

Function description

The duplicate address detection function assists you in identifying inadvertent duplicate addressing.

When commissioning the AS-i system, check that duplicate address detection can be used for the AS-i configuration used.

- Install the complete AS-i system and ensure that the specified addresses of the slaves are correct and unique.
- Enable the duplicate address detection function. In firmware V1.1 and higher, you can do this for AS-i voltages of either 24 V or 30 V.
- Check whether the CM AS-i Master ST signals a duplicate address in spite of correct slave address assignment. If a duplicate address is signaled on the AS-i master even though the bus configuration is correct, this means that duplicate address detection cannot be used for this bus configuration. Should this occur, disable the duplicate address detection function.
- Note that when the duplicate address detection function is enabled, the presence of a duplicate address may not be detected, depending on the bus configuration.

Note

The activation status is saved in volatile memory of the AS-i master. After a startup or restart of the CM AS-i Master ST, duplicate address detection must be activated again via the user program, if required.

The CM AS-i Master ST signals a detected duplicate address as follows:

- The "CER" LED lights up to indicate a configuration error.
- The "SL_Xy (A)" and "SL_xY (B)" LEDs signal the AS-i address concerned.
- The message "AS-i address used multiple times" is output.

To rectify the fault, check and change the address of the affected AS-i slave, e.g. using the addressing unit. Via the online function of *STEP 7* it is not possible to change the AS-i address of an individual slave if there are multiple slaves with the same address on the AS-i cable.

See also

DS 100 Read setting for duplicate address detection (Page 172)

8.7 Diagnosis via the web server

Web server functionality

Many SIMATIC controllers provide integrated web server functionality. This enables access via a web browser to the data of the CPU and its connected components, e.g. the AS-i master.

A *STEP 7* library is available as a download for diagnosing the AS-i master via a web browser. It presents the most important diagnostic information in a clear overview. The package is based on the concept of user-defined web pages. You can obtain the package from the Siemens Service & Support Portal under the following link:

Service and support portal (http://support.automation.siemens.com/WW/view/en/50897766)

8.8 Fault indications/fault remedies

Fault indications/remedies for faults on the CM AS-i Master ST

Below are possible fault indications during operation of the AS-i master and potential remedial measures.

Table 8- 9 Fault indications and remedies for faults on the AS-i Master

Fault	Possible cause	Remedy
"AS-i fault" LED lights up red	The current consumption of the AS-i slaves is too high. Result: Voltage on the AS-i cable is too low.	Check the current consumption of the AS-i slaves.
	No voltage is present on the AS-i cable or the voltage is too low.	Check the connection with the AS-i power supply unit.
	Short-circuit on the AS-i cable	Check the AS-i cable and the connected AS-i slaves.
"DIAG" LED not lit	There is no supply over the communications bus.	Check whether the module is inserted correctly.
"DIAG" LED flashes green, but does not switch to constant green light	The AS-i master is not configured.	Configure the AS-i master in *STEP 7*.
"CER" LED is lit.	A configured AS-i slave has failed. • Evaluate the slave indication.	Replace the defective AS-i slave or configure the AS-i master again if the AS-i slave is not required.
	A non-configured AS-i slave was connected to the AS-i cable.	Remove the AS-i slave or configure the AS-i master again.
	An AS-i slave has been connected whose configuration data, e.g., IO code, ID codes, does not match the values of the configured AS-i slave.	Check whether an incorrect AS-i slave has been connected. Configure the AS-i master again, if necessary.
"CER" LED flashes erratically , i.e. a configured AS-i slave fails sporadically.	Loose connection	Check the connections of the AS-i slaves.
	Injection of interference on the AS-i cable.	Check that the grounding of the AS-i master and routing of the AS-i cable are correct. Check whether the shield of the AS-i power supply unit is connected correctly.
	The connected sensor is causing an overload.	Check the sensor and the sensor cable for damage.
The AS-i master does not switch from "configuration mode" to "protected operation".	An AS-i slave with address 0 is connected to the AS-i cable. The AS-i master is unable to switch to "protected operation" as long as this slave is connected.	Remove the AS-i slave with address 0 or set the correct address using the AS-i addressing device.
In *STEP 7* it is not possible to switch between "configuration mode" and "protected operation"	The automation system is in the "RUN" state.	Switch the automation system to the "STOP" state.

Fault	Possible cause	Remedy
The AS-i master does not switch from "protected operation" to "configuration mode".	The automation system is in the "RUN" state.	Switch the automation system to the "STOP" state.
Automatic address programming does not take place.	The configuration data, e.g., IO code, ID code, ID2 code, and ID1 code, of the replaced AS-i slave does not match the values of the original slave.	Check that the correct replacement slave was used. Compare the manufacturer's information with regard to configuration data. If the original slave is to be replaced by a different type, assign the address with the AS-i addressing device and configure the AS-i master again.
	Replaced AS-i slave does not have the address "0".	Set the address of the replaced slave with the AS-i addressing device.
	Replaced AS-i slave is not correctly connected or is defective.	Check the connections of the slave. Replace the slave, if necessary.
	The AS-i master is in "configuration mode".	Program the address of the new AS-i slave with the AS-i addressing device or via the command interface of the AS-i master.
	Several slaves with the same profile have failed.	Program the addresses of the new AS-i slaves with the AS-i addressing device.
No LEDs are lit, except possibly for the "DIAG" LED	The AS-i voltage is missing.	
"PF" LED is lit	One or more AS-i slaves signal a fault in the connected I/O.	Check the I/O components connected to the AS-i slaves and the cabling for wire break or short-circuit.

Reference

You will find further information about the LEDs on the AS-i master in Section "Meaning of the LEDs (Page 64)".

8.9 Data records for diagnostics

8.9.1 DS 92 Diagnostic data record (FW V1.1 and higher)

The operating status of the AS-i master, the connected AS-i network and the AS-i slave is stored as diagnostic data record DS 92 in the CM AS-i Master ST module.

Description

This data record provides information about the status of an AS-i network.

Table 8- 10 Structure of diagnostic data record DS 92, read

Byte	Description							
	Bit 7	Bit 6	Bit 5	Bit 4	Bit 3	Bit 2	Bit 1	Bit 0
0	Reserved							
1	Reserved							
2	MA30V	MA24V	Res.	Res.	Res.	MADDR	PF	CER
3	Reserved				EFD	CM	CFGOK	DIAG
4	**Flags_1** (See Table "AS-i master flags")							
5	**Flags_2** (See Table "AS-i master flags")							
6	Reserved							
7	Reserved							
Slave diagnostics								
8 … 15	List of active slaves (see Table "Structure of bit fields")							
	Bit = 0	Slave is not in the list of active slaves.						
	Bit = 1	Slave is in the list of active slaves.						
16 … 23	List of failed slaves (see Table "Structure of bit fields")							
	Bit = 0	The configured slave has not failed.						
	Bit = 1	The configured slave has failed.						
24 … 31	List of incorrect slaves (see Table "Structure of bit fields")							
	Bit = 0	The profile of the connected slave is correct.						
	Bit = 1	The profile of the connected slave is incorrect.						
32 … 39	List of excess slaves (see Table "Structure of bit fields")							
	Bit = 0	The connected slave is configured or no slave is connected.						
	Bit = 1	The connected slave is not configured.						
40 … 47	List of multiple addressing (see Table "Structure of bit fields")							
	Bit = 0	The AS-i address is not assigned or is only assigned once.						
	Bit = 1	The AS-i address is assigned more than once.						
48 … 55	List of I/O errors (see Table "Structure of bit fields")							
	Bit = 0	The slave at the AS-i address does not have an I/O error.						
	Bit = 1	The slave at the AS-i address°has an I/O error.						

Byte	Description							
	Bit 7	Bit 6	Bit 5	Bit 4	Bit 3	Bit 2	Bit 1	Bit 0
56 … 63	List of configured ID = A (see Table "Structure of bit fields")							
	Bit = 0	A standard slave is configured at the AS-i address.						
	Bit = 1	An A/B slave is configured at the AS-i°address.						
64 … 71	List of actual ID = A (see Table "Structure of bit fields")							
	Bit = 0	A standard slave is connected at the AS-i address.						
	Bit = 1	An A/B slave is connected at the AS-i°address.						
72 … 79	List of detected slaves (see Table "Structure of bit fields")							
	Bit = 0	No slave detected at the AS-i°address.						
	Bit = 1	Slave detected at the AS-i°address.						
80 … 87	List of configured slaves (see Table "Structure of bit fields")							
	Bit = 0	No slave configured at the AS-i°address.						
	Bit = 1	Slave configured at the AS-i°address.						

Structure of the bit fields:

Byte	Bit 7	Bit 6	Bit 5	Bit 4	Bit 3	Bit 2	Bit 1	Bit 0
0	SLAVE 7/7A	SLAVE 6/6A	SLAVE 5/5A	SLAVE 4/4A	SLAVE 3/3A	SLAVE 2/2A	SLAVE 1/1A	SLAVE 0/Reserved
1	SLAVE 15/15A	SLAVE 14/14A	SLAVE 13/13A	SLAVE 12/12A	SLAVE 11/11A	SLAVE 10/10A	SLAVE 9/9A	SLAVE 8/8A
2	SLAVE 23/23A	SLAVE 22/22A	SLAVE 21/21A	SLAVE 20/20A	SLAVE 19/19A	SLAVE 18/18A	SLAVE 17/17A	SLAVE 16/16A
3	SLAVE 31/31A	SLAVE 30/30A	SLAVE 29/29A	SLAVE 28/28A	SLAVE 27/27A	SLAVE 26/26A	SLAVE 25/25A	SLAVE 24/24A
4	SLAVE 7B	SLAVE 6B	SLAVE 5B	SLAVE 4B	SLAVE 3B	SLAVE 2B	SLAVE 1B	Reserved
5	SLAVE 15B	SLAVE 14B	SLAVE 13B	SLAVE 12B	SLAVE 11B	SLAVE 10B	SLAVE 9B	SLAVE 8B
6	SLAVE 23B	SLAVE 22B	SLAVE 21B	SLAVE 20B	SLAVE 19B	SLAVE 18B	SLAVE 17B	SLAVE 16B
7	SLAVE 31B	SLAVE 30B	SLAVE 29B	SLAVE 28B	SLAVE 27B	SLAVE 26B	SLAVE 25B	SLAVE 24B

Explanation of bit information in bytes 2 and 3:

MA30V	= 0	Multiple address detection for AS-i 30 V is deactivated.
	= 1	Multiple address detection for AS-i 30 V is activated.
MA24V	= 0	Multiple address detection for Power24V is deactivated.
	= 1	Multiple address detection for Power24V is activated.
MADDR	= 0	No multiple addresses detected on the AS-i°cable.
	= 1	Multiple addressing detected for at least one AS-i address on the AS-i cable. This means that multiple slaves have the same AS-i address.
PF	= 0	No I/O errors detected.
	= 1	I/O errors detected.
CER	= 0	No AS-i configuration errors detected.
	= 1	AS-i configuration errors detected.
EFD	0 =	No ground fault detected
	1 =	Ground fault detected
CM	0 =	Master in protected operation
	1 =	Master in configuration mode
CFGOK	0 =	Configuration not OK or slave exists with address 0.
	1 =	Configuration OK
DIAG	0 =	No diagnostics pending
	1 =	Diagnostics pending. It is set when: • The AS-i master is in "offline" mode. • The AS-i voltage is not OK. • Multiple addresses were detected. • An I/O error was detected. • A configuration error was detected. • A slave with address 0 exists.

AS-i master flags:

Flag	Bit	Name of the bit	Meaning
Flag_1	0	`Config_OK`	The flag is set when the CONFIGURED configuration and the ACTUAL configuration match.
	1	`LDS.0`	The flag is set when an AS-i slave with address 0 is present. (List of Detected Slaves)
	2	`Auto_Address_Assign`	The flag is set if automatic address programming is possible. This means that AUTO_ADDR_ENABLE = 1 and no "incorrect" AS-i slaves is connected to AS-Interface.
	3	`Auto_Address_Available`	The flag is set when automatic address programming is performed as soon as a slave with a valid configuration is connected at address zero.
	4	`Configuration_Active`	The flag is set in "configuration mode" and reset in "protected operation".
	5	`Normal_Operation_Active`	The flag is set when the AS-i master is in "protected operation".
	6	`APF`	The flag is set when the voltage on the AS-i cable is too low, or a power down was detected during data transmission. (AS-i Power Fail)
	7	`Offline_Ready`	The flag is set if the offline phase is active.
Flag_2	0	`Periphery_OK`	The flag is set if none of the AS-i slaves signal a peripheral fault. All bits in the LPF are zero.
	1	`Data_Exchange_Active`	Controlling: When the flag is set, data transfer starts between the master and slave.
	2	`Off_Line`	Controlling: When the flag is set, the device is switched "OFFLINE" or is "Offline".
	3	`AUTO_ADDR_ENABLE`	The flag is set when automatic address programming is enabled by the user.
	4	`GROUND FAULT`	The flag is set if a ground fault has been detected on the AS-i cable.
	5	`EEPROM_OK`	The flag is set if the test of the internal EEPROM was successful.
	6	`EFD_Disable`	The flag indicates whether ground fault detection is switched on (BIT = 0) or off (BIT = 1).
	7	Reserved	--

8.9.2 DS 96 Read AS-i master error counters and status messages (FW V1.1 and higher)

Meaning

This data record reads out error counters that pertain to the overall AS-i network.

If the AS-i power supply is missing, the overall device fails. This leads to all counters being reset. The count starts again each time the device is powered up.

Table 8- 11 Meaning of error counter

Count value / Information	Meaning
AS-i Power Fail	The count value is incremented when the AS-i power supply drops to a value that is too low.
Ground fault	The count value is increased when a ground fault has been detected on the AS-i cable.
Slave failure	The count value is increased when an active slave fails, that is, when process data transmission has been interrupted. An active slave only fails when it does not respond to six consecutive master calls.
Missing slave message frame	The count value is increased when a slave does not respond to a master call or the master does not receive the response. Process data transmission is not interrupted in this case.
Erroneous slave message frame	The count value is increased when the master receives an incomplete slave response, such as when slaves are added during operation. Process data transmission is not interrupted in this case.
I/O fault	The count value is increased when a slave signals an I/O error.
Protocol error	The count value is increased when the master detects a transmission error for a slave that needs multiple cycles for transmission of data, e.g. for analog data.
Erroneous master frame	The count value is incremented when a master call cannot be sent correctly, e.g. in the event of strong interfering signals on the AS-i cable. Process data transmission is not interrupted in this case.
Sent master frames	Number of master frames This counter counts all frames sent by the master, regardless of whether or not a slave response was received. The total number of master frames is calculated as follows: MT_CNT_TOTAL = (MT_CNT_HIGH x MT_CNT_BASE) + MT_CNT_LOW The error count starts over each time the device is powered up. By dividing the absolute values of the error counters by the number of master frames, it is possible to calculate the percentage of errors and thus the error frequency.

Table 8- 12 Structure of the data record

Byte	Meaning		
0	Reserved		High byte
1			Low byte
2	Summation counter: AS-i Power Fail		High byte
3			Low byte
4	Summation counter: Ground fault		High byte
5			Low byte
6	Summation counter: Slave failure		High word, high byte
7			High word, low byte
8			Low word, high byte
9			Low word, low byte
10	Summation counter: Missing slave frame		High word, high byte
11			High word, low byte
12			Low word, high byte
13			Low word, low byte
14	Summation counter: Erroneous slave frame		High word, high byte
15			High word, low byte
16			Low word, high byte
17			Low word, low byte
18	Summation counter: Slave peripheral fault		High word, high byte
19			High word, low byte
20			Low word, high byte
21			Low word, low byte
22	Summation counter: Slave protocol error (for slaves according to CTT1 ... CTT5)		High word, high byte
23			High word, low byte
24			Low word, high byte
25			Low word, low byte
26	Summation counter: Erroneous master frame		High word, high byte
27			High word, low byte
28			Low word, high byte
29			Low word, low byte
30 … 37	List of count values > 0 (see "Structure of bit fields")		
	Bit = 0	Count value = 0 for all error counters of the AS-i address	
	Bit = 1	Count value > 0 for at least one error counter of the AS-i address	
38	Summation counter: Sent master frames, less significant part (MT_CNT_LOW)		High word, high byte
39			High word, low byte
40			Low word, high byte
41			Low word, low byte
42	Summation counter: Sent master frames, more significant part (MT_CNT_HIGH)		High word, high byte
43			High word, low byte
44			Low word, high byte
45			Low word, low byte

Byte	Meaning	
46	Summation counter: Sent master frames, factor (MT_CNT_BASE)	High word, high byte
47		High word, low byte
48		Low word, high byte
49		Low word, low byte
50	Reserved	Bit 0 = MADDR
51	Reserved	
52 … 59	List of multiple addressing (see Table "Structure of bit fields")	
	Bit = 0	The AS-i address is assigned once or is not present.
	Bit = 1	The AS-i address is assigned more than once.

The counters are integer values (2 bytes or 4 bytes).

Structure of the bit fields:

Byte	Bit 7	Bit 6	Bit 5	Bit 4	Bit 3	Bit 2	Bit 1	Bit 0
0	SLAVE 7/7A	SLAVE 6/6A	SLAVE 5/5A	SLAVE 4/4A	SLAVE 3/3A	SLAVE 2/2A	SLAVE 1/1A	SLAVE 0/Reserved
1	SLAVE 15/15A	SLAVE 14/14A	SLAVE 13/13A	SLAVE 12/12A	SLAVE 11/11A	SLAVE 10/10A	SLAVE 9/9A	SLAVE 8/8A
2	SLAVE 23/23A	SLAVE 22/22A	SLAVE 21/21A	SLAVE 20/20A	SLAVE 19/19A	SLAVE 18/18A	SLAVE 17/17A	SLAVE 16/16A
3	SLAVE 31/31A	SLAVE 30/30A	SLAVE 29/29A	SLAVE 28/28A	SLAVE 27/27A	SLAVE 26/26A	SLAVE 25/25A	SLAVE 24/24A
4	SLAVE 7B	SLAVE 6B	SLAVE 5B	SLAVE 4B	SLAVE 3B	SLAVE 2B	SLAVE 1B	Reserved
5	SLAVE 15B	SLAVE 14B	SLAVE 13B	SLAVE 12B	SLAVE 11B	SLAVE 10B	SLAVE 9B	SLAVE 8B
6	SLAVE 23B	SLAVE 22B	SLAVE 21B	SLAVE 20B	SLAVE 19B	SLAVE 18B	SLAVE 17B	SLAVE 16B
7	SLAVE 31B	SLAVE 30B	SLAVE 29B	SLAVE 28B	SLAVE 27B	SLAVE 26B	SLAVE 25B	SLAVE 24B

Explanation of the status bits

MADDR = 0 No multiple addressing detected on the AS-i°cable.

= 1 Multiple addressing detected for at least one AS-i address on the AS-i cable. This means that multiple slaves have the same AS-i address.

8.9.3 DS 97 Read and reset AS-i master error counters (FW V1.1 and higher)

Description

This data record functions in the same manner as the "DS 96 Read AS-i slave error counters" data record. After the DS 97 data record is read, all error counters in the AS-i master are reset to "0".

The structure of the DS 97 data record is identical to the structure of the DS 96 data record. For an explanation of the error counter see Section "DS 96 Read AS-i master error counters and status messages (FW V1.1 and higher) (Page 86)".

8.9.4 DS 150 to DS 153 Read AS-i error counters

These data records read the error counters of the AS-i slaves. Data records DS 150 and DS 151 access the standard addresses and the A addresses. Data records DS 152 and DS 153 access the B addresses. The counters for addresses 16 / 16A exist identically in data records DS 150 and DS 151. The counters for address 16B exist identically in data records DS 152 and DS 153.

Error counter

The CM AS-i Master ST module manages several counters internally which log the number of master frames sent and the number of different error occurrences.

These counter values can be read out using data records DS 150 to DS 153:

- DS 150 contains counter values for slave addresses 1(A) to 16(A).
- DS 151 contains counter values for slave addresses 16(A) to 31(A).
- DS 152 contains counter values for slave addresses 1B to 16B
- DS 153 contains counter values for slave addresses 16B to 31B

Each data record also contains the total count of master frames sent. To determine a relative error rate, divide the count of error occurrences by the number of master frames sent.

The bus system allows the automatic sending of repeat message frames. This ensures that the process data is reliably transferred between master and slave in the industrial environment, even in the case of brief interruptions in transmission, e.g. due to switching operations. If the fault limit value is exceeded, or the slave is not functioning correctly due to a defect, communication to the slave cannot be performed within the defined time period. In this case, transmission of the process data is interrupted. The master signals failure of the slave address and tries to establish communication again.

Under error-free conditions, one master frame is sent to every available slave address for cyclic data transfer per AS-i bus cycle. The addressed slave responds with a corresponding slave frame. Depending on the configuration of the bus, between 1 and 31 slaves are addressed in each AS-i bus cycle. This results in a maximum bus cycle time of 5 ms. When two slaves with extended addressing have the same numerical address, but one is the A address and one the B address, these two slaves are automatically addressed in two consecutive bus cycles. It can be assumed that around 64 000 master frames are sent per second.

Table 8- 13 Meaning of error counter

Count value / Information	Meaning
Slave failure	The count value is increased when an active slave fails, that is, when process data transmission has been interrupted. An active slave only fails when it does not respond to six consecutive master calls.
Missing slave frame	The count value is increased when a slave does not respond to a master call or the master does not receive the response. Transmission of process data is not interrupted in this case.
Erroneous slave frame	The count value is increased when the master receives an incomplete slave response, such as when slaves are added during operation. Transmission of process data is not interrupted in this case.
I/O fault	The count value is increased when a slave signals an I/O error.
Protocol error	The count value is increased when the master detects a transmission error for a slave that needs multiple cycles for transmission of data, e.g. for analog data.
Erroneous master frame	The count value is incremented when a master call cannot be sent correctly, e.g. in the event of strong interfering signals on the AS-i cable. Transmission of process data is not interrupted in this case.
Sent master frames	Number of master frames This counter counts all frames sent by the master, regardless of whether or not a slave response was received. The total number of master frames is calculated as follows: MT_CNT_TOTAL = (MT_CNT_HIGH x MT_CNT_BASE) + MT_CNT_LOW The error count starts over each time the device is powered up. By dividing the absolute values of the error counters by the number of master frames, it is possible to calculate the percentage of errors and thus the error frequency.

Table 8- 14 Slave address structure of the counters

Byte	Counter	
0	Counter: Slave failure	High byte
1		Low byte
2	Counter: Missing slave frame	High byte
3		Low byte
4	Counter: Erroneous slave frame	High byte
5		Low byte
6	Counter: I/O fault	High byte
7		Low byte
8	Counter: Protocol error	High byte
9		Low byte
10	Counter: Erroneous master frame	High byte
11		Low byte

The counters are integer values (2 bytes).

Table 8- 15 Master frame structure of the counters

Byte	Meaning	
0	Summation counter: Sent master frames, less significant part (MT_CNT_LOW)	High word, high byte
1		High word, low byte
2		Low word, high byte
3		Low word, low byte
4	Summation counter: Sent master frames, more significant part (MT_CNT_HIGH)	High word, high byte
5		High word, low byte
6		Low word, high byte
7		Low word, low byte
8	Summation counter: Sent master frames, factor (MT_CNT_BASE)	High word, high byte
9		High word, low byte
10		Low word, high byte
11		Low word, low byte

The counters are integer values (4 bytes).

8.9.4.1 DS 150 Read AS-i slave error counters 1/1A to 16/16A

Table 8- 16 Structure of data record DS 150

Byte	Meaning
0	Version High
1	Version Low
2 … 13	Counter for slave address 1 / 1A
14 … 25	Counter for slave address 2 / 2A
26 … 37	Counter for slave address 3 / 3A
38 … 49	Counter for slave address 4 / 4A
50 … 61	Counter for slave address 5 / 5A
62 … 73	Counter for slave address 6 / 6A
74 … 85	Counter for slave address 7 / 7A
86 … 97	Counter for slave address 8 / 8A
98 … 109	Counter for slave address 9 / 9A
110 … 121	Counter for slave address 10 / 10A
122 … 133	Counter for slave address 11 / 11A
134 … 145	Counter for slave address 12 / 12A
146 … 157	Counter for slave address 13 / 13A
158 … 169	Counter for slave address 14 / 14A
170 … 181	Counter for slave address 15 / 15A
182 … 193	Counter for slave address 16 / 16A
194 … 205	Master frame counter

8.9.4.2 DS 151 Read AS-i slave error counters 16/16A to 31/31A

Table 8- 17 Structure of data record DS 151

Byte	Meaning
0	Version High
1	Version Low
2 … 13	Counter for slave address 16 / 16A
14 … 25	Counter for slave address 17 / 17A
26 … 37	Counter for slave address 18 / 18A
38 … 49	Counter for slave address 19 / 19A
50 … 61	Counter for slave address 20 / 20A
62 … 73	Counter for slave address 21 / 21A
74 … 85	Counter for slave address 22 / 22A
86 … 97	Counter for slave address 23 / 23A
98 … 109	Counter for slave address 24 / 24A
110 … 121	Counter for slave address 25 / 25A
122 … 133	Counter for slave address 26 / 26A
134 … 145	Counter for slave address 27 / 27A
146 … 157	Counter for slave address 28 / 28A
158 … 169	Counter for slave address 29 / 29A
170 … 181	Counter for slave address 30 / 30A
182 … 193	Counter for slave address 31 / 31A
194 … 205	Master frame counter

8.9.4.3 DS 152 Read AS-i slave error counters 1B to 16B

Table 8- 18 Structure of data record DS152

Byte	Meaning
0	Version High
1	Version Low
2 … 13	Counter for slave address 1B
14 … 25	Counter for slave address 2B
26 … 37	Counter for slave address 3B
38 … 49	Counter for slave address 4B
50 … 61	Counter for slave address 5B
62 … 73	Counter for slave address 6B
74 … 85	Counter for slave address 7B
86 … 97	Counter for slave address 8B
98 … 109	Counter for slave address 9B
110 … 121	Counter for slave address 10B
122 … 133	Counter for slave address 11B
134 … 145	Counter for slave address 12B
146 … 157	Counter for slave address 13B
158 … 169	Counter for slave address 14B
170 … 181	Counter for slave address 15B
182 … 193	Counter for slave address 16B
194 … 205	Master frame counter

8.9.4.4 DS 153 Read AS-i slave error counters 16B to 31B

Table 8- 19 Structure of data record DS 153

Byte	Meaning
0	Version High
1	Version Low
2 … 13	Counter for slave address 16B
14 … 25	Counter for slave address 17B
26 … 37	Counter for slave address 18B
38 … 49	Counter for slave address 19B
50 … 61	Counter for slave address 20B
62 … 73	Counter for slave address 21B
74 … 85	Counter for slave address 22B
86 … 97	Counter for slave address 23B
98 … 109	Counter for slave address 24B
110 … 121	Counter for slave address 25B
122 … 133	Counter for slave address 26B
134 … 145	Counter for slave address 27B
146 … 157	Counter for slave address 28B
158 … 169	Counter for slave address 29B
170 … 181	Counter for slave address 30B
182 … 193	Counter for slave address 31B
194 … 205	Master frame counter

8.9.5 DS 154 Delete AS-i error counters (from FW V1.1)

Description

When writing this data record all the error counters are reset.

The content of the data record has to be filled with zero values.

Table 8- 20 Structure of DS 154 write

Byte	Meaning
0	0
1	0
2	0
3	0

Using the command interface 9

9.1 Introduction

You control the behavior of the AS-i master in your user program entirely through the command interface.

This chapter contains the information you need for accessing the command interface of the CM AS-i Master ST.

9.2 Command interface with SIMATIC S7

Instruction "ASI_CTRL"

The instruction "ASI_CTRL" is available for controlling the command interface. You will find this instruction in *STEP 7* in the task card "Instructions" under "Advanced instructions" > "Distributed I/O" > "Others" > "ASI".

For detailed instructions on using the instruction "ASI_CTRL", see: ASI_CTRL (http://support.automation.siemens.com/WW/view/en/51678777).

9.3 Command interface with controllers of other manufacturers

Functional principle

AS-i commands are read and written via the acyclic services of PROFINET/PROFIBUS. You use the "Read_data_record" and "Write_data_record" (data record 2) services in the user program of the IO controller/DP master for this.

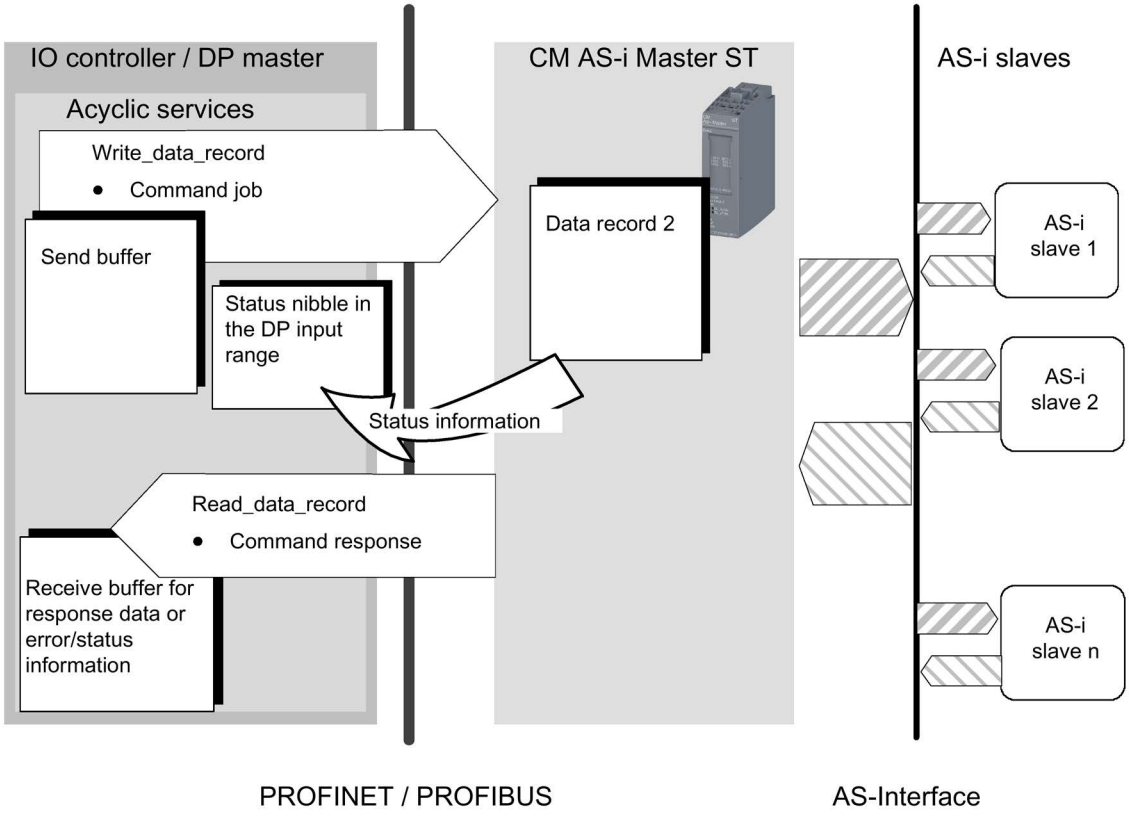

Figure 9-1 Functional principle

Job parameters

You assign parameters for the "Read_data_record" and "Write_data_record" jobs. The following parameters control the issuance of the commands:

- Index:

  Defines the data record number = 2

- Length:
  - With "Write_data_record", you specify the length of the send data depending on the command.
  - With "Read_data_record", the CM AS-i Master ST signals the length of the receive data via the status nibble.

Command processing in the user program

Structure the command processing in the user program as follows:

1. Specify the command call (Page 103) in a send buffer in the user program.
2. Send this data record call to the CM AS-i Master ST with Write_data_record (data record 2).
3. Then, query the status of the command processing in the input range for digital values (cyclic services). The status information is stored in the first byte reserved for it (byte 0) in bits 4 to 7 of the input range (status nibble).
4. Different reactions occur depending on the result of the status evaluation. You can find these in the following sequence chart. Details on the meaning of the status nibble can be found in the "Coding of the status nibble" table.

   To complete the command processing, you must always issue a Read_data_record (data record 2) job either to obtain further information or to apply the response data.

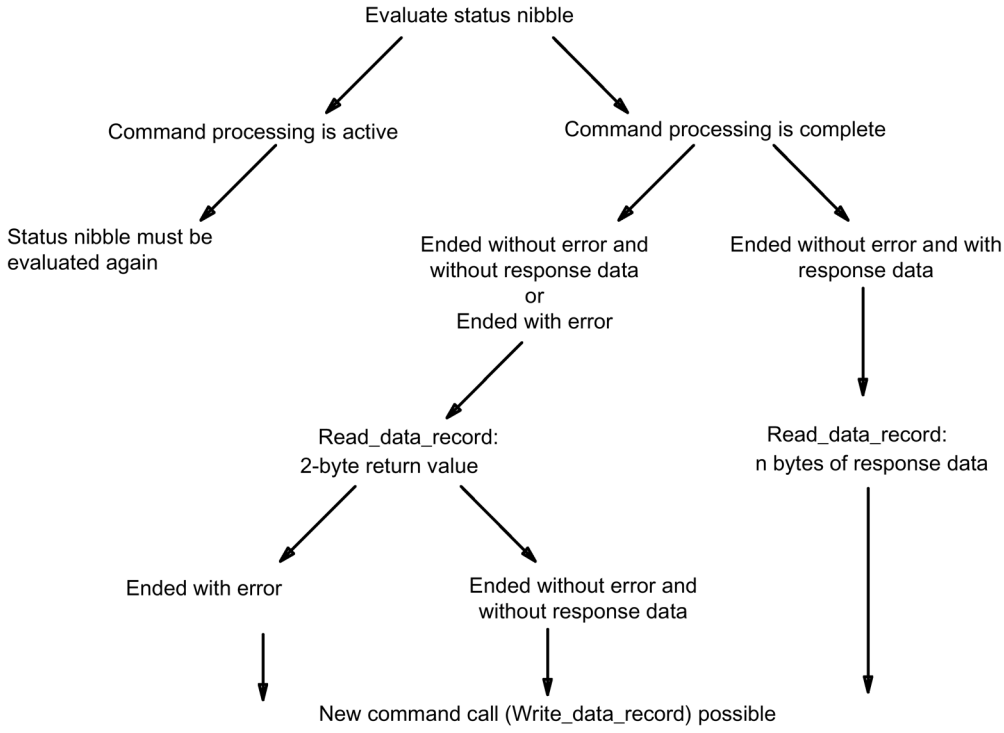

Figure 9-2 Flowchart

Table 9- 1 Coding of the status nibble

Status nibble (byte 1 of the digital input data)				Meaning
Bit 7	Bit 6	Bit 5	Bit 4	
1	0	0	0	Startup detection 1: The status nibble switches between the values 1000_B and 1110_B following a startup/restart of the AS-i master. Initiation of a command by the user program is possible.
1	1	1	0	Startup detection 2: The status nibble switches between the values 1000_B and 1110_B following a startup/restart of the AS-i master. Initiation of a command by the user program is possible.
1	1	0	0	Reserved for SIMATIC S7 use FB ASI_CTRL Initiation of a command by the user program is possible.
0	0	1	0	The command processing is active Initiation of a command by the user program is not possible.
0	0	0	1	Command processing has ended. An asynchronous read access can be used to retrieve a **2-byte** return value from the AS-i master. Two cases are distinguished here: • The return value is 0: A command without response data has been ended without errors. • The return value is a value **other than 0**: The command has been ended **with error** (see "Return value in response buffer" table). Initiation of a new command by the user program is possible.
0	0	1	1	Command processing has been ended without errors. An asynchronous read access can be used to retrieve **1 byte** of response data from the AS-i master. Initiation of a new command by the user program is possible.
0	1	0	1	Command processing has been ended without errors. An asynchronous read access can be used to retrieve **4 bytes** of response data from the AS-i master. Initiation of a new command by the user program is possible.
0	1	1	1	Command processing has been ended without errors. An asynchronous read access can be used to retrieve **14 bytes** of response data from the AS-i master. Initiation of a new command by the user program is possible.
1	0	0	1	Command processing has been ended without errors. An asynchronous read access can be used to retrieve **16 bytes** of response data from the AS-i master. Initiation of a new command by the user program is possible.
1	0	1	1	Command processing has been ended without errors. An asynchronous read access can be used to retrieve **32 bytes** of response data from the AS-i master. Initiation of a new command by the user program is possible.

Status nibble (byte 1 of the digital input data)				Meaning
Bit 7	Bit 6	Bit 5	Bit 4	
1	1	0	1	Command processing has been ended without errors. An asynchronous read access can be used to retrieve **56 bytes** of response data from the AS-i master. Initiation of a new command by the user program is possible.
1	1	1	1	Command processing has been ended without errors. An asynchronous read access can be used to retrieve **221 bytes** of response data from the AS-i master. Initiation of a new command by the user program is possible.
0	1	0	0	Job processing is complete. The response data or return value of the previous job has already been read by the user. Initiation of a new command by the user program is possible.

Example

The table below indicates the behavior of the status nibble display as a result of the device status and the command processing in the user program:

	Action	Response in the status nibble
1.	Switching on the AS-i voltage of the CM AS-i Master ST.	1110_B … 1000_B … 1110_B …
2.	The user program transfers a command (e.g., Write_parameter) to the CM AS-i Master ST with an asynchronous write access.	0010_B (briefly, dependent on command)
3.	The AS-i master ends the command. The user program can read the return value	0001_B
4.	The user program reads the 2 byte return value with an asynchronous read access.	0100_B
5.	... Further program processing ...	…
6.	The user program transfers a command (e.g., Read_expanded_lists_and_flags) to the CM AS-i Master ST with an asynchronous write access.	0010_B (briefly, dependent on command)
7.	The AS-i master ends the command without errors. The user program can read the response data.	1011_B
8.	The user program reads 32 bytes of response data with an asynchronous read access.	1011_B

Return value

Processing errors are itemized in the return value of the response buffer, if necessary. An error indication exists when "ended without error and without response data or ended with error" is displayed in the status nibble (coding: 0001_H).

Table 9- 2 Return value in the response buffer

STATUS	Meaning
0000_H	Job completed without errors
8381_H	The AS-i slave address is incorrect.
8382_H	The AS-i slave is not activated (not in LAS).
8383_H	Error on the AS-Interface
8384_H	The command is not permitted in the current state of the AS-i master.
8385_H	An AS-i slave with address 0 exists.
8386_H	The AS-i slave has impermissible configuration data (IO, ID, ID2, or ID1 code).
$83A1_H$	The referenced AS-i slave was not found on the AS-Interface.
$83A2_H$	An AS-i slave with address 0 exists.
$83A3_H$	An AS-i slave with the new address already exists on the AS-Interface.
$83A4_H$	The AS-i slave address cannot be deleted.
$83A5_H$	The AS-i slave address cannot be set.
$83A6_H$	The AS-i slave address cannot be permanently saved.
$83A7_H$	Error while reading the ID1 code
$83A8_H$	The destination address is not plausible: e.g. a B slave address is used for a standard slave.
$83B1_H$	A length error occurred during the string transfer in accordance with Profile 7.4.
$83B2_H$	A protocol error occurred during the string transfer in accordance with Profile 7.4.
$83C0_H$	The AS-i slave has an invalid profile, e.g. the standard slave or A slave is configured at a B address.
$83C1_H$	The standard slave cannot be configured, because the B address is already assigned.
$83F8_H$	The job number or the job parameter is not known.
$83F9_H$	The AS-i master has detected an EEPROM error.

Note

Errors that occur during processing of acyclic services and are reported via call parameters, such as "Return Value", can be found in the documentation of the relevant programming interface.

9.4 Description of the AS-i commands

Overview

The commands that the user program can issue to the CM AS-i Master ST are described below. With these commands, the AS-i master makes available the complete functionality of the M4 master profile of the AS-i master specification.

Note

Adaptations when using existing user programs

Please observe the following adaptations when using existing user programs:

For some commands of the CM AS-i Master ST, the command numbers have been changed and the data structures belonging to the command have been optimized compared to other AS-i masters (e.g., DP/AS-i LINK Advanced).

The following table provides an overview of the modified command numbers:

Command name	Coding for DP/AS-i LINK Advanced	Coding for CM AS-i Master ST
No. A5: Set_Permanent_Configuration (Page 112)	25_H	$A5_H$
No. A6: Get_Permanent_Configuration (Page 113)	26_H	$A6_H$
No. A8: Read_Actual_Configuration (Page 115)	28_H	$A8_H$
No. A9: Set_LPS (Page 116)	29_H	$A9_H$
No. B0: Get_LPS, Get_LAS, Get_LDS, Get_Flags (Page 122)	30_H	$B0_H$
No. B9: Read_overall_configuration (Page 125)	39_H	$B9_H$
No. BA: Write_overall_configuration (Page 131)	$3A_H$	BA_H
No. BE: Get_LPF (Page 147)	$3E_H$	BE_H
No. CA: Read_Error_Counter (Page 152)	$4A_H$	CA_H
No. CB: Read_and_Delete_AS-i-Master_Error_Counter (Page 155)	$4B_H$	CB_H
No. CC: Read_AS-i_error_counter (Page 156)	$4C_H$	CC_H
No. CD: Read_and_delete_AS-i_Slave_error_counter (Page 157)	$4D_H$	CD_H

The following table lists the commands that can be executed with the CM AS-i Master ST.

Table 9- 3 AS-i commands

Name	Parameters	Return value	Coding
No. 00: Set_Permanent_Parameter (Page 107)	Slave address, parameter	—	00_H
No. 01: GET_Permanent_Parameter (Page 108)	Slave address	Parameter	01_H
No. 02: Write_Parameter (Page 109)	Slave address, parameter	Optional: Parameter echo	02_H
No. 03: Read_Parameter (Page 110)	Slave address	Parameter value	03_H
No. 04: Store_Actual_Parameters (Page 111)	—	—	04_H
No. A5: Set_Permanent_Configuration (Page 112)	Slave address, configuration data to be configured	—	$A5_H$
No. A6: Get_Permanent_Configuration (Page 113)	Slave address	Configured configuration data	$A6_H$
No. 07: Store_Actual_Configuration (Page 114)	—	—	07_H
No. A8: Read_Actual_Configuration (Page 115)	Slave address	ACTUAL configuration	$A8_H$
No. A9: Set_LPS (Page 116)	LPS	—	$A9_H$
No. 0A: SET_Offline_Mode (Page 117)	Mode	—	$0A_H$
No. 08: Set_Auto_Address_Enable (Page 118)	Mode	—	$0B_H$
No. 0C: Set_Operation_Mode (Page 119)	Mode	—	$0C_H$
No. 0D: Change_AS-i-Slave_Address (Page 120)	Address 1, Address 2	—	$0D_H$
No. 0F: Read_Status (Page 121)	Slave address	Error data record of AS-i slave	$0F_H$
No. B0: Get_LPS, Get_LAS, Get_LDS, Get_Flags (Page 122)	—	LDS, LAS, LPS, flags	$B0_H$
No. B9: Read_overall_configuration (Page 125)	—	ACTUAL configuration data, actual parameters, LAS, flags	$B9_H$
No. BA: Write_overall_configuration (Page 131)	Overall configuration	—	BA_H
No. 3C: Set_PI (Page 138)	Parameter list	—	$3C_H$
No. 33: AS-i Parameter Echolist (Page 141)	—	Parameter echo list	33_H
No. 44: Read_Write_CTT2_String (Page 142)	Slave address CTT2 string	CTT2 string	44_H
No. 14: Read_Version (Page 144)	—	Version string	14_H
No. 17: Read ID_Code (Page 144)	Slave address	ID code	17_H
No. 37: Read_ID1-Code (Page 145)	Slave address	ID1 code	37_H
No. 3F: Write ID1-Code (Page 145)	ID1 code	—	$3F_H$
No. 38: Read_ID2-Code (Page 146)	Slave address	ID2 code	38_H
No. 18: Read_IO-Code (Page 146)	Slave address	IO code	18_H
No. BE: Get_LPF (Page 147)	—	LPF	BE_H

Name	Parameters	Return value	Coding
No. 40: Write_Parameter_String (Page 148)	Slave address, parameter string	—	40_H
No. 41: Read_String (Page 149)	Slave address	Parameter string	41_H
No. 42: Read_String (Page 150)	Slave address	Identification string	42_H
No. 43: Read_String (Page 151)	Slave address	Diagnostics string	43_H
No. CA: Read_Error_Counter (Page 152)	—	—	CA_H
No. CB: Read_and_Delete_AS-i-Master_Error_Counter (Page 155)	—	—	CB_H
No. CC: Read_AS-i_error_counter (Page 156)	Slave address	—	CC_H
No. CD: Read_and_delete_AS-i_Slave_error_counter (Page 157)	Slave address	—	CD_H
No. 13: Activate_ground fault detection (reset EFD) (Page 158)	Mode	—	13_H
No. D0: Set_Configuration_Online (Page 159)	Slave address, configuration data to be configured, parameters	—	$D0_H$
No. D1: AS-i-Slave_ID1_schreiben_mit_Zieladresse (Write ID1 code with destination address) (Page 160)	Address, ID1 code	—	$D1_H$

General structure of the send buffer

The basic structure of the send buffer for commands is shown below.

The length of the job data depends on the respective command. Some commands do not require any job data. In this case, the send buffer only has one byte (byte 0).

Table 9- 4 Basic structure of the send buffer for commands

Byte	Meaning
0	Number of the command
1	Job data
…	Job data

General structure of the receive buffer

The basic structure of the receive buffer for commands is shown below. The length of the response data depends on the respective command.

Some commands do not supply any response data. In this case, there is no receive buffer.

Table 9- 5 Basic structure of the receive buffer

Byte	Meaning
0	Response data
1	Response data
…	Response data

General operating state of the AS-i slave address

If an AS-i slave must be addressed in a command or in a response, it must be addressed as follows:

Table 9- 6 Structure of the AS-i slave address

Bit 7	Bit 6	Bit 5	Bit 4	Bit 3	Bit 2	Bit 1	Bit 0
0	0	Select bit	Slave address				

The Select bit for the selection of the slave type is specified as follows:

- Select bit = 0

  AS-i slave with standard-address (0 to 31) or AS-i slave with extended address in address area A (1A to 31A)
- Select bit = 1:

  AS-i slave with extended address in address area B (1B to 31B)

9.4.1 No. 00: Set_Permanent_Parameter

Meaning

This command configures a parameter value for the specified AS-i slave in the AS-i master. The value is stored in the non-volatile EEPROM of the CM AS-i Master ST. The parameter value is additionally forwarded to the addressed AS-i slave.

However, the "parameter echo" of the AS-i slave cannot be read out with this command (see No. 02: Write_Parameter (Page 109) command).

Note

Use of other Siemens AS-i masters

Other Siemens AS-i masters do not transfer the configured parameters to the AS-i slave immediately.

For AS-i slaves that meet the AS-i standard slave profile 7.4, this command is not permitted. For these slaves, the AS-i master itself administers the parameter assignment of the AS-i slave. In this case, the configured parameters are always equal to F_H.

Note

Configuration data are overwritten

If you configure the AS-i slaves using HW Config, there is normally no need to use the command described here.

If you use this command, you will overwrite the respective configuration data that resulted from SET button configuration or HW Config configuration.

When this command is executed, the AS-i master switches to the offline phase and then switches back to "normal operation". The AS-i master restarts.

Structure of the job data in the send buffer

Table 9- 7 Structure of the job data in the send buffer

Byte	Meaning			
	Bit 7	Bit 4	Bit 3	Bit 0
0	Command number: 00_H			
1	Slave address			
2	0		Parameters	

9.4.2 No. 01: GET_Permanent_Parameter

Significance

This command reads a slave-specific parameter value that has been saved in EEPROM of the CM AS-i Master ST.

Structure of the job data in the send buffer

Table 9- 8 Structure of the job data in the send buffer

Byte	Significance
0	Command number: 01_H
1	Slave address

Structure of the reply data in the receive buffer

Table 9- 9 Structure of the reply data in the receive buffer

Byte	Significance			
	Bit 7	Bit 4	Bit 3	Bit 0
0	0		Configured parameters	

9.4.3 No. 02: Write_Parameter

Meaning of the command

The command transfers an AS-i slave parameter value. The AS-i master subsequently makes a parameter call to the addressed AS-i slave and passes the parameter value to the AS-i slave in this call. The slave sends the parameter echo as receipt acknowledgment to the master. The value of the parameter echo is sent in the reply data of the command.

The parameter value is only stored in the volatile memory of the AS-i master and is not transferred to the EEPROM as a configured parameter!

The AS-i slave can provide any parameter echo value. As a general rule, the returned parameter echo value is not a "mirror image" of the parameter value that is sent by the master to the slave. If necessary, refer to the documentation of the AS-i slave to ascertain whether the echo value has a special meaning.

This command is not permissible for AS-i slaves that meet AS-i slave standard profile 7.4. For these slaves, the AS-i master itself administers the AS-i slave parameter assignment.

Structure of the job data in the send buffer

Table 9- 10 Structure of the job data in the send buffer

Byte	Meaning			
	Bit 7	Bit 4	Bit 3	Bit 0
0	Command number: 02_H			
1	Slave address			
2	0		Parameter value	

Structure of the response data in the receive buffer

Table 9- 11 Structure of the response data in the receive buffer

Byte	Meaning			
	Bit 7	Bit 4	Bit 3	Bit 0
0	0		Parameter echo	

9.4.4 No. 03: Read_Parameter

Meaning

This command returns the parameter value (ACT parameter) active in the slave.

The returned parameter value corresponds to the value that was transferred from the master to the slave in the last parameter call. Because read-back of the parameter value from the AS-i slave is not possible according to the AS-i specification, the master stores the parameter values of all slaves internally in a volatile memory as "ACT parameters". The command reads out the ACT parameter value from the memory, so that the command is executed without a query from the AS-i slave.

You must not confuse this value with the parameter echo that the AS-i slave supplies as reply to Write_Parameter.

Structure of the job data in the send buffer

Table 9- 12 Structure of the job data in the send buffer

Byte	Meaning
0	Command number: 03_H
1	Slave address

Structure of the response data in the receive buffer

Table 9- 13 Structure of the response data in the receive buffer

Byte	Meaning			
	Bit 7	Bit 4	Bit 3	Bit 0
0	0		Parameters	

9.4.5 No. 04: Store_Actual_Parameters

Meaning

This command overwrites the configured parameters stored in the EEPROM with the current ACTUAL parameters stored in volatile memory of the AS-i slave. As a result, the ACTUAL parameters in the non-volatile memory of the master are stored as the configuration definition for the next time the slaves are powered up.

The AS-i master parameterizes the AS-i slaves itself in the case of AS-i slaves that meet AS-i slave standard profile 7.4. The configured parameters for these AS-i slaves are always equal to F_H.

Structure of the job data in the send buffer

Table 9- 14 Structure of the job data in the send buffer

Byte	Meaning
0	Command number: 04_H

9.4.6 No. A5: Set_Permanent_Configuration

Meaning

With this command, the following configuration data are configured for the addressed AS-i slave:

- IO code
- ID code
- ID1 code
- ID2 code

The configuration data are stored in the non-volatile EEPROM of the CM AS-i Master ST. The AS-i master uses these configuration data as the specified expected configuration data for "protected operation". The configuration data are defined by the manufacturer of the AS-i slave. The meaning of the configuration data is described in the "AS-Interface Complete Specification".

If the addressed AS-i slave does not support ID code 1 or ID code 2, the value F_H must be specified for this in the command.

When this command is executed, the AS-i master switches to the offline phase and then switches back to "normal operation". The AS-i master restarts.

This command is not executed in "protected operation".

Note

Configuration data are overwritten

If you configure the AS-i slaves using HW Config, there is normally no need to use the command described here.

If you use this command, you will overwrite the respective configuration data that resulted from SET button configuration or HW Config configuration.

Structure of the job data in the send buffer

Table 9- 15 Structure of the job data in the send buffer

Byte	Meaning			
	Bit 7	Bit 4	Bit 3	Bit 0
0	Command number: $A5_H$			
1	Slave address			
2	IO code		ID code	
3	ID1 code		ID2 code	

9.4.7 No. A6: Get_Permanent_Configuration

Meaning

The configuration data (configured CONF data) of an addressed AS-i slave stored on the EEPROM of the AS-i master are read with this command:

- IO code
- ID code
- ID1 code
- ID2 code

The configuration data are defined by the manufacturer of the AS-i slave. The meaning of the configuration data is described in the "AS-Interface Complete Specification".

Structure of the job data in the send buffer

Table 9- 16 Structure of the job data in the send buffer

Byte	Meaning
0	Command number $A6_H$
1	Slave address

Structure of the response data in the receive buffer

Table 9- 17 Structure of the response data in the receive buffer

Byte	Meaning			
	Bit 7	Bit 4	Bit 3	Bit 0
0	IO code		ID code	
1	ID1 code		ID2 code	
2	0			
3	0			

9.4.8 No. 07: Store_Actual_Configuration

Meaning

The following ACTUAL configuration data of all AS-i slaves is obtained from the AS-i master:

- Slave profile (IO, ID, ID2 codes)
- ID1 code

This command saves the obtained ACTUAL configuration data as CONF configuration data in the non-volatile EEPROM. The List of activated AS-i slaves (LAS) is also loaded into the List of configured AS-i slaves (LPS).

When this command is executed, the AS-i master switches to the offline phase and then switches back to "protected operation". The AS-i master restarts.

This command is not executed in "protected operation".

The slave parameter values in volatile memory of the AS-i master and the content of the non-volatile memory for the parameters are not changed. The "Set_Permanent_Parameter" command must be executed, if necessary.

Note

Configuration data are overwritten

If you configure the AS-i slaves using HW Config, there is normally no need to use the command described here.

If you use this command, you will overwrite the respective configuration data that resulted from SET button configuration or HW Config configuration.

Structure of the job data in the send buffer

Table 9- 18 Structure of the job data in the send buffer

Byte	Meaning
0	Command number: 07_H

9.4.9 No. A8: Read_Actual_Configuration

Meaning

This command reads the following configuration data of an addressed AS-i slave obtained from the AS-i master on the AS-Interface:

- IO code
- ID code
- ID1 code
- ID2 code

The configuration data are defined by the manufacturer of the AS-i slave. The meaning of the configuration data is described in the "AS-Interface Complete Specification".

Structure of the job data in the send buffer

Table 9- 19 Structure of the job data in the send buffer

Byte	Meaning
0	Command number: $A8_H$
1	Slave address

Structure of the response data in the receive buffer

Table 9- 20 Structure of the response data in the receive buffer

Byte	Meaning			
	Bit 7	Bit 4	Bit 3	Bit 0
0	IO code		ID code	
1	ID1 code		ID2 code	
2	Reserved			
3	Reserved			

9.4.10 No. A9: Set_LPS

Meaning

This command transfers the list of configured AS-i slaves for non-volatile storage in the EEPROM of the master.

When this command is executed, the AS-i master switches to the offline phase and then switches back to "normal operation". The AS-i master restarts.

This command is not executed in "protected operation".

Note

Configuration data are overwritten

If you configure the AS-i slaves using HW Config, there is normally no need to use the command described here.

If you use this command, you will overwrite the respective configuration data that resulted from SET button configuration or HW Config configuration.

Structure of the job data in the send buffer

Table 9- 21 Structure of the job data in the send buffer

Byte	Meaning							
	Bit 7	Bit 6	Bit 5	Bit 4	Bit 3	Bit 2	Bit 1	Bit 0
0	Command number: $A9_H$							
1	00_H							
2	Slave 7(A)	Slave 6(A)	Slave 5(A)	Slave 4(A)	Slave 3(A)	Slave 2(A)	Slave 1(A)	0
3	Slave 15(A)	Slave 14(A)	Slave 13(A)	Slave 12(A)	Slave 11(A)	Slave 10(A)	Slave 9(A)	Slave 8(A)
4	Slave 23(A)	Slave 22(A)	Slave 21(A)	Slave 20(A)	Slave 19(A)	Slave 18(A)	Slave 17(A)	Slave 16(A)
5	Slave 31(A)	Slave 30(A)	Slave 29(A)	Slave 28(A)	Slave 27(A)	Slave 26(A)	Slave 25(A)	Slave 24(A)
6	Slave 7B	Slave 6B	Slave 5B	Slave 4B	Slave 3B	Slave 2B	Slave 1B	0
7	Slave 15B	Slave 14B	Slave 13B	Slave 12B	Slave 11B	Slave 10B	Slave 9B	Slave 8B
8	Slave 23B	Slave 22B	Slave 21B	Slave 20B	Slave 19B	Slave 18B	Slave 17B	Slave 16B
9	Slave 31B	Slave 30B	Slave 29B	Slave 28B	Slave 27B	Slave 26B	Slave 25B	Slave 24B

The bits have the following meanings in the LPS data:

0: AS-i slave is not configured

1: AS-i slave is configured

9.4.11 No. 0A: SET_Offline_Mode

Meaning

This command switches between online and offline mode.

Online mode is the normal mode for the AS-i master. The following jobs are processed in online mode:

1. In the data exchange phase, the fields of the output data are transferred to the slave outputs for all AS-i slaves of the LAS. In error-free transmission, the addressed AS-i slaves transfer the values of the slave inputs to the master.
2. In the loading phase, a search is conducted for the existing AS-i slaves. Newly added AS-i slaves are inserted in the LDS or LAS.
3. In the management phase, jobs forwarded by the user, such as writing parameters, are executed.

In offline mode, the AS-i master only processes jobs from the user. Jobs that immediately activate an AS-i slave are rejected with an error. Cyclic data exchange is not performed with the AS-i slaves.

The bit OFFLINE=TRUE is not stored permanently. This means that after startup or restart, the AS-i master is in online mode again.

Structure of the job data in the send buffer

Table 9- 22 Structure of the job data in the send buffer

Byte	Meaning		
	Bit 7	Bit 1	Bit 0
0	Command number: $0A_H$		
1	0		Mode 0 = Online 1 = Offline

9.4.12 No. 08: Set_Auto_Address_Enable

Meaning

This command enables or disables the "Automatic address programming" function.

The bit AUTO_ADDR_ENABLE is stored in non-volatile memory. It is retained even after startup or warm restart of the AS-i master.

Structure of the job data in the send buffer

Table 9- 23 Structure of the job data in the send buffer

Byte	Meaning		
	Bit 7	Bit 1	Bit 0
0	Command number: $0B_H$		
1	0		Value for AUTO_ADDR_ENABLE 1 = Automatic address programming enabled 0 = Automatic address programming disabled

9.4.13 No. 0C: Set_Operation_Mode

Meaning

This command chooses between "configuration mode" and "protected operation".

In **"protected operation"**, only the AS-i slaves that are flagged in the LPS and whose CONFIGURED and ACTUAL configurations match are activated. This is the case when the I/O code and the ID codes of the detected AS-i slaves are identical to the configured values.

In **"configuration mode**", all the detected AS-i slaves are activated - with the exception of AS-i slave "0". This also applies to AS-i slaves that differ in their CONFIGURED and ACTUAL configurations.

The "OPERATING MODE" bit is saved in **non-volatile** memory. As a result, this bit is retained in the event of startup or restart.

On switching from "configuration mode" to "protected operation", the AS-i master restarts. It enters the offline phase and then switches to online mode.

Note

AS-i slave with address 0 prevents switchover to "protected operation"

If an AS-i slave with address 0 is present on the AS-i bus, the AS-i master cannot switch from "configuration mode" to "protected operation".

Structure of the job data in the send buffer

Table 9- 24 Structure of the job data in the send buffer

Byte	Meaning		
	Bit 7	Bit 1	Bit 0
0	Command number: $0C_H$		
1	0		Operating mode 0 = "Protected operation" 1 = "Configuration mode"

9.4.14 No. 0D: Change_AS-i-Slave_Address

Meaning of the command

This command changes the AS-i slave address of an AS-i slave.

This command is used predominantly for adding a new AS-i slave with the default address "0". In this case, the address is changed from "AS-i slave address, old" = 0 to "AS-i slave address, new".

The change is only executed if the following conditions are met:

1. An AS-i slave with "AS-i slave address, old" must exist.
2. If "AS-i address, old" is not equal to "0", an AS-i slave with the address "0" must not be connected at the same time.
3. "AS-i slave address, new" must have a valid value.
4. An AS-i slave with "AS-i slave address, new" must not already exist.

Note

When changing the AS-i slave address, the AS-i slave is not reset. The output data of the AS-i slave are retained until the slave resets its data automatically by internal time watchdog monitoring or the slave receives new data at the new address.

Today's AS-i slaves mostly feature watchdog monitoring that reset the internal I/O data of the slave when cyclic communication with the AS-i master is interrupted. Check the technical data of the slave to find out whether it features watchdog monitoring.

Structure of the job data in the send buffer

Table 9- 25 Structure of the job data in the send buffer

Byte	Meaning
0	Command number: $0D_H$
1	Slave address, old
2	Slave address, new

9.4.15 No. 0F: Read_Status

Meaning

This command reads the status register for the addressed AS-i slave. Generally, this command is not required because the slave status is automatically managed by the AS-i master. The following functions are available for detecting an I/O fault: alarm message, read diagnostic data sets, execution of command "Get_LPS, Get_LAS, Get_LDS, Get_Flags" command number B0 hex.

The flags of the status register have the following meaning depending on the type of the AS-i slave:

Table 9- 26 Meaning of the flags of the status register depending on the type of the AS-i slave

Status bit	AS-i slave according to AS-i specification V2.0	AS-i slave AS-i specification V2.1 and higher
S0	Address volatile	Address/ID code volatile
	This flag is set if • The internal routine of the AS-i slave for permanent storage of the AS-i slave address is running. This can last up to 15 ms and must not be interrupted by another addressing call. • The internal address comparison of the AS-i slave determines that the permanently saved address is not identical to the entry in the address register.	
S1	Parity error detected This flag is set if the AS-i slave has detected a parity error in a receive frame since the last "Read and delete status" job.	Peripheral fault detected An AS-i slave can set this flag if it detects a fault, e.g. wire break, on the connected I/O.
S2	End bit error detected This flag is set if the AS-i slave has detected an end bit error in a message frame since the last "Read and delete status" job.	Reserved
S3	Read error in non-volatile memory (EEPROM) This bit is set if the AS-i slave has discovered a read error when reading the non-volatile memory.	

Structure of the job data in the send buffer

Table 9- 27 Structure of the job data in the send buffer

Byte	Meaning
0	Command number: $0F_H$
1	Slave address

Structure of the job data in the receive buffer

Table 9- 28 Structure of the response data in the receive buffer

Byte	Meaning					
	Bit 7	Bit 4	Bit 3	Bit 2	Bit 1	Bit 0
0	0		S 3	S 2	S 1	S 0

9.4.16 No. B0: Get_LPS, Get_LAS, Get_LDS, Get_Flags

Meaning

This command reads the following entries from the AS-i master:

- List of activated AS-i slaves, LAS
- List of detected AS-i slaves, LDS
- List of configured AS-i slaves, LPS
- The flags in accordance with the AS-i slave specification

Structure of the job data in the send buffer

Table 9- 29 Structure of the job data in the send buffer

Byte	Meaning
0	Command number: $B0_H$

Structure of the response data in the receive buffer

Table 9- 30 Structure of the response data in the receive buffer

Byte	Meaning							
	Bit 7	Bit 6	Bit 5	Bit 4	Bit 3	Bit 2	Bit 1	Bit 0
0	LAS Slave 7(A)	LAS Slave 6(A)	LAS Slave 5(A)	LAS Slave 4(A)	LAS Slave 3(A)	LAS Slave 2(A)	LAS Slave 1(A)	Reserved
1	LAS Slave 15(A)	LAS Slave 14(A)	LAS Slave 13(A)	LAS Slave 12(A)	LAS Slave 11(A)	LAS Slave 10(A)	LAS Slave 9(A)	LAS Slave 8(A)
2	LAS Slave 23(A)	LAS Slave 22(A)	LAS Slave 21(A)	LAS Slave 20(A)	LAS Slave 19(A)	LAS Slave 18(A)	LAS Slave 17(A)	LAS Slave 16(A)
3	LAS Slave 31(A)	LAS Slave 30(A)	LAS Slave 29(A)	LAS Slave 28(A)	LAS Slave 27(A)	LAS Slave 26(A)	LAS Slave 25(A)	LAS Slave 24(A)
4	LAS Slave 7B	LAS Slave 6B	LAS Slave 5B	LAS Slave 4B	LAS Slave 3B	LAS Slave 2B	LAS Slave 1B	Reserved
5	LAS Slave 15B	LAS Slave 14B	LAS Slave 13B	LAS Slave 12B	LAS Slave 11B	LAS Slave 10B	LAS Slave 9B	LAS Slave 8B
6	LAS Slave 23B	LAS Slave 22B	LAS Slave 21B	LAS Slave 20B	LAS Slave 19B	LAS Slave 18B	LAS Slave 17B	LAS Slave 16B
7	LAS Slave 31B	LAS Slave 30B	LAS Slave 29B	LAS Slave 28B	LAS Slave 27B	LAS Slave 26B	LAS Slave 25B	LAS Slave 24B
8	LDS Slave 7(A)	LDS Slave 6(A)	LDS Slave 5(A)	LDS Slave 4(A)	LDS Slave 3(A)	LDS Slave 2(A)	LDS Slave 1(A)	LDS Slave 0

Byte	Meaning							
	Bit 7	Bit 6	Bit 5	Bit 4	Bit 3	Bit 2	Bit 1	Bit 0
9	LDS Slave 15(A)	LDS Slave 14(A)	LDS Slave 13(A)	LDS Slave 12(A)	LDS Slave 11(A)	LDS Slave 10(A)	LDS Slave 9(A)	LDS Slave 8(A)
10	LDS Slave 23(A)	LDS Slave 22(A)	LDS Slave 21(A)	LDS Slave 20(A)	LDS Slave 19(A)	LDS Slave 18(A)	LDS Slave 17(A)	LDS Slave 16(A)
11	LDS Slave 31(A)	LDS Slave 30(A)	LDS Slave 29(A)	LDS Slave 28(A)	LDS Slave 27(A)	LDS Slave 26(A)	LDS Slave 25(A)	LDS Slave 24(A)
12	LDS Slave 7B	LDS Slave 6B	LDS Slave 5B	LDS Slave 4B	LDS Slave 3B	LDS Slave 2B	LDS Slave 1B	Reserved
13	LDS Slave 15B	LDS Slave 14B	LDS Slave 13B	LDS Slave 12B	LDS Slave 11B	LDS Slave 10B	LDS Slave 9B	LDS Slave 8B
14	LDS Slave 23B	LDS Slave 22B	LDS Slave 21B	LDS Slave 20B	LDS Slave 19B	LDS Slave 18B	LDS Slave 17B	LDS Slave 16B
15	LDS Slave 31B	LDS Slave 30B	LDS Slave 29B	LDS Slave 28B	LDS Slave 27B	LDS Slave 26B	LDS Slave 25B	LDS Slave 24B
16	LPS Slave 7(A)	LPS Slave 6(A)	LPS S Slave 5(A)	LPS Slave 4(A)	LPS Slave 3(A)	LPS Slave 2(A)	LPS Slave 1(A)	Reserved
17	LPS Slave 15(A)	LPS Slave 14(A)	LPS Slave 13(A)	LPS Slave 12(A)	LPS Slave 11(A)	LPS Slave 10(A)	LPS Slave 9(A)	LPS Slave 8(A)
18	LPS Slave 23(A)	LPS Slave 22(A)	LPS Slave 21(A)	LPS Slave 20(A)	LPS Slave 19(A)	LPS Slave 18(A)	LPS Slave 17(A)	LPS Slave 16(A)
19	LPS Slave 31(A)	LPS Slave 30(A)	LPS Slave 29(A)	LPS Slave 28(A)	LPS Slave 27(A)	LPS Slave 26(A)	LPS Slave 25(A)	LPS Slave 24(A)
20	LPS Slave 7B	LPS Slave 6B	LPS Slave 5B	LPS Slave 4B	LPS Slave 3B	LPS Slave 2B	LPS Slave 1B	Reserved
21	LPS Slave 15B	LPS Slave 14B	LPS Slave 13B	LPS Slave 12B	LPS Slave 11B	LPS Slave 10B	LPS Slave 9B	LPS Slave 8B
22	LPS Slave 23B	LPS Slave 22B	LPS Slave 21B	LPS Slave 20B	LPS Slave 19B	LPS Slave 18B	LPS Slave 17B	LPS Slave 16B
23	LPS Slave 31B	LPS Slave 30B	LPS Slave 29B	LPS Slave 28B	LPS Slave 27B	LPS Slave 26B	LPS Slave 25B	LPS Slave 24B
24	Flag 1							
25	Flag 2							
26 … 31	Reserved							

Meaning of the bits in Byte 0 to 23

- Bit = 0:

  The AS-i slave is **not** activated, detected or configured.

- Bit = 1:

  The AS-i slave **is** activated, detected or configured.

Table 9- 31 Structure of flag 1 and flag 2

Flag 1			Flag 2	
Bit	Meaning		Bit	Meaning
0	Config_OK		0	Periphery_OK
1	LDS.0		1	Data_Exchange_Active
2	Auto_Address_Assign		2	Off_Line
3	Auto_Address_Available		3	AUTO_ADDR_ENABLE
4	Configuration_Active		4	Earth_Fault
5	Normal_Operation_Active		5	EEPROM_OK
6	APF		6	EFD-ENABLE
7	Offline_Ready		7	Reserved

Table 9- 32 Meaning of the flags

Flag	Meaning
Config_OK	The flag is set when the CONFIGURED configuration and the ACTUAL configuration match.
LDS.0	The flag is set when an AS-i slave with address 0 is present. (List of Detected Slaves)
Auto_Address_Assign	The flag is set if automatic address programming is possible. This means that AUTO_ADDR_ENABLE = 1 and no "incorrect" AS-i slaves are connected to AS-Interface.
Auto_Address_Available	The flag is set if automatic address programming can be performed. This means that one AS-i slave has failed.
Configuration_Active	The flag is set in "configuration mode" and reset in "protected operation".
Normal_Operation_Active	The flag is set when the AS-i master is in "protected operation".
APF	The flag is set when the voltage on the AS-i cable is too low (AS-i Power Fail).
Offline_Ready	The flag is set if the offline phase is active.
Periphery_OK	The flag is set if none of the AS-i slaves signal a peripheral fault.
Data_Exchange_Active	The "Data_Exchange_Active" flag is set when cyclic data exchange is in "protected operation".
Off_Line	The flag is set if the "OFFLINE" operating status is to be adopted or has already been adopted.
AUTO_ADDR_ENABLE	The flag indicates whether automatic address programming is disabled (BIT = 0) or enabled (BIT = 1) by the user.
Earth_Fault	The flag is set if a ground fault has been detected on the AS-i cable.
EEPROM_OK	The flag is set if the test of the internal EEPROM was successful.
EFD Disable	The flag indicates whether ground fault detection is enabled (BIT = 0) or disabled (BIT = 1) by the user.

9.4.17 No. B9: Read_overall_configuration

Meaning

This command reads the following data from the AS-i master:

- List of activated AS-i slaves (LAS).

  It specifies which of the connected AS-i slaves are activated
- The current configuration data for the connected AS-i slaves:
  - IO code
  - ID code
  - ID1 code
  - ID2 code
- The current parameters of the AS-i slaves (ACTUAL parameters)
- The current status of the AS-i master (Flag 1, Flag 2)

After commissioning, you can use this command, for example, to determine the configuration of the stations connected to the AS-i cable. You can modify this read-in configuration data if required and store it as the CONFIGURED configuration in the AS-i master with the "Write_overall_configuration" command.

No. BA: Write_overall_configuration (Page 131)

Structure of the job data in the send buffer

Table 9- 33 Structure of the job data in the send buffer

Byte	Meaning
0	Command number: $B9_H$

Structure of the response data in the receive buffer

Table 9- 34 Structure of the response data in the receive buffer

Byte	Meaning							
	Bit 7	Bit 6	Bit 5	Bit 4	Bit 3	Bit 2	Bit 1	Bit 0
0	00_H							
1	00_H							
2	LAS Slave 7(A)	LAS Slave 6(A)	LAS Slave 5(A)	LAS Slave 4(A)	LAS Slave 3(A)	LAS Slave 2(A)	LAS Slave 1(A)	Reserved
3	LAS Slave 15(A)	LAS Slave 14(A)	LAS Slave 13(A)	LAS Slave 12(A)	LAS Slave 11(A)	LAS Slave 10(A)	LAS Slave 9(A)	LAS Slave 8(A)
4	LAS Slave 23(A)	LAS Slave 22(A)	LAS Slave 21(A)	LAS Slave 20(A)	LAS Slave 19(A)	LAS Slave 18(A)	LAS Slave 17(A)	LAS Slave 16(A)
5	LAS Slave 31(A)	LAS Slave 30(A)	LAS Slave 29(A)	LAS Slave 28(A)	LAS Slave 27(A)	LAS Slave 26(A)	LAS Slave 25(A)	LAS Slave 24(A)
6	LAS Slave 7B	LAS Slave 6B	LAS Slave 5B	LAS Slave 4B	LAS Slave 3B	LAS Slave 2B	LAS Slave 1B	Reserved
7	LAS Slave 15B	LAS Slave 14B	LAS Slave 13B	LAS Slave 12B	LAS Slave 11B	LAS Slave 10B	LAS Slave 9B	LAS Slave 8B
8	LAS Slave 23B	LAS Slave 22B	LAS Slave 21B	LAS Slave 20B	LAS Slave 19B	LAS Slave 18B	LAS Slave 17B	LAS Slave 16B
9	LAS Slave 31B	LAS Slave 30B	LAS Slave 29B	LAS Slave 28B	LAS Slave 27B	LAS Slave 26B	LAS Slave 25B	LAS Slave 24B
10	IO code Slave 0				ID_CODE Slave 0			
11	ID1 Slave 0				ID2 Slave 0			
12	IO code Slave 1 / 1A				ID_CODE Slave 1 / 1A			
13	ID1 Slave 1 / 1A				ID2 Slave 1 / 1A			
14	IO code Slave 2 / 2A				ID_CODE Slave 2 / 2A			
15	ID1 Slave 2 / 2A				ID2 Slave 2 / 2A			
16	IO code Slave 3 / 3A				ID_CODE Slave 3 / 3A			
17	ID1 Slave 3 / 3A				ID2 Slave 3 / 3A			
18	IO code Slave 4 / 4A				ID_CODE Slave 4 / 4A			
19	ID1 Slave 4 / 4A				ID2 Slave 4 / 4A			
20	IO code Slave 5 / 5A				ID_CODE Slave 5 / 5A			
21	ID1 Slave 5 / 5A				ID2 Slave 5 / 5A			
22	IO code Slave 6 / 6A				ID_CODE Slave 6 / 6A			
23	ID1 Slave 6 / 6A				ID2 Slave 6 / 6A			
24	IO code Slave 7 / 7A				ID_CODE Slave 7 / 7A			
25	ID1 Slave 7 / 7A				ID2 Slave 7 / 7A			
26	IO code Slave 8 / 8A				ID_CODE Slave 8 / 8A			
27	ID1 Slave 8 / 8A				ID2 Slave 8 / 8A			
28	IO code Slave 9 / 9A				ID_CODE Slave 9 / 9A			
29	ID1 Slave 9 / 9A				ID2 Slave 9 / 9A			
30	IO code Slave 10 / 10A				ID_CODE Slave 10 / 10A			

Byte	Meaning							
	Bit 7	Bit 6	Bit 5	Bit 4	Bit 3	Bit 2	Bit 1	Bit 0
31	ID1 Slave 10 / 10A				ID2 Slave 10 / 10A			
32	IO code Slave 11 / 11A				ID_CODE Slave 11 / 11A			
33	ID1 Slave 11 / 11A				ID2 Slave 11 / 11A			
34	IO code Slave 12 / 12A				ID_CODE Slave 12 / 12A			
35	ID1 Slave 12 / 12A				ID2 Slave 12 / 12A			
36	IO code Slave 13 / 13A				ID_CODE Slave 13 / 13A			
37	ID1 Slave 13 / 13A				ID2 Slave 13 / 13A			
38	IO code Slave 14 / 14A				ID_CODE Slave 14 / 14A			
39	ID1 Slave 14 / 14A				ID2 Slave 14 / 14A			
40	IO code Slave 15 / 15A				ID_CODE Slave 15 / 15A			
41	ID1 Slave 15 / 15A				ID2 Slave 15 / 15A			
42	IO code Slave 16 / 16A				ID_CODE Slave 16 / 16A			
43	ID1 Slave 16 / 16A				ID2 Slave 16 / 16A			
44	IO code Slave 17 / 17A				ID_CODE Slave 17 / 17A			
45	ID1 Slave 17 / 17A				ID2 Slave 17 / 17A			
46	IO code Slave 18 / 18A				ID_CODE Slave 18 / 18A			
47	ID1 Slave 18 / 18A				ID2 Slave 18 / 18A			
48	IO code Slave 19 / 19A				ID_CODE Slave 19 / 19A			
49	ID1 Slave 19 / 19A				ID2 Slave 19 / 19A			
50	IO code Slave 20 / 20A				ID_CODE Slave 20 / 20A			
51	ID1 Slave 20 / 20A				ID2 Slave 20 / 20A			
52	IO code Slave 21 / 21A				ID_CODE Slave 21 / 21A			
53	ID1 Slave 21 / 21A				ID2 Slave 21 / 21A			
54	IO code Slave 22 / 22A				ID_CODE Slave 22 / 22A			
55	ID1 Slave 22 / 22A				ID2 Slave 22 / 22A			
56	IO code Slave 23 / 23A				ID_CODE Slave 23 / 23A			
57	ID1 Slave 23 / 23A				ID2 Slave 23 / 23A			
58	IO code Slave 24 / 24A				ID_CODE Slave 24 / 24A			
59	ID1 Slave 24 / 24A				ID2 Slave 24 / 24A			
60	IO code Slave 25 / 25A				ID_CODE Slave 25 / 25A			
61	ID1 Slave 25 / 25A				ID2 Slave 25 / 25A			
62	IO code Slave 26 / 26A				ID_CODE Slave 26 / 26A			
63	ID1 Slave 26 / 26A				ID2 Slave 26 / 26A			
64	IO code Slave 27 / 27A				ID_CODE Slave 27 / 27A			
65	ID1 Slave 27 / 27A				ID2 Slave 27 / 27A			
66	IO code Slave 28 / 28A				ID_CODE Slave 28 / 28A			
67	ID1 Slave 28 / 28A				ID2 Slave 28 / 28A			
68	IO code Slave 29 / 29A				ID_CODE Slave 29 / 29A			
69	ID1 Slave 29 / 29A				ID2 Slave 29 / 29A			
70	IO code Slave 30 / 30A				ID_CODE Slave 30 / 30A			
71	ID1 Slave 30 / 30A				ID2 Slave 30 / 30A			

Byte	Meaning							
	Bit 7	Bit 6	Bit 5	Bit 4	Bit 3	Bit 2	Bit 1	Bit 0
72	IO code Slave 31 / 31A				ID_CODE Slave 31 / 31A			
73	ID1 Slave 31 / 31A				ID2 Slave 31 / 31A			
74	Reserved				Reserved			
75	Reserved				Reserved			
76	IO code Slave 1B				ID_CODE Slave 1B			
77	ID1 Slave 1B				ID2 Slave 1B			
78	IO code Slave 2B				ID_CODE Slave 2B			
79	ID1 Slave 2B				ID2 Slave 2B			
80	IO code Slave 3B				ID_CODE Slave 3B			
81	ID1 Slave 3B				ID2 Slave 3B			
82	IO code Slave 4B				ID_CODE Slave 4B			
83	ID1 Slave 4B				ID2 Slave 4B			
84	IO code Slave 5B				ID_CODE Slave 5B			
85	ID1 Slave 5B				ID2 Slave 5B			
86	IO code Slave 6B				ID_CODE Slave 6B			
87	ID1 Slave 6B				ID2 Slave 6B			
88	IO code Slave 7B				ID_CODE Slave 7B			
89	ID1 Slave 7B				ID2 Slave 7B			
90	IO code Slave 8B				ID_CODE Slave 8B			
91	ID1 Slave 8B				ID2 Slave 8B			
92	IO code Slave 9B				ID_CODE Slave 9B			
93	ID1 Slave 9B				ID2 Slave 9B			
94	IO code Slave 10B				ID_CODE Slave 10B			
95	ID1 Slave 10B				ID2 Slave 10B			
96	IO code Slave 11B				ID_CODE Slave 11B			
97	ID1 Slave 11B				ID2 Slave 11B			
98	IO code Slave 12B				ID_CODE Slave 12B			
99	ID1 Slave 12B				ID2 Slave 12B			
100	IO code Slave 13B				ID_CODE Slave 13B			
101	ID1 Slave 13B				ID2 Slave 13B			
102	IO code Slave 14B				ID_CODE Slave 14B			
103	ID1 Slave 14B				ID2 Slave 14B			
104	IO code Slave 15B				ID_CODE Slave 15B			
105	ID1 Slave 15B				ID2 Slave 15B			
106	IO code Slave 16B				ID_CODE Slave 16B			
107	ID1 Slave 16B				ID2 Slave 16B			
108	IO code Slave 17B				ID_CODE Slave 17B			
109	ID1 Slave 17B				ID2 Slave 17B			
110	IO code Slave 18B				ID_CODE Slave 18B			
111	ID1 Slave 18B				ID2 Slave 18B			
112	IO code Slave 19B				ID_CODE Slave 19B			

Byte	Meaning							
	Bit 7	Bit 6	Bit 5	Bit 4	Bit 3	Bit 2	Bit 1	Bit 0
113	ID1 Slave 19B				ID2 Slave 19B			
114	IO code Slave 20B				ID_CODE Slave 20B			
115	ID1 Slave 20B				ID2 Slave 20B			
116	IO code Slave 21B				ID_CODE Slave 21B			
117	ID1 Slave 21B				ID2 Slave 21B			
118	IO code Slave 22B				ID_CODE Slave 22B			
119	ID1 Slave 22B				ID2 Slave 22B			
120	IO code Slave 23B				ID_CODE Slave 23B			
121	ID1 Slave 23B				ID2 Slave 23B			
122	IO code Slave 24B				ID_CODE Slave 24B			
123	ID1 Slave 24B				ID2 Slave 24B			
124	IO code Slave 25B				ID_CODE Slave 25B			
125	ID1 Slave 25B				ID2 Slave 25B			
126	IO code Slave 26B				ID_CODE Slave 26B			
127	ID1 Slave 26B				ID2 Slave 26B			
128	IO code Slave 27B				ID_CODE Slave 27B			
129	ID1 Slave 27B				ID2 Slave 27B			
130	IO code Slave 28B				ID_CODE Slave 28B			
131	ID1 Slave 28B				ID2 Slave 28B			
132	IO code Slave 29B				ID_CODE Slave 29B			
133	ID1 Slave 29B				ID2 Slave 29B			
134	IO code Slave 30B				ID_CODE Slave 30B			
135	ID1 Slave 30B				ID2 Slave 30B			
136	IO code Slave 31B				ID_CODE Slave 31B			
137	ID1 Slave 31B				ID2 Slave 31B			
138	Reserved				Parameter Slave 1 / 1A			
139	Parameter Slave 2 / 2A				Parameter Slave 3 / 3A			
140	Parameter Slave 4 / 4A				Parameter Slave 5 / 5A			
141	Parameter Slave 6 / 6A				Parameter Slave 7 / 7A			
142	Parameter Slave 8 / 8A				Parameter Slave 9 / 9A			
143	Parameter Slave 10 / 10A				Parameter Slave 11 / 11A			
144	Parameter Slave 12 / 12A				Parameter Slave 13 / 13A			
145	Parameter Slave 14 / 14A				Parameter Slave 15 / 15A			
146	Parameter Slave 16 / 16A				Parameter Slave 17 / 17A			
147	Parameter Slave 18 / 18A				Parameter Slave 19 / 19A			
148	Parameter Slave 20 / 20A				Parameter Slave 21 / 21A			
149	Parameter Slave 22 / 22A				Parameter Slave 23 / 23A			
150	Parameter Slave 24 / 24A				Parameter Slave 25 / 25A			
151	Parameter Slave 26 / 26A				Parameter Slave 27 / 27A			
152	Parameter Slave 28 / 28A				Parameter Slave 29 / 29A			
153	Parameter Slave 30 / 30A				Parameter Slave 31 / 31A			

Byte	Meaning							
	Bit 7	Bit 6	Bit 5	Bit 4	Bit 3	Bit 2	Bit 1	Bit 0
154	Reserved				Parameter Slave 1B			
155	Parameter Slave 2B				Parameter Slave 3B			
156	Parameter Slave 4B				Parameter Slave 5B			
157	Parameter Slave 6B				Parameter Slave 7B			
158	Parameter Slave 8B				Parameter Slave 9B			
159	Parameter Slave 10B				Parameter Slave 11B			
160	Parameter Slave 12B				Parameter Slave 13B			
161	Parameter Slave 14B				Parameter Slave 15B			
162	Parameter Slave 16B				Parameter Slave 17B			
163	Parameter Slave 18B				Parameter Slave 19B			
164	Parameter Slave 20B				Parameter Slave 21B			
165	Parameter Slave 22B				Parameter Slave 23B			
166	Parameter Slave 24B				Parameter Slave 25B			
167	Parameter Slave 26B				Parameter Slave 27B			
168	Parameter Slave 28B				Parameter Slave 29B			
169	Parameter Slave 30B				Parameter Slave 31B			
170	Flag 1							
171	Flag 2							
172 … 218	Reserved							

Table 9- 35 Structure of flag 1 and flag 2

Flag 1			Flag 2	
Bit number	Meaning		Bit number	Meaning
0	Config_OK		0	Periphery_OK
1	LDS.0		1	Data_Exchange_Active
2	Auto_Address_Assign		2	Off_Line
3	Auto_Address_Available		3	AUTO_ADDR_ENABLE
4	Configuration_Active		4	Earth_Fault
5	Normal_Operation_Active		5	EEPROM_OK
6	APF		6	EFD-ENABLE
7	Offline_Ready		7	Reserved

For the meanings of flags, refer to Chapter:

No. B0: Get_LPS, Get_LAS, Get_LDS, Get_Flags (Page 122)

9.4.18 No. BA: Write_overall_configuration

Meaning

This command transfers the desired overall configuration of AS-Interface to the AS-i master and saves it as the CONFIGURED configuration in the non-volatile EEPROM. This configures the AS-i master.

When this command is executed, the AS-i master changes to the offline phase and then switches back over to "normal operation". The AS-i master restarts.

The "Protected operation" or "Configuration mode" operating mode of the AS-i master after execution of the command is determined by the "Configuration_Active" flag (see Table "Structure of Flag 1 and Flag 2").

This command is permissible both in "Protected operation" and "Configuration mode.

Note

Configuration data are overwritten

If you configure the AS-i slaves using *STEP 7*, there is normally no need to use the command described here. If you have configured proxy slaves, you can specify the configuration data of the proxy slaves with this command. To avoid the offline changeover, the configuration data of the proxy slaves can be specified preferentially with the "No. D0: Set_Configuration_Online (Page 159)" command.

If you use this command, you will overwrite the corresponding configuration data that resulted from configuring the AS-i master using the "SET" button or configuring using *STEP 7*.

Specifically, the following data are transferred:

- List of configured AS-i slaves

  This specifies which AS-i slaves are permitted to be activated by the AS-i master in "protected operation".

- List of configuration data.

  This specifies the ID codes and the IO code that the connected AS-i slaves must have.

- The list of the AS-i slave parameters that have been configured in the AS-i master and stored in non-volatile memory. These parameters are transferred to the AS-i slaves when the AS-i master starts up.
- The flags that determine the operating state of the AS-i master after startup.

The AS-i master parameterizes the AS-i slaves itself in the case of AS-i slaves that comply with standard profile 7.4. For slaves in accordance with standard profile 7.4, the AS-i master ignores the parameter values specified in the command.

NOTICE
Note the size of the I/O image If you have configured the AS-i slaves in *STEP 7*, the size of the I/O image of the individual slaves is defined using *STEP 7*. When using this command, ensure that the I/O image of the individual slaves corresponds to the slaves configured using the command. If the size of the I/O image does not match, only the lower-order data will be transferred. The data that do not fit into the image are truncated or are filled with substitute value "0" in the case of digital values and with substitute value 7FFF (Hex) in the case of analog values.

Structure of the job data in the send buffer

Table 9- 36 Structure of the job data in the send buffer

Byte	Meaning							
	Bit 7	Bit 6	Bit 5	Bit 4	Bit 3	Bit 2	Bit 1	Bit 0
0	Command number: BA_H							
1	00_H							
2	LPS Slave 7(A)	LPS Slave 6(A)	LPS Slave 5(A)	LPS Slave 4(A)	LPS Slave 3(A)	LPS Slave 2(A)	LPS Slave 1(A)	0
3	LPS Slave 15(A)	LPS Slave 14(A)	LPS Slave 13(A)	LPS Slave 12(A)	LPS Slave 11(A)	LPS Slave 10(A)	LPS Slave 9(A)	LPS Slave 8(A)
4	LPS Slave 23(A)	LPS Slave 22(A)	LPS Slave 21(A)	LPS Slave 20(A)	LPS Slave 19(A)	LPS Slave 18(A)	LPS Slave 17(A)	LPS Slave 16(A)
5	LPS Slave 31(A)	LPS Slave 30(A)	LPS Slave 29(A)	LPS Slave 28(A)	LPS Slave 27(A)	LPS Slave 26(A)	LPS Slave 25(A)	LPS Slave 24(A)
6	LPS Slave 7B	LPS Slave 6B	LPS Slave 5B	LPS Slave 4B	LPS Slave 3B	LPS Slave 2B	LPS Slave 1B	0
7	LPS Slave 15B	LPS Slave 14B	LPS Slave 13B	LPS Slave 12B	LPS Slave 11B	LPS Slave 10B	LPS Slave 9B	LPS Slave 8B
8	LPS Slave 23B	LPS Slave 22B	LPS Slave 21B	LPS Slave 20B	LPS Slave 19B	LPS Slave 18B	LPS Slave 17B	LPS Slave 16B
9	LPS Slave 31B	LPS Slave 30B	LPS Slave 29B	LPS Slave 28B	LPS Slave 27B	LPS Slave 26B	LPS Slave 25B	LPS Slave 24B
10	IO code Slave 0				ID_CODE Slave 0			
11	ID1 Slave 0				ID2 Slave 0			
12	IO code Slave 1 / 1A				ID_CODE Slave 1 / 1A			
13	ID1 Slave 1 / 1A				ID2 Slave 1 / 1A			
14	IO code Slave 2 / 2A				ID_CODE Slave 2 / 2A			
15	ID1 Slave 2 / 2A				ID2 Slave 2 / 2A			
16	IO code Slave 3 / 3A				ID_CODE Slave 3 / 3A			

Byte	Meaning							
	Bit 7	Bit 6	Bit 5	Bit 4	Bit 3	Bit 2	Bit 1	Bit 0
17	ID1 Slave 3 / 3A				ID2 Slave 3 / 3A			
18	IO code Slave 4 / 4A				ID_CODE Slave 4 / 4A			
19	ID1 Slave 4 / 4A				ID2 Slave 4 / 4A			
20	IO code Slave 5 / 5A				ID_CODE Slave 5 / 5A			
21	ID1 Slave 5 / 5A				ID2 Slave 5 / 5A			
22	IO code Slave 6 / 6A				ID_CODE Slave 6 / 6A			
23	ID1 Slave 6 / 6A				ID2 Slave 6 / 6A			
24	IO code Slave 7 / 7A				ID_CODE Slave 7 / 7A			
25	ID1 Slave 7 / 7A				ID2 Slave 7 / 7A			
26	IO code Slave 8 / 8A				ID_CODE Slave 8 / 8A			
27	ID1 Slave 8 / 8A				ID2 Slave 8 / 8A			
28	IO code Slave 9 / 9A				ID_CODE Slave 9 / 9A			
29	ID1 Slave 9 / 9A				ID2 Slave 9 / 9A			
30	IO code Slave 10 / 10A				ID_CODE Slave 10 / 10A			
31	ID1 Slave 10 / 10A				ID2 Slave 10 / 10A			
32	IO code Slave 11 / 11A				ID_CODE Slave 11 / 11A			
33	ID1 Slave 11 / 11A				ID2 Slave 11 / 11A			
34	IO code Slave 12 / 12A				ID_CODE Slave 12 / 12A			
35	ID1 Slave 12 / 12A				ID2 Slave 12 / 12A			
36	IO code Slave 13 / 13A				ID_CODE Slave 13 / 13A			
37	ID1 Slave 13 / 13A				ID2 Slave 13 / 13A			
38	IO code Slave 14 / 14A				ID_CODE Slave 14 / 14A			
39	ID1 Slave 14 / 14A				ID2 Slave 14 / 14A			
40	IO code Slave 15 / 15A				ID_CODE Slave 15 / 15A			
41	ID1 Slave 15 / 15A				ID2 Slave 15 / 15A			
42	IO code Slave 16 / 16A				ID_CODE Slave 16 / 16A			
43	ID1 Slave 16 / 16A				ID2 Slave 16 / 16A			
44	IO code Slave 17 / 17A				ID_CODE Slave 17 / 17A			
45	ID1 Slave 17 / 17A				ID2 Slave 17 / 17A			
46	IO code Slave 18 / 18A				ID_CODE Slave 18 / 18A			
47	ID1 Slave 18 / 18A				ID2 Slave 18 / 18A			
48	IO code Slave 19 / 19A				ID_CODE Slave 19 / 19A			
49	ID1 Slave 19 / 19A				ID2 Slave 19 / 19A			
50	IO code Slave 20 / 20A				ID_CODE Slave 20 / 20A			
51	ID1 Slave 20 / 20A				ID2 Slave 20 / 20A			
52	IO code Slave 21 / 21A				ID_CODE Slave 21 / 21A			
53	ID1 Slave 21 / 21A				ID2 Slave 21 / 21A			
54	IO code Slave 22 / 22A				ID_CODE Slave 22 / 21A			
55	ID1 Slave 22 / 22A				ID2 Slave 22 / 22A			
56	IO code Slave 23 / 23A				ID_CODE Slave 23 / 23A			
57	ID1 Slave 23 / 23A				ID2 Slave 23 / 23A			

Byte	Meaning							
	Bit 7	Bit 6	Bit 5	Bit 4	Bit 3	Bit 2	Bit 1	Bit 0
58	IO code Slave 24 / 24A				ID_CODE Slave 24 / 24A			
59	ID1 Slave 24 / 24A				ID2 Slave 24 / 24A			
60	IO code Slave 25 / 25A				ID_CODE Slave 25 / 25A			
61	ID1 Slave 25 / 25A				ID2 Slave 25 / 25A			
62	IO code Slave 26 / 26A				ID_CODE Slave 26 / 26A			
63	ID1 Slave 26 / 26A				ID2 Slave 26 / 26A			
64	IO code Slave 27 / 27A				ID_CODE Slave 27 / 27A			
65	ID1 Slave 27 / 27A				ID2 Slave 27 / 27A			
66	IO code Slave 28 / 28A				ID_CODE Slave 28 / 28A			
67	ID1 Slave 28 / 28A				ID2 Slave 28 / 28A			
68	IO code Slave 29 / 29A				ID_CODE Slave 29 / 29A			
69	ID1 Slave 29 / 29A				ID2 Slave 29 / 29A			
70	IO code Slave 30 / 30A				ID_CODE Slave 30 / 30A			
71	ID1 Slave 30 / 30A				ID2 Slave 30 / 30A			
72	IO code Slave 31 / 31A				ID_CODE Slave 31 / 31A			
73	ID1 Slave 31 / 31A				ID2 Slave 31 / 31A			
74	0				0			
75	0				0			
76	IO code Slave 1B				ID_CODE Slave 1B			
77	ID1 Slave 1B				ID2 Slave 1B			
78	IO code Slave 2B				ID_CODE Slave 2B			
79	ID1 Slave 2B				ID2 Slave 2B			
80	IO code Slave 3B				ID_CODE Slave 3B			
81	ID1 Slave 3B				ID2 Slave 3B			
82	IO code Slave 4B				ID_CODE Slave 4B			
83	ID1 Slave 4B				ID2 Slave 4B			
84	IO code Slave 5B				ID_CODE Slave 5B			
85	ID1 Slave 5B				ID2 Slave 5B			
86	IO code Slave 6B				ID_CODE Slave 6B			
87	ID1 Slave 6B				ID2 Slave 6B			
88	IO code Slave 7B				ID_CODE Slave 7B			
89	ID1 Slave 7B				ID2 Slave 7B			
90	IO code Slave 8B				ID_CODE Slave 8B			
91	ID1 Slave 8B				ID2 Slave 8B			
92	IO code Slave 9B				ID_CODE Slave 9B			
93	ID1 Slave 9B				ID2 Slave 9B			
94	IO code Slave 10B				ID_CODE Slave 10B			
95	ID1 Slave 10B				ID2 Slave 10B			
96	IO code Slave 11B				ID_CODE Slave 11B			
97	ID1 Slave 11B				ID2 Slave 11B			
98	IO code Slave 12B				ID_CODE Slave 12B			

Byte	Meaning							
	Bit 7	Bit 6	Bit 5	Bit 4	Bit 3	Bit 2	Bit 1	Bit 0
99	ID1 Slave 12B				ID2 Slave 12B			
100	IO code Slave 13B				ID_CODE Slave 13B			
101	ID1 Slave 13B				ID2 Slave 13B			
102	IO code Slave 14B				ID_CODE Slave 14B			
103	ID1 Slave 14B				ID2 Slave 14B			
104	IO code Slave 15B				ID_CODE Slave 15B			
105	ID1 Slave 15B				ID2 Slave 15B			
106	IO code Slave 16B				ID_CODE Slave 16B			
107	ID1 Slave 16B				ID2 Slave 16B			
108	IO code Slave 17B				ID_CODE Slave 17B			
109	ID1 Slave 17B				ID2 Slave 17B			
110	IO code Slave 18B				ID_CODE Slave 18B			
111	ID1 Slave 18B				ID2 Slave 18B			
112	IO code Slave 19B				ID_CODE Slave 19B			
113	ID1 Slave 19B				ID2 Slave 19B			
114	IO code Slave 20B				ID_CODE Slave 20B			
115	ID1 Slave 20B				ID2 Slave 20B			
116	IO code Slave 21B				ID_CODE Slave 21B			
117	ID1 Slave 21B				ID2 Slave 21B			
118	IO code Slave 22B				ID_CODE Slave 22B			
119	ID1 Slave 22B				ID2 Slave 22B			
120	IO code Slave 23B				ID_CODE Slave 23B			
121	ID1 Slave 23B				ID2 Slave 23B			
122	IO code Slave 24B				ID_CODE Slave 24B			
123	ID1 Slave 24B				ID2 Slave 24B			
124	IO code Slave 25B				ID_CODE Slave 25B			
125	ID1 Slave 25B				ID2 Slave 25B			
126	IO code Slave 26B				ID_CODE Slave 26B			
127	ID1 Slave 26B				ID2 Slave 26B			
128	IO code Slave 27B				ID_CODE Slave 27B			
129	ID1 Slave 27B				ID2 Slave 27B			
130	IO code Slave 28B				ID_CODE Slave 28B			
131	ID1 Slave 28B				ID2 Slave 28B			
132	IO code Slave 29B				ID_CODE Slave 29B			
133	ID1 Slave 29B				ID2 Slave 29B			
134	IO code Slave 30B				ID_CODE Slave 30B			
135	ID1 Slave 30B				ID2 Slave 30B			
136	IO code Slave 31B				ID_CODE Slave 31B			
137	ID1 Slave 31B				ID2 Slave 31B			
138	0				Parameter Slave 1 / 1A			
139	Parameter Slave 2 / 2A				Parameter Slave 3 / 3A			

Byte	Meaning							
	Bit 7	Bit 6	Bit 5	Bit 4	Bit 3	Bit 2	Bit 1	Bit 0
140	Parameter Slave 4 / 4A				Parameter Slave 5 / 5A			
141	Parameter Slave 6 / 6A				Parameter Slave 7 / 7A			
142	Parameter Slave 8 / 8A				Parameter Slave 9 / 9A			
143	Parameter Slave 10 / 10A				Parameter Slave 11 / 11A			
144	Parameter Slave 12 / 12A				Parameter Slave 13 / 13A			
145	Parameter Slave 14 / 14A				Parameter Slave 15 / 15A			
146	Parameter Slave 16 / 16A				Parameter Slave 17 / 17A			
147	Parameter Slave 18 / 18A				Parameter Slave 19 / 19A			
148	Parameter Slave 20 / 20A				Parameter Slave 21 / 21A			
149	Parameter Slave 22 / 22A				Parameter Slave 23 / 23A			
150	Parameter Slave 24 / 24A				Parameter Slave 25 / 25A			
151	Parameter Slave 26 / 26A				Parameter Slave 27 / 27A			
152	Parameter Slave 28 / 28A				Parameter Slave 29 / 29A			
153	Parameter Slave 30 / 30A				Parameter Slave 31 / 31A			
154	0				Parameter Slave 1B			
155	Parameter Slave 2B				Parameter Slave 3B			
156	Parameter Slave 4B				Parameter Slave 5B			
157	Parameter Slave 6B				Parameter Slave 7B			
158	Parameter Slave 8B				Parameter Slave 9B			
159	Parameter Slave 10B				Parameter Slave 11B			
160	Parameter Slave 12B				Parameter Slave 13B			
161	Parameter Slave 14B				Parameter Slave 15B			
162	Parameter Slave 16B				Parameter Slave 17B			
163	Parameter Slave 18B				Parameter Slave 19B			
164	Parameter Slave 20B				Parameter Slave 21B			
165	Parameter Slave 22B				Parameter Slave 23B			
166	Parameter Slave 24B				Parameter Slave 25B			
167	Parameter Slave 26B				Parameter Slave 27B			
168	Parameter Slave 28B				Parameter Slave 29B			
169	Parameter Slave 30B				Parameter Slave 31B			
170	Flag 1							
171	Flag 2							

Table 9- 37 Structure of flag 1 and flag 2

Flag 1			Flag 2	
Bit number	Meaning		Bit number	Meaning
0	Config_OK		0	Periphery_OK
1	LDS.0		1	Data_Exchange_Active
2	Auto_Address_Assign		2	Off_Line
3	Auto_Address_Available		3	AUTO_ADDR_ENABLE 1)
4	Configuration_Active 1)		4	Earth_Fault
5	Normal_Operation_Active		5	EEPROM_OK
6	APF		6	EFD-ENABLE
7	Offline_Ready		7	Reserved

1) The "Configuration_Active" and "AUTO_ADDR_ENABLE" flags change the operating mode of the AS-i master. The values of the remaining flags are insignificant for the command "Set_LPS, Set_PCD, Set_PP, Set_Flags" and cannot be modified in the AS-i master by this call.

Configuration_Active	"0" means: After the command has been executed, the AS-i master will switch to "protected operation". "1" means: The AS-i master runs in "configuration mode" after completion of the job.
AUTO_ADDR_ENABLE	"0" means: Automatic address programming is disabled. "1" means: Automatic address programming is enabled.

For the meanings of flags, refer to Chapter:

No. B0: Get_LPS, Get_LAS, Get_LDS, Get_Flags (Page 122)

9.4.19 No. 3C: Set_PI

Meaning

This command passes parameter values for all AS-i°slaves to the AS-i master. The AS-i master only sends a parameter call to the slaves whose parameter value passed in the command deviates from the ACTUAL parameter value of the slave. If all parameter values passed in the command are identical to the current parameter values (ACT parameters) of the AS-i slaves, no parameters are passed from the AS-i master to the AS-i slaves.

Control via the function code

The response of the command can be set using the value of the "function code" in byte 1 of the job data (firmware V1.1.16 and higher)

- As of firmware V1.1.16, the function code is defined for values 0, 1, and 2.
- For firmware versions up to and including V1.1.15, the function code is only defined for the value 0.

Other values are not permissible.

The function code determines the response of the command as described below.

The new parameter values are transferred via 3 subfunctions in byte 1 with different responses.

Function code = 0:

The passed parameter values are stored in the non-volatile EEPROM of the CM AS-i master ST.

If the passed parameter value of at least one AS-i slave differs from the parameter value previously active in the slave, the AS-i master powers up on the AS-i bus (offline-online transition). This resets and restarts all slaves with the parameter values currently stored in the EEPROM.

If there are no changes in the passed parameter values, the master does not power up.

Function code = 1 (firmware V1.1.16 and higher):

The passed parameter values are only stored in the volatile memory of the CM AS-i master ST module, i.e. the EEPROM remains unchanged.

For every AS-i slave, the AS-i master checks whether the passed parameter value differs from the parameter value previously active in the slave (ACT parameter). If it does differ, the AS-i master calls a parameter from that AS-i slave and returns a new parameter value.

The AS-i master does not call a parameter from the AS-i slave if the passed parameter value is identical to the parameter value previously active in the slave.

The AS-i master does not perform a power-up on the AS-i bus.

The command is considered completed without errors when the parameter values have been passed to the master. Subsequently, the parameters are passed to the slaves in parameter calls with no time monitoring.

Function code = 2 (firmware V1.1.16 and higher):

The passed parameter values are stored in the non-volatile EEPROM of the CM AS-i master ST.

For every AS-i slave, the AS-i master checks whether the passed parameter value differs from the parameter value previously active in the slave (ACT parameter). If it does differ, the AS-i master calls a parameter from that AS-i slave and returns a new parameter value.

The AS-i master does not call a parameter from the AS-i slave if the passed parameter value is identical to the parameter value previously active in the slave.

The AS-i master does not perform a power-up on the AS-i bus.

The command is considered completed without errors when the parameter values have been passed to the master. Subsequently, the parameters are passed to the slaves in parameter calls with no time monitoring.

Note

Limited number of write accesses to an EEPROM

If function code = 0 and function code = 2, the EEPROM is written to. Because the number of write accesses to an EEPROM is in principle limited (100 000 write accesses), these function codes should not be used in cyclic mode. Write access always means the actual change of a value in the EEPROM.

Structure of the job data in the send buffer

Table 9- 38 Structure of the job data

Byte	Meaning							
	Bit 7	Bit 6	Bit 5	Bit 4	Bit 3	Bit 2	Bit 1	Bit 0
0	Command number: $3C_H$							
1	Function code							
2	0				Parameter value slave 1 / 1A			
3	Parameter value slave 2 / 2A				Parameter value slave 3 / 3A			
4	Parameter value slave 4 / 4A				Parameter value slave 5 / 5A			
5	Parameter value slave 6 / 6A				Parameter value slave 7 / 7A			
6	Parameter value slave 8 / 8A				Parameter value slave 9 / 9A			
7	Parameter value slave 10 / 10A				Parameter value slave 11 / 11A			
8	Parameter value slave 12 / 12A				Parameter value slave 13 / 13A			
9	Parameter value slave 14 / 14A				Parameter value slave 15 / 15A			
10	Parameter value slave 16 / 16A				Parameter value slave 17 / 17A			
11	Parameter value slave 18 / 18A				Parameter value slave 19 / 19A			
12	Parameter value slave 20 / 20A				Parameter value slave 21 / 21A			
13	Parameter value slave 22 / 22A				Parameter value slave 23 / 23A			
14	Parameter value slave 24 / 24A				Parameter value slave 25 / 25A			
15	Parameter value slave 26 / 26A				Parameter value slave 27 / 27A			
16	Parameter value slave 28 / 28A				Parameter value slave 29 / 29A			
17	Parameter value slave 30 / 30A				Parameter value slave 31 / 31A			
18	0				Parameter value slave 1B			
19	Parameter value slave 2B				Parameter value slave 3B			
20	Parameter value slave 4B				Parameter value slave 5B			
21	Parameter value slave 6B				Parameter value slave 7B			
22	Parameter value slave 8B				Parameter value slave 9B			
23	Parameter value slave 10B				Parameter value slave 11B			
24	Parameter value slave 12B				Parameter value slave 13B			
25	Parameter value slave 14B				Parameter value slave 15B			
26	Parameter value slave 16B				Parameter value slave 17B			
27	Parameter value slave 18B				Parameter value slave 19B			
28	Parameter value slave 20B				Parameter value slave 21B			
29	Parameter value slave 22B				Parameter value slave 23B			
30	Parameter value slave 24B				Parameter value slave 25B			
31	Parameter value slave 26B				Parameter value slave 27B			
32	Parameter value slave 28B				Parameter value slave 29B			
33	Parameter value slave 30B				Parameter value slave 31B			

9.4.20 No. 33: AS-i Parameter Echolist

Meaning

This command returns the parameter echo values of all AS-i slaves. The parameter echo of an AS-i slave originates in the last parameter call that was sent to this AS-i slave. The AS-i slave can provide any parameter echo value. As a general rule, the returned parameter echo value is not a "mirror image" of the parameter value that is sent by the master to the slave. If necessary, refer to the documentation of the AS-i slave to ascertain whether the echo value has a special meaning.

Structure of the job data in the send buffer

Table 9- 39 Structure of the job data in the send buffer

Byte	Meaning
0	Command number: 33_H
1	00_H

Structure of the reply data in the receive buffer f(ParEcho = parameter echo)

Table 9- 40 Structure of the job data in the receive buffer

Byte	Meaning							
	Bit 7	Bit 6	Bit 5	Bit 4	Bit 3	Bit 2	Bit 1	Bit 0
0	Reserved				Par.Echo Slave 1			
1	Par.Echo Slave 2				Par.Echo Slave 3			
2	Par.Echo Slave 4				Par.Echo Slave 5			
3	Par.Echo Slave 6				Par.Echo Slave 7			
4	Par.Echo Slave 8				Par.Echo Slave 9			
5	Par.Echo Slave 10				Par.Echo Slave 11			
6	Par.Echo Slave 12				Par.Echo Slave 13			
7	Par.Echo Slave 14				Par.Echo Slave 15			
8	Par.Echo Slave 16				Par.Echo Slave 17			
9	Par.Echo Slave 18				Par.Echo Slave 19			
10	Par.Echo Slave 20				Par.Echo Slave 21			
11	Par.Echo Slave 22				Par.Echo Slave 23			
12	Par.Echo Slave 24				Par.Echo Slave 25			
13	Par.Echo Slave 26				Par.Echo Slave 27			
14	Par.Echo Slave 28				Par.Echo Slave 29			
15	Par.Echo Slave 30				Par.Echo Slave 31			
16	Reserved				Par.Echo Slave 1B			
17	Par.Echo Slave 2B				Par.Echo Slave 3B			
18	Par.Echo Slave 4B				Par.Echo Slave 5B			

Byte	Meaning							
	Bit 7	Bit 6	Bit 5	Bit 4	Bit 3	Bit 2	Bit 1	Bit 0
19	Par.Echo Slave 6B				Par.Echo Slave 7B			
20	Par.Echo Slave 8B				Par.Echo Slave 9B			
21	Par.Echo Slave 10B				Par.Echo Slave 11B			
22	Par.Echo Slave 12B				Par.Echo Slave 13B			
23	Par.Echo Slave 14B				Par.Echo Slave 15B			
24	Par.Echo Slave 16B				Par.Echo Slave 17B			
25	Par.Echo Slave 18B				Par.Echo Slave 19B			
26	Par.Echo Slave 20B				Par.Echo Slave 21B			
27	Par.Echo Slave 22B				Par.Echo Slave 23B			
28	Par.Echo Slave 24B				Par.Echo Slave 25B			
29	Par.Echo Slave 26B				Par.Echo Slave 27B			
30	Par.Echo Slave 28B				Par.Echo Slave 29B			
31	Par.Echo Slave 30B				Par.Echo Slave 31B			

9.4.21 No. 44: Read_Write_CTT2_String

Meaning

This command sends a CTT2 request according to the AS-i slave profile "CombinedTransactionType2" to the AS-i master with a byte string. The master forwards the string bytes to the AS-i slave address specified in the send buffer.

This command transfers a send buffer with up to 222 bytes to the AS-i master. The AS-i master calculates the actual number of string bytes to be sent to the AS-i slave from byte 2 of the send buffer.

The addressed AS-i slave answers the CTT2 request with a CTT2 response. The AS-i master communicates this response as a byte string in the receive buffer. The strings are transmitted by the AS-i master with the response.

The structure of the CTT2 request or CTT2 response (code, index, etc.) starts with string byte 1 in each case. You will find details about this in the respective AS-i slave description.

Note

While transmission of the strings is being executed on AS-i, there is no cyclic data transfer with the addressed AS-i slave. The type of protocol used means that transfer of up to 200 bytes can take up to half a minute.

Structure of the job data in the send buffer

Table 9- 41 Structure of the job data in the send buffer

Byte	Meaning
0	Command number: 44_H
1	Slave address
2	Number of string bytes
3	String byte 1
4	String byte 2
…	—
n + 1	String byte n-1
n + 2	String byte n

Maximum value for n = 220

Structure of the response data in the receive buffer

Table 9- 42 Structure of the response data in the receive buffer

Byte	Meaning
0	Number of string bytes
1	String byte 1
2	String byte 2
…	…
m - 1	String byte m - 1
m	String byte m

Maximum value for m = 220

9.4.22 No. 14: Read_Version

Meaning

This command reads the version ID for the firmware of the AS-i master.

Structure of the job data in the send buffer

Table 9- 43 Structure of the job data in the send buffer

Byte	Meaning
0	Command number: 14_H

Structure of the response data in the receive buffer

Table 9- 44 Structure of the response data in the receive buffer

Byte	Meaning
0 … 31	Versions string [1)]

1) "Siemens AG CM ASi M V aa.bb.cc.dd"

9.4.23 No. 17: Read ID_Code

Significance

This command reads the ID code of an AS-i slave directly over the AS-i cable.

Structure of the job data in the send buffer

Table 9- 45 Structure of the job data in the send buffer

Byte	Significance
0	Command number: 17_H
1	Slave address

Structure of the reply data in the receive buffer

Table 9- 46 Structure of the reply data in the receive buffer

Byte	Significance			
	Bit 7	Bit 4	Bit 3	Bit 0
0	Reserved		ID code	

9.4.24 No. 37: Read_ID1-Code

Meaning

This command reads the ID1 code of an AS-i slave directly over the AS-i cable.

Structure of the job data in the send buffer

Table 9- 47 Structure of the job data in the send buffer

Byte	Meaning
0	Command number: 37_H
1	Slave address

Structure of the response data in the receive buffer

Table 9- 48 Structure of the response data in the receive buffer

Byte	Meaning			
	Bit 7	Bit 4	Bit 3	Bit 0
0	Reserved		ID1 code	

9.4.25 No. 3F: Write ID1-Code

Meaning

This command writes the ID1 code of an AS-i slave with the address "0" directly over the AS-i cable.

The AS-i master forwards the ID1 code to the AS-i slave without a plausibility check.

Structure of the job data in the send buffer

Table 9- 49 Structure of the job data in the send buffer

Byte	Meaning	
0	Command number: $3F_H$	
1	Not relevant	ID1 code

9.4.26 No. 38: Read_ID2-Code

Meaning

This command reads the ID2 code of an AS-i slave directly over the AS-i cable.

Structure of the job data in the send buffer

Table 9- 50 Structure of the job data in the send buffer

Byte	Meaning
0	Command number: 38_H
1	Slave address

Structure of the response data in the receive buffer

Table 9- 51 Structure of the response data in the receive buffer

Byte	Meaning			
	Bit 7	Bit 4	Bit 3	Bit 0
0	Reserved		ID2 code	

9.4.27 No. 18: Read_IO-Code

Meaning

This command reads the IO code of an AS-i slave directly over the AS-i cable.

Structure of the job data in the send buffer

Table 9- 52 Structure of the job data in the send buffer

Byte	Meaning
0	Command number: 18_H
1	Slave address

Structure of the response data in the receive buffer

Table 9- 53 Structure of the response data in the receive buffer

Byte	Meaning			
	Bit 7	Bit 4	Bit 3	Bit 0
0	Reserved		IO code	

9.4.28 No. BE: Get_LPF

Meaning

This command reads the list of I/O faults (periphery faults) (LPF) signaled by the AS-i slaves from the AS-i master. The AS-i master updates the LPF cyclically. Refer to the description of the AS-i slave to learn whether the slave can detect a fault in the connected I/O, e.g. wire break, and when it signals the fault.

Structure of the job data in the send buffer

Table 9- 54 Structure of the job data in the send buffer

Byte	Meaning
0	Command number: BE_H

Structure of the responses in the receive buffer

Table 9- 55 Structure of the responses in the receive buffer

Byte	Meaning							
	Bit 7	Bit 6	Bit 5	Bit 4	Bit 3	Bit 2	Bit 1	Bit 0
0	Slave 7(A)	Slave 6(A)	Slave 5(A)	Slave 4(A)	Slave 3(A)	Slave 2(A)	Slave 1(A)	Reserved
1	Slave 15(A)	Slave 14(A)	Slave 13(A)	Slave 12(A)	Slave 11(A)	Slave 10(A)	Slave 9(A)	Slave 8(A)
2	Slave 23(A)	Slave 22(A)	Slave 21(A)	Slave 20(A)	Slave 19(A)	Slave 18(A)	Slave 17(A)	Slave 16(A)
3	Slave 31(A)	Slave 30(A)	Slave 29(A)	Slave 28(A)	Slave 27(A)	Slave 26(A)	Slave 25(A)	Slave 24(A)
4	Slave 7B	Slave 6B	Slave 5B	Slave 4B	Slave 3B	Slave 2B	Slave 1B	Reserved
5	Slave 15B	Slave 14B	Slave 13B	Slave 12B	Slave 11B	Slave 10B	Slave 9B	Slave 8B
6	Slave 23B	Slave 22B	Slave 21B	Slave 20B	Slave 19B	Slave 18B	Slave 17B	Slave 16B
7	Slave 31B	Slave 30B	Slave 29B	Slave 28B	Slave 27B	Slave 26B	Slave 25B	Slave 24B
8 … 13	Reserved							

The bits have the following meanings in the LPF data:

Bit = 0: The slave signals no I/O fault.

Bit = 1: The slave signals I/O fault.

9.4.29 No. 40: Write_Parameter_String

Meaning

This command sends a parameter string in accordance with AS-i slave profile 7.4 to the AS-i master. The master forwards the parameter string to the AS-i slave address specified in the send buffer.

This command transfers a send buffer with up to 223 bytes to the AS-i master. The AS-i master calculates the actual number of parameter bytes to be sent to the AS-i slave from byte 2 of the send buffer.

The AS-i master does not evaluate any other information in the parameter string. It transfers this to the AS-i slave transparently. While transmission of the parameter string is being executed, there is no transfer of user data / analog data with the addressed AS-i slave.

Structure of the job data in the send buffer

Table 9- 56 Structure of the job data in the send buffer

Byte	Meaning
0	Command number: 40_H
1	Slave address
2	Number of parameter bytes
3	Parameter string byte 1
4	Parameter string byte 2
…	…
n + 1	Parameter string byte n - 1
n + 2	Parameter string byte n

Maximum value for n = 220

9.4.30 No. 41: Read_String

Meaning

This command causes the AS-i slave to read a parameter string in accordance with AS-i slave profile 7.4 with the AS-i slave address specified in the send buffer.

The AS-i master supplies up to 221 bytes of response data. The AS-i master signals the actual number of parameter bytes sent by the AS-i slave in Byte 0 of the receive buffer.

If the AS-i slave sends a parameter string longer than 220 bytes, the AS-i master aborts string transfer and terminates the job with an error. The received data is not made available to the job program.

While transmission of the parameter string is being executed, there is no transfer of user data / analog data with the addressed AS-i slave.

Structure of the job data in the send buffer

Table 9- 57 Structure of the job data in the send buffer

Byte	Meaning
0	Command number: 41_H
1	Slave address

Structure of the response data in the receive buffer

Table 9- 58 Structure of the response data in the receive buffer

Byte	Meaning
0	Number of parameter bytes
1	Parameter string byte 1
2	Parameter string byte 2
…	…
n - 1	Parameter string byte n - 1
n	Parameter string byte n

Maximum value for n = 220

9.4.31 No. 42: Read_String

Meaning

This command causes the AS-i slave to read an identification string in accordance with AS-i slave profile 7.4 with the AS-i slave address specified in the send buffer. The AS-i master supplies up to 221 bytes of reply data. The AS-i master signals the actual number of ID bytes sent by the AS-i slave in Byte 0 of the receive buffer.

If the AS-i slave sends an ID string longer than 220 bytes, the AS-i master aborts string transfer and terminates the job with an error. The received data is not made available to the user program.

As long as the transmission of the identification string is running, there is no transfer of user/analog data with the addressed AS-i slave.

Note

In a deviation from normal procedure, this command also transfers the bytes that contain the bits "Follows" and "Valid".

For further details, refer to AS-i slave profile 7.4

Structure of the job data in the send buffer

Table 9- 59 Structure of the job data in the send buffer

Byte	Meaning
0	Command number: 42_H
1	Slave address

Structure of the reply data in the receive buffer

Table 9- 60 Structure of the reply data in the receive buffer

Byte	Meaning
0	Number of ID bytes
1	ID string byte 1
2	ID string byte 2
…	…
n - 1	ID string byte n - 1
n	ID string byte n

Maximum value for n = 220

9.4.32 No. 43: Read_String

Significance

This command causes the AS-i slave to read a diagnostics string in accordance with AS-i slave profile 7.4 with the AS-i slave address specified in the send buffer. The AS-i master supplies up to 221 bytes of reply data. The AS-i master signals the actual number of diagnostics bytes sent by the AS-i slave in Byte 0 of the receive buffer.

If the AS-i slave sends a diagnostics string longer than 220 bytes, the AS-i master aborts string transfer and terminates the job with an error. The received data is not made available to the user program.

While transmission of the diagnostics string is being executed, there is no transfer of user data / analog data with the addressed AS-i slave.

Structure of the job data in the send buffer

Table 9- 61 Structure of the job data in the send buffer

Byte	Significance
0	Command number: 43_H
1	Slave address

Structure of the reply data in the receive buffer

Table 9- 62 Structure of the reply data in the receive buffer

Byte	Significance
0	Number of diagnostics bytes
1	Diagnostic string byte 1
2	Diagnostic string byte 2
…	…
n - 1	Diagnostic string byte n - 1
n	Diagnostic string byte n

Maximum value for n = 220

9.4.33 No. CA: Read_Error_Counter

Note

With Firmware V1.1 or higher, use data record "DS 96 Read AS-i master error counters and status messages (FW V1.1 and higher) (Page 86)" for reading out the error counters. The Read_AS-i_Master_Error_Counters command continues to exist for compatibility reasons.

Meaning

This command reads out error counters that concern the overall AS-i network.

If the AS-i power supply is missing, the overall device fails. This leads to all counters being reset. The counting starts over each time the device is powered up.

For the meaning of the error counters, refer to Table "Table 8-11 Meaning of error counter (Page 86)".

Structure of the job data in the send buffer

Table 9- 63 Structure of the job data in the send buffer

Byte	Meaning
0	Command number: CA_H

Structure of the responses in the receive buffer

Table 9- 64 Structure of the data record

Byte	Meaning	
0	Summation counter: AS-i Power Fail	High byte
1		Low byte
2	Summation counter: Ground fault	High byte
3		Low byte
4	Summation counter: Slave failure	High word, high byte
5		High word, low byte
6		Low word, high byte
7		Low word, low byte
8	Summation counter: Missing slave frame	High word, high byte
9		High word, low byte
10		Low word, high byte
11		Low word, low byte

Byte	Meaning		
12	Summation counter: Erroneous slave frame		High word, high byte
13			High word, low byte
14			Low word, high byte
15			Low word, low byte
16	Summation counter: Slave peripheral fault		High word, high byte
17			High word, low byte
18			Low word, high byte
19			Low word, low byte
20	Summation counter: Slave protocol error (for slaves according to CTT1 ... CTT5)		High word, high byte
21			High word, low byte
22			Low word, high byte
23			Low word, low byte
24	Summation counter: Erroneous master frame		High word, high byte
25			High word, low byte
26			Low word, high byte
27			Low word, low byte
28 … 35	List of count values > 0 (see Table "Structure of bit fields")		
	Bit = 0	Count value = 0 for all error counters of the AS-i address	
	Bit = 1	Count value > 0 for at least one error counter of the AS-i address	
36	Summation counter: Sent master frames, less significant part (MT_CNT_LOW)		High word, high byte
37			High word, low byte
38			Low word, high byte
39			Low word, low byte
40	Summation counter: Sent master frames, more significant part (MT_CNT_HIGH)		High word, high byte
41			High word, low byte
42			Low word, high byte
43			Low word, low byte
44	Summation counter: Sent master frames, factor (MT_CNT_BASE)		High word, high byte
45			High word, low byte
46			Low word, high byte
47			Low word, low byte
48	Reserved		Bit 0 = MADDR
49	Reserved		
50 … 57	List of multiple addressing (see Table "Structure of bit fields")		
	Bit = 0	The AS-i address is assigned once or is not present.	
	Bit = 1	The AS-i address is assigned more than once.	
58 ... 220	Reserved		

The counters are integer values (2 bytes or 4 bytes).

Multiple addressing has been detected for at least one AS-i address on the AS-i cable. This means that multiple slaves have the same AS-i address.

Structure of the bit fields

Byte	Bit 7	Bit 6	Bit 5	Bit 4	Bit 3	Bit 2	Bit 1	Bit 0
0	SLAVE 7/7A	SLAVE 6/6A	SLAVE 5/5A	SLAVE 4/4A	SLAVE 3/3A	SLAVE 2/2A	SLAVE 1/1A	Reserved
1	SLAVE 15/15A	SLAVE 14/14A	SLAVE 13/13A	SLAVE 12/12A	SLAVE 11/11A	SLAVE 10/10A	SLAVE 9/9A	SLAVE 8/8A
2	SLAVE 23/23A	SLAVE 22/22A	SLAVE 21/21A	SLAVE 20/20A	SLAVE 19/19A	SLAVE 18/18A	SLAVE 17/17A	SLAVE 16/16A
3	SLAVE 31/31A	SLAVE 30/30A	SLAVE 29/29A	SLAVE 28/28A	SLAVE 27/27A	SLAVE 26/26A	SLAVE 25/25A	SLAVE 24/24A
4	SLAVE 7B	SLAVE 6B	SLAVE 5B	SLAVE 4B	SLAVE 3B	SLAVE 2B	SLAVE 1B	Reserved
5	SLAVE 15B	SLAVE 14B	SLAVE 13B	SLAVE 12B	SLAVE 11B	SLAVE 10B	SLAVE 9B	SLAVE 8B
6	SLAVE 23B	SLAVE 22B	SLAVE 21B	SLAVE 20B	SLAVE 19B	SLAVE 18B	SLAVE 17B	SLAVE 16B
7	SLAVE 31B	SLAVE 30B	SLAVE 29B	SLAVE 28B	SLAVE 27B	SLAVE 26B	SLAVE 25B	SLAVE 24B

9.4.34 No. CB: Read_and_Delete_AS-i-Master_Error_Counter

Note

With Firmware V1.1 or higher, use data record "DS 97 Read and reset AS-i master error counters (FW V1.1 and higher) (Page 89)" for reading out the error counters. The Read_and_Reset_AS-i_Master_Error_Counters command continues to exist for compatibility reasons.

Meaning

This command functions like the "Read_AS-i-Master_Error_Counter" command. In addition, the AS-i master then sets all error counters to 0.

Structure of the job data in the send buffer

Table 9- 65 Structure of the job data in the send buffer

Byte	Meaning
0	Command number: CB_H

Structure of the responses in the receive buffer

The receive buffer is identical to the receive buffer of the "No. CA: Read_Error_Counter (Page 152)" command.

9.4.35 No. CC: Read_AS-i_error_counter

Note

With Firmware V1.1 or higher, use data records "DS 150 to DS 153 Read AS-i error counters (Page 89)". The Read_AS-i_Slave_Error_Counters command continues to exist for compatibility reasons.

Meaning

This command reads out AS-i slave-specific error counters. For the meaning of the error counters, refer to Section "Table 8-13 Meaning of error counter (Page 90)".

Structure of the job data in the send buffer

Table 9- 66 Structure of the job data in the send buffer

Byte	Meaning
0	Command number: CC_H
1	AS-i slave address

Structure of the responses in the receive buffer

Table 9- 67 Structure of the responses in the receive buffer

Byte	Meaning	
0	Counter: Slave failure	High byte
1		Low byte
2	Counter: Missing slave frame	High byte
3		Low byte
4	Counter: Faulty slave frame	High byte
5		Low byte
6	Counter: Peripheral fault	High byte
7		Low byte
8	Counter: Protocol error	High byte
9		Low byte
10	Counter: Faulty master frame	High byte
11		Low byte
12	Summation counter: Sent master frames, less significant part (MT_CNT_LOW)	High word / high byte
13		High word / low byte
14		Low word / high byte
15		Low word / low byte

Byte	Meaning	
16	Summation counter: Sent master frames, more significant part (MT_CNT_HIGH)	High word / high byte
17		High word / low byte
18		Low word / high byte
19		Low word / low byte
20	Summation counter: Sent master frames, factor (MT_CNT_BASE)	High word / high byte
21		High word / low byte
22		Low word / high byte
23		Low word / low byte
24 … 31	Reserved	

9.4.36 No. CD: Read_and_delete_AS-i_Slave_error_counter

Note

With Firmware V1.1 or higher, use data records "DS 150 to DS 153 Read AS-i error counters (Page 89)" and "DS 154 Delete AS-i error counters (from FW V1.1) (Page 96)". The Read_and_Reset_AS-i_Slave_Error_Counters command continues to exist for compatibility reasons.

Meaning

This command reads out the error counters of the AS-i slaves. Data records DS 150 and DS 151 access the standard addresses and the A addresses. Data records DS 152 and DS 153 access the B addresses. The counters for addresses 16 / 16A exist identically in data records DS 150 and DS 151. The counters for address 16B exist identically in data records DS 152 and DS 153. Data record DS 154 resets all AS-i slave error counters.

Structure of the job data in the send buffer

Table 9- 68 Structure of the job data in the send buffer

Byte	Meaning
0	Command number: CD_H
1	AS-i slave address

Structure of the responses in the receive buffer

The receive buffer is identical to the receive buffer of the "No. CC: Read_AS-i_error_counter (Page 156)" command.

9.4.37 No. 13: Activate_ground fault detection (reset EFD)

Meaning

The setting for enabling the integrated ground fault detection is always made when configuring the CM AS-i Master.
This command is used to enable or disable the ground fault detection via the user program so as to overwrite the configured setting.
After a startup or restart, the configured setting is applied again.

Structure of the job data in the send buffer

Table 9- 69 Structure of the job data in the send buffer

Byte	Meaning							
	Bit 7	Bit 6	Bit 5	Bit 4	Bit 3	Bit 2	Bit 1	Bit 0
0	Command number 13_H							
1	0							0 = Ground fault detection is enabled 1 = Ground fault detection is disabled

9.4.38 No. D0: Set_Configuration_Online

Meaning

The following configuration data for the addressed AS-i slave is configured with this command:

- IO code
- ID code
- ID1 code
- ID2 code
- Parameter value

The configuration data is stored in the non-volatile EEPROM of the CM AS-i Master ST. The AS-i master uses this configuration data as the specified expected configuration for "protected operation". The configuration data are defined by the manufacturer of the AS-i slave. The meaning of the configuration data is described in the "AS-Interface Complete Specification". If the addressed AS-i slave does not support an ID1 code or ID2 code, ID1 code = F (hex) and ID2 code = F (hex) must be used as the preset values. When this command is executed, the AS-i master remains in the online phase. This means that the AS-i master is not restarted. The command can be executed in "Protected operation".

The command can be executed for any slaves including proxy slaves. Ensure that you have defined an adequate length for the I/O image when configuring the slave. If the the I/O image for the slave is not long enough, surplus input data are truncated and surplus output data are transmitted with substitute value 0. This applies to a digital I/O image and an analog I/O image.

If the value F (hex) is written to a proxy slave for all four codes (IO code, ID code, ID1 code and ID2 code), any slave type at this AS-i address is activated by the AS-i master.

Note

Configuration data are overwritten

If you use this command, you will overwrite the corresponding configuration data that resulted from configuring using the "SET" button or configuring using HW Config.

Note

The configuration data for all proxy slaves can be reset to value F (hex) in the CM AS-i Master ST module by configuring the AS-i slaves using the "SET" button with no slaves connected (see Section "Configuration of the AS-i slaves using the "SET" button (Page 34)").

Structure of the job data in the send buffer

Table 9- 70 Structure of the job data in the send buffer

Byte	Meaning			
	Bit 7	Bit 4	Bit 3	Bit 0
0	Command: $D0_H$			
1	Slave address			
2	IO code		ID code	
3	ID1 code		ID2 code	
4	0		Parameter	

9.4.39 No. D1: AS-i-Slave_ID1_schreiben_mit_Zieladresse (Write ID1 code with destination address)

Meaning

This command writes the ID1 code of an AS-i slave with the specified address directly via the AS-i cable.

The AS-i master forwards the ID1 code to the AS-i slave without a plausibility check.

Requirements

- The AS-i slave at the target address must support writing of the ID1 code.
- There are no AS-i slaves on the AS-i bus with address "0".

Structure of the job data in the send buffer

Table 9- 71 Structure of the job data in the send buffer

Byte	Meaning			
	Bit 7	Bit 4	Bit 3	Bit 0
0	Command: $D1_H$			
1	AS-i slave address			
2	0		ID1 code	

Technical data

10

10.1 Technical data in Siemens Industry Online Support

Technical data sheet

You can also find the technical data of the product at Siemens Industry Online Support (https://support.industry.siemens.com/cs/ww/en/ps/15756/td).

1. Enter the full article number of the desired device in the "Product" field, and confirm with the Enter key.
2. Click the "Technical data link.

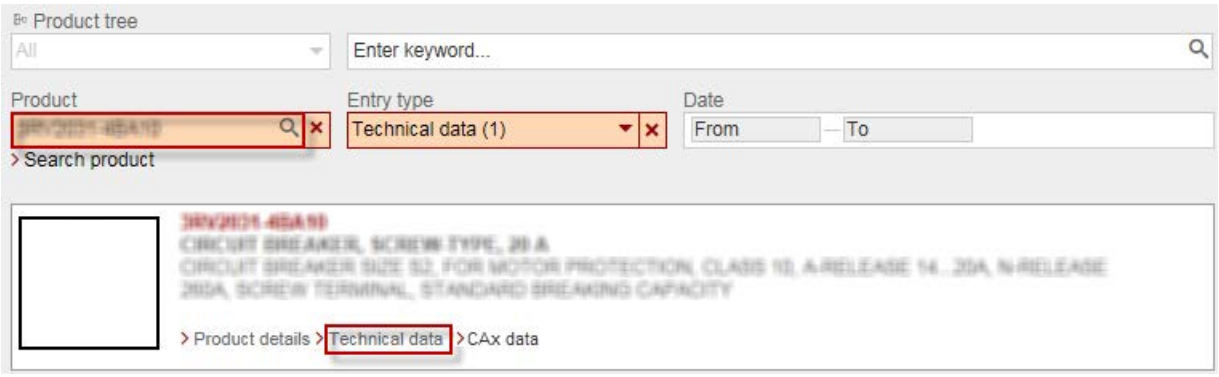

AS-Interface Protocol Implementation Conformance Statements

A

A.1 AS-Interface Protocol Implementation Conformance Statement (PICS)

PICS for the CM AS-i Master ST

Vendor	SIEMENS AG
Product name	CM AS-i Master ST
Article number	3RK137-6SA00-0BC1
Firmware version	V1.0, V1.1
Master profile	M4
Date	—

List of available master functions

Character	Meaning
X	Function available
—	Function not available

No.	Function or command to the host interface (symbolic representation)	M4	Remark / implementation of the function with
1	Image, Status = Read_IDI()	X	Through automation system access to the I/O data of the AS-i master
2	Status = Write_ODI(Image)	X	Through automation system access to the I/O data of the AS-i master
3	Status = Set_Permanent_Parameter (Addr, Param)	X	See Section "Description of the AS-i commands (Page 103)"
4	Param, Status = Get_Permanent_Parameter (Addr)	X	
5	Status, Param = Write_Parameter (Addr, Param)	X	
6	Status, Param = Read_Parameter(Addr)	X	
7	Status = Store_Actual_Parameters()	X	
8	Status = Set_Permanent_Configuration (Addr, Config)	X	
9	Status, Config = Get_Permanent_Configuration (Addr)	X	
10	Status = Store_Actual_Configuration()	X	In *STEP 7*, in the control panel, by pressing the "ACTUAL → CONFIGURED" button.

No.	Function or command to the host interface (symbolic representation)	M4	Remark / implementation of the function with
11	Status, Config = Read_Actual_Configuration (Addr)	X	See Section "Description of the AS-i commands (Page 103)". Access to data record 84.
12	Status = Set_LPS(List31)	X	
13	Status, LPS = Get_LPS()	X	
14	Status, LAS = Get_LAS()	X	
15	Status, LDS = Get_LDS()	X	
16.0	Status = Get_Flags()	X	
16.1	Status, Flag = Get_Flag_Config_OK()	X	
16.2	Status, Flag = Get_Flag_LDS.0()	X	
16.3	Status, Flag = Get_Flag_Auto_Address_Assign()	X	
16.4	Status, Flag = Get_Flag_Auto_Prog_Available()	X	
16.5	Status, Flag = Get_Flag_Configuration_Active()	X	
16.6	Status, Flag = Get_Flag_Normal_Operation_Active()	X	
16.7	Status, Flag = Get_Flag_APF()	X	CP error bit, LED indication (see Section "Description of the AS-i commands (Page 103)"). Access to data record 84.
16.8	Status, Flag = Get_Flag_Offline_Ready()	X	Access to data record 84.
16.9	Status, Flag = Get_Flag_Periphery_OK()	X	
17	Status = Set_Operation_Mode(Mode)	X	By pressing the "Configuration mode" or "Protected operation" button in the control panel of *STEP 7*.
18	Status = Set_Offline_Mode(Mode)	X	See section "Description of the AS-i commands (Page 103)"
19	Status = Activate_Data_Exchange(Mode)	-	Optional command; not implemented
20	Status = Change_Slave_Address (Addr1, Addr2)	X	See Section "Description of the AS-i commands (Page 103)".
21.1	Status = Set_Auto_Address_Enable	X	
21.2	Status = Get_Auto_Address_Enable	X	
22.1	Status, Resp = Cmd_Reset_ASI_Slave (Addr, RESET)	-	
22.2	Status, Resp = Cmd_Read_IO_Configuration (Addr, CONF)	X	
22.3	Status, Resp = Cmd_Read_Identification_Code(Addr, IDCOD)	X	
22.4	Status, Resp = Cmd_Read_Status (Addr, STAT)	X	
22.5	Status, Resp = Cmd_Read_Reset_Status (Addr, STATRES)	-	Not relevant for AS-i master acc. to profile M4; not implemented
22.6	Status, Resp = Cmd_Read_ID−Code_1(Addr, IDCOD1)	X	Not implemented
22.7	Status, Resp = Cmd_Read_ID−Code_2(Addr, IDCOD2)	X	
23	Status, S_List = Get_LPF()	X	See Section "Description of the AS-i commands (Page 103)". Access to data record 84.
24	Status = Write_ID−Code_11(S_ID−Code_1)	X	See Section "Description of the AS-i commands (Page 103)". Not implemented

No.	Function or command to the host interface (symbolic representation)	M4	Remark / implementation of the function with
25	AImage, Status = Read_AIDI()	X	See Section Description of the AS-i commands (Page 103). Through automation system access to the I/O data of the AS-i master
26	Status = Write_AODI(AImage)	X	
27	String, Status = Read_ParamStr(S_Addr)	X	See "Read_Parameter_String" in Section Description of the AS-i commands (Page 103)
28	Status = Write_ParamStr(S_Addr, String)	X	See Section Description of the AS-i commands (Page 103)
29	String, Status = Read_DiagStr(S_Addr)	X	See Section Description of the AS-i commands (Page 103)
30	String, Status = Read_IdentStr(S_Addr)	X	See Section Description of the AS-i commands (Page 103)
B	Supported slave profiles		
1	Support of extended address mode	X	—
2	Support of Combined transaction type 1 integrated (S−7.3 only)	X	—
3	Full support of Combined transaction type 1 integrated	X	Support for profiles 7.3 and 7.4 only.
4	Support of Combined transaction type 2 integrated	X	—
5	Support of Combined transaction type 3 integrated	X	—
6	Support of Combined transaction type 4 integrated	X	—
7	Support of Combined transaction type 5 integrated	X	—

Readme Open Source Software

B

B.1 Read_me OSS

Note

For Resellers

In order to avoid infringements of the license conditions by the reseller or the buyer these instructions and license conditions and accompanying CD - if applicable - have to be forwarded to the buyers.

License Conditions and Disclaimers for Open Source Software and other Licensed Software

In the product "CM AS-i Master ST" (herinafter "Product"), the following Open Source Software is used either unchanged or in a form that we have modified, and additionally the other License Software noted below:

Table B- 1 License Summary

Component	Open Source Software ("OSS) [Yes / No]	Copyright Information / File
Dinkumware C/C++ Library 5.01	NO	LICENSE AND COPYRIGHT INFORMATION FOR COMPONENT DINKUMWARE C/C++LIBRARY - 5.01

Liability for Open Source Software

Open Source Software is provided free of charge. We are liable for the Product including Open Source Software contained in accordance with the license conditions applicable to the Product. Any liability for use of Open Source Software beyond the program flow intened for the Product is explicitly excluded. Furthermore, any liability for defects resulting from modifications to the Open Source Software by you or third parties is excluded.

Note

We do not provide any technical support for the Product if it has been modified.

Please note the following license conditions and copyright notices applicable to Open Source Software and other License Software:

LICENSE CONDITIONS AND COPRIGHT NOTICE

Commercial Software: Dinkumware C/C++ Library - 5.01

Enclosed you'll find the **license conditions** and **copyright notes** for Commercial Software Dinkumware C/C++ Library - 5.01.

License conditions:

Copyright (c) 1991 - 1999 Unicode, Inc. All Rights reserved.

This file is provided as-is by Unicode, Inc. (The Unicode Consortium).

No claims are made as to fitness for any particular purpose. No warranties of any kind are expressed or implied. The recipient agrees to determine applicabiliy of information provided. If this file has been provided on optical media by Unicode, Inc., the sole remedy for any claim will be exchange of defective media within 90 days of receipt.

Unicode, Inc. hereby grants the right to freely use the information aupplied in this file in the creation of products supporting the Unicode Standard, and to make copies of this file in any form for internal or external distribution as long as this notice remains attached.

© Copyright William E. Kempf 2001

Permission to use, copy, modify, distribute and sell this software and its documentation for any purpose is hereby granted without fee, provided that the above copyright notice appear in all copies and that both that copyright notice and this permission notice appear in supporting documentation. William E. Kempf makes no representations about the suitability of this software for any purose. It is provided "as is" without express or implied warranty.

Copyright © 1994

Hewlett-Packard Company

Permission to use, copy modify, distribute and sell this software and its documentation for any purpose is hereby granted without fee, provided that the above copyright notice appear in all copies and that both that copyright notice and this permission notice appear in supporting documentation. Hewlett-Packard Company makes no representations about the suitability of this software for any purpose. It is provided "as is"; without express or implied warranty.

Copyrights:

- Copyright 1992 … 2006 by p.j. plauger and jim brodie. all rights reserved.
- Copyright 1992 … 2006 by p.j. plauger. all rights reserved.ip
- Copyright 1992 … 2006 by p.j.plauger. portions derived from work copyright 1994 by hewettpackard company. all rights reserved
- Copyright 1992 … 2006 by dinkumware, ltd. all rights reserved
- Copyright 1992 … 2006 by dinkumware, ltd. portions derived from work copyright 2001 by william e. kempf. all rights reserved
- Copyright 1994 hewlettpackard company
- Copyright 1994 by hewlettpackard company
- Copyright william e. kempf 2001
- Copyright 1989 … 2006 by p.j.plauger. all rights reserved.
- Copyright (c) by p.j. plauger. all rights reserved
- Copyright(c) by dinumware, ltd. all rights reserved.
- Copyight (c) unicode, inc. all rights reserved.
- (c) copyright william e. kempf 2001
- Copyright (c) hewlettpackard company
- Copyright (c) by p.j. plauger. all rights reserved.
- Copyright 2006 by dinkumware, ltd.
- Copyright (c) by p.j. plauger, licensed by dinkumware, ltd. all rights reserved.
- The dinkum cec++ library reference is copyright (c) by p.j. plauger. this code is protected by copyright. all rights reserved.
- The dinkum cc++ library reference is copyright (c) by p.j. plauger. this code is protected by copyright. all rights reserved.
- Dinkum compleat library, vc++ package (vc++ compilers only) the dinkum complete library and the dinkum compleat library reference are copyright (c) by p.j. plauger. all rights reserved.

Data sets

C

C.1 DS 100 Switch duplicate address detection on/off

Description

The duplicate address detection function can be activated/deactivated via the user program by means of write access to data record DS 100.

For the CM AS-i Master firmware V1.0 the status is stored in the AS-i Master volatile memory, i.e. if the AS-i voltage fails, duplicate address detection is deactivated.

For the CM AS-i Master firmware V1.0 and higher, duplicate address detection is adopted according to the setting in HW Config or GSD after failure of the AS-i voltage.

Note

From firmware V1.1 onwards use the setting option via HW Config or GSD to activate duplicate address detection. Data record DS 100 continues to exist for compatibility reasons.

Table C- 1 Structure of DS 100 write

Byte	Meaning							
	Bit 7	Bit 6	Bit 5	Bit 4	Bit 3	Bit 2	Bit 1	Bit 0
0	0							
1	0							
2	0							0 / 1
3	0							

Bit 0 = 0 Duplicate address detection is activated.

= 1 Duplicate address detection is deactivated (default setting for FW V1.0).

The setting for which AS-i voltage duplicate address detection is activated (possible for FW V1.1 and higher) cannot be changed in this case.

See also

Duplicate address detection (Page 76)

C.2 DS 100 Read setting for duplicate address detection

Description

Via read access to data record DS 100 the enable status of duplicate address detection can be read back.

Table C- 2 Structure of DS 100 read

Byte	Meaning							
	Bit 7	Bit 6	Bit 5	Bit 4	Bit 3	Bit 2	Bit 1	Bit 0
0 … 1	Reserved							
2	Reserved							0 / 1
3	Reserved							

Bit 0 = 0 Duplicate address detection is activated
= 1 Duplicate address detection is deactivated (default setting for FW V1.0).

The setting for which AS-i voltage duplicate address detection is activated (possible for FW V1.1 and higher) cannot be read out in this case.

See also

Duplicate address detection (Page 76)

C.3 DS 101 Read version identifier

Description

This data record reads the version identifier.

Table C- 3 Structure of data record DS 101

Byte	Meaning							
	Bit 7	Bit 6	Bit 5	Bit 4	Bit 3	Bit 2	Bit 1	Bit 0
0 … 1	Reserved							

2 … 33	Version identifier as a string
	e. g.:
	`Siemens AG CM ASi M V01.00.00`
	`1.....1.....1.....1..`							

List of abbreviations

D

D.1 List of abbreviations

Meaning of abbreviations

Abbreviation	Meaning
APF	AS-i Power Fail (problem with the AS-i supply voltage)
AS-i	AS-Interface
ATEX	Atmosphere Explosive
AUP	Automatic address programming
AWP	Automation Web Pages
CER	Configuration error
CBA	Component Based Automation
CDI	Configuration Data Image
CFGOK	Configuration OK
CM	Configuration mode; Communication module
	Configuration mode activated
CPU	Central Processing Unit
CTT	Combined Transaction Type Glossary (Page 175)
DIAG	Diagnosis
	Diagnostics available
DIN	Deutsches Institut für Normierung e. V.
DP	Distributed peripherals
DS	Data record/data set
I/O	Input/Output
EEPROM	Electrically Erasable Programmable Read-Only Memory
EFD	Ground fault detection
EN	Europäische Norm (European standard)
FB	Function Block
FC	Function Code
GSD	Device master data
GSDML	Generic Station Description Markup Language
HSP	Hardware support package
HW	Hardware
HW ID	Hardware identifier
I&M	Identification and Maintenance
ID	Identifier (Identification number, e.g., ID1 code)
IEC	International Electrotechnical Commission

Abbreviation	Meaning
IEEE	Institute of Electrical and Electronics Engineers
IO	Input Output
IP	Ingress Protection (enclosure class)
ISO	International Organization for Standardization
LAS	List of Activated Slaves
LDS	List of Detected Slaves
LED	Light Emitting Diode
LPF	List of peripheral faults (list of peripheral faults signaled by the AS-i slaves)
LPS	List of configured AS-i slaves (list of "projected" slaves)
MPO	Master Power On
NEC	National Electrical Code
NFPA	National Fire Protection Association
OB	Organization block
PIQ	Process Image Output
PII	Process image input
PCD	Permanent Configuration Data
PELV	Protective extra low voltage
PF	Peripheral fault
PI	Parameter Image
PP	Permanent Parameter
RDREC	Read record
SELV	Safety Extra Low Voltage
SIL	Safety Integrity Level
GF, CF	System fault
SFB	System function block
PLC	Programmable logic controller
SNMP	Simple Network Management Protocol
TCP/IP	Transmission Control Protocol / Internet Protocol
TIA	Totally Integrated Automation
USB	Universal Serial Bus
WRREC	Write record

Glossary

"Protected operation"

In "protected operation", the AS-i master only exchanges data with the configured AS-i slaves. "Configured" means that the slave addresses and configuration data stored in the AS-i master agree with the values of existing AS-i slaves.

APF

AS-i Power Fail. Flag or LED display that indicates that the supply voltage on the AS-i cable is too low or has failed, e.g., failure of the AS-i power supply unit.

AS-i (AS-Interface)

Actuator-Sensor-Interface. A networking system for the plant-floor automation layer. It is suitable for networking sensors and actuators with controllers.

AS-i analog slave

AS-i analog slaves are special AS-i standard slaves that exchange analog values with the AS-i master; see also CTT.

AS-i master

The AS-i master monitors and controls simple digital or analog sensors and actuators via AS-i modules or AS-i slaves.

AS-i slave

All devices that can be addressed by an AS-i master are referred to as AS-i slaves. AS-i slaves are distinguished according to their design (AS-i modules as well as sensors or actuators with integrated AS-i connection) and their addressing type (AS-i slave with standard address in the range 0 ... 31 and AS-i slave with A/B address in the range 0, 1A ... 31A, 1B, 31B) or their functionality (standard slave for non-safety-related data transmission and ASIsafe slave for safety-related data).

AS-i slave with A/B address

AS-i slaves with A/B address use extended addressing. A (numerical) address can thus be used by two slaves with A/B address, e.g., 1A and 1B. Based on the address organization, up to 62 slaves with A/B address can be connected to the AS-Interface.

For cyclic data transmission, the master accesses each (numerical) address once per AS-i cycle (max. 5 ms). If two slaves use a (numerical) address on the bus both as an A address and a B address, two consecutive AS-i cycles are required for their data transmission (max. 10 ms rms). If a (numerical) address is used only as an A address or as a B address on the bus, the data transmission for these slaves occurs in every AS-i cycle.

AS-i slave with standard address

Each AS-i slave with standard address occupies one address on the AS-Interface; based on the address organization, up to 31 AS-i slaves with standard address can therefore be connected to the AS-Interface. If a slave with standard address occupies an address, this address is no longer available for slaves with A/B address.

For cyclic data transmission, the master accesses each address once per AS-i cycle (max. 5 ms).

CER

Configuration Error (Indication of configuration errors). The configuration error is indicated by an LED if the actual bus configuration does not match the specified configuration.

CM

Communication module

Module for communication tasks that is used in an automation system as an interface expansion for the CPU.

CPU

Central Processing Unit

CTT

Combined Transaction Type. Special AS-i slave profile:

CTT slaves require several AS-i cycles or several AS-i addresses for updating process data between an AS-I slave and AS-i master.

The following CTT variants are defined:

CTT1: Slave profiles S-7.3, S-7.4

For cyclic data transmission of analog values or transparent data (up to 16 bits per channel).

Depending on the slave, the data transmission is in the direction of the input or output.

The S-7.1 and S-7.2 profiles are outdated profiles that are not managed automatically by the AS-i master (function blocks are required for decoding the process data).

CTT2: Slave profiles S-7.5.5, S-7.A.5, S-B.A.5

For transmission of data blocks similar to data record transmission in PROFIBUS/PROFINET.

The transmission can be initiated individually via the user program (acyclically, see "CTT2-Request_lesen_schreiben (Read_Write_CTT2_String)") or automatically by the master (cyclically, same as for analog values). Refer to the slave documentation.

The transmission process is managed automatically by the master and corresponds to a serial data transmission with approximately 12 bytes (or 6 bytes for A/B address with maximum configuration).

Depending on the slave, in parallel to the data block transmission, digital data of up to 2 DI / DO are also transmitted per AS-i cycle (5 ms or 10 ms for A/B address with maximum configuration).

CTT3: Slave profiles S-7.A.7, S-7.A.A

For cyclic transmission of digital data.

Slave profile S-7.A.7 transmits 4 DI / 4 DO using a slave with A/B address. Like for standard slaves, the inputs are transmitted in each AS-i cycle (5 ms or 10 ms for A/B address with maximum configuration). The outputs require double the transmission time.

Slave profile S-7.A.A transmits 8 DI / 8 DO using a slave with A/B address. The inputs and outputs are transmitted using four AS-i cycles.

CTT4: Slave profiles S-7.A.8, S-7.A.9

For cyclic transmission of analog values or transparent data (up to 16 bits per channel) in the input direction using a slave with A/B address.

Depending on the slave, in parallel to the data block transmission, digital data of up to 1 DO can also be transmitted per AS-i cycle (5 ms or 10 ms for A/B address with maximum configuration).

CTT5: Slave profile S-6.0.x, where x = 2 … 7, A … C

For cyclic transmission of analog values or transparent data (up to 16 bits) in the input and output direction.

The CTT5 types each occupy 2, 3, or 4 slave addresses simultaneously, depending on the data record, so that consistent transmission of the full data width occurs in each AS-i cycle (5 ms).

DIAG

Diagnosis

EFD

Ground fault detection

GSD file

Generic station description file for PROFIBUS or PROFINET devices

GSDML file

GSD file for PROFINET devices. As a generic station description, this file contains all of the properties of a PROFINET device necessary for its configuration.

HSP

The Hardware Support Package supplements the hardware catalog of *STEP 7*.

ID code

Fixed identification code saved in the AS-i slave; part of the slave profile.

See also: Slave profile

ID1 code

Also called: Extended ID1 code

Fixed or editable identification code saved in the AS-i slave.

See also: Slave profile

ID2 code

Also called: Extended ID2 code

Fixed identification code saved in the AS-i slave; part of the slave profile.

See also: Slave profile

Inspector window

The inspector window of *STEP 7* / TIA Portal displays additional information about a selected object or executed actions. The indicated properties and parameters of the selected object can be edited within the inspector window.

IO code

Also called: I/O configuration

Fixed identification code saved in the AS-i slave; part of the slave profile.

See also: Slave profile

LAS

List of Activated Slaves

LDS

List of Detected Slaves

LED

A light-emitting diode that is used to display the signal status.

LPF

List of periphery faults This list in the AS-i master designates the status of the peripheral fault of the activated slaves.

LPS

List of Projected Slave (list of configured slaves)

Nibble

A nibble is a unit of information that comprises four bits.

Option handling

Option handling allows the user program to activate optional functions during normal operation without the need for reconfiguration.

PF

Peripheral fault: Error message of an active AS-i slave to the master, e.g., overload at output (depending on slave, see documentation of the AS-i slave).

Slave profile

The slave profile classifies the basic properties of an AS-i slave. The slave profile consists of the IO code, ID code, and ID2 code, which are stored as fixed, uneditable codes in each slave. In addition, a slave has an ID1 code, which is saved in the slave as a fixed code or a code that is editable by the user (e.g., with an addressing device). The value of the ID1 code usually has no effect on the operating characteristics of the slave. In this case, the user should not change the value, so that compatibility problems do not occur if the device is replaced. Note the documentation of the slave for the ID1 setting.

Each of the four identification codes consists of a 4-bit value that is usually written in hexadecimal notation with a value range of 0 to F. On power-up, the AS-i master reads the codes automatically from each slave and saves this ACTUAL configuration in the volatile memory of the AS-i master.

If the AS-i master is in “protected operation”, it compares the ACTUAL configuration with a CONFIGURED configuration, which is normally stored in non-volatile memory in the AS-i master. Slaves whose ACTUAL configuration matches the CONFIGURED configuration are activated and then participate in the cyclic data exchange. Slaves without a match are not activated and do not exchange cyclic data. A configuration error is also signaled.

ID2 and ID1 are optional codes. That is, some slaves do not have these two codes. In this case, the master enters the hexadecimal value “F” as a substitute value in the ACTUAL configuration.

Slaves with extended addressing, the so-called A/B slaves, use only the three less significant bits of the ID1 code as the slave identification. The most significant bit of the ID1 code is reserved and is used by the AS-i system to distinguish between an A address or B address. The effective value range of the ID1 code is thus 0 ... 7. For the read-out of the ID code, only the 3 less significant bits or all 4 bits are displayed, depending on the system, so that the displayed ID1 code can be within the value range 8 to F for slaves with B address. The user or programmer can ignore the most significant bit of the ID1 code for A/B slaves since it is managed automatically by the system.

The slave profile is usually shown in the documentation with the S prefix and a hyphen (in some cases), followed by the IO, ID, and ID2 codes, each separated by a dot.

Example: S-7.0.F

Since the ID1 code is usually editable, the value is often not documented or documented only as a default value.

Index

"

"CM" LED, 34
"SET" button, 26, 31, 34
"SET1" terminal, 26, 34
"SET2" terminal, 26, 34

2

2I/2O module, 54

A

A/B slave, 33
Accessories, 18
Activate slaves configured as optional on the AS-i bus, 40
Acyclic data record communication, 17
Acyclic services, 102
Ambient temperature range
    Reduced, 27
Analog channel, 58
Analog data transfer, 148, 149
Analog I/O value, 17
Analog input, 59
Analog output, 59
Analog slave, 59
Analog value, 58
AS-i cable error, 43, 44
AS-i command, 98
AS-i configuration error, 43, 44
AS-i F Slave Universal, 33
AS-i master
    Basic configuration, 30
AS-i network, 31
AS-i output, 55
AS-i Power Fail, 87, 152
AS-i slave
    Configuration, 34
    Configuring, 35
    Profile identification, 34
AS-i slave address
    Structure, 106
AS-i Standard Slave Universal,, 33
Asynchronous read access, 100
Automatic address programming, 43, 44
Automatic ID1 code assignment, 43, 44

B

BaseUnits, 16, 28
Basic configuration of the AS-i master, 30
Basic information, 11
Bus cycle time, 90
Button contact, 34

C

Combined transaction type slave, 57
Command interface, 17
Configuration, 29, 31
    Options, 19
Configuration button, 17
Configuration data, 31, 112
Configuration mode, 19, 34, 37, 38, 119, 137, 164
Configuration of the AS-i slaves, 30
Configuration software, 29
Configuring, 34
Cyclic data exchange, 124
Cyclic data transfer, 142
Cyclic process image, 17
Cyclic services, 99

D

Data decoupling, 28
Deactivate slaves configured as optional on the AS-i bus, 40
Device information, 11
Device type, 33
Diagnostic interrupt in case of AS-i cable fault, 43, 44
Diagnostic interrupt in case of errors in AS-i configuration, 43, 44
Diagnostic status of the slaves, 31
Digital I/O value, 17
Digital process data, 19
Digital value, 99
Duplicate address detection, 43, 44
    Read status, 172
    Switch off, 171
    Switch on, 171

E

End bit error, 121
Error counter, 89
ET 200SP
    Assigning parameters, 29
    Configuring, 29, 29

F

FB ASI_CTRL, 100
Firmware update, 17

G

General information, 11
Ground fault, 87, 152
Ground-fault monitoring activated, 43, 44
GSD file, 29, 30, 31, 43

H

Hardware support package, 29
HSP, 29

I

I&M identification data, 17
I/O address, 31
I/O address space, 16
I/O assignment of the slave, 34
I/O data, 54, 163
I/O fault, 85, 87
I/O module, 29
Input byte, 54
Input process image, 55
Interface module, 29
IO code, 119, 131, 146

L

Labeling strips, 18
LDS, 85, 124
Limited Power Source, 14
LPF, 147
LPS, 14, 119
LPS data, 116

N

Negative polarity, 26
Network view, 31

O

OB 82, 69
Operating parameters, 30
Operational voltage, 28
Option handling, 39, 41
Output byte, 54

P

Parameter string, 148, 149
Parity error, 121
PELV, 28
Peripheral fault, 121, 124, 147, 153
PLC program, 31
Pollution degree 2, 13
Positive polarity, 26
Process data, 90
Process image, 17, 30, 45, 45
    Cyclic, 30
    flexibly, 45
    Reducing, 45
PROFIBUS, 29
PROFINET, 29
Protected
operation, 19, 31, 34, 37, 85, 112, 114, 116, 119, 124, 131, 164
Protective Extra-Low Voltage, 28
Protocol error, 87, 102, 153
Proxy slave, 33, 42

R

Rated voltage, 14
Read access
    Asynchronous, 100
Read status of option handling, 41
Reference identification label, 18
Residual ripple, 28
Return value, 102

S

Safety Extra-Low Voltage, 14
Safety input slave, 55
SELV, 14, 28

Server module, 29
Siemens AS-i slave, 33
Slave configuration, 38
Slave diagnostics, 82
Slave failure, 87, 152
Slave parameters, 33
Slave profile, 33, 38
Startup detection, 100
Status evaluation, 99
Status information, 99
Status nibble, 98, 99
Status register, 121
String transfer, 102, 149
Supported power supply units, 28

T

Technical properties, 17
Terminal assignment, 26
Transient disturbance, 14

U

Universal AS-i Slave, 34
Universal slave, 33
User data transfer, 148, 149
User program, 31

SIEMENS

SIMATIC

ET 200SP
Digital input module
F-DI 8x24VDC HF
(6ES7136-6BA00-0CA0)

Manual

Preface

Documentation guide 1

Product overview 2

Connecting 3

Parameters/address space 4

Applications of the F-I/O module 5

Interrupts/diagnostic messages 6

Technical specifications 7

Response times A

07/2013

A5E03858068-01

Legal information

Warning notice system

This manual contains notices you have to observe in order to ensure your personal safety, as well as to prevent damage to property. The notices referring to your personal safety are highlighted in the manual by a safety alert symbol, notices referring only to property damage have no safety alert symbol. These notices shown below are graded according to the degree of danger.

⚠ DANGER
indicates that death or severe personal injury **will** result if proper precautions are not taken.

⚠ WARNING
indicates that death or severe personal injury **may** result if proper precautions are not taken.

⚠ CAUTION
indicates that minor personal injury can result if proper precautions are not taken.

NOTICE
indicates that property damage can result if proper precautions are not taken.

If more than one degree of danger is present, the warning notice representing the highest degree of danger will be used. A notice warning of injury to persons with a safety alert symbol may also include a warning relating to property damage.

Qualified Personnel

The product/system described in this documentation may be operated only by **personnel qualified** for the specific task in accordance with the relevant documentation, in particular its warning notices and safety instructions. Qualified personnel are those who, based on their training and experience, are capable of identifying risks and avoiding potential hazards when working with these products/systems.

Proper use of Siemens products

Note the following:

⚠ WARNING
Siemens products may only be used for the applications described in the catalog and in the relevant technical documentation. If products and components from other manufacturers are used, these must be recommended or approved by Siemens. Proper transport, storage, installation, assembly, commissioning, operation and maintenance are required to ensure that the products operate safely and without any problems. The permissible ambient conditions must be complied with. The information in the relevant documentation must be observed.

Trademarks

All names identified by ® are registered trademarks of Siemens AG. The remaining trademarks in this publication may be trademarks whose use by third parties for their own purposes could violate the rights of the owner.

Disclaimer of Liability

We have reviewed the contents of this publication to ensure consistency with the hardware and software described. Since variance cannot be precluded entirely, we cannot guarantee full consistency. However, the information in this publication is reviewed regularly and any necessary corrections are included in subsequent editions.

Siemens AG
Industry Sector
Postfach 48 48
90026 NÜRNBERG
GERMANY

A5E03858068-01
Ⓟ 08/2013 Technical data subject to change

Copyright © Siemens AG 2013.
All rights reserved

Preface

Purpose of the documentation

This device manual complements the system manual ET 200SP distributed I/O system. General functions of the ET 200SP are described in the system manual ET 200SP distributed I/O system (http://support.automation.siemens.com/WW/view/en/58649293).

The information provided in this device manual and the system manual enables you to commission the ET 200SP distributed I/O system.

Conventions

Note the following identified notes:

Note

A note includes important information on the product described in the documentation, on handling the product or on the part of the documentation to which you ought to pay special attention.

Security information

Siemens provides automation and drive products with industrial security functions that support the secure operation of plants or machines. They are an important component in a holistic industrial security concept. With this in mind, our products undergo continuous development. We therefore recommend that you keep yourself informed with respect to our product updates. Please find further information and newsletters on this subject at: (http://www.siemens.com/industrialsecurity)

To ensure the secure operation of a plant or machine it is also necessary to take suitable preventive action (e.g. cell protection concept) and to integrate the automation and drive components into a state-of-the-art holistic industrial security concept for the entire plant or machine. Any third-party products that may be in use must also be taken into account. Please find further information at: (http://support.automation.siemens.com)

Table of contents

Preface 3

1 Documentation guide 7

1.1 Documentation guide for the F-DI 8x24VDC HF digital input module 7

2 Product overview 9

2.1 Properties of the F-DI 8x24VDC HF 9

3 Connecting 13

3.1 Terminal assignment 13

3.2 Block diagram 14

4 Parameters/address space 15

4.1 Parameters 15

4.2 Explanation of parameters 18
4.2.1 F-parameters 18
4.2.2 Parameters of the sensor supply 18
4.2.2.1 Short circuit test 18
4.2.2.2 Time for short circuit test 19
4.2.2.3 Startup time of sensors after short circuit test 19
4.2.3 Parameters of the channel pairs 20
4.2.3.1 Activated 20
4.2.3.2 Sensor evaluation 20
4.2.3.3 Discrepancy behavior 21
4.2.3.4 Discrepancy time 22
4.2.3.5 Reintegration after discrepancy error 23
4.2.4 Parameters of the channels 24
4.2.4.1 Sensor supply 24
4.2.4.2 Input delay 24
4.2.4.3 Pulse extension 25
4.2.4.4 Chatter monitoring 25
4.2.4.5 Monitoring window 26

4.3 Address space 27

5 Applications of the F-I/O module 29

5.1 Applications of the electronic module 29

5.2 Application 1: Safety mode SIL3/Cat.3/PLd 31

5.3 Application 2: Safety mode SIL3/Cat.3/PLe 34

5.4 Application 3: Safety mode SIL3/Cat.4/PLe 36
5.4.1 Use case 3.1 (SIL3/Cat.4/PLe) 38
5.4.2 Use case 3.2 (SIL3/Cat.4/PLe) 40

6 Interrupts/diagnostic messages 43
6.1 Status and error display 43
6.2 Interrupts 45
6.3 Diagnostic messages 47
6.4 Value status 52
7 Technical specifications 53
A Response times 57

Documentation guide 1

1.1 Documentation guide for the F-DI 8x24VDC HF digital input module

Introduction

The documentation of the SIMATIC products has a modular design and includes topics concerning your automation system.

The complete documentation of the ET 200SP system consists of different modules divided into system manuals, function manuals and manuals.

The STEP 7 (online help) information system supports you in configuring and programming your automation system.

Overview of documentation for the fail-safe digital input module F-DI 8×24VDC HF

The table below lists additional documents that complement this description of the fail-safe digital input module F-DI 8×24VDC HF and are available on the Internet.

Table 1- 1 Documentation for the fail-safe digital input module F-DI 8×24VDC HF

Topic	Documentation	Most important contents
Description of the system	System manual ET 200SP distributed I/O system (http://support.automation.siemens.com/WW/view/en/58649293)	• Application planning • Installation • Connecting • Commissioning • Approvals • TÜV certificate
BaseUnits	Manual ET 200SP BaseUnits (http://support.automation.siemens.com/WW/view/en/58532597/133300)	Technical specifications
Description of the SIMATIC Safety F-system	Programming and operating manual SIMATIC Safety - Configuring and Programming (http://support.automation.siemens.com/WW/view/en/54110126)	• Configuring • Programming • Approvals

SIMATIC manuals

The latest manuals for SIMATIC products are available on the Internet (http://www.siemens.com/automation/service&support) for free download.

Functional Safety Services

Siemens Functional Safety Services support you with a comprehensive package of services from risk assessment to verification all the way to plant commissioning and modernization. We also offer consultation on the use of fail-safe and fault-tolerant SIMATIC S7 automation systems.

You will find more detailed information on the Internet (http://www.siemens.com/safety-services).

Please send your questions to us by e-mail (mailto:safety-services.industry@siemens.com).

Product overview

2

2.1 Properties of the F-DI 8x24VDC HF

Order number

6ES7136-6BA00-0CA0

View of the module

Figure 2-1 View of the F-DI 8×24VDC HF module

Properties

- Technical properties
  - Fail-safe digital module
  - 8 inputs (SIL3/Cat.4/PLe)
  - 8 outputs for sensor supply
  - Use of various interconnection types (1oo1, 1oo2) is possible
  - Supply voltage L+
  - Sink input (P-reading)
  - Suitable for connection of 3/4-wire sensors according to IEC 61131, type 1
  - Channel-specific assignable input delay 0.4 ms to 20 ms
  - Internal short circuit proof sensor supplies for each input
  - External sensor supply possible
  - Diagnostic display (DIAG red/green LED)
  - Status display for each input (green LED)
  - Error display for each input (red LED)
  - Diagnostics, e.g., short circuit/wire break, channel-specific
  - Diagnostics, e.g., load voltage missing, module-specific
  - Channel-specific or passivation throughout the module
- Supported functions
  - Firmware update
  - I&M identification data
  - PROFIsafe

⚠ WARNING

The fail-safe performance characteristics in the technical specifications apply to a proof-test interval of 20 years and a mean time to repair of 100 hours. If a repair within 100 hours is not possible, remove the respective module from the BaseUnit or switch off its supply voltage before 100 hours expires. The module switches off independently after the 100 hours have expired.

Follow the repair procedure described in section Diagnostic messages (Page 47).

Accessories

The following accessories, which are not included in the product package of the F-module, can be used with the F-module:

- Labeling strips
- Color identification labels
- Reference identification labels
- Shield connection

Additional information on accessories can be found in the ET 200SP Distributed I/O System System Manual (http://support.automation.siemens.com/WW/view/en/58649293).

Connecting 3

3.1 Terminal assignment

General terminal assignment

Table 3- 1 Terminal assignment for F-DI 8×24VDC HF

Terminal assignment for F-DI 8×24VDC HF (6ES7136-6BA00-0CA0)						
Terminal	**Assignment**	**Terminal**	**Assignment**	**Description**	**BaseUnit**[1]	**Color identification label (terminals 1 to 16)**
1	DI_0	**2**	DI_1	• DI_n: Input signal, channel n • VS_n: Internal sensor supply, channel n	A0	 CC01 6ES7193-6CP01-2MA0
3	DI_2	**4**	DI_3			
5	DI_4	**6**	DI_5			
7	DI_6	**8**	DI_7			
9	VS_0	**10**	VS_1			
11	VS_2	**12**	VS_3			
13	VS_4	**14**	VS_5			
15	VS_6	**16**	VS_7			
L+	DC24V	**M**	M			

[1] Usable BaseUnit types can be identified by the last two digits of their order number. See also *ET 200SP Distributed I/O System*system manual

Note

The first BaseUnit must be a light BaseUnit.

Note

Make sure that you only use digital modules with BaseUnit type A0 during commissioning.

See also

ET 200SP distributed I/O system
(http://support.automation.siemens.com/WW/view/en/58649293)

3.2 Block diagram

Block diagram

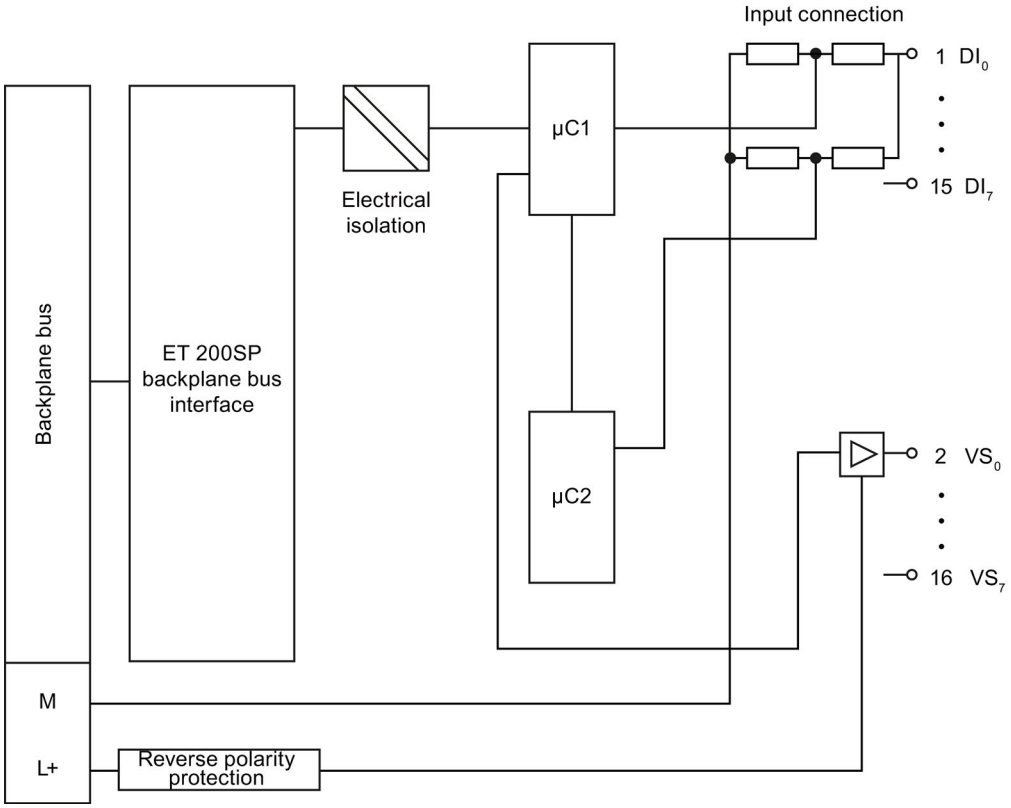

Figure 3-1 Block diagram of the F-DI 8×24VDC HF

Parameters/address space 4

4.1 Parameters

Parameters

⚠ WARNING
Diagnostic functions should be activated or deactivated in accordance with the application.

Table 4- 1 Parameters for F-DI 8×24VDC HF

Parameter	Value range	Parameter reassignment in RUN	Scope
F-parameters:			
Manual assignment of the F-monitoring time	• disable • enable	no	Module
F-monitoring time	1 to 65535 ms	no	Module
F-source address	1 to 65534	no	Module
F-destination address	1 to 65534	no	Module
F-parameter signature (without address)	0 to 65535	no	Module
Behavior after channel faults	• Passivate entire module • Passivate channel	no	Module
F-I/O DB manual number assignment	• disable • enable	no	Module
F-I/O DB number	—	no	Module
F-I/O DB name	—	no	Module
DI parameters:			
Sensor supply			
Short circuit test	• disable • enable	no	Channel
Time for short circuit test	0.5 ms to 2 s	no	Channel
Startup time of the sensors after short circuit test	0.5 ms to 2 s	no	Channel

Parameter	Value range	Parameter reassignment in RUN	Scope
Channel parameters			
Channel n, n+4			
Sensor evaluation	• 1oo1 evaluation • 1oo2 evaluation, equivalent • 1oo2 evaluation, non equivalent	no	Channel pair
Discrepancy behavior	• Supply 0 value • Supply last valid value	no	Channel pair
Discrepancy time	5 ms to 30 s	no	Channel pair
Reintegration after discrepancy error	• Test 0-signal not necessary • Test 0-signal necessary	no	Channel pair
Channel n			
Activated	• enable • disable	no	Channel
Sensor supply	• Sensor supply 0 to 7 • External sensor supply	no	Channel
Input delay	• 0.4 ms • 0.8 ms • 1.6 ms • 3.2 ms • 6.4 ms • 10.0 ms • 12.8 ms • 20 ms The provided value range depends on the parameter assignment of the employed sensor supply.	no	Channel
Pulse extension	• — • 0.5 s • 1 s • 2 s	no	Channel

Parameter	Value range	Parameter reassignment in RUN	Scope
Chatter monitoring activated	• disable • enable	no	Channel
Number of signal changes	2 to 31	no	Channel
Monitoring window	0 to 100 s (If 0 s is configured, the monitoring window is 0.5 s long.)	no	Channel

4.2 Explanation of parameters

4.2.1 F-parameters

F-parameters

Information on F-parameters is available in the SIMATIC Safety - Configuring and Programming (http://support.automation.siemens.com/WW/view/en/54110126) manual.

4.2.2 Parameters of the sensor supply

4.2.2.1 Short circuit test

Here you enable the short-circuit detection for the channels of the F-module for which "Internal sensor supply" is set.

The short-circuit test is only useful if you are using simple switches that do not have their own power supply. For switches with power supply, for example, 3/4-wire proximity switches, a short-circuit test is not possible.

The short-circuit detection switches off the sensor supply briefly. The length of the deactivation period is equivalent to the configured "Time for sensor test".

If a short-circuit is detected, the F-module triggers a diagnostic interrupt and the input is passivated.

The following short-circuits are detected:

- Short-circuit of input to L+
- Short-circuit of the input of another channel when it has a 1 signal
- Short-circuit between the input and sensor supply of another channel
- Short-circuit between the sensor supply and the sensor supply of another channel

If the short-circuit test is disabled, you must make your wiring short-circuit and cross-circuit proof or select a connection type (discrepancy, non-equivalent) which also detect the cross-circuits using discrepancy.

During the execution time (Time for sensor test + Startup time of sensor after sensor test) of the short circuit test, the last valid value of the input before the start of the short circuit test is passed to the F-CPU. The activation of the short-circuit test thus affects the response time of the respective channel or channel pair.

4.2.2.2 Time for short circuit test

Function

When the short-circuit test is enabled, the corresponding sensor supply is switched off for the configured time. If the module does not detect a "0" signal at the input within the assigned time, a diagnostic message is generated.

When assigning parameters, note that

- If the channel is passivated, this may be due to too high capacitance between sensor supply and input. This consists of the capacitance per unit length of the cable and the capacitance of the employed sensor. If the connected capacitance does not discharge within the assigned time, you need to adjust the "Time for sensor test" parameter.
- The values available for the input delay depend on the "Ramp-up time of the sensor after short-circuit test" and the "Time for short-circuit test" of the configured sensor supply.

4.2.2.3 Startup time of sensors after short circuit test

Function

In addition to the off time ("Time for sensor test"), a startup time must be specified for performing the short circuit test. You use this parameter to notify the module how long the utilized sensor needs to start up after connecting the sensor supply. This prevents an undefined input state due to transient reactions in the sensor.

When assigning parameters, note that

- This parameter must be greater than the transient recovery time of the employed sensor.
- Because the assigned time affects the response time of the module, we recommend that you set the time as short as possible but long enough so that your sensor can settle safely.
- The values available for the input delay depend on the "Ramp-up time of the sensor after short-circuit test" and the "Time for short-circuit test" of the configured sensor supply.

Requirement

The short circuit test is enabled.

4.2.3 Parameters of the channel pairs

4.2.3.1 Activated

You hereby enable the corresponding channel for signal processing in the safety program.

4.2.3.2 Sensor evaluation

Overview

Select the type of sensor evaluation with the "Evaluation of the sensors" parameter:

- 1oo1 evaluation
- 1oo2 evaluation, equivalent
- 1oo2 evaluation, non-equivalent

1oo1 evaluation

The sensor is available once for 1oo1 evaluation.

1oo2 evaluation, equivalent/non-equivalent

With a 1oo2 evaluation equivalent/non-equivalent, two input channels are occupied by:

- One two-channel sensor
- Two single-channel sensors
- One non-equivalent sensor

The input signals are compared internally for equivalence or non equivalence.

Note that in 1oo2 evaluation, two channels are combined into a channel pair. The number of available process signals of the F-module is reduced accordingly.

Discrepancy analysis

When using a two-channel sensor or two single-channel sensors which measure the same process variable, the sensors interact with a slight time delay due to the limited precision of their arrangement.

The discrepancy analysis for equivalence/non equivalence is used for fail-safe applications to prevent errors from time differences between two signals for the same function. The discrepancy analysis is initiated when different levels are detected in two associated input signals (when testing for non equivalence: the same levels). A check is made to determine whether the difference in levels (when testing for non equivalence: the same levels) has disappeared after an assignable time period, the so-called discrepancy time. If not, this means that a discrepancy error exists.

4.2.3.3 Discrepancy behavior

Function

For the "Discrepancy behavior", you assign the value that is supplied to the safety program in the F-CPU during a discrepancy between two relevant input channels, which means while discrepancy time is running. You assign the discrepancy behavior as follows:

- "Supply last valid value"
- "Supply value 0"

Requirements

You have assigned the following:

- "Evaluation of the sensors": "1oo2 evaluation, equivalent" or "1oo2 evaluation, non-equivalent"

"Supply last valid value"

The most recent valid value (old value) before the discrepancy occurred is made available to the safety program in the F-CPU as soon as a discrepancy is detected between the signals of the two affected input channels. This value is supplied until the discrepancy disappears or the discrepancy time expires and a discrepancy error is detected. The sensor-actuator response time is correspondingly increased by this time.

This means the discrepancy time of connected sensors with 1oo2 evaluation must be adjusted to fast response times. It makes no sense, for example, if connected sensors with a discrepancy time of 500 ms trigger a time-critical shutdown.. In the worst-case scenario, the sensor-actuator response time is extended by an amount approximately equal to the discrepancy time:

- For this reason, position the sensors in the process in such a way as to **minimize discrepancy**.
- Then select the **shortest possible** discrepancy time which is also sufficient to compensate for faulty triggering of discrepancy errors.

"Supply value 0"

As soon as a discrepancy between the signals of the two relevant input channels is detected, the value "0" is made available to the safety program in the F-CPU.

If you have set "Supply value 0", the sensor-actuator response time is not affected by the discrepancy time.

4.2.3.4 Discrepancy time

Function

You can set the discrepancy time for each channel pair.

Requirements

You have assigned the following:

- "Evaluation of the sensors": "1oo2 evaluation, equivalent" or "1oo2 evaluation, non-equivalent"

In most cases, a discrepancy time is started, but does not fully expire because the signal differences are cleared within a short time.

Set the discrepancy time high enough that in the error-free case the difference between the two signals (when testing for non equivalence: the same levels) has always disappeared before the discrepancy time has expired.

Behavior while discrepancy time is running

While the programmed discrepancy time is running internally on the module, either the **last valid value** or **"0"** is returned to the safety program on the F-CPU by the input channels involved, depending on the parameter settings for the behavior at discrepancy.

Behavior after expiration of the discrepancy time

If no agreement (when checking for non equivalence: inequality) of the input signals exists once the assigned discrepancy time expires, for example, due to a break in a sensor wire, a discrepancy error is detected and the "Discrepancy error" diagnostic message containing information on which channels are faulty is generated.

4.2.3.5 Reintegration after discrepancy error

Function

This parameter specifies the criteria for when a discrepancy error is regarded as corrected, thus enabling reintegration of the relevant input channels. The following parameter assignment options are available:

- "Test 0-signal necessary"
- "Test 0-signal not necessary"

Requirements

You have assigned the following:

- "Sensor evaluation": "1oo2 evaluation, equivalent" or "1oo2 evaluation, non equivalent"

"Test 0-signal necessary"

If you have assigned "Test 0-signal necessary", a discrepancy error is not regarded as corrected until a 0-signal is present at both of the relevant input channels.

If you are using non equivalent sensors, which means you have set "Sensor evaluation" to "1oo2 evaluation, non equivalent", a 0-signal must be present again at the low order channel of the channel pair.

"Test 0-signal not necessary"

If you have assigned "Test 0-Signal not necessary", a discrepancy error is regarded as corrected when a discrepancy no longer exists at both of the relevant input channels.

4.2.4 Parameters of the channels

4.2.4.1 Sensor supply

Here you select one of the internal sensor supplies VS_0 to VS_n or an external sensor supply.

The selection of an internal sensor supply is required for using the short circuit test.

See also

Time for short circuit test (Page 19)

4.2.4.2 Input delay

Function

To suppress stray interference, you can set an input delay for the entire channel or channel pair.

Interference pulses whose pulse time is less than the set input delay (in ms) are suppressed. Suppressed interference pulses are invisible in the PII.

A high input delay suppresses longer interference pulses, but results in a longer response time.

The values available for the input delay depend on the "Startup time of sensors after short circuit test" and the "Time for short circuit test" of the configured sensor supply.

Note

Due to the physical properties, there is a possibility of crosstalk between signals in the case of long, unshielded signal lines (see section "Electromagnetic compatibility" in the system manual ET 200SP distributed I/O system (http://support.automation.siemens.com/WW/view/en/58649293)).

Adapt the input delay or use shielded signal lines in order to prevent possible passivation of the fail-safe digital inputs and switch-off of the sensor supply.

See also

Technical specifications (Page 53)

Response times (Page 57)

4.2.4.3 Pulse extension

Function

Pulse extension is a function to change a digital input signal. A pulse on a digital input is extended to at least the assigned length. If the input pulse is already longer than the assigned length, the pulse is not changed.

The fail-safe electronic module only lengthens pulses with the value "0" because the basis of the safety concept is that there is a safe state for all process variables. For digital F-I/O, this is the value "0", which applies to sensors as well as to actuators.

With 1oo2 evaluation, the result of the evaluation of both sensors is used for the pulse extension.

4.2.4.4 Chatter monitoring

Function

Chatter monitoring is a process control function for digital input signals. It detects and reports unusual signal sequences in the process with 1oo1 evaluation, for example, an input signal fluctuating between "0" and "1" too frequently. The occurrence of such signal characteristics is an indication of faulty sensors or process control instability.

Recognizing unusual signal patterns

An assigned monitoring window is available for each input channel. The monitoring window starts with the first signal change of the input signal. If the input signal changes within the monitoring window at least as often as the assigned "Number of signal changes", a chatter error is detected. If no chatter error is detected within the monitoring window, the next signal change restarts the monitoring window.

If a chatter error is detected, a diagnostic is signaled. If the chatter error does not occur for the monitoring window for three times the configured period, the diagnostic is reset.

Principle

The figure below shows the principle of chatter monitoring as a graphic.

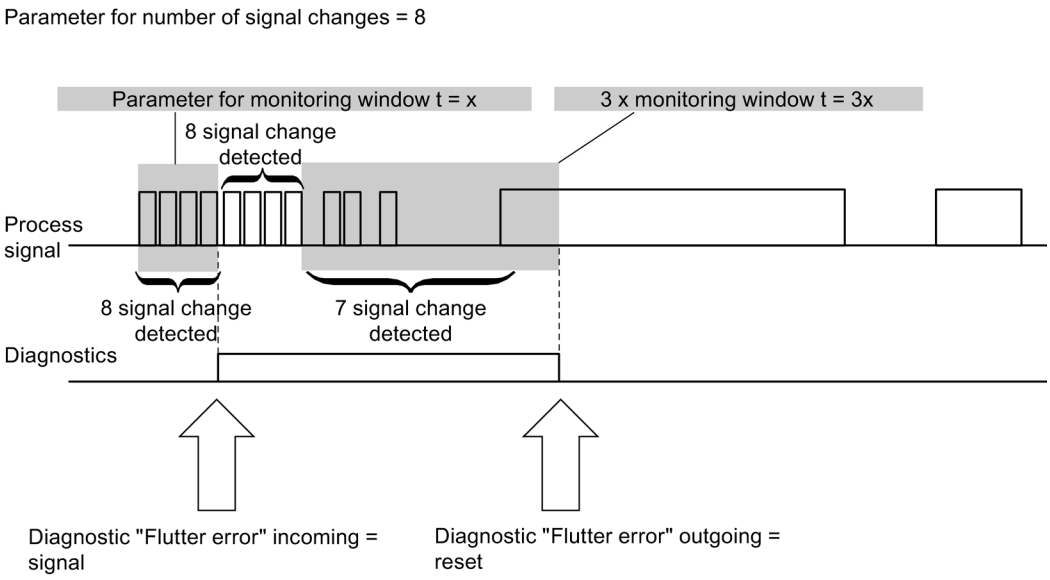

Figure 4-1 Figure chatter monitoring

Number of signal changes

Sets the number of signal changes after which a chatter error should be reported.

4.2.4.5 Monitoring window

Sets the time for the monitoring window of flutter monitoring.

You can set times of 1 s to 100 s in whole seconds for the monitoring window.

You can configure a monitoring window of 0.5 s when you set 0 s.

4.3 Address space

Address assignment of the digital input module F-DI 8×24VDC HF

The digital input module F-DI 8×24VDC HF occupies the following address areas in the F-CPU:

Table 4- 2 Address assignment in the F-CPU

Occupied bytes in the F-CPU:	
In input range	In output range
x + 0 to x + 5	x + 0 to x + 3

x = Module start address

Address assignment of the user data and the value status of digital input module F-DI 8×24VDC HF

The user data occupy the following addresses in the F-CPU out of all the assigned addresses of the digital input module F-DI 8×24VDC HF:

Table 4- 3 Address assignment through user data

Byte in the F-CPU	Assigned bits in F-CPU per F-module:							
	7	6	5	4	3	2	1	0
x + 0	DI_7	DI_6	DI_5	DI_4	DI_3	DI_2	DI_1	DI_0
x + 1	Value status for DI_7	Value status for DI_6	Value status for DI_5	Value status for DI_4	Value status for DI_3	Value status for DI_2	Value status for DI_1	Value status for DI_0

x = Module start address

Note

You may only access the addresses occupied by user data and value status.

The other address areas occupied by the F-modules are assigned for functions including safety-related communication between the F-modules and F-CPU in accordance with PROFIsafe.

1oo2 evaluation of the sensors combines the two channels. With 1oo2 evaluation of the sensors you may only access the low order channel in the safety program.

Additional information

For detailed information about F-I/O access, refer to the SIMATIC Safety – Configuring and Programming (http://support.automation.siemens.com/WW/view/en/54110126) manual.

See also

Value status (Page 52)

Applications of the F-I/O module 5

5.1 Applications of the electronic module

Selecting the application

The diagram below supports you in selecting the application that suits your fail-safe requirements. In the following sections, you will learn how to wire the F-module, the specific parameters you must assign in STEP 7 Safety and the errors that are detected.

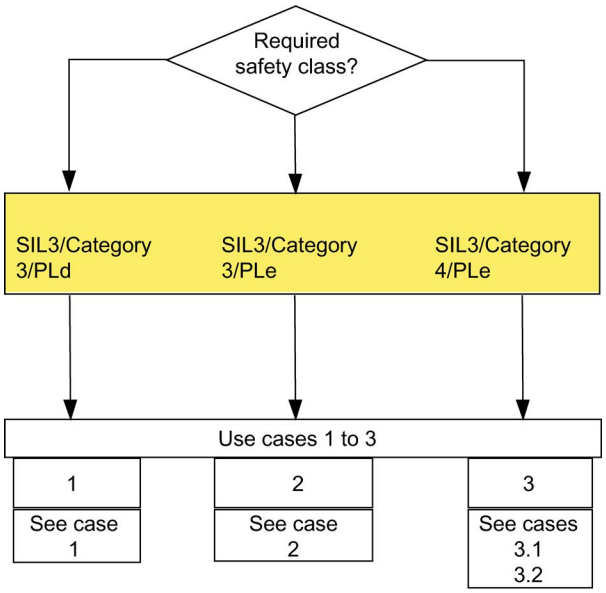

Figure 5-1 Selecting the application – digital input module F-DI 8×24VDC HF

⚠ WARNING

The achievable safety class depends on the quality of the sensor and the duration of the proof-test interval in accordance with IEC 61508:2010. If the quality of the sensor is lower than the quality required by the safety class, redundant sensors connected via two channels must be used and evaluated.

Conditions for achieving SIL/Cat./PL

The table below lists the conditions which have to be met for achieving at least the corresponding safety requirements.

Table 5- 1 Conditions for achieving SIL/Cat./PL

Application	Sensor evaluation	Sensor supply	Achievable SIL/Cat./PL
1	1oo1	Any	3 / 3 / d
2	1oo2 equivalent	Internal, without short circuit test	3 / 3 / e
		External	
3.1	1oo2 equivalent	Internal, with short circuit test	3 / 4 / e
3.2	1oo2 non-equivalent	External/internal, with short circuit test	

Note

You can operate the various inputs of an F-DI module simultaneously in SIL3/Cat.3/PLd **and** in SIL3/Cat.3 or Cat.4/PLe. You only have to interconnect the inputs and assign parameters as described in the following sections.

Sensor requirements

Information on safety-related use of sensors is available in the section Requirements for sensors and actuators for fail-safe modules in the ET 200SP distributed I/O system (http://support.automation.siemens.com/WW/view/en/58649293) system manual.

5.2 Application 1: Safety mode SIL3/Cat.3/PLd

Wiring

The wiring is carried out on the matching BaseUnit (Page 13).

Sensor supply

The sensor supply can be powered internally or externally.

Wiring diagram – connecting one sensor via one channel

One sensor is connected via one channel (1oo1 evaluation) for each process signal. Any sensor supply of the module can be assigned to each input.

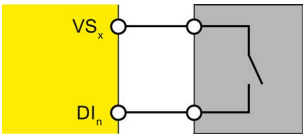

Figure 5-2 One sensor connected via one channel, internal sensor supply

You can also supply the sensor by means of an external sensor supply.

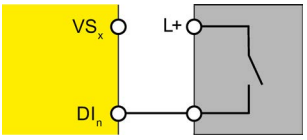

Figure 5-3 One sensor connected via one channel, external sensor supply

⚠ WARNING
To achieve SIL3/Cat.3/PLd using this wiring, you must use a qualified sensor.

Parameter assignment

Assign the following parameters for the corresponding channel:

Table 5- 2 Parameter assignment

Parameter	Channel with internal sensor supply	Channel with external sensor supply
Sensor evaluation	1oo1 evaluation	
Short circuit test	• disable • enable	disable
Sensor supply	• Sensor supply n • External sensor supply	External sensor supply*

*) Otherwise a diagnostic message will be generated when short circuit test is activated.

Fault detection

The following table presents fault detection according to the sensor supply and the parameter assignment for the short circuit test:

Table 5- 3 Fault detection

Fault	Fault detection		
	Internal sensor supply and short circuit test activated	Internal sensor supply and short circuit test deactivated	External sensor supply
Short circuit of the input with other channels or other sensor supplies (short circuit with other channels is detected only if they use a different sensor supply)	yes*	no	no
Short circuit with L+ to DI_n	yes	no	no
Short circuit with M to DI_n	yes*	yes*	no
Discrepancy error	—	—	—
Short circuit with L+ to VS_n	yes	no	—
Short circuit with M to VS_n or defective	yes	yes	—

*) Fault detection only if signals are corrupted. That is, the read signal differs from the sensor signal. If there is no signal corruption with respect to the sensor signal, fault detection is not possible and is not required from a safety standpoint.

WARNING

If the short circuit test is not activated or the sensor supply to digital inputs is set to "External sensor supply", the cable must be routed short circuit proof.

5.3 Application 2: Safety mode SIL3/Cat.3/PLe

Assigning inputs to each other

The digital input module F-DI 8×24VDC HF has 8 fail-safe inputs, DI_0 to DI_7 (SIL3). You can combine two of these inputs each to one input.

You can combine the following inputs:

- DI_0 and DI_4
- DI_1 and DI_5
- DI_2 and DI_6
- DI_3 and DI_7

The process signals are provided by channels DI_0, DI_1, DI_2 and DI_3.

Wiring

The wiring is carried out on the matching BaseUnit (Page 13).

Sensor supply

The sensor supply can be powered internally or externally.

Wiring diagram – connecting a two-channel sensor equivalent

A two-channel sensor is connected equivalent to two inputs of the F-module for each process signal (1oo2 evaluation).

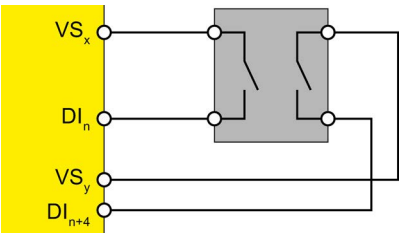

Figure 5-4 One two-channel sensor connected via two channels, internal sensor supply

You can also supply the sensor by means of an external sensor supply.

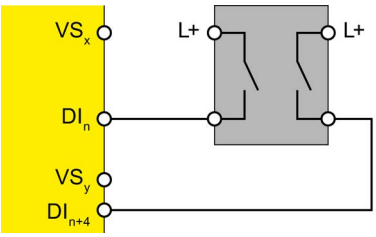

Figure 5-5 One two-channel sensor connected via two channels, external sensor supply

Wiring diagram – connecting two single-channel sensors via two channels

Two single-channel sensors that capture the same process value are connected to two inputs of the F-module for each process signal (1oo2 evaluation).

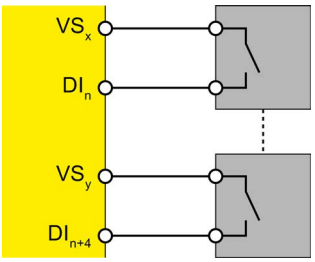

Figure 5-6 Two single-channel sensors connected via two channels, internal sensor supply

You can also supply the sensors by means of an external sensor supply.

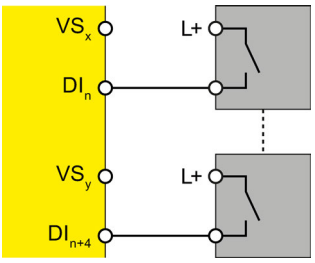

Figure 5-7 Two single-channel sensors connected via two channels, external sensor supply

⚠ WARNING
To achieve SIL3/Cat.3/PLe using this wiring, you must use a qualified sensor.

Parameter assignment

Assign the following parameters for the corresponding channel:

Table 5- 4 Parameter assignment

Parameter	Channel with internal sensor supply	Channel with external sensor supply
Sensor evaluation	1oo2 evaluation, equivalent	
Short circuit test	• disable • enable	disable

Fault detection

The following table presents fault detection according to the sensor supply and the parameter assignment for the short circuit test:

Table 5- 5 Fault detection

Fault	Fault detection	
	Internal sensor supply and short circuit test deactivated	External sensor supply
Short circuit within the channel pair	no	no
Short circuit with other channels or other sensor supplies	yes*	yes
Short circuit with L+ to DI_n	yes*	yes*
Short circuit with M to DI_n	yes*	yes*
Discrepancy error	yes	yes
Short circuit with L+ to VS_n	no	no
Short circuit with M to VS_n or defective	yes	—

*) Fault detection only if signals are corrupted. That is, the read signal differs from the sensor signal (discrepancy error). If there is no signal corruption with respect to the sensor signal, fault detection is not possible and is not required from a safety standpoint.

5.4 Application 3: Safety mode SIL3/Cat.4/PLe

Assigning inputs to each other

The digital input module F-DI 8×24VDC HF has 8 fail-safe inputs, DI_0 to DI_7 (SIL3). You can combine two of these inputs each to one input.

You can combine the following inputs:

- DI_0 with DI_4
- DI_1 with DI_5
- DI_2 with DI_6
- DI_3 with DI_7

The process signals are provided by channels DI_0, DI_1, DI_2 and DI_3.

Wiring

The wiring is carried out on the matching BaseUnit (Page 13).

Sensor supply

The sensor must be supplied internally by at least one channel for application 3.1.

The sensor can be supplied internally or externally for application 3.2.

Requirements for applications in machine protection with Cat.4

Both conditions must be met for applications in machine protection with Cat.4:

- The wiring between sensors and automation system and between automation system and actuators must be designed to state-of-the-art engineering and standards to prevent short circuits.
- The actuators must be wired as seen in sections Use case 3.1 (SIL3/Cat.4/PLe) (Page 38) or Use case 3.2 (SIL3/Cat.4/PLe) (Page 40). You only need to detect **one** short circuit because two faults are required to generate it. This means both signal cables in short circuit have an isolation fault. A multiple short circuit analysis is not required.

Procedures for locating all short circuits are also permitted if single short circuits are not located. One of the two conditions must be met for this purpose:

- Short circuits may not corrupt the read signals compared to the sensor signals.
- Short circuits cause a corruption of the read signals compared to sensor signals in the direction that ensures safety.

5.4.1 Use case 3.1 (SIL3/Cat.4/PLe)

Wiring diagram – connecting a two-channel sensor via two channels

A two-channel sensor is connected to two inputs of the F-module for each process signal (1oo2 evaluation).

Supply the sensors from two different sensor supplies.

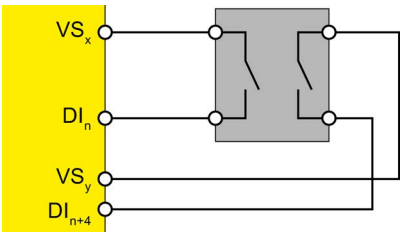

Figure 5-8 One two-channel sensor connected via two channels, internal sensor supply

You can also connect two single-channel sensors via two channels. In this case, the same process variable is acquired with two mechanically separate sensors.

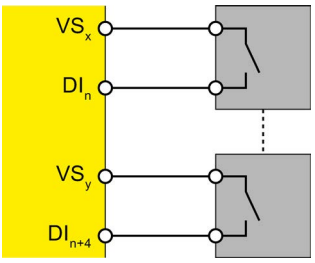

Figure 5-9 Two single-channel sensors connected via two channels, internal sensor supply

⚠ WARNING
To achieve SIL3/Cat.4/PLe using this wiring, you must use a suitably qualified sensor.

Parameter assignment

Assign the following parameters for the corresponding channel:

Table 5- 6 Parameter assignment

Parameter	
Sensor evaluation	1oo2 evaluation, equivalent
Short circuit test	enable
Sensor supply	• Sensor supply n (internally by at least one channel) • External

Fault detection

The following table presents fault detection according to the sensor supply and the parameter assignment for the short circuit test:

Table 5- 7 Fault detection

Fault	Fault detection
Short circuit within the channel pair, with other channels or other sensor supplies	yes*
Short circuit with L+ to DI_n	yes* / yes (for channel whose short circuit test is activated)
Short circuit with M to DI_n	yes*
Discrepancy error	yes
Short circuit with L+ to VS_n	yes
Short circuit with M to VS_n or defective	yes

*) Fault detection only if signals are corrupted. That is, the read signal differs from the sensor signal (discrepancy error). If there is no signal corruption with respect to the sensor signal, fault detection is not possible and is not required from a safety standpoint.

5.4.2 Use case 3.2 (SIL3/Cat.4/PLe)

Wiring diagram – connecting a nonequivalent sensor

A nonequivalent sensor is connected to two inputs of the F-module for each process signal (1oo2 evaluation, non equivalent).

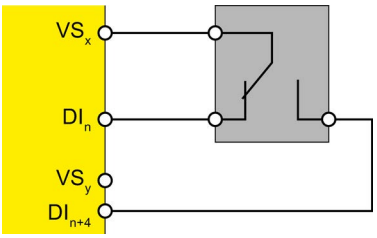

Figure 5-10 Nonequivalent sensor connected, internal sensor supply

You can also supply the sensor by means of an external sensor supply.

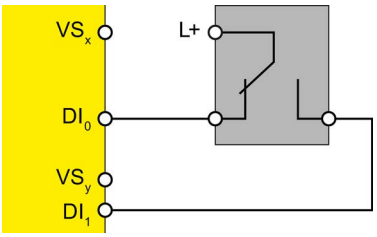

Figure 5-11 Nonequivalent sensor connected, external sensor supply

⚠ WARNING
To achieve SIL3/Cat.4/PLe using this wiring, you must use a suitably qualified sensor.

Wiring diagram – connecting two single-channel sensors nonequivalent

Two single-channel sensors are connected nonequivalent to two inputs of the F-module for each process signal (1oo2 evaluation).

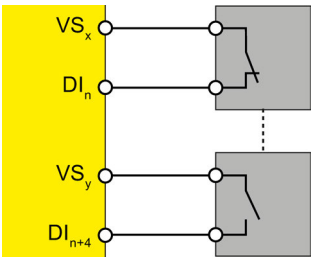

Figure 5-12 Two single-channel sensors connected nonequivalent, internal sensor supply

You can also supply the sensors by means of an external sensor supply.

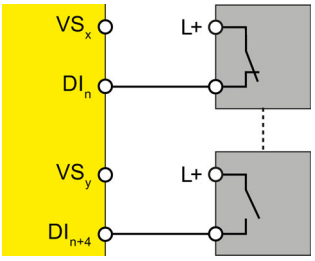

Figure 5-13 Two single-channel sensors connected nonequivalent, external sensor supply

⚠ WARNING
To achieve SIL3/Cat.4/PLe using this wiring, you must use a suitably qualified sensor.

Parameter assignment

Assign the following parameters for the corresponding channel:

Table 5- 8 Parameter assignment

Parameter	
Sensor evaluation	1oo2 evaluation, non equivalent
Short circuit test	• disable • enable
Sensor supply	• Sensor supply n • External sensor supply

Fault detection

The following table presents fault detection according to the sensor supply and the parameter assignment for the short circuit test:

Table 5- 9 Fault detection

Fault	Fault detection
Short circuit within the channel pair, with other channels or other sensor supplies	yes
Short circuit with L+ to DI_n	yes* / yes (for channel whose short circuit test is activated)
Short circuit with M to DI_n	yes*
Discrepancy error	yes
Short circuit with L+ to VS_n	yes, if used
Short circuit with M to VS_n or defective	yes, if sensor supply is activated

*) Fault detection only if signals are corrupted. That is, the read signal differs from the sensor signal (discrepancy error). If there is no signal corruption with respect to the sensor signal, fault detection is not possible and is not required from a safety standpoint.

Interrupts/diagnostic messages 6

6.1 Status and error display

LED display

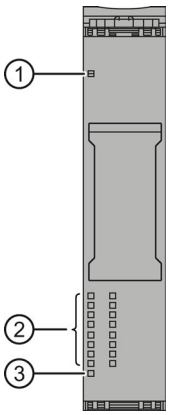

① DIAG (green/red)
② Channel status (green), channel fault (red)
③ PWR (green)

Figure 6-1 LED display

Meaning of the LED displays

The following tables explain the meaning of the status and error displays. Remedies for diagnostic messages can be found in section Diagnostic messages (Page 47).

WARNING
The DIAG LED and the channel status and channel fault LEDs of the inputs are not designed as safety-related LEDs and therefore may not be evaluated for safety-related activities.

PWR LED

Table 6- 1 Meaning of the PWR LED

PWR	Meaning
□ Off	Supply voltage L+ missing
■ On	Supply voltage L+ available

DIAG LED

Table 6- 2 Meaning of the DIAG LED

DIAG	Meaning
□ Off	Backplane bus supply of the ET 200SP not okay
☼ Flashing	Module parameters not configured
■ On	Module parameters configured and no module diagnostics
☼ Flashing	Module parameters configured and module diagnostics

Channel status/channel fault LED

Table 6- 3 Meaning of the channel status/channel fault LED

Channel status	Channel fault	Meaning
□ Off	□ Off	Process signal = 0 and no channel diagnostics
■ On	□ Off	Process signal = 1 and no channel diagnostics
□ Off	■ On	Process signal = 0 and channel diagnostics
☼/☼ Alternately flashing		Channel waiting for user acknowledgment

Channel status/DIAG/channel fault LED

Table 6- 4 Meaning of the channel status/DIAG/channel fault LED

Channel status	DIAG	Channel fault	Meaning
Off	Flashing	All On	The PROFIsafe address does not match the configured PROFIsafe address
Flashing	Flashing	Off	Identification of the F-module when assigning the PROFIsafe address

6.2 Interrupts

Introduction

The F-DI 8×24VDC HF fail-safe digital input module supports diagnostic interrupts.

Diagnostic interrupt

The F-module generates a diagnostic interrupt for each diagnostic message described in section Diagnostic messages (Page 47).

The table below provides an overview of the diagnostic interrupts of the F-module . The diagnostic interrupts are assigned either to one channel or the entire F-module.

Table 6- 5 Diagnostic interrupts of the F-DI 8×24VDC HF

Diagnostic interrupt	Fault code	Signaled in application	Scope of diagnostic interrupt	Configurable
Overtemperature	5_D	1, 2, 3	F-module	No
Parameter assignment error	16_D			
Load voltage missing	17_D			
Access to retentive storage of F-address not possible	30_D			
Different destination address (F_Dest_Add)	64_D			
Invalid destination address (F_Dest_Add)	65_D			
Invalid source address (F_Source_Add)	66_D			
Watchdog time is 0 ms (F_WD_Time or F_WD_Time2)	67_D			
"F_SIL" parameter exceeds the application-specific SIL	68_D			
"F_CRC_Length" parameter does not match the generated CRC	69_D			

Diagnostic interrupt	Fault code	Signaled in application	Scope of diagnostic interrupt	Configurable
Incorrect F-parameter version or F_Block_ID	70_D			
CRC1 error	71_D			
Inconsistent iParameters (iParCRC error)	75_D			
F_Block_ID not supported	76_D			
Internal error	256_D			
Time monitoring activated	259_D			
Internal supply voltage of the module failed	260_D			
Incorrect/inconsistent firmware present. Firmware update required	283_D			
Discrepancy error, channel status 0/0	768_D	2, 3	Channel	
Discrepancy error, channel status 0/1	769_D			
Discrepancy error, channel status 1/0	770_D			
Discrepancy error, channel status 1/1	771_D			
Input signal could not be clearly detected	773_D	1, 2, 3		
Short circuit of internal sensor supply to L+	774_D			Yes
Overload or short circuit of internal sensor supply to ground	775_D			
No pulse detected	778_D	1		
Sensor signal chatters	784_D			
Switching frequency too high	785_D			No
Undertemperature	786_D		F-module	
Fault in input circuit	787_D		Channel	
PROFIsafe communication error (timeout)	792_D		F-module	
PROFIsafe communication error (CRC)	793_D			
PROFIsafe address assignment error	794_D			
Input short-circuited to L+	796_D		Channel	Yes
Supply voltage too high	803_D		F-module	No
Supply voltage too low	804_D			

6.3 Diagnostic messages

Diagnostic messages

Module faults are indicated as diagnostics (module status).

Once the fault is eliminated, the F-module must be reintegrated in the safety program. For additional information on passivation and reintegration of F-I/O, refer to the SIMATIC Safety – Configuring and Programming (http://support.automation.siemens.com/WW/view/en/54110126) manual.

Table 6- 6 Diagnostic messages of the F-DI 8×24VDC HF

Diagnostic message	Fault code	Meaning	Remedy
Overtemperature	5_D	An excessively high temperature was measured in the F-module.	Operate the F-module within the specified temperature range. (see Technical specifications (Page 53)) Once the fault has been eliminated, the F-module must be removed and inserted or the power switched OFF and ON
Parameter assignment error	16_D	Parameter assignment errors include: • The F-module cannot use the parameters (unknown, invalid combination, etc.). • The F-module parameters have not been configured.	Correct the parameter assignment.
Load voltage missing	17_D	Missing or insufficient supply voltage L+	• Check supply voltage L+ at BaseUnit • Check BaseUnit type
Access to retentive storage of F-address not possible	30_D	The F-destination address stored in the coding element cannot be accessed.	Verify that the coding element is present or replace the coding element.
Different destination address (F_Dest_Add)	64_D	The PROFIsafe driver has detected a different F-destination address.	Check the parameter assignment of the PROFIsafe driver and the address setting of the F-module.
Invalid destination address (F_Dest_Add)	65_D	The PROFIsafe driver has detected an invalid F-destination address.	Check the parameter assignment of the PROFIsafe driver.
Invalid source address (F_Source_Add)	66_D	The PROFIsafe driver has detected an invalid F-source address.	
Watchdog time is 0 ms (F_WD_Time or F_WD_Time2)	67_D	The PROFIsafe driver has detected an invalid watchdog time.	
"F_SIL" parameter exceeds the application-specific SIL	68_D	The PROFIsafe driver has detected a discrepancy between the SIL setting of the communication and the application.	
"F_CRC_Length" parameter does not match the generated CRC	69_D	The PROFIsafe driver has detected a discrepancy in the CRC length.	

Diagnostic message	Fault code	Meaning	Remedy
Incorrect F-parameter version or F_Block_ID	70_D	The PROFIsafe driver has detected an incorrect version of the F-parameters or an invalid F_Block_ID.	
CRC1 error	71_D	The PROFIsafe driver has detected inconsistent F-parameters.	
Inconsistent iParameters (iParCRC error)	75_D	The PROFIsafe driver has detected inconsistent iParameters.	Check the parameter assignment.
F_Block_ID not supported	76_D	The PROFIsafe driver has detected an incorrect Block ID.	Check the parameter assignment of the PROFIsafe driver.
Internal error	256_D	Possible causes: • Impermissibly high electromagnetic interference is present. • The F-module is defective.	• Eliminate the interference. The module must then be pulled and plugged, or the power switched OFF and ON • Replace the F-module.
Internal supply voltage of the module failed	260_D	Possible causes: • Impermissibly high electromagnetic interference is present. • The F-module is defective.	• Eliminate the electromagnetic interference. The module must then be pulled and plugged, or the power switched OFF and ON • Replace the F-module.
Incorrect/inconsistent firmware present. Firmware update required	283_D	The firmware is incomplete and/or firmware added to the F-module is incompatible. This leads to errors or functional limitations when operating the F-module.	• Perform a firmware update for all parts of the F-module and note any error messages. • Use only firmware versions released for this F-module.
Discrepancy error, channel status 0/0	768_D	Possible causes: • The process signal is faulty. • The sensor is defective. • The configured discrepancy time is too low. • There is a short circuit between an unconnected sensor cable and the sensor supply cable. • Wire break in connected sensor cable or the sensor supply cable • An error occurred during the discrepancy check.	• Check the process signal. • Replace the sensor. • Check the parameter assignment of the discrepancy time. • Check the process wiring.
Discrepancy error, channel status 0/1	769_D		
Discrepancy error, channel status 1/0	770_D		
Discrepancy error, channel status 1/1	771_D		

Diagnostic message	Fault code	Meaning	Remedy
Input signal could not be clearly detected	773_D	An error occurred in the plausibility check of the input signal between the processors. You must eliminate the error within 100 hours. If you do not eliminate the error within 100 hours, the F-module will become inoperative. Possible causes: • The input signal is faulty, e.g., as a result of impermissibly high electromagnetic interference. • A high-frequency input signal is present, e.g., due to mutual interference of sensors or the signal being above the sampling frequency of the input signal. • A momentary interruption/short circuit of the sensor cable (loose contact) is present. • The sensor/switch is bouncing.	• Use shielded cables to reduce the EMC effects. • Reduce the input frequency. • Check the wiring of the sensor.
Short circuit of internal sensor supply to L+	774_D	Possible causes: • There is a short circuit of the internal sensor supply with L+. • There is a short circuit of two sensor supplies. • The capacitance of the connected sensor for the configured test time is too high. • The sensor is defective.	• Eliminate the short circuit in the process wiring. • Check the configured test time and the process wiring. • Replace the sensor.
Overload or short circuit of internal sensor supply to ground	775_D	Possible causes: • The internal sensor supply is short-circuited to ground. • Impermissibly high electromagnetic interference is present.	• Eliminate the overload. • Eliminate the short circuit in the process wiring. • Check the "Sensor supply" parameter. • Eliminate/reduce the electromagnetic interference.

Diagnostic message	Fault code	Meaning	Remedy
No pulse detected	778D	A pulse with a length greater than or equal to "Minimum pulse time" has not occurred within the time configured with the "Pulse monitoring window" parameter. Possible causes: • The "Pulse monitoring window" parameter setting is too high. • The "Minimum pulse time" parameter setting is too low. • There is a wire break in the process wiring.	• Check the "Pulse monitoring window" parameter. • Check the "Minimum pulse time" parameter. • Check the process wiring.
Sensor signal chatters	784D	Too many signal changes have occurred within the time configured with the "Monitoring window" parameter. • The "Monitoring window" parameter setting is too high. • The "Number of signal changes" parameter setting is too low. • A momentary interruption/short circuit of the sensor cable (loose contact) is present. • Impermissibly high electromagnetic interference is present. • The sensor/switch is bouncing. • The sensor is defective.	• Check the "Monitoring window" parameter. • Check the "Number of signal changes" parameter. • Check the process wiring. • Eliminate/reduce the electromagnetic interference. • Replace the sensor.
Switching frequency too high	785D	The maximum switching frequency of the F-module has been exceeded.	Reduce the switching frequency. (see Technical specifications (Page 53))
Undertemperature	786D	The minimum permissible temperature limit has been violated.	Operate the F-module within the specified temperature range. (see Technical specifications (Page 53))
Fault in input circuit	787D	The F-module has detected an internal error. Possible causes: • Impermissibly high electromagnetic interference is present. • The F-module is defective.	• Eliminate/reduce the electromagnetic interference. • Replace the F-module.
PROFIsafe communication error (timeout)	792D	The PROFIsafe driver has detected a timeout. Possible causes: • The F-monitoring time is set incorrectly. • Bus faults are present.	• Check the parameter assignment. • Ensure that communication is functioning correctly.

Diagnostic message	Fault code	Meaning	Remedy
PROFIsafe communication error (CRC)	793_D	The PROFIsafe driver has detected a CRC error. Possible causes: • The communication between the F-CPU and F-module is disturbed. • Impermissibly high electromagnetic interference is present. • An error occurred in the sign-of-life monitoring.	• Check the communication connection between the F-module and F-CPU. • Eliminate the electromagnetic interference.
PROFIsafe address assignment error	794_D	An error occurred during the automatic PROFIsafe address assignment.	Check the configuration.
Input short-circuited to L+	796_D	The input signal is short-circuited to L+.	Eliminate the short circuit.
Supply voltage too high	802_D	The supply voltage is too high.	Check the supply voltage.
Supply voltage too low	803_D	The supply voltage is too low.	Check the supply voltage.

Supply voltage outside the nominal range

If the supply voltage L+ is outside the specified value range, the DIAG LED flashes and the module is passivated.

When the voltage has recovered (level must remain above the specified value for at least 1 minute (see Technical specifications (Page 53) Voltages, Currents, Potentials)), the DIAG LED stops flashing. The module remains passivated.

Behavior in case of cross circuit/short circuit to the sensor supply

When internal sensor supply is specified and short circuit test is deactivated, short circuits to ground at the sensor supplies are detected. Channels for which the relevant sensor supply is configured will be passivated.

When internal sensor supply is specified and short circuit test is enabled, short circuits to ground and potential at the sensor supply are detected. Channels for which the relevant sensor supply is configured will be passivated.

Special features for fault detection

The detection of certain faults (short-circuits or discrepancy errors, for example) depends on the application, the wiring, and the parameter assignment of the short circuit test and the sensor power supply. For this reason, tables on fault detection for the applications are presented under Applications of the F-I/O module (Page 29).

Generally applicable information on diagnostics

Information on diagnostics that pertains to all F-modules (for example, readout of diagnostics functions or passivation of channels) is available in the SIMATIC Safety – Configuring and Programming (http://support.automation.siemens.com/WW/view/en/54110126) manual.

6.4 Value status

Properties

In addition to the diagnostic messages and the status and error display, the F-module makes available information about the validity of each input and output signal – the value status. The value status is entered in the process image along with the input signal.

Value status for digital input and output modules

The value status is additional binary information of a digital input or output signal. It is entered in the process image of the inputs (PII) at the same time as the process signal. It provides information about the validity of the input or output signal.

The value status is influenced by the wire break check, short-circuit, chatter monitoring, pulse extension, and plausibility check.

- 1_B: A valid process value is output for the channel.
- 0_B: A fail-safe value is output for the channel, or the channel is deactivated.

Assignment of inputs and outputs for the value status in the PII

Each channel of the F-module is assigned a value status in the process image of the inputs. You can find the assignment in section Address space (Page 27).

Reference

A detailed description of the evaluation and processing of the value status can be found in the SIMATIC Safety – Configuring and Programming (http://support.automation.siemens.com/WW/view/en/54110126) manual.

Technical specifications 7

Technical specifications of F-DI 8×24VDC HF

	6ES7136-6BA00-0CA0
Product type designation	F-DI 8x24VDC HF
General information	
Hardware product version	01
Firmware version	V1.0.0
Product function	
I&M data	Yes; IM0 to IM3
Engineering with	
STEP 7 TIA Portal configurable/integrated as of version	V12.0
STEP 7 configurable/integrated as of version	as of V5.5 SP3 / -
PROFINET as of GSD version/GSD revision	V2.31
Supply voltage	
Type of supply voltage	24 V DC
Rated value (DC)	24 V
Low limit of permissible range (DC)	20.4 V
High limit of permissible range (DC)	28.8 V
Reverse polarity protection	Yes
Input current	
Current consumption (rated value)	75 mA; without load
Current consumption, max.	21 mA; from backplane bus
Sensor supply	
Number of outputs	8
Output current	
Up to 60 °C, max.	0.3 A
Short circuit protection	Yes; electronic (response threshold 0.7 A to 1.8 A)
24 V sensor supply	
24 V	Yes; min. L+ (-1.5 V)
Short circuit protection	Yes
Output current, max.	800 mA; total current of all sensors
Power	
Power consumption from the backplane bus	70 mW
Power loss	
Power loss, typ.	4 W

	6ES7136-6BA00-0CA0
Address space	
Address space per module	
Input	6 bytes
Output	4 bytes
Digital inputs	
Number of inputs	8
m/p-reading	Yes; p-reading
Input characteristic curve according to IEC 61131, Type 1	Yes
Input voltage	
Type of input voltage	DC
Rated value, DC	24 V
For "0" signal	-30 to +5 V
For "1" signal	+15 to +30 V
Input current	
For "1" signal, typ.	3.7 mA
Input delay (for rated value of input voltage)	
For standard inputs	
• Assignable	Yes
• For "0" to "1", min.	0.4 ms
• For "0" to "1", max.	20 ms
• For "1" to "0", min.	0.4 ms
• For "1" to "0", max.	20 ms
For counter/technological functions	
• Assignable	No
Length of cable	
Cable length, shielded, max.	1000 m
Cable length unshielded, max.	500 m
Interrupts/diagnostics/status information	
Interrupts	
Diagnostic interrupt	Yes
Hardware interrupt	No
Diagnostic messages	
Diagnostics	Yes, see section "Interrupts/diagnostic messages" in the manual
Diagnostics display LED	
RUN LED	Yes; green LED
ERROR LED	Yes; red LED
Monitoring of supply voltage	Yes; green PWR LED
Channel status display	Yes; green LED
For channel diagnostics	Yes; red LED
For module diagnostics	Yes; green/red DIAG LED

	6ES7136-6BA00-0CA0
Electrical isolation	
Electrical isolation channels	
Between channels	No
Between the channels and the backplane bus	Yes
Between the channels and the supply voltage of the electronics	No
Permitted potential difference	
Between different circuits	75 V DC / 60 V AC
Isolation	
Isolation test voltage	707 V DC (type test)
Standards, approvals, certificates	
SIL acc. to IEC 61508	SIL 3
Suitable for safety functions	Yes
Maximum achievable safety class in safety mode	
Performance level according to EN ISO 13849-1	PLe
Low demand (PFD) acc. to SIL3	< 2.00E-05 1/h
High demand (PFH) acc. to SIL3	< 1.00E-09 1/h
Environmental conditions	
Operating temperature	
Min.	0 °C
Max.	60 °C
Horizontal installation, min.	0 °C
Horizontal installation, max.	60 °C
Vertical installation, min.	0 °C
Vertical installation, max.	50 °C
Storage/transport temperature	
Min.	-40 °C
Max.	70 °C
Dimensions	
Width	15 mm
Weights	
Weight, approx.	49 g

Dimension drawing

See ET 200SP BaseUnits (http://support.automation.siemens.com/WW/view/en/58532597/133300) manual

Response times

A

Introduction

The next section shows the response times of the digital input module F-DI 8×24VDC HF. The response time of the digital input module F-DI 8×24VDC HF is included in the calculation of the F-system response time.

Definition of response time for fail-safe digital inputs

The response time represents the interval between a signal change at the digital input and reliable availability of the safety frame on the backplane bus.

Times required for the calculation

Maximum internal processing time: $T_{max.}$ = 20 ms

Maximum cycle time: T_{cycle} = 11.5 ms

Short circuit test time for the sensor supply configured for the channel = "Time for short circuit test" + "Startup time after short circuit test"

The input delay, short circuit test times, and discrepancy time are configured in STEP 7.

If you have configured "Supply value 0", the sensor-actuator response time is not affected by the discrepancy time.

Maximum response time in the error-free case with 1oo1 evaluation

Maximum response time = T_{max} + Input delay + Short circuit test time for the sensor supply configured for the channel

Maximum response time in the error-free case with 1oo2 evaluation

Maximum response time = T_{max} + Input delay + Maximum (short circuit test time for the sensor supply configured for channel n, short circuit test time for the sensor supply configured for channel n+4)

Maximum response time with external short circuits

Maximum response time = input delay + (n × T_{cycle}) + sum ("Time for short circuit test" + "Startup time after short circuit test" for sensor with activated short circuit test)

n = Number of sensor supplies with activated short circuit test

Maximum response time with discrepancy error and 1oo2 evaluation

Maximum response time = T_{max} + Input delay + Discrepancy time + 2 × Maximum (short circuit test time for the sensor supply configured for channel n, short circuit test time for the sensor supply configured for channel n+4)

SIEMENS

SIMATIC

ET 200SP
Analog input module
F-AI 4xI 0(4)..20mA 2-/4-wire HF
(6ES7136-6AA00-0CA1)

Manual

Original operating instructions

Preface

Documentation guide 1

Product overview 2

Connecting 3

Parameters/address space 4

Applications of the F-I/O module 5

Interrupts/diagnostic messages 6

Technical specifications 7

Response times A

Representation of analog values B

08/2018

A5E41448857-AB

Legal information

Warning notice system

This manual contains notices you have to observe in order to ensure your personal safety, as well as to prevent damage to property. The notices referring to your personal safety are highlighted in the manual by a safety alert symbol, notices referring only to property damage have no safety alert symbol. These notices shown below are graded according to the degree of danger.

⚠ DANGER

indicates that death or severe personal injury **will** result if proper precautions are not taken.

⚠ WARNING

indicates that death or severe personal injury **may** result if proper precautions are not taken.

⚠ CAUTION

indicates that minor personal injury can result if proper precautions are not taken.

NOTICE

indicates that property damage can result if proper precautions are not taken.

If more than one degree of danger is present, the warning notice representing the highest degree of danger will be used. A notice warning of injury to persons with a safety alert symbol may also include a warning relating to property damage.

Qualified Personnel

The product/system described in this documentation may be operated only by **personnel qualified** for the specific task in accordance with the relevant documentation, in particular its warning notices and safety instructions. Qualified personnel are those who, based on their training and experience, are capable of identifying risks and avoiding potential hazards when working with these products/systems.

Proper use of Siemens products

Note the following:

⚠ WARNING

Siemens products may only be used for the applications described in the catalog and in the relevant technical documentation. If products and components from other manufacturers are used, these must be recommended or approved by Siemens. Proper transport, storage, installation, assembly, commissioning, operation and maintenance are required to ensure that the products operate safely and without any problems. The permissible ambient conditions must be complied with. The information in the relevant documentation must be observed.

Trademarks

All names identified by ® are registered trademarks of Siemens AG. The remaining trademarks in this publication may be trademarks whose use by third parties for their own purposes could violate the rights of the owner.

Disclaimer of Liability

We have reviewed the contents of this publication to ensure consistency with the hardware and software described. Since variance cannot be precluded entirely, we cannot guarantee full consistency. However, the information in this publication is reviewed regularly and any necessary corrections are included in subsequent editions.

Siemens AG
Division Digital Factory
Postfach 48 48
90026 NÜRNBERG
GERMANY

A5E41448857-AB
℗ 09/2018 Subject to change

Copyright © Siemens AG 2018.
All rights reserved

Preface

Purpose of the documentation

This manual supplements the system manual Distributed I/O System ET 200SP (http://support.automation.siemens.com/WW/view/en/58649293).

Functions that affect the system in general are described in the system manual.

The information in this manual and the system/function manuals provide support when you commission the system.

A description of the F-system SIMATIC Safety can be found in the programming and operating manual SIMATIC Safety – Configuring and Programming (http://support.automation.siemens.com/WW/view/en/54110126).

Conventions

CPU: When the term "CPU" is used hereafter, it refers to both the CPUs of the S7-1200/1500 automation system and CPUs of the ET 200SP distributed I/O system.

STEP 7: In this documentation, "STEP 7" is used as a synonym for all versions of the configuration and programming software " (STEP 7 TIA Portal)".

Note the following identified notes:

Note

A note includes important information on the product described in the documentation, on handling the product or on the part of the documentation to which you ought to pay special attention.

Standards

You can find a dated reference to the respective standards in the certificate (https://support.industry.siemens.com/cs/ww/en/view/57141281) or in the EC Declaration of Conformity (https://support.industry.siemens.com/cs/ww/en/view/71764057) for the F-module.

Certified versions

You can find the certified product and firmware versions in annex 1 of the report on the TÜV certificate (https://support.industry.siemens.com/cs/ww/en/view/57141289).

Recycling and disposal

For environmentally friendly recycling and disposal of your old equipment, contact a certified electronic waste disposal company and dispose of the equipment according to the applicable regulations in your country.

Important note for maintaining the operational safety of your system

WARNING

The operators of systems with safety-related characteristics must adhere to specific operational safety requirements. The supplier is also obliged to comply with special product monitoring measures. Siemens informs system operators in the form of personal notifications about product developments and properties which may be or become important issues in terms of operational safety.

You should subscribe to the corresponding notifications in order to obtain the latest information and to allow you to make any necessary modifications to your system.

Log on to Industry Online Support. Follow the links below and click on "Email on update" on the right-hand side in each case:

- SIMATIC S7-300/S7-300F (https://support.industry.siemens.com/cs/products?pnid=13751&lc=en-WW)
- SIMATIC S7-400/S7-400H/S7-400F/FH (https://support.industry.siemens.com/cs/products?pnid=13828&lc=en-WW)
- SIMATIC WinAC RTX (F) (https://support.industry.siemens.com/cs/ww/en/ps/13915)
- SIMATIC S7-1500/SIMATIC S7-1500F (https://support.industry.siemens.com/cs/products?pnid=13716&lc=en-WW)
- SIMATIC S7-1200/SIMATIC S7-1200F (https://support.industry.siemens.com/cs/products?pnid=13683&lc=en-WW)
- Distributed I/O (https://support.industry.siemens.com/cs/products?pnid=14029&lc=en-WW)
- STEP 7 (TIA Portal) (https://support.industry.siemens.com/cs/products?pnid=24471&lc=en-WW)

Security information

Siemens provides products and solutions with industrial security functions that support the secure operation of plants, systems, machines and networks.

In order to protect plants, systems, machines and networks against cyber threats, it is necessary to implement – and continuously maintain – a holistic, state-of-the-art industrial security concept. Siemens' products and solutions constitute one element of such a concept.

Customers are responsible for preventing unauthorized access to their plants, systems, machines and networks. Such systems, machines and components should only be connected to an enterprise network or the internet if and to the extent such a connection is necessary and only when appropriate security measures (e.g. firewalls and/or network segmentation) are in place.

For additional information on industrial security measures that may be implemented, please visit (https://www.siemens.com/industrialsecurity).

Siemens' products and solutions undergo continuous development to make them more secure. Siemens strongly recommends that product updates are applied as soon as they are available and that the latest product versions are used. Use of product versions that are no longer supported, and failure to apply the latest updates may increase customers' exposure to cyber threats.

To stay informed about product updates, subscribe to the Siemens Industrial Security RSS Feed under (https://www.siemens.com/industrialsecurity).

Table of contents

Preface 3

1 Documentation guide 8

2 Product overview 13

2.1 Properties 13

3 Connecting 16

3.1 Wiring and block diagram 16

4 Parameters/address space 20

4.1 Measurement types and measuring ranges 20

4.2 Parameters 20

4.3 Explanation of parameters 22
4.3.1 F-parameters 22
4.3.2 Parameters of the channels 23
4.3.2.1 Interference frequency suppression 23
4.3.2.2 Evaluation of the sensors 23
4.3.2.3 Standard value 24
4.3.2.4 Discrepancy time 24
4.3.2.5 Tolerance window %, absolute 25
4.3.2.6 Tolerance window %, relative 26
4.3.2.7 Parameter assignment of discrepancy analysis for 1oo2 evaluation 27
4.3.2.8 Activated 34
4.3.2.9 Channel failure acknowledge 34
4.3.2.10 Measuring range 34
4.3.2.11 Diagnostics: Wire break 35
4.3.2.12 Smoothing 35

4.4 Address space 38

5 Applications of the F-I/O module 40

5.1 Application 1: Safety mode SIL3/Cat.3/PLd with 2-wire transducer 40

5.2 Application 2: Safety mode SIL3/Cat.4/PLe with 2-wire transducer 44

5.3 Application 3: Safety mode SIL3/Cat.3/PLd with 4-wire transducer 47

5.4 Application 4: Safety mode SIL3/Cat.4/PLe with 4-wire transducer 50

6 Interrupts/diagnostic messages 53

6.1 Status and error display 53

6.2 Interrupts 56

6.3 Diagnostic messages 58

6.4 Value status 63

7 Technical specifications 64
7.1 Technical specifications 64
A Response times 69
B Representation of analog values 71
B.1 Representation of analog values 72

Documentation guide

1

The documentation for the SIMATIC ET 200SP distributed I/O system is arranged into three areas.
This arrangement enables you to access the specific content you require.

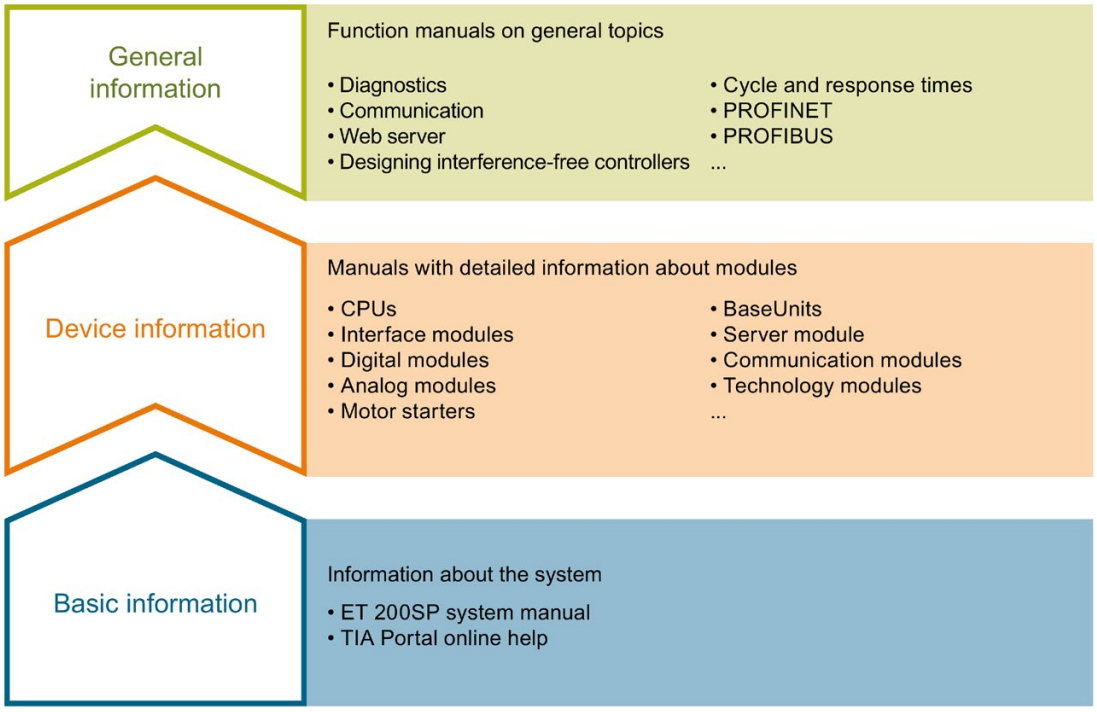

Basic information

The system manual describes in detail the configuration, installation, wiring and commissioning of the SIMATIC ET 200SP. distributed I/O system. The STEP 7 online help supports you in the configuration and programming.

Device information

Product manuals contain a compact description of the module-specific information, such as properties, wiring diagrams, characteristics and technical specifications.

General information

The function manuals contain detailed descriptions on general topics regarding the SIMATIC ET 200SP distributed I/O system, e.g. diagnostics, communication, Web server, motion control and OPC UA.

You can download the documentation free of charge from the Internet (https://support.industry.siemens.com/cs/ww/en/view/109742709).

Changes and supplements to the manuals are documented in a Product Information.

You can download the product information free of charge from the Internet (https://support.industry.siemens.com/cs/us/en/view/73021864).

Manual Collection ET 200SP

The Manual Collection contains the complete documentation on the SIMATIC ET 200SP distributed I/O system gathered together in one file.

You can find the Manual Collection on the Internet (http://support.automation.siemens.com/WW/view/en/84133942).

"mySupport"

With "mySupport", your personal workspace, you make the most of your Industry Online Support.

In "mySupport" you can store filters, favorites and tags, request CAx data and put together your personal library in the Documentation area. Furthermore, your data is automatically filled into support requests and you always have an overview of your current requests.

You need to register once to use the full functionality of "mySupport".

You can find "mySupport" in the Internet (https://support.industry.siemens.com/My/ww/en).

"mySupport" - Documentation

In the Documentation area of "mySupport", you have the possibility to combine complete manuals or parts of them to make your own manual.
You can export the manual in PDF format or in an editable format.

You can find "mySupport" - Documentation in the Internet (http://support.industry.siemens.com/My/ww/en/documentation).

"mySupport" - CAx Data

In the CAx Data area of "mySupport", you can have access the latest product data for your CAx or CAe system.

You configure your own download package with a few clicks.

In doing so you can select:

- Product images, 2D dimension drawings, 3D models, internal circuit diagrams, EPLAN macro files
- Manuals, characteristics, operating manuals, certificates
- Product master data

You can find "mySupport" - CAx Data in the Internet (http://support.industry.siemens.com/my/ww/en/CAxOnline).

Application examples

The application examples support you with various tools and examples for solving your automation tasks. Solutions are shown in interplay with multiple components in the system - separated from the focus in individual products.

You can find the application examples on the Internet (https://support.industry.siemens.com/sc/ww/en/sc/2054).

TIA Selection Tool

With the TIA Selection Tool, you can select, configure and order devices for Totally Integrated Automation (TIA).
This tool is the successor of the SIMATIC Selection Tool and combines the known configurators for automation technology into one tool.
With the TIA Selection Tool, you can generate a complete order list from your product selection or product configuration.

You can find the TIA Selection Tool on the Internet (http://w3.siemens.com/mcms/topics/en/simatic/tia-selection-tool).

SIMATIC Automation Tool

You can use the SIMATIC Automation Tool to run commissioning and maintenance activities simultaneously on various SIMATIC S7 stations as a bulk operation independently of the TIA Portal.

The SIMATIC Automation Tool provides a multitude of functions:

- Scanning of a PROFINET/Ethernet network and identification of all connected CPUs
- Address assignment (IP, subnet, gateway) and station name (PROFINET device) to a CPU
- Transfer of the data and the programming device/PC time converted to UTC time to the module
- Program download to CPU
- Operating mode switchover RUN/STOP
- Localization of the CPU by means of LED flashing
- Reading out CPU error information
- Reading the CPU diagnostic buffer
- Reset to factory settings
- Updating the firmware of the CPU and connected modules

You can find the SIMATIC Automation Tool on the Internet (https://support.industry.siemens.com/cs/ww/en/view/98161300).

PRONETA

With SIEMENS PRONETA (PROFINET network analysis), you analyze the plant network during commissioning. PRONETA features two core functions:

- The topology overview independently scans PROFINET and all connected components.
- The IO check is a fast test of the wiring and the module configuration of a system.

You can find SIEMENS PRONETA on the Internet (https://support.industry.siemens.com/cs/ww/en/view/67460624).

SINETPLAN

SINETPLAN, the Siemens Network Planner, supports you in planning automation systems and networks based on PROFINET. The tool facilitates professional and predictive dimensioning of your PROFINET installation as early as in the planning stage. In addition, SINETPLAN supports you during network optimization and helps you to exploit network resources optimally and to plan reserves. This helps to prevent problems in commissioning or failures during productive operation even in advance of a planned operation. This increases the availability of the production plant and helps improve operational safety.

The advantages at a glance

- Network optimization thanks to port-specific calculation of the network load
- Increased production availability thanks to online scan and verification of existing systems
- Transparency before commissioning through importing and simulation of existing STEP 7 projects
- Efficiency through securing existing investments in the long term and optimal exploitation of resources

You can find SINETPLAN on the Internet (https://www.siemens.com/sinetplan).

Product overview

2

2.1 Properties

Article number

6ES7136-6AA00-0CA1

View of the module

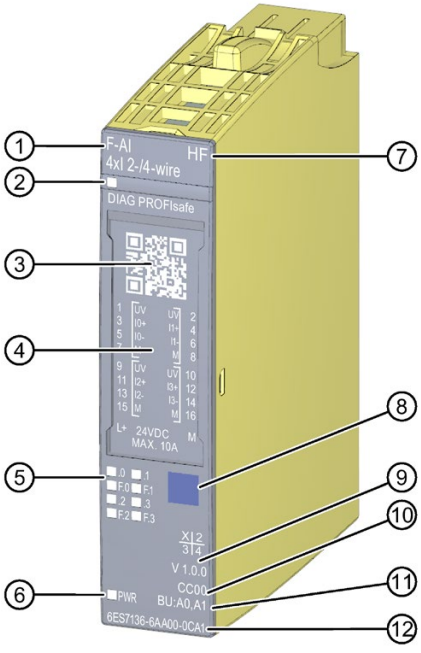

① Module type and name
② LED for diagnostics
③ 2D matrix code
④ Wiring diagram
⑤ LEDs for channel status
⑥ LED for supply voltage
⑦ Function class
⑧ Color coding module type
⑨ Function and firmware version
⑩ Color code for selecting the color identification labels
⑪ BU type
⑫ Article number

Figure 2-1 View of the F-AI 4xI 0(4)..20mA 2-/4-wire HF module

Properties

The module has the following technical properties:

- Fail-safe module
- PROFIsafe

- Supports the "RIOforFA-Safety" profile on F-CPUs S7-1200/1500.
- PROFIsafe address type 2
- 4 analog inputs with electrical isolation between channels and the backplane bus (up to SIL3/Cat.4/PLd)
- Measuring ranges: 0..20 mA and 4..20 mA
- Resolution: 16 bits including sign
- Short circuit-proof power supply for 2-wire or 4-wire transmitter
- Supply voltage L+
- External sensor supply possible
- Assignable diagnostics
- Diagnostics display (DIAG, red/green LED)
- Status display for each input (green LED)
- Error display for each input (red LED)
- Diagnostics
  - e.g., short-circuit, channel-specific
  - e.g. supply voltage missing, module-specific
- Channel- and module-wide passivation

The module supports the following functions:

- Firmware update
- I&M identification data
- Value status

WARNING

The fail-safe performance characteristics in the technical specifications apply for a mission time life of 20 years and a repair time of 100 hours. If a repair within 100 hours is not possible, remove the respective module from the BaseUnit or switch off its supply voltage before 100 hours expires.

The module switches off independently after the 100 hours have expired.

Follow the repair procedure described in section Diagnostic messages (Page 58).

Note

Cyclic reading of I&M data

Cyclic reading of I&M data can affect the timing of the F-modules. You should therefore avoid short read cycles of less than 500 ms.

Accessories

You can order the following accessories separately:

- Labeling strips
- Color identification labels
- Reference identification label
- Shield connector
- Electronic coding element as spare part (article number 6ES7193-6EF00-1AA0)

You can find additional information about accessories in the Distributed I/O System ET 200SP (http://support.automation.siemens.com/WW/view/en/58649293) System Manual.

Connecting

3

3.1 Wiring and block diagram

This section provides the block diagram of the F-AI 4xI 0(4)..20mA 2-/4-wire HF analog input module with the terminal assignment.

You can find additional information about wiring BaseUnits in the Distributed I/O System ET 200SP (http://support.automation.siemens.com/WW/view/en/58649293) System Manual.

Block diagram

The following figure shows the block diagram of the F-AI 4xI 0(4)..20mA 2-/4-wire HF analog input module on the BaseUnit BU type A0/A1.

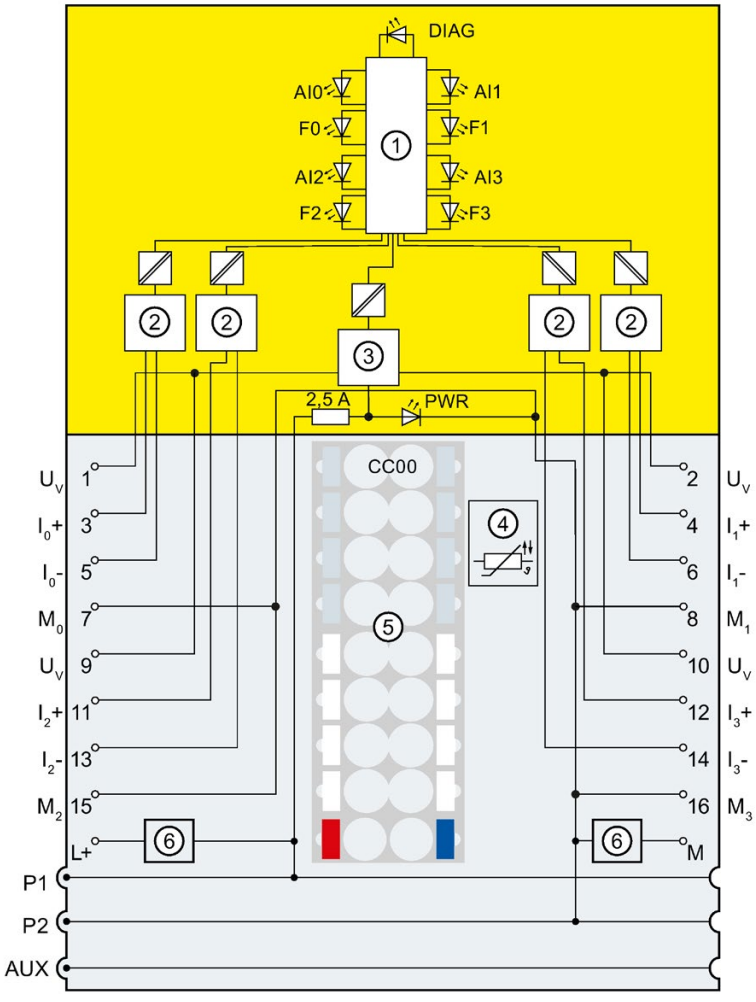

①	Backplane bus interface	U_V	Sensor supply
②	Analog-to-digital converter (ADC)	M	Supply voltage ground
③	Sensor supply/reverse polarity protection	M_n	Ground to channel n
④	Temperature measurement for BU type A1 only (the function cannot be used for this module.)	L+	24 V DC (infeed only with light-colored BaseUnit)
⑤	Color-coded label with color code CC00 (optional)	P1, P2, AUX	Internal self-assembling voltage buses Connection to left (dark-colored BaseUnit) Connection to left interrupted (light-colored BaseUnit)
⑥	Filter connection supply voltage (available with light-colored BaseUnit only)	DIAG	Diagnostics LED (green, red)
I_n+	Current input positive, channel n	AI0, AI1, AI2, AI3	Channel status LED (green)
I_n-	Current input negative, channel n	F0, F1, F2, F3	Channel fault LED (red)
		PWR	Power LED (green)

Figure 3-1 Block diagram

Sensor supply

WARNING

Voltage dips and voltage fluctuations of the voltage supply are not buffered by the F-module and, thus, affect the sensor supply.

This can cause the measured value to be false and must be taken into account when determining the safety function.

To ensure that the sensor functions problem-free, we recommend one of the following options:

- You can avoid voltage dips by using a voltage supply according to the NAMUR recommendation NE 21.

or

- Use a transducer with an appropriate battery backup or diagnostics.

Recommendation: Internal sensor supply

You are strongly advised to use the short circuit-proof internal sensor supply of the F-module. This internal sensor supply is monitored and its status is indicated by the Fn LED. The input is also protected in the event of short-circuits in the wiring or at the sensor.

Note

The internal sensor supply is switched off in case of a short circuit to ground or during power-up in the event of short circuit to L+.

The sensor supply is also switched off at input currents > 35 mA.

A check is made approximately 1 minute later to determine if the error has gone.

Note

Behavior of process values and diagnostics evaluation

Sensor startup during module startup:

After the internal sensor supply is activated, the evaluation of wire break and underflow diagnostics is suppressed for 3 seconds. During this time, the module makes the secure process data 0 available at all channels. This suppresses a possible wire break or underflow diagnostics caused by the sensor startup. If the sensor startup is not yet complete after the 3 seconds have elapsed, it is possible that the module might detect wire break or underflow and passivate the affected channel. In this case, the channel fault must be acknowledged during startup.

Sensor startup during operation:

If a sensor startup takes place during operation, e.g. the sensor supply is reactivated after a short-circuit, all analog values are invalid and wire break or underflow diagnostics can occur on the sensors connected to the internal sensor supply.

External/internal sensor supply

The figures in section "Applications of the F-I/O module (Page 40)" show how you can supply power to the sensors via an external sensor supply (for example, from another module).

WARNING

If there is a short-circuit from L+ to Mn+, the input resistors could be destroyed, depending on the selected interconnection type.

You can avoid this problem through proper wiring and use of the internal sensor supply. When an external sensor supply is used, other suitable measures are necessary to protect the input resistors (e.g. external fast 50 mA fuse in the input circuit of the F-module).

WARNING

External sensor supply

If you use an external sensor supply, you need to take into consideration the voltage dips and voltage fluctuations when determining the safety function.

To ensure that the sensor functions problem-free, we recommend one of the following options:

- Use a transducer with an appropriate battery backup or diagnostics.

  or
- Use a **redundant** external sensor supply

  or
- **Monitor** the external sensor supply for undervoltage/overvoltage, including shutdown of the sensor supply in the event of a fault (single channel for SIL2; two-channel for SIL3).

Parameters/address space 4

4.1 Measurement types and measuring ranges

The following table shows the measurement types and the respective measuring range.

Table 4- 1 Measurement types and measuring ranges

Measurement type	Measuring range	Resolution
Current	0 to 20 mA (2-wire and 4-wire transducer) 4 to 20 mA (2-wire and 4-wire transducer)	16 bits including sign 16 bits including sign

You can find the tables of the measuring ranges as well as overflow, overrange, etc. in the Appendix Representation of analog values (Page 71).

4.2 Parameters

Parameters for F-AI 4xI 0(4)..20mA 2-/4-wire HF

WARNING

Diagnostics functions should be activated or deactivated in accordance with the application, see section Applications of the F-I/O module (Page 40).

The following parameters are possible:

Table 4- 2 Configurable parameters

Parameters	Value range	Default	Parameter reassignment in RUN	Scope
F-parameters:				
Manual assignment of the F-monitoring time	• Disable • Enable	Disable	No	Module
F-monitoring time	1 to 65535 ms	150 ms	No	Module
F-source address	1 to 65534	depends on parameter assignment of F-CPU	No	Module
F-destination address	1 to 65534	suggested by F-system	No	Module
F-parameter signature (without address)	0 to 65535	calculated by F-system	No	Module

Parameters	Value range	Default	Parameter reassignment in RUN	Scope
Behavior after channel faults	• Passivate entire module • Passivate channel	Passivate channel	No	Module
Reintegration after channel fault	• Adjustable • All channels automatically • All channels manually	(S7-300/400) Adjustable (S7-1200/1500) All channels manually	No	Module
F-I/O DB manual number assignment	• Disable • Enable	Disable	No	Module
F-I/O DB number	—	suggested by F-system	No	Module
F-I/O DB name	—	suggested by F-system	No	Module
AI parameters				
Interference frequency suppression	• 50 Hz • 60 Hz	50 Hz	No	Module
Channel parameters:				
Channel n				
Sensor evaluation	• 1oo1 evaluation (max. SIL3/Cat.3/PLd) • 1oo2 evaluation (max. SIL3/Cat.4/PLe)	1oo1 evaluation (max. SIL3/Cat.3/PLd)	No	Channel
Standard value	• MIN • MAX	MIN	No	Channel
Discrepancy time *	100 to 30000 ms	100 ms	No	Channel
Tolerance window %, absolute	2.0 to 20.0%	5.0%	No	Channel
Tolerance window %, relative	2.0 to 20.0%	5.0%	No	Channel
Activated	• Disable • Enable	Enable	No	Channel
Channel fault acknowledgment	• Manual • Automatic The value range offered depends on the F-CPU in use and on the configuration of the F-parameter "Reintegration after channel fault".	(S7-300/400) Parameter is not supported (S7-1200/1500) Manual	No	Channel
Measuring range	• 0 to 20 mA • 4 to 20 mA	4 to 20 mA	No	Channel

Parameters	Value range	Default	Parameter reassignment in RUN	Scope
Diagnostics: Wire break **	• Disable • Enable	Enable	No	Channel
Smoothing	• 1 • 2 • 4 • 8 • 16 • 32 • 64	1	No	Channel

* See formula under Parameter assignment of discrepancy analysis for 1oo2 evaluation (Page 27)

* Can only be set with 4 to 20 mA measuring range

4.3 Explanation of parameters

4.3.1 F-parameters

You must assign the PROFIsafe address (F-destination address together with F-source address) to the F-module before you put it into operation.

- You define the F-source address using the "Base for PROFIsafe addresses" parameter in the F-CPU.
- An F-destination address unique throughout the CPU is automatically assigned for each F-module. You can manually change the F-destination addresses set in the hardware configuration.

You can find information on F-parameters for the F-monitoring time, the PROFIsafe addressing (F-source address, F-destination address) and the F-I/O DB in the manual SIMATIC Safety - Configuring and Programming (http://support.automation.siemens.com/WW/view/en/54110126).

4.3.2 Parameters of the channels

4.3.2.1 Interference frequency suppression

Here you set the interference frequency suppression for the line frequency:

- 50 Hz
- 60 Hz

You can find additional information on this in the Analog value processing function manual (https://support.industry.siemens.com/cs/ww/en/view/67989094).

4.3.2.2 Evaluation of the sensors

Overview

Here you select the type of sensor evaluation:

- "1oo1 evaluation (max. SIL3/Cat.3/PLd)"
- "1oo2 evaluation (max. SIL3/Cat.4/PLe)"

If you do not want to measure with a channel or channel pair, disable the channel or the channel pair.

1oo1 evaluation (max. SIL3/Cat.3/PLd)

With the 1oo1 evaluation, there is one sensor, and it is connected to the F-module via a single channel.

1oo2 evaluation (max. SIL3/Cat.4/PLe)

With the 1oo2 evaluation, two input channels are occupied by:

- Two single-channel sensors
- One two-channel sensor

Note that in 1oo2 evaluation, two channels are combined into a channel pair.

Achievable safety class

Depending on the selected sensor evaluation, you achieve the following safety classes with a sensor that is qualified accordingly:

- SIL3/Cat.3/PLd for "1oo1 evaluation" or
- SIL3/Cat.4/PLe for "1oo2 evaluation"

See also

Parameter assignment of discrepancy analysis for 1oo2 evaluation (Page 27)

4.3.2.3 Standard value

Function

If you have selected "1oo2 evaluation (max. SIL3/Cat.4/PLe)", you can choose for each input channel pair which of the two F-CPU values is provided.

- "MIN": the lesser of the two values.
- "MAX": the greater of the two values.

During a discrepancy between the two input channels, the last valid standard value prior to the occurrence of the discrepancy is made available to the F-CPU.

4.3.2.4 Discrepancy time

Function

If you have selected "1oo2 evaluation (max. SIL3/Cat.4/PLe)", you can enter the discrepancy time for each channel pair here in milliseconds.

The discrepancy time does not start until the standard value is outside the assigned tolerance window (relative or absolute). If the two redundant input channels of the channel pair differ by more than the specified tolerance and for longer than the specified discrepancy time but no longer than the duration of the maximum response time, the F-module detects a discrepancy error and triggers a diagnostic interrupt. If the input channels fall below the specified tolerance prior to expiration of the discrepancy time (input channels are no longer discrepant), the discrepancy time is cleared and is restarted only when a new discrepancy is detected.

You can find additional information about configuring the discrepancy analysis under Parameter assignment of discrepancy analysis for 1oo2 evaluation (Page 27).

A discrepancy error is handled by the safety program in the same way as a channel fault. Additional information is available in the SIMATIC Safety – Configuring and Programming (http://support.automation.siemens.com/WW/view/en/54110126) manual.

4.3.2.5 Tolerance window %, absolute

Function

If you have selected "1oo2 evaluation (max. SIL3/Cat.4/PLe)", you can enter the size of a tolerance window for the discrepancy here for the channel pair. You specify the tolerance window as a percentage of the full-scale value. The reference value is the full-scale value, i.e. 20 mA. The entered value is rounded to one decimal place.

If two redundant input channels of the channel pair differ by more than the tolerance specified here and for longer than the specified discrepancy time, the F-module detects a discrepancy error and triggers a diagnostic interrupt.

For more information regarding setting the tolerance window, refer to Parameter assignment of discrepancy analysis for 1oo2 evaluation (Page 27).

Example

You have assigned the following:

- The "Tolerance window % absolute" 10%
- The measuring range 0..20 mA
- A discrepancy time of 100 ms

The input channels may differ from the configured discrepancy time (100 ms) up to the max. reaction time for a time window with a difference of more than 2 mA.

See also

Discrepancy time (Page 24)

4.3.2.6 Tolerance window %, relative

Function

If you have selected "1oo2 evaluation (max. SIL3/Cat.4/PLe)", you can enter the size of a tolerance window for the discrepancy here for each channel pair. You specify the tolerance window as a percentage of the assigned standard value. The entered value is rounded to one decimal place.

If two redundant input channels of the channel pair differ by more than the tolerance specified here and for longer than the specified discrepancy time, the F-module detects a discrepancy error and triggers a diagnostic interrupt.

The two parameters "Tolerance window % absolute" and "Tolerance window % relative" are combined. The "Tolerance window % absolute" parameter is decisive in case of low process values.

For more information regarding setting the tolerance window, refer to Parameter assignment of discrepancy analysis for 1oo2 evaluation (Page 27).

Example

You have assigned the following:

- The "tolerance window % relative" is set at 10%
- A measuring range of 0 to 20 mA
- A discrepancy time of 200 ms
- A unit value of 20 mA

The input channels may differ from the configured discrepancy time (200 ms) up to the max. reaction time for a time window with a difference of more than 2 mA.

See also

Discrepancy time (Page 24)

4.3.2.7 Parameter assignment of discrepancy analysis for 1oo2 evaluation

Operating principle of discrepancy analysis

A discrepancy analysis is performed with a configured 1oo2 evaluation. **Smoothed** process values are used for the discrepancy analysis.

An assignable tolerance window is formed around the process value that represents the instantaneous standard value (value that is signaled to the F-CPU).

The tolerance window is formed relative to the process value or as an absolute value relative to the measuring range end value. Relative and absolute tolerance windows are combined.

If the process value does not represent the standard value at an instant and is within the tolerance window, **no** discrepancy exists.

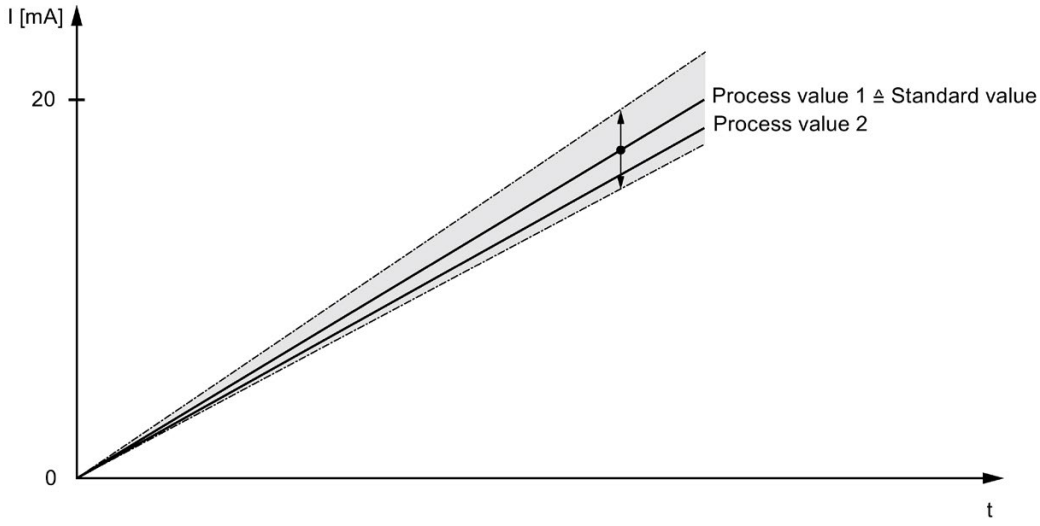

Figure 4-1 Example of a relative tolerance window *without* discrepancy (parameter assignment: standard value = MAX)

If the process value does not represent the standard value at an instant but is outside the tolerance window, a discrepancy exists.

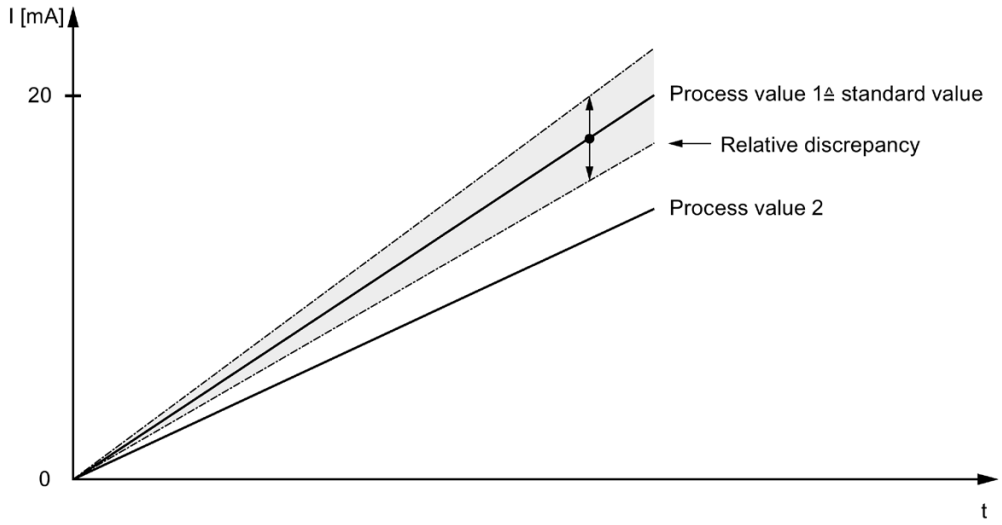

Figure 4-2 Example of a relative tolerance window *with* discrepancy (parameter assignment: standard value = MAX)

The assigned discrepancy time starts as soon as a discrepancy is detected. The discrepancy time runs as long as the discrepancy exists.

- During a discrepancy between the two input channels, the last valid standard value prior to occurrence of the discrepancy is signaled to the F-CPU.

  If the input channels fall below the specified tolerance prior to expiration of the discrepancy time (input channels are no longer discrepant), the discrepancy time is cleared and is restarted only when a new discrepancy is detected.

- There is no valid old value after startup. If the discrepancy is detected during this time, $7FFF_H$ is output for S7-300/400 F-CPUs or 0 is output for S7-1200/1500 F-CPUs and the discrepancy time is started.

  If there is no longer a discrepancy between the input channels when the discrepancy time expires, the standard value is output.

If the discrepancy time has expired, an error is signaled and the process value is set to $7FFF_H$ for S7-300/400 F-CPUs or 0 for S7-1200/1500 F-CPUs. In the PII, the substitute value 0 is set for the safety program.

A discrepancy error is handled by the safety program in the same way as a channel fault. Additional information is available in the STEP 7 Safety – Configuring and Programming (http://support.automation.siemens.com/WW/view/en/54110126) manual.

Configuring the discrepancy analysis parameters

The following four parameters for the discrepancy analysis are assigned for each channel pair:

- Discrepancy time
- Standard value
- Tolerance window %, absolute
- Tolerance window %, relative

"Discrepancy time" parameter

If the following is true, the F-module detects a discrepancy error:

- The process value that does not represent the standard value is outside the configured tolerance window.
- Lasts longer than the configured discrepancy time.
- Lasts at maximum the duration of the maximum response time.

In the case of a discrepancy error, the F-module triggers a diagnostic interrupt and sets the process value to $7FFF_H$ for S7-300/400 F-CPUs or 0 for S7-1200/1500 F-CPUs. The discrepancy time is reset if the standard value lies within the tolerance window again.

In the PII, the substitute value 0 is set for the safety program.

You calculate the maximum discrepancy time that is permitted in the respective application using the following formula:

Discrepancy time = Maximum response time (in case of discrepancy error) – 2 × Conversion cycle time × Smoothing – 2 × Conversion cycle time

---

Note

You calculate the discrepancy time by using the values from section Discrepancy time (Page 69) in the above equation.

You can assign the discrepancy time for each channel pair.

"Standard value" parameter

You can select which of the two values is to be signaled to the F-CPU for each input channel pair. During a discrepancy between the two input channels, the last valid standard value prior to occurrence of the discrepancy is signaled to the F-CPU.

- "MIN": The lower of the two values is signaled to the F-CPU as the standard value.
- "MAX": The higher of the two values is signaled to the F-CPU as the standard value.

"Tolerance window %, absolute" parameter

You can calculate the absolute tolerance window using the following formula:

$$T_{abs} = \frac{|\Delta I_{abs}|}{I_{ME} - I_{MA}} \times 100 \ [\%]$$

Calculate the maximum deviation of the current using the following formula:

$$\Delta I_{abs} = \pm \frac{(I_{ME} - I_{MA}) \times T_{abs}}{100} \ [mA]$$

With

- I_{ME} = 20 mA (full-scale value)
- I_{MA} = 0 mA for measuring range 0 ... 20 mA (start-of-scale value)
- I_{MA} = 4 mA for measuring range 4 ... 20 mA (start-of-scale value)
- T_{abs} = Tolerance in %
- ΔI_{abs} = Maximum deviation of current (+/-)

You can assign a value of 2.0 to 20.0% for the "Tolerance window %, absolute" parameter for each channel pair.

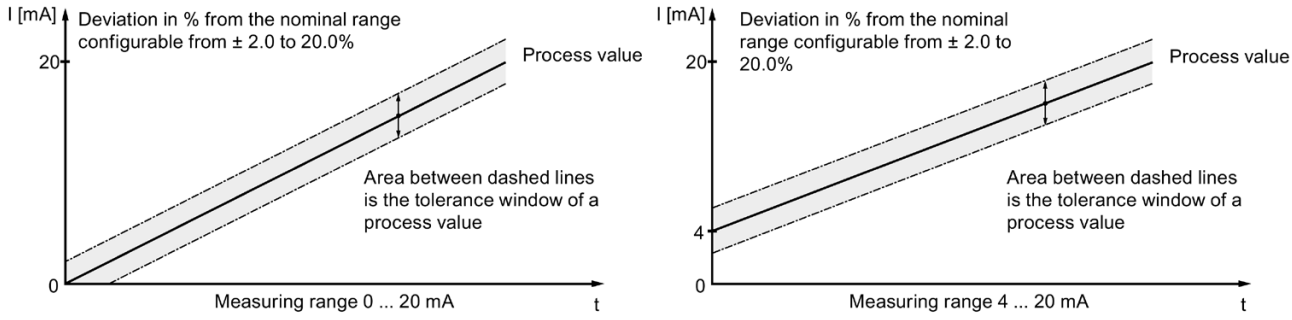

Figure 4-3 Absolute deviation in % of the nominal range for measuring range 0 to 20 mA or 4 to 20 mA

"Tolerance window %, relative" parameter

The tolerance window is calculated as a percentage of the **smoothed** process value that represents the MIN or MAX value (depending on the parameter assignment of the standard value) in this instant.

You can calculate the relative tolerance window using the following formula:

$$T_{rel} = \frac{|\Delta I_{rel}|}{|I_{EW} - I_{MA}|} \times 100 \ [\%]$$

Calculate the maximum deviation of the current using the following formula:

$$\Delta I_{rel} = \pm \frac{|I_{EW} - I_{MA}| \times T_{rel}}{100} \ [mA]$$

With

- I_{EW} = Process standard value (min./max.)
- I_{MA} = 0 mA for measuring range 0 ... 20 mA
- I_{MA} = 4 mA for measuring range 4 ... 20 mA
- T_{rel} = Tolerance in %
- ΔI_{rel} = Maximum deviation of current (+/-)

You can assign a value of 2.0 to 20.0% for the "Tolerance window %, relative" parameter for each channel pair.

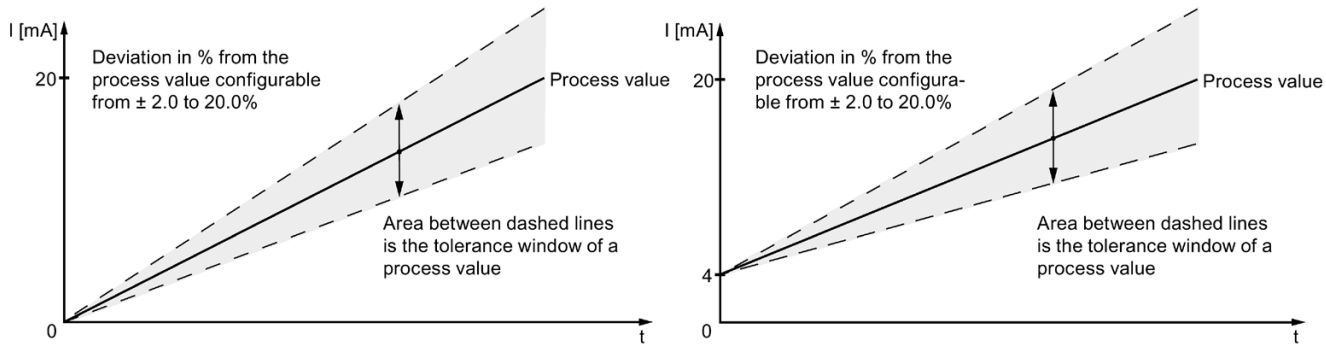

Figure 4-4 Relative deviation in % of the nominal range for measuring range 0 to 20 mA or 4 to 20 mA

Combination of the "Tolerance window %, absolute" and "Tolerance window %, relative" parameters

You can combine the "Tolerance window %, absolute" and "Tolerance window %, relative" parameters as needed. The combined tolerance window (shown in gray in the figure below) is the maximum of T_{rel} and T_{abs}.

$T = MAX \{ T_{rel}, T_{abs} \}$

$\Delta I = MAX \{ \Delta I_{rel}, \Delta I_{abs} \}$

With

- T = Tolerance, in %
- ΔI = Maximum deviation of current (+/-)

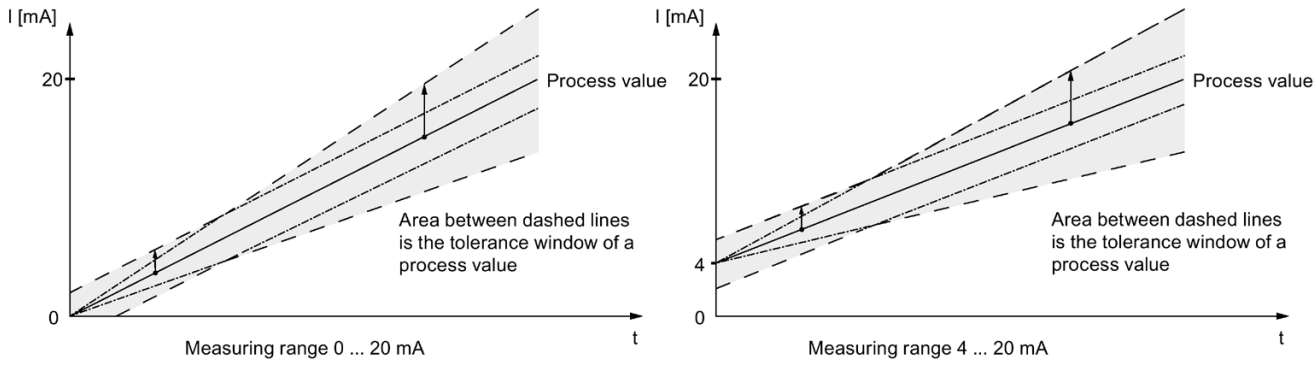

Example

The following diagrams show you the behavior of the discrepancy evaluation when standard value = MAX.

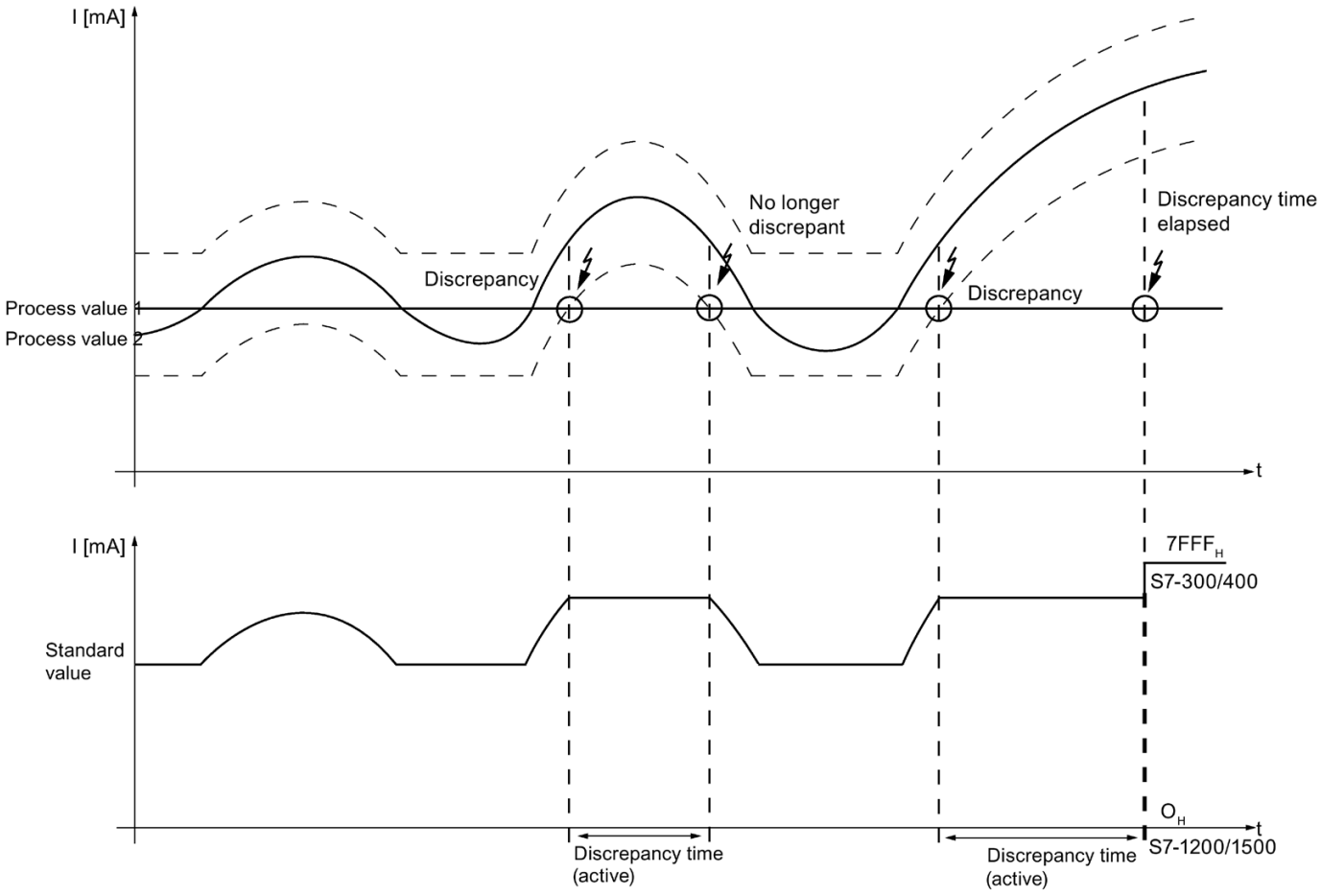

The upper of the two diagrams shows you the characteristic curve of the two process values. The dashed line represents the absolute tolerance range configured in this example.

The lower of the two diagrams shows you the standard value signaled to the F-CPU.

In this example, on the first occurrence of a discrepancy, process value 1 is **within** the tolerance range again **before** expiration of the discrepancy time. This means the discrepancy error is not signaled.

In this example, on the second occurrence of a discrepancy, process value 1 is **outside** the tolerance range when the discrepancy time expires. As a result, a discrepancy error is signaled with $7FFF_H$ for S7-300/400 F-CPUs or 0 for S7-1200/1500 F-CPUs after expiration of the discrepancy time. In the PII, the substitute value 0 is set for the safety program.

See also

Discrepancy time (Page 24)

Tolerance window %, absolute (Page 25)

Tolerance window %, relative (Page 26)

4.3.2.8 Activated

If you select this check box, the corresponding channel is enabled for signal processing.

You can deactivate an unused channel with this parameter.

If you deactivate unused channels, the response time of the F-module is reduced.

4.3.2.9 Channel failure acknowledge

Use on S7-1200/1500 F-CPUs

The parameter is only relevant if the F-module can be operated on an S7-1200/1500 F-CPU.

The parameter can only be set if the F-parameter "Behavior after channel fault" is set to "Passivate channel" and the F-parameter "Reintegration after channel fault" is set to "Adjustable".

The value of this parameter specifies how the channel reacts after a channel fault:

- Manual: A channel failure is reintegrated after manual acknowledgment.
- Automatically: The channel is reintegrated automatically after a channel fault. Manual acknowledgment is not necessary.

Use in S7-300/400 F-CPUs

The value of this parameter is not relevant in the case of operation on S7-300/400 F-CPUs. For S7-300/400 F-CPUs you set the corresponding property at the F-I/O DB by means of the ACK_NEC tag.

For detailed information about the F-I/O DB, refer to the SIMATIC Safety – Configuring and Programming (http://support.automation.siemens.com/WW/view/en/54110126) manual.

4.3.2.10 Measuring range

You select the measuring range for the channel with this parameter:

- 0 to 20 mA
- 4 to 20 mA

4.3.2.11 Diagnostics: Wire break

Function

Here you activate wire break detection for a configured measuring range of 4 to 20 mA.

With an assigned measuring range of 4 to 20 mA:

- With assigned wire break diagnostics and currents < 3.6 mA, a wire break is detected and a diagnostic interrupt is triggered in the F-CPU.
- Without configured wire break and currents diagnostics < 0.4444 mA detects "underflow" and triggers a diagnostic interrupt in the F-CPU.

With an assigned measuring range of 0 to 20 mA, the wire break diagnostics is permanently set by default. With currents < 0.4442 mA, a wire break is detected and a diagnostic interrupt is triggered in the F-CPU.

If you do not need a channel, deactivate the channel. Then, a wire break is not detected.

4.3.2.12 Smoothing

Using smoothing

Smoothing of analog values provides a stabilized analog signal for further processing. Smoothed values are always used for discrepancy analysis.

⚠ WARNING
The smoothing takes place as a result of averaging over the selected number of most recently converted analog values of a channel, e.g. 64. The mean value generation causes a discrepancy to be delayed with a configured "1oo2 evaluation (max. SIL3/Cat.4/PLe)". You can find an example below.

Smoothing principle

The measured values are smoothed by a digital filter. Smoothing is achieved by the F-module forming the mean of a number of converted (digitized) analog values determined by the "Smoothing" parameter.

You assign smoothing in 7 levels (1, 2, 4, 8, 16, 32, 64 conversion cycles). The level determines the number of analog signals that are averaged. If smoothing = 1 is configured, the smoothing is deactivated.

A higher smoothing provides a more stable analog value, and prolongs the time it takes to apply a smoothed analog signal following a unit step. You can find an example below.

Note

Smoothing is reset after startup, short circuit, wire break or another channel fault. If, for example, smoothing with 16 conversion cycles is assigned and all channels are active, it takes up to 2000 ms until the process value is signaled with a configured interference frequency suppression of 50 Hz.

Until the first valid process value, the F-module signals for the channel $7FFF_H$ for S7-300/400 F-CPUs or 0 for S7-1200/1500 F-CPUs.

If a discrepancy occurs, measuring and smoothing continues and is not restarted.

Example

The figure below shows the number of conversion cycles, depending on the smoothing setting, after which the analog value is completely smoothed and available in the case of a unit step. The figure applies to all signal changes at the analog input.

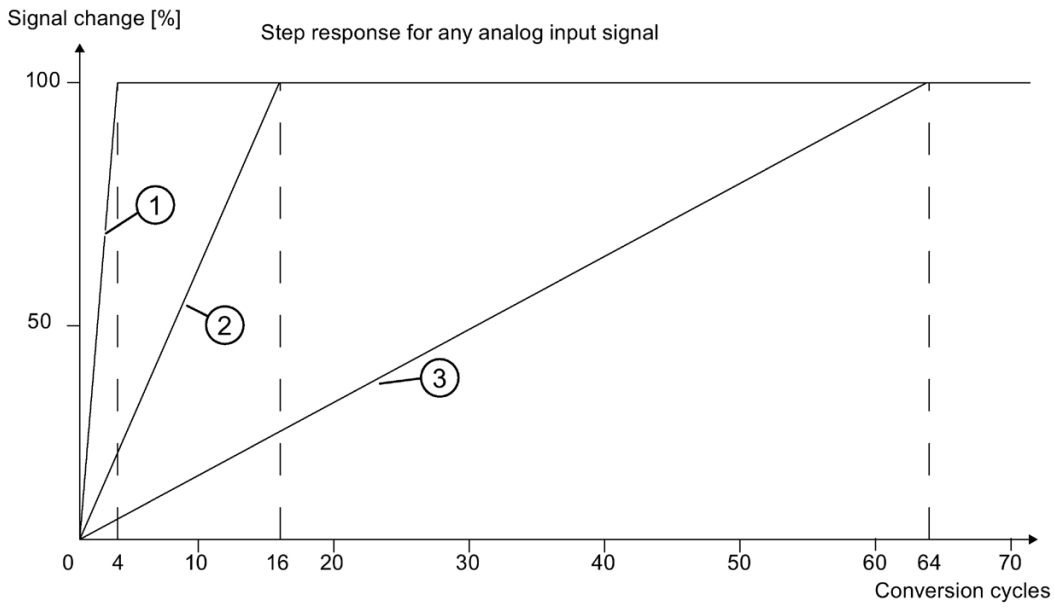

① Smoothing - 4 conversion cycles
② Smoothing - 16 conversion cycles
③ Smoothing - 64 conversion cycles

Example: Effect of smoothing on the maximum response time for a configured "1oo2 evaluation (max. SIL3/Cat.4/PLe)" in case of error

If an error (One Fault Delay Time, OFDT) occurred with a configured "1oo2 evaluation (max. SIL3/Cat.4/PLe)", you calculate the maximum response time according to the following formula:

Maximum response time (in case of discrepancy error) = 2 × Conversion cycle time × Smoothing + Discrepancy time + 2 × Conversion cycle time

Example: One channel pair connected and configured (activated), interference frequency 50 Hz, smoothing = 16 conversion cycles, discrepancy time = 2000 ms, conversion cycle time calculated with the formula from section Response times (Page 69):

Max. response time (in case of discrepancy error) = 2 × 70 ms × 16 + 2000 ms + 2 × 70 ms = 4380 ms

If a discrepancy exists between the two input channels, it can take 4380 ms until the F-module signals a discrepancy error to the F-CPU.

If the discrepancy time expires, an error is signaled and the process value is set to $7FFF_H$ for S7-300/400 F-CPUs or 0 for S7-1200/1500 F-CPUs. In the PII, the substitute value 0 is set for the safety program.

4.4 Address space

Address assignment for the analog input module F-AI 4xI 0(4)..20mA 2-/4-wire HF

The analog input module F-AI 4xI 0(4)..20mA 2-/4-wire HF occupies the following address areas in the F-CPU:

Table 4- 3 Address assignment in the F-CPU

Occupied bytes in the F-CPU:		
F-CPU	In input range	In output range
S7-300/400 F-CPUs	IB x + 0 to x + 12	QB x + 0 to x + 3
S7-1200/1500 F-CPUs	IB x + 0 to x + 13	QB x + 0 to x + 4

x = Module start address

Address assignment of the user data and the value status of the analog input module F-AI 4xI 0(4)..20mA 2-/4-wire HF

The user data occupy the following addresses in the analog input module F-AI 4xI 0(4)..20mA 2-/4-wire HF out of all the assigned addresses in the F-CPU:

Table 4- 4 User data address assignment in the input range

Byte in the F-CPU	Assigned bits in F-CPU per F-module:							
	7	6	5	4	3	2	1	0
IB x + 0	Input value at channel 0 (Result of the 1oo2 evaluation channel 0/2)							
IB x + 1								
IB x + 2	Input value at channel 1 (Result of the 1oo2 evaluation channel 1/3)							
IB x + 3								
IB x + 4	Input value at channel 2							
IB x + 5								
IB x + 6	Input value at channel 3							
IB x + 7								
IB x + 8	—	—	—	—	Value status* for AI_3	Value status* for AI_2	Value status* for AI_1	Value status* for AI_0

* Only S7-1200/1500 F-CPUs

x = Module start address

Note

You may only access the addresses occupied by user data and value status.

The other address areas occupied by the F-modules are assigned for functions including safety-related communication between the F-modules and F-CPU in accordance with PROFIsafe.

Additional information

For detailed information about F-I/O access, refer to the SIMATIC Safety – Configuring and Programming (http://support.automation.siemens.com/WW/view/en/54110126) manual.

Applications of the F-I/O module 5

You achieve SIL3/Cat.4/PLe with the following applications.

The wiring is performed on the suitable BaseUnit. Additional information is available in the Connecting section in the Distributed I/O System ET 200SP (http://support.automation.siemens.com/WW/view/en/58649293) System Manual.

5.1 Application 1: Safety mode SIL3/Cat.3/PLd with 2-wire transducer

Introduction

Below you will find the wiring scheme and the parameter assignment of the F-AI 4xI 0(4)..20mA 2-/4-wire HF for

- Application 1: Safety mode SIL3/Cat.3/PLd, 1oo1 (1v1) evaluation.

Possible diagnostic messages, the error causes and possible corrective measures are given in section "Diagnostic messages (Page 58)".

Current measurement 0/4 to 20 mA, 2-wire transducer

Four process signals can be connected to the F-module in this interconnection variant. Sensor supply U_V is provided by the F-module for 4 channels. You can also supply the sensors by means of an external sensor supply.

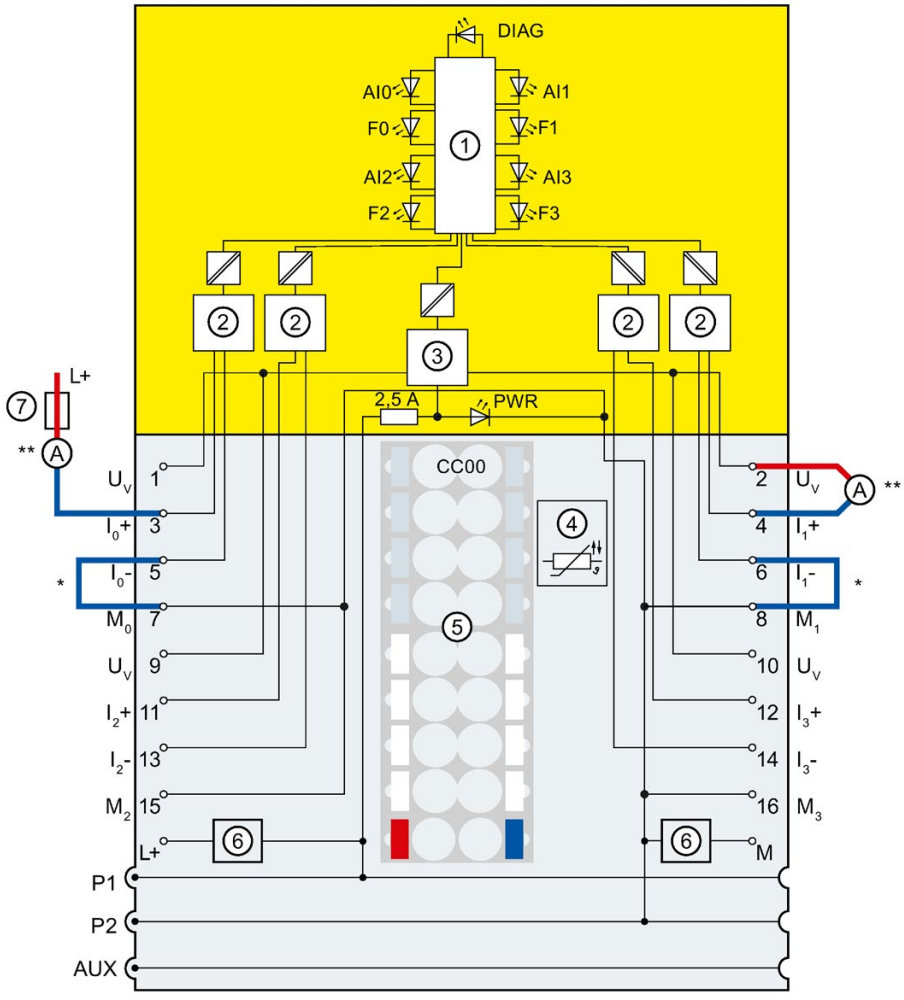

①	Backplane bus interface	U_V	Sensor supply
②	Analog-to-digital converter (ADC)	M	Supply voltage ground
③	Sensor supply/reverse polarity protection	M_n	Ground reference to U_V, channel n
④	Temperature measurement for BU type A1 only (the function cannot be used for this module.)	L+	24 V DC (infeed only with light-colored BaseUnit)
⑤	Color-coded label with color code CC00 (optional)	P1, P2, AUX	Internal self-assembling voltage buses Connection to left (dark-colored BaseUnit) Connection to left interrupted (light-colored BaseUnit)
⑥	Filter connection supply voltage (available with light-colored BaseUnit only)	DIAG	Diagnostics LED (green, red)
⑦	External fuse	AI0, AI1, AI2, AI3	Channel status LED (green)
I_n+	Current input positive, channel n	F0, F1, F2, F3	LED channel fault (red)
I_n-	Current input negative, channel n	PWR	Power LED (green)
*	Create the bridge directly at the terminal connection.	**	Measuring transducer

Figure 5-1 1oo1 evaluation

WARNING

To achieve SIL3/Cat.3/PLd using this wiring, you must use a suitably qualified sensor.

WARNING

All cables need to be laid in such a way that they are resistant to interference voltage. Use shielded cables.

Assignable parameters for application 1

Table 5- 1 Parameters for application 1 of F-AI 4xI 0(4)..20mA 2-/4-wire HF

Parameters	Range of values in safety mode
Behavior after channel faults	• Passivate the entire F-module • Passivate channel
Interference frequency suppression	• 50 Hz • 60 Hz
Sensor evaluation	1oo1 evaluation (max. SIL3/Cat.3/PLd)
Measuring range	• 0 ... 20 mA • 4 ... 20 mA
Diagnostics: Wire break	(in the measuring range 4 to 20 mA) • Disable • Enable
Smoothing	1 / 2 / 4 / 8 / 16 / 32 / 64 conversion cycles

5.2 Application 2: Safety mode SIL3/Cat.4/PLe with 2-wire transducer

Introduction

Below you will find the wiring scheme and the parameter assignment of the F-AI 4xI 0(4)..20mA 2-/4-wire HF for

- application 2: Safety mode SIL3/Cat.4/PLe, 1oo2 (2v2) evaluation.

Possible diagnostic messages, the error causes and possible corrective measures are given in section "Diagnostic messages (Page 58)".

Current measurement 0/4 to 20 mA, 2-wire transducer

Two process signals can be connected to the F-module in this interconnection variant. Sensor supply U_V is provided by the F-module for 4 channels. You can also supply the sensors by means of an external sensor supply.

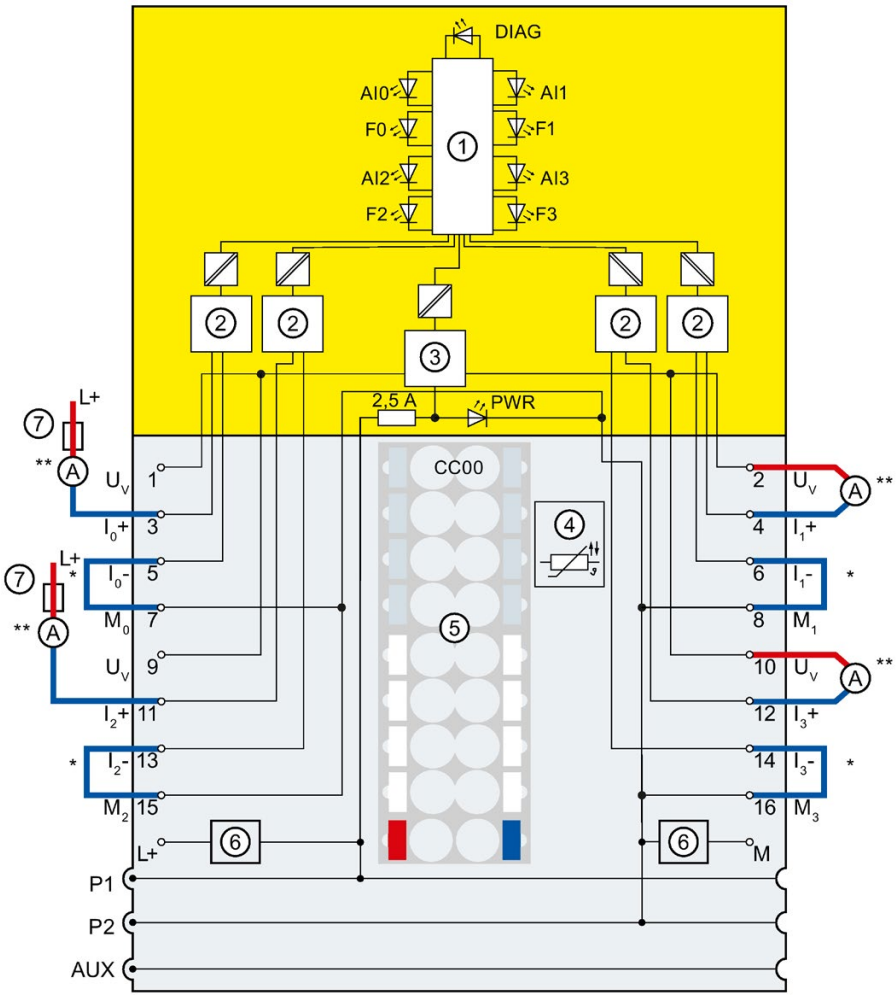

①	Backplane bus interface	U_V	Sensor supply
②	Analog-to-digital converter (ADC)	M	Supply voltage ground
③	Sensor supply/reverse polarity protection	M_n	Ground reference to U_V, channel n
④	Temperature measurement for BU type A1 only (the function cannot be used for this module.)	L+	24 V DC (infeed only with light-colored BaseUnit)
⑤	Color-coded label with color code CC00 (optional)	P1, P2, AUX	Internal self-assembling voltage buses Connection to left (dark-colored BaseUnit) Connection to left interrupted (light-colored BaseUnit)
⑥	Filter connection supply voltage (available with light-colored BaseUnit only)	DIAG	Diagnostics LED (green, red)
⑦	External fuse	AI0, AI1, AI2, AI3	Channel status LED (green)
I_n+	Current input positive, channel n	F0, F1, F2, F3	LED channel fault (red)
I_n-	Current input negative, channel n	PWR	Power LED (green)
*	Create the bridge directly at the terminal connection.	**	Measuring transducer

Figure 5-2 1oo2 evaluation

WARNING

To achieve SIL3/Cat.4/PLe using this wiring, you must use a qualified, two-channel sensor or two qualified single-channel sensors.

WARNING

All cables need to be laid in such a way that they are resistant to interference voltage. Use shielded cables.

Assignable parameters for application 2

Table 5- 2 Parameters for application 2 of F-AI 4xI 0(4)..20mA 2-/4-wire HF

Parameters	Range of values in safety mode
Standard value	• MIN • MAX
Discrepancy time	100 to 30000 ms
Tolerance window %, absolute	2.0 to 20.0%
Tolerance window %, relative	2.0 to 20.0%
Behavior after channel faults	• Passivate the entire F-module • Passivate channel
Interference frequency suppression	• 50 Hz • 60 Hz
Sensor evaluation	1oo2 evaluation (max. SIL3/Cat.4/PLe)
Measuring range	• 0 to 20 mA • 4 to 20 mA
Diagnostics: Wire break	(in the measuring range 4 to 20 mA) • Disable • Enable
Smoothing	1 / 2 / 4 / 8 / 16 / 32 / 64 conversion cycles

5.3 Application 3: Safety mode SIL3/Cat.3/PLd with 4-wire transducer

Introduction

Below you will find the wiring scheme and the parameter assignment of the F-AI 4xI 0(4)..20mA 2-/4-wire HF for

- Application 3: Safety mode SIL3/Cat.3/PLd, 1oo1 (1v1) evaluation.

Possible diagnostic messages, the error causes and possible corrective measures are given in section "Diagnostic messages (Page 58)".

Current measurement 0/4 to 20 mA, 4-wire transducer

Four process signals can be connected to the F-module in this interconnection variant. Sensor supply U_V is provided by the F-module for 4 channels. You can also supply the sensors by means of an external sensor supply.

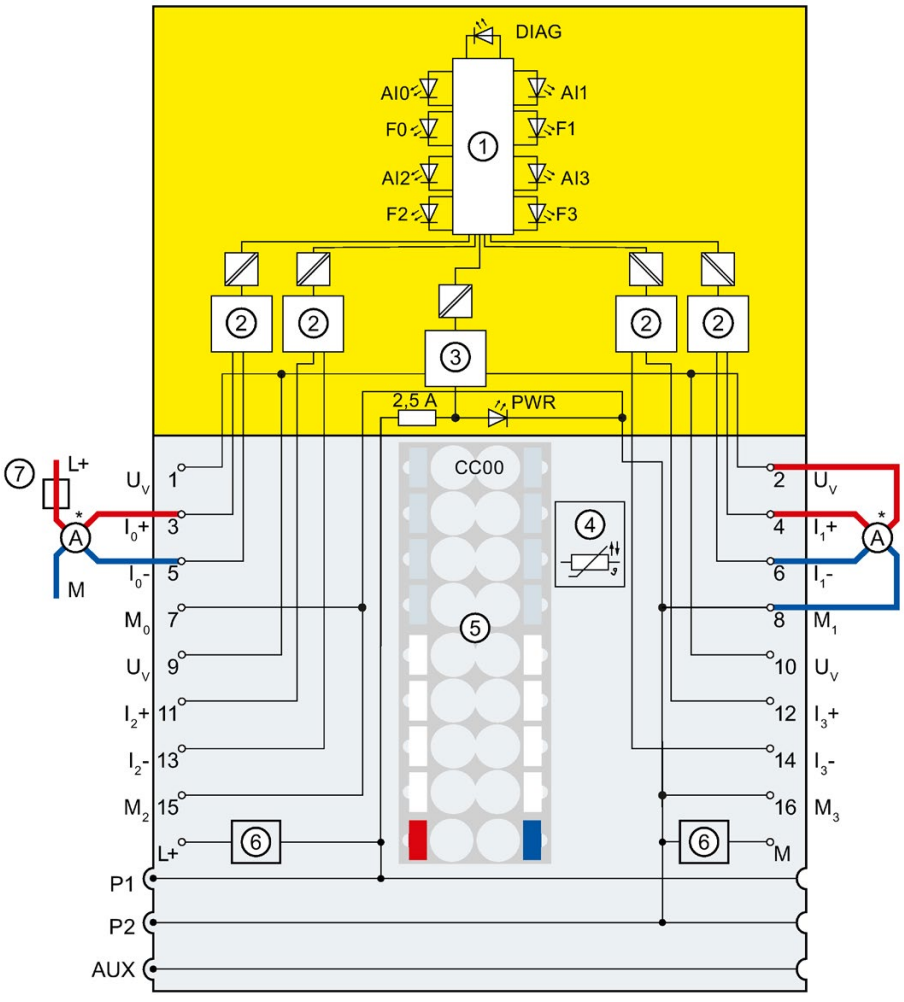

①	Backplane bus interface	U_V	Sensor supply
②	Analog-to-digital converter (ADC)	M	Supply voltage ground
③	Sensor supply/reverse polarity protection	M_n	Ground reference to U_V, channel n
④	Temperature measurement for BU type A1 only (the function cannot be used for this module.)	L+	24 V DC (infeed only with light-colored BaseUnit)
⑤	Color-coded label with color code CC00 (optional)	P1, P2, AUX	Internal self-assembling voltage buses Connection to left (dark-colored BaseUnit) Connection to left interrupted (light-colored BaseUnit)
⑥	Filter connection supply voltage (available with light-colored BaseUnit only)	DIAG	Diagnostics LED (green, red)
⑦	External fuse	AI0, AI1, AI2, AI3	Channel status LED (green)
I_n+	Current input positive, channel n	F0, F1, F2, F3	LED channel fault (red)
I_n-	Current input negative, channel n	PWR	Power LED (green)
*	Measuring transducer		

Figure 5-3 1oo1 evaluation

WARNING

To achieve SIL3/Cat.3/PLd using this wiring, you must use a suitably qualified sensor.

WARNING

All cables need to be laid in such a way that they are resistant to interference voltage. Use shielded cables.

Assignable parameters for application 3

Table 5- 3 Parameters for application 3 of F-AI 4xI 0(4)..20mA 2-/4-wire HF

Parameters	Range of values in safety mode
Behavior after channel faults	• Passivate the entire F-module • Passivate channel
Interference frequency suppression	• 50 Hz • 60 Hz
Sensor evaluation	1oo1 evaluation (max. SIL3/Cat.3/PLd)
Measuring range	• 0 to 20 mA • 4 to 20 mA
Diagnostics: Wire break	(in the measuring range 4 to 20 mA) • Disable • Enable
Smoothing	1 / 2 / 4 / 8 / 16 / 32 / 64 conversion cycles

5.4 Application 4: Safety mode SIL3/Cat.4/PLe with 4-wire transducer

Introduction

Below you will find the wiring scheme and the parameter assignment of the F-AI 4xI 0(4)..20mA 2-/4-wire for

- application 4: Safety mode SIL3/Cat.4/PLe, 1oo2 (2v2) evaluation.

Possible diagnostic messages, the error causes and possible corrective measures are given in section "Diagnostic messages (Page 58)".

Current measurement 0/4 to 20 mA, 4-wire transducer

Two process signals can be connected to the F-module in this interconnection variant. Sensor supply U_V is provided by the F-module for 4 channels. You can also supply the sensors by means of an external sensor supply.

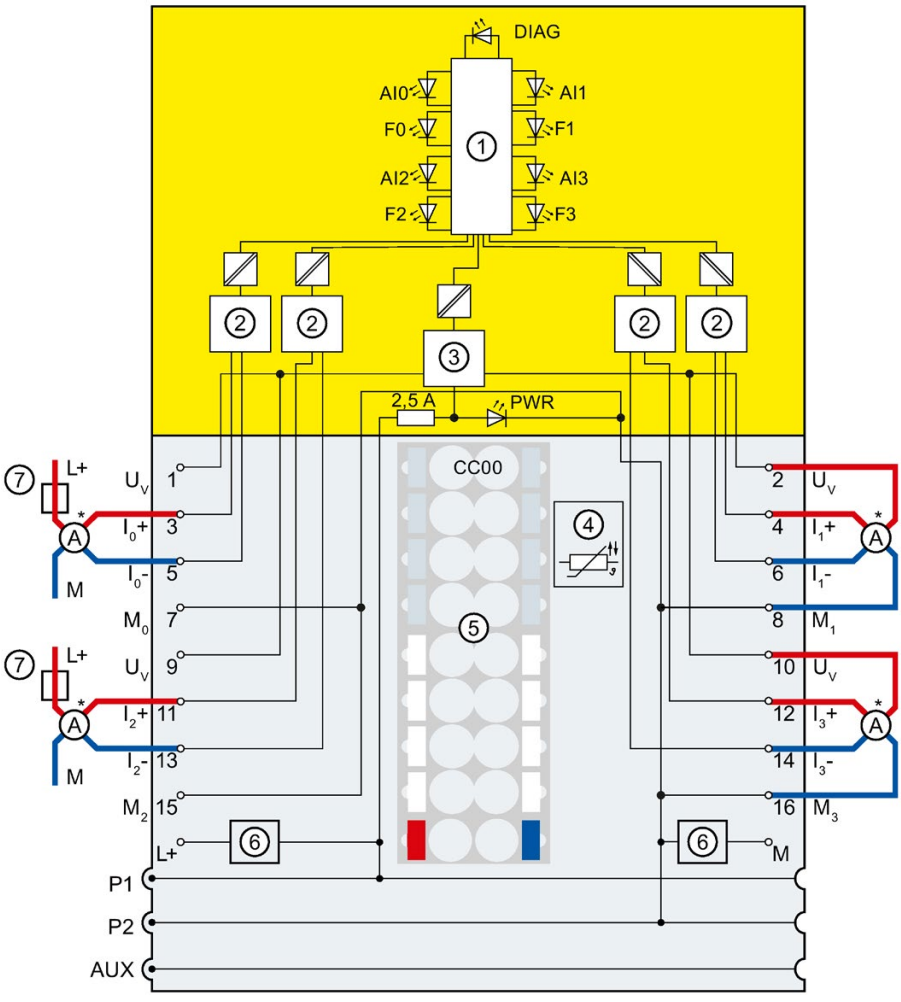

①	Backplane bus interface	U_V	Sensor supply
②	Analog-to-digital converter (ADC)	M	Supply voltage ground
③	Sensor supply/reverse polarity protection	M_n	Ground reference to U_V, channel n
④	Temperature measurement for BU type A1 only (the function cannot be used for this module.)	L+	24 V DC (infeed only with light-colored BaseUnit)
⑤	Color-coded label with color code CC00 (optional)	P1, P2, AUX	Internal self-assembling voltage buses Connection to left (dark-colored BaseUnit) Connection to left interrupted (light-colored BaseUnit)
⑥	Filter connection supply voltage (available with light-colored BaseUnit only)	DIAG	Diagnostics LED (green, red)
⑦	External fuse	AI0, AI1, AI2, AI3	Channel status LED (green)
I_n+	Current input positive, channel n	F0, F1, F2, F3	LED channel fault (red)
I_n-	Current input negative, channel n	PWR	Power LED (green)
*	Measuring transducer		

Figure 5-4 1oo2 evaluation

WARNING

To achieve SIL3/Cat.4/PLe using this wiring, you must use suitably qualified sensors.

WARNING

All cables need to be laid in such a way that they are resistant to interference voltage. Use shielded cables.

Assignable parameters for application 4

Table 5- 4 Parameters for application 4 of F-AI 4xI 0(4)..20mA 2-/4-wire HF

Parameters	Range of values in safety mode
Standard value	• MIN • MAX
Discrepancy time	100 to 30000 ms
Tolerance window %, absolute	2.0 to 20.0%
Tolerance window %, relative	2.0 to 20.0%
Behavior after channel faults	• Passivate the entire F-module • Passivate channel
Interference frequency suppression	• 50 Hz • 60 Hz
Sensor evaluation	1oo2 evaluation (max. SIL3/Cat.4/PLe)
Measuring range	• 0 to 20 mA • 4 to 20 mA
Diagnostics: Wire break	(in the measuring range 4 to 20 mA) • Disable • Enable
Smoothing	1 / 2 / 4 / 8 / 16 / 32 / 64 conversion cycles

Interrupts/diagnostic messages 6

6.1 Status and error display

LED display

The following figure shows the LED display of the F-AI 4xI 0(4)..20mA 2-/4-wire HF.

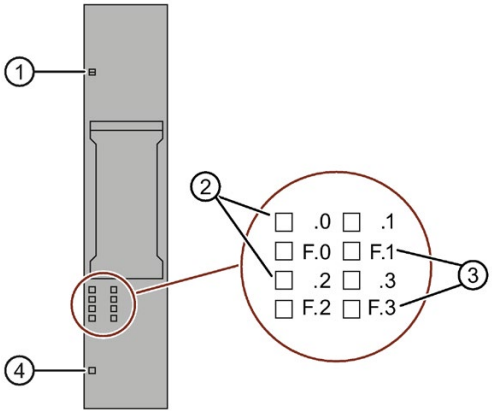

① DIAG (green/red)
② Channel status (green)
③ Channel fault (red)
④ PWR (green)

Figure 6-1 LED display

Meaning of the LED displays

The following tables show the meaning of the status and error displays. Remedies for diagnostics alarms can be found in section Diagnostic messages (Page 58).

WARNING
The DIAG LED and the channel status and channel fault LEDs of the outputs are not designed as safety-related LEDs and therefore may not be evaluated for safety-related activities.

DIAG LED

Table 6- 1 Error display of the LED DIAG

DIAG	Meaning
Off	Backplane bus supply of the ET 200SP not okay
Flashing	Module parameters not configured
On	Module parameters configured and no module diagnostics
Flashing	• Module parameters configured and module diagnostics • Operation in S7-1200/1500 F-CPUs: At least one channel is waiting for a user acknowledgment.
Flashing	• Operation in S7-1200/1500 F-CPUs: The F-module is waiting for a user acknowledgment after a module fault. • Operation in S7-300/400 F-CPUs: The F-module is waiting for a user acknowledgment.

Channel status/channel fault LED

Table 6- 2 Status display of the LEDs channel status / channel error

Channel status	Channel fault	Meaning
Off	Off	Channel deactivated or supply voltage L+ missing.
On	Off	Channel activated and no channel diagnostics
Off	On	Channel activated and channel diagnostics
/ Alternately flashing		At least one channel is waiting for a user acknowledgment.

Channel status/DIAG/channel fault LED

Table 6- 3 Status display of the LEDs channel status / DIAG / channel error

Channel status	DIAG	Channel fault	Meaning
Off	Flashing	All On	The PROFIsafe address does not match the configured PROFIsafe address.
Flashing	Flashing	Off	Identification of the F-module when assigning the PROFIsafe address.

PWR LED

Table 6- 4 Status display of LED PWR

PWR	Meaning
Off	Supply voltage L+ missing
On	Supply voltage L+ available

6.2 Interrupts

Introduction

The fail-safe analog input module F-AI 4xI 0(4)..20mA 2-/4-wire HF supports diagnostic interrupts.

Diagnostic interrupt

The F-module generates a diagnostic interrupt for each diagnostic message described in section Diagnostic messages (Page 58).

The list below provides an overview of the diagnostic interrupts of the F-module. The diagnostic interrupts are assigned either to one channel or the entire F-module.

⚠ WARNING
Before acknowledging the short circuit diagnostic message, remedy the respective fault and validate your safety function. Follow the fault remedying procedure described in section Diagnostic messages (Page 58)

Scope of diagnostic interrupt: F-module

- Overtemperature
- Parameter error
- Supply voltage missing
- Channel/component temporarily not available
- Mismatch of safety destination address (F_Dest_Add)
- Safety destination address not valid (F_Dest_Add)
- Safety source address not valid (F_Source_Add)
- Safety watchdog timer value is 0 ms (F_WD_Time)
- Parameter F_SIL exceeds SIL from specific device application
- Parameter F_CRC_Length does not match the generated values
- Version of F-parameter set incorrectly
- CRC1 fault
- Inconsistent iParameters (iParCRC error)
- F_Block_ID not supported
- Transmission error: Inconsistent data (CRC error)
- Transmission error: Timeout (monitoring time 1 or 2 expired)
- Module is defective
- Watchdog tripped
- Invalid/inconsistent firmware present

- Diagnostics memory overflow
- Channel failure acknowledgment
- F-address memory not accessible
- No valid F-address available
- Diagnostics memory overflow
- Undertemperature
- Supply voltage too high
- Supply voltage too low
- Channel/component not available

Scope of diagnostic interrupt: Channel

- Diagnostics: Wire break (can only be configured for measuring range 4..20mA)
- High limit exceeded
- Low limit violated
- Safety-related switch off
- Internal supply voltage of the module failed
- Common mode error
- Analog input signal not recorded unique
- Internal sensor supply short-circuit to P
- Overload or internal sensor supply short-circuit to M
- Discrepancy error
- Analog input signal not recorded unique
- Internal sensor supply short-circuit to P
- Overload or internal sensor supply short-circuit to M
- Read back failure
- ADC error
- Fault in test circuit

6.3 Diagnostic messages

Diagnostic messages

Module faults are indicated as diagnostics (module status).

Once the fault is eliminated, the F-module must be reintegrated in the safety program. For additional information on passivation and reintegration of F-I/O, refer to the SIMATIC Safety – Configuring and Programming (http://support.automation.siemens.com/WW/view/en/54110126) manual.

Table 6- 5 Diagnostic messages of the F-AI 4xI 0(4)..20mA 2-/4-wire HF

Diagnostic message	Fault code	Meaning	Remedy
Overtemperature	5_H	The F-module measured an excessively high temperature.	Operate the F-module within the specified temperature range (see Technical specifications (Page 64)) Once the temperature has been reduced and returns to the specified range, the F-module must be removed and inserted or the power switched OFF and ON.
Wire break	6_H	Possible causes: • A cable to the sensor is broken. • Fault at the external circuit • Defective sensor • Wrong sensor type set in the parameters • Input channel not used • Measurement resistance too high	Check the possible causes and eliminate the fault.
High limit exceeded	7_H	The measured value exceeds the measuring range.	Check the interaction between the module and the sensor.
Low limit violated	8_H	The measured input value is below a measuring range.	Check the interaction between the module and the sensor.
Parameter error	10_H	Parameter assignment errors include: • The F-module cannot use the parameters (unknown, invalid combination, etc.). • The F-module parameters have not been configured.	Correct the parameter assignment.
Supply voltage missing	11_H	Missing or insufficient supply voltage L+	• Check the supply voltage L+ on the BaseUnit. • Check the BaseUnit.

Diagnostic message	Fault code	Meaning	Remedy
Safety-related switch off	19_H	For safety purposes, channel was switched off due to an error on another channel. Possible causes: • Short circuit is present.	• Correct the process wiring.
Channel/component temporarily not available	$1F_H$	Possible causes: • Internal fault in the F-module • Firmware update error	• Replace the F-module. • Repeat the firmware update.
Mismatch of safety destination address (F_Dest_Add)	40_H	The F-module detected a different F-destination address.	• Check the parameter assignment of the PROFIsafe driver and the PROFIsafe address assigned to the F-module. • Assign the PROFIsafe address to the F-module (again).
Safety destination address not valid (F_Dest_Add)	41_H	The F-module detected an invalid F-destination address.	
Safety source address not valid (F_Source_Add)	42_H	The F-module detected a different F-source address.	
Safety watchdog timer value is 0 ms (F_WD_Time)	43_H	The F-module detected an invalid safety watchdog time.	
Parameter F_SIL exceeds SIL from specific device application	44_H	The F-module detected a discrepancy between the SIL setting of the communication and the application.	
Parameter F_CRC_Length does not match the generated values	45_H	The F-module detected a discrepancy in the CRC length.	
Version of F-parameter set incorrectly	46_H	The F-module detected an incorrect F_Par_Version or an invalid F_Block_ID.	
CRC1 fault	47_H	The F-module detected inconsistent F-parameters.	
Transmission error: Inconsistent data (CRC error)	$4D_H$	The F-module detected a CRC error. Possible causes: • The communication between the F-CPU and F-module is disturbed. • Electromagnetic interference has exceeded limits. • An error occurred in the sign-of-life monitoring.	• Check the communication connection between the F-module and F-CPU. • Eliminate the electromagnetic interference.
Inconsistent iParameters (iParCRC error)	51_H	The firmware of the F-module has detected inconsistent iParameters.	Check the parameter assignment.
F_Block_ID not supported	52_H	The F-module detected an incorrect block ID.	Check the parameter assignment of the PROFIsafe driver.
Transmission error: Timeout (monitoring time 1 or 2 expired)	54_H	The F-module detected a timeout. Possible causes: • The F-monitoring time is set incorrectly. • A bus fault is present.	• Check the parameter assignment. • Ensure that communication is functioning correctly.

Diagnostic message	Fault code	Meaning	Remedy
Module is defective	100_H	Possible causes: • Electromagnetic interference has exceeded limits. • The F-module has detected an internal error and has reacted in a safety-related manner.	• Eliminate the interference. The module must then be pulled and plugged, or the power switched OFF and ON. • If the F-module cannot be put back into operation, consider replacing it.
Watchdog tripped	103_H	Possible causes: • Electromagnetic interference has exceeded limits. • The F-module has detected an internal error and has reacted in a safety-related manner.	• Eliminate the interference. The module must then be pulled and plugged, or the power switched OFF and ON. • If the F-module cannot be put back into operation, consider replacing it.
Internal supply voltage of the module failed	104_H	Internal voltage is too low.	Replace the F-module.
Common mode error	118_H	Voltage between two input channels is too high.	Correct the input wiring.
Invalid/inconsistent firmware present	$11B_H$	The firmware is incomplete and/or firmware added to the F-module is incompatible. This leads to errors or functional limitations when operating the F-module.	• Perform a firmware update for the F-module. Note any error messages. • Use only firmware versions released for this F-module.
Diagnostics memory overflow	$13E_H$	Overflow of the diagnostics memory. It was not possible to send all pending diagnostics. This error can lead to deactivation of the F-module and even to switch off/on of the supply voltage.	Remedy the cause of the diagnostics surge.
Analog input signal not recorded unique	304_H	Measured values from the sensor are not plausible. Possible causes: • Increased EMC • F-module defective	Check the interaction between the F-module and the sensor.
Internal sensor supply short-circuit to P	306_H	Possible causes: • Short-circuit of internal sensor supply to P	Check the process wiring.
Overload or internal sensor supply short-circuit to M	307_H	• The internal sensor supply is overloaded. • Missing or insufficient supply voltage L+.	• Eliminate the short-circuit in the process wiring. • Check the supply voltage L+ on the BaseUnit. • Check the BaseUnit.

Diagnostic message	Fault code	Meaning	Remedy
Channel failure acknowledgment	$30B_H$	A channel fault was detected. Confirmation is required to enable the channel.	Confirm the channel fault.
No valid F-address available	$30D_H$	The F-source address and F-destination address stored in the electronic coding element cannot be accessed.	Verify that the coding element is present. Replace the coding element, if necessary.
F-address memory not accessible	$30E_H$	No valid PROFIsafe address is saved in the retentive memory. Possible causes: • Initial commissioning • Deliberate parameter change of the PROFIsafe address • Deviation between target and actual configuration of the plant.	• In the case of initial commissioning or deliberate parameter change, assign the PROFIsafe address. • Check the consistency of the target and actual configuration.
Undertemperature	312_H	The minimum permissible temperature limit has been violated.	Operate the F-module within the specified temperature range (see Technical specifications (Page 64))
Discrepancy error	314_H	The discrepancy time set for 1oo2 operation has been exceeded. Possible causes of the discrepancy error: • Incorrect parameter assignment • Wire break in the sensor's supply cable	Check the discrepancy time, the sensors and the cabling.
Read back failure	$31E_H$	The F-module detected an internal error in the test connection. Possible causes: • Increased EMC • F-module defective	If the error persists, replace the F-module.
Auxiliary voltage too high	321_H	The supply voltage is too high.	Check the supply voltage and then test the safety application.
Auxiliary voltage too low	322_H	The supply voltage is too low.	Check the supply voltage and then test the safety application.
ADC error	331_H	Internal error during analog-digital conversion. Possible causes: • Increased EMC • F-module defective	If the error persists, replace the F-module.
Fault in test connection	332_H	The F-module detected an internal error in the test connection. Possible causes: • Increased EMC • F-module defective	If the error persists, replace the F-module.

Supply voltage outside the nominal range

If the supply voltage L+ is outside the specified value range, the DIAG LED flashes and the module is passivated.

When the voltage is then recovered (level must remain within the specified value for at least 1 minute (see Technical specifications (Page 64): Voltages, Currents, Potentials)), the DIAG LED stops flashing. The module remains passivated.

Generally applicable information on diagnostics

Information on diagnostics that pertains to all fail-safe modules (for example, readout of diagnostics functions or passivation of channels) is available in the SIMATIC Safety – Configuring and Programming (http://support.automation.siemens.com/WW/view/en/54110126) manual.

6.4 Value status

Properties

In addition to the diagnostic messages and the status and fault display, the F-module provides information about the validity of each analog input signal – the value status. The value status is entered in the process image along with the input signal.

Value status for digital input and output modules

The value status is the binary additional information of an analog input signal. The value status is entered in the process image of the inputs (PII) at the same time as the process signal. It provides information about the validity of the analog input signal.

The value status is affected by all faults.

- 1_B: A valid process value is output for the channel.
- 0_B: A fail-safe value is output for the channel, or the channel is deactivated.

Note

You may only access the addresses occupied by user data and value status.

The other address areas occupied by the F-modules are assigned for functions including safety-related communication between the F-modules and F-CPU in accordance with PROFIsafe.

1oo2 evaluation of the sensors combines the two channels. With 1oo2 evaluation of the sensors, you can only access the low order channel in the safety program, e.g. channel 0.

Assignment of the inputs and value status in the PII

Each channel of the F-module is assigned a value status in the process image of the inputs. You can find the assignment in section Address space (Page 38).

Reference

A detailed description of the evaluation and processing of the respective input signals can be found in the SIMATIC Safety – Configuring and Programming (http://support.automation.siemens.com/WW/view/en/54110126) manual.

Technical specifications

7

7.1 Technical specifications

Technical specifications of the F-AI 4xI 0(4)..20mA 2-/4-wire HF

Article number	6ES7136-6AA00-0CA1
General information	
Product type designation	F-AI 4xI 0(4) ... 20 mA 2/4-wire HF
Firmware version	
• FW update possible	Yes
usable BaseUnits	BU type A0, A1
Color code for module-specific color identification plate	CC00
Product function	
• I&M data	Yes; I&M0 to I&M3
Engineering with	
• STEP 7 TIA Portal configurable/integrated as of version	V15 with HSP 203
CiR – Configuration in RUN	
Reparameterization possible in RUN	No
Calibration possible in RUN	No
Supply voltage	
Rated value (DC)	24 V
permissible range, lower limit (DC)	19.2 V
permissible range, upper limit (DC)	28.8 V
Reverse polarity protection	Yes
Input current	
Current consumption (rated value)	0.38 A
Current consumption, max.	0.4 A
24 V encoder supply	
• 24 V	Yes; min. L+ (-1.5 V)
• Short-circuit protection	Yes
• Output current, max.	300 mA; total current of all encoders/ channels
Power	
Power available from the backplane bus	70 mW
Power loss	
Power loss, typ.	2 W

Article number	6ES7136-6AA00-0CA1
Address area	
Address space per module	
• Inputs	14 byte; S7-300/400F CPU, 13 byte
• Outputs	5 byte; S7-300/400F CPU, 4 byte
Hardware configuration	
Automatic encoding	
• Electronic coding element type F	Yes
Analog inputs	
Number of analog inputs	4
• For current measurement	4
permissible input current for current input (destruction limit), max.	35 mA
Input ranges (rated values), currents	
• 0 to 20 mA	Yes
• Input resistance (0 to 20 mA)	125 Ω
• 4 mA to 20 mA	Yes
• Input resistance (4 mA to 20 mA)	125 Ω
Cable length	
• shielded, max.	1 000 m
Analog value generation for the inputs	
Measurement principle	Sigma Delta
Integration and conversion time/resolution per channel	
• Resolution with overrange (bit including sign), max.	16 bit
• Integration time, parameterizable	Yes
• Integration time (ms)	20 / 16,667
• Interference voltage suppression for interference frequency f1 in Hz	50 / 60 Hz
Smoothing of measured values	
• Number of smoothing levels	7
• parameterizable	Yes
• Step: None	Yes; 1x conversion cycle time
• Step: low	Yes; 2x / 4x conversion cycle time
• Step: Medium	Yes; 8x / 16x conversion cycle time
• Step: High	Yes; 32x / 64x conversion cycle time

Article number	6ES7136-6AA00-0CA1
Encoder	
Connection of signal encoders	
• for current measurement as 2-wire transducer	Yes
– Burden of 2-wire transmitter, max.	650 Ω
• for current measurement as 4-wire transducer	Yes
Errors/accuracies	
Linearity error (relative to input range), (+/-)	0.1 %
Temperature error (relative to input range), (+/-)	0.023 %/K
Repeat accuracy in steady state at 25 °C (relative to input range), (+/-)	0.1 %
Operational error limit in overall temperature range	
• Current, relative to input range, (+/-)	2 %
Basic error limit (operational limit at 25 °C)	
• Current, relative to input range, (+/-)	0.1 %
Interference voltage suppression for f = n x (f1 +/- 1 %), f1 = interference frequency	
• Series mode interference (peak value of interference < rated value of input range), min.	40 dB
• Common mode interference, min.	70 dB
Interrupts/diagnostics/status information	
Diagnostics function	Yes, "Alarms/diagnostic messages" section in the manual
Alarms	
• Diagnostic alarm	Yes
• Limit value alarm	Yes
Diagnostic messages	
• Monitoring the supply voltage	Yes
• Wire-break	Yes; Measuring range 4 to 20 mA only
• Short-circuit	Yes
Diagnostics indication LED	
• RUN LED	Yes; Green LED
• ERROR LED	Yes; Red LED
• Monitoring of the supply voltage (PWR-LED)	Yes; green PWR LED
• Channel status display	Yes; Green LED
• for channel diagnostics	Yes; Red LED
• for module diagnostics	Yes; Green/red LED

Article number	6ES7136-6AA00-0CA1
Potential separation	
Potential separation channels	
• between the channels	No
• between the channels and backplane bus	Yes
• between the channels and the power supply of the electronics	Yes
Permissible potential difference	
between the inputs (UCM)	10 Vpp
Isolation	
Isolation tested with	707 V DC (type test)
Standards, approvals, certificates	
Highest safety class achievable in safety mode	
• Performance level according to ISO 13849-1	PLe
• Category according to ISO 13849-1	Cat. 4
• SIL acc. to IEC 61508	SIL 3
Probability of failure (for service life of 20 years and repair time of 100 hours)	
– Low demand mode: PFDavg in accordance with SIL3	< 5.00E-05
– High demand/continuous mode: PFH in accordance with SIL3	< 1.00E-09 1/h
Ambient conditions	
Ambient temperature during operation	
• horizontal installation, min.	0 °C
• horizontal installation, max.	60 °C
• vertical installation, min.	0 °C
• vertical installation, max.	50 °C
Dimensions	
Width	15 mm
Weights	
Weight, approx.	48 g

Operational limit in complete temperature range

WARNING

When designing the safety function, you must take into account the information "Operational limit in complete temperature range" for the entire mission time.

Temperature characteristic values

Note

When the ambient temperature exceeds 55 °C, you must only apply a maximum total current of 3 A to an adjacent F-DQ 4x24VDC/2A PM HF.

Dimension drawing

See ET 200SP BaseUnits manual

See also

ET 200SP BaseUnits
(http://support.automation.siemens.com/WW/view/en/58532597/133300)

Response times

A

Introduction

You will find the response times of the F-AI 4xI 0(4)..20mA 2-/4-wire HF below. The response times are included in the calculation of the F-system response time.

Definition of response time for fail-safe analog inputs

The response time results from the number of channels/channel pairs, the response time per channel/channel pair, the basic response time and the configured smoothing.

Times required for the calculation

- Max. acknowledgment time (Device Acknowledgment Time): T_{DAT} = 20 ms
- Basic response time: 20 ms
- Response time per channel
  - At 50 Hz: 25 ms
  - At 60 Hz: 22 ms

Conversion cycle time = basic response time + (N × response time per channel)

(N = number of active channels)

The conversion cycle time is the time in which all activated channels are processed/converted once.

Typical response time

You can calculate the typical response time of F-AI 4xI 0(4)..20mA 2-/4-wire HF using the following formula:

Typical response time = Conversion cycle time × Smoothing

Max. response time (worst case delay time, WCDT)

You can calculate the maximum response time of F-AI 4xI 0(4)..20mA 2-/4-wire HF (worst case delay time, WCDT) using the following formula:

Max. response time = 2 × Conversion cycle time × Smoothing

Response time in the case of a fault (one fault delay time, OFDT)

You can calculate the response time of F-AI 4xI 0(4)..20mA 2-/4-wire HF (one fault delay time, OFDT) as follows:

- According to the following formula if a discrepancy error is present:

  Typical response time = Conversion cycle time × Smoothing + Discrepancy time + Conversion cycle time

  Maximum response time = 2 × Conversion cycle time × Smoothing + Discrepancy time + 2 × Conversion cycle time

- According to the following formula if a channel fault is present:

  Typical response time = Conversion cycle time

  Max. response time = 2 × Conversion cycle time

This means that, for OFDT, the time on occurrence of a discrepancy error should be taken with parameter assignment "1oo2 evaluation (max. SIL3/Kat.4/PLe)" and the time on occurrence of a channel fault should be taken with parameter assignment "1oo1 evaluation (max. SIL3/Kat.3/PLd)".

Representation of analog values

B

In this section we are presenting the analog values for all measuring ranges that you can use with the F-AI 4xI 0(4)..20mA 2-/4-wire HF analog input module.

Measured value resolution

The analog values are shown as fixed-point number in two's complement.

The resolutions shown here are 16 bits including sign.

Table B- 1 Resolution of the analog values

Resolution in bits	Values		Analog value	
	Decimal	Hexadecimal	High byte	Low byte
16	1	1_H	Sign 0 0 0 0 0 0 0	0 0 0 0 0 0 0 1

B.1 Representation of analog values

The following tables list the decimal and hexadecimal values (codes) of the possible current measuring ranges.

Table B- 2 Current measuring range 0 to 20 mA

Values		Current measuring range	Range
Dec.	Hex.	0 to 20 mA	
32512	$7F00_H$	> 23.518 mA	Overflow[2]
32511 . . 27649	$7EFF_H$ . . $6C01_H$	23.518 mA . . 20.0007 mA	Overrange
27648 . . 614	$6C00_H$ . . 266_H	20 mA . . 0.4442 mA	Nominal range
613 . . 1 0	265_H . . 1_H 0_H	< 0.4442 mA . . 723.4 nA 0 mA	Wire break[1]

[1] The F-module signals a wire break, $7FFF_H$ for S7-300/400 F-CPUs or 0 for S7-1200/1500 F-CPUs.

[2] In *STEP 7 Safety*, the fail-safe value 0 is provided in place of $7FFF_H$ (for overflow) in the PII for the safety program.

Table B- 3 Current measuring range 4 to 20 mA

Values		Current measuring range	Range	
Dec.	Hex.		Diagnostics wire break: No	Diagnostics wire break: Yes
32512	$7F00_H$	> 22.814 mA	Overflow[2]	Overflow[2]
32511 . . 27649	$7EFF_H$ . . $6C01_H$	22.814 mA . . 20.0006 mA	Overrange	Overrange
27648 . . 1 0	$6C00_H$ . . 1_H 0_H	20 mA . . 4 mA + 578.7 nA 4 mA	Nominal range	Nominal range
-1 . . -691	$FFFF_H$ . . $FD4D_H$	3.9994 mA . . 3.6 mA	Underrange	Underrange
-692 . . -6144	$FD4C_H$ . . $E800_H$	< 3.6 mA . . 0.4444 mA		Wire break[1]
-6145	$E7FF_H$	< 0.4444 mA	Underflow[2]	

1 The F-module signals a wire break, $7FFF_H$ for S7-300/400 F-CPUs or 0 for S7-1200/1500 F-CPUs.

2 In *STEP 7 Safety*, the substitute value 0 is provided in place of $7FFF_H$ (for overflow) or 8000_H (for underflow) in the PII for the safety program.

SIEMENS

SIMATIC

ET 200SP
Digital output module
F-DQ 4x24VDC/2A PM HF
(6ES7136-6DB00-0CA0)

Manual

Preface

Documentation guide 1

Product overview 2

Connecting 3

Parameters/address space 4

Applications of the F-I/O module 5

Interrupts/diagnostic messages 6

Technical specifications 7

Response times A

Switching of loads B

07/2013

A5E03858037-01

Legal information

Warning notice system

This manual contains notices you have to observe in order to ensure your personal safety, as well as to prevent damage to property. The notices referring to your personal safety are highlighted in the manual by a safety alert symbol, notices referring only to property damage have no safety alert symbol. These notices shown below are graded according to the degree of danger.

⚠ DANGER
indicates that death or severe personal injury **will** result if proper precautions are not taken.

⚠ WARNING
indicates that death or severe personal injury **may** result if proper precautions are not taken.

⚠ CAUTION
indicates that minor personal injury can result if proper precautions are not taken.

NOTICE
indicates that property damage can result if proper precautions are not taken.

If more than one degree of danger is present, the warning notice representing the highest degree of danger will be used. A notice warning of injury to persons with a safety alert symbol may also include a warning relating to property damage.

Qualified Personnel

The product/system described in this documentation may be operated only by **personnel qualified** for the specific task in accordance with the relevant documentation, in particular its warning notices and safety instructions. Qualified personnel are those who, based on their training and experience, are capable of identifying risks and avoiding potential hazards when working with these products/systems.

Proper use of Siemens products

Note the following:

⚠ WARNING
Siemens products may only be used for the applications described in the catalog and in the relevant technical documentation. If products and components from other manufacturers are used, these must be recommended or approved by Siemens. Proper transport, storage, installation, assembly, commissioning, operation and maintenance are required to ensure that the products operate safely and without any problems. The permissible ambient conditions must be complied with. The information in the relevant documentation must be observed.

Trademarks

All names identified by ® are registered trademarks of Siemens AG. The remaining trademarks in this publication may be trademarks whose use by third parties for their own purposes could violate the rights of the owner.

Disclaimer of Liability

We have reviewed the contents of this publication to ensure consistency with the hardware and software described. Since variance cannot be precluded entirely, we cannot guarantee full consistency. However, the information in this publication is reviewed regularly and any necessary corrections are included in subsequent editions.

Siemens AG
Industry Sector
Postfach 48 48
90026 NÜRNBERG
GERMANY

A5E03858037-01
Ⓟ 08/2013 Technical data subject to change

Copyright © Siemens AG 2013.
All rights reserved

Preface

Purpose of the documentation

This device manual complements the system manual ET 200SP distributed I/O system. General functions of the ET 200SP are described in the system manual ET 200SP distributed I/O system (http://support.automation.siemens.com/WW/view/en/58649293).

The information provided in this device manual and the system manual enables you to commission the ET 200SP distributed I/O system.

Conventions

Note the following identified notes:

Note

A note includes important information on the product described in the documentation, on handling the product or on the part of the documentation to which you ought to pay special attention.

Security information

Siemens provides automation and drive products with industrial security functions that support the secure operation of plants or machines. They are an important component in a holistic industrial security concept. With this in mind, our products undergo continuous development. We therefore recommend that you keep yourself informed with respect to our product updates. Please find further information and newsletters on this subject at: (http://support.automation.siemens.com)

To ensure the secure operation of a plant or machine it is also necessary to take suitable preventive action (e.g. cell protection concept) and to integrate the automation and drive components into a state-of-the-art holistic industrial security concept for the entire plant or machine. Any third-party products that may be in use must also be taken into account. Please find further information at: (http://www.siemens.com/industrialsecurity)

Table of contents

Preface 3

1 Documentation guide 7

1.1 Documentation guide for F-DQ 4x24VDC/2A PM HF digital output module 7

2 Product overview 9

2.1 Properties of the F-DQ 4x24VDC/2A PM HF 9

3 Connecting 13

3.1 Terminal assignment 13

3.2 Block diagram 15

4 Parameters/address space 17

4.1 Parameters 17

4.2 Explanation of parameters 19
4.2.1 F-parameters 19
4.2.2 Parameters of the channels 19
4.2.2.1 Maximal test period 19
4.2.2.2 Activated 19
4.2.2.3 Max. readback time dark test 20
4.2.2.4 Disable dark test for 48 hours 22
4.2.2.5 Max. readback time switch on test 23
4.2.2.6 Activated light test 25
4.2.2.7 Diagnosis: Wire break 26

4.3 Address space 27

5 Applications of the F-I/O module 29

5.1 Applications of the F-DQ 4x24VDC/2A PM HF 29

5.2 Application: Wiring a load to each digital output 29

5.3 Application: Connection of loads to L+ and M at each digital output 30

5.4 Application: Wiring two loads in parallel to each digital output 31

6 Interrupts/diagnostic messages 33

6.1 Status and error display 33

6.2 Interrupts 36

6.3 Diagnostic messages 38

6.4 Value status 42

7 Technical specifications 43

A Response times 47

B Switching of loads 49

B.1 Connecting capacitive loads 49

B.2 Switching of inductive loads 50

Documentation guide 1

1.1 Documentation guide for F-DQ 4x24VDC/2A PM HF digital output module

Introduction

The documentation of the SIMATIC products has a modular design and includes topics concerning your automation system.

The complete documentation of the ET 200SP system consists of different modules divided into system manuals, function manuals and manuals.

The STEP 7 (online help) information system supports you in configuring and programming your automation system.

Overview of documentation for the fail-safe digital output module F-DQ 4×24VDC/2A PM HF

The table below lists additional documents that complement this description of the fail-safe digital output module DQ 4×24VDC/2A PM HF and are available on the Internet.

Table 1- 1 Documentation for the fail-safe digital output module F-DQ 4×24VDC/2A PM HF

Topic	Documentation	Most important contents
Description of the system	System manual ET 200SP distributed I/O system (http://support.automation.siemens.com/WW/view/en/58649293)	• Application planning • Installation • Connecting • Commissioning • Approvals • TÜV certificate
BaseUnits	Manual ET 200SP BaseUnits (http://support.automation.siemens.com/WW/view/en/58532597/133300)	Technical specifications
Description of the SIMATIC Safety F-system	Programming and operating manual SIMATIC Safety - Configuring and Programming (http://support.automation.siemens.com/WW/view/en/54110126)	• Configuring • Programming • Approvals

SIMATIC manuals

The latest manuals for SIMATIC products are available on the Internet (http://www.siemens.com/automation/service&support) for free download.

Functional Safety Services

Siemens Functional Safety Services support you with a comprehensive package of services from risk assessment to verification all the way to plant commissioning and modernization. We also offer consultation on the use of fail-safe and fault-tolerant SIMATIC S7 automation systems.

You will find more detailed information on the Internet (http://www.siemens.com/safety-services).

Please send your questions to us by e-mail (mailto:safety-services.industry@siemens.com).

Product overview

2

2.1 Properties of the F-DQ 4x24VDC/2A PM HF

Order number

6ES7136-6DB00-0CA0

View of the module

Figure 2-1 View of the F-DQ 4×24VDC/2A PM HF module

Properties

- Technical properties
  - Fail-safe digital module
  - 4 outputs, PM-switching (SIL3/Cat.4/PLe)
  - Supply voltage L+
  - Output current per output 2 A
  - Source output (PM-switching)
  - Suitable for solenoid valves, DC contactors and signal lamps
  - Diagnostic display (DIAG red/green LED)
  - Status display for each output (green LED)
  - Fault display for each output (red LED)
  - Diagnostics, e.g., short circuit/wire break/load voltage missing, channel-specific
  - Channel-specific or passivation throughout the module
  - Direct interconnection to F-DI possible (single channel: SIL1, two-channel: SIL3)
- Supported functions
  - Firmware update
  - I&M identification data
  - PROFIsafe

⚠ WARNING

The fail-safe performance characteristics in the technical specifications apply to a proof-test interval of 20 years and a mean time to repair of 100 hours. If a repair within 100 hours is not possible, remove the respective module from the BaseUnit or switch off its supply voltage before 100 hours expires. The module switches off independently after the 100 hours have expired.

Follow the repair procedure described in section Diagnostic messages (Page 38).

Accessories

The following accessories, which are not included in the product package of the F-module, can be used with the F-module:

- Labeling strips
- Color identification labels
- Reference identification labels
- Shield connection

Additional information on accessories can be found in the ET 200SP Distributed I/O System System Manual (http://support.automation.siemens.com/WW/view/en/58649293).

Passivation of fail-safe outputs over a long period of time

WARNING

Unintentional activation of F-I/O with fail-safe outputs

If an F-I/O with fail-safe outputs is passivated for a period longer than that specified in the safety parameters (> 100 hours) and the fault remains uncorrected, you need to exclude the possibility that the F-I/O can be activated unintentionally by a second fault, and thus place the F-system in a dangerous state.

Even though it is highly unlikely that such hardware faults occur, you must prevent the unintentional activation of F-I/O with fail-safe outputs by using circuit measures or organizational measures.

One possibility is the shutdown of the power supply of the passivated F-I/O within a time period of 100 hours, for example.

The required measures are standardized for plants with product standards.

For all other plants, the plant operator must create a concept for the required measures and have it approved by the inspector.

Property of the individual shutdown of F-modules with fail-safe outputs:

A channel-specific shutdown occurs when a fault is detected. It is also possible to react to critical process states staggered over time or to perform safety-related shutdown of individual outputs.

Connecting 3

3.1 Terminal assignment

General terminal assignment

Table 3- 1 Terminal assignment for F-DQ 4×24VDC/2A PM HF

Terminal assignment for F-DQ 4×24VDC/2A PM HF (6ES7136-6DB00-0CA0)						
Terminal	**Assign-ment**	**Terminal**	**Assign-ment**	**Description**	**BaseUnit**[1]	**Color identification label (terminals 1 to 16)**
1	DQ-P_0	**2**	DQ-P_1	• DQ-P_n: Output signal, channel n, P-switching • DQ-M_n: Ground for output signal, channel n, M-switching	A0	 CC02 6ES7193-6CP02-2MA0
3	DQ-P_2	**4**	DQ-P_3			
5	DQ-P_0	**6**	DQ-P_1			
7	DQ-P_2	**8**	DQ-P_3			
9	DQ-M_0	**10**	DQ-M_1			
11	DQ-M_2	**12**	DQ-M_3			
13	DQ-M_0	**14**	DQ-M_1			
15	DQ-M_2	**16**	DQ-M_3			
L+	DC24V	**M**	M			

[1] Usable BaseUnit types can be identified by the last two digits of their order number. See also *ET 200SP Distributed I/O System*system manual

Note

The first BaseUnit must be a light BaseUnit.

Note

The fuse integrated in BaseUnit type A1 can trigger with the digital output module which renders the terminals useless.

Make sure that you only use digital modules with BaseUnit type A0 during commissioning.

Switching of grounded loads

The F-DQ 4×24VDC/2A PM HF can switch loads with a connection between chassis and ground of at least 100 kΩ. Otherwise a short circuit is detected.

From the perspective of the F-module, the M-switch is bridged by the chassis-ground connection.

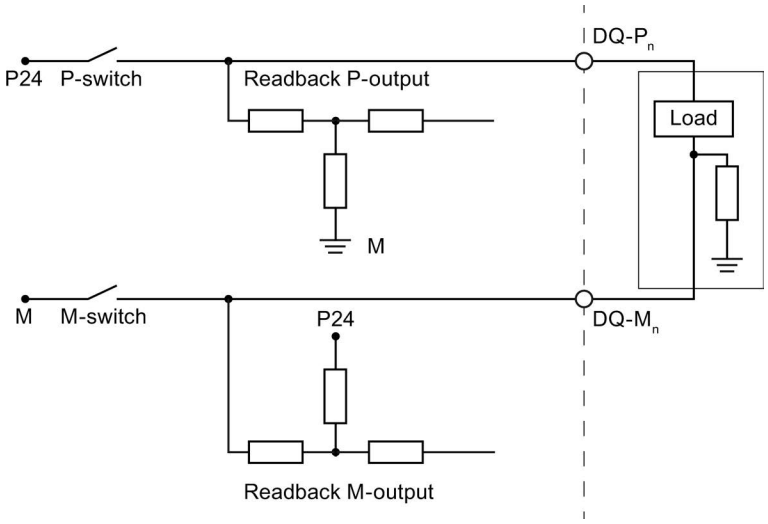

Figure 3-1 Switching of grounded loads (resistance between chassis and ground)

Alternatively, you can use F-PM-E 24VDC/8A PPM ST power module in which the output is configured as a PP-switching output.

See also

ET 200SP distributed I/O system
(http://support.automation.siemens.com/WW/view/en/58649293)

3.2 Block diagram

Block diagram

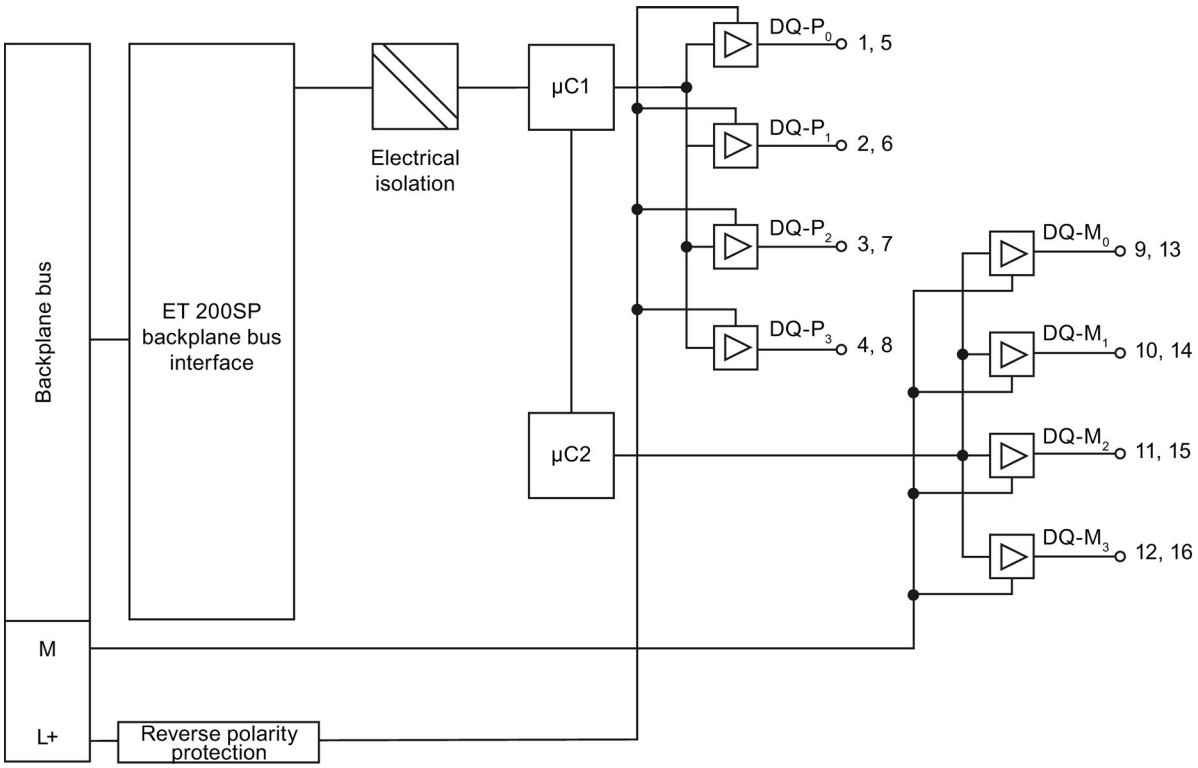

Figure 3-2 Block diagram F-DQ 4×24VDC/2A PM HF

Parameters/address space 4

4.1 Parameters

Parameters

⚠ WARNING
Diagnostic functions should be activated or deactivated in accordance with the application.

Table 4- 1 Parameters for F-DQ 4×24VDC/2A PM HF

Parameter	Value range	Parameter reassignment in RUN	Scope
F-parameters:			
Manual assignment of the F-monitoring time	• disable • enable	no	Module
F-monitoring time	1 to 65535 ms	no	Module
F-source address	1 to 65534	no	Module
F-destination address	1 to 65534	no	Module
F-parameter signature (without address)	0 to 65535	no	Module
Behavior after channel faults	• Passivate entire module • Passivate channel	no	Module
F-I/O DB manual number assignment	• disable • enable	no	Module
F-I/O DB number	—	no	Module
F-I/O DB name	—	no	Module
DQ parameters:			
Maximum test period	• 100 s • 1000 s	no	Module

Parameter	Value range	Parameter reassignment in RUN	Scope
Channel parameters:			
Channel n			
Activated	• disable • enable	no	Channel
Max. readback time dark test	0.6 to 400.0 ms	no	Channel
Disable dark test for 48 hours	• disable • enable	no	Channel
Max. readback time switch on test	0.6 to 5.0 ms	no	Channel
Activated light test	• disable • enable	no	Channel
Diagnosis: Wire break	• disable • enable	no	Channel

4.2 Explanation of parameters

4.2.1 F-parameters

F-parameters

Information on F-parameters is available in the SIMATIC Safety – Configuring and Programming (http://support.automation.siemens.com/WW/view/en/54110126) manual.

4.2.2 Parameters of the channels

4.2.2.1 Maximal test period

With this parameter, you specify the time within which the light, dark and switch on tests (complete bit pattern test) should be performed throughout the module. When this time expires, the tests are repeated. In case of a fault, the test time is reduced to 60 seconds.

- Use "1000 s", for example, to conserve your actuators.
- Use "100 s" to detect faults more quickly.

4.2.2.2 Activated

If you select this check box, the corresponding channel is enabled for signal processing in the safety program.

You can deactivate an unused channel with this parameter.

4.2.2.3 Max. readback time dark test

Function

Dark tests are shutdown tests with bit pattern test.

For a dark test, a test signal is switched to the output channel while the output channel is active (output signal "1"). This output channel is then briefly disabled (= "dark period") and read back. A sufficiently slow actuator does not respond to this and remains switched on.

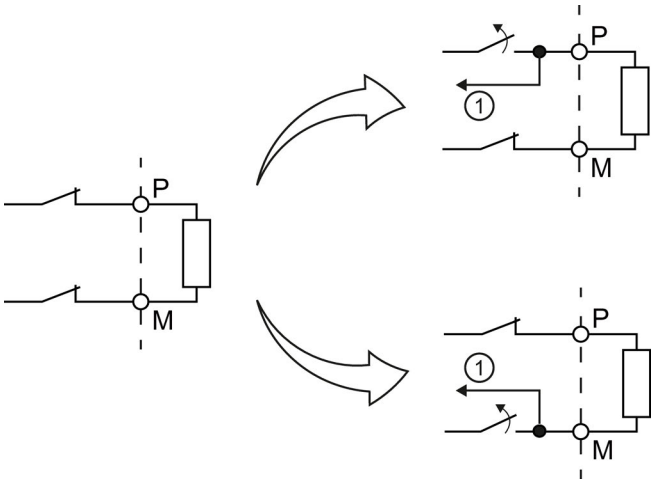

① Readback

Figure 4-1 Functional principle of the dark test (PM switching)

This parameter allows you to set the time for the readback.

If the expected signals (P-readback and M-readback) could not be read back correctly after expiration of the readback time dark test, the output channel is passivated.

No new process values are switched to the output channels while a bit pattern is still active (switch test is carried out). This means that a higher maximum readback time for the dark test increases the response time of the F-module.

⚠ WARNING

Through the configured readback time dark test, short circuits (cross-circuits) to a signal with a frequency greater than 1/(2 x configured readback time dark test) Hz cannot be recognized (50:50 sampling ratio).

Short circuits (cross-circuits) to an output of the same module are recognized.

The parameter also has an effect on the short circuit detection (cross-circuit) with "1" signal when the output signal is changed from "1" to "0" with the safety program.

Setting readback time dark test

Because the fault reaction time is extended by the length of the readback time dark test, we recommend that you set the readback time dark test by trial and error as low as possible, but high enough that the output channel is not passivated.

You determine the readback time required for your actuator with the diagram in the chapter Switching capacitive loads.

If the capacity of the actuator is not known, it may be necessary for you to determine the value for the readback time light test by trial and error. This may also be necessary due to the part variances in the actuator or external influences.

Proceed as follows:

- Set the readback time dark test so that the output channel can be read back correctly but your actuator does not respond yet.
- If the output channel is passivated sporadically, set a higher value for the maximum readback time dark test.
- If the output channel is passivated, the readback time dark test is too small for a connected capacitive load. The discharge cannot take place during the configured readback time dark test. Increase the readback time dark test.

If you have set the readback time dark test to the maximum value of 400 ms and there is still a passivation of the output channel, there is either an external fault or the connected capacity is outside the permitted range.

Test pulses of the dark test

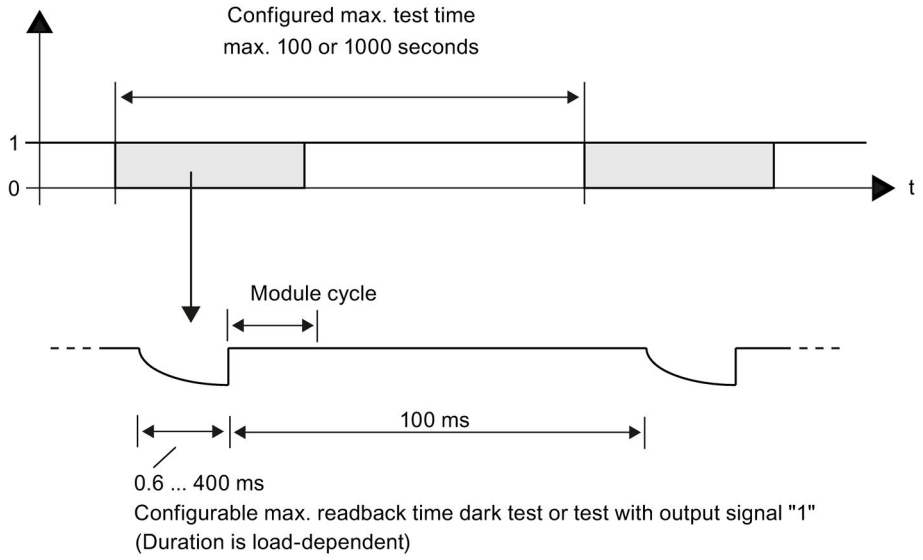

Figure 4-2 Test pulses of the dark test

The interval between two test pulses is 100 ms.

4.2.2.4 Disable dark test for 48 hours

This option allows you to suppress the dark test.

If the channel is permanently active (1) for 48 hours, a single dark test pulse is directed to this channel once the time has expired.

You must provide the signal change from 1 to 0 at the channel yourself within 48 hours to prevent the dark test pulse. This also applies to the operating time if the operating time is < 48 hours. The dark test is suspended for another 48 hours after the signal change from 0 to 1.

The dark test is permanently suppressed if the following condition is met:

- A signal change from 1 to 0 takes place before the 48 hours have expired.

WARNING

If an error caused by short-circuits (cross-circuits) is detected when you request the safety function (shutdown of the output), not only is this output passivated but all outputs are shut down and the module is passivated. This is necessary because a complete bit pattern test is not performed within 48 hours, which means an undetected error burst may not be ruled out.

Consult the respective requirements of your product standards regarding error detection time.

4.2.2.5 Max. readback time switch on test

Function

The switch on test is part of the bit pattern test.

During the switch on test, the P-switch and M-switch of the output channel are alternately closed and read back when the output channel is inactive (output signal "0"). Contrary to the light test, no power flows through the connected load during the switch on test.

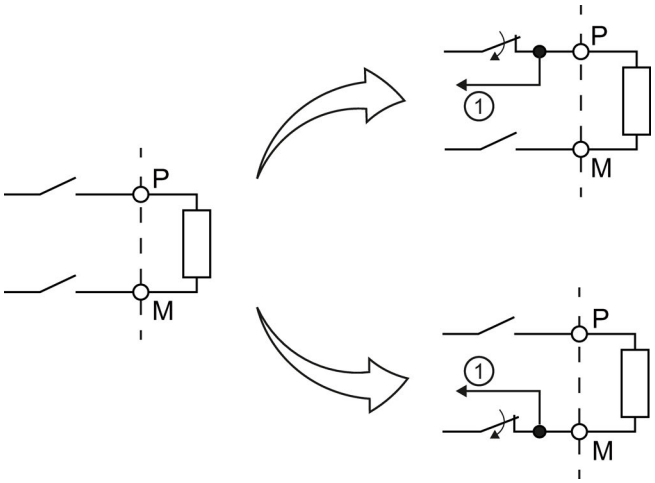

① Readback

Figure 4-3 Functional principle of the switch on test (PM switching)

This parameter allows you to set the time for the readback. If the signal was not read back correctly once the time has expired, the output channel is passivated.

The switch on test detects the following faults:

- Short circuit to L+ with output signal "0"
- Short circuit to ground with output signal "0"

⚠ WARNING

Through the configured readback time, short circuits (cross-circuits) to an interfering signal with a frequency > 1 / (2 x configured readback time) Hz can be suppressed (50:50 sampling ratio).

Short circuits (cross-circuits) to an output of the same module are recognized.

Setting readback time

Because the fault reaction time is extended by the length of the set readback time, we recommend that you set the readback time by trial and error as low as possible but high enough that the output channel is not passivated.

To determine the readback time required for your actuator, refer to the diagram in the section Switching capacitive loads.

If the capacitance of the actuator is not known, you may have to determine the required value for the readback time switch-on test by trial and error. This may also be necessary due to the part variances in the actuator or external influences.

Proceed as follows:

- Set the readback time switch on test in such a way that the output channel can be read back correctly but your actuator does not respond yet.
- If the output channel is passivated sporadically, set a higher value for the maximum readback time switch on test.
- If the output channel is passivated, the readback time is too small for a connected capacitive load. The charge of the capacitive load cannot take place during the configured readback time. Increase the readback time.

If you have set the readback time to the maximum value of 5 ms and there is still a passivation of the output channel, there is either an external fault or the connected capacity is outside the permitted range.

4.2.2.6 Activated light test

Function

Overload and wire break are detected with a 0 signal at the output.

For a light test, a test signal is switched to the output channel while the output channel is inactive (output signal "0"). The output channel is switched on briefly during the light test (= "light period") and read back. A sufficiently slow actuator does not respond to this and remains switched off.

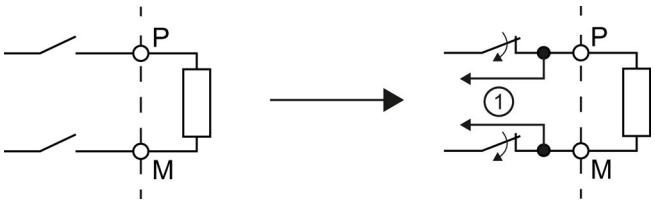

① Readback

Figure 4-4 Functional principle of the light test (PM switching)

In contrast to the switch on test, the P-switch and the M-switch switch at the same time during the light test and power flows through the connected load.

If the readback signals are incorrect, the signal is present for the configured readback time at the output channel before the fault causes passivation of the output channel.

If the signal was not read back correctly once the maximum readback time switch on test has expired, the output channel is passivated.

No new process values are switched to the output channels while a bit pattern is still active (switch test is carried out). This means that a higher maximum readback time switch on test for the light test increases the response time of the F-module.

Test pulses of the light test

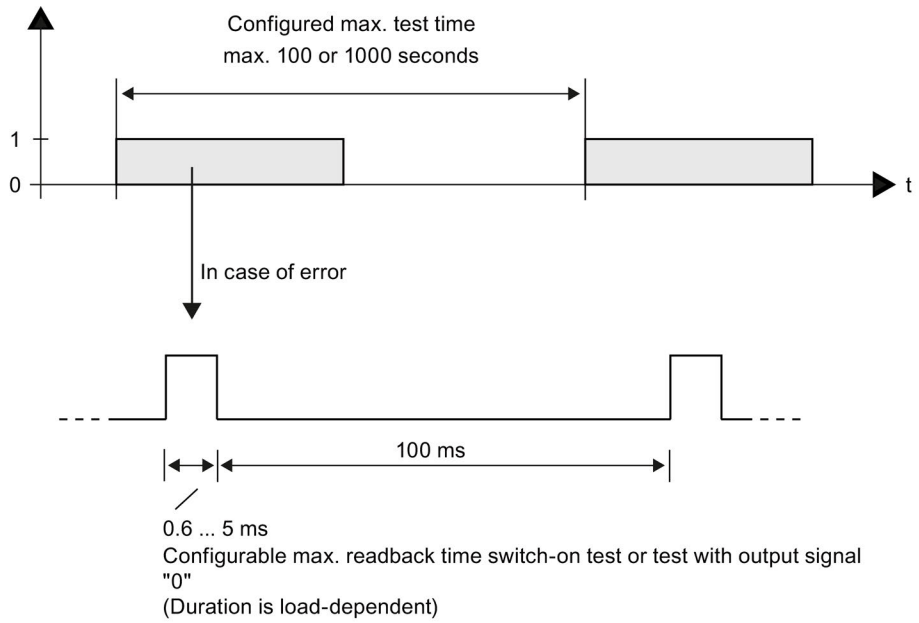

Figure 4-5 Test pulses of the light test

A light pulse with the configured duration takes place within the configured maximum test time per output channel.

If a light pulse returns a fault, the same light pulse (which means the same bit pattern) is repeated once after 100 ms. If the fault is still present, the maximum test time is automatically reduced to 60 seconds and a diagnostic message is generated. If the fault is no longer present, the output channel is reintegrated after the next fault-free test cycle.

4.2.2.7 Diagnosis: Wire break

You can use a wire break test to monitor the connection from the output channel to the actuator.

Selecting this check box enables the wire break monitoring for the relevant channel.

You also have to activate the light test to detect a wire break with an output signal "0".

4.3 Address space

Address assignment of the digital output module F-DQ 4×24VDC/2A PM HF

The digital output module F-DQ 4×24VDC/2A PM HF occupies the following address areas in the F-CPU:

Table 4- 2 Address assignment in the F-CPU

Occupied bytes in the F-CPU:	
In input range	In output range
x + 0 to x + 4	x + 0 to x + 4

x = Module start address

Address assignment of the user data and the value status of digital output module F-DQ 4×24VDC/2A PM HF

The user data occupy the following addresses in the F-CPU out of all the assigned addresses of the digital output module F-DQ 4×24VDC/2A PM HF:

Table 4- 3 Address assignment of user data **in the input range**

Byte in the F-CPU	Assigned bits in F-CPU per F-module:							
	7	6	5	4	3	2	1	0
x + 0	—	—	—	—	Value status DQ_3	Value status DQ_2	Value status DQ_1	Value status DQ_0

x = Module start address

Table 4- 4 Address assignment of user data **in the output range**

Byte in the F-CPU	Assigned bits in F-CPU per F-module:							
	7	6	5	4	3	2	1	0
x + 0	—	—	—	—	DQ_3	DQ_2	DQ_1	DQ_0

x = Module start address

Note

You may only access the addresses occupied by user data and value status.

The other address areas occupied by the F-modules are assigned for functions including safety-related communication between the F-modules and F-CPU in accordance with PROFIsafe.

Additional information

For detailed information about F-I/O access, refer to the SIMATIC Safety – Configuring and Programming (http://support.automation.siemens.com/WW/view/en/54110126) manual.

See also

Value status (Page 42)

Applications of the F-I/O module

5

5.1 Applications of the F-DQ 4x24VDC/2A PM HF

You achieve SIL3/Cat.4/PLe with the following applications.

The wiring is carried out on the matching BaseUnit (Page 13).

5.2 Application: Wiring a load to each digital output

Each of the four fail-safe digital output consists of a P-switch DQ-P_n and an M-switch DQ-M_n. You connect the load between the P-switch and the M-switch. The two switches are always activated so that voltage is applied to the load. This circuit achieves SIL3/Cat.4/PLe.

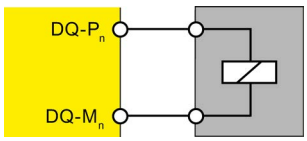

Figure 5-1 Wiring diagram for 1 relay each at 1 F-DQ of the digital output module F-DQ 4×24VDC/2A PM HF

WARNING

In order to achieve SIL3/Cat.4/PLe with this wiring, you must install a qualified actuator, for example, in accordance with IEC 60947.

5.3 Application: Connection of loads to L+ and M at each digital output

You can connect two relays using one fail-safe digital output. The following conditions should be kept in mind:

- Same reference potential
- The normally open contacts of the two relays must be connected in series.

This configuration achieves SIL3/Cat.4/PLe (process status readback required).

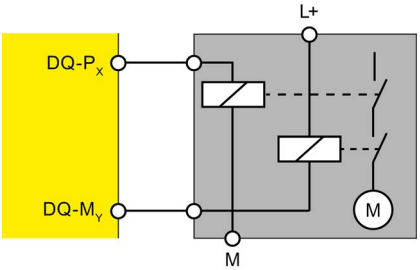

Figure 5-2 Wiring diagram for connecting 2 relays each to 1 F-DQ of the digital output module F-DQ 4×24VDC/2A PM HF

WARNING

When two relays are connected to one digital output, as shown in the figure above, the "wire break" and "overload" faults are detected only at the P-switch of the output (not at the M-switch).

WARNING

With a cross circuit between P-switch and M-switch of the output, the module detects the fault and switches off the output. But the actuator is still supplied with power due to the external fault.

To avoid cross circuits between the P-switch and M-switch of a fail-safe digital output, you should always install the cables for the connection of the relays to the P-switch and M-switch separately to prevent any cross circuits (for example, as separately sheathed cables or in separate cable ducts).

Note

The digital output module F-DQ 4×24VDC/2A PM HF performs a bit pattern test depending on the parameter assignment. For this, the module outputs up to 5 ms pulses depending on the parameter assignment. This test (switch-on test) is run with a time offset between the P-switch and M-switch to prevent the actuator from being activated. This pulse may cause the corresponding relay to operated, which may reduce its service life.

We therefore recommend adhering to the wiring scheme described below.

5.4 Application: Wiring two loads in parallel to each digital output

To protect against cross-circuits between P-switch and M-switch in fail-safe digital outputs, we recommend the following wiring scheme. This circuit achieves SIL3/Cat.4/PLe.

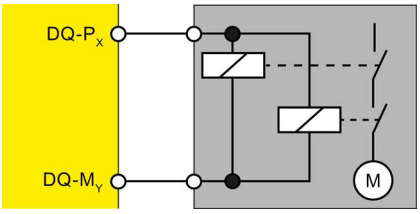

Figure 5-3 Wiring diagram for 2 relays each parallel at 1 F-DQ of the digital output module F-DQ 4×24VDC/2A PM HF

Note

With a parallel connection of two relays on one digital output (as shown above) the "wire break" fault is only detected if the wire break disconnects both relays from P or M. This diagnostics is not safety-related.

Interrupts/diagnostic messages 6

6.1 Status and error display

LED display

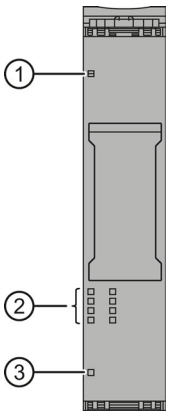

① DIAG (green/red)
② Channel status (green), channel fault (red)
③ PWR (green)

Figure 6-1 LED display

Meaning of the LED displays

The following tables explain the meaning of the status and error displays. Remedies for diagnostic messages can be found in section Diagnostic messages (Page 38).

WARNING
The DIAG LED and the channel status and channel fault LEDs of the outputs are not designed as safety-related LEDs and therefore may not be evaluated for safety-related activities.

PWR LED

Table 6- 1 Meaning of the PWR LED

PWR	Meaning
□ Off	Supply voltage L+ missing
■ On	Supply voltage L+ available

DIAG LED

Table 6- 2 Meaning of the DIAG LED

DIAG	Meaning
□ Off	Backplane bus supply of the ET 200SP not okay
☼ Flashing	Module parameters not configured
■ On	Module parameters configured and no module diagnostics
☼ Flashing	Module parameters configured and module diagnostics

Channel status/channel fault LED

Table 6- 3 Meaning of the channel status/channel fault LED

Channel status	Channel fault	Meaning
□ Off	□ Off	Process signal = 0 and no channel diagnostics
■ On	□ Off	Process signal = 1 and no channel diagnostics
□ Off	■ On	Process signal = 0 and channel diagnostics
☼/☼ Alternately flashing		Channel waiting for user acknowledgment

Channel status/DIAG/channel fault LED

Table 6- 4 Meaning of the channel status/DIAG/channel fault LED

Channel status	DIAG	Channel fault	Meaning
Off	Flashing	All On	The PROFIsafe address does not match the configured PROFIsafe address
Flashing	Flashing	Off	Identification of the F-module when assigning the PROFIsafe address

6.2 Interrupts

Introduction

The F-DQ 4x24VDC/2A PM HF fail-safe digital output module supports diagnostic interrupts.

Diagnostic interrupt

The F-module generates a diagnostic interrupt for each diagnostic message described in section Diagnostic messages (Page 38).

The table below provides an overview of the diagnostic interrupts of the F-module . The diagnostic interrupts are assigned either to one channel or the entire F-module.

WARNING

Before acknowledging the short circuit diagnostic message, remedy the respective fault and validate your safety function. Follow the fault remedying procedure described in section Diagnostic messages (Page 38).

Table 6- 5 Diagnostic interrupts of the F-DQ 4x24VDC/2A PM HF

Diagnostic interrupt	Fault code	Scope of diagnostic interrupt	Configurable
Overtemperature	5_D	F-module	No
Parameter assignment error	16_D		
Load voltage missing	17_D		
Access to retentive storage of F-address not possible	30_D		
Different destination address (F_Dest_Add)	64_D		
Invalid destination address (F_Dest_Add)	65_D		
Invalid source address (F_Source_Add)	66_D		
Watchdog time is 0 ms (F_WD_Time or F_WD_Time2)	67_D		
"F_SIL" parameter exceeds the application-specific SIL	68_D		
"F_CRC_Length" parameter does not match the generated CRC	69_D		
Incorrect F-parameter version or F_Block_ID	70_D		
CRC1 error	71_D		
Inconsistent iParameters (iParCRC error)	75_D		
F_Block_ID not supported	76_D		

Diagnostic interrupt	Fault code	Scope of diagnostic interrupt	Configurable
Internal error	256_D		
Time monitoring activated	259_D		
Internal supply voltage of the module failed	260_D		
Output short-circuited to L+	261_D	Channel	Yes
Output short-circuited to ground	262_D		
Wire break	265_D		
Incorrect/inconsistent firmware present. Firmware update required	283_D	F-module	No
Switching frequency too high	785_D	Channel	
Undertemperature	786_D	F-module	
PROFIsafe communication error (timeout)	792_D	F-module	
PROFIsafe communication error (CRC)	793_D	F-module	
PROFIsafe address assignment error	794_D	F-module	
		Channel	No
Output defective	797_D		
Readback error	798_D	Channel	
Overload	800_D	Channel	
Supply voltage too high	802_D	F-module	
Supply voltage too low	803_D	F-module	

6.3 Diagnostic messages

Diagnostic messages

Module faults are indicated as diagnostics (module status).

Note

You can connect two actuators per output.

The diagnostics of the two actuators influenced each other in the case of duplicate wiring.

This means:

- a wire break is only signaled if both actuators are affected
- a single short circuit affects both actuators.

Once the fault is eliminated, the F-module must be reintegrated in the safety program. For additional information on passivation and reintegration of F-I/O, refer to the SIMATIC Safety – Configuring and Programming (http://support.automation.siemens.com/WW/view/en/54110126) manual.

Table 6- 6 Diagnostic messages of the F-DQ 4×24VDC/2A PM HF

Diagnostic message	Fault code	Meaning	Remedy
Overtemperature	5_D	An excessively high temperature was measured in the F-module.	Operate the F-module within the specified temperature range. (see Technical specifications (Page 43)) Once the fault has been eliminated, the F-module must be removed and inserted or the power switched OFF and ON
Wire break	6_D	Possible causes: • There is an interrupted cable between the module and actuator. • The channel is not connected (open). • There is a short circuit between channels with different signals.	• Establish a cable connection. • Disable the wire break detection for the channel in the parameter assignment. • Eliminate the short circuit.
Parameter assignment error	16_D	Parameter assignment errors include: • The F-module cannot use the parameters (unknown, invalid combination, etc.). • The F-module parameters have not been configured.	Correct the parameter assignment.
Load voltage missing	17_D	Missing or insufficient supply voltage L+	• Check supply voltage L+ at BaseUnit • Check BaseUnit type

Diagnostic message	Fault code	Meaning	Remedy
Access to retentive storage of F-address not possible	30_D	The F-destination address stored in the coding element cannot be accessed.	Verify that the coding element is present or replace the coding element.
Different destination address (F_Dest_Add)	64_D	The PROFIsafe driver has detected a different F-destination address.	Check the parameter assignment of the PROFIsafe driver and the address setting of the F-module.
Invalid destination address (F_Dest_Add)	65_D	The PROFIsafe driver has detected an invalid F-destination address.	Check the parameter assignment of the PROFIsafe driver.
Invalid source address (F_Source_Add)	66_D	The PROFIsafe driver has detected an invalid F-source address.	
Watchdog time is 0 ms (F_WD_Time or F_WD_Time2)	67_D	The PROFIsafe driver has detected an invalid watchdog time.	
"F_SIL" parameter exceeds the application-specific SIL	68_D	The PROFIsafe driver has detected a discrepancy between the SIL setting of the communication and the application.	
"F_CRC_Length" parameter does not match the generated CRC	69_D	The PROFIsafe driver has detected a discrepancy in the CRC length.	
Incorrect F-parameter version or F_Block_ID	70_D	The PROFIsafe driver has detected an incorrect version of the F-parameters or an invalid F_Block_ID.	
CRC1 error	71_D	The PROFIsafe driver has detected inconsistent F-parameters.	
Inconsistent iParameters (iParCRC error)	75_D	The PROFIsafe driver has detected inconsistent iParameters.	Check the parameter assignment.
F_Block_ID not supported	76_D	The PROFIsafe driver has detected an incorrect Block ID.	Check the parameter assignment of the PROFIsafe driver.
Internal error	256_D	Possible causes: • Impermissibly high electromagnetic interference is present. • The F-module is defective.	• Eliminate the interference. The module must then be pulled and plugged, or the power switched OFF and ON • Replace the F-module.
Internal supply voltage of the module failed	260_D	Possible causes: • Impermissibly high electromagnetic interference is present. • The F-module is defective.	• Eliminate the electromagnetic interference. The module must then be pulled and plugged, or the power switched OFF and ON • Replace the F-module.
Output short-circuited to L+	261_D	Short circuit to L+ can mean: • The output cable is short-circuited to L+. • The capacitive load is too high.	• Correct the process wiring. • Increase the test times (dark, light, switch-on tests).

Diagnostic message	Fault code	Meaning	Remedy
Output short-circuited to ground	262_D	Short circuit to ground can mean: • The output cable is short-circuited to ground. • The output signal is short-circuited to ground. • There is a short circuit between two output channels. • The capacitive load is too high.	• Correct the process wiring. • Increase the test times (dark, light, switch-on tests).
Incorrect/inconsistent firmware present. Firmware update required	283_D	The firmware is incomplete and/or firmware added to the F-module is incompatible. This leads to errors or functional limitations when operating the F-module.	• Perform a firmware update for all parts of the F-module and note any error messages. • Use only firmware versions released for this F-module.
Switching frequency too high	785_D	The maximum switching frequency of the F-module has been exceeded.	Reduce the switching frequency. (see Technical specifications (Page 43))
Undertemperature	786_D	The minimum permissible temperature limit has been violated.	Operate the F-module within the specified temperature range. (see Technical specifications (Page 43))
PROFIsafe communication error (timeout)	792_D	The PROFIsafe driver has detected a timeout. Possible causes: • The F-monitoring time is set incorrectly. • Bus faults are present.	• Check the parameter assignment. • Ensure that communication is functioning correctly.
PROFIsafe communication error (CRC)	793_D	The PROFIsafe driver has detected a CRC error. Possible causes: • The communication between the F-CPU and F-module is disturbed. • Impermissibly high electromagnetic interference is present. • An error occurred in the sign-of-life monitoring.	• Check the communication connection between the F-module and F-CPU. • Eliminate the electromagnetic interference.
PROFIsafe address assignment error	794_D	An error occurred during the automatic PROFIsafe address assignment.	Check the configuration.
Output defective	797_D	The F-module has detected an internal error. Possible causes: • The capacitive load is too high. • Short circuit to L+ or M • The F-module is defective	• Increase the test times (dark, light, switch-on tests). • Check the wiring. • Replace the F-module.

Diagnostic message	Fault code	Meaning	Remedy
Readback error	798D	The F-module has detected an internal error. Possible causes: • Impermissibly high electromagnetic interference is present. • The capacitive load is too high. • The F-module is defective.	• Increase the test times (dark, light, switch-on tests). • If the error persists, replace the F-module.
Overload	800D	The maximum permissible output current has been exceeded. The output stage has been switched off. Possible causes: • A short circuit exists.	Check the process wiring.
Supply voltage too high	802D	The supply voltage is too high.	Check the supply voltage.
Supply voltage too low	803D	The supply voltage is too low.	Check the supply voltage.

Supply voltage outside the nominal range

If the supply voltage L+ is outside the specified value range, the DIAG LED flashes and the module is passivated.

When the voltage is then recovered (level must remain within the specified value for at least 1 minute (see Technical specifications (Page 43) Voltages, Currents, Potentials)), the DIAG LED stops flashing. The module remains passivated.

Generally applicable information on diagnostics

Information on diagnostics that pertains to all fail-safe modules (for example, readout of diagnostics functions or passivation of channels) is available in the SIMATIC Safety – Configuring and Programming (http://support.automation.siemens.com/WW/view/en/54110126) manual.

6.4 Value status

Properties

In addition to the diagnostic messages and the status and error display, the F-module makes available information about the validity of each input and output signal – the value status. The value status is entered in the process image along with the input signal.

Value status for digital input and output modules

The value status is additional binary information of a digital input or output signal. It is entered in the process image of the inputs (PII) at the same time as the process signal. It provides information about the validity of the input or output signal.

The value status is influenced by the wire break check, short-circuit, chatter monitoring, pulse extension, and plausibility check.

- 1_B: A valid process value is output for the channel.
- 0_B: A fail-safe value is output for the channel, or the channel is deactivated.

Assignment of the inputs and value status in the PII

Each channel of the F-module is assigned a value status in the process image of the inputs. You can find the assignment in section Address space (Page 27).

Reference

A detailed description of the evaluation and processing of the respective input signals can be found in the SIMATIC Safety – Configuring and Programming (http://support.automation.siemens.com/WW/view/en/54110126) manual.

Technical specifications 7

Technical specifications of F-DQ 4×24VDC/2A PM HF

	6ES7136-6DB00-0CA0
Product type designation	F-DQ 4x24VDC HF
General information	
Hardware product version	01
Firmware version	V1.0.0
Product function	
I&M data	Yes; IM0 to IM3
Engineering with	
STEP 7 TIA Portal configurable/integrated as of version	V12.0
STEP 7 configurable/integrated as of version	as of V5.5 SP3 / -
PROFINET as of GSD version/GSD revision	V2.31
Supply voltage	
Type of supply voltage	24 V DC
Rated value (DC)	24 V
Low limit of permissible range (DC)	20.4 V
High limit of permissible range (DC)	28.8 V
Reverse polarity protection	Yes
Input current	
Current consumption (rated value)	75 mA; without load
Current consumption, max.	21 mA; from backplane bus
Output voltage	
Rated value (DC)	24 V
Power	
Power consumption from the backplane bus	70 mW
Power loss	
Power loss, typ.	4 W
Address space	
Address space per module	
Input	5 bytes
Output	5 bytes

	6ES7136-6DB00-0CA0
Digital outputs	
Number of outputs	4
Digital outputs, configurable	Yes
Short circuit protection	Yes
• Response threshold, typ.	> 3.3 A
Wire break detection	Yes
• Response threshold, typ.	8 mA
Overload protection	Yes
• Response threshold, typ.	2.9 A
Voltage induced on current interruption limited to	typ. 2*47V
Switching capacity of outputs	
With resistive load, max.	2 A
With lamp load, max.	10 W
Load resistance range	
Low limit	12 Ω
High limit	2000 Ω
Output voltage	
Type of output voltage	DC
For "1" signal, min.	24 V; L+ (-0.5 V)
Output current	
For "1" signal, rated value	2 A
For "0" signal, residual current, max.	0.5 mA
Switching frequency	
With resistive load, max.	30 Hz; symmetrical
With inductive load, max.	0.1 Hz; acc. to IEC 947-5-1, DC13, symmetrical
With lamp load, max.	10 Hz; symmetrical
Total current of outputs	
Max. current per channel	2 A; (note derating data in the manual)
Max. current per module	6 A; (note derating data in the manual)
Length of cable	
Cable length, shielded, max.	1000 m
Cable length unshielded, max.	500 m
Interrupts/diagnostics/status information	
Fail-safe values can be switched to	No
Interrupts	
Diagnostic interrupt	Yes
Diagnostic messages	
Diagnostics	Yes, see section "Interrupts/diagnostic messages" in the manual

	6ES7136-6DB00-0CA0
Diagnostics display LED	
RUN LED	Yes; green LED
ERROR LED	Yes; red LED
Monitoring of supply voltage	Yes; green PWR LED
Channel status display	Yes; green LED
For channel diagnostics	Yes; red LED
For module diagnostics	Yes; green/red DIAG LED
Electrical isolation	
Electrical isolation channels	
Between channels	No
Between the channels and the backplane bus	Yes
Between the channels and the supply voltage of the electronics	No
Permitted potential difference	
Between different circuits	75 V DC / 60 V AC
Isolation	
Isolation test voltage	707 V DC (type test)
Standards, approvals, certificates	
SIL acc. to IEC 61508	SIL 3
Suitable for safety functions	Yes
Maximum achievable safety class in safety mode	
Performance level according to EN ISO 13849-1	PLe
Low demand (PFD) acc. to SIL3	< 2.00E-05 1/h
High demand (PFH) acc. to SIL3	< 1.00E-09 1/h
Environmental conditions	
Operating temperature	
Min.	0 °C
Max.	60 °C
Horizontal installation, min.	0 °C
Horizontal installation, max.	60 °C
Vertical installation, min.	0 °C
Vertical installation, max.	50 °C
Storage/transport temperature	
Min.	-40 °C
Max.	70 °C

	6ES7136-6DB00-0CA0
Dimensions	
Width	15 mm
Weights	
Weight, approx.	57 g

Temperature characteristic values

Mounting position	Maximum temperature	Total current across all channels
Horizontal	40 °C	6 A
	50 °C	5 A
	60 °C	4 A
Vertical	50 °C	4 A

Note

Because of the small size of the modules, pay attention to the development of heat between adjacent modules when output modules are exposed to elevated loads. If overtemperature occurs in an output module exposed to an elevated load, shutdown may result and reduce the plant availability. If you fully load an output module, the average total current of the modules directly adjacent to it should not exceed 75% of the values listed in the technical specifications. If you load directly adjacent modules with their maximum total current, reduce the maximum total current of the output module by 1 A (e.g., for horizontal installation up to 60 °C → total current of 3 A across all channels).

Dimension drawing

See ET 200SP BaseUnits (http://support.automation.siemens.com/WW/view/en/58532597/133300) manual

Response times

A

Introduction

The next section shows the response times of the digital output moduleF-DQ 4×24VDC HF. The response times of digital output module F-DQ 4×24VDC HF are included in the calculation of the F-system response time.

Definition of response time for fail-safe digital outputs

The response time represents the interval between an incoming safety message frame from the backplane bus and the signal change at the digital output.

Times required for the calculation

Maximum cycle time: T_{cycle} = 15.5 ms

You assign the dark test time and switch-on time in STEP 7.

Maximum response time in the error-free case

The maximum response time for fail-safe digital outputs in the error-free case is equal to:

Maximum response time = 2 × T_{cycle} + Maximum(dark test time, switch-on time)

Maximum response time with error and change of user data

Maximum response time = 3 × T_{cycle} + Maximum(dark test time, switch-on time)

Maximum response time with detection by bit pattern test

Maximum response time = T_{cycle} + Maximum(dark test time, switch-on time) + configured test time

Switching of loads

B

B.1 Connecting capacitive loads

If an F-DQ 4×24VDC HF digital output module is interconnected with loads that require little current and have capacitance, this can lead to detection of a short circuit or overload. Reason: The capacitance cannot be sufficiently discharged or charged during the configured readback time of the bit pattern test.

The typical trend shown in the diagram below represents the correlation between load impedance and maximum switched load capacitance at a supply voltage of 24 V DC.

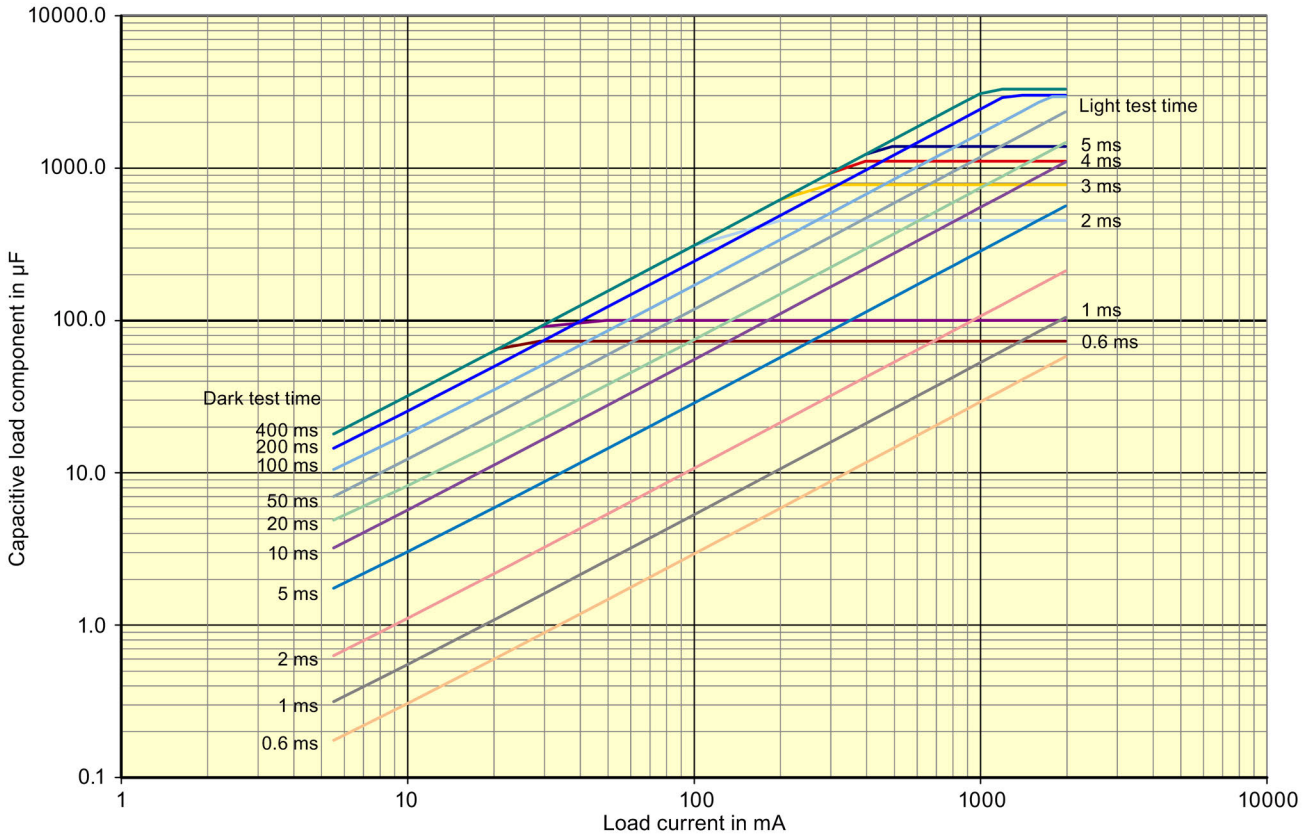

Figure B-1 Switching of capacitive loads for the F-DQ 4×24VDC HF digital output module depending on the configured dark and light test times

Remedy for detecting a short circuit

1. Determine the load current and capacitance of the load.
2. Locate the operating point in the diagram above.
3. If the operating point is above the curve, you must increase the load current until the new operating point is below the curve by connecting a resistor in parallel.

B.2 Switching of inductive loads

Switching of inductive loads

The diagram below shows the maximum permitted inductive loads as a function of the load current and switching frequency.

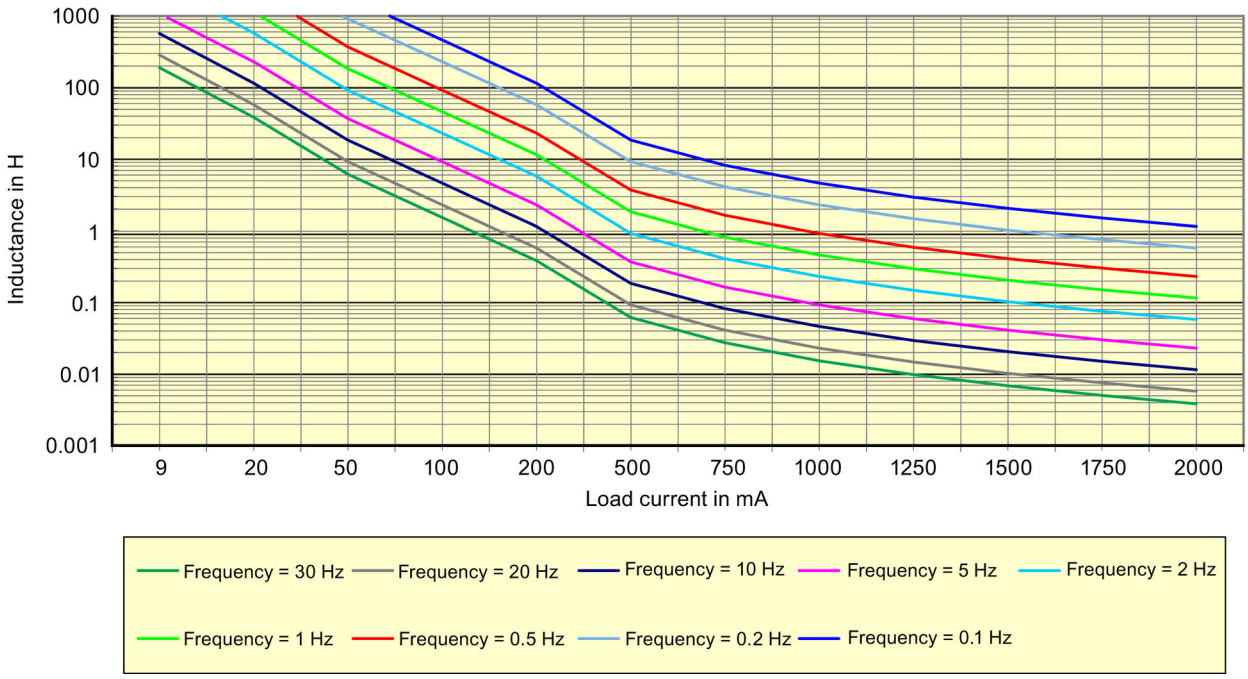

Figure B-2 Switching of inductive loads for the F-DQ 4x24VDC/2A PM HF digital output module depending on the load current and switching frequency

SIEMENS

SIMATIC

ET 200SP
Digital output module
F-DQ 8x24VDC/0.5A PP HF
(6ES7136-6DC00-0CA0)

Manual

Original operating instructions

Preface

Documentation guide 1

Product overview 2

Connecting 3

Parameters/address space 4

Applications of the F-I/O module 5

Interrupts/diagnostic messages 6

Technical specifications 7

Response times A

Switching of loads B

05/2017

A5E38578424-AA

Legal information

Warning notice system

This manual contains notices you have to observe in order to ensure your personal safety, as well as to prevent damage to property. The notices referring to your personal safety are highlighted in the manual by a safety alert symbol, notices referring only to property damage have no safety alert symbol. These notices shown below are graded according to the degree of danger.

⚠ DANGER

indicates that death or severe personal injury **will** result if proper precautions are not taken.

⚠ WARNING

indicates that death or severe personal injury **may** result if proper precautions are not taken.

⚠ CAUTION

indicates that minor personal injury can result if proper precautions are not taken.

NOTICE

indicates that property damage can result if proper precautions are not taken.

If more than one degree of danger is present, the warning notice representing the highest degree of danger will be used. A notice warning of injury to persons with a safety alert symbol may also include a warning relating to property damage.

Qualified Personnel

The product/system described in this documentation may be operated only by **personnel qualified** for the specific task in accordance with the relevant documentation, in particular its warning notices and safety instructions. Qualified personnel are those who, based on their training and experience, are capable of identifying risks and avoiding potential hazards when working with these products/systems.

Proper use of Siemens products

Note the following:

⚠ WARNING

Siemens products may only be used for the applications described in the catalog and in the relevant technical documentation. If products and components from other manufacturers are used, these must be recommended or approved by Siemens. Proper transport, storage, installation, assembly, commissioning, operation and maintenance are required to ensure that the products operate safely and without any problems. The permissible ambient conditions must be complied with. The information in the relevant documentation must be observed.

Trademarks

All names identified by ® are registered trademarks of Siemens AG. The remaining trademarks in this publication may be trademarks whose use by third parties for their own purposes could violate the rights of the owner.

Disclaimer of Liability

We have reviewed the contents of this publication to ensure consistency with the hardware and software described. Since variance cannot be precluded entirely, we cannot guarantee full consistency. However, the information in this publication is reviewed regularly and any necessary corrections are included in subsequent editions.

Siemens AG
Division Digital Factory
Postfach 48 48
90026 NÜRNBERG
GERMANY

A5E38578424-AA
Ⓟ 05/2017 Subject to change

Copyright © Siemens AG 2017.
All rights reserved

Preface

Purpose of the documentation

This manual supplements the system manual Distributed I/O System ET 200SP (http://support.automation.siemens.com/WW/view/en/58649293).

Functions that affect the system in general are described in this system manual.

The information in this manual and the system/function manuals provide support when you commission the system.

A description of the F-system SIMATIC Safety can be found in the programming and operating manual SIMATIC Safety – Configuring and Programming (http://support.automation.siemens.com/WW/view/en/54110126).

Conventions

CPU: When the term "CPU" is used in the following, it refers to both the CPUs of the S7-1500 automation system as well CPUs / interface modules of the ET 200SP distributed I/O system.

STEP 7: In this documentation, "STEP 7" is used as a synonym for all versions of the configuration and programming software " (STEP 7 TIA Portal)".

Note the following identified notes:

Note

A note includes important information on the product described in the documentation, on handling the product or on the part of the documentation to which you ought to pay special attention.

Standards

You can find a dated reference to the respective standards in the certificate (https://support.industry.siemens.com/cs/ww/en/view/57141281) or in the EC Declaration of Conformity (https://support.industry.siemens.com/cs/ww/en/view/71764057) for the F-module.

Important note for maintaining the operational safety of your system

Note

The operators of systems with safety-related characteristics must adhere to specific operational safety requirements. The supplier is also obliged to comply with special product monitoring measures. Siemens informs system operators in the form of personal notifications about product developments and properties which may be or become important issues in terms of operational safety.

You should subscribe to the corresponding notifications in order to obtain the latest information and to allow you to make any necessary modifications to your system.

Log on to Industry Online Support. Follow the links below and click on "Email on update" on the right-hand side in each case:

- SIMATIC S7-300/S7-300F (https://support.industry.siemens.com/cs/products?pnid=13751&lc=en-WW)
- SIMATIC S7-400/S7-400H/S7-400F/FH (https://support.industry.siemens.com/cs/products?pnid=13828&lc=en-WW)
- SIMATIC WinAC RTX (F) (https://support.industry.siemens.com/cs/ww/en/ps/13915)
- SIMATIC S7-1500/SIMATIC S7-1500F (https://support.industry.siemens.com/cs/products?pnid=13716&lc=en-WW)
- SIMATIC S7-1200/SIMATIC S7-1200F (https://support.industry.siemens.com/cs/products?pnid=13683&lc=en-WW)
- Distributed I/O (https://support.industry.siemens.com/cs/products?pnid=14029&lc=en-WW)
- STEP 7 (TIA Portal) (https://support.industry.siemens.com/cs/products?pnid=14340&lc=en-WW)

Security information

Siemens provides products and solutions with industrial security functions that support the secure operation of plants, systems, machines and networks.

In order to protect plants, systems, machines and networks against cyber threats, it is necessary to implement – and continuously maintain – a holistic, state-of-the-art industrial security concept. Siemens' products and solutions only form one element of such a concept.

Customer is responsible to prevent unauthorized access to its plants, systems, machines and networks. Systems, machines and components should only be connected to the enterprise network or the internet if and to the extent necessary and with appropriate security measures (e.g. use of firewalls and network segmentation) in place.

Additionally, Siemens' guidance on appropriate security measures should be taken into account. For more information about industrial security, please visit (http://www.siemens.com/industrialsecurity).

Siemens' products and solutions undergo continuous development to make them more secure. Siemens strongly recommends to apply product updates as soon as available and to always use the latest product versions. Use of product versions that are no longer supported, and failure to apply latest updates may increase customer's exposure to cyber threats.

To stay informed about product updates, subscribe to the Siemens Industrial Security RSS Feed under (http://www.siemens.com/industrialsecurity).

Table of contents

Preface 3

1 Documentation guide 7

2 Product overview 11

2.1 Properties 11

3 Connecting 14

3.1 Wiring and block diagram 14

4 Parameters/address space 16

4.1 Parameters 16

4.2 Explanation of parameters 18
4.2.1 F-parameters 18
4.2.1.1 F-parameters 18
4.2.1.2 Behavior after channel fault 18
4.2.1.3 Reintegration after channel fault 18
4.2.2 Parameters of the channels 19
4.2.2.1 Maximum test period 19
4.2.2.2 Disable dark test for 48 hours 19
4.2.2.3 Activated 20
4.2.2.4 Max. readback time dark test 20
4.2.2.5 Max. readback time light test 22
4.2.2.6 Activated light test 23
4.2.2.7 Channel failure acknowledge 24

4.3 Address space 24

5 Applications of the F-I/O module 26

5.1 Installation of the ground line between the power supply and the BaseUnit 26

5.2 Application: Wiring a load to each digital output 27

5.3 Application: Wiring two loads in parallel to each digital output 29

5.4 Application: Connection of a fail-safe digital input to each digital output 31

5.5 Application: Connection of the ET 200SP digital output module F-RQ 1x24VDC/24..230VAC/5A (6ES7136-6RA00-0BF0) 35

6 Interrupts/diagnostic messages 37

6.1 Status and error display 37

6.2 Interrupts 40

6.3 Diagnostics alarms 42

6.4 Value status 46

7 Technical specifications 47

A Response times 50
B Switching of loads 51
B.1 Connecting capacitive loads 51
B.2 Switching of inductive loads 53

Documentation guide

1

The documentation for the SIMATIC ET 200SP distributed I/O system is arranged into three areas.
This arrangement enables you to access the specific content you require.

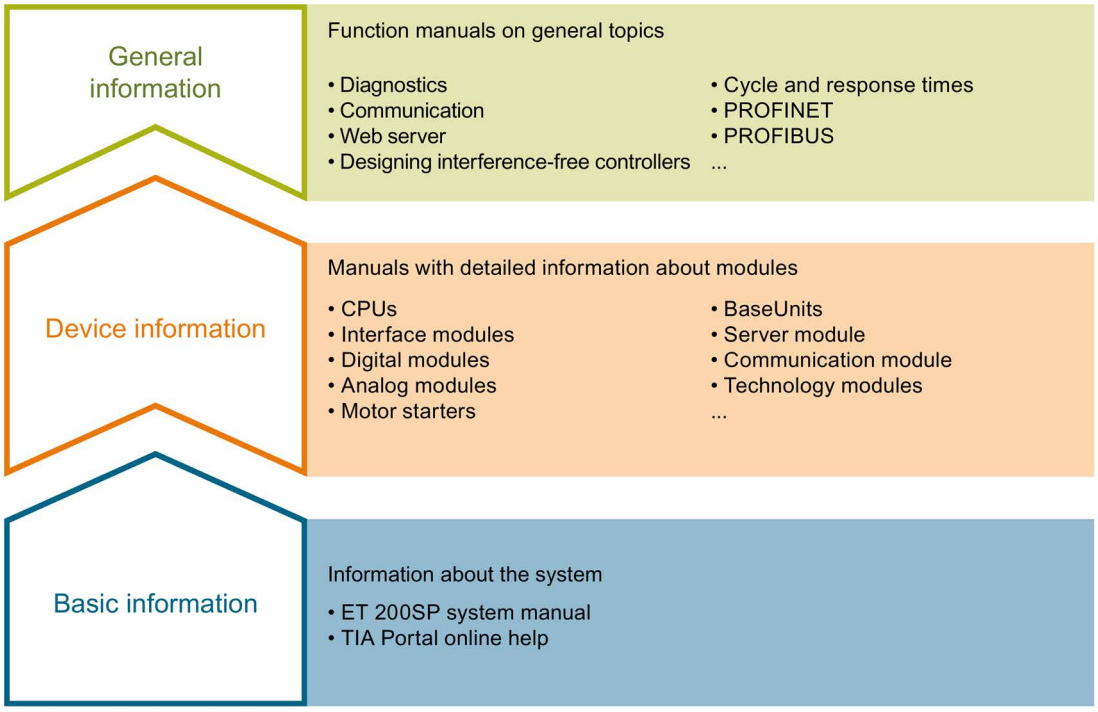

Basic information

The system manual describes in detail the configuration, installation, wiring and commissioning of the SIMATIC ET 200SP. distributed I/O system. The STEP 7 online help supports you in the configuration and programming.

Device information

Product manuals contain a compact description of the module-specific information, such as properties, wiring diagrams, characteristics and technical specifications.

General information

The function manuals contain detailed descriptions on general topics regarding the SIMATIC ET 200SP distributed I/O system, e.g. diagnostics, communication, Web server, motion control and OPC UA.

You can download the documentation free of charge from the Internet (http://w3.siemens.com/mcms/industrial-automation-systems-simatic/en/manual-overview/tech-doc-et200/Pages/Default.aspx).

Changes and supplements to the manuals are documented in a Product Information.

You can download the product information free of charge from the Internet (https://support.industry.siemens.com/cs/us/en/view/73021864).

Manual Collection ET 200SP

The Manual Collection contains the complete documentation on the SIMATIC ET 200SP distributed I/O system gathered together in one file.

You can find the Manual Collection on the Internet (http://support.automation.siemens.com/WW/view/en/84133942).

"mySupport"

With "mySupport", your personal workspace, you make the most of your Industry Online Support.

In "mySupport" you can store filters, favorites and tags, request CAx data and put together your personal library in the Documentation area. Furthermore, your data is automatically filled into support requests and you always have an overview of your current requests.

You need to register once to use the full functionality of "mySupport".

You can find "mySupport" in the Internet (https://support.industry.siemens.com/My/ww/en).

"mySupport" - Documentation

In the Documentation area of "mySupport", you have the possibility to combine complete manuals or parts of them to make your own manual.
You can export the manual in PDF format or in an editable format.

You can find "mySupport" - Documentation in the Internet (http://support.industry.siemens.com/My/ww/en/documentation).

"mySupport" - CAx Data

In the CAx Data area of "mySupport", you can have access the latest product data for your CAx or CAe system.

You configure your own download package with a few clicks.

In doing so you can select:

- Product images, 2D dimension drawings, 3D models, internal circuit diagrams, EPLAN macro files
- Manuals, characteristics, operating manuals, certificates
- Product master data

You can find "mySupport" - CAx Data in the Internet (http://support.industry.siemens.com/my/ww/en/CAxOnline).

Application examples

The application examples support you with various tools and examples for solving your automation tasks. Solutions are shown in interplay with multiple components in the system - separated from the focus in individual products.

You can find the application examples on the Internet (https://support.industry.siemens.com/sc/ww/en/sc/2054).

TIA Selection Tool

With the TIA Selection Tool, you can select, configure and order devices for Totally Integrated Automation (TIA).
This tool is the successor of the SIMATIC Selection Tool and combines the known configurators for automation technology into one tool.
With the TIA Selection Tool, you can generate a complete order list from your product selection or product configuration.

You can find the TIA Selection Tool on the Internet (http://w3.siemens.com/mcms/topics/en/simatic/tia-selection-tool).

SIMATIC Automation Tool

You can use the SIMATIC Automation Tool to run commissioning and maintenance activities simultaneously on various SIMATIC S7 stations as a bulk operation independently of the TIA Portal.

The SIMATIC Automation Tool provides a multitude of functions:

- Scanning of a PROFINET/Ethernet network and identification of all connected CPUs
- Address assignment (IP, subnet, gateway) and station name (PROFINET device) to a CPU
- Transfer of the data and the programming device/PC time converted to UTC time to the module
- Program download to CPU
- Operating mode switchover RUN/STOP
- Localization of the CPU by means of LED flashing
- Reading out CPU error information
- Reading the CPU diagnostic buffer
- Reset to factory settings
- Updating the firmware of the CPU and connected modules

You can find the SIMATIC Automation Tool on the Internet (https://support.industry.siemens.com/cs/ww/en/view/98161300).

PRONETA

With SIEMENS PRONETA (PROFINET network analysis), you analyze the plant network during commissioning. PRONETA features two core functions:

- The topology overview independently scans PROFINET and all connected components.
- The IO check is a fast test of the wiring and the module configuration of a system.

You can find SIEMENS PRONETA on the Internet (https://support.industry.siemens.com/cs/ww/en/view/67460624).

Product overview

2

2.1 Properties

Article number

6ES7136-6DC00-0CA0

View of the module

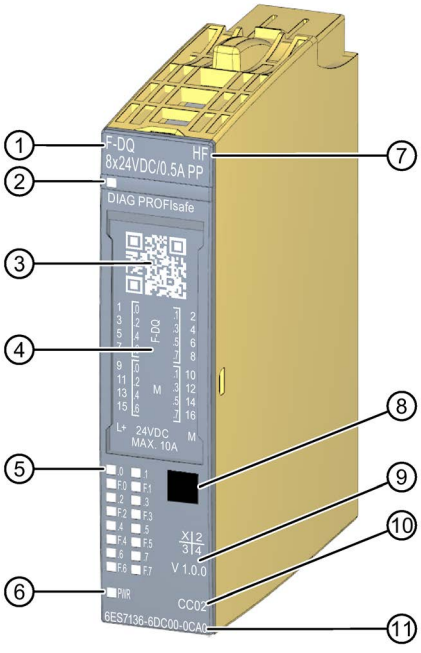

① Module type and name
② LED for diagnostics
③ 2D matrix code
④ Connection diagram
⑤ LEDs for channel status
⑥ LED for supply voltage
⑦ Function class
⑧ Color identification module type
⑨ Function and firmware version
⑩ Color code to select the color identification labels
⑪ Article number

Figure 2-1 View of the module F-DQ 8x24VDC/0.5A PP HF

Properties

The module has the following technical characteristics:

- Fail-safe digital module
- PROFIsafe
- Supports the "RIOforFA-Safety“ profile on F-CPUs S7-1200/1500.
- PROFIsafe address type 2
- 8 outputs, PP-switching (SIL3/Cat.4/PLe)
- Supply voltage L+
- Output current 0.5 A per output
- Sourcing output (PP-switching)
- Suitable for solenoid valves, DC contactors and signal lamps
- Direct interconnection to inputs of an F-DI possible
- Diagnostics display (DIAG red/green LED)
- Status display for each output (green LED)
- Fault display for each output (red LED)
- Diagnostics
  - e.g., short-circuit, channel-specific
  - e.g. supply voltage missing, module-specific
- module-wide passivation

The module supports the following functions:

- Firmware update
- I&M identification data

WARNING

The fail-safe performance characteristics in the technical specifications apply for a mission time of 20 years and a repair time of 100 hours. If a repair within 100 hours is not possible, remove the respective module from the BaseUnit or switch off its supply voltage before 100 hours expires. The module switches off independently after the 100 hours have expired.

Follow the repair procedure described in section Diagnostics alarms (Page 42).

Note

Cyclic reading of I&M data

Cyclic reading of I&M data can affect the timing of the F-modules. You should therefore avoid short read cycles of less than 500 ms.

Accessories

The following accessory must be ordered separately:

- Labeling strips
- Color identification labels
- Reference identification labels
- Shield connection
- Electronic coding element as spare part

You can find additional information about accessories in the Distributed I/O System ET 200SP System Manual (http://support.automation.siemens.com/WW/view/en/58649293).

Passivation of fail-safe outputs over a long period of time

WARNING

Unintentional activation of F-I/O with fail-safe outputs

If an F-I/O with fail-safe outputs is passivated for a period longer than that specified in the safety parameters (> 100 hours) and the fault remains uncorrected, you need to exclude the possibility that the F-I/O can be activated unintentionally by a second fault, and thus put the F-system in a dangerous state.

Even though it is highly unlikely that such hardware faults occur, you must prevent the unintentional activation of F-I/O with fail-safe outputs by using circuit measures or organizational measures.

One possibility is the shutdown of the power supply of the passivated F-I/O within a time period of 100 hours, for example.

The required measures are standardized for plants with product standards.

For all other plants, the plant operator must create a concept for the required measures and have it approved by the inspector.

Property of the individual shutdown of F-modules with fail-safe outputs:

A channel-specific shutdown occurs when a fault is detected. It is also possible to react to critical process states staggered over time or to perform safety-related shutdown of individual outputs.

Connecting 3

3.1 Wiring and block diagram

This section provides the block diagram of the F-DQ 8×24VDC/0.5A PP HF F-module with the terminal assignment.

You can find information about the various connection options and their configuration in the section Applications of the F-I/O module (Page 26) or Parameters/address space (Page 16).

You can find additional information about wiring BaseUnits in the Distributed I/O System ET 200SP System Manual (http://support.automation.siemens.com/WW/view/en/58649293).

Note

The load group of the F-module must begin with a light-colored BaseUnit. Keep this in mind as well during configuration.

Note

Make sure that you only use the digital output module with BaseUnit type A0 during commissioning.

Block diagram

The following figure shows the wiring of the F-DQ 8×24VDC/0.5A PP HF digital output module on BaseUnit BU type A0 without AUX terminals.

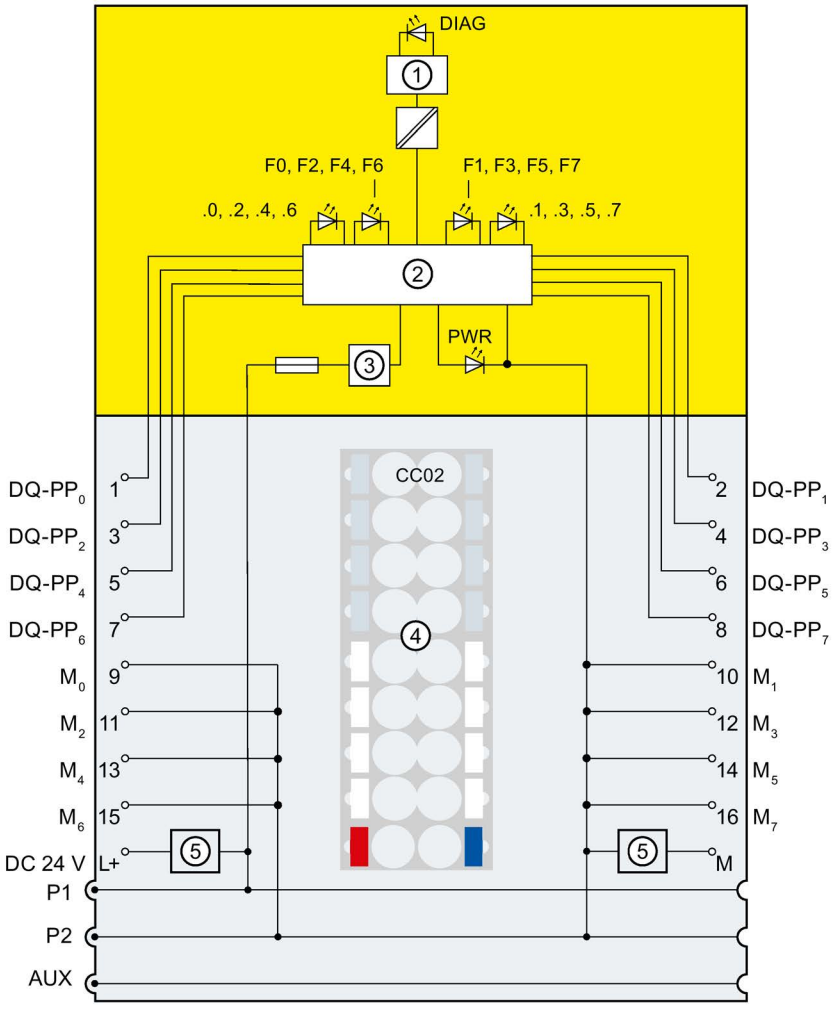

①	Backplane bus interface	M_n	Ground for connection of actuator of channel n.
②	Output electronics	P1, P2, AUX	Internal self-assembling voltage buses Connection to the left (dark-colored BaseUnit) Connection to the left interrupted (light-colored BaseUnit)
③	Reverse polarity protection	$DQ\text{-}PP_n$	Output bit n, channel n, PP-switching (sourcing output)
④	Color-coded label with color code CC02 (optional)	DIAG	LED error of diagnostics (green, red)
⑤	Filter circuit supply voltage (available in light-colored BaseUnit only)	.0 to .7	LED channel status (green)
24 VDC	Supply voltage L+ (feed for light-colored BaseUnit only)	F0 to F7	LED channel error (red)
M	Supply voltage ground	PWR	LED Power (green)

Figure 3-1 Block diagram

Parameters/address space 4

4.1 Parameters

Parameters for F-DQ 8x24VDC/0.5A PP HF

WARNING
Diagnostics functions should be activated or deactivated in accordance with the application, see section Applications of the F-I/O module (Page 26).

The following parameters are possible:

Table 4- 1 Configurable parameters

Parameters	Value range	Default	Parameter reassignment in RUN	Scope
F-parameters:				
Manual assignment of F-monitoring time	• disable • enable	disabled	No	Module
F-monitoring time	1 to 65535 ms	150 ms	No	Module
F-source address	1 to 65534	depends on parameter assignment of F-CPU	No	Module
F-destination address	1 to 65534	suggested by F-system	No	Module
F-parameter signature (without addresses)	0 to 65535	calculated by F-system	No	Module
Behavior after channel faults	• Passivate the entire module • Passivate channel	Passivate channel	No	Module
Reintegration after channel fault	• Adjustable • All channels automatically • All channels manually	(S7-300/400) Adjustable (S7-1200/1500) All channels manually	No	Module
F-I/O DB manual number assignment	• disable • enable	disabled	No	Module
F-I/O DB number	—	suggested by F-system	No	Module
F-I/O DB name	—	suggested by F-system	No	Module

Parameters	Value range	Default	Parameter reassignment in RUN	Scope
DQ parameters:				
Maximum test period	• 100 s • 1000 s	1000 s	No	Module
Disable dark test for 48 hours	• disable • enable	disabled	No	Module
Channel parameters:				
Channel n				
Activated	• enable	enabled	No	Channel
Max. readback time light test / dark test	• 0.8 / 1.0 ms • 3.0 / 5.0 ms	0.8 / 1.0 ms	No	Channel
Activated light test	• enable	enabled	No	Channel
Channel failure acknowledge	• Manual • Automatic The value range offered depends on the F-CPU in use and on the configuration of the F-parameter "Reintegration after channel fault".	(S7-300/400) Parameter is not supported (S7-1200/1500) Manual	No	Channel

4.2 Explanation of parameters

4.2.1 F-parameters

4.2.1.1 F-parameters

You must assign the PROFIsafe address (F-destination address together with F-source address) to the F-module before you put it into operation.

- You define the F-source address using the "Base for PROFIsafe addresses" parameter in the F-CPU.
- An F-destination address unique throughout the CPU is automatically assigned for each F-module. You can manually change the F-destination addresses assigned in the hardware configuration.

You can find information on F-parameters for the F-monitoring time, the PROFIsafe address assignment (F-source address, F-destination address) and the F I/O DB in the manual SIMATIC Safety - Configuring and Programming (http://support.automation.siemens.com/WW/view/en/54110126).

4.2.1.2 Behavior after channel fault

This parameter is used to specify whether the entire F-module is passivated or just the faulty channel(s) in the event of channel faults:

- "Passivate the entire module"
- "Passivate channel"

4.2.1.3 Reintegration after channel fault

Use this parameter to select how the channels of the fail-safe module are reintegrated after a fault.

Use in S7-300/400 F-CPUs

This parameter is always set to "Adjustable" when you use the fail-safe module in S7-300/400 F-CPUs.

You make the required setting in the F-I/O DB of the fail-safe module.

Use in S7-1500 F-CPUs

When using the fail-safe module in S7-1500 F-CPUs, you set this parameter in the STEP 7 dialog of the fail-safe module:

- "Adjustable"
- "All channels automatically"
- "All channels manually"

If you have set the "Behavior after channel fault" parameter to "Passivate channel", you enable individual setting of the reintegration type per channel with the parameter assignment "Adjustable". The reintegration type of the respective channel is specified with the "Channel failure acknowledge" channel parameter.

If you have set the "Behavior after channel fault" parameter to "Passivate the entire module", you can only select the same reintegration type for all channels.

4.2.2 Parameters of the channels

4.2.2.1 Maximum test period

With this parameter, you specify the time within which the light, dark tests (complete bit pattern test) should be performed throughout the module. When this time expires, the tests are repeated. In case of a fault, the test period is reduced to 60 seconds.

- Use "1000 s", for example, to conserve your actuators.
- Use "100 s" to detect faults more quickly.

4.2.2.2 Disable dark test for 48 hours

This option allows you to suppress the dark test.

To suppress dark test pulses, you must ensure that all channels together carry the 0-signal once within the 48 hours. If this condition is not fulfilled, all dark test pulses will be applied anyway on all channels after expiration of this time.

With 0-signal channels, the test pulses of light test continue to occur.

WARNING

When you use the function "Disable dark test for 48 hours", cross-circuits between channels with 1-signal are not detected.

If an error caused by short-circuits (cross-circuits) is detected when you request the safety function (shutdown of the output), not only is this output passivated, but all outputs are shut down and the F-module is passivated.

Also take into consideration the respective requirements of your product standards regarding error detection time.

When you activate the parameter "Disable dark test for 48 hours", all channels use the values set for channel 0 for the parameter "Max. readback time light test / dark test".

4.2.2.3 Activated

The channel is always activated for this F-module.

4.2.2.4 Max. readback time dark test

Function

Dark tests are shutdown tests with bit pattern test.

For a dark test, a test signal is switched to the output channel while the output channel has the 1-signal. This output channel is then briefly disabled (= "dark period") and read back. A sufficiently slow actuator does not respond to this and remains switched on.

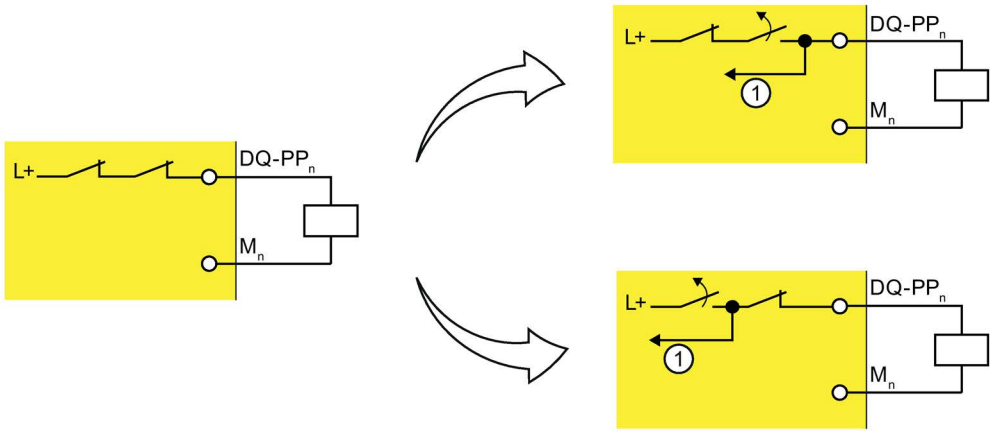

① Readback

Figure 4-1 Functional principle of the dark test (PP switching)

This parameter allows you to set the time for the readback.

If the expected signals could not be read back correctly after expiration of the readback time dark test, the output channel is passivated.

No new process values are switched to the output channels while a bit pattern is still active (switch test is carried out). This means that a higher maximum readback time for the dark test increases the reaction time of the F-module.

WARNING

Through the configured readback time dark test, short circuits (cross-circuits) to a signal with a frequency greater than 1/(2 x configured readback time dark test) Hz cannot be recognized (50:50 sampling ratio).

Short-circuits (cross-circuits) to an output of the same module are recognized.

The parameter also has an effect on the short-circuit detection (cross-circuit) with 1-signal when the output signal is changed from "1" to "0" with the safety program.

Setting readback time dark test

Because the fault reaction time is extended by the length of the readback time dark test, we recommend that you set the readback time dark test as low as possible, but high enough that the output channel is not passivated.

In case of the "Connecting a load per digital output" (Page 27) application, see the warnings and notes in the section describing the application.

To determine the readback time required for your actuator, refer to the diagram in the section Switching capacitive loads (Page 51).

Setting readback time dark test with unknown actuator capacity

If the capacity of the actuator is not known, it may be necessary for you to determine the value for the readback time dark test by trial and error. This may also be necessary due to the part variances in the actuator or external influences.

Proceed as follows:

- Set the readback time dark test so that the output channel can be read back correctly but your actuator does not respond yet.
- For verification use a 1-signal with a minimum duration that corresponds to the "Maximum test period".
- If the output channel is passivated sporadically, set a higher value for the maximum readback time dark test.
- If the output channel is passivated, the readback time dark test is too small for a connected capacitive load. The discharge cannot take place during the configured readback time dark test. Increase the readback time dark test.

If you have set the readback time dark test to the maximum value of 5 ms and there is still a passivation of the output channel, there is either an external fault or the connected capacity is outside the permitted range.

To increase availability, we recommend that you maintain an interval to the determined limit for the times.

Test pulses of the dark test

The interval between two test pulses is 500 ms.

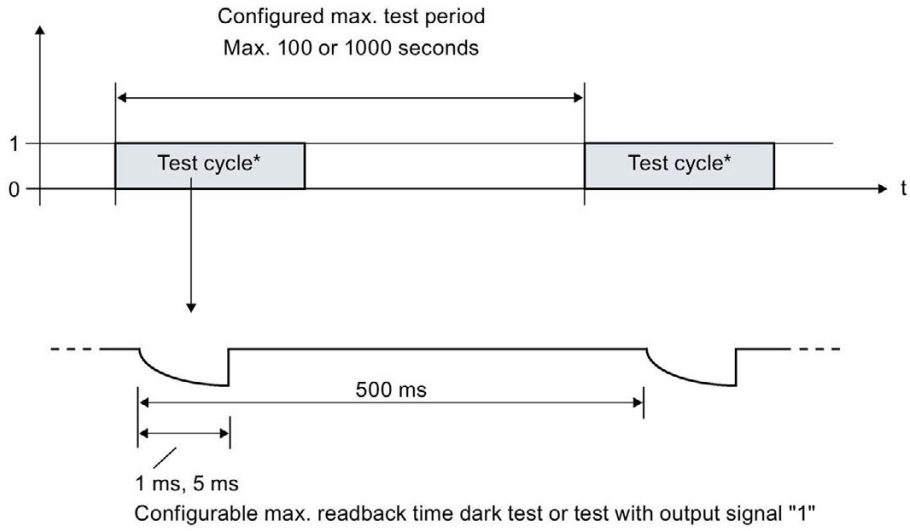

* Output of test pulses only during test cycle.

Figure 4-2 Test pulses of the dark test

Note

If the dark test detects an error, the affected channel is switched off with the error message "Short circuit to L+", all the other channels with the error message "Safety-related shutoff".

4.2.2.5 Max. readback time light test

Function

Short-circuit is detected with a 0-signal at the output.

For a light test, a test signal is switched to the output channel while the output channel has the 0-signal. The output channel is switched on briefly during the light test (= "light period") and read back. A sufficiently slow actuator does not respond to this and remains switched off.

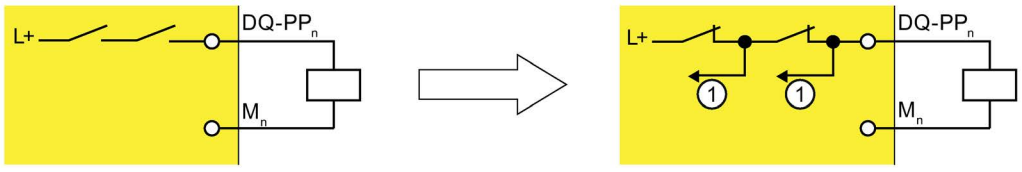

① Readback

Figure 4-3 Functional principle of the light test

If the signal was not read back correctly once the maximum readback time light test has expired, the output channel is passivated.

No new process values are switched to the output channels while a bit pattern is still active (switch test is carried out). This means that a higher maximum readback time light test for the light test increases the reaction time of the F-module.

Test pulses of the light test

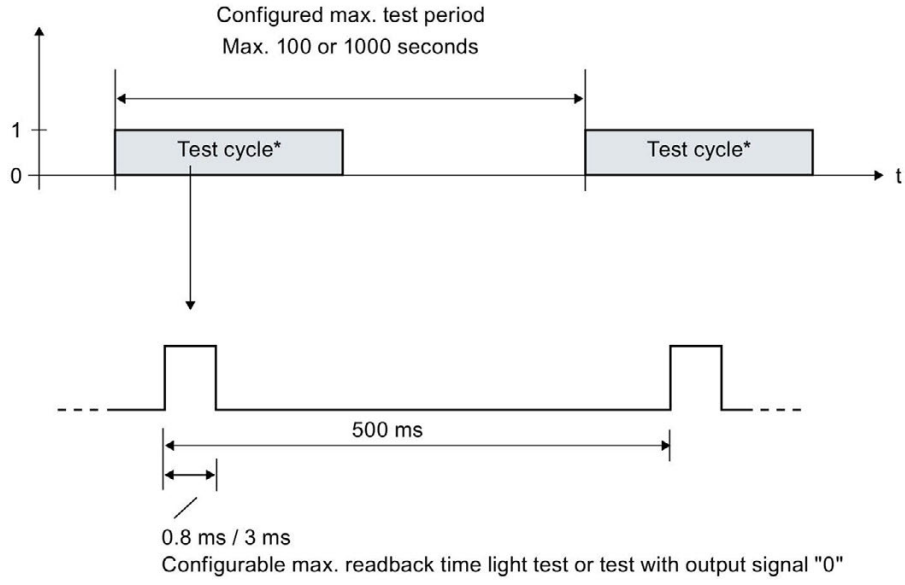

* Output of test pulses only during test cycle.

Figure 4-4 Test pulses of the light test

A light pulse with the configured duration takes place within the configured maximum test period per output channel.

If a light pulse returns a fault, the same light pulse (which means the same bit pattern) is repeated once after 500 ms. If the fault is still present, the maximum test period is automatically reduced to 60 seconds and a diagnostics alarm is generated. If the fault is no longer present, the output channel is reintegrated after the next fault-free test cycle.

4.2.2.6 Activated light test

The light test is always enabled for this F-module.

4.2.2.7 Channel failure acknowledge

Use in S7-1500 F-CPUs

This parameter is only relevant if the fail-safe module is operated on an S7-1500 F-CPU, and can only be set if the F-parameter "Behavior after channel fault" is set to "Passivate channel" and the F-parameter "Reintegration after channel fault" is set to "Adjustable".

The value of this parameter specifies how the channel should react to a channel fault:

- Manual: A channel failure is reintegrated after manual acknowledgment.
- Automatically: The channel is reintegrated automatically after a channel fault. Manual acknowledgment is not necessary.

Use in S7-300/400 F-CPUs

The value of this parameter is not relevant in the case of operation on S7-300/400 F-CPUs. There you set the corresponding property at the F-I/O DB by means of the ACK_NEC tag.

For detailed information about the F-I/O DB, refer to the SIMATIC Safety – Configuring and Programming (http://support.automation.siemens.com/WW/view/en/54110126) manual.

4.3 Address space

Address assignment of the digital output module F-DQ 8x24VDC/0.5A PP HF

The digital output module F-DQ 8x24VDC/0.5A PP HF occupies the following address areas in the F-CPU:

Table 4- 2 Address assignment in the F-CPU

Occupied bytes in the F-CPU:		
F-CPU	In input range	In output range
S7-300/400 F-CPUs	IB x + 0 to x + 4	QB x + 0 to x + 4
S7-1500 F-CPUs	IB x + 0 to x + 5	QB x + 0 to x + 5

x = Module start address

Address assignment of the user data and the value status of digital output module F-DQ 8x24VDC/0.5A PP HF

The user data occupy the following addresses in the F-CPU out of all the assigned addresses of the digital output module F-DQ 8x24VDC/0.5A PP HF:

Table 4- 3 Address assignment of user data **in the input range**

Byte in the F-CPU	Assigned bits in F-CPU per F-module:							
	7	6	5	4	3	2	1	0
IB x + 0	Value status DQ_7	Value status DQ_6	Value status DQ_5	Value status DQ_4	Value status DQ_3	Value status DQ_2	Value status DQ_1	Value status DQ_0

x = Module start address

Table 4- 4 Address assignment of user data **in the output range**

Byte in the F-CPU	Assigned bits in F-CPU per F-module:							
	7	6	5	4	3	2	1	0
QB x + 0	DQ_7	DQ_6	DQ_5	DQ_4	DQ_3	DQ_2	DQ_1	DQ_0

x = Module start address

Note

You may only access the addresses occupied by user data and value status.

The other address areas occupied by the F-modules are assigned for functions including safety-related communication between the F-modules and F-CPU in accordance with PROFIsafe.

Additional information

For detailed information about F-I/O access, refer to the SIMATIC Safety – Configuring and Programming (http://support.automation.siemens.com/WW/view/en/54110126) manual.

See also

Value status (Page 46)

Applications of the F-I/O module 5

You achieve SIL3/Cat.4/PLe with the following applications.

The wiring is performed on the suitable BaseUnit. For more on this, see Connecting section in the system manual Distributed I/O System ET 200SP (http://support.automation.siemens.com/WW/view/en/58649293).

5.1 Installation of the ground line between the power supply and the BaseUnit

Interconnection	Achievable fail-safe performance characteristics	
	Single ground line	Redundant ground line
Connection of the load to the M_n terminal of the BaseUnit	SIL3/Cat.4/PLe	Not required
Connection of the load to the ground of the BaseUnit	SIL3/Cat.3/PLd	SIL3/Cat.4/PLe

In case of redundant installation of the ground line between the power supply and the BaseUnits, the ground connection to the BaseUnits must be installed as follows:

- When the fail-safe digital output module F-DQ 8x24VDC/0.5A PP HF is installed on a dark-colored BaseUnit, terminal M of this dark-colored BaseUnit must be additionally connected to the ground of the power supply.
- When the fail-safe digital output module F-DQ 8x24VDC/0.5A PP HF is installed on a light-colored BaseUnit, terminal M of the dark-colored BaseUnit installed to the right of the light-colored BaseUnit must be additionally connected to the ground of the power supply.

WARNING

When connecting the load to the ground of the power supply, you must run two ground lines between the power supply and the BaseUnits for safety reasons to achieve SIL3/Cat.4/PLe. Otherwise, the maximum residual current at signal "0" (specified in the technical specifications) cannot be maintained if a single ground line is interrupted.

See also

Connecting (Page 14)

5.2 Application: Wiring a load to each digital output

Each of the 8 fail-safe digital outputs consists of two P-switches, which form a PP-switch DQ-PP$_n$. You connect the load between the sourcing output DQ-PP$_n$ and ground. The ground may be the internal ground M$_n$ or an external ground. The two P-switches are always activated so that voltage is applied to the load. This circuit achieves SIL3/Cat.4/PLe.

To achieve SIL3/Cat.4/PLe see section Installation of the ground line between the power supply and the BaseUnit (Page 26).

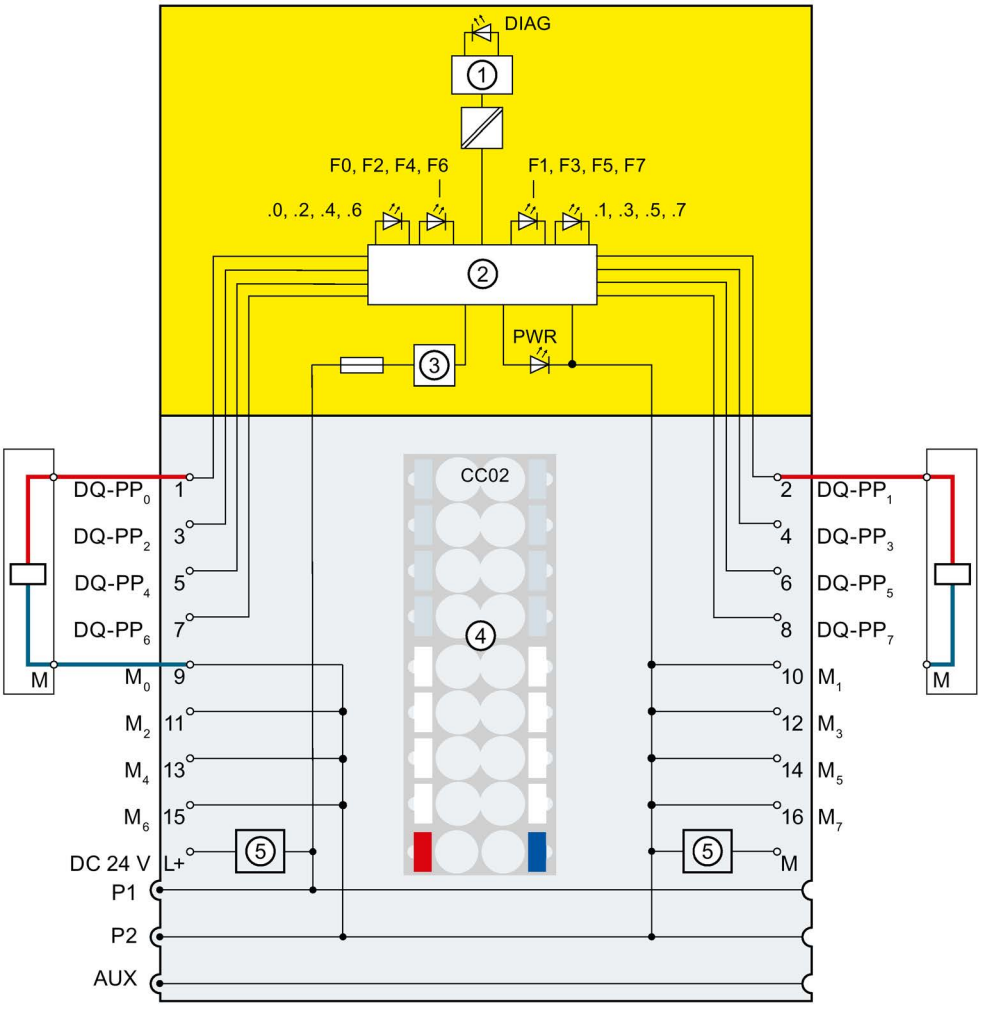

① Backplane bus interface
② Output electronics
③ Reverse polarity protection
④ Color-coded label with color code CC02 (optional)
⑤ Filter circuit supply voltage (available in light-colored BaseUnit only)

Figure 5-1 Wiring diagram for one relay each to a F-DQ of the digital output module F-DQ 8x24VDC/0.5A PP HF

WARNING

In order to achieve SIL3/Cat.4/PLe with this wiring, you must install a suitably-qualified actuator, for example in accordance with IEC 60947.

WARNING

The actuator can no longer be shut down if a cross circuit has developed between positive potential (e.g. L+) and DQ-PP_n. To prevent cross-circuits between positive potential (e.g. L+) and DQ-PP_n, you must route the lines used to connect the actuators in a cross-circuit-proof manner (for example, as separate, sheathed cables or in separate cable ducts).

WARNING

If there is cross-circuit to another output at a non-passivated, switched off output, a brief 1-signal can occur with a duration of 2x max. cycle time (T_{cycle}) + Max. readback time dark test (T_{rb}).

If there is a cross-circuit between two outputs, the test pulses of light tests of the respective other output are also visible. With a different setting of the "Max. readback time light test" parameter, this can cause cyclically occurring 1-signals that last as long as the longest configured "Max. readback time light test".

If the above mentioned 1-signals dangerously affect the plant when a cross-circuit occurs between outputs, you need to guard against the cross-circuits between the outputs with a cross-circuit-proof installation, for example, with separate sheathed cables or separate cable ducts.

5.3 Application: Wiring two loads in parallel to each digital output

The ground may be the internal ground M_n or an external ground. This circuit achieves SIL3/Cat.4/PLe.

To achieve SIL3/Cat.4/PLe see section Installation of the ground line between the power supply and the BaseUnit (Page 26).

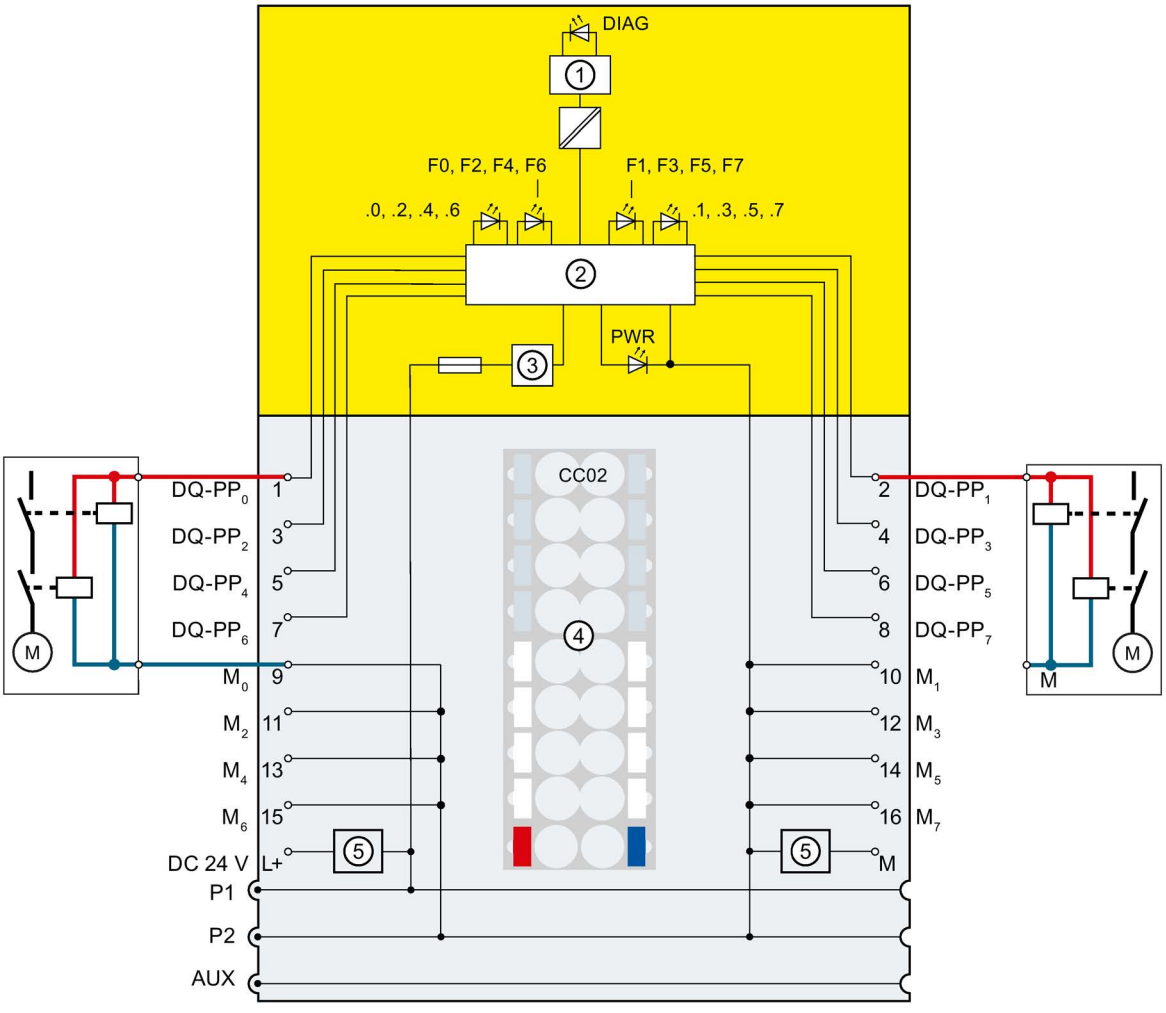

① Backplane bus interface

② Output electronics

③ Reverse polarity protection

④ Color-coded label with color code CC02 (optional)

⑤ Filter circuit supply voltage (available in light-colored BaseUnit only)

Figure 5-2 Wiring diagram for two relays in parallel to a F-DQ of the digital output module F-DQ 8x24VDC/0.5A PP HF

WARNING

The actuator can no longer be shut down if a cross circuit has developed between positive potential (e.g. L+) and DQ-PP_n. To prevent cross-circuits between positive potential (e.g. L+) and DQ-PP_n, you must route the lines used to connect the actuators in a cross-circuit-proof manner (for example, as separate, sheathed cables or in separate cable ducts).

WARNING

If there is cross-circuit to another output at a non-passivated, switched off output, a brief 1-signal can occur with a duration of 2x max. cycle time (T_{cycle}) + Max. readback time dark test (T_{rb}).

If there is a cross-circuit between two outputs, the test pulses of light tests of the respective other output are also visible. With a different setting of the "Max. readback time light test" parameter, this can cause cyclically occurring 1-signals that last as long as the longest configured "Max. readback time light test".

If the above mentioned 1-signals dangerously affect the plant when a cross-circuit occurs between outputs, you need to guard against the cross-circuits between the outputs with a cross-circuit-proof installation, for example, with separate sheathed cables or separate cable ducts.

5.4 Application: Connection of a fail-safe digital input to each digital output

Each of the 8 fail-safe digital outputs can be connected to a fail-safe digital input of the type 1, 2 or 3 in accordance with IEC61131-2.

In this application, the input delay of the fail-safe digital input must be set so that the light test and the dark test of the fail-safe digital output do not impair the fail-safe digital input.

You can achieve SIL3/Cat.4/PLe with this circuit.

⚠ WARNING
To achieve SIL3/Cat.4/PLe using this wiring, you must use a suitably qualified fail-safe digital input, e.g. ET 200SP F-DI 8x24VDC HF.

Input without ground return

To achieve SIL3/Cat.4/PLe see section Installation of the ground line between the power supply and the BaseUnit (Page 26).

If the fail-safe digital output module F-DQ 8x24VDC/0.5A PP HF and the fail-safe digital input module are supplied by different power supply units, the grounds of the two power supply units must be connected to each other.

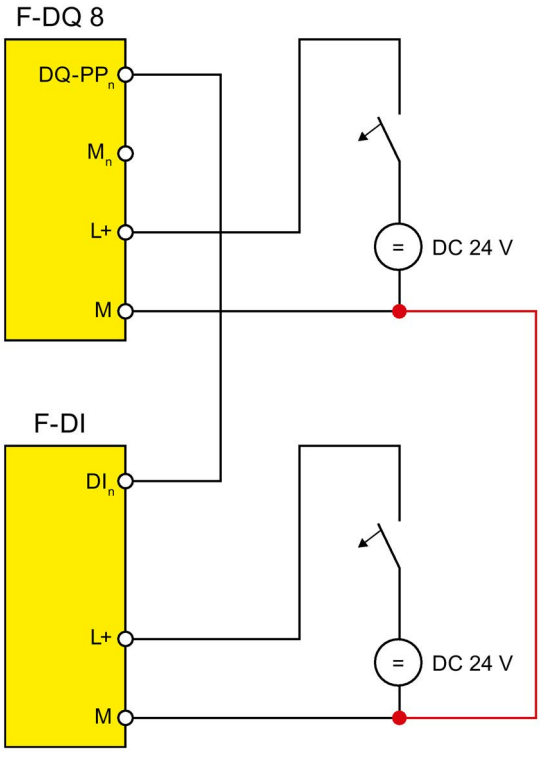

Figure 5-3 Wiring diagram of an output of the digital output module F-DQ 8x24VDC/0.5A PP HF with an input of a fail-safe digital input module (without ground return).

WARNING

To avoid an impermissible process value at the fail-safe digital input, the wiring must be installed so that an interruption of the connection between the ground of the fail-safe digital output module and the ground of the fail-safe digital input module can be excluded (e.g. redundant lines).

WARNING

In case of a cross-circuit between a positive potential (e.g. L+) and DQ-PP_n, a 1-signal is permanently present at the fail-safe digital input. To prevent cross-circuits between positive potential (e.g. L+) and DQ-PP_n, you must route the lines used to connect the fail-safe digital inputs in a cross-circuit-proof manner, for example, as separate, sheathed cables or in separate cable ducts.

WARNING

If there is cross-circuit to another output at a non-passivated, switched off output, a brief 1-signal can occur with a duration of 2x max. cycle time (T_{cycle}) + Max. readback time dark test (T_{rb}).

If there is a cross-circuit between two outputs, the test pulses of light tests of the respective other output are also visible. With a different setting of the "Max. readback time light test" parameter, this can cause cyclically occurring 1-signals that last as long as the longest configured "Max. readback time light test".

If the above mentioned 1-signals dangerously affect the plant when a cross-circuit occurs between outputs, you need to guard against the cross-circuits between the outputs with a cross-circuit-proof installation, for example, with separate sheathed cables or separate cable ducts.

Input with ground return

To achieve SIL3/Cat.4/PLe see section Installation of the ground line between the power supply and the BaseUnit (Page 26).

In this application for potential-free, fail-safe digital inputs, the connection DI_n- of the fail-safe digital input is returned to the internal ground M_n of the fail-safe digital output module.

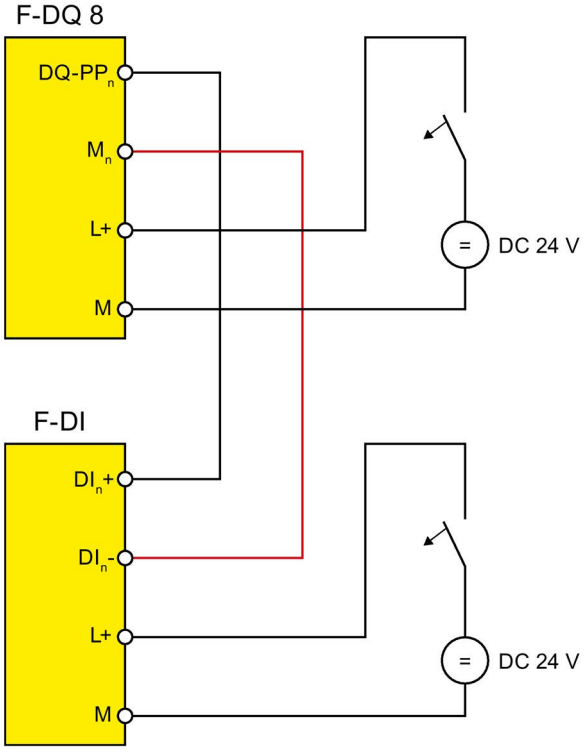

Figure 5-4 Wiring diagram of an output of the digital output module F-DQ 8x24VDC/0.5A PP HF with an input of a fail-safe digital input module (with ground return).

WARNING

In case of a cross-circuit between a positive potential (e.g. L+) and DQ-PP_n, a 1-signal is permanently present at the fail-safe digital input. To prevent cross-circuits between positive potential (e.g. L+) and DQ-PP_n, you must route the lines used to connect the fail-safe digital inputs in a cross-circuit-proof manner, for example, as separate, sheathed cables or in separate cable ducts.

WARNING

If there is cross-circuit to another output at a non-passivated, switched off output, a brief 1-signal can occur with a duration of 2x max. cycle time (T_{cycle}) + Max. readback time dark test (T_{rb}).

If there is a cross-circuit between two outputs, the test pulses of light tests of the respective other output are also visible. With a different setting of the "Max. readback time light test" parameter, this can cause cyclically occurring 1-signals that last as long as the longest configured "Max. readback time light test".

If the above mentioned 1-signals dangerously affect the plant when a cross-circuit occurs between outputs, you need to guard against the cross-circuits between the outputs with a cross-circuit-proof installation, for example, with separate sheathed cables or separate cable ducts.

5.5 Application: Connection of the ET 200SP digital output module F-RQ 1x24VDC/24..230VAC/5A (6ES7136-6RA00-0BF0)

You can use any of the 8 fail-safe digital outputs to actuate one or more digital output modules F-RQ 1x24VDC/24..230VAC/5A.

Pay attention to the permitted current for the corresponding output channel and the total current over all outputs at the corresponding ambient temperature.

To achieve SIL3/Cat.4/PLe see section Installation of the ground line between the power supply and the BaseUnit (Page 26).

For the operation of the digital output module F-RQ 1x24VDC/24..230VAC/5A, the use of extended readback times is required (channel parameter Max. readback time light test / dark test with “3.0 / 5.0 ms").

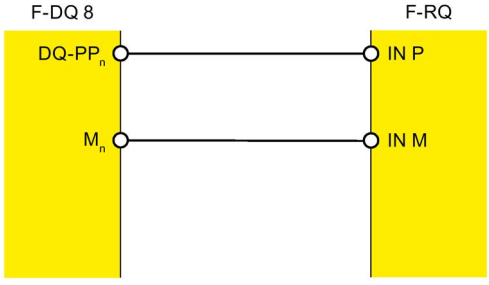

Figure 5-5 Wiring diagram

Note

The output signals "OUT P, OUT M" of the digital output module F-RQ 1x24VDC/24..230VAC/5A are looped through from "IN P, IN M” and should therefore be considered like the output signals of the F-DQ 8x24VDC/0.5A PP HF "DQ-PP$_n$, M$_n$". For this reason, please observe the wiring rules for the F-DQ 8x24VDC/0.5A PP HF.

WARNING

The digital output module F-RQ 1x24VDC/24..230VAC/5A can no longer be shut down if a cross circuit has developed between positive potential (e.g. L+) and DQ-PP$_n$. To prevent cross-circuits between positive potential (e.g. L+) and DQ-PP$_n$, you must route the lines used to connect the digital output modules F-RQ 1x24VDC/24..230VAC/5A in a cross-circuit-proof manner, e.g. as separate, sheathed cables or in separate cable ducts.

WARNING

If there is cross-circuit to another output at a non-passivated, switched off output, a brief 1-signal can occur with a duration of 2x max. cycle time (T_{cycle}) + Max. readback time dark test (T_{rb}).

If there is a cross-circuit between two outputs, the test pulses of light tests of the respective other output are also visible. With a different setting of the "Max. readback time light test" parameter, this can cause cyclically occurring 1-signals that last as long as the longest configured "Max. readback time light test".

If the above mentioned 1-signals dangerously affect the plant when a cross-circuit occurs between outputs, you need to guard against the cross-circuits between the outputs with a cross-circuit-proof installation, for example, with separate sheathed cables or separate cable ducts.

Interrupts/diagnostic messages

6

6.1 Status and error display

LED display

The following figure shows the LED display of the F-DQ 8x24VDC/0.5A PP HF.

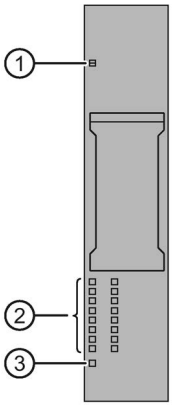

① DIAG (green/red)
② Channel status (green), channel fault (red)
③ PWR (green)

Figure 6-1 LED display

Meaning of the LED displays

The following tables show the meaning of the status and error displays. You can find solutions for diagnostics alarms in section Diagnostics alarms (Page 42).

WARNING
The DIAG LED and the channel status and channel fault LEDs of the outputs are not designed as safety-related LEDs and therefore may not be evaluated for safety-related activities.

DIAG LED

Table 6- 1 Error display of the LED DIAG

DIAG	Meaning
Off	Backplane bus supply of the ET 200SP not okay
Flashing	Module parameters not configured
On	Module parameters configured and no module diagnostics
Flashing	• Module parameters configured and module diagnostics • Operation in S7-1200/1500 F-CPUs: At least one channel is waiting for user acknowledgment.
Flashing	• Operation in S7-1200/1500 F-CPUs: The F-module expects user acknowledgment after a module error. • Operation in S7-300/400 F-CPUs: The F-module is waiting for user acknowledgment.

Channel status/channel fault LED

Table 6- 2 Status display of the LEDs channel status / channel error

Channel status	Channel fault	Meaning
□ Off	□ Off	Process signal = 0 and no channel diagnostics
■ On	□ Off	Process signal = 1 and no channel diagnostics
□ Off	■ On	Process signal = 0 and channel diagnostics
☼/☼ Alternately flashing		• Operation in S7-1200/1500 F-CPUs: At least one channel is waiting for user acknowledgment. • Operation in S7-300/400 F-CPUs: At least one channel is waiting for user acknowledgment.

Channel status/DIAG/channel fault LED

Table 6- 3 Status display of the LEDs channel status / DIAG / channel error

Channel status	DIAG	Channel fault	Meaning
□ Off	☼ Flashing	■ All On	The PROFIsafe address does not match the configured PROFIsafe address
☼ Flashing	☼ Flashing	□ Off	Identification of the F-module when assigning the PROFIsafe address

PWR LED

Table 6- 4 Status display of LED PWR

PWR	Meaning
□ Off	Supply voltage L+ missing
■ On	Supply voltage L+ available

6.2 Interrupts

The fail-safe digital output module F-DQ 8x24VDC/0.5A PP HF supports diagnostic interrupts.

Diagnostic interrupts

The F-module generates a diagnostic interrupt for each diagnostics alarm described in section Diagnostics alarms (Page 42).

The table below provides an overview of the diagnostic interrupts of the F-module . The diagnostic interrupts are assigned either to one channel or the entire F-module.

⚠ WARNING
Before acknowledging the short circuit diagnostics message, correct the respective fault and validate your safety function. In this case, follow the steps described in section Diagnostics alarms (Page 42).

Table 6- 5 Diagnostic interrupts of the F-DQ 8x24VDC/0.5A PP HF

Diagnostic interrupt	Fault code	Scope of diagnostics interrupt	Configurable
Overtemperature	5_D	F-module	No
Error	9_D		
Parameter error	16_D		
Supply voltage missing	17_D		
Safety-related shutoff	25_D		
Channel/component temporarily unavailable	31_D		
Mismatch of safety destination address (F_Dest_Add)	64_D		
Safety destination address not valid (F_Dest_Add)	65_D		
Safety source address not valid (F_Source_Add)	66_D		
Safety watchdog time value is 0 ms (F_WD_Time)	67_D		
Parameter F_SIL exceeds SIL from specific device application	68_D		
Parameter F_CRC_Length does not match the generated values	69_D		
Version of F-parameter set incorrectly	70_D		
CRC1 fault	71_D		
Save iParameter watchdog time exceeded	73_D		
Restore iParameter watchdog time exceeded	74_D		
Inconsistent iParameters (iParCRC error)	75_D		
F_Block_ID not supported	76_D		
Transmission error: Inconsistent data (CRC error)	77_D		
Transmission error: Timeout (watchdog time 1 or 2 expired)	78_D		
Module is defective	256_D		
Watchdog tripped	259_D		
Short-circuit to L+	261_D	Channel	
Short-circuit to ground	262_D		
Invalid/inconsistent firmware present	283_D	F-module	No
Channel failure acknowledgment	779_D	Channel	
F-address memory not accessible	781_D	F-module	
Frequency too high	785_D	Channel	
Undertemperature	786_D	F-module	
Supply voltage too high	801_D	F-module	No
Supply voltage too low	802_D	F-module	

6.3 Diagnostics alarms

Diagnostics alarms

A diagnostics alarm is generated for each diagnostics event and the F-module flashes the DIAG LED. You can read out the diagnostics alarm, for example, from the diagnostics buffer of the F-CPU. You can evaluate the error codes using the user program.

Note

You can connect several actuators per output.

If several actuators are connected to an output, the diagnostics of each actuator affects the other ones.

In other words, a single short-circuit affects multiple actuators.

Once the fault is eliminated, the F-module must be reintegrated in the safety program. For additional information on passivation and reintegration of F-I/O, refer to the SIMATIC Safety – Configuring and Programming (http://support.automation.siemens.com/WW/view/en/54110126) manual.

Table 6- 6 Diagnostics alarms, their meaning and possible remedies

Diagnostics alarm	Fault code	Meaning	Solution
Overtemperature	5_D	An excessively high temperature was measured in the F-module.	Operate the F-module within the specified temperature range (see Technical specifications (Page 47)) Once the temperature has been reduced and returns to the specified range, the F-module must be removed and inserted or the power switched OFF and ON.
Error	9_D	The F-module has detected an internal error and does not start.	Replace the F-module.
Parameter error	16_D	Parameter assignment errors include: • The F-module cannot use the parameters (unknown, invalid combination, etc.). • The F-module parameters have not been configured.	Correct the parameter assignment.
Supply voltage missing	17_D	Missing or insufficient supply voltage L+	• Operate the F-module within the specified supply voltage range.

Diagnostics alarm	Fault code	Meaning	Solution
Safety-related shutoff	25_D	For safety purposes, channel was switched off due to an error on another channel. Possible causes: • A short-circuit exists. • The capacitive load is too high.	• Correct the process wiring. • Increase the test times (dark, light).
Channel/component temporarily unavailable	31_D	The firmware version of the F-module is inconsistent.	Repeat the firmware update.
Mismatch of safety destination address (F_Dest_Add)	64_D	The firmware of the F-module has detected a different F-destination address.	• Check the parameter assignment of the PROFIsafe driver and the PROFIsafe address assigned to the F-module. • Assign the PROFIsafe address to the F-module (again).
Safety destination address not valid (F_Dest_Add)	65_D	The firmware of the F-module has detected an illegal different F-destination address.	Check the configuration/parameter assignment of the iPar server.
Safety source address not valid (F_Source_Add)	66_D	The firmware of the F-module has detected a different F-source address.	
Safety watchdog time value is 0 ms (F_WD_Time)	67_D	The firmware of the F-module has detected an invalid watchdog time.	
Parameter F_SIL exceeds SIL from specific device application	68_D	The firmware of the F-module has detected a discrepancy between the SIL setting of the communication and the application.	
Parameter F_CRC_Length does not match the generated values	69_D	The firmware of the F-module has detected a discrepancy in the CRC length.	
Version of F-parameter set incorrectly	70_D	The firmware of the F-module has detected an incorrect F_Par_Version or an invalid F_Block_ID.	
CRC1 fault	71_D	The firmware of the F-module has detected inconsistent F-parameters.	
Save iParameter watchdog time exceeded	73_D	iPar server does not respond to "save IPar" within 4.4 minutes.	
Restore iParameter watchdog time exceeded	74_D	iPar server does not respond to "restore IPar" within 4.4 minutes.	Check the configuration/parameter assignment of the iPar server.
Inconsistent iParameters (iParCRC error)	75_D	The firmware of the F-module has detected inconsistent iParameters.	Check the parameter assignment.
F_Block_ID not supported	76_D	The firmware of the F-module has detected an incorrect block ID.	Check the parameter assignment of the PROFIsafe driver.

Diagnostics alarm	Fault code	Meaning	Solution
Transmission error: Inconsistent data (CRC error)	77_D	The firmware of the F-module has detected a CRC error. Possible causes: • The communication between the F-CPU and F-module is disturbed. • Impermissibly high electromagnetic interference is present. • An error occurred in the sign-of-life monitoring.	• Check the communication connection between the F-module and F-CPU. • Eliminate the electromagnetic interference. • Power switched OFF and ON for station • Assign the configuration and parameter assignment to the F-module (of the station).
Transmission error: Timeout (watchdog time 1 or 2 expired)	78_D	The firmware of the F-module has detected a timeout. Possible causes: • The F-monitoring time is set incorrectly. • A bus fault is present.	• Check the parameter assignment. • Ensure that communication is functioning correctly.
Module is defective	256_D	Possible causes: • Impermissibly high electromagnetic interference is present. • The F-module has detected an internal error and has reacted in a safety-related manner. • wrong BaseUnit	• Eliminate the interference. The module must then be pulled and plugged, or the power switched OFF and ON • If the F-module cannot be put back into operation, consider replacing it. • Use a BaseUnit of the type A0.
Watchdog tripped	259_D	Possible causes: • Impermissibly high electromagnetic interference is present. • The F-module has detected an internal error and has reacted in a safety-related manner.	• Eliminate the interference. The module must then be pulled and plugged, or the power switched OFF and ON • If the F-module cannot be put back into operation, consider replacing it.
Short-circuit to L+	261_D	Short circuit to L+ can mean: • The output cable is short-circuited to L+. • The capacitive load between the channels is too high (for example, due to cable length or load current being too low). • There is a short circuit between two output channels. You must eliminate the error within 100 hours; otherwise, the F-module is permanently passivated and an acknowledgment is no longer possible.	• Correct the process wiring. • Increase the test times (dark, light). • Pay attention to the warnings in Applications of the F-I/O module (Page 26).

Diagnostics alarm	Fault code	Meaning	Solution
Short-circuit to ground	262_D	Short-circuit to ground can mean: • The output cable is short-circuited to ground. • The output signal is short-circuited to ground. • The capacitive load is too high. You must eliminate the error within 100 hours; otherwise, the F-module is permanently passivated and an acknowledgment is no longer possible.	• Correct the process wiring. • Increase the test times (dark, light). • Check the actuator.
Invalid/inconsistent firmware present	283_D	The firmware is incomplete and/or firmware added to the F-module is incompatible. This leads to errors or functional limitations when operating the F-module.	• Perform a firmware update for all parts of the F-module and note any error messages. • Use only firmware versions released for this F-module.
Channel failure acknowledgment	779_D	A channel fault was detected. Confirmation is required to enable the channel.	Confirm the channel fault.
F-address memory not accessible	781_D	The F-source address and F-destination address stored in the coding element cannot be accessed.	Verify that the coding element is present or replace the coding element.
Frequency too high	785_D	The maximum switching frequency of the F-module has been exceeded.	Reduce the switching frequency (see Technical specifications (Page 47))
Undertemperature	786_D	The minimum permissible temperature limit has been violated.	Operate the F-module within the specified temperature range (see Technical specifications (Page 47)) Once the temperature has increased and returns to the specified range, the F-module must be removed and inserted or the power switched OFF and ON.
Supply voltage too high	801_D	The supply voltage is too high.	Check the supply voltage.
Supply voltage too low	802_D	The supply voltage is too low.	Check the supply voltage.

Supply voltage outside the nominal range

If the supply voltage L+ is outside the specified value range, the DIAG LED flashes and the module is passivated.

When the voltage is then recovered (level must remain within the specified value for at least 1 minute (see Technical specifications (Page 47) Voltages, Currents, Potentials)), the DIAG LED stops flashing. The module remains passivated.

Generally applicable information on diagnostics

Information on diagnostics that pertains to all fail-safe modules (for example, readout of diagnostics functions or passivation of channels) is available in the SIMATIC Safety – Configuring and Programming (http://support.automation.siemens.com/WW/view/en/54110126) manual.

See also

S7 Distributed Safety - Configuring and Programming (https://support.industry.siemens.com/cs/ww/en/view/22099875)

6.4 Value status

Properties

In addition to the diagnostics alarm and the status and error display, the F-module provides information about the validity of each input and output signal – the value status. The value status is entered in the process image along with the input signal.

Value status for digital input and output modules

The value status is additional binary information of a digital input or output signal. It is entered in the process image of the inputs (PII) at the same time as the process signal. It provides information about the validity of the input or output signal.

The value status is affected by a short-circuit and the plausibility check.

- 1_B: A valid process value is output for the channel.
- 0_B: A fail-safe value is output for the channel, or the channel is deactivated.

Assignment of the inputs and value status in the PII

Each channel of the F-module is assigned a value status in the process image of the inputs. You can find the assignment in section Address space (Page 24).

Reference

A detailed description of the evaluation and processing of the respective input signals can be found in the SIMATIC Safety – Configuring and Programming (http://support.automation.siemens.com/WW/view/en/54110126) manual.

Technical specifications 7

Technical specifications of the F-DQ 8x24VDC/0.5A PP HF

	6ES7136-6DC00-0CA0
General information	
Product type designation	F-DQ 8x24 V DC/0.5 A PP HF
Firmware version	
• FW update possible	Yes
Usable BaseUnits	BU type A0
Color code for module-specific color-coded label	CC02
Product function	
I&M data	Yes; I&M0 to I&M3
Engineering with	
STEP 7 TIA Portal can be configured/integrated as of version	V14 SP1 with HSP 202
STEP 7 can be configured/integrated as of version	Check the entry (https://support.industry.siemens.com/cs/ww/en/view/15208817).
Supply voltage	
Rated value (DC)	24 V
Low limit of permissible range (DC)	20.4 V
High limit of permissible range (DC)	28.8 V
Reverse polarity protection	Yes
Input current	
Current consumption (rated value)	75 mA; without load
Current consumption, max.	21 mA; from backplane bus
Output voltage	
Rated value (DC)	24 V
Power	
Power consumption from the backplane bus	70 mW
Power loss	
Power loss, typ.	3 W
Address area	
Address space per module	
Inputs	6 bytes; 5 bytes non-RIO for FA; 6 bytes RIO for FA
Outputs	6 bytes; 5 bytes non-RIO for FA; 6 bytes RIO for FA
Hardware configuration	
Automatic coding	
• Electronic coding element type F	Yes

	6ES7136-6DC00-0CA0
Digital outputs	
Number of outputs	8
Short-circuit protection	Yes
• Response threshold, typ.	min. 0.7 A
Wire break detection	No
Voltage induced on current interruption limited to	Typ. -39 V
Control of a digital input	Yes
Switching capacity of outputs	
With resistive load, max.	0.5 A
With lamp load, max.	2 W
Load resistance range	
Low limit	48 Ω
High limit	12000 Ω
Output voltage	
For "1" signal, min.	24 V; L+ (-0.5 V)
Output current	
For "1" signal, rated value	0.5 A
For "0" signal, residual current, max.	0.5 mA
Switching frequency	
With resistive load, max.	30 Hz; symmetrical
With inductive load, max.	0.1 Hz; according to IEC 60947-5-1, DC-13, balanced
For capacitive load, max.	2 Hz; balanced
With lamp load, max.	10 Hz; symmetrical
Total current of outputs	
Max. current per channel	0.5 A; note derating information in the manual
Current per module, max.	3 A; note derating information in the manual
Total current of the outputs (per module)	
Horizontal mounting position	
• Up to 40 °C, max.	3 A
• Up to 50 °C, max.	2.5 A
• Up to 60 °C, max.	2 A
Vertical mounting position	
• Up to 50 °C, max.	2 A
Length of cable	
shielded, max.	100 m
unshielded, max.	100 m
Interrupts/diagnostics/status information	
Diagnostics function	Yes, see section "Interrupts/diagnostics alarms" in the manual
Fail-safe values can be switched to	No
Interrupts	
Diagnostic interrupt	Yes

	6ES7136-6DC00-0CA0
Diagnostics display LED	
RUN LED	Yes; green LED
ERROR LED	Yes; red LED
Monitoring of the supply voltage (PWR-LED)	Yes; green PWR LED
Channel status display	Yes; green LED
For channel diagnostics	Yes; red LED
For module diagnostics	Yes; green/red DIAG LED
Electrical isolation	
Electrical isolation channels	
Between channels	No
Between channels and backplane bus	Yes
Between the channels and the voltage supply of the electronics	No
Isolation	
Isolation test voltage	707 V DC (type test)
Standards, approvals, certificates	
Maximum achievable safety class in safety mode	
Performance Level according to ISO 13849-1	PLe
Category according to ISO 13849-1	Cat. 4
SIL according to IEC 61508	SIL 3
Probability of failure (with a mission time of 20 years and time to repair of 100 hours)	
• Low demand mode: PFDavg according to SIL3	< 6.00E-05
• High demand/continuous mode: PFH according to SIL3	< 2.00E-09 1/h
Environmental conditions	
Ambient temperature in operation	
Horizontal installation, min.	0 °C
Horizontal installation, max.	60 °C
Vertical installation, min.	0 °C
Vertical installation, max.	50 °C
Dimensions	
Width	15 mm
Weights	
Weight, approx.	48 g

Dimension drawing

See ET 200SP BaseUnits (http://support.automation.siemens.com/WW/view/en/58532597/133300) manual

Response times

A

Introduction

You can find the reaction times of the F-DQ 8x24 V DC/0.5 A PP HF digital output module below. The reaction times of the F-DQ 8x24 V DC/0.5 A PP HF digital output module are included in the calculation of the F-system reaction time.

Definition of reaction time for fail-safe digital outputs

The reaction time represents the interval between an incoming safety message frame from the backplane bus and the signal change at the digital output.

Times required for the calculation

- Max. cycle time: T_{cycle} = 8 ms
- Max. acknowledgment time (Device Acknowledgment Time): T_{DAT} = 16 ms

The maximum reaction time in the case of fault (One Fault Delay Time, OFDT) is equivalent to the maximum reaction time with no faults (Worst Case Delay Time, WCDT).

Assign the parameters for maximum readback time dark test (Maximum Readback Time, T_{rb}) and maximum readback time light test (Maximum Readback Time Light Test, T_{rb_lt}) in STEP 7/in the TIA Portal.

Operating mode: Disable dark test for 48 hours – disabled

Maximum reaction time with no faults (Worst Case Delay Time, WCDT)

$t <= 4 * T_{cycle}$

Maximum reaction time with detection of a channel fault by readback

$t <= 6 * T_{cycle} + T_{rb}$

Maximum reaction time with detection of a channel fault by bit pattern test

$t <= 2 * T_{cycle}$ + maximum test period

Operating mode: Disable dark test for 48 hours – enabled

Maximum reaction time with no faults (Worst Case Delay Time, WCDT)

$t <= 5 * T_{cycle} + T_{rb} + T_{rb_lt}$

Maximum reaction time with detection of a channel fault

A channel fault may not be detected until a 0-1 process value change takes place on the corresponding channel. Please note the restrictions detailed in section Disable dark test for 48 hours (Page 19)

Switching of loads

B

B.1 Connecting capacitive loads

If an F-DQ 8x24VDC/0.5A PP HF digital output module is interconnected with loads that have an excessive capacitance, this can lead to detection of a short-circuit. Reason: The capacitance cannot be sufficiently discharged or charged during the configured readback time of the bit pattern test.

The typical trend shown in the diagram below represents the correlation between load current and maximum switchable load capacitance at a supply voltage of 24 V DC.

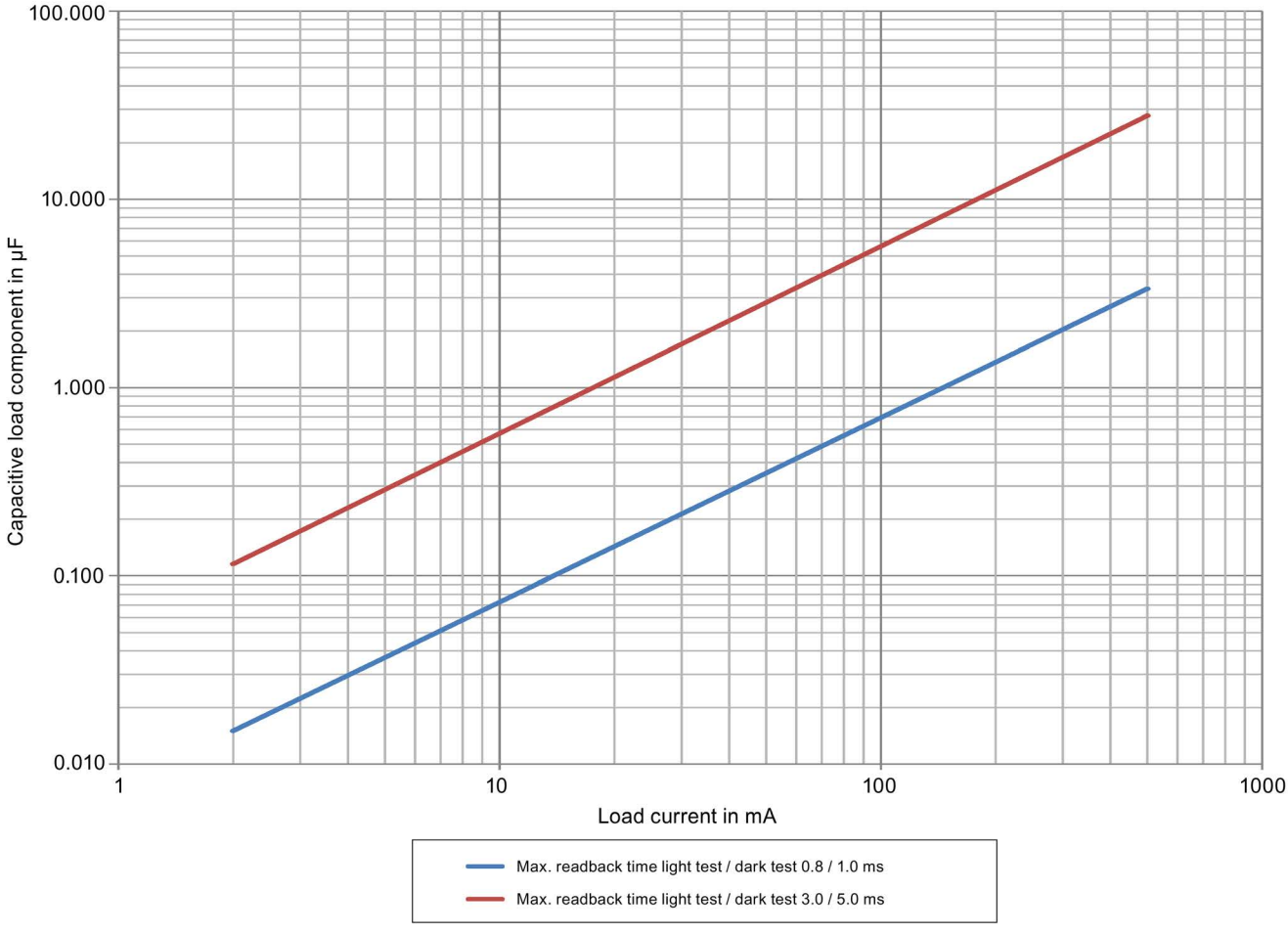

Figure B-1 Switching of capacitive loads for the F-DQ 8x24VDC/0.5A PP HF digital output module depending on the configured max. readback time light test / dark test.

Remedy for detecting a short circuit

1. Determine the load current and capacitance of the load.
2. Locate the operating point in the diagram above.
3. If the operating point is above the trend, select an actuator with higher current consumption so that the new operating point is below the curve.

Example

You have configured a maximum readback time light test/dark test of "0.8 / 1.0 ms". You have set the load current to 20 mA and the capacity to 0.2 µF. The operating point is thus outside the range defined by the trend (gray background).

Solution: Select an actuator with higher current consumption. In this example, 40 mA. Alternatively, you can configure the parameter "Max. readback time light test / dark test" with "3.0 / 5.0 ms".

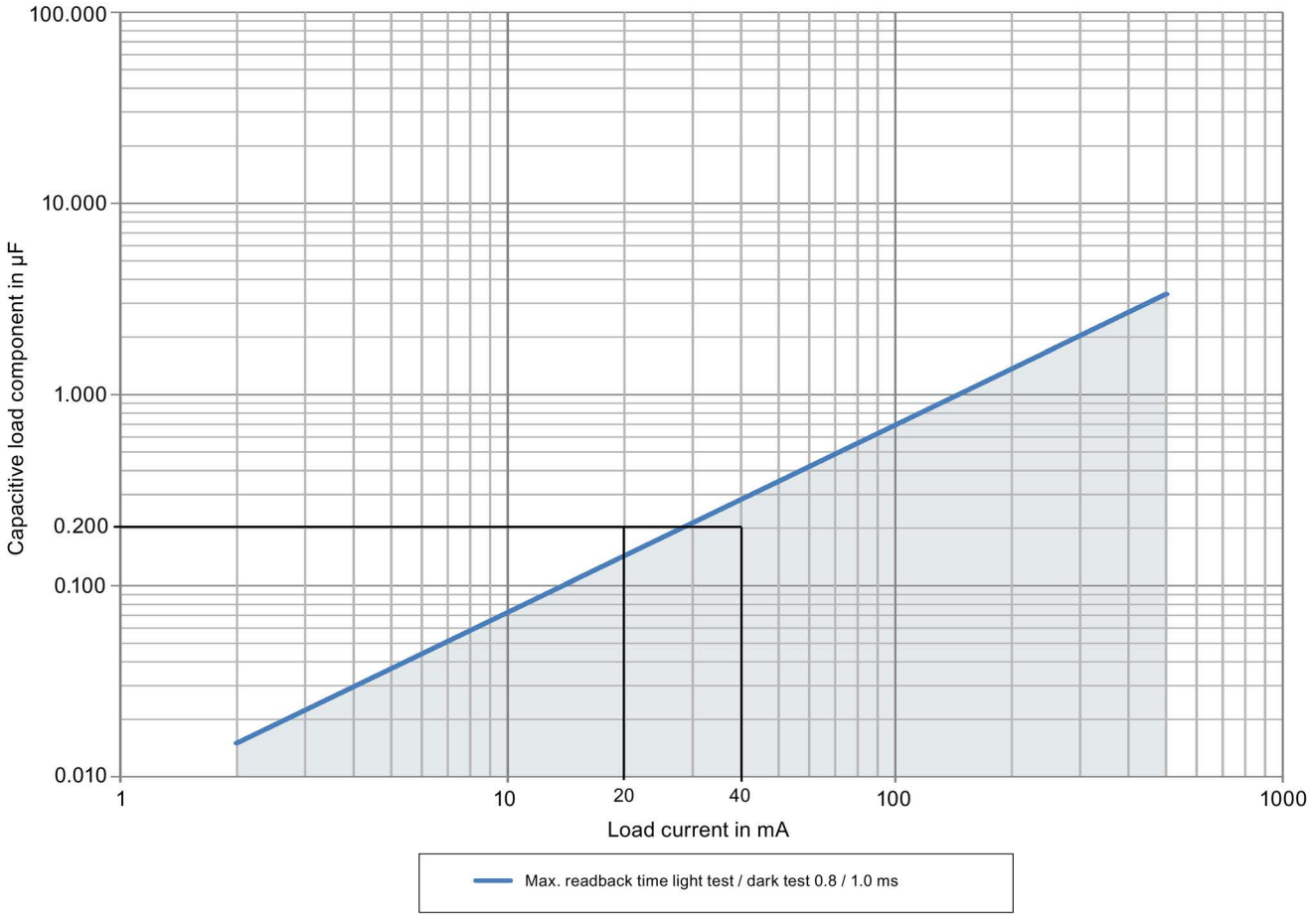

B.2 Switching of inductive loads

Switching of inductive loads

The diagram below shows the maximum permitted inductive loads as a function of the load current and switching frequency.

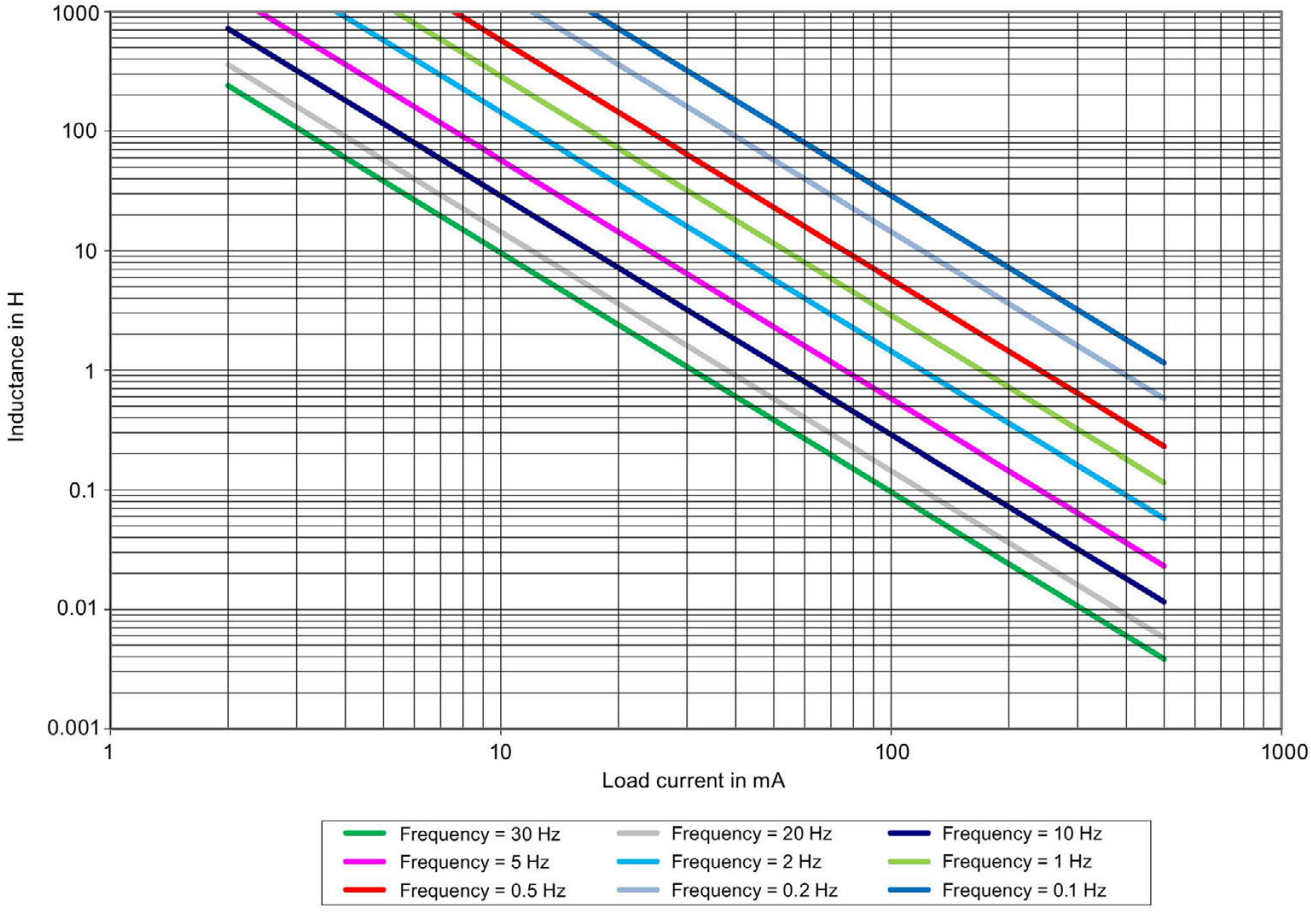

Figure B-2 Switching of inductive loads for the F-DQ 8x24VDC/0.5A PP HF digital output module depending on the load current and switching frequency

SIEMENS

SIMATIC

ET 200SP
Digital output module
F-RQ 1x24VDC/24..230VAC/5A
(6ES7136-6RA00-0BF0)

Manual

Preface

Guide to the documentation 1

Product overview 2

Connecting up 3

Addressing 4

Applications of the F-I/O module 5

Status and error display 6

Technical specifications 7

Response times A

03/2014

A5E33267029-AA

Legal information

Warning notice system

This manual contains notices you have to observe in order to ensure your personal safety, as well as to prevent damage to property. The notices referring to your personal safety are highlighted in the manual by a safety alert symbol, notices referring only to property damage have no safety alert symbol. These notices shown below are graded according to the degree of danger.

⚠ DANGER
indicates that death or severe personal injury **will** result if proper precautions are not taken.

⚠ WARNING
indicates that death or severe personal injury **may** result if proper precautions are not taken.

⚠ CAUTION
indicates that minor personal injury can result if proper precautions are not taken.

NOTICE
indicates that property damage can result if proper precautions are not taken.

If more than one degree of danger is present, the warning notice representing the highest degree of danger will be used. A notice warning of injury to persons with a safety alert symbol may also include a warning relating to property damage.

Qualified Personnel

The product/system described in this documentation may be operated only by **personnel qualified** for the specific task in accordance with the relevant documentation, in particular its warning notices and safety instructions. Qualified personnel are those who, based on their training and experience, are capable of identifying risks and avoiding potential hazards when working with these products/systems.

Proper use of Siemens products

Note the following:

⚠ WARNING
Siemens products may only be used for the applications described in the catalog and in the relevant technical documentation. If products and components from other manufacturers are used, these must be recommended or approved by Siemens. Proper transport, storage, installation, assembly, commissioning, operation and maintenance are required to ensure that the products operate safely and without any problems. The permissible ambient conditions must be complied with. The information in the relevant documentation must be observed.

Trademarks

All names identified by ® are registered trademarks of Siemens AG. The remaining trademarks in this publication may be trademarks whose use by third parties for their own purposes could violate the rights of the owner.

Disclaimer of Liability

We have reviewed the contents of this publication to ensure consistency with the hardware and software described. Since variance cannot be precluded entirely, we cannot guarantee full consistency. However, the information in this publication is reviewed regularly and any necessary corrections are included in subsequent editions.

Siemens AG
Industry Sector
Postfach 48 48
90026 NÜRNBERG
GERMANY

A5E33267029-AA
Ⓟ 04/2014 Subject to change

Copyright © Siemens AG 2014.
All rights reserved

Preface

Purpose of this documentation

This manual complements the system manual ET 200SP distributed I/O system. General functions of the ET 200SP are described in the system manual ET 200SP distributed I/O system (http://support.automation.siemens.com/WW/view/en/58649293).

The information in this manual and the system manual supports you when commissioning the ET 200SP system.

Conventions

Pay particular attention to notes highlighted as follows::

Note

A note contains important information on the product described in the documentation, on handling the product or on the part of the documentation to which you should pay special attention.

Security information

Siemens provides products and solutions with industrial security functions that support the secure operation of plants, solutions, machines, equipment and/or networks. They are important components in a holistic industrial security concept. With this in mind, Siemens' products and solutions undergo continuous development. Siemens recommends strongly that you regularly check for product updates.

For the secure operation of Siemens products and solutions, it is necessary to take suitable preventive action (e.g. cell protection concept) and integrate each component into a holistic, state-of-the-art industrial security concept. Third-party products that may be in use should also be considered. You can find more information about industrial security on the Internet (http://www.siemens.com/industrialsecurity).

To stay informed about product updates as they occur, sign up for a product-specific newsletter. You can find more information on the Internet (http://support.automation.siemens.com).

Table of contents

Preface 3

1 Guide to the documentation 5

1.1 Guide to the documentation for the digital output module F-RQ 1x24VDC/24..230VAC/5A 5

2 Product overview 7

2.1 Properties of the F-RQ 1x24VDC/24..230VAC/5A 7

3 Connecting up 9

3.1 Terminal assignment 9

3.2 Block diagram 10

4 Addressing 11

4.1 Address space 11

5 Applications of the F-I/O module 13

5.1 Applications of the F-RQ 1x24VDC/24..230VAC/5A 13

5.2 Application 1: 2 loads, single-pole switch-off 15

5.3 Application 2: 1 load, single-pole switch-off 17

5.4 Application 3: 1 load, two-pole switch-off with 1 F-RQ module 19

5.5 Application 4: 1 load, two-pole switch-off with 2 F-RQ modules 21

5.6 Application 5: 2 loads, single-pole switch-off with 2 F-RQ modules 24

6 Status and error display 27

6.1 Status and error display 27

7 Technical specifications 29

7.1 Technical specifications 29

7.2 Mechanical and climatic ambient conditions 33

7.3 Switching capacity and service life of contacts 34

A Response times 35

A.1 Response times 35

Guide to the documentation 1

1.1 Guide to the documentation for the digital output module F-RQ 1x24VDC/24..230VAC/5A

Introduction

The documentation of the SIMATIC products has a modular structure and includes topics relating to your automation system.

The complete documentation of the ET 200SP system consists of different modules made up of system manuals, function manuals and device manuals.

The STEP 7 (online help) information system supports you when configuring and programming your automation system.

Overview of the documentation for the fail-safe digital output module F-RQ 1x24VDC/24..230VAC/5A

The table below lists additional documents that complement this description of the fail-safe digital output module F-RQ 1x24VDC/24..230VAC/5A and that are available on the Internet.

Table 1- 1 Documentation for the fail-safe digital output module F-RQ 1x24VDC/24..230VAC/5A

Topic	Documentation	Most important contents
Description of the system	System manual ET 200SP distributed I/O system (http://support.automation.siemens.com/WW/view/en/58649293)	• Application planning • Installation • Connecting up • Commissioning • Approvals • TÜV certificates
BaseUnits	Manual ET 200SP BaseUnits (http://support.automation.siemens.com/WW/view/en/58532597/133300)	Technical specifications
Description of the SIMATIC Safety F-system	Programming and operating manual SIMATIC Safety - Configuring and Programming (http://support.automation.siemens.com/WW/view/en/54110126)	• Configuring • Programming • Approvals

SIMATIC manuals

The latest manuals for SIMATIC products are available on the Internet (http://www.siemens.com/automation/service&support) for free download.

Functional Safety Services

Siemens Functional Safety Services support you with a comprehensive package of services from risk assessment and verification right through to plant commissioning and modernization. We also offer consultation on the use of fail-safe and fault-tolerant SIMATIC S7 automation systems.

You will find more detailed information on the Internet (http://www.siemens.com/automation/service&support).

Please e-mail any queries you may have e-mail (mailto:safety-services.industry@siemens.com).

Product overview

2

2.1 Properties of the F-RQ 1x24VDC/24..230VAC/5A

Article number

6ES7136-6RA00-0BF0

View of the module

Figure 2-1 View of the F-RQ 1x24VDC/24..230VAC/5A module

Properties

- Technical properties
  - Digital module with 1 relay output (2 isolated NO contacts)
  - Safety class SIL3/category 4/PLecan be achieved if the F-RQ module is controlled by a fail-safe output (for example F-module F-DQ 4x24VDC/2A PM HF)
  - Control voltage 24 VDC
  - Total current for both NO contacts 5 A max.
  - Isolated from control voltage
  - Suitable for solenoid valves, DC contactors and signal lamps
- Supported system functions
  - I&M identification data
  - Firmware update

⚠ WARNING

The fail-safe performance characteristics in the technical specifications apply for a service life of 20 years and a repair time of 100 hours. If a repair within 100 hours is not possible, remove the module in question from the BaseUnit or switch off its supply voltage before 100 hours are up.

Accessories

The following components can be used with the module:

- Labeling strips
- Color identification labels
- Reference identification labels

Connecting up

3

3.1 Terminal assignment

General terminal assignment

Table 3- 1 Terminal assignment for F-RQ 1x24VDC/24..230VAC/5A

Terminal assignment for F-RQ 1x24VDC/24..230VAC/5A (6ES7136-6RA00-0BF0)						
Terminal	**Assignment**	**Terminal**	**Assignment**	**Description**	**BaseUnit**	**Color identification label (terminals 1 to 16)**
1	RQ_{01}+ [13]	**2**	RQ_{01}- [14]	• RQ_n+, RQ_n-: Channel n • IN: Control input • OUT: Control input for loop-through	BU20-P8+A4+0B	 CC42 6ES7193-6CP42-2MB0
3	RQ_{02}+ [23]	**4**	RQ_{02}- [24]			
5	—	**6**	—			
7	—	**8**	—			
9	IN P	**10**	OUT P			
11	IN M	**12**	OUT M			
13	AUX	**14**	AUX			
15	AUX	**16**	AUX			

3.2 Block diagram

Block diagram

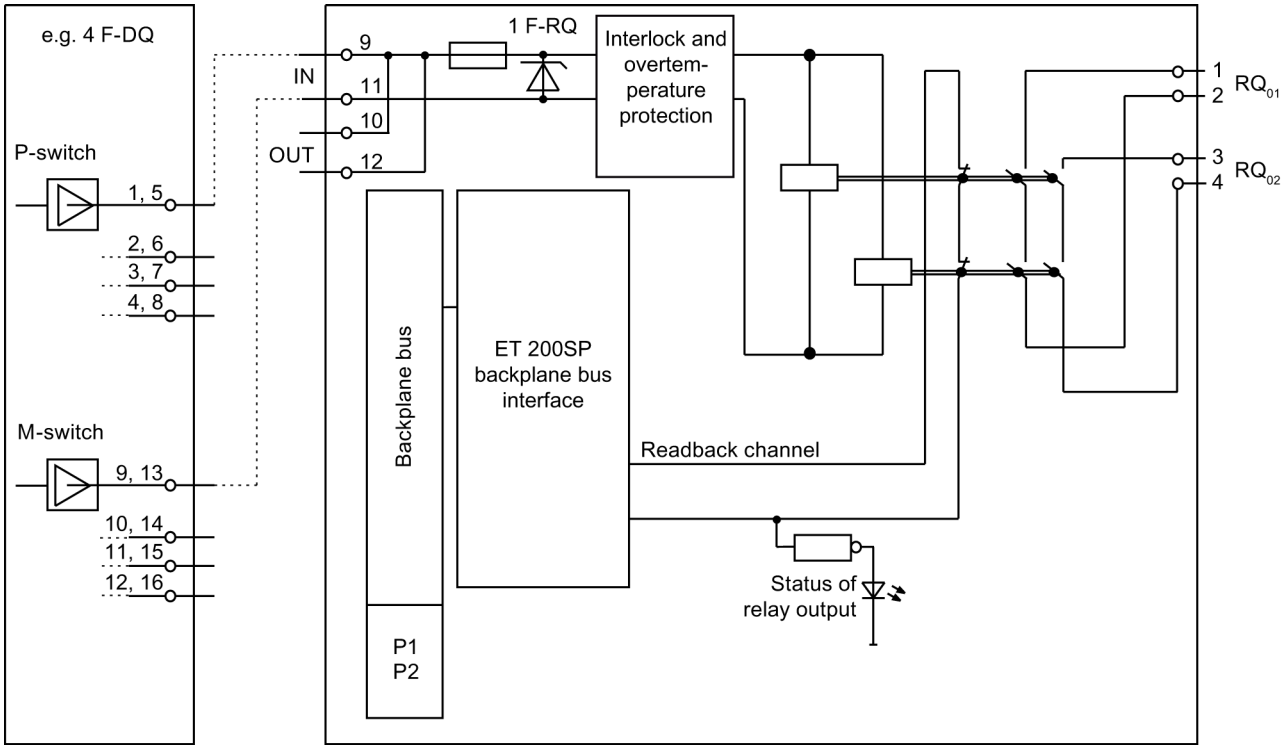

Figure 3-1 Block diagram F-RQ 1x24VDC/24..230VAC/5A

Addressing 4

4.1 Address space

Address assignment of the digital output module F-RQ 1x24VDC/24..230VAC/5A

The digital output module F-RQ 1x24VDC/24..230VAC/5A occupies the following address ranges in the F-CPU:

Table 4- 1 Address assignment in the F-CPU

Occupied bytes in the F-CPU:	
in input range	in output range
x.0 and x.1	—

x = Module start address

Address assignment of the user data of the digital output module F-RQ 1x24VDC/24..230VAC/5A

Of the occupied addresses of the digital output module F-RQ 1x24VDC/24..230VAC/5A, the user data occupies the following addresses in the F-CPU:

Table 4- 2 User data address assignment in the input range

Byte in the F-CPU	Assigned bits in F-CPU per F-RQ module:							
	7	6	5	4	3	2	1	0
x + 0	—	—	—	—	—	—	RQ_1 Inverted readback channel (corresponds to process signal at IN)	RQ_0 Readback channel

x = Module start address

The user data is in the standard process image of the inputs and is not transferred to the F-CPU in safety-related communication. The readback channel in the user program is therefore displayed as a non-failsafe variable.

Note

With migration projects from the ET 200S product family, note the following:

The readback channel RQ_0 (bit 0) allows direct interconnection with the FDBACK instruction (F-block F_FDBACK) to its FEEDBACK input without additional inversion.

The readback channel RQ_1 (bit 1) is inverted.

Additional information

For detailed information about F-I/O access, refer to the SIMATIC Safety, Configuring and Programming (http://support.automation.siemens.com/WW/view/en/54110126) manual.

Applications of the F-I/O module 5

5.1 Applications of the F-RQ 1x24VDC/24..230VAC/5A

You can achieve SIL3/category 4/PLe in the following applications if the activating F-module supports SIL3/category 4/PLe.

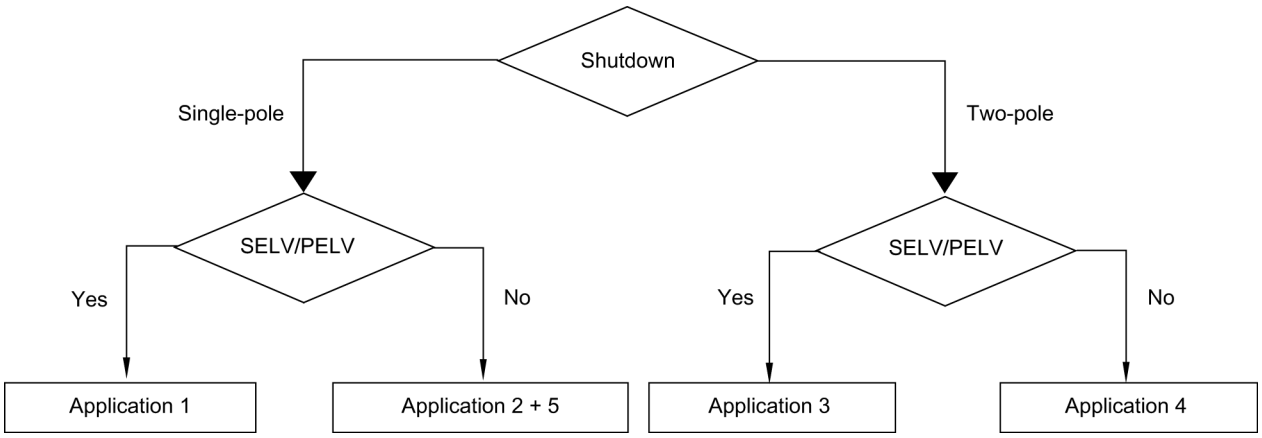

The wiring is carried out on the suitable BaseUnit (http://support.automation.siemens.com/WW/view/en/58532597/133300).

Wiring the 24 VDC power supply

Apply the 24 VDC control voltage to IN P (terminal 9) and IN M (terminal 11). The 24 VDC supply line is usually connected via a sourcing/sinking fail-safe output (e.g. digital output module F-DQ 4x24VDC/2A PM HF). Wire the P output (sourcing) of the F-DQ to the IN P of the F-RQ module and the M output (sinking)to the IN M of the F-RQ module.

As an alternative, you can also connect to a sourcing-sourcing fail-safe output. However, note that external short-circuits to P at the P input cannot be controlled. In this case, IN M would be connected directly to the control voltage ground.

NOTICE
Connecting the control voltage to the IN P and IN M inputs with the reverse polarity will destroy the F-module.

Wiring the load voltage and the load

The connectors of the relay output are electrically isolated NO contacts. This means that power must be supplied to these contacts from an external source. Connect the load supply (supply 1) and the load (load 1) in series to the RQ_{01} connectors (terminals 1;2). This ensures that the NO contacts of the relay interrupt the current flow of the power supply through the load. Due to the two relay contacts connected in series, the current flow can still be interrupted if one of the two relays has a fault..

The second circuit is independent of the first. They are logically interconnected by the common control. This means that the potential in the RQ_{02} (terminals 3;4), supply 2 and load 2 circuit may be different.

⚠ WARNING
If you connect a non-SELV/PELV power supply to one channel, you must not use the other channel.

Parameter assignment of the digital output module F-DQ 4x24VDC/2A PM HF

Assign the following parameters for the channel of the F-DQ 4x24VDC/2A PM HF digital output module to be activated:

Table 5- 1 Parameter assignment

Parameter	
Max. readback time dark test	1 ms
Max. readback time switch on test	1 ms

As the relays are highly inductive, you have the option of activating "Diagnostics: wire break" *or* "enable light test".

5.2 Application 1: 2 loads, single-pole switch-off

Wiring diagram

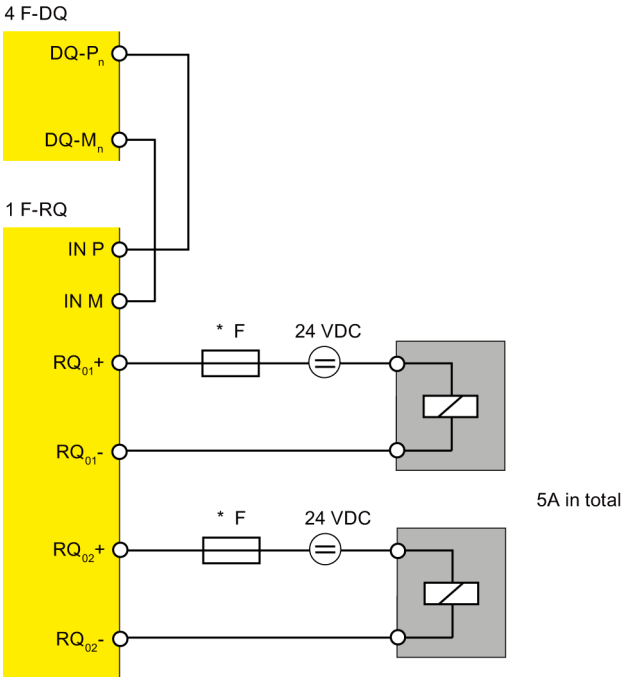

Figure 5-1 Wiring diagram of the F-RQ 1x24VDC/24..230VAC/5A to an F-DQ module

In this application, you can use one F-RQ module for single-pole switching of two loads with a total of 5A and one/two SELV/PELV power supplies.

⚠ WARNING

* Always install an external fuse with the following properties to protect the relay contacts from overload and short-circuits: Fuse, 6 A, operating class gL/gG or C6A miniature circuit breaker, rated short-circuit current of 400 A.

Note that for applications in accordance with EN 50156-1 the specified rated current of the overcurrent protective device must be multiplied by a safety factor of 0.6 to rule out the error "non-opening of contact elements due to permanent contact welding".

Reading back the relay contacts

In the safety program, always compare the readback value returned by the F-RQ module with the control status. In *STEP 7 Safety Advanced*, you can use the instruction "FDBACK: Feedback circuit monitoring" in your safety program (see the SIMATIC Safety - Configuring and Programming (http://support.automation.siemens.com/WW/view/en/54110126) manual).

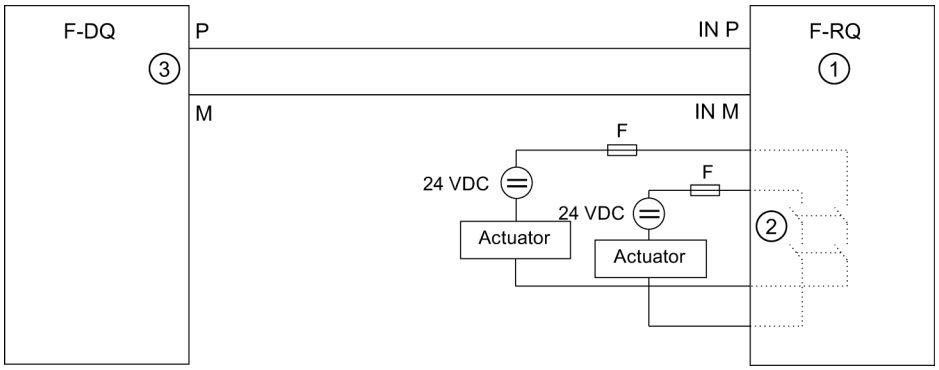

① F-RQ with integrated FEEDBACK input
② Relay contacts for switching the load
③ Output Q

Figure 5-2 Wiring example for the FDBACK instruction

If the 24 VDC control voltage falls below the value required for relay pick-up or if the wire to the input connectors breaks, the relays are released and "1" is read back instead of "0". This fault is only detected if the F-DQ module output is switched on.

If one of the two load contacts connected in series fails to open, "0" is read back by the module. The fault is detected by comparing this readback value with the setpoint "1" in the safety program. This fault is only detected if the control voltage is switched off.

Note

SIL3/category 4/PLe requires that there is a signal change at least once a month and that the process status is read back.

SIL2/category 3/PLd requires that there is a signal change at least once a year and that the process status is read back.

If a fault is detected during this function test, replace the F-RQ module.

5.3 Application 2: 1 load, single-pole switch-off

Wiring diagram

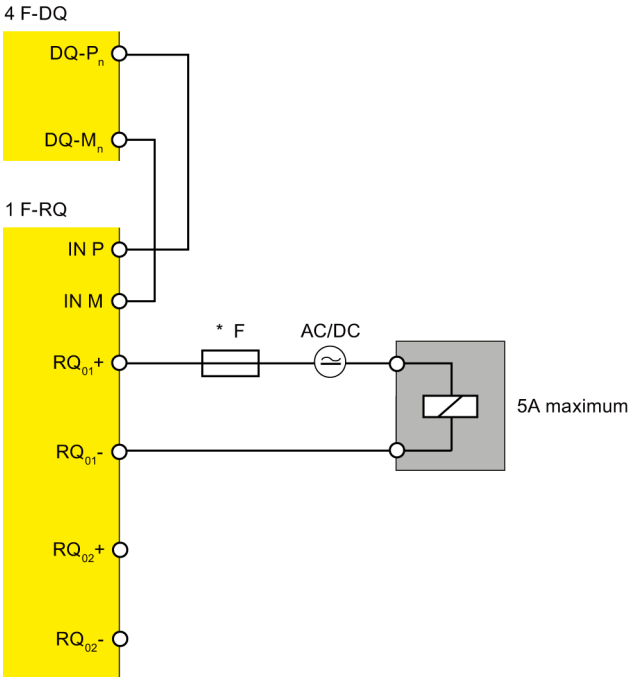

Figure 5-3 Wiring diagram of the F-RQ 1x24VDC/24..230VAC/5A to an F-DQ module

This application allows single-pole switching of one load with a total of 5A with one F-RQ module.

⚠ WARNING

* Always install an external fuse with the following properties to protect the relay contacts from overload and short-circuits: Fuse, 6 A, operating class gL/gG or C6A miniature circuit breaker, rated short-circuit current of 400 A.

Please note that for applications in accordance with EN 50156-1, the specified rated current of the overcurrent protective device must be multiplied by the safety factor 0.6 to rule out the error "non-opening of contact elements due to permanent contact welding".

Reading back the relay contacts

In the safety program, always compare the readback value returned by the F-RQ module with the control status. In *STEP 7 Safety Advanced*, you can use the instruction "FDBACK: Feedback circuit monitoring" in your safety program (see the SIMATIC Safety - Configuring and Programming (http://support.automation.siemens.com/WW/view/en/54110126) manual).

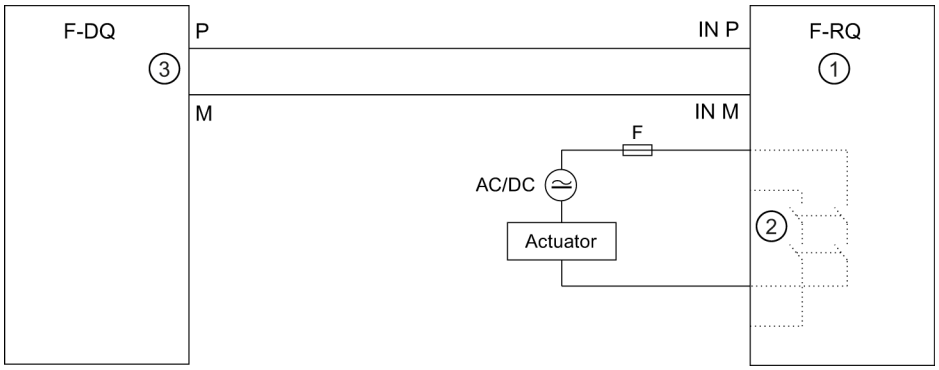

① F-RQ with integrated FEEDBACK input
② Relay contacts for switching the load
③ Output Q

Figure 5-4 Wiring example for the FDBACK instruction

If the 24 VDC control voltage falls below the value required for relay pick-up or if the wire to the input connectors breaks, the relays are released and "1" is read back instead of "0". This fault is only detected if the F-DQ module output is switched on.

If one of the two load contacts connected in series fails to open, "0" is read back by the module. The fault is detected by comparing this readback value with the setpoint "1" in the safety program. This fault is only detected if the control voltage is switched off.

Note

SIL3/category 4/PLe requires that there is a signal change at least once a month and that the process status is read back.

SIL2/category 3/PLd requires that there is a signal change at least once a year and that the process status is read back.

If a fault is detected during this function test, replace the F-RQ module.

5.4 Application 3: 1 load, two-pole switch-off with 1 F-RQ module

Wiring diagram

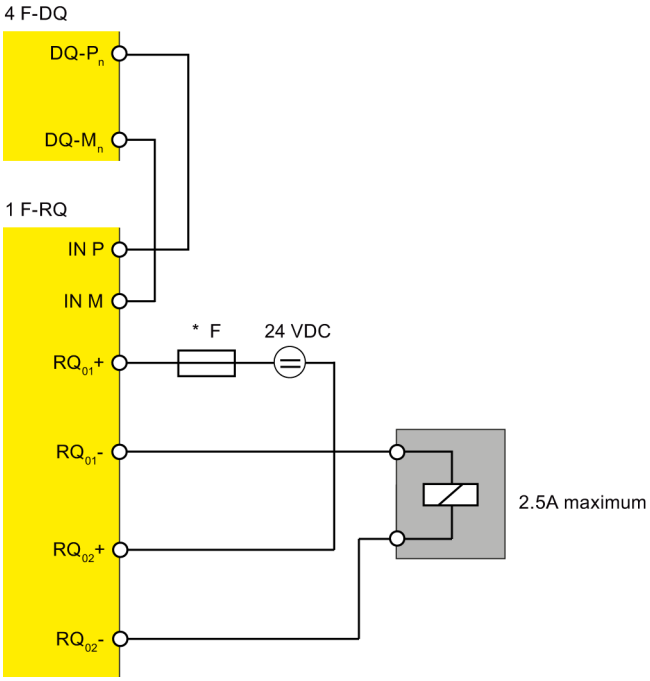

Figure 5-5 Wiring diagram for two F-RQ 1x24VDC/24..230VAC/5A to one F-DQ module

This application allows two-pole switching with one F-RQ module of one load with a maximum of 2.5A and an SELV/PELV power supply.

⚠ WARNING

* Always install an external fuse with the following properties to protect the relay contacts from overload and short-circuits: Fuse, 6 A, operating class gL/gG or C6A miniature circuit breaker, rated short-circuit current of 400 A.

Note that for applications in accordance with EN 50156-1 the specified rated current of the overcurrent protective device must be multiplied by a safety factor of 0.6 to rule out the error "non-opening of contact elements due to permanent contact welding".

Reading back the relay contacts

In the safety program, always compare the readback value returned by the F-RQ module with the control status. In *STEP 7 Safety Advanced*, you can use the instruction "FDBACK: Feedback circuit monitoring" in your safety program (see the SIMATIC Safety - Configuring and Programming (http://support.automation.siemens.com/WW/view/en/54110126) manual).

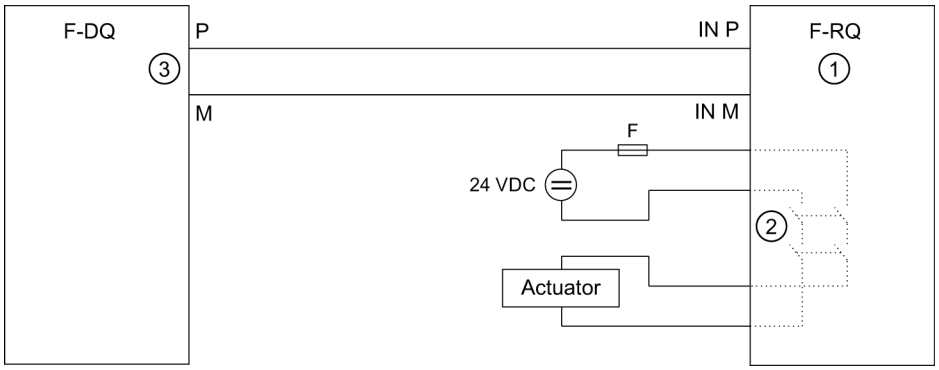

① F-RQ with integrated FEEDBACK input
② Relay contacts for switching the load
③ Output Q

Figure 5-6 Wiring example for the FDBACK instruction

If the 24 VDC control voltage falls below the value required for relay pick-up or if the wire to the input connectors breaks, the relays are released and "1" is read back instead of "0". This fault is only detected if the F-DQ module output is switched on.

If one of the two load contacts connected in series fails to open, "0" is read back by the module. The fault is detected by comparing this readback value with the setpoint "1" in the safety program. This fault is only detected if the control voltage is switched off.

Note

SIL3/category 4/PLe requires that there is a signal change at least once a month and that the process status is read back.

SIL2/category 3/PLd requires that there is a signal change at least once a year and that the process status is read back.

If a fault is detected during this function test, replace the F-RQ module.

5.5 Application 4: 1 load, two-pole switch-off with 2 F-RQ modules

Wiring diagram

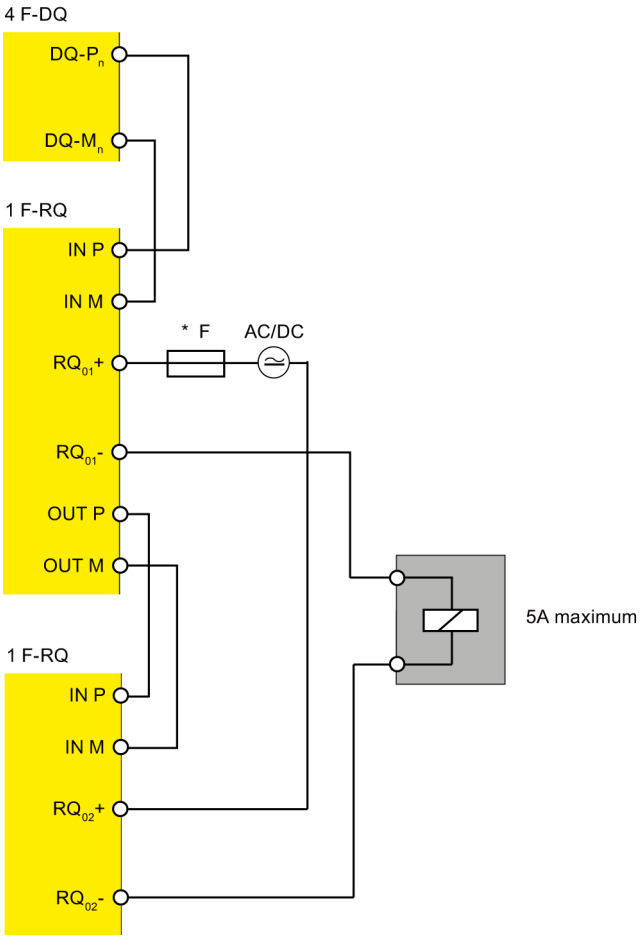

Figure 5-7 Wiring diagram for two F-RQ 1x24VDC/24..230VAC/5A to one F-DQ module

This application allows two-pole switching of one load with a max. of 5A with two F-RQ modules.

WARNING

* Always install an external fuse with the following properties to protect the relay contacts from overload and short-circuits: Fuse, 6 A, operating class gL/gG or C6A miniature circuit breaker, rated short-circuit current of 400 A.

Note that for applications in accordance with EN 50156-1 the specified rated current of the overcurrent protective device must be multiplied by a safety factor of 0.6 to rule out the error "non-opening of contact elements due to permanent contact welding".

Reading back the relay contacts

In the safety program, always compare the readback value returned by the F-RQ module with the control status. In *STEP 7 Safety Advanced*, you can use the instruction "FDBACK: Feedback circuit monitoring" in your safety program (see the SIMATIC Safety - Configuring and Programming (http://support.automation.siemens.com/WW/view/en/54110126) manual).

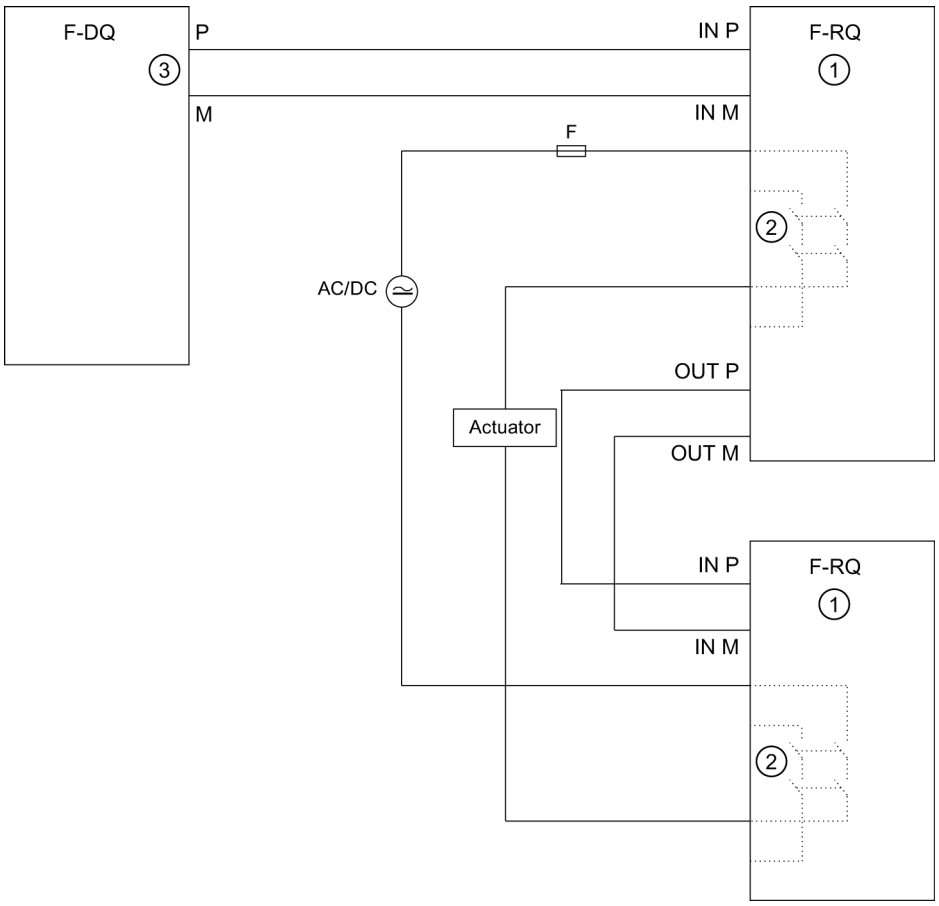

① F-RQ with integrated FEEDBACK input
② Relay contacts for switching the load
③ Output Q

Figure 5-8 Wiring example for the FDBACK instruction

If the 24 VDC control voltage falls below the value required for relay pick-up or if the wire to the input connectors breaks, the relays are released and "1" is read back instead of "0". This fault is only detected if the F-DQ module output is switched on.

If one of the two load contacts connected in series fails to open, "0" is read back by the module. The fault is detected by comparing this readback value with the setpoint "1" in the safety program. This fault is only detected if the control voltage is switched off.

Note

SIL3/category 4/PLe requires that there is a signal change at least once a month and that the process status is read back.

SIL2/category 3/PLd requires that there is a signal change at least once a year and that the process status is read back.

If a fault is detected during this function test, replace the F-RQ module.

Program example

For this application, program an FDBACK instruction for each F-RQ module as follows:

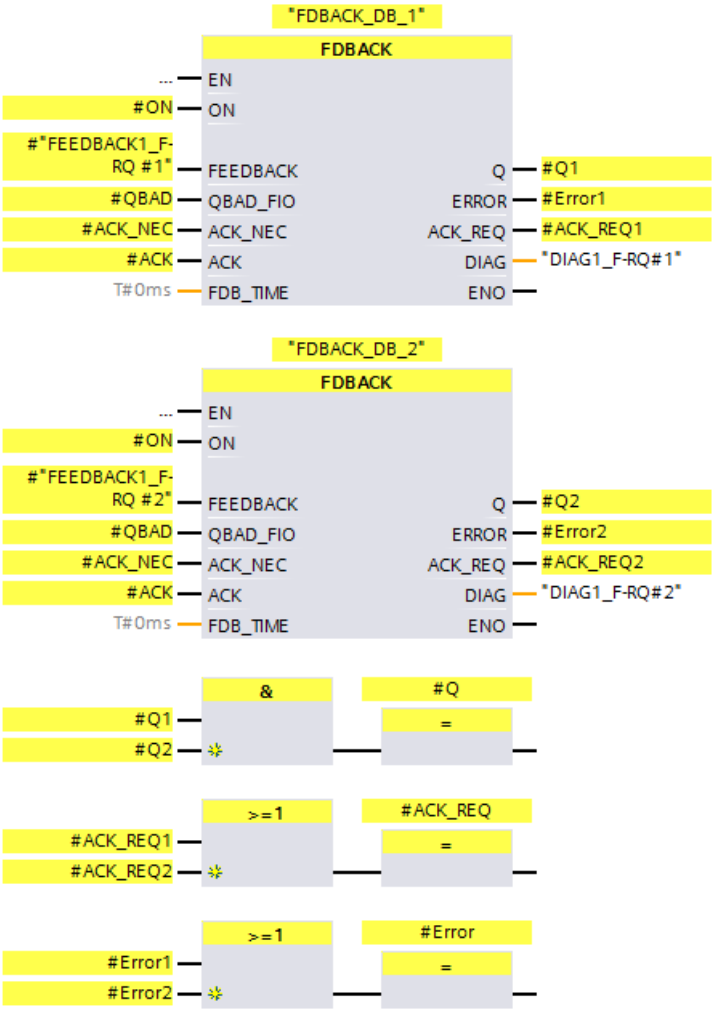

5.6 Application 5: 2 loads, single-pole switch-off with 2 F-RQ modules

Wiring diagram

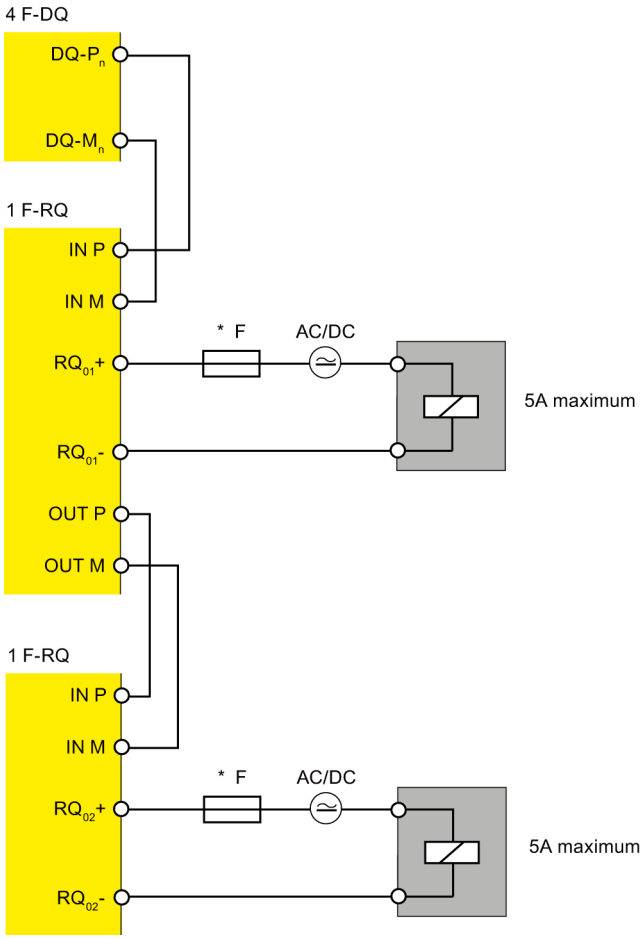

Figure 5-9 Wiring diagram for two F-RQ 1x24VDC/24..230VAC/5A to one F-DQ module

This application allows the single-pole switching of two loads with 5A each with two F-RQ modules. One power supply is not SELV/PELV.

WARNING

* Always install an external fuse with the following properties to protect the relay contacts from overload and short-circuits: Fuse, 6 A, operating class gL/gG or C6A miniature circuit breaker, rated short-circuit current of 400 A.

Note that for applications in accordance with EN 50156-1 the specified rated current of the overcurrent protective device must be multiplied by a safety factor of 0.6 to rule out the error "non-opening of contact elements due to permanent contact welding".

Reading back the relay contacts

In the safety program, always compare the readback value returned by the F-RQ module with the control status. In *STEP 7 Safety Advanced*, you can use the instruction "FDBACK: Feedback circuit monitoring" in your safety program (see the SIMATIC Safety - Configuring and Programming (http://support.automation.siemens.com/WW/view/en/54110126) manual).

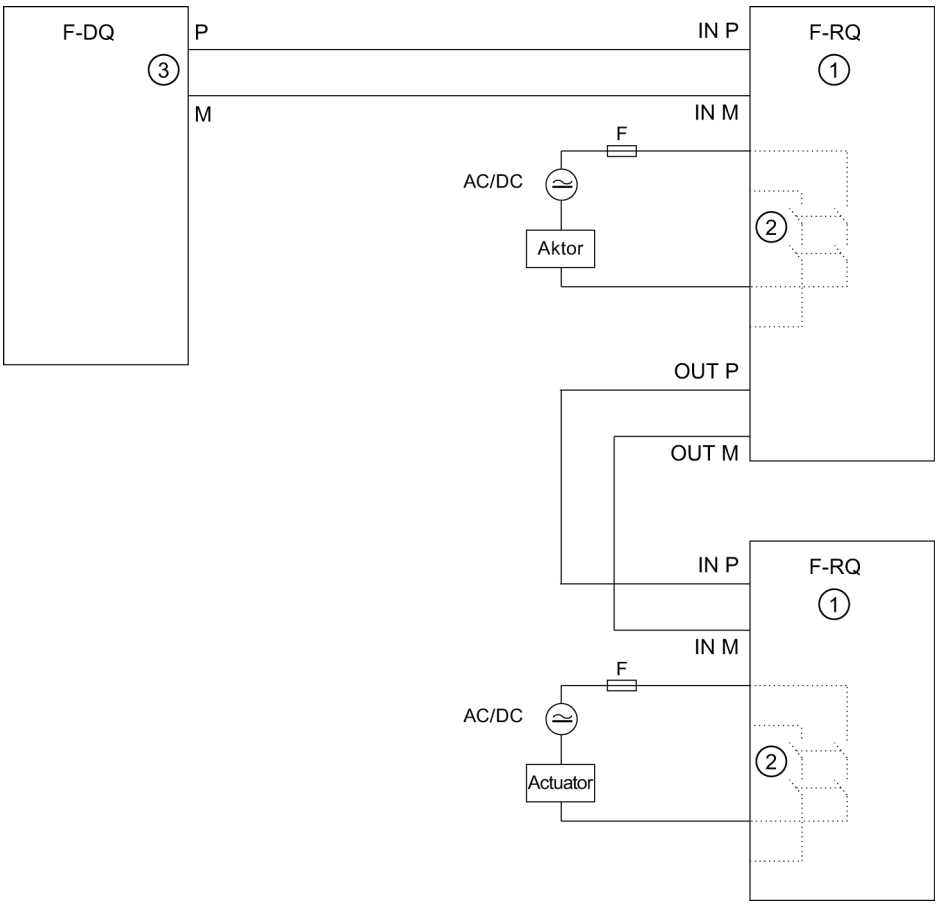

① F-RQ with integrated FEEDBACK input
② Relay contacts for switching the load
③ Output Q

Figure 5-10 Wiring example for the FDBACK instruction

If the 24 VDC control voltage falls below the value required for relay pick-up or if the wire to the input connectors breaks, the relays are released and "1" is read back instead of "0". This fault is only detected if the F-DQ module output is switched on.

If one of the two load contacts connected in series fails to open, "0" is read back by the module. The fault is detected by comparing this readback value with the setpoint "1" in the safety program. This fault is only detected if the control voltage is switched off.

Note

SIL3/category 4/PLe requires that there is a signal change at least once a month and that the process status is read back.

SIL2/category 3/PLd requires that there is a signal change at least once a year and that the process status is read back.

If a fault is detected during this function test, replace the F-RQ module.

Program example

For this application, program an FDBACK instruction for each F-RQ module as follows:

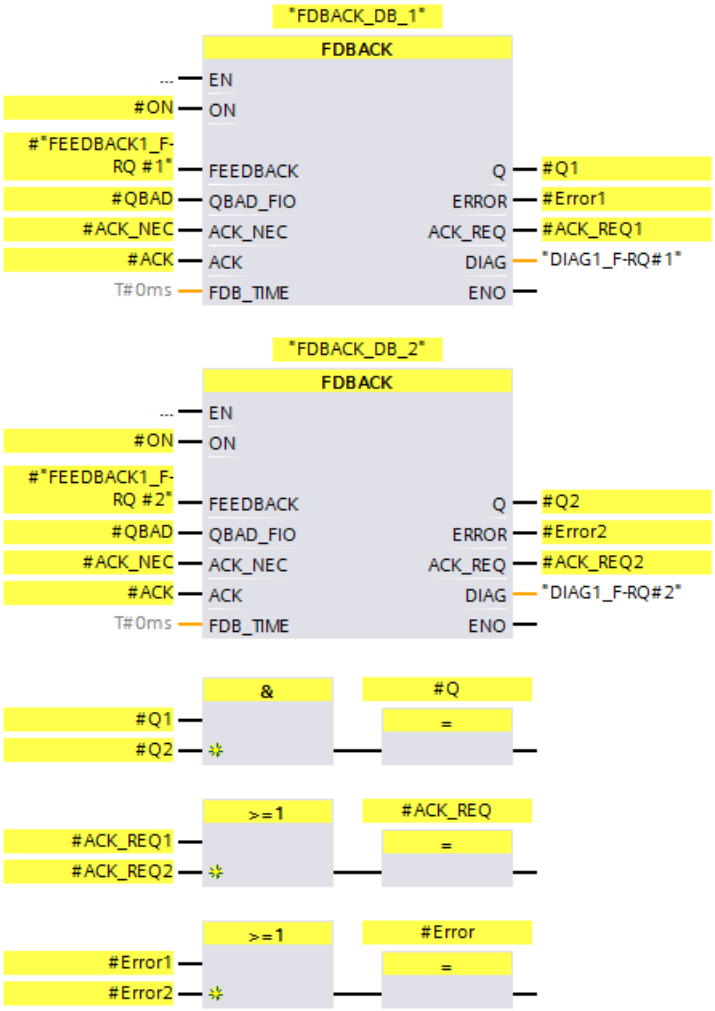

Status and error display

6

6.1 Status and error display

LED display

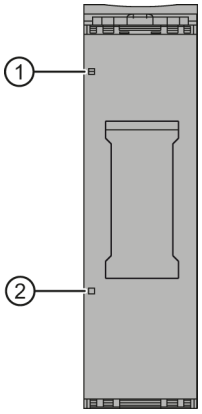

① DIAG (green/red)
② Channel status (green)

Figure 6-1 LED display

Meaning of the LED displays

The following tables explain the meaning of the status and error displays.

⚠ WARNING
The DIAG LED and the channel status LED of the output are not designed as safety-related LEDs and therefore must not be evaluated for safety-related activities.

DIAG LED

Table 6- 1 Meaning of the DIAG LED

DIAG	Meaning
□ Off	Backplane bus supply of the ET 200SP not OK
☼ Flashing	Module parameters not set
■ On	Module parameters set and no module diagnostics

Channel status LED

Table 6- 2 Meaning of the channel status LED

Status	Meaning
□ Off	Process signal = 0
■ On	Process signal = 1

Technical specifications 7

7.1 Technical specifications

Technical specifications of F-RQ 1×24VDC/24...230VAC/5A

	6ES7136-6RA00-0BF0
Product type designation	F-RQ 1x24VDC/24 ... 230VAC/5A
General information	
Hardware product version	01
Firmware version	V1.0.0
Product function	
I&M data	Yes; I&M0 to I&M3
Engineering with	
STEP 7 TIA Portal configurable/integrated as of version	V13
STEP 7 configurable/integrated as of version	V5.5 SP4 and higher
Installation type/mounting	
Rail mounting possible	Yes; standard mounting rail
Supply voltage	
Type of supply voltage	24 VDC
Rated value (DC)	24 V; coil voltage
Low limit of permitted range (DC)	20.4 V
High limit of permitted range (DC)	28.8 V
Power	
Power consumption from the backplane bus	100 mW
Power loss	
Power loss, typ.	1 W
Address range	
Address space per module	
Input	1 byte
Digital outputs	
Number of outputs	1
Voltage induced on current interruption limited to	No
Control of a digital input	Yes
Switching capacity of outputs	
With resistive load, max.	5 A
With lamp load, max.	25 W

	6ES7136-6RA00-0BF0
Switching frequency	
With resistive load, max.	2 Hz
With inductive load, max.	0.1 Hz; see information in the manual
With inductive load (to IEC 60947-5-1, DC13), max.	0.1 Hz
With inductive load (to IEC 60947-5-1, AC15), max.	2 Hz
Total current of the outputs (per module)	
Horizontal installation	
• Up to 40 °C, max.	5 A; note derating information in the manual
• Up to 50 °C, max.	4 A; note derating information in the manual
• Up to 60 °C, max.	3 A; note derating information in the manual
Vertical installation	
• Up to 50 °C, max.	3 A; note derating information in the manual
Relay outputs	
Number of relay outputs	1; 2 NO contacts
Rated input voltage of relay coil L+ (DC)	24 V
Current consumption of relays (coil current of all relays), max.	70 mA
External fuse for relay outputs	Yes, 6 A, see information in the manual
Relay approved acc. to UL 508	Yes; Pilot Duty B300 R300
Switching capacity of contacts	
• With inductive load, max.	See additional description in the manual
• With resistive load, max.	See additional description in the manual
• Thermal continuous current, max.	5 A
• Contact rating, min.	1 mA
• Contact rating after exceeding 300 mA, min.	10 mA
• Contact rating after exceeding 300 mA, max.	5 A
• Rated switching voltage (DC)	24 V
• Rated switching voltage (AC)	230 V
Length of cable	
Cable length, shielded, max.	500 m; for load contacts
Cable length unshielded, max.	300 m; for load contacts
Control cable (input), max.	10 m
Interrupts/diagnostics/status information	
Diagnostics messages	
Diagnostics	Yes, firmware update
Diagnostics display LED	
RUN LED	Yes; green/red DIAG LED
Channel status display	Yes; green LED

	6ES7136-6RA00-0BF0
Electrical isolation	
Electrical isolation, channels	
Between channels	Yes; only with SELV / PELV
Between the channels and the backplane bus	Yes
Between the channels and the supply voltage of the electronics	Yes
Permitted potential difference	
Between channels and backplane bus/supply voltage	250 VAC (reinforced insulation)
Between backplane bus and supply voltage	60 VAC/75 VDC
Insulation	
Insulation test voltage	2545 VDC 2 s (routine test)
Overvoltage category	III
Tested with	
Between channels and backplane bus/supply voltage	2545 VDC 2s (routine test), surge voltage test 7200 VDC/5 positive and 5 negative pulses (type test)
Between backplane bus and supply voltage	707 VDC (type test)
Standards, approvals, certificates	
Suitable for safety functions	Yes
Maximum achievable safety class in safety mode	
Performance level according to EN ISO 13849-1:2008	PLe
Category according to ISO 13849-1:2008	4
SIL according to IEC 61508:2010	SIL 3
Low demand (PFD) acc. to SIL2	<1.00E-04, proof test interval 1 year
Low demand (PFD) acc. to SIL3	<1.00E-05, proof test interval 1 month
High demand (PFH) acc. to SIL2	<1.00E-08 1/h, proof test interval 1 year
High demand (PFH) acc. to SIL3	<6.00E-09 1/h, proof test interval 1 month
Dimensions	
Width	20 mm
Weights	
Weight, approx.	56 g

Supplement to the technical specifications

Technical specifications	
Relay outputs	
Current consumption of relays (coil current of all relays), min.	20 mA
Permitted potential difference	
• Between NO contacts	75 VDC / 60 VAC
Insulation tested	
• Between the NO contacts	707 VDC (type test)

Derating

Note

As the modules are small, you need to monitor the heat build-up between adjacent modules if output modules are subject to high loads. A temperature rise in an output module exposed to a high load can result in shutdown and reduce plant availability. If the operating voltage > 25 VDC, the average total current of the modules directly adjacent should not exceed 50% of the levels listed in the technical specifications, and the ambient temperature should not exceed 50 °C.

If the ambient temperature exceeds 50 °C, supply voltage L+ must not exceed 25 VDC.

Dimension drawing

See ET 200SP BaseUnits (http://support.automation.siemens.com/WW/view/en/58532597/133300) manual

7.2 Mechanical and climatic ambient conditions

In contrast to the specifications for mechanical environmental conditions and mechanical environmental conditions testing in the "Mechanical and climatic ambient conditions" section of the ET 200SP distributed I/O system (http://support.automation.siemens.com/WW/view/en/58649293) system manual, the following applies to this F-module:

Mechanical ambient conditions

The following table shows the mechanical ambient conditions in the form of sinusoidal vibrations.

Table 7- 1 Mechanical ambient conditions

Frequency band	ET 200SP with BusAdapter BA 2×FC	ET 200SP with BusAdapter BA 2×RJ45/ BA 2xSCRJ
5 ≤ f ≤ 8.4 Hz	3.5 mm amplitude	
8.4 ≤ f ≤ 150 Hz	1 g constant acceleration	

Tests of mechanical ambient conditions

The following table provides important information about the type and scope of the tests for ambient mechanical conditions.

Table 7- 2 Tests of mechanical ambient conditions

Check for ...	Test standard	Comment
Vibration	Vibration test according to IEC 60068-2-6 (sinus)	Type of vibration: Frequency sweeps with a rate of change of 1 octave/minute. • 5 Hz ≤ f ≤ 8.4 Hz, 3.5 mm constant amplitude • 8.4 Hz ≤ f ≤ 150 Hz, 1 g constant acceleration Duration of vibration: 10 frequency sweeps per axis at each of three vertically aligned axes
Shock	Shock, tested according to IEC 60068-2-27	Type of shock: Half sine Shock intensity: 150 m/s^2 peak value, 11 ms duration Direction of shock: 3 shocks in each direction (+/-) at each of three vertically aligned axes

7.3 Switching capacity and service life of contacts

Switching capacity and service life of contacts

You can extend the service life beyond the value indicated in the tables below by installing an external protective circuit.

The tables below show the switching capacity and service life of the contacts.

Table 7- 3 Switching capacity and service life of contacts with resistive load

Voltage	Current	Duty cycles (typ.) NO contact
24 VDC	5.0 A	350000
	3.0 A	500000
	2.0 A	750000
	1.0 A	1800000
	0.5 A	4000000
230 VAC	5.0 A	100000
	3.0 A	150000
	2.0 A	200000
	1.0 A	400000
	0.5 A	800000

Table 7- 4 Switching capacity and service life of contacts with inductive load according to IEC 947-5-1 DC 13/ AC15

Voltage	Current	Duty cycles (typ.) NO contact
24 VDC	1.0 A	100000
	0.5 A	200000
230 VAC	1.0 A	200000
	0.5 A	350000

Table 7- 5 B10d values

AC	750000
DC	10000000

Response times

A

A.1 Response times

Introduction

The section below shows the response times of the digital output module F-RQ 1x24VDC/24..230VAC/5A. The response times of digital output module F-RQ 1x24VDC/24..230VAC/5A are included in the calculation of the F-system response time.

Definition of response time for fail-safe relay outputs

The response time defines the interval between controlling by means of a fail-safe digital output module until the signal change at the relay output.

Maximum response time without errors

The maximum response time for fail-safe relay outputs when there are no errors is equal to:

Max. response time = 16 ms

Readback response time

The readback response time for fail-safe relay outputs is equal to:

Readback response time = 30 ms

Maximum response time until error detection

Max. response time = cycle time of the safety program + max. readback time of the FDBACK instruction + max. response time of the F-DQ module + max. response time of the F-RQ module + 12.8 ms

SIEMENS

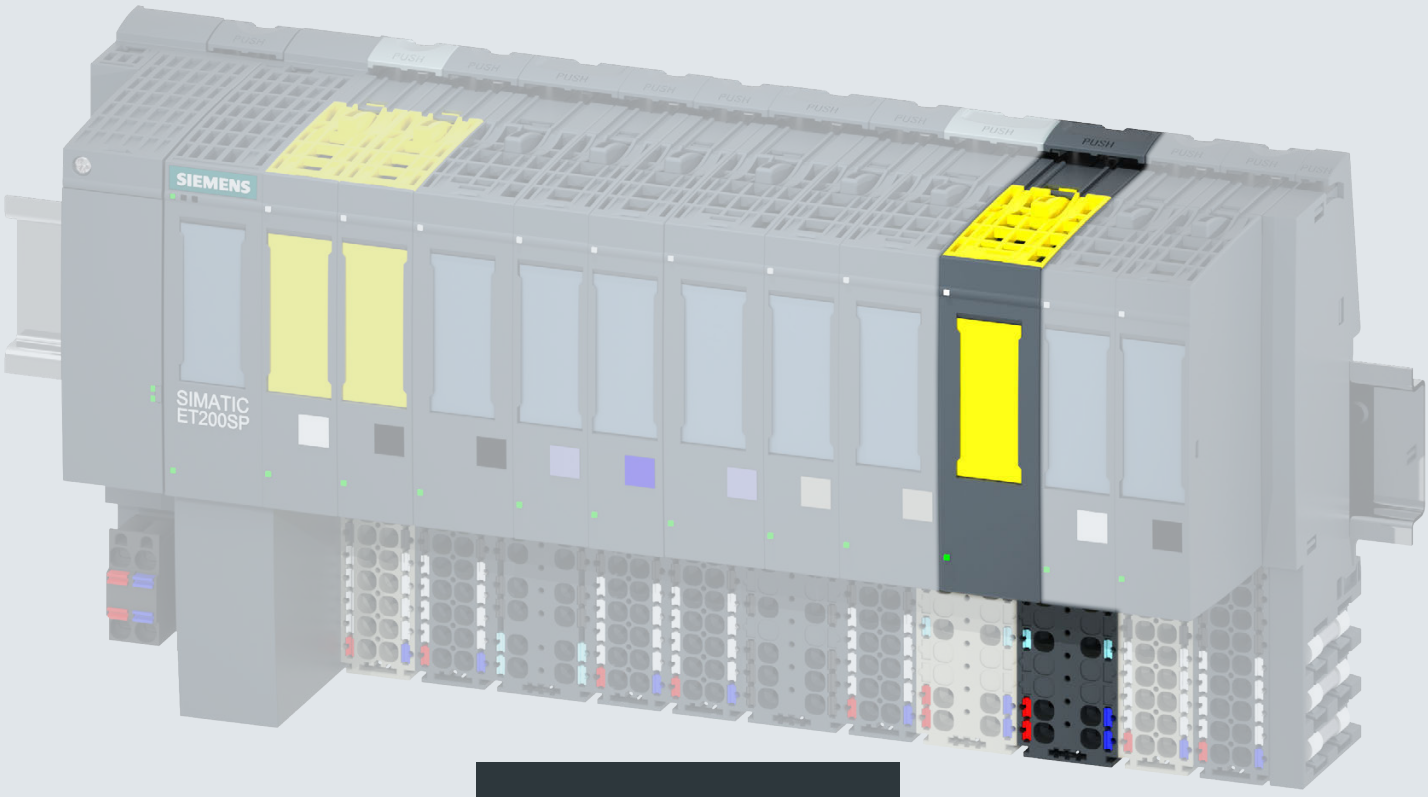

Manual

SIMATIC

ET 200SP

Fail-safe Modul F-CM AS-i Safety ST
3RK7136-6SC00-0BC1

Edition 03/2017

siemens.com

SIEMENS

SIMATIC

ET 200SP
Fail-safe Module
F-CM AS-i Safety ST
(3RK7136-6SC00-0BC1)

Manual

Preface

Documentation guide 1

Safety instructions 2

Product overview 3

Connection 4

Configuring 5

Assigning parameters / Setting the address space 6

Code sequences 7

Alarm, fault, and system events 8

Technical specifications 9

List of abbreviations A

References B

03/2017

A5E03957059020A/RS-AB/002

Legal information

Warning notice system

This manual contains notices you have to observe in order to ensure your personal safety, as well as to prevent damage to property. The notices referring to your personal safety are highlighted in the manual by a safety alert symbol, notices referring only to property damage have no safety alert symbol. These notices shown below are graded according to the degree of danger.

⚠ DANGER

indicates that death or severe personal injury **will** result if proper precautions are not taken.

⚠ WARNING

indicates that death or severe personal injury **may** result if proper precautions are not taken.

⚠ CAUTION

indicates that minor personal injury can result if proper precautions are not taken.

NOTICE

indicates that property damage can result if proper precautions are not taken.

If more than one degree of danger is present, the warning notice representing the highest degree of danger will be used. A notice warning of injury to persons with a safety alert symbol may also include a warning relating to property damage.

Qualified Personnel

The product/system described in this documentation may be operated only by **personnel qualified** for the specific task in accordance with the relevant documentation, in particular its warning notices and safety instructions. Qualified personnel are those who, based on their training and experience, are capable of identifying risks and avoiding potential hazards when working with these products/systems.

Proper use of Siemens products

Note the following:

⚠ WARNING

Siemens products may only be used for the applications described in the catalog and in the relevant technical documentation. If products and components from other manufacturers are used, these must be recommended or approved by Siemens. Proper transport, storage, installation, assembly, commissioning, operation and maintenance are required to ensure that the products operate safely and without any problems. The permissible ambient conditions must be complied with. The information in the relevant documentation must be observed.

Trademarks

All names identified by ® are registered trademarks of Siemens AG. The remaining trademarks in this publication may be trademarks whose use by third parties for their own purposes could violate the rights of the owner.

Disclaimer of Liability

We have reviewed the contents of this publication to ensure consistency with the hardware and software described. Since variance cannot be precluded entirely, we cannot guarantee full consistency. However, the information in this publication is reviewed regularly and any necessary corrections are included in subsequent editions.

Siemens AG
Division Digital Factory
Postfach 48 48
90026 NÜRNBERG
GERMANY

3ZX1012-0RK71-6CC1
℗ 03/2017 Subject to change

Copyright © Siemens AG 2014.
All rights reserved

Preface

Purpose of the documentation

This manual complements the ET 200SP distributed I/O system system manual. General functions of the ET 200SP are listed in the system manual ET 200SP distributed I/O system (http://support.automation.siemens.com/WW/view/en/58649293/0/en).

The information provided in this device manual and the system manual enables you to commission the ET 200SP distributed I/O system.

Table of contents

Preface 4

1 Documentation guide 7

2 Safety instructions 9

3 Product overview 13

3.1 Properties of the F-CM AS-i Safety ST 13

3.2 Operating modes of the F-CM AS-i Safety ST 16
3.2.1 Standard mode 16
3.2.2 Error statuses 17
3.2.2.1 Serious device fault 18
3.2.2.2 Device fault 19
3.2.2.3 Process signal error 20
3.2.2.4 Parameter assignment error 23

3.3 Firmware update 24

4 Connection 27

4.1 Terminal assignment 27

4.2 Schematic circuit diagram 31

5 Configuring 33

5.1 Configuring the F-CM AS-i Safety ST 33

5.2 Safety-related communication with AS-Interface 35
5.2.1 Operating principle of code sequences of safe AS-i slaves 35
5.2.2 Operating principle of the safe AS-i outputs 36

5.3 AS-i bus configuration with multiple F-CM AS-i Safety ST modules 38

5.4 Configuring with STEP 7 (classic) 39

5.5 Configuring with the TIA Portal 39

6 Assigning parameters / Setting the address space 41

6.1 Parameters 41

6.2 Explanation of the parameters 44
6.2.1 F-parameters 44
6.2.2 Potential group / AS-i network 44
6.2.3 Module parameters - General 46
6.2.4 Module parameters - Safe inputs 46
6.2.5 Module parameters - Safe outputs 52

6.3 Address space 54
6.3.1 Address assignment for user data and value status of the F-CM AS-i Safety ST module 54
6.3.2 Value status 56

6.4 Data records for diagnostics ... 57
6.4.1 DS 92 Device-specific diagnostics ... 57
6.4.2 DS 202 Status safe inputs/outputs ... 64
6.4.3 DS 204 Status code sequences ... 66
6.4.4 DS 206 Diagnostic data record ... 69

7 Code sequences ... 75

7.1 Transferring code sequences via STEP 7 online access ... 76
7.1.1 "Teach ASIsafe code sequences" dialog ... 76
7.1.2 Transferring taught code sequences ... 80
7.1.3 "Progress of teaching operation" display ... 80

7.2 Transferring code sequences with the "TEACH" button. ... 81

7.3 Final steps ... 82
7.3.1 Reintegrating passivated input channels ... 82

8 Alarm, fault, and system events ... 83

8.1 Overview ... 83

8.2 LED statuses ... 84
8.2.1 Arrangement of the LEDs on the F-CM AS-i Safety ST ... 84
8.2.2 Meaning of the LEDs ... 85

8.3 Diagnostic messages ... 90

8.4 Replacement of defective devices ... 91
8.4.1 Replacing a safe AS-i input slave ... 91
8.4.2 Replacing the safe AS-i output module (evaluation unit) ... 91
8.4.3 Replacing the F-CM AS-i Safety ST module ... 92

9 Technical specifications ... 93

9.1 Technical data in Siemens Industry Online Support ... 93

9.2 Configuration software ... 93

9.3 Safe technical specifications ... 94

9.4 Response times ... 95

9.5 Calculation of monitoring times and response times ... 97

A List of abbreviations ... 99

A.1 List of abbreviations ... 99

B References ... 101

B.1 References ... 101

Glossary ... 102

Index ... 106

Documentation guide

1

Introduction

The following paragraph gives you an overview of the additional documentation you need to use the F-CM AS-i Safety ST.

Documentation for the distributed I/O system ET 200SP with the F-CM AS-i Safety ST

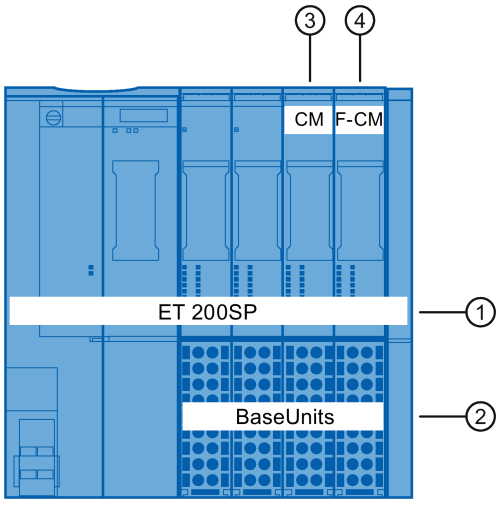

Figure 1-1 Example of a system structure

Table 1- 1 Documentation for the distributed I/O system ET 200SP with the F-CM AS-i Safety ST

No.	Component	Documentation	Most important contents
①	System	Fail-safe modules: Product Information ET 200SP Distributed I/O System (http://support.automation.siemens.com/WW/view/en/78361093/0/en) ET 200SP distributed I/O system (http://support.automation.siemens.com/WW/view/en/58649293/0/en)	• Application planning • Installation • Connecting • Commissioning • Technical specifications
		Fail-safe system: Programming and Operating Manual S7 Distributed Safety (http://support.automation.siemens.com/WW/view/en/22099875/0/en) Programming and Operating Manual SIMATIC Safety (http://support.automation.siemens.com/WW/view/en/54110126/0/en)	• Configuration • Programming

No.	Component	Documentation	Most important contents
②	BaseUnits	SIMATIC ET 200 SP BaseUnits (http://support.automation.siemens.com/WW/view/en/59753521/0/en)	• Connecting • Technical specifications
③	CM AS-i Master ST	Manual CM AS-i Master ST for SIMATIC ET 200SP (http://support.automation.siemens.com/WW/view/en/71756485)	• Commissioning • Technical specifications
④	ET 200SP F-CM AS-i Safety ST fail-safe module	Device manual ET 200SP F-CM AS-i Safety ST fail-safe module (3RK7136-6SC00-0BC1)	• Installation • Connecting • Configuration

Safety instructions 2

Important safety instructions

WARNING

Failure to observe this information may result in death, severe injury, and serious property damage.

For operation in Pollution Degree 2 environment.

WARNING

Failure to observe this information may result in death, severe injury, and serious property damage.

When used in hazardous environments corresponding to Class I, Division 2 or Class I, Zone 2, the device must be installed in a cabinet or an enclosure. To comply with EU Directive 94/9 (ATEX 95), this enclosure must meet the requirements of at least IP54 according to EN 60529.

WARNING

Explosion hazard; failure to observe this information may result in death, severe injury, and serious property damage.

Wires must not be connected to the device or disconnected from the device within a flammable or combustible environment.

WARNING

Explosion hazard; failure to observe this information may result in death, severe injury, and serious property damage.

Do not disconnect live wires from the device if it cannot be ensured that an explosive atmosphere is not present in the environment.

WARNING

Explosion hazard; failure to observe this information may result in death, severe injury, and serious property damage.

Replacement of components may impair suitability for Class I, Division 2 or Zone 2.

WARNING

Explosion hazard; failure to observe this information may result in death, severe injury, and serious property damage.

Do not open the device when the supply voltage is switched on.

WARNING

Connection only to safety extra-low voltage with limiting of output voltage to max. 40 V under fault condition

Connect the BaseUnit only to an AS-i power supply unit that meets the conditions indicated in the Section "Power supply units for AS-Interface". Connection to a higher voltage may result in death, severe injury, and serious property damage.

For this reason, you are only permitted to connect safety extra-low voltage (SELV) with limited power source (LPS) according to IEC 60950-1, EN 60950-1, VDE 0805-1 to the supply connections.

The supply of the device must comply with NEC Class 2, as described by the National Electrical Code (r) (ANSI / NFPA 70).

WARNING

Failure to observe this information may result in death, severe injury, and serious property damage.

Take measures to prevent transient overvoltages of more than 40% of the rated voltage. You can ensure this by using only AS-i power supply units that meet the requirements indicated in Section Terminal assignment (Page 27) in "Power supply units for AS-Interface". Transient overvoltages are not permitted to exceed 119 V under any circumstances. This will ensure compliance with an ATEX requirement.

CAUTION

Failure to observe this information may result in property damage and bodily injury

This device is only suitable for use in areas defined as Class I, Division 2, Groups A, B, C, and D and is not suitable for use in hazardous areas.

WARNING

To be operated by experienced users only

Improper operation may result in death, severe injury, and serious property damage. Users must be familiar with ASIsafe and the safety system used, e.g., SIMATIC, Distributed Safety, SIMATIC Safety Advanced.

Only an experienced user is permitted to teach the code sequences of safe AS-i slaves (organizational specification).

CAUTION

Failure to observe this information may result in property damage and bodily injury

This equipment is only suitable for use in areas defined as Class I, Zone 2, Group IIC and in non-hazardous areas.

NOTICE

Checking parameters

Check that all parameters are correctly set before final acceptance.

NOTICE

Reaction to faults in fail-safe modules

If you are using the module in safety-critical applications, the PROFIsafe mechanism of passivation and reintegration is enabled and must be used.

Observe the information concerning passivation and other fault reactions in the documentation for the ET 200SP Distributed I/O System, see Section Documentation guide (Page 7).

NOTICE

Single-channel use of safe AS-i input slaves

The values in the PROFIsafe process image input have Safety Integrity Level SIL 3.

If two-channel interconnection is not used for a safe AS-i input slave, the application has a maximum safety integrity level of SIL 2 or less. The configuration tool / STEP 7 cannot detect this.

You must ensure that the signals are correctly processed in the safety application.

NOTICE

Ensure that the plant is functioning correctly in productive operation

Carry out a function test before the system goes into productive operation.

Important note for maintaining the operational safety of the system

Note

Newsletter containing information on product development and product features

Owners of systems with safety-related characteristics must ensure compliance with special operational safety requirements. Suppliers are required to comply with special product monitoring measures. For this reason, Siemens publishes a special newsletter containing information on product developments and features that are (or could be) relevant to operation of systems from a safety perspective. A newsletter keeps you constantly up to date in this regard. A subscription to the newsletter is necessary so that you can make any needed changes to your system. To sign up for the newsletter, go to:

Internet (https://www.industry.siemens.com/newsletter)

Select "Service & Support" > "Industry Online Support" > "Automation Technology" > "AS-Interface". Select the "Update" entry type.

See also

References (Page 101)

Product overview

3

3.1 Properties of the F-CM AS-i Safety ST

Item number

3RK7136-6SC00-0BC1

View of the module

Figure 3-1 View of the F-CM AS-i Safety ST module

Use of the module

The F-CM AS-i Safety ST module is a communication module for use in the SIMATIC ET 200SP Distributed I/O System.

The F-CM AS-i Safety ST module features a 20 mm wide ET 200SP module housing. A BaseUnit (BU) is required for use in the ET 200SP. The F-CM AS-i Safety ST module can be plugged in to:

- BaseUnit Type C0
- BaseUnit Type C1

The F-CM AS-i Safety ST fail-safe communication module expands a standard AS-Interface network to include safety-related communication.

The F-CM AS-i Safety ST module reads the input states of safety-related AS-Interface input modules and provides these states to a fail-safe F-CPU for further evaluation.

In the opposite direction, the F-CM AS-i Safety ST module receives safe output states of an F-CPU and outputs them for control of safety-related outputs on AS-Interface.

The F-CM AS-i Safety ST fail-safe module supports safety-related applications up to SIL 3 according to EN 62061 or safety category up to PL e according to EN 13849-1. The input and output values of the safety-related AS-i slaves are addressed using the safe cyclic process image. You need an F-CPU for safe processing.

The F-CM AS-i Safety ST module has no AS-i master functionality. For operation of the AS-i network, you need a CM AS-i Master ST module (3RK7137-6SA00-0BC1) or another AS-i master conforming to AS-i Specification V3.0.

You can plug several F-CM AS-i Safety ST modules into one SIMATIC ET 200SP station. An F-CM AS-i Safety ST occupies 16 input bytes and 8 output bytes in the I/O address space. The number of F-CM AS-i Safety ST modules that can be plugged in depends on:

- The maximum address space of the utilized interface module (IM) of the ET 200SP
- The amount of address space occupied by other modules

Up to five module combinations of CM AS-i Master ST (32 input bytes/32 output bytes) and F-CM AS-i Safety ST (16 input bytes/8 output bytes) can be plugged in to one SIMATIC ET 200SP station with standard interface module IM 155-6 PN ST having a maximum address space of 256 input bytes/256 output bytes. If other modules are present in the ET 200SP station, the available address space and the maximum number of AS-i modules are reduced.

In a SIMATIC ET 200SP station with High Feature Interface Module IM 155-6 PN HF and a maximum address space of 1 440 input bytes/1 440 output bytes, a correspondingly greater number of modules can be plugged in.

You can find additional information in ET 200SP System Manual (http://support.automation.siemens.com/WW/view/en/58649293/0/en).

Properties

- Technical properties
  - Gateway between PROFIsafe and ASIsafe, without master functionality
  - Expands a standard AS-i network to include safety-related communication (ASIsafe)
  - Transfer of safety-related digital I/O values in the cyclic process image
  - Monitoring of up to 31 safety-related input slaves
  - Control of up to 16 safety-related AS-i output slaves or switch-off groups
  - Power supplied from the AS-i voltage
  - Use of various interconnection types (1oo1 and 1oo2) is possible
  - Input delay of 0 ms to 150 ms can be assigned for each channel
  - Startup test can be activated for each channel
  - Discrepancy monitoring can be configured for each channel
  - Sequence monitoring can be set for each channel
  - Channel-wise passivation
  - Test for 0 signal before reintegration
  - 8 LED displays for status and error diagnostics
- Supported functions
  - I&M identification data
  - PROFIsafe V2.4
  - Firmware update

NOTICE
Max. proof test interval When the proof test interval has expired, you must replace the device; see "Technical specifications (Page 93)".

- New properties as from FW V1.0.1
  As from product version 02, the module is shipped with FW V1.0.1 (or higher).
  - Extended functions (diagnostic texts)
  - New messages
  - New diagnostics data record 206

For more information, see Section "Parameterizing (Page 41)".

Accessories

The following components can be used with the module:

- Labeling strips
- Reference identification label

Ease of maintenance

The following features support maintenance:

- Code sequences are saved in the coding element. As a result, teaching of the code sequences does not have to be repeated after an F-CM AS-i Safety ST module is replaced.
- Use is automated to the greatest extent possible. This applies, in particular, to the teaching of the code sequences of safe AS-i slaves.
- An F-address that has already been assigned is stored in the coding element. This means that there is no need to repeat teaching-in after replacing the F-CM AS-i Safety ST module.
- The module/BaseUnit concept allows you to easily replace defective hardware. Remove the defective module from the rack and plug in the new module.

Further information can be found in the Section "Code sequences (Page 75)".

Certifications

More detailed information regarding certifications can be found in the ET 200SP System Manual (http://support.automation.siemens.com/WW/view/en/58649293/0/en).

3.2 Operating modes of the F-CM AS-i Safety ST

3.2.1 Standard mode

Self test during device startup

After the AS-i voltage is switched on (PWR LED shows steady green light), the F-CM AS-i Safety ST module performs a comprehensive self-test. During this test, all LEDs are lit for approximately 3 seconds. Exception: the "DIAG" LED is controlled directly by the ET 200SP backplane bus and indicates the communication status for the ET 200SP system.

Checking of the F-address

After the self-test, the module checks the F-address. If no valid F-address is available, the "DIAG" and "PROFIsafe" LEDs flash red (the status LED flashes green). You must then assign the F-address, see Section "F-parameters (Page 44).

Downloading of the module parameters

The F-CM AS-i Safety ST then begins to read in code sequences of the safe AS-i slaves on the connected AS-i bus. At the same time, the module downloads the module parameters that were stored in the PLC CPU. The module parameters can only be downloaded when the operating voltage is applied to the interface module of the ET 200SP and the parameters have been made available by the PLC CPU during startup of the ET 200SP station.

The "Status" LED flashes green until the module parameters are completely downloaded or the PLC CPU is in STOP state, or the PLC communication is interrupted.

Cyclic data exchange of safe input/output data

When a valid set of module parameters has been downloaded and the PLC CPU is in "RUN" state, the safe input/output data is evaluated according the parameter assignment and exchanged with the PLC CPU.

The PROFIsafe protocol is used for the data exchange.

The "Status" LED is lit green during cyclic data exchange.

If the F-CM AS-i Safety ST module starts cyclic data exchange directly after startup, but communication cannot yet be established on the AS-i bus, the F-CM AS-i Safety ST module supplies the substitute value "0" in the input image. Passivation is delayed by a maximum of 30 s in this case. As a result, communication can start on the AS-i bus within this time window without passivation. After this time window, the input/output channels are passivated if there is no AS-i communication.

3.2.2 Error statuses

Note

Statuses not considered to be errors

The F-CM AS-i Safety ST module does not consider the following statuses to be errors, i.e. no alarm and no passivation is triggered:

- Waiting for start-up test
- Input/output with value = 0 in the process image without error condition, e.g. normal opening of the input contacts by pressing an emergency stop button or opening a protective door.

Diagnostic information can be read out in the user program using data records. For information, please refer to Section "Data records for diagnostics (Page 57)".

3.2.2.1 Serious device fault

Description

Examples of conditions that trigger a serious device fault are:

- Fault in the electronics
- Repeated synchronization error

You can read the following pattern on the LEDs:

Table 3- 1 LED display for a serious device fault

LED	Display
"Status"	☐ "Off"
"Error"	■ Red "On"
"CFG"	■ Red "On"
"PSF"	■ Red "On"

In the event of a serious device fault, communication with the F-CM AS-i Safety ST module, e.g., reading a data record, is not possible. The substitute value "0" is processed for inputs and outputs, and all channels are passivated.

1. Switch off the module.
2. Wait for the module to cool down, if necessary.
3. Switch on the device again.
4. If the error persists after the module is switched on, the module must be replaced.

3.2.2.2 Device fault

Description

Examples of conditions that trigger a device fault are:

- Device fault (e.g. sporadic synchronization error, see also DS92)
- Configuration error (e.g. problem with contact to backplane bus, coding plug missing, see also DS92)

You can read the following pattern on the LEDs:

Table 3- 2 LED display for device faults

LED	Display
"Status"	☐ "Off"
"Error"	✻ Red "flashes"
"CFG"	☐ "Off"
"PSF"	☐ "Off"

In the event of a device fault of this type, communication with the F-CM AS-i Safety ST module is only possible. e.g., for reading out additional diagnostic information via data records. The substitute value "0" is processed for inputs and outputs, and all channels are passivated.

- Make sure that the station is properly grounded.
- Check whether the coding element is present or replace it if necessary.
- Plug the module into the BaseUnit in an untwisted position.

Switch off the module. If the error persists after the module is switched on and no external error cause can be found, the module must be replaced.

3.2.2.3 Process signal error

Description

Examples of conditions that trigger a process signal error are:

- Discrepancy error at the inputs of a safe AS-i input slave
- Sequence error at the inputs of a safe AS-i input slave
- Sporadic code sequence error (from FW V1.0.1), e.g. fault caused by EMC in the input circuit
- Code sequence error at a safe AS-i input slave, e.g. due to cross-circuit at the inputs
- Failure of a safe AS-i input slave

You can read the following pattern on the LEDs:

Table 3- 3 LED display for discrepancy error or sequence error

LED	Display
"Status"	■ Green "On"
"Error"	□ "Off"
"CFG"	□ "Off"
"PSF"	✻ Red "flashes"

Table 3- 4 LED display for code sequence errors (e.g. due to cross-circuit) or for slave failure

LED	Display
"Status"	■ Green "On"
"Error"	□ "Off"
"CFG"	✻ Red "flashes"
"PSF"	✻ Flashes red if the CPU is in RUN "off" if the CPU is in STOP.

In the event of a process signal error, the F-CM AS-i Safety ST module remains in cyclic data exchange. Only at the safe input slave involved in each case is the substitute value "0" processed and the channel passivated. After the cause of the error has been eliminated, the channel can be reintegrated via the safety program.

The "PSF" LED goes out only after all channels have been reintegrated.

The "DIAG" LED switches from flashing red to green as soon as all errors that led to a passivation of the individual channels have been cleared.

Communication with the F-CM AS-i Safety ST module is possible, for example, for reading out additional diagnostic information via data records.

Response to code sequence errors

- Sporadic code sequence error
  Momentary interruption to code sequence, e.g. due to electromagnetic interference on the sensor cable.
  Behavior as from firmware V1.0.1:
  - Sporadic code sequence error leads to passivation of the channel, which must then be reintegrated.
  - Safety input bit of the channel is reset to substitute value 0 until the channel is reintegrated.
  - The resetting to the substitute value 0 takes place without any delay.
  - Diagnostic alarm is triggered (after a short delay, in order to distinguish between sporadic code sequence errors and general code sequence errors).
  - Response to FW V1.0.0
  - No message as diagnostic alarm in FW V1.0.0 and no passivation of the channel.
  - Safety input bit of the channel is reset to substitute value 0 without a delay and automatically switches to the process value 0 or 1 if there is no interference to the code sequence.
- Code sequence error (general)
  Permanent interruption to code sequence, e.g. due to electromagnetic interference on the sensor cable or code sequence corruption after replacement of the fail-safe input module.
  Behavior (identical for firmware V1.0.0 and V1.0.1 or higher):
  - Code sequence error leads to passivation of the channel, which must then be reintegrated.
  - Safety input bit of the channel is reset to substitute value 0 until the channel is reintegrated.
  - The reset to the substitute value 0 takes place without a delay, while the diagnostic alarm is triggered after a short delay (delay necessary in order to distinguish between sporadic code sequence errors and general code sequence errors).

3.2.2.4 Parameter assignment error

Description

In the event of invalid configuration data, the cyclic data exchange will not start.

You can read the following pattern on the LEDs:

Table 3- 5 LED display for parameter assignment errors

LED	Display
"Status"	✳ Green "flashing"
"Error"	☐ "Off"
"CFG"	☐ "Off"
"PSF"	✳ Red "flashes"

1. Check the hardware configuration in *STEP 7*.
2. Perform a compilation.
3. Download the configuration data to the PLC CPU.

3.3 Firmware update

Performing a firmware update

Information about updating the firmware can be found in the ET 200SP System Manual.

Note

Noting the firmware version

After a firmware update, mark the current firmware version on the housing of the F-CM AS-i Safety ST.

Note

Requirement for the firmware update

Always perform the firmware update of the F-CM AS-i Safety ST in a separate ET 200SP rack. Ensure that no other modules besides the interface module (IM), the F-CM AS-i Safety ST, and the terminating server module are located in the ET 200SP rack.

During the firmware update of the F-CM AS-i Safety ST module, the associated CPU must be in the STOP operating state. To do this, switch the CPU to the STOP state before starting the firmware update.

Note

If the FW V1.0.0 is replaced by another FW version, then an intermediate step is necessary. If you would like to replace a higher FW version with FW version V1.0.0, then this intermediate step is also necessary.

As an intermediate step, the Bootloader Version (B1.0.0) of the firmware must be loaded before the actual firmware V1.x.x.

NOTICE

Observe references to the download page for executing the firmware change
Failure to do so can result in the destruction of the device.

The firmware versions are made available in the Online Support:
Online Support (https://support.industry.siemens.com/cs/ww/en/view/109743655)

NOTICE

Checking the firmware version for F-permission

Before using a new firmware version, check whether it is permitted for use in the respective module.

The permissible firmware version is specified in the appendices of the F-CM AS-i Safety ST Safety certificate.

See also:

Certificate for failsafe module F-CM AS-i Safety ST (3RK7136-6SC00-0BC1)
(https://support.industry.siemens.com/cs/ww/en/view/90477145)

Certificate for ET 200SP modules
(http://support.automation.siemens.com/WW/view/en/49368678/134200)

Handling of the F-address and the code sequences

Note

Saving of the F-address in the coding element

During a firmware update, the F-address that is saved in the coding element is retained. Observe the information in the description of the firmware version.

Note

Saving of the code sequences in the coding element

During a firmware update, the ASIsafe code sequences that are saved in the coding element are retained. Observe the information in the description of the firmware version.

LED behavior during a firmware update

During a firmware update, the LEDs exhibit the following behavior:

- "DIAG" LED flashes red.
- "ADDR" LED flashes green.
- "PWR" LED lights up green.
- The rest of the LEDs are Off.

Note

Supply voltage during a firmware update

The AS-i voltage and the supply voltage of the ET 200SP station must not be switched off during a firmware update.

On successful completion of a firmware update, the module performs a hot restart. It is not necessary to switch off the voltage.

After the restart, the LEDs indicate the status of the F-CM AS-i Safety ST same as after a device startup.

If the firmware update cannot be completed, switch the AS-i voltage off and back on again and repeat the firmware update.

See also

Error statuses (Page 17)

Connection 4

4.1 Terminal assignment

Requirement

For connecting, you require a BaseUnit:

- Type C1 (dark BaseUnit, e.g., item number 6ES7193-6BP20-0BC1)
- Type C0 (light BaseUnit, e.g., item number 6ES7193-6BP20-0DC0)

Note that, within a BaseUnit group for AS-i consisting of light and dark BaseUnits, only the AS-i modules CM AS-i Master ST and F-CM AS-i Safety ST may be combined. Other module types of the ET 200SP must always be separated from the BaseUnit group for AS-i using light BaseUnits.

WARNING

Connection of the BaseUnit only to safety extra-low voltage with limiting of output voltage to max. 40 V under fault condition

Connect the BaseUnit only to AS-i power supply units that meet the requirements given in Section "Power supply units for AS-Interface". Connection to a higher voltage may result in death, severe injury, and serious property damage.

Variants

Use with light BaseUnit Type C0

If the F-CM AS-i Safety ST module is connected to an AS-i network whose AS-i master is located outside the ET 200SP station, use the light BaseUnit Type C0.

If the AS-i master is located within the ET 200SP station, you can also use the light BaseUnit. However, you must wire the AS-i network explicitly using the connecting terminals.

The light BaseUnit Type C0 has no internal connection to the module plugged in on the left.

Use with dark BaseUnit Type C1

If you are using a combination of CM AS-i Master ST and F-CM AS-i Safety ST on the same AS-i network, use the dark BaseUnit. In this case, plug the CM AS-i Master ST module into a light BaseUnit Type C0. Next to it on the right, plug the F-CM AS-i Safety ST module into a dark BaseUnit Type C1.

In this case, connect the AS-i network to the light BaseUnit. The dark BaseUnit does not have to be connected to the AS-i network because the connection is made automatically via the BaseUnit group.

In contrast to other BaseUnit types, for the BaseUnits Type C0 and Type C1, the P1 and P2 busbars of the BaseUnit are electrically isolated from the front panel connecting terminals 1L/2L (ASI+) and 1N/2N (ASI-). An electrical connection is made in each case via the plugged-in CM AS-i Master ST module or F-CM AS-i Safety ST module.

The AS-i voltage connected to the light BaseUnit Type C0 is applied through the plugged CM AS-i Master ST module to the busbars. The busbars of the BaseUnit group are connected-through. The F-CM AS-i Safety ST module is supplied with AS-i voltage via the busbars of the dark BaseUnit Type C1. It is not permitted to continue the AS-i voltage from the front panel connecting terminals 1L/2L (ASI+) and 1N/2N (ASI-) of the dark BaseUnit because this type of current draw can cause an overload in the modules.

If you want to maintain the voltage supply of the F-CM AS-i Safety ST module when the CM AS-i Master ST module is unplugged from the light BaseUnit, you can wire an external connection of the connecting terminals 1L/2L (ASI+) and 1N/2N (ASI-) between the light BaseUnit Type C0 and the dark BaseUnit Type C1.

Grouping of a light BaseUnit Type C0 with several dark BaseUnits Type C1

The use of a single F-CM AS-i Safety ST module on an AS-i network is generally sufficient. If several F-CM AS-i Safety ST modules are being used on an AS-i network by means of series connected dark BaseUnits Type C1, you must wire an external connection of the connecting terminals 1L/2L (ASI+) and 1N/2N (ASI-) between the light BaseUnit Type C0 and a dark BaseUnit Type C1. This will prevent an overload of the modules. A current draw from the dark BaseUnit is not allowed. Additional information about this can be found in "Use with dark BaseUnit Type C1".

General terminal assignment

Table 4- 1 Terminal assignment of the F-CM AS-i Safety ST

Terminal	Assignment	Description
1	TEACH1	Connection of the "TEACH" button (optional)
2	TEACH2	See Section Code sequences (Page 75).
3	RES	Reserved
4	RES	Reserved
5	RES	Reserved
6	RES	Reserved
1L, 2L[1)]	ASI+	Dark BaseUnit Type C1: optional connection of the AS-i cable, positive polarity Light BaseUnit Type C0: connection of the AS-i cable, positive polarity
1N, 2N [1)]	ASI-	Dark BaseUnit Type C1: optional connection of the AS-i cable, negative polarity Light BaseUnit Type C0: connection of the AS-i cable, negative polarity

1) The terminals are connected through in the BaseUnit.

Connecting an external "TEACH" button

You can connect a "TEACH" button to the "TEACH1" and "TEACH2" terminals of the F-CM AS-i Safety ST module. The "TEACH" button enables the transfer of code sequences of the connected safe AS-i input slaves. This function is activated by closing the button contact on the TEACH1 and TEACH2 terminals.

The maximum cable length between the terminal and "TEACH" button is 0.5 m.

Use two wires routed in parallel for connecting the button (not included in the scope of delivery).

Additional rules and instructions for operating the ET 200SP with fail-safe modules

Observe generally the information in Section "Connecting" in the following documentation:

- Manual ET 200SP distributed I/O system (http://support.automation.siemens.com/WW/view/en/58649293/0/en)
- Product Information ET 200SP Distributed I/O System (http://support.automation.siemens.com/WW/view/en/78361093/0/en)

The conditions for connecting sensors and actuators to the modules of the ET 200SP also apply generally to the connecting of sensors and actuators to the slaves and modules of the AS-i network.

In addition, the information in the documentation of the AS-i component applies.

Ensure that all components of the AS-i network are connected in such a way that the voltage applied to the safety-related AS-i modules is limited to a maximum of 40 V.

The ET 200SP modules CM AS-i Master ST and F-CM AS-i Safety ST have internal safe electrical isolation from the backplane bus of the ET 200SP.

Power supply units for AS-Interface

A connected power supply unit must have the following properties:

- Rated output voltage 30 V DC (AS-Interface Standard) or 24 V DC (AS-i Power24V)
- PELV/SELV (Protective/Safety Extra-Low Voltage) standard
- Residual ripple < 250 mVpp
- Limiting of output voltage to a maximum of 40 V in the event of a fault, including a second fault.

The Siemens power supply units for AS-Interface meet these requirements. For additional information, refer to the operating instructions of the power supply unit.

Use an AS-Interface power supply unit with integrated data decoupling or a combination of a power supply unit that meets the above-indicated requirements and an AS-i data decoupling unit.

In the following text, the expression "AS-i power supply unit" stands, unless described otherwise, for an AS-Interface power supply unit with integrated data decoupling or a combination of a power supply unit and an AS-i data decoupling unit.

When AS-i Power24V is used, there are limitations on the cable length (max. 50 m AS-i cable) and usability of AS-i components and connected sensors/actuators due to the reduced voltage.

Use a PELV / SELV power supply when operating the F-CM AS-i Safety ST module on PROFIsafe.

Additional notes:

- AS-Interface System Manual (http://support.automation.siemens.com/WW/view/en/26250840/0/en)
- FAQ "Compatibility for AS-i Power24V" (http://support.automation.siemens.com/WW/view/en/20025980/133000)

4.2 Schematic circuit diagram

Schematic circuit diagram

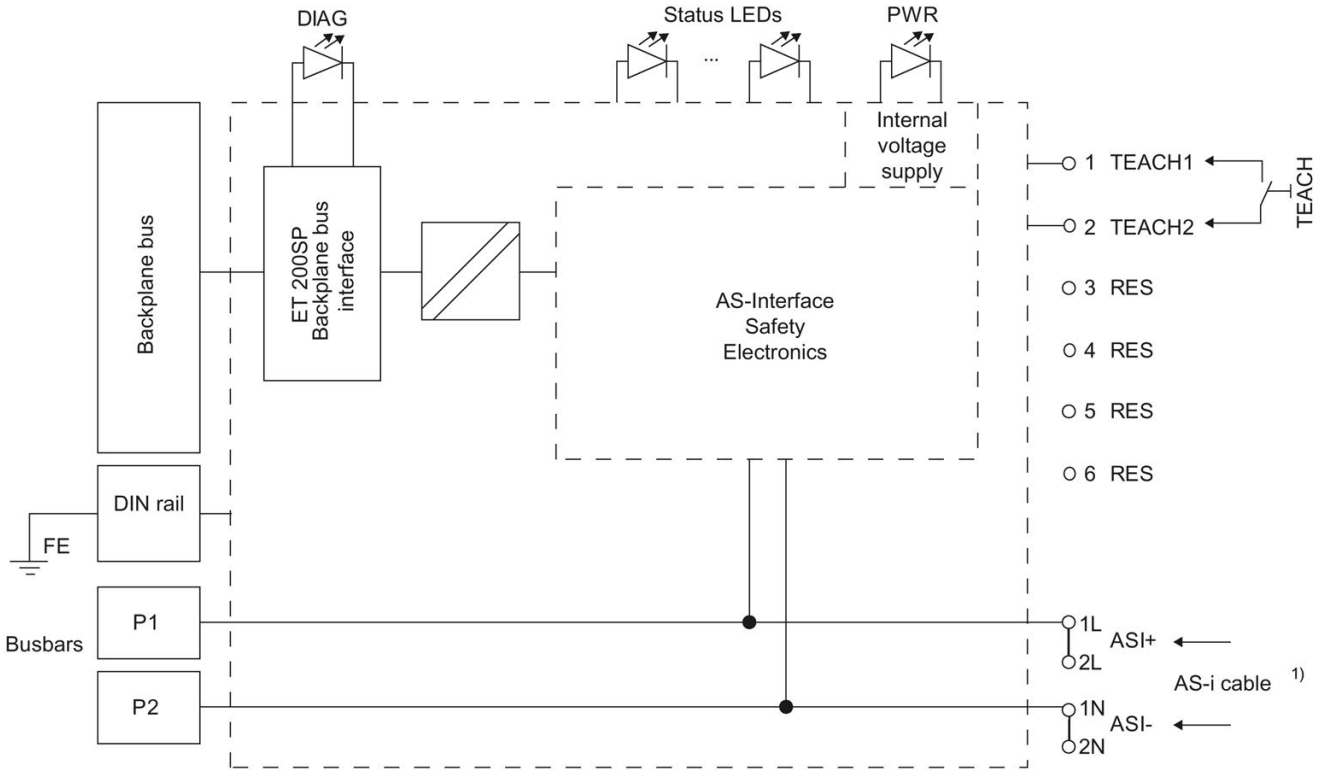

1) AS-i cable: Connection not applicable for dark BaseUnit

Figure 4-1 Schematic diagram of F-CM AS-i Safety ST

Connection to busbars

Requirement:

- An AS-i power supply unit is connected to the light BaseUnit Type C0 of the BaseUnit group.
- A CM AS-i Master ST module is plugged into the light BaseUnit.

If you plug an F-CM AS-i Safety ST module into a dark BaseUnit Type C1, the F-CM AS-i Safety ST module will be automatically supplied with AS-i voltage via the busbars.

It is not permitted to continue the AS-i voltage from the front panel connecting terminals 1L, 2L (ASI+) and 1N, 2N (ASI-) of the dark BaseUnit because this type of current draw can cause an overload of the modules.

Note the additional explanations in Section Terminal assignment (Page 27).

Configuring 5

5.1 Configuring the F-CM AS-i Safety ST

Notes on configuration

You configure the ET 200SP station and its F-CM AS-i Safety ST module and assign their parameters with *STEP 7*.

There is currently no provision for configuration via a GSD file, because the GSD configuration procedure does not permit safety-related parameter assignment (according to PROFIsafe Specification V2.4).

Note

F-CM AS-i Safety ST in the hardware catalog of *STEP 7*

If the F-CM AS-i Safety ST module is not listed in the hardware catalog of *STEP 7* , you will need a "Hardware Support Package". This HSP can be obtained from the Internet using the corresponding function in *STEP 7*.

Note

Operation under S7 F systems is not approved.

Note

The data exchange with "F-DX-MOD" is not supported.

Software for configuration of the F-CM AS-i Safety ST

Configuration software	Requirements	Installation information
STEP 7 (classic) V5.5 SP3 HF4 or higher with Distributed Safety	Hardware Support Package HSP 2093[1)] Internet	Online Help for *STEP 7*
STEP 7 (classic) V5.5 SP4 or higher with Distributed Safety		
STEP 7 (TIA Portal) V13 or higher with Safety Advanced	Hardware Support Package HSP 70[1)] Internet (http://support.automation.siemens.com/WW/view/en/29156492/133100)	
STEP 7 (TIA Portal) V14 or higher with Safety Advanced / Basic		

[1)] Download optional, if not already contained in the hardware catalog

Note

Observe the online help on *STEP 7*.

The "S7 F-Configuration Pack" can be found on the Internet (http://support.automation.siemens.com/WW/view/en/15208817).

Procedure

1. Assign the parameters of the F-CM AS-i Safety ST module according to your safety application.
2. Configure the AS-i Master in such a way that it includes all AS-i slaves in the communication – including the control addresses for safe AS-i outputs that are activated in the F-CM AS-i Safety ST module.
3. Download the hardware configuration to the PLC-CPU.
4. Assign the associated F-address to the F-CM AS-i Safety ST module.
5. Start the teaching and transferring of the code sequences of the safe AS-i input slaves.
6. Create the safety program in the F-CPU.
7. Test your application.

Information concerning these steps can be found in the following sections and in the manuals of the utilized devices.

WARNING

Failure to observe this information may result in death, severe injury, and serious property damage
Observe instructions in the programming and operating manuals

Observe the instructions in the manuals.

- Programming and Operating Manual SIMATIC Safety - Programming and Configuring (http://support.automation.siemens.com/WW/view/en/54110126/0/en)
- Programming and Operating Manual S7 Distributed Safety (http://support.automation.siemens.com/WW/view/en/22099875/0/en)

See also

HSP WinCC "classic" (http://support.automation.siemens.com/WW/view/en/23183356)

5.2 Safety-related communication with AS-Interface

5.2.1 Operating principle of code sequences of safe AS-i slaves

For realization of safety-related communication, each safe AS-i input slave sends a code sequence over the AS-i bus. To prevent a mix-up of the AS-i input slaves on an AS-i bus, each AS-i input slave sends a different code sequence. The code sequences are permanently stored in the AS-i input slave.

The F-CM AS-i Safety ST module checks every code sequence for correct data content. Depending on the result of the evaluation, the module sets the the safe input image.

During initial commissioning, the F-CM AS-i Safety ST module must teach the code sequences of all safe AS-i input slaves present on the AS-i bus and transfer them to non-volatile memory. In so doing, the module detects both the slaves for which input monitoring is activated as well as the other safe input slaves.

After replacement of a safe AS-i input slave, the new code sequence must be taught and saved.

If the code sequence is not saved for a safe AS-i input slave, or if the code sequence does not correspond to the saved code sequence, the input channel will be passivated and assigned the substitute value "0".

As soon as the F-CM AS-i Safety ST module detects a new code sequence, the code sequences are automatically taught. Confirm the transfer of the code sequences into the memory to prevent unauthorized changes to the AS-i component.

You will find more information about teaching code sequences, and the LED behavior, in Section "Code sequences (Page 75)".

You can find a description of the individual parameters in the Section "Process signal errors (Page 20)".

5.2.2 Operating principle of the safe AS-i outputs

Safety-related communication for safe AS-i outputs also uses code sequences. However, they have a different data structure compared to the code sequences of safe AS-i input slaves. The code sequences for safe AS-i outputs do not have to be taught and transferred.

For the function of a safe AS-i output, you need the following components:

- A control unit
- An evaluation unit

Control unit

The control unit outputs safety-related IN or OUT control commands to the AS-i bus. The control unit is integrated in the F-CM AS-i Safety ST module. The control unit assumes an active position in the communication. It acts like an AS-i slave and has an AS-i address that must be called by the AS-i master. The values in the output data of the AS-i master are not relevant in this case. The F-CM AS-i Safety ST module inserts the safety-related control data into the communication data.

Besides controlling the OFF state according to specification, a control unit can control up to four different output switching states: F-OUT 1, F-OUT 2, F-OUT 3, and F-OUT 4. The F-CM AS-i Safety ST module, however, makes available only the output switching state F-OUT 1, i.e., The OFF and ON states are controlled.

In addition to the switching states, a control unit can send out two different auxiliary signals: AUX1 and AUX2. You can use these auxiliary signals for error acknowledgement in the evaluation unit. For technical reasons, the AUX1 and AUX2 signals are mapped in the safe process image output. The auxiliary signals are not safety-related signals, however. During control by the safety program, the F-CM AS-i Safety ST module sends a sequence from each auxiliary signal one after the other on the AS-i bus. Up to 16 different control units can be activated in the F-CM AS-i Safety ST module. The control units are managed in the F-CM AS-i Safety ST module as switching group 0 to switching group 15.

If you want to use more than 16 different control units, you can plug two F-CM AS-i Safety ST modules into the ET 200SP station.

Observe the information on the bus configuration in Section AS-i bus configuration with multiple F-CM AS-i Safety ST modules (Page 38).

NOTICE
Uniqueness of the AS-i address on the AS-i bus Carefully check the AS-i addresses for the control of the safe AS-i outputs. Ensure that the assigned AS-i address exists only once on the AS-i bus. This is particularly important when you are using multiple devices that can control safe AS-i outputs on the same AS-i bus. If this is not observed, reliable shutdown of a safe output module is not guaranteed.

Evaluation unit

The evaluation unit reads the safety-related control commands ON or OFF on the AS-i bus and passes corresponding switching commands, e.g., to switching contacts. In case of error, e.g., communication error on the AS-i bus, the evaluation unit switches off. The evaluation unit is integrated in the safe AS-i output module to which, for example, drive contactor coils are connected. The evaluation unit behaves as a passive unit in the AS-i communication. The master does not detect the evaluation unit and does not call it. The evaluation unit monitors the communication of the AS-i address of the control unit and reacts to its safety-related control signals.

You set the AS-i address (see Section "Control unit") the evaluation unit is to monitor.

You can set multiple evaluation units to the same address so that a control unit can control multiple safe output modules simultaneously.

NOTICE
Bus cycle time for safe AS-i outputs An evaluation unit requires a minimum AS-i bus cycle time. Ensure that at least 5 AS-i addresses are present on the AS-i bus. Otherwise, the control unit goes to error state. When A/B slaves are used, at least 5 different numerical AS-i addresses must be present. That is, a combination of slave addresses 1A and 1B count as 1 numerical address. The F-CM AS-i Safety ST module does not have a monitoring function for this configuration rule.

5.3 AS-i bus configuration with multiple F-CM AS-i Safety ST modules

The F-CM AS-i Safety ST module generates an additional physical bus load on the AS-i cable.

To avoid faults due to too low levels of the communication signals on the AS-i cable, the entire bus load on the AS-i cable must not exceed a maximum value.

The following rules apply to the determination of the physical bus load on the AS-i cable:

Device type	Bus load value
Slave with A/B address	0.5
Slave with standard address	1.0
F-CM AS-i Safety ST module	2.5
---	---
Maximum value as sum of all devices	35.0
---	---

Determine the total bus load by adding the bus load values of the components connected to the AS-i cable. You do not have to include the standard AS-i master and AS-i power supply unit system components when calculating the bus load.

To avoid disturbances, the maximum bus load must not exceed the value 35.

The bus load value of the F-CM AS-i Safety ST module remains unchanged if switching groups are activated in the F-CM AS-i Safety ST module for control of safe outputs. In other words, the internally generated AS-i addresses do not influence the bus load value.

If you connect additional components, e.g., an MSS 3RK3 modular safety system, to the AS-i cable, you must take into consideration the bus load values of these components. For more detailed information, refer to the relevant manual.

When a repeater is used, this yields multiple cable segments for which the bus load can be determined separately.

The following configuration examples result from the table:

- In a fully expanded AS-Interface network configuration (with 31 slaves with standard address), you can install 1 F-CM AS-i Safety ST module.
- In an AS-Interface network configuration with 30 slaves with standard address, you can install 2 F-CM AS-i Safety ST modules.

5.4 Configuring with STEP 7 (classic)

With *STEP 7* (classic) the F-CM AS-i Safety ST module is configured independently of the configuration of further ET 200SP modules, e.g. CM AS-i Master ST.

If a safe AS-i slave, which is not available on the connected AS-i network, is configured on the F-CM AS-i Safety ST module, then this configuration error is not recognized when compiling the configuration. The F-CM module does not report that the slave cannot be detected until operation is in progress or code sequences are being read.

5.5 Configuring with the TIA Portal

TIA Portal V13 SP1

With TIA Portal V13 SP1, an F-CM AS-i Safety module can only be configured in combination with an AS-i master, necessitating the configuration of the AS-i slaves in STEP 7.

The AS-i subnet of the AS-i master, including the configured AS-i slaves, must be linked to the configuration with the F-CM.

The safety parameters of the AS-i input slaves are set in the properties window of the AS-i slaves.

TIA Portal V14 or higher

From TIA Portal V14 onwards, an F-CM AS-i Safety module can be configured:

- In combination with an AS-i Master, necessitating the configuration of the AS-i slaves in STEP 7. The AS-i subnet of the AS-i master, including the configured AS-i slaves, must be linked to the configuration with the F-CM.
  The safety parameters of the AS-i input slaves are set in the properties window of the AS-i slaves.
- Regardless of an AS-i master, i.e. no configuration of the AS-i slaves in STEP 7 is required. In this case, the parameters of the AS-i input slaves are set in the properties window of the F-CM AS-i Safety ST module.

In the case of safe inputs/outputs, the "Configuration status" output field in the properties of the F-CM reports whether the configuration of the F-CM is compatible with the configuration of the connected AS-i subnet. If a safe AS-i slave, which is not available on the connected AS-i network, is configured on the F-CM module, then the compilation of the configuration is nevertheless still possible. During operation or when reading the code sequences, however, the F-CM module reports that the slave cannot be detected.

The affected input address is passivated.

Configuration of safe AS-i outputs

The F-CM module contains a control unit for the safe AS-i outputs, see Section "Functional principle of the safe AS-i outputs (Page 36)".

TIA Portal V13 SP1

When configuring with TIA Portal V13 SP1, this control unit is not visible in the network view on the AS-Interface subnet of the AS-i master. The configuration of the F-CM module, however, is always combined with the AS-i master.

TIA Portal V14 or higher

In TIA Portal V14 or higher, the control unit must additionally be configured as a virtual slave on the AS-i subnet of the master, in the event that the AS-i slaves are configured in STEP 7.

A virtual slave is inserted automatically if a safe AS-i output is activated in the properties of the F-CM module and the F-CM module is already linked with the AS-i subnet. If necessary, by using the "Add AS-i Slave to AS-i network" button, the virtual slave can be inserted in the properties of the F-CM module under "Safe outputs". If no AS-i subnet is connected to the F-CM when the "Add AS-i slave to AS-i network" button is actuated, a subnet is automatically inserted.
The virtual slave can be managed like any other slave on the subnet, which means that all AS-i slave addresses existing in the AS-i subnet are visible. The virtual slave can be deleted if the control of the safe AS-i output is no longer required.

If necessary, the virtual slave can also be inserted straight from the hardware catalog (3RK7136-6SC00-0BC1F-DQ) into the subnet of the master.

Note

The virtual slave 3RK7136-6SC00-0BC1F-DQ is not a hardware module that is connected to the AS-i cable, but only a tool for the configuration of the AS-i master. The AS-i address assigned to the virtual slave 3RK7136-6SC00-0BC1F-DQ is emulated in the F-CM AS-i Safety module as soon as the corresponding safe output is activated in the properties of the F-CM.

If the AS-i master is engineered without configuring the AS-i slaves in STEP 7, i.e. either configuration of the AS-i slaves via the "SET" button or via the control panel in the TIA Portal, then the secure outputs in the F-CM must be configured and must have been loaded into the station before the configuration of the AS-i slaves is read into the master by means of the "SET" button or via the control panel in the TIA Portal.

Assigning parameters / Setting the address space 6

6.1 Parameters

List of parameters

Table 6- 1 F-parameters

Parameter	Value range	Default setting	Parameter reassignment in RUN	Scope
F-monitoring time (ms)	1 … 65534 ms	150 ms	No	F-CM AS-i Safety ST
F-source address	1 … 65534	Assigned by the F-system	No	F-CM AS-i Safety ST
F-destination address	1 … 65534	Is suggested by the F-system	No	F-CM AS-i Safety ST

For information on the F-parameters and the assignment of the F-address, refer to the Programming and Operating Manuals:

- SIMATIC Safety - Configuring and Programming (http://support.automation.siemens.com/WW/view/en/54110126).
- S7 Distributed Safety (http://support.automation.siemens.com/WW/view/en/22099875/0/en)

Table 6- 2 Potential group / AS-i network

Parameter	Value	Default setting	Parameter reassignment in RUN	Scope
BaseUnit with AS-i voltage supply	Potential group: The AS-i network of the left module (dark BaseUnit) is used New potential group: New AS-i network (light BaseUnit)	The AS-i network of the left module (dark BaseUnit) is used	No	F-CM AS-i Safety ST

Table 6- 3 Module parameters: Behavior after channel faults

Parameter	Value	Default setting	Parameter reassignment in RUN	Scope
Behavior after channel faults	Passivate the channel (setting cannot be changed).	Passivate the channel	-	F-CM AS-i Safety ST

Safe inputs

Up to 31 safe AS-i input slaves are monitored. Open the settings for each required AS-i address. Activate the input monitoring and assign the parameters.

Table 6- 4 Module parameters: Safe inputs, AS-i address 1 to 31

Parameter	Value	Default setting	Parameter reassignment in RUN	Scope
Activate input monitoring	• Disable • Enable	Disable	No	If this parameter is not activated, none of the following settings are possible.
I address	Output field, value is calculated automatically	-	No	Channel / safe AS-i input slave
Input delay (ms)	0 ms, 50 ms … 150 ms[1)]	0 ms	No	Channel / safe AS-i input slave
Sensor evaluation	• 1oo1 evaluation • 1oo2 evaluation, equivalent	1oo2 evaluation	No	Channel / safe AS-i input slave
Startup test	• Disable • Enable	Disable	No	Channel / safe AS-i input slave
Discrepancy monitoring	• Disable • Enable	• "Disable" if 1oo1 evaluation • "Enable" if 1oo2 evaluation	No	Channel / safe AS-i input slave
Discrepancy behavior	Supply "0" value[2)]	Supply "0" value	-	Channel / safe AS-i input slave
Discrepancy time infinite	• Disable • Enable	Disable	No	Channel / safe AS-i input slave
Discrepancy time (ms)	0 ms … 60 000 ms	500 ms	No	Channel / safe AS-i input slave
Sequence monitoring	• Deactivated • In ascending order (input 1 before input 2 at HIGH state) • In descending order (input 2 before input 1 at HIGH state)	Deactivated	No	Channel / safe AS-i input slave

Parameter	Value	Default setting	Parameter reassignment in RUN	Scope
Reintegration after discrepancy error	Test 0 signal necessary on both channels[2)]	Test 0 signal necessary on both channels	-	F-CM AS-i Safety ST
Configuration status	-	-	-	(read-only)

1) In increments of 10 ms

2) The setting cannot be changed.

Safe outputs

You can activate up to 16 safe AS-i switching groups Open the settings for each required switching group. Activate the output control and set the associated AS-i address.

Table 6- 5 Safe outputs: Switching group 0 to 15

Parameter	Value	Default setting	Parameter reassignment in RUN	Scope
Activate output control	• Disable • Enable	Disable	No	If this parameter is not activated, none of the following settings are possible.
AS-i address	1 … 31		No	Channel / safe AS-i output slave
AS-i address switching output	Output field, value is calculated automatically	-	No	Channel / safe AS-i output slave
AS-i address error acknowledgement	Output field, value is calculated automatically	-	No	Channel / safe AS-i output slave
Configuration status	-	-	-	(read-only)

You will find additional information in the Programming and Operating Manuals:

- SIMATIC Safety - Configuring and Programming (http://support.automation.siemens.com/WW/view/en/54110126)
- S7 Distributed Safety (http://support.automation.siemens.com/WW/view/en/22099875/0/en)

6.2 Explanation of the parameters

6.2.1 F-parameters

Specify F-destination address for F-I/O of the PROFIsafe address type 2

The F-destination address of F-I/O of the PROFIsafe address type 2 is automatically assigned for every F-CPU.

F-source address

With the parameter "Central F-source address" you specify the F-source address for the F-I/O of the PROFIsafe address type 2 assigned to this F-CPU. The F-source address must be unique throughout the network.

Note

A change to the parameter "Central F-source address" results in a modification to the safety program when it is recompiled. A new acceptance may therefore be required, as this centrally modifies the F-source address of all F-I/O devices of address type 2 retrospectively.

See also

S7 Distributed Safety (http://support.automation.siemens.com/WW/view/en/22099875/0/en)

SIMATIC Safety - Configuring and Programming (http://support.automation.siemens.com/WW/view/en/54110126/0/en)

6.2.2 Potential group / AS-i network

Here, you set:

- The BaseUnit you are using.
- How the F-CM AS-i Safety ST I/O module is connected to the AS-i network.

The module can be connected to the AS-i cable by external wiring or automatically via the module plugged in on the left.

- Enable new AS-i network (light BaseUnit)
- Use AS-i network of the left module (dark BaseUnit)

BaseUnit with voltage supply

Enable new AS-i network (light BaseUnit)

Select this option if the module is plugged into a light BaseUnit.

Connect the module to the AS-i cable (ASI+ / ASI-) via the BaseUnit. The module is supplied with voltage from the AS-i cable. Connect the AS-i cable to an AS-i power supply unit or to a combination of a data decoupling unit and a suitable power supply unit.

There is no module-internal connection of the AS-i cable to the module plugged in on the left.

With TIA Portal or with STEP 7 (classic) the F-CM AS-i Safety module is configured independently of the configuration of the module inserted on the left (normally: CM AS-i Master ST).

WARNING

Connection of the BaseUnit only to safety extra-low voltage with limiting of output voltage to max. 40 V under fault condition

Connect the BaseUnit only to AS-i power supply units that meet the requirements named in Section Terminal assignment (Page 27), "Power supply units for AS-Interface". Connection to higher voltage may result in death, severe injury, and serious property damage.

Use AS-i network of the left module (dark BaseUnit)

Select this option if the module is plugged into the dark BaseUnit.

The module inserted on the left must be a CM AS-i Master ST module (normal situation) or another F-CM AS-i Safety ST module (special case).

The module is connected to the AS-i cable of the module plugged in on the left and supplied with voltage via the module-internal connection.

The module-internal connection is designed only for supplying power to the F-CM AS-i Safety ST I/O module. If several dark BaseUnits are connected in series, a direct connection of the dark BaseUnits to the AS-i cable using external wiring is additionally recommended.

Supplying power to AS-i modules, e.g., AS-i slaves, via the terminals of the dark BaseUnit is not permitted.

With TIA Portal, the F-CM AS-i Safety ST module uses the same AS-Interface subnet as the module inserted on the left (normally: CM AS-i Master ST).

With STEP 7 (classic) the F-CM AS-i Safety module is configured independently of the configuration of the module inserted on the left (as a rule: CM AS-i Master ST).

WARNING

Connection of the BaseUnit only to safety extra-low voltage with limiting of output voltage to max. 40 V under fault condition

Connect the BaseUnit only to AS-i power supply units that meet the requirements named in Section Terminal assignment (Page 27), "Power supply units for AS-Interface". Connection to higher voltage may result in death, severe injury, and serious property damage.

6.2.3 Module parameters - General

Behavior after channel faults

This parameter is permanently set to "Passivate the channel".

After channel faults have occurred, only the faulty PROFIsafe channels are passivated. The PROFIsafe channel corresponds to the safe input and output address in the process image.

6.2.4 Module parameters - Safe inputs

Configuration status

A valid evaluation is only possible if a compatible safe AS-i slave is actively operating on the network.
Input monitoring where there is a missing safe input or a missing AS-i slave causes a passivation of the input address. If no configuration of the slaves is saved in the STEP 7 project, the settings of the AS-i master must ensure that the connected compatible safe AS-i slave is actively operating, for example, using the "SET" button of the master.

Input monitoring activated

With activation of the input monitoring, you activate the corresponding AS-i slave as an input channel for signal processing in the safety program. The AS-i address must be assigned to a safe AS-i input slave.

When the input monitoring is activated, the value of the input channel is calculated based on the input states of the assigned safe AS-i input slave and the evaluation conditions specified by the parameter assignment. If a fault occurs, the substitute value "0" is transferred and the channel is passivated.

If input monitoring is deactivated, the substitute value "0" is transferred. The channel is not passivated.

If required, the AS-i slave can be monitored by another evaluation module, e.g., by another F-CM AS-i Safety ST module, the 3RK3 Modular Safety System. This applies both when input monitoring is deactivated and when it is activated.

Note

Call of the AS-i slave

The AS-i slave must be called by the AS-i master. Set up the configuration of the AS-i master in such a way that the communication of the AS-i master with the AS-i address functions properly.

Note

Slave profile

A safe AS-i input slave has the slave profile (IO.ID) = 0.B or 7.B.

I address

The input bit address of the input channel for the signal processing in the safety program is indicated here. It is calculated automatically from the start of the inputs entered on the "Addresses" tab.

Input delay

To suppress coupled-in interference or brief switching pulses, you can set an input delay for each AS-i slave. This will suppress interference pulses whose pulse time is less than the set input delay, in ms. The input delay applies to both channels of the channel pair of the AS-i slave.

Note

Time of fault suppression shortened by up to 75 ms

It can take 15 AS-i cycles until the valid code sequence is detected. As a result, the time of the fault suppression is shortened by up to 75 ms compared to the set value.

A long input delay suppresses longer interference pulses but results in a longer response time.

Range of values:	0 to 150 ms
Default	0 ms

The values 0, 50 to 150 ms can be selected in 10 ms increments.

The input delay time acts in addition to the system response time. Suppressed interference pulses are not visible in the safety program.

Evaluation of the sensors

This parameter specifies how the connected sensors are to be evaluated.

1oo1 evaluation

In 1oo1 evaluation, the sensor exists once and is connected to the first input of the safe AS-i slave via a single channel. You jumper the second input of the AS-i slave. Instead of the jumper, you can also connect another single-channel sensor to the second input. Only when both inputs supply an ON signal does the F-CM AS-i Safety ST module transfer the "1" value to the safety program (the two inputs are ANDed).

The individual states of the two inputs of the AS-i slave are not visible in the safety program.

A discrepancy analysis is not performed in 1oo1 evaluation.

1oo2 evaluation, equivalent

In 1oo2 (2v2) evaluation, equivalent, both inputs of the safe AS-i slave are occupied by one two-channel sensor or by two single-channel sensors. The two single-channel sensors then belong together functionally as a pair.

The input signals are compared internally for equivalence. The two inputs of the AS-i slave are combined to form a channel pair.

A discrepancy analysis is possible in 1oo2 evaluation, equivalent.

Discrepancy analysis

If you are using a two-channel sensor or two single-channel sensors that acquire the same physical process variable, the sensors will, for example, respond with a delay due to the limited accuracy of their arrangement to each other. For fail-safe inputs, the discrepancy analysis for equivalence is used to infer errors from the time characteristic of two signals of the same functionality. For two associated input signals, if different levels are detected after the input delay time has expired, the discrepancy analysis is started. A check is made to determine if the difference has disappeared after expiration of an assignable time period, the so-called discrepancy time. If not, there is a discrepancy error.

Startup test

If the "Startup test" parameter is activated, after startup of the channel or after a cross-circuit error (code sequence error), the value transferred to the safety program is kept at the substitute value "0" until the connected sensor has been correctly actuated at least once. Afterwards, the value of the input channel is calculated according to the set functionality.

The actuation of the sensor is defined to mean that both inputs of the safe AS-i slave must supply an ON signal, e.g., both switching contacts of the sensor are closed. Then, they must supply an OFF signal, e.g., switching contacts open. Finally, an ON signal must be supplied again, e.g., switching contacts closed. During the sensor actuation phase, none of the following errors may occur:

- Discrepancy error
- Sequence error
- Cross-circuit error (code sequence error)

After reintegration is complete, you must perform a startup test. For this purpose, you actuate the sensor to be monitored once.

A discrepancy error or a sequence monitoring error does not trigger a new startup test.

Discrepancy monitoring

If the discrepancy monitoring is activated, a discrepancy analysis is performed. This is the normal setting for 1oo2 evaluation, equivalent, in order to achieve high error uncovering.

You can deactivate the discrepancy monitoring for special situations. This corresponds in principle to 1oo1 evaluation of sensors. Check whether the lower error uncovering is sufficient for the required safety level. You may possibly use a sensor with integrated error uncovering. If required, you can activate the sequence monitoring.

When 1oo2 evaluation of the sensors is set, discrepancies in signal states between input 1 and input 2 are monitored.

When discrepancy monitoring is activated, the discrepancy time starts to elapse as soon as a difference is detected between the signal on input 1 and the signal on input 2. If the set discrepancy time is exceeded and the difference continues to exist, a discrepancy error is triggered.

Before switch-on, the signal value 0 must be present at both inputs, even when a discrepancy error has not occurred or the discrepancy time has not been set to "infinite".

If the "Evaluation of the sensors" parameter has been assigned with 1oo1, discrepancy monitoring is not performed.

Discrepancy behavior

This parameter is permanently set to "Supply 0 value".

The discrepancy behavior determines the value that is made available to the safety program in the F-CPU during the discrepancy, i.e., while the discrepancy time is running.

After expiration of the set input delay time, once an "OFF" signal is detected at one of the two input channels of the channel pair involved, this parameter setting causes the value "0" to be provided to the safety program in the F-CPU. This setting does not affect the sensor-actuator response time as a result of the discrepancy time.

Discrepancy time infinite

If you activate "Discrepancy time infinite", the time period for the discrepancy analysis never expires. As a result, a time-related discrepancy error will not be detected.

Nevertheless, the following switch-on condition applies: After a channel has been switched off, a "0" signal must be read in simultaneously at both input channels of the relevant channel pair before the channel can be switched on again.

If this condition is not satisfied, especially in the event of a single-channel switch-off (i.e., signal OFF at only one of the two input channels of the relevant channel pair) followed by a change to signal ON at both input channels, a discrepancy error will be detected at the time of the change to signal ON (at both input channels) even though the time for the discrepancy analysis has not expired. In data record 202, the bit 0.2 "= 1" is set in the status of the input monitoring of AS-i address n.

A discrepancy error is only detected if both input channels of the affected channel pair have not received the "0" signal simultaneously.

If "Discrepancy time infinite" is deactivated, the discrepancy analysis uses the value set for the "Discrepancy time" parameter.

Discrepancy time

You can specify the discrepancy time in the range of 0 to 60 000 ms for each channel pair.

The following settings are required:

- "Sensor evaluation": 1oo2 evaluation, equivalent
- "Discrepancy monitoring": Active
- "Discrepancy time infinite": Deactivated

In most cases, the discrepancy time is started but does not completely elapse, because the signal differences are evened out again after a short time.

Select a large enough discrepancy time so that in error-free cases, the difference between the two signals always disappears before the discrepancy time expires.

If the input signals do not match after expiration of the assigned discrepancy time, e.g., due to a mechanical defect of the sensor or sensor wire break, a discrepancy error is detected.

When discrepancy time is running, the switch-on condition also applies that after a channel has been switched off, a "0" signal must be read in simultaneously at both input channels of the relevant channel pair before the channel can be switched on again. If this condition is not satisfied, especially in the event of brief switch-off of a channel (due to signal OFF at only one of the two input channels) followed by a change to signal ON at both input channels, a discrepancy error will be detected at the time of the change to signal ON (at both input channels) if the time for the discrepancy analysis has not expired.

A detected discrepancy error indicates to the user that the switch-on condition is not satisfied.

Assign a discrepancy time that is greater than the input delay time.

Sequence monitoring

Overview

The sequence monitoring monitors the sequence of the signals of the channel pair when there is a signal change OFF >>> ON at the inputs of the safe AS-i slave.

The following settings are possible:

- Deactivated: The sequence is not a condition that has to be satisfied for switching on the function output.
- Ascending order: Input 1 before input 2 at "HIGH" state
- Descending order: Input 2 before input 1 at "HIGH" state

If the sequence is violated, the "Sequence condition violated" error is detected. The value transferred to the safety program is kept at "0" until the "OFF" signal is read in at both input channels. Switch-on condition is, for example, both switching contacts of the sensor open. The inputs must be switched on one after the other in the assigned sequence and must not switch on simultaneously.

You can activate the sequence monitoring if 1oo2 evaluation, equivalent, is set for the sensor evaluation. In this case, the discrepancy monitoring can be activated or deactivated.

Deactivated

The sequence of the inputs is not monitored.

Ascending order: Input 1 before input 2 at "HIGH" state

For switch-on of the channel, input channel 1 must first read in and hold an "ON" signal followed by input channel 2.

When the channel is switched off, the sequence of the input channels is not monitored.

Descending order: Input 2 before input 1 at "HIGH" state

For switch-on of the channel, input channel 2 must first read in and hold an "ON" signal followed by input channel 1.

When the channel is switched off, the sequence of the input channels is not monitored.

Reintegration after discrepancy error

This parameter is permanently set to: "Test 0-signal necessary on both channels".

A discrepancy error is not considered to be rectified until an "OFF" signal is present again at both input channels. Reintegration of the PROFIsafe channel is then possible.

6.2.5 Module parameters - Safe outputs

Configuration status

For operation of the switching group the AS-i master must activate communication with the associated AS-i address of the control unit in the F-CM. For this reason the configuration of the AS-i network must include a virtual AS-i slave with the profile IO.ID.ID2 = 6.B.D and ID1 = 0. If the slaves are not configured, the AS-i master must be set such that the AS-i address of the control unit in the F-CM is actively operating, for example, using the "SET" button of the master while the F-CM module is being configured and connected to the AS-i master.

Activate output control

With this parameter, you activate the corresponding switching group and the associated AS-i address of the control unit in the F-CM AS-i Safety ST module.

You will find additional information in Section Operating principle of the safe AS-i outputs (Page 36), "Operating principle of the safe AS-i outputs."

When output control is activated, the control unit in the F-CM AS-i Safety ST module is switched on so that the F-CM AS-i Safety ST module generates an additional AS-i address on the AS-i Bus. The associated value is output from the safe process image via this AS-i address.

When output control is deactivated, the corresponding control unit in the F-CM AS-i Safety ST module is switched off, and an AS-i slave is not emulated on the AS-i bus.

AS-i address

Here, you set the AS-i address within the range of 1 to 31 that the F-CM AS-i Safety ST module is to use for control of a safe AS-i output.

WARNING

Uniqueness of the AS-i address on the AS-i bus

Carefully check the AS-i addresses for the control of the safe AS-i outputs. Ensure that the assigned AS-i address exists only once on the AS-i bus. This is particularly important when you are using multiple devices that can control safe AS-i outputs on the same AS-i bus. If this is not observed, reliable shutdown of a safe output module is not guaranteed.

Note

Communication of the AS-i master with the AS-i address

The AS-i address of the control unit must be called by the AS-i master. Set up the communication of the AS-i master in such a way that communication with the AS-i address of the control unit functions properly.

Note

Slave profile of the control unit in the F-CM AS-i Safety ST module (control of a safe AS-i output)

The AS-i address of the control unit corresponds to a slave with slave profile (IO.ID.ID2) = 6.B.D and ID1 = 0.

Q address switching output

The output bit address is displayed here. It determines the switching state of the safe output (control signal F-OUT 1). Interconnect the "Q address switching output" in your safety program according to the required safety logic.

The output bit address is calculated automatically from the start of the outputs entered on the "Addresses" tab.

Q address error acknowledgment

The output bit address that sends an acknowledgment signal to the safe output is displayed here.

The output bit address is calculated automatically from the start of the outputs entered on the "Addresses" tab.

A positive edge (0 >>> 1) triggers the F-CM AS-i Safety ST module to first send the AUX1 auxiliary signal to the safe output followed by the AUX2 auxiliary signal. Another positive edge is necessary for sending another sequence of auxiliary signals.

The auxiliary signals are used, in general, for acknowledging an error state at the safe output. Refer to the AS-Interface (http://support.automation.siemens.com/WW/view/en/26250840/0/en) System Manual and the Operating Instructions of the safe output module (http://support.automation.siemens.com/WW/view/en/43666143/0/en) used to find out which functions the auxiliary signals are used for.

Note

"Q address error acknowledgment"

The "Q address error acknowledgment" does not trigger an error acknowledgment in the F-CM AS-i Safety ST module. Rather, as described above, it sends an acknowledgement signal to the safe output module on the AS-i bus.

See also

ET 200SP distributed I/O system (http://support.automation.siemens.com/WW/view/en/58649293/0/en)

6.3 Address space

6.3.1 Address assignment for user data and value status of the F-CM AS-i Safety ST module

Input and output address assignment

Of the assigned addresses of the F-CM AS-i Safety ST module, the user data occupy the following addresses in the F-CPU:

Table 6- 6 Input address assignment in the F-CPU

Byte in the F-CPU	Assigned bits in the F-CPU per F-CM AS-i Safety ST module							
	Bit 7	Bit 6	Bit 5	Bit 4	Bit 3	Bit 2	Bit 1	Bit 0
x + 0	DI0.7 AS-i address 7	DI0.6 AS-i address 6	DI0.5 AS-i address 5	DI0.4 AS-i address 4	DI0.3 AS-i address 3	DI0.2 AS-i address 2	DI0.1 AS-i address 1	DI0.0 Reserved
x + 1	DI1.7 AS-i address 15	DI1.6 AS-i address 14	DI1.5 AS-i address 13	DI1.4 AS-i address 12	DI1.3 AS-i address 11	DI1.2 AS-i address 10	DI1.1 AS-i address 9	DI1.0 AS-i address 8
x + 2	DI2.7 AS-i address 23	DI2.6 AS-i address 22	DI2.5 AS-i address 21	DI2.4 AS-i address 20	DI2.3 AS-i address 19	DI2.2 AS-i address 18	DI2.1 AS-i address 17	DI2.0 AS-i address 16
x + 3	DI3.7 AS-i address 31	DI3.6 AS-i address 30	DI3.5 AS-i address 29	DI3.4 AS-i address 28	DI3.3 AS-i address 27	DI3.2 AS-i address 26	DI3.1 AS-i address 25	DI3.0 AS-i address 24
x + 4	Value status for DI0.7	Value status for DI0.6	Value status for DI0.5	Value status for DI0.4	Value status for DI0.3	Value status for DI0.2	Value status for DI0.1	Reserved
x + 5	Value status for DI1.7	Value status for DI1.6	Value status for DI1.5	Value status for DI1.4	Value status for DI1.3	Value status for DI1.2	Value status for DI1.1	Value status for DI1.0
x + 6	Value status for DI2.7	Value status for DI2.6	Value status for DI2.5	Value status for DI2.4	Value status for DI2.3	Value status for DI2.2	Value status for DI2.1	Value status for DI2.0
x + 7	Value status for DI3.7	Value status for DI3.6	Value status for DI3.5	Value status for DI3.4	Value status for DI3.3	Value status for DI3.2	Value status for DI3.1	Value status for DI3.0
x + 8	Value status for DQ0.7	Value status for DQ0.6	Value status for DQ0.5	Value status for DQ0.4	Value status for DQ0.3	Value status for DQ0.2	Value status for DQ0.1	Value status for DQ0.0
x + 9	Value status for DQ1.7	Value status for DQ1.6	Value status for DQ1.5	Value status for DQ1.4	Value status for DQ1.3	Value status for DQ1.2	Value status for DQ1.1	Value status for DQ1.0
x + 10	Reserved							
...								
x + 15	Reserved							

X = Module start address

NOTICE
Process value "0" is transmitted as a non-safety related value Based on the transfer principle of the code sequences, the process value "1" is transferred via AS-Interface as a safe value, so that the enable for switching on a machine can be issued in a safety-related manner. If an error occurs during transfer of the value "1", this error is detected and substitute value "0" is used. The process value "0" is transferred via AS-interface as an unsafe value. That is, a faulty transmission of the "0" value cannot be detected. The "0" value must therefore not be used as safety-related information that initiates a dangerous action (e.g. feedback "0" of a switch position).

Table 6- 7 Output address assignment in the F-CPU

Byte in the F-CPU	Assigned bits in the F-CPU per F-CM AS-i Safety ST module							
	Bit 7	Bit 6	Bit 5	Bit 4	Bit 3	Bit 2	Bit 1	Bit 0
x + 0	DQ0.7 Switching group 7	DQ0.6 Switching group 6	DQ0.5 Switching group 5	DQ0.4 Switching group 4	DQ0.3 Switching group 3	DQ0.2 Switching group 2	DQ0.1 Switching group 1	DQ0.0 Switching group 0
x + 1	DQ1.7 Switching group 15	DQ1.6 Switching group 14	DQ1.5 Switching group 13	DQ1.4 Switching group 12	DQ1.3 Switching group 11	DQ1.2 Switching group 10	DQ1.1 Switching group 9	DQ1.0 Switching group 8
x + 2	Error acknowledgment for DQ0.7	Error acknowledgment for DQ0.6	Error acknowledgment for DQ0.5	Error acknowledgment for DQ0.4	Error acknowledgment for DQ0.3	Error acknowledgment for DQ0.2	Error acknowledgment for DQ0.1	Error acknowledgment for DQ0.0
x + 3	Error acknowledgment for DQ1.7	Error acknowledgment for DQ1.6	Error acknowledgment for D1.5	Error acknowledgment for DQ1.4	Error acknowledgment for DQ1.3	Error acknowledgment for DQ1.2	Error acknowledgment for DQ1.1	Error acknowledgment for DQ1.0
x + 4	Reserved							
...								
x + 7	Reserved							

X = Module start address

The error acknowledgment bit initiates the AUX1 and AUX2 signals one after the other.

Note

Use of the error acknowledgment bit of a safe AS-i output

The values in the PROFIsafe process output image have Safety Integrity Level SIL 3. In addition to the switching states, a control unit can send out two different auxiliary signals to a safe AS-i output: AUX1 and AUX2. These auxiliary signals are not safety-related signals. You can use the auxiliary signals for error acknowledgement in the evaluation unit. For technical reasons, these error acknowledgment bits are mapped in the safe process output image. If error acknowledgment bits are sent to a safe AS-i output, the *STEP 7* or SIMATIC Manager configuration tool is unable to detect that the error acknowledgment bits are not safe. This means: No warnings or faults will be output for it when the safety application is generated. The user is responsible for the correct processing of these signals in the safety application.

6.3.2 Value status

Properties

For each input signal and output signal, the F-CM AS-i Safety ST module provides information about the signal's validity, i.e., the "value status". Like the input signal, the value status is stored in the process image.

Value status for the digital input and output modules

The value status is binary supplementary information of a digital input or output signal. It is entered in the process input image simultaneously with the process signal. The value status provides information regarding the validity of the input or output signal.

The value status is influenced by the following:

- Code sequence errors, e.g, caused by a permanent fault on the AS-i bus, wiring error, etc.
- Missing safe AS-i input slaves
- Channel faults
- Replacement of a safe AS-i slave by a non-safe AS-i slave
- Discrepancy error
- Sequence error

Value status = 1: A valid process value is output for the channel.

Value status = 0: A substitute value is output for the channel or the channel is deactivated.

Assignment of the inputs and outputs to the value status in the process image

A value status is assigned to each channel of the F-CM AS-i Safety ST module in the process input image.

Additional information

A detailed description of the evaluation and processing of the value status can be found in the Programming and Operating Manual SIMATIC Safety - Programming and Configuring (http://support.automation.siemens.com/WW/view/en/54110126/0/en).

See also

Address assignment for user data and value status of the F-CM AS-i Safety ST module (Page 54)

6.4 Data records for diagnostics

For diagnostic purposes, you can read out the following data records via your user program. In firmware V1.0.1 or higher the diagnostics data record 206 is available. This data record contains a summary of the information that is relevant for a comprehensive diagnosis via your user program.

Note

Use of the DS 206 for diagnostic purposes is recommended (firmware V1.0.1 or higher).

The data records 92, 202 and 204 are required for the diagnosis via the user program for a module with firmware V1.0.0. For reasons of compatibility, these data records also remain available in firmware V1.0.1 or higher.

See also

Firmware update (Page 24)

6.4.1 DS 92 Device-specific diagnostics

Meaning

Note

Use of the data set 206 is recommended for diagnosis via the user program (firmware V1.0.1 or higher).

Data record 92 contains device-specific messages and information on the device function states of the F-CM AS-i Safety ST module.

For some events, the F-CM AS-i Safety ST module generates a diagnostic alarm.

The following applies for diagnostic alarms of the F-CM AS-i Safety ST module with firmware V1.0.0:

- The "Error code" column in the table below indicates which events are relevant here. If the associated bit changes in the data record, a diagnostic alarm with the indicated error code is generated (incoming alarm when bit changes to value "1" and outgoing alarm when bit changes to value "0").
- The text inside parentheses after the error code corresponds to the error text that is specified for the given error code according to the PROFIBUS Standard. Several error codes can be output. If no error code is specified ("-"), a diagnostic alarm is not generated.
- The diagnostic alarms in firmware V1.0.1 or higher are described in Section "DS 206 Diagnostic Data Record (Page 69)".

Table 6- 8 DS 92 device-specific diagnostics

Byte.Bit	Description	Only with firmware V1.0.0: Error code (decimal) in the diagnostic alarm	Remark
0.0 … 0.7	Reserved	-	-
1.0 … 1.7	Reserved	-	-
2.0 … 2.7	Reserved	-	-
3.0 … 3.7	Reserved	-	-
4.0 … 4.7	Reserved	-	-
5.0 … 5.7	Reserved	-	-
6.0 … 6.7	Reserved	-	-
7.0 … 7.7	Reserved	-	-
8.0 … 8.7	Reserved	-	-
9.0 … 9.7	Reserved	-	-
10.0 … 10.7	Reserved	-	-
11.0 … 11.7	Reserved	-	-
12.0	Serious device fault	9 ("Error")	See Section Error statuses (Page 17)
12.1	Group error	24 ("Switch-off")	At least one error is present.
12.2	AS-i communication error	19 ("Communication error")	Failure of an AS-i slave configured in the F-CM AS-i Safety ST module or code sequence error
12.3	Group_Message_Device	-	At least one message about the device state is present, e.g., configuration missing.
12.4	Group_Message_Application	-	At least one message about the application state is present, e.g., startup test necessary, safety sensor tripped (Emergency Stop, protective door, etc.).

Byte.Bit	Description	Only with firmware V1.0.0: Error code (decimal) in the diagnostic alarm	Remark
12.5 … 12.7	Reserved	-	-
13.0	Reserved	-	-
13.1	Device fault	24 ("Switch-off") 27 ("Unclear error")	See Section Error statuses (Page 17)
13.2	Parameter assignment error	24 ("Switch-off") 16 ("Parameter assignment error")	Parameter not permitted in configuration.
13.3	Process signal error	24 ("Switch-off") 27 ("Unclear error")	See Section Error statuses (Page 17)
13.4	Code sequence error	24 ("Switch-off") 26 ("External error")	A code sequence error can occur, for example, in case of: • Cross-circuit at the inputs • EMC problem Bit 18.0 is additionally set.
13.5	Logic error	24 ("Switch-off") 25 ("Safety-related switch-off")	A logic error can occur, for example, in case of: • Discrepancy error • Sequence error Bit 18.0 is additionally set.
13.6 … 13.7	Reserved	-	-
14.0	Downloading of module parameters is not yet complete	-	-
14.1	Reserved	-	-
14.2	Cyclic data exchange is active	-	-
14.3 … 14.7	Reserved	-	-
15 … 17	Reserved	-	-
18.0	Group error code sequence_Logic	24 ("Switch-off")	A code sequence error or logic error is present for at least one safe input. Bytes 90 … 91 contain the AS-i address of the first safe input for which the error is present.
18.1	Reserved	-	-
18.2	Group_Message_Input_Triggered	-	At least one monitored safe input has value status "0". Possible cause: • Startup test necessary • Safety sensor triggered Bytes 94 … 95 contain the AS-i address of the first safe input for which the value status "0" is present.
18.3 … 18.7	Reserved	-	-

Byte.Bit	Description	Only with firmware V1.0.0: Error code (decimal) in the diagnostic alarm	Remark
19 … 21	Reserved	-	-
22.0 … 22.1	Reserved	-	-
22.2	Timeout	24 ("Switch-off") 8 ("Lower limit undershot")	An internal data processing error has occurred. The F-CM AS-i Safety ST module signals a device fault. Bit 13.2 is additionally set.
22.3 … 22.6	Reserved	-	-
22.7	AS-i slave failure	26 ("External error")	No communication is detected in the case of at least one monitored safe input slave or control unit for a safe AS-i output.
23.0 … 23.7	Reserved	-	-
24 … 25	Reserved	-	-
26.0 … 26.3	Reserved	-	-
26.4	Coding element error	24 ("Switch-off") 27 ("Unclear error")	A data error occurred or coding element is missing when a coding element is accessed. The F-CM AS-i Safety ST module signals a device fault.
26.5 … 26.7	Reserved	-	-
27 … 28	Reserved	-	-
29.0 … 29.7	Reserved	-	-
30 … 33	Reserved	-	-
34 … 35	Parameter assignment error object	-	Object number for which a parameter assignment error was detected. 0 = No error 1 … 31 = The number corresponds to the AS-i address of a safe input. 32 … 47 = A number 32 … 47 corresponds to the number of the switching group 0 … 15
36 … 37	Reserved	-	-
38.0	AS-i bus error	26 ("External error")	The AS-i data communication is interrupted, substitute values in the interconnection logic

Byte.Bit	Description	Only with firmware V1.0.0: Error code (decimal) in the diagnostic alarm	Remark
38.1	AS-i parameter assignment error	26 ("External error")	In addition, the AS-i address of the affected AS-i slave with the lowest address is entered in byte 55. If an AS-i address of an output switching group is not included by the AS-i master in the data communication, this bit is set. A substitute value will be used instead.
38.2	AS-i configuration error	-	In addition, the AS-i address of the affected AS-i slave with the lowest address is entered in byte 39. This bit is set when SET ≠ ACTUAL on the AS-i bus, when, for example, an AS-i slave is missing. A substitute value will be used instead.
38.3	AS-i voltage too low	-	If the AS-i voltage is too low during operation, a serious device fault results.
38.4	Reserved	-	-
38.5	AS-i communication okay	-	-
38.6 … 38.7	Reserved	-	-
39	Incorrect AS-i address	-	AS-i address of the AS-i slave that the device has identified as faulty: 0 = No error 1 … 31 = AS-i slave address
40 … 47	Reserved	-	-
48.0	ASIsafe safe input active	-	As soon as safe AS-i slaves become monitored, this bit is set.
48.1	ASIsafe safe output active	-	If safe AS-i outputs are controlled, this bit is set.
48.2 … 48.7	Reserved	-	-
49.0	ASIsafe code sequences missing	26 ("External error")	Safe input In addition, the AS-i address is entered in byte 50.
49.1	ASIsafe code sequences duplicated	24 ("Switch-off") 19 ("Communication error")	In addition, the AS-i address is entered in byte 50.
49.2	ASIsafe code sequences new	-	New code sequences are available for transfer. In addition, the AS-i address is entered in byte 50.
49.3	ASIsafe code sequences known	-	The code sequences are taught and saved in the coding element.
49.4	ASIsafe code sequence error	24 ("Switch-off") 19 ("Communication error")	In addition, the AS-i address is entered in byte 50.

Byte.Bit	Description	Only with firmware V1.0.0: Error code (decimal) in the diagnostic alarm	Remark
49.5	ASIsafe code sequence teaching active	-	The code sequences are being collected. When the code sequences for all safe AS-i input slaves detected on the bus are taught, this bit is reset.
49.6 … 49.7	Reserved	-	-
50	Code sequence error object	-	This bit contains the lowest AS-i address for which a code sequence problem has occurred. Code sequence problems are: • 49.0 ASIsafe code sequences missing (Prio 3) • 49.1 ASIsafe code sequences duplicated (Prio 1) • 49.2 ASIsafe code sequences new (Prio 4) • 49.4 ASIsafe code sequence error (Prio 2)
51 … 54	Reserved	-	-
55	Switching group error object	-	This byte contains the lowest AS-i address that is configured for an output switching group but is not addressed by the master. Correct the slave configuration of the master.
56 … 61	Reserved	-	-
62.0	F_Dest_Adr does not match	24 ("Switch-off") 19 ("Communication error") 64 ("Different destination address")	-
62.1	F_Dest_Adr invalid	24 ("Switch-off") 19 ("Communication error") 65 ("Invalid destination address")	The coding element does not contain an F-address.
62.2	F_Source_Adr invalid	24 ("Switch-off") 19 ("Communication error") 66 ("Invalid source address")	-
62.3	F_WD-Time_0	24 ("Switch-off") 19 ("Communication error") 67 ("Watchdog time is 0 ms")	F_WD-Time value is 0 ms.
62.4	F_SIL value	24 ("Switch-off") 19 ("Communication error") 68 ("Parameter 'F_SIL' exceeds the appl. SIL")	F_SIL value exceeds SIL value of the specified device application

Byte.Bit	Description	Only with firmware V1.0.0: Error code (decimal) in the diagnostic alarm	Remark
62.5	F_CRC_Length	24 ("Switch-off") 19 ("Communication error") 69 ("Parameter 'F_CRC_Length' does not match …")	F_CRC_Length value does not match the actual CRC length.
62.6	F_Par_Version	24 ("Switch-off") 19 ("Communication error") 70 ("Incorrect F-parameter version or F_Block_ID")	F_Par_Version does not match the F-parameter set or F-Block_ID is invalid Block_ID
62.7	CRC1 error	24 ("Switch-off") 19 ("Communication error") 71 ("CRC1 error")	-
63.0 … 63.2	Reserved	-	-
63.3	iPAR_CRC error	24 ("Switch-off") 19 ("Communication error") 75 ("Inconsistent I-parameters [iParCRC error]")	-
63.4	Operator acknowledge requested	-	Channel is ready for reintegration
63.5 … 63.7	Reserved	-	-
64 … 65	Reserved	-	-
70 … 89	Reserved	-	-
90 … 91	Object_Code_Sequence_Logic	-	AS-i address of the first safe AS-i slave for which a code sequence error or logic error i present. See also bit 18.0. 0 = No error 0 = No error 1 … 31 = AS-i slave address ≥32 = Internal error numbers
92 … 93	Reserved	-	-
94 … 95	Object_input_triggered	-	AS-i address of the first safe AS-i slave for which the input_triggered message is present. See also bit 18.2. 0 = No error 1 … 31 = AS-i slave address ≥32 = Internal error numbers
96 … 199	Reserved	-	-

6.4.2 DS 202 Status safe inputs/outputs

Description

Note

Use of the data set 206 is recommended for diagnosis via the user program (firmware V1.0.1 or higher).

DS 202 contains non-safety-related status information for the safe input slaves and for the control of the safe output slaves.

The status information for the control of the safe output slaves relates either to the control units activated in the F-CM AS-i Safety ST module or to data of external control units for safe output slaves that is also read on the AS-i bus.

Table 6- 9 DS 202 Status safe inputs/safe outputs

Byte	Description
0 … 1	Reserved
2 … 5	Status input monitoring AS-i address 1
6 … 9	Status input monitoring AS-i address 2
10 … 13	Status input monitoring AS-i address 3
14 … 17	Status input monitoring AS-i address 4
18 … 21	Status input monitoring AS-i address 5
22 … 25	Status input monitoring AS-i address 6
26 … 29	Status input monitoring AS-i address 7
30 … 33	Status input monitoring AS-i address 8
34 … 37	Status input monitoring AS-i address 9
38 … 41	Status input monitoring AS-i address 10
42 … 45	Status input monitoring AS-i address 11
46 … 49	Status input monitoring AS-i address 12
50 … 53	Status input monitoring AS-i address 13
54 … 57	Status input monitoring AS-i address 14
58 … 61	Status input monitoring AS-i address 15
62 … 65	Status input monitoring AS-i address 16
66 … 69	Status input monitoring AS-i address 17
70 … 73	Status input monitoring AS-i address 18
74 … 77	Status input monitoring AS-i address 19
78 … 81	Status input monitoring AS-i address 20
82 … 85	Status input monitoring AS-i address 21
86 … 89	Status input monitoring AS-i address 22
90 … 93	Status input monitoring AS-i address 23
94 … 97	Status input monitoring AS-i address 24
98 … 101	Status input monitoring AS-i address 25

Byte	Description
102 … 105	Status input monitoring AS-i address 26
106 … 109	Status input monitoring AS-i address 27
110 … 113	Status input monitoring AS-i address 28
114 … 117	Status input monitoring AS-i address 29
118 … 121	Status input monitoring AS-i address 30
122 … 125	Status input monitoring AS-i address 31
126 … 129	Status output control switching group 0
130 … 133	Status output control switching group 1
134 … 137	Status output control switching group 2
138 … 141	Status output control switching group 3
142 … 145	Status output control switching group 4
146 … 149	Status output control switching group 5
150 … 153	Status output control switching group 6
154 … 157	Status output control switching group 7
158 … 161	Status output control switching group 8
162 … 165	Status output control switching group 9
166 … 169	Status output control switching group 10
170 … 173	Status output control switching group 11
174 … 177	Status output control switching group 12
178 … 181	Status output control switching group 13
182 … 185	Status output control switching group 14
186 … 189	Status output control switching group 15
190 … 199	Reserved

Table 6- 10 Input monitoring: Structure of the status information in DS 202

Byte.Bit	Message bit		Remark
0.0	Value = 1:	Startup test necessary	-
0.1	Value = 1:	Sequence condition violated	-
0.2	Value = 1:	Discrepancy condition violated	-
0.3	Value = 1:	Safety sensor triggered	-
0.4 … 0.7	Reserved		-
1.0	Value = 1:	Code sequence error	Cross-circuit at input
1.1 … 1.7	Reserved		-
2.0	Reserved		-
2.1	Value = 1:	Switch-on condition not met	-
2.2 … 2.7	Reserved		-
3.0 … 3.7	Reserved		

Table 6- 11 Output control: Structure of the status information in DS 202

Byte.Bit	Message bit	Remark
0.0	Output active	The control unit of the switching group sends the "F-OUT 1" control signal.
0.1 … 0.7	Reserved	-
1.0 … 1.3	Reserved	-
1.4	Auxiliary signal AUX1 sent	Auxiliary control signal AUX1 was transferred with value "1." If the error acknowledgment bit in the output process image has the value "0", the message is reset.
1.5	Auxiliary signal AUX2 sent	Auxiliary control signal AUX2 was transmitted with value "1." If the error acknowledgment bit in the output process image has the value "0", the message is reset.
1.6 … 1.7	Reserved	-
2.0 … 2.7	Reserved	-
3.0 … 3.7	Reserved	-

6.4.3 DS 204 Status code sequences

Description

Note

Use of the data set 206 is recommended for diagnosis via the user program (firmware V1.0.1 or higher).

The DS 204 contains the statuses of all AS-i slaves that are known to the F-CM AS-i Safety ST module.

Table 6- 12 DS 204: Status code sequence for an AS-i address in DS 204

Byte	Description
0 … 13	Reserved
14 … 17	Status code sequence for AS-i address 1
18 … 21	Status code sequence for AS-i address 2
22 … 25	Status code sequence for AS-i address 3
26 … 29	Status code sequence for AS-i address 4
30 … 33	Status code sequence for AS-i address 5
34 … 37	Status code sequence for AS-i address 6
38 … 41	Status code sequence for AS-i address 7
42 … 45	Status code sequence for AS-i address 8
46 … 49	Status code sequence for AS-i address 9
50 … 53	Status code sequence for AS-i address 10
54 … 57	Status code sequence for AS-i address 11

Byte	Description
58 … 61	Status code sequence for AS-i address 12
62 … 65	Status code sequence for AS-i address 13
66 … 69	Status code sequence for AS-i address 14
70 … 73	Status code sequence for AS-i address 15
74 … 77	Status code sequence for AS-i address 16
78 … 81	Status code sequence for AS-i address 17
82 … 85	Status code sequence for AS-i address 18
86 … 90	Status code sequence for AS-i address 19
90 … 91	Status code sequence for AS-i address 20
94 … 97	Status code sequence for AS-i address 21
98 … 101	Status code sequence for AS-i address 22
102 … 105	Status code sequence for AS-i address 23
106 … 109	Status code sequence for AS-i address 24
110 … 113	Status code sequence for AS-i address 25
114 … 117	Status code sequence for AS-i address 26
118 … 121	Status code sequence for AS-i address 27
122 … 125	Status code sequence for AS-i address 28
126 … 129	Status code sequence for AS-i address 29
130 … 133	Status code sequence for AS-i address 30
134 … 137	Status code sequence for AS-i address 31
138 … 199	Reserved

Table 6- 13 Assignment of the bits of an AS-i address in the "Status code sequence" data structure

Byte	Bit	Description	Setting	Meaning of the setting
0	0 … 2	Status of the slave	= 0	No slave present
			= 1	Standard slave (not safety-related)
			= 2	Safe slave, but the code sequence type safe input/safe output is not yet decoded.
			= 3	Code sequence type safe output
			= 4	Code sequence type safe input
			= 5 … 7	Reserved
	3	-	Reserved	-
	4 … 6	Status of parameter assignment	= 0	No safe AS-i output slave or AS-i input slave is configured.
			= 1	Reserved
			= 2	Safe AS-i slave is configured The detected slave corresponds to the activation.
			= 3	Safe AS-i slave is configured The detected slave does not correspond to the activation.
			= 4 … 7	Reserved
	7	-	Reserved	-
1	0 … 2	Status of the code sequence	= 0	Code sequence irrelevant: No activation or no slave is present.
			= 1	Code sequence missing: No code sequence is taught or transferred.
			= 2	Code sequence duplicated: At least one other slave has the same code sequence.
			= 3	Code sequence new: The taught code sequence does not correspond to the transferred code sequence.
			= 4	Code sequence known: The taught code sequence does not correspond to the transferred code sequence.
			= 5 … 7	Reserved
	3	-	Reserved	-
	4 … 5	Status of the safe input 1	= 0	The input is not present (or the code sequence type is not yet decoded).
			= 1	Error, e.g., code sequence error
			= 2	Input signal = 0: The contact is open.
			= 3	Input signal = 1: The contact is closed.
	6 … 7	Status of the safe input 2	= 0	The input is not present (or the code sequence type is not yet decoded).
			= 1	Error, e.g., code sequence error
			= 2	Input signal = 0: The contact is open.
			= 3	Input signal = 1: The contact is closed.

Byte	Bit	Description	Setting	Meaning of the setting
2	0 … 1	Status of the "F-OUT 1" control signal for safe output	= 0	The output is not present (or the code sequence type is not yet decoded).
			= 1	Error, e.g., code sequence error
			= 2	Control signal for output = 0
			= 3	Control signal for output = 1
	2 … 3	Status of the "F-OUT 2" control signal for safe output	= 0	The output is not present (or the code sequence type is not yet decoded).
			= 1	Error, e.g., code sequence error
			= 2	Control signal for output = 0
			= 3	Control signal for output = 1
	4 … 5	Status of the "F-OUT 3" control signal for safe output	= 0	The output is not present (or the code sequence type is not yet decoded).
			= 1	Error, e.g., code sequence error
			= 2	Control signal for output = 0
			= 3	Control signal for output = 1
	6 … 7	Status of the "F-OUT 4" control signal for safe output	= 0	The output is not present (or the code sequence type is not yet decoded).
			= 1	Error, e.g., code sequence error
			= 2	Control signal for output = 0
			= 3	Control signal for output = 1
3	0 … 1	Status of the auxiliary signal 1	= 0	The signal is not present (or the code sequence type is not yet decoded).
			= 1	Error, e.g., code sequence error
			= 2	Auxiliary signal = 0
			= 3	Auxiliary signal = 1
	2 … 3	Status of the auxiliary signal 2	= 0	The signal is not present (or the code sequence type is not yet decoded).
			= 1	Error, e.g., code sequence error
			= 2	Auxiliary signal = 0
			= 3	Auxiliary signal = 1
	4 … 7	-	Reserved = 0	-

6.4.4 DS 206 Diagnostic data record

Meaning

Note

Use of the data set 206 is recommended for diagnosis via the user program (firmware V1.0.1 or higher).

Data record 206 contains a summary of the information that is relevant for a comprehensive diagnosis of the F-CM AS-i Safety ST module via your user program.

For some events, the F-CM AS-i Safety ST module generates a diagnostic alarm.

The following applies for diagnostic alarms of the F-CM AS-i Safety ST module with firmware V1.0.1 or higher:

- The "Error code" column in the table below indicates which events are relevant here.
- If the associated bit changes in the data record, a diagnostic alarm with the indicated error code is generated (incoming alarm when bit changes to value "1" and outgoing alarm when bit changes to value "0").
- If no error code is specified ("-"), a diagnostic alarm is not generated.
- The diagnostic alarms for firmware V1.0.0 are described in Section "DS 92 Device-specific diagnosis (Page 57)".

Table 6- 14 DS 206 Diagnosis

Byte.Bit	Description In the case of binary values, the description declares the status "1"	FW V1.0.1 and higher: Error code (decimal) in the diagnostic alarm	Remark
0	Version High	-	-
1	Version Low	-	-
2.0	Overtemperature	1048	Maximum operating temperature exceeded
2.1	Undertemperature	786	Ambient temperature too low
2.2	Incorrect parameter value	16	Configuration data contains errors
2.3	Incorrect or inconsistent firmware	283	Firmware is faulty Firmware update necessary
2.4	Supply voltage too high	1038	AS-i voltage too high
2.5	Supply voltage too low	1039	AS-i voltage too low
2.6	Program cycle time exceeded	259	Internal cycle time exceeded
2.7	Device fault	1059	Self-test has determined a device fault. For details, see further error messages.
3.0	Serious device fault	9	Serious device fault. No communication possible
3.1	Teaching necessary	1055	New code tables are available for transfer.
3.2	Normal operation	-	Cyclic I/O data exchange active
3.3	Startup	-	Parameters are loaded No cyclic I/O data exchange
3.4	Serious device fault	-	Serious device fault. No communication possible
3.5	I/O device signal error	-	One or more channels are passivated
3.6	Code sequence cannot be read correctly	-	A code sequence is non-existent or incomplete
3.7	Reintegration necessary	-	Error is cleared, but at least one channel is still passivated
4.0	Access to device settings	-	Assignment of the F-address Acceptance of the code sequences Firmware update

Byte.Bit	Description In the case of binary values, the description declares the status "1"	FW V1.0.1 and higher: Error code (decimal) in the diagnostic alarm	Remark
4.1	ASIsafe code table teaching active	-	Teach LED flashes yellow; code sequences are collected. Is reset when the code tables for all safe AS-i input slaves detected on the bus have been taught.
4.2	Diagnostic memory overflow	33	Too many simultaneous error messages
4.3	Change of parameters not permissible	-	Modification of parameter data is rejected in normal mode
4.4 ... 4.7	Reserved	-	-
5.0	Status LED flashes green	-	-
5.1	Status LED lit green	-	-
5.2	Error LED flashes red	-	-
5.3	CFG LED flashes red	-	-
5.4	PSF LED flashes red	-	-
5.5	Teach LED flashes yellow	-	-
5.6	Teach LED lit yellow	-	-
5.7	ADDR LED flashes green	-	-
6.0	No access possible to the retentive storage of the F-address	781	The coding element (type H) in the BaseUnit is missing or there is an access error
6.1	Different destination address (F_Dest_Add)	64	The PROFIsafe driver has detected a different F-destination address.
6.2	Invalid target address (F_Dest_Add)	65	The PROFIsafe driver has detected an inadmissible F-destination address.
6.3	Invalid source address (F_Source_Add)	66	The PROFIsafe driver has detected an inadmissible F-source address.
6.4	Watchdog time is 0 ms (F_WD_Time or F_WD_Time2)	67	The PROFIsafe driver has detected an inadmissible watchdog time.
6.5	Parameter "F_SIL" exceeds the application-specific SIL	68	The PROFIsafe driver has detected a discrepancy between the communication SIL setting and the application SIL setting.
6.6	Parameter "F_CRC_Length" does not match the generation	69	The PROFIsafe driver has detected a discrepancy in the CRC length.
6.7	Incorrect F-parameter version or F_Block_ID	70	The PROFIsafe driver has detected an incorrect version of the F-parameters or an invalid F_Block_ID.
7.0	CRC1 error	71	The PROFIsafe driver has detected inconsistent F-parameters.
7.1	Inconsistent i-parameters (iParCRC error)	75	The PROFIsafe driver has detected inconsistent i-parameters.
7.2	PROFIsafe communication error (timeout)	92	
7.3	PROFIsafe communication error (CRC)	F93	

Byte.Bit	Description In the case of binary values, the description declares the status "1"	FW V1.0.1 and higher: Error code (decimal) in the diagnostic alarm	Remark
7.4	PROFIsafe address assignment error	F94	Coding element contains inadmissible data
7.5 ... 7.7	Reserved	-	-
8	Configured AS-i address for output switching group 0	-	-
9	Configured AS-i address for output switching group 1	-	-
10	Configured AS-i address for output switching group 2	-	-
11	Configured AS-i address for output switching group 3	-	-
12	Configured AS-i address for output switching group 4	-	-
13	Configured AS-i address for output switching group 5	-	-
14	Configured AS-i address for output switching group 6	-	-
15	Configured AS-i address for output switching group 7	-	-
16	Configured AS-i address for output switching group 8	-	-
17	Configured AS-i address for output switching group 9	-	-
18	Configured AS-i address for output switching group 10	-	-
19	Configured AS-i address for output switching group 11	-	-
20	Configured AS-i address for output switching group 12	-	-
21	Configured AS-i address for output switching group 13	-	-
22	Configured AS-i address for output switching group 14	-	-
23	Configured AS-i address for output switching group 15	-	-
24 ... 27	Status AS-i address 1	-	-
28 ... 31	Status AS-i address 2	-	-
32 ... 35	Status AS-i address 3	-	-
36 ... 39	Status AS-i address 4	-	-
40 ... 43	Status AS-i address 5	-	-
44 ... 47	Status AS-i address 6	-	-
48 ... 51	Status AS-i address 7	-	-
52 ... 55	Status AS-i address 8	-	-

Byte.Bit	Description In the case of binary values, the description declares the status "1"	FW V1.0.1 and higher: Error code (decimal) in the diagnostic alarm	Remark
56 ... 59	Status AS-i address 9	-	-
60 ... 63	Status AS-i address 10	-	-
64 ... 67	Status AS-i address 11	-	-
68 ... 71	Status AS-i address 12	-	-
72 ... 75	Status AS-i address 13	-	-
76 ... 79	Status AS-i address 14	-	-
80 ... 83	Status AS-i address 15	-	-
84 ... 87	Status AS-i address 16	-	-
88 ... 91	Status AS-i address 17	-	-
92 ... 95	Status AS-i address 18	-	-
96 ... 99	Status AS-i address 19	-	-
100 ... 103	Status AS-i address 20	-	-
104 ... 107	Status AS-i address 21	-	-
108 ... 111	Status AS-i address 22	-	-
112 ... 115	Status AS-i address 23	-	-
116 ... 119	Status AS-i address 24	-	-
120 ... 123	Status AS-i address 25	-	-
124 ... 127	Status AS-i address 26	-	-
128 ... 131	Status AS-i address 27	-	-
132 ... 135	Status AS-i address 28	-	-
136 ... 139	Status AS-i address 29	-	-
140 ... 143	Status AS-i address 30	-	-
144 ... 147	Status AS-i address 31	-	-

Table 6- 15 Status AS-i addresses: Structure of the status information

Byte.Bit	Description	FW V1.0.1 and higher: Error code (decimal) in the diagnostic alarm	Remark
0.0	Reserved	-	-
0.1	Discrepancy error, channel status 0/1	1041	When the error occurs, the pair of channels at input 1 has the status "0" and at input 2 the status "1".
0.2	Discrepancy error, channel status 1/0	1042	When the error occurs, the pair of channels at input 1 has the status "1" and at input 2 the status "0".
0.3 ... 0.4	Reserved	-	-
0.5	Sequence error, channel status 0/1	1045	When the error occurs, the pair of channels at input 1 has the status "0" and at input 2 the status "1".

Byte.Bit	Description	FW V1.0.1 and higher: Error code (decimal) in the diagnostic alarm	Remark
0.6	Sequence error, channel status 1/0	1046	When the error occurs, the pair of channels at input 1 has the status "1" and at input 2 the status "0".
0.7	Sequence error, channel status 1/1	1047	When the error occurs, the pair of channels at input 1 has the status "1" and at input 2 the status "1".
1.0	Input slave missing or of the incorrect type	1050	-
1.1	Control unit of the output switching group not in cyclic data exchange	1051	The AS-i master does not address the configured AS-i address of the output switching group.
1.2	Code sequence error (systematic fault)	1054	Permanent interruption to code sequence, e.g. due to electromagnetic interference on the sensor cable or code sequence corruption after replacement of the safe input module.
1.3	Code sequence missing in the memory of the F-CM	1056	-
1.4	ASIsafe code sequences duplicated	1057	Identical code sequence occurs several times
1.5	Sporadic code sequence error	1058	Momentary interruption to code sequence, e.g. due to electromagnetic interference on the sensor cable.
1.6 ... 1.7	Reserved	-	-
2.0	Safety sensor triggered	-	-
2.1	Switch-on condition not met		The safe input value has been reset to the status "0"
2.2	Startup test necessary	-	Test of the input is necessary: Both inputs of the channel pair must assume the status "0".
2.3	Status of process image (user data)	-	-
2.4	Value status	-	Value status = 1: A valid process value is output for the channel. Value status = 0: A substitute value is output for the channel (error on channel or the channel is deactivated).
2.5... 2.7	Reserved	-	-
3.0	Safe AS-i input slave configured	-	-
3.1	Safe AS-i output slave configured	-	-
3.2	Unsafe slave detected	-	-
3.3	Safe slave detected, type unknown	-	-
3.4	Safe slave detected, type input slave	-	-
3.5	Safe slave detected, type output slave	-	-
3.6	Slave is located in cyclic data exchange	-	-
3.7	Reserved	-	-

Code sequences 7

The principle of the ASIsafe code sequences is briefly explained in Section Safety-related communication with AS-Interface (Page 35).

The F-CM AS-i Safety ST module manages the code sequences of the safe AS-i slaves in two steps. First, the F-CM AS-i Safety ST module reads all code sequences on the AS-i bus and checks whether the respective code sequence is plausible. This operation is referred to as "teaching the code sequences". The code sequences taught in this way are in volatile memory. The taught code sequences are transferred to the non-volatile memory after a request by the user.

Initial commissioning

During initial commissioning, the F-CM AS-i Safety ST module must teach the code sequences of all safe AS-i input slaves present on the AS-i bus and transfer them to non-volatile memory. In so doing, the module detects both the slaves for which input monitoring is activated as well as the other safe input slaves.

Replacement of a safe AS-i input slave

After replacement of a safe AS-i input slave, the new code sequence must be taught and saved.

If the code sequence is not saved for a safe AS-i input slave, or if the code sequence does not correspond to the saved code sequence, the input channel will be passivated and assigned the substitute value "0".

As soon as the F-CM AS-i Safety ST module detects a new code sequence, the code sequences are automatically taught. Confirm the transfer of the code sequences into the memory to prevent unauthorized changes to the AS-i component.

For the transfer of the code sequences to the non-volatile memory, you can open the "Teach ASIsafe" dialog by pressing the "Teach ..." button.

Alternatively, the transfer is also possible by pressing the optional "TEACH" button (at least 3 s).

Replacement of the F-CM AS-i Safety ST module

The non-volatile memory is located in the BaseUnit. The transferred code sequences are retained in this memory after replacement of the F-CM AS-i Safety ST module.

Below is a description of the options offered by the F-CM AS-i Safety ST module for transferring code sequences.

See also

Connection (Page 27)

7.1 Transferring code sequences via STEP 7 online access

When code sequence are managed via *STEP 7* online access, you have the option of monitoring the status of the existing code sequences in a graphic overview. In particular, the graphic overview offers advantages for initial commissioning. In addition, you can use the graphic overview for transferring the code sequences of replaced slaves during operation. You can open the graphic overview for diagnostic purposes without changing the saved code sequences. The transfer of taught code sequences is possible but not mandatory.

In order to open this dialog, there must be an online connection to the controller or to the F-CM AS-i Safety ST module. Load the hardware configuration into the modules of the controller before teaching the code sequences so that the online configuration of the F-CM AS-i Safety ST module matches the offline configuration.

7.1.1 "Teach ASIsafe code sequences" dialog

The "Teach ASIsafe code sequences" dialog contains an overview of the code sequences of the existing safety-related AS-i slaves. In this dialog, you start the transfer of the code sequences read in on the AS-i bus into the memory of the F-CM AS-i Safety ST module.

The "Teach ASIsafe code sequences" dialog does not make any changes to the module configuration. You can open the dialog for information purposes during operation. The information displayed in the dialog are obtained online from the F-CM AS-i Safety ST module. There is no comparison with the offline configuration in this case.

Within the "AS-i addresses 0…15" and "AS-i adresses 16…31", you see the following information for each AS-i address:

- Slave status
- Code sequence
- F-IN 1 … 2
- F-OUT 1 ... 4

For the AS-i address 0, only information about the slave status can be displayed because a slave with the address 0 does not exchange cyclic input/output data.

Below this information you see:

- The "Transfer taught code sequences" button
- The "Progress of teaching operation" display

By double-clicking the "Close" button, you can exit the dialog at any time. If the button is actuated, the data will not be changed. If the code sequences have not been transferred or have only been partially transferred, a corresponding notice appears.

"Slave Status" column

The "Slave status" column shows the following information about the AS-i address via a color code:

Gray	The address does not exist on the AS-i bus. It is not needed in the configuration of the F-CM AS-i Safety ST module (input monitoring control / output monitoring control deactivated)
Green (without check mark)	The address belongs to a slave that exists on the AS-i bus. However, the slave is not needed in the configuration of the F-CM AS-i Safety ST module (input monitoring control / output monitoring control deactivated). The slave on the AS-i bus is a safe slave or a standard slave. It is available for use by the AS-i master or another module.
Green (with check mark)	The address is present on the AS-i bus and corresponds to the configuration of the F-CM AS-i Safety ST module (input monitoring or output monitoring is activated).
Yellow	An error has been detected: The address is present on the AS-i bus but does not correspond to the configuration of the F-CM AS-i Safety ST module (input monitoring control or output monitoring control is activated). Check the slave. Replace the slave with the required slave or change the configuration.
Red	An error has been detected: The address is not present on the AS-i bus but is needed in the configuration of the F-CM AS-i Safety ST module (input monitoring or output monitoring is activated). • Check whether the slave exists on the AS-i bus and has been included in the communication by the AS-i master. • Check whether the slave is contained in the configuration of the AS-i master. Correct the configuration of the AS-i bus, if required.

"Code sequence" column

The "Code sequence" column shows the following information about the AS-i address via a color code:

Gray	No code sequence is needed for the address.
Green (without check mark)	A code sequence was taught but not transferred to the memory. Start the transfer of the code sequence by double-clicking the "Transfer taught code sequences" button.
Green (with check mark)	The code sequence was transferred to the non-volatile memory. Note: This status is also displayed when the output control is activated for this address. The code sequences for safe outputs are automatically predefined in the F-CM AS-i Safety ST module. They are not transferred to the non-volatile memory of the code sequences.
Yellow	An error has been detected: A code sequence was taught that is already being used by another slave. The code sequence cannot be used. Replace the slave with a different slave.
Red	Warning or error: The address is sending an incomplete or invalid code sequence. Check whether both inputs of the safe input slave are assigned with the "ON" signal. If required, actuate the associated safety contacts. The contacts must be closed. • Check whether a cross-circuit exists at the inputs. If necessary, correct the wiring of the inputs.

"F-IN 1 ... 2" column

The "F-IN 1 ... 2" column shows the following information about the AS-i address via a color code:

The numbers 1 to 2 designate the number of the input channel.

Gray	The input channel is not present. A safe input slave was not detected at the address.
Green	The input channel shows the value 1 ("ON" status).
White	The input channel shows the value 0 ("OFF" status).
Yellow	The input channel shows the value 0 ("OFF" state) or is not present. Note: The status indication is unambiguous once the code sequence has been taught for a safe input slave (both inputs assigned with "ON" signal), or when an "ON" signal has been read in for an externally controlled safe output slave.
Red	An error was detected, e.g., a code sequence error: The status of the input channel cannot be read in. Substitute value 0 is used.

"F-OUT 1 ... 4" column

The "F-OUT 1 ... 4" column shows the following information about the AS-i address via a color code:

The numbers 1 to 4 designate the number of the output channel.

Gray	The output channel is not present. A safe output channel was not detected at the address.
Green	The output channel shows the value 1 ("ON" status).
White	The output channel shows the value 0 ("OFF" status).
Yellow	The output channel shows the value 0 ("OFF" state) or is not present. Note: The status indication is unambiguous once the code sequence has been taught for a safe input slave (both inputs assigned with "ON" signal), or when an "ON" signal has been read in for an externally controlled safe output slave.
Red	An error was detected, e.g., a code sequence error: The status of the output channel cannot be read in.

If the output control is activated for the address, the F-CM AS-i Safety ST module can control the status for F-OUT 1. The F-CM AS-i Safety ST module cannot control F-OUT 2 … 4. The value 0 is output here.

If an external control unit uses the output address, the dialog shows the statuses for F-OUT 1 … 4 read in on the AS-i bus.

7.1.2 Transferring taught code sequences

In order for the input data of a safe AS-i input slave to be evaluated and made available to the safety program, the taught code sequences must be transferred to the non-volatile memory.

To do so, click the "Transfer taught code sequences..." button.

A dialog opens prompting you whether the code sequences are to be transferred. With "Yes" you confirm that you are addressing the correct module. For checking purposes, the "ADDR" LED flashes green on the front of the F-CM AS-i Safety ST module The code sequences are transferred to the non-volatile memory. The input data of the safe AS-i input slaves are then evaluated. Reintegration in the safety program is enabled.

With "No" you cancel the prompt without transferring the code sequence.

WARNING

The switching on of plant components may result in death, severe injury, and serious property damage.

Depending on the safety program, the transfer of code sequences may cause plant components to be switched on. Before transferring the code sequences, ensure that no personal injury or property damage can occur. After transferring the code sequences, check the safety equipment for proper functioning.

The "Transfer taught code sequences" button is deactivated when all taught code sequences have already been transferred to the non-volatile memory.

7.1.3 "Progress of teaching operation" display

You can track the progress of the teaching operation.

Progress bar "Teaching in progress":

If at least one safe slave is detected on the AS-i bus whose code sequence has not yet been taught an active progress bar and the text "Teaching in progress" is displayed. Check the displays in the "Code sequences" column and ensure that the safe slaves send their code sequences.

For further information, refer to the "'Code sequence' column".

Taught slaves:

The "Taught slaves" output field shows the number of already transferred code sequences in relation to the number of code sequences that must still be transferred. You will additionally see the numerical ratio as a percentage. When 100% is indicated, all code sequences have been transferred to the non-volatile memory.

You will find additional information in the section "Accept taught code sequences".

7.2 Transferring code sequences with the "TEACH" button.

The use of the "TEACH" button provides an easy way of transferring taught code sequences.

The "TEACH" button can be used, for example, to transfer code sequences of replaced modules during operation. However, it is also suitable for initial commissioning.

To learn how to connect the button to the BaseUnit, refer to Section "Connecting". You can track the progress of the code sequence transfer via the LEDs.

Press the "TEACH" button for at least 3 s. This action causes all currently taught code sequences that are unique and consistent to be transferred to the non-volatile memory. The input data of the safe AS-i input slaves are then evaluated. Reintegration in the safety program is enabled.

WARNING

The switching on of plant components may result in death, severe injury, and serious property damage.

Depending on the safety program, the transfer of code sequences may cause plant components to be switched on. Before transferring the code sequences, ensure that no personal injury or property damage can occur. After transferring the code sequences, check the safety equipment for proper functioning.

When the transfer of the code sequences has been ended successfully, the "TEACH" LED goes out and you can release the "TEACH" button.

If you press the "TEACH" button before all code sequences are taught, the code sequences received up to then will be transferred.

7.3 Final steps

7.3.1 Reintegrating passivated input channels

The input channels of the F-CM AS-i Safety ST module for which no valid code sequences are saved supply the substitute value "0" and are passivated.

After the transfer of the code sequences, the passivated channels must be reintegrated so that the application can work with the real process values.

The procedure for this can be found in the following Programming and Operating Manuals:

- SIMATIC Safety - Configuring and Programming (http://support.automation.siemens.com/WW/view/en/54110126/0/en)
- S7 Distributed Safety (http://support.automation.siemens.com/WW/view/en/22099875/0/en)

After transferring the code sequences, check the safety equipment for proper functioning.

Alarm, fault, and system events 8

8.1 Overview

Diagnostics options

The following diagnostics options are available for the F-CM AS-i Safety ST module:

- LEDs on the module
- Diagnostics in *STEP 7*:
  - Diagnostic buffer
- Alarm messages in user program

See also

Meaning of the LEDs (Page 85)

8.2 LED statuses

8.2.1 Arrangement of the LEDs on the F-CM AS-i Safety ST

Introduction

LEDs on the front plate of the respective module display module-internal and module-external faults. The LEDs and their evaluation are described in the manuals for the relevant modules of the SIMATIC devices.

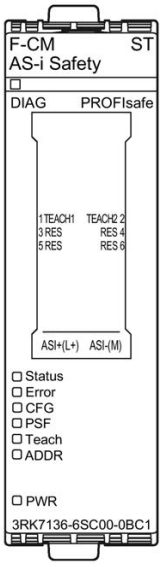

DIAG	Diagnosis
STATUS	Operating state of the module
Error	Operating state of the module
CFG	Fault on the AS-i bus
PSF	Process signal error, e.g.,channel fault on AS-i-F input slave
Teach	Teaching: Teaching of code sequences
ADDR	Addressing of the F-CM AS-i Safety ST module. F-addressing and teaching. The LED indicates whether the module is conducting safety-relevant communication with the software tool.
PWR	Supply voltage

Figure 8-1 LEDs of F-CM AS-i Safety ST

8.2.2 Meaning of the LEDs

The "F-CM AS-i Safety ST" module has 8 LEDs on the front:

LED "DIAG"

The "DIAG" LED displays the general status of the ET 200SP module

Table 8- 1 Meaning of the "DIAG" LED

"DIAG"	Meaning
☐ Off	The voltage is not OK.
✳ Green flashes	The F-CM AS-i Safety ST module is not ready for operation. The module parameters are not assigned.
■ Green ON	The F-CM AS-i Safety ST module is parameterized and error-free. No diagnostic alarms of the F-CM AS-i Safety ST are active.
✳ Red flashes	The F-CM AS-i Safety ST module is parameterized and indicates a diagnostic fault, or a firmware update is in progress.
✳✳ The two-color LED alternately flashes red/green	The position (ping) is displayed for 3 seconds.

LED "Status"

The "Status" and "Error" LEDs indicate the operating state of the device.

Table 8- 2 Meaning of the "Status" LED

"Status"	Meaning
■ Green ON	• The F-CM AS-i Safety ST module is OK. • Cyclic I/O data exchange active
✻ Green flashes	• The system is powering up. • No cyclic I/O data exchange

LED "Error"

The "Status" and "Error" LEDs indicate the operating state of the device.

Table 8- 3 Meaning of the "Error" LED

"Error"	Meaning
■ Red ON	**Serious device fault, e.g.,** • Fault in the electronics • Overtemperature
✻ Red flashes	**Device fault, e.g.,** • Intermittent data processing error (EMC problem) • Contact problem with the backplane bus • Missing coding element in the BaseUnit • Missing firmware update
□ Off	No error

LED "CFG"

The "CFG" LED indicates errors on the AS-i bus.

Table 8- 4 Meaning of the "CFG" LED

"CFG"	Meaning
■ Red ON	The AS-i bus is OK, but a code sequence error exists.
✻ Red flashes	Fault on the AS-i bus: • A code sequence does not exist or it is incomplete.
□ "Off"	All code sequences are completely transferred.

LED "PSF"

The "PSF" LED indicates process signal errors at one or more channels of the module.

Table 8- 5 Meaning of the "PSF" LED

LED "PSF"	Meaning
■ Red ON	PROFIsafe channel fault for the complete F-CM AS-i Safety ST module, e.g. fault on F-CM AS-i input slave
✻ Red "flashes"	• Discrepancy error at the inputs of a safe AS-i input slave • Sequence error at the inputs of a safe AS-i input slave • Code sequence error at a safe AS-i input slave, e.g., due to cross-circuit at inputs or an EMC problem • Failure of a safe AS-i input slave The channel involved is passivated. The "PSF" LED goes out only after all channels have been reintegrated.
□ "Off"	No process signal error

LED "TEACH"

This LED indicates teaching of safe AS-i slaves. The "TEACH" LED indicates the progress of the teaching operation.

Table 8- 6 Meaning of the "TEACH" LED

LED "TEACH"	Meaning
■ Yellow ON	The code sequences have been successfully taught, but have not yet been accepted. Transfer the code sequences either via the STEP 7 online dialog or by pressing the optional "TEACH" button (for at least 3 s). For more information, see the Section "Code sequences (Page 75)".
✳ Yellow flashes	Teaching of code sequences in progress.
□ "Off"	The code sequences are completely transferred.

LED "ADDR"

The "ADDR" LED indicates that the device is conducting safety-relevant communication with a software tool.

Table 8- 7 Meaning of the "ADDR" LED

LED "ADDR"	Meaning
✳ Green flashes	Feedback that the module is addressed: • For assignment of the F-address • For transfer of the code sequences • Firmware update in progress
☐ Off	Not relevant

LED "PWR"

The "PWR" LED indicates the status of the voltage supply.

Table 8- 8 Meaning of the "PWR" LED

LED "PWR"	Meaning
■ Green ON	AS-i voltage is applied.
☐ "Off"	Insufficient AS-i voltage is applied.

8.3 Diagnostic messages

The F-CM AS-i Safety ST module generates one or more alarms when various events occur.

Note

When replacing an F-CM AS-i Safety module with firmware V1.0.0, the following must be observed:

With firmware V1.0.1 or higher, the F-CM AS-i Safety ST module generates a modified range of alarm messages compared with V1.0.0.

If the user program evaluates the error numbers of the generated alarms directly, the user program may have to be adapted if the firmware version is changed (e.g. when changing a device). If necessary, the firmware version of a replacement device can be modified to the previously used firmware version (see Section "Firmware update (Page 24)").

It is expected that the upgrading of the firmware version from V1.0.0 to V1.0.1 will not usually have any influence on the user program. The safety functionality of the F-CM AS-i Safety ST module does not change when the firmware is replaced.

If, after the replacement of a device, an alarm message of the F-CM AS-i Safety module appears in the message system (e.g. on an HMI panel), which contains an error code instead of a message text, then the assigned message texts are not known to the message system. In order to update the message texts, the project must be re-compiled with a current version of the TIA Portal / STEP 7 and loaded into the controller or into the message system. The function of the message system can be checked by generating an alarm (e.g. by removing an assigned AS-i safety slave).

Diagnostic messages for firmware V1.0.0

The following applies for firmware V1.0.0: Which events lead to which alarm messages is indicated in the description of data record DS 92 "Device-specific diagnostics" (Page 57).

The alarms use the diagnostic codes 0 to 31 according to the PROFIBUS Standard.

Diagnostic messages as from firmware V1.0.1

The following applies as from firmware V1.0.1: Which events lead to which alarm messages is indicated in the description of data record DS 206 "Data record diagnostics" (Page 69).

The alarms use diagnostic codes in the extended range of values according to the PROFINET Standard. The alarms allow a meaningful system diagnosis to be made, specifying the type of error and the AS-i address affected.

8.4 Replacement of defective devices

8.4.1 Replacing a safe AS-i input slave

Replace a failed safe AS-i input slave with a new device of the same type and assign the correct AS-i address to the slave. This address assignment can be performed automatically by the AS-i master (see manual of the AS-i master) or manually, e.g., with the AS-i addressing device (1904-2AB02).

Close the contacts on the inputs of the safe AS-i input slave so that the slave sends the code sequences.

The F-CM AS-i Safety ST module detects a new code sequence automatically and teaches it. For reintegration, the taught code sequence must be transferred.

The transfer can be started from the STEP 7 online dialog or by pressing the optional "TEACH" button (at least 3 s). For more information, see Section Code sequences (Page 75).

Observe the "CFG" and "TEACH" LEDs, see Section Meaning of the LEDs (Page 85).

To exclude impermissible duplicate code sequences for two safe input slaves, code sequences from all safe input slaves present on the AS-i bus must be transferred, regardless of whether the monitoring is activated or deactivated.

8.4.2 Replacing the safe AS-i output module (evaluation unit)

After replacement of a safe AS-i output module (evaluation unit), no setting is necessary on the F-CM AS-i Safety ST module.

Observe the operating instructions of the AS-i output module, and set the correct F-address for the AS-i output module and the AS-i address of any integrated standard slave.

An error acknowledgment for the affected output switching group must be performed, if necessary. See Section 6.3 Address space.

Non-safety related AS-i slaves (standard slaves) are not evaluated by the F-CM AS-i Safety ST module. Observe the replacement instructions in the operating instructions of the AS-i master or the slave.

8.4.3 Replacing the F-CM AS-i Safety ST module

When the F-CM AS-i Safety ST module is replaced, the new device automatically receives all necessary settings from the head module (IM) of the ET 200SP and the coding element in the BaseUnit.

When replacing an F-CM AS-i Safety module with firmware V1.0.0, the instructions in Section "DS 206 Diagnostic data record (Page 69)" must be observed.

For more information, see Manual "ET 200SP Distributed I/O System (http://support.automation.siemens.com/WW/view/en/58649293/0/en)

Technical specifications

9

9.1 Technical data in Siemens Industry Online Support

Technical data sheet

You can also find the technical data of the product at Siemens Industry Online Support (https://support.industry.siemens.com/cs/ww/en/ps/15757/td).

1. Enter the full article number of the desired device in the "Product" field, and confirm with the Enter key.
2. Click the "Technical data link.

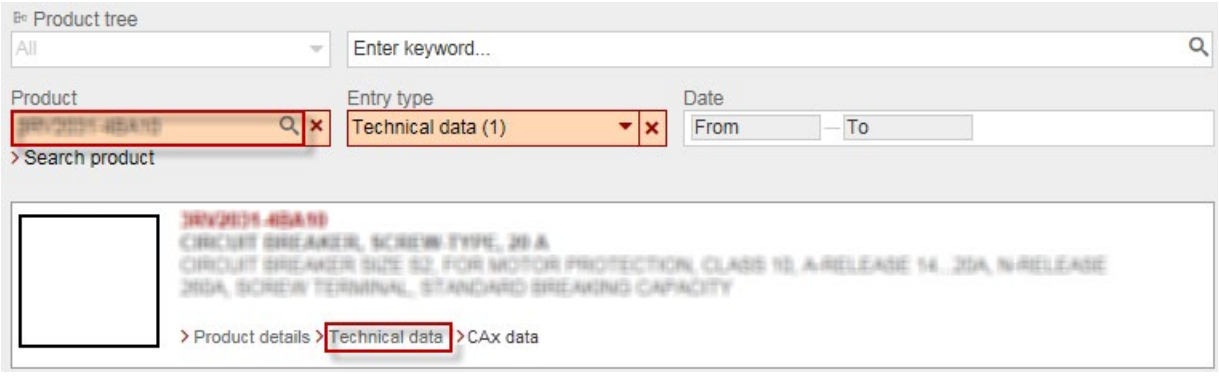

9.2 Configuration software

Information on the configuration software that you can use can be found in the Table "Software for configuration of the F-CM AS-i Safety ST" in Section Configuring the F-CM AS-i Safety ST (Page 33).

9.3 Safe technical specifications

Safety characteristics

Table 9- 1 Maximum achievable safety class in safety mode

Standard	Designation	Value
SIL according to IEC 61508	SIL	3
EN ISO 13849-1[1)]	PL	e
	Category	4

1) Performance Level

Table 9- 2 **Safety characteristics**

Characteristic	Designation	Value
High Demand according to SIL 3[1)] Total value for AS-i system with the F-CM AS-i Safety ST module[2)]	PFH_D	$1.00 \times 10^{-9} \times 1 / h$ $1.89 \times 10^{-9} \times 1 / h$
Individual value for F-CM AS-i Safety ST	PFH_D	$0.89 \times 10^{-9} \times 1 / h$
Individual value for AS-Interface transfer procedure	PFH_D	$1.00 \times 10^{-9} \times 1 / h$
Individual value for AS-Interface slave[2)]	PFH_D	0
Proof test interval	T1	20 years
Low Demand according to SIL 3[3)] Total value for AS-i system with the F-CM AS-i Safety ST module[2)]	PFD	2.00×10^{-5} 1.55×10^{-5}
Individual value for F-CM AS-i Safety ST	PFD	0.55×10^{-5}
Individual value for AS-Interface transfer procedure	PFD	1.00×10^{-5}
Individual value for AS-Interface slave[2)]	PFD	0
Mean Time To dangerous Failure	$MTTF_d$	≥100 years (37 000 years) High (according to EN ISO 13849-1)
Diagnostic Coverage level	DC	>99 %
Common Cause Failure	CCF	75 points (requirements met according to EN ISO 13849-1)

1) Probability of a dangerous failure in the case of an operating mode with high or continuous demand rate

2) Value "0" as an approximation for the individual value for AS-Interface slave applies only under the assumption that the PFH_D or PFD value of the AS-i slave is comparatively low and, thus, the PFH_D or PFD value of the AS-i slave does not contributed significantly to the PFH_D or PFD value of the total system. For this, observe the technical specifications of the safe AS-i slaves and use the specific values of the manufacturer.

3) Probability of a dangerous failure in the case of an operating mode with lower demand rate

9.4 Response times

The response times specified below represent worst case specifications. The response times relate to the switch-off operation (status change "1" → "0").

The response times for the switch-on operation (status change "0" → "1") can be longer but are not relevant for the given safety-related examination.

Maximum response time in the input direction

The maximum response time in the input direction results from the calculation of the response time from the safe AS-i input slave up to the head module (IM) of the ET 200SP:

max.	5 ms	AS-i bus cycle with maximum configuration
max.	5 ms	Disturbance in AS-i bus cycle with maximum configuration
max.	20 ms	Module-internal processing
max.	2 ms	Transfer ET 200SP backplane bus
max.	32 ms	Total response time in input direction (with 0 ms input delay)

WARNING

Increased response time

If an input delay time > 0 is assigned for a safe input, this input delay time must be added to the total response time.

In the total response time indicated above, external influencing variables are **not** included:

- Response time of the sensor
- Additional response time in the safe AS-i input slave (see operating instructions)
- Bus response time between the head module (IM) of the ET 200SP and the controller
- Response time of the controller
- Timeout time (F-monitoring time) of the controller in case of PROFIsafe failure

These influencing variables must be taken into consideration when calculating the system response time of the total system.

In the above-indicated total response time, it is taken into consideration that a maximum of 4 AS-i bus cycle times elapse between a safe input slave failure and detection of an error.

Maximum response time in the output direction

The maximum response time in the output direction results from the calculation of the response time from the head module (IM) of the ET 200SP to the safe AS-i input slave (evaluation unit).

max.	2 ms	Transfer ET 200SP backplane bus
max.	20 ms	Module-internal processing
max.	5 ms	AS-i bus cycle with maximum configuration
max.	5 ms	Disturbance in AS-i bus cycle with maximum configuration
max.	32 ms	Total response time in output direction (for disturbance-free PROFIsafe transmission)

WARNING

Increased response time

In case of PROFIsafe failure, the total response time in the output direction increases by the set timeout time of the F-CM AS-i Safety ST module (see F-parameters, F-monitoring time).

In the total response time indicated above, external influencing variables are **not** included:

- Response time of the controller
- Bus response time between the controller and the head module (IM) of the ET 200SP
- Response time in the safe AS-i output module (evaluation unit), see operating instructions
- For response time of the safe AS-i output module (evaluation unit) in case of AS-i failure, see operating instructions
- Response time of the actuator (e.g., contactor)

These influencing variables must be taken into consideration when calculating the system response time of the total system.

Additional information

Further information is provided in

System Manual SIMATIC Industrial Software Safety Engineering in SIMATIC S7 (http://support.automation.siemens.com/WW/view/en/12490443/0/en)

For calculation of response times, the following aid is available on the Internet:

- For S7 Distributed Safety, the Excel file S7fcotia.xls (http://support.automation.siemens.com/WW/view/en/25412441)

9.5 Calculation of monitoring times and response times

The Excel file S7fcotia.xls for S7 Distributed Safety is available on the Internet to aid the approximate calculation of the runtime of the F-runtime group, the minimum F-monitoring time, and the maximum response time of the safety program:

S7fcotia (http://support.automation.siemens.com/WW/view/en/25412441)

Additional information is available in Manual "Safety Engineering in SIMATIC S7".

You can download this free of charge on the Internet at:

Safety Engineering in SIMATIC S7
(http://support.automation.siemens.com/WW/view/en/12490443/0/en)

Notes on completing the Excel file S7fcotia.xls (when used without IE/PB Link)

Tab "max. runtime F-run-time group"

Enter the number of modules (in the relevant F-runtime group) in the "F-CM AS-i Safety ST" row under "ET 200SP fail-safe modules".

Tab "min. F-Monitoring times"

In the "Configuring the PROFIsafe monitoring time" section, select one of the following variants depending on which head module (IM) of the ET 200SP is being used.

- Variant 3 (distributed F-I/O via PROFINET IO)

Use the values from the following table.

Table 9- 3 Values for calculating the minimum F-monitoring times

Description	Designation	Value
Max. acknowledgment time of the F-CM AS-i Safety ST	T_DAT	20 ms
F-I/O with inputs and outputs	-	Yes

Tab "max. response times"

In the "Input" section, select one of the following variants for the relevant signal flow of the safety function depending on which head module (IM) of the ET 200SP is being used:

- Variant 3 (distributed F-I/O via PROFINET IO)

Use the values from the following table.

Table 9- 4 Values for calculating the max. response times

Description	Designation	Value
Max. discrepancy time (Note: The safe value 0 is supplied while the discrepancy time is running)	T_DIS	0
Maximum response time in error-free operation	T_WCDT	20 ms
Maximum response time when an error is present	T_OFDT	20 ms
Max. acknowledgment time of the F-I/O	T_DAT	20 ms
Configured PROFIsafe monitoring time	T_PSTO, conf.	F_WD_TIME (see the setting on the PROFISAFE tab of the properties dialog)
Max. response time of sensor Note: For T_Sensor_DLY, the part of the system starting from the F-CM AS-i Safety ST module up to the sensor, including the AS-i bus, is considered.	T_Sensor_DLY	10 ms (signal flow of AS-i Bus) + Assigned input delay + Response time of the sensor + Additional response time in the safe AS-i input slave

List of abbreviations

A

A.1 List of abbreviations

Meaning of abbreviations

Abbreviation	Meaning
ADDR	Addressing
AS-i	AS-Interface
ATEX	Atmosphere Explosive
AUX	Auxiliary
BF	AS-i bus error
BU	BaseUnit
CFG	Configuration
CM	Communication Module
CPU	Central Processing Unit
CRC	Cyclic Redundancy Check
DI	Digital Input
DIAG	Diagnosis
DP	Distributed peripherals
DS	Data record/data set
I/O	Input/Output
EMC	Electromagnetic compatibility
EN	Europäische Norm (European standard)
F-	Fail-safe
GSD	Generic Station Description
GSDML	Generic Station Description Markup Language
HF	High Feature
HSP	Hardware support package
HW	Hardware
HW ID	Hardware identifier
I&M	Identification and Maintenance
ID	Identifier
IEC	International Electrotechnical Commission
IM	Interface module
IO	Input Output
IP	Ingress Protection (enclosure class)
ISO	International Organization for Standardization
LED	Light Emitting Diode
LPS	List of configured AS-i slaves (list of "projected" slaves)

Abbreviation	Meaning
NEC	National Electrical Code
NFPA	National Fire Protection Association
PIQ	Process Image Output
PII	Process image input
PELV	Protective extra low voltage
PF	Peripheral fault
PFD	Probability of dangerous failure on demand (from IEC 61508)
PFH_D	Probability of dangerous failure per hour (from IEC 61508)
PL	Performance Level
PSF	Process signal error
PWR	Power
SELV	Safety Extra Low Voltage
SIL	Safety Integrity Level
GF, CF	System fault
PLC	Programmable logic controller

References

B

B.1 References

Additional documentation

Further information is available in the following documents:

Document type	Internet link
System Manual	ET 200SP System Manual (http://support.automation.siemens.com/WW/view/en/58649293/0/en)
Manual	ET 200SP BaseUnits (http://support.automation.siemens.com/WW/view/en/59753521/0/en)
System Manual	ET 200SP distributed I/O system (http://support.automation.siemens.com/WW/view/en/58649293/0/en)
Product Information	Product Information ET 200SP Distributed I/O System (http://support.automation.siemens.com/WW/view/en/78361093/0/en)
Programming and Operating Manual	SIMATIC Safety - Programming and configuring (http://support.automation.siemens.com/WW/view/en/54110126/0/en)
Programming and Operating Manual	S7 Distributed Safety (http://support.automation.siemens.com/WW/view/en/22099875/0/en)
Manual	CM AS-i Master ST for SIMATIC ET 200SP (http://support.automation.siemens.com/WW/view/en/71756485)
System Manual	AS-Interface System Manual (http://support.automation.siemens.com/WW/view/en/26250840/0/en)
FAQ	FAQ "Compatibility for AS-i Power24V" (http://support.automation.siemens.com/WW/view/en/20025980/133000)
IEC 61508 standard	-
System Manual	SIMATIC Industrial Software Safety Engineering in SIMATIC S7 (http://support.automation.siemens.com/WW/view/en/12490443/0/en)

Glossary

1oo1 evaluation

Type of sensor evaluation. With 1oo1 evaluation, the sensor exists once. The sensor is connected to the F-module over a single channel.

1oo2 evaluation, equivalent

Type of sensor evaluation. With 1oo2 evaluation, two input channels are occupied by one two-channel sensor or by two single-channel sensors. The input signals are compared internally for equivalence.

AS-i (AS-Interface)

Actuator-sensor interface. A networking system for the lowest field level of the automation level. The networking system is suitable for networking sensors and actuators with control devices (previous designation: SINEC S1).

AS-i A/B slave

AS-i A/B slaves use the extended address range. You can assign two A/B slaves as a pair to an address on AS-Interface. Because of the address organization, you can therefore connect up to 62 AS-i A/B slaves to AS-Interface.

AS-i analog slave

AS-i analog slaves are AS-i slaves that exchange analog values with the AS-i master.

AS-i master

The AS-i master monitors and controls binary or analog sensors and actuators via AS-i modules or AS-i slaves.

AS-i slave

All devices that can be addressed by an AS-i master are referred to as AS-i slaves. AS-i slaves are distinguished according to their design (AS-i modules as well as sensors or actuators with integrated AS-i connection) and their addressing mode (AS-i standard slave and AS-i A/B slave with extended addressing mode).

AS-i standard slave

The AS-i standard slave occupies one address on AS-Interface; because of to the address organization, up to 31 AS-i standard slaves can therefore be connected to AS-Interface.

ASIsafe®

The AS-Interface Safety at Work concept allows the integration of safety-related components in an AS-Interface network, e.g.:

- EMERGENCY STOP switch
- Protective door switch
- Safety light grid

These safety-related components are fully compatible, according to EN 50 295, with the well-known AS-Interface components, e.g., master, slaves, power supply unit, etc. They can be operated together on the yellow AS-Interface cable. Siemens supplies all components for configuring a safe AS-Interface network.

CM

Communication Module

Module for communication tasks that is used in an automation system as an interface expansion for the CPU.

CPU

Central Processing Unit

CRC

Cyclic Redundancy Check is a test procedure for checking the integrity of data. A generator polynomial is used to calculate a checksum over the data to be monitored. This checksum is, in the signature sense, characteristic of the data concerned. The generator polynomial can be calculated according to various algorithms.

DIAG

Diagnosis

Distributed Safety

Siemens-specific addition to PROFIsafe. The Distributed Safety fail-safe system with F-Configuration Pack supports implementation of safety concepts for machine and personal protection.

With Distributed Safety, passivation of selective channels has possible since PROFIsafe V2.0. The quality bits transferred in the process image are used to enter a substitute value in the process image for the channel concerned. The quality bits for the inputs and outputs are subsequently transferred in the process image to the actual process data. The same mechanism that PROFIsafe uses for reintegration of the module is used for reintegration of passivated channels.

F-address

Each fail-safe module has an F-address. For the F-CM AS-i Safety ST module, the F-address must initially be assigned online using *Step 7*. You specify the F-address in the configuration.

Fail-safe systems

Fail-safe systems are characterized in that, when certain failures occur, the system remains in a safe state or changes over directly to another safe state.

F-parameters

The fail-safe parameters are safety-relevant parameters. They are needed for communication via PROFIsafe.

I-parameters

Individual parameters for revising the AS-i functionality. The I-parameters are safety-relevant.

LED

A light-emitting diode that is used to display the signal status.

Nibble

A nibble is a unit of information that comprises four bits.

Passivation

When a fail-safe I/O device detects an error, it switches the affected channel, or all channels, to the safe state. That is, the channels of these fail-safe I/O devices are passivated. The fail-safe I/O device signals the detected fault to the F-CPU.

In the case of passivation of a fail-safe I/O device with inputs, the fail-safe system provides the safety program with substitute value "0" instead of the process values that are present at the fail-safe inputs.

In the case of passivation of a fail-safe I/O device with outputs, the fail-safe system transfers substitute value "0" to the fail-safe outputs instead of the output values supplied by the safety program.

PROFIsafe

Safety-related bus profile of PROFINET IO for communication between the safety program and the fail-safe I/Os in a fail-safe system.

Proof test interval

Time interval after which a component must be put into error-free state. The component is replaced or proof is furnished that it is entirely free of errors.

Safe state

The basis of the safety concept in fail-safe systems is that a safe state exists for all process variables.

Safety class

Safety Integrated Level (SIL) acc. to IEC 61508. The higher the safety integrity level, the stronger the measures for avoiding systematic failures as well as for overcoming intermittent failures and hardware failures.

Fail-safe modules used in safety mode can achieve up to safety class SIL 3.

Index

"

"TEACH" button, 29, 81
"TEACH" terminal, 29

1

1oo1 evaluation, 48
1oo2 evaluation, 48
1oo2 evaluation, equivalent, 48

A

Accessories, 16
Activate input monitoring, 42, 46
Activate output control, 43, 52
Activated input monitoring, 47
Activated output control, 52
Address space, 14
Addressing, 84
Alarm, 90
Alarm message, 90
AS-i address, 42, 52, 54
AS-i address error acknowledgement, 43
AS-i address switching output, 43
AS-i bus, 84
AS-i communication error, 58
AS-i input slave, 35, 75
AS-i network, 41
AS-i output, 61
AS-i output slave, 56
AS-i voltage, 89
ASIsafe, 15
AUX1, 55, 66
AUX2, 55, 66
Auxiliary controller signal, 66
Auxiliary signal, 53, 69

B

BaseUnit
    Dark, 28
    Light, 27
BaseUnit with AS-i voltage supply, 41
BaseUnit with voltage supply, 45
Behavior after channel faults, 41, 46
Busbars, 28, 32

C

Cable length, 29
Certification, 16
Channel faults, 41, 46
Code sequence, 66, 75
Code sequence duplicated, 68
Code sequence error, 49, 59, 59, 65, 79, 87
Code sequence known:, 68
Code sequence new, 68
Code sequence type safe input, 68
Code sequence type safe output, 68
Coding element, 16, 62, 86
Color code, 77
Common Cause Failure, 94
Communication, 89
    Safety-related, 15
    Safety-relevant, 89
Communication error, 37
Communication module, 13
Configuring, 33
Connecting an external "TEACH" button, 29
Contact problem with the backplane bus, 86
Control signal, 69, 69
Control signal for output, 69
Control unit, 36, 52
Cross-circuit, 65, 78
Cross-circuit error, 49
Cycle with maximum configuration, 95
Cyclic I/O data exchange, 86

D

Dark BaseUnit, 28, 41, 45
Device fault, 59, 86
Diagnostic Coverage level, 94
Diagnostic errors, 85
Diagnostic fault code, 90
Discrepancy analysis, 48
Discrepancy behavior, 42, 49
Discrepancy condition, 65
Discrepancy error, 43, 49, 49, 87
    Reintegration after, 51
Discrepancy monitoring, 15, 42, 49

Discrepancy time, 42, 50
Discrepancy time infinite, 42, 50

E

Ease of maintenance, 16
EMC problem, 86
Error acknowledgment, 55
Error acknowledgment bit, 55, 66
ET 200SP
    Configuring, 33
Evaluation of the sensors, 48
Evaluation unit, 37

F

F-address, 25
F-destination address, 41, 44
Firmware update, 15, 85
F-monitoring time, 41
F-source address, 41, 44
Function test, 11

G

Group_Message_Application, 58
Group_Message_Device, 58

H

Head module, 96

I

I address, 47
I&M identification data, 15
Input address assignment, 54
Input channel, 79
Input delay, 15, 42, 47
Input monitoring, 42, 65, 75
    Status, 64
Input signal, 68
Interconnection logic, 60
Interface module, 14, 17, 97
Interference pulse, 47
Intermittent data processing error, 86

L

LED "ADDR", 89
LED "CFG", 87
LED "DIAG", 85
LED "Error", 86
LED "PSF", 87
LED "PWR", 89
LED "Status", 86
LED "TEACH", 88
LED displays, 15, 85
Light BaseUnit, 27, 41, 45
Limited power source, 10
Logic error, 59
Low Demand, 94
LPS, 10

N

Negative polarity, 29
Non-volatile memory, 75
Null sequence, 55

O

Operating principle of code sequences, 35
Operating state of the device, 86
Operation of the ET 200SP with fail-safe modules, 29
Output address assignment, 55
Output bit address, 53
Output channel, 79
Output control, 66, 79
    Status, 65
Output module, 52, 91, 96
Output process image, 66

P

Parameter assignment error, 59
Passivate the channel, 46
PELV, 30, 45
Pollution Degree 2, 9
Positive edge, 53
Positive polarity, 29
Process image, 15, 46, 52, 55
Process image input, 57
Process signal error, 59, 84, 87
PROFIsafe, 15
PROFIsafe process output image, 56
Progress of teaching operation display, 80
Proof test interval, 15, 94

Protective Extra-Low Voltage, 30

Q

Q address error acknowledgment, 53
Q address switching output, 53

R

Rated voltage, 10
Reintegration, 15, 87, 87
Reintegration after discrepancy error, 43, 51
Residual ripple, 30
Response time
    During operation, 95

S

Safe AS-i input slave, 42
Safe AS-i output, 36
Safe AS-i output slave, 43
Safe input, 42, 61, 68
Safe input slave, 79
Safe output, 43, 61, 69
Safety characteristics, 94
Safety class, 94
Safety equipment, 82
Safety Extra Low Voltage, 30
Safety extra-low voltage, 10, 45
Safety mode, 94
Safety program, 46, 48
Safety-relevant communication, 89
SELV, 10, 30, 45
Sensor evaluation, 42
Sequence condition, 65
Sequence error, 49, 87
Sequence monitoring, 15, 42, 51
Serious device fault, 58, 70, 86
SIL, 56, 94
Slave profile, 47, 53
Startup test, 15, 42, 48, 65
Status code sequence for AS-i address, 66
Status information, 66
Status input monitoring, 64
Status of the slave, 68
Status output control, 65
Supply voltage, 84
Supported power supply units, 30
Switching group, 43, 52, 55, 65
Switch-on condition not met, 65

T

Taught slaves, 80
Teaching, 84, 84, 88
Teaching of code sequences, 88
Transferring code sequences via STEP 7 online access, 80
Transferring code sequences with the "TEACH" button., 81
Transient overvoltage, 10

U

Use in hazardous environment, 9
Use of the module, 13

V

Value status, 54, 56
Voltage supply, 89

W

Wiring, 78

SIEMENS

SIMATIC

ET 200SP
Power Module
F-PM-E 24VDC/8A PPM ST
(6ES7136-6PA00-0BC0)

Manual

Preface

Documentation guide 1

Product overview 2

Connecting 3

Parameters/address space 4

Applications of the F-I/O module 5

Interrupts/diagnostic messages 6

Technical specifications 7

Response times A

Switching of loads B

07/2013

A5E03857933-01

Legal information

Warning notice system

This manual contains notices you have to observe in order to ensure your personal safety, as well as to prevent damage to property. The notices referring to your personal safety are highlighted in the manual by a safety alert symbol, notices referring only to property damage have no safety alert symbol. These notices shown below are graded according to the degree of danger.

⚠ DANGER
indicates that death or severe personal injury **will** result if proper precautions are not taken.

⚠ WARNING
indicates that death or severe personal injury **may** result if proper precautions are not taken.

⚠ CAUTION
indicates that minor personal injury can result if proper precautions are not taken.

NOTICE
indicates that property damage can result if proper precautions are not taken.

If more than one degree of danger is present, the warning notice representing the highest degree of danger will be used. A notice warning of injury to persons with a safety alert symbol may also include a warning relating to property damage.

Qualified Personnel

The product/system described in this documentation may be operated only by **personnel qualified** for the specific task in accordance with the relevant documentation, in particular its warning notices and safety instructions. Qualified personnel are those who, based on their training and experience, are capable of identifying risks and avoiding potential hazards when working with these products/systems.

Proper use of Siemens products

Note the following:

⚠ WARNING
Siemens products may only be used for the applications described in the catalog and in the relevant technical documentation. If products and components from other manufacturers are used, these must be recommended or approved by Siemens. Proper transport, storage, installation, assembly, commissioning, operation and maintenance are required to ensure that the products operate safely and without any problems. The permissible ambient conditions must be complied with. The information in the relevant documentation must be observed.

Trademarks

All names identified by ® are registered trademarks of Siemens AG. The remaining trademarks in this publication may be trademarks whose use by third parties for their own purposes could violate the rights of the owner.

Disclaimer of Liability

We have reviewed the contents of this publication to ensure consistency with the hardware and software described. Since variance cannot be precluded entirely, we cannot guarantee full consistency. However, the information in this publication is reviewed regularly and any necessary corrections are included in subsequent editions.

Siemens AG
Industry Sector
Postfach 48 48
90026 NÜRNBERG
GERMANY

A5E03857933-01
Ⓟ 08/2013 Technical data subject to change

Copyright © Siemens AG 2013.
All rights reserved

Preface

Purpose of the documentation

This device manual complements the system manual ET 200SP distributed I/O system. General functions of the ET 200SP are described in the system manual ET 200SP distributed I/O system (http://support.automation.siemens.com/WW/view/en/58649293).

The information provided in this device manual and the system manual enables you to commission the ET 200SP distributed I/O system.

Conventions

Note the following identified notes:

Note

A note includes important information on the product described in the documentation, on handling the product or on the part of the documentation to which you should pay special attention.

Security information

Siemens provides automation and drive products with industrial security functions that support the secure operation of plants or machines. They are an important component in a holistic industrial security concept. With this in mind, our products undergo continuous development. We therefore recommend that you keep yourself informed with respect to our product updates. Please find further information and newsletters on this subject at: (http://support.automation.siemens.com)

To ensure the secure operation of a plant or machine it is also necessary to take suitable preventive action (e.g. cell protection concept) and to integrate the automation and drive components into a state-of-the-art holistic industrial security concept for the entire plant or machine. Any third-party products that may be in use must also be taken into account. Please find further information at: (http://www.siemens.com/industrialsecurity)

Table of contents

Preface 3

1 Documentation guide 7

1.1 Documentation Guide for Power Module F-PM-E 24VDC/8A PPM ST 7

2 Product overview 9

2.1 Properties of the F-PM-E 24VDC/8A PPM ST 9

3 Connecting 13

3.1 Terminal assignment 13

3.2 Block diagram 16

4 Parameters/address space 17

4.1 Parameters 17

4.2 Explanation of parameters 19
4.2.1 F-parameters 19
4.2.2 PM-parameters 19
4.2.2.1 Maximum test period 19
4.2.3 Parameters of the sensor supply 20
4.2.3.1 Short circuit test 20
4.2.3.2 Time for short circuit test 20
4.2.3.3 Startup time of sensors after short circuit test 21
4.2.4 Parameters of the inputs 21
4.2.4.1 Sensor evaluation 21
4.2.4.2 Discrepancy behavior 23
4.2.4.3 Discrepancy time 24
4.2.4.4 Reintegration after discrepancy error 24
4.2.4.5 Activated 25
4.2.4.6 Sensor supply 25
4.2.4.7 Input delay 26
4.2.4.8 Pulse extension 26
4.2.4.9 Chatter monitoring 27
4.2.4.10 Monitoring window 28
4.2.5 Parameters of the output 28
4.2.5.1 Activated 28
4.2.5.2 Controlling the output 28
4.2.5.3 Output type 28
4.2.5.4 Max. readback time dark test 29
4.2.5.5 Disable dark test for 48 hours 31
4.2.5.6 Max. readback time switch on test 32
4.2.5.7 Activated light test 34
4.2.5.8 Diagnosis: Wire break 35

4.3 Address space 36

5 Applications of the F-I/O module 39

5.1 Applications for the output DQ/P1 and P2 39
5.1.1 Applications: Safety mode up to SIL3/Cat.4/PLe 40
5.1.1.1 Application: Wiring a load to the digital output, PM switching 40
5.1.1.2 Application: Wiring a load to the digital output, PP switching 41
5.1.1.3 Application: Wiring two loads in parallel to the digital output, PM switching 41
5.1.1.4 Application: Wiring two loads in parallel to the digital output, PP switching 42

5.2 Applications for inputs 43
5.2.1 Applications of the electronic module 43
5.2.2 Application 1: Safety mode SIL3/Cat.3/PLd 45
5.2.3 Application 2: Safety mode SIL3/Cat.3/PLe 48
5.2.4 Application 3: Safety mode SIL3/Cat.4/PLe 51
5.2.4.1 Application 3.1 (SIL3/Cat.4/PLe) 52
5.2.4.2 Application 3.2 (SIL3/Cat.4/PLe) 54

5.3 Application for internal evaluation 57

5.4 Applications for safety-related shutdown of standard modules 59
5.4.1 Safety-related shutdown of standard output modules, PM-switching 59
5.4.2 Safety-related shutdown of standard output modules, PP-switching 61

6 Interrupts/diagnostic messages 65

6.1 Status and error display 65

6.2 Interrupts 67

6.3 Diagnostic messages 69

6.4 Value status 75

7 Technical specifications 77

A Response times 83

A.1 Response times 83

A.2 Minimum distance of test pulses 84

B Switching of loads 85

B.1 Connecting capacitive loads 85

B.2 Switching of inductive loads 86

Documentation guide 1

1.1 Documentation Guide for Power Module F-PM-E 24VDC/8A PPM ST

Introduction

The documentation of the SIMATIC products has a modular design and includes topics concerning your automation system.

The complete documentation of the ET 200SP system consists of different modules divided into system manuals, function manuals and manuals.

The STEP 7 (online help) information system supports you in configuring and programming your automation system.

Overview of documentation for the F-PM-E 24VDC/8A PPM ST fail-safe power module

The table below lists additional documents that complement this description of the F-PM-E 24VDC/8A PPM ST fail-safe power module and are available on the Internet.

Table 1- 1 Documentation for the F-PM-E 24VDC/8A PPM ST fail-safe power module

Topic	Documentation	Most important contents
Description of the system	System manual ET 200SP distributed I/O system (http://support.automation.siemens.com/WW/view/en/58649293)	• Application planning • Installation • Connecting • Commissioning • Approvals • TÜV certificate
BaseUnits	Manual ET 200SP BaseUnits (http://support.automation.siemens.com/WW/view/en/58532597/133300)	Technical specifications
Description of the SIMATIC Safety F-system	Programming and operating manual SIMATIC Safety - Configuring and Programming (http://support.automation.siemens.com/WW/view/en/54110126)	• Configuring • Programming • Approvals

SIMATIC manuals

The latest manuals for SIMATIC products are available on the Internet (http://www.siemens.com/automation/service&support) for free download.

Functional Safety Services

Siemens Functional Safety Services support you with a comprehensive package of services from risk assessment to verification all the way to plant commissioning and modernization. We also offer consultation on the use of fail-safe and fault-tolerant SIMATIC S7 automation systems.

You will find more detailed information on the Internet (http://www.siemens.com/safety-services).

Please send your questions to us by e-mail (mailto:safety-services.industry@siemens.com).

Product overview

2

2.1 Properties of the F-PM-E 24VDC/8A PPM ST

Order number

6ES7136-6PA00-0BC0

View of the module

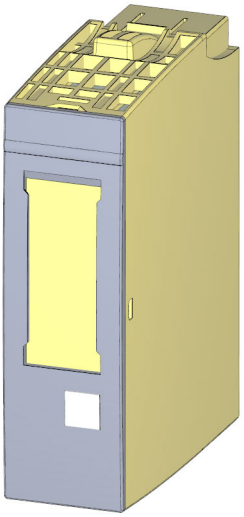

Figure 2-1 View of the F-PM-E 24VDC/8A PPM ST module

Properties

- Technical properties
  - Fail-safe digital module
  - 2 inputs (SIL3/Cat.4/PLe)
  - 1 output PM-switching or PP-switching, output current 8 A (SIL3/Cat.4/PLe)
  - 2 outputs for sensor supply
  - Sink input (P-reading)
  - Source output (PM/PP-switching)
  - Supply voltage L+
  - Suitable for connection of 2-wire sensors to IEC 61131, type 1
  - Channel-specific assignable input delay 0.4 ms to 20 ms
  - Diagnostic display (DIAG red/green LED)
  - Status display for each input or output (green LED)
  - Fault display for each input or output (red LED)
  - Diagnostics, e.g., short circuit/wire break, channel-specific
  - Diagnostics, e.g., load voltage missing, module-specific
  - Channel-specific or passivation throughout the module
- Supported functions
  - Firmware update
  - I&M identification data
  - PROFIsafe

WARNING

The fail-safe performance characteristics in the technical specifications apply to a proof-test interval of 20 years and a mean time to repair of 100 hours. If a repair within 100 hours is not possible, remove the respective module from the BaseUnit or switch off its supply voltage before 100 hours expires. The module switches off independently after the 100 hours have expired.

Follow the repair procedure described in section Diagnostic messages (Page 69).

Accessories

The following accessories, which are not included in the product package of the F-module, can be used with the F-module:

- Labeling strips
- Color identification labels
- Reference identification labels
- Shield connection

Additional information on accessories can be found in the ET 200SP Distributed I/O System System Manual (http://support.automation.siemens.com/WW/view/en/58649293).

Safety-related shutdown of standard DQ modules by the F-PM-E 24VDC/8A PPM ST

This cost-effective solution allows for full and simultaneous shutdown of all affected outputs of the standard DQ modules when a fault is detected in the process or on the F-PM-E 24VDC/8A PPM ST power module.

You achieve SIL2/Cat.3/PLd with safety-related shutdown of standard DQ modules.

You can use the F-PM-E 24VDC/8A PPM ST power module with all standard DQ modules within a potential group. Additional information is available in Applications for safety-related shutdown of standard modules (Page 59).

Passivation of fail-safe outputs over a long period of time

WARNING

Unintentional activation of F-I/O with fail-safe outputs

If an F-I/O with fail-safe outputs is passivated for a period longer than that specified in the safety parameters (> 100 hours) and the fault remains uncorrected, you need to exclude the possibility that the F-I/O can be activated unintentionally by a second fault, and thus place the F-system in a dangerous state.

Even though it is highly unlikely that such hardware faults occur, you must prevent the unintentional activation of F-I/O with fail-safe outputs by using circuit measures or organizational measures.

One possibility is the shutdown of the power supply of the passivated F-I/O within a time period of 100 hours, for example.

The required measures are standardized for plants with product standards.

For all other plants, the plant operator must create a concept for the required measures and have it approved by the inspector.

Connecting

3

3.1 Terminal assignment

General terminal assignment

Table 3- 1 Terminal assignment for F-PM-E 24VDC/8A PPM ST

Terminal assignment for F-PM-E 24VDC/8A PPM ST (6ES7136-6PA00-0BC0)						
Terminal	**Assign-ment**	**Terminal**	**Assign-ment**	**Description**	**BaseUnit**[1]	**Color identification label (terminals 1 to 16)**
1	DI_0	**2**	DI_1	• DI_n: Input signal, channel n • VS_n: Internal sensor supply, channel n • $DQ\text{-}P_0$: Output signal, channel 0, P-switching • $DQ\text{-}M_0$: Ground for output signal, channel 0, M-switching • AUX: Protective conductor connection or voltage bus for SELV/PELV circuits	C0	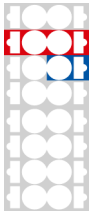 CC52 6ES7193-6CP52-2MC0
3	VS_0	**4**	VS_1			
5	$DQ\text{-}P_0$	**6**	$DQ\text{-}M_0$			
7	AUX	**8**	AUX			
L+	DC24V	**N**	M			
L+	DC24V	**N**	M			

[1] Usable BaseUnit types can be identified by the last two digits of their order number. See also *ET 200SP Distributed I/O System*system manual

Note

Make sure that you only use the power module with BaseUnit type C0 during commissioning.

Digital output

The digital output switches the voltage L+ and M using two electronic switches (see Block diagram (Page 16)). The switched voltage and chassis are conducted to the internal voltage buses P1 and P2. The switched voltage and chassis is also available at the BaseUnit at DQ-P_0 and DQ-M_0.

This results in two connection options that can be used at the same time, if desired:

- One load can be wired directly to the BaseUnit (see Applications for the output DQ/P1 and P2 (Page 39)).
- The standard modules can be supplied and switched off safety-related by means of the internal voltage buses P1 and P2. You can, in turn, connect loads to the standard modules (see Applications for safety-related shutdown of standard modules (Page 59)).

WARNING

It is no longer possible to shut down an actuator if a cross circuit has developed between L+ and DQ. To prevent cross circuits between L+ and DQ, you must route the cables used to connect the actuators in a cross-circuit proof manner (for example, as separate, sheathed cables or in separate cable ducts).

Redundant ground conductor required

WARNING

The ground conductor to the BaseUnit for F-PM-E 24VDC/8A PPM ST must be installed twice for safety reasons. Any interruption of a single ground conductor would prevent the safety-related shutdown of voltage bus P2.

Property of the individual shutdown of F-modules with fail-safe outputs

A channel-specific shutdown occurs when a fault is detected. It is also possible to react to critical process states staggered over time or to perform safety-related shutdown of individual outputs.

Switching of loads with ground if the F-module is configured PM-switching

If the following two conditions are met, F-PM-E 24VDC/8A PPM ST detects a short circuit:

- If loads that have a connection between chassis and ground are switched by the F-PM-E 24VDC/8A PPM ST , for example, to improve the EMC properties.
- If chassis and ground are connected at the power supply unit.

From the perspective of the F-module, the M-switch is bridged by the chassis-ground connection (refer to the diagram below as an example for an F-PM-E 24VDC/8A PPM ST).

Remedy:

- Use the F-PM-E 24VDC/8A PPM ST configured as a PP-switching module.
- Increase the value of the resistance between chassis and ground at the load end to more than 100 kΩ.
- Reduce the capacitance value between chassis and ground at the load end to less than 2 µF.

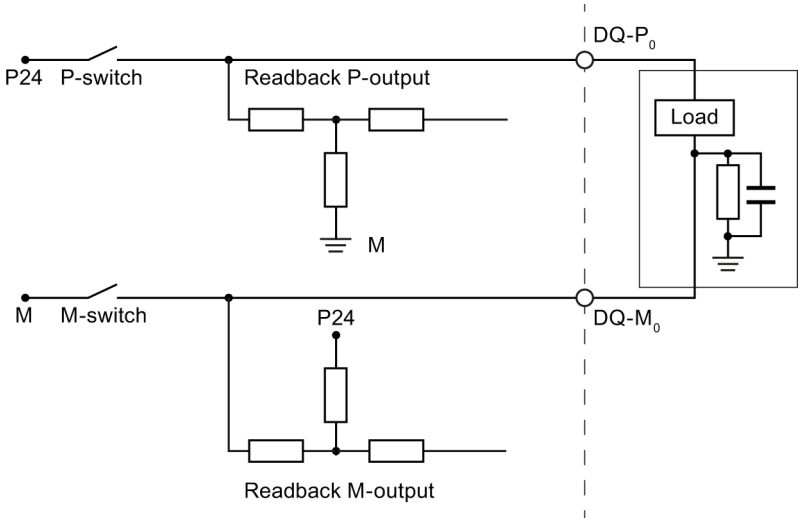

Figure 3-1 Switching of grounded loads (resistance between chassis and ground)

⚠ WARNING

During startup, the F-PM-E 24VDC/8A PPM ST carries out a switch-on test of approximately 3 ms. The capacitance between chassis and ground at the load end is charged by way of the load resistance. This low charging current may briefly trigger sensitive load circuits.

See also

ET 200SP distributed I/O system
(http://support.automation.siemens.com/WW/view/en/58649293)

3.2 Block diagram

Block diagram

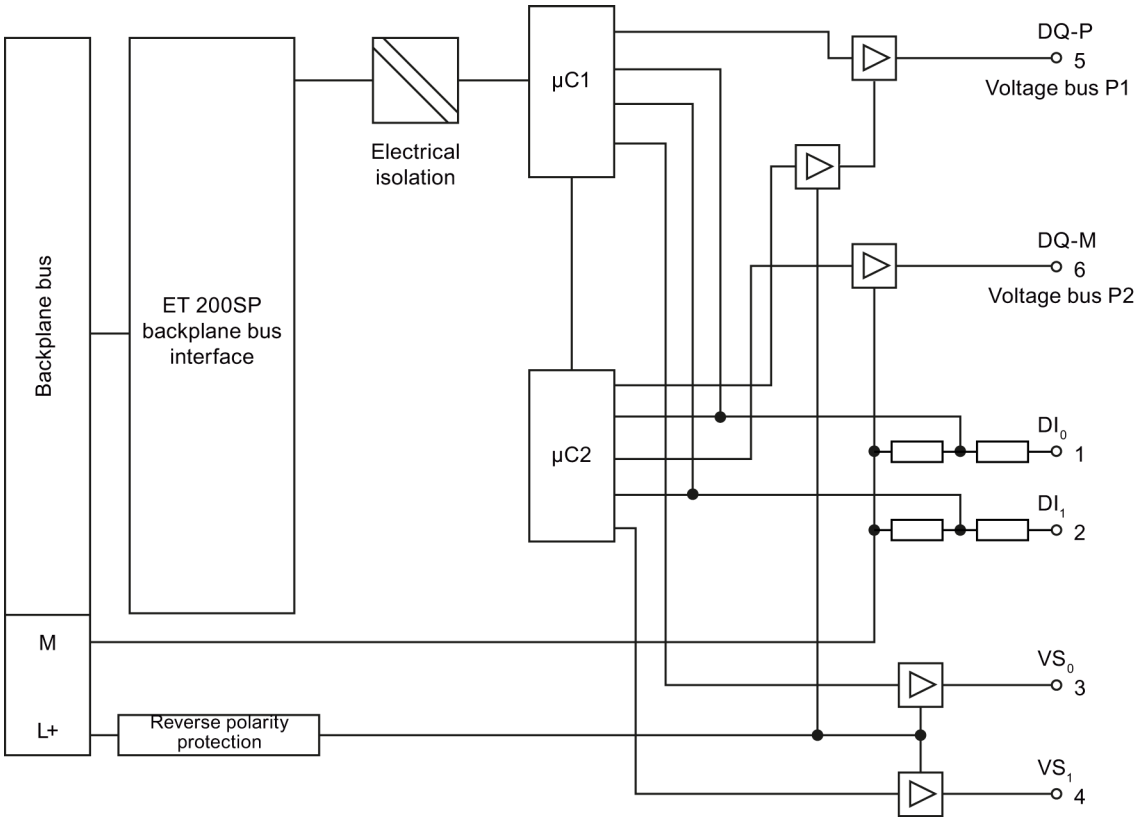

Figure 3-2 Block diagram F-PM-E 24VDC/8A PPM ST

Parameters/address space 4

4.1 Parameters

Parameters

⚠ WARNING
Diagnostic functions should be activated or deactivated in accordance with the application.

Table 4- 1 Parameters for power module

Parameter	Value range	Parameter reassignment in RUN	Scope
F-parameters:			
Manual assignment of the F-monitoring time	• disable • enable	no	Module
F-monitoring time	1 to 65535 ms	no	Module
F-source address	1 to 65534	no	Module
F-destination address	1 to 65534	no	Module
F-parameter signature (without address)	0 to 65535	no	Module
Behavior after channel faults	• Passivate entire module • Passivate channel	no	Module
F-I/O DB manual number assignment	• disable • enable	no	Module
F-I/O DB number	—	no	Module
F-I/O DB name	—	no	Module
PM-parameters:			
Maximum test period	• 100 s • 1000 s	no	Module
Sensor supply:			
Short circuit test	• disable • enable	no	Channel
Time for short circuit test	0.5 ms to 2 s	no	Channel
Startup time of the sensors after short circuit test	0.5 ms to 2 s	no	Channel

Parameter	Value range	Parameter reassignment in RUN	Scope
Inputs:			
Sensor evaluation	• 1oo1 evaluation • 1oo2 evaluation, equivalent • 1oo2 evaluation, non-equivalent	no	Channel pair
Discrepancy behavior	• Supply last valid value • Supply 0 value	no	Channel pair
Discrepancy time	5 ms to 30 s	no	Channel pair
Reintegration after discrepancy error	• Test 0-signal necessary • Test 0-signal not necessary	no	Channel pair
Activated	• disable • enable	no	Channel
Sensor supply	• Sensor supply 0 • Sensor supply 1 • External sensor supply	no	Channel
Input delay	• 0.4 ms • 0.8 ms • 1.6 ms • 3.2 ms • 6.4 ms • 10.0 ms • 12.8 ms • 20 ms The provided value range depends on the parameter assignment of the employed sensor supply.	no	Channel
Pulse extension	• — • 0.5 s • 1 s • 2 s	no	Channel
Chatter monitoring activated	• disable • enable	no	Channel
Number of signal changes	2 to 31	no	Channel
Monitoring window	0 to 100 s (If 0 s is configured, the monitoring window is 0.5 s long.)	no	Channel

Parameter	Value range	Parameter reassignment in RUN	Scope
Output:			
Activated	• disable • enable	no	Channel
Control of the output	• F-CPU • F-CPU and onboard F-DI	no	Module
Output type	• PM switching • PP switching	no	Channel
Max. readback time dark test	0.8 to 400.0 ms	no	Channel
Disable dark test for 48 hours	• disable • enable	no	Channel
Max. readback time switch on test	0.8 to 5.0 ms	no	Channel
Activated light test	• disable • enable	no	Channel
Diagnosis: Wire break	• disable • enable	no	Channel

4.2 Explanation of parameters

4.2.1 F-parameters

F-parameters

Information on F-parameters is available in the SIMATIC Safety - Configuring and Programming (http://support.automation.siemens.com/WW/view/en/54110126) manual.

4.2.2 PM-parameters

4.2.2.1 Maximum test period

Here you specify the time within which the light and dark tests (in all combinations) should be performed throughout the module. When this time expires, the tests are repeated.

The "Maximum test period" parameter is a module parameter, which means the test cycle for the entire fail-safe output module is performed within the configured maximum test time. If the bit pattern test is not performed within the configured time (or the shortened test time of 60 seconds in case of an error), the module goes into the error state.

4.2.3 Parameters of the sensor supply

4.2.3.1 Short circuit test

Here you enable the short-circuit detection for the channels of the F-module for which "Internal sensor supply" is set.

The short-circuit test is only useful if you are using simple switches that do not have their own power supply. For switches with power supply, for example, 3/4-wire proximity switches, a short-circuit test is not possible.

The short-circuit detection switches off the sensor supply briefly. The length of the deactivation period is equivalent to the configured "Time for sensor test".

If a short-circuit is detected, the F-module triggers a diagnostic interrupt and the input is passivated.

The following short-circuits are detected:

- Short-circuit of input to L+
- Short-circuit of the input of another channel when it has a 1 signal
- Short-circuit between the input and sensor supply of another channel
- Short-circuit between the sensor supply and the sensor supply of another channel

If the short-circuit test is disabled, you must make your wiring short-circuit and cross-circuit proof or select a connection type (discrepancy, non-equivalent) which also detect the cross-circuits using discrepancy.

During the execution time (Time for sensor test + Startup time of sensor after sensor test) of the short circuit test, the last valid value of the input before the start of the short circuit test is passed to the F-CPU. The activation of the short-circuit test thus affects the response time of the respective channel or channel pair.

4.2.3.2 Time for short circuit test

Function

When the short-circuit test is enabled, the corresponding sensor supply is switched off for the configured time. If the module does not detect a "0" signal at the input within the assigned time, a diagnostic message is generated.

When assigning parameters, note that

- If the channel is passivated, this may be due to too high capacitance between sensor supply and input. This consists of the capacitance per unit length of the cable and the capacitance of the employed sensor. If the connected capacitance does not discharge within the assigned time, you need to adjust the "Time for sensor test" parameter.
- The values available for the input delay depend on the "Ramp-up time of the sensor after short-circuit test" and the "Time for short-circuit test" of the configured sensor supply.

4.2.3.3 Startup time of sensors after short circuit test

Function

In addition to the off time ("Time for sensor test"), a startup time must be specified for performing the short circuit test. You use this parameter to notify the module how long the utilized sensor needs to start up after connecting the sensor supply. This prevents an undefined input state due to transient reactions in the sensor.

When assigning parameters, note that

- This parameter must be greater than the transient recovery time of the employed sensor.
- Because the assigned time affects the response time of the module, we recommend that you set the time as short as possible but long enough so that your sensor can settle safely.
- The values available for the input delay depend on the "Ramp-up time of the sensor after short-circuit test" and the "Time for short-circuit test" of the configured sensor supply.

Requirement

The short circuit test is enabled.

4.2.4 Parameters of the inputs

4.2.4.1 Sensor evaluation

Overview

Select the type of sensor evaluation with the "Sensor evaluation" parameter:

- 1oo2 evaluation, equivalent
- 1oo2 evaluation, non-equivalent

1oo2 evaluation equivalent/non-equivalent

With a 1oo2 evaluation equivalent/non-equivalent, two input channels are occupied by:

- One single-channel sensor
- One non-equivalent sensor
- One two-channel sensor
- Two single-channel sensors

The input signals are compared internally for equivalence or non equivalence.

Note that in 1oo2 evaluation, two channels are combined into a channel pair. The number of available process signals of the F-module is reduced accordingly.

Discrepancy analysis

When using a two-channel sensor or two single-channel sensors which measure the same process variable, the sensors interact with a slight time delay due to the limited precision of their arrangement.

The discrepancy analysis for equivalence/non-equivalence is used for fail-safe applications to prevent errors from time differences between two signals for the same function. The discrepancy analysis is initiated when different levels are detected in two associated input signals (when testing for non-equivalence: the same levels). A check is made to determine whether the difference in levels (when testing for non equivalence: the same levels) has disappeared after an assignable time period, the so-called discrepancy time. If not, this means that a discrepancy error exists.

Achievable safety class

The following safety class can be achieved depending on the selected sensor evaluation:

- SIL3/Cat.4/PLe with "1oo2 evaluation equivalent/non-equivalent"

4.2.4.2 Discrepancy behavior

Function

For the "Discrepancy behavior", you assign the value that is supplied to the safety program in the F-CPU during a discrepancy between two relevant input channels, which means while discrepancy time is running. You assign the discrepancy behavior as follows:

- "Supply last valid value"
- "Supply value 0"

Requirements

You have assigned the following:

- "Evaluation of the sensors": "1oo2 evaluation, equivalent" or "1oo2 evaluation, non-equivalent"

"Supply last valid value"

The most recent valid value (old value) before the discrepancy occurred is made available to the safety program in the F-CPU as soon as a discrepancy is detected between the signals of the two affected input channels. This value is supplied until the discrepancy disappears or the discrepancy time expires and a discrepancy error is detected. The sensor-actuator response time is correspondingly increased by this time.

This means the discrepancy time of connected sensors with 1oo2 evaluation must be adjusted to fast response times. It makes no sense, for example, if connected sensors with a discrepancy time of 500 ms trigger a time-critical shutdown.. In the worst-case scenario, the sensor-actuator response time is extended by an amount approximately equal to the discrepancy time:

- For this reason, position the sensors in the process in such a way as to **minimize discrepancy**.
- Then select the **shortest possible** discrepancy time which is also sufficient to compensate for faulty triggering of discrepancy errors.

"Supply value 0"

As soon as a discrepancy between the signals of the two relevant input channels is detected, the value "0" is made available to the safety program in the F-CPU.

If you have set "Supply value 0", the sensor-actuator response time is not affected by the discrepancy time.

4.2.4.3 Discrepancy time

Function

You can set the discrepancy time for each channel pair.

Requirements

You have assigned the following:

- "Evaluation of the sensors": "1oo2 evaluation, equivalent" or "1oo2 evaluation, non-equivalent"

In most cases, a discrepancy time is started, but does not fully expire because the signal differences are cleared within a short time.

Set the discrepancy time high enough that in the error-free case the difference between the two signals (when testing for non equivalence: the same levels) has always disappeared before the discrepancy time has expired.

Behavior while discrepancy time is running

While the programmed discrepancy time is running internally on the module, either the **last valid value** or **"0"** is returned to the safety program on the F-CPU by the input channels involved, depending on the parameter settings for the behavior at discrepancy.

Behavior after expiration of the discrepancy time

If no agreement (when checking for non equivalence: inequality) of the input signals exists once the assigned discrepancy time expires, for example, due to a break in a sensor wire, a discrepancy error is detected and the "Discrepancy error" diagnostic message containing information on which channels are faulty is generated.

4.2.4.4 Reintegration after discrepancy error

Function

This parameter specifies the criteria for when a discrepancy error is regarded as corrected, thus enabling reintegration of the relevant input channels. The following parameter assignment options are available:

- "Test 0-signal necessary"
- "Test 0-signal not necessary"

Requirements

You have assigned the following:

- "Sensor evaluation": "1oo2 evaluation, equivalent" or "1oo2 evaluation, non equivalent"

"Test 0-signal necessary"

If you have assigned "Test 0-signal necessary", a discrepancy error is not regarded as corrected until a 0-signal is present at both of the relevant input channels.

If you are using non equivalent sensors, which means you have set "Sensor evaluation" to "1oo2 evaluation, non equivalent", a 0-signal must be present again at the low order channel of the channel pair.

"Test 0-signal not necessary"

If you have assigned "Test 0-Signal not necessary", a discrepancy error is regarded as corrected when a discrepancy no longer exists at both of the relevant input channels.

4.2.4.5 Activated

You hereby enable the corresponding channel for signal processing in the safety program.

4.2.4.6 Sensor supply

Here you select one of the internal sensor supplies VS_0 to VS_n or an external sensor supply.

The selection of an internal sensor supply is required for using the short circuit test.

See also

Time for short circuit test (Page 20)

4.2.4.7 Input delay

Function

To suppress stray interference, you can set an input delay for the entire channel or channel pair.

Interference pulses whose pulse time is less than the set input delay (in ms) are suppressed. Suppressed interference pulses are invisible in the PII.

A high input delay suppresses longer interference pulses, but results in a longer response time.

The values available for the input delay depend on the "Startup time of sensors after short circuit test" and the "Time for short circuit test" of the configured sensor supply.

Note

Due to the physical properties, there is a possibility of crosstalk between signals in the case of long, unshielded signal lines (see section "Electromagnetic compatibility" in the system manual ET 200SP distributed I/O system (http://support.automation.siemens.com/WW/view/en/58649293)).

Adapt the input delay or use shielded signal lines in order to prevent possible passivation of the fail-safe digital inputs and switch-off of the sensor supply.

See also

Technical specifications (Page 77)

4.2.4.8 Pulse extension

Function

Pulse extension is a function to change a digital input signal. A pulse on a digital input is extended to at least the assigned length. If the input pulse is already longer than the assigned length, the pulse is not changed.

The fail-safe electronic module only lengthens pulses with the value "0" because the basis of the safety concept is that there is a safe state for all process variables. For digital F-I/O, this is the value "0", which applies to sensors as well as to actuators.

With 1oo2 evaluation, the result of the evaluation of both sensors is used for the pulse extension.

4.2.4.9 Chatter monitoring

Function

Chatter monitoring is a process control function for digital input signals. It detects and reports unusual signal sequences in the process with 1oo1 evaluation, for example, an input signal fluctuating between "0" and "1" too frequently. The occurrence of such signal characteristics is an indication of faulty sensors or process control instability.

Recognizing unusual signal patterns

An assigned monitoring window is available for each input channel. The monitoring window starts with the first signal change of the input signal. If the input signal changes within the monitoring window at least as often as the assigned "Number of signal changes", a chatter error is detected. If no chatter error is detected within the monitoring window, the next signal change restarts the monitoring window.

If a chatter error is detected, a diagnostic is signaled. If the chatter error does not occur for the monitoring window for three times the configured period, the diagnostic is reset.

Principle

The figure below shows the principle of chatter monitoring as a graphic.

Parameter for number of signal changes = 8

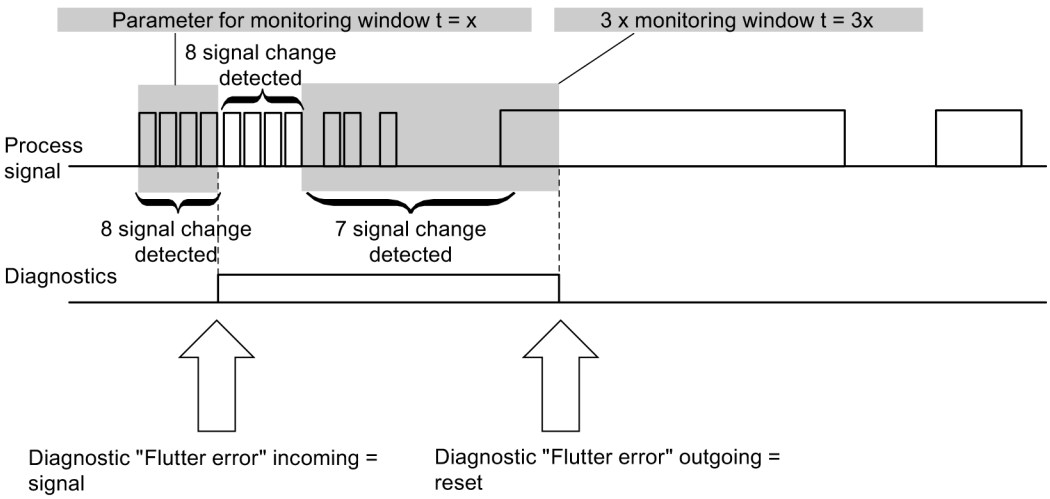

Figure 4-1 Figure chatter monitoring

Number of signal changes

Sets the number of signal changes after which a chatter error should be reported.

4.2.4.10 Monitoring window

Sets the time for the monitoring window of flutter monitoring.

You can set times of 1 s to 100 s in whole seconds for the monitoring window.

You can configure a monitoring window of 0.5 s when you set 0 s.

4.2.5 Parameters of the output

4.2.5.1 Activated

If you select this check box, the corresponding channel is enabled for signal processing in the safety program.

You can deactivate an unused channel with this parameter.

4.2.5.2 Controlling the output

Activates the internal evaluation.

Additional information on internal evaluation is available in the chapter "Application for internal evaluation" (Page 57).

4.2.5.3 Output type

The parameter specifies if the output switches PM or PP.

4.2.5.4 Max. readback time dark test

Function

Dark tests are shutdown tests with bit pattern test.

For a dark test, a test signal is switched to the output channel while the output channel is active (output signal "1"). This output channel is then briefly disabled (= "dark period") and read back. A sufficiently slow actuator does not respond to this and remains switched on.

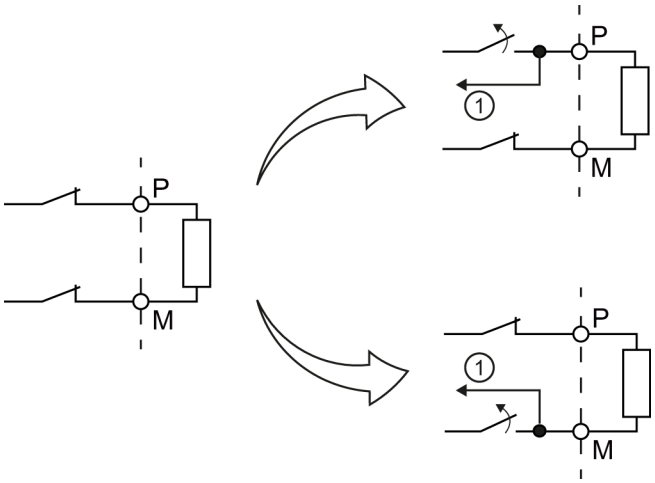

① Readback

Figure 4-2 Functional principle of the dark test (PM switching)

This parameter allows you to set the time for the readback.

If the expected signals (P-readback and M-readback) could not be read back correctly after expiration of the readback time dark test, the output channel is passivated.

No new process values are switched to the output channels while a bit pattern is still active (switch test is carried out). This means that a higher maximum readback time for the dark test increases the response time of the F-module.

⚠ WARNING

Through the configured readback time dark test, short circuits (cross-circuits) to a signal with a frequency greater than 1/(2 x configured readback time dark test) Hz cannot be recognized (50:50 sampling ratio).

Short circuits (cross-circuits) to an output of the same module are recognized.

The parameter also has an effect on the short circuit detection (cross-circuit) with "1" signal when the output signal is changed from "1" to "0" with the safety program.

Setting readback time dark test

Because the fault reaction time is extended by the length of the readback time dark test, we recommend that you set the readback time dark test by trial and error as low as possible, but high enough that the output channel is not passivated.

You determine the readback time required for your actuator with the diagram in the chapter Switching capacitive loads (Page 85).

If the capacity of the actuator is not known, it may be necessary for you to determine the value for the readback time light test by trial and error. This may also be necessary due to the part variances in the actuator or external influences.

Proceed as follows:

- Set the readback time dark test so that the output channel can be read back correctly but your actuator does not respond yet.
- If the output channel is passivated sporadically, set a higher value for the maximum readback time dark test.
- If the output channel is passivated, the readback time dark test is too small for a connected capacitive load. The discharge cannot take place during the configured readback time dark test. Increase the readback time dark test.

If you have set the readback time dark test to the maximum value of 400 ms and there is still a passivation of the output channel, there is either an external fault or the connected capacity is outside the permitted range.

Test pulses of the dark test

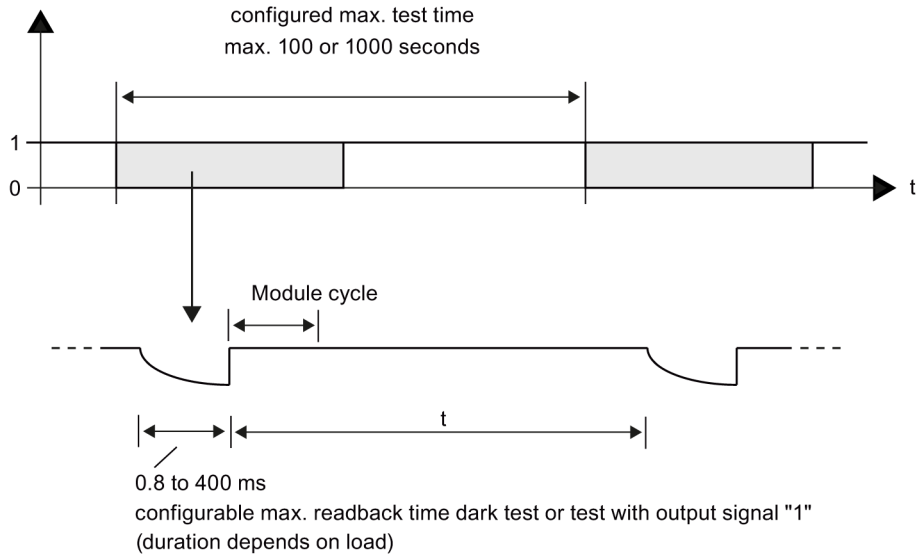

Figure 4-3 Test pulses of the dark test

The distance between two test pulses (t) depends on the parameter assignment. Additional information is available in Minimum distance of test pulses (Page 84).

4.2.5.5 Disable dark test for 48 hours

This option allows you to suppress the dark test.

If the channel is permanently active (1) for 48 hours, 2 dark test pulses (PP switching) or 3 dark test pulses (PM switching) are directed to this channel once the time has expired.

You must provide the signal change from 1 to 0 at the channel yourself within 48 hours to prevent the dark test pulse. The dark test is suspended for another 48 hours after the signal change from 0 to 1.

The dark test is permanently suppressed if the following condition is met:

- A signal change from 1 to 0 takes place before the 48 hours have expired.

WARNING

The output is passivated if an error caused by a short-circuit is recognized when the safety-function is executed (output turned off). This is necessary because a complete bit pattern test is not performed within 48 hours, which means an undetected error burst may not be ruled out.

If the channel can retain signal 0 for 48 hours and longer, the function "Disable dark test for 48 hours" must not be used.

Consult the respective requirements of your product standards regarding error detection time.

4.2.5.6 Max. readback time switch on test

Function

The switch on test is part of the bit pattern test.

During the switch on test, the P-switch and M-switch of the output channel are alternately closed and read back when the output channel is inactive (output signal "0"). Contrary to the light test, no power flows through the connected load during the switch on test.

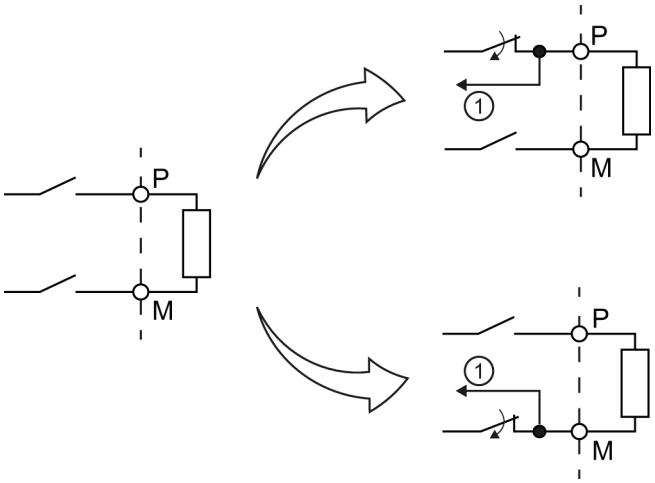

① Readback

Figure 4-4 Functional principle of the switch on test (PM switching)

This parameter allows you to set the time for the readback. If the signal was not read back correctly once the time has expired, the output channel is passivated.

The switch on test detects the following faults:

- Short circuit to L+ with output signal "0"
- Short circuit to ground with output signal "0"

WARNING

Through the configured readback time, short circuits (cross-circuits) to an interfering signal with a frequency > 1 / (2 x configured readback time) Hz can be suppressed (50:50 sampling ratio).

Short circuits (cross-circuits) to an output of the same module are recognized.

Setting readback time

Because the fault reaction time is extended by the length of the set readback time, we recommend that you set the readback time by trial and error as low as possible but high enough that the output channel is not passivated.

To determine the readback time required for your actuator, refer to the diagram in the chapter Switching capacitive loads (Page 85).

If the capacity of the actuator is not known, it may be necessary for you to determine the required value for the readback time by trial and error. This may also be necessary due to the part variances in the actuator or external influences.

Proceed as follows:

- Set the readback time switch on test in such a way that the output channel can be read back correctly but your actuator does not respond yet.
- If the output channel is passivated sporadically, set a higher value for the maximum readback time switch on test.
- If the output channel is passivated, the readback time switch on test is too small for a connected capacitive load. The charge of the capacitive load cannot take place within the configured readback time switch on test. Increase the readback time.

If you have set the readback time to the maximum value of 5 ms and there is still a passivation of the output channel, there is either an external fault or the connected capacity is outside the permitted range.

4.2.5.7 Activated light test

Function

Overload and wire break are detected with a 0 signal at the output.

For a light test, several test signals are switched to the output channel while the output channel is inactive (output signal "0"). The output channel is switched on briefly during the light test (= "light period") and read back. A sufficiently slow actuator does not respond to this and remains switched off.

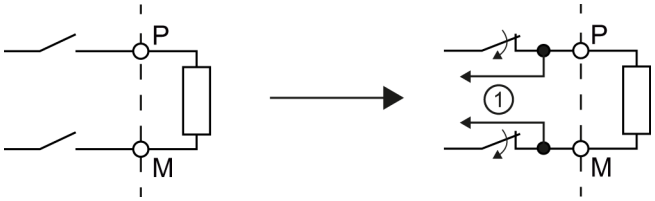

① Readback

Figure 4-5 Functional principle of the light test (PM switching)

In contrast to the switch on test, the P-switch and the M-switch switch at the same time during the light test and power flows through the connected load.

If the readback signals are incorrect, the signal is present for the configured readback time at the output channel before the fault causes passivation of the output channel.

If the signal was not read back correctly once the maximum readback time switch on test has expired, the output channel is passivated.

No new process values are switched to the output channels while a bit pattern is still active (switch test is carried out). This means that a higher maximum readback time switch on test for the light test increases the response time of the F-module.

Test pulses of the light test

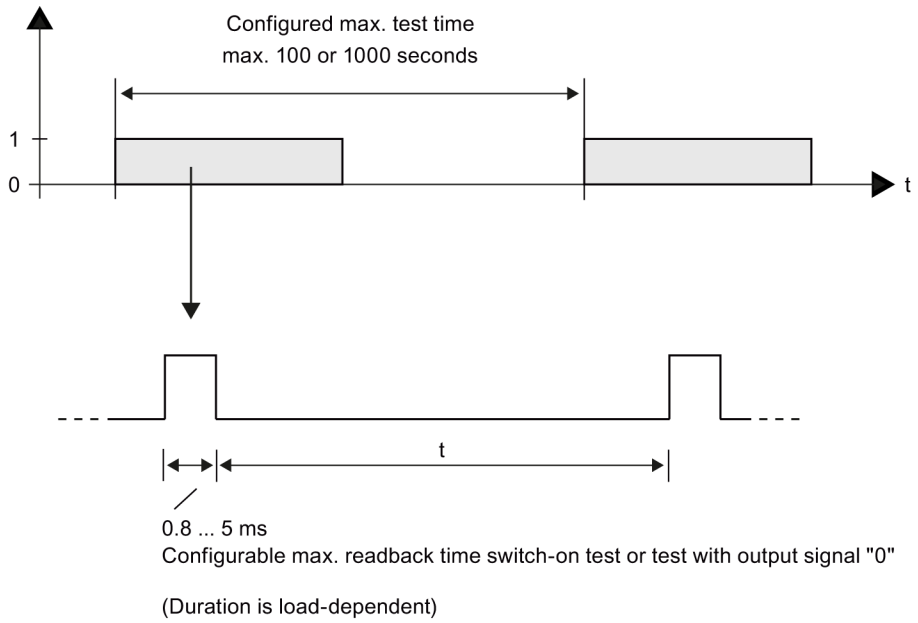

Figure 4-6 Test pulses of the light test

The distance between two test pulses (t) depends on the parameter assignment. Additional information is available in Minimum distance of test pulses (Page 84).

If a light pulse returns a fault, the same light pulse (which means the same bit pattern) is repeated once after t. If the fault is still present, the maximum test time is automatically reduced to 60 seconds and a diagnostic message is generated. If the fault is no longer present, the output channel is reintegrated after the next fault-free test cycle.

4.2.5.8 Diagnosis: Wire break

You can use a wire break test to monitor the connection from the output channel to the actuator.

Selecting this check box enables the wire break monitoring for the relevant channel.

Wire break is signaled when the following conditions are met:

- Wiring to the actuator is interrupted.
- A module that is disabled in fail-safe mode by the F-PM module has been removed.

You also have to activate the light test to detect a wire break with an output signal "0".

4.3 Address space

Address assignment of power module F-PM-E 24VDC/8A PPM ST

The F-PM-E 24VDC/8A PPM ST power module occupies the following address areas in the F-CPU:

Table 4- 2 Address assignment in the F-CPU

Occupied bytes in the F-CPU:	
In input range	In output range
x + 0 to x + 6	x + 0 to x + 4

x = Module start address

Address assignment of the user data and value status of power module F-PM-E 24VDC/8A PPM ST

Of the assigned addresses of power module F-PM E 24VDC/8A PPM ST, the user data occupy the following addresses in the F-CPU:

Table 4- 3 Address assignment of user data **in the input range**

Byte in the F-CPU	Assigned bits in F-CPU per F-module:							
	7	6	5	4	3	2	1	0
x + 0	—	—	—	—	—	—	DI_1	DI_0
x + 1	—	—	—	—	—	—	Value status for DI_1	Value status for DI_0
x + 2	—	—	—	—	—	—	—	Value status DQ_0

x = Module start address

Table 4- 4 Address assignment of user data **in the output range**

Byte in the F-CPU	Assigned bits in F-CPU per F-module:							
	7	6	5	4	3	2	1	0
x + 0	—	—	—	—	—	—	—	DQ_0

x = Module start address

Note

You may only access the addresses occupied by user data and value status.

The other address areas occupied by the F-modules are assigned for functions including safety-related communication between the F-modules and F-CPU in accordance with PROFIsafe.

1oo2 evaluation of the sensors combines the two channels. With 1oo2 evaluation of the sensors you may only access the low order channel in the safety program.

Additional information

For detailed information about F-I/O access, refer to the SIMATIC Safety – Configuring and Programming (http://support.automation.siemens.com/WW/view/en/54110126) manual.

See also

Value status (Page 75)

Applications of the F-I/O module 5

5.1 Applications for the output DQ/P1 and P2

Conditions for achieving SIL/Cat./PL

The table below lists the conditions which have to be met for achieving the various safety categories.

Table 5- 1 Conditions for achieving SIL/Cat./PL

F-PM-E 24VDC/8A PPM ST		Achievable safety class
Digital output DQ	Without standard DQ modules	SIL3/Cat.4/PLe
	With standard DQ modules	SIL2/Cat.3/PLd

5.1.1 Applications: Safety mode up to SIL3/Cat.4/PLe

Wiring

The wiring is carried out on the matching BaseUnit (Page 13).

5.1.1.1 Application: Wiring a load to the digital output, PM switching

The fail-safe digital output consists of two P-switches for DQ-P_0 and one M-switch for DQ-M_0. They connect the load between the P-switches DQ-P_0 and the M-switch DQ-M_0. The two P-switches and the M-switch are always activated so that voltage is applied to the load. This circuit achieves SIL3/Cat.4/PLe.

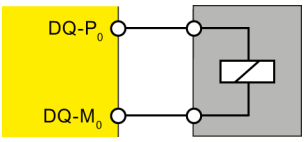

Figure 5-1 Wiring diagram of power module F-PM-E 24VDC/8A PPM ST

⚠ WARNING
In order to achieve SIL3/Cat.4/PLe with this wiring, you must install a qualified actuator, for example, in accordance with IEC 60947.

Parameter assignment

Assign the following parameter for the corresponding channel:

Table 5- 2 Parameters

Parameter	
Output type	PM switching

5.1.1.2 Application: Wiring a load to the digital output, PP switching

The fail-safe digital output consists of two P-switches for DQ-P_0 and one M-switch for DQ-M_0. You connect the load between the P-switch DQ-P_0 and chassis in this case. The two P-switches are always activated so that voltage is applied to the load. This circuit achieves SIL3/Cat.4/PLe.

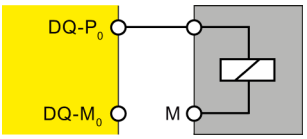

Figure 5-2 Wiring diagram of power module F-PM-E 24VDC/8A PPM ST

WARNING

In order to achieve SIL3/Cat.4/PLe with this wiring, you must install a qualified actuator, for example, in accordance with IEC 60947.

Parameter assignment

Assign the following parameter for the corresponding channel:

Table 5- 3 Parameters

Parameter	
Output type	PP switching

5.1.1.3 Application: Wiring two loads in parallel to the digital output, PM switching

You achieve SIL3/Cat.4/PLe with the following wiring variant.

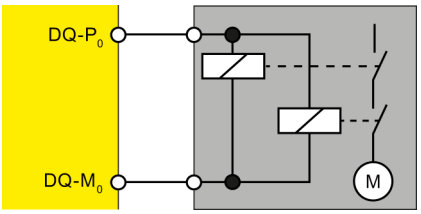

Figure 5-3 Wiring diagram for connecting two relays each in parallel to F-DQ of power module F-PM-E 24VDC/8A PPM ST

Note

When two relays are connected in parallel to one digital output (as shown above), a wire break is only detected if the wire break disconnects both relays from P or M. The diagnostics generated in the process is not safety-related.

Parameter assignment

Assign the following parameter for the corresponding channel:

Table 5- 4 Parameters

Parameter	
Output type	PM switching

5.1.1.4 Application: Wiring two loads in parallel to the digital output, PP switching

You achieve SIL3/Cat.4/PLe with the following wiring variant.

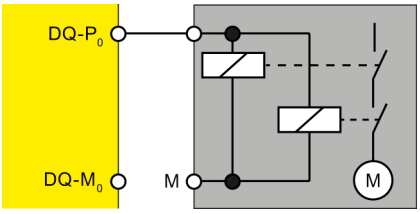

Figure 5-4 Wiring diagram for connecting two relays each in parallel to F-DQ of power module F-PM-E 24VDC/8A PPM ST

Note

When two relays are connected in parallel to one digital output (as shown above), a wire break is only detected if the wire break disconnects both relays from P or M. The diagnostics generated in the process is not safety-related.

Parameter assignment

Assign the following parameter for the corresponding channel:

Table 5- 5 Parameters

Parameter	
Output type	PP switching

5.2 Applications for inputs

5.2.1 Applications of the electronic module

Selecting the application

The diagram below supports you in selecting the application that suits your fail-safe requirements. In the following sections, you will learn how to wire the F-module, the specific parameters you must assign in STEP 7 Safety and the errors that are detected.

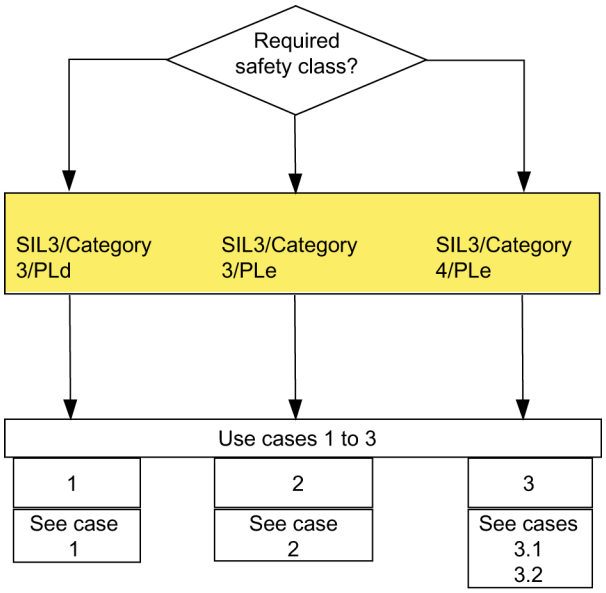

Figure 5-5 Selecting the application – digital inputs of the F-PM-E 24VDC/8A PPM ST

WARNING

The achievable safety class depends on the quality of the sensor and the duration of the proof-test interval in accordance with IEC 61508:2010. If the quality of the sensor is lower than the quality required by the safety class, redundant sensors connected via two channels must be used and evaluated.

Conditions for achieving SIL/Cat./PL

The table below lists the conditions which have to be met for achieving at least the corresponding safety requirements.

Table 5- 6 Conditions for achieving SIL/Cat./PL

Application	Sensor evaluation	Sensor supply	Achievable SIL/Cat./PL
1	1oo1	Any	3 / 3 / d
2	1oo2 equivalent	Internal, without short circuit test	3 / 3 / e
		External	
3.1	1oo2 equivalent	Internal, with short circuit test	3 / 4 / e
3.2	1oo2 non-equivalent	External/internal, with short circuit test	

Sensor requirements

Information on safety-related use of sensors is available in the section Requirements for sensors and actuators for fail-safe modules in the ET 200SP distributed I/O system (http://support.automation.siemens.com/WW/view/en/58649293) system manual.

5.2.2 Application 1: Safety mode SIL3/Cat.3/PLd

Wiring

The wiring is carried out on the matching BaseUnit (Page 13).

Sensor supply

The sensor supply can be powered internally or externally.

Wiring diagram – connecting one sensor via one channel

One sensor is connected via one channel (1oo1 evaluation) for each process signal. Any sensor supply of the module can be assigned to each input.

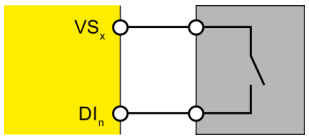

Figure 5-6 One sensor connected via one channel, internal sensor supply

You can also supply the sensor by means of an external sensor supply.

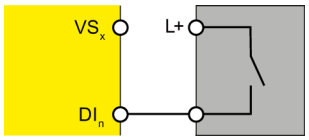

Figure 5-7 One sensor connected via one channel, external sensor supply

⚠ WARNING
To achieve SIL3/Cat.3/PLd using this wiring, you must use a qualified sensor.

Parameter assignment

Assign the following parameters for the corresponding channel:

Table 5- 7 Parameter assignment

Parameters	Channel with internal sensor supply	Channel with external sensor supply
Sensor evaluation	1oo1 evaluation	
Short circuit test	• disable • enable	disable
Sensor supply	• Sensor supply n	External sensor supply*

*) Otherwise a diagnostic message will be generated when short circuit test is activated.

Fault detection

The following table presents fault detection according to the sensor supply and the parameter assignment for the short circuit test:

Table 5- 8 Fault detection

Fault	Fault detection		
	Internal sensor supply and short circuit test activated	Internal sensor supply and short circuit test deactivated	External sensor supply
Short circuit with other channels or other sensor supplies (short circuit with other channels is detected only if they use a different sensor supply)	yes*	no	no
Short circuit with L+ to DI_n	yes	no	no
Short circuit with M to DI_n	yes*	yes*	no
Discrepancy error	—	—	—
Short circuit with L+ to VS_n	yes	no	—
Short circuit with M to VS_n or defective	yes	yes	—

*) Fault detection only if signals are corrupted. That is, the read signal differs from the sensor signal. If there is no signal corruption with respect to the sensor signal, fault detection is not possible and is not required from a safety standpoint.

WARNING

If the short circuit test is not activated or the sensor supply to digital inputs is set to "External sensor supply", the wiring between the sensor and the input channel must be short circuit proof.

5.2.3 Application 2: Safety mode SIL3/Cat.3/PLe

Assigning inputs to each other

The F-PM-E 24VDC/8A PPM ST power module has two fail-safe inputs, DI_0 and DI_1 (SIL3). You can combine the two inputs into one input.

The process signal is supplied by channel DI_0.

Wiring

The wiring is carried out on the matching BaseUnit (Page 13).

Sensor supply

The sensor supply can be powered internally or externally.

Wiring diagram – connecting a two-channel sensor via two channels

A two-channel sensor is connected equivalent to two inputs of the F-module for each process signal (1oo2 evaluation).

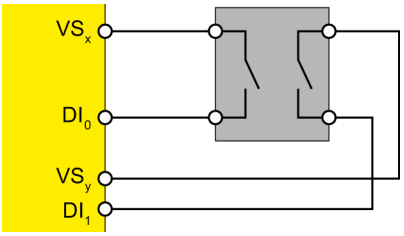

Figure 5-8 One two-channel sensor connected via two channels, internal sensor supply

You can also supply the sensor by means of an external sensor supply.

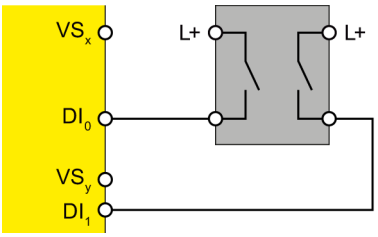

Figure 5-9 One two-channel sensor connected via two channels, external sensor supply

Wiring diagram – connecting two single-channel sensors via two channels

Two single-channel sensors that capture the same process value are connected to two inputs of the F-module for each process signal (1oo2 evaluation).

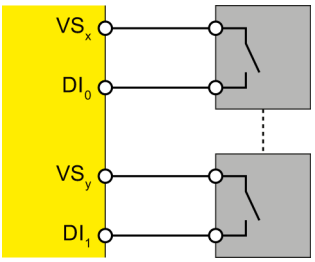

Figure 5-10 Two single-channel sensors connected via two channels, internal sensor supply

You can also supply the sensor by means of an external sensor supply.

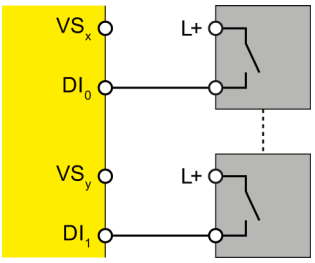

Figure 5-11 Two single-channel sensors connected via two channels, external sensor supply

⚠ WARNING
To achieve SIL3/Cat.3/PLe using this wiring, you must use a qualified sensor.

Parameter assignment

Assign the following parameters for the corresponding channel:

Table 5- 9 Parameter assignment

Parameter	Channel with internal sensor supply	Channel with external sensor supply
Sensor evaluation	1oo2 evaluation, equivalent	
Short circuit test	• disable • enable	disable

Fault detection

The following table presents fault detection according to the sensor supply and the parameter assignment for the short circuit test:

Table 5- 10 Fault detection

Fault	Fault detection	
	Internal sensor supply and short circuit test deactivated	External sensor supply
Short circuit within the channel pair, with other channels or other sensor supplies	no	no
Short circuit with L+ to DI_n	yes*	yes*
Short circuit with M to DI_n	yes*	yes*
Discrepancy error	yes	yes
Short circuit with L+ to VS_n	no	no
Short circuit with M to VS_n or defective	yes	—

*) Fault detection only if signals are corrupted. That is, the read signal differs from the sensor signal (discrepancy error). If there is no signal corruption with respect to the sensor signal, fault detection is not possible and is not required from a safety standpoint.

5.2.4 Application 3: Safety mode SIL3/Cat.4/PLe

Assigning inputs to each other

The F-PM-E 24VDC/8A PPM ST power module has two fail-safe inputs, DI_0 and DI_1 (SIL3). You can combine the two inputs into one input.

The process signal is supplied by channel DI_0.

Wiring

The wiring is carried out on the matching BaseUnit (Page 13).

Sensor supply

The sensor must be supplied **internally** for application 3.1 (Page 52).

The sensor can be supplied internally or externally for application 3.2 (Page 54).

Requirements for applications in machine protection with Cat.4

Both conditions must be met for applications in machine protection with Cat.4:

- The wiring between sensors and automation system and between automation system and actuators must be designed to state-of-the-art engineering and standards to prevent short circuits.
- All short circuits listed in Table 5-12 Fault detection (Page 53) and Table 5-14 Fault detection (Page 56) must be detected. You only need to detect **one** short circuit because two faults are required to generate it. This means both signal cables in short circuit have an isolation fault. A multiple short circuit analysis is not required.

Procedures for locating all short circuits are also permitted if single short circuits are not located. One of the two conditions must be met for this purpose:

- Short circuits may not corrupt the read signals compared to the sensor signals.
- Short circuits cause a corruption of the read signals compared to sensor signals in the direction that ensures safety.

5.2.4.1 Application 3.1 (SIL3/Cat.4/PLe)

Wiring diagram – connecting a two-channel sensor via two channels

A two-channel sensor is connected to both inputs of the power module for each process signal (1oo2 evaluation).

Supply the sensors from two different sensor supplies.

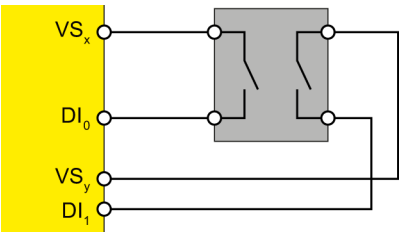

Figure 5-12 One two-channel sensor connected via two channels, internal sensor supply

You can also connect two single-channel sensors via two channels. In this case, the same process variable is acquired with two mechanically separate sensors.

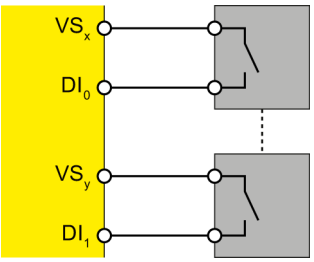

Figure 5-13 Two single-channel sensors connected via two channels, internal sensor supply

⚠ WARNING
To achieve SIL3/Cat.4/PLe using this wiring, you must use a suitably qualified sensor.

Parameter assignment

Assign the following parameters for the corresponding channel:

Table 5- 11 Parameter assignment

Parameter	Channel with internal sensor supply
Sensor evaluation	1oo2 evaluation, equivalent
Short circuit test	enable
Sensor supply	• Sensor supply n • External sensor supply

Fault detection

The following table presents fault detection according to the sensor supply and the parameter assignment for the short circuit test:

Table 5- 12 Fault detection

Fault	Fault detection
Short circuit within the channel pair, with other channels or other sensor supplies	yes*
Short circuit with L+ to DI_n	yes* / yes (for channel whose short circuit test is activated)
Short circuit with M to DI_n	yes*
Discrepancy error	yes
Short circuit with L+ to VS_n	yes
Short circuit with M to VS_n or defective	yes

*) Fault detection only if signals are corrupted. That is, the read signal differs from the sensor signal (discrepancy error). If there is no signal corruption with respect to the sensor signal, fault detection is not possible and is not required from a safety standpoint.

5.2.4.2 Application 3.2 (SIL3/Cat.4/PLe)

Wiring diagram – connecting a nonequivalent sensor nonequivalent via two channels

A nonequivalent sensor is connected nonequivalent via 2 channels to both inputs of the power module for each process signal (1oo2 evaluation, nonequivalent).

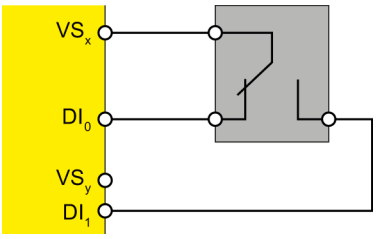

Figure 5-14 Nonequivalent sensor connected, internal sensor supply

You can also supply the sensor by means of an external sensor supply.

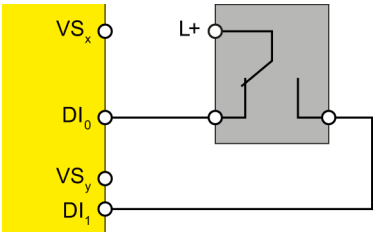

Figure 5-15 Nonequivalent sensor connected, external sensor supply

⚠ WARNING
To achieve SIL3/Cat.4/PLe using this wiring, you must use a suitably qualified sensor.

Wiring diagram – connecting two single-channel sensors nonequivalent via two channels

Two single-channel sensors are connected nonequivalent to both inputs of the power module for each process signal (1oo2 evaluation).

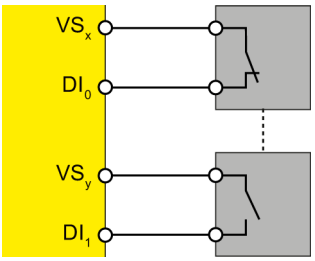

Figure 5-16 Two single-channel sensors connected nonequivalent, internal sensor supply

You can also supply the sensors by means of an external sensor supply.

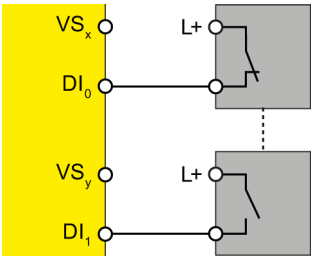

Figure 5-17 Two single-channel sensors connected nonequivalent, external sensor supply

WARNING
To achieve SIL3/Cat.4/PLe using this wiring, you must use a suitably qualified sensor.

Parameter assignment

Assign the following parameters for the corresponding channel:

Table 5- 13 Parameter assignment

Parameters	
Sensor evaluation	1oo2 evaluation, non equivalent
Short circuit test	• disable • enable
Sensor supply	• Sensor supply n • External sensor supply

Fault detection

The following table presents fault detection according to the sensor supply and the parameter assignment for the short circuit test:

Table 5- 14 Fault detection

Fault	Fault detection
Short circuit within the channel pair, with other channels or other sensor supplies	yes
Short circuit with L+ to DI_n	yes* / yes (for channel whose short circuit test is activated)
Short circuit with M to DI_n	yes*
Discrepancy error	yes
Short circuit with L+ to VS_n	yes, if used
Short circuit with M to VS_n or defective	yes, if sensor supply is activated

*) Fault detection only if signals are corrupted. That is, the read signal differs from the sensor signal (discrepancy error). If there is no signal corruption with respect to the sensor signal, fault detection is not possible and is not required from a safety standpoint.

5.3 Application for internal evaluation

Function

The evaluation of the safety function takes place internally in the F-module.

You can choose between 1oo1 evaluation or nonequivalent/equivalent 1oo2 evaluation of the sensors.

- With 1oo1 evaluation, the activated inputs are logically ANDed with the process image of output DQ_0.
- With 1oo2 evaluation, the result of the inputs is logically ANDed with the process image of output DQ_0.

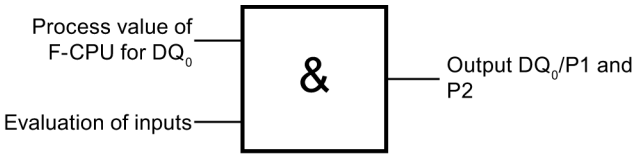

The acknowledgment in case of an error takes place by the safety program in the F-CPU.

Use the wiring diagrams Applications for the output DQ/P1 and P2 (Page 39) and Applications for inputs (Page 43).

You achieve SIL3/Cat.4/PLe.

WARNING

In order to achieve SIL3/Cat.4/PLe with this wiring, you must install a qualified actuator and sensor, for example, in accordance with IEC 60947.

Note

If an error occurs at the inputs in this application, the F-module also outputs the error message "Safety-related shutdown" or "Safety event" for the output. Following elimination of the error at the inputs, a reintegration of the output is only possible after the bit pattern test (within the test time shortened to 60 s) has been performed.

Interconnection example

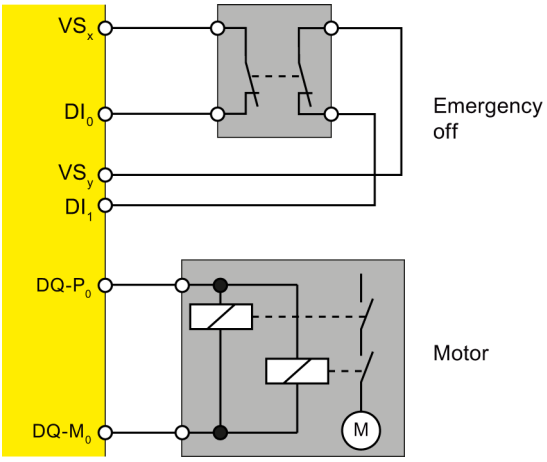

Figure 5-18 Emergency Off shutdown of a motor with equivalent 1oo2 evaluation

Parameter assignment

Assign the following parameters for the F-module:

Parameter	
Control of the output	F-CPU and onboard F-DI
Type of sensor interconnection	• 1-channel • 2-channel equivalent • 2-channel, non equivalent
Sensor supply	Sensor supply 0, Sensor supply 1, or External sensor supply

5.4 Applications for safety-related shutdown of standard modules

5.4.1 Safety-related shutdown of standard output modules, PM-switching

The F-PM-E 24VDC/8A PPM ST power module opens, together with the matching BaseUnit, a new potential group . Standard DQ modules that you use in the potential group can undergo a safety-related shutdown by the F-PM-E 24VDC/8A PPM ST power module. For this, the F-PM-E 24VDC/8A PPM ST power module performs a safety-related shutdown of voltage buses P1 and P2.

Configure the power module parameters as described in section Terminal assignment (Page 13).

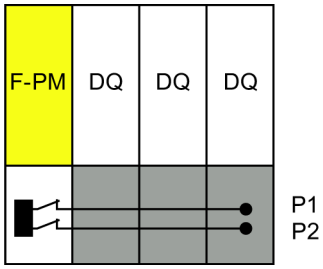

Figure 5-19 Safety-related shutdown of standard output modules

You achieve SIL2/Cat.3/PLd with safety-related shutdown of standard DQ modules.

WARNING

Safety-related activation of standard DQ module outputs is not possible; only safety-related **shutdown** is possible. You must therefore take the following possible effects into consideration:

In the worst case scenario, you must consider all possible faults of the standard DQ modules and the program controlling them for which there is no direct fault detection. For example, the F-PM-E 24VDC/8A PPM ST and F-DQ 4×24VDC/2A PM HF do not detect external short circuits to L+ at the standard DQ module outputs. All faults of the standard DQ modules act on the process via final controlling elements. The process must be made known to the F-CPU by way of sensors and a corresponding safety program.

Because safety-critical faults in the standard DQ modules cannot be detected by self-tests within the module, the "diagnostics" must be performed indirectly via the controlled process. As long as the incorrectly controlled process does not pose a hazard, the safety-related control does not intervene It only performs a shutdown if the process exhibits unwanted or potentially dangerous behavior.

It therefore follows that the reaction times for faults within standard DQ modules are not based on the specified short fault detection times of S7 but rather depend on the controlled process and the evaluation of feedback from the process.

Safety-related process values must be

- safely
- read in by way of fail-safe inputs or fail-safe input modules (e.g., F-DI)
- the safety function must be evaluated locally in the power module F-PM-E 24VDC/8A PPM ST or processed by the fail-safe CPU to form output commands and
- output by the fail-safe output module for shutdown of the corresponding safety relay or
- output by the F-PM-E 24VDC/8A PPM ST fail-safe power module.

If the expectations at the process end are not met (due to a process malfunction or faulty standard DO modules), the standard DQ modules must be brought to a safe state by way of the higher-level safety circuit.

The process safety time is of particular importance here. During this process safety time, no hazard is posed by an incorrectly controlled process.

The safety program must react in a safety-related and logical manner to unwanted or potentially dangerous states in the process via the F-PM-E 24VDC/8A PPM ST, F-DQ 4×24VDC/2A PM HF and fail-safe output modules.

If you want to avoid the problems described above completely, we recommend that you use the PM-switching F-DQ 4×24VDC/2A PM HF module instead of standard DQ modules.

WARNING

Always connect the 24 V DC supply for the standard ET 200SP modules to the F-PM-E 24VDC/8A PPM ST. Otherwise, the outputs of DQ modules may exhibit safety-critical behavior.

WARNING

When supplying standard DQ modules, always use the BaseUnits of these modules to supply the actuators (actuator feedback on the DQ module).

See also Terminal assignment (Page 13).

WARNING

Note the following for the "Safety-related shutdown of standard modules" application:

If standard modules behind a F-PM-E 24VDC/8A PPM ST power module are exposed to surge conditions, immunity according to failure criterion B is achieved (according to EN 298 and IEC 61326-3-2), i.e., the standard modules may fail in the event of surge conditions.

5.4.2 Safety-related shutdown of standard output modules, PP-switching

The F-PM-E 24VDC/8A PPM ST power module opens, together with the matching BaseUnit, a new potential group . Standard DQ modules that you use in the potential group can undergo a safety-related shutdown by the F-PM-E 24VDC/8A PPM ST power module. For this, the F-PM-E 24VDC/8A PPM ST power module performs a safety-related shutdown of voltage bus P1.

Configure the power module parameters as described in section Terminal assignment (Page 13).

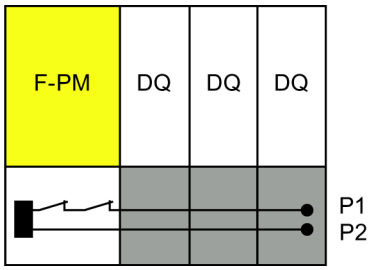

Figure 5-20 Safety-related shutdown of standard output modules

You achieve SIL2/Cat.3/PLd with safety-related shutdown of standard DQ modules.

WARNING

Safety-related activation of standard DQ module outputs is not possible; only safety-related **shutdown** is possible. You must therefore take the following possible effects into consideration:

In the worst case scenario, you must consider all possible faults of the standard DQ modules and the program controlling them for which there is no direct fault detection. For example, the F-PM-E 24VDC/8A PPM ST and F-DQ 4×24VDC/2A PM HF do not detect external short circuits to L+ at the standard DQ module outputs. All faults of the standard DQ modules act on the process via final controlling elements. The process must be made known to the F-CPU by way of sensors and a corresponding safety program.

Because safety-critical faults in the standard DQ modules cannot be detected by self-tests within the module, the "diagnostics" must be performed indirectly via the controlled process. As long as the incorrectly controlled process does not pose a hazard, the safety-related control does not intervene It only performs a shutdown if the process exhibits unwanted or potentially dangerous behavior.

It therefore follows that the reaction times for faults within standard DQ modules are not based on the specified short fault detection times of S7 but rather depend on the controlled process and the evaluation of feedback from the process.

Safety-related process values must be

- safely
- read in by way of fail-safe inputs or fail-safe input modules (e.g., F-DI)
- the safety function must be evaluated locally in the power module F-PM-E 24VDC/8A PPM ST or processed by the fail-safe CPU to form output commands and
- output by the fail-safe output module for shutdown of the corresponding safety relay or
- output by the F-PM-E 24VDC/8A PPM ST fail-safe power module.

If the expectations at the process end are not met (due to a process malfunction or faulty standard DO modules), the standard DQ modules must be brought to a safe state by way of the higher-level safety circuit.

The process safety time is of particular importance here. During this process safety time, no hazard is posed by an incorrectly controlled process.

The safety program must react in a safety-related and logical manner to unwanted or potentially dangerous states in the process via the F-PM-E 24VDC/8A PPM ST, F-DQ 4×24VDC/2A PM HF and fail-safe output modules.

If you want to avoid the problems described above completely, we recommend that you use the PM-switching F-DQ 4×24VDC/2A PM HF module instead of standard DQ modules.

WARNING

Always connect the 24 V DC supply for the standard ET 200SP modules to the F-PM-E 24VDC/8A PPM ST. Otherwise, the outputs of DQ modules may exhibit safety-critical behavior.

WARNING

When supplying standard DQ modules, always use the BaseUnits of these modules to supply the actuators (actuator feedback on the DQ module).

See also Terminal assignment (Page 13).

WARNING

Note the following for the "Safety-related shutdown of standard modules" application:

If standard modules behind a F-PM-E 24VDC/8A PPM ST power module are exposed to surge conditions, immunity according to failure criterion B is achieved (according to EN 298 and IEC 61326-3-2), i.e., the standard modules may fail in the event of surge conditions.

Interrupts/diagnostic messages 6

6.1 Status and error display

LED display

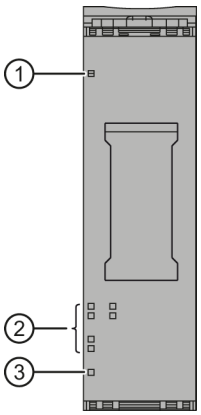

① DIAG (green/red)
② Channel status (green), channel fault (red)
③ PWR (green)

Figure 6-1 LED display

Meaning of the LED displays

The following tables explain the meaning of the status and error displays. Remedies for diagnostic messages can be found in section Diagnostic messages (Page 69).

WARNING
The DIAG LED and the channel status and channel fault LEDs of the inputs and outputs are not designed as safety-related LEDs and therefore may not be evaluated for safety-related activities.

PWR LED

Table 6- 1 Meaning of the PWR LED

PWR	Meaning
□ Off	Supply voltage L+ missing
■ On	Supply voltage L+ available

DIAG LED

Table 6- 2 Meaning of the DIAG LED

DIAG	Meaning
□ Off	Backplane bus supply of the ET 200SP not okay
☼ Flashing	Module parameters not configured
■ On	Module parameters configured and no module diagnostics
☼ Flashing	Module parameters configured and module diagnostics

Channel status/channel fault LED

Table 6- 3 Meaning of the channel status/channel fault LED

Channel status	Channel fault	Meaning
□ Off	□ Off	Process signal = 0 and no channel diagnostics
■ On	□ Off	Process signal = 1 and no channel diagnostics
□ Off	■ On	Process signal = 0 and channel diagnostics
☼/☼ Alternately flashing		Channel waiting for user acknowledgment

Channel status/DIAG/channel fault LED

Table 6- 4 Meaning of the channel status/DIAG/channel fault LED

Channel status	DIAG	Channel fault	Meaning
Off	Flashing	All On	The PROFIsafe address does not match the configured PROFIsafe address
Flashing	Flashing	Off	Identification of the F-module when assigning the PROFIsafe address

6.2 Interrupts

Introduction

The F-PM-E 24VDC/8A PPM ST fail-safe power module supports diagnostic interrupts.

Diagnostic interrupt

The F-module generates a diagnostic interrupt for each diagnostic message described in section Diagnostic messages (Page 69).

The table below provides an overview of the diagnostic interrupts of the F-module . The diagnostic interrupts are assigned either to one channel or the entire F-module.

WARNING

Before acknowledging the short circuit diagnostic message, remedy the respective fault and validate your safety function. Follow the fault remedying procedure described in section Diagnostic messages (Page 69).

Table 6- 5 Diagnostic interrupts of the F-PM-E 24VDC/8A PPM ST

Diagnostic interrupt	Fault code	Signaled in application	Scope of diagnostic interrupt	Configurable
Overtemperature	5_D	—	F-module	No
Parameter assignment error	16_D			
Load voltage missing	17_D			
Access to retentive storage of F-address not possible	30_D			
Different destination address (F_Dest_Add)	64_D			

Diagnostic interrupt	Fault code	Signaled in application	Scope of diagnostic interrupt	Configurable
Invalid destination address (F_Dest_Add)	65_D			
Invalid source address (F_Source_Add)	66_D			
Watchdog time is 0 ms (F_WD_Time or F_WD_Time2)	67_D			
"F_SIL" parameter exceeds the application-specific SIL	68_D			
"F_CRC_Length" parameter does not match the generated CRC	69_D			
Incorrect F-parameter version or F_Block_ID	70_D			
CRC1 error	71_D			
Inconsistent iParameters (iParCRC error)	75_D			
F_Block_ID not supported	76_D			
Internal error	256_D			
Time monitoring activated	259_D			
Internal supply voltage of the module failed	260_D			
Output short-circuited to L+	261_D		Channel	Yes
Output short-circuited to ground	262_D			
Wire break	265_D			
Incorrect/inconsistent firmware present. Firmware update required	283_D			No
Discrepancy error, channel status 0/0	768_D	2, 3		
Discrepancy error, channel status 0/1	769_D			
Discrepancy error, channel status 1/0	770_D			
Discrepancy error, channel status 1/1	771_D			
Input signal could not be clearly detected	773_D	1, 2, 3		
Short circuit of internal sensor supply to L+	774_D			Yes
Overload or short circuit of internal sensor supply to ground	775_D			
No pulse detected	778_D	1		
Sensor signal chatters	784_D			
Switching frequency too high	785_D	1,2,3		No
Undertemperature	786_D		F-module	
Fault in input circuit	787_D			
PROFIsafe communication error (timeout)	792_D			
PROFIsafe communication error (CRC)	793_D			
PROFIsafe address assignment error	794_D			
Input short-circuited to L+	796_D		Channel	Yes
Output defective	797_D	—		No
Readback error	798_D			
Overload	800_D			
Supply voltage too high	802_D	1, 2, 3	F-module	
Supply voltage too low	803_D			

6.3 Diagnostic messages

Digital module error types

Module faults are indicated as diagnostics (module status).

Once the fault is eliminated, the F-module must be reintegrated in the safety program. For additional information on passivation and reintegration of F-I/O, refer to the SIMATIC Safety – Configuring and Programming (http://support.automation.siemens.com/WW/view/en/54110126) manual.

Table 6- 6 Diagnostic messages of the F-PM-E 24VDC/8A PPM ST

Diagnostic message	Fault code	Meaning	Remedy
Overtemperature	5_D	An excessively high temperature was measured in the F-module.	Operate the F-module within the specified temperature range. (see Technical specifications (Page 77)) Once the fault has been eliminated, the F-module must be removed and inserted or the power switched OFF and ON
Wire break	6_D	Possible causes: • There is an interrupted cable between the module and actuator. • The channel is not connected (open). • There is a short circuit between channels with different signals.	• Establish a cable connection. • Disable the wire break detection for the channel in the parameter assignment. • Eliminate the short circuit.
Parameter assignment error	16_D	Parameter assignment errors include: • The F-module cannot use the parameters (unknown, invalid combination, etc.). • The F-module parameters have not been configured.	Correct the parameter assignment.
Load voltage missing	17_D	Missing or insufficient supply voltage L+	• Check supply voltage L+ at BaseUnit • Check BaseUnit type
Access to retentive storage of F-address not possible	30_D	The F-destination address stored in the coding element cannot be accessed.	Verify that the coding element is present or replace the coding element.
Different destination address (F_Dest_Add)	64_D	The PROFIsafe driver has detected a different F-destination address.	Check the parameter assignment of the PROFIsafe driver and the address setting of the F-module.
Invalid destination address (F_Dest_Add)	65_D	The PROFIsafe driver has detected an invalid F-destination address.	Check the parameter assignment of the PROFIsafe driver.
Invalid source address (F_Source_Add)	66_D	The PROFIsafe driver has detected an invalid F-source address.	

Diagnostic message	Fault code	Meaning	Remedy
Watchdog time is 0 ms (F_WD_Time or F_WD_Time2)	67_D	The PROFIsafe driver has detected an invalid watchdog time.	
"F_SIL" parameter exceeds the application-specific SIL	68_D	The PROFIsafe driver has detected a discrepancy between the SIL setting of the communication and the application.	
"F_CRC_Length" parameter does not match the generated CRC	69_D	The PROFIsafe driver has detected a discrepancy in the CRC length.	
Incorrect F-parameter version or F_Block_ID	70_D	The PROFIsafe driver has detected an incorrect version of the F-parameters or an invalid F_Block_ID.	
CRC1 error	71_D	The PROFIsafe driver has detected inconsistent F-parameters.	
Inconsistent iParameters (iParCRC error)	75_D	The PROFIsafe driver has detected inconsistent iParameters.	Check the parameter assignment.
F_Block_ID not supported	76_D	The PROFIsafe driver has detected an incorrect Block ID.	Check the parameter assignment of the PROFIsafe driver.
Internal error	256_D	Possible causes: • Impermissibly high electromagnetic interference is present. • The F-module is defective.	• Eliminate the interference. The module must then be pulled and plugged, or the power switched OFF and ON • Replace the F-module.
Internal supply voltage of the module failed	260_D	Possible causes: • Impermissibly high electromagnetic interference is present. • The F-module is defective.	• Eliminate the electromagnetic interference. The module must then be pulled and plugged, or the power switched OFF and ON • Replace the F-module.
Output short-circuited to L+	261_D	Short circuit to L+ can mean: • The sensor cable is short-circuited to L+. • The output cable is short-circuited to L+.	Correct the process wiring.
Output short-circuited to ground	262_D	Short circuit to ground can mean: • The sensor cable is short-circuited to ground. • The output cable is short-circuited to ground. • The output signal is short-circuited to ground.	Correct the process wiring.
Incorrect/inconsistent firmware present. Firmware update required	283_D	The firmware is incomplete and/or firmware added to the F-module is incompatible. This leads to errors or functional limitations when operating the F-module.	• Perform a firmware update for all parts of the F-module and note any error messages. • Use only firmware versions released for this F-module.

Diagnostic message	Fault code	Meaning	Remedy
Discrepancy error, channel status 0/0	768_D	Possible causes: • The process signal is faulty. • The sensor is defective. • The configured discrepancy time is too low. • There is a short circuit between an unconnected sensor cable and the sensor supply cable. • Wire break in connected sensor cable or the sensor supply cable • An error occurred during the discrepancy check.	• Check the process signal. • Replace the sensor. • Check the parameter assignment of the discrepancy time. • Check the process wiring.
Discrepancy error, channel status 0/1	769_D		
Discrepancy error, channel status 1/0	770_D		
Discrepancy error, channel status 1/1	771_D		
Input signal could not be clearly detected	773_D	An error occurred in the plausibility check of the input signal between the processors. You must eliminate the error within 100 hours. If you do not eliminate the error within 100 hours, the F-module will become inoperative. Possible causes: • The input signal is faulty, e.g., as a result of impermissibly high electromagnetic interference. • A high-frequency input signal is present, e.g., due to mutual interference of sensors or the signal being above the sampling frequency of the input signal. • A momentary interruption/short circuit of the sensor cable (loose contact) is present. • The sensor/switch is bouncing.	• Use shielded cables to reduce the EMC effects. • Reduce the input frequency. • Check the wiring of the sensor.
Short circuit of internal sensor supply to L+	774_D	Possible causes: • There is a short circuit of the internal sensor supply with L+. • There is a short circuit of two sensor supplies. • The capacitance of the connected sensor for the configured test time is too high. • The sensor is defective.	• Eliminate the short circuit in the process wiring. • Check the configured test time and the process wiring. • Replace the sensor.

Diagnostic message	Fault code	Meaning	Remedy
Overload or short circuit of internal sensor supply to ground	775D	Possible causes: • The internal sensor supply is short-circuited to ground. • Impermissibly high electromagnetic interference is present.	• Eliminate the overload. • Eliminate the short circuit in the process wiring. • Check the "Sensor supply" parameter. • Eliminate/reduce the electromagnetic interference.
No pulse detected	778D	A pulse with a length greater than or equal to "Minimum pulse time" has not occurred within the time configured with the "Pulse monitoring window" parameter. Possible causes: • The "Pulse monitoring window" parameter setting is too low. • The "Minimum pulse time" parameter setting is too high. • There is a wire break in the process wiring.	• Check the "Pulse monitoring window" parameter. • Check the "Minimum pulse time" parameter. • Check the process wiring.
Sensor signal chatters	784D	Too many signal changes have occurred within the time configured with the "Monitoring window" parameter. • The "Monitoring window" parameter setting is too high. • The "Number of signal changes" parameter setting is too low. • A momentary interruption/short circuit of the sensor cable (loose contact) is present. • Impermissibly high electromagnetic interference is present. • The sensor is bouncing. • The sensor is defective.	• Check the "Monitoring window" parameter. • Check the "Number of signal changes" parameter. • Check the process wiring. • Eliminate/reduce the electromagnetic interference. • Replace the sensor.
Switching frequency too high	785D	The maximum switching frequency of the F-module has been exceeded.	Reduce the switching frequency. (see Technical specifications (Page 77))
Undertemperature	786D	The minimum permissible temperature limit has been violated.	Operate the F-module within the specified temperature range. (see Technical specifications (Page 77))
Fault in input circuit	787D	The F-module has detected an internal error. Possible causes: • Impermissibly high electromagnetic interference is present. • The F-module is defective.	• Eliminate/reduce the electromagnetic interference. • Replace the F-module.

Diagnostic message	Fault code	Meaning	Remedy
PROFIsafe communication error (timeout)	792_D	The PROFIsafe driver has detected a timeout. Possible causes: • The F-monitoring time is set incorrectly. • Bus faults are present.	• Check the parameter assignment. • Ensure that communication is functioning correctly.
PROFIsafe communication error (CRC)	793_D	The PROFIsafe driver has detected a CRC error. Possible causes: • The communication between the F-CPU and F-module is disturbed. • Impermissibly high electromagnetic interference is present. • An error occurred in the sign-of-life monitoring.	• Check the communication connection between the F-module and F-CPU. • Eliminate the electromagnetic interference.
PROFIsafe address assignment error	794_D	An error occurred during the automatic PROFIsafe address assignment.	Check the configuration.
Input short-circuited to L+	796_D	The input signal is short-circuited to L+.	Eliminate the short circuit.
Output defective	797_D	The F-module has detected an internal error. Possible causes: • Short circuit to L+ or M • The F-module is defective.	• Check the wiring. • Replace the F-module.
Readback error	798_D	The F-module has detected an internal error. Possible causes: • Impermissibly high electromagnetic interference is present. • The F-module is defective.	If the error persists, replace the F-module.
Overload	800_D	The maximum permissible output current has been exceeded. The output stage has been switched off. Possible causes: • A short circuit exists.	Check the process wiring.
Supply voltage too high	802_D	The supply voltage is too high.	Check the supply voltage.
Supply voltage too low	803_D	The supply voltage is too low.	Check the supply voltage.

Supply voltage outside the nominal range

In the case of a voltage dip in the supply voltage L+, the DIAG LED flashes and the module is passivated.

When the voltage has recovered (level must remain above the specified value for at least 1 minute (see Technical specifications (Page 77): Voltages, Currents, Potentials)), the DIAG LED stops flashing. The module remains passivated.

Behavior in case of cross circuit/short circuit to the sensor supply

When internal sensor supply is specified and short circuit test is disabled, short circuits to ground at the sensor supplies are detected. Channels for which the relevant sensor supply is configured will be passivated.

When internal sensor supply is specified and short circuit test is enabled, short circuits to ground and potential at the sensor supply are detected. Channels for which the relevant sensor supply is configured will be passivated.

Special features for fault detection

The detection of certain faults (short-circuits or discrepancy errors, for example) depends on the application, the wiring, and the parameter assignment of the short circuit test and the sensor power supply. The corresponding tables for fault detection for the applications are available under Applications of the F-I/O module (Page 39).

Generally applicable information on diagnostics

Information on diagnostics that pertains to all fail-safe modules (for example, readout of diagnostics functions or passivation of channels) is available in the SIMATIC Safety – Configuring and Programming (http://support.automation.siemens.com/WW/view/en/54110126) manual.

6.4 Value status

Properties

In addition to the diagnostic messages and the status and error display, the F-module makes available information about the validity of each input and output signal – the value status. The value status is entered in the process image along with the input signal.

Value status for digital input and output modules

The value status is additional binary information of a digital input or output signal. It is entered in the process image of the inputs (PII) at the same time as the process signal. It provides information about the validity of the input or output signal.

The value status is influenced by the wire break check, short-circuit, chatter monitoring, pulse extension, and plausibility check.

- 1_B: A valid process value is output for the channel.
- 0_B: A fail-safe value is output for the channel, or the channel is deactivated.

Assignment of the inputs and value status in the PII

Each channel of the F-module is assigned a value status in the process image of the inputs. You can find the assignment in section Address space (Page 36).

Reference

A detailed description of the evaluation and processing of the respective input signals can be found in the SIMATIC Safety – Configuring and Programming (http://support.automation.siemens.com/WW/view/en/54110126) manual.

Technical specifications 7

Technical specifications of F-PM-E 24VDC/8A PPM ST

	6ES7136-6PA00-0BC0
Product type designation	F-PM-E PPM 24VDC
General information	
Hardware product version	01
Firmware version	V1.0.0
Product function	
I&M data	Yes; IM0 to IM3
Engineering with	
STEP 7 TIA Portal configurable/integrated as of version	V12.0
STEP 7 configurable/integrated as of version	as of V5.5 SP3 / -
PROFIBUS as of GSD version/GSD revision	V2.3
PROFINET as of GSD version/GSD revision	V2.31
Operating mode	
Multi-output	No
Installation type/mounting	
Rack mounting possible	No
Front installation possible	No
Rail mounting possible	Yes; standard DIN rail
Wall mounting/direct mounting possible	No
Supply voltage	
Type of supply voltage	24 V DC
Rated value (DC)	24 V
Low limit of permissible range (DC)	20.4 V
High limit of permissible range (DC)	28.8 V
Reverse polarity protection	Yes
Input current	
Current consumption (rated value)	75 mA; without load
Current consumption, max.	21 mA; from backplane bus
Output voltage	
Rated value (DC)	24 V

	6ES7136-6PA00-0BC0
Sensor supply	
Number of outputs	2
Output current	
Up to 60 °C, max.	0.3 A
Short circuit protection	Yes; electronic (response threshold 0.7 A to 2.1 A)
24 V sensor supply	
24 V	Yes; min. L+ (-1.5 V)
Short circuit protection	Yes
Output current, max.	600 mA; total current of all sensors
Power	
Power consumption from the backplane bus	70 mW
Power loss	
Power loss, typ.	5 W
Address space	
Address space per module	
Input	7 bytes
Output	5 bytes
Digital inputs	
Number of inputs	2
m/p-reading	Yes; p-reading
Input characteristic curve according to IEC 61131, Type 1	Yes
Input voltage	
Type of input voltage	DC
Rated value, DC	24 V
For "0" signal	-30 to +5 V
For "1" signal	+15 to +30 V
Input current	
For "1" signal, typ.	3.7 mA
Input delay (for rated value of input voltage)	
For standard inputs	
• Assignable	Yes
• For "0" to "1", min.	0.4 ms
• For "0" to "1", max.	20 ms
• For "1" to "0", min.	0.4 ms
• For "1" to "0", max.	20 ms
For counter/technological functions	
• Assignable	No
Length of cable	
Cable length, shielded, max.	1000 m
Cable length unshielded, max.	500 m

	6ES7136-6PA00-0BC0
Digital outputs	
Number of outputs	1
Digital outputs, configurable	Yes
Short circuit protection	Yes
• Response threshold, typ.	> 14.8 A
Wire break detection	Yes
• Response threshold, typ.	8 mA
Overload protection	Yes
• Response threshold, typ.	8.8 A
Voltage induced on current interruption limited to	max 1.5 V
Switching capacity of outputs	
With resistive load, max.	8 A
With lamp load, max.	100 W
Load resistance range	
Low limit	3 Ω
High limit	2000 Ω
Output voltage	
Type of output voltage	DC
For "1" signal, min.	24 V; L+ (-0.5 V)
Output current	
For "1" signal, rated value	8 A
For "0" signal, residual current, max.	1.5 mA; PP-switching: Max. 1.5 mA; PM-switching: Max. 1 mA
Switching frequency	
With resistive load, max.	10 Hz; symmetrical
With inductive load, max.	0.1 Hz; acc. to IEC 947-5-1, DC13, symmetrical
With lamp load, max.	4 Hz; symmetrical
Total current of outputs	
Max. current per channel	8 A; (note derating data in the manual)
Max. current per module	8 A; (note derating data in the manual)
Length of cable	
Cable length, shielded, max.	1000 m
Cable length unshielded, max.	500 m
Interrupts/diagnostics/status information	
Fail-safe values can be switched to	No
Interrupts	
Diagnostic interrupt	Yes
Hardware interrupt	No
Diagnostic messages	
Diagnostics	Yes, see section "Interrupts/diagnostic messages" in the manual

	6ES7136-6PA00-0BC0
Diagnostics display LED	
RUN LED	Yes; green LED
ERROR LED	Yes; red LED
Monitoring of supply voltage	Yes; green PWR LED
Channel status display	Yes; green LED
For channel diagnostics	Yes; red LED
For module diagnostics	Yes; green/red DIAG LED
Electrical isolation	
Electrical isolation channels	
Between channels	No
Between the channels and the backplane bus	Yes
Between the channels and the supply voltage of the electronics	No
Permitted potential difference	
Between different circuits	60 V DC / 75 V AC
Isolation	
Isolation test voltage	707 V DC (type test)
Standards, approvals, certificates	
SIL acc. to IEC 61508	SIL 3
Suitable for safety functions	Yes
Maximum achievable safety class in safety mode	
Performance level according to EN ISO 13849-1	PLe
Low demand (PFD) acc. to SIL3	< 2.00E-05 1/h
High demand (PFH) acc. to SIL3	< 1.00E-09 1/h
Environmental conditions	
Operating temperature	
Min.	0 °C
Max.	60 °C
Horizontal installation, min.	0 °C
Horizontal installation, max.	60 °C
Vertical installation, min.	0 °C
Vertical installation, max.	50 °C
Storage/transport temperature	
Min.	-40 °C
Max.	70 °C
Dimensions	
Width	20 mm
Height	72 mm
Depth	55 mm
Weights	
Weight, approx.	70 g

Temperature characteristic values (derating)

Mounting position	Maximum temperature	Maximum output current
Horizontal	40 °C	8 A
	50 °C	6 A
	60 °C	4 A
Vertical	50 °C	4 A

Dimension drawing

See ET 200SP BaseUnits (http://support.automation.siemens.com/WW/view/en/58532597/133300) manual

Response times

A

A.1 Response times

Introduction

The next section shows the response times of power module F-PM-E 24VDC/8A PPM ST. The response times of the fail-safe modules are included in the calculation of the F-system response time.

Times required for the calculation

Maximum internal processing time: $T_{max.}$ = 29 ms

Maximum cycle time: T_{cycle} = 14 ms

Short circuit test time for the sensor supply configured for the channel = "Time for short circuit test" + "Startup time after short circuit test"

The input delay, short circuit test times, dark test time, switch-on time, discrepancy time, and test time are configured in STEP 7.

Definition of response time for fail-safe digital inputs

The response time represents the interval between a signal change at the digital input and reliable availability of the safety frame on the backplane bus.

Definition of response time for internal evaluation: Cycle time + Input delay + Short circuit test time + Maximum(readback time, switch-on time, light test time)

Maximum response time in the error-free case with 1oo1 evaluation

Maximum response time = T_{max} + Input delay + Short circuit test time for the sensor supply configured for the channel

Maximum response time in the error-free case with 1oo2 evaluation

Maximum response time = T_{max} + Input delay + Maximum (short circuit test time for the sensor supply configured for channel 0, short circuit test time for the sensor supply configured for channel n1)

Maximum response time with external short circuits

Maximum response time = Input delay + (n × T_{cycle}) + Sum(all short circuit test times + all startup times of sensors with activated short circuit test)

n = Number of sensor supplies with activated short circuit test

Maximum response time with discrepancy error and 1oo2 evaluation

Maximum response time = T_{max} + Input delay + Discrepancy time + 2 × Maximum (short circuit test time for the sensor supply configured for channel 0, short circuit test time for the sensor supply configured for channel 1)

Maximum response time with error and change of user data

Maximum response time = 3 × T_{cycle} + Maximum(dark test time, switch-on time)

Maximum response time with detection by bit pattern test

Maximum response time = T_{cycle} + Maximum(dark test time, switch-on time) + configured test time

Definition of response time for fail-safe digital outputs

The response time represents the interval between an incoming safety message frame from the backplane bus and the signal change at the digital output.

Maximum response time for fail-safe digital outputs

The maximum response time for fail-safe digital outputs in the error-free case is equal to:

Maximum response time = 2 × T_{cycle} + Maximum(dark test time, switch-on time)

The maximum response time for fail-safe digital outputs in the presence of an error is equal to:

Maximum response time = T_{cycle} + 2 × Maximum(dark test time, switch-on time) + interval between test pulses

A.2 Minimum distance of test pulses

The minimum interval between two test pulses depends on the activation of the light test, the configured maximum test time, and whether the output has been specified as a PM-switching or PP-switching output.

You can find the dependencies in the table below:

Assigned maximum test time	PM switching, light test not active	PM switching, light test active	PP switching, light test not active	PP switching, light test active
1000 s	62.080 s	45.147 s	82.913 s	38.137 s
100 s	5.830 s	4.238 s	7.913 s	3.521 s

Switching of loads

B

B.1 Connecting capacitive loads

If the output of power module F-PM-E 24VDC/8A PPM ST is interconnected with loads that require little current and have capacitance, this can lead to detection of a short circuit or overload. Reason: The capacitance cannot be sufficiently discharged or charged during the configured readback time of the bit pattern test.

The figure below shows typical curves for the assignable readback times representing the correlation between load resistance and switchable load capacitance at a supply voltage of 24 V DC.

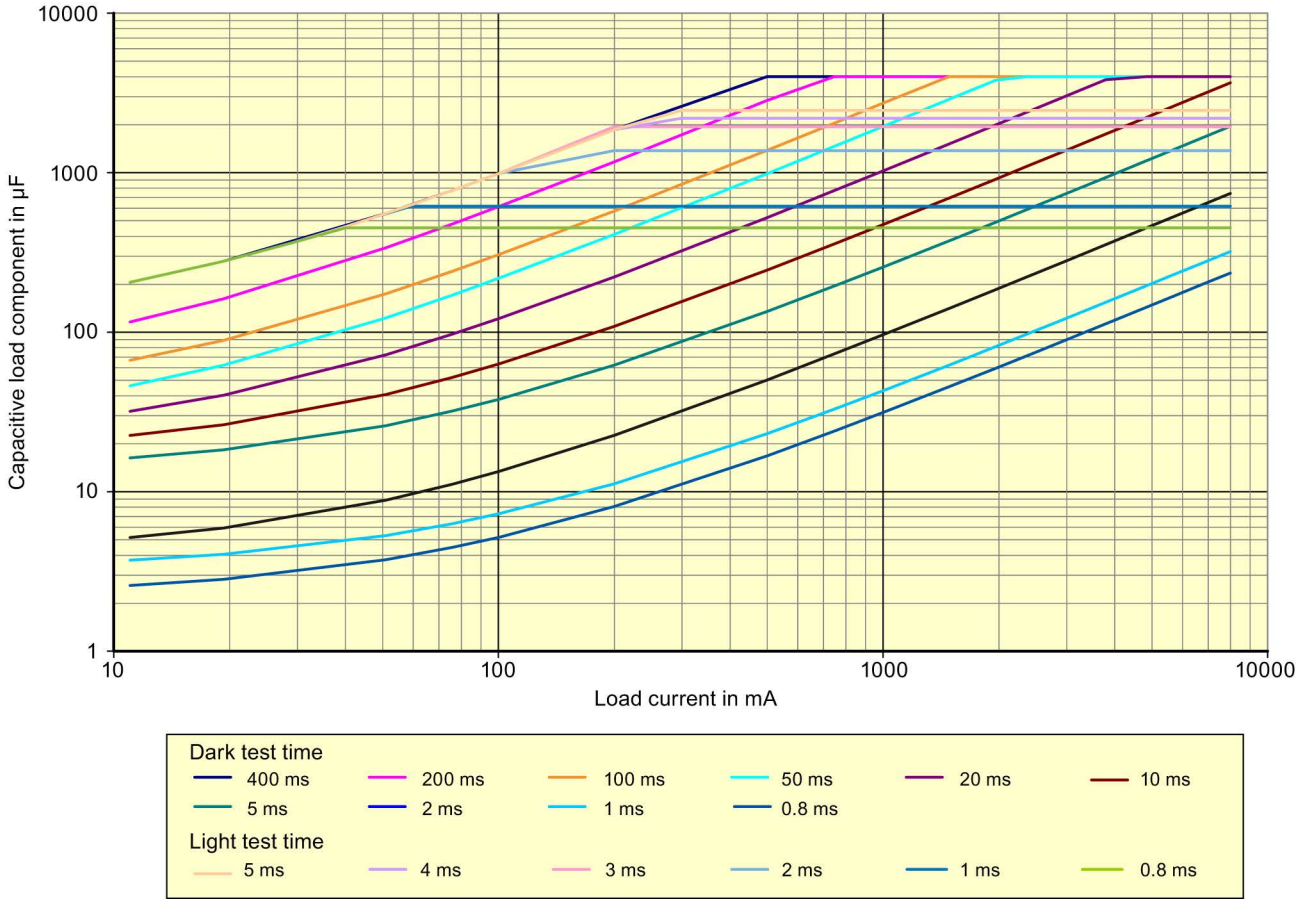

Figure B-1 Switching of capacitive loads for the F-PM-E 24VDC/8A PPM ST power module depending on the configured dark and light test times

The curves shown were plotted using a SIMATIC PS 307 10A power supply unit with a cable length of 25 m (cable cross-section of 1.5 mm²) between the output of the F-PM-E 24VDC/8A PPM ST power module and the load.

Remedy for detecting a short circuit

1. Determine the load current and capacitance of the load.
2. Locate the operating point in the diagram above.
3. If the operating point is above the curve, you must increase the load current until the new operating point is below the curve by connecting a resistor in parallel.

B.2 Switching of inductive loads

Switching of inductive loads

The diagram below shows the maximum permitted inductive loads as a function of the load current and switching frequency.

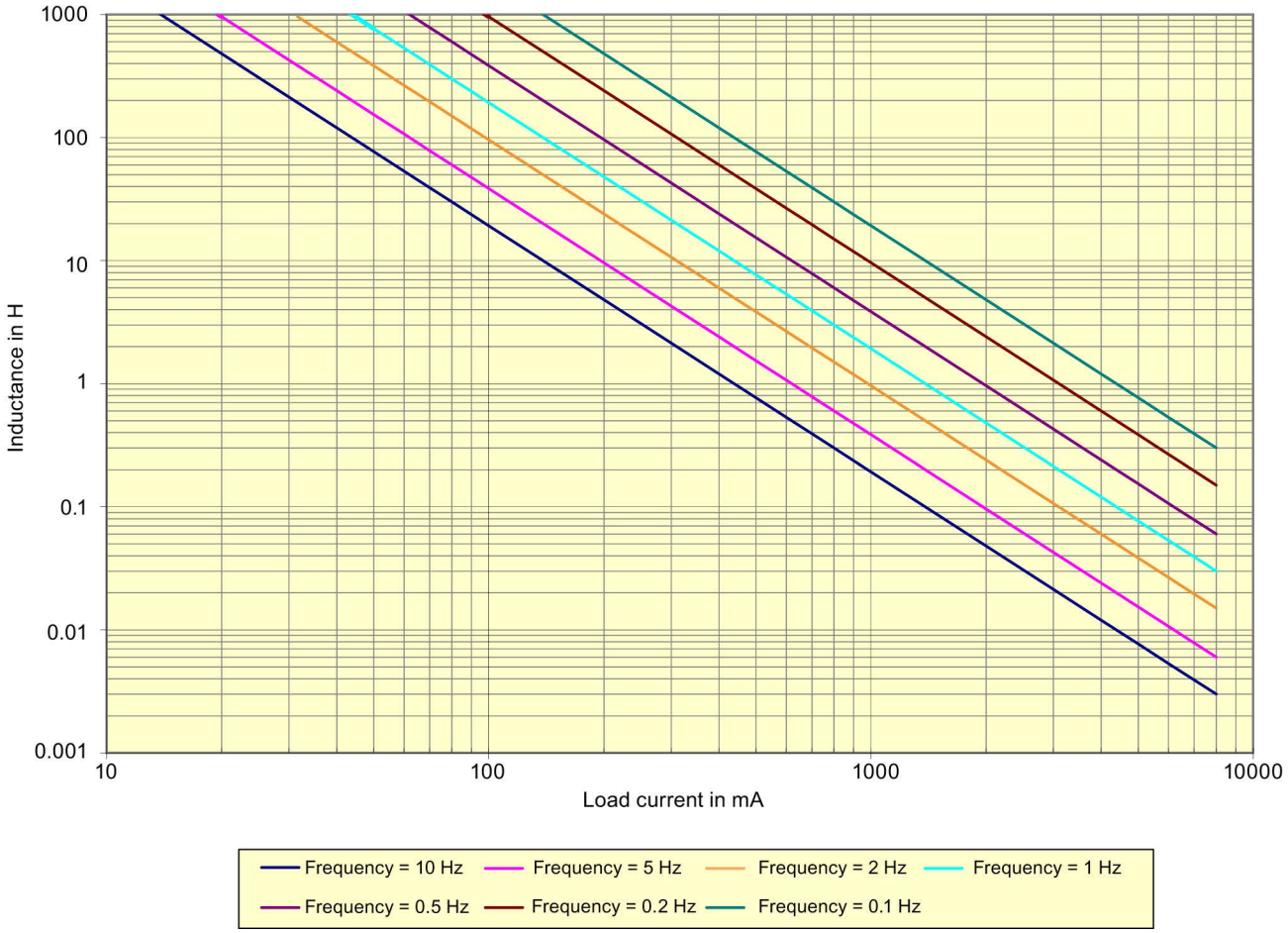

Figure B-2 Switching of inductive loads for the F-PM-E 24VDC/8A PPM ST power module depending on the load current and switching frequency

SIEMENS

SIMATIC
ET 200SP
Produktinformation zur Dokumentation der fehlersicheren Module ET 200SP

Produktinformation

Security-Hinweise

Siemens bietet Produkte und Lösungen mit Industrial Security-Funktionen an, die den sicheren Betrieb von Anlagen, Lösungen, Maschinen, Geräten und/oder Netzwerken unterstützen. Sie sind wichtige Komponenten in einem ganzheitlichen Industrial Security-Konzept. Die Produkte und Lösungen von Siemens werden unter diesem Gesichtspunkt ständig weiterentwickelt. Siemens empfiehlt, sich unbedingt regelmäßig über Produkt-Updates zu informieren.

Für den sicheren Betrieb von Produkten und Lösungen von Siemens ist es erforderlich, geeignete Schutzmaßnahmen (z. B. Zellenschutzkonzept) zu ergreifen und jede Komponente in ein ganzheitliches Industrial Security-Konzept zu integrieren, das dem aktuellen Stand der Technik entspricht. Dabei sind auch eingesetzte Produkte von anderen Herstellern zu berücksichtigen. Weitergehende Informationen über Industrial Security finden Sie unter (http://www.siemens.com/industrialsecurity).

Um stets über Produkt-Updates informiert zu sein, melden Sie sich für unseren produktspezifischen Newsletter an. Weitere Informationen hierzu finden Sie unter (http://support.automation.siemens.com).

Allgemeine Ergänzungen zur Dokumentation

Inhalt

Diese Produktinformation enthält Ergänzungen und Korrekturen zur Dokumentation der F-Module ET 200SP.

Ergänzung der Kapitel 5.1.1.2 "*Anwendungsfall: Anschluss von einer Last am Digitalausgang, PP schaltend*", 5.1.1.4 "*Anwendungsfall: Anschluss von 2 Lasten parallel liegend am Digitalausgang, PP schaltend*" und 5.4.2 "*Sicherheitsgerichtete Abschaltung von Standard-Ausgabemodulen, PP schaltend*" des Gerätehandbuchs "Powermodul F-PM-E 24VDC/8A PPM ST (6ES7136-6PA00-0BC0)"

⚠ WARNUNG
Wenn der Ausgangskanal 100 Stunden, und länger, dauerhaft „0"-Signal führen kann, muss der Helltest aktiviert werden. Beachten Sie die jeweiligen Anforderungen Ihrer Produktnormen hinsichtlich der Fehleraufdeckungszeit.

Nicht unterstützte Parameter

Die Parameter "Impulsverlängerung" und "Dunkeltest für 48 Stunden deaktivieren" werden nicht unterstützt.

Abhängigkeiten zwischen den Parametern "Diskrepanzzeit" und "Eingangsverzögerung"

Die Diskrepanzzeit muss größer als die Eingangsverzögerung parametriert werden.

Abhängigkeiten zwischen den Parametern "Hochlaufzeit des Gebers nach Kurzschlusstest" und "Zeit für Kurzschlusstest"

Die Hochlaufzeit des Gebers nach Kurzschlusstest muss mindestens 1% der Zeit für den Kurzschlusstest betragen.

Einschalten der Versorgungsspannung L+ für F-Module ET 200SP und IM

Stellen Sie sicher, dass vor dem Einschalten der Versorgungsspannung L+ eines F-Moduls sowohl das F-Modul als auch die IM gleichzeitig spannungslos waren. Eine Einschaltreihenfolge müssen Sie dabei nicht beachten.

© Siemens AG 2013 - 2014. Alle Rechte vorbehalten

Zyklisches Lesen von I&M-Daten

Zyklisches Lesen von I&M-Daten kann das Timing der F-Module belasten. Vermeiden Sie deshalb schnelle Lesezyklen von unter 500 ms.

Drahtbrucherkennung F-Modul F-DQ 4x24VDC/2A PM HF

Die Ansprechschwelle der Drahtbrucherkennung beträgt < 15 mA.

Einsatz von nicht-fehlersicheren Modulen

Fehlersichere Module ET 200SP dürfen Sie in einem Dezentralen Peripheriesystem ET 200SP nur zusammen mit nicht-fehlersicheren Modulen einsetzen, die mit SELV/PELV betrieben werden. Außerdem darf das Digitalausgabemodul RQ 4x120VDC-230VAC/5A NO ST nicht mit der gleichen Spannung wie die fehlersicheren Module ET 200SP versorgt werden.

Quittierungzeit T_{DAT}

F-Modul	Quittierungszeit T_{DAT}
Digitaleingabemodul F-DI 8x24VDC HF	23 ms
Digitalausgabemodul F-DQ 4x24VDC/2A PM HF	31 ms
Powermodul F-PM-E 24VDC/8A PPM ST	30 ms

Siemens AG
Industry Sector
Postfach 48 48
90026 NÜRNBERG

Produktinformation zur Dokumentation der fehlersicheren Module ET 200SP
A5E32586870-AF, 02/2014

SIEMENS

SIMATIC

ET 200SP

Product Information for the documentation on Power Module F-PM-E 24VDC/8A PPM ST (6ES7136-6PA00-0BC0)

Product Information

Security information

Siemens provides products and solutions with industrial security functions that support the secure operation of plants, systems, machines and networks.

In order to protect plants, systems, machines and networks against cyber threats, it is necessary to implement – and continuously maintain – a holistic, state-of-the-art industrial security concept. Siemens' products and solutions only form one element of such a concept.

Customer is responsible to prevent unauthorized access to its plants, systems, machines and networks. Systems, machines and components should only be connected to the enterprise network or the internet if and to the extent necessary and with appropriate security measures (e.g. use of firewalls and network segmentation) in place.

Additionally, Siemens' guidance on appropriate security measures should be taken into account. For more information about industrial security, please visit (http://www.siemens.com/industrialsecurity).

Siemens' products and solutions undergo continuous development to make them more secure. Siemens strongly recommends to apply product updates as soon as available and to always use the latest product versions. Use of product versions that are no longer supported, and failure to apply latest updates may increase customer's exposure to cyber threats.

To stay informed about product updates, subscribe to the Siemens Industrial Security RSS Feed under (http://www.siemens.com/industrialsecurity).

General amendments to the documentation

Content

This Product Information contains additional information and corrections relating to the documentation on Power Module F-PM-E 24VDC/8A PPM ST (6ES7136-6PA00-0BC0) up to and including hardware version (FS) 04.

The Product Information is part of the product supplied. The information in it should be considered more up-to-date if uncertainties arise.

Technical specifications of the F-PM-E 24VDC/8A PPM ST up to and including hardware version (FS) 04.

	6ES7136-6PA00-0BC0
Output current	
For "0" signal, residual current max.	6 mA; PP switching: typ. 1.5 mA, max. 6 mA PM switching: max. 1 mA

Siemens AG
Division Digital Factory
Postfach 48 48
90026 NÜRNBERG
GERMANY

Product Information for the documentation on Power Module F-PM-E 24VDC/8A PPM ST (6ES7136-6PA00-0BC0)
A5E35730426-AB, 01/2017

SIEMENS

SIMATIC

ET 200SP

Product Information for the Documentation of ET 200SP Fail-safe Modules

Product Information

Security information

Siemens provides products and solutions with industrial security functions that support the secure operation of plants, solutions, machines, equipment and/or networks. They are important components in a holistic industrial security concept. With this in mind, Siemens' products and solutions undergo continuous development. Siemens recommends strongly that you regularly check for product updates.

For the secure operation of Siemens products and solutions, it is necessary to take suitable preventive action (e.g. cell protection concept) and integrate each component into a holistic, state-of-the-art industrial security concept. Third-party products that may be in use should also be considered. You can find more information about industrial security on the Internet (http://www.siemens.com/industrialsecurity).

To stay informed about product updates as they occur, sign up for a product-specific newsletter. You can find more information on the Internet (http://support.automation.siemens.com).

General amendments to the documentation

Content

This product information contains amendments and corrections to the documentation of the ET 200SP fail-safe modules.

Amendment to chapter 5.1.1.2 "*Use case: Wiring a load to the digital output, PP switching*", 5.1.1.4 "*Use case: Wiring of two parallel loads to the digital output, PP switching*" and 5.4.2 "*Safety-related shutdown of standard output modules, PP switching*" of the manual "Power module F-PM-E 24VDC/8A PPM ST (6ES7136-6PA00-0BC0)"

⚠ WARNING
The light test must be activated if the output channel can permanently carry the "0" signal for 100 hours or more. Consult the respective requirements of your product standards regarding error detection time.

Unsupported parameters

The "Pulse stretching" and "Disable dark test for 48 hours" parameters are not supported.

Dependencies between the "Discrepancy time" and "Input delay" parameters

The configured discrepancy time must be greater than the configured input delay.

Dependencies between the "Startup time of the sensors after short circuit test" and "Time for short circuit test" parameters

The startup time of the sensor after a short circuit test must amount to at least 1% of the time for the short circuit test.

Switching on the supply voltage L+ for the ET 200SP F-modules and IM

Make sure that the F-module as well as the IM were de-energized at the same time before you switch on the supply voltage L+ for an F-module. You do not have to observe a switch-on sequence.

© Siemens AG 2013 - 2014. All rights reserved

Cyclic reading of I&M data

Cyclic reading of I&M data can affect the timing of the F-modules. You should therefore avoid short read cycles of less than 500 ms.

Open-circuit detection for F-DQ 4x24VDC/2A PM HF fail-safe module

The response threshold of the open-circuit detection is < 15 mA.

Using non-fail-safe modules

In an ET 200SP distributed I/O system, you can only use ET 200SP fail-safe modules together with non-fail-safe modules that are operated with SELV/PELV. In addition, the digital output module RQ 4x120VDC-230VAC/5A NO ST cannot be supplied with the same voltage as the ET 200SP fail-safe modules.

T_{DAT} acknowledgment time

F-Module	T_{DAT} acknowledgment time
Digital input module F-DI 8x24VDC HF	23 ms
Digital output module F-DQ 4x24VDC/2A PM HF	31 ms
Power module F-PM-E 24VDC/8A PPM ST	30 ms

Siemens AG
Industry Sector
Postfach 48 48
90026 NÜRNBERG

Product Information for the Documentation of ET 200SP Fail-safe Modules
A5E32586870-AF, 02/2014

SIEMENS

SIMATIC

ET 200SP

Information produit sur la documentation des modules de sécurité ET 200SP

Information produit

Notes relatives à la sécurité

Siemens commercialise des produits et solutions comprenant des fonctions de sécurité industrielle qui contribuent à une exploitation sûre des installations, solutions, machines, équipements et/ou réseaux. Ces fonctions jouent un rôle important dans un système global de sécurité industrielle. Dans cette optique, les produits et solutions Siemens font l'objet de développements continus. Siemens vous recommande donc vivement de vous tenir régulièrement informé des mises à jour des produits.

Pour garantir une exploitation fiable des produits et solutions Siemens, il est nécessaire de prendre des mesures de protection adéquates (par ex. concept de protection des cellules) et d'intégrer chaque composant dans un système de sécurité industrielle global et moderne. Veuillez également tenir compte des produits que vous utilisez et qui proviennent d'autres fabricants. Pour plus d'informations sur la sécurité industrielle, rendez-vous sur (http://www.siemens.com/industrialsecurity).

Veuillez vous abonner à la newsletter d'un produit particulier afin d'être informé des mises à jour dès qu'elles surviennent. Pour plus d'informations, rendez-vous sur (http://support.automation.siemens.com).

Addenda généraux à la documentation

Contenu

Cette information produit contient des addenda et des correctifs à la documentation des modules de sécurité ET 200SP.

Addendum au chapitre 5.1.1.2 "*Cas d'application : Connexion d'une charge à la sortie TOR, commutation PP*", 5.1.1.4 "*Cas d'application : Connexion de 2 charges parallèles à la sortie TOR, commutation PP*" et 5.4.2 "*Désactivation de sécurité de modules de sorties standard, commutation PP*" du manuel "Module de puissance F-PM-E 24VDC/8A PPM ST (6ES7136-6PA00-0BC0)"

⚠ ATTENTION
Si la voie de sortie peut fournir un signal "0" en continu pendant 100 heures et plus, le test avec activation doit être activé. Tenez compte des exigences spécifiques aux normes de votre produit en ce qui concerne le temps de détection des erreurs.

Paramètres non pris en charge

Les paramètres "Impulsion prolongée" et "Désactivation du test avec désactivation pour 48 heures" ne sont pas pris en charge.

Dépendances entre les paramètres "Temps de discordance" et "Retard à l'entrée"

Le temps de discordance doit être supérieur au retard à l'entrée.

Dépendances entre les paramètres "Temps de démarrage du capteur après le test de court-circuit" et "Temps de test de court-circuit"

Le temps de démarrage du capteur après le test de court-circuit doit être égal au moins égal à 1% au temps de test de court-circuit.

© Siemens AG 2013 - 2014. Tous droits réservés

Mise en route de la tension d'alimentation L+ des modules F ET 200SP et IM

Assurez-vous que le module F et l'IM sont tous deux hors tension avant de mettre en route la tension d'alimentation L+ d'un module F. Pour ce faire, il n'est pas nécessaire de suivre un ordre d'activation.

Lecture cyclique des données I&M

La lecture cyclique des données I&M peut surcharger la synchronisation des modules F. Il convient donc d'éviter les cycles rapides de lecture inférieurs à 500 ms.

Détection de rupture de fil du module de sécurité F-DQ 4x24 V CC/2A PM HF

Le seuil de déclenchement de la détection de rupture de fil est < 15 mA.

Utilisation de modules non de sécurité

Les modules de sécurité ET 200SP ne doivent être utilisés dans un système de périphérie décentralisée ET 200SP qu'avec des modules non de sécurité fonctionnant avec une TBTS/TBTP. En outre, le module de sorties TOR RQ 4x120VDC-230VAC/5A NO ST ne doit pas être alimenté avec la même tension que les modules de sécurité ET 200SP.

Temps d'acquittement T_{DAT}

Module F	Temps d'acquittement T_{DAT}
Module d'entrées TOR F-DI 8x24 V CC HF	23 ms
Module de sorties TOR F-DQ 4x24 V CC/2A PM HF	31 ms
Module d'alimentation F-PM-E 24 V CC/8A PPM ST	30 ms

Siemens AG
Industry Sector
Postfach 48 48
90026 NÜRNBERG

Information produit sur la documentation des modules de sécurité ET 200SP
A5E32586870-AF, 02/2014

SIEMENS

SIMATIC

ET 200SP
ET 200SP distributed I/O system

Product Information

Preface

Product overview 1

Application planning 2

Installation 3

Connecting 4

Configuring 5

Maintenance 6

Technical specifications 7

Accessories/spare parts 8

07/2013

A5E32288220-AA

Legal information

Warning notice system

This manual contains notices you have to observe in order to ensure your personal safety, as well as to prevent damage to property. The notices referring to your personal safety are highlighted in the manual by a safety alert symbol, notices referring only to property damage have no safety alert symbol. These notices shown below are graded according to the degree of danger.

⚠ DANGER
indicates that death or severe personal injury **will** result if proper precautions are not taken.

⚠ WARNING
indicates that death or severe personal injury **may** result if proper precautions are not taken.

⚠ CAUTION
indicates that minor personal injury can result if proper precautions are not taken.

NOTICE
indicates that property damage can result if proper precautions are not taken.

If more than one degree of danger is present, the warning notice representing the highest degree of danger will be used. A notice warning of injury to persons with a safety alert symbol may also include a warning relating to property damage.

Qualified Personnel

The product/system described in this documentation may be operated only by **personnel qualified** for the specific task in accordance with the relevant documentation, in particular its warning notices and safety instructions. Qualified personnel are those who, based on their training and experience, are capable of identifying risks and avoiding potential hazards when working with these products/systems.

Proper use of Siemens products

Note the following:

⚠ WARNING
Siemens products may only be used for the applications described in the catalog and in the relevant technical documentation. If products and components from other manufacturers are used, these must be recommended or approved by Siemens. Proper transport, storage, installation, assembly, commissioning, operation and maintenance are required to ensure that the products operate safely and without any problems. The permissible ambient conditions must be complied with. The information in the relevant documentation must be observed.

Trademarks

All names identified by ® are registered trademarks of Siemens AG. The remaining trademarks in this publication may be trademarks whose use by third parties for their own purposes could violate the rights of the owner.

Disclaimer of Liability

We have reviewed the contents of this publication to ensure consistency with the hardware and software described. Since variance cannot be precluded entirely, we cannot guarantee full consistency. However, the information in this publication is reviewed regularly and any necessary corrections are included in subsequent editions.

Siemens AG
Industry Sector
Postfach 48 48
90026 NÜRNBERG
GERMANY

A5E32288220-AA
Ⓟ 08/2013 Technical data subject to change

Copyright © Siemens AG 2013.
All rights reserved

Preface

Scope of the product information

This product information amends the ET 200SP Distributed I/O System System Manual (http://support.automation.siemens.com/WW/view/en/58649293) to include ET 200SP fail-safe modules.

Table of contents

Preface 3

1 Product overview 7

1.1 What are fail-safe automation systems and fail-safe modules? 7

1.2 Fault reactions with fail-safe modules 10

2 Application planning 13

2.1 Forming potential groups with fail-safe modules 13

3 Installation 15

3.1 Basics 15

4 Connecting 17

4.1 Additional rules and provisions for operation of the ET 200SP with fail-safe modules 17

4.1.1 Safe functional extra-low voltage (SELV) for fail-safe modules 17

4.1.2 Requirements of sensors and actuators for fail-safe modules 18

4.1.3 Capacitive crosstalk of digital input/output signals 20

5 Configuring 21

5.1 Assigning the F-destination address for fail-safe modules 21

5.1.1 Assigning the F-destination address 21

6 Maintenance 23

6.1 Firmware update 23

7 Technical specifications 25

7.1 Electromagnetic compatibility of fail-safe modules 25

7.2 Standards and approvals 27

8 Accessories/spare parts 29

8.1 Lightning protection and overvoltage protection for fail-safe modules 29

Glossary 31

Product overview 1

1.1 What are fail-safe automation systems and fail-safe modules?

Fail-safe automation systems

Fail-safe automation systems (F-systems) are used in systems with higher-level safety requirements. F-systems serve to control processes and ensure that they are in a safe state immediately after shutdown. In other words, F-systems control processes in which an immediate shutdown does not endanger persons or the environment.

Fail-safe modules

The key difference between fail-safe modules (F-modules) and standard ET 200SP modules is that they have an internal two-channel design. The two integrated processors monitor each other, automatically test the input and output circuits, and switch the F-I/O module to a safe state in the event of a fault.

The F-CPU communicates with the fail-safe modules via the fail-safe PROFIsafe bus profile.

Fail-safe power modules, together with the respective BaseUnit, serve the load voltage supply of the potential group and the safety-oriented tripping of the load voltage for standard output modules.

Fail-safe digital input modules detect the signal states of safety-oriented sensors and send the relevant safety message frames to the F-CPU.

Fail-safe digital output modules are suitable for safety-related shutdown procedures with short circuit and cross-circuit protection up to the actuator.

Possible uses of ET 200SP with fail-safe modules

The use of ET 200SP with fail-safe modules allows conventional configurations in safety engineering to be replaced with PROFNET IO components. This includes the replacement of switching devices for emergency STOP, protective door monitors, two-hand operation, etc.

ET 200SP fail-safe modules are supported with the STEP 7 Safety Advanced optional package V12 including HSP 54 or higher.

ET 200SP fail-safe modules are supported with IM155-6PN ST as of firmware V1.1.

Achievable safety classes

Fail-safe modules are equipped with integrated safety functions for safety mode.

The following safety classes can be achieved through appropriate parameter assignment of the safety functions in STEP 7 Professional V12 SP1 or higher with STEP 7 Safety Advanced optional package V12 or higher, through a specific combination of fail-safe and standard modules, and through a specific arrangement and wiring of sensors and actuators:

Safety class in safety mode		
According to IEC 61508	According to ISO 13849-1:2006	
SIL2	Category 3	(PL) Performance Level d
SIL3	Category 3	(PL) Performance Level e
SIL3	Category 4	(PL) Performance Level e

Use in SIMATIC Safety F-systems

ET 200SP fail-safe modules can be used with the STEP 7 Safety Advanced optional package, V12 or higher under PROFINET IO, together with an F-CPU.

SIMATIC Safety F-system with ET 200SP

The following figure shows a sample configuration for a SIMATIC Safety F-system with, among other things, an ET 200SP on a PROFINET IO. The PROFINET IO lines can be set up with copper cable, with fiber-optic cable or WLAN.

You will find further information on the Internet at Application planning (Page 13).

Tasks of the fail-safe IO controller (F-CPU) include the exchange of safety-related and non-safety-related data with fail-safe and standard ET 200SP modules.

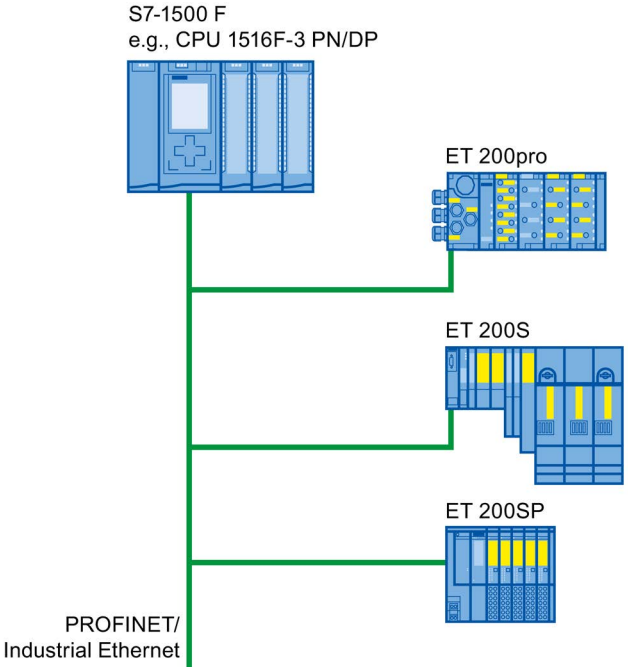

Figure 1-1 Fail-safe SIMATIC Safety automation system (sample configuration)

Use in safety mode only

Fail-safe modules can only be used in fail-safe mode. They cannot be used in non-fail-safe mode In this context, fail-safe mode/non-fail-safe mode refers to the operating mode of the F-I/O module, which either does or doesn't support safety-related communication via safety message frames.

Fail-safe modules and non-fail-safe modules can be combined within an ET 200SP.

1.2 Fault reactions with fail-safe modules

Safe state (safety concept)

The basic principle behind the safety concept is the existence of a safe state for all process variables.

Note

For digital F-modules, this safe state is the value "0". This applies to both sensors and actuators.

Fault reactions and startup of the F-system

The safety function requires that fail-safe values (safe state) be applied to the fail-safe module instead of process values (**passivation of the fail-safe module**) in the following situations:

- When the F-system is started up
- If errors are detected during safety-related communication between the F-CPU and the F-module via the PROFIsafe safety protocol (communication error)
- If F-I/O faults or channel faults are detected (e.g., wire break, discrepancy error)

Detected faults are written to the diagnostic buffer of the F-CPU and communicated to the safety program in the F-CPU.

F-modules cannot save errors as retentive data. When the system is powered down and then restarted, any faults still existing are detected again during startup. However, you have the option of saving faults in your safety program.

WARNING

For channels that you set to "deactivated" in *STEP 7*, no diagnostic response or error handling is triggered when a channel fault occurs, not even when such a channel is affected indirectly by a channel group fault ("Channel activated/deactivated" parameter).

Remedying faults in the F-system

To remedy faults in your F-system, follow the procedure described in IEC 61508-1:2010 section 7.15.2.4 and IEC 61508-2:2010 section 7.6.2.1 e.

The following steps must be performed:

1. Diagnostic and repair of the fault
2. Revalidation of the safety function
3. Recording in the service report

Fail-safe value output for F-modules

In the case of F-modules with inputs, the F-system provides fail-safe values (0) for the safety program instead of the process data pending at the fail-safe inputs in case of passivation.

In the case of F-modules with outputs, the F-system transfers fail-safe values (0) to the fail-safe outputs instead of the output values provided by the safety program in case of passivation. The output channels are de-energized. This also applies when the F-CPU goes into STOP mode. The parameter assignment of fail-safe values is not possible.

Depending on which F-system you are using and the type of fault that occurred (F-I/O fault, channel fault or communication error), fail-safe values are used either for the relevant channel only or for all channels of the relevant fail-safe module.

Reintegration of a fail-safe module

The system changes from fail-safe to process values (reintegration of an F-module) either automatically or only after user acknowledgment in the safety program. If channel faults occur, it may be necessary to remove and reinsert the F-module. A detailed listing of faults requiring removal and insertion of the F-module can be found in the section Diagnostic messages of the respective F-module.

After reintegration, the following occurs:

- In the case of an F-module with inputs, the process data pending at the fail-safe inputs are provided to the safety program
- In the case of an F-module with outputs, the output values provided in the safety program are again transferred to the fail-safe outputs

Additional information on passivation and reintegration

For additional information on passivation and reintegration of F-I/O, refer to the SIMATIC Safety, Configuring and Programming (http://support.automation.siemens.com/WW/view/en/54110126) manual.

Reaction of the F-module with inputs to communication errors

F-modules with inputs respond differently to communication errors compared to other errors.

If a communication error is detected, the current process values remain set at the inputs of the F-module. There is no passivation of the channels. The current process values are passivated in the F-CPU.

Application planning

2

2.1 Forming potential groups with fail-safe modules

Introduction

ET 200SP distributed I/O systems can be configured using fail-safe and non-fail-safe modules. This chapter provides an example of a mixed configuration comprising fail-safe and non-fails-safe modules.

Assembly example for ET 200SP with fail-safe and non-fail-safe modules

Generally speaking, it is not necessary to operate fail-safe and non-fail-safe modules in separate potential groups. You can divide the modules into fail-safe and non-fail-safe potential groups and mount them.

The following diagram shows an assembly example with fail-safe and non-fail-safe modules within a single ET 200SP.

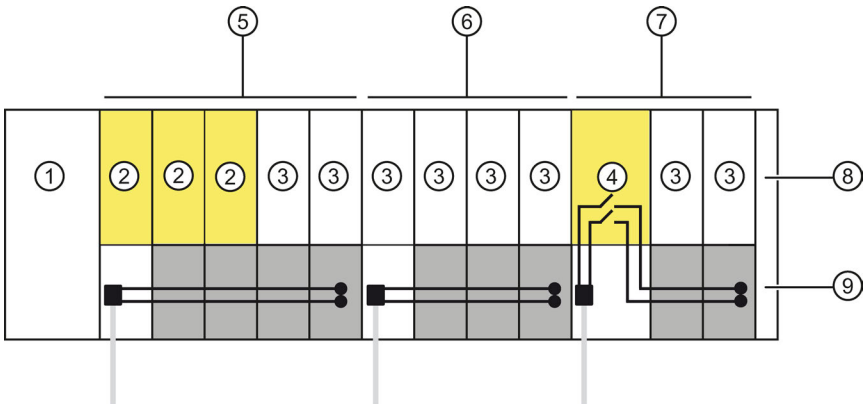

① Interface module IM 155-6 PN HF
② F-module
③ Non-fail-safe module
④ Power module F-PM-E 24VDC/8A PPM ST
⑤ Mixed fail-safe and non-fail-safe potential group with BaseUnits BU15..D and BU15..B.
You achieve SIL3/Cat.4/PLe for the fail-safe modules.
⑥ Non-fail-safe potential group with BaseUnits BU15..D and BU15..B.
⑦ Fail-safe potential group with BaseUnits BU20..D and BU15..B.
Through disconnection of the power bus, and thus of the non-fail-safe modules, up to SIL2/Cat.3/PLd is possible.
⑧ Server module
⑨ P1/P2 power buses

Figure 2-1 ET 200SP assembly example with fail-safe modules

Installation 3

3.1 Basics

The following applies to ET 200SP fail-safe modules:

⚠ WARNING
Protection from conductive contaminants In consideration of the environmental conditions, the devices must be protected from conductive contaminants. One way to accomplish this is by installing the devices in a control cabinet with an appropriate degree of protection.

Connecting 4

4.1 Additional rules and provisions for operation of the ET 200SP with fail-safe modules

4.1.1 Safe functional extra-low voltage (SELV) for fail-safe modules

WARNING

The fail-safe modules must be operated with safe functional extra low voltage (SELV, PELV).

You can find more information on safe functional extra-low voltage in the data sheets, for example, of the applicable power supplies.

The fail-safe modules work with a rated voltage of 24 V DC. The tolerance range is 20.4 V DC to 28.8 V DC.

Within the overvoltage range from 32 V DC to 36 V DC, the F-modules react in a fail-safe manner and the inputs and outputs are passivated. For overvoltages greater than 36 V DC, the F-modules are permanently de-energized.

Use a power supply unit that does not exceed U_m = 36 V DC even in the event of a fault. For more on this, refer to the information in the data sheet on overvoltage protection in the case of an internal error. Or implement appropriate measures to limit the voltage, e.g., use of an overvoltage protector.

All system components that can supply electrical energy in any form whatsoever must fulfill this condition.

Each additional circuit (24 V DC) used in the system must have a safe functional extra low voltage (SELV, PELV). Refer to the relevant data sheets or contact the manufacturer.

Sensors and actuators with an external power supply can also be connected to F-modules. Make sure that power is supplied to these components from safe functional extra-low voltage as well. The process signal of a 24 V DC digital module may not exceed a fault voltage U_m in the event of a fault.

WARNING

Even when a fault occurs, the permissible potential difference between the supply of the interface module (bus voltage) and the load voltage must not be exceeded.

An external direct electrical connection is one way to meet this requirement. This also prevents potential differences from causing voltage additions at the individual voltage sources, which would cause the
fault voltage U_m to be exceeded.

Power supply requirements for compliance with NAMUR recommendations

Note

To ensure adherence to the NAMUR recommendation NE 21, IEC 61131-2 and EN 298, only use power packs/power supply units (230 V AC → 24 V DC) with a mains buffering time of at least **20 ms**. The latest up-to-date information on PS components is available on the Internet (http://mall.automation.siemens.com).

It goes without saying that these requirements also apply to power packs/power supply units not constructed using ET 200SP / S7-300/-400/-1500 technology.

4.1.2 Requirements of sensors and actuators for fail-safe modules

General requirements for sensors and actuators

Note the following important warning regarding safety-related use of sensors and actuators:

WARNING

Note that instrumentation with sensors and actuators bears a considerable **safety responsibility**. Also bear in mind that sensors and actuators generally do not have proof-test intervals of 20 years as defined in IEC 61508:2010 without considerable loss of safety.

The probability of hazardous faults and the rate of hazardous faults of safety functions must comply with an SIL-defined high limit. A listing of values achieved by F-modules in the technical specifications of the F-modules is available under "Fail-safe performance characteristics".

To achieve the respective safety class, suitably qualified sensors and actuators are necessary.

Additional sensor requirements

General rule: To achieve SIL3/Cat.3/PLe, a single-channel sensor is all you need. However, to achieve SIL3/Cat.3/PLe with a single-channel sensor, the sensor itself must be SIL3/Cat.3/PLe-capable; otherwise the sensor must be connected by two channels to achieve this safety level.

To achieve SIL3/Cat.4/PLe, sensors must be connected by two channels.

WARNING

In the case of fail-safe input modules, a "0" value is output to the F-CPU after detection of faults. You therefore need to make sure that the sensors are implemented in such a way as to ensure the reliable reaction of the safety program when the sensor is in the "0" state.

Example: In its safety program, an EMERGENCY-STOP sensor must achieve the shutdown of the respective actuator when it is in the "0" state (EMERGENCY-STOP button pressed).

Duration requirements for sensor signals

WARNING

Observe the following requirements for sensor signals:

- In order to ensure the correct detection of the sensor signals via fail-safe modules with inputs, you need to make sure that the sensor signals are output for a minimum duration.
- In order for pulses to be detected with certainty, the time between two signal changes (pulse duration) must be greater than the PROFIsafe monitoring time.

Reliable detection by F-modules with inputs

The minimum duration of sensor signals for F-modules with inputs depends on the configured input delay, the parameters of the short circuit test of the sensor supplies, and the configured discrepancy behavior for 1oo2 evaluation. The signal must be greater than the maximum response time of the configured application. Information on calculating the maximum response time can be found in section "Response times" of the respective F-module.

The maximum permitted switching frequency of the sensor signals results from the minimum duration.

Additional requirements for actuators

The fail-safe output modules test the outputs at regular intervals. The F-module briefly switches off the activated outputs and, if necessary, switches on the deactivated outputs. You can assign the maximum duration of the test pulses (dark and light period) with parameters.

High-speed actuators may briefly drop out or be activated during this test. If your process does not tolerate this, set the pulse duration of the light or dark test correspondingly or use actuators that have sufficient lag.

WARNING

If the actuators switch voltages greater than 24 V DC (e.g., 230 V DC), the outputs of a fail-safe output module and the parts carrying a higher voltage must be electrically isolated (according to IEC 60664-1).

This is generally the case for relays and contactors. Particular attention must be paid to this issue for semiconductor switching devices.

Technical specifications of sensors and actuators

Refer to the manuals of the fail-safe modules for technical specifications to assist you in selecting sensors and actuators.

4.1.3 Capacitive crosstalk of digital input/output signals

When fail-safe digital output and input signals are in a single cable, F-DQ modules and F-PM-E modules may experience readback errors.

Cause: Capacitive crosstalk

During the bit pattern test of the outputs or the sensor supply of the inputs, the steep switching edge of the output drivers caused by the coupling capacitance of the line may result in crosstalk to other non-activated output or input channels. This may then lead to a response of the readback circuit in these channels. The module detects a cross circuit/short circuit and performs a safety-related shutdown.

Remedy:

- Separate cables for F-DI modules, F-DQ modules, and F-PM-E modules or non-fail-safe DQ modules
- Separate cables for F-DQ channel and F-DI channels for the F-PM-E module
- Coupling relay or diodes in the outputs
- Disable the sensor supply test if safety class requirements allow it

Cause: magnetic crosstalk

Note that an inductive load connected to the F-DQ channels can induce capacitive coupling of a strong magnetic field.

Remedy:

- Spatially disconnect the inductive loads or shield against the magnetic field.
- Configure the readback time to 50 ms or higher.

Configuring 5

5.1 Assigning the F-destination address for fail-safe modules

5.1.1 Assigning the F-destination address

The F-destination address is saved permanently on the coding element of the ET 200SP fail-safe modules.

Note

During assignment of the F-destination address, the F-modules must be supplied with supply voltage L+.

Note

Note the following in conjunction with configuration control:

Before you can use configuration control together with F-modules, you must assign the F-destination address to the F-modules at the designated slots. For this, each F-module must be inserted in the slot configured for it. The actual configuration can then differ from the specified configuration.

For additional information on assigning the F-destination address, refer to the SIMATIC Safety - Configuring and Programming (http://support.automation.siemens.com/WW/view/en/54110126) programming and operating manual.

Maintenance 6

6.1 Firmware update

Introduction

It may be necessary to update the firmware during operation (e.g. function expansions).

Update the firmware of the interface module and I/O modules using firmware files.

Options for the firmware update

Online via PROFINET IO/PROFIBUS DP (with STEP 7)

Requirements

The ET 200SP is accessible online via PROFINET IO/PROFIBUS DP.

Additional requirement for fail-safe modules

⚠ WARNING

Check of the firmware version for F-validity

When using a new firmware version, you must check whether the employed firmware version is approved for use in the respective module.

The approved firmware version is specified in the appendices of the Certificate for SIMATIC Safety.

Procedure

Connect the programming device or PC to the PROFINET IO or PROFIBUS DP interface of the ET 200SP.

Note

Firmware update of analog I/O modules

For analog I/O modules, L+ supply voltage must be present on the module at the start of and during the firmware update.

You can find additional information on the procedure in the online help for STEP 7.

See also

Certificate (http://support.automation.siemens.com/WW/view/en/49368678/134200)

Technical specifications 7

7.1 Electromagnetic compatibility of fail-safe modules

Protecting ET 200SP with fail-safe modules against overvoltages

If your equipment requires protection from overvoltage, we recommend that you use an external protective circuit (surge filter) between the load voltage power supply and the load voltage input of the BaseUnits to ensure surge immunity for the ET 200SP with fail-safe modules.

Note

Lightning protection measures always require a case-by-case examination of the entire system. An almost complete protection from overvoltages, however, can only be achieved if the entire building surroundings have been designed for overvoltage protection. In particular, this involves structural measures in the building design phase.

For detailed information regarding overvoltage protection, we recommend that you contact your Siemens representative or a company specializing in lightning protection.

The following figure shows an example configuration with fail-safe modules. Voltage is supplied by 1 power supply unit. Note, however, that the total current of the modules fed by the power supply unit must not exceed the permissible limits. You can also use multiple power supply units.

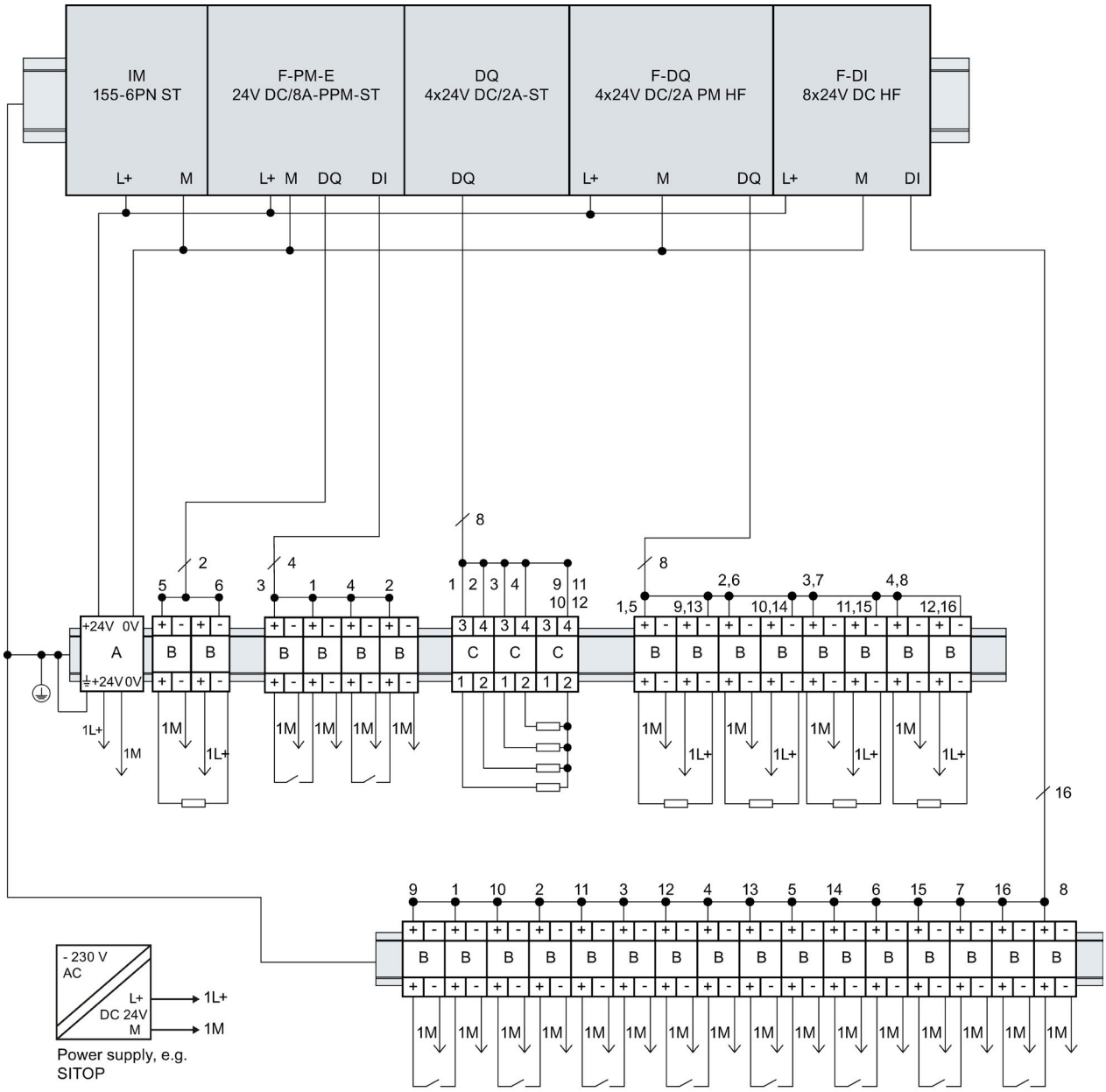

Figure 7-1 External protective circuit (surge filter) for ET 200SP with fail-safe modules

Name	Order number of Dehn Co.
A = BVT AD 24	918 402
B = DCO RK D 5 24	919 986
C = DEHNconnect DCO RK E 60	919 990

7.2 Standards and approvals

CE mark

The ET 200SP F distributed I/O system meets the requirements and safety objectives of the following EC directives and satisfies the harmonized European Standards (EN) for programmable logic controllers published in the official journals of the European Community:

- 2006/42/EC "Directive on Machinery" (Machinery Directive)
- 2006/95/EC "Electrical Equipment Designed for Use within Certain Voltage Limits" (Low-Voltage Directive)
- 2004/108/EC "Electromagnetic Compatibility" (EMC Directive)
- 94/9/EC "Equipment and Protective Systems Intended for Use in Potentially Explosive Atmospheres" (Explosion Protection Directive)

The EC declarations of conformity are kept available for the relevant authorities at:

Siemens Aktiengesellschaft
Industry Sector
I IA AS FA DH AMB
PO Box 1963
D-92209 Amberg, Germany

These are also available for download on the Customer Support web page, keyword "Declaration of Conformity".

Accessories/spare parts 8

8.1 Lightning protection and overvoltage protection for fail-safe modules

Overvoltage suppressors for fail-safe electronic modules

Note

This section lists only those overvoltage suppressors that may be used for the protection of fail-safe modules.

Be sure to observe the detailed information on lightning protection and overvoltage protection of the ET 200SP distributed I/O device in ET 200SP distributed I/O system (http://support.automation.siemens.com/WW/view/en/58649293).

Components for overvoltage protection of fail-safe modules (lightning protection zone transition 0_B to 1)

The table below lists overvoltage arresters you can use for fail-safe modules:

Table 8- 1 Components for the overvoltage protection (only for unshielded lines)

Fail-safe modules	Connecting of the lines to interface 0_B to 1 with:	Article number
Supply voltage 1L+, L+ (24 V DC)	BLITZDUCTOR BVT AD 24	918 402
Inputs/outputs of the F-modules (24 V DC)	DEHNconnect RK DCO RK D 5 24	919 986
Direct ordering of the components from: DEHN + SÖHNE GmbH + CO. KG. Hans-Dehn-Str. 1 D-92318 Neumarkt, Germany Phone +49 (0)9181-906-730		

Glossary

1oo1 evaluation

Type of → sensor evaluation – in the case of the 1oo1 evaluation, there → is one sensor with a 1-channel connection to the F module.

1oo2 evaluation

Type of → sensor evaluation – in the case of 1oo2 evaluation , two input channels are assigned one two-channel sensor or two one-channel sensors. The input signals are compared internally for equivalence or nonequivalence.

Acknowledgment time

During the acknowledgment time, the → F-I/O acknowledge the sign of life specified by the → F-CPU. The acknowledgment time is included in the calculation of the → monitoring time and → response time of the overall fail-safe system.

Actuator

Actuators can be power relays or contactors for switching on loads, or they can be loads themselves (e.g., directly controlled solenoid valves).

Availability

Availability is the probability that a system is functional at a specific point in time. Availability can be increased by redundancy, e.g., by using multiple -> sensors at thesame measuring point.

Channel fault

Channel-specific fault, such as a wire break or short circuit.

In channel-specific passivation, the affected channel is either automatically reintegrated or the fail-safe module must be removed and reinserted after the fault has been eliminated.

Channel group

The channels of a module are grouped together in a channel group. Certain parameters in STEP 7 can only be assigned to channel groups, rather than to individual channels.

Channel number

Channel numbers are used to uniquely identify the inputs and outputs of a module and to assign channel-specific diagnostic messages.

Channel-specific passivation

With this type of passivation, only the affected channel is passivated in the event of a → channel fault. In the event of a → module fault, all channels of the → fail-safe module are passivated.

CRC

Cyclic Redundancy Check

CRC signature

The validity of the process values in the safety message frame, the accuracy of the assigned address references, and the safety-related parameters are validated by means of the CRC signature in the safety message frame.

Dark period

Dark periods occur during shutdown tests and complete bit pattern tests. The fail-safe output module switches test-related zero signals to the active output. This output is then briefly disabled (= dark period). An adequate carrier → actuator will not respond to this and will remain activated.

Derating

See temperature characteristics

Discrepancy analysis

The discrepancy analysis for equivalence/non-equivalence is used for fail-safe applications to prevent errors from time differences between two signals for the same function. The discrepancy analysis is initiated when different levels are detected in two associated input signals (when testing for non-equivalence: the same levels). A check is performed to determine whether the difference (for nonequivalence testing: the same levels) has disappeared after an assignable time period, the so-called discrepancy time. If not, this means that a discrepancy error exists.

The discrepancy analysis compares the two input signals of the 1oo2 sensor evaluation in the fail-safe input module.

Discrepancy time

Configurable time for the → discrepancy analysis. If the discrepancy time is set too high, the fault detection time and → fault reaction time are extended unnecessarily. If the discrepancy time is set too low, availability is decreased unnecessarily since a discrepancy error is detected when, in reality, no error exists.

Fail-safe modules

ET 200SP modules with integrated safety functions that can be used for safety-related operation (safety mode).

Fail-safe systems

Fail-safe systems (F-systems) remain in a safe state or immediately assume another safe state as soon as particular failures occur.

Fault response time

The maximum fault response time of an F-system defines the interval between the occurrence of any fault and a safe reaction at all affected fail-safe outputs.

For → F-systems overall: The maximum fault response time defines the interval between the occurrence of any fault at any → F-I/O and the safe reaction at the corresponding fail-safe output.

For digital inputs: The maximum fault response time defines the interval between the occurrence of the fault and the safe reaction at the backplane bus.

For digital outputs: The maximum fault response time defines the interval between the occurrence of the fault and the safe reaction at the digital output.

Fault tolerance time

The fault tolerance time of a process is the time a process can be left unattended without risk to life and limb of the operating personnel, or damage to the environment.

Any type of F-system control is tolerated within this fault tolerance time, i.e. the → F-system can control its processes incorrectly or even not at all. The fault tolerance time depends on the type of process and must be determined on a case-by-case basis.

F-CPU

An F-CPU is a central processing unit with fail-safe capability that is permitted for use in SIMATIC Safety. A standard user program can also be run on the F-CPU.

F-I/O

Collective name for fail-safe inputs and outputs available in SIMATIC S7 for integration into the SIMATIC Safety F-system. Available F-I/O modules:

- Fail-safe I/O module for ET 200eco
- Fail-safe signal modules S7-300 (F-SMs)
- Fail-safe modules for ET 200S
- Fail-safe modules for ET 200SP
- Fail-safe DP standard slaves
- Fail-safe PA field devices
- Fail-safe IO devices

F-monitoring time

→ PROFIsafe monitoring time

F-Systems

→ fail-safe systems

Module fault

Module faults can be external faults (e.g. missing load voltage) or internal faults (e.g. processor failure). Internal faults always require module replacement.

Monitoring time

→ PROFIsafe monitoring time

M-switch

Each fail-safe digital output of ET 200SP F-modules consists of a P-switch DO-P_x (current sourcing) and an M-switch DO-M_x (current sinking). The load is connected between the P-switch and M-switch. The two switches are always activated so that voltage is applied to the load.

Nonequivalent sensor

A nonequivalent → sensor is a two-way switch that is connected to two inputs of an → F-I/O (via 2 channels) in → fail-safe systems (for → 1oo2 evaluation of sensor signals).

Passivation

If an → F-I/O module detects a fault it switches either the affected channel or all channels to a → safe state, i.e. the channels of this F-I/O module are passivated. The F-I/O module signals the detected faults to the → F-CPU.

When passivating channels at F-I/O with inputs, the → F-System provides fail-safe values for the → safety program instead of the process values pending at the fail-safe inputs.

When passivating channels at F-I/O with outputs, the F-system returns fail-safe values (0) to the fail-safe outputs instead of the output values provided by the safety program.

Performance Level

Performance Level (PL) according to ISO 13849-1:2006 or EN ISO 13849-1:2008

PROFIsafe

Safety-oriented PROFINET I/O bus profile for communication between the → safety program and the → F-I/O module in a → fail-safe system.

PROFIsafe address

Every → fail-safe module has a PROFIsafe address. You have to configure the PROFIsafe address.

PROFIsafe monitoring time

Monitoring time for safety-related communication between the F-CPU and F-I/O

Proof-test interval

Period after which a component must be forced to fail-safe state, that is, it is either replaced with an unused component, or is proven faultless.

P-switch

→ M-switch

Redundancy, availability-enhancing

Multiple instances of components with the objective of maintaining component functionality in the event of hardware faults.

Redundancy, safety-enhancing

Multiple availability of components with the aim of exposing hardware faults based on comparison; such as → 1oo2 evaluation in → fail-safe modules.

Reintegration

After the elimination of a fault, it is necessary to ensure the reintegration (depassivation) of the → F-I/O. Reintegration (switchover from fail-safe values to process values) occurs either automatically or only after a user acknowledgment in the safety program.

In the case of a fail-safe input module, the process values pending at the fail-safe inputs are made available to thesafety program again after reintegration. In the case of a fail-safe output module, the → fail-safe system transfers the output values in the safety program to the fail-safe outputs again.

Safe state

The basic principle of the safety concept in F-systems is the existence of a safe state for all process variables. For the digital F-I/O, for example, the safe state is the value "0".

Safety class

Safety level (Safety Integrity Level) SIL according to IEC 61508:2010. The higher the Safety Integrity Level, the more rigid the measures for prevention of systematic faults and for management of systematic faults and hardware failures.

The fail-safe modules support operation in safety mode up to safety class SIL3.

Safety function

A mechanism integrated in the → F-CPU and → F-I/O that enables their use in → the fail-safe system SIMATIC Safety.

According to IEC 61508:2010 A safety function is implemented by a safety system in order to maintain or force a system safe state in the event of a specific fault.

Safety message frame

In safety mode, data are transferred between the → F-CPU and → F-I/O in a safety message frame.

Safety mode

Operating mode of → F-I/O that enables → safety-related communication via → safety message frames.

→ ET 200SP fail-safe modules can only used in safety mode.

Safety program

Safety-related user program

Safety-related communication

Communication used to exchange fail-safe data.

Sensor evaluation

There are two types of sensor evaluation:

→ 1oo1 evaluation – sensor signal is read once

→ 1oo2 evaluation – sensor signal is read in twice by the same F-module and compared internally

Sensors

Sensors are used for accurate detection of digital and analog signals as well as routes, positions, velocities, rotational speeds, masses, etc.

SIL

Safety Integrated Level → safety class

Standard mode

Operating mode of F-I/O in which standard communication is possible by means of → safety message frames, but not → safety-related communication.

Fail-safe ET 200SP modules can only be operated in safety mode.

Value status

The value status is the binary additional information of a digital signal. The value status is entered in the process image of the input and provides information on the validity of the signal.

SIEMENS

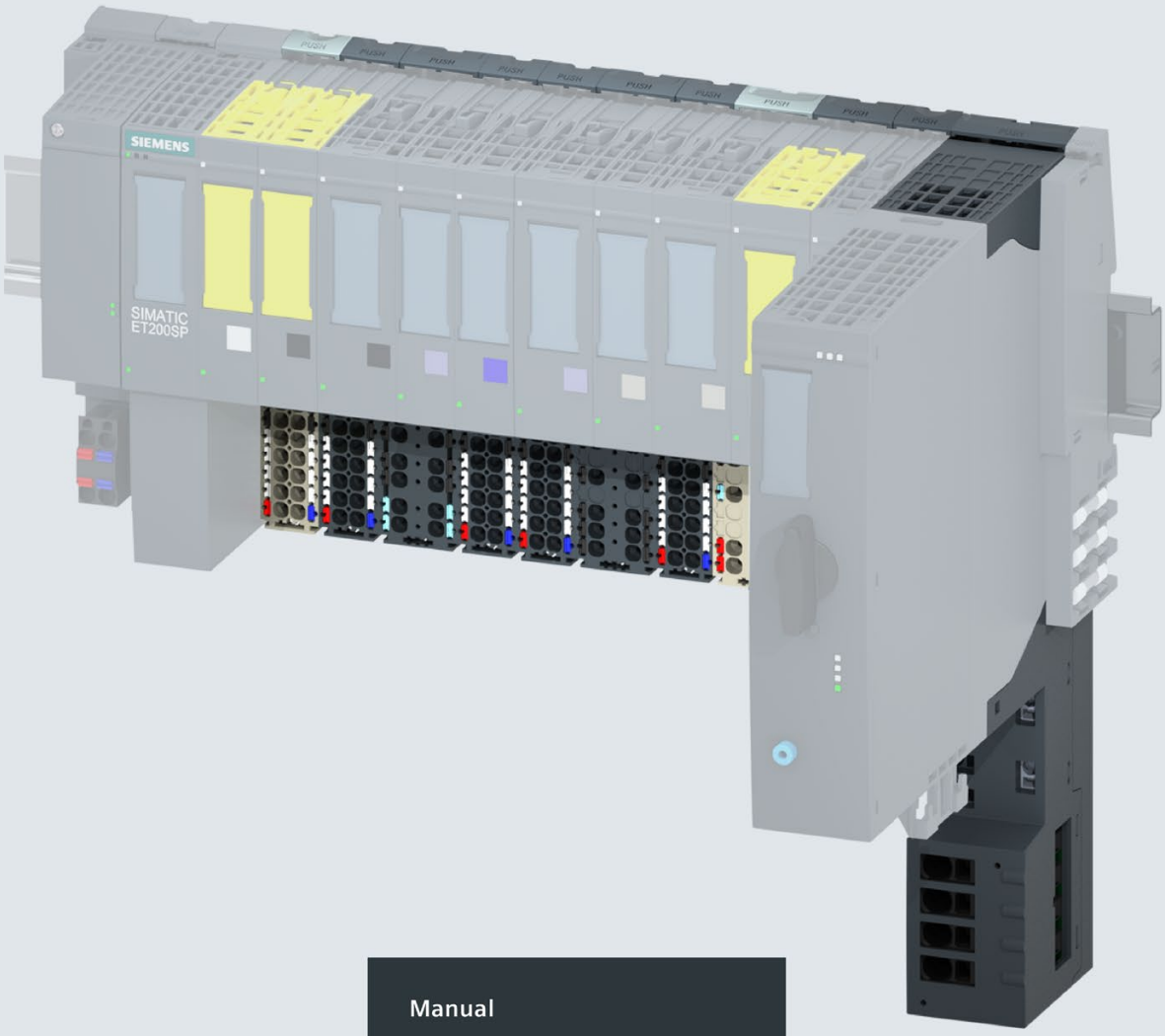

Manual

SIMATIC

ET 200SP

BaseUnits (6ES7193-6BP.../3RK1908-0AP00...)

Edition 09/2018

support.industry.siemens.com

SIEMENS

SIMATIC

ET 200SP BaseUnits (6ES7193-6BP.../3RK1908-0AP00…)

Manual

Preface

Guide to the documentation 1

New properties 2

Product overview 3

BaseUnits for I/O modules 4

BaseUnits for motor starters 5

Potential distributor modules 6

Dimension drawings of I/O modules A

Dimension drawings of motor starters B

Dimension drawings of the potential distributor modules C

09/2018

A5E03727049-AJ

Legal information

Warning notice system

This manual contains notices you have to observe in order to ensure your personal safety, as well as to prevent damage to property. The notices referring to your personal safety are highlighted in the manual by a safety alert symbol, notices referring only to property damage have no safety alert symbol. These notices shown below are graded according to the degree of danger.

⚠ DANGER

indicates that death or severe personal injury **will** result if proper precautions are not taken.

⚠ WARNING

indicates that death or severe personal injury **may** result if proper precautions are not taken.

⚠ CAUTION

indicates that minor personal injury can result if proper precautions are not taken.

NOTICE

indicates that property damage can result if proper precautions are not taken.

If more than one degree of danger is present, the warning notice representing the highest degree of danger will be used. A notice warning of injury to persons with a safety alert symbol may also include a warning relating to property damage.

Qualified Personnel

The product/system described in this documentation may be operated only by **personnel qualified** for the specific task in accordance with the relevant documentation, in particular its warning notices and safety instructions. Qualified personnel are those who, based on their training and experience, are capable of identifying risks and avoiding potential hazards when working with these products/systems.

Proper use of Siemens products

Note the following:

⚠ WARNING

Siemens products may only be used for the applications described in the catalog and in the relevant technical documentation. If products and components from other manufacturers are used, these must be recommended or approved by Siemens. Proper transport, storage, installation, assembly, commissioning, operation and maintenance are required to ensure that the products operate safely and without any problems. The permissible ambient conditions must be complied with. The information in the relevant documentation must be observed.

Trademarks

All names identified by ® are registered trademarks of Siemens AG. The remaining trademarks in this publication may be trademarks whose use by third parties for their own purposes could violate the rights of the owner.

Disclaimer of Liability

We have reviewed the contents of this publication to ensure consistency with the hardware and software described. Since variance cannot be precluded entirely, we cannot guarantee full consistency. However, the information in this publication is reviewed regularly and any necessary corrections are included in subsequent editions.

Siemens AG
Division Digital Factory
Postfach 48 48
90026 NÜRNBERG
GERMANY

A5E03727049-AJ
℗ 10/2018 Subject to change

Copyright © Siemens AG 2012 - 2018.
All rights reserved

Preface

Purpose of the documentation

This manual supplements the system manual ET 200SP distributed I/O system (http://support.automation.siemens.com/WW/view/en/58649293). Functions affecting the system in general are described there.

The information provided in this manual and in the system/function manuals supports you in commissioning the system.

Conventions

Please also observe notes marked as follows:

Note

A note contains important information on the product described in the documentation, on the handling of the product and on the section of the documentation to which particular attention should be paid.

Changes compared to the previous version

In contrast to the previous version, the chapters "BaseUnits for motor starters" and "Dimension drawings for motor starters" have been added to this manual.

Recycling and disposal

For ecologically sustainable recycling and disposal of your old device, contact a certificated disposal service for electronic scrap and dispose of the device in accordance with the regulations in your country.

Security information

Siemens provides products and solutions with industrial security functions that support the secure operation of plants, systems, machines and networks.

In order to protect plants, systems, machines and networks against cyber threats, it is necessary to implement – and continuously maintain – a holistic, state-of-the-art industrial security concept. Siemens' products and solutions constitute one element of such a concept.

Customers are responsible for preventing unauthorized access to their plants, systems, machines and networks. Such systems, machines and components should only be connected to an enterprise network or the internet if and to the extent such a connection is necessary and only when appropriate security measures (e.g. firewalls and/or network segmentation) are in place.

For additional information on industrial security measures that may be implemented, please visit (https://www.siemens.com/industrialsecurity).

Siemens' products and solutions undergo continuous development to make them more secure. Siemens strongly recommends that product updates are applied as soon as they are available and that the latest product versions are used. Use of product versions that are no longer supported, and failure to apply the latest updates may increase customers' exposure to cyber threats.

To stay informed about product updates, subscribe to the Siemens Industrial Security RSS Feed under (https://www.siemens.com/industrialsecurity).

Table of contents

Preface 3

1 Guide to the documentation 8

2 New properties 13

3 Product overview 14

4 BaseUnits for I/O modules 21

4.1 Product description 21
4.1.1 Introduction 21

4.2 BU type A0, light-colored version with AUX terminals 22
4.2.1 Product overview 22
4.2.2 Connecting up 24
4.2.3 Technical specifications 25

4.3 BU type A0, light-colored version without AUX terminals 26
4.3.1 Product overview 26
4.3.2 Connection 28
4.3.3 Technical specifications 29

4.4 BU type A0, dark-colored version, with AUX terminals 30
4.4.1 Product overview 30
4.4.2 Connection 32
4.4.3 Technical specifications 33

4.5 BU type A0, dark-colored version, without AUX terminals 34
4.5.1 Product overview 34
4.5.2 Connection 36
4.5.3 Technical specifications 37

4.6 BU type A1, light-colored version, with additional terminals 38
4.6.1 Product overview 38
4.6.2 Connection 40
4.6.3 Technical specifications 41

4.7 BU type A1, light-colored version, without additional terminals 42
4.7.1 Product overview 42
4.7.2 Connection 44
4.7.3 Technical specifications 45

4.8 BU type A1, dark-colored version, with additional terminals 46
4.8.1 Product overview 46
4.8.2 Connection 48
4.8.3 Technical specifications 49

4.9 BU type A1, dark-colored version, without additional terminals 50
4.9.1 Product overview 50
4.9.2 Connection 52
4.9.3 Technical specifications 53

4.10 BU type B0, dark-colored version, with AUX terminals, supply over P1, P2 busbar 54
4.10.1 Product overview 54
4.10.2 Connecting 56
4.10.3 Technical specifications 57

4.11 BU type B1, dark-colored version, without AUX terminals, supply over supply terminals 58
4.11.1 Product overview 58
4.11.2 Connecting up 60
4.11.3 Technical specifications 61

4.12 BU type C0, light-colored version, with AUX terminals, supply over supply terminals 62
4.12.1 Product overview 62
4.12.2 Connecting 64
4.12.3 Technical specifications 65

4.13 BU type C1, dark-colored version, with AUX terminals, supply over P1, P2 busbar 66
4.13.1 Product overview 66
4.13.2 Connecting 68
4.13.3 Technical specifications 69

4.14 BU type D0, dark-colored version, without AUX terminals, supply over supply terminals 70
4.14.1 Product overview 70
4.14.2 Connecting 72
4.14.3 Technical specifications 73

4.15 BU type F0, dark-colored version, with AUX terminals, supply over supply terminals 74
4.15.1 Product overview 74
4.15.2 Connecting up 76
4.15.3 Technical specifications 77

4.16 BU type U0, light-colored version without AUX terminals 78
4.16.1 Product overview 78
4.16.2 Connection 80
4.16.3 Technical specifications 81

4.17 BU type U0, dark-colored version, without AUX terminals 82
4.17.1 Product overview 82
4.17.2 Connection 84
4.17.3 Technical specifications 85

5 BaseUnits for motor starters 86

5.1 Introduction 86

5.2 BU30-MS1 - BaseUnit with 24 V DC and 500 V AC infeed 87
5.2.1 Product overview 87
5.2.2 Connection 89
5.2.3 Technical specifications 90

5.3 BU30-MS2 - BaseUnit with 500 V AC infeed 91
5.3.1 Product overview 91
5.3.2 Connection 93
5.3.3 Technical specifications 94

5.4 BU30-MS3 - BaseUnit with 24 V DC infeed 95
5.4.1 Product overview 95
5.4.2 Connection 97

5.4.3 Technical specifications 98

5.5 BU30-MS4 - BaseUnit without infeed 99
5.5.1 Product overview 99
5.5.2 Connection 101
5.5.3 Technical specifications 102

5.6 BU30-MS5 BaseUnit with 500 V AC infeed and F-DI 103
5.6.1 Product overview 103
5.6.2 Connection 105
5.6.3 Technical specifications 106

5.7 BU30-MS6 BaseUnit without infeed and with F-DI 107
5.7.1 Product overview 107
5.7.2 Connection 109
5.7.3 Technical specifications 110

6 Potential distributor modules 111

6.1 Introduction 111

6.2 PotDis-BU type P1, light-colored version 113
6.2.1 Short designation 113
6.2.2 Product overview 113
6.2.3 Connecting 115
6.2.4 Technical specifications 116

6.3 PotDis-BU type P1, dark-colored version 118
6.3.1 Product overview 118
6.3.2 Connecting 120
6.3.3 Technical specifications 121

6.4 PotDis-BU type P2, light-colored version 123
6.4.1 Short designation 123
6.4.2 Product overview 123
6.4.3 Connecting 125
6.4.4 Technical specifications 126

6.5 PotDis-BU type P2, dark-colored version 128
6.5.1 Short designation 128
6.5.2 Product overview 128
6.5.3 Connecting 130
6.5.4 Technical specifications 131

6.6 PotDis-TB 133
6.6.1 Product overview 133
6.6.2 Connecting 136
6.6.3 Technical specifications 137

A Dimension drawings of I/O modules 145

B Dimension drawings of motor starters 148

C Dimension drawings of the potential distributor modules 149

Index 150

Guide to the documentation 1

The documentation for the SIMATIC ET 200SP distributed I/O system is arranged into three areas.
This arrangement enables you to access the specific content you require.

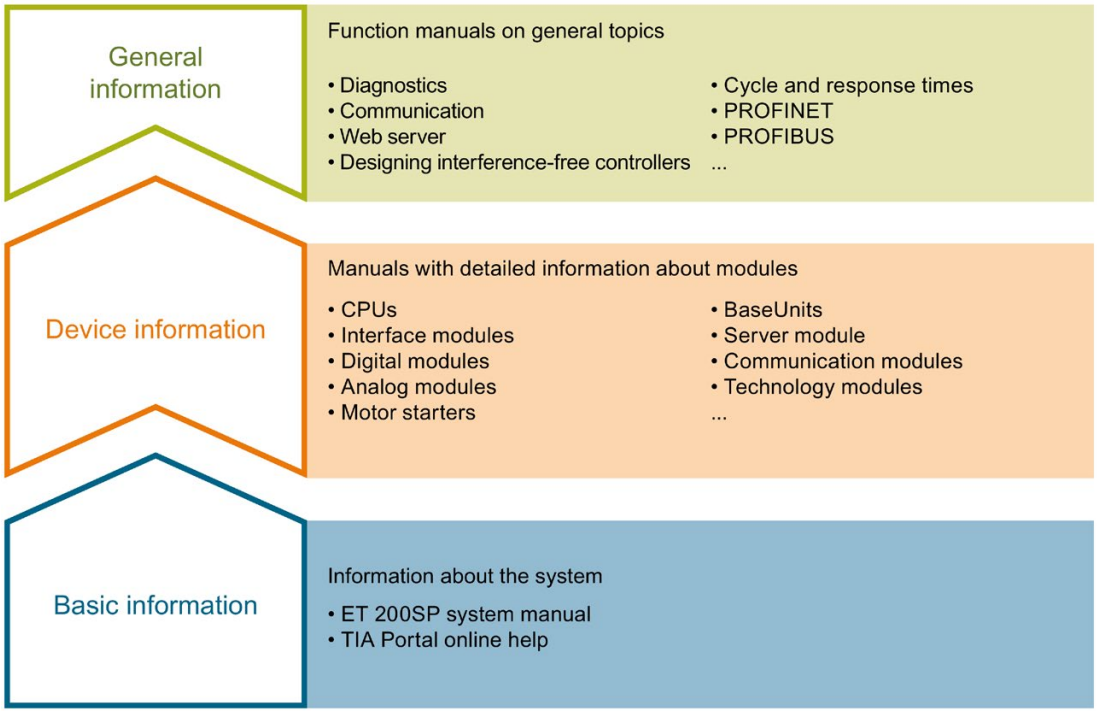

Basic information

The system manual describes in detail the configuration, installation, wiring and commissioning of the SIMATIC ET 200SP. distributed I/O system. The STEP 7 online help supports you in the configuration and programming.

Device information

Product manuals contain a compact description of the module-specific information, such as properties, wiring diagrams, characteristics and technical specifications.

General information

The function manuals contain detailed descriptions on general topics regarding the SIMATIC ET 200SP distributed I/O system, e.g. diagnostics, communication, Web server, motion control and OPC UA.

You can download the documentation free of charge from the Internet (https://support.industry.siemens.com/cs/ww/en/view/109742709).

Changes and supplements to the manuals are documented in a Product Information.

You can download the product information free of charge from the Internet (https://support.industry.siemens.com/cs/us/en/view/73021864).

Manual Collection ET 200SP

The Manual Collection contains the complete documentation on the SIMATIC ET 200SP distributed I/O system gathered together in one file.

You can find the Manual Collection on the Internet (http://support.automation.siemens.com/WW/view/en/84133942).

"mySupport"

With "mySupport", your personal workspace, you make the most of your Industry Online Support.

In "mySupport" you can store filters, favorites and tags, request CAx data and put together your personal library in the Documentation area. Furthermore, your data is automatically filled into support requests and you always have an overview of your current requests.

You need to register once to use the full functionality of "mySupport".

You can find "mySupport" in the Internet (https://support.industry.siemens.com/My/ww/en).

"mySupport" - Documentation

In the Documentation area of "mySupport", you have the possibility to combine complete manuals or parts of them to make your own manual.
You can export the manual in PDF format or in an editable format.

You can find "mySupport" - Documentation in the Internet (http://support.industry.siemens.com/My/ww/en/documentation).

"mySupport" - CAx Data

In the CAx Data area of "mySupport", you can have access the latest product data for your CAx or CAe system.

You configure your own download package with a few clicks.

In doing so you can select:

- Product images, 2D dimension drawings, 3D models, internal circuit diagrams, EPLAN macro files
- Manuals, characteristics, operating manuals, certificates
- Product master data

You can find "mySupport" - CAx Data in the Internet (http://support.industry.siemens.com/my/ww/en/CAxOnline).

Application examples

The application examples support you with various tools and examples for solving your automation tasks. Solutions are shown in interplay with multiple components in the system - separated from the focus in individual products.

You can find the application examples on the Internet (https://support.industry.siemens.com/sc/ww/en/sc/2054).

TIA Selection Tool

With the TIA Selection Tool, you can select, configure and order devices for Totally Integrated Automation (TIA).
This tool is the successor of the SIMATIC Selection Tool and combines the known configurators for automation technology into one tool.
With the TIA Selection Tool, you can generate a complete order list from your product selection or product configuration.

You can find the TIA Selection Tool on the Internet (http://w3.siemens.com/mcms/topics/en/simatic/tia-selection-tool).

SIMATIC Automation Tool

You can use the SIMATIC Automation Tool to run commissioning and maintenance activities simultaneously on various SIMATIC S7 stations as a bulk operation independently of the TIA Portal.

The SIMATIC Automation Tool provides a multitude of functions:

- Scanning of a PROFINET/Ethernet network and identification of all connected CPUs
- Address assignment (IP, subnet, gateway) and station name (PROFINET device) to a CPU
- Transfer of the data and the programming device/PC time converted to UTC time to the module
- Program download to CPU
- Operating mode switchover RUN/STOP
- Localization of the CPU by means of LED flashing
- Reading out CPU error information
- Reading the CPU diagnostic buffer
- Reset to factory settings
- Updating the firmware of the CPU and connected modules

You can find the SIMATIC Automation Tool on the Internet (https://support.industry.siemens.com/cs/ww/en/view/98161300).

PRONETA

With SIEMENS PRONETA (PROFINET network analysis), you analyze the plant network during commissioning. PRONETA features two core functions:

- The topology overview independently scans PROFINET and all connected components.
- The IO check is a fast test of the wiring and the module configuration of a system.

You can find SIEMENS PRONETA on the Internet (https://support.industry.siemens.com/cs/ww/en/view/67460624).

SINETPLAN

SINETPLAN, the Siemens Network Planner, supports you in planning automation systems and networks based on PROFINET. The tool facilitates professional and predictive dimensioning of your PROFINET installation as early as in the planning stage. In addition, SINETPLAN supports you during network optimization and helps you to exploit network resources optimally and to plan reserves. This helps to prevent problems in commissioning or failures during productive operation even in advance of a planned operation. This increases the availability of the production plant and helps improve operational safety.

The advantages at a glance

- Network optimization thanks to port-specific calculation of the network load
- Increased production availability thanks to online scan and verification of existing systems
- Transparency before commissioning through importing and simulation of existing STEP 7 projects
- Efficiency through securing existing investments in the long term and optimal exploitation of resources

You can find SINETPLAN on the Internet (https://www.siemens.com/sinetplan).

New properties

2

What's new in the BaseUnits manual, edition 02/2018, compared to edition 12/2016?

What's new?		What are the customer benefits?	Where can I find information?
New contents	Potential distributor modules	A system-integrated potential distribution can be implemented via the PotDis modules. One application is, for example, the design of digital input modules with 16 channels and three-wire connection. You use the potential distributor modules to reserve the unused signal cables of antivalent sensors. Another application is the supply of potentials for supply of external components.	Section Potential distributor modules (Page 111)
	BaseUnit type U0 Can be used for all I/O modules whose article number ends in U0	Light-colored version: BU20-P16+A0+2D Per slot, up to 16 process terminals can be supplied to the module with max. 230 V/5 A per terminal. • 2 supply terminals on integrated self-assembling voltage buses P1/P2, max. 230 V AC/10 A • Separation of voltage buses P1/P2 and AUX from the adjacent module on the left	Section BU20-P16+A0+2D (Page 78)
		Dark-colored version: BU20-P16+A0+2B Per slot, up to 16 process terminals can be supplied to the module with max. 230 V/5 A per terminal. • 2 terminals for external supply/forwarding from integrated self-assembling voltage buses P1/P2 • Bridging voltage buses P1/P2 and AUX to the adjacent module on the left	Section BU20-P16+A0+2B (Page 82)

Product overview

3

General properties of the BaseUnits

The ET 200SP distributed I/O system includes various BaseUnits. You use the BaseUnit to specify the following, for example:

- Process connection
- Plug-in I/O module/motor starter
- Infeed of supply voltage specified

You can recognize the properties of the BaseUnits from their short description:

Table 3- 1 Properties of the BaseUnits

Short description BU15-P16+A10+2D/T (example)			BaseUnit properties
Name/module width	BU	15	BaseUnit with width of 15 mm
		20	BaseUnit with width of 20 mm
		30	BaseUnit with width of 30 mm
Process connection	P	4	• Connection method: Push-in terminal • Number of terminals to the I/O module: 4
		8	• Connection method: Push-in terminal • Number of terminals to the I/O module: 8
		16	• Connection method: Push-in terminal • Number of terminals to the I/O module: 16
Connection to the AUX busbar	A	0	No connection to the AUX busbar
		10	n = number of AUX terminals, e.g. 10
Self-assembling voltage buses	2		2 push-in terminals for supplying or tapping the supply voltage via the self-assembling voltage buses P1, P2 (see D, B)
	12		• 2 push-in terminals for supplying or tapping the supply voltage via the self-assembling voltage buses P1, P2 (see D, B) • 2×5 push-in additional terminals (1 B to 5 B, 1 C to 5 C). For connecting further potential up to a maximum supply current of 24 V DC/10 A
	0		No terminals with access to the self-assembling voltage buses P1, P2
		B	• Looping through the potential group • Tapping of the supply voltage for external components or looping through with a maximum total current of 10 A per potential group
		D	• Opening a new potential group • Feeding in of supply voltage up to a maximum supply current of 10 A
Additional functions	T		Integrated temperature sensor to compensate the reference junction temperature for thermocouples

Properties of the BaseUnits for motor starters

The following table lists the properties of the individual BaseUnits for motor starters:

BaseUnit	Properties
BU30-MS1	• Push-in terminals for opening a new potential group (24 V DC). • Feeding in of supply voltage up to a maximum supply current of 7 A DC. • Opening a new supply voltage potential group (500 V AC) • Feeding in of supply voltage up to a maximum supply current of 32 A AC.
BU30-MS2	• Further conduction of the potential group (24 V DC) • Push-in terminals for opening a new supply voltage potential group (500 V AC) • Infeed of supply voltage up to a maximum supply current up to 32 A AC.
BU30-MS3	• Push-in terminals for opening a new potential group (24 V DC). • Infeed of the supply voltage L+ up to an infeed current of 7 A DC • Further conduction of the supply voltage potential group (500 V AC)
BU30-MS4	• Further conduction of the supply voltage potential group (500 V AC) • Further conduction of the potential group (24 V DC)
BU30-MS5	• Further conduction of the potential group (24 V DC) • Push-in terminals for opening a new supply voltage potential group (500 V AC) • Infeed of supply voltage up to a maximum supply current of 32 A AC • A fail-safe digital input
BU30-MS6	• Further conduction of the potential group (24 V DC) • Further conduction of the supply voltage potential group (500 V AC) • Push-In terminals • A fail-safe digital input

Properties of the potential distributor modules

The following table shows the properties of the individual potential distributor modules:

Table 3- 2 PotDis-BaseUnits properties

Short description PotDis-BU-P1/D-R (example)			PotDis-BaseUnit properties
Designation	PotDis-BU		PotDis-BaseUnit
Process connection (24 V DC / 10 A)	P1		Terminals for supplying or tapping the supply voltage with connection to the voltage bus P1 (see D, B)
	P2		Terminals for supplying or tapping the supply voltage with connection to the voltage bus P2 (see D, B)
Self-assembling voltage buses		D	• Opening a new PotDis potential group • Feeding in of supply voltage up to a maximum supply current up to 10 A • Tapping the supply voltage for external components or looping with a maximum total current of 10 A per potential group
		B	• Further conduction of the potential group • Tapping the supply voltage for external components or looping with a maximum total current of 10 A per potential group
Color coding of the spring releases	R		Connection to the internal voltage bus P1 Red spring release
	B		Connection to the internal voltage bus P2 Blue spring release

Properties of the terminal blocks PotDis-TB

The following table shows the properties of the individual terminal blocks:

Table 3- 3 Properties of the PotDis-Terminalblocks

Short description PotDis-TB-P1-R (example)		PotDis-Terminalblock properties
Designation	PotDis-TB	PotDis terminal block
Process connection (24 V DC / 10 A)	P1	• Connection to the voltage bus P1 • Terminals for picking off the rated supply voltage 24 V DC with max. 10 A of the same voltage level
	P2	• Connection to the voltage bus P2 • Terminals for picking off the rated supply voltage 24 V DC with max. 10 A of the same voltage level
	n.c.	• No connection to the P1, P2 or AUX bus • Terminals can be used freely up to 230 V AC with max. 10 A
	BR	• No connection to the P1, P2 or AUX bus • Terminals for protective conductor connection or voltage bus (internal connected) freely usable up to 230 V AC with max. 10 A
Color coding of the spring releases	R	Red spring release
	B	Blue spring release
	W	White spring release
	G	Gray spring release

Selecting, installing and connecting BaseUnits

You can find additional information in the system manual ET 200SP Distributed I/O System (http://support.automation.siemens.com/WW/view/en/58649293).

WARNING

Personal injury or damage to equipment is possible.

Connecting a rated supply voltage to the BaseUnit higher than the one given in the technical specifications may lead to dangerous situations in your plant or cause defects in ET 200SP components.

Therefore, only connect the rated supply voltage given in the technical specifications to the BaseUnit.

The connected rated supply voltage must correspond to the rated supply voltage of the I/O modules in the potential group.

When mains voltage is connected to the BaseUnit, ensure that all other supply voltages on this BaseUnit use the same phase as the mains.

The Totally Integrated Automation Selection Tool (TIA Selection Tool) (http://w3.siemens.com/mcms/topics/de/simatic/tia-selection-tool) supports you in selecting, configuring and ordering the ET 200SP modules. The free TIA Selection Tool is available on the Internet (http://support.automation.siemens.com/WW/view/en/58649293).

WARNING

Hazardous Voltage (when using ET 200SP motor starters)
Can Cause Death, Serious Injury, or Property Damage.

Proper use of hardware products

This equipment is only allowed to be used for the applications described in the catalog and in the technical description, and only in conjunction with non-Siemens equipment and components recommended by Siemens.

Correct transport, storage, installation and assembly, as well as careful operation and maintenance, are required to ensure that the product operates safely and without faults.

EU note: Start-up/commissioning is absolutely prohibited until it has been ensured that the machine in which the component described here is to be installed fulfills the regulations/specifications of Machinery Directive 2006/42/EC.

WARNING

Hazardous Voltage (when using ET 200SP motor starters)
Can Cause Death, Serious Injury, or Property Damage.

Please take note of our latest information.

Systems with safety-related characteristics are subject to special operational safety requirements on the part of the operator. The supplier is also obliged to comply with special product monitoring measures. For this reason, we publish a special newsletter containing information on product developments and features that are (or could be) relevant to operation of safety-related systems. You need to subscribe to the corresponding newsletter to ensure that you always remain up-to-date and are able to make any necessary changes to your plant regarding operational safety should the need arise.

Siemens Newsletter (http://www.industry.siemens.com/newsletter)

Sign on to the following newsletter under "Products & Solutions":

- Control Components and System Engineering News
- Safety Integrated Newsletter

BaseUnits for I/O modules 4

4.1 Product description

4.1.1 Introduction

Properties of the BaseUnits

The ET 200SP distributed I/O system offers you a rugged and service-friendly design with permanent wiring over the BaseUnits (BU).

The BaseUnits provide the electrical and mechanical connection of the ET 200SP modules. A wide range of BaseUnits is available to suit individual requirements.

You can place BaseUnits at any location with the ET 200SP distributed I/O system. Thanks to the push-in connection system, you can wire the terminals without tools.

Note the following restrictions:

- The potential group based on SELV/PELV supply or the PotDis version is light-colored.
- The infeed of protective conductor via BU is not permitted.

You can find additional information on using the BaseUnit in the ET 200SP System Manual (https://support.industry.siemens.com/cs/ww/en/view/58649293).

Note

All BaseUnits placed in a load group must match the infeed potential of the corresponding light-colored BaseUnits.

4.2 BU type A0, light-colored version with AUX terminals

Short designation

Short designation: BU15-P16+A10+2D

4.2.1 Product overview

Delivery options (packing unit VPE)

6ES7193-6BP20-0DA0 (VPE: 1 unit)

6ES7193-6BP20-2DA0 (VPE: 10 units)

View

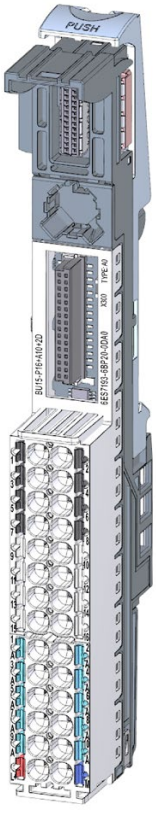

Figure 4-1 BU type A0, light-colored version with AUX terminals

Properties

- BaseUnit suitable for all I/O modules of the BaseUnit type "A0/A1". Can be recognized by the laser inscription on the front and/or the last two digits of the article number.
  - Supply voltage (L+ terminal, ground): Max. 24 V DC/10 A
  - Current-carrying capacity per process terminal (terminal 1 to 16): Max. 2 A
- The BaseUnit opens up a new potential group. The self-assembling voltage buses P1 and P2, and the AUX busbar are interrupted to the left-hand neighboring module (BaseUnit, interface module).
- Access to the AUX busbar via terminals
- 16 terminals to the process (assignment through the I/O module)
- 10 AUX terminals for connecting a protective conductor or potential. The AUX busbar is not connected to the I/O module. Max. 24 V DC/10 A
- Connection system in the form of push-in terminals Connection cross-sections are available in the ET 200SP System Manual (https://support.industry.siemens.com/cs/ww/en/view/58649293).

Maximum configuration per potential group

The number of I/O modules that can be used per potential group depends on the following factors:

1. Total power requirement of all I/O modules operated on this potential group
2. Total power requirement of all loads connected externally to this potential group

The total current calculated according to item 1. and item 2. must not exceed 10 A.

4.2.2 Connecting up

Pin assignment

Pin assignment for BaseUnit BU type A0, light-colored version with AUX terminals	
Terminal	**Descriptions**
1 to 16	Assignment is determined by the I/O module. You can find additional information in the I/O Module (http://support.automation.siemens.com/WW/view/en/55679691/133300) manual.
1 A, 2 A, 3 A, 4 A, 5 A, 6 A, 7 A, 8 A, 9 A, 10 A	Protective conductor connection or voltage bus freely usable up to 24 V DC with max. 10 A
L+/ M	L+: Rated supply voltage 24 V DC with max. 10 A M: Ground

Block diagram

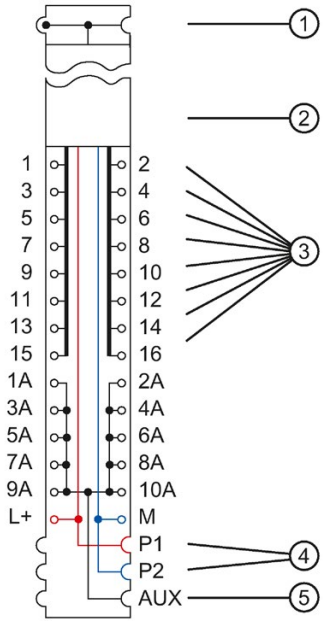

① Backplane bus

② I/O module

③ Terminals with connection to the I/O module

④ System-integrated, self-assembling voltage buses P1, P2 with connection to the supply terminals, interrupted to the adjacent module on the left (forms a new potential group)

⑤ System-integrated, self-assembling AUX voltage bus with connection to the 10 AUX terminals, interrupted to the adjacent module on the left (forms a new potential group)

Figure 4-2 Block diagram of the BU type A0, light-colored version with AUX terminals

4.2.3 Technical specifications

Technical specifications of the BU-Typ A0, Variante hell mit AUX-Klemmen

Article number	6ES7193-6BP20-2DA0
General information	
Product type designation	Type A0
Supply voltage	
Rated value (DC)	24 V
external protection for power supply lines	Yes; 24 V DC/10 A miniature circuit breaker with type B or C tripping characteristic
Current carrying capacity	
For P1 and P2 bus, max.	10 A
For AUX bus, max.	10 A
For process terminals, max.	2 A
Hardware configuration	
Formation of potential groups	
• New potential group	Yes
• Potential group continued from the left	No
Potential separation	
between the potential groups	Yes
Isolation	
Isolation tested with	707 V DC (type test)
Accessories	
Color coding labels	
• for process terminals	CC00 to CC09
• for AUX terminals	CC71 to CC73
• for add-on terminals	does not exist
Connection method	
Terminals	
• Terminal type	Push-in terminal
• Conductor cross-section, min.	0.14 mm²; AWG 26
• Conductor cross-section, max.	2.5 mm²; AWG 14
• Number of process terminals to I/O module	16
• Number of terminals to AUX bus	0
• Number of add-on terminals	0
• Number of terminals with connection to P1 and P2 bus	2
Dimensions	
Width	15 mm
Height	141 mm
Depth	35 mm
Weights	
Weight, approx.	50 g

4.3 BU type A0, light-colored version without AUX terminals

Short designation

Short designation: BU15-P16+A0+2D

4.3.1 Product overview

Delivery options (packing unit VPE)

6ES7193-6BP00-0DA0 (VPE: 1 unit)

6ES7193-6BP00-2DA0 (VPE: 10 units)

View

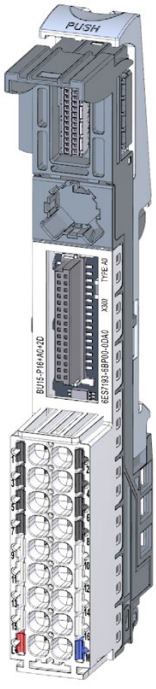

Figure 4-3 BU type A0, light-colored version, without AUX terminals

Properties

- BaseUnit suitable for all I/O modules of the BaseUnit type "A0/A1". Can be recognized by the laser inscription on the front and/or the last two digits of the article number.
  - Supply voltage (L+ terminal, ground): Max. 24 V DC/10 A
  - Current-carrying capacity per process terminal (terminal 1 to 16): Max. 2 A
- The BaseUnit opens up a new potential group. The self-assembling voltage buses P1 and P2, and the AUX busbar are interrupted to the left-hand neighboring module (BaseUnit, interface module).
- No access to the AUX busbar via terminals
- 16 terminals to the process (assignment through the I/O module)
- Connection system in the form of push-in terminals Connection cross-sections are available in the ET 200SP System Manual (https://support.industry.siemens.com/cs/ww/en/view/58649293).

Maximum configuration per potential group

The number of I/O modules that can be used per potential group depends on the following factors:

1. Total power requirement of all I/O modules operated on this potential group
2. Total power requirement of all loads connected externally to this potential group

The total current calculated according to item 1. and item 2. must not exceed 10 A.

4.3.2 Connection

Pin assignment

Pin assignment for BaseUnit BU type A0, light-colored version, without AUX terminals	
Terminal	**Descriptions**
1 to 16	Assignment is determined by the I/O module. You can find additional information in the I/O Module (http://support.automation.siemens.com/WW/view/en/55679691/133300) manual.
(AUX)	No access to the AUX busbar via terminals
L+ / M	L+: Rated supply voltage 24 V DC with max. 10 A M: Ground

Block diagram

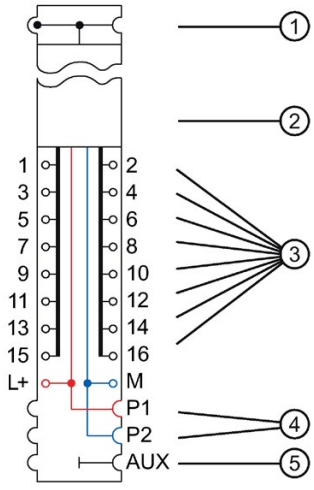

① Backplane bus

② I/O module

③ Terminals with connection to the I/O module

④ System-integrated, self-assembling voltage buses P1, P2 with connection to the supply terminals, interrupted to the adjacent module on the left (forms a new potential group)

⑤ System-integrated, self-assembling AUX voltage bus without connection to the AUX terminals, interrupted to the adjacent module on the left (forms a new potential group)

Figure 4-4 Block diagram of the BU type A0, light-colored version, without AUX terminals

4.3.3 Technical specifications

Technical specifications of the BaseUnit BU type A0, light-colored version, without AUX terminals

Article number	6ES7193-6BP20-2DA0
General information	
Product type designation	Type A0
Supply voltage	
Rated value (DC)	24 V
external protection for power supply lines	Yes; 24 V DC/10 A miniature circuit breaker with type B or C tripping characteristic
Current carrying capacity	
For P1 and P2 bus, max.	10 A
For AUX bus, max.	10 A
For process terminals, max.	2 A
Hardware configuration	
Formation of potential groups	
• New potential group	Yes
• Potential group continued from the left	No
Potential separation	
between the potential groups	Yes
Isolation	
Isolation tested with	707 V DC (type test)
Accessories	
Color coding labels	
• for process terminals	CC00 to CC09
• for AUX terminals	CC71 to CC73
• for add-on terminals	does not exist
Connection method	
Terminals	
• Terminal type	Push-in terminal
• Conductor cross-section, min.	0.14 mm²; AWG 26
• Conductor cross-section, max.	2.5 mm²; AWG 14
• Number of process terminals to I/O module	16
• Number of terminals to AUX bus	0
• Number of add-on terminals	0
• Number of terminals with connection to P1 and P2 bus	2
Dimensions	
Width	15 mm
Height	141 mm
Depth	35 mm
Weights	
Weight, approx.	50 g

4.4 BU type A0, dark-colored version, with AUX terminals

Short designation

Short designation: BU15-P16+A10+2B

4.4.1 Product overview

Delivery options (packing unit VPE)

6ES7193-6BP20-0BA0 (VPE: 1 unit)

6ES7193-6BP20-2BA0 (VPE: 10 units)

View

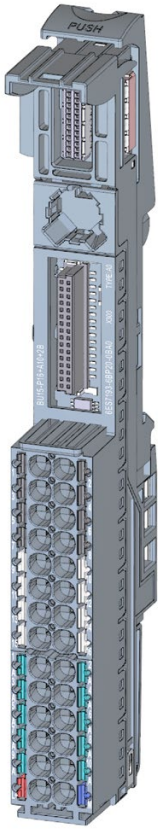

Figure 4-5 BU type A0, dark-colored version, with AUX terminals

Properties

- BaseUnit suitable for all I/O modules of the BaseUnit type "A0/A1". Can be recognized by the laser inscription on the front and/or the last two digits of the article number.
  - Current-carrying capacity per process terminal (terminal 1 to 16): Max. 2 A
- The BaseUnit conducts the potential group further. The self-assembling voltage buses P1 and P2, and the AUX busbar are connected to the left-hand neighboring module (BaseUnit).
- Access to the AUX busbar via terminals
- 16 terminals to the process (assignment through the I/O module)
- 10 AUX terminals for connecting a protective conductor or potential. The AUX busbar is not connected to the I/O module. Max. 24 V DC/10 A
- Connection system in the form of push-in terminals Connection cross-sections are available in the ET 200SP System Manual (https://support.industry.siemens.com/cs/ww/en/view/58649293).

4.4.2 Connection

Pin assignment

Pin assignment for BU type A0, dark-colored version, with AUX terminals	
Terminal	**Descriptions**
1 to 16	Assignment is determined by the I/O module. You can find additional information in the I/O Module (http://support.automation.siemens.com/WW/view/en/55679691/133300) manual.
1 A, 2 A, 3 A, 4 A, 5 A, 6 A, 7 A, 8 A, 9 A, 10 A, AUX	Protective conductor connection or voltage bus freely usable up to 24 V DC with max. 10 A
L+ / M	L+: Rated supply voltage 24 V DC with max. 10 A M: Ground

Block diagram

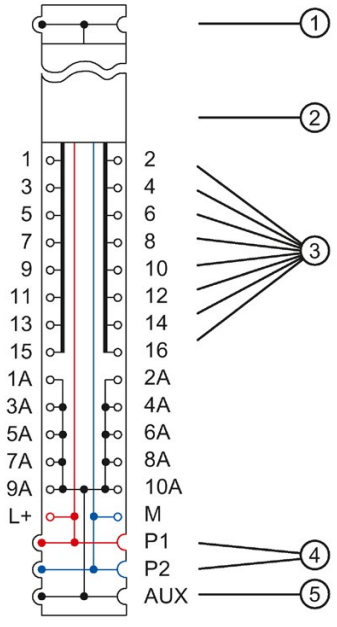

① Backplane bus
② I/O module
③ Terminals with connection to the I/O module
④ System-integrated, self-assembling voltage buses P1, P2 with connection to the supply terminals, connected to the adjacent module on the left
⑤ System-integrated, self-assembling AUX voltage bus with connection to the 10 AUX terminals, connected to the adjacent module on the left

Figure 4-6 Block diagram of the BU type A0, dark-colored version, with AUX terminals

4.4.3 Technical specifications

Technical specifications of the BU type A0, dark-colored version, with AUX terminals

Article number	6ES7193-6BP20-0BA0
General information	
Product type designation	Type A0
Supply voltage	
Rated value (DC)	24 V
external protection for power supply lines	Yes; 24 V DC/10 A miniature circuit breaker with type B or C tripping characteristic
Current carrying capacity	
For P1 and P2 bus, max.	10 A
For AUX bus, max.	10 A
For process terminals, max.	2 A
Hardware configuration	
Formation of potential groups	
• New potential group	No
• Potential group continued from the left	Yes
Isolation	
Isolation tested with	707 V DC (type test)
Accessories	
Color coding labels	
• for process terminals	CC00 to CC09
• for AUX terminals	CC71 to CC73
• for add-on terminals	does not exist
Connection method	
Terminals	
• Terminal type	Push-in terminal
• Conductor cross-section, min.	0.14 mm²; AWG 26
• Conductor cross-section, max.	2.5 mm²; AWG 14
• Number of process terminals to I/O module	16
• Number of terminals to AUX bus	0
• Number of add-on terminals	0
• Number of terminals with connection to P1 and P2 bus	2
Dimensions	
Width	15 mm
Height	141 mm
Depth	35 mm
Weights	
Weight, approx.	50 g

4.5 BU type A0, dark-colored version, without AUX terminals

Short designation

Short designation: BU15-P16+A0+2B

4.5.1 Product overview

Delivery options (packing unit VPE)

6ES7193-6BP00-0BA0 (VPE: 1 unit)

6ES7193-6BP00-2BA0 (VPE: 10 units)

View

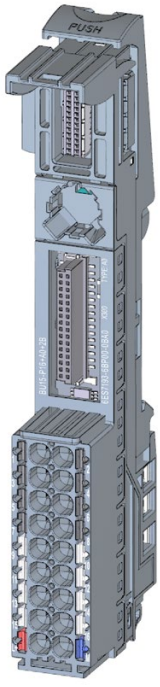

Figure 4-7 BU type A0, dark-colored version, without AUX terminals

Properties

- BaseUnit suitable for all I/O modules of the BaseUnit type "A0/A1". Can be recognized by the laser inscription on the front and/or the last two digits of the article number.
  - Current-carrying capacity per process terminal (terminal 1 to 16): Max. 2 A
- The BaseUnit conducts the potential group further. The self-assembling voltage buses P1 and P2, and the AUX busbar are connected to the left-hand neighboring module (BaseUnit).
- No access to the AUX busbar via terminals
- 16 terminals to the process (assignment through the I/O module)
- Connection system in the form of push-in terminals Connection cross-sections are available in the ET 200SP System Manual (https://support.industry.siemens.com/cs/ww/en/view/58649293).

4.5.2 Connection

Pin assignment

Pin assignment for BU type A0, dark-colored version, without AUX terminals	
Terminal	**Descriptions**
1 to 16	Assignment is determined by the I/O module. You can find additional information in the I/O Module (http://support.automation.siemens.com/WW/view/en/55679691/133300) manual.
(AUX)	No access to the AUX busbar via terminals
L+ / M	L+: Rated supply voltage 24 V DC with max. 10 A M: Ground

Block diagram

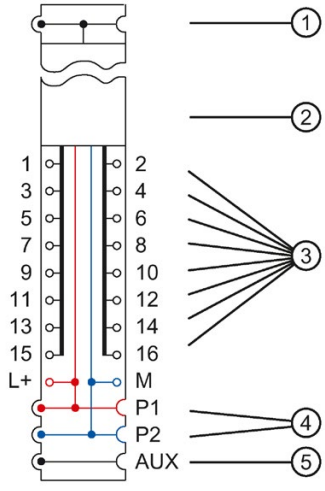

① Backplane bus
② I/O module
③ Terminals with connection to the I/O module
④ System-integrated, self-assembling voltage buses P1, P2 with connection to the supply terminals, connected to the adjacent module on the left
⑤ System-integrated, self-assembling AUX voltage bus without connection to the AUX terminals, connected to the adjacent module on the left

Figure 4-8 Block diagram of the BU type A0, dark-colored version, without AUX terminals

4.5.3 Technical specifications

Technical specifications of the BU type A0, dark-colored version, without AUX terminals

Article number	6ES7193-6BP00-0BA0
General information	
Product type designation	BU type A0, dark version, without AUX terminals, PU 1
Supply voltage	
Rated value (DC)	24 V
external protection for power supply lines	Yes; 24 V DC/10 A miniature circuit breaker with type B or C tripping characteristic
Current carrying capacity	
For P1 and P2 bus, max.	10 A
For process terminals, max.	2 A
Hardware configuration	
Formation of potential groups	
• New potential group	No
• Potential group continued from the left	Yes
Isolation	
Isolation tested with	707 V DC (type test)
Accessories	
Color coding labels	
• for process terminals	CC00 to CC09
• for AUX terminals	does not exist
• for add-on terminals	does not exist
Connection method	
Terminals	
• Terminal type	Push-in terminal
• Conductor cross-section, min.	0.14 mm²; AWG 26
• Conductor cross-section, max.	2.5 mm²; AWG 14
• Number of process terminals to I/O module	16
• Number of terminals to AUX bus	0
• Number of add-on terminals	0
• Number of terminals with connection to P1 and P2 bus	2
Dimensions	
Width	15 mm
Height	117 mm
Depth	35 mm
Weights	
Weight, approx.	40 g

4.6 BU type A1, light-colored version, with additional terminals

Short designation

Short designation: BU15-P16+A0+12D/T

4.6.1 Product overview

Delivery options (packing unit VPE)

6ES7193-6BP40-0DA1 (VPE: 1 unit)

View

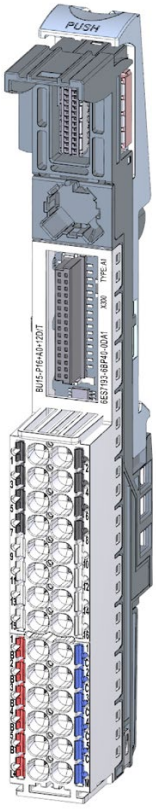

Figure 4-9 BU type A1, light-colored version, with additional terminals

Properties

- BaseUnit suitable for all I/O modules of BaseUnit type "A1". Can be recognized by the laser inscription on the front and/or the last two digits of the article number.

  Note

  Using another I/O module can trigger an internal, non-exchangeable fuse and you must exchange the terminal box.

  – Supply voltage (L+ terminal, ground): Max. 24 V DC/10 A
  – Current-carrying capacity per process terminal (terminal 1 to 16): Max. 2 A
- The BaseUnit opens up a new potential group. The self-assembling voltage buses P1 and P2, and the AUX busbar are interrupted to the left-hand neighboring module (BaseUnit, interface module).
- No access to the AUX busbar via terminals
- 16 terminals to the process (assignment through the I/O module)
- 2x5 additional terminals for supplying a supply voltage up to 24 V DC/ 10 A. The additional terminals are not connected to the I/O module.
- Recording of the terminal temperature for internal temperature compensation at connected thermocouples
- Connection system in the form of push-in terminals Connection cross-sections are available in the ET 200SP System Manual (https://support.industry.siemens.com/cs/ww/en/view/58649293).

Maximum configuration per potential group

The number of I/O modules that can be used per potential group depends on the following factors:

1. Total power requirement of all I/O modules operated on this potential group
2. Total power requirement of all loads connected externally to this potential group

The total current calculated according to item 1. and item 2. must not exceed 10 A.

4.6.2 Connection

Pin assignment

Pin assignment for BU type A1, light-colored version, with additional terminals	
Terminal	**Descriptions**
1 to 16	Assignment is determined by the I/O module. You can find additional information in the I/O Module (http://support.automation.siemens.com/WW/view/en/55679691/133300) manual.
1 B, 2 B, 3 B, 4 B, 5 B / 1 C, 2 C, 3 C, 4 C, 5 C	2 x 5 add-on terminals for the infeed of a supply voltage up to 24 V DC with max. 10 A
(AUX)	No access to the AUX busbar via terminals
L+ / M	L+: Rated supply voltage 24 V DC with max. 10 A M: Ground

Block diagram

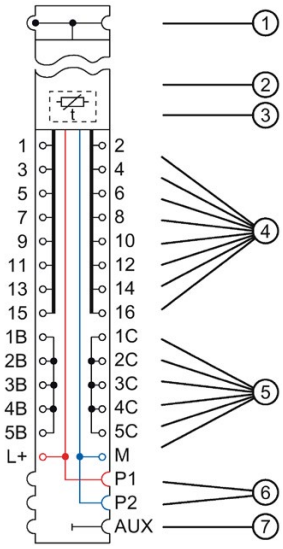

① Backplane bus
② I/O module
③ Internal reference junction for temperature compensation
④ Terminals with connection to the I/O module
⑤ Additional terminals for feeding an additional supply voltage
⑥ System-integrated, self-assembling voltage buses P1, P2 with connection to the supply terminals, interrupted to the adjacent module on the left (forms a new potential group)
⑦ System-integrated, self-assembling AUX voltage bus without connection to the AUX terminals, interrupted to the adjacent module on the left (forms a new potential group)

Figure 4-10 Block diagram of the BU type A1, light-colored version, with additional terminals

4.6.3 Technical specifications

Technical specifications of the BU type A1, light-colored version, with additional terminals

Article number	6ES7193-6BP40-0DA1
General information	
Product type designation	Type A1
Supply voltage	
Rated value (DC)	24 V
external protection for power supply lines	Yes; 24 V DC/10 A miniature circuit breaker with type B or C tripping characteristic
Current carrying capacity	
For P1 and P2 bus, max.	10 A
For process terminals, max.	2 A
Hardware configuration	
Additional terminals	Yes
Temperature sensor	Yes
Formation of potential groups	
• New potential group	Yes
• Potential group continued from the left	No
Potential separation	
between the potential groups	Yes
Isolation	
Isolation tested with	707 V DC (type test)
Accessories	
Color coding labels	
• for process terminals	CC00 to CC09
• for AUX terminals	does not exist
• for add-on terminals	CC74
Connection method	
Terminals	
• Terminal type	Push-in terminal
• Conductor cross-section, min.	0.14 mm²; AWG 26
• Conductor cross-section, max.	2.5 mm²; AWG 14
• Number of process terminals to I/O module	16
• Number of terminals to AUX bus	0
• Number of add-on terminals	0
• Number of terminals with connection to P1 and P2 bus	2
Dimensions	
Width	15 mm
Height	141 mm
Depth	35 mm
Weights	
Weight, approx.	50 g

4.7 BU type A1, light-colored version, without additional terminals

Short designation

Short designation: BU15-P16+A0+2D/T

4.7.1 Product overview

Delivery options (packing unit VPE)

6ES7193-6BP00-0DA1 (VPE: 1 unit)

View

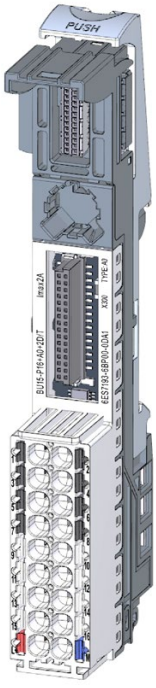

Figure 4-11 BU type A1, light-colored version, without additional terminals

Properties

- BaseUnit suitable for all I/O modules of BaseUnit type "A1". Can be recognized by the laser inscription on the front and/or the last two digits of the article number.

  Note

  Using another I/O module can trigger an internal, non-exchangeable fuse and you must exchange the terminal box.

  – Supply voltage (L+ terminal, ground): Max. 24 V DC/10 A
  – Current-carrying capacity per process terminal (terminal 1 to 16): Max. 2 A
- The BaseUnit opens up a new potential group. The self-assembling voltage buses P1 and P2, and the AUX busbar are interrupted to the left-hand neighboring module (BaseUnit, interface module).
- No access to the AUX busbar via terminals
- 16 terminals to the process (assignment through the I/O module)
- Recording of the terminal temperature for internal temperature compensation at connected thermocouples
- Connection system in the form of push-in terminals Connection cross-sections are available in the ET 200SP System Manual (https://support.industry.siemens.com/cs/ww/en/view/58649293).

Maximum configuration per potential group

The number of I/O modules that can be used per potential group depends on the following factors:

1. Total power requirement of all I/O modules operated on this potential group
2. Total power requirement of all loads connected externally to this potential group

The total current calculated according to item 1. and item 2. must not exceed 10 A.

4.7.2 Connection

Pin assignment

Pin assignment for BU type A1, light-colored version, without additional terminals	
Terminal	**Descriptions**
1 to 16	Assignment is determined by the I/O module. You can find additional information in the I/O Module (http://support.automation.siemens.com/WW/view/en/55679691/133300) manual.
(AUX)	No access to the AUX busbar via terminals
L+, P1 / M, P2	L+: Rated supply voltage 24 V DC with max. 10 A M: Ground

Block diagram

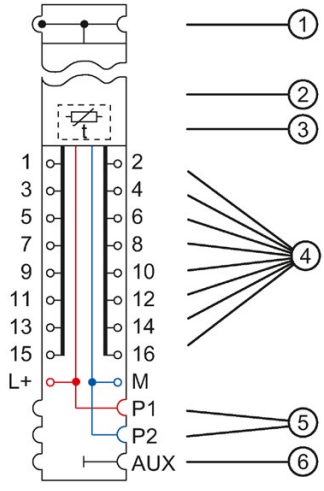

① Backplane bus
② I/O module
③ Internal reference junction for temperature compensation
④ Terminals with connection to the I/O module
⑤ System-integrated, self-assembling voltage buses P1, P2 with connection to the supply terminals, interrupted to the adjacent module on the left (forms a new potential group)
⑥ System-integrated, self-assembling AUX voltage bus without connection to the AUX terminals, interrupted to the adjacent module on the left (forms a new potential group)

Figure 4-12 Block diagram of the BU type A1, light-colored version, without additional terminals

4.7.3 Technical specifications

Technical specifications of the BU type A1, light-colored version, without additional terminals

Article number	6ES7193-6BP00-0DA1
General information	
Product type designation	Type A1
Supply voltage	
Rated value (DC)	24 V
external protection for power supply lines	Yes; 24 V DC/10 A miniature circuit breaker with type B or C tripping characteristic
Current carrying capacity	
For P1 and P2 bus, max.	10 A
For process terminals, max.	2 A
Hardware configuration	
Temperature sensor	Yes
Formation of potential groups	
• New potential group	Yes
• Potential group continued from the left	No
Potential separation	
between the potential groups	Yes
Isolation	
Isolation tested with	707 V DC (type test)
Accessories	
Color coding labels	
• for process terminals	CC00 to CC09
• for AUX terminals	does not exist
• for add-on terminals	does not exist
Connection method	
Terminals	
• Terminal type	Push-in terminal
• Conductor cross-section, min.	0.14 mm²; AWG 26
• Conductor cross-section, max.	2.5 mm²; AWG 14
• Number of process terminals to I/O module	16
• Number of terminals to AUX bus	0
• Number of add-on terminals	0
• Number of terminals with connection to P1 and P2 bus	2
Dimensions	
Width	15 mm
Height	117 mm
Depth	35 mm
Weights	
Weight, approx.	40 g

4.8 BU type A1, dark-colored version, with additional terminals

Short designation

Short designation: BU15-P16+A0+12B/T

4.8.1 Product overview

Delivery options (packing unit VPE)

6ES7193-6BP40-0BA1 (VPE: 1 unit)

View

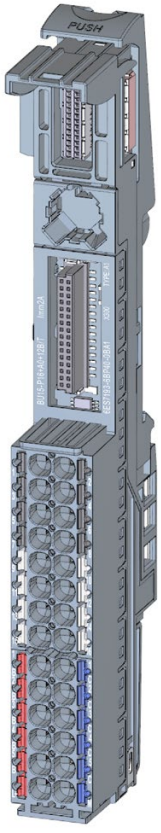

Figure 4-13 BU type A1, dark-colored version, with additional terminals

Properties

- BaseUnit suitable for all I/O modules of BaseUnit type "A1". Can be recognized by the laser inscription on the front and/or the last two digits of the article number.

  Note

  Using another I/O module can trigger an internal, non-exchangeable fuse and you must exchange the terminal box.

  – Current-carrying capacity per process terminal (terminal 1 to 16): Max. 2 A
- The BaseUnit conducts the potential group further. The self-assembling voltage buses P1 and P2, and the AUX busbar are connected to the left-hand neighboring module (BaseUnit).
- No access to the AUX busbar via terminals
- 16 terminals to the process (assignment through the I/O module)
- 2x5 additional terminals for supplying a supply voltage up to 24 V DC/ 10 A. The additional terminals are not connected to the I/O module.
- Recording of the terminal temperature for internal temperature compensation at connected thermocouples
- Connection system in the form of push-in terminals Connection cross-sections are available in the ET 200SP System Manual (https://support.industry.siemens.com/cs/ww/en/view/58649293).

4.8.2 Connection

Pin assignment

Pin assignment for BU type A1, dark-colored version, with additional terminals	
Terminal	**Descriptions**
1 to 16	Assignment is determined by the I/O module. You can find additional information in the I/O Module (http://support.automation.siemens.com/WW/view/en/55679691/133300) manual.
1 B, 2 B, 3 B, 4 B, 5 B / 1 C, 2 C, 3 C, 4 C, 5 C	2 x 5 add-on terminals for the infeed of a supply voltage up to 24 V DC with max. 10 A
(AUX)	No access to the AUX busbar via terminals
L+, P1 / M, P2	L+: Rated supply voltage 24 V DC with max. 10 A M: Ground

Block diagram

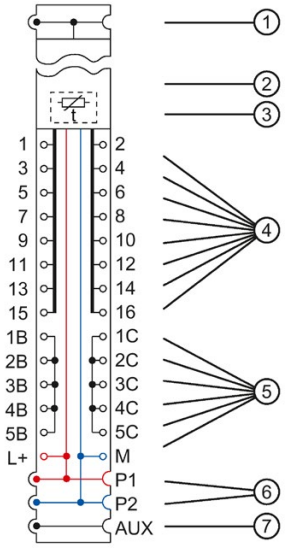

① Backplane bus
② I/O module
③ Internal reference junction for temperature compensation
④ Terminals with connection to the I/O module
⑤ Additional terminals for feeding an additional supply voltage
⑥ System-integrated, self-assembling voltage buses P1, P2 with connection to the supply terminals, connected to the adjacent module on the left
⑦ System-integrated, self-assembling AUX voltage bus without connection to the AUX terminals, connected to the adjacent module on the left

Figure 4-14 Block diagram of the BU type A1, dark-colored version, with additional terminals

4.8.3 Technical specifications

Technical specifications of the BU type A1, dark-colored version, with additional terminals

Article number	6ES7193-6BP40-0BA1
General information	
Product type designation	Type A1
Supply voltage	
Rated value (DC)	24 V
external protection for power supply lines	Yes; 24 V DC/10 A miniature circuit breaker with type B or C tripping characteristic
Current carrying capacity	
For P1 and P2 bus, max.	10 A
For process terminals, max.	2 A
Hardware configuration	
Additional terminals	Yes
Temperature sensor	Yes
Formation of potential groups	
• New potential group	No
• Potential group continued from the left	Yes
Isolation	
Isolation tested with	707 V DC (type test)
Accessories	
Color coding labels	
• for process terminals	CC00 to CC09
• for AUX terminals	does not exist
• for add-on terminals	CC74
Connection method	
Terminals	
• Terminal type	Push-in terminal
• Conductor cross-section, min.	0.14 mm²; AWG 26
• Conductor cross-section, max.	2.5 mm²; AWG 14
• Number of process terminals to I/O module	16
• Number of terminals to AUX bus	0
• Number of add-on terminals	0
• Number of terminals with connection to P1 and P2 bus	2
Dimensions	
Width	15 mm
Height	141 mm
Depth	35 mm
Weights	
Weight, approx.	50 g

4.9 BU type A1, dark-colored version, without additional terminals

Short designation

Short designation: BU15-P16+A0+2B/T

4.9.1 Product overview

Delivery options (packing unit VPE)

6ES7193-6BP00-0BA1 (VPE: 1 unit)

View

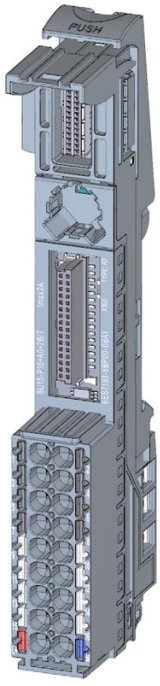

Figure 4-15 BU type A1, dark-colored version, without additional terminals

Properties

- BaseUnit suitable for all I/O modules of BaseUnit type "A1". Can be recognized by the laser inscription on the front and/or the last two digits of the article number.

  Note

  Using another I/O module can trigger an internal, non-exchangeable fuse and you must exchange the terminal box.

  – Current-carrying capacity per process terminal (terminal 1 to 16): Max. 2 A
- The BaseUnit conducts the potential group further. The self-assembling voltage buses P1 and P2, and the AUX busbar are connected to the left-hand neighboring module (BaseUnit).
- No access to the AUX busbar via terminals
- 16 terminals to the process (assignment through the I/O module)
- Recording of the terminal temperature for internal temperature compensation at connected thermocouples
- Connection system in the form of push-in terminals Connection cross-sections are available in the ET 200SP System Manual (https://support.industry.siemens.com/cs/ww/en/view/58649293).

4.9.2 Connection

Pin assignment

Pin assignment for BU type A1, dark-colored version, without additional terminals	
Terminal	**Descriptions**
1 to 16	Assignment is determined by the I/O module. You can find additional information in the I/O Module (http://support.automation.siemens.com/WW/view/en/55679691/133300) manual.
(AUX)	No access to the AUX busbar via terminals
L+, P1 / M, P2	L+: Rated supply voltage 24 V DC with max. 10 A M: Ground

Block diagram

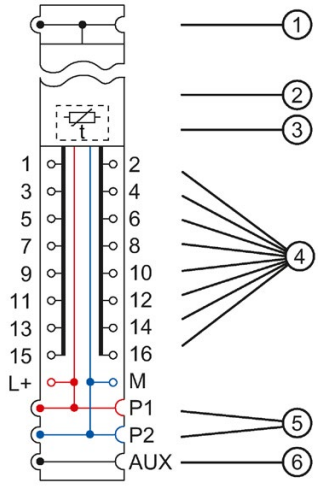

① Backplane bus
② I/O module
③ Internal reference junction for temperature compensation
④ Terminals with connection to the I/O module
⑤ System-integrated, self-assembling voltage buses P1, P2 with connection to the supply terminals, connected to the adjacent module on the left
⑥ System-integrated, self-assembling AUX voltage bus without connection to the AUX terminals, connected to the adjacent module on the left

Figure 4-16 Block diagram of the BU type A1, dark-colored version, without additional terminals

4.9.3 Technical specifications

Technical specifications of the BU type A1, dark-colored version, without additional terminals

Article number	6ES7193-6BP00-0BA1
General information	
Product type designation	Type A1
Supply voltage	
Rated value (DC)	24 V
external protection for power supply lines	Yes; 24 V DC/10 A miniature circuit breaker with type B or C tripping characteristic
Current carrying capacity	
For P1 and P2 bus, max.	10 A
For process terminals, max.	2 A
Hardware configuration	
Temperature sensor	Yes
Formation of potential groups	
• New potential group	No
• Potential group continued from the left	Yes
Isolation	
Isolation tested with	707 V DC (type test)
Accessories	
Color coding labels	
• for process terminals	CC00 to CC09
• for AUX terminals	does not exist
• for add-on terminals	does not exist
Connection method	
Terminals	
• Terminal type	Push-in terminal
• Conductor cross-section, min.	0.14 mm²; AWG 26
• Conductor cross-section, max.	2.5 mm²; AWG 14
• Number of process terminals to I/O module	16
• Number of terminals to AUX bus	0
• Number of add-on terminals	0
• Number of terminals with connection to P1 and P2 bus	2
Dimensions	
Width	15 mm
Height	117 mm
Depth	35 mm
Weights	
Weight, approx.	40 g

4.10 BU type B0, dark-colored version, with AUX terminals, supply over P1, P2 busbar

Short designation

Short designation: BU20-P12+A4+0B

4.10.1 Product overview

Delivery options (packing unit VPE)

6ES7193-6BP20-0BB0 (VPE: 1 unit)

6ES7193-6BP20-2BB0 (VPE: 10 units)

View

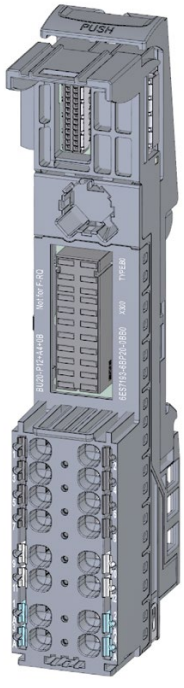

Figure 4-17 BU type B0, dark-colored version, with AUX terminals, supply over P1, P2 busbar

Properties

- BaseUnit suitable for all I/O modules of the BaseUnit type "B0/B1". Can be recognized by the laser inscription on the front and/or the last two digits of the article number.
  - Current-carrying capacity per process terminal (terminal 1 to 12): Max. 5 A
- The BaseUnit conducts the potential group further. The self-assembling voltage buses P1 and P2, and the AUX busbar are connected to the left-hand neighboring module (BaseUnit).
- Access to the AUX busbar via terminals
- 12 terminals to the process (assignment with the I/O module)
- Connection system in the form of push-in terminals Connection cross-sections are available in the ET 200SP System Manual (https://support.industry.siemens.com/cs/ww/en/view/58649293).

4.10.2 Connecting

Pin assignment

Pin assignment for BU type B0, dark-colored version, with AUX terminals, supply over P1, P2 busbar	
Terminal	**Descriptions**
1 to 12	Assignment is determined by the I/O module. You can find additional information in the I/O Module (http://support.automation.siemens.com/WW/view/en/55679691/133300) manual.
1 A, 2 A, 3 A, 4 A, AUX	Protective conductor connection or voltage bus. Freely usable up to 230 V AC/DC with max 10 A. If you connect a voltage, it must belong to the same potential group as the rated supply voltage.

Block diagram

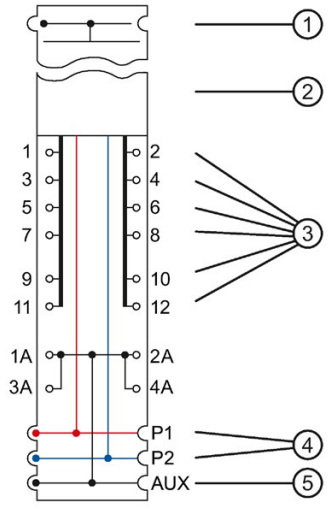

① Backplane bus
② I/O module
③ Terminals with connection to the I/O module
④ System-integrated, self-assembling voltage buses P1, P2 with connection to the supply terminals, connected to the adjacent module on the left
⑤ System-integrated, self-assembling AUX voltage bus with connection to the 4 AUX terminals, connected to the adjacent module on the left

Figure 4-18 Block diagram of the BU type B0, dark-colored version, with AUX terminals, supply over P1, P2 busbar

4.10.3 Technical specifications

Technical specifications of the BU type B0, dark-colored version, with AUX terminals, supply over P1, P2 busbar

Article number	6ES7193-6BP20-0BB0
General information	
Product type designation	Type B0
Supply voltage	
Rated value (DC)	24 V
Rated value (AC)	230 V; 110 V
Current carrying capacity	
up to 60 °C, max.	10 A
Potential separation	
between backplane bus and supply voltage	Yes
Isolation	
Isolation tested with	3 250 V DC
Dimensions	
Width	20 mm
Height	117 mm
Depth	35 mm
Weights	
Weight, approx.	48 g

4.11 BU type B1, dark-colored version, without AUX terminals, supply over supply terminals

Short designation

Short designation: BU20-P12+A0+4B

4.11.1 Product overview

Delivery options (packing unit VPE)

6ES7193-6BP20-0BB1 (VPE: 1 unit)

6ES7193-6BP20-2BB1 (VPE: 10 units)

View

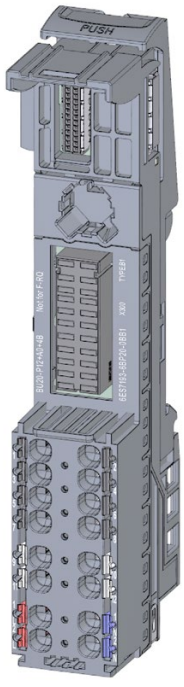

Figure 4-19 BU type B1, dark-colored version, without AUX terminals, supply over supply terminals

Properties

- BaseUnit suitable for all I/O modules of the BaseUnit type "B1". Can be recognized by the laser inscription on the front and/or the last two digits of the article number.
  - Current-carrying capacity per process terminal (terminal 1 to 12): Max. 5 A
- The BaseUnit conducts the potential group further. The self-assembling voltage buses P1 and P2, and the AUX busbar are connected to the left-hand neighboring module (BaseUnit).
- No access to the power and AUX busbars via terminals
- 12 terminals to the process (assignment with the I/O module)
- Connection system in the form of push-in terminals Connection cross-sections are available in the ET 200SP System Manual (https://support.industry.siemens.com/cs/ww/en/view/58649293).

4.11.2 Connecting up

Pin assignment

Pin assignment for BU type B1, dark-colored version, without AUX terminals, supply over supply terminals	
Terminal	**Descriptions**
1 to 12	Assignment is determined by the I/O module. You can find additional information in the I/O Module (http://support.automation.siemens.com/WW/view/de/55679691/133300) manual.
(AUX)	No access to the AUX busbar via terminals
1 L, 2 L, (P1) / 1 N, 2 N, (P2)	1 L, 2 L: Rated supply voltage up to 230 V AC with max. 10 A 1 N, 2 N: Neutral/Ground

Block diagram

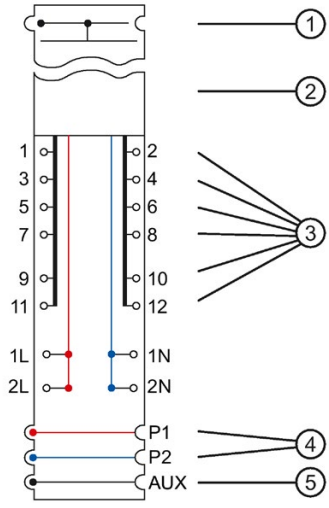

① Backplane bus
② I/O module
③ Terminals with connection to the I/O module
④ System-integrated, self-assembling voltage buses P1, P2 without connection to the terminals, connected to the adjacent module on the left
⑤ System-integrated, self-assembling AUX voltage bus without connection to the AUX terminals, connected to the adjacent module on the left

Figure 4-20 Block diagram of the BU type B1, dark-colored version, without AUX terminals, supply over supply terminals

4.11.3 Technical specifications

Technical specifications of the BU type B1, dark-colored version, without AUX terminals, supply over supply terminals

Article number	6ES7193-6BP20-0BB1
General information	
Product type designation	Type B1
Supply voltage	
Rated value (DC)	24 V
Rated value (AC)	230 V; 110 V
Current carrying capacity	
up to 60 °C, max.	10 A
Potential separation	
between backplane bus and supply voltage	Yes
between process terminals and supply voltage	Yes
between power bus and supply voltage	Yes
Isolation	
Isolation tested with	3 250 V DC
Dimensions	
Width	20 mm
Height	117 mm
Depth	35 mm
Weights	
Weight, approx.	48 g

4.12 BU type C0, light-colored version, with AUX terminals, supply over supply terminals

Short designation

Short designation: BU20-P6+A2+4D

4.12.1 Product overview

Delivery options (packing unit VPE)

6ES7193-6BP20-0DC0 (VPE: 1 unit)

View

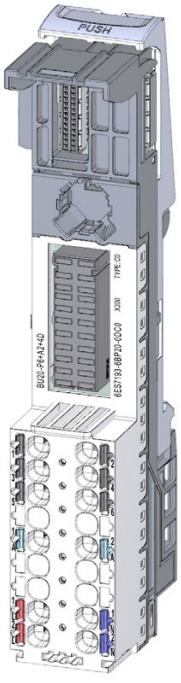

Figure 4-21 BU type C0, light-colored version, with AUX terminals, supply over supply terminals

Properties

- BaseUnit suitable for all I/O modules of BaseUnit type "C0/C1". Can be recognized by the laser inscription on the front and/or the last two digits of the article number.
  - Supply voltage (terminal 1 L, 2 / 1 N, 2 N): Max. 230 V AC/10 A
  - Current-carrying capacity per process terminal (terminal 1 to 4): Max. 5 A
  - Current carrying capacity per process terminal (terminal 5 and 6): Max. 10 A
- The BaseUnit opens up a new potential group by means of the inserted I/O module. The self-assembling voltage buses P1 and P2, and the AUX busbar are interrupted to the left-hand neighboring module (BaseUnit, interface module).
- Access to the AUX busbar via terminals
- 6 terminals to the process (assignment with the I/O module)
- Two AUX terminals for connecting a PE terminal or potential. The AUX busbar is not connected to the I/O module. Max. 24 V DC/10 A
- Connection system in the form of push-in terminals You can find more information in the ET 200SP System Manual (https://support.industry.siemens.com/cs/ww/en/view/58649293).

Maximum configuration per potential group

The number of I/O modules that can be used per potential group depends on the following factors:

1. Total power requirement of all I/O modules operated on this potential group
2. Total power requirement of all loads connected externally to this potential group

The total current calculated according to item 1. and item 2. must not exceed 10 A.

4.12.2 Connecting

Pin assignment

Pin assignment for BU type C0, light-colored version, with AUX terminals, supply over supply terminals	
Terminal	**Descriptions**
1 to 6	Assignment is determined by the I/O module. You can find additional information in the I/O Module (http://support.automation.siemens.com/WW/view/en/55679691/133300) manual.
1 A, 2 A, AUX	Protective conductor connection or voltage bus, freely usable up to 230 V AC/DC with max. 10 A. If you connect a voltage, it must belong to the same potential group as the rated supply voltage.
1 L, 2 L, (P1) / 1 N, 2 N, (P2)	1 L, 2 L: Rated supply voltage up to 230 V AC with max. 10 A 1 N, 2 N: Neutral/Ground

Block diagram

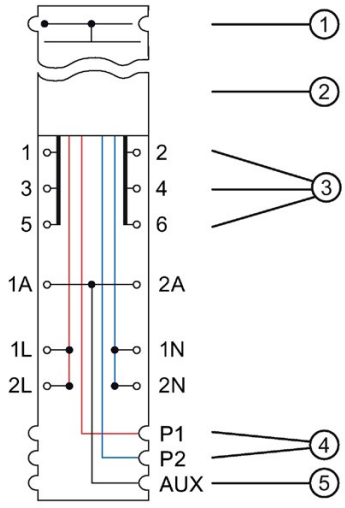

① Backplane bus
② I/O module
③ Terminals with connection to the I/O module
④ System-integrated, self-assembling voltage buses P1, P2 with connection to the supply terminals (through the inserted I/O module) Interrupted to the adjacent module on the left (forms a new potential group)
⑤ System-integrated, self-assembling AUX voltage bus with connection to the AUX terminals, interrupted to the adjacent module on the left (forms a new potential group)

Figure 4-22 Block diagram of the BU type C0, light-colored version, with AUX terminals, supply over supply terminals

4.12.3 Technical specifications

Technical specifications of the BU type C0, light-colored version, with AUX terminals, supply over supply terminals

Article number	6ES7193-6BP20-0DC0
General information	
Product type designation	Type C0
Supply voltage	
Rated value (DC)	24 V; 30 V
Rated value (AC)	230 V; 110 V
external protection for power supply lines	Yes; 10 A miniature circuit breaker with type B or C tripping characteristic for the respective rated supply voltage
Current carrying capacity	
up to 60 °C, max.	10 A
Potential separation	
between backplane bus and supply voltage	Yes
between process terminals and supply voltage	Yes
Isolation	
Isolation tested with	3 250 V DC
Dimensions	
Width	20 mm
Height	117 mm
Depth	35 mm
Weights	
Weight, approx.	47 g

4.13 BU type C1, dark-colored version, with AUX terminals, supply over P1, P2 busbar

Short designation

Short designation: BU20-P6+A2+4B

4.13.1 Product overview

Delivery options (packing unit VPE)

6ES7193-6BP20-0BC1 (VPE: 1 unit)

View

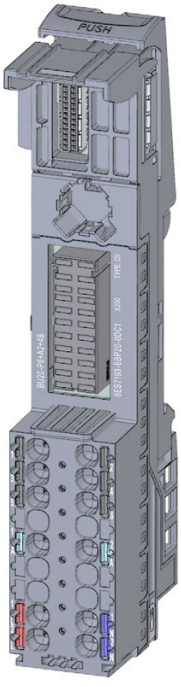

Figure 4-23 BU type C1, dark-colored version, with AUX terminals, supply over P1, P2 busbar

Properties

- BaseUnit suitable for all I/O modules of BaseUnit type "C0/C1". Can be recognized by the laser inscription on the front and/or the last two digits of the article number.
  - Current-carrying capacity per process terminal (terminal 1 to 4): Max. 5 A
  - Current carrying capacity per process terminal (terminal 5 and 6): Max. 10 A
- The BaseUnit further conducts the potential group. The self-assembling voltage buses P1 and P2, and the AUX busbar are connected to the left-hand neighboring module (BaseUnit).
- Access to the AUX busbar via terminals
- 6 terminals to the process (assignment with the I/O module)
- Two AUX terminals for connecting a PE terminal or potential. The AUX busbar is not connected to the I/O module. Max. 24 V DC/10 A
- Connection system in the form of push-in terminals Connection cross-sections are available in the ET 200SP System Manual (https://support.industry.siemens.com/cs/ww/en/view/58649293).

4.13.2 Connecting

Pin assignment

Pin assignment for BU type C1, dark-colored version, with AUX terminals, supply over P1, P2 busbar	
Terminal	**Descriptions**
1 to 6	Assignment is determined by the I/O module. You can find additional information in the I/O Module (http://support.automation.siemens.com/WW/view/en/55679691/133300) manual.
1 A, 2 A, AUX	Protective conductor connection or voltage bus, freely usable up to 230 V AC/DC with max 10 A. If you connect a voltage, it must belong to the same potential group as the rated supply voltage.
1 L, 2 L, (P1) / 1 N, 2 N, (P2)	1 L, 2 L: Rated supply voltage up to 230 V AC with max. 10 A 1 N, 2 N: Neutral/Ground

Block diagram

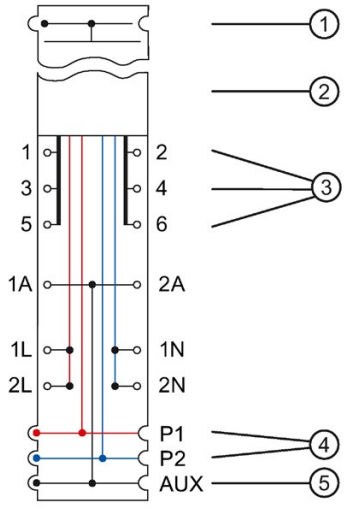

① Backplane bus
② Power module
③ Terminals with connection to the I/O module
④ System-integrated, self-assembling voltage buses P1, P2 with connection to the supply terminals (through the inserted I/O module) Connected to the adjacent module on the left
⑤ System-integrated, self-assembling AUX voltage bus with connection to the AUX terminals, connected to the adjacent module on the left

Figure 4-24 Block diagram of the BU type C1, dark-colored version, with AUX terminals, supply over P1, P2 busbar

4.13.3 Technical specifications

Technical specifications of the BU type C1, dark-colored version, with AUX terminals, supply over P1, P2 busbar

Article number	6ES7193-6BP20-0BC1
General information	
Product type designation	Type C1
Supply voltage	
Rated value (DC)	24 V; 30 V
Rated value (AC)	230 V; 110 V
Current carrying capacity	
up to 60 °C, max.	10 A
Potential separation	
between backplane bus and supply voltage	Yes
between process terminals and supply voltage	Yes
Isolation	
Isolation tested with	3 250 V DC
Dimensions	
Width	20 mm
Height	117 mm
Depth	35 mm
Weights	
Weight, approx.	47 g

4.14 BU type D0, dark-colored version, without AUX terminals, supply over supply terminals

Short designation

Short designation: BU20-P12+A0+0B

4.14.1 Product overview

Delivery options (packing unit VPE)

6ES7193-6BP00-0BD0 (VPE: 1 unit)

View

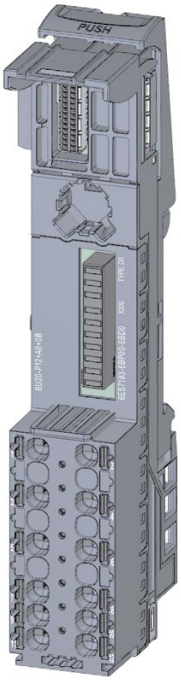

Figure 4-25 BU type D0, dark-colored version, without AUX terminals, supply over supply terminals

Properties

- BaseUnit suitable for all I/O modules of the BaseUnit type "D0". Can be recognized by the laser inscription on the front and/or the last two digits of the article number.
  - Current-carrying capacity per process terminal (terminal 1 to 12): Max. 5 A
- The BaseUnit further conducts the potential group. The self-assembling voltage buses P1 and P2, and the AUX busbar are connected to the left-hand neighboring module (BaseUnit).
- No access to the power and AUX busbars via terminals
- 12 terminals to the process (assignment with the I/O module)
- Connection system in the form of push-in terminals Connection cross-sections are available in the ET 200SP System Manual (https://support.industry.siemens.com/cs/ww/en/view/58649293).

Note

The shield connection (shield support and shield terminal) is not intended for BaseUnit BU20-P12+A0+0B and must not be installed.

4.14.2 Connecting

Pin assignment

Pin assignment for BU type D0, dark-colored version, without AUX terminals, supply over supply terminals	
Terminal	Descriptions
1 to 12	Assignment is determined by the I/O module. You can find additional information in the I/O Module (http://support.automation.siemens.com/WW/view/en/55679691/133300) manual.
(AUX)	No access to the AUX busbar via terminals

Block diagram

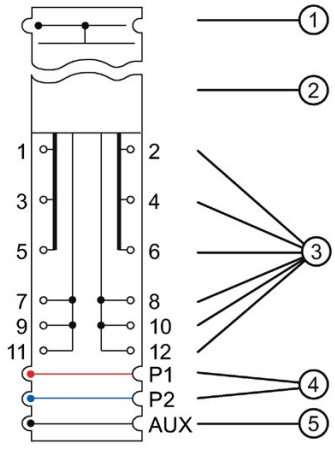

① Backplane bus
② I/O module
③ Terminals with connection to the I/O module
④ System-integrated, self-assembling voltage buses P1, P2 without connection to the terminals, connected to the adjacent module on the left
⑤ System-integrated, self-assembling AUX voltage bus without connection to the AUX terminals, connected to the adjacent module on the left

Figure 4-26 Block diagram of the BU type D0, dark-colored version, without AUX terminals, supply over supply terminals

4.14.3 Technical specifications

Technical specifications of the BU type D0, dark-colored version, without AUX terminals, supply over supply terminals

Article number	6ES7193-6BP00-0BD0
General information	
Product type designation	Type D0
Supply voltage	
Rated value (AC)	400 V; 230 V AC (L1, N)
Current carrying capacity	
up to 60 °C, max.	5 A
Isolation	
Isolation tested with	3 250 V DC
Dimensions	
Width	20 mm
Height	117 mm
Depth	35 mm
Weights	
Weight, approx.	47 g

4.15 BU type F0, dark-colored version, with AUX terminals, supply over supply terminals

Short designation

Short designation: BU20-P8+A4+0B

4.15.1 Product overview

When you use the AUX terminals as a PE busbar:

NOTICE
When AUX is used as PE, AUX must be identified as green-yellow (e.g., gn/ye color-coded labels). These identifications must be removed if the terminals are no longer used as PE.

Delivery options (packing unit VPE)

6ES7193-6BP20-0BF0 (VPE: 1 unit)

View

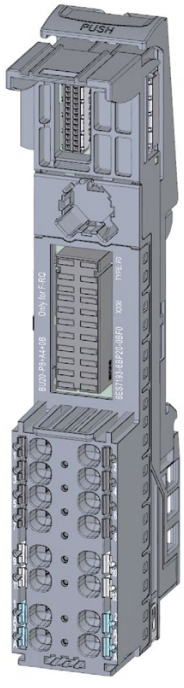

Figure 4-27 BU type F0, dark-colored version, with AUX terminals, supply over supply terminals

Properties

- BaseUnit suitable for all I/O modules of the BaseUnit type "F0". Can be recognized by the laser inscription on the front and/or the last two digits of the article number.
  - Current carrying capacity per process terminal (terminals 1 to 4 and 9 to 12): Max. 5 A
- The BaseUnit loops the potential group through with the self-assembling voltage buses P1, P2 and the AUX bus of the left-hand neighboring module (BaseUnit).
- Access to the AUX busbar via terminals 1 A to 4 A max. 24 V DC/10 A
- 8 terminals to the process (occupied by the I/O module)
- Connection system in the form of push-in terminals Connection cross-sections are available in the ET 200SP System Manual (https://support.industry.siemens.com/cs/ww/en/view/58649293).

4.15.2 Connecting up

Pin assignment

Pin assignment for BU type F0, dark-colored version, with AUX terminals, supply over supply terminals		
Terminals of a potential group	Fail-safe module Overvoltage category 3	Non-fail-safe module Overvoltage category 2
1 to 4	Up to 230 V AC/DC (AC only one phase) Assignment is determined by the I/O module. You can find additional information in the I/O Module (http://support.automation.siemens.com/WW/view/en/55679691/133300) manual.	
9 to 12	Safe extra low voltage SELV/PELV Assignment is determined by the I/O module. You can find additional information in the I/O Module (http://support.automation.siemens.com/WW/view/en/55679691/133300) manual.	
P1, P2, AUX (1 A to 4 A)	SELV/PELV (max. 10 A)	SELV/PELV or up to 230 V AC/DC (AC only one phase) (max. 10 A)

Use the AUX terminals only with an identical voltage or PE associated with the supply voltage.

Block diagram

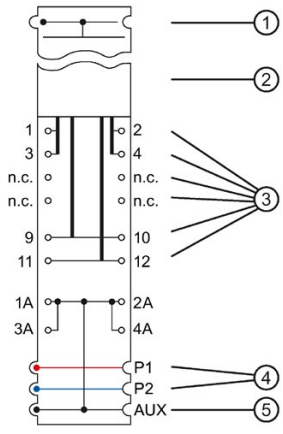

① Backplane bus
② I/O module
③ Terminals with connection to the I/O module
④ System-integrated, self-assembling voltage buses P1, P2 without connection to the terminals, connected to the adjacent module on the left
⑤ System-integrated, self-assembling AUX voltage bus with connection to the AUX terminals, connected to the adjacent module on the left

Figure 4-28 Block diagram of the BU type F0, dark-colored version, with AUX terminals, supply over supply terminals

4.15.3 Technical specifications

Technical specifications of the BU type F0, dark-colored version, with AUX terminals, supply over supply terminals

Article number	6ES7193-6BP20-0BF0
General information	
Product type designation	Type F0
Supply voltage	
Rated value (DC)	See manual
Rated value (AC)	See manual
Current carrying capacity	
up to 60 °C, max.	10 A
Potential separation	
between backplane bus and supply voltage	Yes
between process terminals and supply voltage	Yes
between power bus and supply voltage	Yes
Isolation	
Isolation tested with	3 250 V DC/1 min (type test), 2 545 V DC/2 s (routine test)
Dimensions	
Width	20 mm
Height	117 mm
Depth	35 mm
Weights	
Weight, approx.	48 g

4.16 BU type U0, light-colored version without AUX terminals

Short designation

Short designation: BU20-P16+A0+2D

4.16.1 Product overview

Delivery options (packing unit VPE)

6ES7193-6BP00-0DU0 (VPE: 1 unit)

6ES7193-6BP00-2DU0 (VPE: 10 units)

View

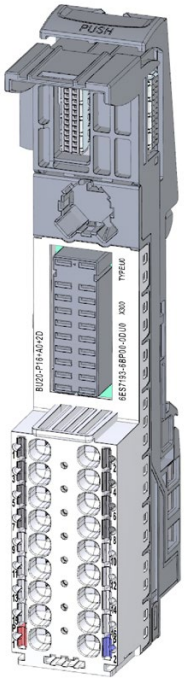

Figure 4-29 BU type U0, light-colored version without AUX terminals

Properties

- BaseUnit suitable for all I/O modules of the BaseUnit type "U0". Can be recognized by the laser inscription on the front and/or the last two digits of the article number.
  - Current-carrying capacity per process terminal (terminal 1 to 16): Max. 10 A
- The BaseUnit opens up a new potential group. The self-assembling voltage buses P1, P2 and the AUX busbar are disconnected from the adjacent module on the left (BaseUnit, interface module, CPU).
- No access to the AUX busbar via terminals
- 16 terminals to the process (assignment through the I/O module)
- Connection system in the form of push-in terminals Connection cross-sections are available in the ET 200SP System Manual (https://support.industry.siemens.com/cs/ww/en/view/58649293).

Maximum configuration per potential group

The number of I/O modules that can be used per potential group depends on the following factors:

1. Total power requirement of all I/O modules operated on this potential group
2. Total power requirement of all loads connected externally to this potential group

The total current calculated according to item 1. and item 2. must not exceed 10 A.

Note

A potential group opened with light-colored BaseUnit of type U0 must contain no dark-colored BaseUnit of type A0 or A1.

4.16.2 Connection

Pin assignment

Pin assignment for BU type U0, light-colored version, without AUX terminals	
Terminal	**Descriptions**
1 to 16	Assignment is determined by the I/O module. You can find additional information in the I/O Module (http://support.automation.siemens.com/WW/view/de/55679691/133300) manual.
(AUX)	No access to the AUX busbar via terminals
P1 / P2	P1: Rated supply voltage up to 230 V AC with max. 10 A P2: Neutral/Ground

Block diagram

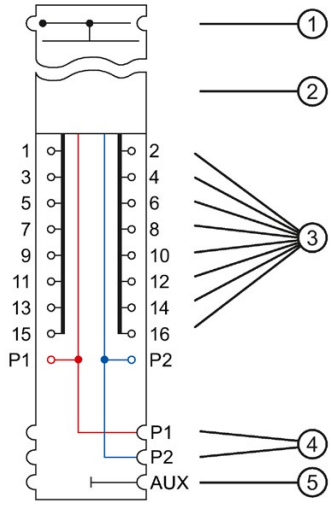

① Backplane bus
② I/O module
③ Terminals with connection to the I/O module
④ System-integrated, self-assembling voltage buses P1, P2 with connection to the supply terminals, interrupted to the adjacent module on the left (forms a new potential group)
⑤ System-integrated, self-assembling AUX voltage bus without connection to the AUX terminals, interrupted to the adjacent module on the left (forms a new potential group)

Figure 4-30 Block diagram of the BU type U0, light-colored version, without AUX terminals

4.16.3 Technical specifications

Technical specifications of the BU type U0, light-colored version without AUX terminals

Article number	6ES7193-6BP00-0DU0
General information	
Product type designation	BU type U0, BU20-P16+A0+2D, PU 1
Supply voltage	
Rated value (DC)	120 V
• For P1 and P2 bus	120 V
• For AUX bus	120 V
Rated value (AC)	240 V; 400 V (L1 - L2 - L3); 240 V (L1, N)
• For P1 and P2 bus	240 V
• For AUX bus	240 V
• for process terminals	240 V
external protection for power supply lines	Yes
Mains filter	
• integrated	Yes
Current carrying capacity	
up to 60 °C, max.	10 A
For P1 and P2 bus, max.	10 A
For AUX bus, max.	10 A
For process terminals, max.	10 A
Hardware configuration	
Automatic encoding	Yes
Formation of potential groups	
• New potential group	No
• Potential group continued from the left	Yes
Potential separation	
between backplane bus and supply voltage	Yes
between the potential groups	Yes
Isolation	
Isolation tested with	3 100 V DC for 2 s
Connection method	
Terminals	
• Terminal type	Push-in terminal
• Conductor cross-section, min.	0.14 mm²; 0.2 mm² without wire end ferrule
• Conductor cross-section, max.	2.5 mm²; 1.5 mm² with wire end ferrule
• Number of process terminals to I/O module	16
• Number of terminals to AUX bus	0
• Number of add-on terminals	0
• Number of terminals with connection to P1 and P2 bus	2
Dimensions	
Width	20 mm
Height	117 mm
Depth	35 mm
Weights	
Weight, approx.	50 g

4.17 BU type U0, dark-colored version, without AUX terminals

Short designation

Short designation: BU20-P16+A0+2B

4.17.1 Product overview

Delivery options (packing unit VPE)

6ES7193-6BP00-0BU0 (VPE: 1 unit)

6ES7193-6BP00-2BU0 (VPE: 10 units)

View

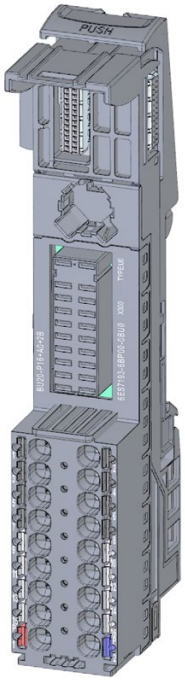

Figure 4-31 BU type U0, dark-colored version, without AUX terminals

Properties

- BaseUnit suitable for all I/O modules of the BaseUnit type "U0". Can be recognized by the laser inscription on the front and/or the last two digits of the article number.
  - Current-carrying capacity per process terminal (terminal 1 to 16): Max. 10 A
- The BaseUnit conducts the potential group further. The self-assembling voltage buses P1 and P2, and the AUX busbar are connected to the left-hand neighboring module (BaseUnit).
- No access to the AUX busbar via terminals
- 16 terminals to the process (assignment through the I/O module)
- Connection system in the form of push-in terminals Connection cross-sections are available in the ET 200SP System Manual (https://support.industry.siemens.com/cs/ww/en/view/58649293).

4.17.2 Connection

Pin assignment

Pin assignment for BU type U0, dark-colored version, without AUX terminals	
Terminal	**Descriptions**
1 to 16	Assignment is determined by the I/O module. You can find additional information in the I/O Module (http://support.automation.siemens.com/WW/view/de/55679691/133300) manual.
(AUX)	No access to the AUX busbar via terminals
P1 / P2	P1: Rated supply voltage up to 230 V AC with max. 10 A P2: Neutral/Ground

Block diagram

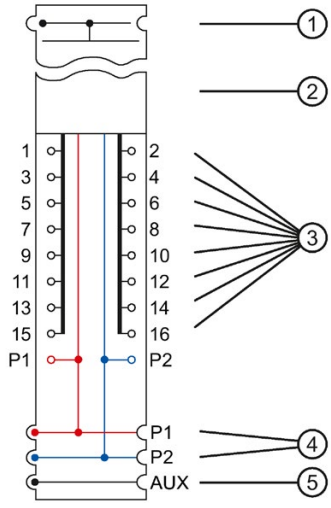

① Backplane bus
② I/O module
③ Terminals with connection to the I/O module
④ System-integrated, self-assembling voltage buses P1, P2 with connection to the supply terminals, connected to the adjacent module on the left
④ System-integrated, self-assembling AUX voltage bus without connection to the AUX terminals, connected to the adjacent module on the left

Figure 4-32 Block diagram of the BU type U0, dark-colored version, without AUX terminals

4.17.3 Technical specifications

Technical specifications of the BU type U0, dark-colored version, without AUX terminals

Article number	6ES7193-6BP00-0BU0
General information	
Product type designation	BU type U0, BU20-P16+A0+2B, PU 1
Supply voltage	
Rated value (DC)	120 V
• For P1 and P2 bus	120 V
• For AUX bus	120 V
Rated value (AC)	240 V; 400 V (L1 - L2 - L3); 240 V (L1, N)
• For P1 and P2 bus	240 V
• For AUX bus	240 V
• for process terminals	240 V
external protection for power supply lines	Yes
Mains filter	
• integrated	No
Current carrying capacity	
up to 60 °C, max.	10 A
For P1 and P2 bus, max.	10 A
For AUX bus, max.	10 A
For process terminals, max.	10 A
Hardware configuration	
Automatic encoding	Yes
Formation of potential groups	
• New potential group	No
• Potential group continued from the left	Yes
Potential separation	
between backplane bus and supply voltage	Yes
Isolation	
Isolation tested with	3 100 V DC for 2 s
Connection method	
Terminals	
• Terminal type	Push-in terminal
• Conductor cross-section, min.	0.14 mm²; 0.2 mm² without wire end ferrule
• Conductor cross-section, max.	2.5 mm²; 1.5 mm² with wire end ferrule
• Number of process terminals to I/O module	16
• Number of terminals to AUX bus	0
• Number of add-on terminals	0
• Number of terminals with connection to P1 and P2 bus	2
Dimensions	
Width	20 mm
Height	117 mm
Depth	35 mm
Weights	
Weight, approx.	50 g

BaseUnits for motor starters 5

5.1 Introduction

Properties of the infeed bus

- The infeed bus is set up by connecting the BaseUnits, and wiring takes place automatically
- The infeed bus distributes the energy to the SIMATIC ET 200SP motor starter within one load group
- The max. current carrying capacity is up to 32 A (3-phase)
  - With infeed (for one load group) and motor connection
  - Infeed bus: 3-pole + PE
  - The voltage range for power infeed is 48 … 500 V AC

You must observe the deratings depending on the configuration.

Properties of the self-assembling voltage bus (power bus)

- Maximum current: 7 A
- Rated voltage: 24 V DC

You must observe the deratings depending on the configuration.

AUX1 bus

The AUX1 bus is not supported in the BaseUnits of the SIMATIC ET 200SP motor starters.

You can find assembly rules of the BaseUnits for the SIMATIC ET 200SP motor starter in the System Manual SIMATIC ET 200SP motor starters.

5.2 BU30-MS1 - BaseUnit with 24 V DC and 500 V AC infeed

5.2.1 Product overview

Article number

3RK1908-0AP00-0AP0

View

Figure 5-1 BaseUnit with 24 V DC and 500 V AC infeed

Properties

- BaseUnit suitable for all fail-safe and non-fail-safe SIMATIC ET 200SP High Feature motor starters
- The BaseUnit opens a new potential group (24 V DC). The power buses P1 and P2 are interrupted to the left-hand neighboring module (BaseUnit, interface module/CPU).
- The BaseUnit opens a new potential group (500 V DC). The infeed bus L1 (L), L2 (N), L3, PE is interrupted to the left-hand BaseUnit of the ET 200SP motor starter.
- Connection method using push-in terminals
- The touch protection cover for the infeed bus (3RK1908-1DA00-2BP0) is included in the scope of delivery.
- The fail-safe input F-DI of the fail-safe motor starter is connected to the power bus.

Maximum configuration per voltage group (24 V DC)

The number of I/O modules that can be used per potential group depends on the following factors:

1. Total power requirement of all I/O modules operated on this potential group
2. Total power requirement of all loads connected externally to this potential group

The total current calculated according to item 1. and item 2. must not exceed 7 A.

Maximum configuration of the infeed bus (500 V AC)

The number of motor starters that can be used per infeed group depends on the following factors:

1. Total current requirement of all motor starters operated on this infeed group.
2. Ambient temperature and installation type in which the motor starters are operated.
   You can find further information in the derating table in the Manual SIMATIC ET 200SP motor starters (https://support.industry.siemens.com/cs/ww/en/view/109479973).

5.2.2 Connection

Pin assignment

Pin assignment for BaseUnit with 24 V DC and 500 V AC infeed	
Terminal	**Descriptions**
L1(L), L2(N), L3, PE	Power supply Assignment is determined by the motor starter. You can find more information in the ET 200SP Motor Starter (https://support.industry.siemens.com/cs/ww/en/view/109479973) manual.
T1, T2, T3, PE	Motor feeder
24 V DC, M	24 V DC: Supply voltage 24 V DC with max. 7 A M: Ground

Block diagram

The figure below shows the block diagram of the BaseUnit with 24 V DC and 500 V AC infeed.

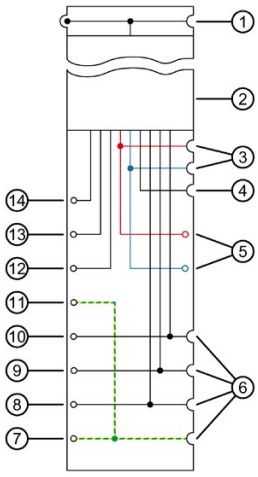

① Backplane bus
② Motor starter module
③ Interrupted busbars 24 V DC, M
④ Interrupted AUX bus
⑤ Terminals for 24 V DC and ground M
⑥ Interrupted busbars for the infeed system L1(L), L2(N), L3, PE
⑦ Infeed terminal for protective ground PE
⑧ Infeed terminal L3
⑨ Infeed terminal L2(N)
⑩ Infeed terminal L1(L)
⑪ Terminal for protective ground PE
⑫ Terminal T3
⑬ Terminal T2
⑭ Terminal T1

Figure 5-2 Block diagram BaseUnit with 24 V DC and 500 V AC infeed

5.2.3 Technical specifications

Technical specifications of the BaseUnit with 24 V DC and 500 V AC infeed

	3RK1908-0AP00-0AP0
Product type designation	BU30-MS1
Galvanic isolation	
Galvanic isolation between backplane bus and supply voltage	Yes
Insulation tested with	2500 V AC
Rated operating voltage	24 V DC
Max. operating current	7 A (observe derating)
Rated insulation voltage in accordance with IEC 60947-1	500 V
Impulse withstand voltage/rated value U_{imp} according to IEC 60947-1	6 kV
Operating voltage range	48 ... 500 V AC
Max. current-carrying capacity	32 A (observe derating)
Isolating function between the infeed terminals L1(L), L2 (N), L3 and motor feeder terminals T1, T2, T3 for motor starters in parking position, or removed motor starters: impulse withstand voltage/rated value Uimp according to IEC 60947-1	6 kV
Wiring	
Push-in	Required tools for releasing: Standard screwdriver size 1 (SZF1 - 0.6x3.5)
Dimensions	
Width	30 mm
Height	215 mm
Weights	
Weight, approx.	164 g

5.3 BU30-MS2 - BaseUnit with 500 V AC infeed

5.3.1 Product overview

Article number

3RK1908-0AP00-0CP0

View

Figure 5-3 BaseUnit with 500 V AC infeed

Properties

- BaseUnit suitable for all fail-safe and non-fail-safe SIMATIC ET 200SP High Feature motor starters
- The BaseUnit takes over the potential group (P1, P2) from the adjacent module on the left.
- The BaseUnit opens a new supply group 500 V AC. The potential group (24 V DC) is further continued
- Connection method using push-in terminals
- The touch protection cover for the infeed bus is included in the scope of delivery.
- The fail-safe input F-DI of the fail-safe motor starter is connected to the power bus.

Maximum configuration of the infeed bus (500 V AC)

The number of motor starters that can be used per infeed group depends on the following factors:

1. Total current requirement of all motor starters operated on this infeed group.
2. Ambient temperature and installation type in which the motor starters are operated. You can find further information in the derating table in the Manual SIMATIC ET 200SP motor starters.

5.3.2 Connection

Pin assignment

Pin assignment for BaseUnit with 500 V AC infeed	
Terminal	**Descriptions**
L1(L), L2(N), L3, PE	Power supply Assignment is determined by the motor starter. See Manual ET 200SP motor starters (https://support.industry.siemens.com/cs/ww/en/view/109479973).
T1, T2, T3, PE	Motor feeder

Block diagram

The figure below shows the block diagram of the BaseUnit with 500 V AC infeed.

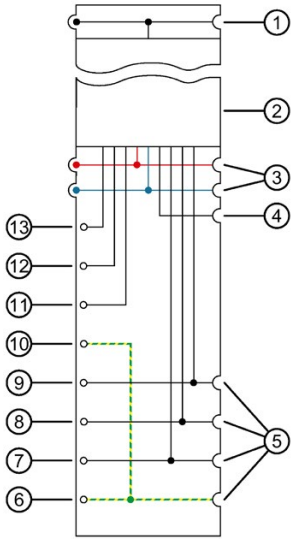

① Backplane bus
② Motor starter module
③ Connected power buses 24 V DC, M
④ Interrupted AUX bus
⑤ Interrupted busbars for the infeed system L1(L), L2(N), L3, PE
⑥ Infeed terminal for protective ground PE
⑦ Infeed terminal L3
⑧ Infeed terminal L2(N)
⑨ Infeed terminal L1(L)
⑩ Terminal for protective ground PE
⑪ Terminal T3
⑫ Terminal T2
⑬ Terminal T1

Figure 5-4 Block diagram BaseUnit with 500 V AC infeed

5.3.3 Technical specifications

Technical specifications of the BaseUnit with 500 V AC infeed

	3RK1908-0AP00-0CP0
Product type designation	BU30-MS2
Galvanic isolation	
Galvanic isolation between backplane bus and supply voltage	Yes
Insulation tested with	2500 V AC
Rated operating voltage	24 V DC
Max. operating current	7 A (observe derating)
Rated insulation voltage in accordance with IEC 60947-1	500 V
Impulse withstand voltage/rated value U_{imp} according to IEC 60947-1	6 kV
Operating voltage range	48 ... 500 V AC
Max. current-carrying capacity	32 A (observe derating)
Isolating function between the infeed terminals L1(L), L2 (N), L3 and motor feeder terminals T1, T2, T3 for motor starters in parking position, or removed motor starters: impulse withstand voltage/rated value Uimp according to IEC 60947-1	6 kV
Wiring	
Push-in	Required tools for releasing: Standard screwdriver size 1 (SZF1 - 0.6x3.5)
Dimensions	
Width	30 mm
Height	215 mm
Weight, approx.	160 g

5.4 BU30-MS3 - BaseUnit with 24 V DC infeed

5.4.1 Product overview

Article number

3RK1908-0AP00-0BP0

View

Figure 5-5 BaseUnit with 24 V DC infeed

Properties

- BaseUnit suitable for all fail-safe and non-fail-safe SIMATIC ET 200SP High Feature motor starters
- The BaseUnit opens a new potential group (24 V DC). The power buses P1 and P2 are interrupted to the left-hand neighboring module (BaseUnit, interface module/CPU).
- This BaseUnit handles the infeed bus (500 V AC) of the left-hand BaseUnit and loops this through.
- Connection method using push-in terminals
- The touch protection cover for the infeed bus is not included in the scope of delivery.
- The fail-safe input F-DI of the fail-safe motor starter is connected to the power bus.

Maximum configuration per voltage group (24 V DC)

The number of I/O modules that can be used per potential group depends on the following factors:

1. Total power requirement of all I/O modules operated on this potential group
2. Total power requirement of all loads connected externally to this potential group

The total current calculated according to item 1. and item 2. must not exceed 7 A.

5.4.2 Connection

Pin assignment

Pin assignment for BaseUnit with 24 V DC infeed	
Terminal	**Descriptions**
T1, T2, T3, PE	Motor feeder
24 V DC, M	24 V DC: Rated supply voltage 24 V DC with max. 7 A M: Ground

Block diagram

The figure below shows the three-phase connection with 24 V infeed and mains infeed.

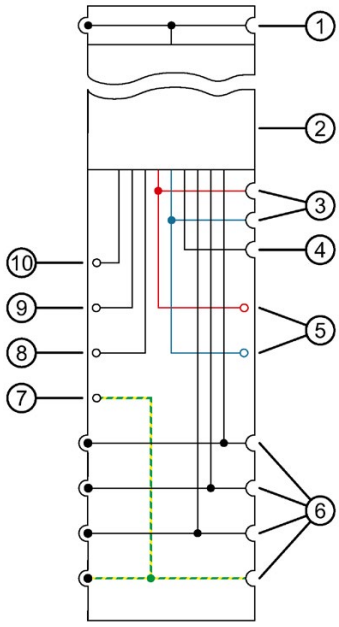

① Backplane bus
② Motor starter module
③ Interrupted busbars 24 V DC, M
④ Interrupted AUX bus
⑤ Terminal for 24 V DC and ground M
⑥ Connected busbars for the infeed system L1(L), L2(N), L3, PE
⑦ Terminal for protective ground PE
⑧ Terminal T3
⑨ Terminal T2
⑩ Terminal T1

Figure 5-6 Block diagram BaseUnit with 24 V DC infeed

5.4.3 Technical specifications

Technical specifications of the BaseUnit with 24 V DC infeed

	3RK1908-0AP00-0BP0
Product type designation	BU30-MS3
Galvanic isolation	
Galvanic isolation between backplane bus and supply voltage	Yes
Insulation tested with	2500 V AC
Rated operating voltage	24 V DC
Max. operating current	7 A (observe derating)
Rated insulation voltage in accordance with IEC 60947-1	500 V
Impulse withstand voltage/rated value U_{imp} according to IEC 60947-1	6 kV
Operating voltage range	48 ... 500 V AC
Max. current-carrying capacity	32 A (observe derating)
Isolating function between the infeed terminals L1(L), L2 (N), L3 and motor feeder terminals T1, T2, T3 for motor starters in parking position, or removed motor starters: impulse withstand voltage/rated value Uimp according to IEC 60947-1	6 kV
Wiring	
Push-in	Required tools for releasing: Standard screwdriver size 1 (SZF1 - 0.6x3.5)
Dimensions	
Width	30 mm
Height	215 mm
Weight, approx.	152 g

5.5 BU30-MS4 - BaseUnit without infeed

5.5.1 Product overview

Article number

3RK1908-0AP00-0DP0

View

Figure 5-7 BaseUnit without infeed

Properties

- BaseUnit suitable for all fail-safe and non-fail-safe SIMATIC ET 200SP High Feature motor starters
- No new potential groups are opened with this BaseUnit.
- The potential group (24 V DC) is looped through.
- The infeed group (500 V AC) is looped through.
- Connection method using push-in terminals
- The touch protection cover for the infeed bus is not included in the scope of delivery.
- The fail-safe input F-DI of the fail-safe motor starter is connected to the power bus.

5.5.2 Connection

Pin assignment

Pin assignment for BaseUnit without infeed	
Terminal	Descriptions
T1, T2, T3, PE	Motor feeder

Block diagram

The figure below shows the block diagram of the BaseUnit without infeed.

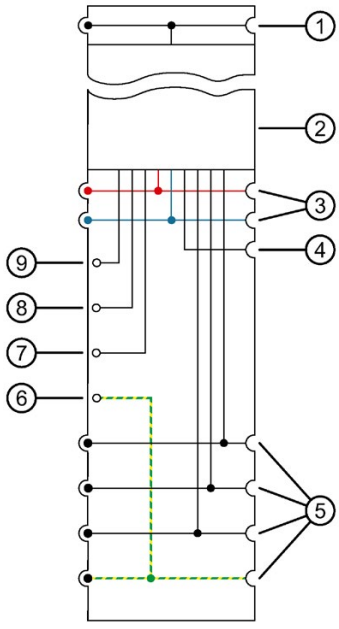

① Backplane bus
② Motor starter module
③ Connected busbars 24 V DC, M
④ Interrupted AUX bus
⑤ Connected busbars for the infeed system L1(L), L2(N), L3, PE
⑥ Terminal for protective ground PE
⑦ Terminal T3
⑧ Terminal T2
⑨ Terminal T1

Figure 5-8 Block diagram BaseUnit without infeed

5.5.3 Technical specifications

Technical specifications of BaseUnit without infeed

	3RK1908-0AP00-0DP0
Product type designation	BU30-MS4
Galvanic isolation	
Galvanic isolation between backplane bus and supply voltage	Yes
Insulation tested with	2500 V AC
Rated operating voltage	24 V DC
Max. operating current	7 A (observe derating)
Rated insulation voltage in accordance with IEC 60947-1	500 V
Impulse withstand voltage/rated value U_{imp} according to IEC 60947-1	6 kV
Operating voltage range	48 ... 500 V AC
Max. current-carrying capacity	32 A (observe derating)
Isolating function between the infeed terminals L1(L), L2 (N), L3 and motor feeder terminals T1, T2, T3 for motor starters in parking position, or removed motor starters: impulse withstand voltage/rated value Uimp according to IEC 60947-1	6 kV
Wiring	
Push-in	Required tools for releasing: Standard screwdriver size 1 (SZF1 - 0.6x3.5)
Dimensions	
Width	30 mm
Height	215 mm
Weight, approx.	150 g

5.6 BU30-MS5 BaseUnit with 500 V AC infeed and F-DI

5.6.1 Product overview

Article number

3RK1908-0AP00-0EP0

View

Figure 5-9 BaseUnit with 500 V AC and F-DI

Properties

- BaseUnit suitable for all fail-safe SIMATIC ET 200SP High Feature motor starters
- The BaseUnit takes over the potential group (P1, P2) from the adjacent module on the left.
- The BaseUnit opens a new supply group 500 V AC. The potential group (24 V DC) is further continued
- The BaseUnit has an F-DI input terminal for fail-safe control signals of the motor starter. This signal is not forwarded to neighboring motor starters.
- Connection method using push-in terminals
- The touch protection cover for the infeed bus is included in the scope of delivery.

Maximum configuration of the supply bus

The number of I/O modules that can be used per potential group depends on the following factors:

1. Total power requirement of all I/O modules operated on this potential group
2. Total power requirement of all loads connected externally to this potential group

The total current calculated according to item 1. and item 2. must not exceed 7 A.

Properties of the F-DI input

The fail-safe digital input "F-DI" has the following properties:

- Use of interconnection type 1oo1 possible
- Sink input
- Input delay 10 ms
- Status display of the input F-DI at the motor starter module (green LED)

5.6.2 Connection

Pin assignment

Pin assignment for BaseUnit with 500 V AC infeed and F-DI	
Terminal	**Descriptions**
T1, T2, T3, PE	Motor feeder
F-DI, M	F-DI: Connection of fail-safe signal M: Reference potential of fail-safe signal
L1(L), L2(N), L3, PE	Power supply Assignment is determined by the motor starter. You can find more information in the ET 200SP Motor Starter (https://support.industry.siemens.com/cs/ww/en/view/109479973) manual.

Block diagram

The figure below shows the two-phase connection with 500 V AC infeed and F-DI:

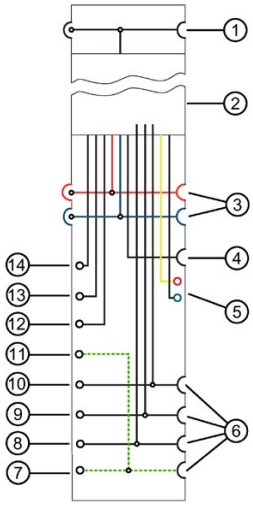

① Backplane bus
② Motor starter module
③ Connected busbars 24 V DC, M
④ Interrupted AUX bus
⑤ Safety input F-DI (P24/M)
⑥ Interrupted busbars for the infeed system L1(L), L2(N), L3, PE
⑦ Infeed terminal for protective ground PE
⑧ Infeed terminal L3
⑨ Infeed terminal L2(N)
⑩ Infeed terminal L1(L)
⑪ Terminal for protective ground PE
⑫ Terminal T3
⑬ Terminal T2
⑭ Terminal T1

Figure 5-10 BaseUnit block diagram with 500 V AC infeed and fail-safe input

5.6.3 Technical specifications

Technical specifications of the BaseUnit with 500 V AC infeed and F-DI

	3RK1908-0AP00-0EP0
Product type designation	BU30-MS5
Galvanic isolation	
Galvanic isolation between backplane bus and supply voltage	Yes
Insulation tested with	2500 V AC
Rated operating voltage	24 V DC
Max. operating current	7 A (observe derating)
Galvanic isolation between fail-safe digital input and supply voltage	Yes
Rated insulation voltage in accordance with IEC 60947-1	500 V
Impulse withstand voltage/rated value U_{imp} according to IEC 60947-1	6 kV
Operating voltage range	48 ... 500 V AC
Max. current-carrying capacity	32 A (observe derating)
Isolating function between the infeed terminals L1(L), L2 (N), L3 and motor feeder terminals T1, T2, T3 for motor starters in parking position, or removed motor starters: impulse withstand voltage/rated value Uimp according to IEC 60947-1	6 kV
Wiring	
Push-in	Required tools for releasing: Standard screwdriver size 1 (SZF1 - 0.6x3.5)
Dimensions	
Width	30 mm
Height	215 mm
Weight, approx.	152 g

5.7 BU30-MS6 BaseUnit without infeed and with F-DI

5.7.1 Product overview

Article number

3RK1908-0AP00-0FP0

View

Figure 5-11 BaseUnit without 500 V AC infeed, with F-DI

Properties

- BaseUnit suitable for all fail-safe SIMATIC ET 200SP High Feature motor starters
- The BaseUnit takes over the potential group (P1, P2) from the adjacent module on the left.
- This BaseUnit handles the potential group/infeed bus (500 V AC) of the left-hand BaseUnit and loops this through.
- The BaseUnit has an F-DI input terminal for fail-safe control signals of the motor starter. This signal is not forwarded to neighboring motor starters.
- Connection method using push-in terminals
- The touch protection cover for the infeed bus is not included in the scope of delivery.

Properties of the F-DI input

The fail-safe digital input "F-DI" has the following properties:

- Use of interconnection type 1oo1 possible
- Sink input
- Input delay 10 ms
- Status display of the input F-DI at the motor starter module (green LED)

5.7.2 Connection

Pin assignment

Pin assignment for BaseUnit with 24 V DC infeed	
Terminal	**Descriptions**
T1, T2, T3, PE	Motor feeder
F-DI, M	F-DI: Connection of fail-safe signal M: Reference potential of fail-safe signal

Block diagram

The following figure shows the block diagram for the BaseUnit without infeed, but with fail-safe input:

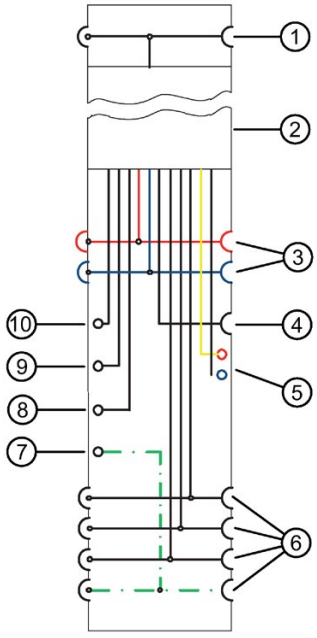

① Backplane bus
② Motor starter module
③ Connected busbars 24 V DC, M
④ Interrupted AUX bus
⑤ Safety input F-DI (P24/M)
⑥ Connected busbars infeed system L1, L2, L3, PE
⑦ Terminal for protective ground PE
⑧ Terminal T3
⑨ Terminal T2
⑩ Terminal T1

Figure 5-12 Block diagram BaseUnit without infeed, with fail-safe input

5.7.3 Technical specifications

Technical specifications of BaseUnit without infeed, with F-DI

	3RK1908-0AP00-0FP0
Product type designation	BU30-MS6
Galvanic isolation	
Galvanic isolation between backplane bus and supply voltage	Yes
Insulation tested with	2500 V AC
Rated operating voltage	24 V DC
Max. operating current	7 A (observe derating)
Rated insulation voltage in accordance with IEC 60947-1	500 V
Galvanic isolation between fail-safe digital input and supply voltage	Yes
Impulse withstand voltage/rated value U_{imp} according to IEC 60947-1	6 kV
Operating voltage range	48 ... 500 V AC
Max. current-carrying capacity	32 A (observe derating)
Isolating function between the infeed terminals L1(L), L2 (N), L3 and motor feeder terminals T1, T2, T3 for motor starters in parking position, or removed motor starters: impulse withstand voltage/rated value Uimp according to IEC 60947-1	6 kV
Wiring	
Push-in	Required tools for releasing: Standard screwdriver size 1 (SZF1 - 0.6x3.5)
Dimensions	
Width	30 mm
Height	215 mm
Weight, approx.	152 g

Potential distributor modules 6

6.1 Introduction

Properties of potential distributor modules

A potential distributor module (PotDis module) consists of a potential distributor BaseUnit (PotDis-BU) and a potential distributor terminal block (PotDis-TB) installed on top of it.

A system-integrated potential distribution is possible with the various PotDis-BUs and PotDis-TBs.

You can place potential distributor modules at any location with the ET 200SP distributed I/O system. In doing so, you must observe the same design rules that apply to the design of a potential group from the BaseUnits for I/O modules. The following information is particularly important:

- The potential groups opened with a light-colored PotDis-BU must contain no I/O modules. You can integrate any dark-colored PotDis-BUs into I/O module potential groups provided these are based on SELV/PELV supply.
- If you do not need the additional terminals of the PotDis-TB in a potential distributor module, replace the PotDis-TB with a BU-Cover.
- You may only connect one potential group within a combination of PotDis-BU and PotDis-TB.
- Only SELV/PELV potentials are permitted on PotDis-BUs. Separate different SELV/PELV potential groups using light-colored PotDis-BUs.
- With potential distributor modules you may only connect to the PotDis-TB versions BR-W and n.c.-G potential, which exceed the voltage level of SELV/PELV.
- PotDis terminals are not directly configurable as PotDis via GSD/GSDML. When configuring with GSD, always use an empty module; with GSDML, integrate a free space.

Potential distributor modules are configurable with STEP 7/STEP 7 TIA Portal. Individual versions are listed in the following table:

Engineering with	version/HSP
STEP 7 TIA Portal	
• Configurable as of version • Configurable as of version • Configurable as of version • Configurable as of version	HSP0241 up to V13 SP1 Update 8 HSP0241 up to V14 HSP0241 up to V14 SP1 Update 5 HSP0241 up to V15 Update 1
STEP 7	
• Configurable as of version	HSP0293 up to V5.5 SP4

You can find additional information on the use of the potential distributor modules in the ET 200SP Distributed I/O System (http://support.automation.siemens.com/WW/view/en/58649293) system manual.

6.2 PotDis-BU type P1, light-colored version

6.2.1 Short designation

Short designation

Light-colored version with 16 terminals to P1 + 2 supply terminals P1/P2.

Short designation: PotDis-BU-P1/D-R.

D stands for a new potential group, which means P1, P2, AUX separated to the left, R stands for red spring release.

6.2.2 Product overview

Delivery options (packing unit VPE)

6ES7193-6UP00-0DP1 (VPE: 1 unit)

View

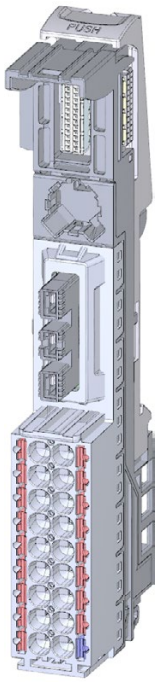

Figure 6-1 PotDis-BU type P1, light-colored version

Properties

- BaseUnit suitable for all PotDis terminal blocks of the type "P1/P2/N0/P0". Can be recognized by the laser inscription on the front and/or the last two digits of the article number.
  - Supply voltage (terminal P1, P2) up to DC 48 V/10 A
  - Current carrying capacity per terminal: Max. 10 A
- BaseUnit opens up a new PotDis potential group. The self-assembling voltage buses P1, P2 and the AUX busbar are disconnected from the adjacent module on the left (BaseUnit, CPU, interface module).

NOTICE
Opening a potential group for I/O modules is not permitted with the BaseUnit PotDis-BU-P1/D-R. The BaseUnit PotDis-BU-P1/D-R opens a new potential group only for the potential distributor modules. Opening a potential group for I/O modules is not permitted with the BaseUnit PotDis-BU-P1/D-R.

- 18 terminals
  - 17 red terminals (P1)
  - 1 blue terminal (P2)
- 36 terminals (with PotDis-TB)
- Connection system in the form of push-in terminals

6.2.3 Connecting

Pin assignment

Pin assignment for BaseUnit PotDis-BU type P1, light-colored version	
Terminal	Explanation
P1	Rated supply voltage up to 48 V DC with max. 10 A (17 red terminals)
P2	Ground (1 terminal)

Block diagram

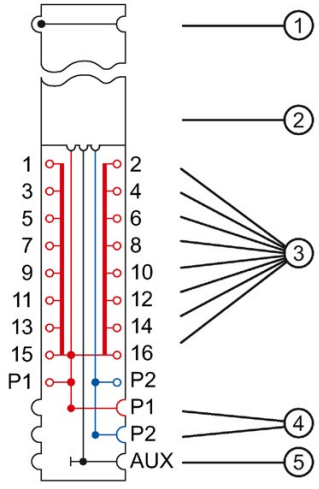

① Backplane bus
② PotDis-TB terminal block
③ Terminals with connection to the supply voltage P1
④ Disconnected voltage bus with connection to the terminals for supply
⑤ Interrupted AUX busbar

Figure 6-2 Block diagram of the PotDis-BU type P1, light-colored version

6.2.4 Technical specifications

Technical specifications of the BaseUnit PotDis-BU type P1, light-colored version

Article number	6ES7193-6UP00-0DP1
General information	
Product type designation	PotDis BU type P1, light version, PU 1
Supply voltage	
Rated value (DC)	
• For P1 and P2 bus	48 V; max.
• for process terminals	48 V; max.
external protection for power supply lines	Yes; 10 A miniature circuit breaker with type B or C tripping characteristic for the respective rated supply voltage
Current carrying capacity	
For P1 and P2 bus, max.	10 A
For process terminals, max.	10 A
Hardware configuration	
Formation of potential groups	
• New potential group	Yes
• Potential group continued from the left	No
Potential separation	
between backplane bus and supply voltage	Yes
Isolation	
Isolation tested with	3 250 V DC
Ambient conditions	
Ambient temperature during operation	
• horizontal installation, min.	0 °C; No condensation
• horizontal installation, max.	60 °C
• vertical installation, min.	0 °C; No condensation
• vertical installation, max.	50 °C
• Vertical installation, min.	0 °C; No condensation
• Vertical installation, max.	50 °C
• Horizontal installation, min.	0 °C; No condensation
• Horizontal installation, max.	50 °C
Altitude during operation relating to sea level	
• Ambient air temperature-barometric pressure-altitude	On request: Ambient temperatures lower than 0 °C (without condensation) and/or installation altitudes greater than 2 000 m
Accessories	
Color coding labels	
• for process terminals	CC62

Article number	6ES7193-6UP00-0DP1
Connection method	
Terminals	
• Terminal type	Push-in terminal
• Conductor cross-section, min.	0.14 mm²
• Conductor cross-section, max.	2.5 mm²
• Number of terminals with connection to P1 and P2 bus	17 terminals to P1, 1 terminal to P2
Dimensions	
Width	15 mm
Height	117 mm
Depth	35 mm
Weights	
Weight, approx.	40 g

6.3 PotDis-BU type P1, dark-colored version

Short designation

Dark-colored version with 16 terminals to P1 + 2 supply terminals P1/P2.

Short designation: PotDis-BU-P1/B-R.

B stands for bridged potential group, which means P1, P2, AUX bridged to the left, R stands for red spring release.

6.3.1 Product overview

Delivery options (packing unit VPE)

6ES7193-6UP00-0BP1 (VPE: 1 unit)

View

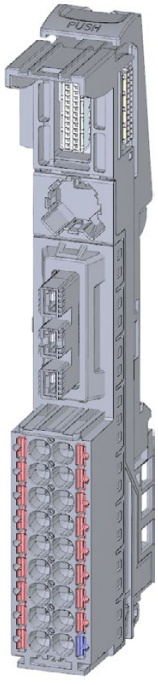

Figure 6-3 PotDis-BU type P1, dark-colored version

Properties

- BaseUnit suitable for all PotDis terminal blocks of the type "P1/P2/N0/P0". Can be recognized by the laser inscription on the front and/or the last two digits of the article number.
  - Current carrying capacity per terminal: Max. 10 A
- BaseUnit further conducts the potential group. The self-assembling voltage buses P1, P2 and the AUX busbar are connected to the adjacent module on the left (BaseUnit).
- 18 terminals
  - 17 red terminals (P1)
  - 1 blue terminal (P2)
- 36 terminals (with PotDis-TB)
- Connection system in the form of push-in terminals

6.3.2 Connecting

Pin assignment

Pin assignment for BaseUnit PotDis-BU type P1, dark-colored version	
Terminal	**Explanation**
P1	Rated supply voltage up to 48 V DC with max. 10 A (17 red terminals)
P2	Ground (1 terminal)

Block diagram

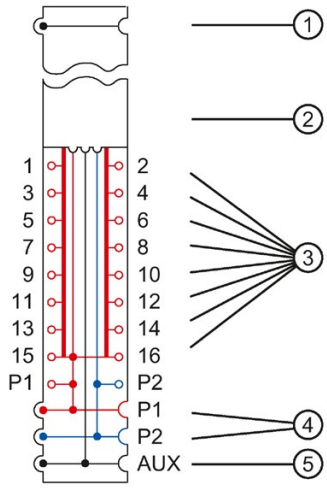

① Backplane bus
② PotDis-TB terminal block
③ Terminals with connection to the supply voltage P1
④ Connected voltage bus with connection to the terminals
⑤ Connected AUX busbar

Figure 6-4 Block diagram of the PotDis-BU type P1, dark-colored version

6.3.3 Technical specifications

Technical specifications of the BaseUnit PotDis-BU type P1, dark-colored version

Article number	6ES7193-6UP00-0BP1
General information	
Product type designation	PotDis BU type P1, dark version, PU 1
Supply voltage	
Rated value (DC)	
• For P1 and P2 bus	48 V; max.
• for process terminals	48 V; max.
external protection for power supply lines	Yes; 10 A miniature circuit breaker with type B or C tripping characteristic for the respective rated supply voltage
Current carrying capacity	
For P1 and P2 bus, max.	10 A
For process terminals, max.	10 A
Hardware configuration	
Formation of potential groups	
• New potential group	No
• Potential group continued from the left	Yes
Potential separation	
between backplane bus and supply voltage	Yes
Isolation	
Isolation tested with	3 250 V DC
Ambient conditions	
Ambient temperature during operation	
• horizontal installation, min.	0 °C; No condensation
• horizontal installation, max.	60 °C
• vertical installation, min.	0 °C; No condensation
• vertical installation, max.	50 °C
• Vertical installation, min.	0 °C; No condensation
• Vertical installation, max.	50 °C
• Horizontal installation, min.	0 °C; No condensation
• Horizontal installation, max.	50 °C
Altitude during operation relating to sea level	
• Ambient air temperature-barometric pressure-altitude	On request: Ambient temperatures lower than 0 °C (without condensation) and/or installation altitudes greater than 2 000 m
Accessories	
Color coding labels	
• for process terminals	CC62

Article number	6ES7193-6UP00-0BP1
Connection method	
Terminals	
• Terminal type	Push-in terminal
• Conductor cross-section, min.	0.14 mm²
• Conductor cross-section, max.	2.5 mm²
• Number of terminals with connection to P1 and P2 bus	17 terminals to P1, 1 terminal to P2
Dimensions	
Width	15 mm
Height	117 mm
Depth	35 mm
Weights	
Weight, approx.	40 g

6.4 PotDis-BU type P2, light-colored version

6.4.1 Short designation

Short designation

Light-colored version with 16 terminals to P2 + 2 supply terminals P1/P2.

Short designation: PotDis-BU-P2/D-B.

D stands for a new potential group, which means P1, P2, AUX separated to the left, B stands for blue spring release.

6.4.2 Product overview

Delivery options (packing unit VPE)

6ES7193-6UP00-0DP2 (VPE: 1 unit)

View

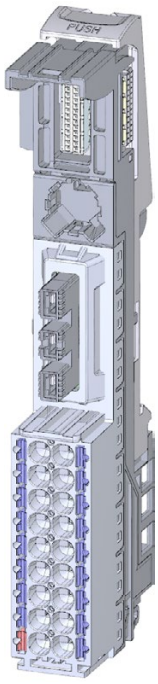

Figure 6-5 PotDis-BU type P2, light-colored version

Properties

- BaseUnit suitable for all PotDis terminal blocks of the type "P1/P2/N0/P0". Can be recognized by the laser inscription on the front and/or the last two digits of the article number.
  - Supply voltage (terminal P1, P2) up to DC 48 V/10 A
  - Current carrying capacity per terminal: Max. 10 A
- BaseUnit opens up a new PotDis potential group. The self-assembling voltage buses P1, P2 and the AUX busbar are disconnected from the adjacent module on the left (BaseUnit, CPU, interface module).

NOTICE
Opening a potential group for I/O modules is not permitted with the BaseUnit PotDis-BU-P2/D-B. The BaseUnit PotDis-BU-P2/D-B opens a new potential group only for the potential distributor modules. Opening a potential group for I/O modules is not permitted with the BaseUnit PotDis-BU-P2/D-B.

- 18 terminals
  - 1 red terminal (P1)
  - 17 blue terminals (P2)
- 36 terminals (with PotDis-TB)
- Connection system in the form of push-in terminals

6.4.3 Connecting

Pin assignment

Pin assignment for PotDis-BU type P2, light-colored version	
Terminal	Explanation
P1	Rated supply voltage up to 48 V DC with max. 10 A (1 terminal)
P2	Ground (17 terminals)

Block diagram

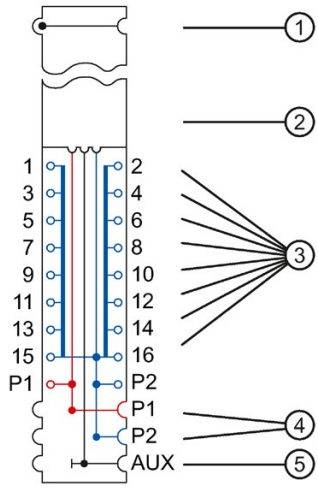

① Backplane bus
② PotDis-TB terminal block
③ Terminals with connection to ground P2
④ Disconnected voltage bus with connection to the terminals for supply
⑤ Interrupted AUX busbar

Figure 6-6 Block diagram of the PotDis-BU type P2, light-colored version

6.4.4 Technical specifications

Technical specifications of the BaseUnit PotDis-BU type P2, light-colored version

Article number	6ES7193-6UP00-0DP2
General information	
Product type designation	PotDis BU type P2, light version, PU 1
Supply voltage	
Rated value (DC)	
• For P1 and P2 bus	48 V; max.
• for process terminals	48 V; max.
external protection for power supply lines	Yes; 10 A miniature circuit breaker with type B or C tripping characteristic for the respective rated supply voltage
Current carrying capacity	
For P1 and P2 bus, max.	10 A
For process terminals, max.	10 A
Hardware configuration	
Formation of potential groups	
• New potential group	No
• Potential group continued from the left	Yes
Potential separation	
between backplane bus and supply voltage	Yes
Isolation	
Isolation tested with	3 250 V DC
Ambient conditions	
Ambient temperature during operation	
• horizontal installation, min.	0 °C; No condensation
• horizontal installation, max.	60 °C
• vertical installation, min.	0 °C; No condensation
• vertical installation, max.	50 °C
• Vertical installation, min.	0 °C; No condensation
• Vertical installation, max.	50 °C
• Horizontal installation, min.	0 °C; No condensation
• Horizontal installation, max.	50 °C
Altitude during operation relating to sea level	
• Ambient air temperature-barometric pressure-altitude	On request: Ambient temperatures lower than 0 °C (without condensation) and/or installation altitudes greater than 2 000 m
Accessories	
Color coding labels	
• for process terminals	CC63

Article number	6ES7193-6UP00-0DP2
Connection method	
Terminals	
• Terminal type	Push-in terminal
• Conductor cross-section, min.	0.14 mm²
• Conductor cross-section, max.	2.5 mm²
• Number of terminals with connection to P1 and P2 bus	18; 17 terminals to P2, 1 terminal to P1
Dimensions	
Width	15 mm
Height	117 mm
Depth	35 mm
Weights	
Weight, approx.	40 g

6.5 PotDis-BU type P2, dark-colored version

6.5.1 Short designation

Short designation

Dark-colored version with 16 terminals to P2 + 2 supply terminals P1/P2.

Short designation: PotDis-BU-P2/B-B.

B stands for bridged potential group, which means P1, P2, AUX bridged to the left, B stands for blue spring release.

6.5.2 Product overview

Delivery options (packing unit VPE)

6ES7193-6UP00-0BP2 (VPE: 1 unit)

View

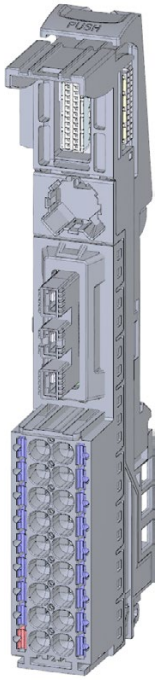

Figure 6-7 PotDis-BU type P2, dark-colored version

Properties

- BaseUnit suitable for all PotDis terminal blocks of the type "P1/P2/N0/P0". Can be recognized by the laser inscription on the front and/or the last two digits of the article number.
  - Current carrying capacity per terminal: Max. 10 A
- BaseUnit further conducts the potential group. The self-assembling voltage buses P1, P2 and the AUX busbar are connected to the adjacent module on the left (BaseUnit).
- 18 terminals
  - 1 red terminal (P1)
  - 17 blue terminals (P2)
- 36 terminals (with PotDis-TB)
- Connection system in the form of push-in terminals

6.5.3 Connecting

Pin assignment

Pin assignment for PotDis-BU type P2, dark-colored version	
Terminal	Explanation
P1	Rated supply voltage up to 48 V DC with max. 10 A (1 terminal)
P2	Ground (17 terminals)

Block diagram

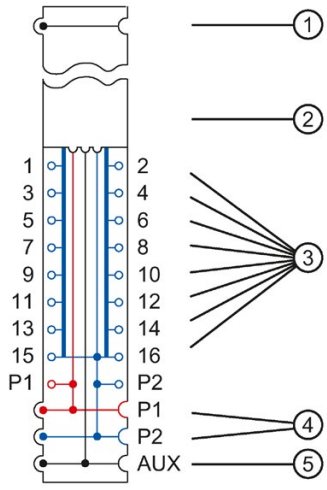

① Backplane bus
② PotDis-TB terminal block
③ Terminals with connection to ground P2
④ Connected voltage bus with connection to the terminals
⑤ Connected AUX busbar

Figure 6-8 Block diagram of the PotDis-BU type P2, dark-colored version

6.5.4 Technical specifications

Technical specifications of the BaseUnit PotDis-BU type P2, dark-colored version

Article number	6ES7193-6UP00-0BP2
General information	
Product type designation	PotDis BU type P2, dark version, PU 1
Supply voltage	
Rated value (DC)	
• For P1 and P2 bus	48 V; max.
• for process terminals	48 V; max.
external protection for power supply lines	Yes; 10 A miniature circuit breaker with type B or C tripping characteristic for the respective rated supply voltage
Current carrying capacity	
For P1 and P2 bus, max.	10 A
For process terminals, max.	10 A
Hardware configuration	
Formation of potential groups	
• New potential group	No
• Potential group continued from the left	Yes
Potential separation	
between backplane bus and supply voltage	Yes
Isolation	
Isolation tested with	3 250 V DC
Ambient conditions	
Ambient temperature during operation	
• horizontal installation, min.	0 °C; No condensation
• horizontal installation, max.	60 °C
• vertical installation, min.	0 °C; No condensation
• vertical installation, max.	50 °C
• Vertical installation, min.	0 °C; No condensation
• Vertical installation, max.	50 °C
• Horizontal installation, min.	0 °C; No condensation
• Horizontal installation, max.	50 °C
Altitude during operation relating to sea level	
• Ambient air temperature-barometric pressure-altitude	On request: Ambient temperatures lower than 0 °C (without condensation) and/or installation altitudes greater than 2 000 m
Accessories	
Color coding labels	
• for process terminals	CC63

Article number	6ES7193-6UP00-0BP2
Connection method	
Terminals	
• Terminal type	Push-in terminal
• Conductor cross-section, min.	0.14 mm²
• Conductor cross-section, max.	2.5 mm²
• Number of terminals with connection to P1 and P2 bus	18; 17 terminals to P2, 1 terminal to P1
Dimensions	
Width	15 mm
Height	117 mm
Depth	35 mm
Weights	
Weight, approx.	40 g

6.6 PotDis-TB

6.6.1 Product overview

Article number

- PotDis-TB-P1-R terminal block: 6ES7193-6TP00-0TP1
- PotDis-TB-P2-B terminal block: 6ES7193-6TP00-0TP2
- PotDis-TB-n.c.-G terminal block: 6ES7193-6TP00-0TN0
- PotDis-TB-BR-W terminal block: 6ES7193-6TP00-0TP0

View

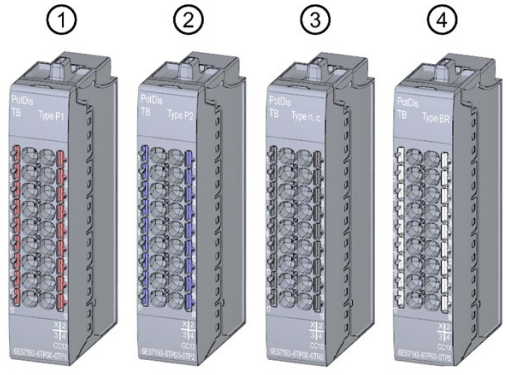

① PotDis-TB-P1-R
② PotDis-TB-P2-B
③ PotDis-TB-n.c.-G
④ PotDis-TB-BR-W

Figure 6-9 PotDis terminal blocks

Properties

- Terminal blocks matching all BaseUnits PotDis-BU
  - Current carrying capacity per terminal: Max. 10 A
- 18 terminals
  - PotDis-TB-P1-R terminal block: Red terminals with connection to the supply voltage P1 of the BaseUnit PotDis-BU
  - PotDis-TB-P2-B terminal block: Blue terminals with connection to ground P2 of the BaseUnit PotDis-BU
  - PotDis-TB-n.c.-G terminal block: Gray (internal not connected) terminals without connection to the BaseUnit PotDis-BU

NOTICE
Mixed connection of direct current or alternating current (DC/AC) is not permitted on the PotDis-TB-n.c-G Connect direct currents up to 48 V or alternating currents up to 230 V to the terminals of the PotDis-TB-n.c.-G. A mixed connection of both types of voltages (DC/AC) is not permitted at the terminals of the PotDis-TB-n.c.-G.

  - PotDis-TB-BR-W terminal block: White (internal not connected) terminals without connection to the BaseUnit-BU

NOTICE
Only PotDis-TB-BR may be used for protective conductors. Check all protective conductors. Check the required conductor cross-section for the respective plant unit before commissioning of the plant (especially for motor starters).

- Connection system in the form of push-in terminals
- You can find the assignment of color-coded labels in the ET 200SP System Manual under Accessories.

NOTICE
Use of color-coded labels Before commissioning the system, check that the color-coded labels attached correspond to the wired potential.

NOTICE
Voltages greater than SELV/PELV Voltages greater than SELV/PELV are only permitted for the PO PotDis-TBs BR (bridged) and NC (not connected). This applies equally to protective conductors. No voltages greater than SELV/PELV are present on the terminals of the PotDis module with connection to the P1/P2 rails.

6.6.2 Connecting

Pin assignment

Pin assignment for PotDis-TB terminal block		
Terminal block	**Terminal**	**Explanation**
PotDis-TB-P1-R	P1	Rated supply voltage up to 48 V DC with max. 10 A (18 red terminals)
PotDis-TB-P2-B	P2	Ground (18 blue terminals)
PotDis-TB-n.c.-G	n c. (not connected)	Terminals can be used freely up to 230 V AC with max. 10 A (18 gray terminals). If you connect voltage, it must belong to the same potential group.
PotDis-TB-BR-W	BR (bridged)	Terminals for protective conductor connection or voltage bus freely usable up to 230 V AC with max. 10 A (18 white terminals)

Block diagram

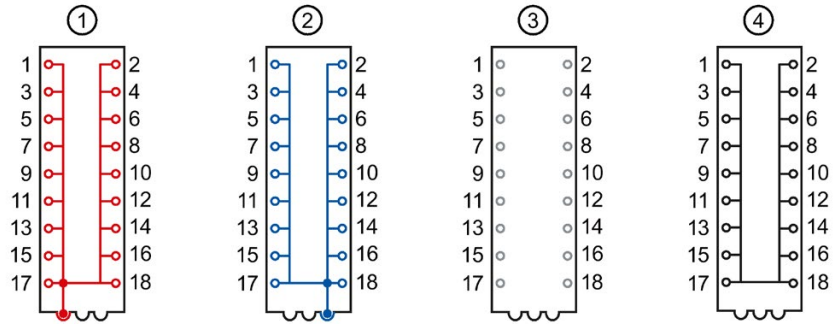

① PotDis-TB-P1-R
② PotDis-TB-P2-B
③ PotDis-TB-n.c.-G
④ PotDis-TB-BR-W

Figure 6-10 PotDis-TB block diagram

6.6.3 Technical specifications

Technical specifications of the PotDis-TB-P1_R terminal block

Article number	6ES7193-6TP00-0TP1
General information	
Product type designation	PotDis TB P1-R, PU 1
Supply voltage	
Rated value (DC)	
• For P1 and P2 bus	48 V; max.
• for process terminals	48 V; max.
external protection for power supply lines	Yes; 10 A miniature circuit breaker with type B or C tripping characteristic for the respective rated supply voltage
Current carrying capacity	
up to 60 °C, max.	10 A
For P1 and P2 bus, max.	10 A
For AUX bus, max.	10 A
For process terminals, max.	10 A
Ambient conditions	
Ambient temperature during operation	
• horizontal installation, min.	0 °C; No condensation
• horizontal installation, max.	60 °C
• vertical installation, min.	0 °C; No condensation
• vertical installation, max.	50 °C
• ceiling installation, min.	0 °C; No condensation
• ceiling installation, max.	50 °C
• floor installation, min.	0 °C; No condensation
• floor installation, max.	50 °C
Altitude during operation relating to sea level	
• Ambient air temperature-barometric pressure-altitude	On request: Ambient temperatures lower than 0 °C (without condensation) and/or installation altitudes greater than 2 000 m
Accessories	
Color coding labels	
• for process terminals	CC10, CC12

Article number	6ES7193-6TP00-0TP1
Connection method	
Terminals	
• Terminal type	Push-in terminal
• Conductor cross-section, min.	0.14 mm²; 0.2 mm² without wire end ferrule
• Conductor cross-section, max.	2.5 mm²; 1.5 mm² with wire end ferrule
• Number of process terminals to I/O module	16
• Number of terminals to AUX bus	0
• Number of add-on terminals	0
• Number of terminals with connection to P1 and P2 bus	2
Dimensions	
Width	15 mm
Height	74 mm
Depth	34 mm
Weights	
Weight, approx.	24 g

Technical specifications of the PotDis-TB-P2-B terminal block

Article number	6ES7193-6TP00-0TP2
General information	
Product type designation	PotDis TB P2-B, PU 1
Supply voltage	
Rated value (DC)	
• For P1 and P2 bus	48 V; max.
• for process terminals	48 V; max.
external protection for power supply lines	Yes; 10 A miniature circuit breaker with type B or C tripping characteristic for the respective rated supply voltage
Current carrying capacity	
up to 60 °C, max.	10 A
For P1 and P2 bus, max.	10 A
For AUX bus, max.	10 A
For process terminals, max.	10 A
Potential separation	
between process terminals and supply voltage	No
Ambient conditions	
Ambient temperature during operation	
• horizontal installation, min.	0 °C; No condensation
• horizontal installation, max.	60 °C
• vertical installation, min.	0 °C; No condensation
• vertical installation, max.	50 °C
• ceiling installation, min.	0 °C; No condensation
• ceiling installation, max.	50 °C
• floor installation, min.	0 °C; No condensation
• floor installation, max.	50 °C
Altitude during operation relating to sea level	
• Ambient air temperature-barometric pressure-altitude	On request: Ambient temperatures lower than 0 °C (without condensation) and/or installation altitudes greater than 2 000 m
Accessories	
Color coding labels	
• for process terminals	CC10, CC13

Article number	6ES7193-6TP00-0TP2
Connection method	
Terminals	
• Terminal type	Push-in terminal
• Conductor cross-section, min.	0.14 mm²; 0.2 mm² without wire end ferrule
• Conductor cross-section, max.	2.5 mm²; 1.5 mm² with wire end ferrule
• Number of process terminals to I/O module	16
• Number of terminals to AUX bus	0
• Number of add-on terminals	0
• Number of terminals with connection to P1 and P2 bus	2
Dimensions	
Width	15 mm
Height	74 mm
Depth	34 mm
Weights	
Weight, approx.	24 g

Technical specifications of the PotDis-TB-n.c.-G

Article number	6ES7193-6TP00-0TN0
General information	
Product type designation	PotDis TB n.c. G, PU 1
Supply voltage	
Rated value (DC)	
• for process terminals	48 V; max.
Rated value (AC)	
• for process terminals	240 V; max.
external protection for power supply lines	Yes; 10 A miniature circuit breaker with type B or C tripping characteristic for the respective rated supply voltage
Current carrying capacity	
up to 60 °C, max.	10 A
For P1 and P2 bus, max.	10 A
For AUX bus, max.	10 A
Potential separation	
between process terminals and supply voltage	Yes
Ambient conditions	
Ambient temperature during operation	
• horizontal installation, min.	0 °C; No condensation
• horizontal installation, max.	60 °C
• vertical installation, min.	0 °C; No condensation
• vertical installation, max.	50 °C
• ceiling installation, min.	0 °C; No condensation
• ceiling installation, max.	50 °C
• floor installation, min.	0 °C; No condensation
• floor installation, max.	50 °C
Altitude during operation relating to sea level	
• Ambient air temperature-barometric pressure-altitude	On request: Ambient temperatures lower than 0 °C (without condensation) and/or installation altitudes greater than 2 000 m
Accessories	
Color coding labels	
• for process terminals	CC10

Article number	6ES7193-6TP00-0TN0
Connection method	
Terminals	
• Terminal type	Push-in terminal
• Conductor cross-section, min.	0.14 mm²; 0.2 mm² without wire end ferrule
• Conductor cross-section, max.	2.5 mm²; 1.5 mm² with wire end ferrule
• Number of process terminals to I/O module	16
• Number of terminals to AUX bus	0
• Number of add-on terminals	0
• Number of terminals with connection to P1 and P2 bus	2
Dimensions	
Width	15 mm
Height	74 mm
Depth	34 mm
Weights	
Weight, approx.	24 g

Technical specifications of the PotDis-TB-BR-W terminal block

Article number	6ES7193-6TP00-0TP0
General information	
Product type designation	PotDis TB BR-W, PU 1
Supply voltage	
Rated value (DC)	
• for process terminals	48 V; max.
Rated value (AC)	
• for process terminals	240 V; max.
external protection for power supply lines	Yes; 10 A miniature circuit breaker with type B or C tripping characteristic for the respective rated supply voltage
Current carrying capacity	
up to 60 °C, max.	10 A
For P1 and P2 bus, max.	10 A
For AUX bus, max.	10 A
For process terminals, max.	10 A
Potential separation	
between process terminals and supply voltage	Yes
Ambient conditions	
Ambient temperature during operation	
• horizontal installation, min.	0 °C; No condensation
• horizontal installation, max.	60 °C
• vertical installation, min.	0 °C; No condensation
• vertical installation, max.	50 °C
• ceiling installation, min.	0 °C; No condensation
• ceiling installation, max.	50 °C
• floor installation, min.	0 °C; No condensation
• floor installation, max.	50 °C
Altitude during operation relating to sea level	
• Ambient air temperature-barometric pressure-altitude	On request: Ambient temperatures lower than 0 °C (without condensation) and/or installation altitudes greater than 2 000 m
Accessories	
Color coding labels	
• for process terminals	CC10, CC11, CC12, CC13

Article number	6ES7193-6TP00-0TP0
Connection method	
Terminals	
• Terminal type	Push-in terminal
• Conductor cross-section, min.	0.14 mm²; 0.2 mm² without wire end ferrule
• Conductor cross-section, max.	2.5 mm²; 1.5 mm² with wire end ferrule
• Number of process terminals to I/O module	16
• Number of terminals to AUX bus	0
• Number of add-on terminals	0
• Number of terminals with connection to P1 and P2 bus	2
Dimensions	
Width	15 mm
Height	74 mm
Depth	34 mm
Weights	
Weight, approx.	24 g

Dimension drawings of I/O modules

A

Dimension drawing BU15-P16+A10+2D, BU15-P16+A10+2B, BU15-P16+A0+12D/T, BU15-P16+A0+12B/T

The figure below shows the dimension drawing of the BU15-P16+A10+2D with plugged-in I/O module as an example.

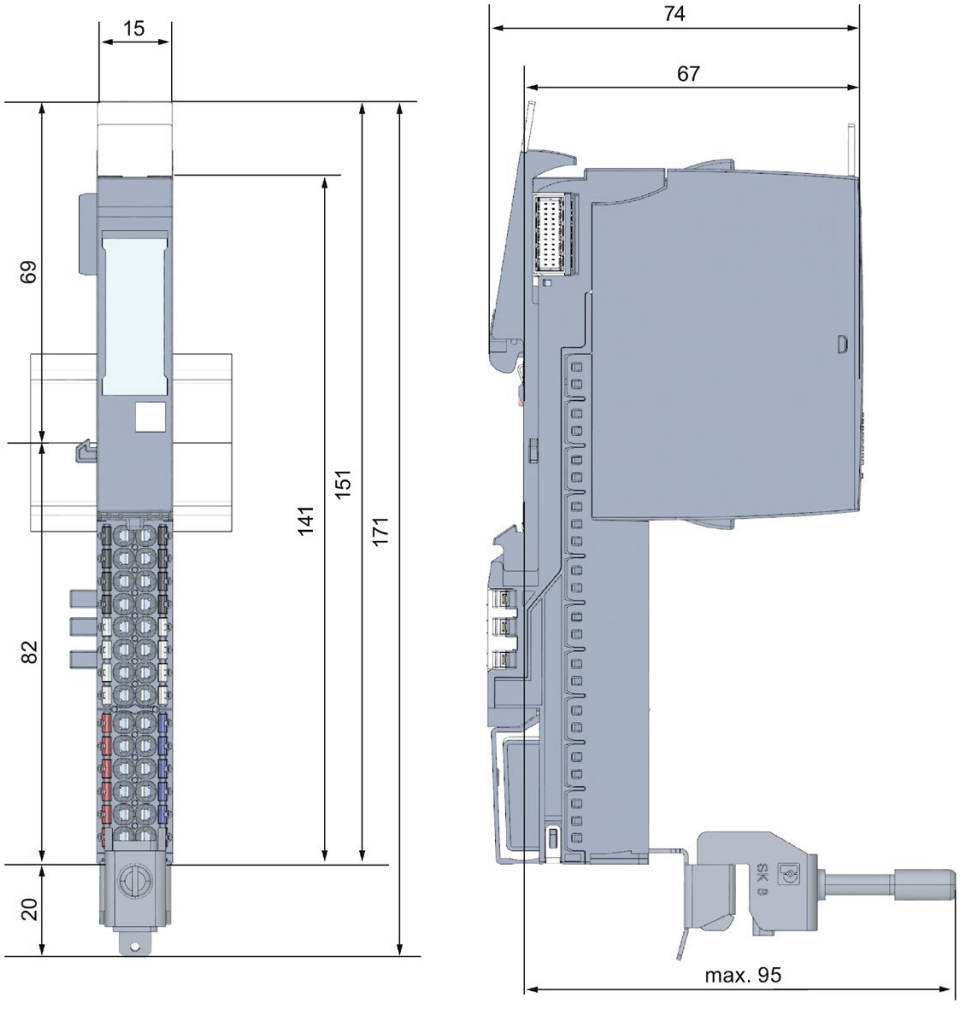

Figure A-1 Dimension drawing BU15-P16+A10+2D

Dimension drawing BU15-P16+A0+2D, BU15-P16+A0+2B, BU15-P16+A0+2D/T, BU15-P16+A0+2B/T

The figure below shows the dimension drawing of the BU15-P16+A0+2D with plugged-in I/O module as an example.

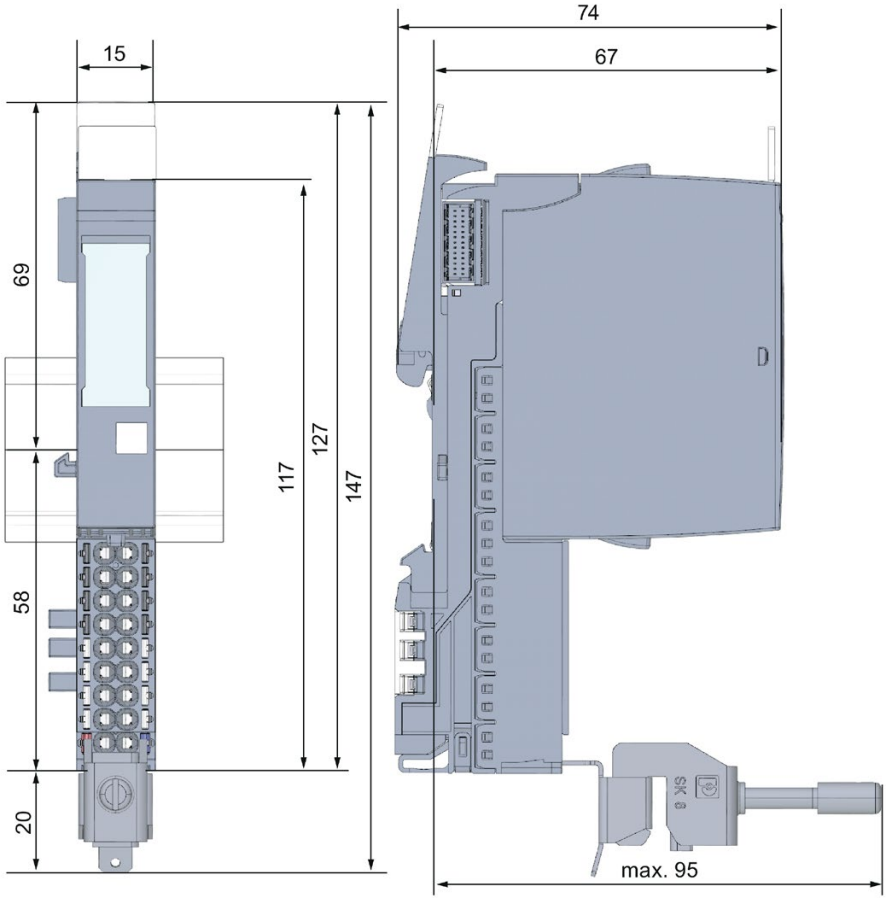

Figure A-2 Dimension drawing BU15-P16+A0+2D

Dimension drawing BU20-P6+A2+4D, BU20-P6+A2+4B, BU20-P12+A4+0B, BU20-P12+A0+0B, BU20-P12+A0+4B, BU20-P8+A4+0B

The figure below shows the dimension drawing of the BU20-P12+A4+0B with plugged-in I/O module as an example.

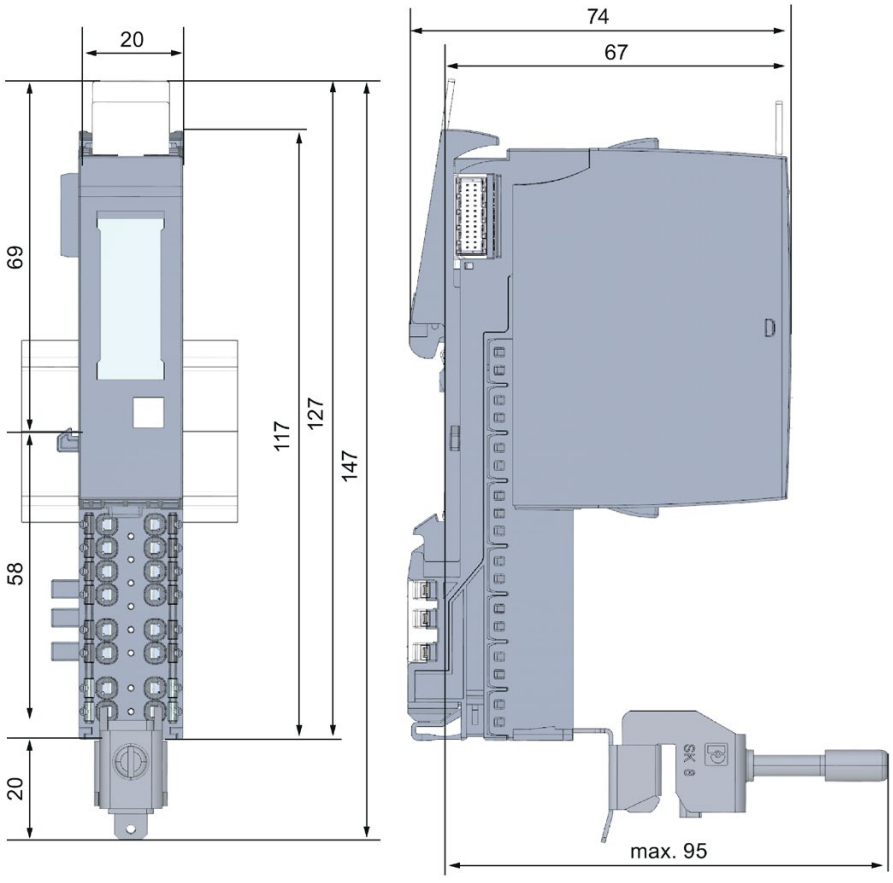

Figure A-3 Dimension drawing BU20-P12+A4+0B

Dimension drawing test probe for measurement tap

The figure below shows the dimension drawing of a suitable test probe for measurement tap at the BaseUnit.

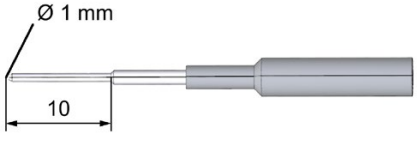

Figure A-4 Dimension drawing test probe

Dimension drawings of motor starters

B

Dimension drawing BU30-MS1, BU30-MS2, BU30-MS3, BU30-MS4, BU30-MS5, BU30-MS6

The figure below shows the dimension drawing of the BU30-MS-1 with plugged-in motor starter module as an example.

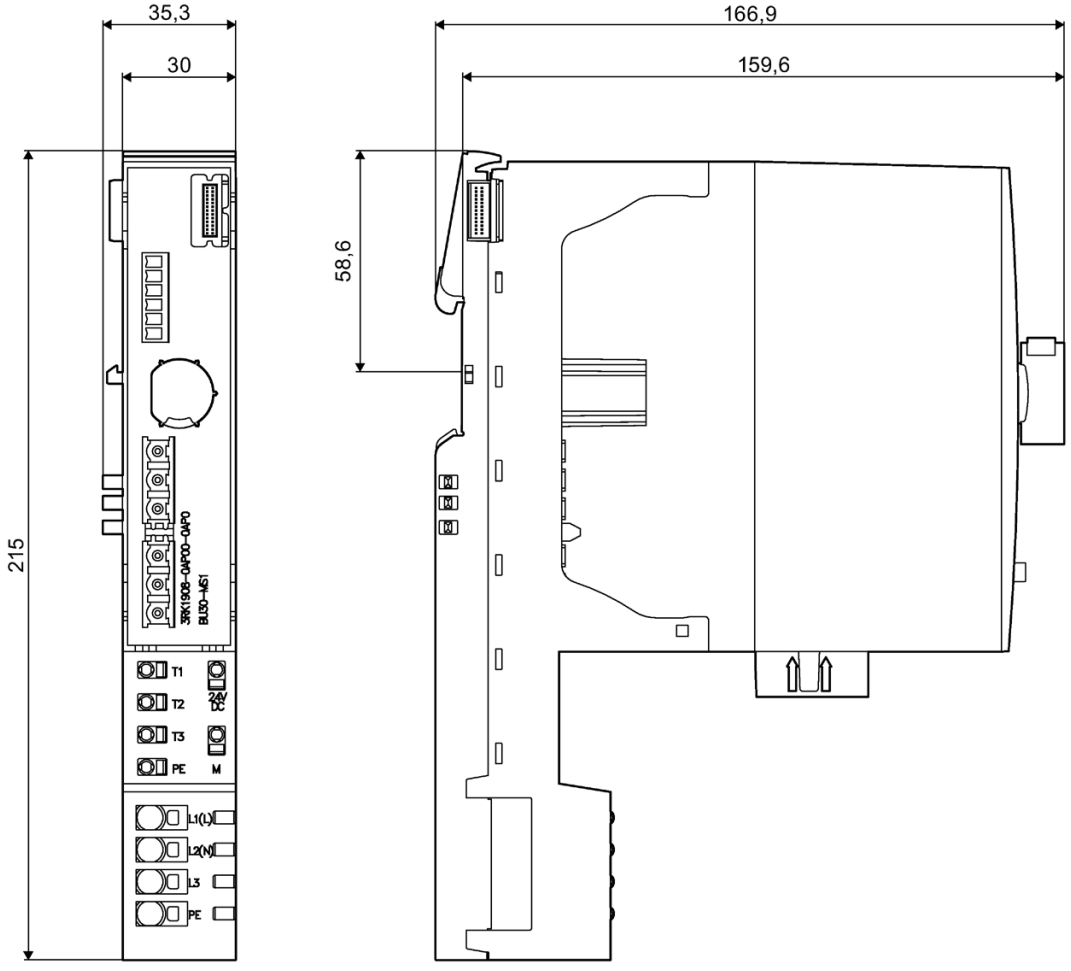

Figure B-1 Dimension drawing BU30-MS1

Dimension drawings of the potential distributor modules

C

Dimension drawing

The figure below shows the dimension drawing of the PotDis-BU-P1/B-R with plugged-in PotDis-TB-P1-R terminal block.

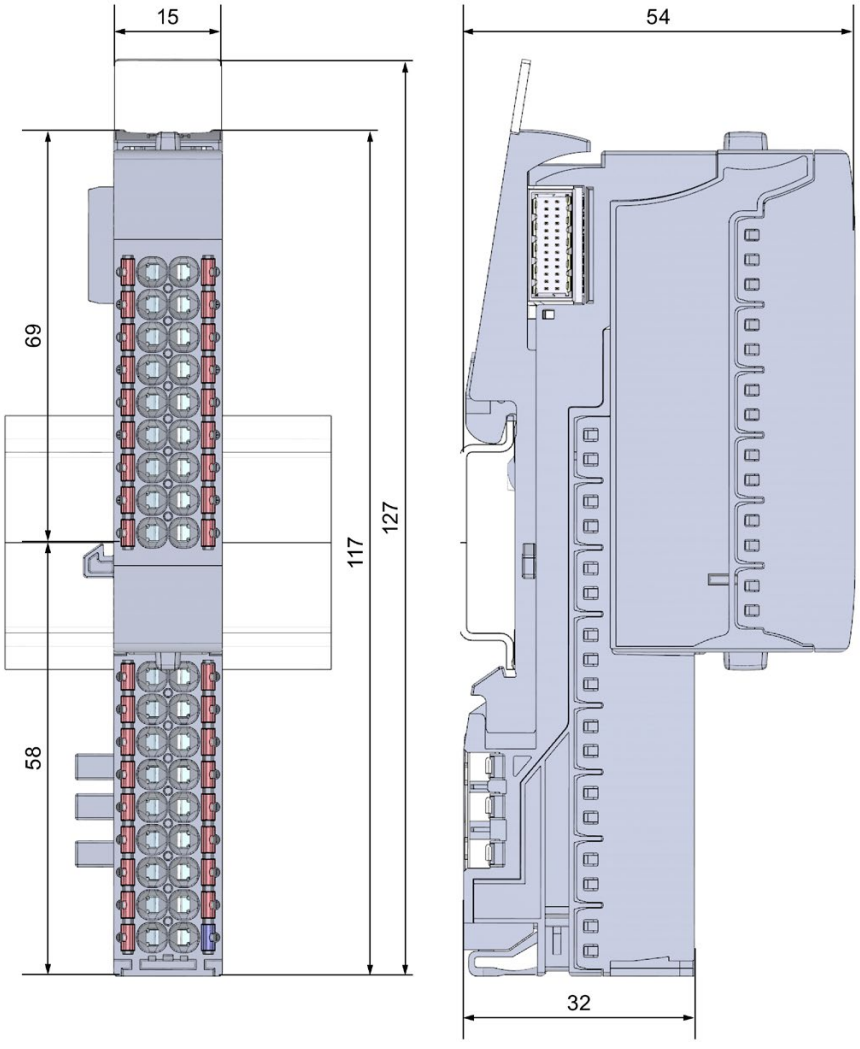

Figure C-1 Dimension drawing of PotDis BU-P1/B-R with plugged-in terminal block

Index

No index entries found.

SIEMENS

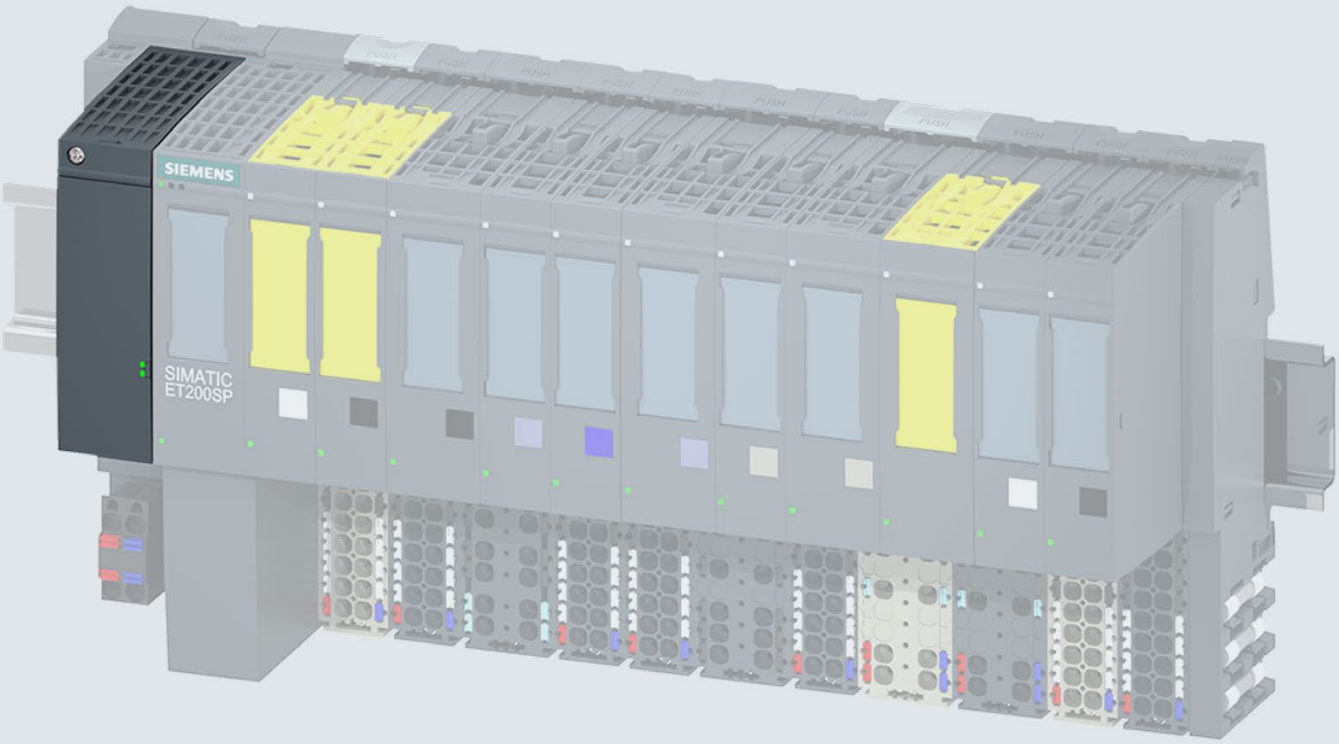

Manual

SIMATIC

ET 200SP

BusAdapter

Edition 03/2018

support.industry.siemens.com

SIEMENS

SIMATIC

ET 200SP BusAdapter

Manual

Preface 1

Guide 2

Product overview 3

BusAdapter BA 2xRJ45 4

BusAdapter BA 2xFC 5

BusAdapter BA 2xSCRJ 6

BusAdapter BA SCRJ/RJ45 7

BusAdapter BA SCRJ/FC 8

BusAdapter BA 2xLC 9

BusAdapter BA LC/RJ45 10

BusAdapter BA LC/FC 11

Strain relief 12

Dimension drawings A

Accessories B

03/2018

A5E41449003-AA

Legal information

Warning notice system

This manual contains notices you have to observe in order to ensure your personal safety, as well as to prevent damage to property. The notices referring to your personal safety are highlighted in the manual by a safety alert symbol, notices referring only to property damage have no safety alert symbol. These notices shown below are graded according to the degree of danger.

⚠ DANGER

indicates that death or severe personal injury **will** result if proper precautions are not taken.

⚠ WARNING

indicates that death or severe personal injury **may** result if proper precautions are not taken.

⚠ CAUTION

indicates that minor personal injury can result if proper precautions are not taken.

NOTICE

indicates that property damage can result if proper precautions are not taken.

If more than one degree of danger is present, the warning notice representing the highest degree of danger will be used. A notice warning of injury to persons with a safety alert symbol may also include a warning relating to property damage.

Qualified Personnel

The product/system described in this documentation may be operated only by **personnel qualified** for the specific task in accordance with the relevant documentation, in particular its warning notices and safety instructions. Qualified personnel are those who, based on their training and experience, are capable of identifying risks and avoiding potential hazards when working with these products/systems.

Proper use of Siemens products

Note the following:

⚠ WARNING

Siemens products may only be used for the applications described in the catalog and in the relevant technical documentation. If products and components from other manufacturers are used, these must be recommended or approved by Siemens. Proper transport, storage, installation, assembly, commissioning, operation and maintenance are required to ensure that the products operate safely and without any problems. The permissible ambient conditions must be complied with. The information in the relevant documentation must be observed.

Trademarks

All names identified by ® are registered trademarks of Siemens AG. The remaining trademarks in this publication may be trademarks whose use by third parties for their own purposes could violate the rights of the owner.

Disclaimer of Liability

We have reviewed the contents of this publication to ensure consistency with the hardware and software described. Since variance cannot be precluded entirely, we cannot guarantee full consistency. However, the information in this publication is reviewed regularly and any necessary corrections are included in subsequent editions.

Siemens AG
Division Digital Factory
Postfach 48 48
90026 NÜRNBERG
GERMANY

A5E41449003-AA
℗ 02/2018 Subject to change

Copyright © Siemens AG 2018.
All rights reserved

Table of contents

1 Preface 5
2 Guide 8
2.1 BusAdapter guide 8
3 Product overview 11
4 BusAdapter BA 2xRJ45 14
4.1 Product overview 14
4.2 Connecting 15
4.3 Diagnostics 18
4.4 Technical specifications 19
5 BusAdapter BA 2xFC 20
5.1 Product overview 20
5.2 Connecting 21
5.3 Diagnostics 25
5.4 Technical specifications 26
6 BusAdapter BA 2xSCRJ 27
6.1 Product overview 27
6.2 Connecting 28
6.3 Diagnostics 32
6.4 Technical specifications 34
7 BusAdapter BA SCRJ/RJ45 35
7.1 Product overview 35
7.2 Connecting 36
7.3 Diagnostics 38
7.4 Technical specifications 40
8 BusAdapter BA SCRJ/FC 41
8.1 Product overview 41
8.2 Connecting 42
8.3 Diagnostics 44
8.4 Technical specifications 46

9 BusAdapter BA 2xLC 47
9.1 Product overview 47
9.2 Connecting 48
9.3 Diagnostics 52
9.4 Technical specifications 53
10 BusAdapter BA LC/RJ45 54
10.1 Product overview 54
10.2 Connecting 55
10.3 Diagnostics 57
10.4 Technical specifications 58
11 BusAdapter BA LC/FC 59
11.1 Product overview 59
11.2 Connecting 60
11.3 Diagnostics 62
11.4 Technical specifications 63
12 Strain relief 64
12.1 Product overview 64
12.2 Installing 65
A Dimension drawings 67
A.1 BusAdapter dimension drawings 67
A.2 Strain relief dimension drawings 67
B Accessories 68
B.1 Accessories 68

Preface

1

Purpose of the manual

This manual provides all the necessary information for configuring, installing, connecting and commissioning the BusAdapter.

Basic knowledge required

The following knowledge is required in order to understand the manual:

- General knowledge in the field of automation technology
- Knowledge of the use of computers or PC -like tools (e.g. programming devices) under the Windows operating system.
- Knowledge of working with STEP 7. You can find information on this topic in the STEP 7 online help.

Range of validity of this manual

The manual describes the components based on the data valid at the time of its release. We reserve the right to include up-to-date Product Information with new components and new versions of components.

Recycling and disposal

The BusAdapter can be recycled due to their low pollutant content. For environmentally sustainable recycling and disposal of your old device, please contact a company certified for the disposal of electronic waste.

Security information

Siemens provides products and solutions with industrial security functions that support the secure operation of plants, systems, machines and networks.

In order to protect plants, systems, machines and networks against cyber threats, it is necessary to implement – and continuously maintain – a holistic, state-of-the-art industrial security concept. Siemens' products and solutions constitute one element of such a concept.

Customers are responsible for preventing unauthorized access to their plants, systems, machines and networks. Such systems, machines and components should only be connected to an enterprise network or the internet if and to the extent such a connection is necessary and only when appropriate security measures (e.g. firewalls and/or network segmentation) are in place.

For additional information on industrial security measures that may be implemented, please visit (https://www.siemens.com/industrialsecurity).

Siemens' products and solutions undergo continuous development to make them more secure. Siemens strongly recommends that product updates are applied as soon as they are available and that the latest product versions are used. Use of product versions that are no longer supported, and failure to apply the latest updates may increase customers' exposure to cyber threats.

To stay informed about product updates, subscribe to the Siemens Industrial Security RSS Feed under (https://www.siemens.com/industrialsecurity).

Siemens Industry Online Support

You can find current information on the following topics quickly and easily here:

- **Product support**

  All the information and extensive know-how on your product, technical specifications, FAQs, certificates, downloads, and manuals.

- **Application examples**

  Tools and examples to solve your automation tasks – as well as function blocks, performance information and videos.

- **Services**

  Information about Industry Services, Field Services, Technical Support, spare parts and training offers.

- **Forums**

  For answers and solutions concerning automation technology.

- **mySupport**

  Your personal work area in Industry Online Support for messages, support queries, and configurable documents.

This information is provided by the Siemens Industry Online Support on the Internet (http://www.siemens.com/automation/service&support).

Industry Mall

The Industry Mall is the catalog and order system of Siemens AG for automation and drive solutions on the basis of Totally Integrated Automation (TIA) and Totally Integrated Power (TIP).

You can find catalogs for all automation and drive products on the Internet (https://mall.industry.siemens.com).

Guide 2

2.1 BusAdapter guide

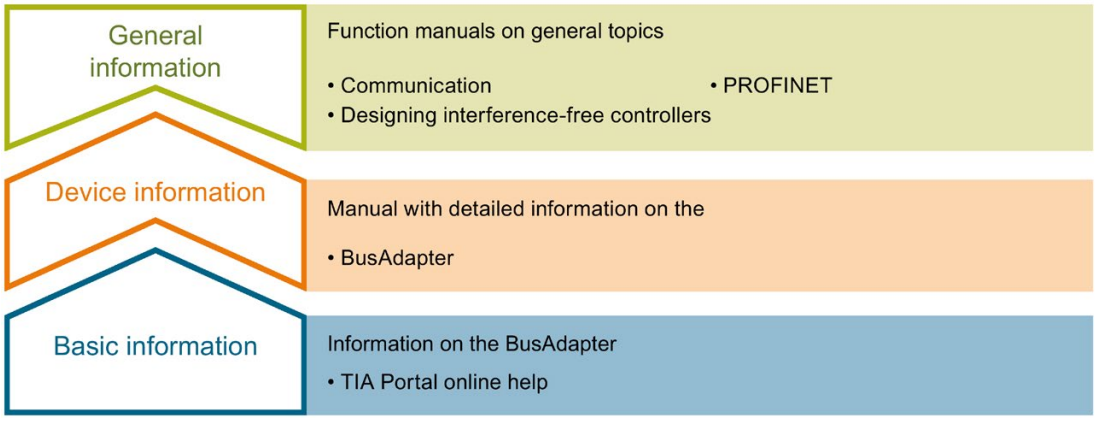

Device information

The BusAdapter manual contains information, for example, on properties, assembling, connecting, configuring and parameter assignment, alarms and diagnostics and technical specifications of the BusAdapter.

General information

The function manuals contain detailed descriptions on general topics such as PROFINET and communication.

You can download the documentation free of charge from the Internet (https://support.industry.siemens.com/cs/ww/de/view/109742709).

"mySupport"

With "mySupport", your personal work area, you make the most of your Industry Online Support.

In "mySupport" you can store filters, favorites and tags, request CAx data and put together your personal library in the Documentation area. Furthermore, your data is automatically filled into support requests and you always have an overview of your current requests.

You must register once to use the full functionality of "mySupport".

You can find "mySupport" on the Internet (https://support.industry.siemens.com/My/ww/de/).

"mySupport" - Documentation

In the Documentation area of "mySupport", you have the possibility to combine complete manuals or parts of them to make your own manual.
You can export the manual in PDF format or in an editable format.

Your documentation is available in My Documentation Manager (http://support.industry.siemens.com/My/ww/de/documentation).

"mySupport" - CAx data

In the CAx data area in "mySupport", you can access the current product data for your CAx or CAe system.

You configure your own download package with a few clicks.

In doing so you can select:

- Product images, 2D dimension drawings, 3D models, internal circuit diagrams, EPLAN macro files
- Manuals, characteristics, operating manuals, certificates
- Product master data

You can find "mySupport" - CAx data on the Internet (http://support.industry.siemens.com/my/ww/de/CAxOnline).

Application examples

The application examples support you with various tools and examples for solving your automation tasks. Solutions are shown in interplay with multiple components in the system - separated from the focus on individual products.

Additional information can be found on the Internet under Application examples (https://support.industry.siemens.com/sc/ww/de/sc/2054).

SIMATIC Automation Tool

You can use the SIMATIC Automation Tool to perform commissioning and maintenance activities simultaneously on various SIMATIC S7 stations as a bulk operation independent of the TIA Portal.

The SIMATIC Automation Tool provides a multitude of functions:

- Scanning of a PROFINET/Ethernet system network and identification of all connected CPUs
- Address assignment (IP, subnet, gateway) and station name (PROFINET device) to a CPU
- Transfer of the date and the programming device/PC time converted to UTC time to the module
- Program download to CPU
- RUN/STOP mode switchover
- CPU localization by means of LED flashing
- Reading out of CPU error information
- Reading of the CPU diagnostic buffer
- Reset to factory settings
- Firmware update of the CPU and connected modules

You can find the SIMATIC Automation Tool on the Internet (https://support.industry.siemens.com/cs/ww/de/view/98161300).

PRONETA

With SIEMENS PRONETA (PROFINET network analysis), you analyze the plant network during commissioning. PRONETA features two core functions:

- The topology overview independently scans PROFINET and all connected components.
- PRONETA also scans: configuration of the station name, IP subnet mask and identification and maintenance data (I&M1..3)

For more information, refer to SIEMENS PRONETA (https://support.industry.siemens.com/cs/ww/de/view/67460624).

Product overview

3

Introduction

The SIMATIC BusAdapters connect PROFINET IO to their ET 200SP system. You select the required connection technology and connection method for your process from the different versions of SIMATIC BusAdapter.

Supported PROFINET devices

The SIMATIC BusAdapters are used for:

- ET 200SP interface module and central processing unit (CPU and Open Controller)
- PN/PN Coupler
- Switches

Overview

The SIMATIC BusAdapters can be ordered in the following versions:

BusAdapter	Article number	Property	Figure
BA 2xRJ45	6ES7193-6AR00-0AA0	PROFINET BusAdapter with standard Ethernet socket for standard RJ45 connector	
BA 2xFC	6ES7193-6AF00-0AA0	PROFINET BusAdapter with FastConnect Ethernet connection for direct connection of the bus cable for applications with increased EMC and vibration/shock load	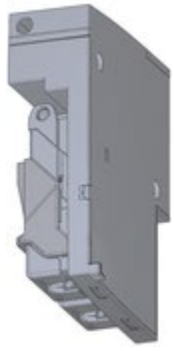

BusAdapter	Article number	Property	Figure
BA 2xSCRJ	6ES7193-6AP00-0AA0	PROFINET BusAdapter with fiber-optic cable connection POF/PCF for SCRJ connector for applications with increased EMC and vibration/shock load as well as electrical potential differences between two stations	
BA SCRJ/RJ45	6ES7193-6AP20-0AA0	Media converter, PROFINET BusAdapter with POF/PCF fiber-optic cable ⇔ standard RJ45 connector	
BA SCRJ/FC	6ES7 193-6AP40-0AA0	Media converter, PROFINET BusAdapter with POF/PCF fiber-optic cable ⇔ direct connection of bus cable	
BA 2xLC	6ES7193-6AG00-0AA0	PROFINET BusAdapter with glass fiber-optic cable connection for LC connector for applications with increased EMC and vibration/shock load as well as electrical potential differences between two stations	

BusAdapter	Article number	Property	Figure
BA LC/RJ45	6ES7193-6AG20-0AA0	Media converter, PROFINET BusAdapter with glass fiber-optic cable ⇔ standard RJ45 connector	
BA LC/FC	6ES7193-6AG40-0AA0	Media converter, PROFINET BusAdapter with glass fiber-optic cable ⇔ direct connection of bus cable	

See also

Strain relief (Page 64)

BusAdapter BA 2xRJ45

4

4.1 Product overview

Article number

6ES7193-6AR00-0AA0

View

Figure 4-1 BusAdapter BA 2×RJ45

Properties

- You connect PROFINET IO cable with RJ45 connector to the PROFINET device via the BusAdapter BA 2×RJ45. To do this, screw the BusAdapter BA 2×RJ45 to the PROFINET device and insert the PROFINET connecting cable.
- You loop through the PROFINET via the integrated 2-port switch.

4.2 Connecting

Installing the bus connector

Install the PROFINET connector according to the instructions in the PROFINET Installation Guide (http://www.profibus.com/).

Tools required

3 to 3.5 mm screwdriver, alternatively TX10 (torx).

Accessories required

- Connector:
  - IE FC RJ45 plug 180 2X2 (6GK1901-1BB10-2A)
  - IE FC RJ45 plug 180 4X2 (6GK1901-1BB12-2A)
- Cables:
  - IE FC TP standard cable (6XV1840-2A)
  - IE FC TP trailing cable (6XV1840-3AH10)
  - IE FC TP marine cable (6XV1840-4AH10)
  - IE FC TP robust cable (6XV1841-2)
  - IE TP torsion cable (6XV1870-2F)
- Please observe the specifications in the PROFINET Installation Guide (http://www.profibus.com/).

Pin assignment

The following table shows the signal name and description of the pin assignment of BusAdapter BA 2×RJ45.

Table 4- 1 PROFINET IO pin assignment with BusAdapter BA 2×RJ45

View	Signal name		Description
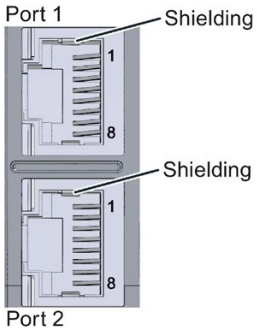	1	TD	Transmit Data +
	2	TD_N	Transmit Data –
	3	RD	Receive Data +
	4	TERM1	Termination Network 1
	5	TERM1	Termination Network 1
	6	RD_N	Receive Data –
	7	TERM2	Termination Network 2
	8	TERM2	Termination Network 1

Procedure

Watch video sequence "Connect BusAdapter BA 2xRJ45 to the ET 200SP interface module" (https://support.industry.siemens.com/cs/ww/de/view/95886218)

To connect PROFINET IO to the PROFINET device via the BusAdapter BA 2xRJ45, follow these steps:

1. Plug the BusAdapter BA 2×RJ45 into the PROFINET device.
2. Screw the BusAdapter BA 2×RJ45 to the PROFINET device (1 screw with 0.2 Nm tightening torque).
3. Plug the RJ45 bus connector into the PROFINET port on the BusAdapter BA 2×RJ45.

You can also swap steps 2 and 3.

BusAdapter BA 2×RJ45 installed

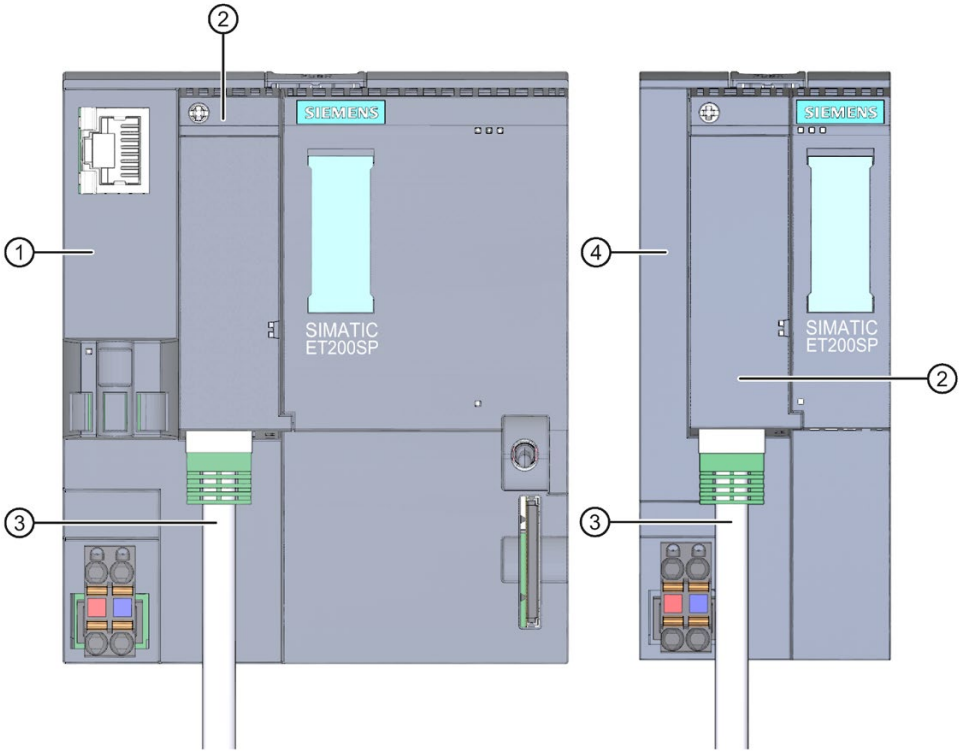

① CPU
② BusAdapter BA 2×RJ45
③ PROFINET connecting cable
④ Interface module

Figure 4-2 BusAdapter BA 2×RJ45 installed (using an ET 200SP CPU/interface module as an example)

Note

Installation guidelines for modules with PROFINET IO interfaces

Ensure that all devices are connected to the SELV/PELV power supply (or equivalent). Only then are you permitted to operate the modules with PROFINET IO interfaces in LAN networks (Local Area Networks).

A data transfer point that guarantees this degree of safety is prescribed for connection to the WAN (Wide Area Network).

4.3 Diagnostics

LEDs

The figure below shows the LEDs on the BusAdapter BA 2xRJ45:

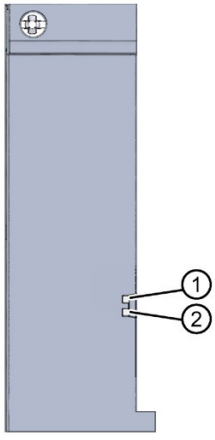

① LK1 (green)
② LK2 (green)

Figure 4-3 LEDs on the BusAdapter BA 2xRJ45

LK1/LK2 LEDs on the BusAdapter

Table 4- 2 Status and error displays

LED LK1/LK2	Meaning	Remedy
☐ off	There is no Ethernet connection between the PROFINET IO interface of your PROFINET device and a communication partner, e.g. IO controller.	Check whether the bus cable to the switch or IO controller is disconnected.
■ on	There is an Ethernet connection between the PROFINET IO interface of your PROFINET device and a communication partner, e.g. IO controller.	-
☼ flashes	The "Node flash test" is running. The RN/ER/MT LEDs are also flashing.	-

4.4 Technical specifications

Technical specifications of the BusAdapter BA 2×RJ45

Article number	6ES7193-6AR00-0AA0
Interfaces	
Number of PROFINET interfaces	1
PROFINET IO	
• RJ 45	Yes; 2 x
• FC (FastConnect)	No
• Number of SCRJ ports	0
• Number of LC ports	0
Cable length	
– Cu conductors	100 m
Dimensions	
Width	20 mm
Height	69.5 mm
Depth	59 mm
Weights	
Weight, approx.	46 g

BusAdapter BA 2xFC

5

5.1 Product overview

Article number

6ES7193-6AF00-0AA0

View

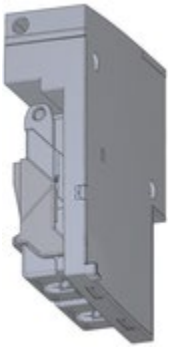

Figure 5-1 BusAdapter BA 2xFC

Properties

- You connect PROFINET IO cable with FastConnect connection method to the PROFINET device via the BusAdapter BA 2xFC. To do this, screw the BusAdapter BA 2xFC with the connected PROFINET connection cable in place on the PROFINET device.
- You loop through the PROFINET via the integrated 2-port switch.

5.2 Connecting

Installing the bus connector

Install the PROFINET connector according to the instructions in the PROFINET Installation Guide (http://www.profibus.com/).

Tools required

3 to 3.5 mm screwdriver, alternatively TX10 (torx).

Accessories required

- If you use Fast Connect Cable, we recommend the Industrial Ethernet Fast Connect Stripping Tool (6GK1901-1GA00) with green knife cassette (6GK1901-1B). This guarantees fast and safe stripping.
- Fast Connect Cable (recommended types):
  - IE FC TP Standard Cable GP 2x2 (6XV1840-2AH10)
  - IE FC TP Trailing Cable 2x2 (6XV1840-3AH10)
  - IE FC TP Marine Cable (6XV1840-4AH10)
  - IE FC TP Flexible Cable GP 2x2 (6XV1870-2B)
  - IE FC TP Trailing Cable 2x2 (6XV1870-2D)
  - IE TP Torsion Cable 2x2 (6XV1870-2F)
  - FC TP FRNC Cable GP (6XV1871-2F)
  - IE FC TP Food Cable GP 2x2 (6XV1871-2L)
  - IE FC TP Festoon Cable 2x2 (6XV1871-2S)
- Please observe the specifications in the PROFINET Installation Guide (http://www.profibus.com/).

Pin assignment

The following table shows the signal name and description of the pin assignment of BusAdapter BA 2×FC:.

Table 5- 1 PROFINET IO pin assignment with BusAdapter BA 2×FC

View	Signal name		Description
Port 1 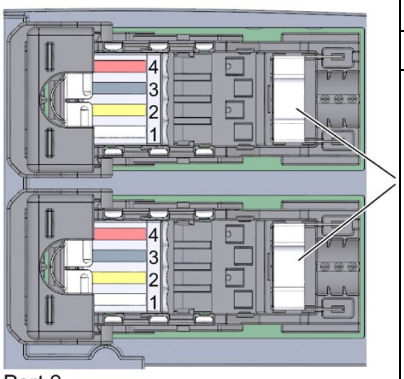 Port 2	1	RD_N	Receive Data -
	2	TD_N	Transmit Data -
	3	RD	Receive Data +
	4	TD	Transmit Data +

Procedure

Watch the video sequence "Connecting the BusAdapter BA 2xFC to the interface module" (https://support.industry.siemens.com/cs/ww/de/view/95886218)

To connect PROFINET IO to the PROFINET device via the BusAdapter BA 2xFC, follow these steps:

1. Strip insulation from the sheath of the PROFINET connecting cable as follows:

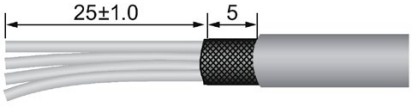

Figure 5-2 PROFINET connecting cable

2. Pull back the locking slide and fold up the cover of the connection element.
3. Pull up the wire guide as far as it will go.
4. Insert the unstripped single cores of the PROFINET connecting cable into the cable routing as far as it will go. **Firmly** press down the wire guide as far as it will go. Please refer to the color coding.

5. Close the cover of the connection element. Then push the locking slide forwards as far as it will go.
6. Screw the BusAdapter BA 2×FC to the PROFINET device (1 screw with 0.2 Nm tightening torque). To do this, use a screwdriver with a 3 to 3.5 mm blade, alternatively TX10.

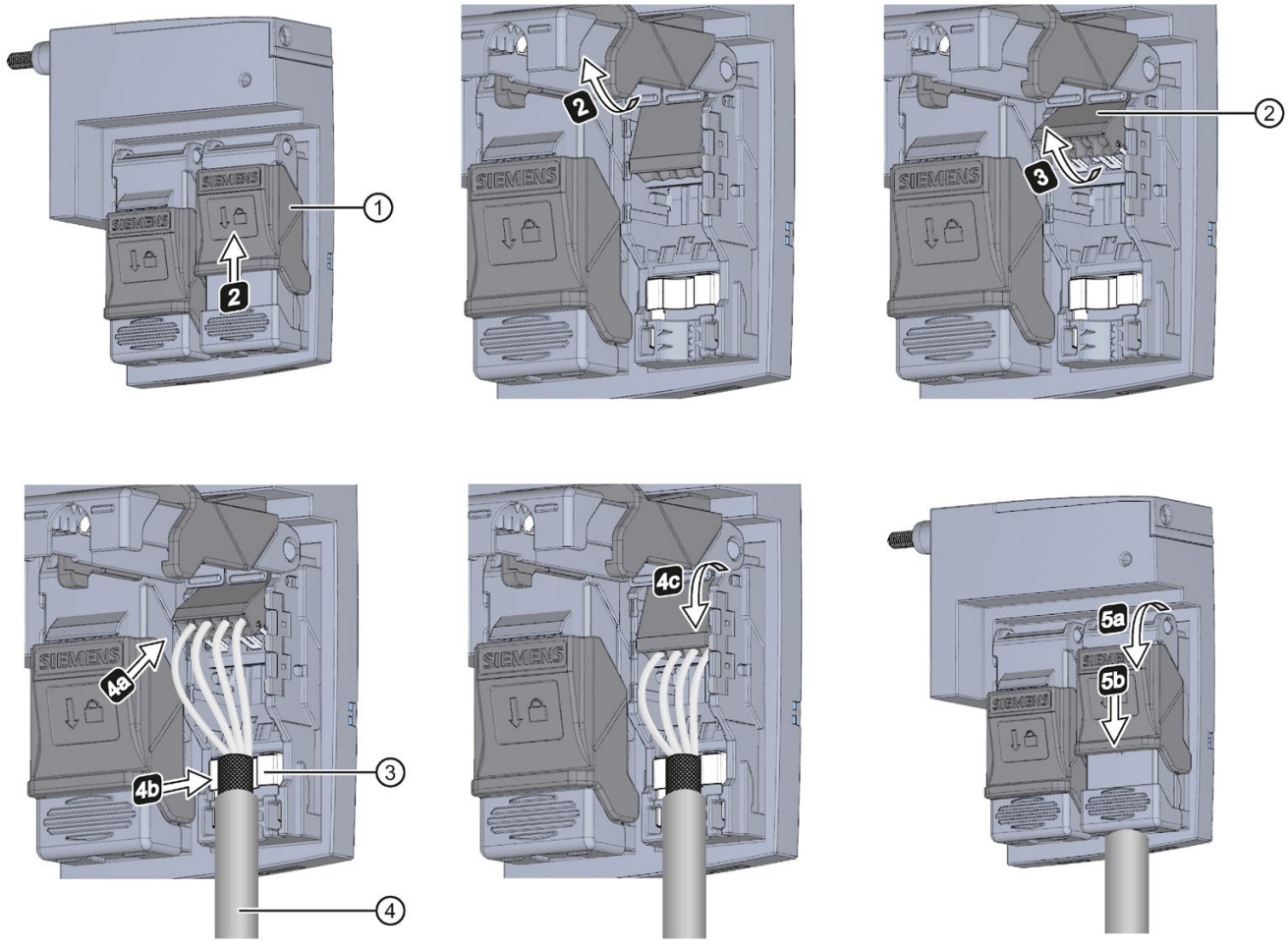

① Locking slide
② Wire guide
③ Shield contact
④ PROFINET connecting cable

Figure 5-3 Connection of the PROFINET IO BusAdapter BA 2×FC

BusAdapter BA 2xFC installed

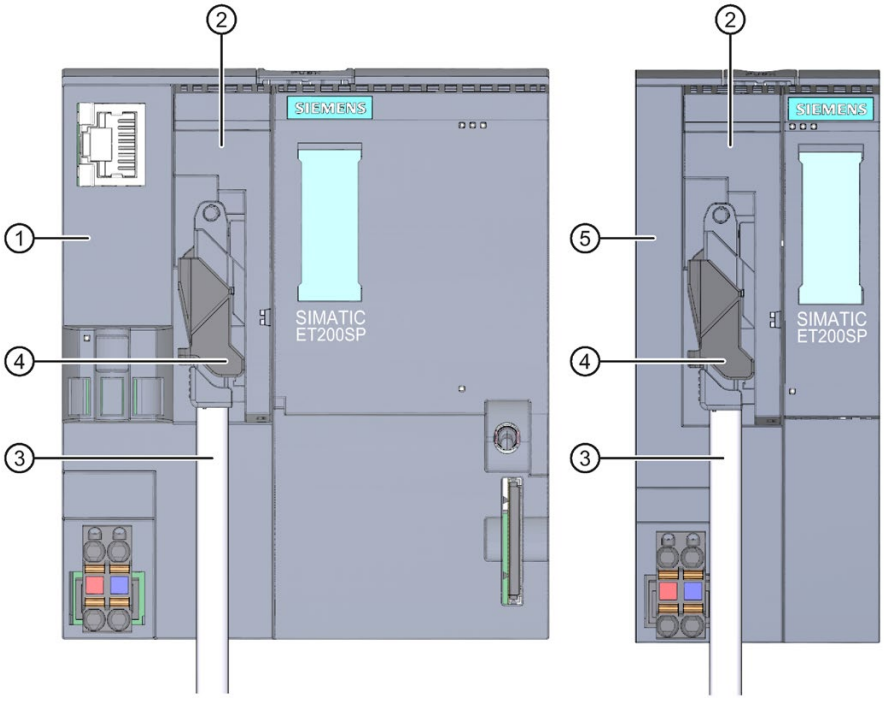

① CPU
② BA 2xFC BusAdapter
③ PROFINET connecting cable
④ Connection element

Figure 5-4 BusAdapter BA 2xFC installed (using an ET 200SP CPU/interface module as an example)

Note

Installation guidelines for modules with PROFINET IO interfaces

Ensure that all devices are connected to the SELV/PELV power supply (or equivalent). Only then are you permitted to operate the modules with PROFINET IO interfaces in LAN networks (Local Area Networks).

A data transfer point that guarantees this degree of safety is prescribed for connection to the WAN (Wide Area Network).

5.3 Diagnostics

LEDs

The figure below shows the LEDs on the BusAdapter BA 2xFC:

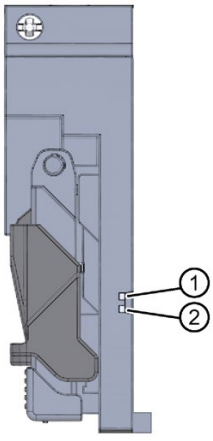

① LK1 (green)
② LK2 (green)

Figure 5-5 LEDs on the BusAdapter BA 2xFC

LK1/LK2 LEDs on the BusAdapter

Table 5- 2 Status and error displays

LED LK1/LK2	Meaning	Remedy
☐ off	There is no Ethernet connection between the PROFINET IO interface of your PROFINET device and a communication partner, e.g. IO controller.	Check whether the bus cable to the switch or IO controller is disconnected.
■ on	There is no Ethernet connection between the PROFINET IO interface of your PROFINET device and a communication partner, e.g. IO controller.	-
☼ flashes	The "Node flash test" is running. The RN/ER/MT LEDs are also flashing.	-

5.4 Technical specifications

Technical specifications of the BusAdapters BA 2×FC

Article number	6ES7193-6AF00-0AA0
Interfaces	
Number of PROFINET interfaces	1
PROFINET IO	
• FC (FastConnect)	Yes; 2 x
Cable length	
– Cu conductors	100 m
Dimensions	
Width	20 mm
Height	69.5 mm
Depth	59 mm
Weights	
Weight, approx.	53 g

BusAdapter BA 2xSCRJ

6

6.1 Product overview

Article number

6ES7193-6AP00-0AA0

View

Figure 6-1 BusAdapter BA 2xSCRJ

Properties

- Using BusAdapter BA 2×SCRJ , you connect PROFINET IO to the PROFINET device optically with fiber-optic cables via an SCRJ connector. To do this, screw the BusAdapter BA 2×SCRJ to the PROFINET device and plug in the SCRJ connector.
- You loop through the PROFINET via the integrated 2-port switch.
- SCRJ connector is suitable for POF and PCF.

6.2 Connecting

Installing the bus connector

Install the PROFINET connector according to the instructions in the PROFINET Installation Guide (http://www.profibus.com/).

Tools required

3 to 3.5 mm screwdriver, alternatively TX10 (torx).

Accessories required

- Connector for PROFINET connection: IE SCRJ POF Plug
- Fiber-optic cable:
  - IE POF standard cable (6XV1874-2A)
  - IE POF trailing cable (6XV1874-2B)
  - IE PCF standard cable (6XV1861-2A)
  - IE PCF trailing cable (6XV1861-2C)
  - IE PCF trailing cable, GI (6XV1861-2D)

Requirements

- Prepare the IE POF cables with the connectors IE SCRJ POF Plug or IE SC RJ PCF Plug.

  You will find more Instructions in the installation instructions:

  – POF fiber-optic cables with IE SCRJ POF plugs (A5E00351141).

  – PCF fiber-optic cables with IE SCRJ PCF plugs (A5E00835119).
- When installing the fiber-optic cable, make sure the bending radius is not less than permitted:

  – IE POF/PCF standard cable: 150 mm

  – IE POF/PCF trailing cable: 60 mm
- The maximum lengths of the fiber-optic cables are as follows:

  – IE POF standard cable: 50 m

  – IE POF trailing cable: 50 m

  – IE POF standard cable: 100 m

  – IE PCF trailing cable: 100 m

  – IE PCF trailing cable, GI: 250 m
- When the PROFINET device is the last device of the fiber-optic cable network, the unoccupied fiber-optic cable interface must be closed with a blanking plug. When the modules ship, the blanking plugs are inserted in the PROFINET sockets of the BusAdapter.

Pin assignment

The following table shows the signal name and description of the pin assignment of BusAdapter BA 2×SCRJ.

Table 6- 1 PROFINET IO pin assignment with BusAdapter BA 2×SCRJ

View	Signal name	Description
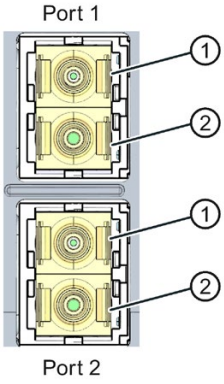	①	Receive Data
	②	Transmit Data

Procedure

1. Plug the BusAdapter BA 2×SCRJ into the PROFINET device.
2. Screw the BusAdapter BA 2×SCRJ to the PROFINET device (1 screw with 0.2 Nm tightening torque). To do this, use a screwdriver with a 3 to 3.5 mm blade, alternatively TX10.
3. Remove the blanking plugs from the PROFINET sockets.
4. Hold the prepared connector by the housing. Insert it into the PROFINET socket on the BusAdapter BA 2xLC until you hear it click into place. The coding of the connectors ensures a safe connection.

⚠ CAUTION

Risk of damage to eyes

Do not look directly into the opening of the optical transmitter diodes. The emitted light beam damages your eyes.

You can swap steps 3 and 4.

BusAdapter BA 2×SCRJ installed

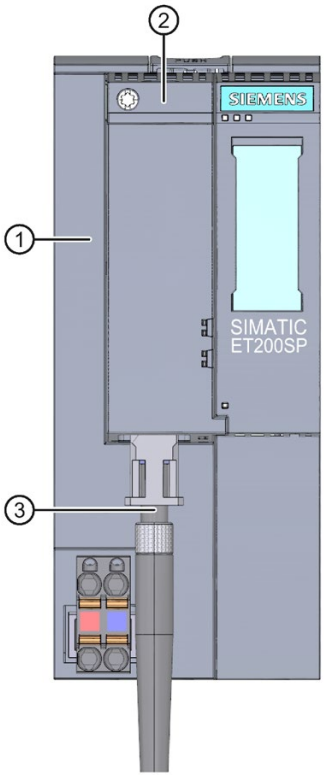

① Interface module
② BusAdapter BA 2xSCRJ
③ PROFINET connecting cable (fiber-optic cable)

Figure 6-2 BusAdapter BA 2×SCRJ connected to interface module (using ET 200SP interface module as an example)

Reusing used fiber-optic cables

Note

Shorten both fiber-optic cores by the amount of the curved lengths and reassemble the connectors. This will prevent any attenuation losses caused by re-bent, heavily stressed portions of the fiber-optic cores.

Reference

For more information on the installation guidelines for fiber-optic cables, refer to the SIMATIC NET PROFIBUS Network Manual (https://support.industry.siemens.com/cs/de/de/view/1172302).

6.3 Diagnostics

LEDs

The figure below shows the LED display on the BusAdapter BA 2xSCRJ:

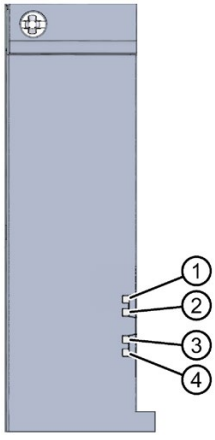

① LK1 (green)
② MT1 (yellow)
③ LK2 (green)
④ MT2 (yellow)

Figure 6-3 LEDs on the BusAdapter BA 2xSCRJ

LK1/LK2 and MT1/MT2 LEDs on the BusAdapter

Table 6- 2 Status and error displays

LED		Meaning	Remedy
LK1/LK2	MT1/MT2		
□ off	Not relevant	There is no Ethernet connection between the PROFINET IO interface of your PROFINET device and a communication partner, e.g. IO controller.	Check whether the bus cable to the switch or IO controller is disconnected.
■ on	Not relevant	There is an Ethernet connection between the PROFINET IO interface of your PROFINET device and a communication partner, e.g. IO controller.	-
☼ flashes	Not relevant	The "Node flash test" is running. The RN/ER/MT LEDs are also flashing.	-
Not relevant	□ off	No error	-
Not relevant	■ on	• Fiber-optic error • Maintenance demanded: attenuation through the fiber-optic cable is already so high that operation will soon no longer be possible.	Causes and measures for the transmission route: • Replace the fiber-optic cable if damaged or aged. • Ensure correct installation of the PROFINET plugs or PROFINET connectors. • Adhere to maximum length of 50 m for POF cable or 100 m for PCF cable. • Ensure that the FOC connectors fit securely.

6.4 Technical specifications

Technical specifications of BusAdapter BA 2×SCRJ

Article number	6ES7193-6AP00-0AA0
Interfaces	
Number of PROFINET interfaces	1; 2 ports (switch) SCRJ FO
PROFINET IO	
• RJ 45	No
• FC (FastConnect)	No
• Number of SCRJ ports	2
• Number of LC ports	0
Cable length	
– PCF	100 m
– Plastic FOC (POF)	50 m
– PCF-GI	250 m
Dimensions	
Width	20 mm
Height	69.5 mm
Depth	59 mm
Weights	
Weight, approx.	50 g

BusAdapter BA SCRJ/RJ45

7

7.1 Product overview

Article number

6ES7193-6AP20-0AA0

View

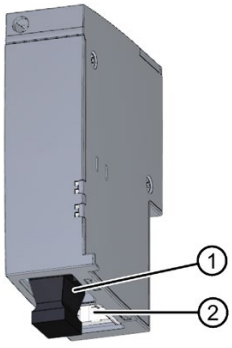

① Fiber-optic cable SCRJ
② RJ45

Figure 7-1 BusAdapter BA SCRJ/RJ45

Properties

You connect PROFINET IO connection cables to the PROFINET device via the BusAdapter BA SCRJ/RJ45:

- Optically with fiber-optic cables (FOC) with an SCRJ connector to port 1
- Electrically with a standard RJ45 connector to port 2

To do this, screw the BusAdapter BA SCRJ/RJ45 to the PROFINET device and plug in the SCRJ connector or the RJ45 connector.

You can loop through PROFINET IO via the integrated 2-port switch. You can use any port of the BusAdapter for feeding or for looping through. The integrated media converter converts the signals automatically.

7.2 Connecting

Installing the bus connector

Install the PROFINET connector in accordance with the instructions in the PROFINET Installation Guide (http://www.profibus.com/).

Connecting the SCRJ connector

You can find more information about the required tools, accessories, requirements and procedures in the section Connecting BusAdapter BA 2×SCRJ (Page 28).

Connecting the RJ45 connector

You can find more information about the required tools, accessories and procedures in the section Connecting BusAdapter BA 2×RJ45 (Page 15).

Pin assignment

The following table shows the signal names and description of the pin assignment for the BusAdapter BA SCRJ/RJ45:

Table 7- 1 PROFINET IO pin assignment with BusAdapter BA SCRJ/RJ45

View	Signal name		Description
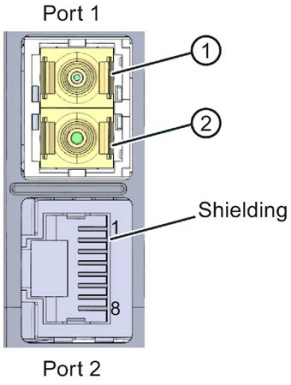	①		Receive Data
	②		Transmit Data
	1	TD	Transmit Data +
	2	TD_N	Transmit Data -
	3	RD	Receive Data +
	4	TERM1	Termination Network 1
	5	TERM1	Termination Network 1
	6	RD_N	Receive Data -
	7	TERM2	Termination Network 2
	8	TERM2	Termination Network 2

BA SCRJ/RJ45 BusAdapter mounted

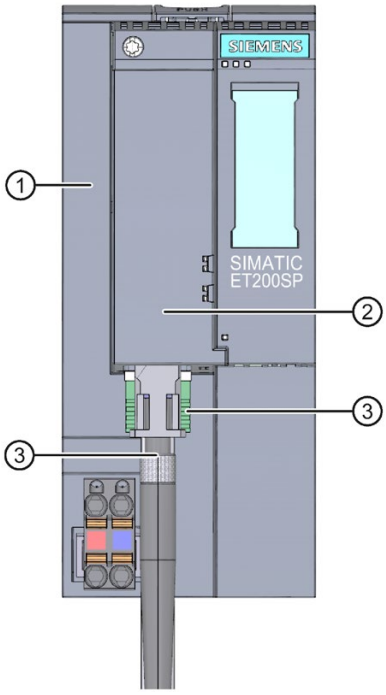

① Interface module
② BusAdapter BA SCRJ/RJ45
③ PROFINET connecting cable

Figure 7-2 Connecting the BusAdapter BA SCRJ/RJ45 to the interface module

---

Note

Installation guidelines for modules with PROFINET IO interfaces

Ensure that all devices are connected to the SELV/PELV power supply (or equivalent). Only then are you permitted to operate the modules with PROFINET IO interfaces in LAN networks (Local Area Networks).

A data transfer point that guarantees this degree of safety is prescribed for connection to the WAN (Wide Area Network).

7.3 Diagnostics

LEDs

The figure below shows the LEDs on the BusAdapter BA SCRJ/RJ45:

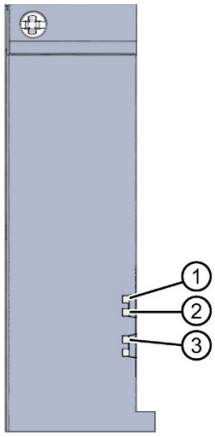

① LK1 (green)
② MT (yellow)
③ LK2 (green)

Figure 7-3 LED displays on the BusAdapter BA SCRJ/RJ45

LK1/LK2 and MT LEDs on the BusAdapter

Table 7- 2 Status and error displays

LED		Meaning	Remedy
LK1/LK2	MT		
☐ off	Not relevant	There is no Ethernet connection between the PROFINET IO interface of your PROFINET device and a communication partner, e.g. IO controller.	Check whether the bus cable to the switch or IO controller is disconnected.
■ on	Not relevant	There is an Ethernet connection between the PROFINET IO interface of your PROFINET device and a communication partner, e.g. IO controller.	-
☼ flashes	Not relevant	The "Node flash test" is running. The RN/ER/MT LEDs are also flashing.	-
Not relevant	☐ off	No error	-
Not relevant	■ on	• Fiber-optic error • Maintenance demanded: attenuation through the fiber-optic cable is already so high that operation will soon no longer be possible.	Causes and measures for the transmission route: • Replace the fiber-optic cable if damaged or aged. • Ensure correct installation of the PROFINET plugs or PROFINET connectors. • Adhere to maximum length of 50 m for POF cable or 100 m for PCF cable. • Ensure that the FOC connectors fit securely.

7.4 Technical specifications

Technical specifications of BusAdapter BA SCRJ/RJ45

Article number	6ES7193-6AP20-0AA0
Interfaces	
Number of PROFINET interfaces	1; 2 ports (SCRJ + RJ45)
PROFINET IO	
• RJ 45	Yes; 1x
• FC (FastConnect)	No
• Number of SCRJ ports	1
• Number of LC ports	0
Cable length	
– PCF	100 m
– Plastic FOC (POF)	50 m
– PCF-GI	250 m
– Cu conductors	100 m
Dimensions	
Width	20 mm
Weights	
Weight, approx.	50 g

BusAdapter BA SCRJ/FC

8

8.1 Product overview

Article number

6ES7193-6AP40-0AA0

View

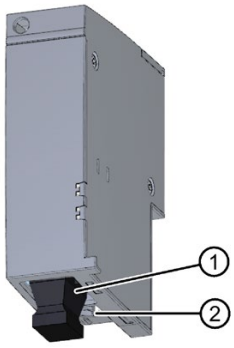

① SCRJ fiber-optic cable
② FastConnect FC

Figure 8-1 BusAdapter BA SCRJ/FC

Properties

- You connect PROFINET IO to the PROFINET device via the BusAdapter BA SCRJ/FC .
- The BusAdapter BA SCRJ/FC has one port for connection of a copper cable and one port for connection of a fiber-optic cable.

Screw the BusAdapter BA SCRJ/FC with the attached Fast Connect bus cable onto the interface module and plug in the SCRJ connector.

You loop through the PROFINET IO via the integrated 2-port switch. You can use any port of the BusAdapter for feeding or for looping through. The integrated media converter converts the signals automatically.

8.2 Connecting

Installing the bus connector

Install the PROFINET connector according to the instructions in the PROFINET Installation Guide (http://www.profibus.com/).

Connecting the SCRJ connector

You can find more information about the required tools, accessories, requirements and procedures in the section Connecting BusAdapter BA 2×SCRJ (Page 28).

Connecting the RJ45 connector

You can find more information about the required tools, accessories and procedures in the section Connecting BusAdapter BA 2×FC (Page 21).

Pin assignment

The following table shows the signal name and description of the pin assignment of BusAdapter BA SCRJ/FC.

Table 8- 1 PROFINET IO pin assignment with BusAdapter BA SCRJ/FC

View	Signal name		Description
Port 1 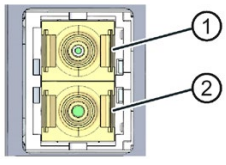	①		Receive Data
	②		Transmit Data
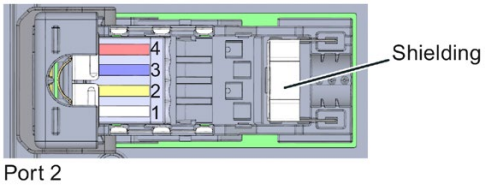 Port 2	1	RD_N	Receive Data –
	2	TD_N	Transmit Data -
	3	RD	Receive Data +
	4	TD	Transmit Data +

Procedure

To connect PROFINET IO to the PROFINET device via the BusAdapter BA SCRJ/FC, follow these steps:

1. Plug the BusAdapter BA SCRJ/FC into the PROFINET device.
2. Screw the BusAdapter BA SCRJ/FC to the PROFINET device (1 screw with 0.2 Nm tightening torque). To do this, use a screwdriver with a 3 to 3.5 mm blade, alternatively TX10.
3. Plug the RJ45 bus connector into the PROFINET port on the BusAdapter BA SCRJ/FC.

BA SCRJ/FC BusAdapter mounted

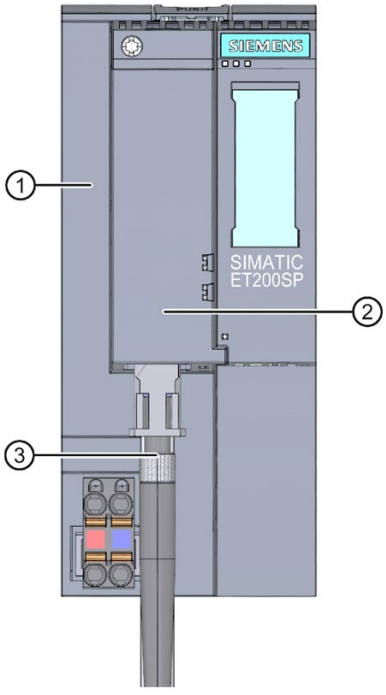

① Interface module
② BusAdapter BA SCRJ/FC
③ PROFINET connecting cable

Figure 8-2 BusAdapter BA SCRJ/FC installed (using an ET 200SP interface module as an example)

Note

Installation guidelines for modules with PROFINET IO interfaces

Ensure that all devices are connected to the SELV/PELV power supply (or equivalent). Only then are you permitted to operate the modules with PROFINET IO interfaces in LAN networks (Local Area Networks).

A data transfer point that guarantees this degree of safety is prescribed for connection to the WAN (Wide Area Network).

8.3 Diagnostics

LEDs

The figure below shows the LEDs on the BusAdapter BA SCRJ/FC:

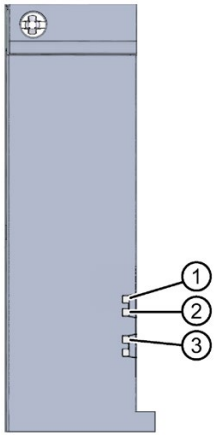

① LK1 (green)
② MT (yellow)
③ LK2 (green)

Figure 8-3 LEDs on the BusAdapter BA SCRJ/FC

LK1/LK2 and MT LEDs on the BusAdapter

Table 8- 2 Status and error displays

LED		Meaning	Remedy
LK1/LK2	MT		
☐ off	Not relevant	There is no Ethernet connection between the PROFINET IO interface of your PROFINET device and a communication partner, e.g. IO controller.	Check whether the bus cable to the switch or IO controller is disconnected.
■ on	Not relevant	There is an Ethernet connection between the PROFINET IO interface of your PROFINET device and a communication partner, e.g. IO controller.	-
☼ flashes	Not relevant	The "Node flash test" is running. The RN/ER/MT LEDs are also flashing.	-
Not relevant	☐ off	No error	-
Not relevant	■ on	• Fiber-optic error • Maintenance demanded: attenuation through the fiber-optic cable is already so high that operation will soon no longer be possible.	Causes and measures for the transmission route: • Replace the fiber-optic cable if damaged or aged. • Ensure correct installation of the PROFINET plugs or PROFINET connectors. • Adhere to maximum length of 50 m for POF cable or 100 m for PCF cable. • Ensure that the FOC connectors fit securely.

8.4 Technical specifications

Technical specifications of BusAdapter BA SCRJ/FC

Article number	6ES7193-6AP40-0AA0
Interfaces	
Number of PROFINET interfaces	1; 2 ports (SCRJ + FC)
PROFINET IO	
• RJ 45	No
• FC (FastConnect)	Yes; 1x
• Number of SCRJ ports	1
• Number of LC ports	0
Cable length	
– PCF	100 m
– Plastic FOC (POF)	50 m
– PCF-GI	250 m
– Cu conductors	100 m
Dimensions	
Width	20 mm
Height	69.5 mm
Depth	59 mm
Weights	
Weight, approx.	50 g

BusAdapter BA 2xLC

9

9.1 Product overview

Article number

6ES7193-6AG00-0AA0

View

Figure 9-1 BusAdapter BA 2xLC

Properties

- You connect PROFINET IO fiber-optic cables to the PROFINET device via the BusAdapter BA 2×LC. To do this, screw the BusAdapter BA 2×LC to the PROFINET device and insert the PROFINET connection cable.
- You loop through the PROFINET via the integrated 2-port switch.

9.2 Connecting

Installing the bus connector

Install the PROFINET connector in accordance with the instructions in the PROFINET Installation Guide (http://www.profibus.com/).

Tools required

3 to 3.5 mm screwdriver, alternatively TX10 (torx).

Accessories required

- If you prepare the FC FO cables with the IE FC FO LC plug, we recommend the FC FO Termination Kit (LC) (6GK1900-0RL00-0AA0). You can cleave the glass fiber precisely using the FC FO Termination Kit (LC).

⚠ CAUTION
Cleaving the glass fiber • Wear protective glasses during the cleaving process. • Dispose of the remaining fibers in a suitable waste container.

- Connector for PROFINET fiber-optic cable connection: IE FC FO LC Plug (10 duplex plugs: 6GK1900-1RB00-2AB0)
- Fiber-optic cable:
  - IE FC FO Standard Cable GP (62.5/200/230) (6XV1847-2A)
  - IE FC FO Trailing Cable (62.5/200/230) (6XV1847-2C)
  - IE FC FO Robust Cable (6XV1873-5Rxx)
  - IE FC FO Standard Cable (6XV1873-3Axx)

Pin assignment

The following table shows the signal name and description of the pin assignment of BusAdapter BA 2×LC:

Table 9- 1 PROFINET IO pin assignment with BusAdapter BA 2xLC

View	Signal name	Description
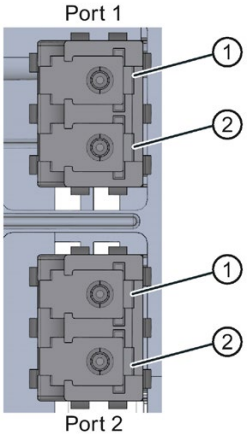	①	Receive Data
	②	Transmit Data

Requirements

- Prepare the IE FC FO cable with the IE FC FO LC plug connectors. For detailed instructions, refer to the assembly instructions Preparing IE FC FO Cable with the plug-in connector IE FC FO LC Plug (A5E36312721).
- When installing the fiber-optic cable, make sure the bending radius is not less than permitted:
  - IE FC FO Standard Cable GP (62.5/200/230): 70 mm
  - IE FC FO Trailing Cable (62.5/200/230) (6XV1847-2C): 88 mm
- The maximum lengths of the fiber-optic cables are as follows:
  - IE FC FO Standard Cable GP (62.5/200/230): 2 km
  - IE FC FO Trailing Cable (62.5/200/230): 2 km
- When the interface module is the last device of the fiber-optic cable network, the unoccupied fiber-optic cable interface must be closed with a blanking plug. When the modules ship, the blanking plugs are inserted in the PROFINET sockets of the BusAdapter.

Procedure

To connect PROFINET IO to the PROFINET device via the BusAdapter BA 2xLC, follow these steps:

1. Plug the BusAdapter BA 2xLC into the PROFINET device.
2. Screw the BusAdapter BA 2xLC to the PROFINET device (1 screw with 0.2 Nm tightening torque). To do this, use a screwdriver with a 3 to 3.5 mm blade, alternatively TX10.
3. Remove the blanking plugs from the PROFINET sockets.
4. Hold the prepared connector by the housing. Insert it into the PROFINET socket on the BusAdapter BA 2xLC until you hear it click into place. The coding of the connectors ensures a safe connection.

⚠ CAUTION
Risk of damage to eyes Do not look directly into the opening of the optical transmitter diodes. The emitted light beam damages your eyes.

BusAdapter BA 2xLC installed

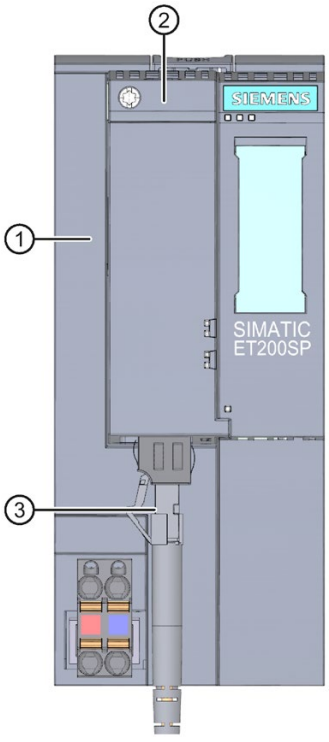

① Interface module
② BusAdapter BA 2xLC
③ PROFINET glass fiber connecting cable

Figure 9-2 Connecting the BusAdapter BA 2xLC to the interface module

Reusing used fiber-optic cables

Note

Shorten both fiber-optic cores by the amount of the curved lengths and reassemble the connectors. This will prevent any attenuation losses caused by re-bent, heavily stressed portions of the fiber-optic cores.

Reference

For more information on the installation guidelines for fiber-optic cables, refer to the SIMATIC NET PROFIBUS Network Manual (https://support.industry.siemens.com/cs/de/de/view/1172302).

9.3 Diagnostics

LEDs

The figure below shows the LEDs on the BusAdapter BA 2xLC:

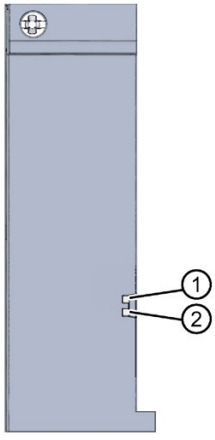

① LK1 (green)
② LK2 (green)

Figure 9-3 LEDs on the BusAdapter BA 2xLC

LK1/LK2 LEDs on the BusAdapter

Table 9- 2 Status and error displays

LED LK1/LK2	Meaning	Remedy
☐ off	There is no Ethernet connection between the PROFINET IO interface of your PROFINET device and a communication partner, e.g. IO controller.	Check whether the bus cable to the switch or IO controller is disconnected.
■ on	There is no Ethernet connection between the PROFINET IO interface of your PROFINET device and a communication partner, e.g. IO controller.	-
☼ flashes	The "Node flash test" is running. The RN/ER/MT LEDs are also flashing.	-

9.4 Technical specifications

Technical specifications of BusAdapter BA 2xLC

Article number	6ES7193-6AG00-0AA0
Interfaces	
Number of PROFINET interfaces	1; 2 ports (switch) LC Multimode Glass Fibre
PROFINET IO	
• RJ 45	No
• FC (FastConnect)	No
• Number of SCRJ ports	0
• Number of LC ports	2; Wavelength of 1 270 ... 1 380 nm, corresponds to 100BASE-FX
Cable length	
– Multimode graded-index fiber 50/125 µm	3 km
– Multimode graded-index fiber 62.5/125 µm	3 km
Ambient conditions	
Ambient temperature during operation	
• min.	0 °C
• max.	60 °C
Dimensions	
Width	20 mm
Height	69.5 mm
Depth	59 mm

BusAdapter BA LC/RJ45

10

10.1 Product overview

Article number

6ES7193-6AG20-0AA0

View

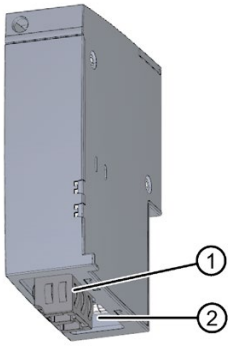

① Glass fiber-optic cable LC

② RJ45

Figure 10-1 BusAdapter BA LC/RJ45

Properties

You connect PROFINET IO connection cables to the PROFINET device via the BusAdapter BA LC/RJ45:

- Optically with glass fiber-optic cables with an LC connector to port 1
- Electrically with a standard RJ45 connector to port 2

To do this, screw the BusAdapter BA LC/RJ45 to the PROFINET device and plug in the LC connector or the RJ45 connector.

You can loop through PROFINET IO via the integrated 2-port switch. You can use any port of the BusAdapter for feeding or for looping through. The integrated media converter converts the signals automatically.

10.2 Connecting

Installing the bus connector

Install the PROFINET connector in accordance with the instructions in the PROFINET Installation Guide (http://www.profibus.com/).

Attaching LC connectors

You can find more information about the required tools, accessories, requirements and procedures in the section Connecting BusAdapter BA 2×LC (Page 48).

Connecting the RJ45 connector

You can find more information about the required tools, accessories and procedures in the section Connecting BusAdapter BA 2×RJ45 (Page 15).

Pin assignment

The following table shows the signal name and description of the pin assignment of BusAdapter BA LC/RJ45.

Table 10- 1 PROFINET IO pin assignment with BusAdapter BA LC/RJ45

View	Signal name		Description
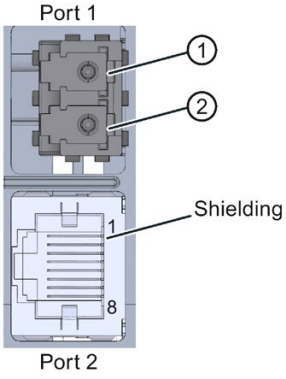	①		Receive Data
	②		Transmit Data
	1	TD	Transmit Data +
	2	TD_N	Transmit Data -
	3	RD	Receive Data +
	4	TERM1	Termination Network 1
	5	TERM1	Termination Network 1
	6	RD_N	Receive Data -
	7	TERM2	Termination Network 2
	8	TERM2	Termination Network 2

BA LC/RJ45 BusAdapter mounted

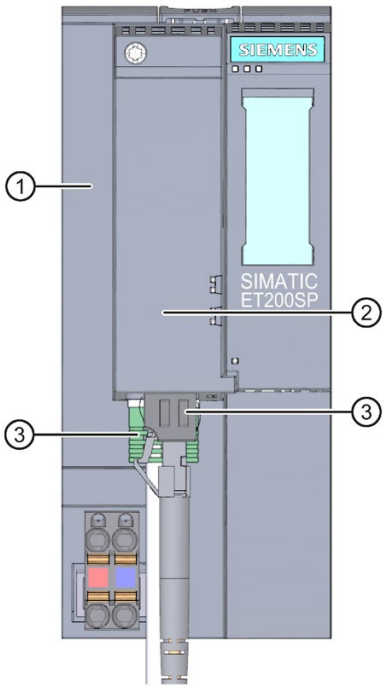

① Interface module
② BA LC/RJ45 BusAdapter
③ PROFINET connecting cable

Figure 10-2 BusAdapter BA LC/RJ45 installed (using an ET 200SP interface module as an example)

Note

Installation guidelines for modules with PROFINET IO interfaces

Ensure that all devices are connected to the SELV/PELV power supply (or equivalent). Only then are you permitted to operate the modules with PROFINET IO interfaces in LAN networks (Local Area Networks).

A data transfer point that guarantees this degree of safety is prescribed for connection to the WAN (Wide Area Network).

10.3 Diagnostics

LEDs

The figure below shows the LEDs on the BusAdapter BA LC/RJ45:

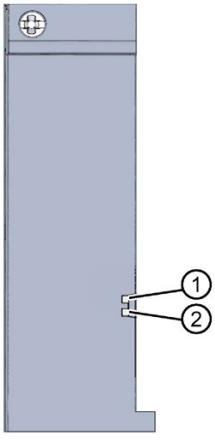

① LK1 (green)
② LK2 (green)

Figure 10-3 LED displays on the BusAdapter BA LC/RJ45

LEDs LK1/LK2 on the BusAdapter

Table 10- 2 Status and error displays

LED LK1/LK2	Meaning	Remedy
☐ off	There is no Ethernet connection between the PROFINET IO interface of your PROFINET device and a communication partner, e.g. IO controller.	Check whether the bus cable to the switch or IO controller is disconnected.
■ on	There is no Ethernet connection between the PROFINET IO interface of your PROFINET device and a communication partner, e.g. IO controller.	-
☼ flashes	The "Node flash test" is running. The RN/ER/MT LEDs are also flashing.	-

10.4 Technical specifications

Technical specifications of the BusAdapters BA LC/RJ45

Article number	6ES7193-6AG20-0AA0
Interfaces	
Number of PROFINET interfaces	1; 2 ports (switch) LC / RJ45
PROFINET IO	
• RJ 45	Yes; 1x
• FC (FastConnect)	No
• Number of SCRJ ports	0
• Number of LC ports	1
Cable length	
– Cu conductors	100 m
– Multimode graded-index fiber 50/125 µm	3 km
– Multimode graded-index fiber 62.5/125 µm	3 km
Ambient conditions	
Ambient temperature during operation	
• min.	0 °C
• max.	60 °C
Dimensions	
Width	20 mm
Height	69.5 mm
Depth	59 mm
Weights	
Weight, approx.	32 g

BusAdapter BA LC/FC

11

11.1 Product overview

Article number

6ES7193-6AG40-0AA0

View

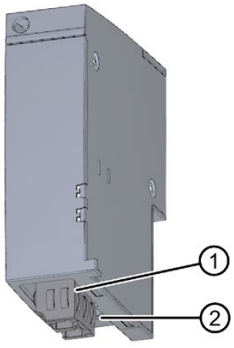

① Glass fiber-optic cable LC
② FastConnect FC

Figure 11-1 BusAdapter BA LC/FC

Properties

You connect PROFINET IO connection cables to the PROFINET device via the BusAdapter BA LC/FC:

- Optically with glass fiber-optic cables with an LC connector to port 1
- Electrically with direct connection of the Fast Connect bus cable to port 2

Screw the BusAdapter BA LC/FC with the attached Fast Connect bus cable onto the PROFINET device and plug in the LC connector.

You loop through the PROFINET IO via the integrated 2-port switch. You can use any port of the BusAdapter for feeding or for looping through. The integrated media converter converts the signals automatically.

11.2 Connecting

Installing the bus connector

Install the PROFINET connector in accordance with the instructions in the PROFINET Installation Guide (http://www.profibus.com/).

Attaching LC connectors

You can find more information about the required tools, accessories, requirements and procedures in the section Connecting BusAdapter BA 2×LC (Page 48).

Connecting FastConnect bus cable

You can find more information about the required tools, accessories and procedures in the section Connecting BusAdapter BA 2×FC (Page 21).

Pin assignment

The following table shows the signal name and description of the pin assignment of BusAdapter BA LC/FC.

Table 11- 1 PROFINET IO pin assignment with BusAdapter BA LC/FC

View	Signal name		Description
Port 1 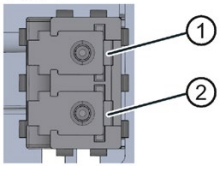	①		Receive Data
	②		Transmit Data
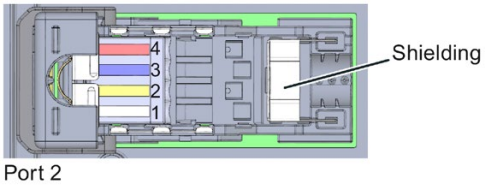 Port 2	1	RD_N	Receive Data –
	2	TD_N	Transmit Data -
	3	RD	Receive Data +
	4	TD	Transmit Data +

BusAdapter BA LC/FC installed

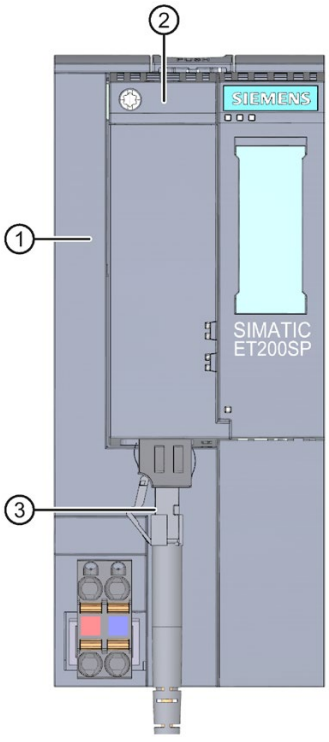

① Interface module
② BA LC/FC BusAdapter
③ PROFINET connecting cable

Figure 11-2 Connecting the BusAdapter BA LC/FC to the interface module

---

Note

Installation guidelines for modules with PROFINET IO interfaces

Ensure that all devices are connected to the SELV/PELV power supply (or equivalent). Only then are you permitted to operate the modules with PROFINET IO interfaces in LAN networks (Local Area Networks).

A data transfer point that guarantees this degree of safety is prescribed for connection to the WAN (Wide Area Network).

11.3 Diagnostics

LEDs

The figure below shows the LEDs on the BusAdapter BA LC/FC:

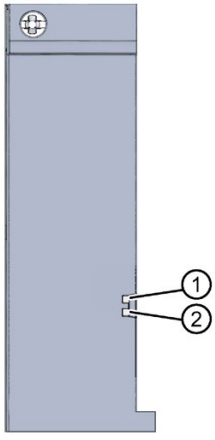

① LK1 (green)
② LK2 (green)

Figure 11-3 LEDs on the BusAdapter BA LC/FC

LK1/LK2 LEDs on the BusAdapter

Table 11- 2 Status and error displays

LED LK1/LK2	Meaning	Remedy
☐ off	There is no Ethernet connection between the PROFINET IO interface of your PROFINET device and a communication partner, e.g. IO controller.	Check whether the bus cable to the switch or IO controller is disconnected.
■ on	There is no Ethernet connection between the PROFINET IO interface of your PROFINET device and a communication partner, e.g. IO controller.	-
☼ flashes	The "Node flash test" is running. The RN/ER/MT LEDs are also flashing.	-

11.4 Technical specifications

Technical specifications of the BusAdapters BA LC/FC

Article number	6ES7193-6AG40-0AA0
Interfaces	
Number of PROFINET interfaces	1
PROFINET IO	
• RJ 45	No
• FC (FastConnect)	Yes; 1x
• Number of SCRJ ports	0
• Number of LC ports	1
Cable length	
– Cu conductors	100 m
– Multimode graded-index fiber 50/125 µm	3 km
– Multimode graded-index fiber 62.5/125 µm	3 km
Ambient conditions	
Ambient temperature during operation	
• min.	0 °C
• max.	60 °C
Dimensions	
Width	20 mm
Height	69.5 mm
Depth	59 mm
Weights	
Weight, approx.	50 g

Strain relief 12

12.1 Product overview

Article number

6ES7193-6RA00-1AN0 (VPE: 5 strain relief units incl. screws)

View

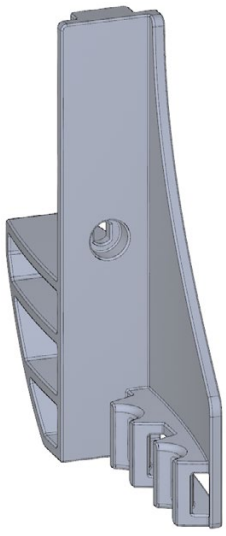

Figure 12-1 Strain relief

Properties

- The strain relief is a mechanical protective device for the electrical PROFINET cables on the BusAdapter.
- The strain relief is suitable for all optical and electrical PROFINET cables of the BusAdapter.
- The strain relief is an optional accessories.
- The cable ties are not included in the delivery. We recommend cable ties with a width of 4.8 mm. The maximum width is 7.0 mm. The length of the cable tie is min. 60 mm.

12.2 Installing

Requirement

- The PROFINET cables are not inserted on the BusAdapter. The inserted PROFINET cables hamper the mounting of the strain relief.
- BusAdapter and strain relief can be mounted separately.

Tools required

Screwdriver TX10 (torx).

Procedure

To install the strain relief, follow these steps:

1. Press the strain relief below the BusAdapter seat of the PROFINET device.

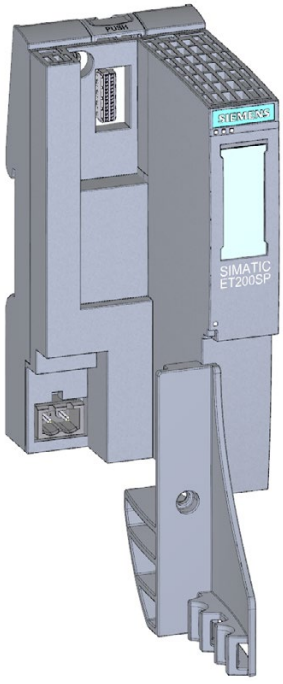

Figure 12-2 Strain relief before mounting

2. Fasten the strain relief (1 screw with 0.7 to 0.8 Nm tightening torque).
3. Plug the BusAdapter into the PROFINET device.

4. Screw the BusAdapter to the PROFINET device (1 screw with 0.2 Nm tightening torque).
5. Attach the PROFINET cables with the cable ties to the strain relief.

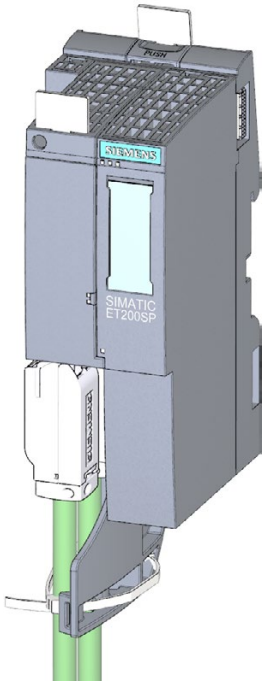

Figure 12-3 Strain relief installed

Dimension drawings

A

A.1 BusAdapter dimension drawings

The figure below shows the dimension drawing of the BusAdapter BA 2xRJ45 as an example.

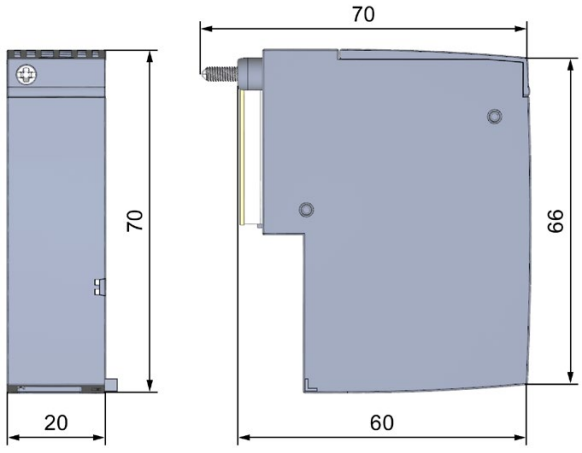

Figure A-1 Dimensional drawing of BusAdapter BA 2xRJ45

A.2 Strain relief dimension drawings

The figure below shows the dimension drawing of the strain relief.

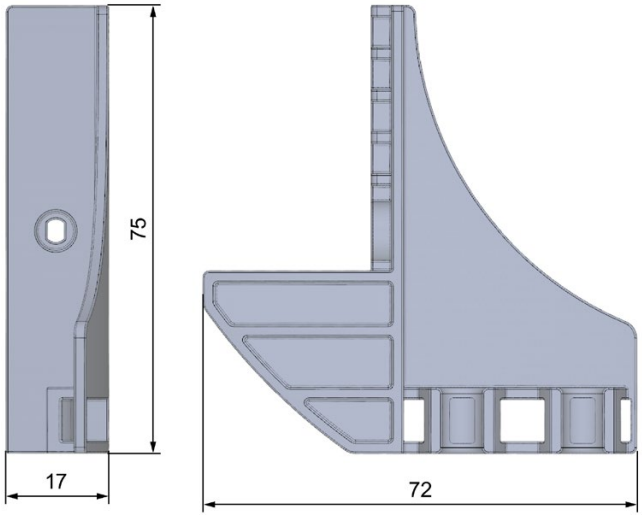

Figure A-2 Strain relief dimension drawing

Accessories

B

B.1 Accessories

Additional accessories are available for the SIMATIC BusAdapters:

Accessories	Article number	Property	Figure
Strain relief	6ES7193-6RA00-1AN0	The strain relief is a mechanical protective device for the electrical PROFINET cables on the BusAdapter. The strain relief can be ordered as optional accessories. You install the strain relief on the PROFINET device (e.g.: interface module) before you install the BusAdapter. You can find additional information in section Strain relief (Page 64).	
Reference identification label (10 mats with 16 labels each)	6ES7193-6LF30-0AW0	The labels enable the reference identification labeling of the BusAdapter. The labels can be ordered on a mat for thermal transfer and inkjet printers as optional accessories. You insert the reference identification label into the opening on the top of the BusAdapter.	

Cables and connectors

You can find the recommended cables and connectors with the respective BusAdapters.

Assembly tools

Tool	MLFB	Description
Industrial Ethernet FastConnect Stripping Tool	6GK1901-1GA00	Stripping tool for the fast stripping of IE FastConnect cables with green blade cassette
FC FO Termination Kit	6GK1900-0RL00-0AA0	Stripping tool for FC FO cable with the IE FC FO LC plug (cleaving of the glass fiber).

SIEMENS

Function manual

SIMATIC

S7-1500, S7-1500R/H, ET 200SP, ET 200pro

Cycle and response times

Edition 10/2018

support.industry.siemens.com

SIEMENS

SIMATIC

S7-1500, S7-1500R/H, ET 200SP, ET 200pro
Cycle and response times

Function Manual

Preface

Documentation guide 1

Program execution 2

Cyclic program execution 3

Event-driven program execution 4

Cycle and response times of the S7-1500R/H redundant system 5

10/2018

A5E03461504-AD

Legal information

Warning notice system

This manual contains notices you have to observe in order to ensure your personal safety, as well as to prevent damage to property. The notices referring to your personal safety are highlighted in the manual by a safety alert symbol, notices referring only to property damage have no safety alert symbol. These notices shown below are graded according to the degree of danger.

⚠ DANGER

indicates that death or severe personal injury **will** result if proper precautions are not taken.

⚠ WARNING

indicates that death or severe personal injury **may** result if proper precautions are not taken.

⚠ CAUTION

indicates that minor personal injury can result if proper precautions are not taken.

NOTICE

indicates that property damage can result if proper precautions are not taken.

If more than one degree of danger is present, the warning notice representing the highest degree of danger will be used. A notice warning of injury to persons with a safety alert symbol may also include a warning relating to property damage.

Qualified Personnel

The product/system described in this documentation may be operated only by **personnel qualified** for the specific task in accordance with the relevant documentation, in particular its warning notices and safety instructions. Qualified personnel are those who, based on their training and experience, are capable of identifying risks and avoiding potential hazards when working with these products/systems.

Proper use of Siemens products

Note the following:

⚠ WARNING

Siemens products may only be used for the applications described in the catalog and in the relevant technical documentation. If products and components from other manufacturers are used, these must be recommended or approved by Siemens. Proper transport, storage, installation, assembly, commissioning, operation and maintenance are required to ensure that the products operate safely and without any problems. The permissible ambient conditions must be complied with. The information in the relevant documentation must be observed.

Trademarks

All names identified by ® are registered trademarks of Siemens AG. The remaining trademarks in this publication may be trademarks whose use by third parties for their own purposes could violate the rights of the owner.

Disclaimer of Liability

We have reviewed the contents of this publication to ensure consistency with the hardware and software described. Since variance cannot be precluded entirely, we cannot guarantee full consistency. However, the information in this publication is reviewed regularly and any necessary corrections are included in subsequent editions.

Siemens AG
Division Digital Factory
Postfach 48 48
90026 NÜRNBERG
GERMANY

A5E03461504-AD
℗ 09/2018 Subject to change

Copyright © Siemens AG 2013 - 2018.
All rights reserved

Preface

Purpose of the documentation

The controller offers various options for program execution with different run priorities. Cyclic-driven and time-driven program execution have the largest share. The response times of a controller are therefore significantly determined by the processing cycles.

There is also the possibility of event-driven program execution. The event-driven program execution is normally limited to a few selected events.

This manual provides information on the following topics:

- Types of program execution
- Run priorities
- Cycle and response times, and the influences to which they are subject
- Configuration options for the optimization of your user program

Basic knowledge required

The following knowledge is required in order to understand the documentation:

- General knowledge of automation technology
- Knowledge of the SIMATIC industrial automation system
- Knowledge of the use of Windows-based computers
- Knowledge of working with STEP 7

Conventions

STEP 7: In this documentation, "STEP 7" is used as a synonym for all versions of the configuration and programming software "STEP 7 (TIA Portal)".

Please also observe notes marked as follows:

Note

A note contains important information on the product described in the documentation, on the handling of the product or on the section of the documentation to which particular attention should be paid.

Scope of the documentation

This documentation mainly covers the description of the CPU components of the cycle and response times of the following systems:

- S7-1500 automation system
- S7-1500R/H redundant system
- ET 200SP distributed I/O system
- CPU 1516pro-2 PN of the ET 200pro distributed I/O system

You can find links to more information on the ET 200MP, ET 200SP and ET 200pro distributed I/O systems at the corresponding points in this manual.

What's new in edition 10/2018 as compared to edition 09/2016?

What's new?		What are the customer benefits?	Where can I find information?
Changed contents	Scope of the function manual expanded to include CPUs of the S7-1500R/H redundant system	The determination of the cycle and response times of the S7-1500R/H redundant system follows the same principle as for the CPUs of the S7-1500 automation system.	Section Cycle and response times of the S7-1500R/H redundant system (Page 51)

What's new in the 09/2016 edition compared to the 02/2014 edition?

What's new?		What are the customer benefits?	Where can I find information?
Changed contents	Scope of the function manual expanded to include the CPUs of the ET 200SP distributed I/O system and CPU 1516pro-2 PN of the ET 200pro distributed I/O system	Functions that you will be familiar with from the SIMATIC S7-1500 CPUs are implemented in CPUs in other designs (ET 200SP) and in the CPU 1516pro-2 PN (degree of protection IP 65, IP 66 and IP 67).	Starting from section Program execution (Page 13)

Recycling and disposal

For environmentally friendly recycling and disposal of your old equipment, contact a certified electronic waste disposal company and dispose of the equipment according to the applicable regulations in your country.

Security information

Siemens provides products and solutions with industrial security functions that support the secure operation of plants, systems, machines and networks.

In order to protect plants, systems, machines and networks against cyber threats, it is necessary to implement – and continuously maintain – a holistic, state-of-the-art industrial security concept. Siemens' products and solutions constitute one element of such a concept.

Customers are responsible for preventing unauthorized access to their plants, systems, machines and networks. Such systems, machines and components should only be connected to an enterprise network or the internet if and to the extent such a connection is necessary and only when appropriate security measures (e.g. firewalls and/or network segmentation) are in place.

For additional information on industrial security measures that may be implemented, please visit (https://www.siemens.com/industrialsecurity).

Siemens' products and solutions undergo continuous development to make them more secure. Siemens strongly recommends that product updates are applied as soon as they are available and that the latest product versions are used. Use of product versions that are no longer supported, and failure to apply the latest updates may increase customers' exposure to cyber threats.

To stay informed about product updates, subscribe to the Siemens Industrial Security RSS Feed under (https://www.siemens.com/industrialsecurity).

Siemens Industry Online Support

You can find current information on the following topics quickly and easily here:

- **Product support**

  All the information and extensive know-how on your product, technical specifications, FAQs, certificates, downloads, and manuals.

- **Application examples**

  Tools and examples to solve your automation tasks – as well as function blocks, performance information and videos.

- **Services**

  Information about Industry Services, Field Services, Technical Support, spare parts and training offers.

- **Forums**

  For answers and solutions concerning automation technology.

- **mySupport**

  Your personal working area in Industry Online Support for messages, support queries, and configurable documents.

This information is provided by the Siemens Industry Online Support in the Internet (https://support.industry.siemens.com).

Industry Mall

The Industry Mall is the catalog and order system of Siemens AG for automation and drive solutions on the basis of Totally Integrated Automation (TIA) and Totally Integrated Power (TIP).

You can find catalogs for all automation and drive products on the Internet (https://mall.industry.siemens.com).

Table of contents

Preface 3

1 Documentation guide 8

2 Program execution 13

2.1 Principle of operation 13

2.2 Overload behavior 16

3 Cyclic program execution 20

3.1 Cycle 21

3.2 Cycle time 24
3.2.1 Different cycle times 24
3.2.2 Influences on the cycle time 28
3.2.2.1 Update time for process image partitions 28
3.2.2.2 User program execution time 31
3.2.2.3 Extension of cycle time due to communication load 36
3.2.2.4 Special consideration when PROFINET IO communication is configured on the 2nd PROFINET interface (X2) 38

3.3 Time-driven program execution in cyclic interrupts 40

3.4 Response time for cyclic and time-driven program execution 42

3.5 Summary of response time with cyclic and time-controlled program execution 45

4 Event-driven program execution 47

4.1 Response time of the CPUs when program execution is event-controlled 47

4.2 Process response time when program execution is event-driven 49

5 Cycle and response times of the S7-1500R/H redundant system 51

5.1 Introduction 51

5.2 Maximum cycle time and time errors 52

5.3 Influences on the cycle time of the S7-1500R/H redundant system 54
5.3.1 Influences on the cycle time in RUN-Solo system state 54
5.3.2 Influences on the cycle time in SYNCUP system state 55
5.3.3 Influences on the cycle time in RUN-Redundant system state 59
5.3.4 Influences on the cycle time when a CPU fails 63

5.4 Response time of R/H CPUs 66

5.5 Timetables for the RUN-Redundant system state 69

Glossary 72

Index 77

Documentation guide

1

The documentation for the SIMATIC S7-1500 automation system, for CPU 1516pro-2 PN based on SIMATIC S7-1500, and for the distributed I/O systems SIMATIC ET 200MP, ET 200SP and ET 200AL is divided into three areas.
This division allows you easier access to the specific information you require.

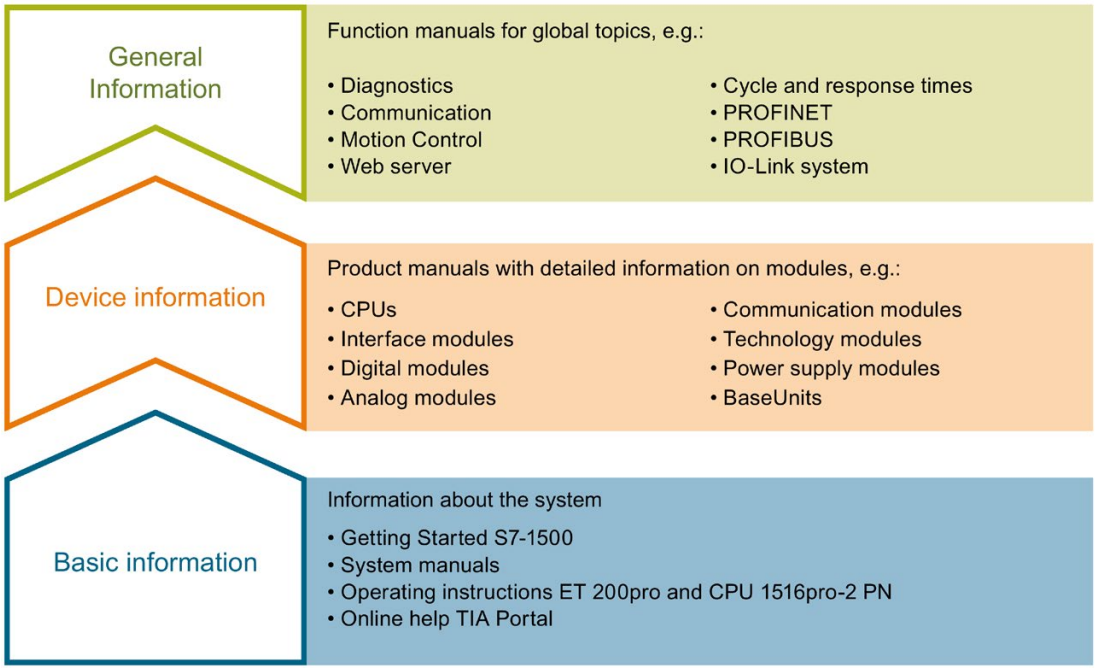

Basic information

System manuals and Getting Started manuals describe in detail the configuration, installation, wiring and commissioning of the SIMATIC S7-1500, ET 200MP, ET 200SP and ET 200AL systems; use the corresponding operating instructions for CPU 1516pro-2 PN. The STEP 7 online help supports you in configuration and programming.

Device information

Product manuals contain a compact description of the module-specific information, such as properties, terminal diagrams, characteristics and technical specifications.

General information

The function manuals contain detailed descriptions on general topics such as diagnostics, communication, Motion Control, Web server, OPC UA.

You can download the documentation free of charge from the Internet (https://support.industry.siemens.com/cs/ww/en/view/109742705).

Changes and additions to the manuals are documented in product information sheets.

You will find the product information on the Internet:

- S7-1500/ET 200MP (https://support.industry.siemens.com/cs/us/en/view/68052815)
- ET 200SP (https://support.industry.siemens.com/cs/us/en/view/73021864)
- ET 200AL (https://support.industry.siemens.com/cs/us/en/view/99494757)

Manual Collections

The Manual Collections contain the complete documentation of the systems put together in one file.

You will find the Manual Collections on the Internet:

- S7-1500/ET 200MP (https://support.industry.siemens.com/cs/ww/en/view/86140384)
- ET 200SP (https://support.industry.siemens.com/cs/ww/en/view/84133942)
- ET 200AL (https://support.industry.siemens.com/cs/ww/en/view/95242965)

"mySupport"

With "mySupport", your personal workspace, you make the best out of your Industry Online Support.

In "mySupport", you can save filters, favorites and tags, request CAx data and compile your personal library in the Documentation area. In addition, your data is already filled out in support requests and you can get an overview of your current requests at any time.

You must register once to use the full functionality of "mySupport".

You can find "mySupport" on the Internet (https://support.industry.siemens.com/My/ww/en).

"mySupport" - Documentation

In the Documentation area in "mySupport" you can combine entire manuals or only parts of these to your own manual.
You can export the manual as PDF file or in a format that can be edited later.

You can find "mySupport" - Documentation on the Internet (https://support.industry.siemens.com/My/ww/en/documentation).

"mySupport" - CAx data

In the CAx data area in "mySupport", you can access the current product data for your CAx or CAe system.

You configure your own download package with a few clicks.

In doing so you can select:

- Product images, 2D dimension drawings, 3D models, internal circuit diagrams, EPLAN macro files
- Manuals, characteristics, operating manuals, certificates
- Product master data

You can find "mySupport" - CAx data on the Internet (https://support.industry.siemens.com/my/ww/en/CAxOnline).

Application examples

The application examples support you with various tools and examples for solving your automation tasks. Solutions are shown in interplay with multiple components in the system - separated from the focus on individual products.

You will find the application examples on the Internet (https://support.industry.siemens.com/sc/ww/en/sc/2054).

TIA Selection Tool

With the TIA Selection Tool, you can select, configure and order devices for Totally Integrated Automation (TIA).
This tool is the successor of the SIMATIC Selection Tool and combines the known configurators for automation technology into one tool.
With the TIA Selection Tool, you can generate a complete order list from your product selection or product configuration.

You can find the TIA Selection Tool on the Internet (https://w3.siemens.com/mcms/topics/en/simatic/tia-selection-tool).

SIMATIC Automation Tool

You can use the SIMATIC Automation Tool to run commissioning and maintenance activities simultaneously on different SIMATIC S7 stations as a bulk operation, independently of the TIA Portal.

The SIMATIC automation tool provides a variety of functions:

- Scanning of a PROFINET/Ethernet plant network and identification of all connected CPUs
- Address assignment (IP, subnet, gateway) and station name (PROFINET device) to a CPU
- Transfer of the date and programming device/PC time converted to UTC time to the module
- Program download to CPU
- Operating mode switchover RUN/STOP
- CPU localization by means of LED flashing
- Reading out CPU error information
- Reading of CPU diagnostic buffer
- Reset to factory settings
- Updating the firmware of the CPU and connected modules

You can find the SIMATIC Automation Tool on the Internet (https://support.industry.siemens.com/cs/ww/en/view/98161300).

PRONETA

With SIEMENS PRONETA (PROFINET network analysis), you analyze the plant network during commissioning. PRONETA features two core functions:

- The topology overview independently scans PROFINET and all connected components.
- The IO check is a fast test of the wiring and the module configuration of a plant.

You can find SIEMENS PRONETA on the Internet (https://support.industry.siemens.com/cs/ww/en/view/67460624).

SINETPLAN

SINETPLAN, the Siemens Network Planner, supports you in planning automation systems and networks based on PROFINET. The tool facilitates professional and predictive dimensioning of your PROFINET installation as early as in the planning stage. In addition, SINETPLAN supports you during network optimization and helps you to exploit network resources optimally and to plan reserves. This helps to prevent problems in commissioning or failures during productive operation even in advance of a planned operation. This increases the availability of the production plant and helps improve operational safety.

The advantages at a glance

- Network optimization thanks to port-specific calculation of the network load
- Increased production availability thanks to online scan and verification of existing systems
- Transparency before commissioning through importing and simulation of existing STEP 7 projects
- Efficiency through securing existing investments in the long term and optimal exploitation of resources

You can find SINETPLAN on the Internet (https://www.siemens.com/sinetplan).

Program execution 2

2.1 Principle of operation

Introduction

You often program your user program with a cyclic OB, usually in OB 1. With complex applications, problems are often encountered in complying with the response times required by the application. You can often meet the response time requirements by splitting the user program up into several parts with different response time requirements. The CPU offers a number of different OB types for this purpose, the properties (priority, frequency, etc.) of which can be adapted to meet your requirements.

Program organization

You can choose from the following types of program execution for running your user program:

Program execution in the cyclic program of the CPU:

The CPU executes the user program cyclically. When the execution has reached the end of a cycle, the program execution starts again in the next cycle. In the simplest case, you execute the entire user program in the cyclic program of the CPU. All tasks in the user program are then processed with equal rank. This also results in the same response times for all tasks.

In addition to program execution in the cyclic program, there is time-driven and event-driven program execution.

Time-driven execution:

In a complex user program, there are frequently portions with different response time requirements. You can optimize the response times by taking advantage of these differences in the requirements. To do so, you can break down the program parts with higher response time requirements into higher-priority OBs with shorter cycles, for example cyclic interrupt OBs.

The execution of these parts can thus occur at different frequencies and with different priorities.

Event-driven execution:

Depending on the I/O modules used, you can configure hardware interrupts for specific process events (such as an edge change of a digital input) that result in the call of the assigned hardware interrupt OB. The hardware interrupts have a higher priority and interrupt the cyclic program of the CPU. You can achieve very short response times in the CPU with hardware interrupts by directly triggering program execution.

Keep in mind that the time characteristics of your application becomes less predictable with intense use of hardware interrupts. The reason for this is that the time at which the triggering events occur can result in drastically different response times.

Tip: Use hardware interrupts only for a few selected events.

Special consideration for hardware interrupts: If you have assigned an OB to an event (hardware interrupt), the OB then has the priority of the event.

Using process image partitions

If you have distributed a program over various OBs, for example, due to different response time requirements, it is advisable and often necessary to assign the update of the used I/O data directly to these OBs. You can use process image partitions for this purpose.

You group the input and output data in a process image partition according to their use in the program and assign the data to the OB.

A process image partition of the inputs (PIPI) permits the associated input data for an OB program to be updated immediately before the OB program starts.

A process image partition of the outputs (PIPQ) permits the output data associated with an OB program to become effective on the outputs immediately after the OB program runs.

You have 32 (0 … 31) process image partitions at your disposal. The I/O is assigned to the process image partition 0 by default (setting: "Automatic update"). Process image partition 0 is permanently assigned to cyclic execution.

You have to configure the "system-side update of process image partitions". You can find additional information on configuration of process image partitions in the online help for STEP 7 under the keyword "Assign process image/process image partition".

Interruptibility of program execution

Each organization block is processed according to the priority it has been assigned. You can adapt the priority according to the response time requirements for most organization blocks.

All cycle OBs always have the lowest priority of 1. The highest priority is 26.

Communication tasks always have priority 15. If necessary, you can change the priority of your blocks and select a higher priority than the communication.

Organization blocks or system activities with higher priority interrupt organization blocks or system activities with lower priority. Organization blocks or system activities with higher priority interrupt thus extend the runtime of the interrupted organization blocks or system activities. If two pending tasks have the same priority, these tasks are processed in the order in which the tasks occurred.

Note

Higher priority OBs

Communication functionality is strongly influenced by too many and/or runtime-intensive OBs with a priority > 15.

When using OBs with a priority > 15, you should therefore consider the runtime load that they cause.

Reference

You can find additional information on the subject of "priorities" in the "Events and OBs" section of the following manuals:

- S7-1500 automation system (https://support.industry.siemens.com/cs/ww/en/view/59191792) system manual
- S7-1500R/H redundant system (https://support.industry.siemens.com/cs/ww/en/view/109754833) system manual
- ET 200SP distributed I/O system (https://support.industry.siemens.com/cs/ww/en/view/58649293) system manual
- CPU 1516pro-2 PN (https://support.industry.siemens.com/cs/ww/en/view/109482416) operating instructions

You can find additional information on organization blocks and their priorities for Motion Control in the S7-1500T Motion Control (https://support.industry.siemens.com/cs/ww/en/view/109481326) function manual.

2.2 Overload behavior

CPU overload behavior

An occurring event triggers the execution of the associated OB. Depending on the OB priority and the current processor load, a time delay may occur before the OB is executed when there is an overload. The same event can therefore occur once or several times before the user program processes the OB belonging to the preceding event. The CPU handles such a situation as follows: The operating system queues the events in the queue associated with their priority in the order of their occurrence. The CPU then takes the oldest event for the highest priority and processes the associated OB. After the OB has been processed, the CPU processes the OB for the next event.

To control temporary overload situations, you can limit the number of queued events that originate from the same source. The next event is discarded as soon as the maximum number of pending triggers of a specific cyclic interrupt OB, for example, is reached.

Overload occurs when similar events occur faster than the CPU can process these events. Similar events are events from a single source, such as start events for a specific cyclic interrupt OB.

Configuration of the overload response

In the properties of an organization block in which an overload can occur, you can select the response to the overload response under "Attributes" and "Event queuing".

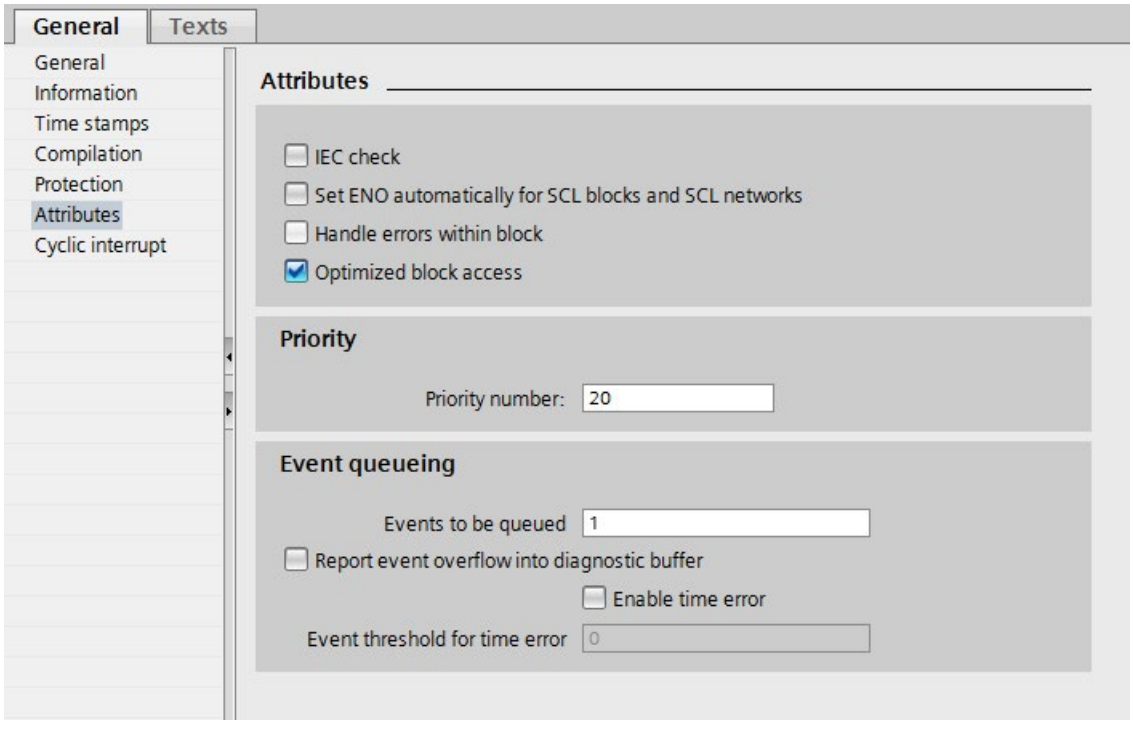

Figure 2-1 Configuration of the overload response in the block properties

Events to be queued

The OB parameter "Events to be queued" is used to specify how many similar events the operating system places in the associated queue and therefore post-processes. If this parameter has the value 1, for example, exactly one event is stored temporarily.

If the maximum number of similar start events is reached in the queue, each additional start event is only counted and subsequently discarded. During the next scheduled processing of the event, the CPU provides the number of discarded start events in the "Event_Count" input parameter (in the start information). You can then react appropriately to the overload situation. The CPU then resets the counter for lost events to zero.

Note

Post-processing of cyclic events is often not desirable, as this can lead to an overload with OBs of the same or lower priority. Therefore, it is generally advantageous to discard similar events and to react to the overload situation during the next scheduled OB processing. A low value of the "Events to be queued" parameter mitigates an overload situation.

To ensure that the CPU processes the OB of at least one queued event, the minimum number of events to be queued is "1". The maximum number of events that can be queued is "12".

Report event overflow into diagnostic buffer

If the CPU first discards a start event of a cyclic interrupt OB, for example, its further behavior depends on the OB parameter "Report event overflow into diagnostic buffer". If you have selected the check box, the CPU enters the event DW#16#0002:3507 in the diagnostic buffer for the overload situation at this event source. If an overload situation occurs again (overflow counter changes from 0 to 1), another diagnostic buffer entry is made at the next OB end.

Enable time error

The cyclic interrupt OB parameter "Enable time error" is used to specify whether the CPU is to call a time error OB when a specific overload level is reached for similar events. You use the OB parameter "Enable time error" to program a reaction to an overload before the limit for similar events is reached. The reaction occurs before the CPU discards similar events.

By default, the "Enable time error" parameter is not set.

Event threshold for time error

Select the "Enable time error" check box to enable the "Event threshold for time error" OB parameter. You use the "Event threshold for time error" OB parameter to specify how many similar events in the queue are permitted before the CPU calls a time error OB.

The following value range applies to the "Event threshold for time error" parameter:

1 ≤ "Event threshold for time error" ≤ "Events to be queued".

Example 1

The following example shows the response of the CPU when multiple similar events occur faster than the CPU can process the associated OBs. In example 1, the user selected the following parameter assignment:

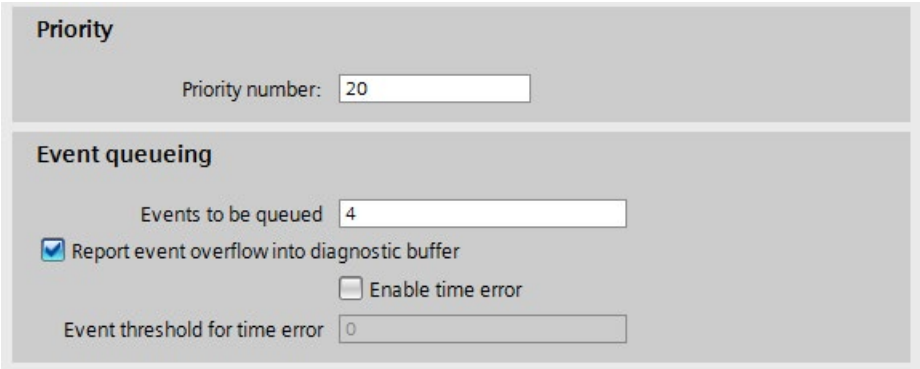

Figure 2-2 Example of parameter assignment for the overload behavior

The figure below shows the processing sequence as soon as an event calls an associated OB.

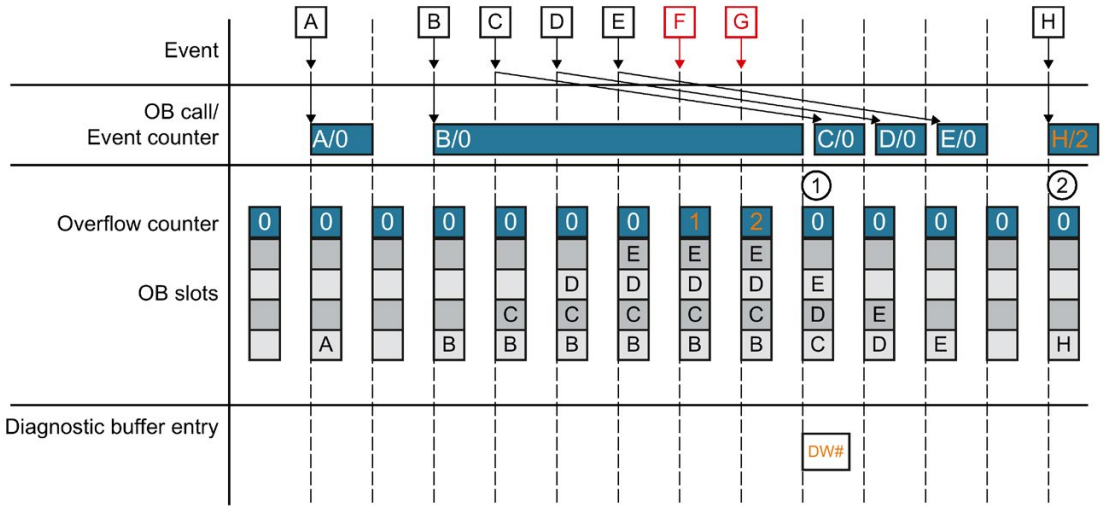

Figure 2-3 Example 1

As soon as an occurring event calls an OB, the event occupies a slot of the OB. The occupied slot is free again as soon as the CPU has processed the event. If the CPU has not completed processing the OB of an occurring event, additional occurring events each occupy an additional slot of the OB during this time. As soon as this number exceeds the configured number of events to be queued, these events are discarded and counted by the overflow counter. When an OB which takes a long time to run is completed, the CPU creates an entry in the diagnostic buffer and sets the overflow counter to zero (①). After the CPU has processed this long-running OP, the CPU then processes the OBs of the events that are queued one after the other. At the next new occurring event, the CPU writes the previous value of the reset overflow counter to the start information of the OB. The CPU then processes the OB (②).

Example 2

In example 2, the user has selected the following parameter assignment:

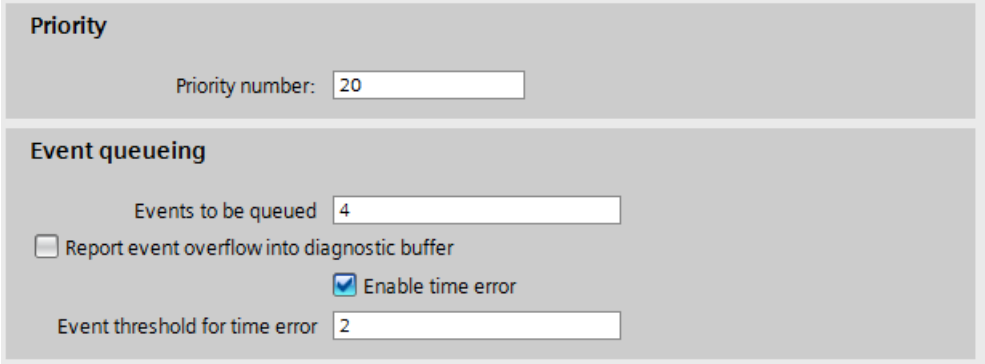

Figure 2-4 Example of parameter assignment for the overload behavior

Contrary to example 1, the CPU in example 2 requests a time error as soon as the configured event threshold has been exceeded. An additional time error can then only occur if all slots of the OB have been free once in the meantime.

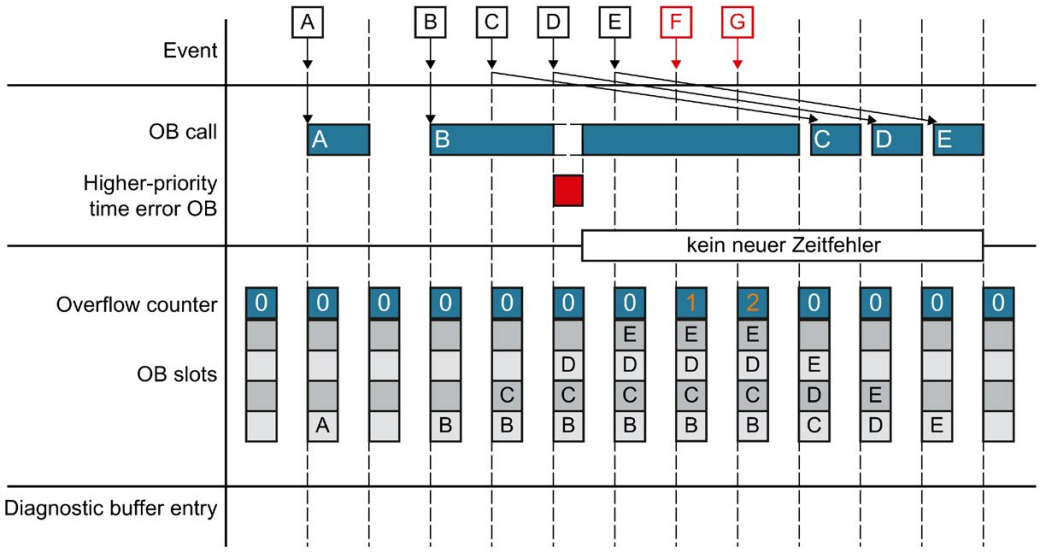

Figure 2-5 Example 2

Cyclic program execution 3

Validity

The statements of the section "Cyclic program execution" apply to the CPU components of the following systems:

- S7-1500 automation system
- ET 200MP and ET 200SP distributed I/O systems
- CPU 1516pro-2 PN of the ET 200pro distributed I/O system
- S7-1500R/H redundant system (in RUN-Solo system state)
  In RUN-Redundant system state, the statements of section "Cycle and response times of the S7-1500R/H redundant system (Page 51)" apply.

Restrictions

With the S7-1500R/H redundant system, there are restrictions compared to the S7-1500 automation system. The S7-1500R/H redundant system does not support all hardware properties and firmware functions of the S7-1500 automation system (for example, it does not support PROFIBUS DP, central I/O, web server, etc.).

The restrictions are described in the S7-1500R/H redundant system (https://support.industry.siemens.com/cs/ww/en/view/109754833) system manual.

3.1 Cycle

Definition of cycle

A cycle includes the following sections:

- Update of process image partition 0 of the outputs (PIPQ 0)
- Automatic update of the process image partition 0 of the inputs (PIPI 0)
- Execution of the cyclic program

The process image partition 0 is automatically updated in the cycle. You assign the I/O addresses to these process image partitions (PIPI 0/PIPQ 0) when you configure the I/O modules via the "Automatic update" setting (default).

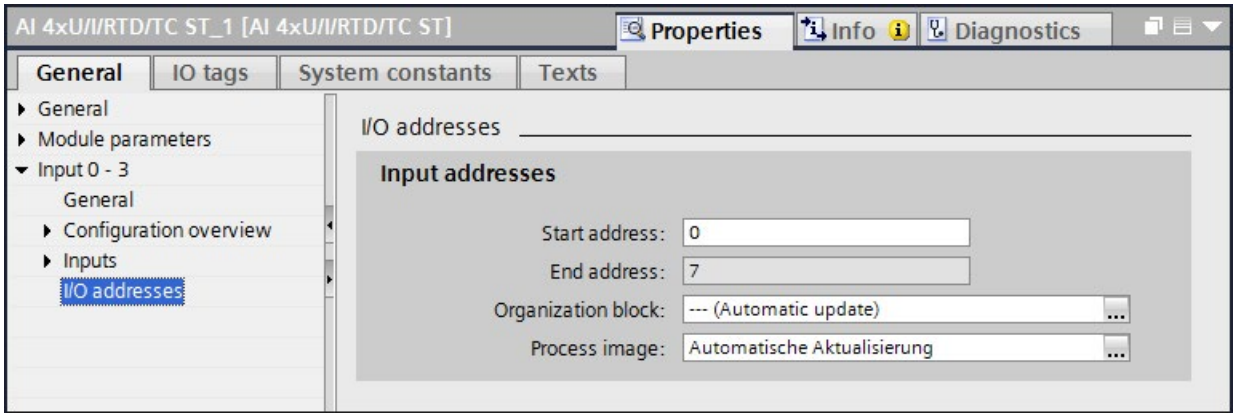

Figure 3-1 Assigning I/O addresses to process image partitions

The figure below illustrates the phases that are passed through during a cycle. In the example below the user has configured a minimum cycle time. Updating of the process image partitions and processing of the cyclic program is completed before the end of the configured minimum cycle time. Therefore, the CPU waits until the configured minimum cycle time has expired before the next program cycle starts.

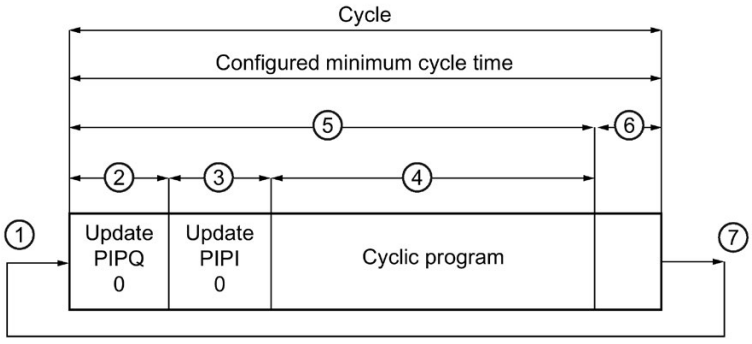

① The operating system starts measurement of the cycle time.

② The CPU writes the states from the process image output to the output modules.

③ The CPU reads the status of the inputs at the input modules and writes the input data to the process image input.

④ The CPU processes the user program and executes the instructions specified in the program.

⑤ The CPU updates the process image partitions and processes the cyclic program.

⑥ Wait phase until end of configured minimum cycle time

⑦ The operating system restarts the monitoring of the maximum cycle time, evaluates the calculated cycle time, and starts the new measurement.

Figure 3-2 Cycle

Cycle control point

When the cycle control point is reached, the CPU has completed the cycle program and is no longer executing OBs. All user data are consistent at this time. Requirement is that no communication that modifies user data (such as HMI communication or PUT/GET communication) is active.

The cycle control point marks:

- The end of a cycle and its cycle time statistics
- The start of the next cycle and its cycle time statistics
- The restart of the monitoring of the configured maximum cycle time (time-out counter is reset)

The cycle control point is reached depending on which of the following events occurred last:

- End of the last cyclic OB
- Expiry of the minimum cycle time (if configured)

After the cycle control point has been reached, the CPU executes the following steps:

1. Writes the process image outputs to the output modules
2. Reads the state of the inputs into the input modules
3. Executes the first cyclic OB

3.2 Cycle time

Definition of cycle time

The cycle time is the time the CPU needs for:

- Updating the process image inputs/outputs
- Executing the cyclic program
- All program parts and system activities interrupting this cycle
- Waiting for the minimum cycle time (if it is parameterized and is longer than the program execution time)

3.2.1 Different cycle times

Introduction

The cycle time (T_{cyc}) is not the same in each cycle because the processing times may vary. Causes of this include:

- For example, different program runtimes:
  - Program loops
  - Conditional commands
  - Conditional block calls
  - Different program paths
- Lengthening due to interruptions, for example:
  - Time-driven interrupt processing
  - Event-driven interrupt processing
  - Communication

Causes of different cycle times

The figure below shows the different cycle times T_{cyc1} and T_{cyc2} using an example.

Because the cyclic program is interrupted by a cyclic interrupt OB in this example (for example: OB 30), the cycle time T_{cyc2} is greater than T_{cyc1}. The cyclic interrupt OB in turn is interrupted by Motion Control functions and communication.

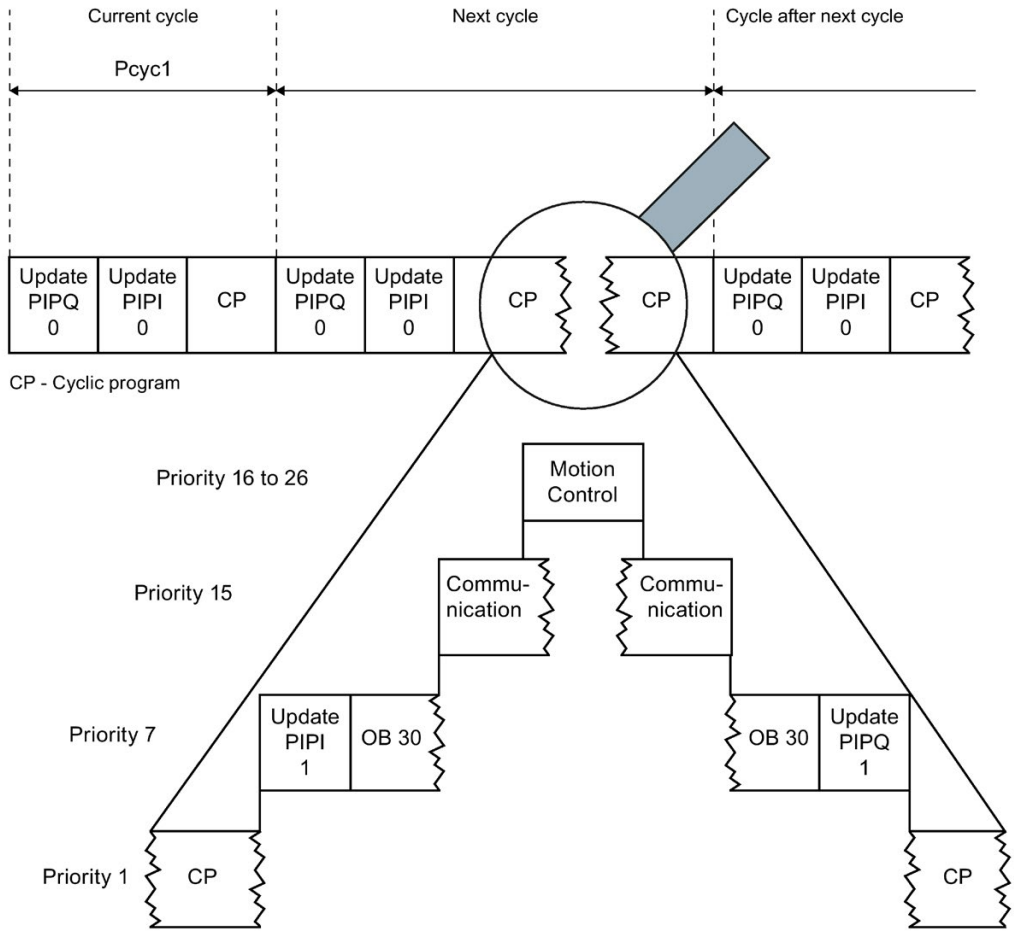

Figure 3-3 Possible causes of differing cycle times

Minimum cycle time

In STEP 7, you can set a minimum cycle time for a CPU. The default for the minimum cycle time is one millisecond. It is advisable to increase this setting in the following cases:

- To reduce the cycle time's fluctuation range.
- To make remaining computing time available for communication tasks. The CPU then processes these communication tasks until the minimum cycle time has expired. Making the remaining computing time available to communication tasks offers the following advantages:
  - Longer minimum cycle times prevent that process images are updated unnecessarily often and thus lead to less load on the backplane bus.
  - Longer minimum cycle times result in an increase in communication performance.

Maximum cycle time

The maximum cycle time is a configurable high limit of the cyclic program runtime. The task of the cycle time is to monitor the response time required for the respective process.

The maximum cycle time of non-redundant CPUs is set to 150 ms by default. You can set this value from 1 ms to 6000 ms when assigning parameters to the CPU. When the cycle time is longer than the maximum cycle time, the time error OB (OB 80) is called.

You have the option of restarting the maximum cycle time using the "RE_TRIGR" instruction, and thus extending it.

You specify how the CPU responds to the time error with the user program in OB 80. The CPU switches to STOP under the following conditions:

- If you have not loaded an OB 80.
- If the cycle is still not completed after an additional maximum cycle time.

Note

Behavior of the CPU on the second cycle timeout

Note that you can only extend the cycle time a maximum of once. On the second consecutive cycle timeout, the CPU always goes into STOP state.

Cycle time statistics

You can read the cycle time statistics either directly from STEP 7 ("Online tools" task card) or with the "RT_INFO" instruction.

You can use the "RT_INFO" instruction to generate statistics in STEP 7 on the runtime of specific organization blocks for communication or for the user program. For example, this includes

- The shortest and longest cycle time
- The portions of runtime used for communication and the user program

---

Note

Showing the cycle time statistics on the display and Web server

With the S7-1500 CPUs, you also have the option of calling the cycle time statistics via the display of the CPU. As of firmware version 2.0 of the CPUs, the cycle time statistics are also displayed in the Web server.

To view the cycle time statistics directly in STEP 7, follow these steps:

1. Establish an online connection to the CPU with STEP 7.
2. Select the "Online tools" task card.

Result: The diagram of the cycle time statistics is displayed in the cycle time section.

The following figure shows an extract from STEP 7 with the cycle time statistics. In this example, the cycle time fluctuates between 7 ms and 12 ms. The current cycle time is 10 ms. The maximum cycle time that can be set in this example is 40 ms.

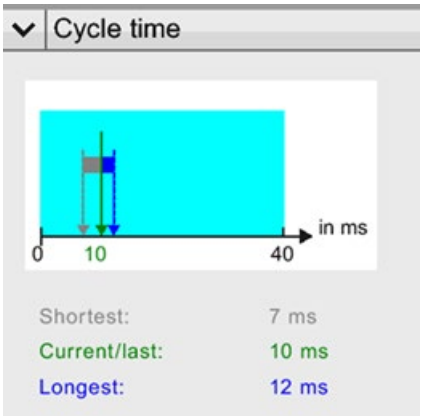

Figure 3-4 Cycle time statistics

You can find additional information on the runtime characteristics of the CPU with the "RT_INFO" instruction in the user program. The instruction includes information about:

- The utilization of the CPU by the user program and communication in percentage
- The runtimes of the individual OBs

Reference

Additional information on the "RT_INFO" instruction is available in the STEP 7 online help.

3.2.2 Influences on the cycle time

3.2.2.1 Update time for process image partitions

Estimating update time for process image partitions

The update time of the process image partitions depends on the volume of assigned central and distributed I/O module data.

You can estimate the update time using the following formula:

	Base load for process image update
+	Number of words in the process image x copy time for central I/O
+	Number of words in the process image via DP x copy time for PROFIBUS I/O
+	Number of words in the process image via PROFINET x copy time for PROFINET I/O
=	**Update time of the process image partition**

Update times of the process image partitions

The following table contains the times for estimating the typical update times of the process image partitions.

Table 3- 1 Data for estimating the typical update time of the process image partitions

Components	Update times of the CPUs			
	S7-1500			
	1511(F)-1 PN 1511T(F)-1 PN 1511C-1 PN 1512C-1 PN 1513(F)-1 PN	1515(F)-2 PN 1515T(F)-2 PN 1516(F)-3 PN/DP 1516T(F)-3 PN/DP	1517(F)-3 PN/DP 1517T(F)-3 PN/DP	1518(F)-4 PN/DP 1518(F)-4 PN/DP MFP
Basic load for updating process image partitions	35 µs	30 µs	7 µs	5 µs
Copy time for central I/O	9 µs/word	8 µs/word	5 µs/word	4 µs/word
Copy time for distributed I/O via PROFIBUS	0.5 µs/word	0.5 µs/word	0.4 µs/word	0.3 µs/word
Copy time for distributed I/O via PROFINET	0.5 µs/word	0.5 µs/word	0.4 µs/word	0.3 µs/word

Components	Update time of the CPU in RUN-Solo system state		
	S7-1500R/H*		
	1513R-1 PN	1515R-2 PN	1517H-3 PN
Basic load for updating process image partitions	35 µs	30 µs	7 µs
Copy time for distributed I/O via PROFINET	0.5 µs/word	0.5 µs/word	0.4 µs/word

* Additional information about cycle and response times of R/H CPUs is available in the section "Cycle and response times of the S7-1500R/H redundant system"

Components	Update time of the CPU		
	ET 200SP		
	1510SP(F)-1 PN	1512SP(F)-1 PN	1515SP(F)-PC
Basic load for updating process image partitions	60 µs	60 µs	30 µs
Copy time for central I/O	0.5 µs/word	0.5 µs/word	0.5 µs/word
Copy time for distributed I/O via PROFIBUS	0.5 µs/word	0.5 µs/word	0.5 µs/word
Copy time for distributed I/O via PROFINET	0.5 µs/word	0.5 µs/word	0.5 µs/word

Components	Update time of the CPU
	ET 200pro
	1516pro(F)-2 PN
Basic load for updating process image partitions	30 µs
Copy time for central I/O	120 µs/word
Copy time for distributed I/O via PROFIBUS	0.5 µs/word
Copy time for distributed I/O via PROFINET	0.5 µs/word

Note

Update time of the backplane bus for ET 200SP CPUs

For the update time of the ET 200SP CPUs, observe also the information in table "Update time of the ET 200SP CPUs" in the section Response time for cyclic and time-driven program execution (Page 42).

3.2.2.2 User program execution time

Introduction

Organization blocks or system activities with higher priority interrupt organization blocks or system activities with lower priority, and thus extend their runtime.

Program execution time without interruptions

The user program has a certain runtime without interruptions. The runtime depends on the number of operations that are executed in the user program.

The following table contains the typical durations of operations.

Table 3- 2 Duration of an operation

	S7-1500						
	1511(F)-1 PN 1511T(F)-1 PN 1511C-1 PN	1512C-1 PN	1513(F)-1 PN	1515(F)-2 PN 1515T(F)-2 PN	1516(F)-3 PN/DP 1516T(F)-3 PN/DP	1517(F)-3 PN/DP 1517T(F)-3 PN/DP	1518(F)-4 PN/DP 1518(F)-4 PN/DP MFP
Bit operations, typ.	60 ns	48 ns	40 ns	30 ns	10 ns	2 ns	1 ns
Word operations, typ.	72 ns	58 ns	48 ns	36 ns	12 ns	3 ns	2 ns
Fixed-point arithmetic, typ.	96 ns	77 ns	64 ns	48 ns	16 ns	3 ns	2 ns
Floating-point arithmetic, typ.	384 ns	307 ns	256 ns	192 ns	64 ns	12 ns	6 ns

	S7-1500R/H* in RUN-Solo system state		
	1513R-1 PN	1515R-2 PN	1517H-3 PN
Bit operations, typ.	40 ns	30 ns	2 ns
Word operations, typ.	48 ns	36 ns	3 ns
Fixed-point arithmetic, typ.	64 ns	48 ns	3 ns
Floating-point arithmetic, typ.	256 ns	192 ns	12 ns

* Additional information about cycle and response times of R/H CPUs is available in the section "Cycle and response times of the S7-1500R/H redundant system"

	ET 200SP		
	1510SP(F)-1 PN	1512SP(F)-1 PN	1515SP(F)-PC
Bit operations, typ.	72 ns	48 ns	30 ns
Word operations, typ.	86 ns	58 ns	36 ns
Fixed-point arith-metic, typ.	115 ns	77 ns	48 ns
Floating-point arithmetic, typ.	461 ns	307 ns	192 ns

	ET 200pro
	1516pro(F)-2 PN
Bit operations, typ.	10 ns
Word operations, typ.	12 ns
Fixed-point arithmetic, typ.	16 ns
Floating-point arithmetic, typ.	64 ns

Note

Instruction "RUNTIME"

You can measure the runtimes of program sequences with the instruction "RUNTIME".

Extension due to nesting of higher-priority OBs and/or interrupts

The interruption of a user program at the end of an instruction by a higher-priority OB causes a certain basic time expenditure. Take account of this basic time expenditure in addition to the update time of the assigned process image partitions and the execution time of the contained user program. The following tables contain the typical times for the various interrupts and error events.

Table 3- 3 Basic time expenditure for an interrupt

	S7-1500			
	1511(F)-1 PN 1511T(F)-1 PN 1511C-1 PN 1512C-1 PN 1513(F)-1 PN	1515(F)-2 PN 1515T(F)-2 PN 1516(F)-3 PN/DP 1516T(F)-3 PN/DP	1517(F)-3 PN/DP 1517T(F)-3 PN/DP	1518(F)-4 PN/DP 1518(F)-4 PN/DP MFP
Hardware interrupt	90 µs	80 µs	20 µs	12 µs
Time-of-day interrupt	90 µs	80 µs	20 µs	12 µs
Time-delay interrupt	90 µs	80 µs	20 µs	12 µs
Cyclic interrupt	90 µs	80 µs	20 µs	12 µs

	S7-1500R/H* in RUN-Solo system state		
	1513R-1 PN	1515R-2 PN	1517H-3 PN
Hardware interrupt	170 µs	140 µs	20 µs
Time-of-day interrupt	170 µs	140 µs	20 µs
Time-delay interrupt	170 µs	140 µs	20 µs
Cyclic interrupt	170 µs	140 µs	20 µs

* Additional information about cycle and response times of R/H CPUs is available in the section "Cycle and response times of the S7-1500R/H redundant system"

	ET 200SP		
	1510SP(F)-1 PN	1512SP(F)-1 PN	1515SP(F)-PC
Hardware interrupt	90 µs	90 µs	80 µs
Time-of-day interrupt	90 µs	90 µs	80 µs
Time-delay interrupt	90 µs	90 µs	80 µs
Cyclic interrupt	90 µs	90 µs	80 µs

	ET 200pro
	1516pro(F)-2 PN
Hardware interrupt	80 µs
Time-of-day interrupt	80 µs
Time-delay interrupt	80 µs
Cyclic interrupt	80 µs

Table 3- 4 Basic time expenditure for an error OB

	S7-1500			
	1511(F)-1 PN 1511T(F)-1 PN 1511C-1 PN 1512C-1 PN 1513(F)-1 PN	1515(F)-2 PN 1515T(F)-2 PN 1516(F)-3 PN/DP 1516T(F)-3 PN/DP	1517(F)-3 PN/DP 1517T(F)-3 PN/DP	1518(F)-4 PN/DP 1518(F)-4 PN/DP MFP
Programming error	90 µs	80 µs	20 µs	12 µs
I/O access error	90 µs	80 µs	20 µs	12 µs
Time error	90 µs	80 µs	20 µs	12 µs
Diagnostic interrupt	90 µs	80 µs	20 µs	12 µs
Module failure/recovery	90 µs	80 µs	20 µs	12 µs
Station failure/recovery	90 µs	80 µs	20 µs	12 µs

	S7-1500R/H* in RUN-Solo system state		
	1513R-1 PN	1515R-2 PN	1517H-3 PN
Programming error	170 µs	140 µs	20 µs
I/O access error	170 µs	140 µs	20 µs
Time error	170 µs	140 µs	20 µs
Diagnostic interrupt	170 µs	140 µs	20 µs
Module failure/recovery	170 µs	140 µs	20 µs
Station failure/recovery	170 µs	140 µs	20 µs

* Additional information about cycle and response times of R/H CPUs is available in the section "Cycle and response times of the S7-1500R/H redundant system"

	ET 200SP		
	1510SP(F)-1 PN	1512SP(F)-1 PN	1515SP(F)-PC
Programming error	90 µs	90 µs	80 µs
I/O access error	90 µs	90 µs	80 µs
Time error	90 µs	90 µs	80 µs
Diagnostic interrupt	90 µs	90 µs	80 µs
Module failure/recovery	90 µs	90 µs	80 µs
Station failure/recovery	90 µs	90 µs	80 µs

CPU	ET 200pro
	1516pro(F)-2 PN
Programming error	80 µs
I/O access error	80 µs
Time error	80 µs
Diagnostic interrupt	80 µs
Module failure/recovery	80 µs
Station failure/recovery	80 µs

Reference

You can find additional information on the topic of error handling in the Events and OBs section of the

- S7-1500 automation system (http://support.automation.siemens.com/WW/view/en/59191792) system manual
- S7-1500R/H redundant system (https://support.industry.siemens.com/cs/ww/en/view/109754833) system manual
- ET 200SP distributed I/O system (http://support.automation.siemens.com/WW/view/en/58649293) system manual
- CPU 1516pro-2 PN operating instructions (https://support.industry.siemens.com/cs/ww/en/view/109482416)

You can find additional information on the topic of the complete cycle time of a program in an FAQ on the Internet (https://support.industry.siemens.com/cs/ww/en/view/87668055).

3.2.2.3 Extension of cycle time due to communication load

Impact of communication on the cycle time

In the sequence model of the CPU, communication tasks are processed with priority 15. All program parts with priority > 15 (e.g. for Motion Control functions) are unaffected by communication.

Configured communication load

The CPU operating system provides the maximum specified percentage of total CPU processing power for communication tasks. The communication load is preset in STEP 7 at 50%, for example, for the CPUs of the S7 series. If the processing power is not needed for communication, then the processing power is available to the operating system and the user program.

Communication is allocated the requisite computing time in 1 ms increments, with priority 15. At 50% communication load, 500 µs of each 1 millisecond are used for communication.

The following formula may be used to estimate the extension of the cycle time by communication.

$$\text{Actual cycle time} = \text{Cycle time without communication} \times \frac{100}{100 - \text{"configured communication load in \%"}}$$

Figure 3-5 Formula: Impact of communication load

With a complete use of the communication load of 50% (default), the following value results:

$$\text{Actual cycle time} = \text{Cycle time without communication} \times 2$$

Figure 3-6 Extension of cycle time due to communication load

The actual cycle time is up to twice as long as the cycle time without communication when you use the default communication load.

Dependency of maximum cycle time on the configured communication load

The diagram shows the nonlinear relationship between maximum cycle time and configured communication load with a pure cycle time of 10 ms. No interruptions occur in the example.

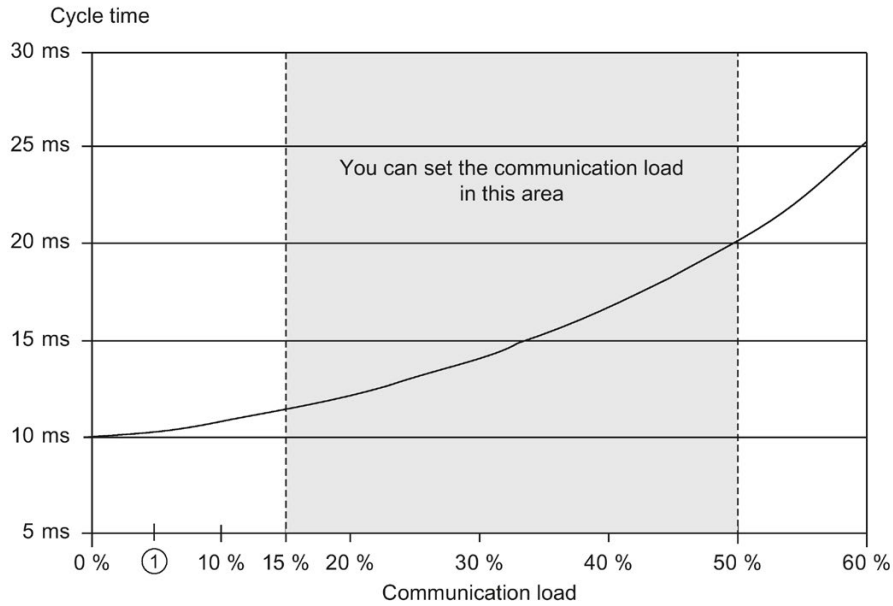

① CPUs 1516T(F)-3 PN/DP, 1517(F)-3 PN/DP, CPU 1517T(F)-3 PN/DP, CPU 1518(F)-4 PN/DP, 1518(F)-4 PN/DP MFP: The (minimum) communication load that can be set is 5%.

Figure 3-7 Maximum cycle time depending on the configured communication load

The described influence of the communication load on the execution time applies to all OBs with a priority < 15.

Reducing the cycle time with a lower communication load

You can reduce the setting for the communication load in the hardware configuration. If you set a communication load of 20% instead of 50%, for example, the cycle time extension due to the communication is reduced from a factor of 2 to 1.25.

Effect on the actual cycle time

Communication is only one cause of extension of the cycle time. All configured events that extend the cycle time (e.g. hardware interrupts) mean that more asynchronous events can occur within a cycle. These asynchronous events further extend the cyclic program. The extension depends on the number of events that occur and are processed in the cycle.

Note

Checking parameter changes

- Check the effects of a value change on the "Cycle load due to communication" parameter during system operation. You can use the "RT_INFO" instruction to determine which portions of runtime are used for communication and the user program.
- Take the communication load into consideration when setting the maximum cycle time to prevent time errors (for example, exceeding the cycle time within a cycle) from occurring.

Tips

Whenever possible, use the default setting for the configured communication load.

If you reduce the value of the communication load, keep in mind that communication tasks are interrupted by higher-priority OBs. This means it will also take longer to process the communication.

3.2.2.4 Special consideration when PROFINET IO communication is configured on the 2nd PROFINET interface (X2)

If you configure the PROFINET IO communication at the 2nd PROFINET interface (X2) on the following CPUs as of firmware version 2.0, an additional system load occurs:

- CPU 1515(F)-2 PN
- CPU 1515T(F)-2 PN
- CPU 1516(F)-3 PN/DP
- CPU 1516(F)pro-2 PN
- CPU 1516T(F)-3 PN/DP

This additional system load has priority 26 and extends the runtime of the program. The execution of synchronous cycle interrupts or hardware interrupts, for example, can be delayed as a result.

The additional system load depends on:

- Communication traffic at the 2nd PROFINET interface (X2)
  The communication traffic at the interface in frames per second causes communication load as well as system load. You cannot limit the communication traffic using the "Communication load" parameter.
- Number of IO devices which the CPU at the 2nd PROFINET interface (X2) updates within a millisecond

You determine the additional system load with the "RT_INFO" (read RUNTIME statistics) instruction at the Mode parameter with mode 10 or mode 20.

Reducing additional system load

You reduce the communication load at the 2nd PROFINET interface, e.g. with:

- Fewer HMI devices or slower update cycles of the HMI devices
- Less or slower communication with other CPUs

Increase the update times in STEP 7 for all IO devices that are assigned to the 2nd PROFINET interface (X2):

1. Select the "IO Communication" in the "Network view" of STEP 7.
2. Set the "Update mode" parameter to "Adjustable".
3. Select a higher value for the "Update time [ms]" parameter in the drop-down list.
4. Repeat this setting for the other IO devices.

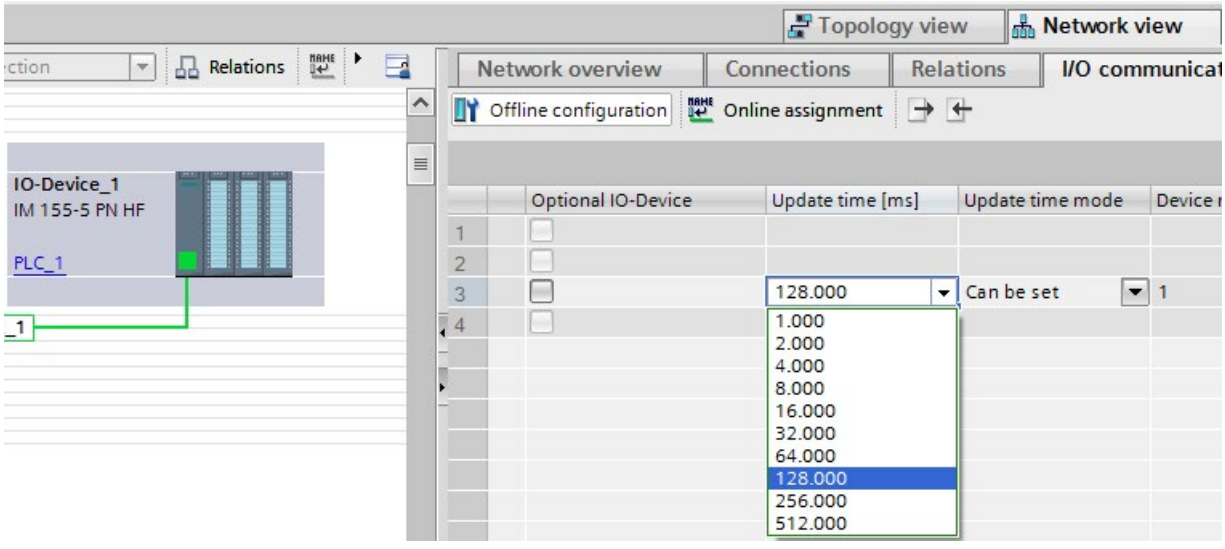

Figure 3-8 Increasing update times

3.3 Time-driven program execution in cyclic interrupts

With a cyclic interrupt you have the option of having a specific OB processed in a time interval. The time interval is independent of the execution time of the cyclic program. A priority from 2 to 24 can be selected for the cyclic interrupt. This makes the priority of cyclic interrupts higher than the priority of the cyclic program. A cyclic interrupt increases the execution time of the cyclic program.

Tip: By shifting program sections to cyclic interrupts, you can reduce the response times or better adapt them to your requirements.

In STEP 7 the organization blocks OB 30 to OB 38 are intended for processing cyclic interrupts. You can create additional cyclic interrupts starting with organization block OB 123. The number of available organization blocks depends on the CPU used.

Cyclic interrupt

A cyclic interrupt is an interrupt initiated according to a defined cycle that causes a cyclic interrupt OB to be processed. A cyclic interrupt OB is assigned to the "Cyclic interrupt" event class.

Cycle of a cyclic interrupt

The cycle of a cyclic interrupt is defined as the time from the call of a cyclic interrupt OB to the next call of a cyclic interrupt OB.

The following figure shows an example of the cycle of a cyclic interrupt.

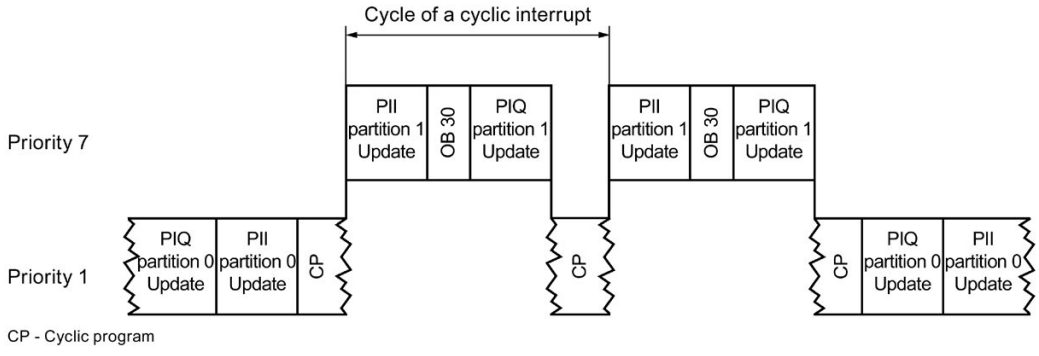

Figure 3-9 Call interval of a cyclic interrupt

Accuracy of a cyclic interrupt

Even if a cyclic interrupt is not delayed by a higher-priority OB or communication activities, the accuracy with which it is started is nevertheless subject to system-dependent fluctuations.

The following table shows the accuracy with which a cyclic interrupt is triggered:

Table 3- 5 Accuracy of cyclic interrupts

	S7-1500			
	1511(F)-1 PN 1511T(F)-1 PN 1511C-1 PN 1512C-1 PN 1513(F)-1 PN	1515(F)-2 PN 1515T(F)-2 PN 1516(F)-3 PN/DP 1516T(F)-3 PN/DP	1517(F)-3 PN/DP 1517T(F)-3 PN/DP	1518(F)-4 PN/DP 1518(F)-4 PN/DP MFP
Cyclic interrupt	±90 µs	±80 µs	±30 µs	±25 µs

	S7-1500R/H* in RUN-Solo system state		
	1513R-1 PN	1515R-2 PN	1517H-3 PN
Cyclic interrupt	±390 µs	±300 µs	±90 µs

* Additional information about cycle and response times of R/H CPUs is available in the section "Cycle and response times of the S7-1500R/H redundant system"

	ET 200SP		
	1510SP(F)-1 PN	1512SP(F)-1 PN	1515SP(F)-PC
Cyclic interrupt	±90 µs	±90 µs	±80 µs

	ET 200pro
	1516pro(F)-2 PN
Cyclic interrupt	±80 µs

3.4 Response time for cyclic and time-driven program execution

Introduction

In this section you learn:

- How the response time is composed
- How to calculate the response time

Definition

The response time in the case of cyclic or time-controlled program execution is the time between the detection of an input signal and the change of a connected output signal.

Fluctuation in the response time of the CPU

The actual response time of the CPU fluctuates between one and two cycles for cyclic program execution and between one and two cyclic interrupt cycles for time-controlled program execution.

You should always assume the longest response time when configuring your system.

The following figure shows the shortest and longest response times of the CPU to an event.

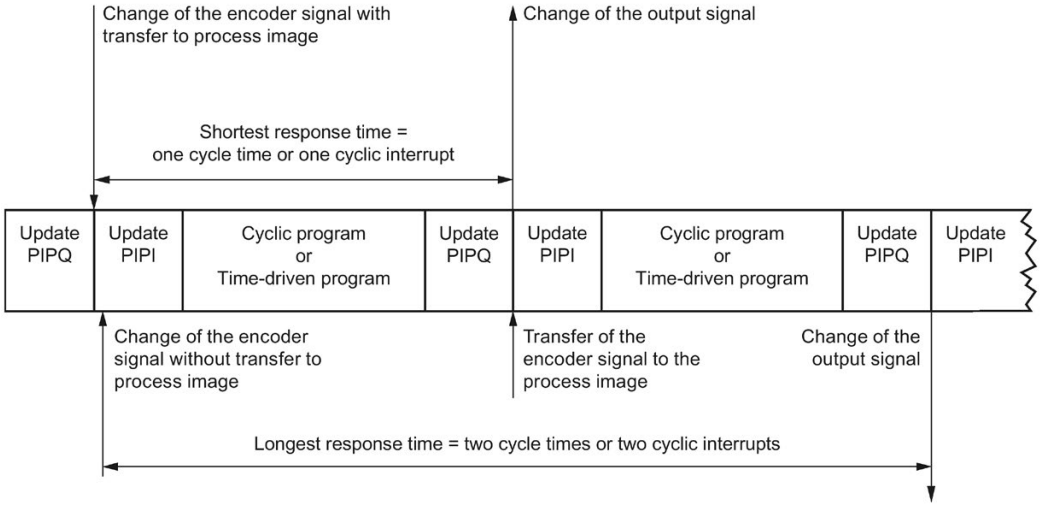

Figure 3-10 Shortest and longest response times of the CPU

Factors

To determine the process response time, you must take account of the following factors in addition to the CPU response time described above:

- Delay of the inputs and outputs at the I/O module
- Switching times of the sensors and actuators used
- Update times for PROFINET IO or DP cycle times on PROFIBUS DP; update time of the backplane bus for ET 200SP CPUs

Delay at the inputs and outputs of the modules

The delay and cycle times can be found in the technical specifications of the I/O modules.

Update times for PROFINET IO and DP cycle times on PROFIBUS DP

When distributed I/O is used, the maximum response time is additionally extended by the bus transmission times of PROFIBUS or PROFINET. These bus transmission times occur during both the reading and output of the process image partitions. The bus transmission times correspond to the bus update cycle of the distributed device.

PROFINET IO

If you use STEP 7 to configure your PROFINET IO system, STEP 7 calculates the update time. To display the update time, follow these steps:

- Select the PROFINET interface of the I/O module.
- In the General tab, select "Advanced options > Real time settings > IO cycle".

The update time is displayed in the "Update time" field and can be set for each IO device.

PROFIBUS DP

If you use STEP 7 to configure your PROFIBUS DP master system, STEP 7 calculates the DP cycle time. To display the DP cycle time, follow these steps:

- Select the PROFIBUS subnet in the network view.
- In the General tab of the Inspector window, navigate to the Bus parameters.

The DP cycle time is displayed in the "Parameters" field at "Typical Ttr".

The following figure illustrates the additional bus runtimes using distributed I/O.

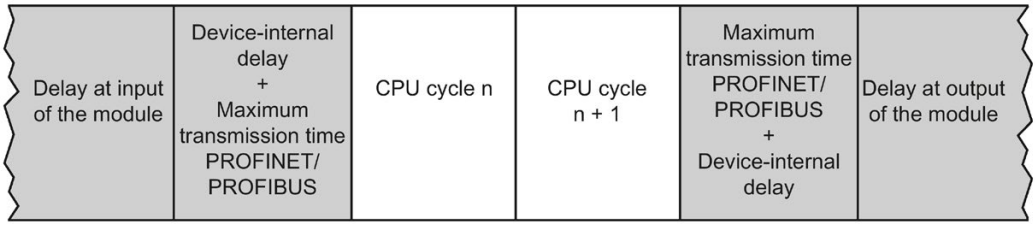

Figure 3-11 Additional bus runtimes with distributed I/O

A further optimization of the response times is achieved by using isochronous mode.

Update time of the backplane bus for ET 200SP CPUs

The following table shows the central (typical) update times of the backplane bus for the ET 200SP CPUs.

Table 3- 6 Update time of the ET 200SP CPUs

	Update time of the CPU		
	ET 200SP		
	1510SP(F)-1 PN	1512SP(F)-1 PN	1515SP(F)-PC
Update time for central I/O	250 µs to 1 ms, depending on number and type of central I/O modules[1]		

[1] The duration of the update time depends on the number of the I/O modules and their type (ST, HF, HS). The update time is set at 1 ms for a max. central I/O configuration with standard I/O modules. You can reduce the update time down to 250 µs, for example, by using HF I/O modules and by reducing the number of modules.

The table below is an orientation guide. It shows the approximate relationship between the number of ET 200SP I/O modules and the bus cycle that is used. As an example, 8 bytes of I/O data per I/O module are assumed in the table.

Number of ET 200SP I/O modules	Input data (bytes)	Output data (bytes)	Used bus cycle (µs)
8	64	64	250
16	128	128	250
24	192	192	281.25
32	256	256	312.5
40	320	320	343.75
48	384	384	375
56	448	448	406.25
64	512	512	437.5

For I/O modules with more than 32 bytes of I/O data, the bus cycle is calculated with an I/O module of 32 bytes. In this case the I/O module requires multiple bus cycles to update its I/O data.

Reference

The following links provide additional information:

- Application example for determining the response time for PROFINET (http://support.automation.siemens.com/WW/view/en/21869080)
- Transmission times and isochronous mode in function manual PROFINET with STEP 7 V15 (http://support.automation.siemens.com/WW/view/en/49948856); see also the section "Tips on assembly"
- Transmission times and isochronous mode in function manual PROFIBUS with STEP 7 V15 (http://support.automation.siemens.com/WW/view/en/59193579); see also the section "Network settings"
- Delays at the input or output of the modules can be found in the manual for the respective device.
- Information on device-internal delays can be found in the manuals for the ET 200MP and ET 200SP distributed I/O systems.

3.5 Summary of response time with cyclic and time-controlled program execution

Estimation of the shortest and longest response time

The following formulas may be used to estimate the shortest and longest response time:

Estimation of the shortest response time

The shortest response time is the sum of:

1 x delay of the input/output module for inputs
+ 1 x (update PROFINET IO or PROFIBUS DP)*; (update time of the backplane bus for the ET 200SP CPUs)
+ 1 x transfer time of the process image input
+ 1 x execution of the user program
+ 1 x transfer time of the process image output
+ 1 x (update PROFINET IO or PROFIBUS DP)*; (update time of the backplane bus for the ET 200SP CPUs)
+ 1 x delay of the input/output module for outputs

= **Shortest response time**

* Time is dependent on the configuration and the extent of the network.

The shortest response time is equivalent to the sum of the cycle time plus the input and output delay times.

Estimation of the longest response time

The longest response time is the sum of:

	1 x delay of the input/output module for inputs
+	2 x (update PROFINET IO or PROFIBUS DP)*; (update time of the backplane bus for the ET 200SP CPUs)
+	2 x transfer time of the process image input
+	2 x execution of the user program
+	2 x transfer time of the process image output
+	2 x (update PROFINET IO or PROFIBUS DP)*; (update time of the backplane bus for the ET 200SP CPUs)
+	1 x delay of the input/output module for outputs
=	**Longest response time**

* Time is dependent on the configuration and the extent of the network.

The longest response time is equivalent to the sum of twice the cycle time plus the delay times of the inputs and outputs. Twice the update time for PROFINET IO or twice the DP cycle time on PROFIBUS DP is added to the longest response time.

Event-driven program execution 4

4.1 Response time of the CPUs when program execution is event-controlled

Introduction

Hardware interrupts are used to detect events in the process in the user program and to react to them with an appropriate program. In STEP 7, the organization blocks OB 40 to OB 47 are intended for processing hardware alarms. You can create additional hardware interrupts starting with organization block OB 123. The number of available organization blocks depends on the CPU used.

Hardware interrupt

A hardware interrupt is an interrupt that occurs during the running program execution, due to an interrupt-triggering process event. The operating system calls the assigned interrupt OB; as a result, the execution of the program cycle or of lower priority program parts is interrupted. A hardware interrupt OB is assigned to the "Hardware interrupt" event class.

Interrupt response times of the CPUs for hardware interrupts

The interrupt response time starts with the occurrence of a hardware interrupt event in the CPU. The interrupt response time ends with the start of processing of the assigned hardware interrupt OB.

This time is subject to system-inherent fluctuations, and this is expressed using a minimum and maximum interrupt response time.

The following table contains the length of the typical response times of the CPUs for hardware interrupts.

Table 4- 1 Response times of the CPUs for hardware interrupts

		S7-1500			
		1511(F)-1 PN 1511T(F)-1 PN 1511C-1 PN 1512C-1 PN 1513(F)-1 PN	1515(F)-2 PN 1515T(F)-2 PN 1516(F)-3 PN/DP 1516T(F)-3 PN/DP	1517(F)-3 PN/DP 1517T(F)-3 PN/DP	1518(F)-4 PN/DP 1518(F)-4 PN/DP MFP
Interrupt response times	Min.	100 µs	90 µs	30 µs	20 µs
	Max.	400 µs	360 µs	120 µs	90 µs

		S7-1500R/H* in RUN-Solo system state		
		1513R-1 PN	1515R-2 PN	CPU 1517H-3 PN
Interrupt response times	Min.	100 µs	90 µs	30 µs
	Max.	400 µs	360 µs	120 µs

* Additional information about cycle and response times of R/H CPUs is available in the section "Cycle and response times of the S7-1500R/H redundant system"

		ET 200SP		
		1510SP(F)-1 PN	1512SP(F)-1 PN	1515SP(F)-PC
Interrupt response times	Min.	100 µs	100 µs	90 µs
	Max.	400 µs	400 µs	360 µs

		ET 200pro
		1516pro(F)-2 PN
Interrupt response times	Min.	90 µs
	Max.	360 µs

The specified times are extended:

- If higher-priority interrupts are queued for execution
- If the hardware interrupt OB is assigned to a process image partition

You can find these times in the tables in the section "Extension due to nesting of higher-priority OBs and/or interrupts" in the chapter User program execution time (Page 31).

If you need fast interrupt response times, do not assign a process image partition to the hardware interrupt OB and use direct access in the hardware interrupt OB.

You can find additional information on determining response times for PROFINET in the application example with the entry ID 21869080 on the Service&Support (http://support.automation.siemens.com/WW/view/en/21869080) Internet page.

Influence of input modules on the interrupt response times of hardware interrupts

Digital input modules:

Interrupt response time of hardware interrupts = internal interrupt processing time + input delay (see section Technical specifications in the relevant manual)

Analog input modules:

Interrupt response time of hardware interrupts = internal interrupt processing time + conversion time (see section Technical specifications in the relevant manual)

Impact of communication on interrupts

Communication tasks are always processed by the CPU with priority 15. If you do not want the interrupt execution to be delayed or interrupted by communication, configure the interrupt execution with priority > 15. The default setting for interrupt execution is priority 16.

Special consideration when PROFINET IO communication is configured on the 2nd PROFINET interface (X2)

Additional information on this is available in section Special consideration when PROFINET IO communication is configured on the 2nd PROFINET interface (X2) (Page 38).

4.2 Process response time when program execution is event-driven

When program execution is event-driven, the process response time is determined by the following:

- Delay times of the input and output modules used
- Update times for PROFIBUS/PROFINET for distributed modules; update time of the backplane bus for ET 200SP CPUs
- Interrupt response time of CPU
- Runtimes of the interrupt OB including update of the process image partition

The following figure shows the individual execution steps for event-driven program execution.

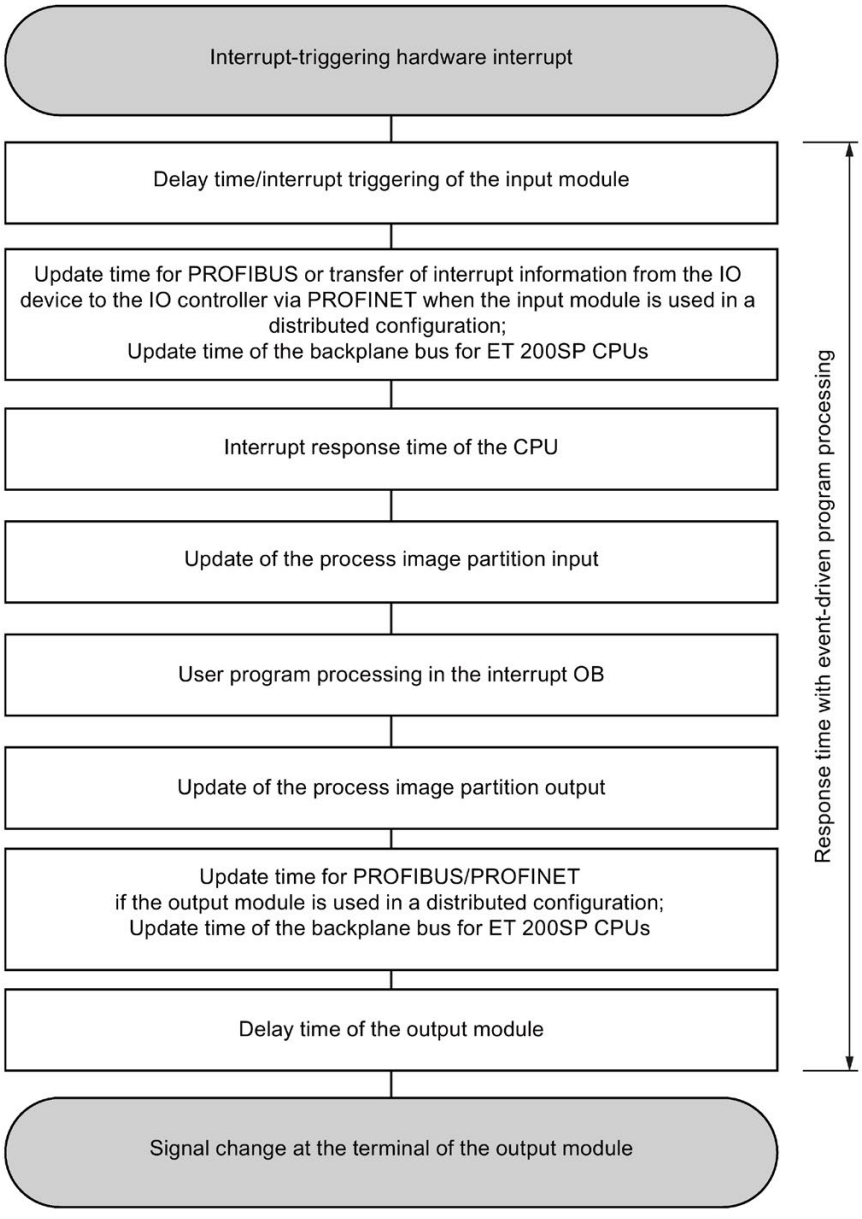

Figure 4-1 Schematic representation of event-driven program execution

Cycle and response times of the S7-1500R/H redundant system

5

5.1 Introduction

CPUs of the S7-1500R/H redundant system are designed as being redundant. The goal of the redundant configuration is to avoid production downtimes. When a CPU fails, the other CPU maintains control over the process.

Compared to non-redundant CPUs, the CPUs of the S7-1500R/H redundant system have the following special features:

- Longer cycle and response times
- Specific operating and system states
- Additional load and delays through synchronization

Contents of this section

This section describes the effects of the mode of operation of the S7-1500R/H redundant system on the cycle and response times.

It also describes how to estimate and control the cycle response times of the CPUs. This prevents excessive cycle times.

Note

Classification of this chapter

The statements in the previous chapters describe the response of an individual CPU.

The section "Cycle and response times of the S7-1500R/H redundant system" supplements the information of the previous sections with information on the S7-1500R/H redundant system.

5.2 Maximum cycle time and time errors

Maximum cycle time

As with non-redundant CPUs, you can parameterize a high limit of the cyclic program by setting the maximum cycle time.

The cycle time of redundant CPUs is usually longer as compared to non-redundant CPUs.

The factor by which the cycle time for redundant CPUs is higher than that for non-redundant CPUs depends very strongly on your specific automation task.

Note

Maximum cycle time in SYNCUP system state

The length of the parameterized maximum cycle time also affects the SYNCUP system state.

If the following condition is fulfilled during the SYNCUP, the system initiates a transition to RUN-Redundant:
The actual cycle time is ≤ 80% of the maximum cycle time over several cycles.

More information on this is available in section Influences on the cycle time in SYNCUP system state (Page 55).

Maximum cycle time in RUN-Redundant system state

On the failure of one of the two CPUs, the cycle time also contains a dead time of up to 300 ms for R-CPUs and up to 50 ms for the H-CPU. You must schedule this time as cycle time reserve in case of failure of one of the two CPUs. Therefore, ensure that the longest cycle time plus this dead time is < 60% of the configured maximum cycle time in RUN-Redundant system state. By doing so, you prevent the parameterized maximum cycle time from being exceeded in case of load fluctuations and delays due to synchronization.

Time error

As with non-redundant CPUs, you can specify the response to a time error for the CPUs of the S7-1500R/H redundant system. In RUN-Solo system state, the redundant CPUs behave like non-redundant CPUs when the maximum cycle time is exceeded (see section Cycle time (Page 24)).

In the SYNCUP and RUN-Redundant system states the redundant CPUs behave as follows:

Behavior without OB 80

Without loaded OB 80 the backup CPU switches to STOP operating state after a maximum cycle time has been exceeded once in the same cycle.

Note

System state change after STOP without OB 80

The primary CPU also switches to STOP after the maximum cycle time has been exceeded twice in the same cycle.

Behavior with OB 80

When OB 80 is loaded, the backup CPU switches to STOP operating state after the maximum cycle time has been exceeded twice in the same cycle.

Note

System state change after STOP with OB 80

The primary CPU also switches to STOP after the maximum cycle time has been exceeded three times in the same cycle.

Ensure that the actual maximum cycle time is < 60% of the parameterized maximum cycle time.

Switchover of the backup CPU to STOP operating state when the maximum cycle time is exceeded

A switchover of the backup CPU to STOP operating state reduces the synchronization load and stabilizes the primary CPU.

5.3 Influences on the cycle time of the S7-1500R/H redundant system

5.3.1 Influences on the cycle time in RUN-Solo system state

RUN-Solo system state

In RUN-Solo system state, the primary CPU is in RUN operating state. The primary CPU executes the cyclic, time- and interrupt-controlled program execution on its own. The backup CPU is in STOP operating state, is switched off or defective.

Influence on the cycle time

In RUN-Solo system state, the primary CPU behaves exactly the same as a standard CPU (non-redundant CPU) with regard to cycle time monitoring. Additional information on this is available in section "Cycle time (Page 24)".

5.3.2 Influences on the cycle time in SYNCUP system state

SYNCUP system state

In SYNCUP system state, the primary CPU is in RUN-Syncup operating state. The backup CPU is in SYNCUP operating state. The task of the SYNCUP system state is to synchronize the data of both CPUs so that the CPUs can subsequently work redundantly.

Influence on the cycle time

The figure below shows the chronological behavior of primary CPU and backup CPU during the SYNCUP system state.

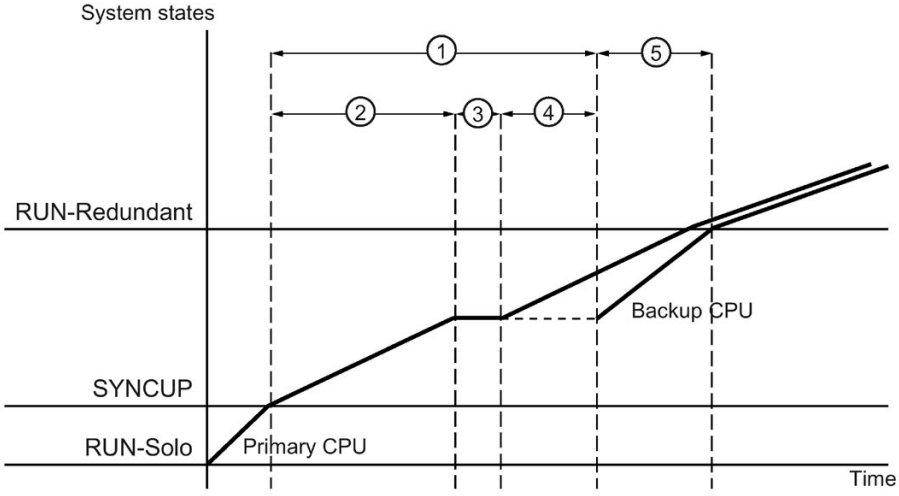

① Synchronization of data from the primary CPU to the backup CPU
② Copying the load memory and terminating the asynchronous instructions
③ Snapshot of the work memory contents
④ Transfer of the work memory contents to the backup CPU
⑤ Backup CPU makes up the time lag to the primary CPU

Figure 5-1 Effects of the SYNCUP on the cycle times of the CPUs

In SYNCUP system state, all relevant data is synchronized from the primary CPU to the backup CPU. At the end of SYNCUP, the backup CPU makes up the time lag to the primary CPU caused by the synchronization.

CAUTION

SYNCUP system state

- The synchronization of data, in particular the snapshot of the work memory contents, extends the cycle time. In addition, no test and commissioning functions can be carried out during the SYNCUP.
- During SYNCUP, hardware interrupts are processed with a very significant delay.
- The cycle time increases greatly during the transition from SYNCUP system state to RUN-Redundant.

Therefore, only execute the SYNCUP during uncritical process states.

① Synchronization of data from the primary CPU to the backup CPU

During this phase all relevant contents of the load memory, work memory, and system memory of the primary CPU are synchronized to the backup CPU.

② Copying the load memory and terminating the asynchronous instructions

The primary CPU copies parts of its load memory from its SIMATIC memory card to the SIMATIC memory card of the backup CPU. The backup CPU restarts and automatically switches to SYNCUP operating state. The backup CPU copies the transferred load memory contents to its work memory. Data blocks, process image, etc. are immediately overwritten with current data from the primary CPU.

③ Snapshot of the work memory contents

The primary CPU saves a consistent snapshot of its work memory contents at the next cycle control point.

④ Transfer of work memory contents to the backup CPU

During this phase the consistent snapshot is transferred from the primary CPU to the backup CPU. The transfer of the work memory contents extends the cycle time. The time required for the transfer of the work memory contents depends on the performance capability of the CPU and the amount of work memory data.

⑤ Backup CPU makes up the time lag to the primary CPU

During this phase the backup CPU makes up the time lag in program execution to the primary CPU. As in redundant mode, events are already synchronized during this phase as needed.

Note

No switchover possible during SYNCUP

If a fault occurs in the primary CPU during SYNCUP, no switchover to the backup CPU is possible. The SYNCUP is canceled and the backup CPU returns to STOP operating state.

Switchover from SYNCUP to RUN-Redundant

The system checks continuously which cycle time would result from a change to the RUN-Redundant system state. If this cycle time would be ≤ 80% of the maximum cycle time over multiple cycles, the transition is initiated.

Note

Determination of the cycle time during the SYNCUP

You can track the progress of the SYNCUP on the display of the primary CPU and backup CPU. At each cycle control point the backup CPU sends a status message on its program progress to the primary CPU. The display of the primary CPU indicates the duration of the time lag of the backup CPU.

In addition to viewing the progress in the displays, the progress of the SYNCUP can also be read out using the "RT_INFO" instruction.

Reasons for cancellation of the SYNCUP

Possible causes for the cancellation of the SYNCUP are:

- The load of the user program or the load on the redundancy connections between primary and backup CPU is too high
- The maximum cycle time of the primary CPU was exceeded

An overview of all reasons for the cancellation of the SYNCUP and remedial measures is available in the system manual S7-1500R/H redundant system (https://support.industry.siemens.com/cs/ww/en/view/109754833).

Disable SYNCUP

To avoid the described effects of the SYNCUP on the cycle times during critical process states, use the instruction "RH_CTRL".

The "RH_CTRL" instruction can be used to disable the SYNCUP system state for the S7-1500R/H redundant system. If the disable is no longer required, the "RH_CTRL" instruction can be used to enable the SYNCUP system state once again.

More information on the "RH_CTRL" instruction is available in the system manual S7-1500R/H redundant system (https://support.industry.siemens.com/cs/ww/en/view/109754833).

Minimum cycle time

It is often necessary to set a longer minimum cycle time for the CPUs of the S7-1500R/H redundant system than for those of the non-redundant CPUs.

Recommendation: Select the minimum cycle time so that the cyclic program does not have to be executed more frequently than your process requires. A longer minimum cycle time that has been adapted to your process optimizes the entire system. The computing power that is available per cycle by extending the minimum cycle time is then available for system tasks such as communication.

Note

Too low cycle times

Cycle times that are too low can result in an excessive synchronization load and thus terminate the SYNCUP.

5.3.3 Influences on the cycle time in RUN-Redundant system state

RUN-Redundant system state

In RUN-Redundant system state, the primary CPU guides the process. The primary CPU continuously synchronizes itself with the backup CPU. In the event of a failure of the primary CPU, the backup CPU adopts its role and thus control over the process.

Cycle time without interruption of the cyclic program

In RUN-Redundant system state, the backup CPU has a time lag compared to the primary CPU. This time lag results from the time required for event-controlled synchronization of data from the primary CPU to the backup CPU.

The following figure shows the phases which the CPUs run through without an interruption of the cyclic program.

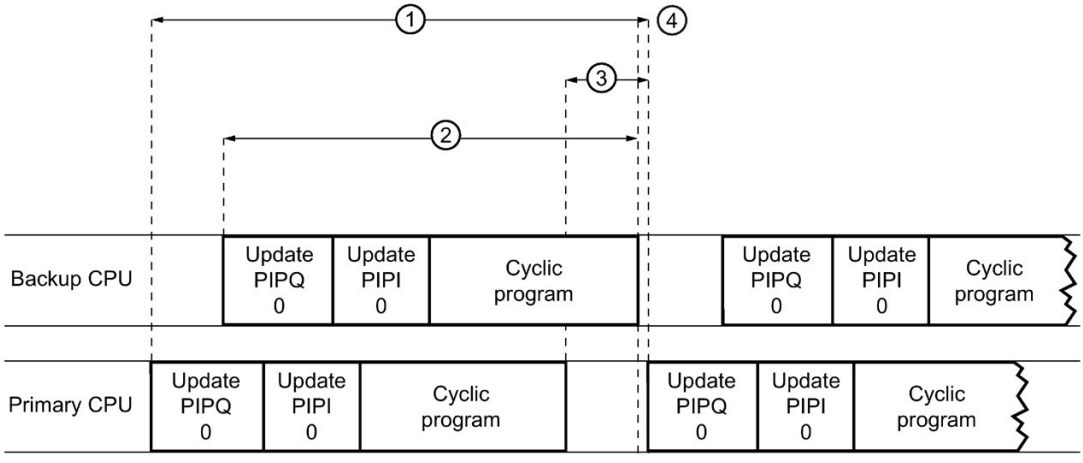

① Cycle time
② Cycle of the backup CPU
③ Time lag
④ Cycle end and start of the next cycle (cycle control point)

Figure 5-2 Cycle time without interruption of the cyclic program

The cycle time ① includes the cycle of the backup CPU ② and the time lag ③ of the backup CPU compared to the primary CPU. The time lag results from the time required for the synchronization of the data between primary CPU and backup CPU. The synchronization between primary CPU and backup CPU occurs automatically if required. The more data has to be synchronized between the CPUs during a cycle, the greater the time lag. The program cycle ends as soon as the backup CPU has reached the end of its cyclic program. The primary CPU starts the next cycle as soon as the backup CPU reports the cycle end to the primary CPU ④.

Extension of the cycle

As with non-redundant CPUs, an occurring event and the associated OB can extend the cycle. Events can occur both during the execution of the cyclic program and during the time lag.

In the following example the CPU must process a higher-priority OB (OB 30 with priority 7), while the primary CPU waits for the end of the cycle of the backup CPU. The figure below shows the phases which the CPUs run through in such a case.

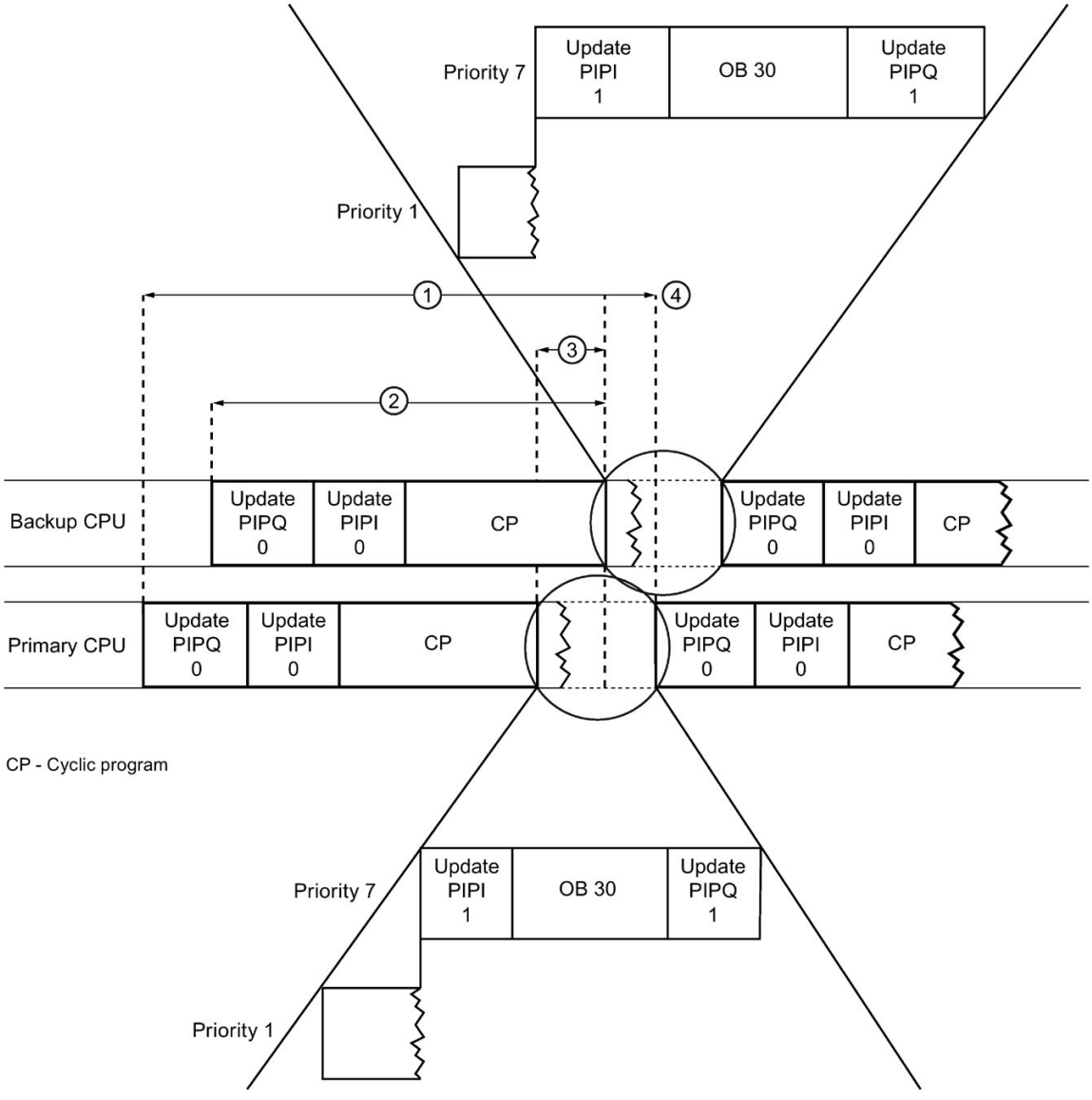

① Cycle time
② Cycle of the backup CPU
③ Time lag
④ Cycle end and start of the next cycle (cycle control point)

Figure 5-3 Processing of a higher-priority OB

Execution of the cyclic program (CP with priority 1) is complete. While the primary CPU waits for the end of the cycle of the backup CPU, a higher priority OB (OB 30 with priority 7) starts. The primary CPU starts the next cycle as soon as the following conditions have been fulfilled:

- The primary CPU has received the message from the backup CPU that the backup CPU has finished processing the cyclic program.
- The primary CPU has processed OB 30 and updated PIPQ1.

Note

Due to the change of the run level and the synchronization, interruptions of the program cycle by higher-priority OBs result in a higher load. Interruptions of the program cycle extend the cycle time.

Differences between the synchronization times

The available bandwidth has a significant impact on the synchronization time.

With the R-CPUs both the synchronization of data and the synchronization of communication tasks operate over the PROFINET ring. 25% of the bandwidth is reserved for the synchronization.

With the H-CPU, synchronization works independently of the PROFINET ring over fiber optic cables. The full bandwidth on the PROFINET cable is available for PROFINET IO communication.

The table below provides an overview of performance features of R-CPUs and H-CPU.

Table 5- 1 Performance features of S7-1500R and S7-1500H

	S7-1500R		S7-1500H
	CPU 1513R-1 PN	CPU 1515R-2 PN	CPU 1517H-3 PN
Performance	• Data transfer rate of 100 Mbps (for synchronization and communication)		• Significantly greater performance than S7-1500R due to – Separate redundancy connections over fiber-optic cables – Greater computing power • Transmission rate of 1 Gbps (for the synchronization) • Data work memory: max. 8 MB • Code work memory: max. 2 MB
	• Data work memory: max. 1.5 MB • Code work memory: max. 300 KB	• Data work memory: max. 3 MB • Code work memory: max. 500 KB	
Hardware	• The CPUs are identical in design with the respective S7-1500 standard versions. • The synchronization of the CPUs takes place over the PROFINET ring. • The H-Sync-Forwarding function is recommended for all devices in the PROFINET ring. • Part of the bandwidth on the PROFINET cable is used to synchronize the CPUs. Less bandwidth is therefore available for PROFINET IO communication.		• The CPUs each have two optical interfaces. • The synchronization of the CPUs operates independently of the PROFINET ring over fiber-optic cables. • The full bandwidth on the PROFINET cable is available for PROFINET IO communication.

Technical specifications

More information about the technical specifications is available in the manuals of the specific CPUs.

5.3.4 Influences on the cycle time when a CPU fails

If one of the two CPUs fails during redundant operation, the other CPU controls the process alone. If a CPU fails, the system state switches from RUN-Redundant to RUN-Solo. The CPU continues executing the user program in RUN operating state.

Note

Dead time in case of a CPU failure

On the failure of a CPU, the cycle time also contains a dead time of up to 300 ms for R-CPUs and up to 50 ms for the H-CPU. You must schedule this time as cycle time reserve for a CPU failure.

To avoid excessive cycle times after a CPU failure, further increase the maximum cycle time by this value.

Note

Change of the system state from RUN-Redundant to Run-Solo by the user

If you deliberately trigger a change of the system state, e.g. by switching the backup CPU to STOP via the display, this will also extend the cycle time. However, the cycle time will not increase to the same extent as with switchover of the CPUs in the event of an error (failure of one of the CPUs).

Information on the causes for the failure of a CPU is available in the S7-1500R/H redundant system (https://support.industry.siemens.com/cs/ww/en/view/109754833) system manual.

Failure of the primary CPU

The figure below shows the impact of the failure of the primary CPU on the cycle time.

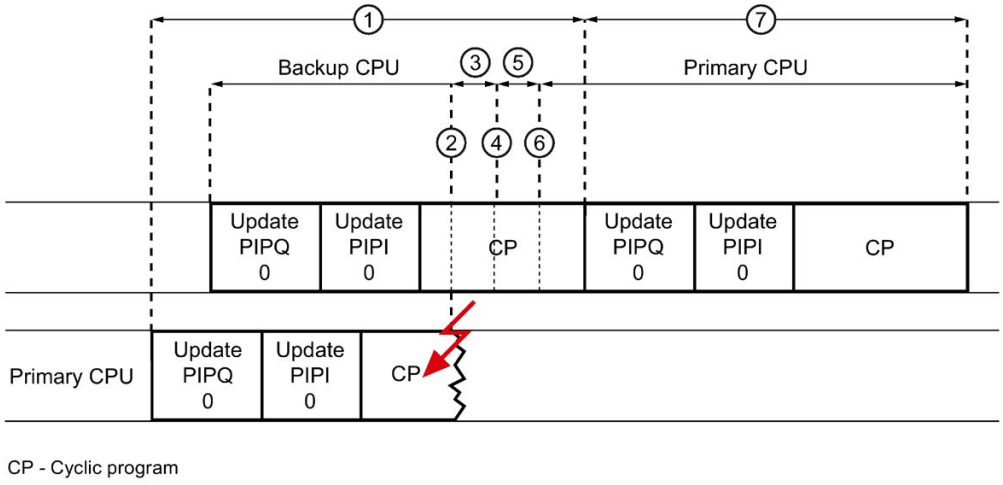

① Cycle time
② Failure of the primary CPU
③ Backup CPU continues processing the program
④ Backup CPU no longer receives synchronization telegrams
⑤ Backup CPU waits for the monitoring time to expire
⑥ End of the monitoring time, switchover time and system state transition
⑦ Cycle time of the new primary CPU in RUN operating state

Figure 5-4 Impact of the failure of the primary CPU on the cycle time

The example shows the failure of the primary CPU ② while it is processing the cyclic program. The primary CPU no longer sends any synchronization telegrams to the backup CPU. During the period ③, the backup CPU continues operating only on the basis of the synchronization data transferred before the failure of the primary CPU. At ④, the backup CPU has reached the point in the program where the primary CPU stopped sending synchronization telegrams. During the phase ⑤, the backup CPU waits to see whether data will again be sent from the primary CPU after all. Because the synchronization data is not transferred even after the monitoring time has expired, the backup CPU becomes the new primary CPU at point ⑥. The redundant system switches from RUN-Redundant system state to RUN-Solo system state.

The cycle time ① extends from the time processing of the cyclic program is started in RUN-Redundant to the time when processing of the cyclic program ends in RUN-Solo.

Because data can no longer be synchronized in the RUN-Solo system state, the cycle time ⑦ is shorter than the cycle time ①.

Note

Monitoring time

The monitoring time is an internal time with fixed duration. You cannot assign parameters for the internal time. The monitoring time starts as soon as the synchronization data arrives at the backup CPU. If no synchronization data is received from the primary CPU, the system automatically performs a system state change after the monitoring time has expired.

Failure of the backup CPU

The figure below shows the impact of the failure of the backup CPU on the cycle time.

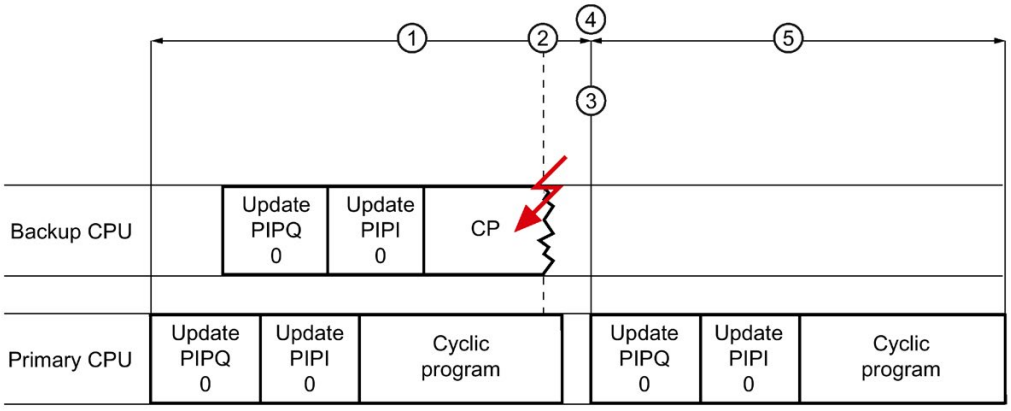

CP = Cyclic program

① Cycle time
② Failure of the backup CPU
③ Expiration of the monitoring time
④ System status transition
⑤ Cycle time of the primary CPU in RUN-Solo operating state

Figure 5-5 Impact of the failure of the backup CPU on the cycle time

The backup CPU fails before processing of the cyclic program has ended ②. The primary CPU detects the failure of the backup CPU because no synchronization data has been received until the monitoring time ③ has expired. The primary CPU terminates the synchronization with the backup CPU. The redundant system switches from RUN-Redundant system state to RUN-Solo system state ④.

Because no more data can be synchronized in RUN operating state, the cycle time ⑤ is shorter than the cycle time ①.

5.4 Response time of R/H CPUs

Relationship between the cycle time and response time

The cycle time of the system also forms the basis for its response time. The response time depends, among other things, on the cycle time of the individual program cycles.

Fluctuation of the response time

The actual response time fluctuates between one and two cycles during cyclic program execution. The actual response time fluctuates between one and two cyclic interrupt cycles for time-controlled program execution.

You should always assume the longest response time when configuring your system.

In the figure below the process image is updated immediately after the change of the encoder signal. The output can therefore respond to the signal change after a cycle has ended.

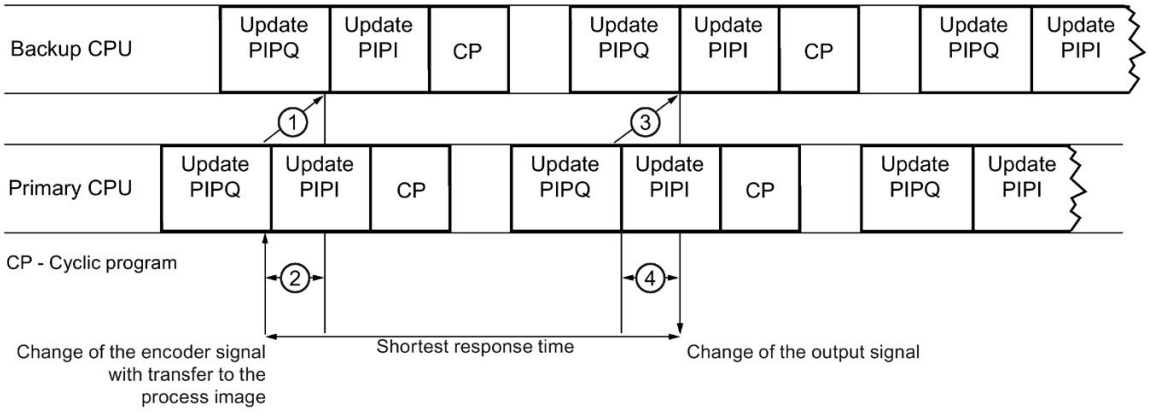

① Synchronization of the encoder signal change in the backup CPU
② Time lag of the backup CPU to the primary CPU
③ Synchronization of the output signal change in the backup CPU
④ Time lag of the backup CPU to the primary CPU until actual output of the signal change to the IO devices in the PROFINET ring

Figure 5-6 Shortest response time

In the figure below, the process image has already been updated by the time of the signal change. It therefore takes one cycle until the system detects the change and sets the input in the process image. The output signal is changed after an additional cycle.

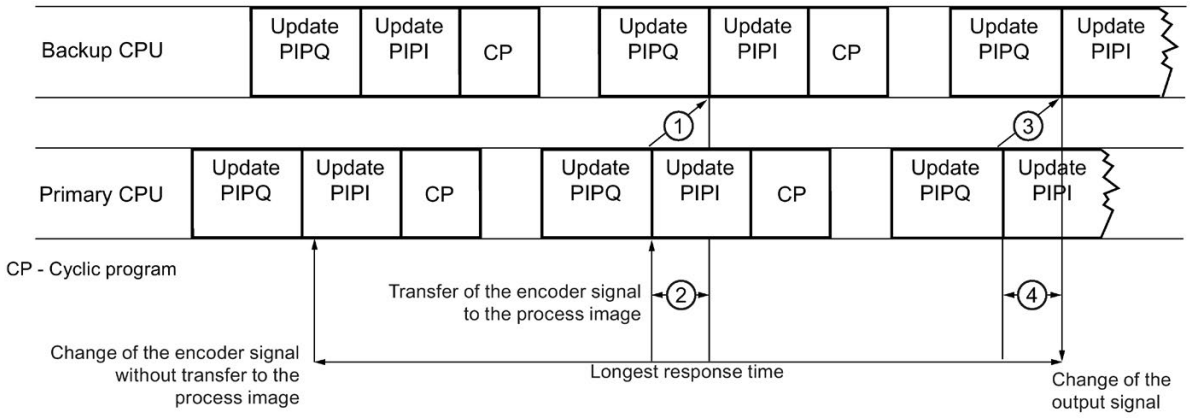

① Synchronization of the encoder signal change in the backup CPU
② Time lag of the backup CPU to the primary CPU
③ Synchronization of the output signal change in the backup CPU
④ Time lag of the backup CPU to the primary CPU until actual output of the signal change to the IO devices in the PROFINET ring

Figure 5-7 Longest response time

The cycle times include the time lag. The time lag of the backup CPU to the primary CPU depends on the synchronization load. The synchronization load results from the data to be synchronized in the user program and in the communication.

Note

Effect of the time lag

The synchronization and transfer of the changes requires computing time. The time lag therefore affects both CPUs (from the primary CPU to the backup CPU and from the backup CPU to the primary CPU). The slower the CPU and the slower and longer the synchronization connection, the greater the time lag.

Determination of cycle and response times

At the end of the cyclic program, the primary CPU waits until the backup CPU too has acknowledged the end of the cyclic program. The cycle time of the primary CPU therefore also includes the time lag of the backup CPU. The cycle is extended by the time lag.

Advantages

The fact that the cycle time includes the time lag of the backup CPU to the primary CPU offers the following advantages:

- By monitoring the maximum cycle time in STEP 7, in the HMI or in the user program after SYNCUP, it is possible to determine the cycle time for a switchover of the CPUs in case of an error.
  Requirement: You have reset the maximum cycle time after the end of SYNCUP.
- During commissioning it is not necessary to perform complicated tests to determine whether the required response time can still be complied with if a CPU fails.
- During commissioning and ongoing operation you can estimate whether your automation task can meet the response times required for the process.

The same functions as those for the non-redundant CPUs are available for determining the cycle and response times:

Table 5- 2 Functions for determining the cycle and response times

Function	Additional information
Defining the minimum cycle time and the maximum cycle time in STEP 7	Section Cycle time (Page 24)
Defining the desired response of the user program if the maximum cycle time has been exceeded	
Reading out the cycle time statistics via STEP 7 and the display of the CPU Note that this function always shows the cycle time statistics from the primary CPU viewpoint, even when you go online via the backup CPU.	
Reading out the cycle time and reading out the progress in the SYNCUP system state with the instruction "RT_INFO"	
Display of measurements (traces) which record special time-critical signal characteristics	Function manual Using the trace and logic analyzer functions (http://support.automation.siemens.com/WW/view/en/64897128)
Reading out the progress of the SYNCUP system state using the display of the CPU	S7-1500R/H redundant system (https://support.industry.siemens.com/cs/ww/en/view/109754833) system manual

5.5 Timetables for the RUN-Redundant system state

The following section describes the typical times of the CPUs of the S7-1500R/H redundant system in the RUN-Redundant system state.

Update times of the process image partitions

The following table contains the times for estimating the typical update times of the process image partitions.

Table 5- 3 Data for estimating the typical update time of the process image partitions

	Update times of the CPUs in the RUN-Redundant system state		
	CPU 1513R-1 PN	CPU 1515R-2 PN	CPU 1517H-3 PN
Basic load for updating process image partitions	63 µs	57 µs	13 µs
Copy time for distributed I/O via PROFINET	6.5 µs/word	6.5 µs/word	2.6 µs/word

A table of the update times of the CPUs in the RUN-Solo system state is available in section Update time for process image partitions (Page 28).

Program execution time without interruptions

The user program has a certain runtime without interruptions. The runtime depends on the number of operations that are executed in the user program.

The following table contains the typical durations of operations.

Table 5- 4 Duration of an operation

	Program execution times of the CPUs in RUN-Redundant system state		
	CPU 1513R-1 PN	CPU 1515R-2 PN	CPU 1517H-3 PN
Bit operations, typ.	80 ns	60 ns	4 ns
Word operations, typ.	96 ns	72 ns	6 ns
Fixed-point arith-metic, typ.	128 ns	96 ns	6 ns
Floating-point arithmetic, typ.	512 ns	384 ns	24 ns

A table of the program execution times of the CPUs in the RUN-Solo system state is available in section User program execution time (Page 31).

Extension due to nesting of higher-priority OBs and/or interrupts

The interruption of a user program at the end of an instruction by a higher-priority OB causes a certain basic time expenditure. Take account of this basic time expenditure in addition to the update time of the assigned process image partitions and the execution time of the contained user program. The following tables contain the typical times for the various interrupts and error events.

Table 5- 5 Basic time expenditure for an interrupt

	Basic time expenditure of the CPUs for an interrupt in the RUN-Redundant system state		
	CPU 1513R-1 PN	CPU 1515R-2 PN	CPU 1517H-3 PN
Hardware interrupt	560 µs	430 µs	70 µs
Time-of-day interrupt	560 µs	430 µs	70 µs
Time-delay interrupt	560 µs	430 µs	70 µs
Cyclic interrupt	560 µs	430 µs	70 µs

A table of the time expenditure of the CPUs for an interrupt in the RUN-Solo system state is available in section User program execution time (Page 31).

Table 5- 6 Basic time expenditure for an error OB

	Basic time expenditure of the CPUs for an error OB in the RUN-Redundant system state		
	CPU 1513R-1 PN	CPU 1515R-2 PN	CPU 1517H-3 PN
Programming error	560 µs	430 µs	70 µs
I/O access error	560 µs	430 µs	70 µs
Time error	560 µs	430 µs	70 µs
Diagnostic interrupt	560 µs	430 µs	70 µs
Module failure/recovery	560 µs	430 µs	70 µs
Station failure/recovery	560 µs	430 µs	70 µs

A table with the basic time expenditure of the CPUs for an error OB in the RUN-Solo system state is available in section User program execution time (Page 31).

Accuracy of a cyclic interrupt

Even if a cyclic interrupt is not delayed by a higher-priority OB or communication activities, the accuracy with which it is started is nevertheless subject to system-dependent fluctuations.

The following table shows the accuracy with which a cyclic interrupt is triggered:

Table 5- 7 Accuracy of cyclic interrupts

	Accuracy of cyclic interrupts of the CPUs in the RUN-Redundant system state		
	CPU 1513R-1 PN	CPU 1515R-2 PN	CPU 1517H-3 PN
Cyclic interrupt	±5.8 ms	±3.2 ms	±1.6 ms

A table with the accuracy of cyclic interrupts of the CPUs in the RUN-Solo system state is available in section Time-driven program execution in cyclic interrupts (Page 40).

Interrupt response times for hardware interrupts

The interrupt response times of the CPUs start with the occurrence of a hardware interrupt event in the CPU and end with the start of the assigned hardware interrupt OB.

This time is subject to system-inherent fluctuations, and this is expressed using a minimum and maximum interrupt response time.

The following table contains the length of the typical response times of the CPUs for hardware interrupts.

Table 5- 8 Interrupt response times for hardware interrupts

		Interrupt response times of the CPUs for hardware interrupts in the RUN-Redundant system state		
		CPU 1513R-1 PN	CPU 1515R-2 PN	CPU 1517H-3 PN
Interrupt response times	Min.	180 µs	150 µs	40 µs
	Max.	1420 µs	1360 µs	470 µs

A table of the interrupt response times of the CPUs in the RUN-Solo system state is available in section Response time of the CPUs when program execution is event-controlled (Page 47).

Glossary

Backup CPU

Role of a CPU in the S7-1500R/H redundant system. If the R/H system is in RUN-Redundant system state, the primary CPU guides the process. The backup CPU processes the user program synchronously and can take over the process management if the primary CPU fails.

Cycle time

The cycle time represents the time a CPU requires to process the user program once.

Data block

Data blocks (DBs) are data areas in the user program that contain user data. The following data blocks exist:

- Global data blocks which you can access from all code blocks.
- Instance data blocks that are assigned to a specific FB call.

Diagnostic interrupt

See "Interrupt, diagnostic"

Diagnostics

Monitoring functions include:

- The detection, localization and classification of errors, faults and alarms.
- Displaying and further evaluation of errors, faults and alarms.

They run automatically during plant operation. This increases the availability of systems by reducing commissioning times and downtimes.

Diagnostics buffer

The diagnostics buffer represents a backup memory in the CPU, used to store diagnostics events in their order of occurrence.

Distributed I/O system

System with I/O modules that are configured on a distributed basis, at a large distance from the CPU controlling them.

Firmware of the CPU

In SIMATIC, a distinction is made between the firmware of the CPU and user programs.

The firmware is a software embedded in electronic devices, which means it is permanently connected with the hardware functionally. It is usually saved in a flash memory, such as EPROM, EEPROM or ROM, and cannot be replaced by the user or only with special means or functions.

User program: see glossary entry "User program"

H-Sync Forwarding

H-Sync Forwarding enables a PROFINET device with MRP to forward synchronization data (synchronization frames) only within the PROFINET ring.

Through H-Sync Forwarding, the synchronization data is also forwarded during reconfiguration of the PROFINET ring. This reduces the cycle time utilization.

H-Sync Forwarding is recommended for PROFINET devices that you use in the PROFINET ring of redundant S7-1500R systems.

H-Sync Forwarding is not relevant for redundant S7-1500H systems.

I/O module

Device of the distributed I/O that is used as interface between the controller and the process.

Interrupt

The CPU's operating system distinguishes between various priority classes that control the execution of the user program. These priority classes include interrupts, such as hardware interrupts. When an interrupt occurs, the operating system automatically calls an assigned organization block. The required response is programmed in the organization block (for example, in an FB).

Interrupt, cyclic

The CPU generates a cyclic interrupt periodically within a parameterizable time grid and then processes the corresponding organization block.

Interrupt, diagnostics

Diagnostics-capable modules signal detected system errors to the CPU using diagnostic interrupts.

Interrupt, hardware

A hardware interrupt is triggered by interrupt-triggering modules due to a certain event in the process. The hardware interrupt is reported to the CPU. The CPU then processes the assigned organization block according to the priority of this interrupt.

Interrupt, time-delay

The time-delay interrupt is one of the program execution priority classes of SIMATIC S7. The time-delay interrupt is generated after the expiration of a timer started in the user program. The CPU then processes the corresponding organization block.

Interrupt, time-of-day

The time-of-day interrupt is one of the program execution priority classes of SIMATIC S7. The time-of-day interrupt is generated depending on a specific date and time. The CPU then processes the corresponding organization block.

IO controller

See "PROFINET IO controller"

IO device

See "PROFINET IO device"

Operating states

Operating states describe the behavior of a single CPU at a specific time.

The CPUs of the SIMATIC standard systems have the STOP, STARTUP and RUN operating states.

The primary CPU of the redundant system S7-1500R/H has the operating states STOP, STARTUP, RUN, RUN-Syncup and RUN-Redundant. The backup CPU has the operating states STOP, SYNCUP and RUN-Redundant.

Organization block

Organization blocks (OBs) form the interface between the CPU operating system and the user program. The organization blocks determine the order in which the user program is executed.

Parameter

- Tag of a STEP 7 code block:
- Tag for setting the behavior of a module (one or more per module). In as-delivered state, every module has an appropriate basic setting, which you can change by configuring in STEP 7. There are static and dynamic parameters.

Parameters, dynamic

Dynamic parameters of modules can be changed during operation by calling an SFC in the user program, for example, limit values of an analog input module.

Parameters, static

Static parameters of modules cannot be changed by the user program but only by the configuration in STEP 7, e.g. input delay of a digital input module.

Primary CPU

If the R/H system is in RUN-Redundant system state, the primary CPU guides the process. The backup CPU processes the user program synchronously and can take over the process management if the primary CPU fails.

Process image (I/O)

The CPU transfers the values from the input and output modules to this memory area. At the start of the cyclic program, the CPU transfers the process image output as a signal state to the output modules. The CPU then transfers the signal states of the input modules into the process image input. The CPU then executes the user program.

PROFINET

PROcess **FI**eld **NET**work, open Industrial Ethernet standard which further develops PROFIBUS and Industrial Ethernet. A cross-manufacturer communication, automation, and engineering model defined by PROFIBUS International e.V. as an automation standard.

PROFINET IO

Communication concept for the realization of modular, distributed applications within the scope of PROFINET.

PROFINET IO controller

Device used to address connected I/O devices (e.g. distributed I/O systems). The IO controller exchanges input and output signals with assigned I/O devices. The IO controller often corresponds to the CPU in which the automation program is running.

PROFINET IO device

Distributed field device that can be assigned to one or more IO controllers (e.g. distributed I/O system, valve terminals, frequency converters, switches).

Redundancy connection

The redundancy connection in an S7-1500R system is the PROFINET ring with MRP. The redundancy connection uses part of the bandwidth on the PROFINET cable to synchronize the CPUs, which means the bandwidth is not available for PROFINET IO communication.

Contrary to S7-1500R, PROFINET ring and redundancy connection are separate in an S7-1500H. The two redundancy connections are fiber-optic cables which directly connect the CPUs to each other via synchronization modules. The bandwidth on the PROFINET cable is available for PROFINET IO communication.

Redundant systems

Redundant systems are identified by the fact that important automation components are available in multiple units (redundant). If one redundant component fails, control of the process is maintained.

Retentivity

A memory area whose content is retained even after a power failure and after a transition from STOP to RUN is retentive. The non-retentive bit memory area, timers and counters are reset after a power failure and after a STOP-RUN transition.

System states

The system states of the S7-1500R/H redundant system result from the operating states of the primary and backup CPU. The term system state is used as a simplified expression that identifies the operating states of the two CPUs that occur at the same time. The S7-1500R/H redundant system features the STOP, STARTUP, RUN-Solo, SYNCUP and RUN-Redundant system states.

TIA Portal

Totally Integrated Automation Portal

The TIA Portal is the key to the full performance capability of Totally Integrated Automation. The software optimizes all operating, machine and process sequences.

Timers

Timers are components of the CPU system memory. The operating system automatically updates the content of the "timer cells" asynchronously to the user program. STEP 7 instructions define the precise function of the timer cell (e.g. on-delay) and trigger its execution.

User program

In SIMATIC, a distinction is made between user programs and the firmware of the CPU.

The user program contains all instructions, declarations and data by which a system or process can be controlled. The user program is assigned to a programmable module (for example, CPU, FM) and can be structured in smaller units.

Firmware: see glossary entry "Firmware of the CPU"

Index

C

Cycle
    Definition, 21
Cycle control point, 23
Cycle time
    Definition, 24
    Different, 25
    Process image partition, 28
    Update, 28
Cycle time statistics, 27

D

Dead time, 52, 63

E

Execution
    Event-driven, 13
    Time-driven, 13

F

FAQ
    Total cycle time of a program, 35

H

Hardware interrupts, 13, 47

I

Instruction
    RE_TRIGR, 26
    RT_Info, 27, 38, 38, 57, 68
    RUNTIME, 32
Interrupt response times
    CPU, 48
    R/H CPUs, 71
Interruptibility, 14

M

Maximum cycle time, 26, 37, 52
Minimum cycle time, 22, 26, 58

O

OB 80
    Time error OB, 26

P

Parameter
    Enable time error, 17
    Event threshold for time error, 17
    Events to be queued, 17
    Report event overflow into diagnostic buffer, 17
Process image partitions, 14
Program execution, 13
Program execution in the cyclic program, 13
Program execution times
    Without interruption, 31
Program execution times of R/H CPUs
    Without interruption, 69
Program organization, 13

R

R/H CPUs
    Interrupt response times, 71
Response time
    Definition, 42
Response time of CPU, 42
    Fluctuation, 42
Response time of R/H CPUs
    Fluctuation, 66

S

Synchronization
    in RUN-Redundant system state, 59
    in SYNCUP system state, 55

T

Time error OB
    OB 80, 26, 53
Times
    Basic expenditure for error OB, 34, 70
    Basic expenditure for interrupts, 33, 70
    Cyclic interrupts for S7-1500 CPUs, 41
    Cyclic interrupts for S7-1500R/H-CPUs, 71
    For one operation, 31, 34, 34, 35, 35, 70

U

Update times
    Backplane bus ET 200SP CPUs, 44
    PROFIBUS DP, 43
    PROFINET IO, 43
    S7-1500 CPUs, 29
    S7-1500R/H-CPUs, 69

SIEMENS

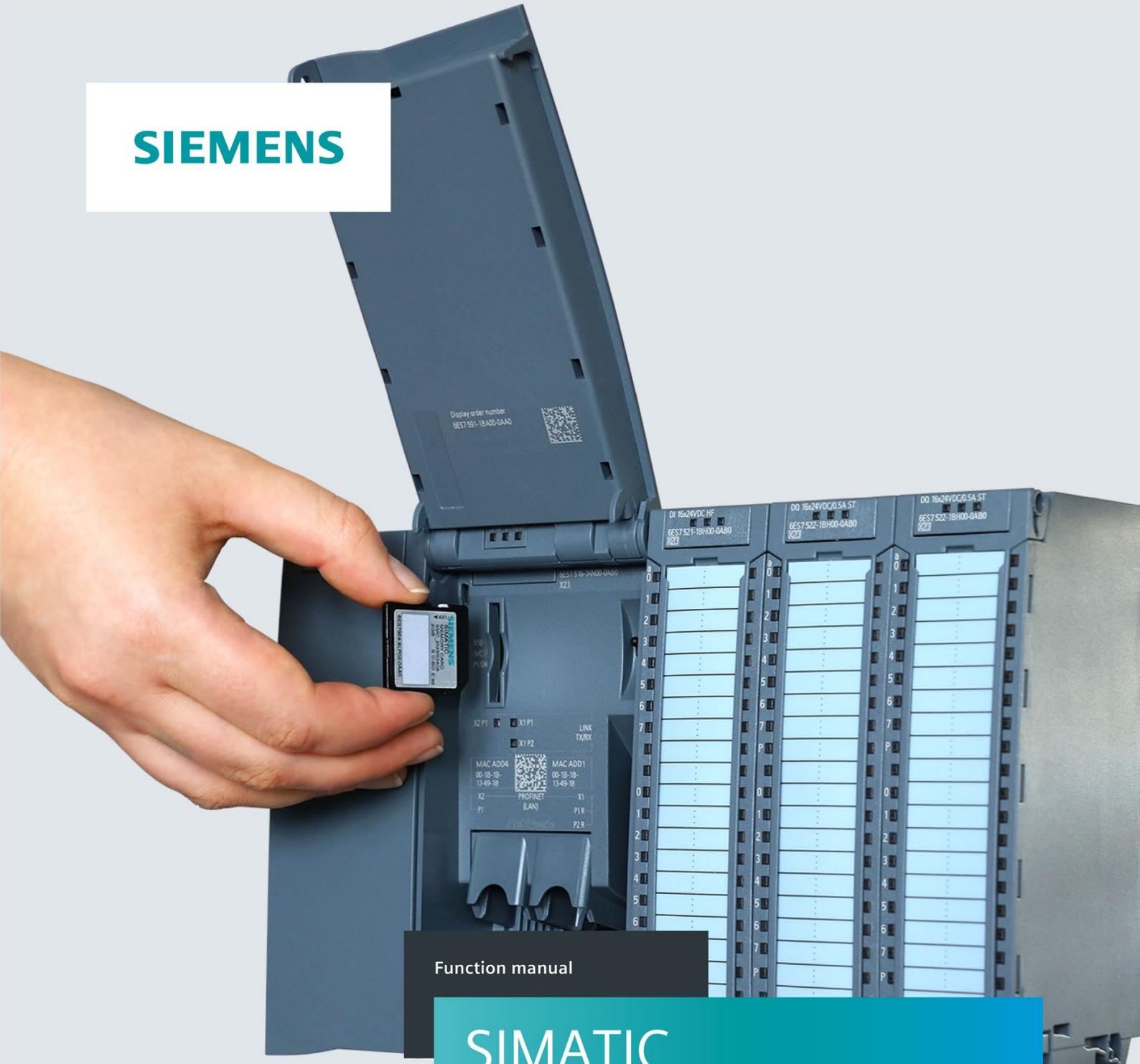

Function manual

SIMATIC

S7-1500, ET 200SP, ET 200pro

Structure and Use of the CPU Memory

Edition 10/2018

support.industry.siemens.com

SIEMENS

SIMATIC

S7-1500, ET 200SP, ET 200pro Structure and Use of the CPU Memory

Function Manual

Preface

Documentation guide 1

Memory areas and retentive memory 2

Memory usage and application examples 3

SIMATIC memory card 4

10/2018

A5E03461664-AC

Legal information

Warning notice system

This manual contains notices you have to observe in order to ensure your personal safety, as well as to prevent damage to property. The notices referring to your personal safety are highlighted in the manual by a safety alert symbol, notices referring only to property damage have no safety alert symbol. These notices shown below are graded according to the degree of danger.

⚠ DANGER

indicates that death or severe personal injury **will** result if proper precautions are not taken.

⚠ WARNING

indicates that death or severe personal injury **may** result if proper precautions are not taken.

⚠ CAUTION

indicates that minor personal injury can result if proper precautions are not taken.

NOTICE

indicates that property damage can result if proper precautions are not taken.

If more than one degree of danger is present, the warning notice representing the highest degree of danger will be used. A notice warning of injury to persons with a safety alert symbol may also include a warning relating to property damage.

Qualified Personnel

The product/system described in this documentation may be operated only by **personnel qualified** for the specific task in accordance with the relevant documentation, in particular its warning notices and safety instructions. Qualified personnel are those who, based on their training and experience, are capable of identifying risks and avoiding potential hazards when working with these products/systems.

Proper use of Siemens products

Note the following:

⚠ WARNING

Siemens products may only be used for the applications described in the catalog and in the relevant technical documentation. If products and components from other manufacturers are used, these must be recommended or approved by Siemens. Proper transport, storage, installation, assembly, commissioning, operation and maintenance are required to ensure that the products operate safely and without any problems. The permissible ambient conditions must be complied with. The information in the relevant documentation must be observed.

Trademarks

All names identified by ® are registered trademarks of Siemens AG. The remaining trademarks in this publication may be trademarks whose use by third parties for their own purposes could violate the rights of the owner.

Disclaimer of Liability

We have reviewed the contents of this publication to ensure consistency with the hardware and software described. Since variance cannot be precluded entirely, we cannot guarantee full consistency. However, the information in this publication is reviewed regularly and any necessary corrections are included in subsequent editions.

Siemens AG
Division Digital Factory
Postfach 48 48
90026 NÜRNBERG
GERMANY

A5E03461664-AC
℗ 09/2018 Subject to change

Copyright © Siemens AG 2013 - 2018.
All rights reserved

Preface

Purpose of the documentation

This documentation describes the various memory areas of the SIMATIC S7-1500 automation system, the SIMATIC S7-1500-based CPU 1516pro-2 and the ET 200SP distributed I/O system and shows you how to optimally use these memory areas.

In addition, this manual shows you how to reduce work memory utilization by using recipes and data logs.

Basic knowledge required

The following knowledge is required in order to understand the documentation:

- General knowledge of automation technology
- Knowledge of the SIMATIC industrial automation system
- Knowledge about the use of computers
- Proficiency with STEP 7

Conventions

STEP 7: in this documentation, "STEP 7" is used as a synonym for all versions of the "STEP 7 (TIA Portal)" configuring and programming software.

Please also observe notes marked as follows:

Note

A note contains important information on the product described in the documentation, on the handling of the product or on the section of the documentation to which particular attention should be paid.

Scope of the documentation

This documentation is valid for the central modules of the S7-1500 and ET 200SP systems and for the ET 200pro CPU 1516pro-2 PN.

The CPUs of the redundant system S7-1500R/H do not support all the memory objects described in this function manual. The limitations of the redundant S7-1500R/H system are pointed out where appropriate in the manual. You can find a list of the unsupported functions in the Redundant System S7-1500R/H (https://support.industry.siemens.com/cs/ww/en/view/109754833) system manual.

What's new in Edition 10/2018 compared to Edition 09/2016

What's new?		What are the customer benefits?	Where can I find information?
Changed contents	Scope of the function manual expanded to include the CPUs of the redundant system S7-1500R/H.	The CPUs of the redundant system S7-1500R/H support the memory structure familiar from the S7-1500 automation system. Information on the particularities of the redundant S7-1500R/H system is provided where appropriate in the manual.	• In the corresponding sections of the manual • System manual Redundant System S7-1500R/H (https://support.industry.siemens.com/cs/ww/en/view/109754833)

What's new in Edition 09/2016 compared to Edition 01/2013

What's new?		What are the customer benefits?	Where can I find information?
New contents	Analyzing memory requirements and memory usage	You have various options for analyzing the memory requirements and the memory usage of the CPU: • With STEP 7 • With the display of the CPU • With the web server of the CPU	Section Memory requirements and memory usage (Page 18)
	Memory requirements in load memory for downloading software changes	When loading software changes to the SIMATIC memory card, the files in question are only deleted after creation of the new files. For this reason, the CPU requires adequate free memory space on the SIMATIC memory card. You have various options for creating memory space; these will be explained.	Section Memory requirements for downloading software changes (Page 34)
	Service life of SIMATIC memory cards	Using calculation examples of the service life of a SIMATIC memory card, you can estimate which SIMATIC memory card is required for your automation task.	Section Service life of the SIMATIC memory card (Page 68)
Changed contents	Scope of the function manual expanded to include the CPUs of the ET 200SP distributed I/O system and the CPU 1516pro-2 PN	Functions that you will be familiar with from the SIMATIC S7-1500 CPUs are implemented in CPUs in other designs (ET 200SP) and in the CPU 1516pro-2 PN (degree of protection IP65, IP66 and IP67).	• Manual CPU 1510SP-1 PN (https://support.industry.siemens.com/cs/ww/en/view/90157130) • Manual CPU 1512SP-1 PN (https://support.industry.siemens.com/cs/ww/en/view/90157013) • Operating instructions CPU 1516pro-2 PN (https://support.industry.siemens.com/cs/ww/en/view/109482416)

Recycling and disposal

For environmentally friendly recycling and disposal of your old equipment, contact a certified electronic waste disposal company and dispose of the equipment according to the applicable regulations in your country.

Security information

Siemens provides products and solutions with industrial security functions that support the secure operation of plants, systems, machines and networks.

In order to protect plants, systems, machines and networks against cyber threats, it is necessary to implement – and continuously maintain – a holistic, state-of-the-art industrial security concept. Siemens' products and solutions constitute one element of such a concept.

Customers are responsible for preventing unauthorized access to their plants, systems, machines and networks. Such systems, machines and components should only be connected to an enterprise network or the internet if and to the extent such a connection is necessary and only when appropriate security measures (e.g. firewalls and/or network segmentation) are in place.

For additional information on industrial security measures that may be implemented, please visit (https://www.siemens.com/industrialsecurity).

Siemens' products and solutions undergo continuous development to make them more secure. Siemens strongly recommends that product updates are applied as soon as they are available and that the latest product versions are used. Use of product versions that are no longer supported, and failure to apply the latest updates may increase customers' exposure to cyber threats.

To stay informed about product updates, subscribe to the Siemens Industrial Security RSS Feed under (https://www.siemens.com/industrialsecurity).

Siemens Industry Online Support

You can find current information on the following topics quickly and easily here:

- **Product support**

  All the information and extensive know-how on your product, technical specifications, FAQs, certificates, downloads, and manuals.

- **Application examples**

  Tools and examples to solve your automation tasks – as well as function blocks, performance information and videos.

- **Services**

  Information about Industry Services, Field Services, Technical Support, spare parts and training offers.

- **Forums**

  For answers and solutions concerning automation technology.

- **mySupport**

  Your personal working area in Industry Online Support for messages, support queries, and configurable documents.

This information is provided by the Siemens Industry Online Support in the Internet (https://support.industry.siemens.com).

Industry Mall

The Industry Mall is the catalog and order system of Siemens AG for automation and drive solutions on the basis of Totally Integrated Automation (TIA) and Totally Integrated Power (TIP).

You can find catalogs for all automation and drive products on the Internet (https://mall.industry.siemens.com).

Table of contents

Preface 3

1 Documentation guide 8

2 Memory areas and retentive memory 13

2.1 Memory areas 13
2.1.1 Specifics of the CPUs of the redundant system S7-1500R/H 16

2.2 Memory requirements and memory usage 18

2.3 Retentive memory areas 26

2.4 Summary of retentive behavior 30
2.4.1 Retentive behavior of the memory objects 30

2.5 Memory behavior when loading software changes 32

2.6 Memory requirements for downloading software changes 34

3 Memory usage and application examples 38

3.1 Memory usage for recipes 38

3.2 Memory usage for data logging 43
3.2.1 Overview of data logging 43
3.2.2 Data structure of the data logs 45
3.2.3 Instructions for data logging 46
3.2.4 Example program for data logging 47
3.2.5 Calculation of the data log size 53

4 SIMATIC memory card 57

4.1 SIMATIC memory card - Overview 57

4.2 Setting the card type 64

4.3 Data transfer with SIMATIC memory cards 65

4.4 Service life of the SIMATIC memory card 68

4.5 Expanding the load memory of the CPUs of the redundant system S7-1500R/H 73

Glossary 74

Index 80

Documentation guide

1

The documentation for the SIMATIC S7-1500 automation system, for CPU 1516pro-2 PN based on SIMATIC S7-1500, and for the distributed I/O systems SIMATIC ET 200MP, ET 200SP and ET 200AL is divided into three areas.
This division allows you easier access to the specific information you require.

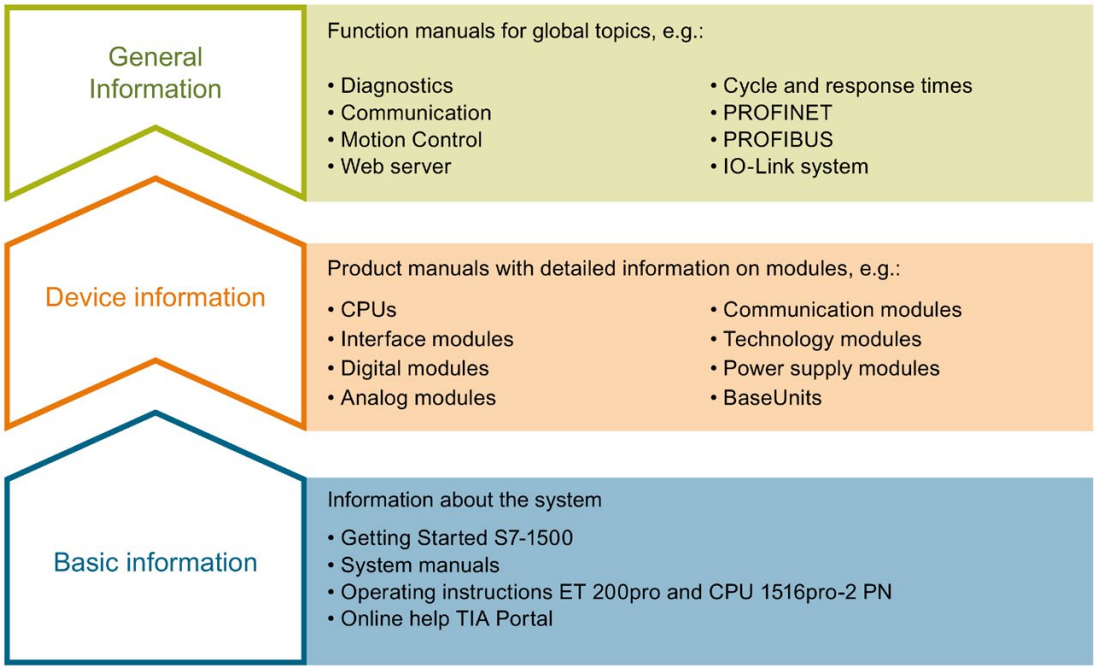

Basic information

System manuals and Getting Started manuals describe in detail the configuration, installation, wiring and commissioning of the SIMATIC S7-1500, ET 200MP, ET 200SP and ET 200AL systems; use the corresponding operating instructions for CPU 1516pro-2 PN. The STEP 7 online help supports you in configuration and programming.

Device information

Product manuals contain a compact description of the module-specific information, such as properties, terminal diagrams, characteristics and technical specifications.

General information

The function manuals contain detailed descriptions on general topics such as diagnostics, communication, Motion Control, Web server, OPC UA.

You can download the documentation free of charge from the Internet (https://support.industry.siemens.com/cs/ww/en/view/109742705).

Changes and additions to the manuals are documented in product information sheets.

You will find the product information on the Internet:

- S7-1500/ET 200MP (https://support.industry.siemens.com/cs/us/en/view/68052815)
- ET 200SP (https://support.industry.siemens.com/cs/us/en/view/73021864)
- ET 200AL (https://support.industry.siemens.com/cs/us/en/view/99494757)

Manual Collections

The Manual Collections contain the complete documentation of the systems put together in one file.

You will find the Manual Collections on the Internet:

- S7-1500/ET 200MP (https://support.industry.siemens.com/cs/ww/en/view/86140384)
- ET 200SP (https://support.industry.siemens.com/cs/ww/en/view/84133942)
- ET 200AL (https://support.industry.siemens.com/cs/ww/en/view/95242965)

"mySupport"

With "mySupport", your personal workspace, you make the best out of your Industry Online Support.

In "mySupport", you can save filters, favorites and tags, request CAx data and compile your personal library in the Documentation area. In addition, your data is already filled out in support requests and you can get an overview of your current requests at any time.

You must register once to use the full functionality of "mySupport".

You can find "mySupport" on the Internet (https://support.industry.siemens.com/My/ww/en).

"mySupport" - Documentation

In the Documentation area in "mySupport" you can combine entire manuals or only parts of these to your own manual.
You can export the manual as PDF file or in a format that can be edited later.

You can find "mySupport" - Documentation on the Internet (https://support.industry.siemens.com/My/ww/en/documentation).

"mySupport" - CAx data

In the CAx data area in "mySupport", you can access the current product data for your CAx or CAe system.

You configure your own download package with a few clicks.

In doing so you can select:

- Product images, 2D dimension drawings, 3D models, internal circuit diagrams, EPLAN macro files
- Manuals, characteristics, operating manuals, certificates
- Product master data

You can find "mySupport" - CAx data on the Internet (https://support.industry.siemens.com/my/ww/en/CAxOnline).

Application examples

The application examples support you with various tools and examples for solving your automation tasks. Solutions are shown in interplay with multiple components in the system - separated from the focus on individual products.

You will find the application examples on the Internet (https://support.industry.siemens.com/sc/ww/en/sc/2054).

TIA Selection Tool

With the TIA Selection Tool, you can select, configure and order devices for Totally Integrated Automation (TIA).
This tool is the successor of the SIMATIC Selection Tool and combines the known configurators for automation technology into one tool.
With the TIA Selection Tool, you can generate a complete order list from your product selection or product configuration.

You can find the TIA Selection Tool on the Internet (https://w3.siemens.com/mcms/topics/en/simatic/tia-selection-tool).

SIMATIC Automation Tool

You can use the SIMATIC Automation Tool to run commissioning and maintenance activities simultaneously on different SIMATIC S7 stations as a bulk operation, independently of the TIA Portal.

The SIMATIC automation tool provides a variety of functions:

- Scanning of a PROFINET/Ethernet plant network and identification of all connected CPUs
- Address assignment (IP, subnet, gateway) and station name (PROFINET device) to a CPU
- Transfer of the date and programming device/PC time converted to UTC time to the module
- Program download to CPU
- Operating mode switchover RUN/STOP
- CPU localization by means of LED flashing
- Reading out CPU error information
- Reading of CPU diagnostic buffer
- Reset to factory settings
- Updating the firmware of the CPU and connected modules

You can find the SIMATIC Automation Tool on the Internet (https://support.industry.siemens.com/cs/ww/en/view/98161300).

PRONETA

With SIEMENS PRONETA (PROFINET network analysis), you analyze the plant network during commissioning. PRONETA features two core functions:

- The topology overview independently scans PROFINET and all connected components.
- The IO check is a fast test of the wiring and the module configuration of a plant.

You can find SIEMENS PRONETA on the Internet (https://support.industry.siemens.com/cs/ww/en/view/67460624).

SINETPLAN

SINETPLAN, the Siemens Network Planner, supports you in planning automation systems and networks based on PROFINET. The tool facilitates professional and predictive dimensioning of your PROFINET installation as early as in the planning stage. In addition, SINETPLAN supports you during network optimization and helps you to exploit network resources optimally and to plan reserves. This helps to prevent problems in commissioning or failures during productive operation even in advance of a planned operation. This increases the availability of the production plant and helps improve operational safety.

The advantages at a glance

- Network optimization thanks to port-specific calculation of the network load
- Increased production availability thanks to online scan and verification of existing systems
- Transparency before commissioning through importing and simulation of existing STEP 7 projects
- Efficiency through securing existing investments in the long term and optimal exploitation of resources

You can find SINETPLAN on the Internet (https://www.siemens.com/sinetplan).

Memory areas and retentive memory 2

2.1 Memory areas

The automation data is located in the automation system in different memory areas.

The offline data of the project created in STEP 7 is located on the hard disk of the programming device. The online data of the project is located in the load memory on the SIMATIC memory card. In addition, the work memory, retentive memory and other memory areas are located on the CPU.

The following figure shows an overview of the memory areas of the CPUs:

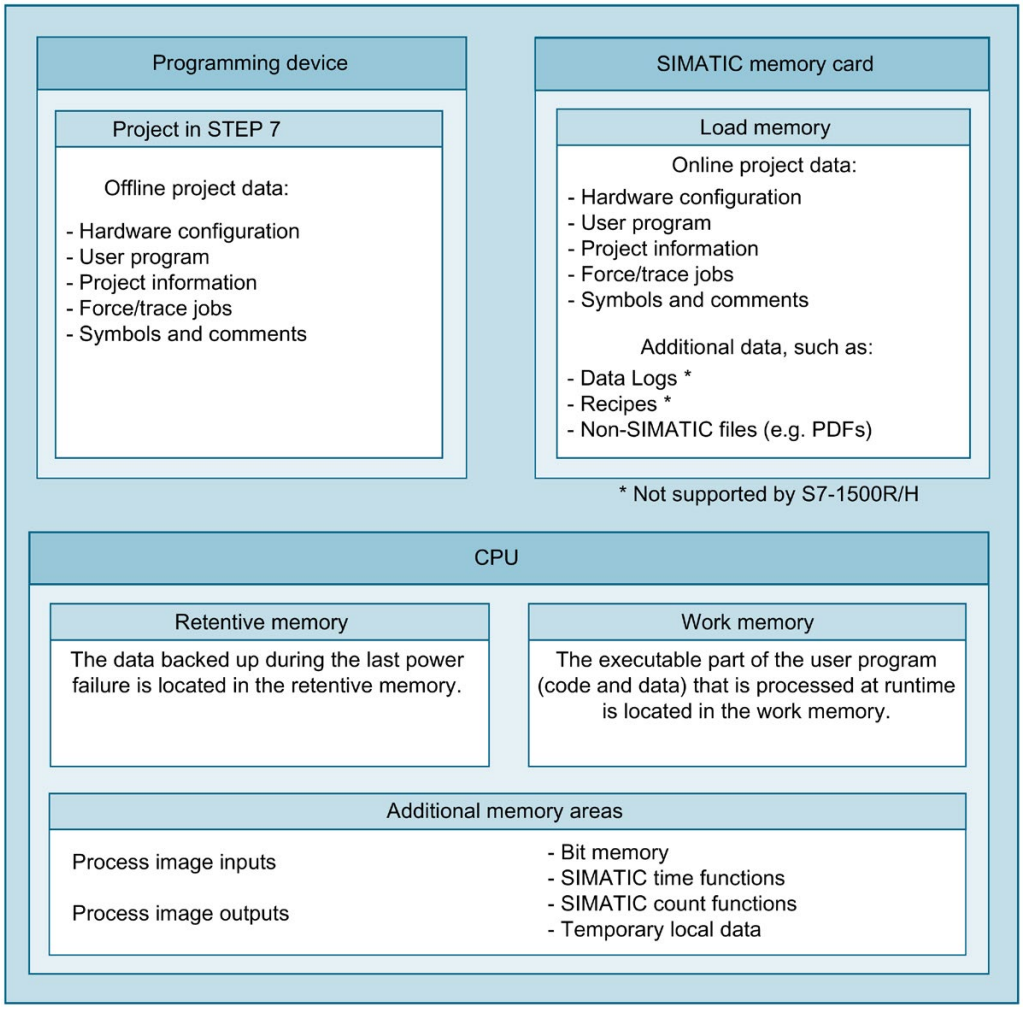

Figure 2-1 Memory areas

Load memory

Load memory is non-volatile memory for code blocks, data blocks, technology objects and the hardware configuration. This load memory is located on the SIMATIC memory card. STEP 7 transfers the project data from the programming device to the load memory.

You can copy additional data (e.g. HMI backups and other files) to the SIMATIC memory card using the web server or Explorer. This data can then be found in the load memory on the SIMATIC memory card.

Note

An inserted SIMATIC memory card is required to operate the CPU.

Load memory: CPU 1518-4 PN/DP MFP and CPU 1518F-4 PN/DP MFP

On these CPUs additional memory space is used in the load memory by:

- Linux runtime, which runs in parallel with the CPU runtime
- C/C++ runtime applications
- Files that are needed for C/C++ runtime applications
- CPU function libraries

Note

CPU runtime

In the context of the CPU 1518-4 PN/DP MFP and the CPU 1518F-4 PN/DP MFP as well as the Open Development Kit (ODK), the term "CPU runtime" has the following meaning:

The CPU runtime is the runtime environment in which a CPU runtime application can be executed. CPU 1518-4 PN/DP MFP and CPU 1518F-4 PN/DP MFP run a Linux runtime in parallel with the CPU runtime. The Linux runtime is the runtime environment for applications that are executable in Linux, e.g. C/C++ runtime applications.

For additional information on the CPUs, refer to the CPU 1518-4 PN/DP MFP (https://support.industry.siemens.com/cs/ww/en/view/109749061) manual and the CPU 1518(F)-4 PN/DP MFP (https://support.industry.siemens.com/cs/ww/en/view/109756478) product information. You can find information on creating C/C++ runtime applications in the SIMATIC S7-1500 ODK 1500S (https://support.industry.siemens.com/cs/ww/en/view/109752683) manual.

Work memory

The work memory is volatile memory that contains the code and data blocks. The work memory is integrated into the CPU and cannot be extended. The work memory is only used in operation of the CPU.

In the CPUs, the work memory is divided into two areas:

- Code work memory: The code work memory contains runtime-relevant parts of the program code.
- Data work memory: The data work memory contains the runtime-relevant parts of the data blocks and technology objects.
  Tags of global data blocks, instance data blocks and technology objects are initialized with their start values at the operating states changes below. Retentive tags receive their actual values saved in the retentive memory.
  - POWER ON → STARTUP
  - STOP → STARTUP

Work memory of CPU 1518-4 PN/DP MFP and CPU 1518F-4 PN/DP MFP

Additional work memory is needed for use of the CPU function libraries and C/C++ runtime applications.

Retentive memory

The retentive memory is non-volatile memory for saving a limited amount of data in the event of power failure.

The following actions delete certain memory objects of the retentive memory:

- Memory reset
- Reset to factory settings

You can find an overview of the retentive behavior of the individual memory objects in section Retentive behavior of the memory objects (Page 30).

You can find additional information on the memory reset and reset to factory settings functions in the following manuals:

- System manual S7-1500, ET 200MP Automation System (http://support.automation.siemens.com/WW/view/en/59191792)
- System manual ET 200SP Distributed I/O System (http://support.automation.siemens.com/WW/view/en/58649293)
- Operating instructions ET 200pro CPU 1516pro-2 PN (https://support.industry.siemens.com/cs/ww/en/view/109482416)

Additional memory areas

Besides the memory areas that have been described for the user program and data, the CPU has additional memory areas available.

The additional memory areas include the following:

- Process images
- Temporary local data

The CPU-specific sizes can be found in the technical specifications for the respective CPU.

2.1.1 Specifics of the CPUs of the redundant system S7-1500R/H

The redundant system S7-1500R/H consists of two CPUs. A SIMATIC memory card must be inserted in each of the CPUs. During redundant operation, both CPUs execute the user program in parallel. In so doing, one CPU takes the role of the leading CPU (Primary CPU) and one CPU takes the role of the following CPU (Backup CPU). If one CPU fails, the second CPU maintains control over the process.

Memory areas

The two CPUs of the redundant system S7-1500R/H have the same memory areas as the CPUs of non-redundant systems.

You create the hardware configuration of the offline project data only once in STEP 7 STEP 7 loads the offline project data into the current primary CPU. The system synchronizes all data required for redundant operation from the primary CPU to the backup CPU.

Both CPUs receive identical online project data. The online project data contains the hardware configuration of the H-system.

Particularities of the retentive memory

Like for non-redundant CPUs, the retentive memory is a non-volatile memory. The retentive memory saves a limited amount of data in the event of power failure.

Each of the CPUs of the redundant system S7-1500R/H has its own retentive memory. If one of the CPUs changes to POWER OFF and the second CPU is still in RUN, the retentive data of the CPU in RUN continues to be updated. If the remaining CPU also goes from RUN to POWER OFF, the retentive memory of this CPU contains the most up-to-date retentive data. Note the following for when you switch the CPUs back to RUN afterwards.

Note

Characteristics of retentive data after a STOP or POWER OFF of both CPUs

After a STOP or POWER OFF of both CPUs, switch the CPU with the more up-to-date data to RUN first. The more up-to-date data is located in the CPU that controlled the process before STOP or POWER OFF. This procedure gives you certainty that you are using the most up-to-date retentive data. The precondition for this is that you did not change any data using STEP 7 or the HMI while the CPUs were in STOP.

Redundancy ID

Unlike in a non-redundant CPU, an additional memory object is contained in the retentive memory of the respective redundant CPU. Each CPU saves its respective redundancy ID in this memory object. The redundancy IDs can assume the values 1 and 2. Different redundancy IDs are required for redundant operation in order to clearly identify the CPUs and assign the project data to the respective CPUs. For additional information on redundancy IDs of the CPUs, refer to the Redundant System S7-1500R/H (https://support.industry.siemens.com/cs/ww/en/view/109754833) system manual.

You can find an overview of the retentive behavior of the individual memory objects in section Retentive behavior of the memory objects (Page 30).

2.2 Memory requirements and memory usage

You can access information regarding the memory areas of the CPUs in the following ways depending on product family used:

Product family	Information regarding the memory areas of the CPU is accessible via:		
	STEP 7	Web server	Display
S7-1500	✓	✓	✓
S7-1500R/H	✓	--	✓
ET 200SP	✓	✓	--
ET 200pro CPU 1516pro-2 PN	✓	✓	--

Memory requirements of the program in the offline project

During creation or modification of a project, the display of memory utilization in STEP 7 shows you the size of the project in the following memories:

- Load memory
- Work memory
- Retentive memory

You can find this information for the CPU under "Program info" in the project tree, "Resources" tab.

- Total size of the memory areas of the respective CPU project (in the figure below line "Total:")
- Memory requirements of the program elements (blocks, data types, objects for motion technology and PLC tags)
- Memory amounts in the respective memory area of the offline project (in figure below, line "Used:")
- Used inputs and outputs

The following figure shows an overview of the utilization of the various memory areas of the "Resources" tab:

Resources of PLC_1

	Objects	Load memory	Code work-memory	Data work-memory	Retain memory
1		?%	0 %	0 %	0 %
2					
3	Total:	not specified	1048576 bytes	5242880 bytes	484000 bytes
4	Used:	not specified	164 bytes	0 bytes	0 bytes
5	Details	2 MB			
6	OB	4 MB	>164 bytes		
7	FC	12 MB	-		
8	FB	24 MB	?		
9	DB	256 MB		-	0 bytes
10	Objects for Motion Technology	2 GB ?		-	0 bytes
11	Data types	32 GB 43941 bytes			
12	PLC tags	1426 bytes			0 bytes

Figure 2-2 Display of the utilization of the various memory areas

For a CPU, you can select the total size of the load memory in a drop-down list. Select the size of the load memory in accordance with the size of the SIMATIC memory card you are using. The percentage shown in the Load memory column depends on the selected size of the load memory. As soon as the memory size exceeds the size of the load memory of the memory card you are using, the sizes indicated turn red.

Note

Determination of the memory utilization

Note that the SIMATIC memory card also contains data other than the user program that you cannot determine using "Resources". This data includes:

- Hardware configuration
- Recipes, data logs and HMI backups (not supported for S7-1500R/H)
- Non-SIMATIC files, such as PDF, etc.

Therefore, the drop-down list with the size of your SIMATIC memory card only serves as a visual orientation aid.

Also refer to the FAQ "How do you estimate the memory requirements of your project in the load memory of a SIMATIC S7-1500" on the Internet (https://support.industry.siemens.com/cs/ww/en/view/97553417).

Note

Display of the memory utilization under "Program info"

The display of the memory utilization in the program information is an offline display in STEP 7 and only shows the memory requirements of the program in the project. The program on the memory card of the CPU may differ, however, e.g. if the program:

- is more up to date
- contains blocks generated by other projects
- contains blocks generated on the CPU

Data on the SIMATIC memory card

In addition to the program and the associated program elements (blocks, data types, objects for motion control and PLC tags), the following data is also stored on the memory card:

- Hardware configuration
- Project information
- Force jobs
- Trace recordings (not supported for S7-1500R/H)
- Symbols and comments

The following further data may also be found on the memory card:

- Recipes, data logs and HMI backups (not supported for S7-1500R/H)
- Non-SIMATIC files that were copied to the memory card via the web server of the CPU or offline in Explorer (e.g. PDF files etc.)

Display of the memory utilization in STEP 7

In online mode, the online function "Memory" provides you with the following up-to-date memory information:

- Size of the total free and already allocated load memory on the SIMATIC memory card.
- Size of the total free and already allocated work memory, separated by code and data.
- Size of the total free and already allocated retentive memory.

The online function "Memory" can be found in Online & Diagnostics under "Diagnostics > Memory". You can access the functions under Online & Diagnostics in various ways:

- In the project tree under each configured CPU.
- In the project tree under Online access > Accessible devices, in order to display the memory utilization of CPUs that were not configured in the project.
- In all views of the device configuration (topology view, network view, device view) by selecting a CPU with the right mouse button.

Sizes in bytes	Load memory	Code work-memory	Data work-memory	Retain memory
Free:	6291456	1048576	5242880	524288
In use:	2316997	17355	2299642	301234
Total:	8608453	1065931	7542522	825522

Figure 2-3 "Memory" online function

Note

Fill levels of the CPUs of the redundant system S7-1500R/H

The CPUs of the redundant system S7-1500R/H can have CPU-specific fill levels in non-redundant operation.

The fill levels of the load memory of the CPUs can differ in redundant operation and non-redundant operation (e.g. due to stored PDF files or SIMATIC memory cards of different sizes).

You can have the memory utilization of both CPU 1 and CPU 2 displayed in STEP 7.

Alternatively to the "Memory" online function, you will also find a display of the current memory functions on the "Online tools" task card in the "Memory" section.

Display of the memory utilization on the display of the CPU

To obtain information about the available memory via the display, proceed as follows:

- Select the "Diagnostics" menu on the display with the help of the arrow keys.
- Select the "Used memory" command from the "Diagnostics" menu.

Under the "Used memory" menu item, you can find information about the utilization of the various memory areas (see following figure). Note that the memory usage is a snapshot of the memory used at the time of the request and is not continuously updated.

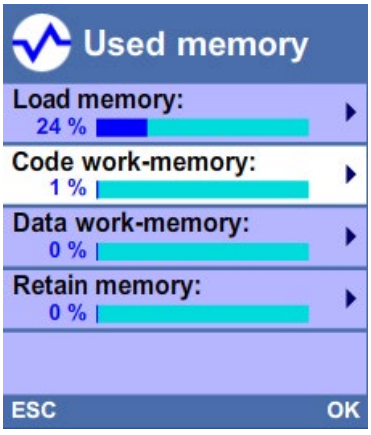

To find out details about the respective memory areas (e.g. code work memory), select the required memory area with the help of the arrow keys (see following figure).

In the detail view, e.g. of the code work memory, the display provides you with the following information:

- Memory space which is still available in the code work memory.
- Memory space which is already allocated in the code work memory.
- Total available memory space in the code work memory.

Note

Display of the memory utilization of redundant system S7-1500R/H in non-redundant operation

The CPU displays indicate the local memory utilization of the respective CPU.

Display of the memory utilization of redundant system S7-1500R/H in redundant operation

Irrespective of the sizes of the inserted SIMATIC memory cards, both CPU displays indicate the same (synchronized) fill level.

Display of the memory usage in the Web server

On the Web server, you can find information about the current usage of the individual memory areas on the Web page "Diagnostics" in the "Memory" tab.

Detailed information about the use of the Web server can be found in the S7-1500 Web server (https://support.industry.siemens.com/cs/ww/en/view/59193560) function manual.

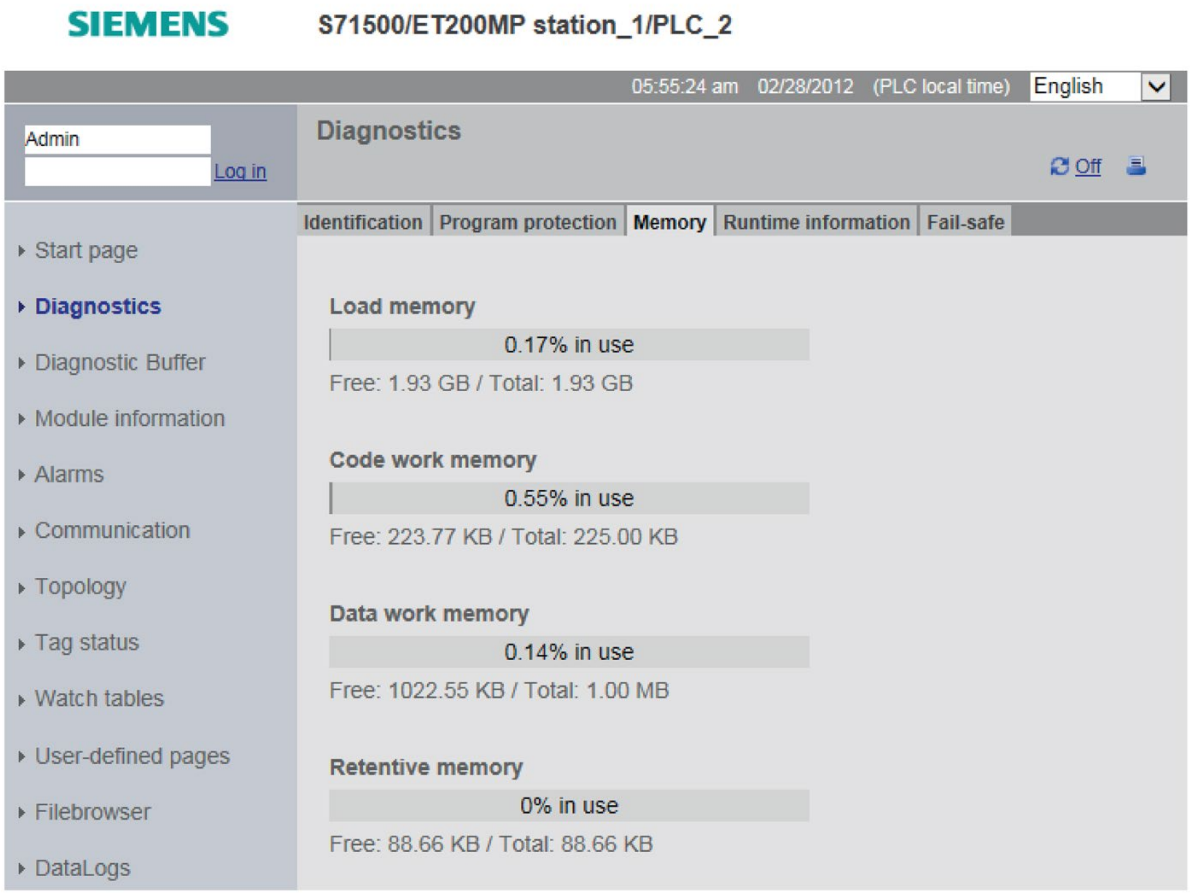

Figure 2-4 Display of the memory usage in the Web server

Note

Redundant system S7-1500R/H

The web server is not supported by the CPUs of the redundant system S7-1500R/H.

2.3 Retentive memory areas

Introduction

The CPUs have a memory for storing retentive data at POWER OFF. You can find the size of the retentive memory in the technical specifications of the respective CPU.

You can find the utilization of the retentive memory of the configured CPU in STEP 7 offline under "Program info > Resources" or online under Online & diagnostics with "Diagnostics > Memory".

If you define data as retentive, its content is retained for the startup of a program after STOP or a power failure.

You can define the following data and objects as retentive:

- Tags of global data blocks
- Tags of instance data blocks of a function block
- Bit memories, timers and counters

Tags of technology objects are retentive, e.g. calibration values of absolute encoders. STEP 7 manages the retentivity of the technology object tags automatically. Hence, you do not have to configure retentivity.

The retentive tags of technology objects are unaffected by a memory reset. You can delete these retentive tags only by a reset to factory settings.

Tags of a global data block

In a global data block, you can define either individual tags from a block or all of its tags collectively as retentive, depending on the setting for the "Optimized block access" attribute:

- "Optimized block access" activated: In the declaration table of the data block, you can define individual tags as retentive.

	Name	Data type	Start value	Retain	Visible in HMI	Comment
1	Static			☐	☐	
2	var1	Bool	false	☑	☑	
3	var2	Bool	false	☐	☑	
4	var3	Bool	false	☑	☑	
5	var4	Bool	false	☐	☑	
6	var5	Bool	false	☑	☑	

Figure 2-5 Retentivity setting "Optimized block access" activated

- "Optimized block access" not activated: In the declaration table of the data block, you can only define the retentivity of all tags collectively.

	Name	Data type	Offset	Start value	Retain	Visible in HMI	Comment
1	Static				☐	☐	
2	var6	Bool	...	false	☑	☑	
3	var7	Bool	...	false	☑	☑	
4	var8	Bool	...	false	☑	☑	
5	var9	Bool	...	false	☑	☑	
6	var10	Bool	...	false	☑	☑	

Figure 2-6 Retentivity setting "Optimized block access" not activated

You can find additional information on optimized and non-optimized data blocks in the Programming guideline for S7-1200/S7-1500 (https://support.industry.siemens.com/cs/de/de/view/90885040/en).

Tags of an instance data block of a function block

You can define the tags of the instance data block of a function block as retentive in STEP 7. Depending on the setting for the "Optimized block access" attribute, you can define retentivity either for individual tags from a block or for all of its tags collectively:

- "Optimized block access" activated: In the interface of the function block, you can define individual tags as retentive.
- "Optimized block access" not activated: In the instance data block, you can only define the retentivity of all tags collectively.

Creation of a data block in the user program

The instruction "CREATE_DB" is used to create a new data block in the load and/or work memory. For data blocks which you create in the load memory, depending on the selection for the ATTRIB parameter, the generated data block either has the property "retentive" or the property "non-retentive". Setting the retentivity for individual tags is not possible here. The "Optimized block access" attribute is disabled.

You can find additional information on the "CREATE_DB" instruction in the STEP 7 online help under "Programming a PLC > Instructions > Extended instructions > Data block control > CREATE_DB: Create data block".

Note

Redundant S7-1500R/H system

The "CREATE_DB" instruction is not supported by the CPUs of the redundant system S7-1500R/H.

Tags of technology objects

Tags of technology objects are retentive, e.g. calibration values of absolute encoders. STEP 7 manages the retentivity of the technology object tags automatically. Hence, you do not have to configure retentivity.

The retentive tags of technology objects are unaffected by a memory reset. They can be deleted only by a reset to factory settings.

Note

Redundant S7-1500R/H system

Technology objects are not supported by the CPUs of the redundant system S7-1500R/H.

Bit memories, timers and counters

You can define the number of retentive bit memories, timers and counters in STEP 7 in the PLC tag table using the "Retain" button.

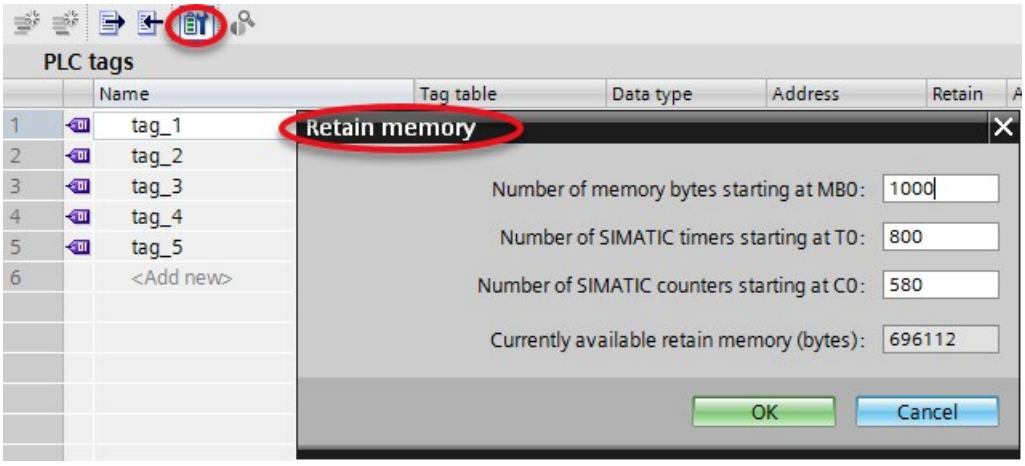

Figure 2-7 Definition of the number of retentive bit memories, timers and counters (beginning at 0, continuing without gaps) using the "Retain" button

Reference

You can find additional information on setting the retentivity in the STEP 7 online help.

2.4 Summary of retentive behavior

2.4.1 Retentive behavior of the memory objects

This section gives an overview of the retentive behavior of the memory objects of the CPUs.

In addition to the retentive memory areas described, there are other objects with retentive characteristics, for example, the diagnostics buffer. These objects do not occupy any storage space in the retentive memory.

The following table shows the retentive behavior of the memory objects in the case of the following:

- STOP → STARTUP
- POWER ON → STARTUP
- POWER ON → STOP
- "Memory reset"
- "Reset to factory settings"

Table 2- 1 Retentive behavior of the memory objects

Memory object	STOP → STARTUP POWER ON → STARTUP POWER ON → STOP	Memory reset	Reset to factory settings
Actual values of the data blocks, instance data blocks	Can be set in the properties of the DB in STEP 7 [1]	-	-
Bit memories, timers and counters - configured as retentive	x	-	-
Bit memories, timers and counters - configured as non-retentive	-	-	-
Retentive tags of technology objects (e.g. calibration values of absolute encoders) [2]	x	x	-
Diagnostic buffer entries	x	x	-
Operating hours counter	x	x	-
Clock time	x	x	-
Redundancy ID [3]	x	x	-
x = content is retained – = object is initialized			

[1] For DBs with optimized access the retentive behavior is configurable for specific tags.

[2] Not for the CPUs of the redundant system S7-1500R/H

[3] Only for the CPUs of the redundant system S7-1500R/H

Diagnostics buffer

The 500 most recent entries in the diagnostics buffer are retained after power failure and are not affected by a memory reset. The diagnostics buffer can be cleared only by a reset to factory settings. The entries in the diagnostics buffer do not occupy any memory space in the retentive memory.

Operating hours counter

The operating hours counters of the CPUs are retentive and are not affected by a memory reset. By resetting to factory settings, the operating hours counters are set to zero.

Clock time

The clock time of the CPUs is retentive and is not affected by a memory reset. By resetting to factory settings, the clock time is reset.

Reference

You can find additional information on the memory reset and reset to factory settings functions in the following manuals:

- System manual S7-1500, ET 200MP Automation System (http://support.automation.siemens.com/WW/view/en/59191792)
- System manual ET 200SP Distributed I/O System (http://support.automation.siemens.com/WW/view/en/58649293)
- Operating instructions ET 200pro CPU 1516pro-2 PN (https://support.industry.siemens.com/cs/ww/en/view/109482416)
- System manual Redundant System S7-1500R/H (https://support.industry.siemens.com/cs/ww/en/view/109754833)

2.5 Memory behavior when loading software changes

Introduction

You can download software changes in STOP and RUN without affecting the actual values of previously loaded tags.

You load changes to the software in STEP 7 (in the project tree and with selected PLC station) under "Download to device > Software (only changes)".

Note

Redundant system S7-1500R/H

The CPUs of the redundant system S7-1500R/H permit the downloading of software changes only in the STOP or RUN-Solo system state.

Impact of software changes on PLC tags

You can load the following software changes without affecting the actual values of PLC tags that have already been loaded:

- Name change
- Comment change
- Addition of new tags
- Deletion of tags
- Change of retentivity settings for Retentive memory areas (Page 26)

The actual values are affected by loading the following software changes:

- Data type change
- Address change

Memory reserve of global DBs and instance DBs

Each function block or data block with the "Optimized block access" attribute activated contains, by default, a memory reserve which you can use for subsequent interface changes. The memory reserve is initially not used. When you have compiled and loaded the block, and then observe that you want to reload interface changes, activate the memory reserve. All tags that you subsequently declare will be placed in the memory reserve. During the next load, the new tags are then initialized to their start values. Tags which have already been loaded are not reinitialized.

The setting of the memory reserve can be found in STEP 7 under the data block properties in the "Download without reinitialization" category.

Impacts of software changes on data blocks without memory reserve

If you are not using memory reserve, you can load the following software changes without this reinitializing the actual values of DB tags that have already been loaded:

- Change of start value
- Comment change

Impacts of software changes on data blocks with memory reserve

If you are using the memory reserve for data blocks ("Optimized block access" attribute and "Enable download without reinitialization for retentive tags" button selected), you can load the following software changes. The actual values of previously downloaded DB tags are not reinitialized by this.

- Change of start value
- Comment change
- Addition of new tags

If the button "Enable download without reinitialization for retentive tags" is deactivated, then all actual values of the data block are reinitialized on the next loading of the following software changes:

- Name change
- Data type change
- Retentivity change
- Deletion of tags
- Changes to the memory reserve settings

Reference

You can find additional information on setting and activating the memory reserve and on downloading block changes in the STEP 7 online help under "Programming a PLC > Compiling and downloading PLC programs > Downloading blocks for S7-1200/1500 > Loading block extensions without reinitialization".

2.6 Memory requirements for downloading software changes

Memory requirements in RUN state

For the consistent and atomic execution of the complete download operation, the CPU requires adequate free memory space in the work memory and on the SIMATIC memory card. The files affected by loading the software changes to the CPU are only deleted after the new files have been created. This SIMATIC memory card therefore requires free memory space corresponding approximately to the space required for all program objects to be loaded on the memory card.

If this amount of memory is not available on your SIMATIC memory card, the following message is displayed in STEP 7 during the download operation to the CPU: "There is insufficient memory on the memory card for this amount of data."

In order to still enable the loading of changes to the CPU in such a case, we recommend one or more of the following options:

- Download in RUN state
  - Delete any files no longer required (e.g. CSV files, panel backups, etc.) on the memory card using the Web server.
  - Preferably, you should download extensive changes in RUN state in multiple steps or perform the download after each change step.
- Download in STOP state
  - If downloading in several steps is not possible, load extensive changes in STOP state. Note that when loading in STOP state, the actual values of non-retentive data are not initialized.
- Use a larger memory card
  - In order to perform extensive downloads in RUN state of the CPU in the future, use a larger memory card. A description of how to change the memory card can be found in the section "Changing the memory card without loss of retentive data".

Impact of minor program changes on the load procedure

Under the objects of a program, there are dependencies, e.g.

- Of code blocks to called code blocks
- Of code blocks to data blocks
- Of data blocks to data types (PLC data types, FB types)

This means that the load procedure for a minor change may be very time-consuming if the change affects a large number of dependent objects.

Example:

A STEP 7 program contains an organization block (OB), 20 functions (FC) and a data block (DB). The OB calls the 20 FCs. All the FCs access the DB. If you change the program code in one of the FCs, the following load procedure only contains the changed FC. If you change the data type of a tag in the DB, however, the following load procedure then contains all the FCs and the DB.

The following figure shows the objects in the load procedure in a preview.

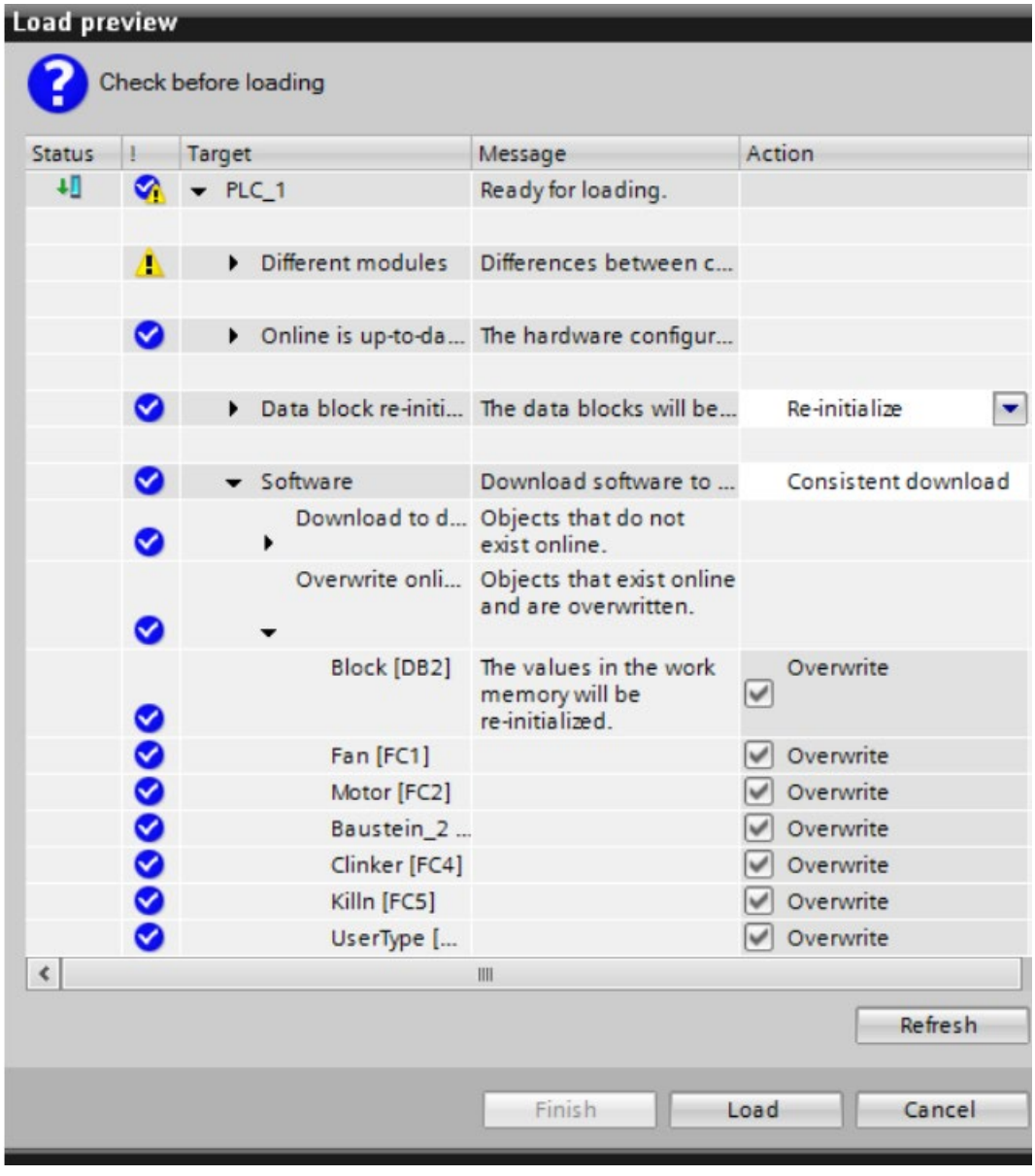

Figure 2-8 Preview for loading

To find the interdependencies of the individual objects, double-click "Program info" in the project tree. Change to the "Dependency structure" tab in the "Program info" dialog.

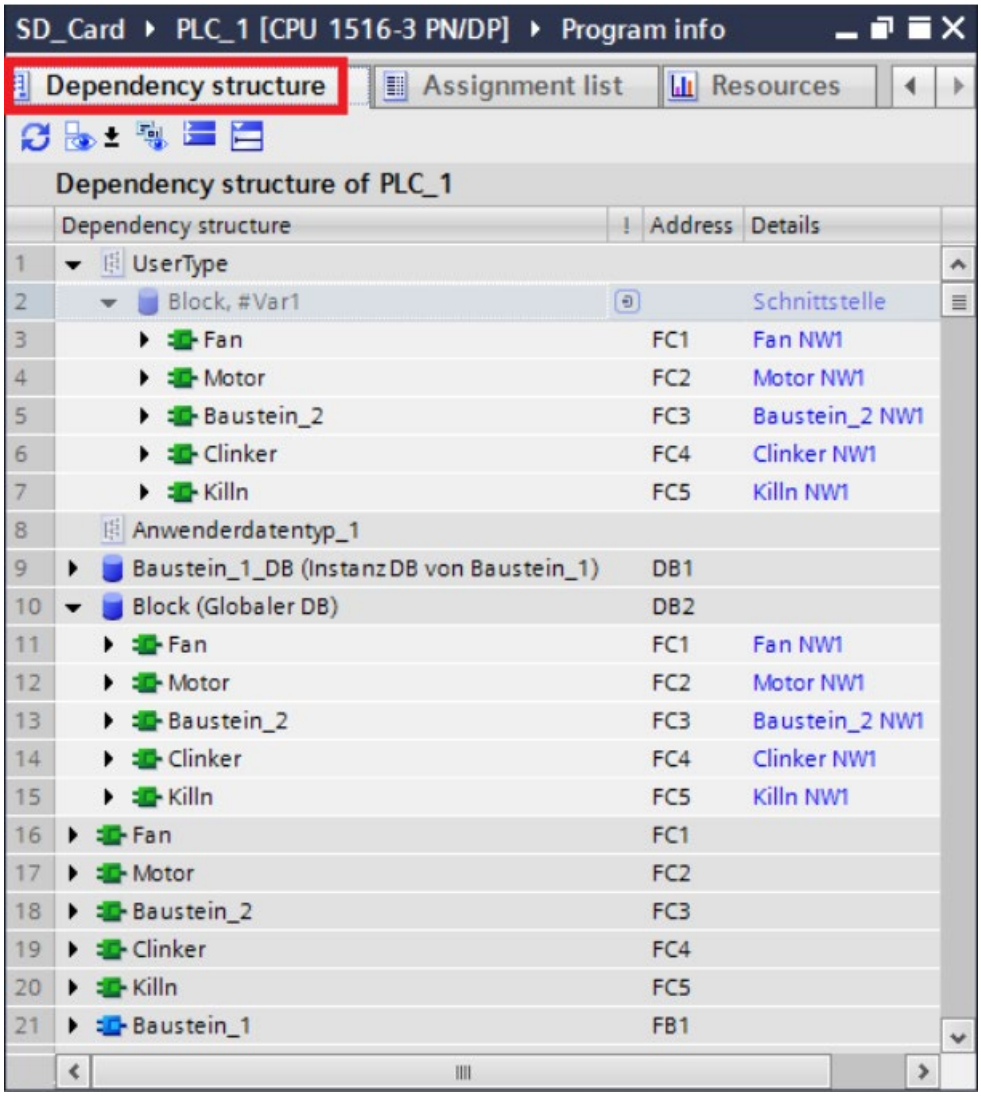

Figure 2-9 Dependency structure

Memory requirements in STOP state

Even when downloading in STOP state, a certain amount of reserve memory is required, because your CPU needs sufficient free memory on the memory card for consistent downloading of individual data blocks. The files affected by loading the data blocks are only deleted after the new files have been created. Therefore, for the modifications you must have available at least the memory requirement of the largest data block.

If insufficient reserve memory is available on your SIMATIC memory card when loading in STOP state, the following message is displayed in STEP 7 during the download to the CPU: "There is insufficient memory on the memory card for this amount of data."

In order to still enable the loading of changes to the CPU in such a case, we recommend one or more of the following options:

- Delete any files no longer required (e.g. CSV files, panel backups, etc.) from the memory card using the Web server.
- Use a larger memory card. A description of how to change the memory card can be found in the section "Changing the memory card without loss of retentive data".

Note

Please note that retentive data and possibly also project data is lost with the following three options. Therefore only use the following options described if the two options described previously did not lead to the desired result.

- In STEP 7, download your program to the CPU with menu command "Online > Download and reset PLC program".
- Remove the memory card from the slot of the CPU. Delete the content that is longer needed from the memory card with your programming device.
- Delete the entire contents, e.g. by formatting the memory card. A description of how to format the memory card can be found in the section "Formatting a SIMATIC memory card".

Note also the following FAQs:

- "When downloading to the S7-1500 CPU, why is the message "There is insufficient memory on the memory card for this amount of data" displayed although there is still enough memory available?" on the Internet (https://support.industry.siemens.com/cs/ww/en/view/107108015).
- "Why can you not load the project data into the load memory of the S7-1500 CPU when the number of alarms and messages is too large?" on the Internet (https://support.industry.siemens.com/cs/ww/en/view/109751485).

Memory usage and application examples 3

3.1 Memory usage for recipes

Introduction

A recipe is a collection of parameter sets with the same structure. These recipe data records are located in a non-runtime-relevant data block in the load memory, and do not occupy any storage space in the work memory. You have the option of reading individual recipe data records into a data block in the work memory and accessing the data in the user program. You can write a recipe data record that has been changed in the user program back to the recipe data block.

For example, recipes contain the related data of a particular batch in production. You can export recipe data records of a recipe DB as a csv file. A web browser can read data via the web server of the CPU, even when the CPU is in STOP state. You can also directly access the data of the SIMATIC memory card using a card reader on the programming device.

Note

Redundant S7-1500R/H system

Recipes are not supported by the CPUs of the redundant system S7-1500R/H.

Processing sequence

- **Storing the recipe in the load memory**

  STEP 7 fills the individual data records of a recipe into a non-runtime-relevant DB and downloads the DB to the CPU. In order to configure a non-runtime-relevant DB, you must enable the "Only store in load memory" block attribute. The recipes then only use memory space in the load memory and not in the work memory.

- **Working with recipe data in the user program**

  You use the "READ_DBL" instruction to copy a data record of the current recipe from the DB in the load memory to a runtime-relevant DB in the work memory. As a result, the work memory only has to accommodate the data for the currently required recipe data record. The user program can now access the data of the current data record.

- **Saving back changed recipe data records**

  The "WRIT_DBL" instruction writes new or changed data records of a recipe from the user program back to the load memory. The data written to the load memory is portable and not affected by a memory reset. To back up changed data records (recipes), you must upload the data blocks and back them up on the PG/PC.
  You can find information on uploading data blocks in the STEP 7 online help under "Programming a PLC > Compiling and downloading blocks > Downloading blocks for S7-1200/1500 > Uploading blocks from a memory card".

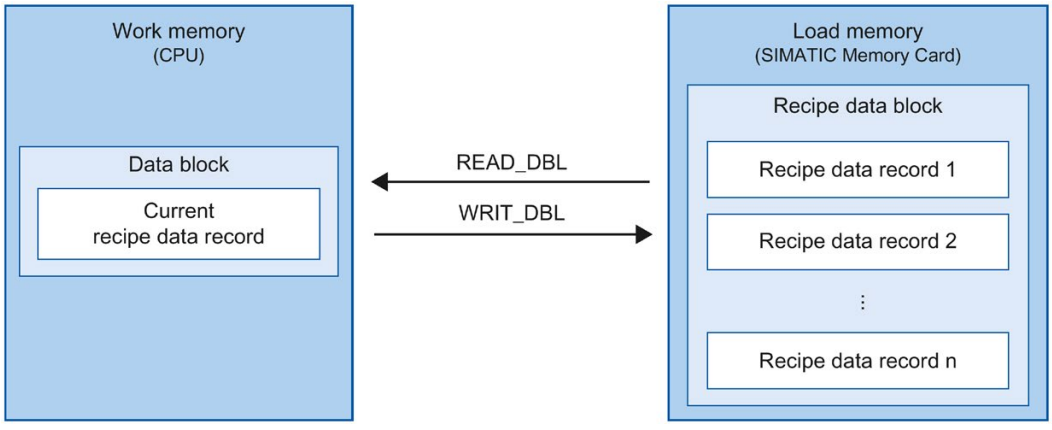

Figure 3-1 Processing sequence with "READ_DBL" and "WRIT_DBL"

Also note the FAQ "How do you configure data blocks with the "Only store in load memory" attribute for the S7-1200/S7-1500? " in the Internet (https://support.industry.siemens.com/cs/ww/en/view/53034113).

Note

Instructions that access the SIMATIC memory card have a lower performance than instructions that access the work memory. The associated blocks (e.g. READ_DBL and WRIT_DBL) are therefore asynchronous. Their execution extends if necessary over several cycles.

NOTICE
Service life of the SIMATIC memory card Only a limited number of delete and write operations are possible on the SIMATIC memory card. After expiration of the service life, there is a risk that the card can no longer be used. Therefore, use a SIMATIC memory card with sufficient memory for your particular purposes. Additional information on the service life of the SIMATIC memory card can be found in the section Service life of the SIMATIC memory card (Page 68).

Import and export of recipe data

You have the option of exporting recipe data records of a recipe DB as a CSV file, and importing them from a CSV file into a DB. The CSV file is located in the "\recipes" directory on the SIMATIC memory card. You can open and process this file further with a spreadsheet program, e.g. Microsoft Excel.

You can easily work with CSV files on the SIMATIC memory card via the web server of the CPU (e.g. rename, save to hard disk, delete, etc.). To avoid undesired manipulation, set access rights for the web server in STEP 7. You can find additional information on the Web server in the Web Server (http://support.automation.siemens.com/WW/view/en/59193560) function manual.

- **Export of recipe data**

  The "RecipeExport" instruction exports all the recipe data records of a recipe DB from the load memory to a CSV file on the SIMATIC memory card. The CSV file has the same name as the recipe of the DB. The CSV file is stored in the "\recipes" directory on the SIMATIC memory card.

  The "RecipeExport" instruction only exports valid and unencrypted recipe data records.

- **Import of recipe data**

  The "RecipeImport" instruction imports all recipe data records from the CSV file into the recipe DB in the load memory. The name of the CSV file must match the name of the recipe DB.

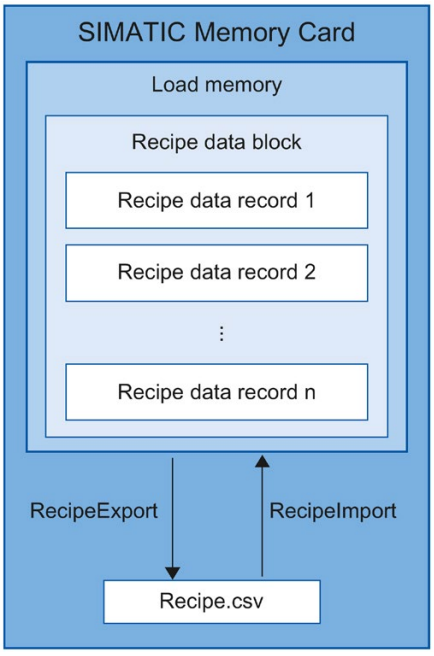

Figure 3-2 Import and export of recipe data

Note

Asynchronous instructions

Please note that the "RecipeExport" and "RecipeImport" instructions are asynchronous instructions.

In contrast to synchronous instructions, this means the execution of an asynchronous instruction can extend over multiple calls before execution is completed. The CPU processes asynchronous instructions in parallel with the cyclic user program.

A CPU can process several asynchronous instruction jobs in parallel. The CPU can process a maximum of 10 jobs of the instructions listed in parallel.

You can find additional information about asynchronous instructions in the following manuals:

- System manual S7-1500, ET 200MP (http://support.automation.siemens.com/WW/view/en/59191792)
- System manual ET 200SP Distributed I/O System (http://support.automation.siemens.com/WW/view/en/58649293)
- Operating instructions ET 200pro CPU 1516pro-2 PN (https://support.industry.siemens.com/cs/ww/en/view/109482416)

Reference

You can find additional information on the instructions for recipes in the STEP 7 online help under "Programming a PLC > Instructions > Instructions (S7-1200, S7-1500) > Extended instructions > Recipes and data logging > Recipe functions".

Note also FAQ "Using recipe functions for persistent data with SIMATIC S7-1200 and S7 1500" on the Internet (https://support.industry.siemens.com/cs/ww/en/view/109479727).

3.2 Memory usage for data logging

3.2.1 Overview of data logging

With data logging, you save selected process values from the user program in a file, the data log. The data logs are saved on the SIMATIC memory card in csv format and stored in the "\datalogs" directory. A web browser can read data via the web server of the CPU, even when the CPU is in STOP state. You can also directly access the data of the SIMATIC memory card using a card reader on the programming device.

NOTICE
Service life of the SIMATIC memory card Only a limited number of delete and write operations are possible on the SIMATIC memory card. Cyclic write operations to the SIMATIC memory card by the user program reduce the service life of the SIMATIC memory card. After expiration of the service life, there is a risk that the card can no longer be used. Therefore, use a SIMATIC memory card with sufficient memory for your particular purposes. Information on the service life of the SIMATIC memory card can be found in the section Service life of the SIMATIC memory card (Page 68).

The "data logging" instructions may be used in your program to create, open, write, and close data logs. You decide which tags are logged by creating a data block that defines a single data log data record. Your data block is used as temporary storage for a new data log data record. New current values for the tags must be transferred into the data block during runtime by means of user program instructions. If all tag values have been updated, you can execute the "DataLogWrite" instruction, in order to transfer data from the data block into the data log.

You manage your data logs with the integrated web server. You can download data logs from the standard "File Browser" website. After you have transferred a data log to your PC, you can analyze the data using popular spreadsheet programs, e.g. Microsoft Excel.

Note

Redundant system S7-1500R/H

Data logging is not supported by the CPUs of the redundant system S7-1500R/H.

The following figure shows the basic sequence for creating a data log:

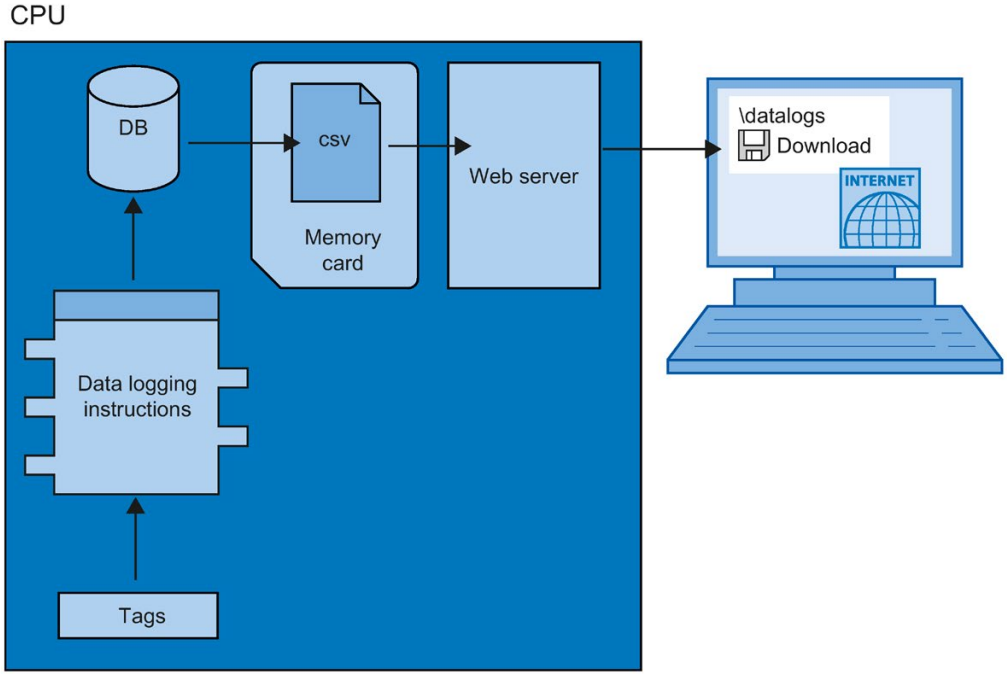

Figure 3-3 Basic sequence during the creation of a data log

3.2.2 Data structure of the data logs

Introduction

You use the "DataLogCreate" instruction to create a data log in STEP 7. The NAME parameter assigns the data log a name. The DATA and HEADER parameters specify the data type of all data elements in a data log data record, and the header line of the data log. The RECORDS parameter indicates the maximum number of records in the data log.

NAME parameter for the "DataLogCreate" instruction

You use the NAME parameter to assign a name for the data log. This is the name under which the data log is saved in the "\datalogs" directory of the SIMATIC memory card.

DATA parameter for the "DataLogCreate" instruction

The DATA block parameter specifies the structure of the data log's records. The columns and data types of a data record in the data log are determined by the elements of the structure declaration or array declaration of this data buffer. Each element of a structure or array corresponds to a column in a row in the data log.

HEADER parameter for the "DataLogCreate" instruction

Using the HEADER block parameter, you can assign a heading in the header row to each column in the data log.

RECORDS parameter for the "DataLogCreate" instruction

The RECORDS parameter specifies the maximum number of records that can be stored in a data log. When the specified maximum number of data records in a data log is reached, the next write operation overwrites the oldest data record.

3.2.3 Instructions for data logging

Overview

The following table gives an overview of the instructions for data logging. You will find the data logging instructions in "STEP 7" in the "Instructions" task card, under "Extended instructions > Recipe and data logging > Data Logging".

Table 3- 1 Overview of the data logging instructions

Name of the instruction	Description
"DataLogCreate": Create data log	With the "DataLogCreate" instruction you create a data log. The data log is saved on the SIMATIC memory card in the "\datalogs" directory. You can use the data logging instructions to save process data. The amount of data in a data log depends on the available memory space on the SIMATIC memory card.
"DataLogOpen": Open data log	With the "DataLogOpen" instruction, you open an existing data log on the SIMATIC memory card. A data log must be open before you can write new data records to it. The data log opens automatically when the "DataLogCreate" and "DataLogNewFile" instructions are executed. A maximum of 10 data logs can be open at any one time. The data log to be opened can be selected using the ID or name of the data log. The maximum file size of data logs is 2 GB. A maximum number of 1000 data log files is possible with firmware version V2.0.
"DataLogWrite": Write data log	With the "DataLogWrite" instruction you write a data record into an existing data log. Use the ID parameter to select the data log to which the data record is to be written. To write a new data record, the data log must be open.
"DataLogClose": Close data log	With the "DataLogClose" instruction, you close an open data log. You select the data log using the ID parameter. When the CPU changes to STOP state, all open data logs are closed.
"DataLogNewFile": Data log in new file	With the "DataLogNewFile" instruction you create a new data log. The new data log has the same properties as an already existing data log. By creating a new data log, you prevent cyclic overwriting of existing data records. When the instruction is called it creates a new data log on the SIMATIC memory card using the name defined in the NAME parameter. You use the ID parameter to specify the ID of the old data log whose properties you want to apply to the new data log. The ID parameter then outputs the ID of the new data log.
"DataLogClear": Empty data log	The "DataLogClear" instruction deletes all data records in an existing data log. The header of the data log is not deleted (see description of parameter Data structure of the data logs (Page 45)).
"DataLogDelete": Delete data log	The "DataLogDelete" instruction is used to delete a data log from the SIMATIC memory card. Select the data log to be deleted using the NAME and ID parameters.

Note

Asynchronous instructions

Note that the instructions in the table are asynchronous instructions.

In contrast to synchronous instructions, this means the execution of an asynchronous instruction can extend over multiple calls before execution is completed. The CPU processes asynchronous instructions in parallel with the cyclic user program.

A CPU can process several asynchronous instruction jobs in parallel. The CPU can process a maximum of 10 jobs of the instructions listed in the table in parallel.

You can find additional information about asynchronous instructions in the following manuals:

- System manual S7-1500, ET 200MP (http://support.automation.siemens.com/WW/view/en/59191792)
- System manual ET 200SP Distributed I/O System (https://support.industry.siemens.com/cs/ww/en/view/109482416)
- Operating instructions ET 200pro CPU 1516pro-2 PN (https://support.industry.siemens.com/cs/ww/en/view/109482416)

3.2.4 Example program for data logging

This example program shows the storing of process values for counter content, temperature, and pressure in a data log.

The example shows the basic functioning of the instructions for data logs. The complete program logic is not shown.

Note

General use of data logs

- Data logs are automatically opened after execution of the "DataLogCreate" and "DataLogNewFile" instructions.
- Data logs are automatically closed at a change of the CPU from RUN to STOP or a restart of the CPU.
- A data log must be open so that data can be written to the data log with the "DataLogWrite" instruction.
- A maximum of 10 data logs can be open at any one time, even when more than 10 data logs exist.

Tags of the data block

The following figure shows the tags of the "My_Datalog_Vars" data block. These tags are used by the "Data logging" instructions "DataLogCreate" and "DataLogNewFile". The "MyDataLogName" and "MyNEWDataLogName" tags are called in the NAME block parameter, and give the data logs a name. The "MyData" structure is called in the DATA block parameter and specifies the structure of the csv file. The three MyData tags temporarily store new values. The tag values at these DB addresses are transferred to a data log using the "DataLogWrite" instruction. The "MyDataLogHeaders" tag is called in the HEADER block parameter and specifies a header for the data log.

My_Datalog_Vars

	Name	Data type	Start value
1	Static		
2	MyNEWDataLogName	String	'MyNEWDataLog'
3	MyDataLogName	String	'MyDataLog'
4	MyDataLogID	DWord	0
5	MyDataLogHeaders	String	'Count,Temperature,Pressure'
6	MyData	Struct	
7	MyCount	Int	0
8	MyTemperature	Real	0.0
9	MyPressure	Real	0.0

Figure 3-4 Declaration table with the data block's tags

Network 1

A rising edge at REQ starts the creation of the data log.

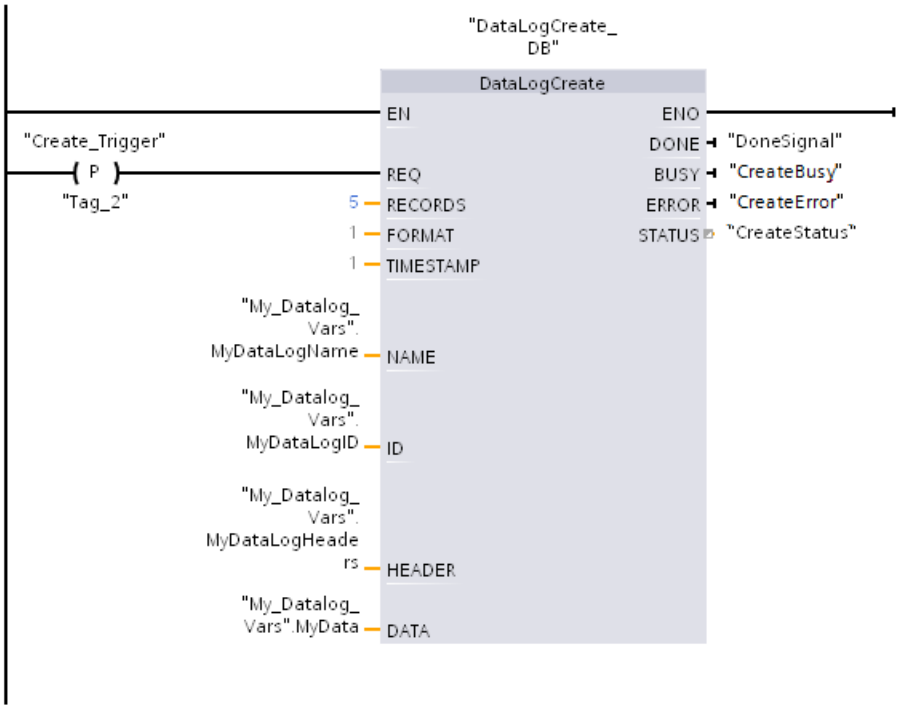

Figure 3-5 Network 1

Network 2

Detect the output DONE of "DataLogCreate", because after the execution of "DataLogCreate" it is only set to 1 for one cycle.

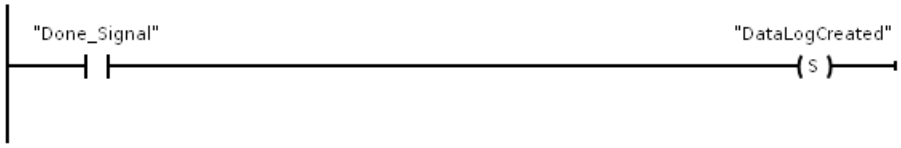

Figure 3-6 Network 2

Network 3

A rising edge triggers the point in time at which new process values are stored in the MyData structure.

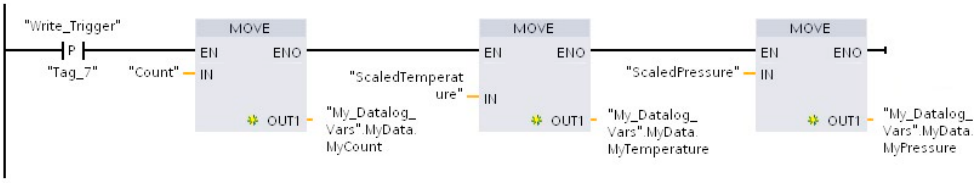

Figure 3-7 Network 3

Network 4

The state of the input EN is based on the point in time at which the execution of "DataLogCreate" was completed. One execution of "DataLogCreate" extends over multiple cycles, and must be completed before a write operation is executed. The rising edge at input REQ is the event that triggers an activated write operation.

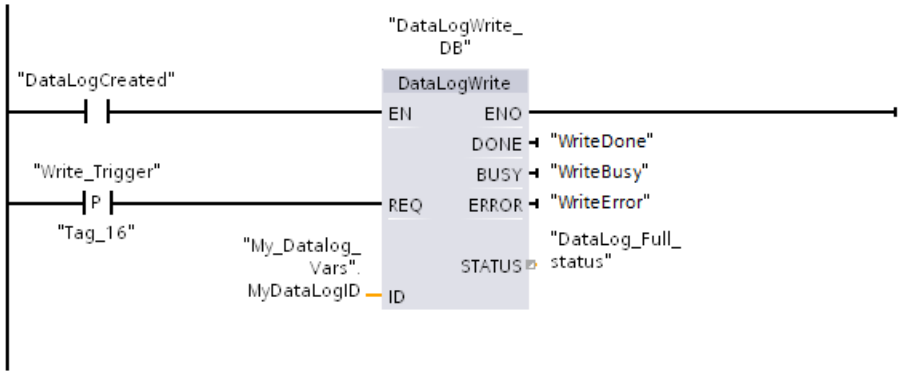

Figure 3-8 Network 4

Network 5

Close the data log after the last data record has been written. After execution of the "DataLogWrite" instruction, which writes the last data record, the STATUS output is set to "1".

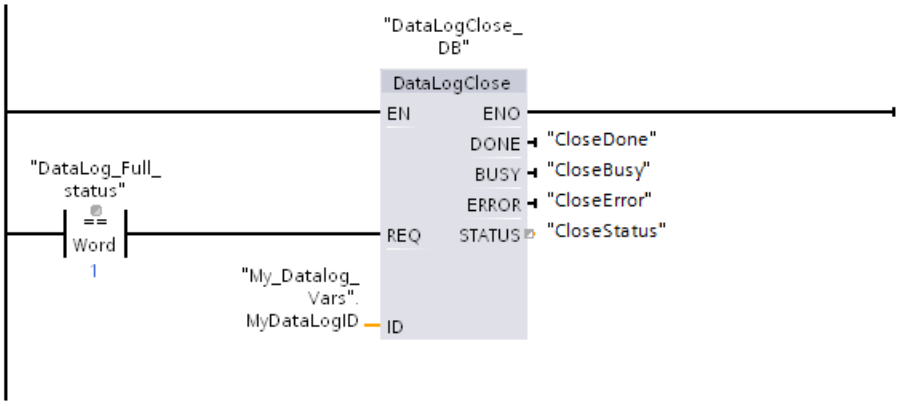

Figure 3-9 Network 5

Network 6

A rising edge at the input REQ of the instruction "DataLogOpen" simulates that the user presses a button on an HMI device, which opens a data log. If you open a data log in which all records are occupied by process data, then the next execution of the "DataLogWrite" instruction overwrites the oldest data record. You can however also preserve the old data log, and create a new data log instead. This is shown in network 7.

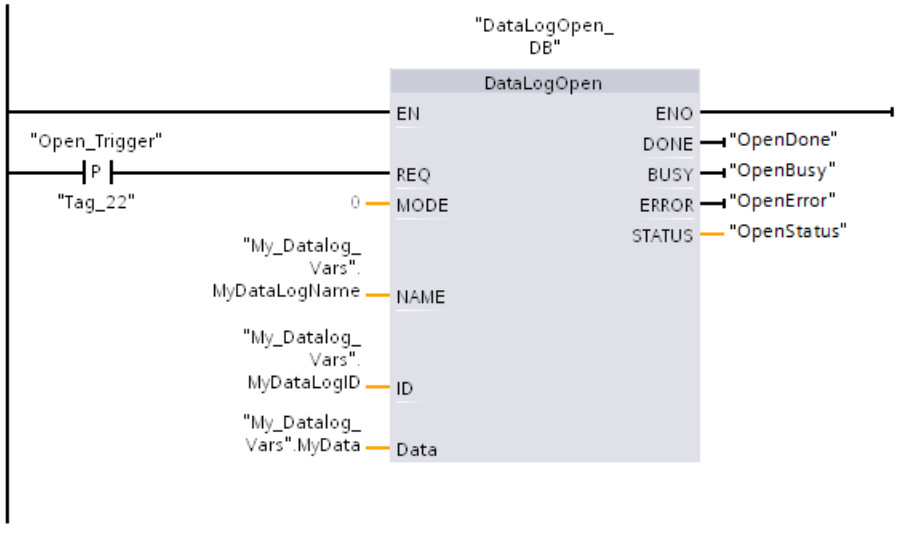

Figure 3-10 Network 6

Network 7

The ID parameter is an IN/OUT type. First you indicate the ID value of the existing data log whose structure you want to copy. After the "DataLogNewFile" instruction has been executed, a new and unique ID value for the new data log is written back into the address of the ID reference. The required detection DONE bit = TRUE is not shown. An example for the logic of the DONE bit can be found in networks 1, 2 and 4.

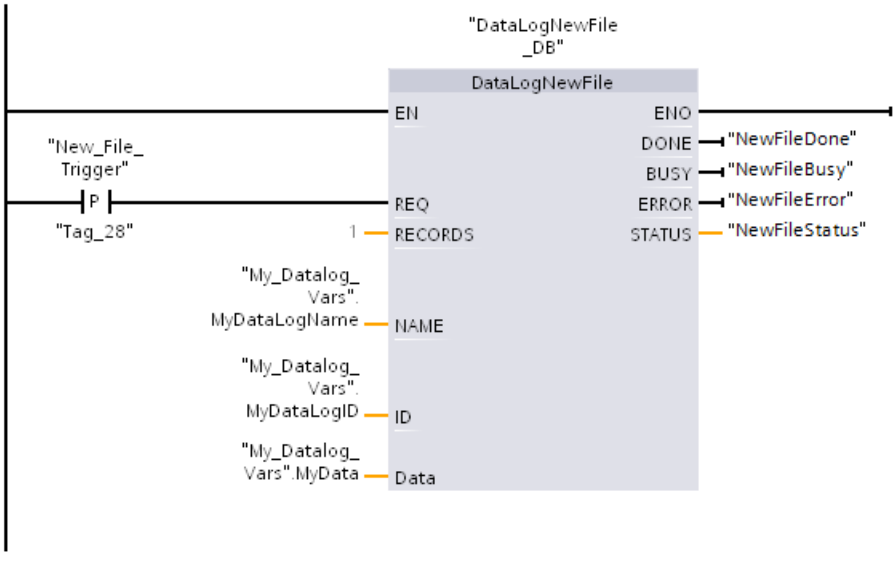

Figure 3-11 Network 7

The data logs created in the example program can be found on the CPU Web server's standard "File browser" Web page in the "\datalogs" folder.

The following figure shows the standard Web page of the Web server using the example of the CPU 1516-3 PN/DP.

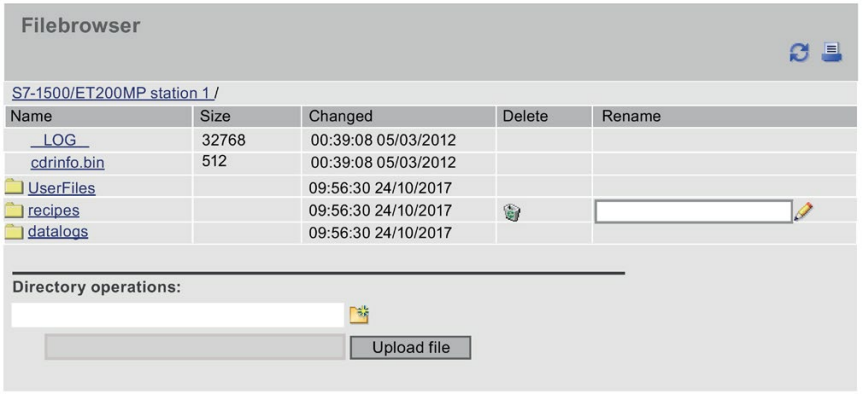

Figure 3-12 Standard "File browser" web page of the Web server

In the file browser, you can download the data logs created in the example program. It is not possible to delete or rename the data logs in the Web server. To delete a data log you either use the "DataLogDelete" instruction or you format the SIMATIC memory card.

On the DataLogs web page, you can have all the data logs that you created displayed. You can call and empty the relevant data log file by clicking the icon .

Note

Manipulation of the data logs using a card reader

Do not delete or change the data logs using a card reader on the PG/PC. You can copy the data logs on the SIMATIC memory card, however, using a card reader on the PG/PC.

The recommended medium for viewing, downloading (copying) and deleting data logs is the file browser of the web server, however. Direct file access via Windows Explorer brings with it the risk of inadvertent deletion of modification of data logs or system files. This can cause the files to be damaged or the SIMATIC memory card to become unusable.

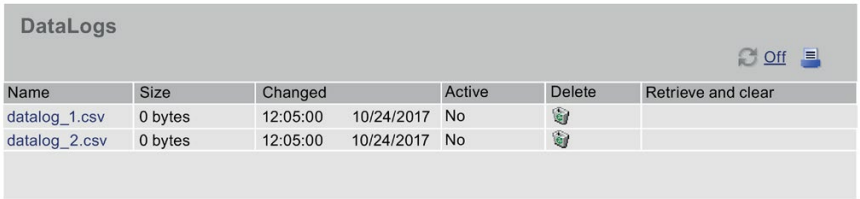

Name	Size	Changed		Active	Delete	Retrieve and clear
datalog_1.csv	0 bytes	12:05:00	10/24/2017	No		
datalog_2.csv	0 bytes	12:05:00	10/24/2017	No		

Figure 3-13 Example - Data logs in the folder "\datalogs" of the file browser

Table 3- 2 Downloaded examples of data logs displayed in Microsoft Excel

Two data records written in a data log which contains a maximum of five data records.	

	A	B	C	D	E	F
1	Record	Date	Time	Count	Temperature	Pressure
2	1	1/3/2012	10:16:47	5	5,00E+00	5,00E+00
3	2	1/3/2012	10:16:48	5	5,00E+00	5,00E+00
4	//END					
5						

Five data records written in a data log which contains a maximum of five data records.	

	A	B	C	D	E	F
1	Record	Date	Time	Count	Temperature	Pressure
2	1	1/3/2012	10:08:23	1	9,86E+01	3,52E+01
3	2	1/3/2012	10:08:39	2	1,00E+02	3,73E+01
4	3	1/3/2012	10:08:54	3	9,99E+01	3,68E+01
5	4	1/3/2012	10:09:11	4	9,95E+01	3,64E+01
6	5	1/3/2012	10:09:28	5	9,92E+01	3,74E+01
7						

After another data record has been written, the 6th write operation overwrites the oldest data record (record 1) with data record 6. Another write operation overwrites data record 2 with data record 7, etc.	

	A	B	C	D	E	F
1	Record	Date	Time	Count	Temperature	Pressure
2	6	1/3/2012	10:09:42	6	9,87E+01	3,58E+01
3	2	1/3/2012	10:08:39	2	1,00E+02	3,73E+01
4	3	1/3/2012	10:08:54	3	9,99E+01	3,68E+01
5	4	1/3/2012	10:09:11	4	9,95E+01	3,64E+01
6	5	1/3/2012	10:09:28	5	9,92E+01	3,74E+01
7						

3.2.5 Calculation of the data log size

The maximum memory size is allocated when you create the data log. Besides ensuring enough memory space for all the data records, you must take into account the memory space of the following elements for the memory allocation:

- Data log header (if used)
- Time stamp header (if used)
- Data record index header
- Minimum block size

The formula below represents a method to help you determine the estimated size of your data log. Make sure that you observe the rule for the maximum size.

Data bytes of the data log = ((data bytes in a data record + time stamp bytes + 12 bytes) * number of data records)

Header

Header bytes of the data log = header character bytes + 2 bytes

Header character bytes

- No data header and no time stamp = 7 bytes
- No data header and time stamp (with time stamp header) = 21 bytes
- Data header and no time stamp = Number of character bytes in all column headers including separating commas
- Data header and time stamp (with time stamp header) = Number of character bytes in all column headers including separating commas + 21 bytes

Data

Data bytes of the data log = ((data bytes in a data record + time stamp bytes + 12 bytes) * number of data records)

Data bytes in a data record

The DATA parameter of the "DataLogCreate" instruction points to a structure. The structure assigns the number of data fields and the data type of each data field for a data log data record.

Multiply the number of the respective data type with the number of bytes required for this data type. Repeat this step for each data type in a data record. Add all the data bytes to obtain the sum of all the data elements in a data record.

Size of the individual data types

The data in data logs is saved as character bytes in csv format (comma separated values). The table below shows the number of bytes that are required to save each data type.

Data type	Bytes
Any	10
Bool	1
Byte	4
Char	1
Date	10
DInt	12
DTL	31
DWORD	11
Int	7
LDT	31
LReal	25
Real	16
Sint	5

Data type	Bytes
String	**Example 1:** MyString String[10] The maximum character string size is specified with 10 characters. • Text character + automatic filling with spaces = 10 bytes • Quotation marks at the start and end + comma character = 3 bytes 10 + 3 = 13 bytes total **Example 2:** Mystring2 String If no size is specified in square brackets, 254 bytes are assigned by default. • Text character + automatic filling with spaces = 254 bytes • Quotation marks at the start and end + comma character = 3 bytes 254 + 3 = 257 bytes total
Time	14
Tod	12
UDInt	12
UInt	7
USInt	5
WChar	1
Word	6

Number of data records in a data log

The RECORDS parameter of the "DataLogCreate" instruction specifies the maximum number of data records that can be stored in a data log.

Time stamp bytes in a data record

- No time stamp = 0 bytes
- Time stamp = 22 bytes

Example for size of a CSV file

The figure "Open CSV file" shows a CSV file opened in a spreadsheet program with five written data records in one data log.

The figure "Size of the header and the data records" shows the size of the header used in the CSV file and the size of the individual data records on the SIMATIC memory card.

The figure "Column size" shows the size of the respective columns depending on the data type used.

Open CSV file

	A	B	C	D	E	F
1						
2	Record	Date	UTC Time	Count	Temperature	Pressure
3	1	9/30/2010	20:26:56	1	9.86E+01	3.52E+01
4	2	9/30/2010	20:28:43	2	1.00E+02	3.73E+01
5	3	9/30/2010	20:29:03	3	9.99E+01	3.68E+01
6	4	9/30/2010	20:29:21	4	9.95E+01	3.64E+01
7	5	9/30/2010	20:30:19	5	9.92E+01	3.74E+01
8						

Size of the header and the data records

G
49 (42 characters + 5 commas + 2 line ending)
79 (72 + 5 commas + 2 line ending)
79 (72 + 5 commas + 2 line ending)
79 (72 + 5 commas + 2 line ending)
79 (72 + 5 commas + 2 line ending)
77 (72 + 5 commas)
Total = 442

Column size

9			Size of each column:			
10	index	Date	Time	int	real	real
11	11	10	12	7	16	16

Each data record also has a separator comma. Therefore, the calculation of the total size per column also includes 1 byte for each separator comma.

Note that the calculation of the size of the header, the data records and the columns is not an integral component of the open CSV file. The size information was added manually to illustrate the elements that make up the size of a data log. You can have the total size of a data log you have created as CSV file displayed in the web server on the "DataLogs" page.

SIMATIC memory card 4

4.1 SIMATIC memory card - Overview

Introduction

The automation system uses a SIMATIC memory card as the program memory. The SIMATIC memory card is a preformatted memory card compatible with the Windows file system. The memory card is available in different memory sizes and can be used for the following purposes:

- Transportable data carrier
- Program card
- Firmware update card
- Service data card

When you transfer the user program to the CPU via an online connection, it is written to the SIMATIC memory card. The SIMATIC memory card must be in the card slot of the CPU for this.

You can also write the SIMATIC memory card in the programming device or PC. A commercially available SD card reader is needed to read or write the SIMATIC memory card with the programming device or PC. You use this, for example, to copy files directly to the SIMATIC memory card with Windows Explorer.

The SIMATIC memory card is mandatory for operation of the CPU.

Note

SIMATIC memory cards of the redundant system S7-1500R/H

For the redundant system S7-1500R/H you need a SIMATIC memory card for each of the two CPUs. During redundant operation, both CPUs access the memory cards.

Labeling of the SIMATIC memory card

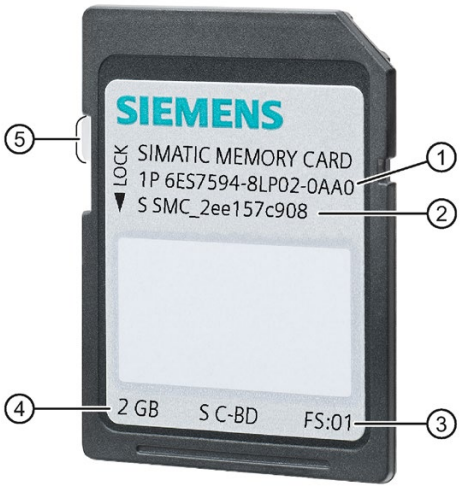

① Article number
② Serial number
③ Production version
④ Memory size
⑤ Slider for setting the write protection:
- Slider up: not write-protected
- Slider down: write-protected

Figure 4-1 Labeling of the SIMATIC memory card

Folders and files on the SIMATIC memory card

The following folders and files can be found on the SIMATIC memory card:

Table 4- 1 Folder structure

Folder	Description
FWUPDATE.S7S	Firmware update files for CPU and I/O modules
SIMATIC.S7S	User program, i.e. all blocks (OBs, FCs, FBs, DBs) and system blocks, project data of the CPU
SIMATIC.HMI	HMI-relevant data
DataLogs*	DataLog files
Recipes*	Recipe files
UserFiles*	You have to manually create the folder named "UserFiles" on the memory card for your user data. Only files in this folder (*.pdf, *.txt, *.csv, etc) are also loaded into the STEP 7 project with the "Upload device as new station" function.
Backups	Files for backing up and restoring via the display

* The content of these folders is also loaded into the STEP 7 project with the "Upload device as new station" function.

Table 4- 2 File structure

File type	Description
S7_JOB.S7S	Job file
SIMATIC.HMI\Backup*.psb	Panel backup files
SIMATICHMI_Backups_DMS.bin	Protected file (necessary for use of panel backup files in STEP 7)
__LOG__	Protected system file (necessary for use of card)
crdinfo.bin	Protected system file (necessary for use of card)
DUMP.S7S	Service data file
*.pdf, *.txt, *.csv, etc.	Additional file with different formats that you can also store in folders of the SIMATIC memory card If you store the files in the "UserFiles" folder, the files are stored in the STEP 7 project with "Upload device as new station" and can be used, for example, for restoring files in the event of a defective SIMATIC memory card.

Additional folders and files: CPU 1518-4 PN/DP MFP and CPU 1518F-4 PN/DP MFP

The SIMATIC memory card of the CPU 1518-4 PN/DP MFP and CPU 1518F-4 PN/DP MFP also contain the following folders and files:

- The following C/C++ runtime containers are located in the "/CppEnv1.MFP" directory on the SIMATIC memory card and are mounted in the file system in Linux:
  - System.img → Mount point: "/etc/mfp" (system files)
  - User.img → Mount point: "/home" (home directories of users, for C/C++ runtime application, for example)
  - Data.img → Mount point: "/var/userdata" (e.g. log data)
- RAM-Disk → Mount point: "/var/volatile"

Note

First-time startup of CPU 1518-4 PN/DP MFP and CPU 1518F-4 PN/DP MFP with empty SIMATIC memory card

When the CPU starts up for the first time with an empty SIMATIC memory card, the card is prepared for use with C/C++ runtime. This process takes up to three minutes. Do not turn off the CPU during this phase; the STOP LED flashes.

Note

Impact on performance of the CPU 1518-4 PN/DP MFP and CPU 1518F-4 PN/DP MFP

Depending on the type of programming, C/C++ runtime applications, such as mass storage accesses to the SIMATIC memory card, can affect the performance of the CPU.

You can find additional information on these CPUs in the CPU 1518-4 PN/DP MFP (https://support.industry.siemens.com/cs/ww/en/view/109749061) manual and the CPU 1518(F)-4 PN/DP MFP (https://support.industry.siemens.com/cs/ww/en/view/109756478) product information.

You can find information on creating C/C++ runtime applications in the SIMATIC S7-1500 ODK 1500S (https://support.industry.siemens.com/cs/ww/en/view/109752683) manual.

Using the serial number for copy protection

You can set up copy protection for CPUs that binds execution of the block to a specific SIMATIC memory card. You can then only execute the block if it is on the SIMATIC memory card with the specified serial number.

Note

Redundant system S7-1500R/H

The copy protection function is not supported by the CPUs of the redundant system S7-1500R/H.

You can find additional information about copy protection in the following manuals:

- System manual S7-1500, ET 200MP Automation System (http://support.automation.siemens.com/WW/view/en/59191792)
- System manual ET 200SP Distributed I/O System (http://support.automation.siemens.com/WW/view/en/58649293)
- Operating instructions ET 200pro CPU 1516pro-2 PN (https://support.industry.siemens.com/cs/ww/en/view/109482416)

Removing a SIMATIC memory card from the CPU

Only remove the SIMATIC memory card in POWER OFF or STOP of the CPU. Ensure that no writing functions (online functions with the programming device, e.g. loading/deleting a block, test functions) are active in STOP or were active before POWER OFF.

If you remove the SIMATIC memory card during a write operation, the following problems can occur:

- The data content of a file is incomplete.
- The file is no longer readable, or no longer exists.
- The entire data content is corrupted.

Inserting the SIMATIC memory card in the CPU in STOP state triggers a re-evaluation of the SIMATIC memory card. The CPU compares the content of the configuration on the SIMATIC memory card with the backed-up retentive data. If the backed-up retentive data matches the data of the configuration on the SIMATIC memory card, the retentive data is retained. If the data differs, the CPU automatically performs a memory reset. A memory reset deletes the retentive data on the CPU. After the memory reset, the CPU goes to STOP.

With regard to removal of the SIMATIC memory card, note also the following FAQ on the Internet (https://support.industry.siemens.com/cs/ww/en/view/59457183).

Note

Using the SIMATIC memory card as a firmware update card

If you use the SIMATIC memory card as a firmware update card, removing and inserting the card will not result in the loss of retentive data.

Removing a SIMATIC memory card from Windows computers

If you are using the card in a commercially available card reader under Windows, use the "Eject" function before you remove the card from the card reader. If you remove the card without using the "Eject" function, you may lose data.

Deleting contents of the SIMATIC memory card

You have the following options for deleting the content of the SIMATIC memory card:

- Delete files with Windows Explorer
- Format with STEP 7

Note

If you format the card with Windows tools, you will render the SIMATIC memory card unusable as a storage medium for a CPU.

Deletion of files and folders is permitted, with the exception of the "__LOG__" and "crdinfo.bin" system files. The CPU needs these system files. When you delete the files, you will no longer be able to use the SIMATIC memory card with the CPU.

If you have deleted the "__LOG__" and "crdinfo.bin" system files, format the SIMATIC memory card as described in the following section.

Formatting a SIMATIC memory card

NOTICE
Formatting the SIMATIC memory card Do **not** format the memory card with Windows tools. Formatting with Windows renders the memory card unusable by a CPU initially. You can find information on how to repair an inconsistent or incorrectly formatted card in the following FAQ on the Internet (https://support.industry.siemens.com/cs/ww/en/view/69063974).

To free up memory space on your SIMATIC memory card, you have the option of formatting the SIMATIC memory card. During formatting, the entire content of the memory card is deleted with the exception of the IP address.

The SIMATIC memory card may only be formatted in the CPU. With a SIMATIC memory card inserted, follow these steps:

Formatting with STEP 7:

- Establish an online connection.
- Double-click "Online & diagnostics" in the project tree.
- In the dialog window select "Functions > Format memory card" and then select the "Format" button.

Formatting via the display of the CPU

- In the display of the CPU, select the menu "Settings" > "Card functions" > "Format card" and confirm with OK.

Changing the memory card without loss of retentive data

You can change the memory card or use a larger SIMATIC memory card without losing the retentive data. When you switch off the CPU, the retentive data is backed up in the retentive memory of the CPU. While the CPU is switched off, you can remove the memory card and copy its content to a larger memory card. After switching on the CPU, the data backed up in the CPU when the CPU was switched off is restored.

4.2 Setting the card type

Introduction

You can use the SIMATIC memory card as a program card or as a firmware update card.

Procedure

1. To set the card type, insert the SIMATIC memory card into the card reader of the programming device.
2. Select the "SIMATIC Card Reader" folder in the project tree.
3. In the properties of the selected SIMATIC memory card, specify the card type:

- **Program card**

  You use a program card as an external load memory for the CPU. It contains the complete user program for the CPU. The CPU transfers the user program from the load memory to the work memory. The user program runs in the work memory.

  The following folder is created on the SIMATIC memory card: SIMATIC.S7

- **Firmware update card**

  You can save firmware for a CPU and for I/O modules on a SIMATIC memory card. This enables you to perform a firmware update with the help of a specially prepared SIMATIC memory card.

  The following folder is created on the SIMATIC memory card: FWUPDATE.S7S

Reference

You can find additional information in the STEP 7 online help.

4.3 Data transfer with SIMATIC memory cards

Transferring objects from the project to the SIMATIC memory card

When the SIMATIC memory card is inserted in the programming device or in the external card reader, you can transfer the following objects from the project tree (STEP 7) to the SIMATIC memory card:

- Individual blocks (multiple selection possible)

  In this case, the transfer is consistent, i.e. the function takes dependencies between blocks due to block calls into account.

- CPU folder

  In this case, all the runtime-relevant objects, such as blocks and the hardware configuration, are transferred to the SIMATIC memory card, just as with downloading.

- Service data
  In this case, the service data saved beforehand is transferred to the SIMATIC memory card. You will find additional information on the service data in the following manuals:

  – System manual S7-1500, ET 200MP Automation System (http://support.automation.siemens.com/WW/view/en/59191792)

  – System manual Redundant System S7-1500R/H (https://support.industry.siemens.com/cs/ww/en/view/109754833)

  – System manual ET 200SP Distributed I/O System (http://support.automation.siemens.com/WW/view/en/58649293)

  – Operating instructions ET 200pro CPU 1516pro-2 PN (http://support.automation.siemens.com/WW/view/en/58649293)

You have the following options for performing the transfer:

- Transfer the objects using drag-and-drop.
- Use the "Card Reader/USB memory > Write to memory card" command in the "Project" menu.

Transferring trace recordings to the SIMATIC memory card

The "Save measurements on device (memory card)" function allows you to save trace recordings on your SIMATIC memory card.

Note

Redundant system S7-1500R/H

The CPUs of the redundant system S7-1500R/H do not support the saving of measurements on the SIMATIC memory card.

Response when number reached

The "Deactivate recording" parameter repeats the measurements until the configured "Number of measurements" is reached.

The "Overwrite oldest recording" parameter replaces the oldest measurement with the latest measurement when the configured "Number of measurements" is reached. Note, however, that continuously writing data to the SIMATIC memory card shortens its service life.

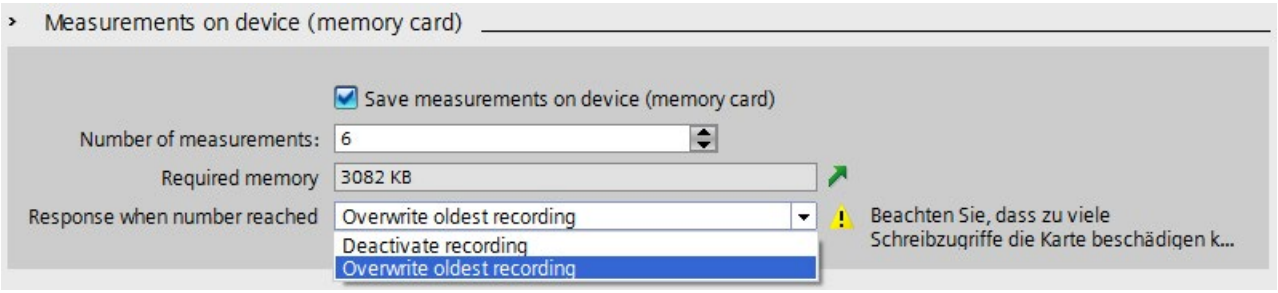

Figure 4-2 Dialog of settings for saving measurements on the memory card in STEP 7

Number of measurements

The CPU supports a maximum of 999 measurements. The CPU writes the trace recordings to the load memory of the memory card. Meanwhile, the CPU pauses the checking of trigger conditions for the trace job. Once the CPU finishes saving the trace recordings, the CPU continues checking the trigger conditions.

NOTICE
Memory required on the SIMATIC memory card When the trace function "Measurements on device (memory card)" requires more memory than is available on the SIMATIC memory card, undesired effects may result. Ensure there is always sufficient free memory space to use the "Measurements on device (memory card)" function. In addition to the "Measurements on device (memory card)" trace function, other functions such as storing data logs use memory space on the SIMATIC memory card. Ensure there is always sufficient memory space available for all functions that use memory.

You can find additional information about trace measurements and trace recordings in the following:

- Function manual Using the Trace and Logic Analyzer Function (http://support.automation.siemens.com/WW/view/en/64897128)
- Function manual Web Server (http://support.automation.siemens.com/WW/view/en/59193560)
- STEP 7 online help

Firmware update using SIMATIC memory card

You can find information on how to perform a firmware update in the following:

- System manual S7-1500, ET 200MP Automation System (http://support.automation.siemens.com/WW/view/en/59191792)
- System manual Redundant System S7-1500R/H (https://support.industry.siemens.com/cs/ww/en/view/109754833)
- System manual ET 200SP Distributed I/O System (http://support.automation.siemens.com/WW/view/en/58649293)
- Operating instructions ET 200pro CPU 1516pro-2 PN (http://support.automation.siemens.com/WW/view/en/58649293)

Reference

You can find additional information about the SIMATIC memory card in the STEP 7 online help.

4.4 Service life of the SIMATIC memory card

Calculation of the theoretical service life of a SIMATIC memory card serves as a decision-making aid for selecting which card you need for your automation task. The following examples only return a guide value, however. A precise calculation of the service life is not possible due to the fact that the description cannot cover all the theoretically possible scenarios.

Influences on the service life

You can influence the service life of SIMATIC memory cards by the following factors:

- Size of card
- Number and type of write operations

  The number of physical write operations to the memory blocks of the card results from the following:

  – Number of write operations from the application

  – Type of write operations from the application

Structure of a SIMATIC memory card

The internal flash memory of the SIMATIC memory card is organized in memory blocks. A memory block is a memory area of a fixed size. A write operation always addresses entire memory blocks on the SIMATIC memory card. When a memory block has been written once it must be deleted before it can be written again. The number of delete/write operations per memory block is limited. The service life of the SIMATIC memory card is measured by the maximum number of supported delete or write operations per memory block.

In contrast to delete or write operations, read operations have a negligible impact on the service life. Therefore, the impact of the read operations on the service life is not included in this calculation. A very high number of read operations can, however, influence the service life to a small extent.

Maximum number of write/delete operations

The internal controller of the memory card ensures that the available memory blocks are evenly used. In this way, a maximum number of write operations is possible on the SIMATIC memory card. Internal algorithms distribute the write accesses to the same logical memory area over changing physical memory areas in order to use the memory blocks evenly.

The following table shows the maximum possible number of write/delete operations as a function of the SIMATIC memory card used. The number of maximum write/delete operations of the respective SIMATIC memory card is also available online in the technical specifications of the respective SIMATIC memory card.

Memory size of the SIMATIC memory card *	Article number	Max. number of write/delete operations per memory block
4 MB	6ES7954-8LCxx-0AA0	500 000
12 MB	6ES7954-8LExx-0AA0	500 000
24 MB	6ES7954-8LFxx-0AA0	500 000
256 MB	6ES7954-8LL02-0AA0	200 000
2 GB	6ES7954-8LP01-0AA0	100 000
2 GB	6ES7954-8LP02-0AA0	60 000
32 GB	6ES7954-8LT02-0AA0	50 000

* The memory size figures named in the table are theoretical values. The actual existing memory size in practice is below the theoretical value. The reason for this is that the internal controller of the card and the file system reserve part of the existing memory for internal memory management.

Note

Write or delete operations

Write or delete operations, particularly repeated (cyclic) write/delete operations by the user program on the SIMATIC memory card reduces its service life.

Cyclic execution of the following instructions reduces the service life of the memory card depending on the number of write operations and data:

- "CREATE_DB" (with ATTRIB "Create DB in load memory")
- "DataLogWrite"
- "RecipeExport"
- "RecipeImport" (if target DB in load memory)
- "WRIT_DBL"
- "SET_TIMEZONE"

Note also that, in addition to the cyclic write/delete operations, the writing or deleting of very large amounts of data also adversely affects the service life of the SIMATIC memory card.

Note

Redundant system S7-1500R/H

The CPUs of the redundant system S7-1500R/H do not support the instructions specified in this "Write or delete operations" notice, except for "SET_TIMEZONE".

Guaranteed data retention time

If you do not use your SIMATIC memory card for an extended period of time, there is the risk that data contained on the memory card may no longer be readable after a certain amount of time.

The guaranteed data retention time of a SIMATIC memory card is 10 years on delivery and with proper storage. With a number of ≤ 10% of the maximum write/delete operations, the data stored on the card has a retention time of 10 years.

Please note that increasing numbers of write/delete operations to the card reduces its data retention time. If 90% of the maximum write/delete operations is reached, the guaranteed data retention time is reduced to 1 year. If 100% of the maximum write/delete operations is reached, the retention time of the saved data can no longer be guaranteed.

Determining the current usage level of a SIMATIC memory card in STEP 7

When you activate the "Aging of the SIMATIC memory card" option, you enter a threshold value as a percentage in the text box below. As soon as the service life of the SIMATIC memory card has reached the specified threshold value (e.g.: 80%), the CPU outputs a diagnostics alarm.

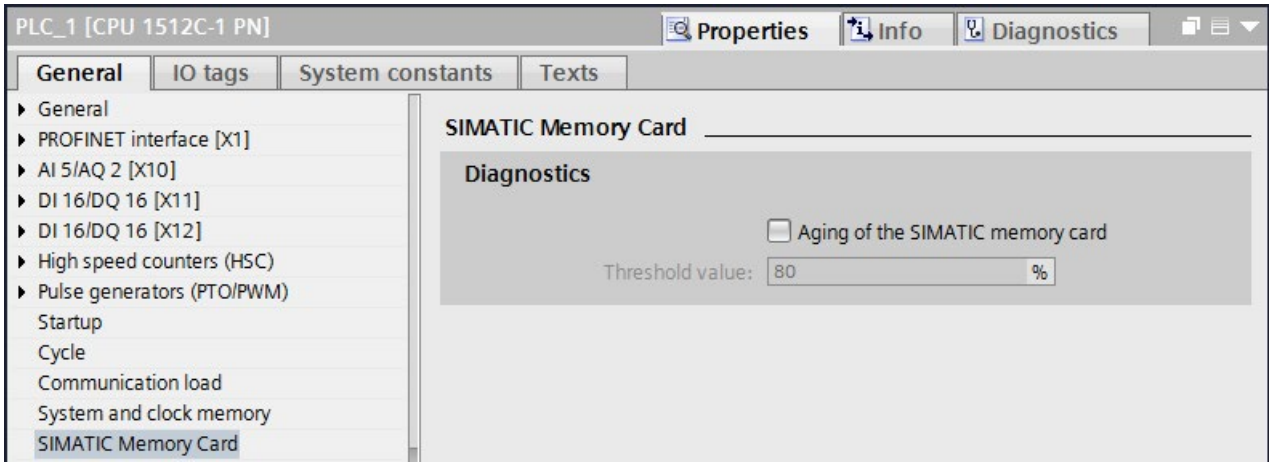

Figure 4-3 Enabled option "Aging of the SIMATIC memory card"

Calculation of the theoretical service life of a SIMATIC memory card

We will use the following example as a basis for calculation:

The user is using a new **256** MB memory card. In accordance with the table, this memory card type supports **200000** write operations. After parameter changes, the user would like to write **200** data blocks of **5** Kbytes each to the SIMATIC memory card at a frequency of **50** times per day with the "RecipeExport" instruction.

Step 1: Calculating the write operations

First use the following formula to calculate the service life of the SIMATIC memory card:

$$\text{Write operations} = \frac{\text{Size of the memory card} \ * \ \text{Maximum number of write operations}}{\text{Number of written bytes}}$$

We first use the sizes from the example in the formula "Write operations" as a basis for calculating the service life:

- Size of the memory card: **256** MB = **268435456** bytes
- Maximum number of write operations: **200000**
- Number of written bytes: **1024000** bytes (**200** x **5** KB)

If we use the sizes from the example in the formula, we obtain the following result:

$$\text{Write operations} = \frac{268\,435\,456 \text{ byte} \ * \ 200\,000}{1\,024\,000 \text{ byte}} = 52\,428\,800 \text{ write operations}$$

Step 2: Calculating the service life

Use the following formula to calculate the service life in years:

$$\text{Service life} = \frac{\dfrac{\text{Write operations}}{\text{Write operations per day}}}{365 \text{ days}} : \text{Net-gross factor} = \text{years}$$

Note

Net-gross factor

Internal data (metadata) are also written to the SIMATIC memory card with each write operation. Due to this additional data, include the net-gross factor **10** when calculating the service life.

If we use the sizes from the example in the formula, we obtain the following result:

$$\text{Service life} = \frac{\dfrac{52\,428\,800}{50}}{365 \text{ days}} : 10 = 287 \text{ years}$$

Calculation with more frequent write accesses and a higher number of bytes written

If the frequency of write accesses and the number of bytes written per day increases, the service life of the SIMATIC memory card is reduced.

The following table shows, based on empirical values, how the service life of a SIMATIC memory card with a size of 256 MB is reduced

Write accesses per day	Number of bytes written per instruction	Service life of the SIMATIC memory card in years
50	1024000	287
100	1024000	143
400	1024000	36
400	2048000	18
400	4096000	9

The following table shows how the same values impact the service life of a SIMATIC memory card with a size of 2 GB (6ES7954-8LP01-0AA0).

Write accesses per day	Number of bytes written per instruction	Service life of the SIMATIC memory card in years
50	1024000	1149
100	1024000	575
400	1024000	144
400	2048000	72
400	4096000	36

The result shows that a high number of write accesses together with a high number of written bytes significantly shortens the service life of the SIMATIC memory card.

Reference

You can find an alternative method for calculating the service life of a SIMATIC memory card in an FAQ on the Internet (https://support.industry.siemens.com/cs/ww/en/view/109482591).

GetSMCinfo instruction

In STEP 7 (TIA Portal) you have the option of reading out the inserted SIMATIC memory card using the GetSMCinfo instruction. The following information can be read out with the instruction:

- Memory size in KB
- Memory space used in KB
- Maintenance information: Previously used up portion of the service life in %
- Configured amount of the service life in % after which the CPU creates a diagnostics buffer entry and the maintenance LED switches on.

You can find additional information on the GetSMCinfo instruction in the STEP 7 online help.

4.5 Expanding the load memory of the CPUs of the redundant system S7-1500R/H

Memory requirements

If the memory space on one of the two SIMATIC memory cards is not sufficient, you can replace this card during operation of the redundant system S7-1500R/H.

Note

To avoid errors on the SIMATIC memory card due to insufficient memory, use memory cards with enough memory space.

Expanding the load memory during operation

To expand the load memory of the CPUs of the redundant system S7-1500R/H during operation, follow these steps:

Action		System response
1.	Switch the first CPU to STOP while in redundant operation.	The system changes to system state RUN-Solo.
2.	Remove the existing SIMATIC memory card from the CPU that is in STOP. Insert a larger SIMATIC memory card.	The CPU performs a memory reset.
3.	After the memory reset switch the CPU back to RUN.	The CPU performs a SYNCUP.
4.	Wait until the SYNCUP of the CPU is complete and then switch the second CPU to STOP.	The system changes to system state RUN-Solo again.
5.	Remove the existing SIMATIC memory card from the CPU that is in STOP. Insert a larger SIMATIC memory card.	The CPU performs a memory reset.
6.	After the memory reset, switch the CPU back to RUN.	The CPU performs a SYNCUP.
7.	Wait until the SyncUp of the CPU is complete.	The CPUs now have a larger load memory and are in system state RUN-Redundant again.

Glossary

Backup CPU

When the R/H system is in RUN-Redundant system state, the Primary CPU controls the process. The Backup CPU synchronously executes the user program and can take over the process control at a failure of the Primary CPU.

Bit memory

Bit memory is a component of the system memory of the CPU for saving intermediate results. You access the bit memory from the user program in bit, byte, word or double-word mode.

Code block

In SIMATIC S7, a code block contains a portion of the STEP 7 user program.

Consistent data

Consistent data is data whose content belongs together. Consistent data is read and written contiguously.

Counter

Counters are components of the system memory of the CPU. You can modify the content of the "counter cells" using STEP 7 instructions. Example: Count up or down.

Data block

Data blocks (DBs) are data areas in the user program that contain user data. The following data blocks are available:

- Global data blocks that you access from all code blocks.
- Instance data blocks that are assigned to a particular FB call.

Data log

Data logs are CSV files for the saving of tag values. The data logs are stored on the SIMATIC memory card in the "\datalogs" directory. Instructions in the user program write data records of tag values to a data log.

Diagnostics

Monitoring functions include:

- Detection, localization, classification of errors, faults and alarms.
- Display and further evaluation of errors, faults and alarms.

The monitoring functions run automatically during system operation. This increases the availability of systems because commissioning times and downtimes are reduced.

Diagnostics buffer

The diagnostics buffer is a buffered memory area in the CPU in which diagnostics events are stored in their order of occurrence.

Firmware of the CPU

In SIMATIC, a distinction is made between the firmware of the CPU and user programs.

Firmware is software that is embedded in electronic devices, i.e. functionally connected permanently to the hardware. It is usually saved in a flash memory, EPROM, EEPROM or ROM and cannot be replaced by the user or can only be replaced with special tools or functions.

User program: see glossary entry "User program"

Firmware update

You use a firmware update to update the firmware of modules. A firmware update is performed, e.g. for functional extensions of a CPU or interface module.

Function block

A function block (FB) is a code block with static data. An FB allows you to pass parameters in the user program. Function blocks are thus suited for programming frequently recurring complex functions, such as closed-loop controls or operating states selection.

Global data block (DB)

Every function block, every function, and every organization block can read the data from a global data block, or write its own data to a global data block. This data is retained in the data block, even when the data block is exited.

I/O module

Device of the distributed I/O that is used as an interface between the controller and the process.

Instance data block (DB)

Each call of a function block in the STEP 7 user program is assigned a data block that is automatically generated. Values of the input, output and in/out parameters, as well as local block data, are stored in the instance data block.

IP address

The IP address is made up of four decimal numbers, each with a value range of 0 to 255. The decimal numbers are separated by a dot (e.g. 192.162.0.0).

The IP address consists of the following:

- Address of the network
- Device address (PROFINET interface of the IO controller/IO devices)

Local data

This memory area accepts the temporary local data of a block for the duration of processing.

Memory reset

Procedure for setting the memories of the CPU to a defined initial state.

Operating states

Operating states describe the behavior of an individual CPU at any given point in time.

The CPUs of the SIMATIC standard systems feature the STOP, STARTUP and RUN operating states.

The primary CPU of the redundant system S7-1500R/H has the operating states STOP, STARTUP, RUN, RUN-Syncup and RUN-Redundant. The backup CPU has the operating states STOP, SYNCUP and RUN-Redundant.

Optimized block access

Data blocks with optimized access have no fixed structure. In the declaration, the data elements only receive a symbolic name, and no fixed address within the block. The elements are automatically arranged in the block's available memory area in such a way that its capacity is optimally exploited.

In these data blocks, you can only address tags symbolically. For example, you would access the "FillState" tag in the "Data" DB as follows:

"Data".FillState

Optimized access offers the following advantages:

- The data is structured and saved in a manner that is optimal for the CPU used. This allows you to increase CPU performance.
- Access errors, e.g. from the HMI, are not possible.
- You can selectively define individual tags as retentive.

Organization block

Organization blocks (OBs) form the interface between the operating system of the CPU and the user program. The organization blocks determine the order in which the user program is executed.

Parameter

- Variable of a STEP 7 code block
- Variable for setting the behavior of a module (one or more per module). In delivery state, each module has an appropriate basic setting that can be changed by configuring in STEP 7. There are static and dynamic parameters.

Parameters, dynamic

In contrast to static parameters, you can change dynamic parameters of modules during operation by calling an SFC in the user program, e.g. limit values of an analog input module.

Parameters, static

In contrast to dynamic parameters, you cannot change static parameters of modules with the user program but only by configuring in STEP 7, e.g. input delay of a digital input module.

Primary CPU

When the R/H system is in RUN-Redundant system state, the Primary CPU controls the process. The Backup CPU synchronously executes the user program and can take over the process control at a failure of the Primary CPU.

Process image (I/O)

The CPU transfers the values from the input and output modules to this memory area. At the start of the cyclic program, the CPU transfers the process image output as a signal state to the output modules. The CPU then reads the signal states of the input modules to the process image of the inputs. Then the CPU executes the user program.

Redundant systems

Redundant systems are characterized in that important automation components are present multiple times (redundantly). Process control is maintained if a redundant component fails.

Reset to factory settings

Resetting to factory settings restores the CPU settings to the delivery state.

Restart

A restart (warm restart) deletes all non-retentive bit memory and resets non-retentive DB contents to the start values from the load memory. Retentive bit memory and retentive DB contents are retained. Program execution begins at the call of the first startup OB.

Retentivity

A memory area whose content is retained after power failure and after a transition from STOP to RUN is retentive. The non-retentive bit memory area, timers and counters are reset after power failure and after a STOP to RUN transition.

SIMATIC memory card

Memory for the user program for programmable modules and communications processors. You can also use the SIMATIC memory card for exchange of user software and user data.

Standard access

Data blocks with standard access have a fixed structure. In the declaration, the data elements contain both a symbolic name and a fixed address within the block. The address is displayed in the "Offset" column.

In these data blocks, you can address tags both symbolically and absolutely:

"Data".FillState

DB1.DBW2

System states

The redundant S7-1500R/H system has various system states. The system states result from the operating states of the Primary and Backup CPUs. The concept of the system state is used to obtain a simplified expression that characterizes the simultaneously occurring operating states of the two CPUs. The following system states are available for the redundant system S7-1500R/H: STOP, STARTUP, RUN-Solo, SYNCUP and RUN-Redundant.

Timer

Timers are components of the system memory of the CPU. The operating system automatically updates the content of the "timer cells" asynchronously to the user program. STEP 7 instructions specify the precise function of the timer cell (e.g. on delay) and trigger its execution.

User program

In SIMATIC, a distinction is made between user programs and the firmware of the CPU.

The user program contains all instructions, declarations and data that enable a plant or process to be controlled. The user program is assigned to a programmable module (e.g. CPU, FM) and can be structured in smaller units.

Firmware: see glossary entry "Firmware of the CPU"

Index

B

Bit memory, 29

C

C/C++, 14, 60
Counter, 29

D

Data block, 27, 33
Data logging
    Data structure, 45
    DataLogCreate, 45
    Example program, 48
    Overview of data logging, 43
Data retention time, 70
Diagnostics buffer, 31
Display, 23, 59, 63
Disposal, 5

F

FAQ
    Calculate service life SMC, 72
    Configure data blocks, 39
    Estimating memory requirements, 20
    Formatting a SIMATIC memory card, 63
    Insufficient load memory, 37
    Load project data in load memory, 37
    Removing a SIMATIC memory card, 61
    Repairing the SIMATIC memory card, 63
    Using recipe phases, 42
Function block, 27

I

Instructions
    Asynchronous, 42, 47
    CREATE_DB, 28
    DataLogClear, 46
    DataLogClose, 46
    DataLogCreate, 45, 46, 54
    DataLogDelete, 46
    DataLogNewFile, 46
    DataLogOpen, 46
    DataLogWrite, 46
    GetSMCinfo, 72
    READ_DBL, 39
    RecipeExport, 41
    RecipeImport, 41
    WRIT_DBL, 39

L

Linux, 14, 60
Load memory, 14
Load memory S7-1500/H-CPUs, 73

M

Memory reserve, 32

O

Offline project, 16, 19
Offline project data, 13
Online project data, 13
Operating hours counter, 31

P

PLC tags, 32

R

Redundancy ID, 17
Redundant S7-1500R/H system, 73
Retentive data, 17, 61, 63
Retentive memory, 13, 15, 26
    S7-1500R/H-CPUs, 17
Runtime, 14, 60

S

Scope, 3
SIMATIC memory card, 57, 64, 65
    Basics, 57
    Firmware card, 64

Possible applications, 65
Program card, 64
Repairing, 63
Updating firmware, 67
Software change, 32

T

Technology objects, 28
Timer, 29
Trace recordings, 66

W

Web server, 14, 25, 51, 67
Work memory, 13, 15

SIEMENS

Function manual

SIMATIC

S7-1500, ET 200SP, ET 200pro

Web server

Edition 12/2017

support.industry.siemens.com

SIEMENS

Preface

Documentation guide 1

General information 2

Web pages 3

SIMATIC

S7-1500, ET 200SP, ET 200pro Web server

Function Manual

12/2017

A5E03484625-AF

Legal information

Warning notice system

This manual contains notices you have to observe in order to ensure your personal safety, as well as to prevent damage to property. The notices referring to your personal safety are highlighted in the manual by a safety alert symbol, notices referring only to property damage have no safety alert symbol. These notices shown below are graded according to the degree of danger.

⚠ DANGER

indicates that death or severe personal injury **will** result if proper precautions are not taken.

⚠ WARNING

indicates that death or severe personal injury **may** result if proper precautions are not taken.

⚠ CAUTION

indicates that minor personal injury can result if proper precautions are not taken.

NOTICE

indicates that property damage can result if proper precautions are not taken.

If more than one degree of danger is present, the warning notice representing the highest degree of danger will be used. A notice warning of injury to persons with a safety alert symbol may also include a warning relating to property damage.

Qualified Personnel

The product/system described in this documentation may be operated only by **personnel qualified** for the specific task in accordance with the relevant documentation, in particular its warning notices and safety instructions. Qualified personnel are those who, based on their training and experience, are capable of identifying risks and avoiding potential hazards when working with these products/systems.

Proper use of Siemens products

Note the following:

⚠ WARNING

Siemens products may only be used for the applications described in the catalog and in the relevant technical documentation. If products and components from other manufacturers are used, these must be recommended or approved by Siemens. Proper transport, storage, installation, assembly, commissioning, operation and maintenance are required to ensure that the products operate safely and without any problems. The permissible ambient conditions must be complied with. The information in the relevant documentation must be observed.

Trademarks

All names identified by ® are registered trademarks of Siemens AG. The remaining trademarks in this publication may be trademarks whose use by third parties for their own purposes could violate the rights of the owner.

Disclaimer of Liability

We have reviewed the contents of this publication to ensure consistency with the hardware and software described. Since variance cannot be precluded entirely, we cannot guarantee full consistency. However, the information in this publication is reviewed regularly and any necessary corrections are included in subsequent editions.

Siemens AG
Division Digital Factory
Postfach 48 48
90026 NÜRNBERG
GERMANY

A5E03484625-AF
℗ 12/2017 Subject to change

Copyright © Siemens AG 2012 - 2017.
All rights reserved

Preface

Purpose of the documentation

This documentation supports you in the operation of the Web server.

The Web server offers, among other things, web page access to diagnostic data and to process data of the CPU.

Basic knowledge required

The following knowledge is required in order to understand the documentation:

- General knowledge in the field of automation technology
- Knowledge of the industrial automation system SIMATIC
- Experience of working with Windows-based computers
- Knowledge about how to use STEP 7 (TIA Portal)

Scope of the documentation

This documentation is valid for CPUs as of firmware version V2.5 and contains illustrations of the Web server user interface. The images used are identical for all CPUs of the S7-1500 automation system and distributed I/O system ET 200SP and the CPU 1516pro-2 PN of distributed I/O system ET 200pro.

The displayed illustrations can differ from the interface of the Web server in some details, e.g. depending on the browser used.

What's new in the Web Server function manual, Version 12/2017 compared to Version 09/2016

What's new?		What are the customer benefits?	Where can I find the information?
New contents	New web page "User files"	You can download ASCII files (files in binary format) from the SIMATIC Memory Card, directory UserFiles\ to the web page and delete them.	Section User files (Page 115)
	Time display as Coordinated Universal Time (UTC) or as PLC local time	The display of the UTC allows you to use a uniform time for the web pages. You can set the format of the time display to Coordinated Universal Time (UTC) or PLC local time (default setting).	Section Start page with general CPU information (Page 35)
	Automated downloading, reading out and archiving of DataLogs	You can, for example, read out and archive DataLogs daily from one or more CPUs at a specific time via the Web server. Automatic downloading of DataLogs is realized either by the execution of scripts in, for example, Bash or via JavaScript on your HTML user page.	Section Automated reading out of data logs (Page 113)
	The “Permit access only with HTTPS" check box is activated in the default setting of a configured CPU.	The web pages are transmitted by default via a secure connection and are protected from attacks by third parties.	Section Configuring the Web server (Page 21)
Changed contents	Web page "Module information”: New column Device number	You can read the assignment of the device number to the device name.	Section Module information (Page 47)
	Web page "Topology": Selection of the available PROFINET interfaces, for example X1, X2, CM 1542-1	You can select the topology display for the PROFINET interfaces X1, X2 and for connected PROFINET communication modules.	Section Topology (Page 62)
	Web page "DataLogs": New column for deleting DataLog files	You can delete DataLog files via the Web server.	Section DataLogs (Page 112)
	Web page "Trace": Changes in the display of Trace recordings	You can evaluate the Trace recordings in more detail through the extension of the display.	Section Trace (Page 133)
	Web page "Trace": New arithmetic functions	In the case of completed measurements you can combine the measured signals mathematically with each other and this generate signals that were not recorded. You can, for example, form the difference of two signals in order to better display the deviation of the current pressure of a boiler from the set setpoint value.	

What's new in the Web Server function manual, Version 09/2016 compared to Version 12/2014

What's new?		What are the customer benefits?	Where can I find the information?
New contents	Handling of certificate modified	You protect the Web server against tapping or distortion of the communication through access via the secure transmission protocol "HTTPS" including a special Web server certificate.	Section Configuring the Web server (Page 21)
	Four additional languages for the Web server interface	You can set the Web server interface to the following languages: • Korean • Russian • Turkish • Portuguese (Brazil)	Section Start page with general CPU information (Page 35)
	Assignment of different project languages extended	You can assign up to three different project languages for comments, alarm texts and diagnostic information to the user interface languages of the Web server.	Section Language settings (Page 31)
	"Start page" web page extended	The display of the TIA project name immediately indicates whether the desired project is selected.	Section Start page with general CPU information (Page 35)
	"Diagnostics" web page extended by one tab: • "Program protection" • "Runtime information" • "Fail-safe" (with an F-CPU)	Here you can find information about: • Know-how protection or copy protection of the PLC program • Program/communication load and cycle time • F-collective signatures, cycle times and runtimes of the F-runtime group(s)	Section Diagnostics (Page 40)
	"Alarms" web page extended	You can acknowledge alarms of the CPU via the Web server.	Section Alarms (Page 55)
	"Tag status" and "Watch tables" web pages extended	You can change the value of tags and write them to the CPU, also using the absolute address.	Section Tag status (Page 72) Section Watch tables (Page 75)
	New web page "Online backup"	You can back up and restore the CPU configuration to/from the SIMATIC memory card via the Web server.	Section Online backup (Page 120)
	New "Motion Control diagnostics" web page	You can monitor statuses, errors, technology alarms and the current values of configured technology objects (TOs) with the Web server without STEP 7.	Section Motion Control diagnostics (Page 125)
	New web page "Online backup"	You can read, view and save trace recordings via the Web server and thus obtain plant and project information for diagnostics and maintenance without STEP 7.	Section Trace (Page 133)

What's new?		What are the customer benefits?	Where can I find the information?
Changed contents	Scope of the function manual expanded to include CPUs of the distributed I/O system ET 200SP and the CPU 1516pro-2 PN	Functions that you will be familiar with from the SIMATIC S7-1500 CPUs are implemented in CPUs in other designs (ET 200SP) and in the CPU 1516pro-2 PN (degree of protection IP65, IP66 and IP67).	Manual CPU 1510SP-1 PN (https://support.industry.siemens.com/cs/ww/en/view/90157130) Manual CPU 1512SP-1 PN (https://support.industry.siemens.com/cs/ww/en/view/90157013) Operating instructions CPU 1516pro-2 PN (https://support.industry.siemens.com/cs/ww/en/view/109482416)
	Web page "Watch tables": Note added on the maximum configuration limits.		Section Watch tables (Page 75)
	Web page "User pages": Note added on the maximum size of the HTML pages.		Section User pages (Page 77)

Conventions

In this documentation, "STEP 7" is used as a synonym for all versions of the configuration and programming software "STEP 7 (TIA Portal)".

Please also observe notes marked as follows:

Note

A note contains important information on the product described in the documentation, on the handling of the product and on the section of the documentation to which particular attention should be paid.

Security information

Siemens provides products and solutions with industrial security functions that support the secure operation of plants, systems, machines and networks.

In order to protect plants, systems, machines and networks against cyber threats, it is necessary to implement – and continuously maintain – a holistic, state-of-the-art industrial security concept. Siemens' products and solutions constitute one element of such a concept.

Customers are responsible for preventing unauthorized access to their plants, systems, machines and networks. Such systems, machines and components should only be connected to an enterprise network or the internet if and to the extent such a connection is necessary and only when appropriate security measures (e.g. firewalls and/or network segmentation) are in place.

For additional information on industrial security measures that may be implemented, please visit (http://www.siemens.com/industrialsecurity).

Siemens' products and solutions undergo continuous development to make them more secure. Siemens strongly recommends that product updates are applied as soon as they are available and that the latest product versions are used. Use of product versions that are no longer supported, and failure to apply the latest updates may increase customers' exposure to cyber threats.

To stay informed about product updates, subscribe to the Siemens Industrial Security RSS Feed under (http://www.siemens.com/industrialsecurity).

Siemens Industry Online Support

You can find current information on the following topics quickly and easily here:

- **Product support**

  All the information and extensive know-how on your product, technical specifications, FAQs, certificates, downloads, and manuals.

- **Application examples**

  Tools and examples to solve your automation tasks – as well as function blocks, performance information and videos.

- **Services**

  Information about Industry Services, Field Services, Technical Support, spare parts and training offers.

- **Forums**

  For answers and solutions concerning automation technology.

- **mySupport**

  Your personal working area in Industry Online Support for messages, support queries, and configurable documents.

This information is provided by the Siemens Industry Online Support in the Internet (http://www.siemens.com/automation/service&support).

Industry Mall

The Industry Mall is the catalog and order system of Siemens AG for automation and drive solutions on the basis of Totally Integrated Automation (TIA) and Totally Integrated Power (TIP).

Catalogs for all the products in automation and drives are available on the Internet (https://mall.industry.siemens.com).

Table of contents

Preface 3

1 Documentation guide 11

2 General information 16

2.1 Properties of the Web server 16

2.2 Configuring the Web server 21

2.3 Language settings 31

2.4 Updating and saving information 34

3 Web pages 35

3.1 Start page with general CPU information 35

3.2 Diagnostics 40

3.3 Diagnostics buffer 45

3.4 Module information 47

3.5 Firmware update 52

3.6 Alarms 55

3.7 Communication 57

3.8 Topology 62
3.8.1 Introduction 62
3.8.2 Graphical view 63
3.8.3 Tabular view 66
3.8.4 Status overview 68
3.8.5 Examples for graphical topology views 69

3.9 Tag status 72

3.10 Watch tables 75

3.11 User pages 77
3.11.1 AWP commands 81
3.11.1.1 PLC tags 82
3.11.1.2 Special tags 86
3.11.1.3 Enum types 88
3.11.1.4 Fragments 90
3.11.1.5 Arrays 91
3.11.1.6 Structures 93
3.11.2 Configuring user pages 94
3.11.3 Programming the WWW instruction 96
3.11.4 Defining the user page as start page 98
3.11.5 Example of a user page 100
3.11.5.1 Website for monitoring and controlling a wind turbine 100
3.11.5.2 Reading and displaying data from the CPU 103

3.11.5.3 Using enum types ... 104
3.11.5.4 Writing user inputs into the controller ... 105
3.11.5.5 Writing special tags ... 106
3.11.5.6 HTML code of the user page "Remote Wind Turbine Monitor" ... 107

3.12 Filebrowser ... 111

3.13 DataLogs ... 112
3.13.1 Automated reading out of DataLogs ... 113

3.14 UserFiles ... 115
3.14.1 Reading or upload user files automatically ... 117

3.15 Online backup ... 120

3.16 Motion Control diagnostics ... 125

3.17 Trace ... 133

3.18 Reading out service data ... 154

3.19 Basic websites ... 155

Glossary ... 157

Index ... 161

Documentation guide

1

The documentation for the SIMATIC S7-1500 automation system, for CPU 1516pro-2 PN based on SIMATIC S7-1500, and for the distributed I/O systems SIMATIC ET 200MP, ET 200SP and ET 200AL is divided into three areas.
This division allows you easier access to the specific information you require.

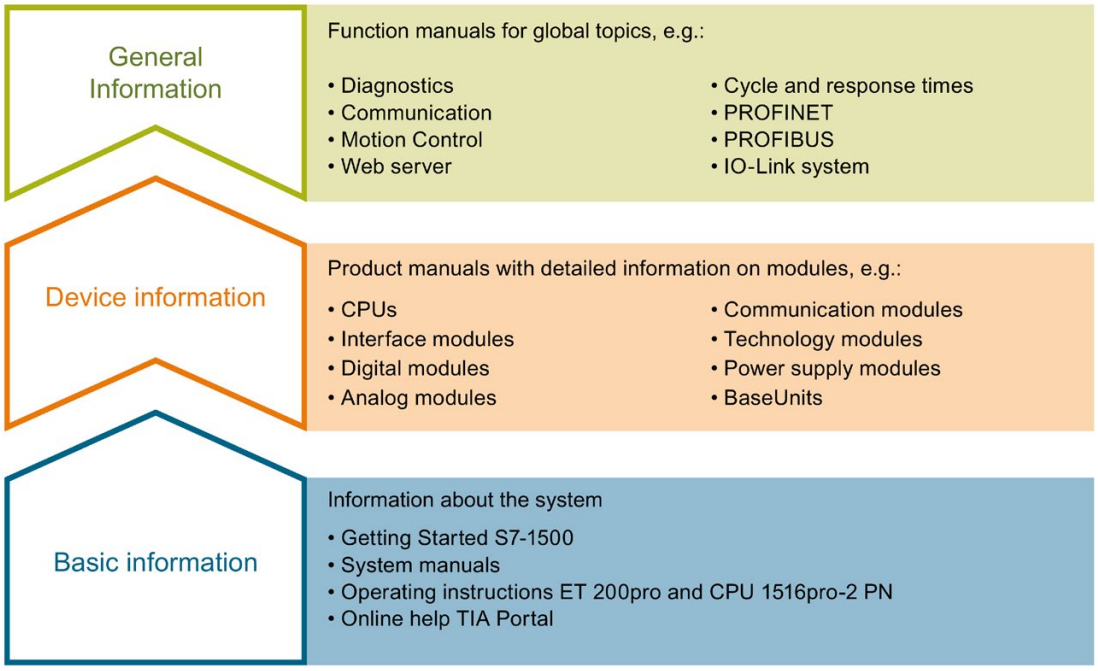

Basic information

System manuals and Getting Started manuals describe in detail the configuration, installation, wiring and commissioning of the SIMATIC S7-1500, ET 200MP, ET 200SP and ET 200AL systems; use the corresponding operating instructions for CPU 1516pro-2 PN. The STEP 7 online help supports you in configuration and programming.

Device information

Product manuals contain a compact description of the module-specific information, such as properties, terminal diagrams, characteristics and technical specifications.

General information

The function manuals contain detailed descriptions on general topics such as diagnostics, communication, Motion Control, Web server, OPC UA.

You can download the documentation free of charge from the Internet (https://support.industry.siemens.com/cs/ww/en/view/109742705).

Changes and additions to the manuals are documented in product information sheets.

You will find the product information on the Internet:

- S7-1500/ET 200MP (https://support.industry.siemens.com/cs/us/en/view/68052815)
- ET 200SP (https://support.industry.siemens.com/cs/us/en/view/73021864)
- ET 200AL (https://support.industry.siemens.com/cs/us/en/view/99494757)

Manual Collections

The Manual Collections contain the complete documentation of the systems put together in one file.

You will find the Manual Collections on the Internet:

- S7-1500/ET 200MP (https://support.industry.siemens.com/cs/ww/en/view/86140384)
- ET 200SP (https://support.industry.siemens.com/cs/ww/en/view/84133942)
- ET 200AL (https://support.industry.siemens.com/cs/ww/en/view/95242965)

"mySupport"

With "mySupport", your personal workspace, you make the best out of your Industry Online Support.

In "mySupport", you can save filters, favorites and tags, request CAx data and compile your personal library in the Documentation area. In addition, your data is already filled out in support requests and you can get an overview of your current requests at any time.

You must register once to use the full functionality of "mySupport".

You can find "mySupport" on the Internet (https://support.industry.siemens.com/My/ww/en).

"mySupport" - Documentation

In the Documentation area in "mySupport" you can combine entire manuals or only parts of these to your own manual.
You can export the manual as PDF file or in a format that can be edited later.

You can find "mySupport" - Documentation on the Internet (http://support.industry.siemens.com/My/ww/en/documentation).

"mySupport" - CAx data

In the CAx data area in "mySupport", you can access the current product data for your CAx or CAe system.

You configure your own download package with a few clicks.

In doing so you can select:

- Product images, 2D dimension drawings, 3D models, internal circuit diagrams, EPLAN macro files
- Manuals, characteristics, operating manuals, certificates
- Product master data

You can find "mySupport" - CAx data on the Internet (http://support.industry.siemens.com/my/ww/en/CAxOnline).

Application examples

The application examples support you with various tools and examples for solving your automation tasks. Solutions are shown in interplay with multiple components in the system - separated from the focus on individual products.

You will find the application examples on the Internet (https://support.industry.siemens.com/sc/ww/en/sc/2054).

TIA Selection Tool

With the TIA Selection Tool, you can select, configure and order devices for Totally Integrated Automation (TIA).
This tool is the successor of the SIMATIC Selection Tool and combines the known configurators for automation technology into one tool.
With the TIA Selection Tool, you can generate a complete order list from your product selection or product configuration.

You can find the TIA Selection Tool on the Internet (http://w3.siemens.com/mcms/topics/en/simatic/tia-selection-tool).

SIMATIC Automation Tool

You can use the SIMATIC Automation Tool to run commissioning and maintenance activities simultaneously on different SIMATIC S7 stations as a bulk operation, independently of the TIA Portal.

The SIMATIC automation tool provides a variety of functions:

- Scanning of a PROFINET/Ethernet plant network and identification of all connected CPUs
- Address assignment (IP, subnet, gateway) and station name (PROFINET device) to a CPU
- Transfer of the date and programming device/PC time converted to UTC time to the module
- Program download to CPU
- Operating mode switchover RUN/STOP
- CPU localization by means of LED flashing
- Reading out CPU error information
- Reading of CPU diagnostic buffer
- Reset to factory settings
- Updating the firmware of the CPU and connected modules

You can find the SIMATIC Automation Tool on the Internet (https://support.industry.siemens.com/cs/ww/en/view/98161300).

PRONETA

With SIEMENS PRONETA (PROFINET network analysis), you analyze the plant network during commissioning. PRONETA features two core functions:

- The topology overview independently scans PROFINET and all connected components.
- The IO check is a fast test of the wiring and the module configuration of a plant.

You can find SIEMENS PRONETA on the Internet (https://support.industry.siemens.com/cs/ww/en/view/67460624).

SINETPLAN

SINETPLAN, the Siemens Network Planner, supports you in planning automation systems and networks based on PROFINET. The tool facilitates professional and predictive dimensioning of your PROFINET installation as early as in the planning stage. In addition, SINETPLAN supports you during network optimization and helps you to exploit network resources optimally and to plan reserves. This helps to prevent problems in commissioning or failures during productive operation even in advance of a planned operation. This increases the availability of the production plant and helps improve operational safety.

The advantages at a glance

- Network optimization thanks to port-specific calculation of the network load
- Increased production availability thanks to online scan and verification of existing systems
- Transparency before commissioning through importing and simulation of existing STEP 7 projects
- Efficiency through securing existing investments in the long term and optimal exploitation of resources

You can find SINETPLAN on the Internet (https://www.siemens.com/sinetplan).

General information 2

2.1 Properties of the Web server

Benefits of the Web server

The Web server lets you monitor and administer the CPU through authorized users by means of a network. Evaluations, diagnostics, and modifications are thus possible over long distances. Monitoring and evaluation is possible without STEP 7; all you need is a web browser. Make sure that you take appropriate measures (e.g., limiting network access, using firewalls) to protect the CPU from being compromised.

Activating the Web server

The Web server is deactivated in the delivery state of the CPU. This means that you must load a project in which the Web server is activated to enable access using the Web browser.

Security functions

The Web server provides the following security functions:

- Access via the secure transmission protocol "HTTPS" using the CA-signed Web server certificate
- User authorizations you can configure by means of user list
- Activation for specific interfaces

Web browser

You need a web browser to access the HTML pages of the CPU.

The following web browsers have been tested for communication with the CPU. Other web browsers may also work, especially newer versions. However, if problems occur with web browsers not mentioned here that cannot be rectified, use one of the following tested web browsers:

- Internet Explorer (Version 11)
- Microsoft Edge (Version 40)
- Google Chrome (versions 47 to 62)
- Mozilla Firefox (version 47 to 56)
- Opera (Version 48)
- Mobile Safari and Chrome for iOS (iOS 10)
- Android browser (Android 6)
- Android Chrome (Android 6 to 8 (Certificate only works with restriction under Android 8))

Note

If you are using Internet Explorer, disable "Compatibility view" in the settings ("Options" menu).

Note

For access to display devices with low screen resolution, we recommend the use of basic websites, see section Basic websites (Page 155).

Note

Older versions of the web browsers mentioned which previously supported access to the HTML pages of the CPU continue to do so. However, these older versions do not support the new functions and HTML pages described in this edition.

Note

Two reserved communication connections are available to the Web server for communication with the CPU.

Depending on the web browser used, different numbers of connections to the CPU are established. If more connections are available, more communication connections will be established.

If no more connections are available, display or functional problems may occur, because the Web server will reject all other communication connections apart from the two that are reserved.
For this reason, the web pages may not load fully.

Note

If you access the Web server of the CPU using a communication processor (CP), ensure that the cache (temporary Internet files) is enabled in your browser. Choose the "Automatically" option in the cache settings of your browser.

If the cache is disabled or if a setting other than "Automatically" is made in the cache settings of your browser, this may result in slow access times and incomplete display.

Note

After a firmware update of the CPU, incorrect display of Web pages can occur in various Web browsers. This is caused by problems of the new CPU firmware with the cache of the Web browser.

Solution: Press F5 or clear the Web browser cache.

Reading out data

With the Web server, you can read out the following data from the CPU and, in some cases, modify and write back the data to the CPU:

- Start page with general CPU information (Page 35)
- Information on Diagnostics (Page 40)
  - Identification
  - Program protection
  - Memory
  - Runtime information
  - Fail-safe (with an F CPU)
- Contents of the diagnostics buffer (Page 45)
- Module information (Page 47)
- Firmware update (Page 52)
- Alarms (Page 55)
- Information on Communication (Page 57)
  - Important interface parameters
  - Port statistics
  - Display of the communication resources
  - Display of the communication connections
- PROFINET Topology (Page 62)
  - Graphical view (set and actual topology)
  - Table view (actual topology)
  - Status overview
- Tag status (Page 72)
- Watch tables (Page 75)
- User pages (Page 77)
- Filebrowser (Page 111)
- DataLogs (Page 112)
- User files (Page 115)
- Online backup and restoration of the configuration (Page 120)
- Diagnostic information for technology objects (Page 125)
- Evaluation of trace recordings (Page 133)
- Reading out service data (Page 154)
- Basic websites (Page 155)

On the following pages, you will find more detailed descriptions of the HTML pages.

Note

Max. characters at data type WSTRING

Note that the data type WSTRING is limited to 254 characters for the display in the Web server. If the 254 characters are exceeded, the Web server does not display the superfluous characters.

Web access to the CPU via PG/PC, HMI devices and mobile terminal devices

Proceed as follows to access the Web server:

1. Use STEP 7 to download a project in which the Web server is enabled to the CPU.
2. Connect the display device (PG/PC, HMI, mobile terminal device) with the CPU or a communication module using a PROFINET interface.
   If you are working with WLAN, activate the WLAN on the display device and establish a connection to the access point (e.g. SCALANCE W788-1RR or SCALANCE W784-1), which is in turn connected to the CPU.
3. Open the web browser on the display device.
4. Enter the IP address of the interface of the CPU which is connected to the client in the "Address" field of the web browser in the following format: http://a.b.c.d or https://a.b.c.d (sample input: http://192.168.3.141).
   The CPU intro page opens. From the intro page you can navigate to additional information.

Additional information on access using the secure transmission protocol "HTTPS" is available in the section Configuring the Web server (Page 21) under "Permit access only with HTTPS".

Additional information

Using a smartphone, you can access the Web server of the CPU either via WLAN or access to the CPU via the SIMATIC S7 app (using Web server functionality). You can find additional information in the FAQ entry ID 103473392 on the Service&Support (https://support.industry.siemens.com/cs/ww/en/view/103473392) Internet page.

Note: The Web server must also be activated for access to the CPU via the SIMATIC S7 app.

The SIMATIC S7 app offers you additional functions. You can find a detailed application example with further documentation and example projects on the Service&Support (https://support.industry.siemens.com/cs/ww/en/view/84133612) Internet page.

2.2 Configuring the Web server

To use the full range of functions offered by the Web server, you need to make the settings in STEP 7 listed below:

Procedure

You have opened the properties dialog of the CPU in the STEP 7 project view.

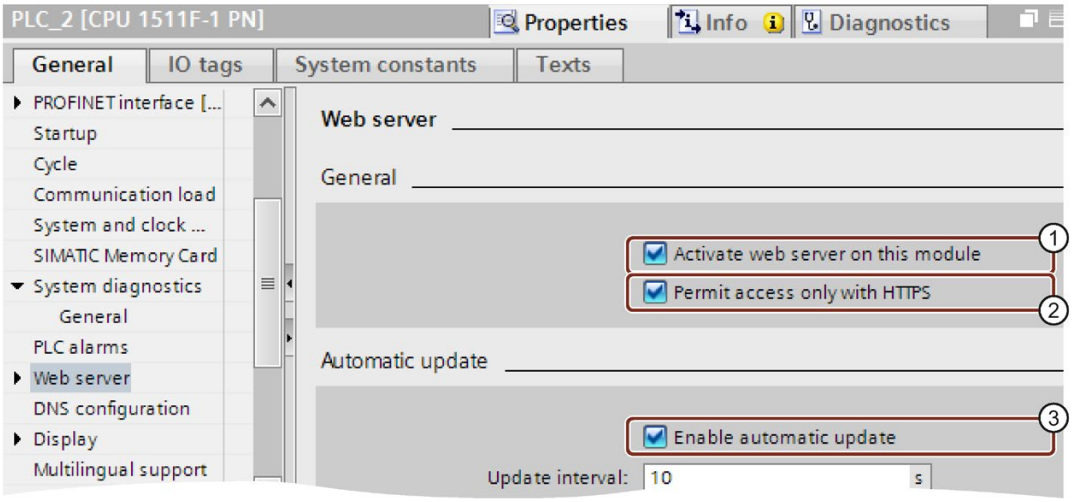

Figure 2-1 Web server settings in STEP 7

① Activate Web server

In the default setting of a configured CPU, the Web server is disabled. Proceed as follows to enable the Web server:

1. Open the "Devices & Networks" view with a double-click in the STEP 7 project tree.
2. Select the required CPU in the device view, network view or topology view.
3. Navigate to the "Web server" area in the Inspector window properties, "General" tab.
4. Select the "Activate web server on this module" check box.
   The following note is output:

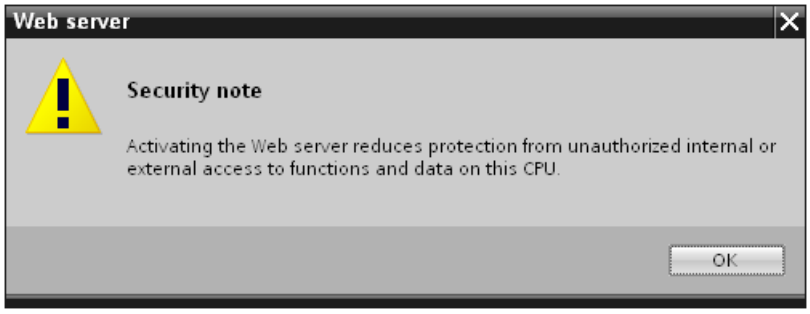

Figure 2-2 Security note upon activation of the Web server in STEP 7

Note

When projects from deliveries are applied in which the Web server was already activated and configured on the module, this security note is not shown.

Creating and assigning a Web server certificate

The activation of the Web server using the secure transmission protocol "HTTPS" requires a valid Web server certificate.

With SIMATIC S7-1500 CPUs as of firmware V2.0, you have to create the certificate for the Web server of the CPU with STEP 7 yourself and assign it to the Web server in the CPU properties. When the hardware configuration is downloaded to the CPU, this certificate is also automatically downloaded. STEP 7 itself has a Certification Authority (CA) certificate, with which the device certificate (end-entity certificate) of the Web server is signed.

Note

If you update the firmware of a SIMATIC S7-1500 CPU or ET 200SP with firmware version < V2.0 to firmware version ≥ V2.0, a valid server certificate is automatically generated and used. The same applies to the replacement parts scenario in which a newer CPU replaces a CPU with firmware version < V2.0.

You can create different Web server certificates:

- If you use the certificate manager in the global security settings, the certificate authority of the project (CA certificate) signs the device certificate of the Web server. During loading, the CA certificate of the project is automatically loaded as well.
- If you do not use the certificate manager in the global security settings, STEP 7 generates the device certificate as a self-signed certificate.

NOTICE

Utilizing the full functionality of the Web server

A valid CA-signed Web server certificate in the CPU is a requirement for:

- User management with password-protected users
- The use of safety-related functions (online backup and restore of the CPU configuration, saving and downloading diagnostic information in csv files)

To use the full functionality of the Web server, we therefore recommend that you use the Certificate Manager to create a CA-signed server certificate in the global security settings and assign it to the CPU.

Creating a self-signed server certificate

To create a self-signed Web server certificate, follow these steps:

1. in the Inspector window Properties of the CPU, "General" tab, navigate to the "Web server > Security" area.
2. Click the "Add" button in the drop-down list to select a certificate.
   The "Create a new certificate" dialog opens.
3. Select the "Self-signed" check box in the subsequent dialog.
4. Enter the parameters for the new certificate or confirm the default settings.
   - Select "Web server" in the "Usage" box.
   - Enter the IP address(es) of the interface(s) or the domain name of the configured CPU in the "Subject Alternative Name" field.
5. Click "OK" to confirm.
6. Compile and load the configuration into the CPU.
   The device certificate of the Web server is a component of the configuration.

Creating and assigning a CA-signed Web server certificate

To create a CA-signed Web server certificate, follow these steps:

1. In the Inspector window Properties of the CPU, "General" tab, navigate to the "Protection & Security > Certificate Manager" area and select the "Use global security settings for certificate manager" option.
   The "Global security settings" appear in the project tree.

   Note

   To edit the Certificate Manager in the global security settings, you require the "Configure security" configuration permission.

2. Log on as a user in the project tree in the "Global security settings > User logon" area.
   The "Administrator" role is the default for the first logon for a new project.
3. in the Inspector window Properties of the CPU, "General" tab, navigate to the "Web server > Security" area.
4. Click the "Add" button in the drop-down list to select a certificate.
   The "Create a new certificate" dialog opens.
5. In the following dialog, select the "Signed by certificate authority" check box and select the certificate authority from the drop-down list.
6. Enter the parameters for the new certificate or confirm the default settings.
   - Select "Web server" in the "Usage" box.
   - Enter the IP address(es) of the interface(s) or the domain name of the configured CPU in the "Subject Alternative Name" field.
7. Click "OK" to confirm.
8. Compile and load the configuration in the CPU.
   The device certificate of the Web server and the CA certificate are components of the configuration.

NOTICE
Addressing the Web server of the CPU via domain names If you enter the IP address(es) of the interface(s) of the configured CPU in the "Subject Alternative Name" field, the generated certificate may not be accepted by all Internet browsers. You also need to create and load a new server certificate (end-entity certificate) every time you change the IP address of an Ethernet interface of the CPU, since the identity of the CPU changes along with the IP address. You can avoid this problem by addressing the Web server of the CPU using domain names instead of IP address(es), e.g. "myconveyer-cpu.room13.myfactory.com". For this purpose, you have to manage the domain names of your CPU via a DNS server.

Additional information

Detailed information on local self-signed certificates and global CA certificates, on the "Public Key Infrastructure" (PKI) and on certificate management can be found in the Communication function manual (https://support.industry.siemens.com/cs/ww/en/view/59192925) and in the online help for STEP 7, keyword "Secure communication".

② Permit access only with HTTPS

Note: The activation of the Web server using the secure transmission protocol "HTTPS" requires a valid Web server certificate in the CPU. See "Creating and assigning a Web server certificate" in the section above.

To ensure secure access to the Web server the "Permit access only with HTTPS" check box is activated in the basic setting of a configured CPU.

The web pages are transmitted by default via a secure connection and are protected from attacks by third parties. Note that the URL of the CPU starts with "https://" in this case.

For error-free HTTPS access to the CPU, the following conditions must be met:

- The current date/time must be set in the CPU.

  Note

  When using secure communication (e.g. HTTPS), make sure that the corresponding modules have the current time of day and the current date. Otherwise, the modules evaluate the used certificates as invalid and the secure connection will not be established.

- The IP address of the CPU must be set.
- A valid server certificate offered by the CPU is installed in the Web browser.

NOTICE
Safety-related functions only possible with CA-signed Web server certificate Online backup and restore of the CPU configuration, see section Online backup (Page 120), as well as saving and downloading diagnostic information to csv files are only possible with a CA-signed Web server certificate. A valid CA-signed Web server certificate in the CPU is also required for user administration with password-protected users. To use the full functionality of the Web server, we therefore recommend that you use the Certificate Manager to create a CA-signed server certificate in the global security settings and assign it to the CPU.

If no CA-signed Web server certificate is installed, a warning is output recommending that you do not use the page. To view the page, you may need to "Add an exception", depending on the Web browser used.

A valid CA certificate is available for download from the "Intro" web page under "Download certificate".

You can find instructions for installing the certificate in the help system of your Web browser and in the FAQ with the entry ID 103528224 at the Service&Support (https://support.industry.siemens.com/cs/ww/en/view/103528224) website.

Note

To protect against manipulation from the outside, download the certificate only in an environment that is guaranteed not to be compromised. Installation of the CA certificate has to be carried out once for each display device you wish to use.

Access protection

The certificate establishes an encrypted connection that prevents tapping or distortion of the communication but does not provide access protection. This means you have to protect your CPU from unauthorized access with the corresponding configuration in the user management.

You can find additional information on access protection in the online help for STEP 7, keyword: "Protection".

③ Automatic update

Automatic updating is activated in the default setting of a configured CPU.

The following web pages are updated automatically:

- Start page
- Diagnostics (memory, runtime information, fail-safe)
- Diagnostics buffer
- Module information
- Alarms
- Communication
- Topology
- Tag status
- Watch tables
- Filebrowser
- DataLogs
- User files
- Motion Control diagnostics
- Trace

Note

The preset activation interval is 10 seconds.
Larger amounts of data or several HTTP-/HTTPS connections increase the update time.

Setting the language for the Web

In total, you can assign up to three different project languages to the user interface languages of the Web server.

In STEP 7, activate the project languages you wish to use and then assign one of the activated project languages to each interface language of the Web server.

You can find additional information about the language settings and a description of how to assign a project language to the interface languages in the section Language settings (Page 31).

Amending user management

Note: A valid CA-signed Web server certificate in the CPU along with a secure HTTPS connection are required for user administration with password-protected users. See "Creating and assigning a Web server certificate" and "Permit access only with HTTPS" in this section.

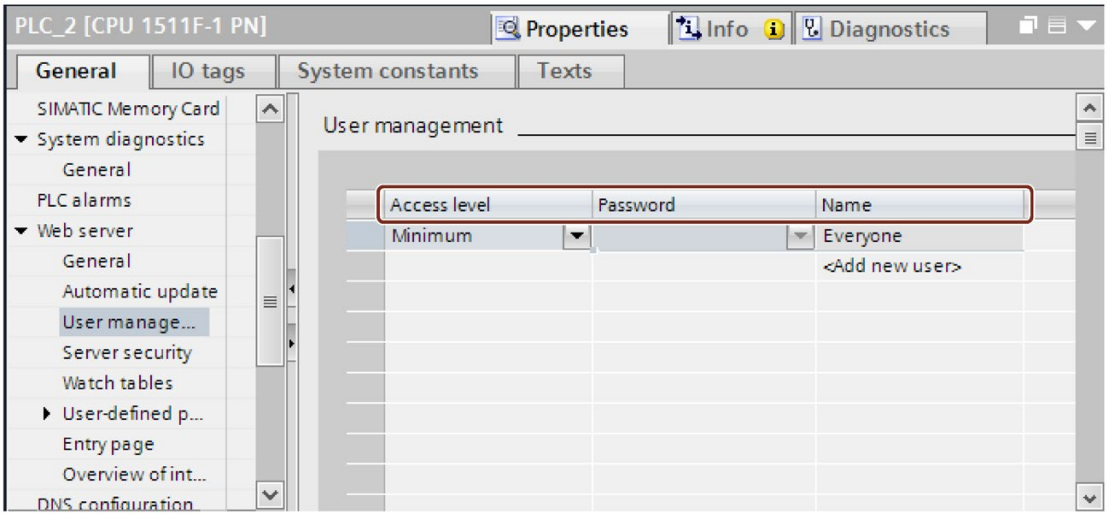

Figure 2-3 User management in STEP 7

In STEP 7, you can manage the user list in the "Web server > User management" area.

The user list provides the following options:

- Create users
- Specify access permissions
- Assign passwords

Users only have access to the options that are permanently linked to the access rights.

You can assign different user rights depending on the used CPU and firmware.

The available user rights can be available for selection as follows in STEP 7:

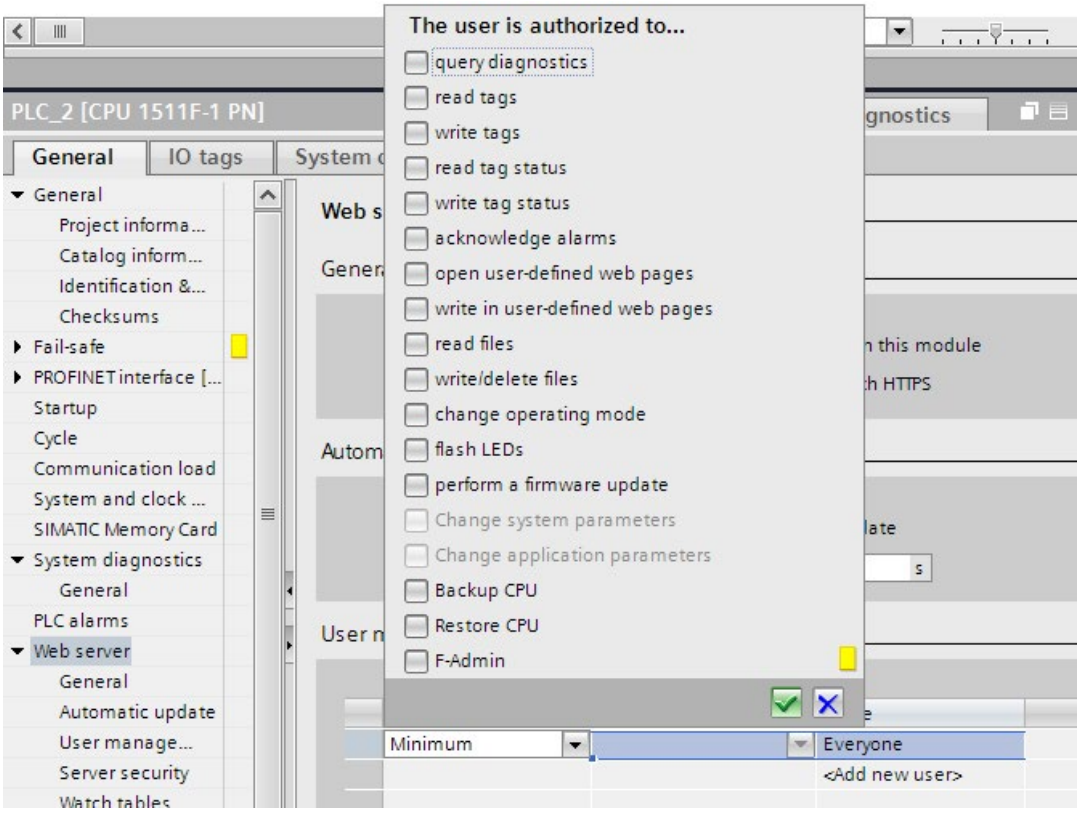

Figure 2-4 Assignment of user rights in STEP 7

If you are not logged in, you automatically access the Web server as the user "Everybody". It does not matter in this case whether you have configured additional users.

User "Everybody"

A user with the name "Everybody" is preset in the user list; this user has minimum access rights. These are read-only access to the intro page and start page. The user "Everybody" is defined without a password. However, you can assign all access authorizations available in STEP 7 to this user.

You can create a maximum of 20 users and a user "Everybody".

Because the user "Everybody" is defined in STEP 7 without assignment of a password, be careful of the access authorizations that you assign to this user.
Certain authorizations, such as the possibility of changing the operating mode, could represent a security risk.
For the assignment of security-relevant authorizations, we recommend that you create a user with password protection in STEP 7.

WARNING

With an F-CPU, do **not** assign the access authorization "F-Admin" to the user "Everybody".

Make sure that you observe the warnings relating to this in the section "Restoring a backup of the safety program to an S7-300/1500 F-CPU" in the manual SIMATIC Safety - Configuring and Programming (http://support.automation.siemens.com/WW/view/en/54110126).

Passwords should always be more than 8 characters in length and contain uppercase and lowercase characters as well as special characters and numbers (?!+%$1234...). Computer keyboard character strings and words from the dictionary are unsuitable. Change the password regularly.

Note

When assigning rights, note that read or write access to the watch tables and tag status is retained even if you have disabled the "Accessible from HMI/OPC UA" attribute in the PLC tag table when configuring the data block in STEP 7.

User pages

In the "User pages" area you can download your own web pages to the CPU and make your own web applications available via the web browser.

You can find additional information in section User pages (Page 77).

Activation of the Web server for specific interfaces

In the area "Overview of interfaces", you have the option to enable or disable access to the Web server.

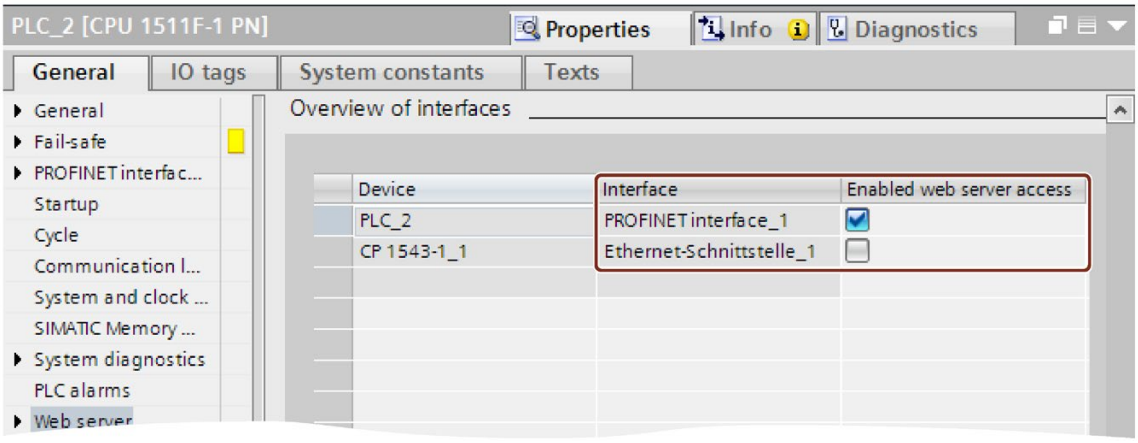

Figure 2-5 Activation of access to the Web server via the interfaces

2.3 Language settings

Introduction

The Web server provides the user interface in the following languages:

- German (Germany)
- English (U.S.)
- French (France)
- Italian (Italy)
- Spanish (traditional sort)
- Japanese
- Chinese (Simplified)
- Korean
- Russian
- Turkish
- Portuguese (Brazil)

Requirements for the availability of the East Asian languages

The following requirements must be met for the East Asian languages:

- The corresponding support package for East Asian languages is installed on the display device (e.g., PC).
  For this purpose, activate the "Install files for East Asian languages" option in the "Regional and Language Options > Languages" tab of the Windows Control Panel.
- STEP 7 for East Asian languages is installed on the programming device used to configure the CPU.

Note

East Asian languages are not supported for SIMATIC HMI devices with Windows CE operating system.

Requirements for multilingual output of text

To ensure that the Web server displays alarms, comments and diagnostic information correctly in the various project languages, you have to assign a project language of the Web server to each required interface language in STEP 7.

Note

The project languages of the STEP 7 project you want to assign must be activated and the corresponding texts (translations) must be available in the project. The project languages selection is available in the project tree under "Languages & Resources".

Setting the language for the Web

Once you have activated the Web server on your module, assign a project language of the STEP 7 project from the drop-down list to each interface language.

1. Navigate to the "Multilingual support" area in the Inspector window Properties of the CPU, "General" tab.
2. Assign a project language from the drop-down list to each interface language of the Web server.

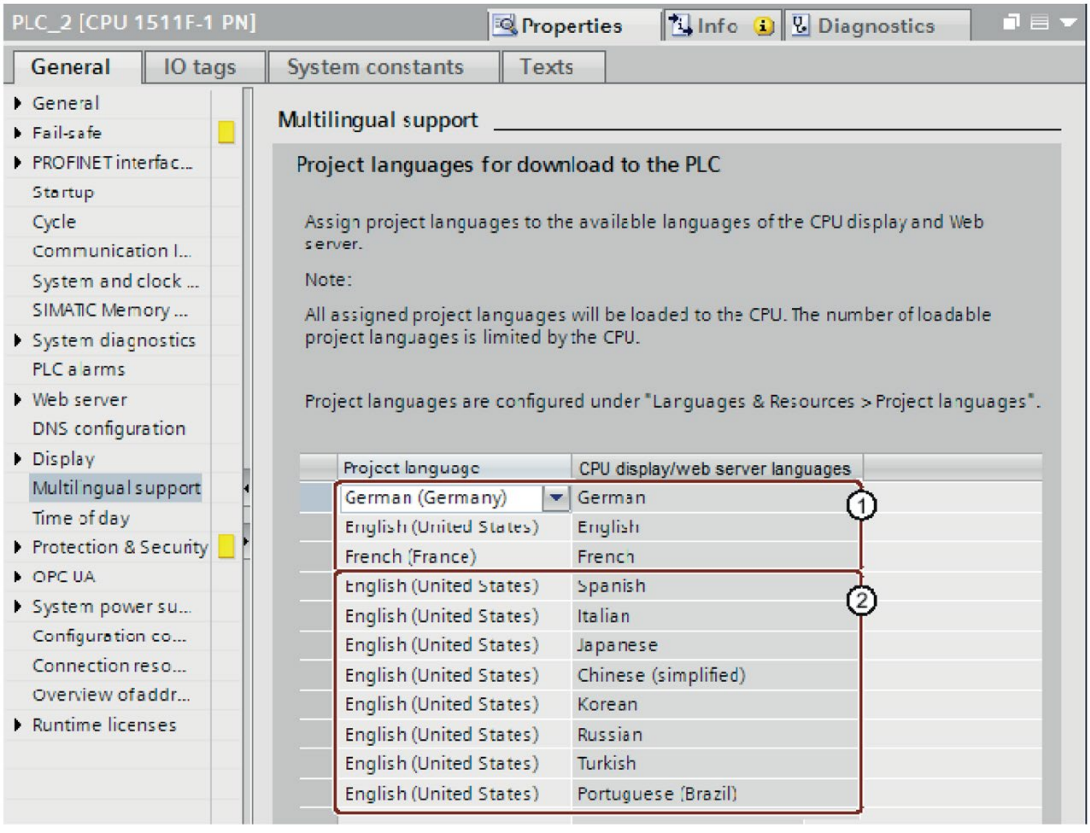

Figure 2-6 Language settings for the Web server in STEP 7

You can also assign interface languages the same project language, for example:

- ① Project language German for user interface language German, English (US) for English, French for French.
- ② Project language English (US) for all other available interface languages of the Web server.

In total, you can assign up to three different project languages of the STEP 7 project to the user interface languages of the Web server.

Reference

You can find additional information on how to set the project language in STEP 7 in the online help for STEP 7, keyword: "Selecting project languages".

See also

Configuring the Web server (Page 21)

2.4 Updating and saving information

Updating the screen content

Automatic updating is activated in the default setting. The preset update time is 10 s.

You update the web pages manually with the <F5> function key.

Disabling automatic updating for an individual web page

Click Off to temporarily deactivate automatic updating for a web page.
Note that the deactivation affects only the currently visited web page. Automatic updating is activated again when you change to a different web page.

You reactivate automatic updating by clicking On.

Note

If the load on the CPU is very high during operation, for example, due to a large number of PROFINET interrupts or extensive communication jobs, the updating of web pages may be significantly delayed for the duration of this high CPU load.

Printing web pages

The Web server offers you a print preview on most web pages. Click the symbol to open it.

Created printouts always contain the current information in the CPU. This means that it is possible that the information in the print preview is more up-to-date than the information in the standard view.

Web pages

3

3.1 Start page with general CPU information

Connecting to the Web server

Establish a connection to the Web server by entering the IP address of the interface of the configured CPU which is connected to the client in the address bar of the web browser, for example, http://192.168.3.141 or https://192.168.3.141. The connection is set up and the "Intro" page opens.

The examples in the next section provide information about the different web pages.

Intro

The figure below shows the first page (Intro) called by the Web server.

Figure 3-1 Intro page of the Web server of the CPU 1516-3 PN/DP

Click the NEXT link to go to the Web server pages.

Note

Select the "Skip Intro" check box in order to skip the intro. The Web server will then take you directly to its start page in future. This setting is saved in the user profile of the current PC user.

You can undo the setting "Skip Intro" by clicking the "Intro" link in the left-hand navigation bar of a web page.

Setting the user interface language

You can change the language for the Web server interface, e.g., from English to German, in the upper right corner. This option is available to you on all web pages of the Web server.

Switching the time display

You can set the format of the time display to Coordinated Universal Time (UTC) or PLC local time (default setting) on the left next to the language setting.

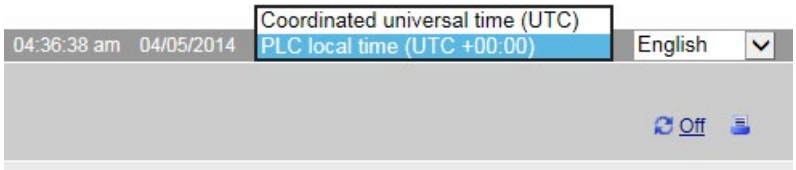

Figure 3-2 Switching the time display

You can switch the time display on all the Web pages that provide this drop-down list.

The displayed PLC local time result from the time zone and Daylight Savings Time / Standard Time setting that are set in the CPU properties.

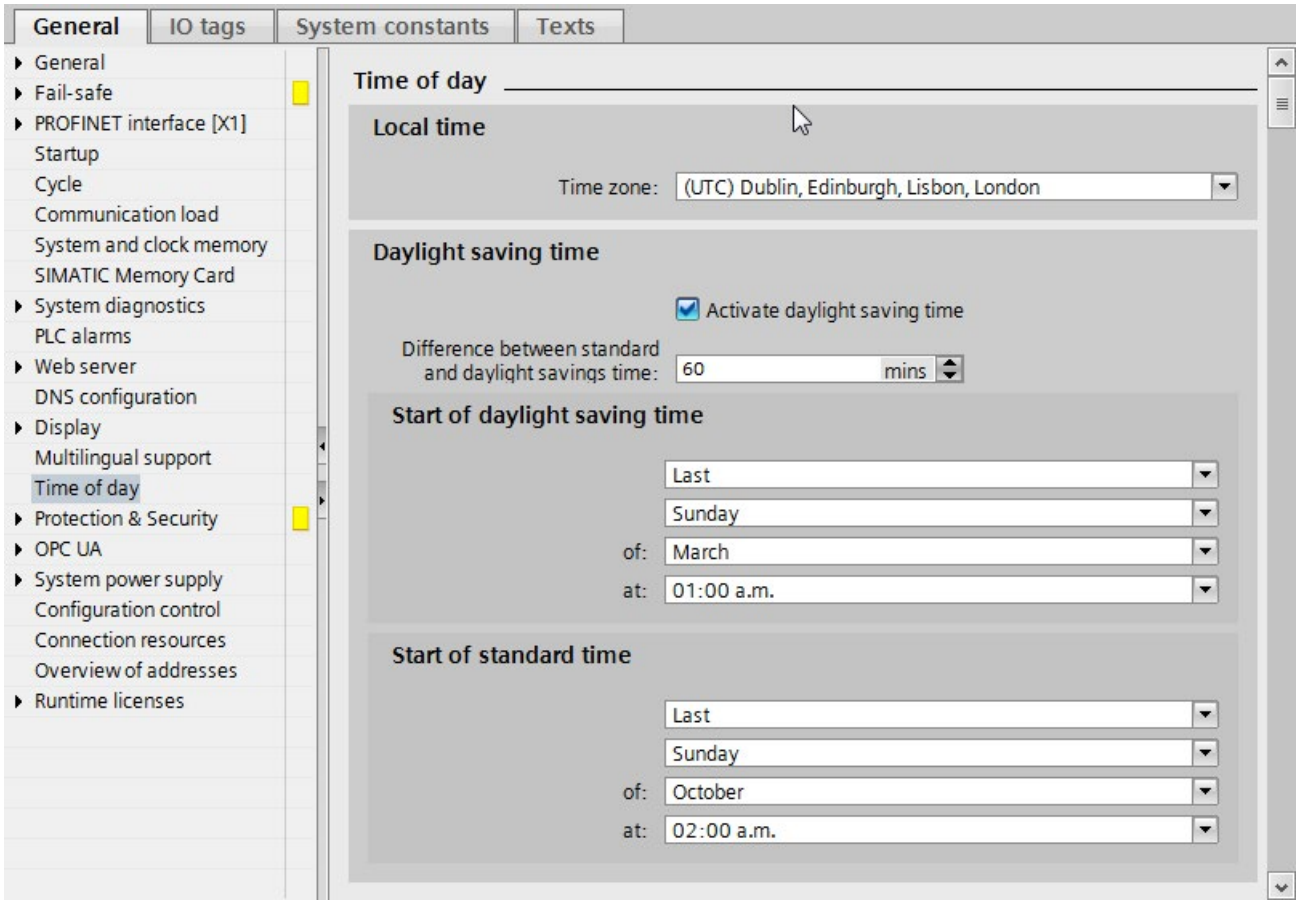

Figure 3-3 Setting the time in the CPU properties

The switchover has an effect on the following Web pages:

Table 3- 1 Switching the time display: Display on Web pages

Web pages	Display as Coordinated Universal Time (UTC) or as PLC local time
Start page	Last F-change
Diagnostics buffer	Date and time of the diagnostic buffer entry
Alarms	Date and time of the alarms
Online backup	Backup file with date and time of the backup
DataLogs	Date of change and time of change
File browser	Date of change and time of change
User files	Date of change and time of change
Save service data	File with time stamp of the storage

Start page

The start page before login offers information as shown in the figure below. The CPU image with LEDs returns the actual CPU status at the time of the data request.

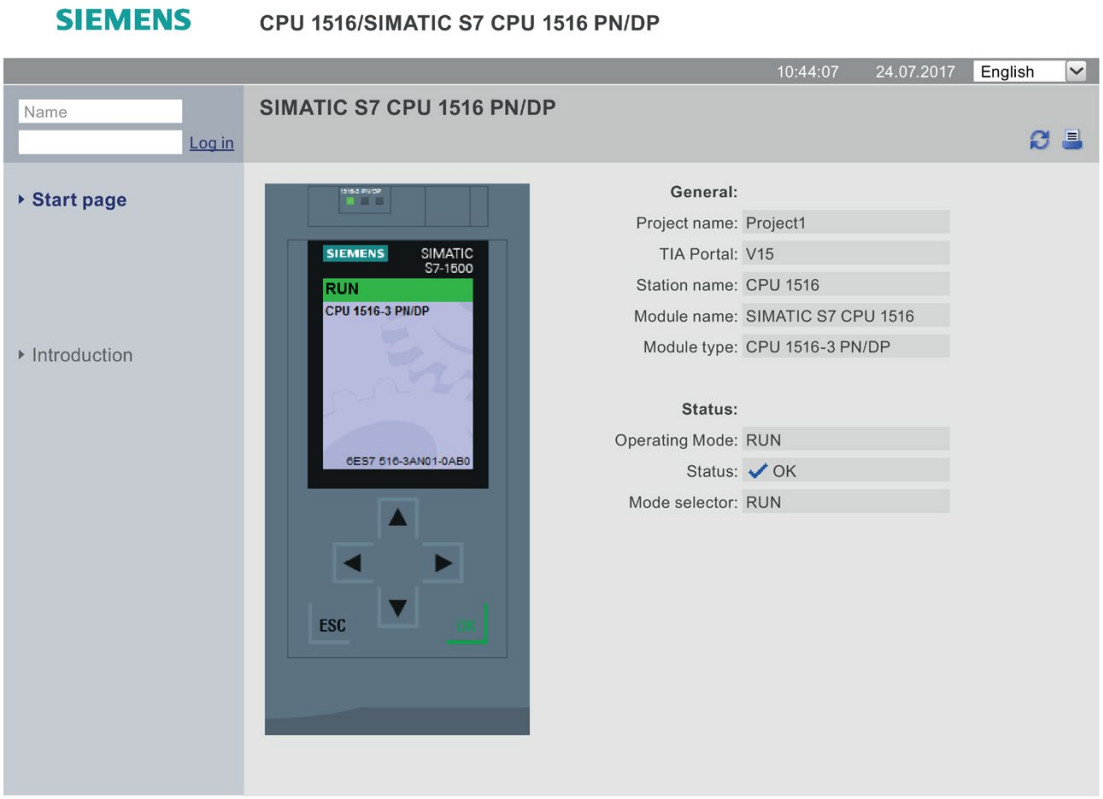

Figure 3-4 Start page before login

Log in

To use the full functionality of the web pages, you must be logged in. Log in with a user name and password specified in the Web configuration in STEP 7. You now have corresponding permissions to access the web pages released for this user. If you have not configured a user, read-only access is granted to intro and start pages by default.

Note

After carrying out your required actions, log out explicitly from the Web server by clicking "Logout" in order to minimize the risk of unauthorized external access.

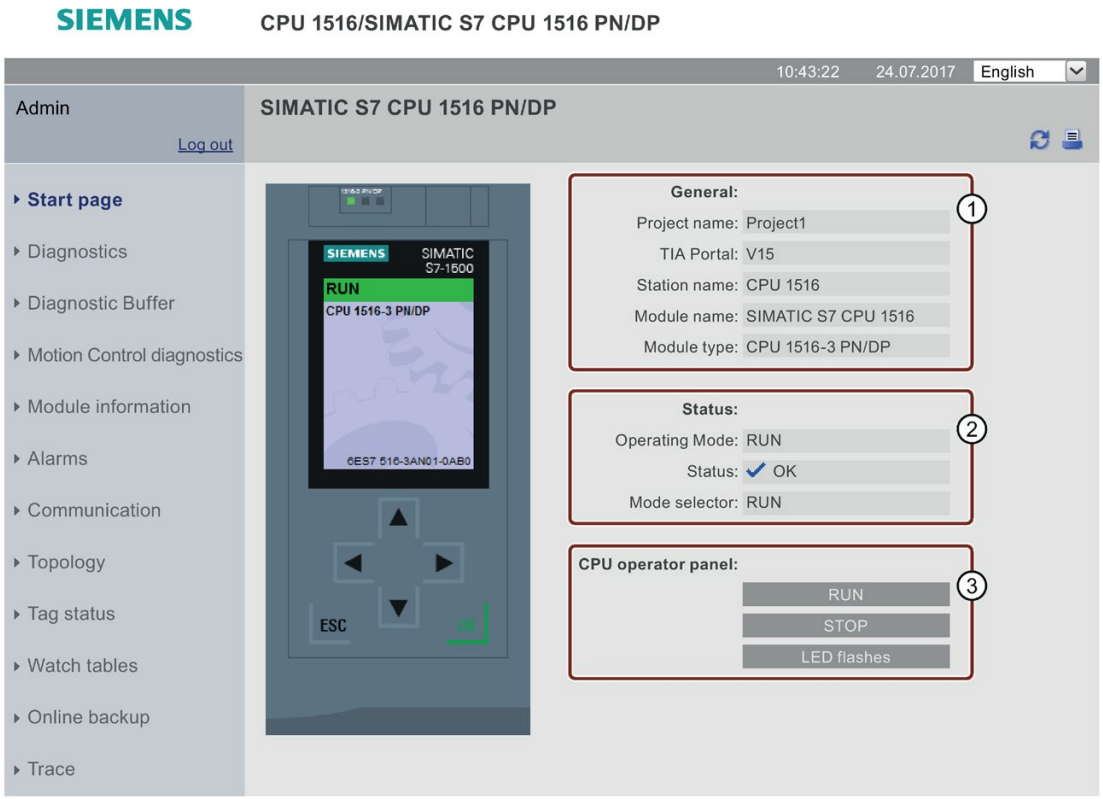

Figure 3-5 Start page after login

① "General"

"General" contains information on the CPU with the Web server to which you are currently connected, as well as the version of the TIA Portal with which the CPU was configured.

② "Status"

"Status" contains information about the CPU at the moment of the query.

③ "CPU operator panel"

If you have the necessary access permissions, you can change the operating mode of the CPU ("RUN"/"STOP" buttons) or have the LEDs flash ("Flash LED" button) in the "CPU operator panel" area.

Additional information for F-CPUs

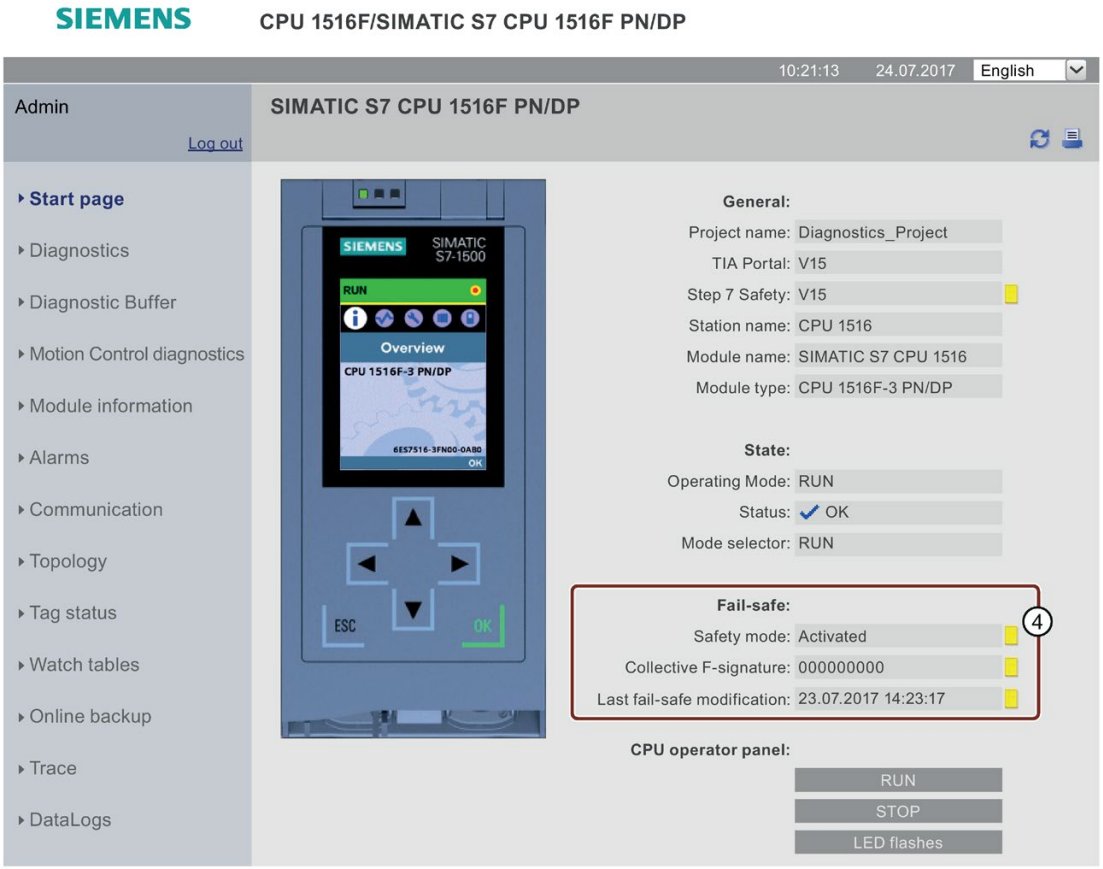

Figure 3-6 Start page after login to an F-CPU

④ "Fail-safe"

"Fail-safe" contains additional information on the F-CPU. Further information about the specification is available in the Programming and Operating Manual SIMATIC Safety - Configuring and Programming (https://support.industry.siemens.com/cs/de/de/view/54110126/en?dl=en).

Reference

You can find additional information in the section Configuring the Web server (Page 21).

3.2 Diagnostics

Overview

The "Diagnostics" web page provides more information about the tabs:

- Identification
- Program protection
- Memory
- Runtime information
- Fail-safe (with an F CPU)

"Identification" tab

The CPU characteristics are available in the "Identification" tab.

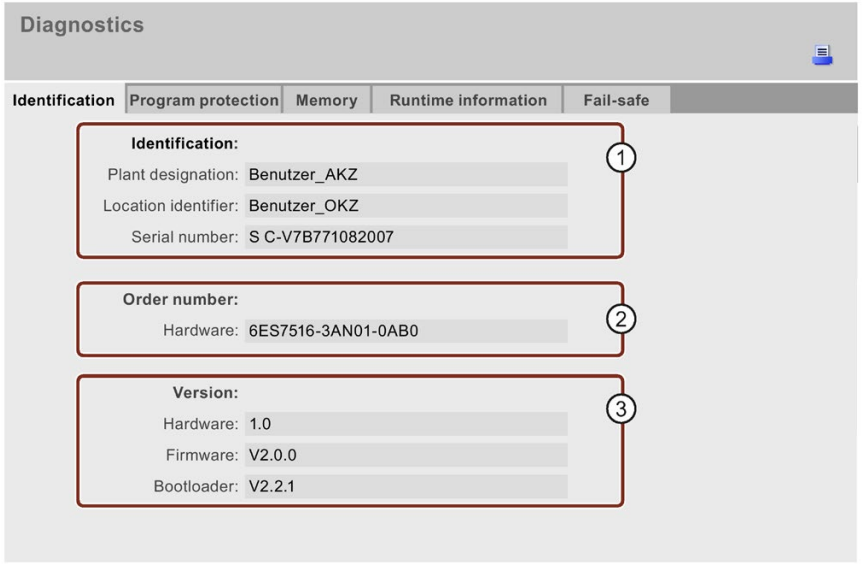

Figure 3-7 Identification tab

①"Identification"

The "Identification" info box contains the plant and location designation and the serial number. Plant and location designations can be configured in STEP 7 in the properties dialog box of the CPU, in the "General" tab.

②"Order number"

The "Order number" info box contains the order number for the hardware.

③"Version"

You can find the hardware, firmware and bootloader versions in the "Version" info box.

"Program protection" tab

The "Program protection" tab provides information on whether the PLC program contains know-how protection or copy protection.

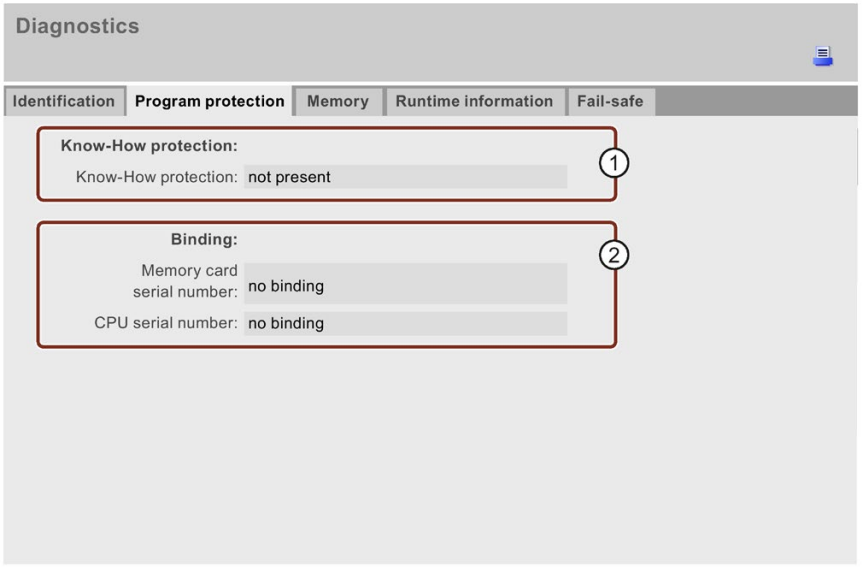

Figure 3-8 "Program protection" tab

① "Know-how protection"

Information on whether the PLC program contains at least one block with know-how protection or not can be found in the info field "Know-how protection".

②"Binding"

In the info field "Binding" you can find information on whether copy protection has been activated by binding at least one program block of the PLC program to the serial number of the CPU or memory card.

- "Binding"
- "No binding"
- "No matching binding": At least one block is bound to a different serial number (load process is rejected)

"Memory" tab

The "Memory" tab contains current values on the memory currently in use.

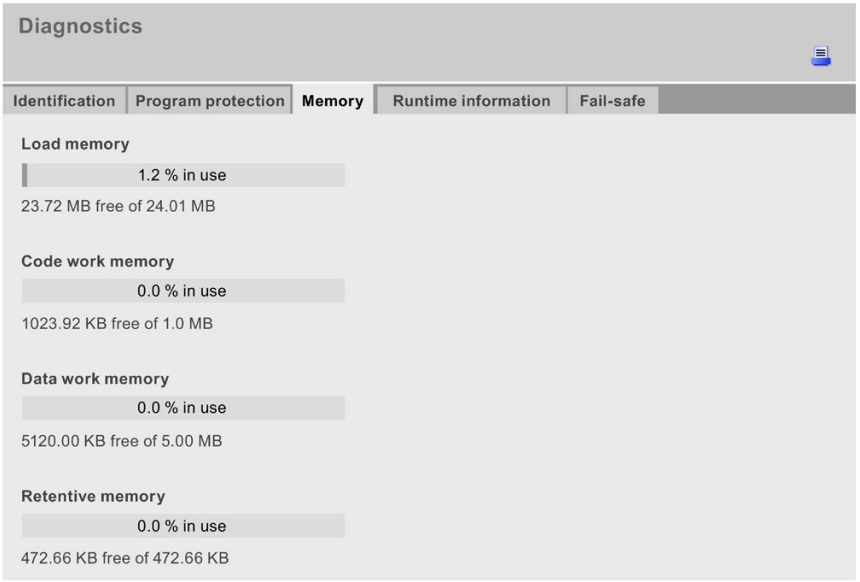

Figure 3-9 "Memory" tab

"Runtime information" tab

Current information on program/communication load and cycle time can be found in the "Runtime information" tab. This enables you to see whether there may be runtime problems during execution of your user program.

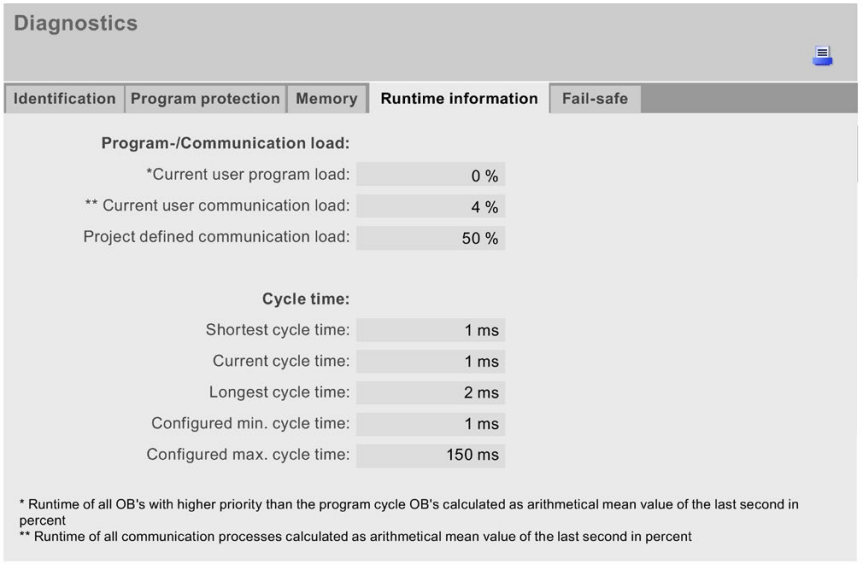

Figure 3-10 "Runtime information" tab

The current user communication load is the actual load arising through communication, for example through Web server access or PROFINET communication. In the example above, 4% of the project-defined communication load is “used”. The remaining 46% is available for the operating system and the user program. You can find additional information about the influence of the communication on the cycle time in the Cycle and Response Times (https://support.industry.siemens.com/cs/us/en/view/59193558) function manual.

"Fail-safe" tab (with an F-CPU)

The safety program of an F-CPU consists of one or two F-runtime groups. You can find their F-runtime group signature, cycle times (F-monitoring time) and runtimes in the "Fail-safe" tab.

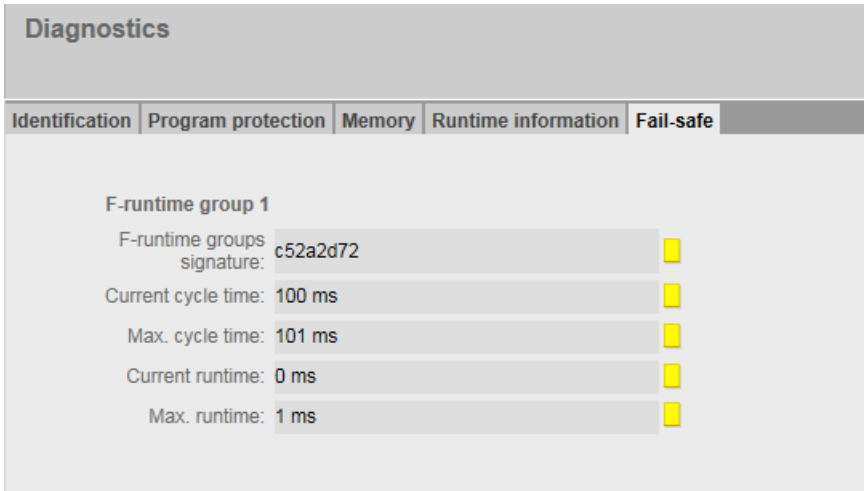

Figure 3-11 "Fail-safe" tab

3.3 Diagnostics buffer

Requirements

The Web server is activated, languages are set, the text libraries are loaded and the project has been compiled and downloaded with STEP 7.

Diagnostics buffer

The browser displays the content of the diagnostics buffer on the "Diagnostics buffer" web page.

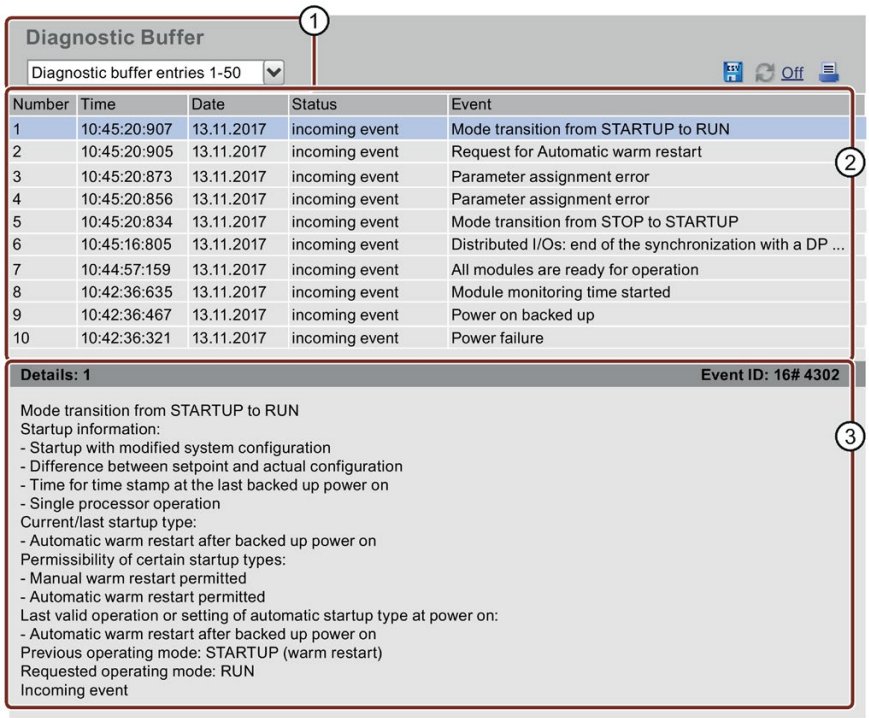

Figure 3-12 Diagnostics buffer

① "Diagnostics buffer entries 1-50"

The diagnostics buffer can accommodate different numbers of alarms depending on the CPU used.
For information on the maximum number of diagnostics buffer entries, refer to the technical specifications of the CPU used.

Select an interval for the entries from the drop-down list. Each interval comprises 50 entries.

② "Event"

The "Event" info box contains the diagnostics interrupts with date and time.

Note that the diagnostics events are displayed in the project language of the STEP 7 project that is assigned to the current user interface language of the Web server. You can find out how to assign project languages to interface languages in section Language settings (Page 31).

③ "Details"

This field outputs detailed information about a selected event. Select the corresponding event from the ② "Event" info field.

Saving diagnostics buffer entries

You can save diagnostics buffer entries to a csv file for further processing in a spreadsheet program or database program.
Save the data by clicking the icon.

A dialog opens in which you can specify the file name and target directory.

3.4 Module information

Module information

The status of a device is indicated by means of symbols and comments on the "Module information" web page.

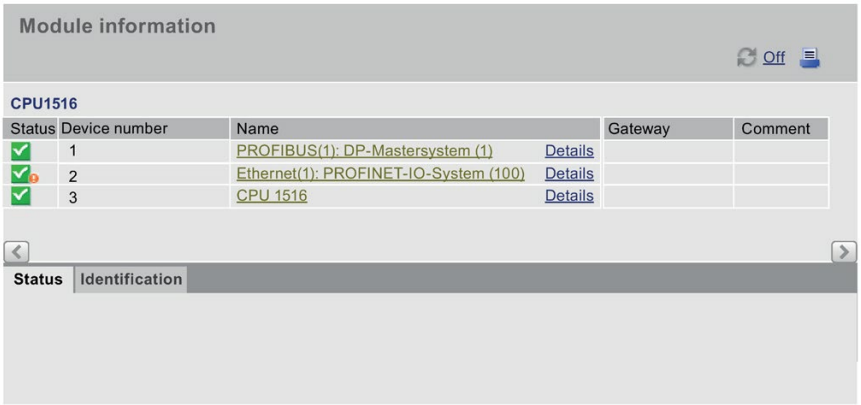

Figure 3-13 Module information

Meaning of the symbols in the "Status" column

Table 3- 2 Meaning of symbols

Symbol	Symbol color	Meaning
	Green	Component is OK
	Gray	Deactivated PROFIBUS slaves or PROFINET devices.
	Gray	State cannot be determined • "State cannot be determined" is displayed during system diagnostics for all configured I/O modules and I/O systems after restart of the CPU. • However, this state can also be displayed temporarily during operation if a diagnostics interrupt burst occurs for all modules. • It is not possible to determine the status of modules on a subsystem that is connected to a CP.
	Red	Component "not reachable" "Not reachable" is displayed when a module has been removed or a module has been configured but does not exist.
	Black	No input or output data available. Input or output channels of the (sub)module are disabled.
	Green	Maintenance required (Maintenance Required)
	Yellow	Maintenance demanded (Maintenance Demanded)
	Red	Error - component faulty or not available due to an incorrect type
	Red	A module in a lower module level does not have the status "Component OK"

Navigation to further module levels

The status of individual components/modules/submodules is displayed when you navigate to the further module levels:

- To the next higher module level using the links in the display of the module levels
- To the next lower module level using the links in the "Name" column

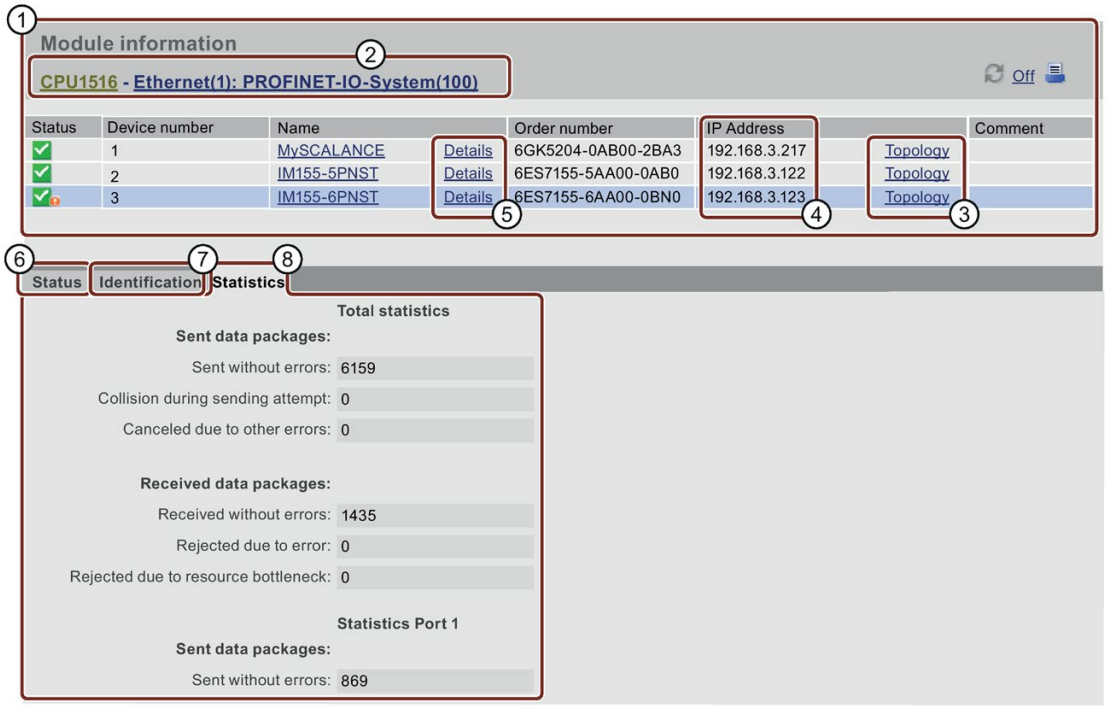

Figure 3-14 Navigation to further module levels

① "Module information"

Depending on the selected level, the table contains information about the rack, the DP master system, the PROFINET IO master system, about the devices, the individual modules, as well as the modules or submodules of the device.

② "Display of the module levels"

The links are used to access the "Module information" of the higher module levels.

③ "Topology"

The two web pages, "Topology" and "Module information", are linked. A click on "Topology" of the selected module automatically takes you to this module in the graphic view of the set topology on the "Topology" web page. The module is displayed in the visible area of the "Topology" web page. The device header of the selected module flashes for a few seconds.

④ "IP address"

If a link is available, you can use it to access the Web server of the configured device you selected.

⑤ "Details"

Additional information about the selected module is provided in the "Status" and "Identification" tabs via the "Details" link.

⑥ "Status" tab

The tab contains information about the status of the selected module when a fault or alarm exists.

⑦ "Identification" tab

The tab contains data on the identification of the selected module.

Note

This tab displays only the data configured offline of the module.

⑧ "Statistics" tab

The tab is only displayed for PROFINET IO devices and includes the following information on communication statistics of the selected IO device:

- "Total statistics - Sent data packages"

  You can assess the data transmission on the transmit line based on the key data in this info box.

- "Total statistics - Received data packages"

  You can assess the data transmission on the receive line based on the key data in this info box.

- "Statistics port x - Sent data packages"

  You can assess the data transmission on the transmit line for each port based on the key data in this info box.

- "Statistics port x - Received data packages"

  You can assess the data transmission on the receive line for each port based on the key data in this info box.

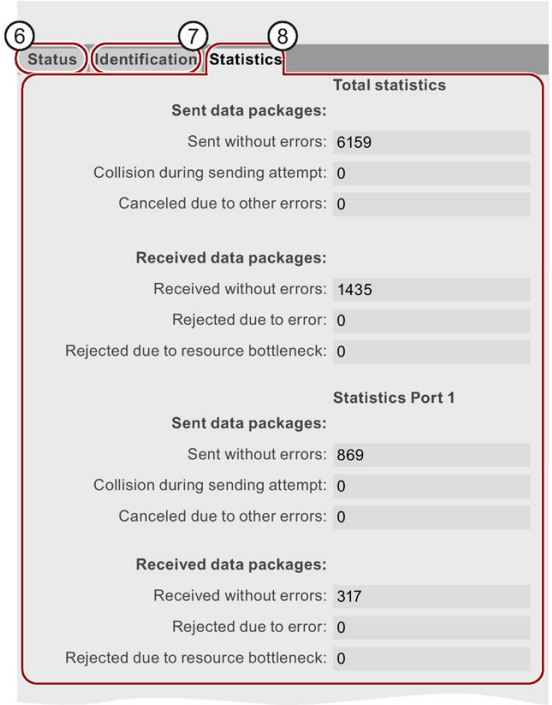

Figure 3-15 "Statistics" tab

Reference

You can find additional information in the "Statistics" tab in the section Communication (Page 57).

Example: Module information - module

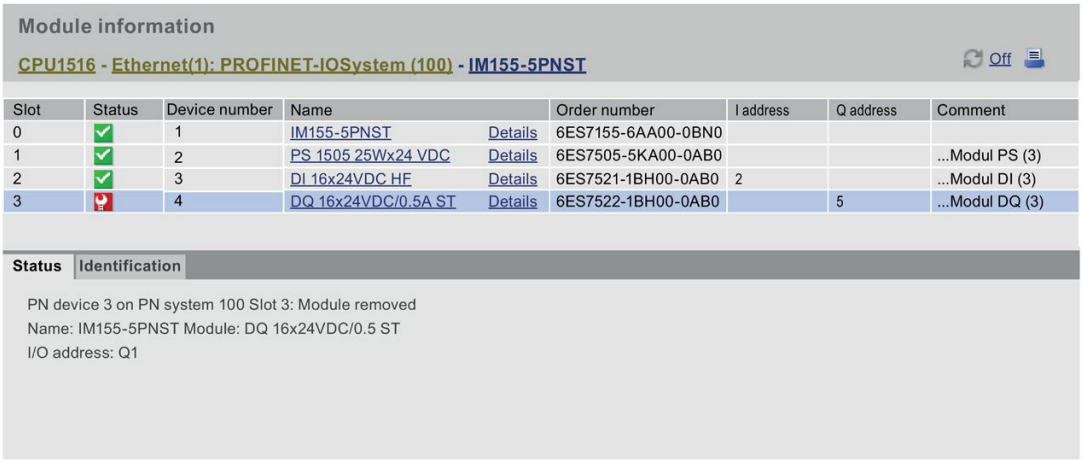

Figure 3-16 Example: Module information - module

Note

If you are using the function Configuration control (option handling) in the central configuration of your plant, the information text in the headings area of the web page informs you that the status of the I/O modules may be displayed inconsistently. No corresponding text is displayed for the distributed I/O.

Example: Module information - submodule

Figure 3-17 Example: Module information - submodule

Reference

You can find additional information on the "Module information" in the online help for STEP 7, keyword: "Module information".

3.5 Firmware update

Introduction

You update the firmware as a user with the corresponding access rights on the "Module information" web page at the module level. You will find information on user management in section Configuring the Web server (Page 21) under "Amending user management".
You use an update file to update the firmware of the CPU, the display of the CPU, or the individual central or distributed modules. Note that all modules you want to update must be compatible with the TIA Portal as of V12.0.

Note

A firmware update is not possible if access is via a mobile terminal device with the "iOS" operating system.

Procedure

The following steps are required to perform a firmware update:

- Click on "Browse" in the Firmware Loader area.
- Select the file you would like to use for the firmware update. You can find the available firmware updates on the Service&Support page on the Internet (http://support.automation.siemens.com).

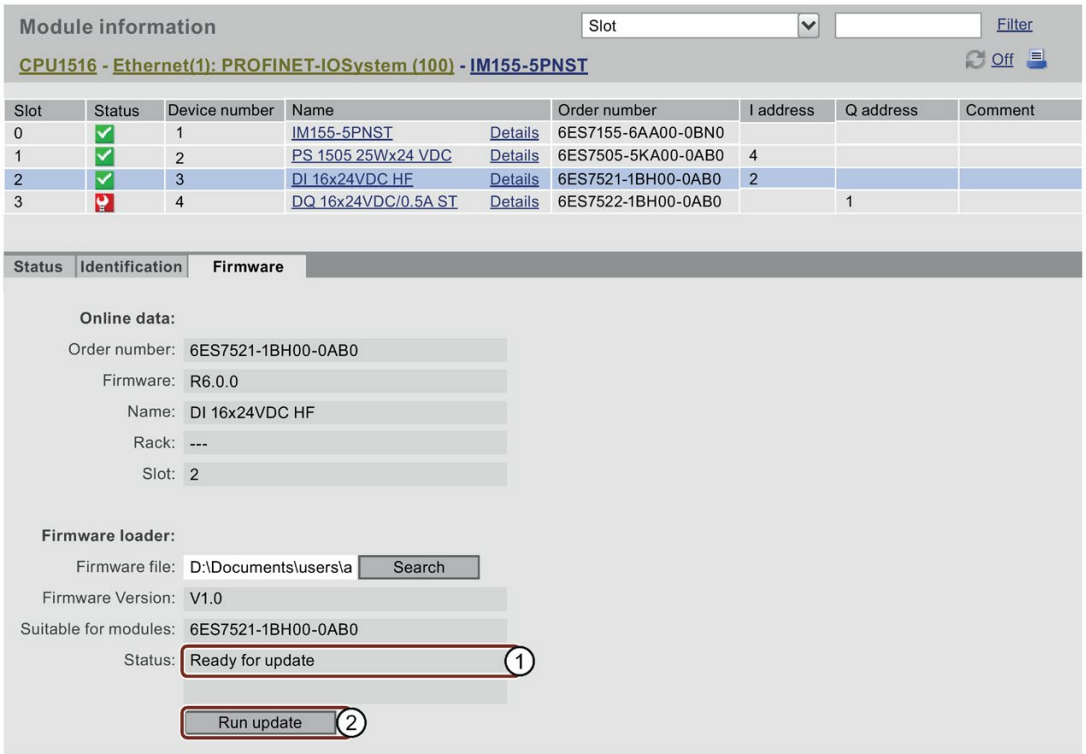

① Status of the selected firmware file

② Button to execute the update

Figure 3-18 Module information, "Firmware" tab, "Ready for update" status

- If the status is "Ready for update", click "Run update". If the CPU is in RUN mode during the update, the following alarm is output:

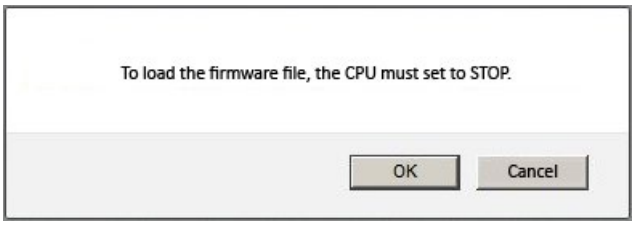

Figure 3-19 Alarm after clicking "Run update"

Acknowledge the alarm output by clicking "OK". The CPU is set to STOP mode and the firmware update is executed.
If you click "Cancel", the CPU remains in the current mode and the firmware update is canceled.

- A alarm informs you about the order number and version ID of the updated firmware once the update is complete.
  The CPU is automatically placed in RUN mode when the mode selector of the CPU is in RUN and when you acknowledge the alarm with "OK". This may take a few minutes; there is no progress indicator.
  If you click "Cancel", the CPU remains in STOP mode and you can run additional updates.

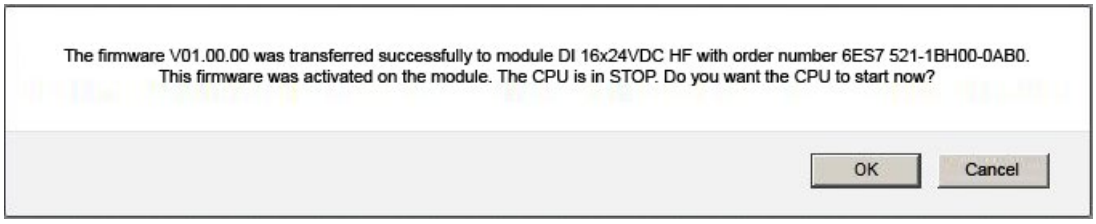

Figure 3-20 Alarm: Firmware successfully transferred

3.6 Alarms

Requirements

The alarm texts were configured in the user-specific languages. For information about configuring alarm texts, refer to STEP 7 and to the Service&Support pages (http://www.siemens.com/automation/service&support).

Alarms

To receive compact information on fault analysis, we recommend that you always first read out the content of the alarm buffer. This is the most effective method to get an overview of the pending faults.

The browser displays the content of the alarm buffer on the "Alarms" web page.

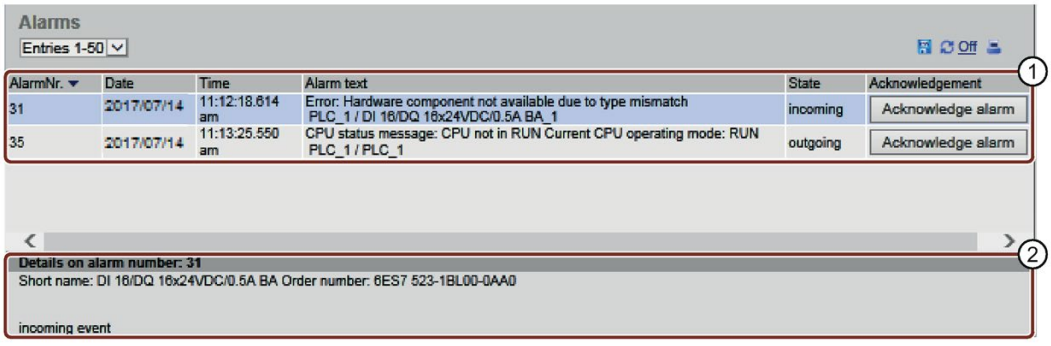

Figure 3-21 Alarms

① "Alarms"

CPU alarms are displayed in descending chronological order with **date** and **time** in info box ①.

The **alarm text** parameter is an entry which contains the alarm texts configured for the corresponding fault definitions.

Note that the alarm texts are displayed in the project language of the STEP 7 project that is assigned to the current user interface language of the Web server. You can find out how to assign project languages to interface languages in section Language settings (Page 31).

Sorting

You also have the option to display the individual parameters of the currently displayed web page (max. 50 entries) sorted in ascending or descending order. For this purpose, click on one of the parameters in the column header:

- Alarm number
- Date
- Time (of the CPU)
- Alarm text
- Status
- Acknowledgment

The alarms are returned in chronological order when you click the "Date" entry. Incoming and outgoing events are output at the **Status** parameter.

If you have the appropriate user rights (see section Configuring the Web server (Page 21)), for alarms which can be acknowledged, a button is available to you in the "Acknowledgment" column with which you can acknowledge the alarm.

② "Details on alarm number"

You can view detailed alarm information in this info box. Select the corresponding alarm from the info field ②.

Saving alarms

You can save alarms to a csv file for further processing in a spreadsheet program or database program.
Save the data by clicking the icon.

A dialog opens in which you can specify the file name and target directory.

3.7 Communication

Overview

The "Communication" web page provides detailed information about the following tabs:

- Parameters
- Statistics
- Resources
- Connections

① "Parameter" tab

A summary of the information on the PROFINET and Ethernet interfaces of the selected CPU is available in the "Parameter" tab.

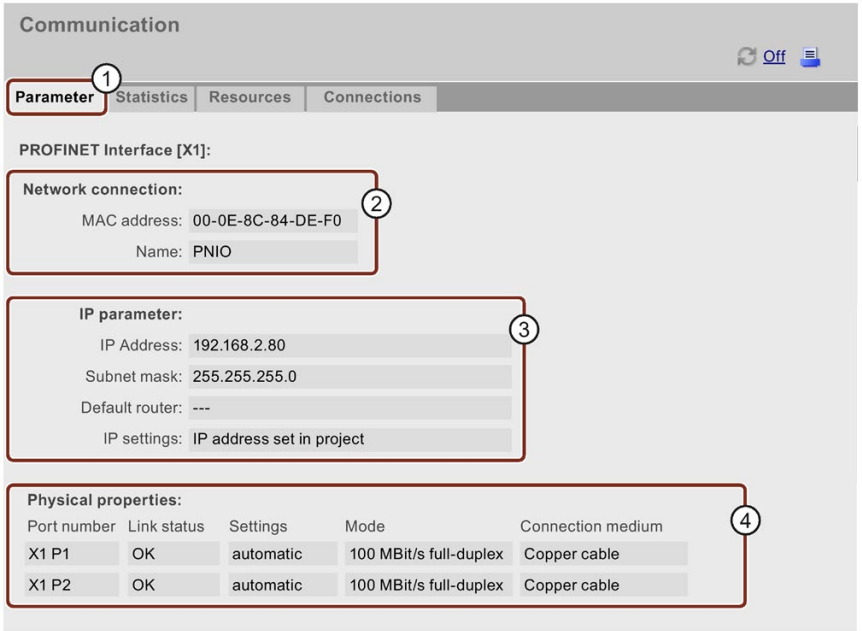

Figure 3-22 Parameters of the integrated PROFINET and Ethernet interfaces

② "Network connection"

The item "Network connection" includes information for identification of the integrated PROFINET and Ethernet interfaces of the corresponding CPU. The MAC address is located on the CPU above the respective PROFINET or Ethernet interface.

③ "IP parameter"

This parameter includes information on the configured IP address and number of the subnet in which the corresponding CPU is located.

④ "Physical properties"

The following information on the interface hardware is available in the "Physical properties" field:

- Port number
- Link status
- Settings
- Mode
- Connection medium

① "Statistics" tab

Information on the data transmission can be found on the "Statistics" tab.

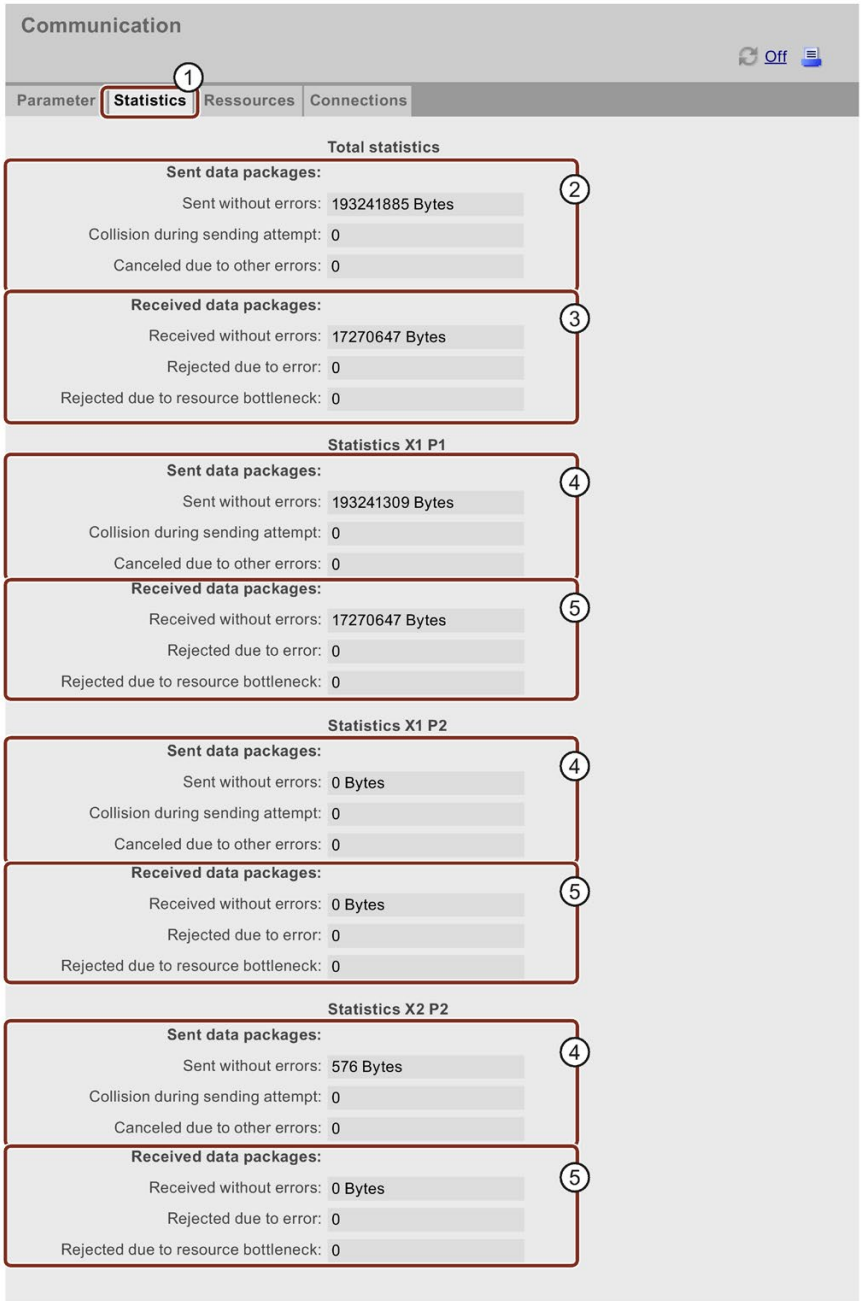

Figure 3-23 "Statistics" tab with key data on data transmission

② "Total statistics - Sent data packages"

You can assess the data transmission on the transmit line based on the key data in this info box.

③ "Total statistics - Received data packages"

You can assess the data transmission on the receive line based on the key data in this info box.

④ "Statistics Port x - Sent data packages"

You can assess the data transmission on the transmit line for each port based on the key data in this info box.

⑤ "Statistics port x - Received data packages"

You can assess the data transmission on the receive line for each port based on the key data in this info box.

① The "Resources" tab

For information about the resource consumption of the connections, refer to the "Resources" tab.

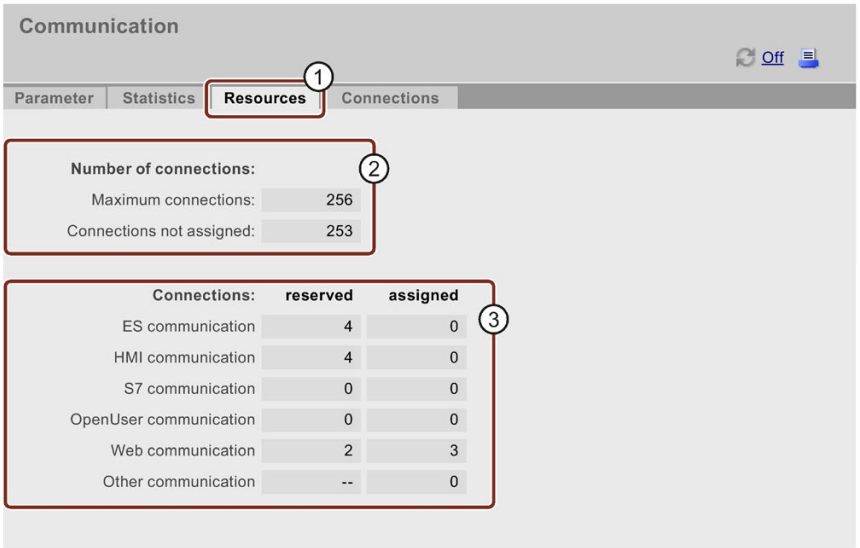

Figure 3-24 "Resources" tab

② Number of connections

Under "Number of connections", you will find information on the maximum number of connections and the number of connections not assigned.

③ Connections

The item "Connections" provides information on the number of connections reserved or used for ES, HMI, S7, OpenUser, web communication and other communication functions.

① "Connections" tab

The "Connections" tab contains information on the status of the communication connections.

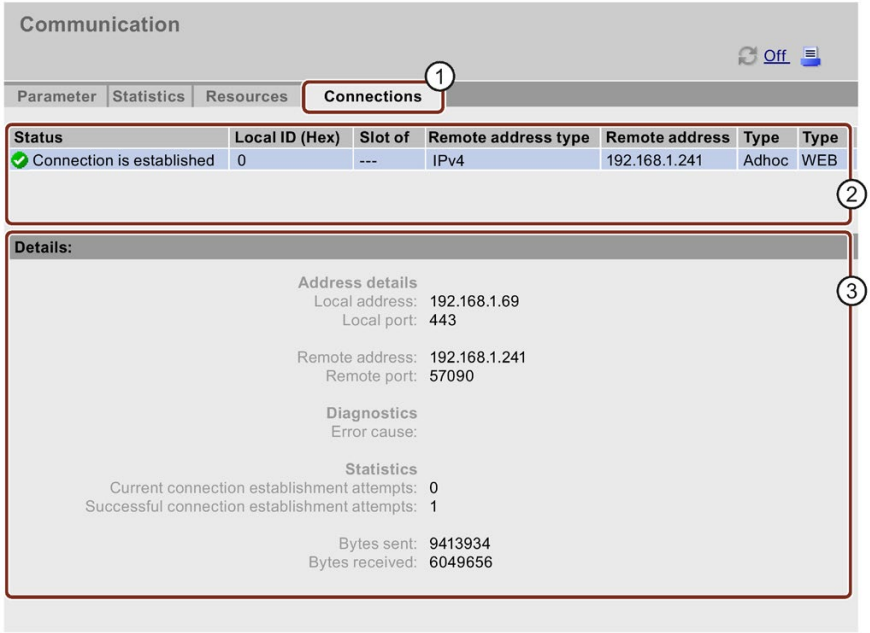

Figure 3-25 "Connections" tab

② Status

Under "Status", you will find an overview of the communication connections being established and the already established communication connections.

For each connection, the table contains the following information: status of the connection, local ID, slot of gateway, remote address (IP address), the corresponding remote address type, method of connection, and type of connection.

③ Details

Under "Details", you will find detailed information about the selected connection.

Reference

For an explanation of the error message displayed when a connection is interrupted or an attempt to establish a connection fails, refer to the STEP 7 online help.

3.8 Topology

3.8.1 Introduction

Topology of the PROFINET devices

The "Topology" web page provides information on the topological configuration and status of the PROFINET devices on your PROFINET IO system.

There are three tabs for the following views:

- Graphical view (set and actual topology)
- Table view (actual topology only)
- Status overview (excluding topological correlations)

You can print the table view and status overview. Before printing, use the print preview of your browser and, if necessary, correct the format.

Set topology

The set topology is displayed if you have topologically interconnected the connections in the configuration with STEP 7.

This view identifies the topological assignment of PROFINET devices that have failed, the differences between the set and actual topology, and interchanged ports.

Note

The configured set topology is always displayed by default in the following scenarios:

- When the "Topology" web page is called via the navigation bar
- When you change from the overview of PROFINET IO devices on the "Module information" web page to the "Topology" web page by means of the "Topology" link.

If a setpoint topology was not configured, the actual topology is displayed.

Actual topology

Displays the current topological structure of the "configured" PROFINET devices of a PROFINET IO system and the directly adjacent, non-configured PROFINET devices (display of the neighbor relationships, provided these can be determined; but the status of these adjacent PROFINET devices is not displayed).

3.8.2 Graphical view

Requirements

For error-free operation of the topology, the following conditions must be met:

- You have made the Language settings (Page 31).
- In the Topology Editor of STEP 7, you configured the topological interconnection of ports (requirement for display of the set topology and the corresponding topological target connections).
- The project has been compiled in STEP 7.
- The project is completely loaded.

Set and actual topology - graphical view

You can select the interface with the topology you want to display (X1, X2, X3 or PROFINET communication modules such as CM 1542-1) at the top left of the "Topology" Web page.

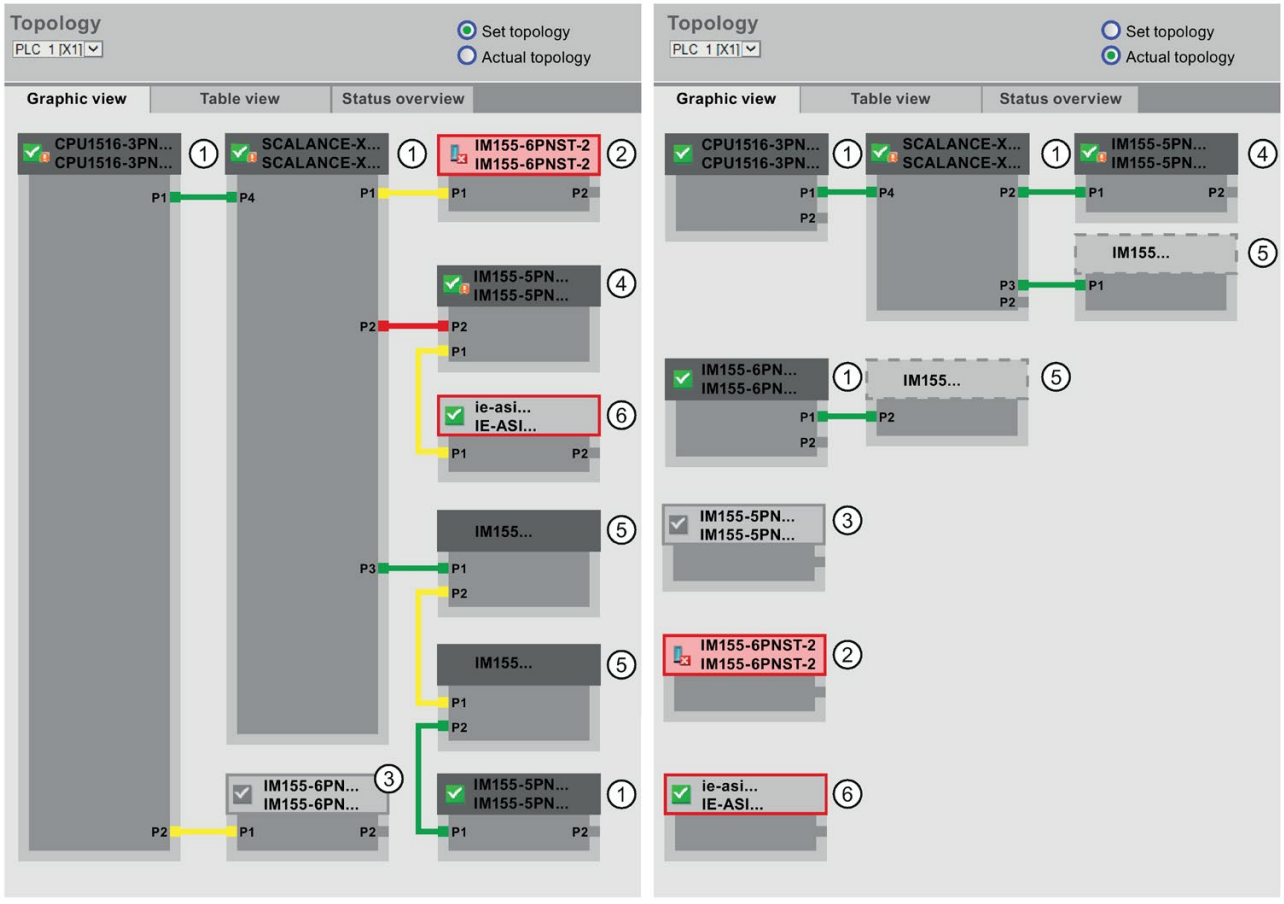

Figure 3-26 Graphical view - Set and actual topology

Meaning of the colored connections in the set/actual topology:

Table 3- 3 Meaning of the colored connections in the set/actual topology

Connection	Meaning	
	Set topology	Actual topology
Green	The current actual connection matches the configured target connection.	Connections detected
Red	Mismatch between the current actual connection and the configured target connection (e.g., port interchanged).	-
Yellow	Connection diagnostics not possible. Causes: • Malfunction of communication with a device (e.g., cable was removed) • Connection to a passive component (e.g., switches or cables) • Connection to devices/PROFINET devices on a different IO controller or IO subsystem.	-

① Configured and accessible PROFINET devices

Configured and accessible PROFINET devices are displayed in dark gray. Connections indicate the ports used to connect the PROFINET devices of a station.

② Configured but inaccessible PROFINET devices

Configured but inaccessible PROFINET devices are indicated in pink with red frame (e.g., device failure, cable disconnected).

③ Deactivated devices

All deactivated, configured PROFINET devices are displayed in light gray.

④ Interchanged ports

Interchanged ports are highlighted in red in the set topology view. The actual topology view indicates the actually connected ports, while the set topology view displays the configured target connections.

⑤ PROFINET devices of a different PROFINET IO subsystem

- In the set topology:

  A PROFINET device of a different PROFINET IO subsystem is indicated by means of a green link (or red link for interchanged ports) if it is available on the bus and directly adjacent to an accessible configured PROFINET device ①. If the PROFINET device of a different PROFINET IO subsystem is inaccessible, it is identified by means of a yellow connecting line.
  The connection between two PROFINET devices which both belong to a different PROFINET IO subsystem cannot be identified and is always indicated in yellow color.

- In the actual topology:

  The PROFINET device of a different PROFINET IO subsystem is not displayed unless it is directly adjacent to a configured PROFINET device. The PROFINET device is shown in light gray with a dashed line around the device header.

The status of PROFINET devices of a different PROFINET IO subsystem is **not** displayed in the device header.

⑥ Displaying faulty neighbor relationships

Devices from which the relation data could not be read completely or with error are highlighted in light gray with a red frame.

Note

Displaying faulty neighbor relationships

If a device does not have the matching firmware, the relationships cannot be displayed correctly. This means a firmware update of the respective device is required in case a faulty neighbor relationship is displayed.

Views after changes to the configuration

- If a device fails, it remains at the same position in the "Set topology" view. This error state is indicated with a red border around the device header and the icon .
- If a device fails, it is displayed in the "Actual topology" view. This error state is indicated separately in the bottom area with a red border around the device header and the icon .

Link between the "Topology" and "Module information" web pages

The two web pages, "Topology" and "Module information", are linked. A click on the header of a selected module in the topology view automatically takes you to this module on the "Module information" web page.

You can find additional information on this in the section Module information (Page 47).

Reference

Additional examples for graphical topology view are available in the section Examples for graphical topology views (Page 69).

3.8.3 Tabular view

Topology - tabular view

The "Tabular view" always shows the "Actual topology".

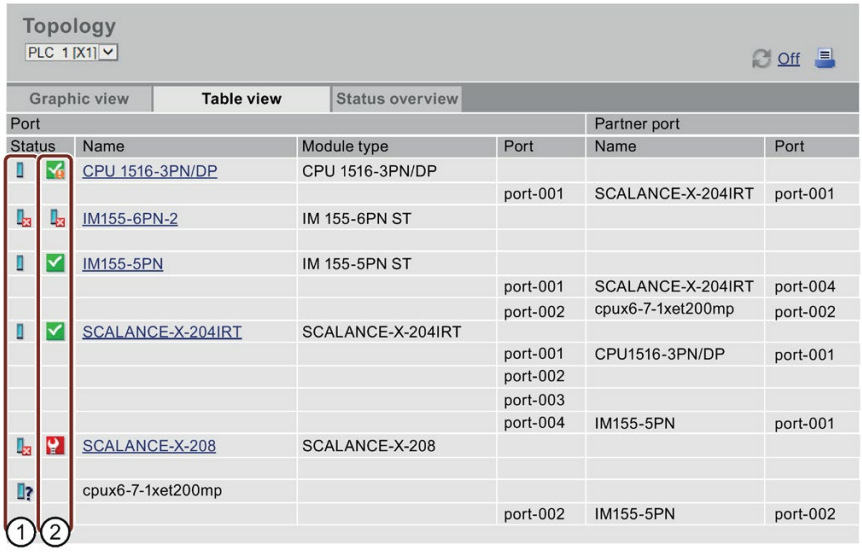

Figure 3-27 Topology - tabular view

① Meaning of the symbols relating to the status of the PROFINET devices

Table 3- 4 Meaning of the symbols relating to the status of the PROFINET devices

Symbol	Meaning
	Configured and accessible PROFINET devices
?	Unconfigured and accessible PROFINET devices
	Configured but inaccessible PROFINET devices
!	Devices for which neighbor relations cannot be determined, or for which the neighbor relationship could not be read out completely, or only with errors

② Meaning of the symbols relating to the module status of the PROFINET devices

Table 3- 5 Meaning of the symbols relating to the module status of the PROFINET devices

Symbol	Color	Meaning
	green	Component is OK.
	gray	Deactivated PROFIBUS slaves or PROFINET devices
	black	State cannot be determined • For example, "Status cannot be determined" is always displayed while the CPU is in STOP mode, or during startup evaluation of "Report system error" for all configured I/O modules and I/O systems after a CPU restart. • However, this status can also be displayed temporarily during operation if a diagnostics interrupt burst occurs at all modules. • It is not possible to determine the status of modules on a subsystem that is connected to a CP.
	red	Component failed or is not reachable • "Not reachable" is displayed for e.g. a module that has been removed or a module that has been configured but does not exist.
	green	Maintenance required (Maintenance Required)
	yellow	Maintenance demanded (Maintenance Demanded)
	red	Error - component faulty or not available due to an incorrect type.
	-	A module in a lower module level does not have the status "Component OK".

Reference

For additional information on the "Report System Error" function, refer to the STEP 7 online help, keyword: "System diagnostics".

3.8.4 Status overview

Topology - status overview

The "Status overview" provides a clear presentation of all PROFINET IO devices/PROFINET devices (without connection relations) on one page. A quick error diagnostics is possible based on the symbols that show the module statuses.

The overview also provides a link of the modules to the Web page Module information (Page 47).

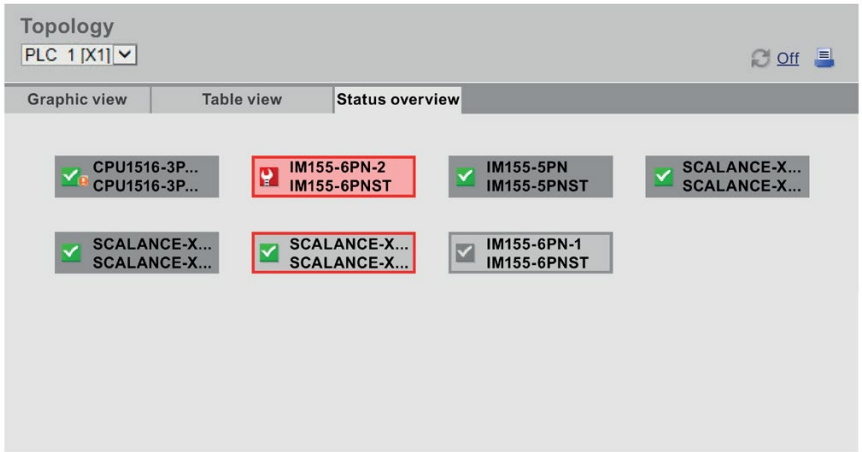

Figure 3-28 Topology - status overview

3.8.5 Examples for graphical topology views

The following section shows, as an example, some displays of the different topology views for a simple project.

"Set topology" is OK

Here you see the connections as they are configured in the topology editor by STEP 7. The configuration and wiring match.

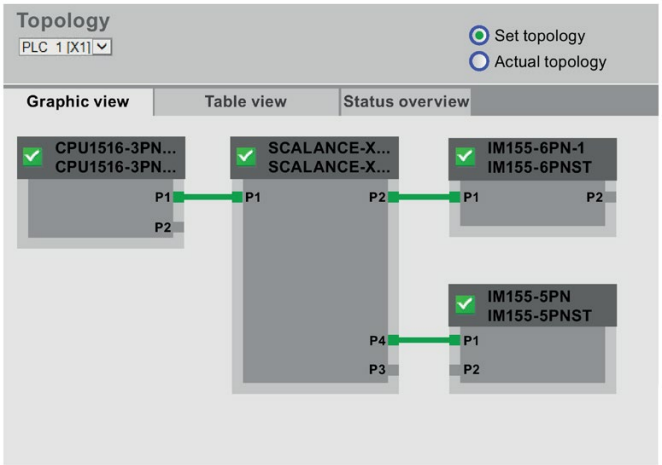

Figure 3-29 "Set topology" is OK

"Actual topology" is OK

Shows the actual layout of all configured devices that can be reached topologically.

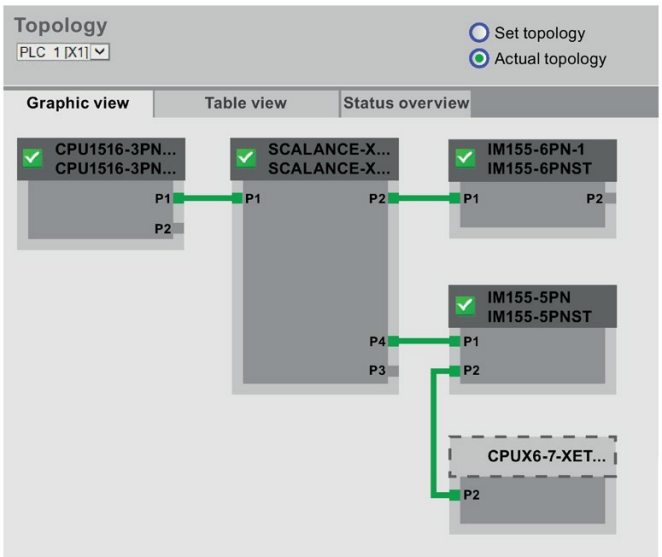

Figure 3-30 "Actual topology" is OK

"Set topology" with failed device

If a device has failed in the meantime, this device remains in the same place in the "Set topology" view. The failed device is displayed with a red border around the device header and the icon.

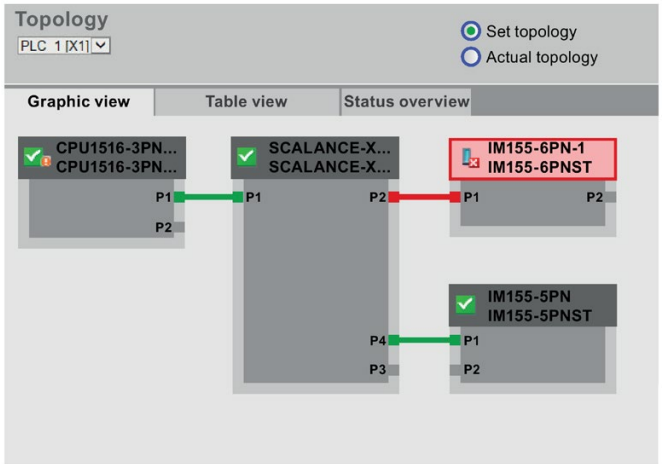

Figure 3-31 "Set topology" with failed device

"Actual topology" with failed device

In the "Actual topology" view, the device that has failed in the meantime is displayed separately in the bottom area of the view. The failed device is displayed with a red border around the device header and the icon.

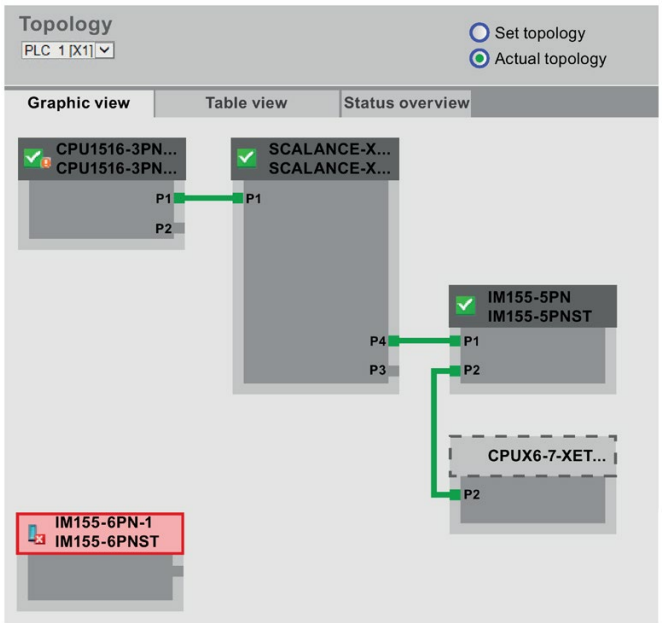

Figure 3-32 "Actual topology" with failed device

"Set topology" with interchanged ports

If a port was interchanged for a configured, directly adjacent PROFINET device, this device remains in the same place in the "Set topology" view. The interchanged connection is indicated by a red line.

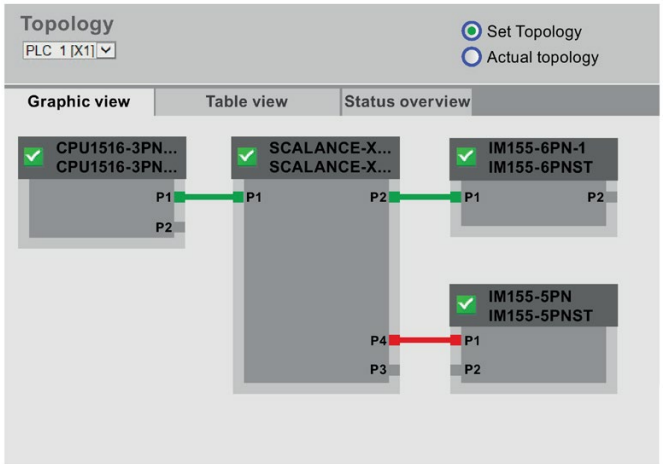

Figure 3-33 "Set topology" with interchanged ports

3.9 Tag status

Tag status

The browser outputs the tag status on the web page of the same name.

Note

Saving the tag status as a bookmark

When the page is exited, the entries made on it are not saved. If you want to monitor the same entered tags again later on, then create a bookmark in your Web browser for the "Tag status" page. Otherwise, you will have to enter the tags again when the page is reopened.

If you have defined your user page as start page of the Web server, you cannot access the tag status via the saved bookmarks. You can find additional information in section Defining the user page as start page (Page 98).

Note

Selected tag addresses are copied to the URL

The maximum number of characters for the URL of the tag status page is 2083. You can see the URL which corresponds to your current tag status page in the address bar of your Web browser.

To monitor several tags, we recommend the use of the watch tables (Page 75).

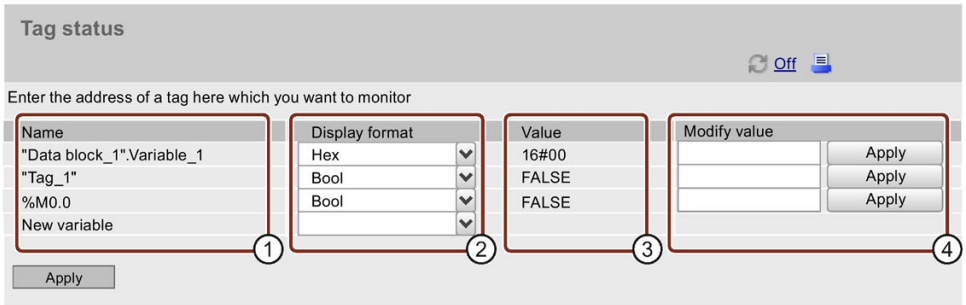

Figure 3-34 Tag status

① "Name"

In the "Name" text box, enter the address of the tag whose behavior you want to monitor. This may be a symbolic or absolute address.

- PLC tags (inputs and outputs, bit memories, times and counters) and DB tags in blocks with standard access have an absolute and a symbolic address.
- DB tags in blocks with optimized access have a symbolic address and no absolute address.

Example for access to the absolute address of a data block with standard access:
The absolute address consists of the preceding address ID %, the number of the data block and the absolute address of the tags in the data block, separated by a period: `%DB1.DBX1.0` = absolute addressing of the tags "DBX1.0" in the global data block "DB1".

Invalid entries are displayed in red font.

② "Display format"

Using the drop-down list box, select the desired display format of the respective tag. If the tag cannot be displayed in the desired format, it will be displayed in hexadecimal format.

③ "Value"

Under "Value", the value of the corresponding operand is displayed in the selected format.

④ "Modify value"

You can change the value of tags and write them to the CPU in this column. To transfer several changed values in one operation, click the "Apply" button below the table.

To be able to read values and write values to the CPU, you need to have configured a user with the appropriate access rights in STEP 7.

If the value you entered is not valid (e.g. binary value in a BOOL field), the entry is not applied and the corresponding input field remains empty. A specific message relating to this is not output.

You can change the values of the following data types:

- Bool, Byte
- DWord, LWord, Word
- Int, DInt, LInt, SInt, UDInt, UInt, ULInt, USInt
- Real, LReal
- LDT
- Counter, Date
- Time, LTime, Time_Of_Day, LTime_Of_Day, Timer
- S5Time
- Char, WChar, String

Note

The following generally applies: To be able to write data, the "Referrer" transfer must be activated in your Web browser (this is the default in all common browsers).

Special considerations when changing languages

You can change the language, e.g., from German to English, in the upper right corner. Note that the German mnemonics differ from those of the other languages.

For monitoring available data types

In principle, all data types of PLC tags that can be monitored in STEP 7 can also be monitored via the Web server.

Note that structured data types such as ARRAY, STRUCT and DTL are not available as data types for PLC tags because of their data volume.

Reference

You can find additional information on the available data types in the STEP 7 online help, keyword: "Overview of the valid data types".

See also

Configuring the Web server (Page 21)

3.10 Watch tables

Watch tables

The browser displays the content of the configured, web-enabled watch tables on the web page of the same name.

Note

Please note that you can observe a maximum of 50 of the watch tables configured in STEP 7 in the Web server.

Each of these tables is displayed in the Web server with a maximum of 200 entries.

If you are monitoring many large watch tables in the Web server, the update time may increase due to the large data volumes.

The number of watch tables that you can monitor download into the CPU also depends on the size of the SIMATIC memory card used.

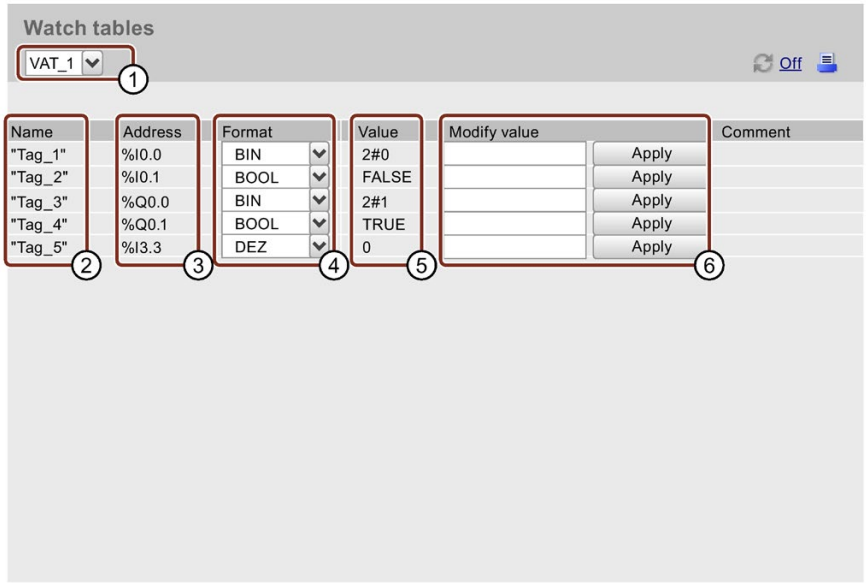

Figure 3-35 Watch tables

① Selection

Select one of the configured watch tables from the drop-down list.

② "Name"

The symbolic name of the tag is shown in this info box.

③ "Address"

The absolute address of the tags is displayed within this info field (if present, e.g. for inputs or outputs; DB tags in blocks with optimized access have no absolute address).

③ "Format"

Select the display format of the respective tag from the drop-down list.

⑤ "Value"

This column shows the values in the corresponding display format.

⑥ "Modify value"

You can change the value of tags and write them to the CPU in this column.

To be able to read values and write values to the CPU, you need to have configured a user with the appropriate access rights in STEP 7.

If the value you entered is not valid (e.g. binary value in a BOOL field), the entry is not applied and the corresponding input field remains empty. A specific message relating to this is not output.

Note

The following generally applies: To be able to write data, the "Referrer" transfer must be activated in your Web browser (this is the default in all common browsers).

Note that the comments are displayed in the project language of the STEP 7 project that is assigned to the current user interface language of the Web server. You can find out how to assign project languages to interface languages in section Language settings (Page 31).

Reference

You can find additional information on the available data types in the STEP 7 online help, keyword: "Overview of the valid data types".

3.11 User pages

User pages

In the "User pages" area of the Web server you can upload HTML pages you have created yourself for reading out data of the target system.

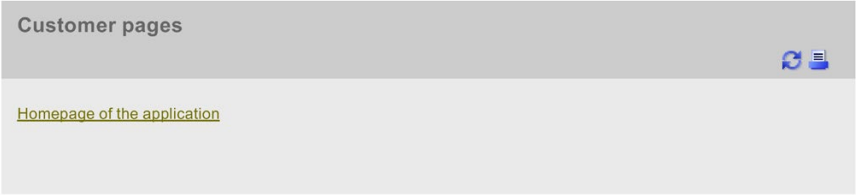

Figure 3-36 User pages

You create the pages with an HTML editor of your choice from which you generate data blocks (Web control DB and Fragment DBs) in STEP 7 and download them to the CPU. The "WWW" instruction synchronizes the user program with the Web server on the CPU and initializes the Web server. With the first call of the "WWW" instruction, the link to the user page is displayed on the web page of the CPU. A click on the link opens the user page in a new window.

Note

Write access to user pages allows the process parameters and, thus, the operation of the CPU to be influenced.
To prevent external manipulation, always assign a password for users with write access to user pages in the user management. You will find information on user management in section Configuring the Web server (Page 21) under "Amending user management".

Requirements

- You have assigned symbolic names to the tags you want to use on your web page in STEP 7 .
- In the Inspector window under "Properties > General > Web server", you have at least:
  - Activated the Web server
  - Assigned read-only or read and write permissions to the users for user pages (see section Configuring the Web server (Page 21))
- You have completed all necessary communication settings (IP address parameter, subnet mask, etc.).
- You have downloaded the configuration.
- You have created your user page in an HTML editor of your choice:
  - Automatic HTML pages, if you want to **disable** control of the page layout by means of the user program (requires at least one call of SFC 99).
    Changes in mode from RUN to STOP do not affect the call of the user pages.
  - Manual HTML pages, if you want to **enable** control of the page layout by means of the user program (cyclic call of SFC 99 required).

Creating user pages

You can use any HTML editor to create your own user page(s). Make sure that your HTML code complies with the standards of the W3C (World Wide Web Consortium), because STEP 7 does not check the HTML syntax in any way. In addition to the simple HTML code, you can also use JavaScript commands in your user pages.

Proceed as follows:

1. Create the HTML file for your user page with an HTML editor.
   To allow data from the CPU to be output on your web page, integrate the AWP commands as HTML comments (see section AWP commands (Page 81)).
2. Store the HTML file and all associated source files (e.g., *.gif, *.jpg, *.js, etc.) in a directory on your PG/PC and note the storage path.
3. Call the "WWW" instruction in STEP 7 and program it (see section Programming the WWW instruction (Page 96)).
4. Configure the user page in STEP 7 (see section Configuring user pages (Page 94)). In this way, you compile the contents of your HTML files, among other things, into data blocks.
5. Download the configuration and the user program to the CPU.
6. Open your user page with your display device by means of a web browser in the Web server of the CPU.

Note

Extensive HTML pages, especially those with a lot of images, take up a lot of space in the load memory. Make sure you select a SIMATIC memory card with enough memory to provide sufficient load memory.

If the **sum of the HTML pages** > 1 MB, performance losses may occur as only 1 MB data is saved in the cache.

We recommend that you create **each individual file of an HTML page** with a size not exceeding 512 KB; otherwise, problems can occur when sending the file from the Web server to the browser. You can view the size of the respective file in the file explorer of the directory.

Updating user pages

User pages are not updated automatically in the browser. You can program the HTML code so that the pages are updated automatically.

Pages which read out data from the controller are always up-to-date due to regular updates.

Note

If the HTML page contains form fields for data input, automatic update can impair the correct data input by the user.

To update the entire page automatically, you can add the following instruction to the <head> area of your HTML page, whereby the number "10" stands for the update interval in seconds:

```
<meta http-equiv="refresh" content="10">
```

References

The description of a user page is available in the section Example of a user page (Page 100).

Additional help for visualization with user pages is available in the application examples on the Internet:

- Creating and using your own Web pages for S7-1200 (http://support.automation.siemens.com/WW/view/en/58862931)
- Creating and using your own Web pages for S7-1200 / S7-1500 (https://support.industry.siemens.com/cs/de/en/view/68011496)
- Visualizing with user-defined Web pages on SIMATIC CPUs with PROFINET interface (http://support.automation.siemens.com/WW/view/en/44212999)
- How do you integrate the string contents in your user-defined Web page of the S7-1500 CPU as of Firmware V1.6? (https://support.industry.siemens.com/cs/ww/en/view/98754370)

You will find more information on JavaScript commands in the ECMAScript specification on the Internet (http://www.ecma-international.org/ecma-262/5.1/).

For more information about how to automatically update web pages and how to incorporate user pages with relative path names, refer to the FAQ with entry ID 62543256 on the Service&Support (https://support.industry.siemens.com/cs/ww/en/view/62543256) Internet page.

3.11.1 AWP commands

Overview

Automation Web Programming (AWP) commands are a special command syntax for data exchange between CPU and user page (HTML file).

AWP commands are entered as HTML comments and offer the following options for your user pages:

- Reading PLC tags
- Writing PLC tags
- Reading special tags
- Writing special tags
- Defining enum types
- Assigning enum types to tags
- Defining data block fragments
- Importing data block fragments
- Accessing the values of an array
- Accessing the values of a PLC tag of STRUCT data type

General syntax

All AWP commands, except for the command for reading a PLC tag, have this structure:

```
<!-- AWP_< command name and parameter> -->
```

Files including AWP commands:

- must be UTF-8 encoded.
  To define UTF-8 as character set of the page, add the following line to your HTML code:
  ```
  <meta http-equiv="content-type" content="text/html; charset utf-8">
  ```

  Note
  Saving the HTML page
  Make sure that you save the file in the editor in UTF 8 character encoding as well.

- may not include the following sequence:]]>
- may not include the following sequence outside "read tag areas" (:="<Varname>":):
- depending on the use, must identify special characters in tag names or data block names with character escape sequences or quotation marks
- are case-sensitive
- should be additionally enclosed by JavaScript comments ("/*...*/") in JavaScript files

Overview of AWP commands

Table 3- 6 AWP commands

Function	Representation
Reading PLC tags	`:=<Varname>:`
Writing PLC tags	`<!-- AWP_In_Variable Name='<Varname1>' -->`
Reading special tags	`<!-- AWP_Out_Variable Name='<Typ>:<Name>' -->`
Writing special tags	`<!-- AWP_In_Variable Name='<Typ>:<Name>' -->`
Defining enum types	`<!-- AWP_Enum_Def Name='<Name Enum-Typ>' Values='0: "<Text_1>",1:"<Text_2>",...,x:"<Text_y>"' -->`
Assigning enum types to tags	`<!-- AWP_Enum_Ref Name='<Varname>' Enum='<Name Enum-Typ>' -->`
Defining data block fragments	`<!-- AWP_Start_Fragment Name='<Name>'[Type=<Typ>] [ID=<Id>] -->`
Importing data block fragments	`<!-- AWP_Import_Fragment Name='<Name>' -->`

Accessing the values of an array	`<!-- AWP_Start_Array Name='"<DB name>".<array name>' -->`
	`...`
	`<!-- AWP_End_Array -->`

Accessing the values of a PLC tag of STRUCT data type	`<!-- AWP_Start_Struct Name='"<DB name>".<struct name>' --> ...` `<!-- AWP_End_Struct -->`

3.11.1.1 PLC tags

Introduction to PLC tags

User pages can read PLC tags from the CPU and write data to the CPU.

To do so, PLC tags must:

- be enclosed by double quotation marks ("...").
- also be enclosed by single quotation marks ('" ... "') or with quotation marks masked with a backslash ("\" ... "\").
- be specified by a PLC tag name.
- if the PLC tag name includes the characters \ (backslash) or ', identify these characters with the escape sequence \\ or \' as normal characters of the PLC tag name.
- be enclosed with single quotation marks ('...'), if an absolute address (input, output, bit memory) is used in the AWP command.

Reading PLC tags

These out-tags (output direction as seen from the controller) are inserted at any place in the HTML text with the syntax described below.

Syntax

```
:=<Varname>:
```

<Varname> corresponds to the tag to be read from your STEP 7 project and can be a simple shared tag or a complete tag path to a structural element. Make sure that you use the name of the data block and not its number when you use data blocks.

Examples

```
:="Conveying speed":
:="My_datablock".bitmemory1:
:=%MW100:
```

Reading tags of the String and Character type

Below, these types of quotation marks are used in the explanation: single quotation marks ('), double quotation marks (").

As of firmware V1.6, with the "Read PLC tags" function, the CPU outputs tags of the String or Character type enclosed in single quotation marks to the browser.
For example:

- "Varname".MyString = ABC string tag
- You read the tag in HTML using the function :="Varname".MyString:
- The Web server outputs the character string 'ABC' to the browser

Using String or Character tags in expressions

On your HTML page, you use an expression in which the character string for reading a tag is enclosed in quotation marks, for example in forms.

Possible HTML code used:
```
<input type="text" name="appfield" value="myvalue">
```

If you read the displayed value for the "value" attribute from a PLC tag in this expression, the HTML code appears as follows:
```
<input type="text" name="appfield" value=":="Varname".MyString:">
```

By reading the PLC tag, the Web server outputs the value 'ABC'. In HTML, the code is then represented as follows:
```
<input type="text" name="appfield" value=" 'ABC' ">
```

If you have used single quotation marks instead of double quotation marks in your HTML code to enclose the attributes, the Web server passes on the content of the tags enclosed in two single quotation marks to the browser. As a result of this, the browser does not output the content of the String or Character tag, since two consecutive single quotation marks each form a closed sequence. The values to be read are located between these sequences and are not output by the browser.

In this context, note in particular that the character string with double quotation marks is not identical to two single quotation marks even if they appear to be identical.

Note

The code is not adapted automatically during an update to firmware as of V1.6.
Adapt your HTML code if you have used single quotation marks to enclose attributes for the "Read PLC tags" function.

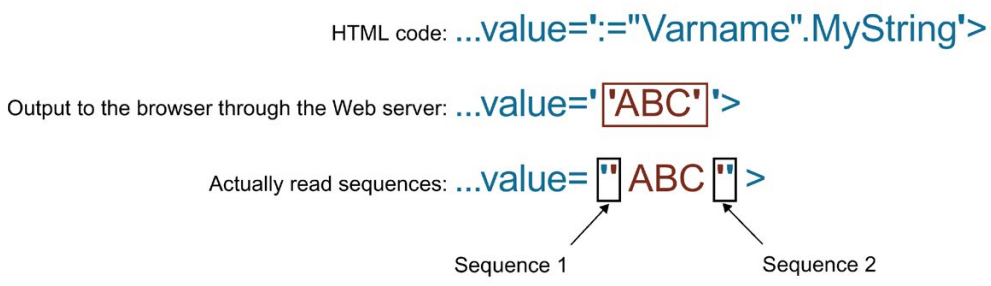

Figure 3-37 Example of HTML code with attribute in single quotation marks

Writing PLC tags

These in-tags (input direction as seen from the controller) are set on the browser page. This can take place in a form on your HTML page, for example, with text input or list selection boxes that correspond to the tags that can be written.

The tags are either set in the HTTP Header (per cookie or POST method) or in the URL (GET method) by the browser in the HTTP request and are then written by the Web server into the respective PLC tag.

Note

Write access during operation

For data to be written from a user page to the CPU, a user must have the required write permissions and be logged on as this user. This applies to all write accesses of web pages to the CPU.

Syntax

```
<!-- AWP_In_Variable Name='"<Varname1>"' Name='"<Varname2>"'
Name='"<Varname3>"' -->
```

If the name of the tag that you are using for the web application is not identical with the name of the PLC tag, you can assign it to a PLC tag with the "Use" parameter.

```
<!-- AWP_In_Variable Name='<Varname_Webapp>' Use='<PLC_Varname>' -->
```

Examples with HTML input boxes

```
<!-- AWP_In_Variable Name='"Target_Level"' -->
<form method="post">
<p>Input Target Level: <input name='"Target_Level"'
type="text"><input type="submit" value="Write to PLC"> </p>
</form>

<!-- AWP_In_Variable Name='"Data_block_1".Braking' -->
<form method="post">
<p>Braking: <input name='"Data_block_1".Braking' type="text"> <input
type="submit" value="Write to PLC"></p>
</form>
```

Examples with HTML drop-down list

```
<!-- AWP_In_Variable Name='"Data_block_1".ManualOverrideEnable' -->
<form method="post">
<select name='"Data_block_1".ManualOverrideEnable'>
<option value=1>Yes</option>
<option value=0>No</option>
</select><input type="submit" value="submit setting"> </form>
```

3.11.1.2 Special tags

Special tags

Special tags are mainly the HTTP tags specified in the definitions of the World Wide Web Consortium (W3C). Special tags are also used for cookies and server tags.

Reading special tags

The Web server can read PLC tags and transfer them to special tags in the HTTP response header. You can, for example, read out a path name from a PLC tag to redirect the URL to another storage location with the special tag "HEADER:Storage location".

Syntax

```
<!-- AWP_Out_Varible Name='<Type>:<Name>' Use='<Varname>' -->
```

<Type> corresponds to the type of special tag.
Options are:

- HEADER
- COOKIE_VALUE
- COOKIE_EXPIRES

<Name> corresponds to the name of the HEADER tag or the cookie:

- HEADER tags:
  - Status: HTTP status code (if no other value was set, status code 302 is returned).
  - Location: path for redirection to another page. Status code 302 must be set.
  - Retry-After: time for which the service is most likely not available. Status code 503 must be set.
- COOKIE_VALUE:name: value of the named cookie.
- COOKIE_EXPIRES:name: expiration time of the named cookie in seconds.

Examples

The HTTP HEADER tag is written to the PLC tag of the same name:

```
<!-- AWP_Out_Variable Name='"HEADER:Status"' -->
```

If the name of the special tag is not identical with the name of the PLC tag, you can assign it to a PLC tag with the "Use" parameter:

```
<!-- AWP_Out_Variable Name='"HEADER:Status"' Use='"Status"' -->
```

Writing special tags

The Web server gives you the option to write values of special tags written in the HTTP header in the CPU. You can, for example, save information on the cookie of a user page or on the user that accesses a page in STEP 7.

Syntax

```
<!-- AWP_In_Variable Name='<Type>:<Name>' Use='Varname' -->
```

<Type> corresponds to the type of special tag.
Options are:

- HEADER
- SERVER
- COOKIE_VALUE

<Name> corresponds to the name of the HEADER tag or the cookie:

- HEADER tags:
  - Accept-Language: accepted or preferred language
  - User-Agent: information on the browser
  - Authorization: credentials for a requested resource
- SERVER tags:
  - current_user_id: Indicates whether a user is logged on:
    current_user_id=0: No user is logged on / access by "Everybody" user.
    current_user_id=1: At least one user is logged on.
  - current_user_name: user name of the logged-on user
- COOKIE_VALUE:name: value of the named cookie.

Examples

The HTTP-SERVER tag is written to the PLC tag of the same name:

```
<!-- AWP_In_Variable Name='"SERVER:current_user_id"' -->
```

The HTTP-SERVER tag is written to the PLC tag "My_userID":

```
<!-- AWP_In_Variable Name='"SERVER:current_user_id"'
Use='"My_userID"' -->
```

3.11.1.3 Enum types

Enumeration types (enum types)

Enum types convert numerical values from the PLC program into texts or vice versa. The numerical values may also be assigned for use with several languages.

Define enum types

You can define enum types in your user pages and assign the values in an AWP command.

Syntax

```
<!-- AWP_Enum_Def_Name='<Name Enum-Typ>' Values='0:"<Text_1>",
1:"<Text_2>",...,x:"<Text_y>"' -->
```

Examples

To store German values as HTML file in the "de" folder of the HTML directory:

```
<!-- AWP_Enum_Def Name="Enum1" Values='0:"on", 1:"off", 2:"Fault"' -
->
```

To store English values as HTML file in the "en" folder of the HTML directory:

```
<!-- AWP_Enum_Def Name="Enum1" Values='0:"on", 1:"off", 2:"error"' -
->
```

Assigning enum types to tags

The assignment of tags from the user program to the individual enum types takes place by means of a separate AWP command. The used tag can be used at a different location of the user pages in a read operation or in a write operation.

For a read operation, the Web server replaces the value read from the CPU with the enum text value defined correspondingly. For a write operation, the Web server replaces the defined enum text value with the corresponding integer value of the enumeration before the value is written to the CPU.

Syntax

```
<!-- AWP_Enum_Ref_Name='<Varname>' Enum="<Enum-Type>" -->
```

<Varname> is the symbolic tag name from the user program; <Enum-Type> the previously specified name of the enum type.

Example for a declaration

```
<!-- AWP_Enum_Ref_Name='"Alarm"' Enum="AlarmEnum" -->
```

Example for use when reading a tag

```
<!-- AWP_Enum_Def Name='AlarmEnum' Values='0:"No alarms",
1:"Container is full", 2:"Container is empty"' -->
<!-- AWP_Enum_Ref Name='"Alarm"' Enum="AlarmEnum" -->
...
<p> The current value of "Alarm" is :="Alarm": </p>
```

If the value of "Alarm" in the CPU is 2, the HTML page shows 'The current value of "Alarm" is container is empty' because the definition of the enum type assigns the numerical value 2 to the character sequence "Container is empty".

Example for use when writing a tag

```
<!-- AWP_Enum_Def Name='AlarmEnum' Values='0:"No alarms",
1:"Container is full", 2:"Container is empty"' -->
<!-- AWP_In_Variable_Name='"Alarm"' -->
<!-- AWP_Enum_Ref Name='"Alarm"' Enum="AlarmEnum" -->
...
<form method="post">
<p><input type="hidden" name ='"Alarm"' value='Container is full'
/></p>
<p><input type="submit" value='Set container is full' /></p>
</form>
```

The value 1 is written to the PLC tag "Alarm" because the definition of the enum type assigns the numerical value 1 the text "Container is full".

Keep in mind that the name specified in "AWP_In_Variable" must be exactly the same in "AWP_Enum_Ref".

3.11.1.4 Fragments

Fragments

Fragments are "short paragraphs" of a website that the CPU processes separately.

Fragments are usually entire pages, but they can be individual elements, such as files (e.g. images) or documents.

Note

In each fragment in which enum texts are referenced by a PLC tag, this PLC tag must be assigned to the enum type name with the appropriate AWP command.

Defining fragments

A fragment extends to the beginning of the next fragment or to the end of the file.

Syntax

```
<!-- AWP_Start_Fragment_Name='<Name>' [Type="<Typ>"] [ID="<Id>"] -->
```

This command specifies the start of a fragment.

- <Name> Specifies the name of the fragment. The name must start with a letter [a-zA-Z] or an underscore (_). This first character can be followed by letters, underscores or numbers [0-9].
- <Type> Specifies the type of the fragment.
  - "manual": The user program is notified of the request for a fragment and can react accordingly. The function of the fragment must be controlled with STEP 7 and the tags of the control DB.
  - "automatic": The page is automatically processed (default)
- <Id> You can specify a numerical ID for the fragment. If no ID is assigned, the fragment is automatically assigned an ID. For manual pages (<Type>=manual), the fragment can be addressed with this ID in the user program of the CPU.

  Note

  ID assignment

  Set the ID as low as possible because the highest ID influences the size of the Web control DB.

- <Modus>
  - "visible": The contents of the fragment are displayed on the user page (default).
  - "hidden": The contents of the fragment are **not** displayed on the user page.

Importing fragments

You can specify a fragment in an HTML page and import this fragment into other websites.

Note

Ensure that no AWP command for importing fragments is positioned between an enum assignment and enum usage, because this import can result in the enum assignment being located in a different fragment than the enum usage.

Example

A company logo is to be displayed on all websites of a web application.

The HTML code for the fragment that displays the company logo exists only once. You can import the fragment as often and into as many HTML files as necessary.

Syntax

```
<!-- AWP_Import_Fragment_Name='<Name>' -->
```

<Name> corresponds to the name of the fragment to be imported.

Example

HTML code within a website that creates a fragment for displaying an image:

```
<!-- AWP_Start_Fragment Name='My_company_logo' -->
<p><img src="Company logo.jpg"></p>
```

HTML code that imports the created fragment into another website:

```
<!-- AWP_Import_Fragment Name='My_company_logo' -->
```

3.11.1.5 Arrays

Arrays

The Web server provides the user program commands AWP_Start_Array and AWP_End_Array for accessing all values of an array.

Only one-dimensional arrays are supported.

Multidimensional arrays of the form array[x][y] are not supported.

Syntax

```
<!-- AWP_Start_Array Name='"<DB name>".<array name>' -->
... Content of the array, utilized keywords: ArrayIndex and value..
<!-- AWP_End_Array -->
```

Parameter

- <Name> defines the name of the array with the elements you want to access.
  - You require the DB name and the name of the array corresponding to the data block structure defined in STEP 7.
  - The name must be within single or double quotation marks.
  - The DB name is within double quotation marks.
- <ArrayIndex> Index of an array element
- <value> Value of an array element

Example

The example reads all elements of the "MyArray" structure in the "DB_Name" data block of the CPU and displays the index and the values of the tags on the user-defined web page.

DB_Name

	Name	Data type	Start value
1	Static		
2	myArray	Array [0..2] of Int	
3	myArray[0]	Int	42
4	myArray[1]	Int	43
5	myArray[2]	Int	44

```
<!-- AWP_Start_Array Name='"DB_Name".MyArray' -->
Index: :=ArrayIndex: Value: :=value:
<!-- AWP_End_Array -->
```

The code indicated above generates the following display:

Index: 1 Value: 42

Index: 2 Value: 43

Index: 3 Value: 44

Representation of arrays of the BOOL data type

The output of arrays of the BOOL type is always filled to the next full 8 bits. This particular feature only occurs with BOOL arrays.

Example:

```
"DB_1".bitArray is a BOOL array with 5 elements.
<!-- AWP_Start_Array Name='"DB_1".bitArray' -->
:=ArrayIndex: -> :=value:
<!-- AWP_End_Array -->
```

Edition:

0 -> Value from "DB_1".bitArray[0]

1 -> Value from "DB_1".bitArray[1]

2 -> Value from "DB_1".bitArray[2]

3 -> Value from "DB_1".bitArray[3]

4 -> Value from "DB_1".bitArray[4]

5 -> 0

6 -> 0

7 -> 0

3.11.1.6 Structures

Structures

The Web server provides user program commands for accessing structures in order to access the values of a PLC tag of the STRUCT data type.

Syntax

```
<!-- AWP_Start_Struct Name='"<DB name>".<struct name>' -->
... Content of structure ...
<!-- AWP_End_Struct -->
```

Parameter

- <Name> defines the name of the structure with the elements you want to access.
  - You require the DB name and the name of the structure corresponding to the data block structure defined in STEP 7.
  - The name must be within single or double quotation marks.
  - The DB name is within double quotation marks.

Example

The example reads elements of the "MyStruct" structure in the "DB_Name" data blocks of the CPU and displays the value of the tag on the user-defined web page.

DB_Name1

		Name	Data type	Start value
1		Static		
2		myStruct	Struct	
3		A	Int	0
4		B	Word	16#0
5		C	Bool	false

```
<!-- AWP_Start_Struct Name='"DB_Name".MyStruct' -->
:=A:
:=B:
:=C:
<!-- AWP_End_Struct -->
```

The code indicated above corresponds to the following commands:

```
:="DB_Name".MyStruct.A:
:="DB_Name".MyStruct.B:
:="DB_Name".MyStruct.C:
```

3.11.2 Configuring user pages

Configuring user pages

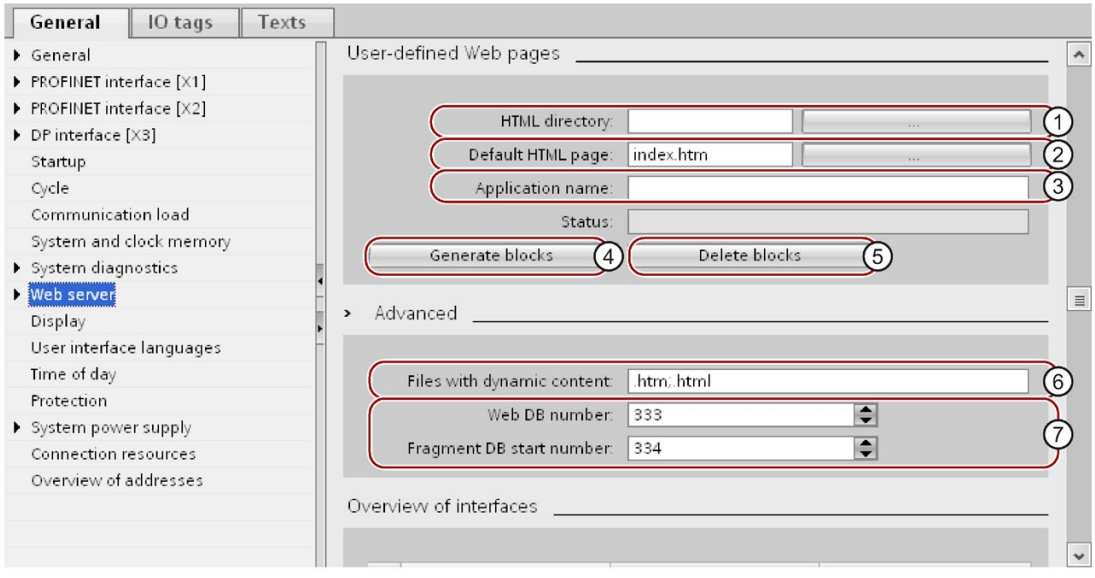

Figure 3-38 Configuring user pages in STEP 7

Proceed as follows to configure the user pages in STEP 7:

1. Select the CPU in the device configuration.
2. Open the settings in the Inspector window of the CPU under "Properties > General > Web server".
3. In the area "User pages" under ① "HTML directory", select the folder on your display device in which you have saved your HTML page.
4. Enter the name of the HTML page under ② "Start HTML page" that is to open when you start the application.
5. You can also specify a name for your application under ③ "Application name". This name is used to further divide or group the webpages. If an application name already exists, the URL is displayed in the following format: http://a.b.c.d/awp/<application name>/<page name>.html
6. In the "Extended" area, enter the file extensions that have to be checked for AWP commands in input box ⑥ "Files with dynamic contents". By default, STEP 7 analyses files with the extensions ".js", ".htm" and ".html". Here you can enter other file extensions that you have used when creating your user page.
7. You can accept the number for the Web DB ⑦ and the fragment DB start number ⑦ or you can assign a new number of your choice that is not assigned.
8. Click the button ④ "Create blocks" to create data blocks from the source files. The created data blocks are stored in the STEP 7 project tree in the folder "System blocks > Web server". These data blocks consist of a control data block (Web control DB) that controls the display of the webpages and one or several data block fragments (fragment DBs) with the compiled webpages.
9. In the network view, select the CPU you want to download and select the command "Download to device" in the "Online" menu to download the blocks. The compilation of the blocks is implicitly triggered before the download. If errors are signaled during this process, they must be remedied before you can download the configuration.

Deleting data blocks

Click the "Delete block" button ⑤ to delete previously generated data blocks. STEP 7 deletes the Web Control DB and all fragment DBs from the project containing your user pages.

3.11.3 Programming the WWW instruction

The WWW instruction

The WWW instruction initializes the Web server of the CPU or synchronizes the user pages with the user program in the CPU. The Web control DB is the input parameter for the WWW instruction and specifies the content of the pages as they are displayed in the fragment DBs as well as the status and control information. STEP 7 creates the Web control DB when you click the button "Create blocks".

Note

DB number of the web control DB.

If you change the DB number of the DB 333, the user pages in the Web server can no longer be reached at renewed downloading into the CPU. Error code W#16#007F is output at the parameter RET_VAL. Therefore observe the default setting DB 333 for the Web Control DB.

If you want to change the DB number nevertheless, you have to switch the CPU POWER-OFF → POWER ON, so that the user pages in the Web server can be reached.

Programming the WWW instruction

The user program must execute the WWW instruction so that the user pages can be accessed in the Web server.

Table 3- 7 WWW instruction

LAD/FBD	SCL	Description
	`ret_val :=WWW(ctrl_db:=uint_in_) ;`	Access to user pages by means of the Web server

Parameters

The table below shows the parameters of the WWW instruction.

Table 3- 8 Parameters

Parameters	Declaration	Data type	Description
CTRL_DB	Input	DB_WWW	Data block that describes the user pages (Web control DB)
RET_VAL	Output	INT	Error information

RET_VAL parameter

Table 3- 9 RET_VAL

Error code (W#16#...)	Explanation
0000	No error has occurred. There are no pending website requests that must be released by the user program.
00xy	x: indicates if an error occurred during initialization of the Web control DB (CTRL_DB): x=0: No errors occurred. x=1: Error(s) occurred. The error is encoded in the "CTRL_DB.last_error" byte of the Web control DB. y: Number of the pending request. Several requests are possible (e.g., request "0" and "1" are pending: y="3"). y="1": Request "0" y="2": Request "1" y="4": Request "2" y="8": Request "3"
803A	The specified Web Control DB does not exist on the CPU.
8081	Incorrect version or incorrect format of the Web Control DB.
80C1	There are no resources available to initialize the Web application.

3.11.4 Defining the user page as start page

Defining the user page as start page

In addition to the default intro page, you can also define the start page of your user pages as the start page of the Web server.

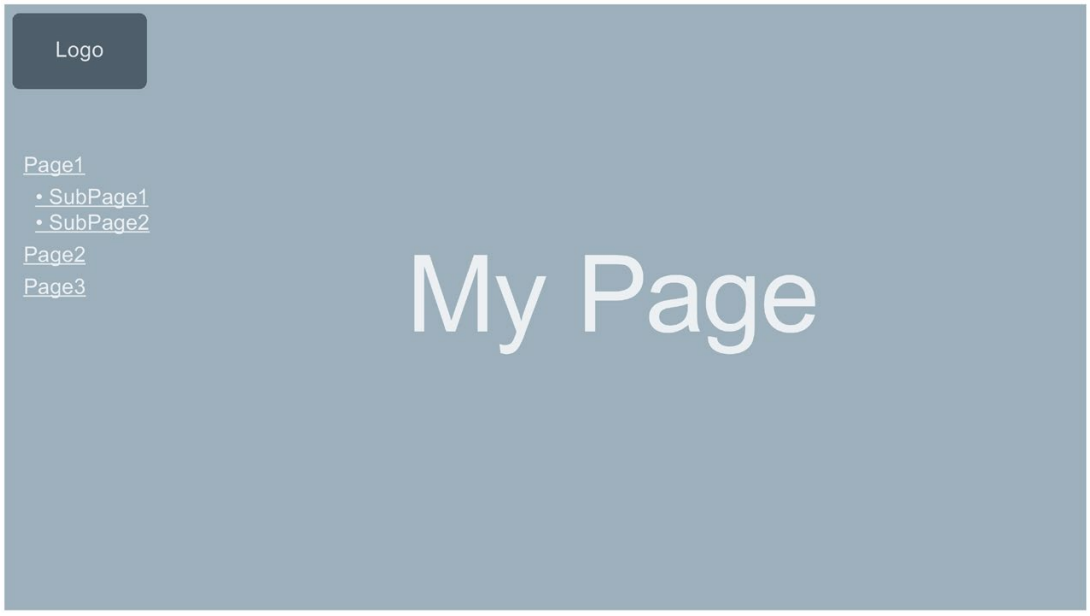

Figure 3-39 Example of user page as start page of the Web server

Requirements

The following requirements must be met before the user page is displayed as the start page of the Web server:

- You have configured the user page as the start page.
- You have configured a user in STEP 7 whom you have assigned at least the authorization "... open user-defined web pages".
- The CPU is in RUN mode.

Procedure

Proceed as follows to define the user pages in STEP 7 as start page of the Web server:

1. Select the CPU in the device configuration.
2. Open the settings in the Inspector window of the CPU under "Properties > General > Web server".
3. Select the entry "AWP1" in the area "Entry page" under "Select entry page".

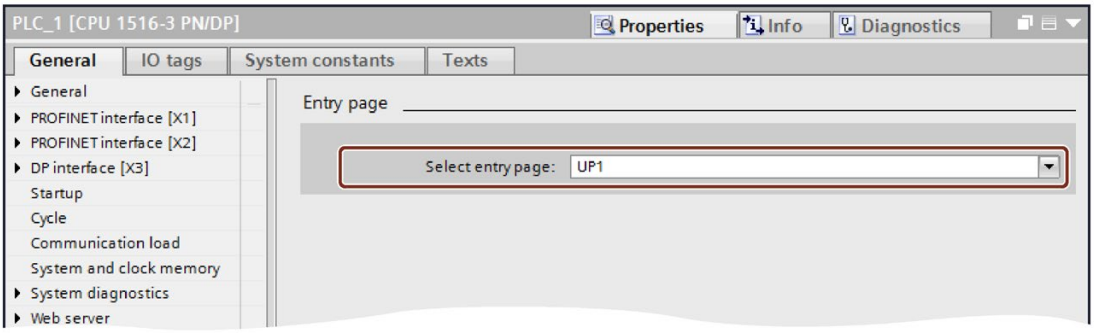

Figure 3-40 Setting user page in STEP 7 as start page

4. Download the configuration to the CPU.

If you now enter the IP address of the CPU in the browser, a connection is automatically established to your user pages.

If you want to access the web pages of your CPU again, link the web pages from your user pages, via the URL "http://a.b.c.d./Portal/Portal.mwsl?PriNav=Start" or "https://a.b.c.d/Portal/Portal.mwsl?PriNav=Start" for example. In this case, the information "a.b.c.d" represents, as an example, the IP address of the configured CPU.

Example of link in HTML:

```
<a href="/Portal/Portal.mwsl?PriNav=Start">SIMATIC web pages</a>
```

Note

If you define your user page as start page of the Web server, all direct access to the web pages of the CPU is disabled. This applies also to the bookmarks you saved for the web pages of the CPU as well as the page for reading out the service data.

Reading out service data

If you define your user page as start page of the Web server, all direct access to the web pages for reading out the service data is also disabled.
If you want to continue to read out service data via the Web server when servicing is required, here is how you can link the service data page directly to your user page.
Just as for the web pages of the CPU, link the service data page e.g. via the URL "http://a.b.c.d/save_service_data" or "https://a.b.c.d/save_service_data", the "a.b.c.d" here is an example of the IP address of the configured CPU.

Example of link in HTML:

```
<a href="/save_service_data">Service data</a>
```

Reference

You can find additional information on the topic of user page as start page in the FAQ with entry ID 67184104 on the Service&Support (https://support.industry.siemens.com/cs/ww/en/view/67184104) Internet page.

3.11.5 Example of a user page

3.11.5.1 Website for monitoring and controlling a wind turbine

Example of a user page

Here you see a user page for monitoring and controlling a wind turbine:

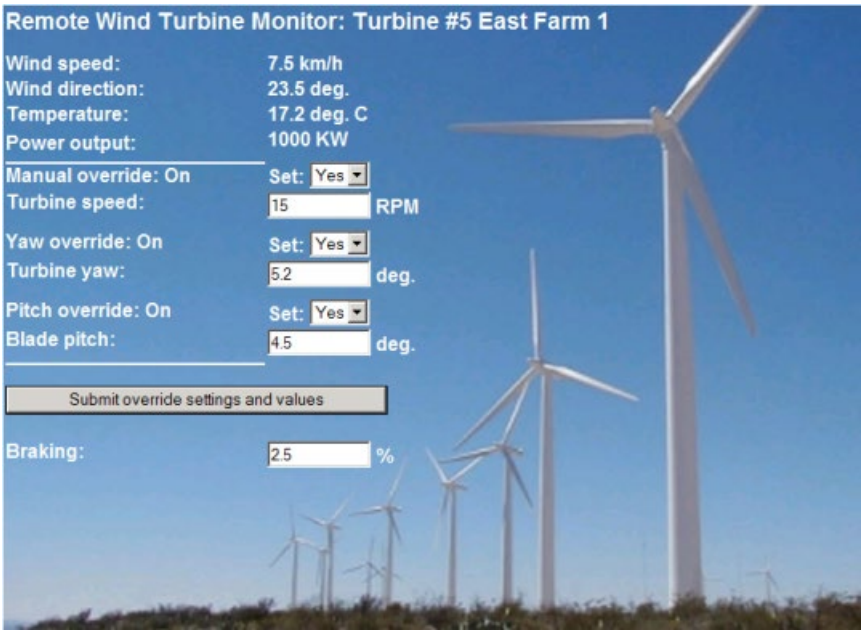

Figure 3-41 Overview of user page wind turbine

The user page was created in English in this example, but you can select any language you wish when you create your own user page.

In this application, each wind turbine of the wind farm has a data block in STEP 7 with specific data for the respective location and the turbine.

The user page gives you the option to access the turbine remotely with a display device. A user can open the standard websites for a CPU of a specific wind turbine and go to the "Remote Wind Turbine Monitor" user page to view the turbine data. A user with the corresponding access permissions can also set the turbine into the manually controlled mode and thus control the tags for speed, orientation and angle of attack of the turbine by means of the website. The user can also specify a brake value regardless of manual or automatic control of the turbine.

STEP 7 checks the Boolean values for override of the automatic control and, if set, uses the values for speed, orientation and angle of attack of the turbine as defined by the user.

Files used

Three files are used in the application example:

- Wind_turbine.html: The user page in the figure shown above. The control data is accessed by AWP commands.
- Wind_turbine.css: The Cascading Style Sheet which includes the formatting specifications of the user page. The use is optional but can simplify the design of the user page.
- Wind_turbine.jpg: The background image displayed on the user page. The use of images is optional, user pages with lots of images require a lot more memory in the load memory.

These files are not part of your installation but they are described as an example below.

Implementation

The user page uses AWP commands to read out values from the CPU as well as writing values to it. The user page also uses AWP commands for the definition of enum types, such as the assignment of tags to enum types for handling the ON/OFF settings.

The user page is structured as follows:

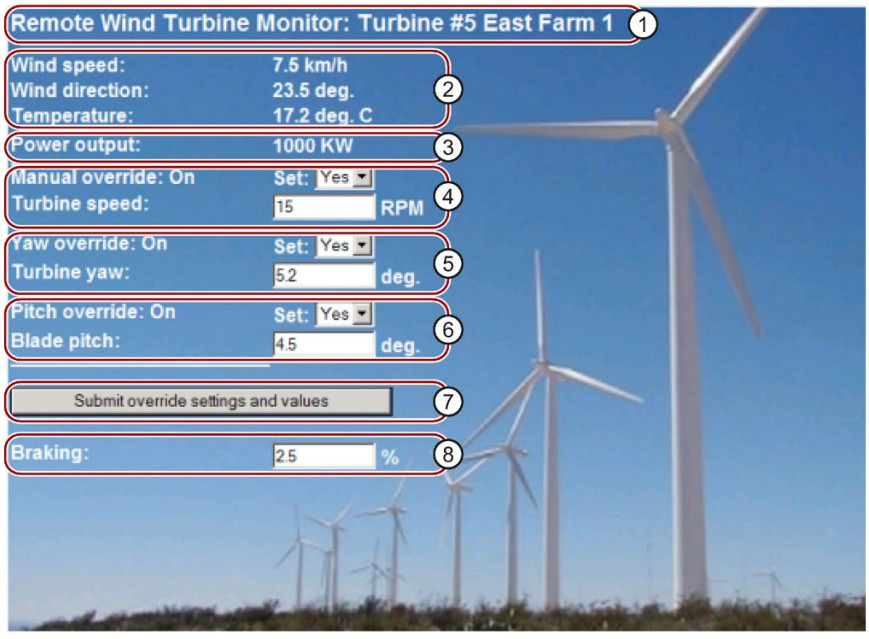

① Header of the website with number and location of the wind turbine.

② Atmospheric conditions at the turbine, wind speed, wind direction and current temperature are displayed.

③ Read-out power output.

④ Manual override: Activates manual override of the turbine. To make manual settings for speed, orientation and angle of attack, the STEP 7 user program requires that manual override has been activated.

⑤ Override of the orientation: Activates manual override of the turbine orientation.

⑥ Override of the angle of attack: Activates manual override of the angle of attack of the rotor blades.

⑦ By clicking this button, you transfer the override settings to the CPU.

⑧ Manual setting of a percentage value for braking. The setting "Manual override" is not required to enter a brake value.

Figure 3-42 Overview of user page wind turbine

The user page also uses an AWP command which writes the special tag into the tag table; it includes the user ID of the user who currently accesses the page.

3.11.5.2 Reading and displaying data from the CPU

Example HTML code for reading out and displaying data from the CPU

This part of the HTML code is used for displaying the power output on the user side.

The text "Power Output:" is displayed on the left-hand side; on the right-hand side, the value of the tags for the power output including the unit ("KW") is displayed.

The AWP command `:="Data_block_1".PowerOutput` executes the reading operation. The data block is referenced by its symbolic name here and not by its number ("Data_block_1" instead of "DB1").

The code used in the example is:

```
<tr style="height:2%;">
<td>
<p>Power output:</p>
</td>
<td>
<p style="margin-bottom:5px;"> :="Data_block_1".PowerOutput: KW</p>
</td>
</tr>
```

See also

PLC tags (Page 82)

3.11.5.3 Using enum types

Definition of enum types

The described user page uses enum types in three locations. "On" or "Off" is displayed for a Boolean value at these locations.

The enum type for "On" results in a value of 1; the enum type for "Off" results in a value of 0. The following excerpts from the HTML code of the user page show the declaration of an enum type with the name "OverrideStatus" and the values "0" and "1" for "Off" or "On" as well as the specification of an enum type reference of "OverrideStatus" for the tag "ManualOverrideEnable" in the data block "Data_block_1".

Note

Assignment of enum types

If the user page writes into a tag by using an enum type, there has to be a declaration "AWP_In_Variable" for each "AWP_Enum_Ref" declaration.

The code used in the example is:

```
<!-- AWP_In_Variable_Name='"Data_block_1".ManualOverrideEnable' -->
<!-- AWP_Enum_Def_Name="OverrideStatus" Values='0: "Off",1:"On"' -->
<!-- AWP_Enum_Ref_Name='"Data_block_1".ManualOverrideEnable'
Enum="OverrideStatus" -->
```

The following code describes a display box for displaying the current status of "ManualOverrideEnable". A normal read command for tags is used but because of the declared and referenced enum type, the website displays the values "On" and "Off" instead of "1" and "0".

```
<td style="width:24%; border-top-style: Solid; border-top-width:
2px; border-top-color: #ffffff;">
<p>Manual override: :="Data_block_1".ManualOverrideEnable:</p>
</td>
```

The following code describes a drop-down list for changing "ManualOverrideEnable" by the user. The drop-down list consists of the "Yes" and "No" options that are assigned to the "On" or "Off" values by means of the enum type reference. If you make no selection, the status remains the same.

```
<select name='"Data_block_1"ManualOverrideEnable'>
<option value=':"Data_block_1".ManualOverrideEnable:'> </option>
<option value="On">Yes</option>
<option selected value="Off">No</option>
</select>
```

The drop-down list is included in the form on the website. The form is uploaded, when the user clicks on the "Send" button. If the user has selected "Yes", the value "1" is written in the tag "ManualOverrideEnable" in the "Data_block_1" data block; if the user has selected "No", the value "0" is written.

3.11.5.4 Writing user inputs into the controller

Setting options

The user page "Remote Wind Turbine Monitor" includes different AWP commands for writing data into the controller. A user with the corresponding access permissions can control the wind turbine manually, activate the override for the turbine speed and the turbine orientation as well as the angle of attack of the rotor blades with the declaration of different "AWP_In_Variable" write commands. The user can also specify floating-point numbers for turbine speed, orientation angle of attack and percentage of braking. The user page uses an HTTP command in the format "POST" to write the tags into the controller.

The code used in the example for setting the brake value is:

```
<!-- AWP_In_Variable Name='"Data_block_1"' -->
...
<tr sytle="vertical-align: top; height: 2%;">
<td style="width: 22%;"><p>Braking:</p></td>
<td>
<form method="POST">
<p><input name='"Data_block_1".Braking' size="10" type ="text">
%</p>
</form>
</td>
</tr>
```

This excerpt from the HTML code first defines a "AWP_In_Variable" for the "Data_block_1" data block which enables the user page to write any number of tags into the data block. The text "Braking:" is displayed on the left-hand side; on the right-hand side is a box in which the user can make entries for the "Braking" tag in the data block.

The user page reads out the actual braking value from the controller and displays it in the text box. A user with the corresponding access permissions can then write a brake value that controls the braking process into the data block of the CPU.

Note

Declaration of data blocks

If you declare an entire data block by means of a "AWP_In_Variable", each tag in the data block can be written by means of the user page. If only certain tags in the data block are to be writable, you declare this specifically using `<!-- AWP_In_Variable Name='"Data_block_1".Braking' -->`, for example.

3.11.5.5 Writing special tags

Using special tags

The user page "Remote Wind Turbine Monitor" writes the special tag "Server:current_user_id" into a tag of the CPU. The tag value contains the value "1" if a user is logged on and "0" if a user is not logged on. In this example, a user is logged on, so the tag value is set to "1". The special tag is written into the CPU by the user page and does not need a user interface.

The code used in the example is:

```
<!-- AWP_in_variable Name="SERVER:current_user_id" Use="User_ID" -->
```

3.11.5.6 HTML code of the user page "Remote Wind Turbine Monitor"

The complete HTML code of the example user page "Remote Wind Turbine Monitor" as well as the used Cascading Style Sheet (CSS) is listed below.

Wind_turbine.html

```
<!DOCTYPE HTML PUBLIC "-//W3C//DTD HTML 4.01 Transitional//EN"
"http://www.w3.org/TR/html4/loose.dtd"><!--
This test program simulates a website for monitoring and operating a
wind turbine.
Required PLC tags and data block tags in STEP 7:
PLC tag:
User_ID: Int
Data blocks:
Data_block_1
Tags in Data_Block_1:
TurbineNumber: Int
WindSpeed: Real
WindDirection: Real
Temperature: Real
PowerOutput: Real
ManualOverrideEnable: Bool
TurbineSpeed: Real
YawOverride: Bool
Yaw: Real
PitchOverride: Bool
Pitch: Real
Braking: Real
The user-defined website shows the current values for the PLC data
and offers a drop-down list to specify the three Boolean values with
the assigned enumeration type. The selected Boolean values as well
as the data text boxes for speed, orientation and angle of attack of
the turbine are uploaded with the "Send" button. The brake value can
be specified without the "Send" button.

No actual STEP 7 program is required for using this page. The STEP 7
program would theoretically only respond to the values for speed,
orientation and angle of attack of the turbine, if the assigned
Boolean values were specified. The only requirement for STEP 7 is
that the WWW instruction is called with the DB number of the
generated data blocks for this page.
-->
-->
<!-- AWP_In_Variable Name='"Data_block_1"' -->
<!-- AWP_In_Variable Name='"Data_block_1".ManualOverrideEnable'
Enum="OverrideStatus" -->
<!-- AWP_In_Variable Name='"Data_block_1".PitchOverride'
Enum="OverrideStatus" -->
<!-- AWP_In_Variable Name='"Data_block_1".YawOverride'
Enum="OverrideStatus" -->
<!-- AWP_In_Variable Name="SERVER:current_user_id" Use="User_ID"-->
<!-- AWP_Enum_Def Name="OverrideStatus" Values='0:"Off",1:"On"' -->
```

```
<html>
<head>
<meta http-equiv="content-type" content="text/html;
charset=utf-8"><link rel="stylesheet" href="Wind_turbine.css">
<title>Remote monitoring of wind turbines
    </title>
 <body>
<table cellpadding="0" cellspacing="2">
<tr style="height: 2%;">
<td colspan="2">
<h2>Remote Wind Turbine Monitor: Turbine
#:="Data_block_1".TurbineNumber:</h2>
</td>
<tr style="height: 2%;"><td style="width: 25%;"><p>Wind speed:</p></
td>
<td><p> :="Data_block_1".WindSpeed: km/h</p></td>
</tr>
<tr style="height: 2%;">
<td style="width: 25%;"><p>Wind direction:</p></td>
<td><p> :="Data_block_1".WindDirection: deg.</p></td>
</tr>
<tr style="height: 2%;"><td style="width:
25%;"><p>Temperature:</p></
td>
<td><p> :="Data_block_1".Temperature: deg. C</p></td>
</tr>
<tr style="height: 2%;">
<td style="width: 25%;"><p>Power output:</p></td>
<td><p style="margin-bottom:5px;"> :="Data_block_1".PowerOutput:
kW</p>
</td>
</tr>
<form method="POST" action="">
<tr style="height: 2%;" >
<td style="width=25%; border-top-style: Solid; border-top-width:
2px; border-top-color: #ffffff;">
<p>Manual override: :="Data_block_1".ManualOverrideEnable:</p>
</td>
<td class="Text">Set:
<select name='"Data_block_1".ManualOverrideEnable'>
<option value=':="Data_block_1".ManualOverrideEnable:'> </option>
<option value="On">Yes</option>
<option value="Off">No</option>
</select>
</td>
</tr>
<tr style="vertical-align: top; height: 2%;"><td style="width:
25%;"><p>Turbine speed:</p></td>
<td>
<p style="margin-bottom:5px;"><input
name='"Data_block_1".TurbineSpeed' size="10"
value=':="Data_block_1".TurbineSpeed:' type="text"> RPM</p>
</td>
</tr>
<tr style="vertical-align: top; height: 2%;">
```

```
<td style="width: 25%;">
<p>Yaw override: :="Data_block_1".YawOverride: </p>
</td>
<td class="Text">Set:
<select name='"Data_block_1".YawOverride'>
<option value=':="Data_block_1".YawOverride:'> </option>
<option value="On">Yes</option>
<option value="Off">No</option>
</select>
</td>
</tr>
<tr style="vertical-align: top; height: 2%;">
<td style="width: 25%;">
<p>Turbine yaw:</p>
</td>
<td>
<p style="margin-bottom:5px;"><input name='"Data_block_1".Yaw'
size="10" value=':="Data_block_1".Yaw:' type="text"> deg.</p>
</td>
</tr>
<tr style="vertical-align: top; height: 2%;">
<td style="width: 25%;">
<p>Pitch override: :="Data_block_1".PitchOverride: </p>
</td>
<td class="Text">Set:
<select name='"Data_block_1".PitchOverride'>
<option value=':="Data_block_1".PitchOverride:'> </option>
<option value="On">Yes</option>
<option value="Off">No</option>
</select>
</td>
</tr>
<tr style="vertical-align: top; height: 2%;">
<td style="width=25%; border-bottom-style: Solid; border-
bottomwidth:
2px; border-bottom-color: #ffffff;">
<p>Blade pitch:</p>
</td>
<td>
<p style="margin-bottom:5px;"><input name='"Data_block_1".Pitch'
size="10" value=':="Data_block_1".Pitch:' type="text"> deg.</p>
</td>
</tr>
<tr style="height: 2%;">
<td colspan="2">
<input type="submit" value="Submit override settings and values">
</td>
</tr>
</form>
<tr style="vertical-align: top; height: 2%;">
<td style="width: 25%;"><p>Braking:</p></td>
<td>
<form method="POST" action="">
<p> <input name='"Data_block_1".Braking' size="10"
value=':="Data_block_1".Braking:' type="text"> %</p>
```

```
</form>
</td>
</tr>
</table>
</body>
</html>
```

Wind_turbine.css

```
BODY {
    background-image: url('./Wind_turbine.jpg')
    background-position: 0% 0%;
    background-repeat: no-repeat;
    background-size: cover;
H2 {
    font-family: Arial;
    font-weight: bold;
    font-size: 14.0pt;
    color: #FFFFFF;
    margin-top:0px;
    margin-bottom:10px;
}
P {
    font-family: Arial;
    font-weight: bold;
    color: #FFFFFF;
    font-size: 12.0pt;
    margin-top:0px;
    margin-bottom:0px;
}
TD.Text {
    font-family: Arial;
    font-weight: bold;
    color: #FFFFFF;
    font-size: 12.0pt;
    margin-top:0px;
    margin-bottom:0px;
}
```

3.12 Filebrowser

Requirements

Access rights must be assigned for the user in the user management.

Filebrowser

The browser displays the content of the SIMATIC memory card on the "Filebrowser" web page. This means, for example, that you can read and edit the log files generated by the CPU without having to use STEP 7.

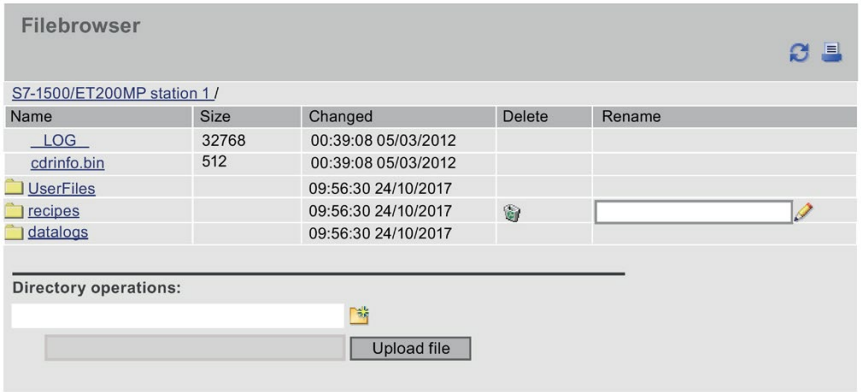

Figure 3-43 Filebrowser view

The Filebrowser lists all existing files and directories on the SIMATIC memory card. You can download, delete, rename and upload the files. You can create, delete and rename the directories.

Note

The Filebrowser only grants you read access to the “DataLogs”, "Backups" and “UserFiles” directories.

Exception system files

The system files include the job file and all special directories including their contents to which the job file refers. System files are not displayed, and cannot be changed or deleted.

3.13 DataLogs

DataLogs

On the DataLogs web page, you can view all the DataLogs that you have created.

You can sort the DataLogs according to individual parameters in ascending or descending order.
For this purpose, click on one of the parameters in the column header:

- Name
- Size
- Changed

You can download the relevant DataLog file by clicking the file name.

The "Active" column shows whether the respective DataLog file is used (is active) or not.

When the DataLog file is active, you can call (download) and empty the relevant DataLog file by clicking the icon . The file must be closed. The empty DataLog file is still maintained in the list of DataLogs.

You delete the DataLog file by clicking the icon in the "Delete" column. The file must be closed.

You close an opened DataLog file in STEP 7 by using the "DataLogClose" instruction.

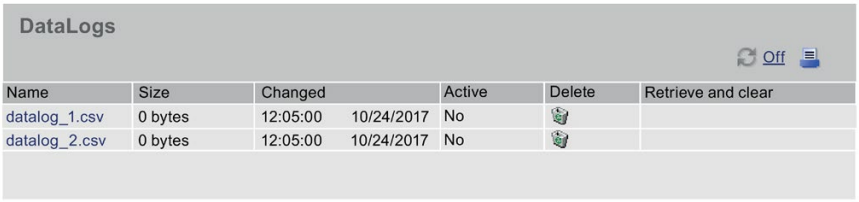

Figure 3-44 DataLogs

3.13.1 Automated reading out of DataLogs

In addition to the downloading of individual DataLogs via the user interface of the Web server, you can download, read out and archive DataLogs. Automatic downloading of DataLogs is realized either by the execution of scripts in, for example, Bash or on your HTML user page via JavaScript.

A typical application for this functionality is the daily reading out and archiving of DataLogs from one or more CPUs at a specific time.

Calling up of the DataLogs from the SIMATIC memory card

The CPU makes a URL in the following format available so that you can download DataLogs automatically from the SIMATIC memory card of your CPU:
`http[s]://[ip]/DataLogs?Action=List`

Enter the correct IP address of the interface of your CPU at this URL and use the appropriate transfer protocol (HTTP or HTTPS), for example `https://192.168.2.132/DataLogs?Action=LIST`. Subsequently call up the URL in your browser or command line interpreter.

The URL returns a list of the DataLogs on the SIMATIC memory card. Each entry returns the URL by which you download the corresponding DataLog.

For simple syntax analysis of the list by command line interpreters (such as Bash) or web-based programming languages (such as JavaScript) the individual URLs are separated by a line break `<CR><LF>`. The following example shows the syntax of two URLs that access the DataLog files `Test.txt` and `Test2.txt`:

```
/DataLogs?Path=/DataLogs/Test.txt&Action=DOWNLOAD&E=1<CR><LF>

/DataLogs?Path=/DataLogs/Test2.txt&Action=DOWNLOAD&E=1<CR><LF>

<CR><LF>
```

When the URLs are called successfully, the CPU returns the status code `200 OK`. The CPU also returns this status code if no DataLogs exist on the SIMATIC memory card.

Note

Access authorization to the CPU for the reading out of data

In order to download DataLogs from the CPU, the user has to dispose of reading rights on the CPU. If the user does not have the required rights, the CPU returns the status code `403 FORBIDDEN` in the HTTP Response.

Downloading of the DataLogs via Bash scripts

The following example shows how you can download DataLogs automatically from the CPU by using a Bash script. Replace the URL of the example by the correct IP address of the interface of your CPU at this URL and use the appropriate transfer protocol (HTTP or HTTPS).

```
wget --content-disposition -i
"http://192.168.2.132/DataLogs?Action=LIST"
```

Downloading of the DataLogs via JavaScript

The following example shows how you can download DataLogs automatically by using JavaScript. Replace the URL of the example by the correct IP address of the interface of your CPU at this URL and use the appropriate transfer protocol (HTTP or HTTPS).

```
<html>
 <head>
  <title>DataLog JavaScript Test</title>
  <script type="text/javascript" src="jquery-
1.12.4.min.js"></script>
 </head>
 <body>
  <h1>DataLog JavaScript Test</h1>
  <div><button id="load">Load DataLogs</button></div>
  <div><ul id="list"></ul></div>
  <script type="text/javascript">
   $('#load').click(function(){
    $.get('http://192.168.2.132/DataLogs', {'Action': 'LIST'},
     function(data){
      $('#list').empty();
      $.each(data.split(/\r\n/), function(){
       if (this.length == 0) continue;
       $('#list').append('<li><a href="http://192.168.2.132' +
        this + '">' + this + '</a></li>');
      });
     });
    });
  </script>
 </body>
</html>
```

3.14 UserFiles

Introduction

You read and write with the instructions "FileReadC" (Compact Read Data of a File) or "FileWriteC" (Compact Write Data to a File) in STEP 7 ASCII files (files in binary format).

Requirements

You need to save the UserFiles in the "UserFiles" directory on the SIMATIC memory card. You specify the storage location in the path of the "FileReadC" or "FileWriteC" instruction.

Path and file name for UserFiles have to fulfill the following rules:

- The file name must not be longer than 55 characters.
- The following characters are permitted for the directory and file name: 0 to 9, a to z in upper- and lower-case, "-" and "_"
- The path name must not start with "/", "\" or "."
- The path name must not contain ".."

Examples:

- UserFiles\Lift16_DataBase.txt
- UserFiles\2017-04-13_ErrorLog.bin

"User files" Web page

The browser displays the content of the SIMATIC memory card, directory UserFiles\ on the "User files" Web page.

You can sort the UserFiles according to the individual parameters in ascending or descending order.
To do this, click on one of the parameters in the column header:

- Name
- Size
- Changed

You can download, delete, and upload files.

You download the UserFile by clicking the file name.

By clicking on the ✕ icon, you can delete the UserFile. The file must be closed.

Figure 3-45 User files view

NOTICE
Size UserFiles When you open a large UserFile through this Web page, the processing times of the instructions that process this file can increase notably.

3.14.1 Reading or upload user files automatically

In addition to the Web server's user interface, you can automatically list, delete, download and upload UserFiles. Use JavaScript or Bash for this, for example.

Opening UserFiles from the SIMATIC memory card

The CPU makes a URL in the following format available so that you can list UserFiles automatically from the SIMATIC memory card of your CPU:
`http[s]://[ip]/UserFiles?Action=List`

Enter the correct IP address of the interface of your CPU at this URL and use the appropriate transfer protocol (HTTP or HTTPS), e.g. `https://192.168.2.132/UserFiles?Action=LIST`. Subsequently call up the URL in your browser or command line interpreter.

The URL returns a list of the UserFiles on the SIMATIC memory card. Each entry returns the URL by which you download or delete the corresponding UserFile from the CPU. The actions to be performed are separated by a vertical line "|".

For simple syntax analysis of the list by web-based programming languages (such as JavaScript), the individual URLs are separated by a line break `<CR><LF>`. The following example shows the syntax of two URLs that access the UserFiles `File1.csv` and `File2.csv`:

```
File1.csv|/UserFiles?Name=File1.csv&Action=DOWNLOAD&E=1|/UserFiles?Name=File1.csv&Action=DELETE&E=1<CR><LF>

File2.csv|/UserFiles?Name=File2.csv&Action=DOWNLOAD&E=1|/UserFiles?Name=File2.csv&Action=DELETE&E=1<CR><LF>

<CR><LF>
```

When the URLs are called successfully, the CPU returns the status code `200 OK`. The CPU also returns this status code if there are no UserFiles on the SIMATIC memory card.

Note

Access authorization to the CPU for the reading out of data

In order to download UserFiles from the CPU, the user must have reading rights for the CPU. If the user does not have the required rights, the CPU returns the status code `403 FORBIDDEN` in the HTTP Response.

Uploading UserFiles to the SIMATIC memory card

The CPU makes a URL in the following format available so that you can upload UserFiles automatically to the SIMATIC memory card of your CPU:
`http[s]://[ip]/UserFiles?Action=UPLOAD`

The following example shows how you can upload a UserFile to your HTML user page automatically using JavaScript.

Replace the URL of the example by the correct IP address of the interface of your CPU at this URL and use the appropriate transfer protocol (HTTP or HTTPS).

```
<html>
 <head>
  <title>UserFiles Upload</title>
 </head>
 <body>
  <form method="POST"
action="https://192.168.2.132/UserFiles?Action=UPLOAD&E=1"
enctype="multipart/form-data">
   <input type="file" name="File" />
   <input type="submit" />
  </form>
 </body>
</html>
```

When the upload of the UserFile is successful, the CPU returns the status code `201 CREATED`. If the UserFile already exists on the SIMATIC memory card, the CPU returns the status code `409 CONFLICT`.

Note

Access authorization to the CPU for uploading data

In order to download UserFiles to the CPU, the user must have write rights for the CPU. If the user does not have the required rights, the CPU returns the status code `403 FORBIDDEN` in the HTTP Response.

Downloading UserFiles via Bash scripts

The following example shows how you can download UserFiles automatically from the CPU using a Bash script. Replace the URL of the example by the correct IP address of the interface of your CPU at this URL and use the appropriate transfer protocol (HTTP or HTTPS).

```
wget --content-disposition -i
"http://192.168.2.132/UserFiles?Action=LIST"
```

Downloading UserFiles via JavaScript

The following example shows how you can download UserFiles automatically using JavaScript. Replace the URL of the example by the correct IP address of the interface of your CPU at this URL and use the appropriate transfer protocol (HTTP or HTTPS).

```
<html>
 <head>
  <title>UserFiles JavaScript Test</title>
  <script type="text/javascript" src="jquery-
1.11.2.min.js"></script>
 </head>
 <body>
  <h1>UserFiles JavaScript Test</h1>
  <div><button id="load">Load UserFiles</button></div>
  <table
border="1"><thead><th>Name</th><th>Operation</th></thead><tbody
id="list"></tbody></div>
  <div><form method="POST"
action="http://192.168.2.132/UserFiles?Action=UPLOAD&E=1"
enctype="multipart/form-data"><input type="file" name="File"
/><input type="submit" /></form></div><br>
  <script type="text/javascript">
   function Delete(url) {
    $.post('http://192.168.2.132/UserFiles' + url, {}, function(){
     $('#load').click();
    });
   }
   $('#load').click(function(){
    $('#list').empty();
    $.get('http://192.168.2.132/UserFiles', {'Action': 'LIST'},
function(data){
     $.each(data.split(/\r\n/), function(){
      var data = this.split("|");
      if (data.length == 3)

$('#list').append('<tr><td>'+decodeURIComponent(data[0])+'</td><td><
a href="http://192.168.2.132'+data[1]+'">Download</a><br><button
type="button"
onclick="Delete(\''+data[2]+'\')">Delete</button></td></tr>');
     });
    });
   });
  </script>
 </body>
</html>
```

3.15 Online backup

Backing up and restoring the CPU configuration

You can back up a CPU configuration using the Web server with the corresponding access rights. If necessary, you can also restore this configuration at a later time using the Web server.

You can create as many backups as you want and store a variety of configurations for a CPU.

NOTICE
Prior to every restoration of the CPU configuration, always first perform an online backup of the current CPU configuration and save this backup file to a local directory of your PC. This ensures that you can undo a restoration which failed (e.g. due to a damaged backup file) or which does not show the desired result.

Note

You can also perform online backup and restoration of the CPU configuration in STEP 7 (see online help for STEP 7, keyword: "Creating a backup of an S7 CPU").

With a backup using STEP 7, the backup file is saved within the STEP 7 project. With a backup using the Web server, the backup file is saved to a local directory of your PG/PC (e.g. "Downloads" directory). Web server backup files cannot be restored via STEP 7, nor can STEP 7 backup files be restored directly using the Web server.

To restore a STEP 7 backup file using the Web server, first save the STEP 7 backup file to a local directory of your PG/PC (e.g. "Downloads" directory). From there, you can restore the backup with the Web server.

Requirements

- You access the CPU via the secure transmission protocol "HTTPS".
- A valid CA-signed certificate is installed in the Web browser; see section Configuring the Web server (Page 21).

Online backup

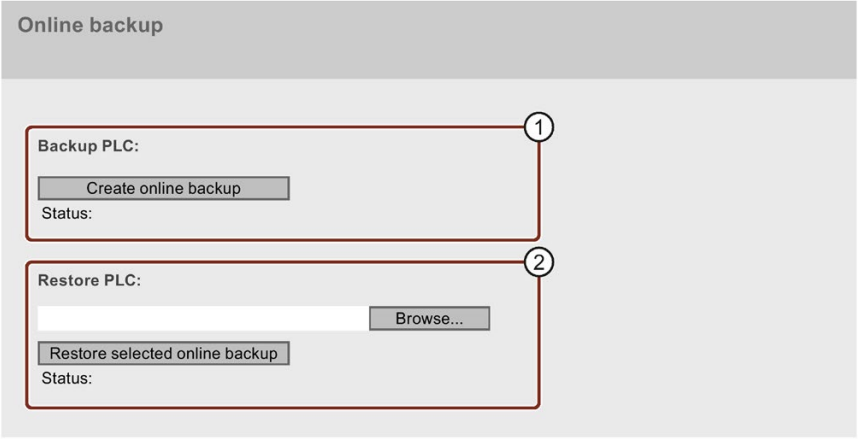

Figure 3-46 Online backup

① Perform online backup of the configuration

To perform an online backup of the CPU configuration, proceed as follows:

1. Click the "Create online backup" button in the "PLC backup" area.
2. If the CPU is in RUN mode, the following alarm is output:
   "Creation of an online backup requires PLC STOP. Do you want to set the PLC to STOP mode?"

   Acknowledge the alarm output by clicking "OK". The CPU is set to STOP mode and online backup is performed. (If you click "Cancel", the CPU remains in the current mode and the online backup is canceled.)
3. Save the backup file to a local directory of your PC.
4. Set the CPU back to RUN mode ("RUN" button in the "CPU operator panel" area of the start page).

Scope of the backup

The backup includes all data needed to restore a particular state of a CPU, i.e. the specific combination of the configuration of the CPU with the current values of the user-related retentive data.

The following data of the configuration of the CPU is backed up:

- The contents of the SIMATIC memory card, e.g. configuration, program code, recipes and archives, DataLogs

The following user-relevant retentive data is backed up:

- Retentive memory areas of data blocks, bit memories, counters and timers
- Front-panel settings, dynamic IP configuration data, operating hours counters, retentive Motion Control sensor data

Note:

- Entries in the diagnostic buffer are not included in the backup.
- The current time of day is not backed up for a SIMATIC S7-1500 CPU.
- The entire contents of the SIMATIC memory card are backed up, i.e. any data stored on the card (e.g. PDF files, GSD files).
- The backup file is assigned the name of the CPU and the project with the time and date of the backup, e.g. "2015-09-10_11-01_03_online backup_PLC69_machineControl.s7pbkp".
- The backup file of an F-CPU also contains the collective signature of the safety program in the file name. Check whether it is the expected F-collective signature.
- You can rename the backup, but you cannot make any changes to the contents of the backup.

② Restore the configuration

To restore the CPU configuration, follow these steps:

1. Enter the password of the currently logged-in user in the "PLC restore" area.
2. Click the "Browse" button and select the backup file of the configuration that you want to restore.
3. Click "Load online backup".
4. If the CPU is in RUN mode, the following alarm is output:
   "Download online backup to device. The CPU is set to STOP and the contents of the CPU will be overwritten. Do you want to continue?"

   If the CPU is already in STOP mode, the following alarm is output:
   "Download online backup to device. The contents of the CPU will be overwritten. Do you want to continue?"

   Acknowledge the alarm output by clicking "OK". The CPU is set to "STOP" mode if required, and the online backup is downloaded. (If you click "Cancel", the CPU remains in the current mode and downloading is canceled.)
5. An alarm informs you that you must not leave the web page during the "restore procedure". Acknowledge the alarm output by clicking "OK".

   The restoration of the CPU configuration starts and you will be continuously informed of the current status:

   – "Download of online backup has been started."
   – "Checking backup file."
   – "Formatting memory card and resetting CPU."

6. If you have started the restoration procedure with a user name and password defined in the Web server configuration, you will be asked to enter these again after restoration of the CPU. Enter the required information and click "Login".

   If you have started the restoration procedure as the user "Everybody" without a password (but with appropriate access rights), this prompt is not displayed.

   Note

   To restore the configuration of an F-CPU whose security program and/or password has been changed for the F-CPU in the meantime, you also need the access authorization "F-Admin"; see "Amending user management" in the section Configuring the Web server (Page 21).

   WARNING

   The authorization "F-admin" for the Web server without password protection (User "Everybody") is only for test purposes, commissioning etc. i.e. only when the system is in productive operation. In this case, you have to ensure the security of the plant through other organizational measures, e.g. through spatial protection.

   Prior to the transition to productive operation, you must remove the right "F-Admin" for the user "Everybody".

   The password of the user of the Web server with the right "F-Admin" should only be accessible to authorized persons.

   The restoration of the CPU configuration starts and you will be continuously informed of the current status:

   – "Loading configuration."
   – "Resetting CPU."

   This may take a few minutes.

7. When the procedure is complete, you will be logged out and the "Reload page..." button will be displayed.

   If you did not receive an error message during the restoration procedure, the restoration of the CPU configuration was successfully completed and you will receive a corresponding message.

   Click the "Reload page..." button and log on to the newly downloaded CPU configuration with your user name and password.

   You will receive the following error message if:

   – the newly downloaded CPU configuration does not contain the same IP address as the former one
   – the Web server is deactivated in the newly downloaded CPU configuration
   – the browser does not receive a response from the CPU after 3 minutes

   Error message: "The CPU is not reachable anymore. Please check the IP address and the Web server configuration. The result of the restore can be checked in the ASLog."

3.16 Motion Control diagnostics

Overview

The Web server displays statuses, errors, technology alarms and the current values of the configured technology objects (TOs):

- Speed-controlled axis (TO_SpeedAxis)
- Positioning axis (TO_PositioningAxis)
- Synchronous axis (TO_SynchronousAxis)
- External encoder (TO_ExternalEncoder)
- Measuring input (TO_MeasuringInput)
- Output cam (TO_OutputCam)
- Cam track (TO_CamTrack)

The "Motion Control Diagnostics" web page provides detailed information on the configured technology objects in the following views:

- Diagnostics
- Service overview

Diagnostics

The "Diagnostics" view offers you:

- ① An overview list of the configured technology objects
- ② The status and error messages of a selected technology object
- ③ Values and limits of the status of a selected axis/cam

① "Diagnostics" view

Under "Status", you will find an overview list of the configured technology objects with the designation and type, which indicates whether the technology object in question is "released" and "referenced".

The technology object is enabled: The axis can be moved with motion jobs.

The technology object is homed: The relationship between the position in the technology object and the mechanical position was successfully created.

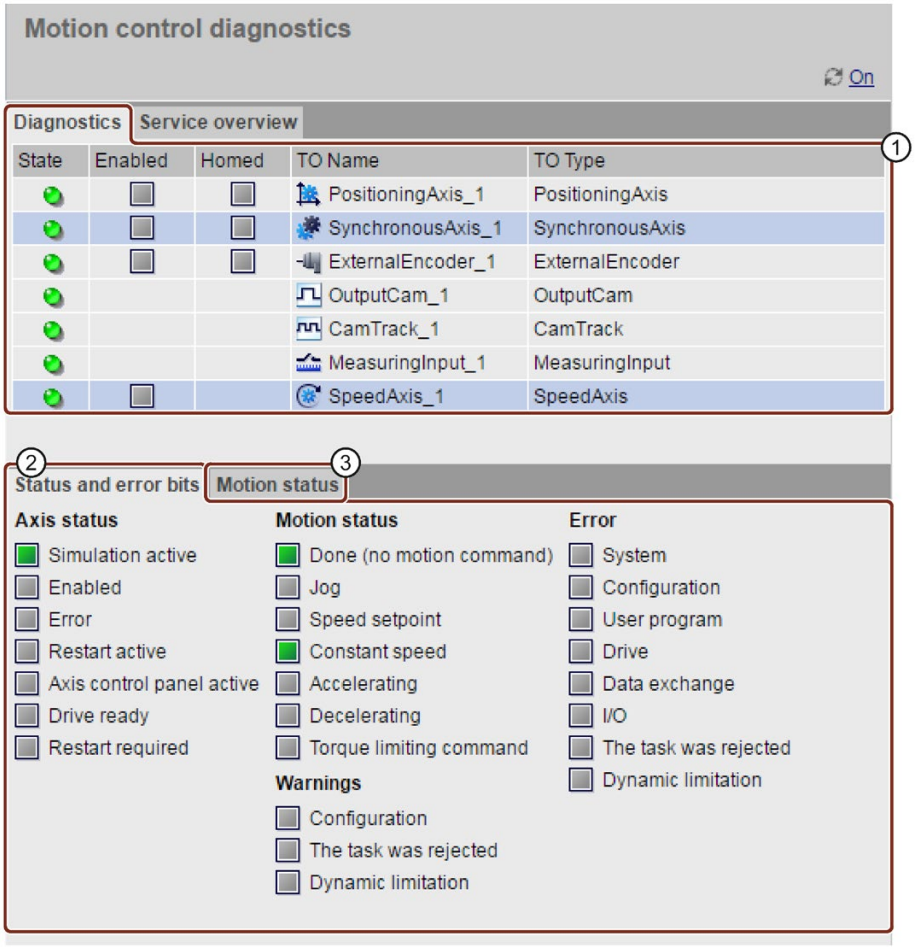

Figure 3-47 Motion Control diagnostics: Status and error bits

Meaning of the symbols in the "Status" column

Table 3- 10 Meaning of symbols

Symbol	Symbol color	Meaning
	Green	Component is OK
	Yellow	Warning pending
	Red	Error - component faulty or not available

Select the required technology object. The related diagnostics information is shown in the bottom tabs.

② "Status and error bits" tab

You use the "Status and error bits" tab to monitor the status and error messages for the technology object as in STEP 7.

③ "Motion status"/"Cam track status" tab

You use the "Motion status" tab to monitor the motion status of the axis as in STEP 7.

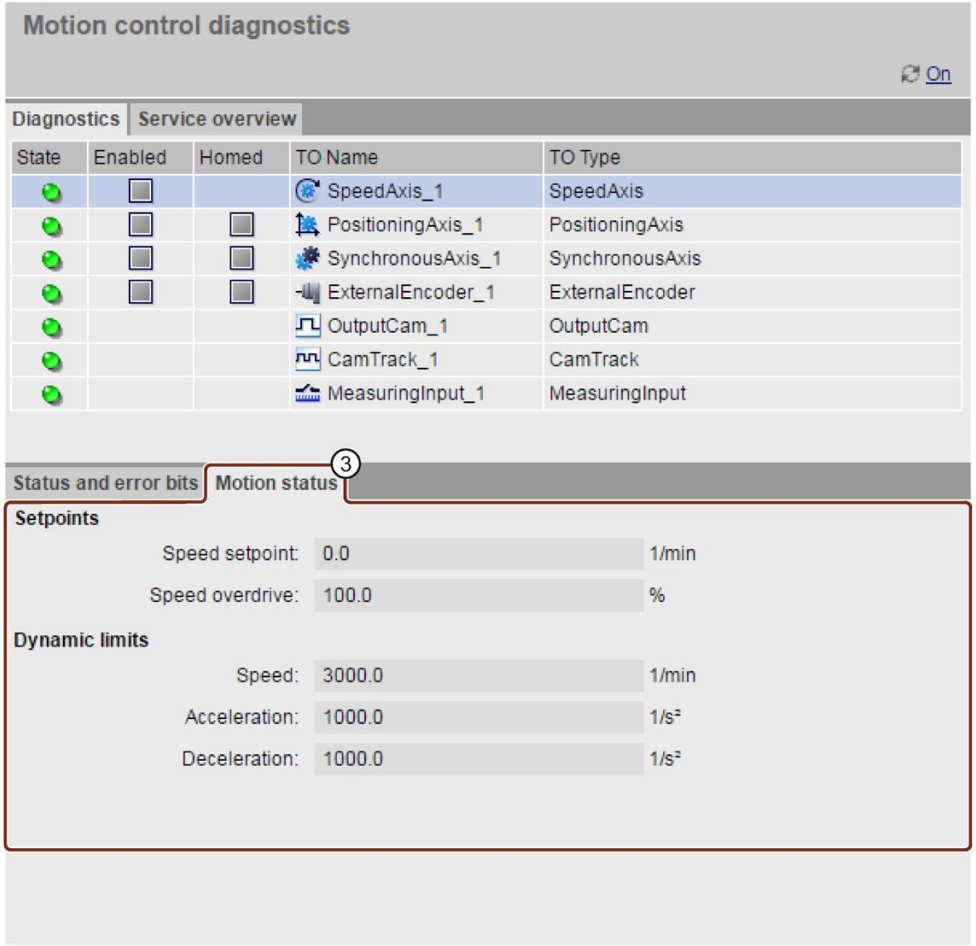

Figure 3-48 Motion Control diagnostics: Motion status

You use the "Cam track status" tab to monitor the cam track status as in STEP 7.

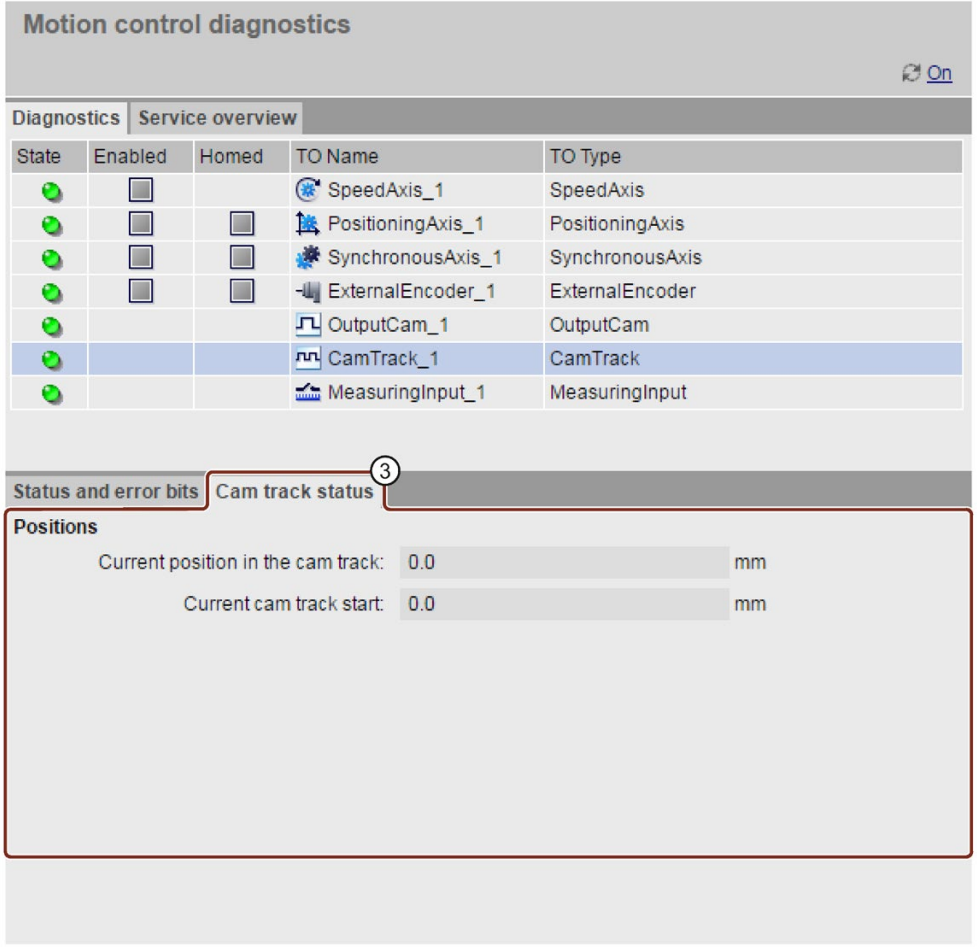

Figure 3-49 Motion Control diagnostics: Cam track status

Service overview

The "Service overview" view offers you:

- ① Diagnostics information for several technology objects
- ② A filter option for selecting the displayed technology objects

① "Service overview" view

The "Service overview" shows the diagnostics information for several technology objects in table form.

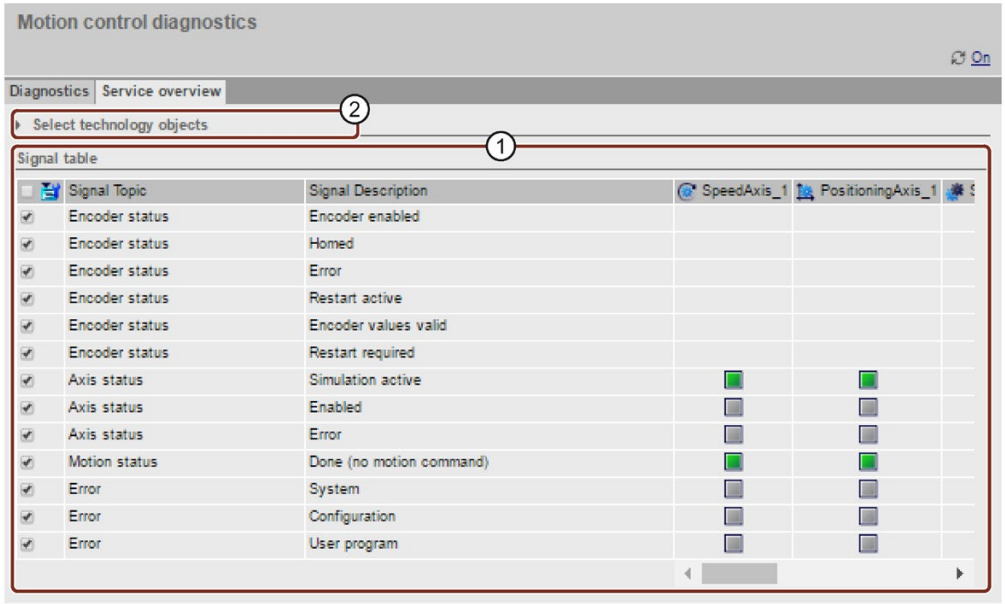

Figure 3-50 Motion Control diagnostics, service overview: Status and error information

To select the information to be displayed, click the list symbol in the first column of the table. Make your selection in the next window. Click the list symbol again to leave the selection window.

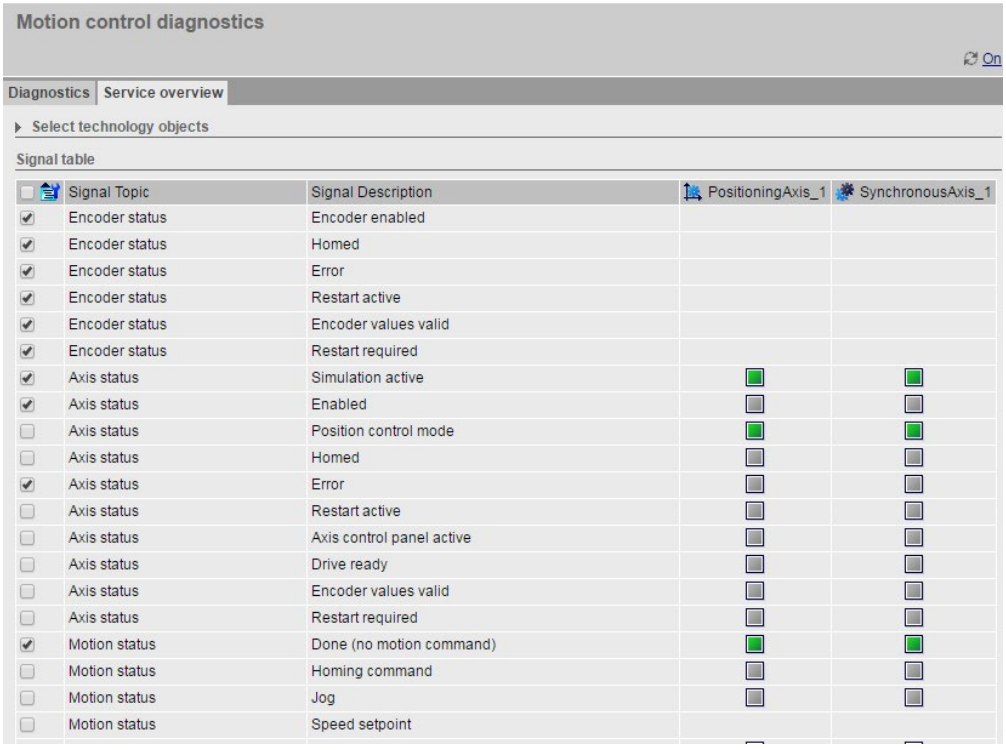

Signal Topic	Signal Description	PositioningAxis_1	SynchronousAxis_1
Encoder status	Encoder enabled		
Encoder status	Homed		
Encoder status	Error		
Encoder status	Restart active		
Encoder status	Encoder values valid		
Encoder status	Restart required		
Axis status	Simulation active		
Axis status	Enabled		
Axis status	Position control mode		
Axis status	Homed		
Axis status	Error		
Axis status	Restart active		
Axis status	Axis control panel active		
Axis status	Drive ready		
Axis status	Encoder values valid		
Axis status	Restart required		
Motion status	Done (no motion command)		
Motion status	Homing command		
Motion status	Jog		
Motion status	Speed setpoint		

Figure 3-51 Motion Control diagnostics, service overview: Configuring the status and error information

② Selection "Select technology objects"

You can make a selection of the displayed technology objects with the selection "Select technology objects".

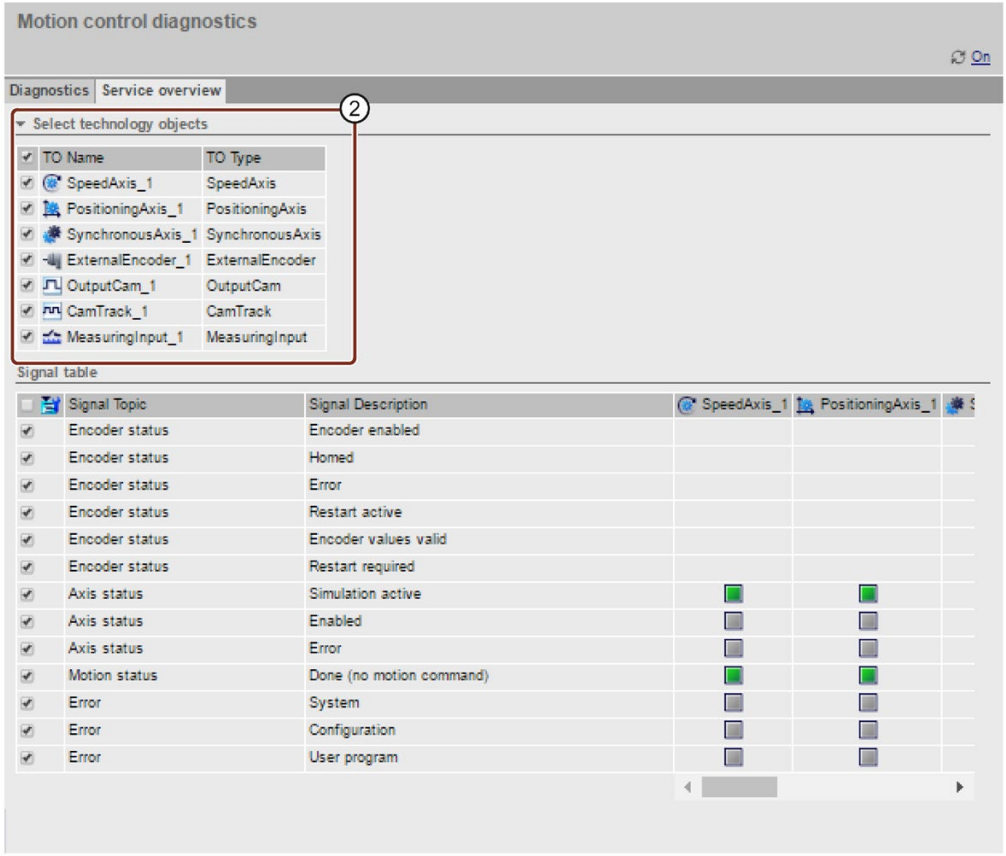

Figure 3-52 Motion Control diagnostics, service overview: Status and error information - Select technology objects

Reference

You can find explanations of the diagnostics functions "Status and error bits" and "Motion status"/Cam track status" of the individual technology objects in the online help for STEP 7.

3.17 Trace

Trace and logic analyzer function

You record device tags and evaluate the recordings with the trace and logic analyzer function. Tags are, for example, drive parameters or system and user tags of a CPU.

The recordings are saved on the device and can be read out by users with appropriate access rights via the Web server and saved. The trace and logic analyzer function is therefore suitable for monitoring highly dynamic processes in the Web server.

Requirements

- A trace configuration has been created, i.e. you have defined the recording and trigger conditions and selected the signals to be recorded.
  - Note: Only measurements which are saved on the SIMATIC memory card can be displayed on the "Trace" Web page.

    For the CPU to save the measurements on the SIMATIC memory card, you must make the following settings for the trace configuration in STEP 7:

    1. Set the "Trigger mode" to "Trigger on tag".
    2. Select the "Save measurements on device (memory card)" check box.
- You have transferred the trace configuration to the device and activated it there.
- You have been assigned the access right "The user is authorized to..." > "...query diagnostics" in the user administration of the Web server; see section Configuring the Web server (Page 21).

Space requirements for storing trace recordings

The "Save measurements on device (memory card)" function in STEP 7 saves Trace recordings on your SIMATIC memory card.

Response when number reached

The "Deactivate recording" parameter repeats the measurements until the configured "Number of measurements" is reached.

The "Overwrite oldest recording" parameter replaces the oldest measurement with the latest measurement when the configured "Number of measurements" is reached. Note, however, that continuously writing data to the SIMATIC memory card shortens its service life.

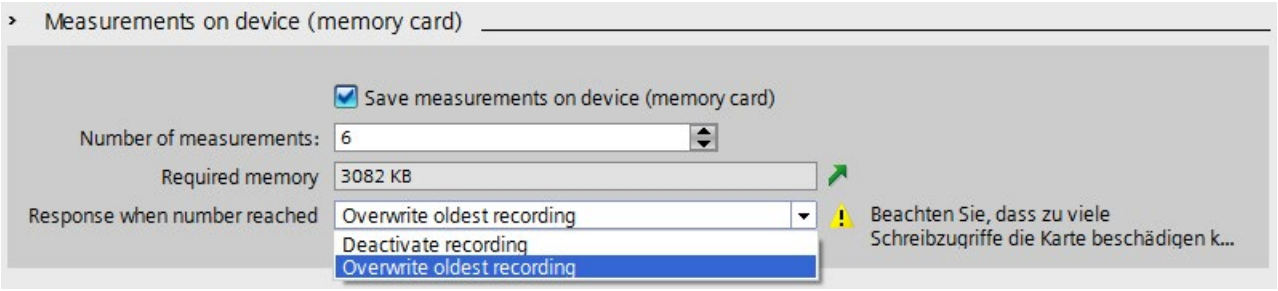

Figure 3-53 Dialog of settings for storing measurements on the memory card in STEP 7

Number of measurements

The CPU supports a maximum of 999 measurements. While the CPU writes the trace recordings to the load memory of the memory card, it pauses monitoring of the trigger conditions for the trace job. After the CPU has terminated the storing of Trace recordings, the CPU continues checking of the trigger conditions.

NOTICE
Required memory on the SIMATIC memory card Note that the "Save measurements on device (memory card)" function needs >1024 KB of free space on your SIMATIC memory card. This amount of required space is independent of the size of the SIMATIC memory card you are using. If this space is no longer available, the CPU stops storing measurements on the memory card and writes a corresponding entry to the diagnostic buffer. Therefore, ensure that there is enough space on the SIMATIC memory card before running the "Save measurements on device (memory card)" function. Delete trace recordings no longer required from the SIMATIC memory card.

You can view the current values on the currently used space in the load memory in the "Memory" tab on the "Diagnostics" web page.

Additional information

The operation of the interface of the "Trace" web page largely corresponds to the operation of the trace function in STEP 7. See the Using the trace and logic analyzer function manual (https://support.industry.siemens.com/cs/ww/en/view/64897128) and the online help for STEP 7 for more on this.

Displaying the trace recordings

The web page of the trace and logic analyzer function consists of several areas. The example in the figure below shows how the Web server user interface is divided when the "Trace" web page is first called.

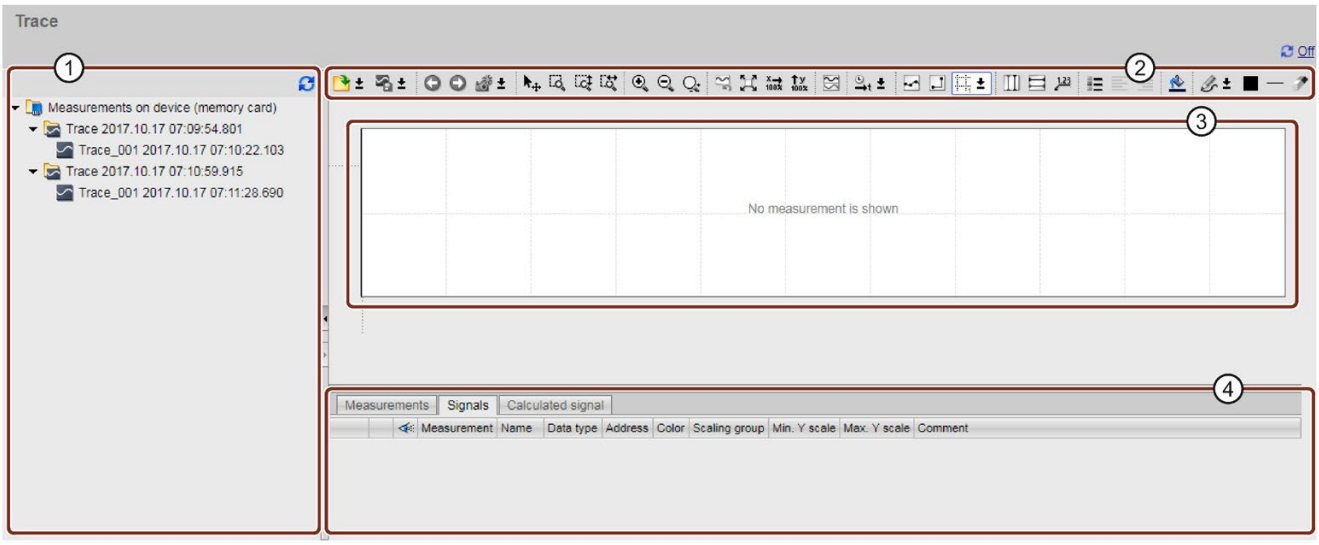

① Trace recordings
② Toolbar of the trend diagram
③ Trend diagram and bit track
④ Signal tables

Figure 3-54 Trace start page without measurement

Opening measurements

To open a measurement, right-click on a measurement to select it from the "Trace recordings" area. Then select the command "Display in diagram" in the shortcut menu.

The measurement is displayed in the "Curve diagram and bit track" area.

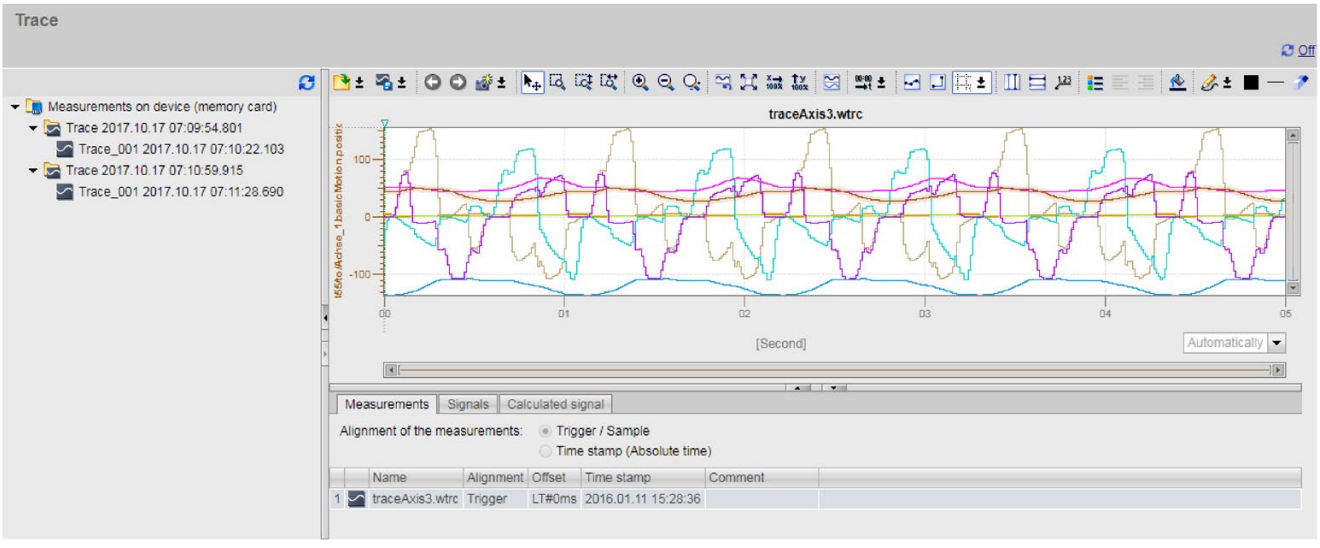

Figure 3-55 Displaying an individual measurement

To display multiple measurement at once, right-click on a measurement to select it from the "Trace recordings" area. Then select the command "Add to table" in the shortcut menu.

The measurements are displayed in the "Curve diagram and bit track" area.

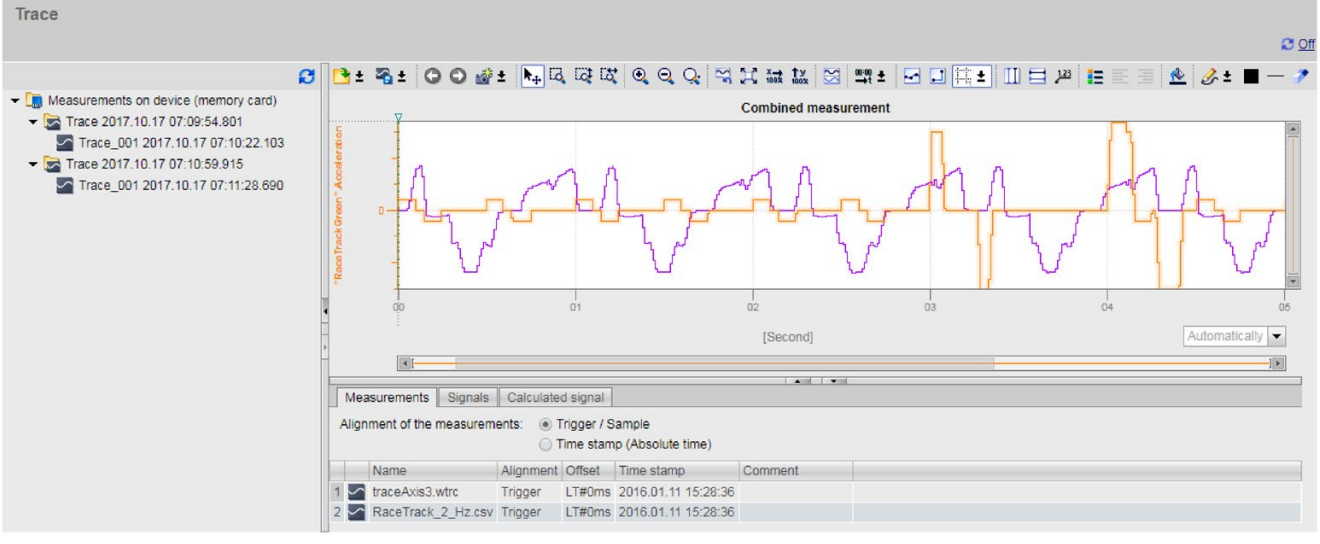

Figure 3-56 Displaying several measurements

Trace recordings

The "Trace recordings" area shows a list of all existing measurements, sorted by date and time of the trace recordings. A measurement always consists of a trace configuration with an associated recording.

The following table shows the special Web server shortcut menu commands in the Trace recordings area:

Table 3- 11 Web server shortcut menu commands in the trace recordings area

Shortcut menu command	Description
"Delete"	Deletes the selected measurement on the memory card of the CPU. A confirmation dialog opens. After deletion, the display in the trend diagram is not automatically overwritten.
"Save as"	Saves the selected measurement.
"Show in chart"	Loads the selected measurement to the display area of the Web server.

Some data types offer the display of individual bit tracks. Enable the individual bit tracks of the signal opened in the signal table using the icon.

You can adjust the display of the signals in the signal table and with the toolbar of the curve diagram.

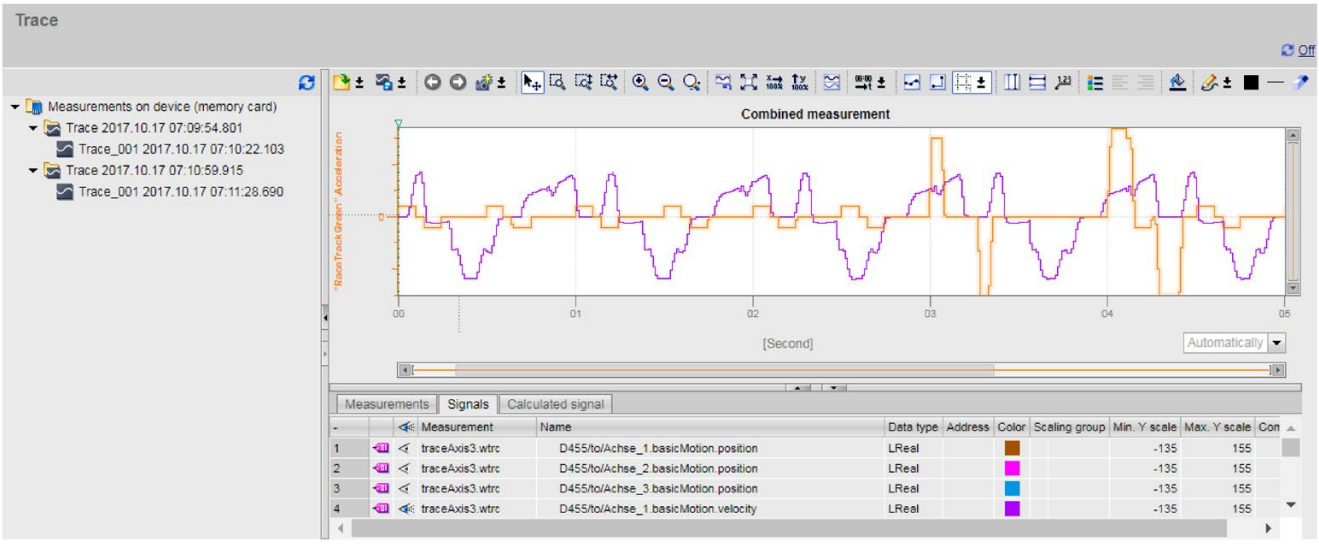

Figure 3-57 Trace measurement - All areas visible

Toolbar of the trend diagram

As in STEP 7, tools are available for adapting the display via buttons of the toolbar of the trend diagram.

The following table shows the Web server buttons in the trend diagram toolbar:

Table 3- 12 Buttons of the trend diagram toolbar

Symbol	Function	Description
	Open / add measurement	Opens measurements or adds measurement to an existing measurement.
	Save as	Saves measurement(s) as a file with the extension .csv, .wtrc (SIMOTION format for saving Trace data) or .ttrecx (TIA Portal format for saving Trace data). In addition to the measured data the command also saves the diagram, snapshots, marking and calculated signals.
	Undo move / zoom	Undoes the move / zoom function executed last. If you have carried out several move / zoom functions, you can undo these step-by-step.
	Repeat move / zoom	Redoes the last undone move / zoom function. If you have undone several move / zoom functions, you can redo these step-by-step.
	Snapshot	Saves the current view as a snapshot (see the section "Settings and displays of the Snapshot symbol").
	Move view	Moves the display with a pressed mouse button - corresponds to the button in STEP 7.
	Zoom selection	Selection of an arbitrary range with the mouse button pressed. The button scales the display to the range selection.
	Vertical zoom selection	Selection of a vertical range with the mouse button pressed. The button scales the display to the range selection.
	Horizontal zoom selection	Selection of a horizontal range with the mouse button pressed. The button scales the display to the range selection.
	Zoom in	Enlargement of the display. The ranges of the X axis and Y axis are reduced every time the button is clicked. The curves are displayed larger.
	Zoom out	Reduction of the display. The ranges of the X axis and Y axis are reduced every time the button is clicked. The curves are displayed smaller.
	Scaling	Scales all the signals or also only signal / signal group vertically and horizontally.
	Restore standard view	The button undoes scaling and move commands. The view is reset to the status at the time of loading of the measurement. Hidden signals are also reset but remain disabled.
	Display all	The button moves all the signals completely into the display area without changing the relative positions of the signals to each other.
	Scale X automatically	Automatic scaling of all visible signals on the horizontal X area.
	Scale Y automatically	Automatic scaling of all visible signals on the vertical Y area.

Symbol	Function	Description
	Arrange in tracks	Activate or deactivate the trace arrangement. When the trace arrangement is activated the signals are arranged among themselves with the relevant value axes. Signal groups are displayed in the same trace. This setting does not affect the display for the bit tracks.
/	Unit switching of the time axis	Switching the unit of the time axis You can enter the following information: • Measuring points • Time (relative time related to the trigger time) • Trigger stamp of the measurement points
	Display measurement points	The button displays the measurement point as small circles on the curves.
/	Interpolation on/off	The buttons activate / deactivate the interpolation of the data of the trend diagram.
	Grid	The button activates / deactivates the grid of the trend diagram and regulates its brightness in the Levels 1 to 9.
	Vertical measurement cursor	Display of vertical measurement cursor. The vertical position of the two measurement cursors can be moved with the mouse. The values of the signals and the difference between two measuring points are displayed in the signal table for all displayed signals and also in the trend diagram for the selected signal. The measuring point or the relative/absolute time to the measurement cursors is displayed depending on the set unit of the time axis (X axis) in the movable pop-up window "Measuring points/Time values".
	Horizontal measurement cursor	Display of the horizontal measurement cursors. The horizontal position of the two measurement cursors can be moved with the mouse. The Y values of the measurement cursor for the selected signal are displayed in the movable pop-up window "Y values".
	Difference of the measurement cursor	Display of the difference of the horizontal and vertical measurement cursors and the Y values at the intersections with the vertical measurement cursors.
	Show legend	Showing or hiding of the legend in the curve diagram and the bit track labels.
	Align the chart legend to the left	Display of the legend and the bit track labels on the left side of the curve diagram.
	Align the chart legend to the right	Display of the legend and the bit track labels on the right side of the curve diagram.
	Change background color	Changeover between various background colors.
	Identification	The following table provides an overview of marked signal areas. Note that markings are only possible for analog signal.

All icons in the toolbar are equipped with tooltips.

Trend diagram

The trend diagram displays the selected signals of a recording. Bits are shown in the lower diagram as a bit track.

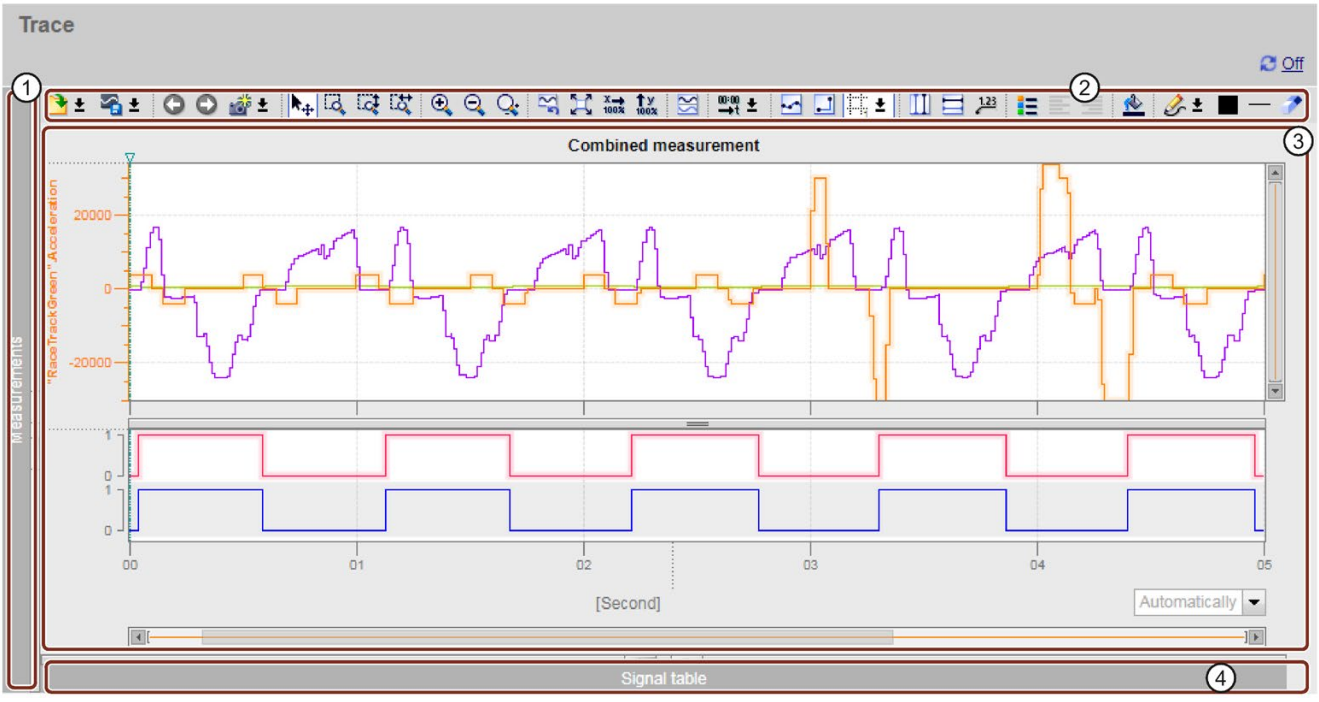

① Trace recordings (minimized)
② Toolbar of the trend diagram
③ Trend diagram and bit track
④ Signal table (minimized)

Figure 3-58 Trace measurement - only trend diagram visible

The following table shows the special Web server shortcut menu commands of a selected signal in the trend diagram:

Table 3- 13 Web server shortcut menu commands in the trend diagram area

Shortcut menu command	Description
"Scale Y automatically"	Automatic scaling of the selected signal in Y direction.
"Hide signal"	Hides the selected signal in the trend diagram.

Use of the trend diagram

You can zoom the display area as you like. Measurement cursors (see "② Toolbar of the trend diagram") can be used to select individual values for display in the signal table.

The following image shows how you can change the display area of the trend diagram as required with rulers and scroll bars.

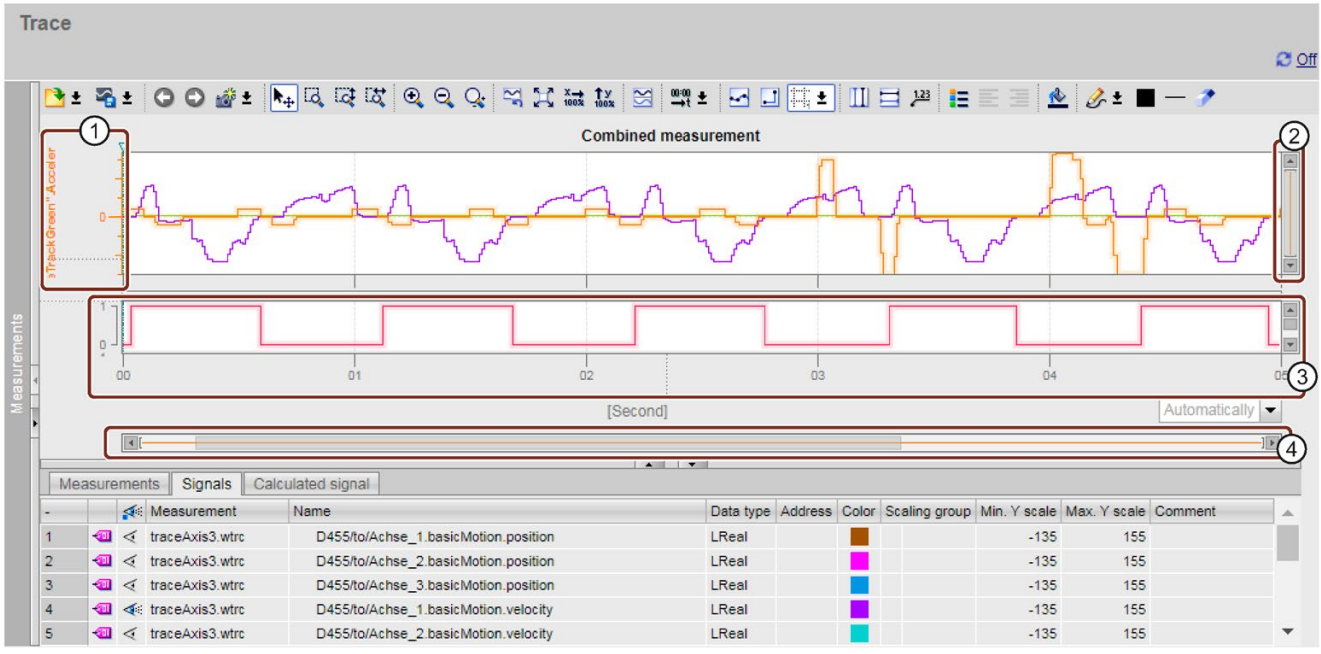

① Vertical ruler
② Vertical scroll bar
③ Horizontal ruler
④ Horizontal scroll bar

Figure 3-59 Trace measurement - rulers and scroll bars

Using the vertical ruler

- If you click the vertical ruler at the top or the bottom, you increase the size of the display at the top or bottom.
- If you click the vertical ruler at the top or the bottom while keeping the shift key pressed, you scale both ends.
- If you click the vertical ruler at the top or the bottom while keeping the Ctrl key pressed, you move the display up or down.

Using the horizontal ruler

- If you click the horizontal ruler on the left or the right, you increase the size of the display on the left or right.
- If you click the horizontal ruler on the left or right while keeping the shift key pressed, you scale both ends.
- If you click the horizontal ruler on the left or the right while keeping the Ctrl key pressed, you move the display to the left or right.

Using the mouse wheel

- If you activate the mouse wheel in the display, you move the display up or down.
- If you activate the mouse wheel in the display while keeping the shift key pressed, you move the display to the left or right.
- If you activate the mouse wheel in the display while keeping the Ctrl key pressed, you increase/reduce the size of the display at the position of the mouse pointer.

Signal tables

The signal tables list the signals of the selected measurement and provides setting options for some properties. The area of the signal tables is divided into the tabs "Measurements", "Signals" and "Calculated signal".

Settings and displays in the "Signals" tab

The following figure shows the signal table of the "Signals" tab.

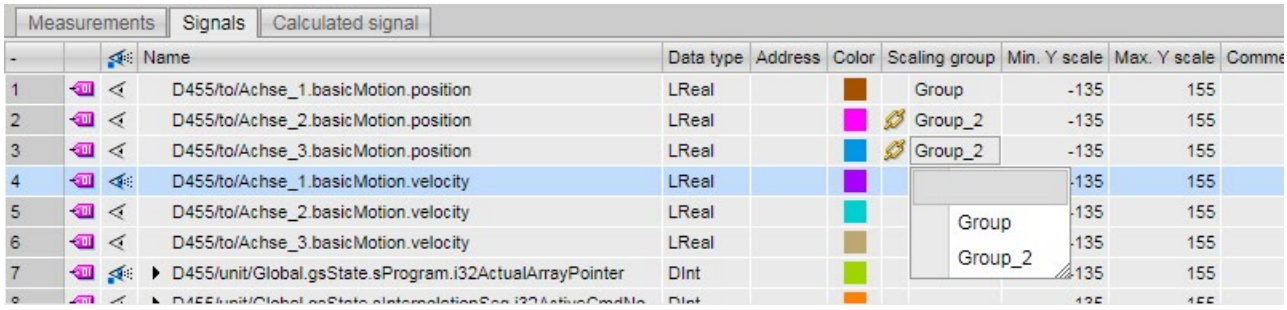

Figure 3-60 Display in the "Signals" tab

The following table shows the settings and displays of the recorded signals of the "Signals" tab:

Column	Description
Signal or error symbol	
	Signal symbol
	Symbol for calculated signals (formulas)
	Error in the formula of the calculated signal
	Selection for the display in the trend diagram
	The point indicates that at least one bit has been selected for display as bit track for the signal in the bit selection.
Signal number	Automatically generated number of the signal The signal can be accessed via the signal number in the formulas.
Name	Display of the signal name A click on the name of a displayed signal updates the scale in the trend diagram.
	Open bit selection Individual bits can also be selected for the following data types for display as a bit track in the lower curve diagram: • Byte, Word, DWord, LWord • SInt, USInt, Int, UInt, DInt, UDInt, LInt, ULInt Example of an opened bit selection for the DWORD data type: 1 "Tag_1" Byte %MB10 2 "Tag_4" DWord %MD20 3 Bool %M23.0 4 Bool %M23.1 5 Bool %M23.2 Select or deselect the relevant bit for display by clicking the icon.
Data type	Display of the data type

Column	Description
Address	Display of the address of the signal The field remains empty with optimized / type correct tags.
Color	Display and setting option for the color of the signal
Signal group	Display or input of the signal group name for one signal group The Y-scales are scaled identically for all signals of one signal group. Enter an identical signal group name for those signals that you want to scale identically. To remove signals from a signal group: • Delete the signal group name. • Click the empty entry in the shortcut menu of the signal group Note that you cannot group binary signals.
Gray field for the chain icon of the signal group	To add or delete the signal from a signal group, move the mouse pointer over the grey field or the chain icon (or), Clicking the chain icon adds the signal to a signal group or creates a new signal group. Clicking the chain icon removes the signal from the signal group. For a selected signal with signal group, the chain icon displays all signals of the same signal group.
Input field of the signal group	The input field displays the signal group name. As an alternative to the chain icon, you can assign or delete a group name via text input in this field.
Min. Y-scale	Display or input of the minimum value for the scaling of the signal
Max. Y-scale	Display or input of the maximum value for the scaling of the signal
Comment	Display and input option for a comment about the signal

The following table shows the possible Web server shortcut menu commands of the "Signals" tab:

Table 3- 14 Web server shortcut menu commands of the "Signals" tab

Shortcut menu command	Description
"Scale Y automatically"	Automatic scaling of the selected signal in Y direction.
"Show signal"	Shows the signal in the trend diagram
"Hide signal"	Hides the signal in the trend diagram
"Show all bits"	Shows all the bits of a signal
"Hide all bits"	Hides all the bits of a signal

Settings and displays in the "Measurements" tab

The following figure shows the display of the "Measurements" tab and the shortcut menu of the "Alignment" column of a selected measurement.

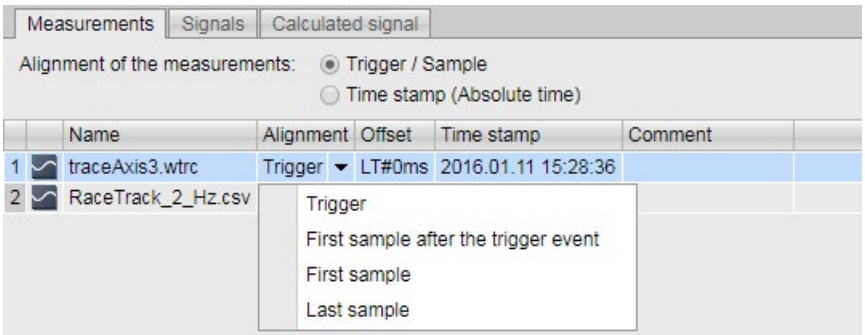

Figure 3-61 Tab "Measurements" with shortcut menu

The following table shows the settings and displays for the measurements:

Column	Description
Alignment of the measurements	
Trigger/Sample	Alignment of the measurements in accordance with the trigger or measurement point. The individual zero point for the measurement is predefined in the table under the "Alignment" column.
Time stamp (absolute time)	Alignment of the measurements in accordance with their time stamp. The signals are aligned in accordance with the time from the absolute time stamp.
Table columns	
	Static display of the measurement icon
Name	Display and change options for the name Note that the name must be unique.
Alignment	Alignment of the measurement (only adjustable with the "Trigger/Sample" check box selected). Determines the individual zero point for a measurement. All signals for the measurement are displayed in relation to this zero point. The following settings are possible: • Trigger • First sample after the trigger event • First sample • Last sample
Offset	Offset related to the time axis Moves the measurement left or right by the offset stated on the time axis. If you enter solely a numerical value without a unit of measurement, the system automatically assigns the unit "ms" (for example 0=0ms, 100=100ms, 1000=1s, -1001=-1s 1ms , LT#2000ms=2s, LT#-3605000ms=-1h 5s , LT#-1h5s=-1h 5s)
Time stamp	Display of the trigger time
Comments	Display and input option for a comment about the signal
Shortcut menu commands	
"Save as WTRC"	Saves the measurement(s) as a file with the extension .csv, .wtrc (SIMOTION format for saving Trace data) or .ttrecx (TIA Portal format for saving Trace data).
"Save as CSV"	Exports a measurement as a file with the file extension .´csv. Note that the command only saves the measured data. The command does not save the diagram, snapshots, markings and calculated signals.
"Edit name"	Switches the name in editing mode
"Edit offset"	Switches the offset in editing mode
"Edit comment"	Switches the comment in editing mode

Settings and displays in the "Calculated signal" tab

You can use this function to calculate new signals based on real signals. The system calculates the Y-values of the signal points in the process.

To parameterize the signals to be calculated, open the "Calculated signal" tab.

In the "General" section specify the name, the data type and color of a signal to be calculated. Note that the name of the signal to be calculated must differ from the name of a real signal.

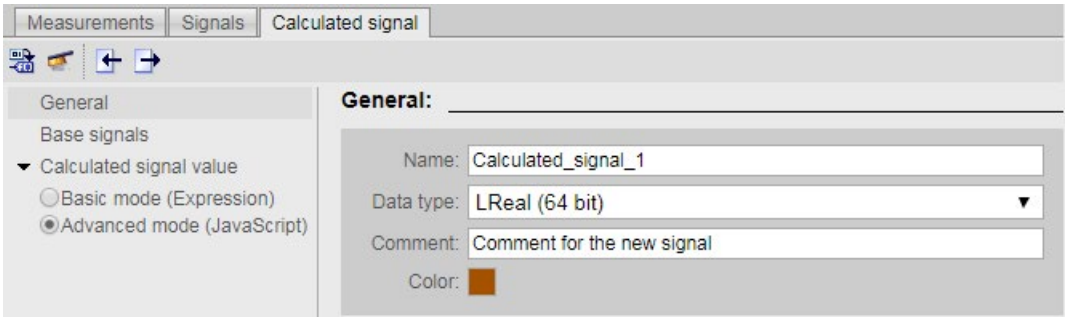

Figure 3-62 "General" section of the "Calculated signal" tab

Add the basic signals in the "Basic signals" section. The basic signals form the basis for calculating the new signal. You can change the default name of the variable in the "Name" column. You select real signals for the specification of the number of signal points to be calculated in the "Signal" column.

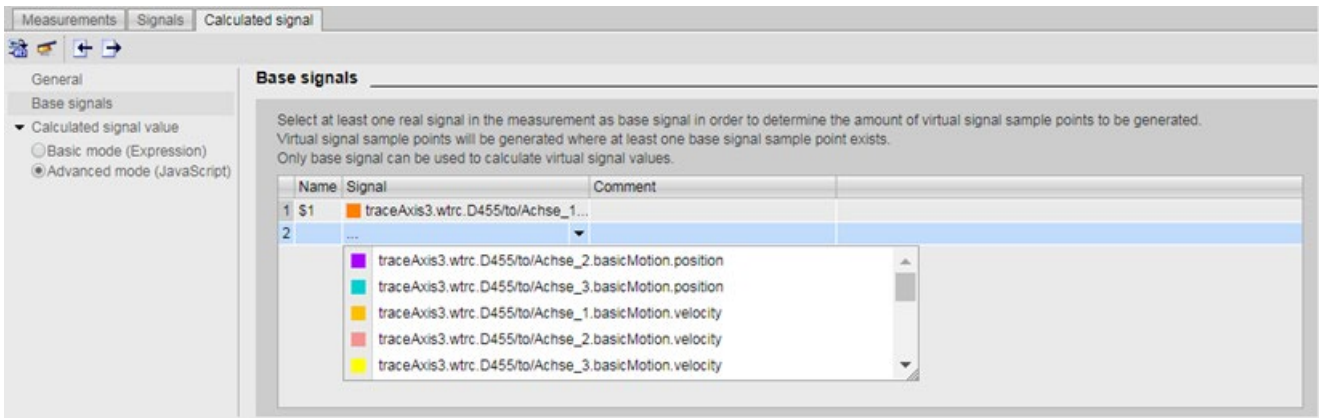

Figure 3-63 "Basic signals" section of the "Calculated signal" tab

Enter the code for the calculation of the Y values of the signal points in the "Calculated signal value" section. The section is divided into:

- Basic mode (expression)
- Advanced mode (JavaScript)

Use the JavaScript syntax to enter the code for both modes. Take into account, however, that not the full JavaScript functionality is supported.

Basic mode (expression)

In this mode you use the following to create your code:

- Standardized JavaScript expressions and operators (for example +, -, /, *, %, ~, &, |, ?, !)
- Standardized math libraries
- The tag names specified under "Basic signals"
  (the system writes the Y-value directly to the variable name)

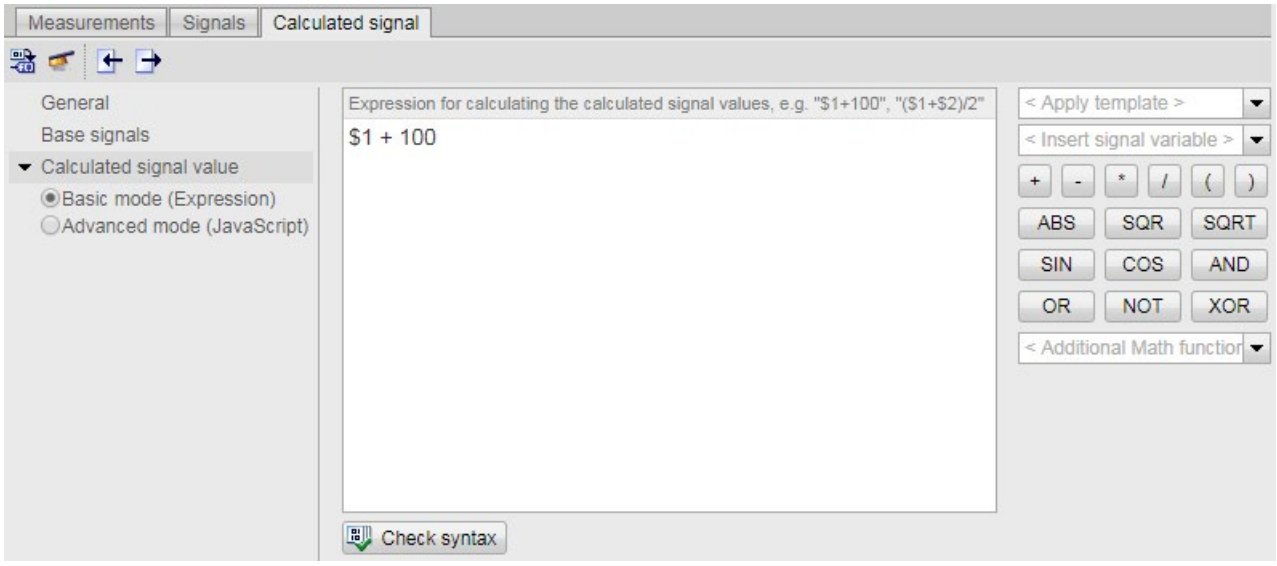

Figure 3-64 Basic mode (expression)

Advanced mode (JavaScript)

This mode offers you an advanced functional scope for the calculation of the Y value by means of a complex JavaScript code. You can, for example, specify own static tags for the iteration of code sections:

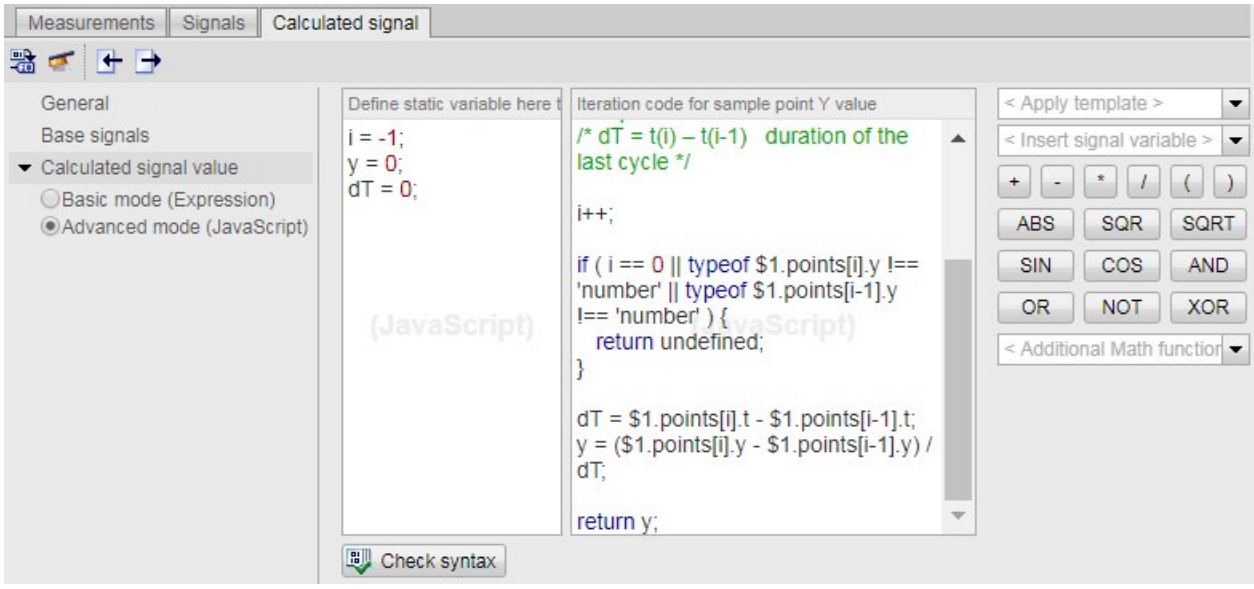

Figure 3-65 Advanced mode (JavaScript)

The following table shows all the elements that you can use for your code:

Reserved words (case-sensitive)						
if	var	Math	Array	catch	typeof	unescape
encodeURI	in	for	else	break	escape	delete
Infinity	decodeURI	do	Date	case	false	String
Object	continue	parseFloat	new	case	true	while
return	Number	parseInt	try	null	isNaN	throw
switch	default	undefined				
Operators						
%	-	*=	!=	<=	|=	&&
!==	+	--	/	>	=	||
^	===	++	-=	/=	>=	==
&	~	+=	*	!	<	|
&=	?					
Delimiters						
(	)	{	}	[	]	.
,	:	;				
Comments						
/*	*/					

Every signal point consists of the following attributes:

1. x (measuring point)
2. t (relative ^time in milliseconds)
3. y (Y value)
4. points (number of signal points that are available for the calculation of a new signal)

In "Advanced mode (JavaScript)" you can access all four attributes (e.g. "$1.y", 485 "$1.t", "$1.x", $1.points[i].y, …).

The following function tables support you in writing expressions or complex code in JavaScript. The function table contains the functions used most often:

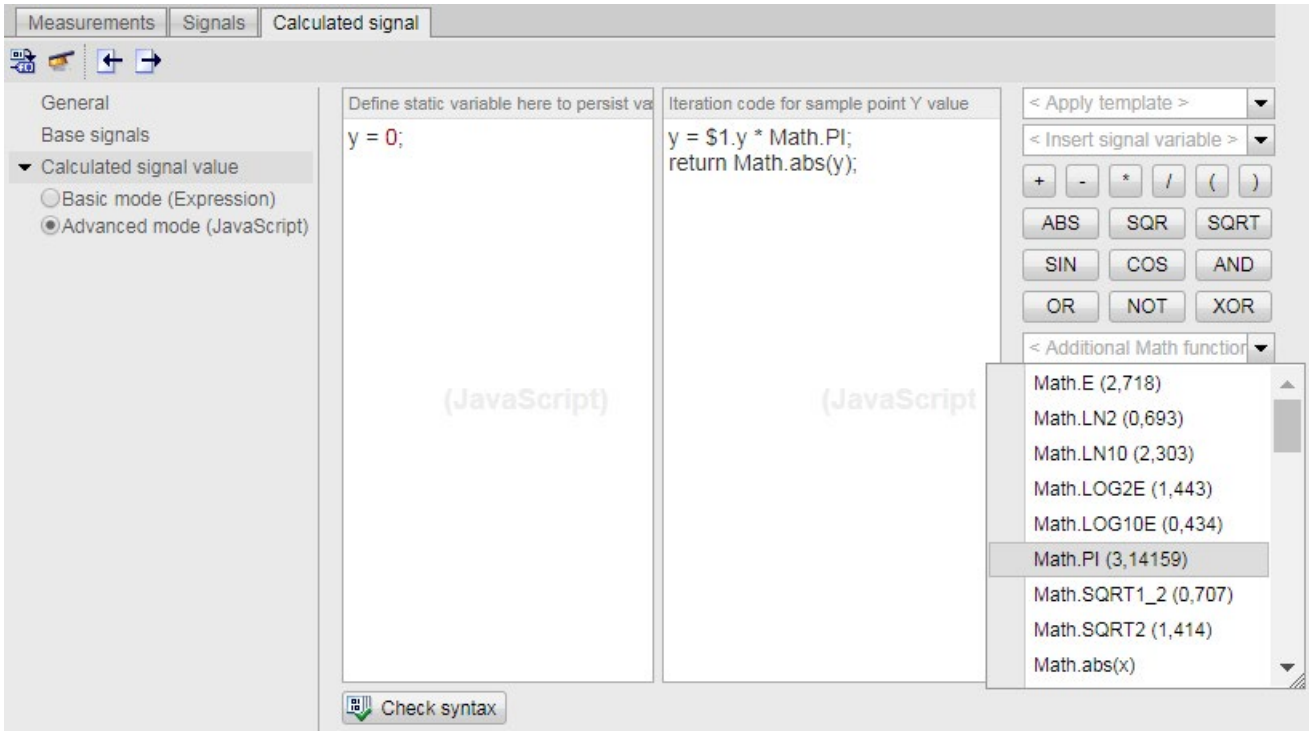

Figure 3-66 "Calculated signal" tab with function table

You also have the possibility to generate the JavaScript code of a real signal from the "Signals" tab. Alternatively you can also select one of predefined templates of the function table, change the code and generate a calculated signal.

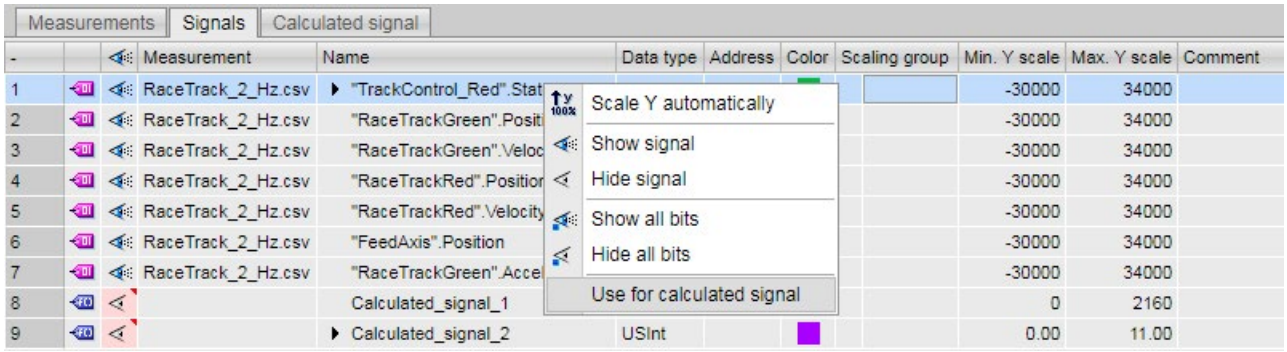

Figure 3-67 Real signals of the "Signals" tab

The following templates are available in the function table:

- Numerical differentiation
- Numerical integration
- Arithmetic mean

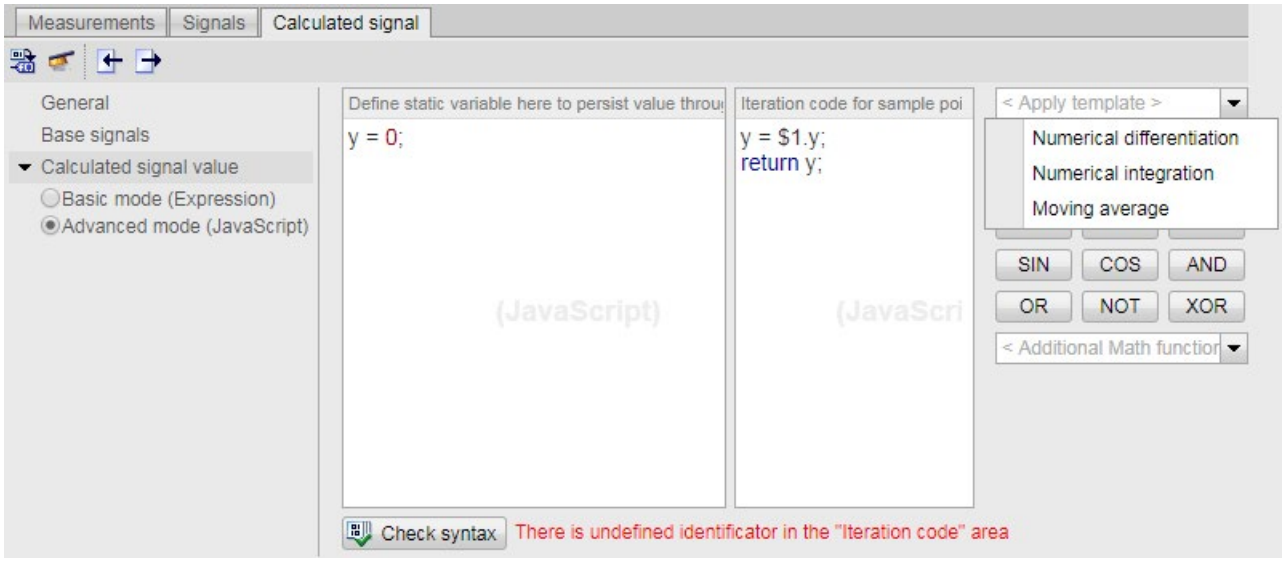

Figure 3-68 Templates

To check the syntax click the symbol "Check syntax" or generate the signal by clicking the icon in the toolbar. If the code has any errors, these are displayed to the right of the "Check syntax" icon in red lettering. If the code does not have any errors, the "Syntax check successful" message is displayed.

How does the system calculate a new signal?

The system checks:

- Whether you have selected a basic signal for the calculation of a new signal
- The name of the signal to be calculated
- The syntax of your JavaScript code

Subsequently the system defines the counting of the measuring points and executes the code for each measuring point to be calculated. In each iteration the system stores the measuring points of the new signal on the basis of the following four attributes:

- Measuring point
- Relative time
- Calculated Y value
- Signal point with x-, t, y-values

The course is displayed after calculation has been completed.

Example for calculating on the basis of a basic signal

You use a single basic signal to calculate the new signal. The basic signal consists of 1000 measuring points.

In this case the system carries out your written code a thousand times. The calculated signal then consists of 1000 calculated signal points with the same x- and t-values, but with own y-values.

Importing/exporting settings

You can import/export certain parameters (formulas, calculation method, signal type and signal name. To import parameters click the icon in the toolbar of the "Calculated signal" tab. To export parameters click the icon in the toolbar of the "Calculated signal" tab.

Settings and displays of the Snapshot icon

With the "Snapshot" icon in the toolbar of the trend diagram you save the current signal course in the form of a snapshot.

To create a snapshot of the signal course click the icon. To manage the created snapshots click the arrow on the left next to the "Snapshot" icon and select the entry "Manage snapshots".

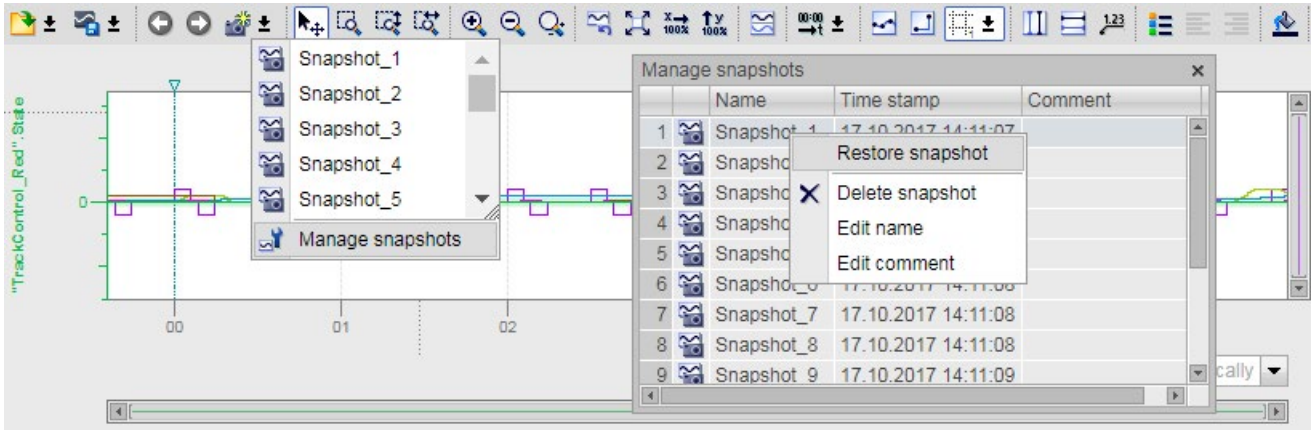

Figure 3-69 Managing snapshots

The following table shows the settings and displays of the "Managing snapshots" window.

Column	Description
	Static display of the snapshot icon
Name	Display and change options for the name
Time stamp	Display of the creation time of the snapshot
Comments	Display and input option for a comment

Several rows can be selected.

The following table shows the possible shortcut menu commands:

Shortcut menu command	Description
"Restore snapshot"	Shows the measurement with the saved view in the "Diagram" tab.
"Remove snapshot"	Deletes the snapshot.
"Edit name"	Switches the name in editing mode
"Edit comment"	Switches the comment in editing mode

Several rows can be selected.

Note

Delete measurement

If you delete a measurement of a calculated signal, all the associated snapshots are also deleted.

3.18 Reading out service data

The Web server gives you the option to save service data. In addition to the content of the diagnostic buffer, they include additional information on the internal status of the CPU. If you should encounter a problem with the CPU that cannot be resolved otherwise, you therefore have the option to submit the service data to the Service&Support team.

Procedure

1. Enter the following address in the address bar of your web browser:
   "http://<CPU IP address>/save_service_data", e.g.,
   "http://192.168.3.141/save_service_data"
2. Your screen displays the service data page with a button for saving the service data.

3. Save the service data locally on your display device by clicking "Save ServiceData".

Result

The data is saved into a .dmp file with the following naming convention: "<MLFB><serial number><time stamp>.dmp". The user can change the file name at a later time.

Note

If you have defined your user page as the start page, observe the note on reading out service data in section Defining the user page as start page (Page 98).

3.19 Basic websites

Web pages with reduced contents

Basic websites are offered for display devices with smaller screens, for example HMI, on the Web server.
Basic websites are web pages with reduced content that are adapted to the requirements of small screens with low resolution.
These sites do not support JavaScript for the sake of fast access. This means that not all standard websites are available as basic websites. The basic website can also have fewer functions than the standard website.

The switch to basic websites takes place automatically for HMI devices.
You access basic websites from other end devices by entering the IP address of the configured and the extension "/basic" in the address bar of the Web browser, for example http://192.168.3.141/basic or https://192.168.3.141/basic.

The following standard websites are also available as basic websites:

- Start page (in Basic: "Status")
- Diagnostics (without the "Program protection", "Runtime information" and "Fail-safe" tabs)
- Diagnostics buffer
- Memory usage
- Module information
- Alarms (without acknowledgment option)
- Communication
- Tag status
- Watch tables
- User pages
- Filebrowser (read access only)
- DataLogs
- Intro

The basic websites are displayed as follows:

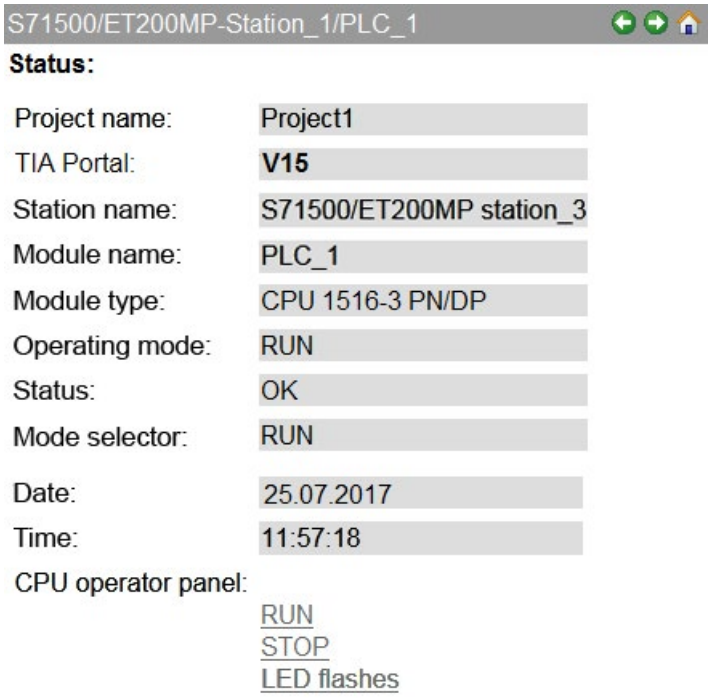

Figure 3-70 Example basic websites, "Status" web page

Glossary

Automation system

An automation system is a programmable logic controller that consists of at least one CPU, various input and output modules, as well as operating and monitoring devices.

AWP

Automation Web Programming

AWP commands

Special command syntax for data exchange between CPU and HTML file.

Configuration

Systematic arrangement of individual modules (design).

CSS

A CSS (Cascading Style Sheet) specifies how an area or content marked up in HTML is displayed.

Device

Device that can send, receive or amplify data via the bus, e.g., IO controller.

Diagnostics

The detection, localization, classification, visualization and further evaluation of errors, malfunction and alarms.

Diagnostics provides monitoring functions that run automatically during plant operation. This increases the availability of plants by reducing commissioning times and downtimes.

Firewall

A firewall is used to restrict the network access based on sender or target address of the used services. The firewall decides based on specified rules which of the network packets it handles are forwarded and which are not. This way the firewall tries to prevent unauthorized network access.

It is not the function of a firewall to detect attacks. It only implements rules for network communication.

HTTP

Hypertext Transfer Protocol (HTTP). Protocol for data transmission across a network.

HTTPS

Hypertext Transfer Protocol Secure (HTTPS). Protocol for tap-proof transmission of sensitive data across a network.

Identification data

Identification data is stored on a module, and contains information which supports the user in

- Checking the system configuration
- Locating hardware changes in a system
- Correcting errors in a system

Modules can be clearly identified online using the identification data.

Master

The master in possession of the token is an active device. This master has the option to receive data from other devices and to send data to other devices.

PROFIBUS

PROcess **FIeld BUS**, process and field bus standard specified in standard IEC 61784-1:2002 Ed1 CP 3/1. It specifies functional, electrical, and mechanical properties for a bit-serial field bus system.

PROFIBUS is available with the protocols DP (= Distributed I/O), FMS (= Fieldbus Message Specification), PA (= Process Automation), or TF (= Technological Functions).

PROFINET

Within the framework of Totally Integrated Automation (TIA), PROFINET represents the consistent continuation of:

- PROFIBUS DP, the established field bus
- Industrial Ethernet, the communications bus for the cell level

Experience gained from both systems was and is being integrated into PROFINET.

PROFINET as an Ethernet-based automation standard from PROFIBUS International (previously PROFIBUS User Organization) defines a vendor-independent communication, automation, and engineering model.

PROFINET component

A PROFINET component includes the entire data of the hardware configuration, the parameters of the modules, and the corresponding user program. The PROFINET component is made up as follows:

- Technological Function

  The (optional) technological (software) function includes the interface to other PROFINET components in the form of interconnectable inputs and outputs.

- Device

  The device is the representation of the physical programmable controller or field device including the I/O, sensors and actuators, mechanical parts, and the device firmware.

PROFINET IO

As part of PROFINET, PROFINET IO is a communication concept that is used to implement modular, distributed applications.

PROFINET IO allows you to create automation solutions which are familiar to you from PROFIBUS.

PROFINET IO is implemented by the PROFINET standard for automation devices on the one hand, and on the other hand by the engineering tool STEP 7.

That is, you have the same application view in STEP 7, regardless of whether you configure PROFINET or PROFIBUS devices. Programming your user program is essentially the same for PROFINET IO and PROFIBUS DP if you use the extended blocks and system status lists for PROFINET IO.

PROFINET IO controller

Device used to address connected I/O devices. This means that the IO controller exchanges input and output signals with assigned field devices. The IO controller is often the controller on which the automation program runs.

PROFINET IO device

A distributed field device that is assigned to one of the IO controllers (e.g., remote IO, valve terminals, frequency converters, switches).

URL

Uniform Resource Locator (URL). Identifies and localizes a source, such as a web page, uniquely via the method of access used and the location of the source in computer networks.

UTF-8

Abbreviation for 8-bit UCS (Universal Character Set) transformation format. Most popular coding of Unicode characters.

Each Unicode character is assigned a specially coded byte string of variable length in this format. UTF-8 supports up to four bytes on which all Unicode characters can be mapped.

Web browser

Web browsers are visualization programs for web pages and can communicate with Web servers.

Typical web browsers are, for example:

- Microsoft Internet Explorer
- Mozilla Firefox

Index

A

Access restriction, 31
Activating the Web server, 22
Alarms, 55
Automatic updating, 27
AWP commands, 81
    Arrays, 91
    Enumeration types, 88
    Fragments, 90
    PLC tags, 82, 85
    Special tags, 86
    Structures, 93

B

Backup of configuration, 122
Binding, 41

C

CA certificate, 23
Certificate
    Web server certificate, 23
Certificate manager
    Global CA-signed certificate, 24
    Global security settings, 24
    Local CPU-specific certificate, 24
Communication, 57
    Connections, 61
    Parameters, 57
    Resources, 60
    Statistics, 59
Configuring
    Backup, 120
    Restoring, 120
Copy protection, 41
CPU-specific certificate, 23

D

Diagnostics (Motion Control), 125
Diagnostics buffer, 45
Display of texts in different languages, 32

E

East Asian languages, 32

F

Fail-safe, 44
FAQs
    Automatically updating web pages, 80
    Download certificate, 26
    Incorporating web pages with relative path names, 80
    User page as start page, 100
    Web server access via smartphone, 20
Filebrowser, 111
    System files, 111
Firmware update, 52
F-runtime groups, 44

G

Global security settings, 24

H

HTTPS, 26

I

Identification, 40
    Diagnostics, 40
    Module information, 49

K

Know-how protection, 41

L

Language settings, 31

M

Measurements (trace), 137
Memory, 42
Motion Control
  Diagnostics, 125
  Service overview, 125
Motion status, 128

P

Program protection, 41

R

Reading out service data, 154
Reading PLC tags
  Overview, 83
  String or character tags in expressions, 84
  Tags of the String and Character type, 83
Restoring the configuration, 123
Runtime information, 43

S

Security functions, 16
Select technology objects, 132
Self-signed certificates, 23
Service overview, 130
Signal table (Trace), 142, 143
Start page, 35
  Intro, 35
  Log in, 38
  Logout, 38
Statistics
  Communication, 59
  Module information, 50
Status and error bits, 127

T

Tags
  writing, 74, 76
Technology objects
  Status, errors, technology alarms, 125
Topology, 62
  Actual topology, 62
  Examples, 69
  Graphical view, 63
  Set topology, 62
  Status overview, 68
  Tabular view, 66
Trace recordings, 135
Trend diagram (Trace), 138

U

Updating and saving, 34
  Deactivating automatic updating, 34
  Printing web pages, 34
  Saving alarms, 56
  Saving diagnostics buffer entries, 46
Updating user pages, 80
User interface language
  assign to project language, 33
  Setting, 36
User management, 28
User pages, 30, 77
  Configuring user pages, 94
  Example user page, 100
  User page as start page, 98
  WWW instruction, 96

W

Web access
  Via HMI devices and mobile terminal devices, 20
  Via PG/PC, 20
Web browser, 17
Web server
  Certificate, 23
  Properties, 16
Web server - web pages
  Tag status, 72
  Watch table, 75
Web server certificate
  creating and assigning, 23
Web server language, 28

SIEMENS

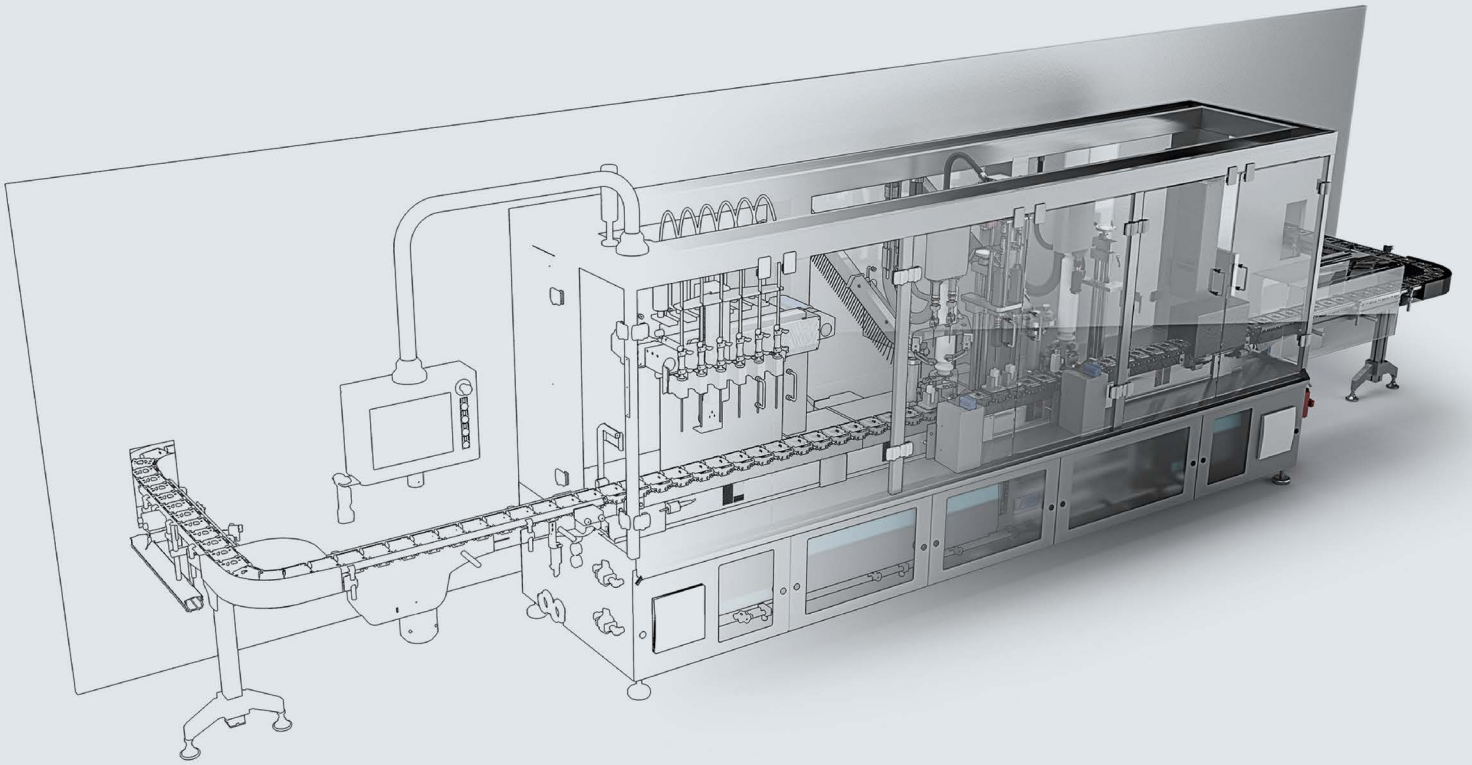

Function manual

SIMATIC

S7-1500

S7-PLCSIM Advanced

Edition 12/2017

support.industry.siemens.com

SIEMENS

SIMATIC

S7-1500
S7-PLCSIM Advanced

Function Manual

Preface

Guide 1

Product overview 2

Installing 3

Communication paths 4

Simulate CPU 5

Virtual time response 6

User interfaces (API) 7

Restrictions 8

List of abbreviations A

12/2017

A5E37039512-AB

Legal information

Warning notice system

This manual contains notices you have to observe in order to ensure your personal safety, as well as to prevent damage to property. The notices referring to your personal safety are highlighted in the manual by a safety alert symbol, notices referring only to property damage have no safety alert symbol. These notices shown below are graded according to the degree of danger.

⚠ DANGER

indicates that death or severe personal injury **will** result if proper precautions are not taken.

⚠ WARNING

indicates that death or severe personal injury **may** result if proper precautions are not taken.

⚠ CAUTION

indicates that minor personal injury can result if proper precautions are not taken.

NOTICE

indicates that property damage can result if proper precautions are not taken.

If more than one degree of danger is present, the warning notice representing the highest degree of danger will be used. A notice warning of injury to persons with a safety alert symbol may also include a warning relating to property damage.

Qualified Personnel

The product/system described in this documentation may be operated only by **personnel qualified** for the specific task in accordance with the relevant documentation, in particular its warning notices and safety instructions. Qualified personnel are those who, based on their training and experience, are capable of identifying risks and avoiding potential hazards when working with these products/systems.

Proper use of Siemens products

Note the following:

⚠ WARNING

Siemens products may only be used for the applications described in the catalog and in the relevant technical documentation. If products and components from other manufacturers are used, these must be recommended or approved by Siemens. Proper transport, storage, installation, assembly, commissioning, operation and maintenance are required to ensure that the products operate safely and without any problems. The permissible ambient conditions must be complied with. The information in the relevant documentation must be observed.

Trademarks

All names identified by ® are registered trademarks of Siemens AG. The remaining trademarks in this publication may be trademarks whose use by third parties for their own purposes could violate the rights of the owner.

Disclaimer of Liability

We have reviewed the contents of this publication to ensure consistency with the hardware and software described. Since variance cannot be precluded entirely, we cannot guarantee full consistency. However, the information in this publication is reviewed regularly and any necessary corrections are included in subsequent editions.

Siemens AG
Division Digital Factory
Postfach 48 48
90026 NÜRNBERG
GERMANY

A5E37039512-AB
℗ 12/2017 Subject to change

Copyright © Siemens AG 2016 - 2017.
All rights reserved

Preface

Purpose of the documentation

This function manual describes the simulation software, SIMATIC S7-PLCSIM Advanced V2.0. You can use this software to simulate and test your SIMATIC STEP 7 programs on a virtual controller.

You can obtain updates to the function manual as downloads on the Internet (https://support.industry.siemens.com/cs/us/en/view/109739154).

An application example for S7-PLCSIM Advanced is also available on the Internet (https://support.industry.siemens.com/cs/ww/en/view/109739660).

Scope

This function manual is valid for the following order versions

- 6ES7823-1FA01-0YA5 - SIMATIC S7-PLCSIM Advanced V2.0 Floating License (DVD)
- 6ES7823-1FE01-0YA5 - SIMATIC S7-PLCSIM Advanced V2.0 Floating License (Download)
- 6ES7823-1FA01-0YE5 - Upgrade SIMATIC S7-PLCSIM Advanced V1.0 → V2.0 (DVD)
- 6ES7823-1FE01-0YE5 - Upgrade SIMATIC S7-PLCSIM Advanced V1.0 → V2.0 (Download)

The articles each contain one license for up to three instances.

Basic knowledge required

The system may only be used by qualified staff.
The following knowledge is required:

- Industrial Automation and Automation Technology
- Programming with STEP 7 (TIA Portal)
- SIMATIC CPUs and CPU programming
- PC-based automation using S7-1500 and WinCC Runtime Advanced
- Development of software in C++ or C#
- PC technology
- Windows operating system

Conventions

Conventions STEP 7: In this documentation, "STEP 7" is used as a synonym for all versions of the configuration and programming software "STEP 7 (TIA Portal)".

We also abbreviate SIMATIC S7-PLCSIM Advanced V2.0 as "PLCSIM Advanced".

Please also observe notes marked as follows:

Note

A note contains important information on the product described in the documentation, on the handling of the product or on the section of the documentation to which particular attention should be paid.

Security information

Siemens provides products and solutions with industrial security functions that support the secure operation of plants, systems, machines and networks.

In order to protect plants, systems, machines and networks against cyber threats, it is necessary to implement – and continuously maintain – a holistic, state-of-the-art industrial security concept. Siemens' products and solutions only form one element of such a concept.

Customer is responsible to prevent unauthorized access to its plants, systems, machines and networks. Systems, machines and components should only be connected to the enterprise network or the internet if and to the extent necessary and with appropriate security measures (e.g. use of firewalls and network segmentation) in place.

Additionally, Siemens' guidance on appropriate security measures should be taken into account. For more information about industrial security, please visit (http://www.siemens.com/industrialsecurity).

Siemens' products and solutions undergo continuous development to make them more secure. Siemens strongly recommends to apply product updates as soon as available and to always use the latest product versions. Use of product versions that are no longer supported, and failure to apply latest updates may increase customer's exposure to cyber threats.

To stay informed about product updates, subscribe to the Siemens Industrial Security RSS Feed under (http://www.siemens.com/industrialsecurity).

Table of contents

Preface 4

1 Guide 27

1.1 Documentation guide 27

1.2 S7-PLCSIM products 29

2 Product overview 30

2.1 What is S7-PLCSIM Advanced? 30

2.2 Compatibility during upgrade 31

2.3 Security for S7-PLCSIM Advanced 32

2.4 Simulations support 33

2.5 Supported CPUs 34

2.6 Differences between a simulated and a real CPU 36

2.6.1 Restrictions for all supported CPUs 37

2.7 Simulating Motion Control 39

3 Installing 40

3.1 Introduction 40

3.1.1 System requirements 40

3.1.2 Licenses 42

3.1.3 Trial License 42

3.1.4 Installation log 44

3.2 S7-PLCSIM Advanced 45

3.3 Installing S7-PLCSIM Advanced 46

3.4 Changing S7-PLCSIM Advanced 48

3.5 Repairing S7-PLCSIM Advanced 49

3.6 Uninstalling S7-PLCSIM Advanced 50

4 Communication paths 51

4.1 Local communication 53

4.2 Communication via TCP / IP 54

4.3 Enable distributed communication 56

5 Simulate CPU 58

5.1 Basic procedure for the simulation 58

5.2 User interface 59

5.2.1 S7 PLCSIM Advanced Symbol 59

5.2.2 S7 PLCSIM Advanced Control Panel 60

5.3 Download 64

5.4 Network addresses in the simulation 66
5.4.1 Siemens PLCSIM Virtual Ethernet Adapter 66
5.4.2 PLCSIM Advanced instances 66

5.5 Simulate peripheral I/O 68

5.6 Simulate communication 69
5.6.1 Communication services that can be simulated 69
5.6.2 Communication between instances 70

5.7 Provide project data offline for simulation 71

6 Virtual time response 73

6.1 Speed up and slow down simulation 75

6.2 Stop simulation 76

6.3 Synchronize simulation partner 78
6.3.1 Synchronize simulation partner cycle-controlled 78
6.3.2 Synchronize simulation partner time-controlled 80

7 User interfaces (API) 82

7.1 Introduction 82
7.1.1 Access to instances 84
7.1.2 User interfaces (API) 85
7.1.3 Overview of user interfaces for native C++ 86
7.1.4 Overview of user interfaces for managed code 90
7.1.5 Overview of data types for native C++ 93
7.1.6 Overview of data types for managed code 94

7.2 Initialize API 96
7.2.1 Load API library 96
7.2.2 Native C++ 96
7.2.2.1 InitializeApi() 96
7.2.2.2 RuntimeApiEntry_Initialize 98
7.2.3 .NET (C#) 99
7.2.3.1 Initialize 99

7.3 Shut down API 100
7.3.1 Native C++ 100
7.3.1.1 DestroyInterface() 101
7.3.1.2 RuntimeApiEntry_DestroyInterface 102
7.3.1.3 FreeApi() 103
7.3.1.4 ShutdownAndFreeApi() 104
7.3.2 .NET (C#) 105
7.3.2.1 Shut down API 105

7.4 Global functions (Native C++) ... 106

7.5 API ISimulationRuntimeManager ... 111
7.5.1 Interfaces - Information and settings ... 111
7.5.2 Simulation Runtime instances ... 113
7.5.3 Remote connections ... 119
7.5.4 Events ... 124
7.5.4.1 OnConfigurationChanged events ... 124
7.5.4.2 OnRuntimeManagerLost events ... 127

7.6 API IInstances ... 130
7.6.1 Interfaces - Information and settings ... 130
7.6.2 Controller - Information and settings ... 136
7.6.3 Operating state ... 144
7.6.4 Tag list ... 152
7.6.5 I/O access ... 158
7.6.5.1 Synchronizing inputs and outputs ... 158
7.6.5.2 I/O access via address - Reading ... 158
7.6.5.3 I/O access via address - Writing ... 166
7.6.5.4 I/O access via tag name - Reading ... 173
7.6.5.5 I/O access via tag name - Writing ... 191
7.6.6 Settings for the virtual time ... 220
7.6.7 Cycle control ... 223
7.6.8 Acyclic services ... 228
7.6.8.1 Overview ... 228
7.6.8.2 ReadRecordDone / WriteRecordDone ... 230
7.6.8.3 AlarmNotification ... 232
7.6.8.4 ProcessEvent ... 234
7.6.8.5 PullOrPlugEvent ... 236
7.6.8.6 StatusEvent ... 238
7.6.8.7 ProfileEvent ... 239
7.6.8.8 UpdateEvent ... 240
7.6.8.9 GetConfiguredProcessEvent ... 241
7.6.8.10 RackOrStationFaultEvent ... 242
7.6.9 Events ... 243
7.6.9.1 OnOperatingStateChanged events ... 243
7.6.9.2 OnSyncPointReached events ... 247
7.6.9.3 OnConfigurationChanging events ... 249
7.6.9.4 OnConfigurationChanged events ... 252
7.6.9.5 OnLedChanged events ... 254
7.6.10 Events for acyclic services ... 257
7.6.10.1 OnDataRecordRead / OnDataRecordWrite events ... 257
7.6.10.2 OnAlarmNotification events ... 258
7.6.10.3 OnProcessEvent events ... 259
7.6.10.4 OnPullOrPlugEvent events ... 260
7.6.10.5 OnStatusEvent events ... 261
7.6.10.6 OnProfileEvent events ... 262
7.6.10.7 OnUpdateEvent events ... 263
7.6.10.8 RackOrStationFault events ... 264

7.7 API IRemoteRuntimeManager 265
7.7.1 Interfaces - Information and settings 265
7.7.2 Simulation Runtime instances 268
7.7.2.1 Simulation Runtime instances (remote) 268
7.7.3 Events 275
7.7.3.1 OnConnectionLost events 275

7.8 Data types 279
7.8.1 DLL import functions (Native C++) 280
7.8.1.1 ApiEntry_Initialize 280
7.8.1.2 ApiEntry_DestroyInterface 280
7.8.2 Event callback functions (Native C++) 281
7.8.2.1 EventCallback_VOID 281
7.8.2.2 EventCallback_II_SREC_ST 281
7.8.2.3 EventCallback_II_SREC_ST_SROS_SROS 282
7.8.2.4 EventCallback_II_SREC_ST_SRLT_SRLM 283
7.8.2.5 EventCallback_II_SREC_ST_UINT32_INT64_INT64_UINT32 284
7.8.2.6 EventCallback_IRRTM 285
7.8.2.7 EventCallback_SRCC_UINT32_UINT32_INT32 285
7.8.2.8 EventCallback_II_SREC_ST_SRICC_UINT32_UINT32_UINT32_UINT32 286
7.8.2.9 EventCallback_II_SREC_ST_SDRI 287
7.8.2.10 EventCallback_II_SREC_ST_SDR 288
7.8.2.11 EventCallback_II_SREC_ST_UINT32_EPPET_UINT32 289
7.8.2.12 EventCallback_II_SREC_ST_UINT32_UINT32_EPET_UINT32 290
7.8.2.13 EventCallback_II_SREC_ST_UINT32 291
7.8.2.14 EventCallback_II_SREC_ST_UINT32_UINT32 292
7.8.2.15 EventCallback_II_SREC_ST_UINT32_ERSFET 293
7.8.3 Delegate definitions (managed code) 293
7.8.3.1 Delegate_Void 293
7.8.3.2 Delegate_II_EREC_DT 294
7.8.3.3 Delegate_II_EREC_DT_EOS_EOS 294
7.8.3.4 Delegate_II_EREC_DT_ELT_ELM 295
7.8.3.5 Delegate_II_EREC_DT_UINT32_INT64_INT64_UINT32 296
7.8.3.6 Delegate_IRRTM 297
7.8.3.7 Delegate_SRCC_UINT32_UINT32_INT32 297
7.8.3.8 Delegate_II_EREC_DT_SRICC_UINT32_UINT32_UINT32_UINT32 298
7.8.3.9 Delegate_II_EREC_DT_SDRI 299
7.8.3.10 Delegate_II_EREC_DT_SDR 300
7.8.3.11 Delegate_SREC_ST_UINT32_EPPET_UINT32 301
7.8.3.12 Delegate_SREC_ST_UINT32_UINT32_EPET_UINT32 302
7.8.3.13 Delegate_SREC_ST_UINT32 303
7.8.3.14 Delegate_SREC_ST_UINT32_UINT32 304
7.8.3.15 Delegate_SREC_ST_UINT32_ERSFET 305
7.8.4 Definitions and constants 306
7.8.5 Unions (Native C++) 307
7.8.5.1 UIP 307
7.8.5.2 UDataValue 308

7.8.6 Structures ... 309
7.8.6.1 SDataValue ... 309
7.8.6.2 SDVBNI ... 311
7.8.6.3 SDataValueByAddress ... 311
7.8.6.4 SDataValueByAddressWithCheck ... 312
7.8.6.5 SDataValueByName ... 312
7.8.6.6 SDataValueByNameWithCheck ... 313
7.8.6.7 SConnectionInfo ... 313
7.8.6.8 SInstanceInfo ... 314
7.8.6.9 SDimension ... 314
7.8.6.10 STagInfo ... 315
7.8.6.11 SIP ... 317
7.8.6.12 SIPSuite4 ... 317
7.8.6.13 SOnSyncPointReachedResult ... 319
7.8.6.14 SDataRecordInfo ... 321
7.8.6.15 SDataRecord ... 322
7.8.6.16 SConfiguredProcessEvents ... 323
7.8.6.17 SDiagExtChannelDescription ... 324
7.8.7 Enumerations ... 326
7.8.7.1 ERuntimeErrorCode ... 327
7.8.7.2 EArea ... 330
7.8.7.3 EOperatingState ... 330
7.8.7.4 EOperatingMode ... 331
7.8.7.5 ECPUType ... 332
7.8.7.6 ECommunicationInterface ... 334
7.8.7.7 ELEDType ... 334
7.8.7.8 ELEDMode ... 335
7.8.7.9 EPrimitiveDataType ... 335
7.8.7.10 EDataType ... 338
7.8.7.11 ETagListDetails ... 342
7.8.7.12 ERuntimeConfigChanged ... 343
7.8.7.13 EInstanceConfigChanged ... 343
7.8.7.14 EPullOrPlugEventType ... 344
7.8.7.15 EProcessEventType ... 344
7.8.7.16 EDirection ... 345
7.8.7.17 EDiagProperty ... 345
7.8.7.18 EDiagSeverity ... 346
7.8.7.19 ERackOrStationFaultType ... 346

8 Restrictions ... 347

8.1 Overview ... 347
8.2 Restrictions with fail-safe CPUs ... 347
8.3 OPC UA server ... 348
8.4 Web server ... 349
8.5 Backing up and restoring the configuration of a PLCSIM Advanced instance ... 350
8.6 Restrictions for file paths ... 350
8.7 Restrictions for communications services ... 351
8.8 Restrictions for instructions ... 351

8.9 Restrictions with Motion Control 352
8.9.1 MCR and EMCR 352
8.9.2 Technology modules 353
8.9.3 OB 91 and OB 92 353
8.10 Restrictions to local communication via Softbus 354
8.11 Restrictions of security with VMware vSphere Hypervisor (ESXi) 355
8.12 Error with overflow of cyclical events and motion OBs 355
8.13 Deviating I/O values in the STEP 7 user program 356
8.14 Multiple simulations and possible collision of IP addresses 356
8.15 Lacking access to an IP address 356
8.16 Simulation in standby mode 356
8.17 Error installing the antivirus software from Kaspersky 357

A List of abbreviations 358

Tables

Table 1- 1 Comparison of S7-PLCSIM products 29
Table 2- 1 Compatibility of API and Runtime versions 31
Table 2- 2 Supported CPUs 34
Table 2- 3 Compatibility to the TIA Portal 35
Table 3- 1 Minimum requirements for hardware 40
Table 5- 1 Assignment of the Ethernet interfaces, for example, for a CPU 1518-4 PN/DP 67
Table 5- 2 Supported communication options 69
Table 6- 1 Cycle-controlled operating modes (SingleStep) 78
Table 6- 2 Time-controlled operating modes (TimespanSynchronized) 80
Table 7- 1 Overview of initializing and shutting down API - Native C++ 86
Table 7- 2 Overview of global functions - Native C++ 86
Table 7- 3 Overview of API ISimulationRuntimeManager functions - Native C++ 87
Table 7- 4 Overview of API ISimulationRuntimeManager events - Native C++ 87
Table 7- 5 Overview of IInstances functions - Native C++ 87
Table 7- 6 Overview of IInstances events - Native C++ 89
Table 7- 7 Overview of IRemoteRuntimeManager functions - Native C++ 89
Table 7- 8 Overview of IRemoteRuntimeManager events - Native C++ 89
Table 7- 9 Overview of initializing and shutting down API - .NET (C#) 90
Table 7- 10 Overview of ISimulationRuntimeManager functions - .NET (C#) 90
Table 7- 11 Overview of ISimulationRuntimeManager events - .NET (C#) 90
Table 7- 12 Overview of IInstances functions - .NET (C#) 91
Table 7- 13 Overview of IInstances events - .NET (C#) 92
Table 7- 14 Overview of IRemoteRuntimeManager functions - .NET (C#) 92
Table 7- 15 Overview IRemoteRuntimeManager events - .NET (C#) 92
Table 7- 16 Overview of data types - Native C++ 93
Table 7- 17 Overview of data types - .NET (C#) 94
Table 7- 18 InitializeApi() - Native C++ 97
Table 7- 19 RuntimeApiEntry_Initialize - Native C++ 98
Table 7- 20 Initialize - .NET (C#) 99
Table 7- 21 DestroyInterface() - Native C++ 101
Table 7- 22 RuntimeApiEntry_DestroyInterface() - Native C++ 102
Table 7- 23 FreeApi() - Native C++ 103
Table 7- 24 ShutdownAndFreeApi() - Native C++ 104

Table 7- 25 GetNameOfAreaSection() - Native C++ ... 106
Table 7- 26 GetNameOfCPUType() - Native C++ ... 106
Table 7- 27 GetNameOfCommunicationInterface() - Native C++ ... 106
Table 7- 28 GetNameOfDataType() - Native C++ ... 106
Table 7- 29 GetNameOfErrorCode() - Native C++ ... 107
Table 7- 30 GetNameOfLEDMode() - Native C++ ... 107
Table 7- 31 GetNameOfLEDType() - Native C++ ... 107
Table 7- 32 GetNameOfOperatingMode() - Native C++ ... 107
Table 7- 33 GetNameOfErrorCode() - Native C++ ... 108
Table 7- 34 GetNameOfOperatingState() - Native C++ ... 108
Table 7- 35 GetNameOfPrimitiveDataType() - Native C++ ... 108
Table 7- 36 GetNameOfTagListDetails() - Native C++ ... 108
Table 7- 37 GetNameOfRuntimeConfigChanged() - Native C++ ... 109
Table 7- 38 GetNameOfInstanceConfigChanged() - Native C++ ... 109
Table 7- 39 GetNameOfDirection() - Native C++ ... 109
Table 7- 40 GetNameOfDiagSeverity() - Native C++ ... 109
Table 7- 41 GetNameOfRackOrStationFaultType() - Native C++ ... 110
Table 7- 42 GetVersion() - Native C++ ... 111
Table 7- 43 Version { get; } - .NET (C#) ... 111
Table 7- 44 IsInitialized() - Native C++ ... 111
Table 7- 45 IsInitialized { get; } - .NET (C#) ... 111
Table 7- 46 IsRuntimeManagerAvailable() - Native C++ ... 112
Table 7- 47 IsRuntimeManagerAvailable { get; } - .NET (C#) ... 112
Table 7- 48 Shutdown() - Native C++ ... 112
Table 7- 49 Shutdown() - .NET (C#) ... 112
Table 7- 50 GetRegisteredInstancesCount() - Native C++ ... 113
Table 7- 51 GetRegisteredInstanceInfoAt() - Native C++ ... 113
Table 7- 52 RegisteredInstanceInfo { get; } - .NET (C#) ... 113
Table 7- 53 RegisterInstance() - Native C++ ... 114
Table 7- 54 RegisterInstance() - .NET (C#) ... 115
Table 7- 55 RegisterCustomInstance() - Native C++ ... 116
Table 7- 56 RegisterCustomInstance() - .NET (C#) ... 117
Table 7- 57 CreateInterface() - Native C++ ... 118
Table 7- 58 CreateInterface() - .NET (C#) ... 119
Table 7- 59 OpenPort() - Native C++ ... 119
Table 7- 60 OpenPort() - .NET (C#) ... 120

Table 7- 61 ClosePort() - Native C++ 120
Table 7- 62 ClosePort() - .NET (C#) 120
Table 7- 63 GetPort() - Native C++ 120
Table 7- 64 Port { get; } - .NET (C#) 121
Table 7- 65 GetRemoteConnectionsCount() - Native C++ 121
Table 7- 66 GetRemoteConnectionInfoAt()- Native C++ 121
Table 7- 67 RemoteConnectionInfo { get; } - .NET (C#) 121
Table 7- 68 RemoteConnect() - Native C++ 122
Table 7- 69 RemoteConnect() - .NET (C#) 123
Table 7- 70 Events for the ISimulationRuntimeManager interface 124
Table 7- 71 OnConfigurationChanged - .NET (C#) 124
Table 7- 72 RegisterOnConfigurationChangedCallback() - Native C++ 124
Table 7- 73 RegisterOnConfigurationChangedEvent() - Native C++ 125
Table 7- 74 RegisterOnConfigurationChangedEvent() - .NET (C#) 125
Table 7- 75 UnregisterOnConfigurationChangedCallback() - Native C++ 125
Table 7- 76 UnregisterOnConfigurationChangedEvent() - Native C++ 125
Table 7- 77 UnregisterOnConfigurationChangedEvent() - .NET (C#) 126
Table 7- 78 WaitForOnConfigurationChangedEvent() - Native C++ 126
Table 7- 79 WaitForOnConfigurationChangedEvent - .NET (C#) 126
Table 7- 80 OnRuntimeManagerLost - .NET (C#) 127
Table 7- 81 RegisterOnRuntimeManagerLostCallback() - Native C++ 127
Table 7- 82 RegisterOnRuntimeManagerLostEvent() - Native C++ 127
Table 7- 83 RegisterOnRuntimeManagerLostEvent() - .NET (C#) 128
Table 7- 84 UnregisterOnRuntimeManagerLostCallback() - Native C++ 128
Table 7- 85 UnregisterOnRuntimeManagerLostEvent() - Native C++ 128
Table 7- 86 UnregisterOnRuntimeManagerLostEvent() - .NET (C#) 128
Table 7- 87 WaitForOnRuntimeManagerLostEvent() - Native C++ 129
Table 7- 88 WaitForOnRuntimeManagerLostEvent() - .NET (C#) 129
Table 7- 89 Dispose() - .NET (C#) 130
Table 7- 90 GetID() - Native C++ 130
Table 7- 91 ID { get; } - .NET (C#) 130
Table 7- 92 GetName() - Native C++ 131
Table 7- 93 Name { get; } - .NET (C#) 131
Table 7- 94 GetCPUType() - Native C++ 132
Table 7- 95 SetCPUType() - Native C++ 132
Table 7- 96 CPUType { get; set; } - .NET (C#) 132

Table 7- 97 GetCommunicationInterface() - Native C++ 133
Table 7- 98 SetCommunicationInterface() - Native C++ 133
Table 7- 99 CommunicationInterface { get; set; } - .NET (C#) 134
Table 7- 100 GetInfo() - Native C++ 134
Table 7- 101 Info { get; } - .NET (C#) 134
Table 7- 102 UnregisterInstance() - Native C++ 135
Table 7- 103 UnregisterInstance() - .NET (C#) 135
Table 7- 104 GetControllerName() - Native C++ 136
Table 7- 105 ControllerName { get; } - .NET (C#) 136
Table 7- 106 GetControllerShortDesignation() - Native C++ 137
Table 7- 107 ControllerShortDesignation { get; } - .NET (C#) 137
Table 7- 108 GetControllerIPCount() - Native C++ 137
Table 7- 109 GetControllerIP() - Native C++ 138
Table 7- 110 ControllerIP { get; } - .NET (C#) 138
Table 7- 111 GetControllerIPSuite4() Native C++ 138
Table 7- 112 ControllerIPSuite4 { get; } - .NET (#) 138
Table 7- 113 SetIPSuite() - Native C++ 139
Table 7- 114 SetIPSuite() - .NET (C#) 140
Table 7- 115 GetStoragePath() - Native C++ 140
Table 7- 116 SetStoragePath() - Native C++ 141
Table 7- 117 StoragePath { get; set; } - .NET (C#) 141
Table 7- 118 ArchiveStorage() - Native C++ 142
Table 7- 119 ArchiveStorage() - .NET (C#) 142
Table 7- 120 RetrieveStorage() - Native C++ 143
Table 7- 121 RetrieveStorage() - .NET (C#) 143
Table 7- 122 GetOperatingState() - Native C++ 144
Table 7- 123 OperatingState { get; } - .NET (C#) 145
Table 7- 124 PowerOn() - Native C++ 146
Table 7- 125 PowerOn() - .NET (C#) 147
Table 7- 126 PowerOff() - Native C++ 148
Table 7- 127 PowerOff() - .NET (C#) 148
Table 7- 128 MemoryReset() - Native C++ 149
Table 7- 129 MemoryReset() - .NET (C#) 149
Table 7- 130 Run() - Native C++ 150
Table 7- 131 Run() - .NET (C#) 150
Table 7- 132 Stop() - Native C++ 151

Table 7- 133 Stop() - .NET (C#) 151
Table 7- 134 UpdateTagList() - Native C++ 153
Table 7- 135 UpdateTagList() - .NET (C#) 154
Table 7- 136 GetTagListStatus() - Native C++ 155
Table 7- 137 GetTagListStatus() - .NET (C#) 155
Table 7- 138 GetTagInfoCount() - Native C++ 155
Table 7- 139 GetTagInfos() - Native C++ 156
Table 7- 140 TagInfos { get; } - .NET (C#) 156
Table 7- 141 CreateConfigurationFile() - Native C++ 157
Table 7- 142 CreateConfigurationFile() - .NET (C#) 157
Table 7- 143 InputArea { get; } MarkerArea { get; } OutputArea { get; } - .NET (C#) 158
Table 7- 144 GetAreaSize() - Native C++ 159
Table 7- 145 AreaSize { get; } - .NET (C#) 159
Table 7- 146 ReadBit() - Native C++ 160
Table 7- 147 ReadBit() - .NET (C#) 160
Table 7- 148 ReadByte() - Native C++ 161
Table 7- 149 ReadByte() - .NET (C#) 162
Table 7- 150 ReadByte() - Native C++ 163
Table 7- 151 ReadBytes() - .NET (C#) 164
Table 7- 152 ReadSignals() - Native C++ 165
Table 7- 153 ReadSignals() - .NET (C#) 166
Table 7- 154 WriteBit() - Native C++ 167
Table 7- 155 WriteBit() - .NET (C#) 168
Table 7- 156 WriteByte() - Native C++ 169
Table 7- 157 WriteByte() - .NET (C#) 169
Table 7- 158 WriteBytes() - Native C++ 170
Table 7- 159 WriteBytes() - .NET (C#) 171
Table 7- 160 WriteSignals() - Native C++ 172
Table 7- 161 WriteSignals() - .NET (C#) 173
Table 7- 162 Read() - Native C++ 174
Table 7- 163 Read() - .NET (C#) 175
Table 7- 164 ReadBool() - Native C++ 176
Table 7- 165 ReadBool() - .NET (C#) 176
Table 7- 166 ReadInt8() - Native C++ 177
Table 7- 167 ReadInt8() - .NET (C#) 177
Table 7- 168 ReadInt16() - Native C++ 178

Table 7- 169 ReadInt16() - .NET (C#) 178
Table 7- 170 ReadInt32() - Native C++ 179
Table 7- 171 ReadInt32() - .NET (C#) 179
Table 7- 172 ReadInt64() - Native C++ 180
Table 7- 173 ReadInt64() - .NET (C#) 180
Table 7- 174 ReadUInt8() - Native C++ 181
Table 7- 175 ReadUInt8() - .NET (C#) 181
Table 7- 176 ReadUInt16() - Native C++ 182
Table 7- 177 ReadUInt16() - .NET (C#) 182
Table 7- 178 ReadUInt32() - Native C++ 183
Table 7- 179 ReadUInt32() - .NET (C#) 183
Table 7- 180 ReadInt64() - Native C++ 184
Table 7- 181 ReadUInt64() - .NET (C#) 184
Table 7- 182 ReadFloat() - Native C++ 185
Table 7- 183 ReadFloat() - .NET (C#) 185
Table 7- 184 ReadDouble() - Native C++ 186
Table 7- 185 ReadDouble() - .NET (C#) 186
Table 7- 186 ReadChar() - Native C++ 187
Table 7- 187 ReadChar() - .NET (C#) 187
Table 7- 188 ReadWChar() - Native C++ 188
Table 7- 189 ReadWChar() - .NET (C#) 188
Table 7- 190 ReadSignals() - Native C++ 189
Table 7- 191 ReadSignals() - .NET (C#) 190
Table 7- 192 Write() - Native C++ 191
Table 7- 193 Write() - .NET (C#) 192
Table 7- 194 WriteBool() - Native C++ 193
Table 7- 195 WriteBool() - .NET (C#) 194
Table 7- 196 WriteInt8() - Native C++ 195
Table 7- 197 WriteInt8() - .NET (C#) 196
Table 7- 198 WriteInt16() - Native C++ 197
Table 7- 199 WriteInt16() - .NET (C#) 198
Table 7- 200 WriteInt32() - Native C++ 199
Table 7- 201 WriteInt32() - .NET (C#) 200
Table 7- 202 WriteInt64() - Native C++ 201
Table 7- 203 WriteInt64() - .NET (C#) 202
Table 7- 204 WriteUInt8() - Native C++ 203

Table 7- 205 WriteUInt8() - .NET (C#) 204
Table 7- 206 WriteUInt16() - Native C++....205
Table 7- 207 WriteUInt16() - .NET (C#) 206
Table 7- 208 WriteUInt32() - Native C++....207
Table 7- 209 WriteUInt32() - .NET (C#) 208
Table 7- 210 WriteUInt64() - Native C++....209
Table 7- 211 WriteUInt64() - .NET (C#) 210
Table 7- 212 WriteFloat() - Native C++ 211
Table 7- 213 WriteFloat() - .NET (C#)....212
Table 7- 214 WriteDouble() - Native C++....213
Table 7- 215 WriteDouble() - .NET (C#)....214
Table 7- 216 WriteChar() - Native C++ 215
Table 7- 217 WriteChar() - .NET (C#) 216
Table 7- 218 WriteWChar() - Native C++ 217
Table 7- 219 WriteWChar() - .NET (C#)....218
Table 7- 220 WriteSignals() - Native C++ 219
Table 7- 221 WriteSignals() - .NET (C#) 220
Table 7- 222 GetSystemTime() - Native C++....220
Table 7- 223 SetSystemTime() - Native C++ 221
Table 7- 224 SystemTime { get; set; } - .NET (C#) 221
Table 7- 225 GetScaleFactor() - Native C++ 221
Table 7- 226 SetScaleFactor() - Native C++....222
Table 7- 227 ScaleFactor { get; set; } - .NET (C#) 223
Table 7- 228 GetOperatingMode() - Native C++....223
Table 7- 229 SetOperatingMode() - Native C++ 223
Table 7- 230 OperatingMode { get; set; } - .NET (C#)....224
Table 7- 231 SetSendSyncEventInDefaultModeEnabled() - Native C++....224
Table 7- 232 IsSendSyncEventInDefaultModeEnabled() - Native C++ 224
Table 7- 233 IsSendSyncEventInDefaultModeEnabled { get; set; } - .NET (C#) 225
Table 7- 234 GetOverwrittenMinimalCycleTime_ns() - Native C++ 225
Table 7- 235 SetOverwrittenMinimalCycleTime_ns() - Native C++ 225
Table 7- 236 OverwrittenMinimalCycleTime_ns { get; set; } - .NET (C#)....226
Table 7- 237 RunToNextSyncPoint() - Native C++ 226
Table 7- 238 RunToNextSyncPoint() - .NET (C#)....226
Table 7- 239 StartProcessing() - Native C++ 227
Table 7- 240 StartProcessing() - .NET (C#)....227

Table 7- 241 Overview - API methods and associated events 228
Table 7- 242 ReadRecordDone() - Native C++ 230
Table 7- 243 ReadRecordDone() - .NET (C#) 230
Table 7- 244 WriteRecordDone() - Native C++ 231
Table 7- 245 WriteRecordDone() - .NET (C#) 231
Table 7- 246 AlarmNotification() - Native C++ 232
Table 7- 247 AlarmNotification() - .NET (C#) 233
Table 7- 248 ProcessEvent() - Native C++ 234
Table 7- 249 ProcessEvent() - .NET (C#) 235
Table 7- 250 PullOrPlugEvent() - Native C++ 236
Table 7- 251 PullOrPlugEvent() - .NET (C#) 237
Table 7- 252 StatusEvent() - Native C++ 238
Table 7- 253 StatusEvent() - .NET (C#) 238
Table 7- 254 ProfileEvent() - Native C++ 239
Table 7- 255 ProfileEvent() - .NET (C#) 239
Table 7- 256 UpdateEvent() - Native C++ 240
Table 7- 257 UpdateEvent() - .NET (C#) 240
Table 7- 258 GetConfiguredProcessEvents() - Native C++ 241
Table 7- 259 GetConfiguredProcessEvents() - .NET (C#) 241
Table 7- 260 RackOrStationFaultEvent() - Native C++ 242
Table 7- 261 RackOrStationFaultEvent() - .NET (C#) 242
Table 7- 262 Events for the IInstances interface 243
Table 7- 263 OnOperatingStateChanged - .NET (C#) 243
Table 7- 264 RegisterOnOperatingStateChangedCallback() - Native C++ 244
Table 7- 265 RegisterOnOperatingStateChangedEvent() - Native C++ 244
Table 7- 266 UnregisterOnOperatingStateChangedCallback() - Native C++ 245
Table 7- 267 UnregisterOnOperatingStateChangedEvent() - Native C++ 245
Table 7- 268 UnregisterOnOperatingStateChangedEvent() - .NET (C#) 246
Table 7- 269 WaitForOnOperatingStateChangedEvent() - Native C++ 246
Table 7- 270 WaitForOnOperatingStateChangedEvent() - .NET (C#) 246
Table 7- 271 OnSyncPointReached - .NET (C#) 247
Table 7- 272 RegisterOnSyncPointReachedCallback() - Native C++ 247
Table 7- 273 RegisterOnSyncPointReachedEvent() - Native C++ 248
Table 7- 274 UnregisterOnSyncPointReachedCallback() - Native C++ 248
Table 7- 275 UnregisterOnSyncPointReachedEvent() - Native C++ 248
Table 7- 276 UnregisterOnSyncPointReachedEvent() - .NET (C#) 248

Table 7- 277 WaitForOnSyncPointReachedEvent() - Native C++ 249
Table 7- 278 WaitForOnSyncPointReachedEvent() - .NET (C#) 249
Table 7- 279 OnConfigurationChanging - .NET (C#) 249
Table 7- 280 RegisterOnConfigurationChangingCallback() - Native C++ 250
Table 7- 281 RegisterOnConfigurationChangingEvent() - Native C++ 250
Table 7- 282 UnregisterOnConfigurationChangingCallback() - Native C++ 250
Table 7- 283 UnregisterOnConfigurationChangingEvent() - Native C++ 251
Table 7- 284 UnregisterOnConfigurationChangingEvent() - .NET (C#) 251
Table 7- 285 WaitForOnConfigurationChangingEvent() - Native C++ 251
Table 7- 286 WaitForOnConfigurationChangingEvent() - .NET (C#) 251
Table 7- 287 OnConfigurationChanged - .NET (C#) 252
Table 7- 288 RegisterOnConfigurationChangedCallback() - Native C++ 252
Table 7- 289 RegisterOnConfigurationChangedEvent() - Native C++ 253
Table 7- 290 UnregisterOnConfigurationChangedCallback() - Native C++ 253
Table 7- 291 UnregisterOnConfigurationChangedEvent() - Native C++ 253
Table 7- 292 UnregisterOnConfigurationChangedEvent() - .NET (C#) 253
Table 7- 293 WaitForOnConfigurationChangedEvent() - Native C++ 254
Table 7- 294 WaitForOnConfigurationChangedEvent() - .NET (C#) 254
Table 7- 295 OnLedChanged - .NET (C#) 254
Table 7- 296 RegisterOnLedChangedCallback() - Native C++ 255
Table 7- 297 RegisterOnLedChangedEvent() - Native C++ 255
Table 7- 298 UnregisterOnLedChangedCallback() - Native C++ 255
Table 7- 299 UnregisterOnLedChangedEvent() - Native C++ 256
Table 7- 300 UnregisterOnLedChangedEvent() - .NET (C#) 256
Table 7- 301 WaitForOnLedChangedEvent() - Native C++ 256
Table 7- 302 WaitForOnLedChangedEvent() - .NET (C#) 256
Table 7- 303 OnDataRecordRead - .NET (C#) 257
Table 7- 304 OnDataRecordWrite - .NET (C#) 257
Table 7- 305 RegisterOnDataRecordReadCallback() - Native C++ 257
Table 7- 306 UnregisterOnDataRecordReadCallback() - Native C++ 258
Table 7- 307 OnAlarmNotificationDone() - .NET (C#) 258
Table 7- 308 RegisterOnAlarmNotificationDoneCallback() - Native C++ 258
Table 7- 309 UnregisterOnAlarmNotificationDoneCallback() - Native C++ 259
Table 7- 310 OnProcessEventDone() - .NET (C#) 259
Table 7- 311 RegisterOnProcessEventDoneCallback() - Native C++ 259
Table 7- 312 UnregisterOnProcessEventDoneCallback() - Native C++ 260

Table 7- 313 OnPullOrPlugEventDone() - .NET (C#) 260
Table 7- 314 RegisterOnPullOrPlugEventDoneCallback() - Native C++ 260
Table 7- 315 UnregisterOnPullOrPlugEventDoneCallback() - Native C++ 261
Table 7- 316 OnStatusEventDone() - .NET (C#) 261
Table 7- 317 RegisterOnStatusEventDoneCallback() - Native C++ 261
Table 7- 318 UnregisterOnStatusEventDoneCallback() - Native C++ 262
Table 7- 319 OnProfileEventDone() - .NET (C#) 262
Table 7- 320 RegisterOnProfileEventDoneCallback() - Native C++ 262
Table 7- 321 UnregisterOnProfileEventDoneCallback() - Native C++ 263
Table 7- 322 OnUpdateEventDone() - .NET (C#) 263
Table 7- 323 RegisterOnUpdateEventDoneCallback() - Native C++ 263
Table 7- 324 UnregisterOnUpdateEventDoneCallback() - Native C++ 264
Table 7- 325 OnRackOrStationFaultEvent - .NET (C#) 264
Table 7- 326 RegisterOnRackOrStationFaultEventCallback() - Native C++ 264
Table 7- 327 UnregisterOnRackOrStationFaultEventCallback() - Native C++ 264
Table 7- 328 Dispose() - .NET (C#) 265
Table 7- 329 GetVersion() - Native C++ 265
Table 7- 330 Version { get; } - .NET (C#) 265
Table 7- 331 GetIP() - Native C++ 266
Table 7- 332 IP { get; } - .NET (C#) 266
Table 7- 333 GetPort() - Native C++ 266
Table 7- 334 Port { get; } - .NET (C#) 266
Table 7- 335 GetRemoteComputerName() - Native C++ 267
Table 7- 336 RemoteComputerName { get; } - .NET (C#) 267
Table 7- 337 Disconnect() - Native C++ 267
Table 7- 338 Disconnect() - .NET (C#) 268
Table 7- 339 GetRegisteredInstancesCount() - Native C++ 268
Table 7- 340 GetRegisteredInstanceInfoAt() - Native C++ 268
Table 7- 341 RegisterInstanceInfo { get; } - .NET (C#) 269
Table 7- 342 RegisterInstance() - Native C++ 269
Table 7- 343 RegisterInstance() - .NET (C#) 271
Table 7- 344 RegisterCustomInstance() - Native C++ 272
Table 7- 345 RegisterCustomInstance() - .NET (C#) 273
Table 7- 346 CreateInterface() - Native C++ 274
Table 7- 347 CreateInterface() - .NET (C#) 275
Table 7- 348 OnConnectionLost - .NET (C#) 275

Table 7- 349 RegisterOnConnectionLostCallback() - Native C++ 276
Table 7- 350 RegisterOnConnectionLostEvent() - Native C++ 276
Table 7- 351 RegisterOnConnectionLostEvent() - .NET (C#) 276
Table 7- 352 UnregisterOnConnectionLostCallback() - Native C++ 277
Table 7- 353 UnregisterOnConnectionLostEvent() - Native C++ 277
Table 7- 354 UnregisterOnConnectionLostEvent() - .NET (C#) 277
Table 7- 355 WaitForOnConnectionLostEvent() - Native C++ 277
Table 7- 356 WaitForOnConnectionLostEvent() - .NET (C#) 278
Table 7- 357 ApiEntry_Initialize - Native C++ 280
Table 7- 358 ApiEntry_DestroyInterface - Native C++ 280
Table 7- 359 EventCallback_VOID - Native C++ 281
Table 7- 360 EventCallback_II_SREC_ST - Native C++ 281
Table 7- 361 EventCallback_II_SREC_ST_SROS_SROS - Native C++ 282
Table 7- 362 EventCallback_II_SREC_ST_SRLT_SRLM - Native C++ 283
Table 7- 363 EventCallback_II_SREC_ST_UINT32_INT64_INT64_UINT32 - Native C++ 284
Table 7- 364 EventCallback_IRRTM - Native C++ 285
Table 7- 365 EventCallback_SRCC_UINT32_UINT32_INT32 - Native C++ 285
Table 7- 366 EventCallback_II_SREC_ST_SRICC_UINT32_UINT32_UINT32_UINT32 - Native C++ 286
Table 7- 367 EventCallback_II_SREC_ST_SDRI - Native C++ 287
Table 7- 368 EventCallback_II_SREC_ST_SDR - .NET (C#) 288
Table 7- 369 EventCallback_II_SREC_ST_UINT32_EPPET_UINT32 - Native C++ 289
Table 7- 370 EventCallback_II_SREC_ST_UINT32_UINT32_EPET_UINT32 - Native C++ 290
Table 7- 371 EventCallback_II_SREC_ST_UINT32 - Native C++ 291
Table 7- 372 EventCallback_II_SREC_ST_UINT32_UINT32 - Native C++ 292
Table 7- 373 EventCallback_II_SREC_ST_UINT32_ERSFET - Native C++ 293
Table 7- 374 Delegate_Void - .NET (C#) 293
Table 7- 375 Delegate_II_EREC_DT - .NET (C#) 294
Table 7- 376 Delegate_II_EREC_DT_EOS_EOS - .NET (C#) 294
Table 7- 377 Delegate_II_EREC_DT_ELT_ELM - .NET (C#) 295
Table 7- 378 Delegate_II_EREC_DT_UINT32_INT64_INT64_UINT32 - .NET (C#) 296
Table 7- 379 Delegate_IRRTM - .NET (C#) 297
Table 7- 380 Delegate_SRCC_UINT32_UINT32_INT32 - .NET (C#) 297
Table 7- 381 Delegate_II_EREC_DT_SRICC_UINT32_UINT32_UINT32_UINT32 - .NET (C#) 298
Table 7- 382 Delegate_II_EREC_DT_SDRI - .NET (C#) 299
Table 7- 383 Delegate_II_EREC_DT_SDR - .NET (C#) 300
Table 7- 384 Delegate_SREC_ST_UINT32_EPPET_UINT32 - .NET (C#) 301

Table 7- 385 Delegate_SREC_ST_UINT32_UINT32_EPET_UINT32 - Native C++ 302
Table 7- 386 Delegate_SREC_ST_UINT32 - .NET (C#) 303
Table 7- 387 Delegate_SREC_ST_UINT32_UINT32 - .NET (C#) 304
Table 7- 388 Delegate_SREC_ST_UINT32_ERSFET - .NET (C#) 305
Table 7- 389 Definitions - Native C++ 306
Table 7- 390 Constants - .NET (C#) 306
Table 7- 391 UIP - Native C++ 307
Table 7- 392 UDataValue - Native C++ 308
Table 7- 393 SDataValue - Native C++ 309
Table 7- 394 SDataValue - .NET (C#) 310
Table 7- 395 SDVBNI - Native C++ 311
Table 7- 396 SDVBNI - .NET (C#) 311
Table 7- 397 SDataValueByAddress - Native C++ 311
Table 7- 398 SDataValueByAddress - .NET (C#) 311
Table 7- 399 SDataValueByAddressWithCheck - Native C++ 312
Table 7- 400 SDataValueByAddressWithCheck - .NET (C#) 312
Table 7- 401 SDataValueByName - Native C++ 312
Table 7- 402 SDataValueByName - .NET (C#) 312
Table 7- 403 SDataValueByNameWithCheck - Native C++ 313
Table 7- 404 SDataValueByNameWithCheck - .NET (C#) 313
Table 7- 405 SConnectionInfo - Native C++ 313
Table 7- 406 SConnectionInfo - .NET (C#) 313
Table 7- 407 SInstanceInfo - Native C++ 314
Table 7- 408 SInstanceInfo - .NET (C#) 314
Table 7- 409 SDimension - Native C++ 314
Table 7- 410 SDimension - .NET (C#) 314
Table 7- 411 STagInfo - Native C++ 315
Table 7- 412 STagInfo - .NET (C#) 316
Table 7- 413 SIP - .NET (C#) 317
Table 7- 414 SIPSuite4 - Native C++ 317
Table 7- 415 SIPSuite4 - .NET (C#) 318
Table 7- 416 SOnSyncPointReachedResult - Native C++ 319
Table 7- 417 SOnSyncPointReachedResult - .NET (C#) 320
Table 7- 418 SDataRecordInfo - Native C++ 321
Table 7- 419 SDataRecordInfo - .NET (C#) 321
Table 7- 420 SDataRecord - Native C++ 322

Table 7- 421 SDataRecord - .NET (C#) 322
Table 7- 422 SConfiguredProcessEvents - Native C++ 323
Table 7- 423 SConfiguredProcessEvents - .NET (C#) 323
Table 7- 424 SDiagExtChannelDescription - Native C++ 324
Table 7- 425 SDiagExtChannelDescription - .NET (C#) 325
Table 7- 426 Error types according to PROFINET standard 325
Table 7- 427 ExtChannelErrType error types 326
Table 7- 428 ERuntimeErrorCode - Native C++ 327
Table 7- 429 ERuntimeErrorCode - .NET (C#) 329
Table 7- 430 EArea - Native C++ 330
Table 7- 431 EArea - .NET (C#) 330
Table 7- 432 EOperatingState - Native C++ 330
Table 7- 433 EOperatingState - .NET (C#) 331
Table 7- 434 EOperatingMode - Native C++ 331
Table 7- 435 EOperatingMode - .NET (C#) 331
Table 7- 436 ECPUType - Native C++ 332
Table 7- 437 ECPUType - .NET (C#) 333
Table 7- 438 ECommunicationInterface - Native C++ 334
Table 7- 439 ECommunicationInterface - .NET (C#) 334
Table 7- 440 ELEDType - Native C++ 334
Table 7- 441 ELEDType - .NET (C#) 334
Table 7- 442 ELEDMode - Native C++ 335
Table 7- 443 ELEDMode - .NET (C#) 335
Table 7- 444 EPrimitiveDataType - Native C++ 335
Table 7- 445 EPrimitiveDataType - .NET (C#) 336
Table 7- 446 Compatible primitive data types - Reading 336
Table 7- 447 Compatible primitive data types - Write 337
Table 7- 448 EDataType - Native C++ 338
Table 7- 449 EDataType - .NET (C#) 340
Table 7- 450 ETagListDetails - Native C++ 342
Table 7- 451 ETagListDetails - .NET (C#) 342
Table 7- 452 ERuntimeConfigChanged - Native C++ 343
Table 7- 453 ERuntimeConfigChanged - .NET (C#) 343
Table 7- 454 EInstanceConfigChanged - Native C++ 343
Table 7- 455 EInstanceConfigChanged - .NET (C#) 343
Table 7- 456 EPullOrPlugEventType - Native C++ 344

Table 7- 457 EPullOrPlugEventType - .NET (C#) 344
Table 7- 458 EProcessEventType - Native C++ 344
Table 7- 459 EProcessEventType - .NET (C#) 345
Table 7- 460 EDirection - Native C++ 345
Table 7- 461 EDirection - .NET (C#) 345
Table 7- 462 EDiagProperty - Native C++ 345
Table 7- 463 EDiagProperty - .NET (C#) 345
Table 7- 464 EDiagSeverity - Native C++ 346
Table 7- 465 EDiagSeverity - .NET (C#) 346
Table 7- 466 ERackOrStationFaultType - Native C++ 346
Table 7- 467 ERackOrStationFaultType - .NET (C#) 346
Table 8- 1 CPUs with limited Motion Control resources (MCR, EMCR) during the simulation 352

Figures

Figure 2-1 Enable simulation capability 33
Figure 4-1 Local communication via Softbus 53
Figure 4-2 Local communication via TCP/IP 53
Figure 4-3 Distributed communication via Ethernet 54
Figure 4-4 Distributed communication via network adapters 55
Figure 4-5 Activate PLCSIM Virtual Switch 56
Figure 4-6 Accessible devices on the Virtual Ethernet Adapter 57
Figure 5-1 PLCSIM Advanced Symbol 59
Figure 5-2 Example: Message in the taskbar 59
Figure 5-3 Control Panel 61
Figure 5-4 Example: Download via the "PLCSIM Virtual Ethernet Adapter" (TCP/IP) after naming 65
Figure 5-5 Structure of the MAC address for an instance 67
Figure 5-6 Add card reader 71
Figure 5-7 Preview of download dialog 71
Figure 6-1 Freeze state of the virtual controller 76
Figure 6-2 Overview of the synchronization points 77
Figure 6-3 Example: Sequence in the SingleStep_CP operating mode 79
Figure 6-4 Example: Sequence in the TimespanSynchronized_CP operating mode 81
Figure 7-1 External applications and Simulation Runtime 83
Figure 7-2 Access to instances with distributed communication 84
Figure 7-3 API and external applications 85
Figure 7-4 Flowchart for the simulation of events 228
Figure 7-5 Flowchart 229
Figure 8-1 Policy exceptions for VMware vSphere Hypervisor (ESXi) 355

Guide 1

1.1 Documentation guide

The documentation for the SIMATIC S7-1500 automation system and the SIMATIC ET 200SP distributed I/O system is arranged into three areas.

Basic information

System manuals and Getting Started describe in detail the configuration, installation, wiring and commissioning of the SIMATIC S7-1500 and ET 200SP systems. The STEP 7 online help supports you in configuration and programming.

Device information

Product manuals contain a compact description of the module-specific information, such as properties, terminal diagrams, characteristics and technical specifications.

General information

The function manuals contain detailed descriptions on general topics such as diagnostics, communication, Motion Control, Web server, OPC UA.

You can download the documentation free of charge from the Internet (https://support.industry.siemens.com/cs/ww/en/view/109742691).

Changes and additions to the manuals are documented in product information sheets.

You will find the product information on the Internet:

- S7-1500 (https://support.industry.siemens.com/cs/us/en/view/68052815)
- ET 200SP (https://support.industry.siemens.com/cs/us/en/view/73021864)

Manual Collections

The Manual Collections contain the complete documentation of the systems put together in one file.

You will find the Manual Collections on the Internet:

- S7-1500 (https://support.industry.siemens.com/cs/ww/en/view/86140384)
- ET 200SP (https://support.industry.siemens.com/cs/ww/en/view/84133942)

"mySupport"

With "mySupport", your personal workspace, you make the best out of your Industry Online Support.

In "mySupport", you can save filters, favorites and tags, request CAx data and compile your personal library in the Documentation area. In addition, your data is already filled out in support requests and you can get an overview of your current requests at any time.

You must register once to use the full functionality of "mySupport".

You can find "mySupport" on the Internet (http://support.industry.siemens.com/My/ww/en/documentation).

"mySupport" - Documentation

In the Documentation area in "mySupport" you can combine entire manuals or only parts of these to your own manual.
You can export the manual as PDF file or in a format that can be edited later.

You can find "mySupport" - Documentation on the Internet (https://support.industry.siemens.com/My/ww/en/).

Application examples

The application examples support you with various tools and examples for solving your automation tasks. Solutions are shown in interplay with multiple components in the system - separated from the focus on individual products.

You will find the application examples on the Internet (https://support.industry.siemens.com/sc/ww/en/sc/2054).

TIA Selection Tool

The TIA Selection Tool can be used to select, configure and order devices for Totally Integrated Automation (TIA). It assembles the configuration editors for automation technology already familiar into a single tool.

With the TIA Selection Tool, you can generate a complete order list from your product selection or product configuration.

You can find the TIA Selection Tool on the Internet (http://w3.siemens.com/mcms/topics/en/simatic/tia-selection-tool).

1.2 S7-PLCSIM products

PLCSIM Advanced V2.0, PLCSIM V15 and PLCSIM V5.x

Table 1- 1 Comparison of S7-PLCSIM products

Function	PLCSIM Advanced V2.0	PLCSIM V15	PLCSIM V5.x
Runtime	Independent	Programming with STEP 7	Programming with STEP 7
User interface	Control Panel	Look&Feel of TIA Portal	Look&Feel of STEP 7 V5.x
Communication	Softbus, TCP/IP	Softbus only	Softbus only
Supported CPU families	S7-1500 (C, T, F), ET 200SP, ET 200SP F	S7-1200 (F), S7-1500 (C, T, F), ET 200SP, ET 200SP F	S7-300, S7-300F S7-400, S7-400F
API for co-simulation[1]	✓	-	-
Web server	✓	-	-
OPC UA	✓	-	-
Process diagnostics	✓	✓	-
S7 communication	✓	Softbus	Softbus
Open user communication	✓, UDP only via TCP/IP	Softbus	-
Traces[2]	✓	(✓)	-
Motion[3]	✓	(✓)	-
Protected blocks (KHP)	✓	✓, for S7-1500 CPUs only	-
Multiple instances	Up to 16	Up to 2	-
Support of distributed instances	✓	-	-
Virtual time	✓	-	-
Connection of real CPUs/HMIs	✓	-	-
DNS usage	✓	-	-
Virtual memory card	✓	-	-
Communication between the instances	-	PLCSIM as of V12 and PLCSIM V5.x can be installed and operated on the same PC or the same virtual machine.	
	-	Instances of PLCSIM as of V12 can communicate via Softbus with PLCSIM V5.x.	
	PLCSIM Advanced 2.0 and PLCSIM V15 and higher can be installed and operated on the same PC or the same virtual machine. The communication between the two applications **cannot** be simulated.		-
	PLCSIM V5.4 SP8 is automatically installed with PLCSIM Advanced. The communication between the two applications can be simulated. Instances of PLCSIM Advanced can communicate via Softbus with PLCSIM V5.4 SP8.		

1 Via C++ and C# programs and simulation software

2 Can be monitored with PLCSIM V15 in the TIA Portal; can also be monitored with PLCSIM Advanced V2.0 in the Web server.

3 With PLCSIM V15 the axes are always in simulation mode irrespective of the axis configuration.
With PLCSIM Advanced V2.0 the axes can also be operated in "Real" mode over the API.

Product overview 2

2.1 What is S7-PLCSIM Advanced?

Using PLCSIM Advanced, you can simulate your CPU programs on a virtual controller. You do not need any real controllers for this. You can configure your CPU with STEP 7 in the TIA Portal, program your application logic and then load the hardware configuration and the program into the virtual controller. From there you can run your program logic, observe the effects of simulated inputs and outputs and adapt your programs.

In addition to communicating via Softbus, PLCSIM Advanced provides a full Ethernet connection and can thus also communicate distributed.

PLCSIM Advanced enables interaction with native C++/C# programs or simulation software over the **user interface (API)**.

Application areas

- Verification of the user program (TIA Portal)
- Automatic testing of the STEP 7 program
- Software in the loop simulation for the virtual commissioning of machine tools/production machines, production cells and production lines in a plant.

Advantages

The use of PLCSIM Advanced offers numerous advantages:

- Improve quality of automation projects by early error detection
- Avoid costs for hardware in simulation environments
- Reduced response times
- Reduce risk for commissioning
- Earlier training of operator is possible
- Increase production efficiency by optimizing program components
- Increase efficiency during replacement of machine components
- Increase efficiency during expansion of existing plants

2.2 Compatibility during upgrade

Compatibility of API and Runtime versions

The installation of PLCSIM Advanced V2.0 leads to an upgrade of an existing earlier version. However, the Runtime Manager of PLCSIM Advanced V2.0 is compatible with projects that were created with the API version V1.0. You can therefore continue to use already created projects.

Note

PLCSIM Advanced V2.0 contains the API versions V1.0 (SP1) and V2.0 and the Runtime version V2.0.

An API with higher version number cannot connect with the Runtime of an earlier version.

Table 2- 1 Compatibility of API and Runtime versions

API version	Runtime version	Supported
V1.0 (SP1)	V1.0 (SP1)	Yes
V1.0 (SP1)	V2.0	Yes
V2.0	V1.0 (SP1)	No[1]
V2.0	V2.0	Yes

1 The combination leads to a "WRONG_VERSION" error.

2.3 Security for S7-PLCSIM Advanced

Restrictions for security

Note the following restrictions when using PLCSIM Advanced:

Authentication

- The user interfaces (API) do not have options for authentication and authorization. There is no protection using user accounts and passwords.
- The Runtime Manager communication is not protected by authentication.

Communication

- The multi-computer simulation communication is not encrypted.
- A TCP/IP port is opened on the PC for cross-network communication.
- The installed WinPcap component provides access to TCP/IP network communication.

Note

For cross-computer communication, it is recommended to use a closed simulation network that is not connected to a production network.

Know-how protection

Note

If know-how-protected blocks for the simulation support are enabled, the know-how protection is limited.

2.4 Simulations support

Requirement for simulation

Note

Enable simulation capability

To use a STEP 7 project with simulation, you must select the "Support simulation during block compilation" option in the "Protection" tab in the properties of the project and confirm with OK.

Figure 2-1 Enable simulation capability

Know-how protection

If a know-how-protected block is to be used for the simulation, it must be unlocked by entering a password. Only through unlocking can the "Simulation with SIMATIC S7-PLCSIM Advanced" option in the tab "General > Compilation" in the properties of the block be activated.

Global libraries

You cannot use know-how protection with global libraries, because the libraries are write-protected.

The "Simulation with SIMATIC S7-PLCSIM Advanced" option must be set when generating the blocks (source of the blocks).

2.5 Supported CPUs

Supported CPUs from the S7-1500 family

PLCSIM Advanced V2.0 supports the simulation of the following CPUs:

Table 2- 2 Supported CPUs

Type	Version V1.8, V2.0, V2.1, V2.5	
Standard CPUs	CPU 1511-1 PN CPU 1513-1 PN CPU 1515-2 PN CPU 1516-3 PN/DP CPU 1517-3 PN/DP[2] CPU 1518-4 PN/DP[2] CPU 1518-4 PN/DP ODK[2, 3] CPU 1518-4 PN/DP MFP[2, 3]	CPU 1511F-1 PN CPU 1513F-1 PN CPU 1515F-2 PN CPU 1516F-3 PN/DP CPU 1517F-3 PN/DP[2] CPU 1518F-4 PN/DP[2] CPU 1518F-4 PN/DP ODK[2, 3] CPU 1518F-4 PN/DP MFP[2, 3]
Compact CPUs[1]	CPU 1511C-1 PN CPU 1512C-1 PN	
ET 200SP CPUs	CPU 1510SP-1 PN CPU 1512SP-1 PN	CPU 1510SP F-1 PN CPU 1512SP F-1 PN
Technology CPUs	CPU 1511T-1 PN CPU 1515T-2 PN CPU 1516T-3 PN/DP[2] CPU 1517T-3 PN/DP[2]	CPU 1511TF-1 PN CPU 1515TF-2 PN CPU 1516TF-3 PN/DP[2] CPU 1517TF-3 PN/DP[2]

1 The on-board I/O within the compact CPUs is not simulated. The simulation interface corresponds to the process image.

2 The simulation of this CPU only supports Motion Control Resources (MCR) and Extended Motion Control Resources (EMCR) to a limited extent.

3 The ODK functionality of this CPU is not simulated.

Unsupported CPUs

PLCSIM Advanced does not support the simulation of the following CPUs:

- S7-1200 CPUs
- ET 200pro, ET 200pro F CPUs
- ET 200SP Open Controller CPU 1515SP PC
- Software Controller

Compatibility to the TIA Portal

The following versions of PLCSIM Advanced and the TIA Portal are compatible:

Table 2- 3 Compatibility to the TIA Portal

PLCSIM Advanced version	TIA Portal version	Supported CPU version
V1.0 SP1	V14 (SP1), V15	V1.8, V2.0
V2.0	V14 (SP1), V15	V1.8, V2.0, V2.1, V2.5

Note

Firmware version

The firmware used in PLCSIM Advanced corresponds to that of a CPU S7-15xx V2.5.

You can configure a CPU with an earlier firmware version (for example V1.8) and load it onto PLCSIM Advanced. The online diagnostics then also displays the firmware version V2.5.

Downloading a CPU with a newer firmware version results in aborting.

See also

Restrictions with Motion Control (Page 352)

2.6 Differences between a simulated and a real CPU

The virtual controller cannot fully simulate a real CPU down to the individual details. Even if a program is downloaded without errors to the CPU and running successfully, this does not necessarily mean that the virtual controller in the simulation behaves exactly like a real CPU.

Deterministic

PLCSIM Advanced runs on a PC with the Windows operating system. Therefore, the scan cycle time and the exact time of actions in PLCSIM Advanced are not the same as when these actions run on physical hardware. This is because that several programs share the processing resources on your PC.

To provide the best possible deterministic behavior under these conditions, PLCSIM Advanced as of V2.0 requires one free Core (CPU core) per instance.

If your program depends heavily on the time required to execute actions, then make sure that you do not evaluate your program based only on the results of the simulation time.

Know-how protection

Projects with know-how protection for blocks can only be simulated if they are enabled for simulation. You need the block password for this purpose.

Instructions

Instructions are simulated with a few exceptions, see Restrictions for instructions (Page 351).

Programs that are based on the instructions behave different than real CPUs in the simulation.

Display of the quantity structure

In STEP 7 the maximum quantity structure that is based on the CPU 1518-4 PN/DP is shown in the project navigation under "Program info" for all the CPUs.

The maximum quantity structure of the currently simulated CPU is displayed under "Online & diagnositics".

2.6.1 Restrictions for all supported CPUs

Bus systems

PLCSIM Advanced does not simulate bus systems (PROFINET IO, PROFIBUS DP, backplane bus).

I/O

PLCSIM Advanced simulates the real CPU, but not configured I/O modules and the on-board I/O of the compact CPUs.

Process image partitions

Process image partitions are supported as with the real CPU.

Address spaces that are not assigned to a process image partition are updated at the cycle control point.

Update

PLCSIM Advanced does not support updating of the process image partitions for IO systems that are connected to the CPU via CMs or CPs.

Diagnostics / diagnostic alarms

With PLCSIM Advanced, simple diagnostics buffer entries can be simulated according to PROFINET standard.

PROFIBUS-specific diagnostics (e.g. via DS0, DS1) and user-specific text lists are not supported.

Online and diagnostic functions

Some online and diagnostic functions are not very useful in the simulation and are therefore not supported. These include, for example, the functions "Format memory card" and "Firmware update".

Status indicators LED flashing

In STEP 7, you can have the LED displayed on an CPU flash using the "Extended download to device" dialog. PLCSIM Advanced does not simulate this function.

Data logging

PLCSIM Advanced does not simulate data logging.

Recipes

PLCSIM Advanced does not simulate the use of recipes.

Copy protection

PLCSIM Advanced does not simulate copy protection.

Limited support

PLCSIM Advanced simulates some functions to a limited extent. You can find an overview in the section Restrictions (Page 347).

2.7 Simulating Motion Control

Restrictions

PLCSIM Advanced supports STEP 7 projects with configurations and functions for motion control for the CPUs S7-1500 (F), S7-1500C, S7-1500T (F) und ET 200SP (F).

PLCSIM Advanced provides only limited support for technology objects in some CPUs, see Restrictions with Motion Control (Page 352).

Simulation with external simulation software

Note

In a virtual S7-1500 controller, the technology objects are connected to the process image. Simulation software can thus access the process image via the user interfaces (API) of PLCSIM Advanced and simulate the behavior of the other connected axes.

Simulation mode in STEP 7

The simulation mode in STEP 7 is a standard function of the technology objects and is independent of PLCSIM Advanced.

If you want to move an axis in simulation mode, select the "Activate simulation" check box in STEP 7 under "Technology Object > Configuration> Basic Parameters > Simulation". No additional setting is required for a virtual axis.

Feedback of the axis position

The speed setpoint of the simulated drive is integrated into the actual position value with a time delay (PT1). The result of this calculation is returned to the technology object as position actual value of the axis.

Reference point approach of the axis

If you selected "Use zero mark via PROFIdrive frame" in STEP 7 for the reference point approach, PLCSIM Advanced responds immediately to any active (mode 2, 3, 8) or passive (mode 4, 5) reference point approach command (MC_Home). The actual position is predefined as the reference point.

Additional information

Information on "Setting in the drive and encoder connection" for actual value calculation of a virtual axis and on the topic "Virtual axis/Simulation" is available in the S7-1500T Motion Control (https://support.industry.siemens.com/cs/ww/en/view/109481326) function manual.

Installing 3

3.1 Introduction

3.1.1 System requirements

You need high-performance computer hardware if you intend to run multiple instances of PLCSIM Advanced at the same time or to simulate communication between PLCSIM Advanced V2.0 and HMI devices as of version 14.0.

Recommendation: Create up to 4 local instances on your PC or virtualization platform.

Minimum requirements for hardware

Preferably, you should install PLCSIM Advanced stand-alone on a Siemens field programming device or PC, independent of STEP 7. Alternatively, you can install PLCSIM Advanced on the configuration PC on which STEP 7 is already installed.

For PLCSIM Advanced to operate efficiently, the computer hardware must meet minimum requirements.

Table 3- 1 Minimum requirements for hardware

Hardware	Requirement
Processor	• 2.2 GHz Intel® Celeron® Dual Core for one instance • One further free core per additional instance
RAM	• 4 GB for one instance • 8 GB for 4 instances
Free hard disk space	5 GB
Screen resolution	Minimum 1024 x 768

Operating systems (64-bit versions)

PLCSIM Advanced V2.0 supports the following operating systems:

- Windows 7 Home Premium SP1
- Windows 7 Professional SP1
- Windows 7 Enterprise SP1
- Windows 7 Ultimate SP1
- Windows 10 Home Version 1703
- Windows 10 Pro Version 1703
- Windows 10 Enterprise Version 1703 (for Field PG M5)
- Windows 10 Enterprise 2016 LTSB
- Windows 10 IoT Enterprise 2016 LTSB
- Windows Server 2012 R2 StdE (full installation)
- Windows Server 2016 Standard (full installation)

Note

Make sure that the Windows operating system you are using is up to date.

Virtualization platforms

You can install STEP 7 and PLCSIM Advanced on a virtual machine. For this purpose, use one of the following virtualization platforms in the specified version or a newer version:

- VMware vSphere Hypervisor (ESXi) 6.5
- VMware Workstation 12.5.5
- VMware Workstation Player 12.5.5

The information that you need to install STEP 7 (TIA Portal) on a virtual machine is available on the Internet (https://support.industry.siemens.com/cs/en/en/view/78788417).

3.1.2 Licenses

Floating license

PLCSIM Advanced is supplied with a floating type license. It can be stored locally and shared for a network.

Note

Validity

A license is valid for up to three instances within a PLCSIM Advanced installation.

PLCSIM Advanced V2.0 cannot be used with a V1.0 license.

PLCSIM Advanced V1.0 can be used with a V2.0 license.

Handling licenses

Handling of licenses is described in the Help for SIMATIC Automation License Manager (ALM).

3.1.3 Trial License

A license is available for the limited period of 21 days for S7-PLCSIM Advanced V2.0.

Activating the Trial License

As soon as you start an instance in the Control Panel, the Automation License Manager (ALM) searches the network for a valid license. If a Floating License is available for S7-PLCSIM Advanced, the ALM offers the Trial License for activation.

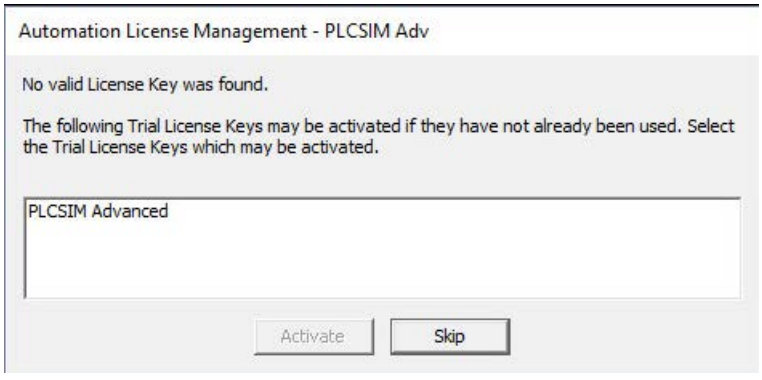

A message at the start of the instances shows the remaining number of days.

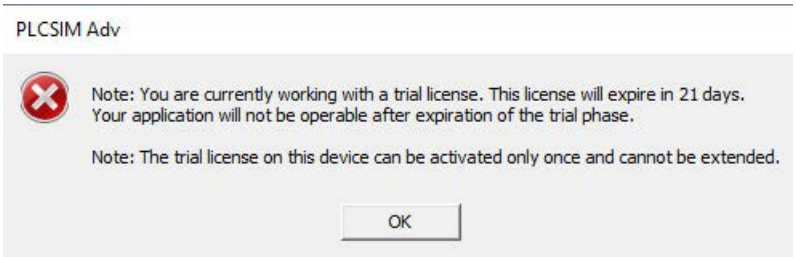

Note

Remote access

With remote access, the message must be confirmed on the computer on which the instance was started.

Note

Sequence of the Trial License

If no valid license is available after the Trial License has elapsed, the instance is no longer started.

Timeout alarm

If you do not confirm the message for the license in a certain amount of time, the instance is not started and the following message appears:

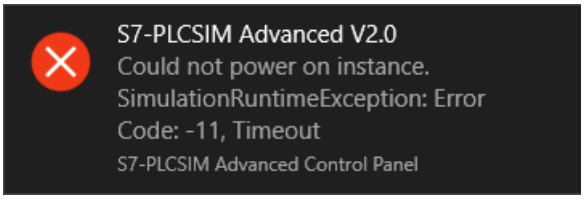

Remedy

Start the instance again and confirm the message for the license.

API functions for licenses

- Return values for API function PowerOn() (Page 144) and callback function OnOperatingStateChanged (Page 243)
  - `SREC_OK` when a floating license is available.
  - `SREC_WARNING_TRIAL_MODE_ACTIVE` when an instance is started with the Trial License.
- Return value for callback function `OnOperatingStateChanged`
  - `SREC_LICENSE_NOT_FOUND` when the instance is automatically shut down after 21 days.

3.1.4 Installation log

The log files contains automatically recorded information on the following installation processes:

- Installation of S7-PLCSIM Advanced
- Change or update of installation of S7-PLCSIM Advanced
- Repair of an existing installation of S7-PLCSIM Advanced
- Uninstallation of S7-PLCSIM Advanced

You can evaluate installation errors and warnings using the log files. You can troubleshoot the installation yourself or contact Siemens Technical Support. Product Support personnel need information from the installation log to analyze the problem. Send the folder with the log files as a ZIP file to Support.

Memory location of the installation log

The memory location of the log file depends on the operating system. To open the folder with the log files, enter the environment variable "%autinstlog%" in the address bar in Windows Explorer. Alternatively, you reach the appropriate directory by entering "cd %autinstlog%" in the command line.

The log files are named as follows:

- SIA_S7-PLCSIM_Advanced_V02@<DATE_TIME>.log
- SIA_S7-PLCSIM_Advanced_V02@<DATE_TIME>_summary.log

Setup_Report (CAB file)

An archive file with the installation log and all other required files is stored in CAB format. This archive file can be found at "%autinstlog%\Reports\Setup_report.cab".

If you need help during installation, send this CAB file to SIEMENS Technical Support. Technical Support personnel can troubleshoot your installation based on the information in the CAB file.

A separate CAB file with a date ID is saved for each installation.

3.2 S7-PLCSIM Advanced

The S7-PLCSIM Advanced package contains the following software:

- S7-PLCSIM Advanced
- Automation License Manager
- S7-PLCSIM V5.4
- .NET Framework
- WinPcap

The package is available as download and on DVD.

- SIMATIC S7-PLCSIM Advanced V2.0 Floating License Download
- SIMATIC S7-PLCSIM Advanced V2.0 Floating License (DVD)
  After installing PLCSIM Advanced, keep the DVD in a secure, easily accessible place.

Setup program

You can use the Setup program to change, repair or uninstall your installation, if necessary.

3.3 Installing S7-PLCSIM Advanced

Installation requirements

The Setup program starts automatically with a double-click on the download package or when you insert the DVD in the drive. Make sure that the following conditions are met before you begin the installation process:

- The hardware and software of the computer meet the system requirements.
- You have administrator rights on the installation computer.
- No other programs are active. This also applies to the Siemens Automation License Manager and other Siemens applications.
- All S7-PLCSIM versions prior or equal to V14 are uninstalled.

Note

Security settings

For licensing via the ALM, you must agree during installation that port 4410 for TCP can be entered as an exception in the Windows Firewall (procedure step 5).

Installing S7-PLCSIM Advanced

To install, follow these steps:

1. Double-click the download package or insert the installation medium into the DVD drive of your computer. The setup program starts up automatically, provided you have not disabled the Autostart function on the computer. If the setup program does not start up automatically, start it manually by double-clicking the "Start.exe" file. The "General settings" window is displayed.
2. Click the "Read installation notes" button. After you have read the notes, close the file.
3. Click the "Read product information" button. After you have read the information, close the file.
4. Click the "Browse" button if you want to change the default installation path. The installation path must not exceed 89 characters. The path name must not contain any UNICODE characters. If you select a different installation path than the default installation path, the desktop icon may not be displayed correctly.
5. Click "Next". The window with the security settings is displayed. To continue the installation, select the check box at the bottom of the screen to accept changes to the security and permissions settings of your system.
6. Click "Next". The window with the installation settings is displayed. You can save or print a report of the settings by clicking "Save report" or "Print report". Check the settings for correctness. If you want to make any changes, click "Back" until you reach the point in the installation process where you want to make changes. Once you have completed your changes, click "Next".

7. The overview screen shows your installation details. Click the "Install" button. The installation then starts.
8. After completion of the setup program, you must restart your computer. Select "Yes, I want to restart the computer now" to restart the computer immediately or select "No, I will restart computer later" to restart the computer later.
9. Click "Restart". If the computer is not restarted, click "Finish".

Error during installation of S7-PLCSIM Advanced

When PLCSIM Advanced is installed, any existing installation of S7-PLCSIM is displayed.

A requirement for installation of S7-PLCSIM Advanced is that no other S7-PLCSIM installation prior or equal to V14 is located on the same computer.

Even though no installation of S7-PLCSIM is displayed in the "Programs and Features" list, it is still possible that the computer has an existing installation.

Remedy

Run the setup for S7-PLCSIM prior or equal to V14 and uninstall the program.

When the setup is not available, download the setup files for S7-PLCSIM via Siemens Mall (https://support.industry.siemens.com/cs/ww/en/view/65601780).

3.4 Changing S7-PLCSIM Advanced

Requirements

The following conditions must be met before you can start changing the installation:

- The hardware and software of the computer meet the system requirements.
- You have administrator rights on the installation computer.
- No other programs are active.

Procedure

To change your S7-PLCSIM Advanced installation, follow these steps:

1. Double-click the download package or insert the installation medium into the drive. The setup program starts up automatically, provided you have not disabled the Autostart function on the computer. If the setup program does not start up automatically, start it manually by double-clicking the "Start.exe" file.
2. Follow the prompts until you reach the "Configuration" window.
3. Select the "Change upgrade" check box.
4. Follow the remaining prompts to change your installation.
5. Complete the installation operation by restarting your computer.

Note

Target directory

You cannot change the target directory because you are changing an existing installation.

3.5 Repairing S7-PLCSIM Advanced

Requirements

The following conditions must be met before you can start repairing the installation:

- The hardware and software meet the system requirements.
- You have administrator rights on the installation computer.
- No other programs are active.

Procedure

To repair your installation, follow these steps:

1. Double-click the download package or insert the installation medium into the drive. The setup program starts up automatically, provided you have not disabled the Autostart function on the computer. If the setup program does not start up automatically, start it manually by double-clicking the "Start.exe" file.
2. Follow the prompts until you reach the "Configuration" window. Select the "Repair" check box.
3. Follow the remaining prompts to repair your installation.
4. Complete the repair operation by restarting your computer.

3.6 Uninstalling S7-PLCSIM Advanced

You have two options for uninstalling S7-PLCSIM Advanced:

- You uninstall the program using the Windows Control Panel.
- You uninstall the entire product using the Setup program.

Uninstalling S7-PLCSIM Advanced using the Windows Control Panel

Proceed as follows:

1. Double-click the "Programs and Features" option in the Windows Control Panel.
2. Right-click "Siemens S7-PLCSIM Advanced V2.0" and select "Uninstall".
3. Follow the prompts for uninstallation.
4. Complete the uninstallation operation by restarting your computer.

   If you do not perform a restart, the Runtime Manager continues running.

If problems occur when uninstalling PLCSIM Advanced using the Windows Control Panel, use the installation medium for uninstalling.

Uninstalling S7-PLCSIM Advanced using the Setup program

Proceed as follows:

1. Double-click the download package or insert the installation medium into the drive. The setup program starts up automatically, provided you have not disabled the Autostart function on the computer. If the setup program does not start up automatically, start it manually by double-clicking the "Start.exe" file.

   If you do not perform a restart, the Runtime Manager continues running.
2. Follow the prompts until you reach the "Configuration" window. Your previous installation is detected. Select the "Uninstall" check box.
3. Follow the prompts for uninstallation.
4. Complete the uninstallation operation by restarting your computer.

   If you do not perform a restart, the Runtime Manager continues running.

Uninstalling additional software

During uninstalling the following software from the S7-PLCSIM Advanced package remains installed:

- Automation License Manager
- S7-PLCSIM V5.4
- .NET Framework
- WinPcap

If you also want to uninstall this software, use the Windows Control Panel.

Communication paths

4

Local and distributed communication

The following paths are open for communication between STEP 7 V15 or higher and the instances of PLCSIM Advanced user interfaces:

Communication paths	Local	Local	Distributed
Protocol	Softbus	TCP/IP	TCP/IP
Communication interface in PLCSIM Advanced	PLCSIM	PLCSIM Virtual Ethernet Adapter	PLCSIM Virtual Ethernet Adapter
STEP 7 and instances	On a PC / VM	On a PC / VM	Distributed
Communication...			
between STEP 7 and instances	Yes	Yes	Yes
among instances	Yes	Yes	Yes
possible via OPC UA server and Web server	No	Yes	Yes
between an instance and a real hardware CPU	No	No	Yes
between an instance and a real HMI V14 and higher	No	No	Yes
between an instance and a simulated HMI V14 and higher	Yes	Yes	Yes

Softbus

Softbus is a communication path via a virtual software interface.

The communication is limited to a local PC or a virtual machine. The advantage here is that no data can be accidentally downloaded to a hardware CPU or communicate with real hardware.

Selecting a communication interface

You program the communication interface via the user interfaces (API) or select them in the Control Panel under "Online Access". The setting is valid for all generated instances. The default setting is the communication via "PLCSIM" (Softbus).

Additional network settings are necessary for the distributed communication via the "PLCSIM Virtual Ethernet Adapter" (TCP/IP), see Network addresses in the simulation (Page 66).

API functions for selecting the communication interface

- GetCommunicationInterface() (Page 133)
- SetCommunicationInterface() (Page 133)
- CommunicationInterface { get; set; } (Page 134)

See also

Interfaces - Information and settings (Page 130)

S7 PLCSIM Advanced Control Panel (Page 60)

4.1 Local communication

Local communication can be performed via the Softbus protocol or TCP/IP.

For local communication, the PLCSIM Advanced instance is on the same PC or on the same virtualization platform (VMware) as STEP 7 or another communication partner.

Local communication via Softbus

Local communication is performed via Softbus in PLCSIM Advanced by default.

This ensures that no data can be accidentally downloaded to a hardware CPU or that there is communication with real hardware.

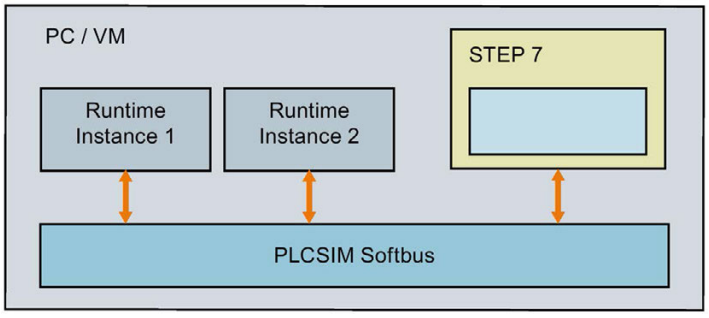

Figure 4-1 Local communication via Softbus

Local communication via TCP/IP

Communication is performed via the PLCSIM Virtual Ethernet Adapter, a virtual network interface that behaves like a real network interface.

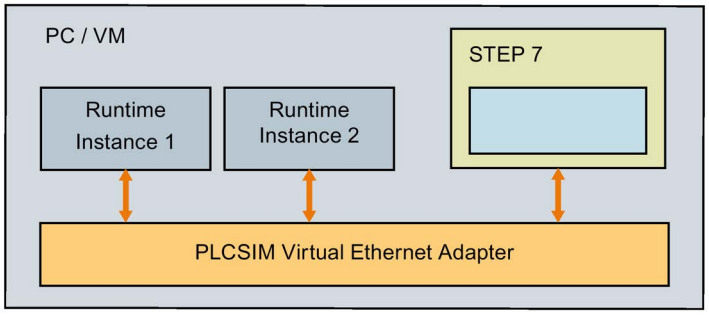

Figure 4-2 Local communication via TCP/IP

4.2 Communication via TCP / IP

Distributed communication

Distributed communication via TCP/IP means that the PLCSIM Advanced instances communicate with the other devices via the Virtual Switch . Communication is possible with real or simulated CPUs, real or simulated HMIs.

The PLCSIM Virtual Switch must be activated on the PLCSIM Virtual Ethernet Adapter for instances on the network to be visible.

Example 1: Distributed communication

In the following example, STEP 7 is on a PC and the PLCSIM Advanced instances are on another PC. The PCs are connected via the Ethernet adapter.

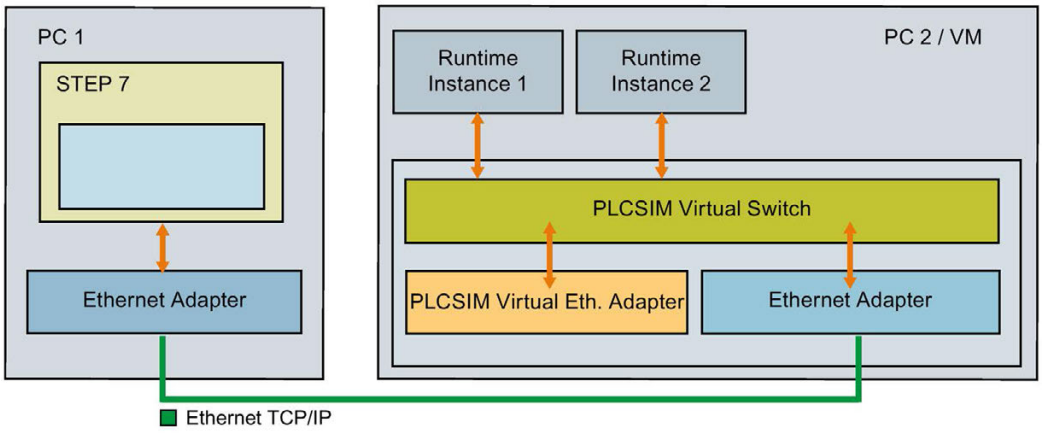

Figure 4-3 Distributed communication via Ethernet

Example 2: Distributed communication

In the following example, STEP 7 is on a PC and the PLCSIM Advanced instances are on a virtual machine on the same PC. PC and virtual machine are connected via the network adapters.

Recommendation

Use to ensure the VMware settings as the network adapter type for the Bridged Mode to ensure error-free operation.

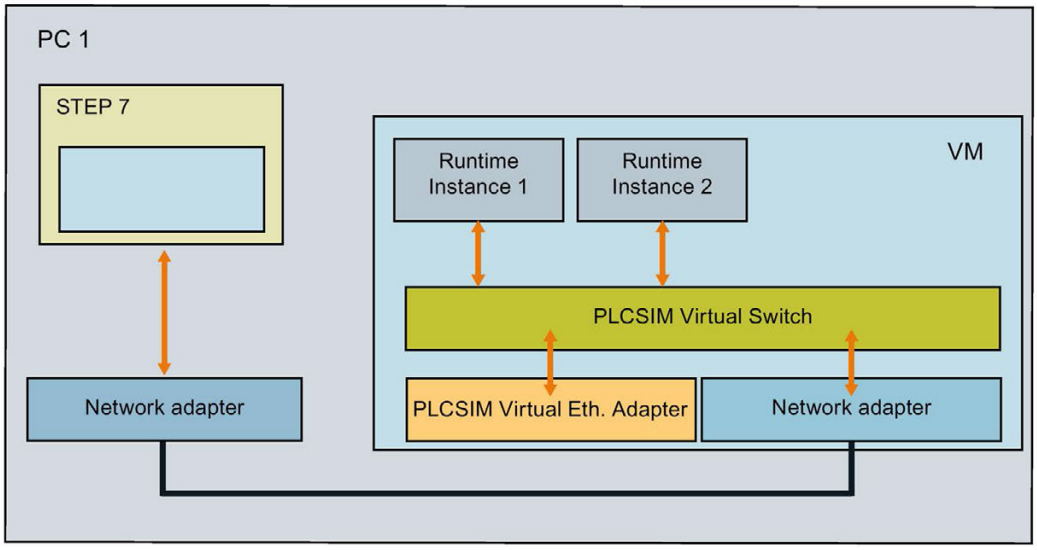

Figure 4-4 Distributed communication via network adapters

4.3 Enable distributed communication

By default, the PLCSIM Virtual Switch can only communicate locally. For a distributed, i.e. multi-computer, communication to be possible, you must activate the PLCSIM Virtual Switch for a real network adapter.

Note

Network adapter

Make sure that only one network adapter of the PLCSIM Virtual Switch is activated.

The Control Panel of PLCSIM Advanced checks the activation and may report an incorrect configuration (error code -50).

Activate PLCSIM Virtual Switch

To make the PLCSIM instances visible on the network and to reach other devices, activate the PLCSIM Virtual Switch in the Control Panel of PLCSIM Advanced or under Windows:

1. To do this, open the "Network and Sharing Center" in the Windows Control Panel.
2. Open the properties of the desired network adapter, for example, for the "Local Area Connection".
3. Select the check box for the "Siemens PLCSIM Virtual Switch" and confirm with OK.

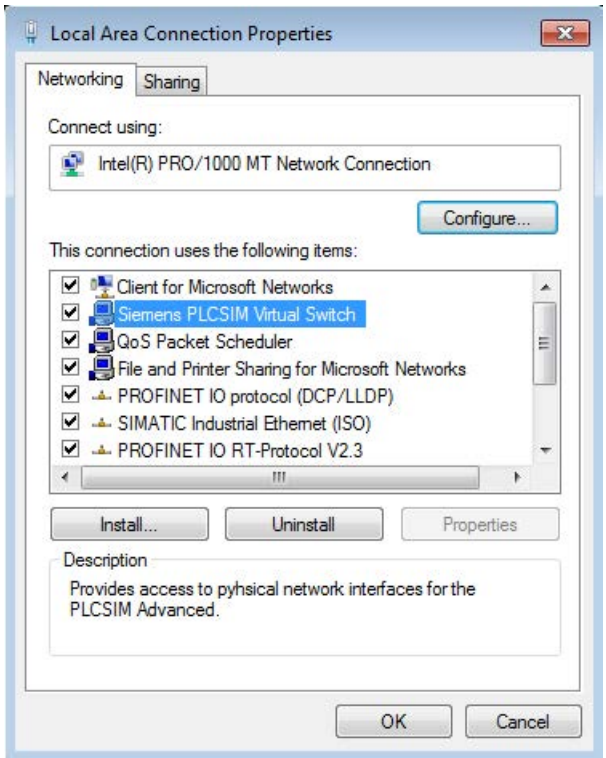

Figure 4-5 Activate PLCSIM Virtual Switch

Accessible devices

When the PLCSIM Virtual Switch is activated, STEP 7 shows the devices available on the Virtual Ethernet Adapter in the project tree.

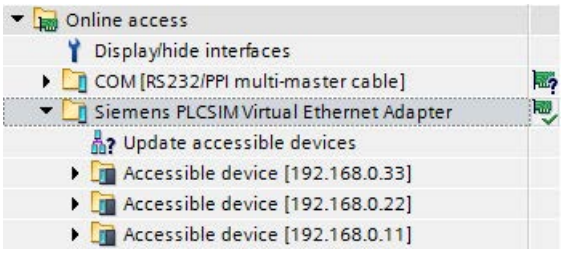

Figure 4-6 Accessible devices on the Virtual Ethernet Adapter

Distributed communication via WLAN

When using distributed communication via WLAN, it may happen that the WinPcap software installed by PLCSIM Advanced does not work with the integrated WLAN adapter of the computer. In this case, no WLAN connection can be established.

Remedy

Use the wired network adapter of the PC/notebook and connect a WLAN adapter upstream.

Simulate CPU 5

5.1 Basic procedure for the simulation

The following overview shows the basic steps to perform simulation with an instance of a virtual controller.

Requirements

The following requirements must be met for starting simulation via local communication:

- STEP 7 as of V14 and S7-PLCSIM Advanced V2.0 are installed on the same PC.
- The CPU hardware is configured in STEP 7.

Note

Enable simulation support

In the "Protection" tab in the properties of the project in STEP 7, select the check box "Support simulation during block compilation".

Create and activate an instance via the Control Panel

- Open PLCSIM Advanced Control Panel
- Open the "Start Virtual S7-1500 PLC" options
- Enter a name for an instance
- Select CPU type
- Create an instance using the "Start" button

In STEP 7, perform the download and start the simulation

- Download the program to the virtual controller
- Switch the controller to RUN to start the simulation
- Perform diagnostics
- ...

See also

Simulations support (Page 33)

5.2 User interface

5.2.1 S7 PLCSIM Advanced Symbol

After installing PLCSIM Advanced, the following icons are on the Windows desktop:

Figure 5-1 PLCSIM Advanced Symbol

After double-clicking the icon, the icon appears in the taskbar of the information area.

You can use Windows functions to permanently display the icon in the information area of the taskbar.

Opening a graphical interface

Right-clicking on the icon in the taskbar opens the graphical interface of PLCSIM Advanced, the Control Panel.

If the Control Panel is open, you can use the mouse-over function to display messages about the current status of the instances.

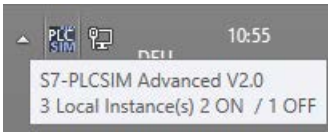

Figure 5-2 Example: Message in the taskbar

5.2.2 S7 PLCSIM Advanced Control Panel

Control Panel

The Control Panel is optional and is not needed to use PLCSIM Advanced via the API. It is available in English in version 2.0.

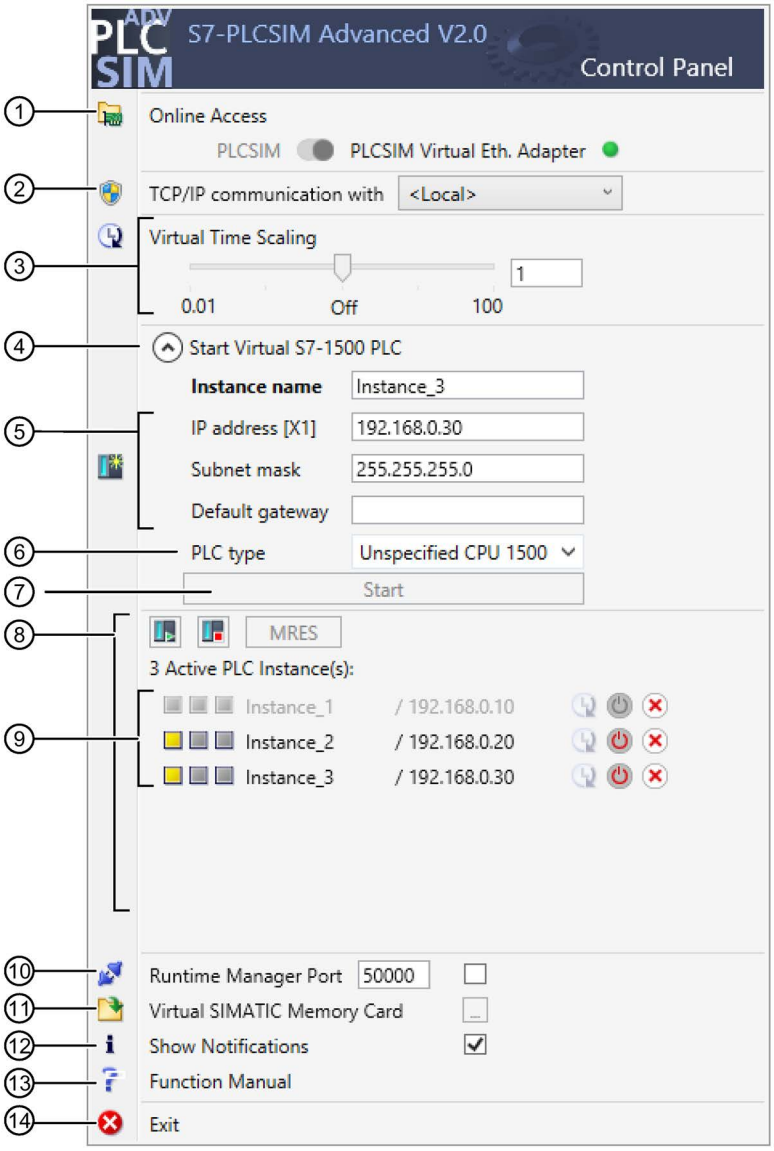

①	Online access	Switch to select the communication interface
②	TCP/IP communication	Selection of network adapter for distributed communication
③	Virtual time	Slider to adjust the scaling factor
④	**Start Virtual S7-1500 PLC**	
	Name of the instance	Here you enter a unique name for the instance. Enter a minimum of 3, a maximum of 64 characters. If the name is unique in the network, the "Start" button is enabled.

⑤	• IP address • Subnet mask • Standard gateway	The input boxes are visible when you switch the communication interface to "PLCSIM Virtual Ethernet Adapter". The IP address is entered automatically.
⑥	CPU type	Here you select the type of CPU to be simulated.
⑦	"Start" button	Use the button to create and start an instance with the entered or selected name.
⑧	Instance list	The "RUN", "STOP" and "MRES" buttons for the operating mode and memory reset. The list displays the available **local** instances of the CPUs.
⑨	LED displays	The meaning of the LED is displayed when you move the mouse over it.
⑩	Runtime Manager Port	Here you open a port on the local PC.
⑪	Virtual SIMATIC Memory Card ...	Open an Explorer window here in which you select the path to the virtual memory card.
⑫	Display messages	Here you disable the PLCSIM Advanced messages in the Windows task bar for the duration of the operation.
⑬	Function manual	This is where you open the S7 PLCSIM Advanced Function Manual in a standard PDF viewer.
⑭	Exit	Exit switches all instances off and closes the Control Panel.

Figure 5-3 Control Panel

Switch for communication interface

Use the switch to select the communication interface for all instances to be created:

- "PLCSIM corresponds to the local communication via Softbus (default).
- "PLCSIM Virtual Ethernet Adapter corresponds to the communication via TCP/IP.

The setting applies to all other instances. The selected communication interface for starting an instance is maintained until all instances are shut down.

When an instance is already started, it sets "its" communication interface as the default for other instances.

To change the communication interface, switch off all instances and enable the other interface.

TCP/IP communication

You can select a real network adapter from the drop-down list during operation. You thus activate the PLCSIM Virtual Switch and establish TCP/IP communication between the instances and the real network.

The <Local > setting disables the PLCSIM Virtual Switch and disconnects the instances from the real network. Only local TCP/IP communication over virtual adapter is possible in this case.

Virtual time

Use the slider or the mouse wheel to select the scaling factor for the virtual time.

The selected scaling factor applies to the instances for which the virtual time is enabled.

Clicking on "Off" restores the default (1) again. For more information, seeVirtual time response (Page 73).

Create instance (local)

To create an instance, enter a unique name under "Instance Name". If the name already exists in the directory of the Virtual SIMATIC Memory Card, the existing instance is started.

In the "PLC-Type" drop-down list, select the Unspecified CPU 1500 or Unspecified ET 200SP CPU type. The CPU is named with the first download of the TIA Portal.

Recommendation: Create up to 4 local instances on your PC or virtualization platform. Remote instances cannot be created through the Control Panel.

Instance list

The list contains the active instances of the CPU that are started locally on the PC or virtualization platform. Instances that have already been started on the runtime API are detected and displayed in the list.

Select the operating mode of the instance with the "RUN" and "STOP" buttons. Select one or more instances for this purpose. Perform a memory reset with the "MRES" button.

The LED displays show the status of the instance that corresponds to those of the hardware CPU.
RUN and STOP are displayed depending on the current operating state of the instance.

You can "operate" the instance with icons:

Apply scaling factor for the virtual time, disable virtual time,

Switch on instance, Switch off instance,

Switch off instance and log out of the Runtime Manager

Runtime Manager Port

A remote connection can be established to another Runtime Manager via the specified port. The value must be greater than 1024.

If you select the check box, the port remains stored. You can use the remote connection without having to make this setting every time you start the Control Panel. To use this functionality, the Control Panel must be started and running in the background.

Virtual SIMATIC Memory Card

The user program, the hardware configuration and the retentive data are stored on the Virtual SIMATIC Memory Card. Use the button to open an Explorer window in which you select the path to the virtual memory card or in which the path is displayed.

Display messages

Each time the panel starts, help information and messages relating to the Control Panel are displayed, for example, when changing the IP address or when a license is missing. Disable the display if you do not need the messages.

Exit

- The command switches off all local instances on the PC or the VM and logs them off from the Runtime Manager.
- This command closes the Runtime Manager if there is no remote connections to other Runtime Managers.
- If the Runtime Manager has remote connections to instances on additional PCs, these instances and the Runtime Manager continue to run.

Minimize Control Panel

Clicking on an empty area on the desktop minimizes the Control Panel. The instances are not affected.

5.3 Download

Requirements

You can download the STEP 7 project to the virtual controller when the following conditions are met:

- The instance is created via the Control Panel.
- The check box "Support simulation during block compilation" is selected.

Selecting the communication interface

In the Download dialog box, select the PG/PC interface:

- "PLCSIM" for download via Softbus
- "Siemens PLCSIM Virtual Ethernet Adapter" for download via TCP/IP
- For distributed communication the real adapter that is connected to the network

Display in the download dialog

The dialog in STEP 7 at the first download of the CPU shows the compatible PLCSIM Advanced instances.

If the instance has not yet been configured after the first download only **one** interface is visible and it appears with the device type "CPU-1500 Simulation".

If the instance has been configured, the number of interfaces visible is determined my the number the CPU type has.

The lifelist shows the interfaces of an instance with their IP addresses.

Perform download

1. Select the PG/PC interface.
2. Click "Download".

   → In the "Load preview" window, STEP 7 shows the message "The downloads are performed on a simulated CPU".

   → After the first download, the PLCSIM Advanced instance displays the CPU type.

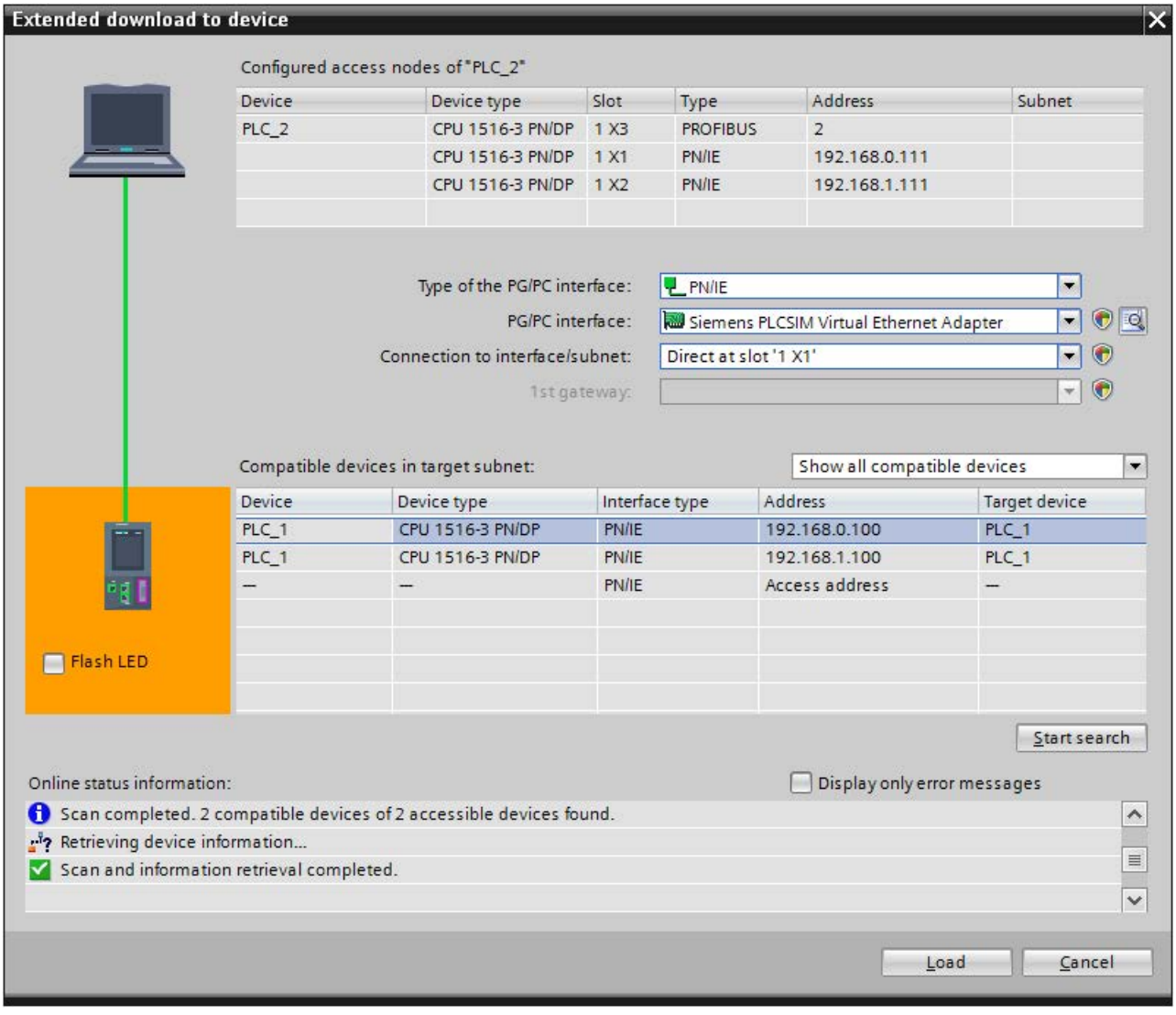

Figure 5-4 Example: Download via the "PLCSIM Virtual Ethernet Adapter" (TCP/IP) after naming

5.4 Network addresses in the simulation

5.4.1 Siemens PLCSIM Virtual Ethernet Adapter

IP address

At the PLCSIM Virtual Ethernet Adapter you assign a static IP address or obtain an IP address via DHCP (default).

MAC address

A randomly generated MAC address is assigned to the PLCSIM Virtual Ethernet Adapter during its installation.

PLCSIM Advanced only uses MAC addresses that are designated as "locally administered" (bit 2 in LSB).

The Siemens-specific prefix is: 02-1B-1B

Three bytes follow, which are determined at random.

Storage location

This MAC address is stored in the registry key "PlcsimvminiMacAddress".

You can overwrite this value.

5.4.2 PLCSIM Advanced instances

Detect CPUs and instances

If Ethernet interfaces of CPUs and PLCSIM Advanced instances are mixed in a network, the instances can be recognized by the "PLCSIM" suffix on the station type.

Structure of the MAC address for an instance

The following figure shows the structure of the dynamically generated, locally managed MAC address:

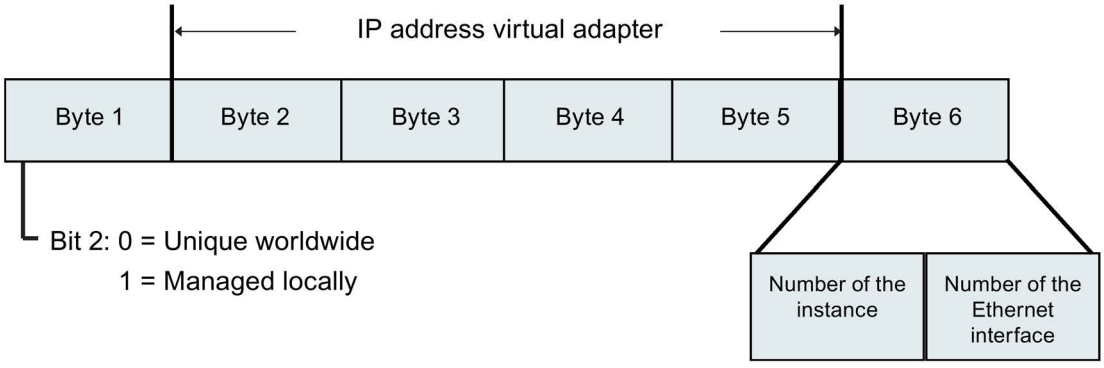

Figure 5-5 Structure of the MAC address for an instance

The MAC address tells you the PC on which a PLCSIM Advanced instance has been started.

Assignment of the Ethernet interfaces

Port configurations of the Ethernet interfaces cannot be simulated in PLCSIM Advanced V2.0. Topological interconnection is not supported. A MAC address for a port is reserved internally for each Ethernet interface.

Table 5- 1 Assignment of the Ethernet interfaces, for example, for a CPU 1518-4 PN/DP

Ethernet interface	Last digit of the MAC Address
IE 1 IE 1 / Port 1	.....0 1
IE 2 IE 2 / Port 1	.....2 3
IE 3 IE 3 / Port 1	.....4 5

Example

02-C0-A8-00-83-10 means:

02 → locally managed MAC address of a PLCSIM Advanced instance

C0-A8-00-83 → IP of the Siemens PLCSIM Virtual Ethernet adapter = 192.168.0.131

1 → Instance 1

0 → Ethernet interface IE 1

If no Virtual SIMATIC Memory Card is loaded during startup of PLCSIM Advanced, the interfaces of PLCSIM Advanced display instances with their locally managed MAC address.

5.5 Simulate peripheral I/O

The Runtime API writes to and reads from a memory area. This memory is synchronized with the internal process image of the virtual S7-1500 controller at the cycle control point and when calling cyclic and acyclic OBs (process image partitions, interrupts, events). The direct I/O accesses are made to this memory area. Only one process can access this memory at a given time.

The virtual controller must be in RUN to apply changes made by the API.

Note

Dominance of the API when synchronizing

The API dominates when synchronizing. If the user program writes to the same address range as the API, the changes of the API overwrite those of the virtual controller.

See also

Deviating I/O values in the STEP 7 user program (Page 356)

5.6 Simulate communication

5.6.1 Communication services that can be simulated

PLCSIM Advanced V2.0 supports the following communication options:

Table 5- 2 Supported communication options

Communications options	Functionality / instructions
PG communication	On commissioning, testing, diagnostics
Open communication using TCP/IP	• TSEND_C / TRCV_C • TSEND / TRCV • TCON[1, 3] • T_DISCON
Open communication using ISO-on-TCP	• TSEND_C / TRCV_C • TSEND / TRCV • TCON • T_DISCON
Open communication via UDP[2]	• TUSEND / TURCV • TCON • T_DISCON
Communication via Modbus TCP	• MB_CLIENT • MB_SERVER
E-mail[2, 3]	• TMAIL_C
S7 communication	• PUT / GET • BSEND / BRCV • USEND / URCV
OPC UA Server[2]	Data exchange with OPC UA clients
Web server[2, 3]	Data exchange via HTTP

1 When the "PLCSIM" interface (Softbus) is set, communication is performed **internally** via ISO-on-TCP.

2 Only via the communication interface "PLCSIM Virtual Ethernet Adapter" (TCP/IP)

3 Secure TCP communication is not supported.

Special conditions apply when communicating with TUSEND/TURCV, see Restrictions for communications services (Page 351).

TMAIL_C

When the TMAIL_C instruction is used, the mail server may not be located on the same computer as the PLCSIM Advanced instance.

Remedy

Make the mail server available via a different computer in the network.

5.6.2 Communication between instances

PLCSIM Advanced supports communication between instances. An instance may be a simulation in PLCSIM Advanced V2.0 or a simulation in WinCC Runtime as of V14.

You can run two instances of PLCSIM Advanced, which then communicate with each other. To enable instances to communicate with each other, they must have a unique IP address.

Each simulated CPU requires a unique IP address

If the CPUs have the same IP address, you cannot run multiple simulations. Each simulated CPU requires a unique IP address.

Make sure that the IP addresses in STEP 7 are unique before you start your simulations.

T-block instructions and UDP

PLCSIM Advanced simulates T-block connections for which the UDP protocol is configured only via the communication interface "PLCSIM Virtual Ethernet Adapter" (TCP/IP).

T-block instructions and data segmentation

PLCSIM Advanced implements T-block instructions with a data segmentation of 4 KB. A real CPU has data segmentation of 8192 bytes.

If you send more than 4 KB in a single TSEND instruction and receive data in ad hoc mode with a TRCV instruction, the TRCV instruction generates new data with only 4 KB. You must perform the TRCV instruction several times to receive additional bytes.

5.7 Provide project data offline for simulation

Simulations regardless of STEP 7

To perform simulations independent of STEP 7, you can save the user program and the hardware configuration in STEP 7 in a directory.

Provide project data offline

1. Create a "User-defined Card Reader" for your project data under Card Reader/USB storage in the project tree of STEP 7 for the CPU.
2. In the "Load preview" dialog for the target device, select "PLC Simulation Advanced" as an action, click in the selection field for this.
   → The project is saved to the <Virtual Memory Card>\SIMATIC.S7S\OMSSTORE directory.
3. Save the folder\SIMATIC.S7S with the project data to a medium of your choice.

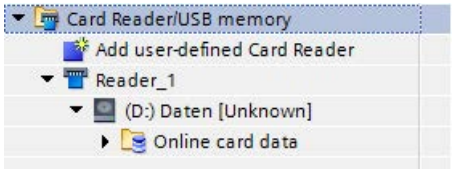

Figure 5-6 Add card reader

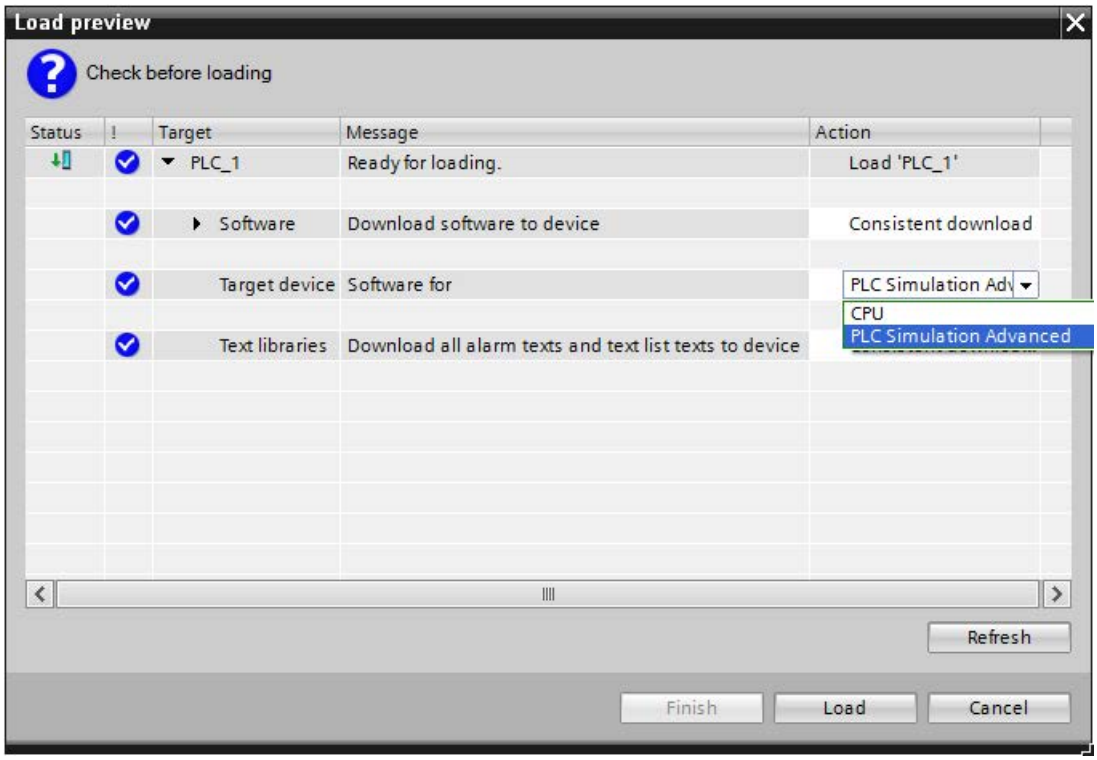

Figure 5-7 Preview of download dialog

Provide project data for simulation

1. On the PC on which PLCSIM Advanced is installed, create the directory \SIMATIC_MC in the directory in which the instance saves its data.
2. Move the \SIMATIC.S7S folder to the directory you have created.
   → The instances can be started with the project data.

API functions

The project data can be used for an instance via the user interface. Use of the following functions for this:

API functions

- GetStoragePath() (Page 140)
- StoragePath { get; set; } (Page 141)

See also

Controller - Information and settings (Page 136)

Virtual time response

6

The virtual controller uses internally two types of clocks for simulation: A virtual clock and a real clock. The virtual clock is always the basis for the user program. It is used by components that are relevant for running the STEP 7 user program, such as cyclic OBs, cycle time monitoring, minimum cycle time, virtual system time and time calculations. Also, the time between two cycle control points is measured in virtual time.

The virtual time can be accelerated or slowed for test purposes.

The real clock always runs unchanged. It is used by components that are not subject to control processes, for example, communication with STEP 7.

Virtual system time

When you start PLCSIM Advanced, the virtual system time of the virtual controller starts with the system time of Windows.

The virtual system time is based on the virtual clock, i.e. if a scaling factor is used, the system time runs correspondingly faster or slower.

All events that the virtual controller sends to the API provides a time stamp based on the system time.

Note

Difference between system time and local time

- System time: UTC ± 0 with daylight saving / standard time
- Local time: UTC ± time zone with daylight saving time / winter time

---

API functions

- GetSystemTime() (Page 220)
- SetSystemTime() (Page 221)
- SystemTime { get; set; } (Page 221)

Time offset

Note

Keep in mind that the time information of virtual system time and real local time differs by the time offset that is formed in addition to the selected scaling factor from the time zone offset and the daylight saving time/standard time offset.

Scaling factor

Using a scaling factor, you can speed up or slow down the virtual clock of the virtual controller for simulations.

- The default is 1, i.e. the course of the virtual time corresponds to the course of real time.
- **Fast forward:** A scaling factor greater than 1 accelerates the virtual clock.

  Example: Scaling factor 2.0 → The virtual time is running twice as fast.
- **Slow motion**: A scaling factor less than 1 decelerates the virtual clock.

  Example: Scaling factor 0.5 → The progress of the virtual time slows down to 50%.

API functions

- GetScaleFactor() (Page 221)
- SetScaleFactor() (Page 222)
- ScaleFactor { get; set; } (Page 223)

See also

Settings for the virtual time (Page 220)

6.1 Speed up and slow down simulation

Influence of fast forward and slow motion

Simulations can be accelerated and slowed down. Fast forward and slow motion only affects time-based components, for example, cyclic OBs. Compared to the real time, they are performed more frequently with fast forward and less frequently with slow motion.

Fast forward and slow motion do not change the execution speed of the CPU machine codes. For example, the speed at which all operations of an OB1 cycle are executed does not change. The execution speed depends on the processor of the PC on which the virtual controller running. If you change the scaling factor, more or fewer cycle control points are reached in a given period of virtual time.

Fast forward

To speed up the virtual time, select a scaling factor greater than 1 in the Control Panel or in the API.

Note

Performance

The performance depends on the size of your project, among other things.

If the scaling factor is too high and the cycle-time monitoring indicates that the PC was incapable of calculating the OB1 or cyclic OBs in the specified time, the virtual controller goes to STOP.

Recommendation: To avoid this, start with a small scaling factor and gradually increase it step-by-step while keeping the virtual controller in RUN.

Slow motion

To slow down the virtual time, select a scaling factor less than 1 in the Control Panel or in the API.

API functions

- GetScaleFactor() (Page 221)
- SetScaleFactor() (Page 222)
- ScaleFactor { get; set; } (Page 223)

See also

Cycle control (Page 223)

Settings for the virtual time (Page 220)

Error with overflow of cyclical events and motion OBs (Page 355)

6.2 Stop simulation

Freeze state of the virtual controller

To stop a simulation and to synchronize a simulation partner, a virtual controller can be set to a freeze state via the API. When the virtual controller has reached a synchronization point, it sends the event `OnSyncPointReached` to the API clients.

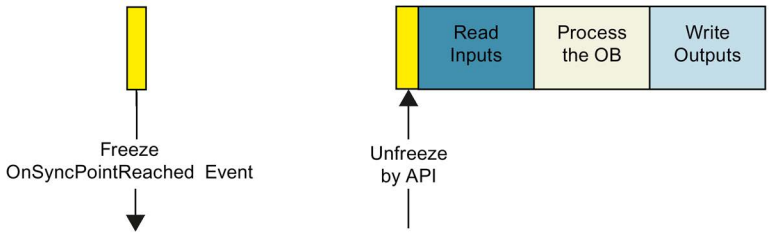

Figure 6-1 Freeze state of the virtual controller

The following occurs in the freeze state:

- The virtual time is stopped.
- No OBs and no timers are running.
- The user program is no longer executed.
- The virtual controller is still accessible from the TIA Portal.
- The input and output data of the virtual controller are in a consistent state.

Note

Cancelation of the freeze state during downloading

During a download the freeze state is canceled. After completion of the download the virtual controller at the synchronization point is reset to the freeze state.

Note

Freeze-state ≠ operating state

The freeze state is an internal operating state of the virtual controller. It does not correspond to RUN/STOP mode of a CPU. In the freeze state, the virtual controller maintains the last operating state.

- The LED display on the Control Panel and on the Web server accordingly shows RUN or STOP for instance.
- The instance shows the operating state `SROS_FREEZE` / `Freeze`, see EOperatingState (Page 330).

Synchronization points

A synchronization point always exists **before** inputs are read in, for example at the cycle control point or at the beginning of a cyclic OB.

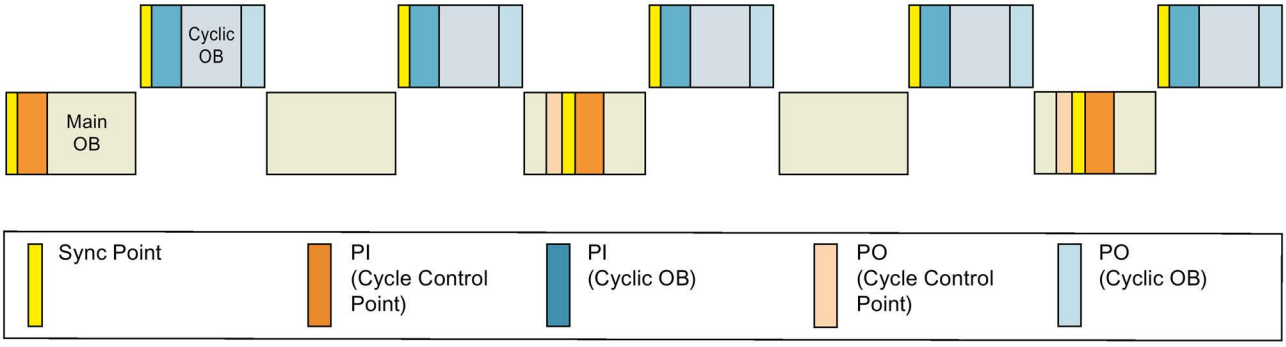

Figure 6-2 Overview of the synchronization points

Trigger freeze state

To trigger the freeze state, following modes are available for the virtual controller:

- SingleStep operating modes

  See Synchronize simulation partner cycle-controlled (Page 78).
- TimespanSynchronized operating modes

  See Synchronize simulation partner time-controlled (Page 80).

In Default operating mode, the virtual controller does not change into a freeze state.

API functions

- Settings for the cycle control (Page 223)
- GetOperatingMode() (Page 223)
- SetOperatingMode() (Page 223)
- OperatingMode { get; set; } (Page 224)
- EOperatingMode (Page 331)

6.3 Synchronize simulation partner

6.3.1 Synchronize simulation partner cycle-controlled

SingleStep operating modes

Several simulation partners (clients) are synchronized cycle-controlled with the SingleStep operating modes of the virtual controller. The operating modes define the synchronization point at which the virtual controller changes to the freeze state and sends the `OnSyncPointReached` event.

Table 6- 1 Cycle-controlled operating modes (SingleStep)

Operating mode	Synchronization point		Minimum cycle time[1]
	Cycle control point	Before reading in the process image partition	
	"C"	"P"	"T"
`SingleStep_C`	✓		
`SingleStep_P`		✓	
`SingleStep_CP`	✓	✓	
`SingleStep_CT`	✓		✓
`SingleStep_CPT`	✓	✓	✓

[1] In addition, the minimum cycle time of the OB 1 is overwritten in this operating mode. When you define a minimum cycle time of 200 ms via the API, the minimum distance between two cycle control points is 200 virtual milliseconds. The default setting is 100 ms.

API functions / events

- GetOverwrittenMinimalCycleTime_ns() (Page 225)
- SetOverwrittenMinimalCycleTime_ns() (Page 225)
- OverwrittenMinimalCycleTime_ns { get; set; } (Page 226)
- RunToNextSyncPoint() (Page 226)
- OnSyncPointReached (Page 247)
- EventCallback_II_SREC_ST_UINT32_INT64_INT64_UINT32 (Page 284) / Delegate_II_EREC_DT_UINT32_INT64_INT64_UINT32 (Page 296)

Terminating the freeze state

The `RunToNextSyncPoint()` function cancels the freeze state and induces the virtual controller to continue running until the next synchronization point.

Switching to the Default operating mode also terminates the freeze state.

Example

The figure schematically shows the sequence in the `SingleStep_CP` operating mode.

In addition to the `OnSyncPointReached` event the virtual controller also sends the virtual time since the last synchronization point of the same process image partition ID or of any process image partition ID has been reached (`TimeSinceSameSyncPoint_ns` / `TimeSinceAnySyncPoint_ns`).

The `RunToNextSyncPoint()` function cancels the freeze state.

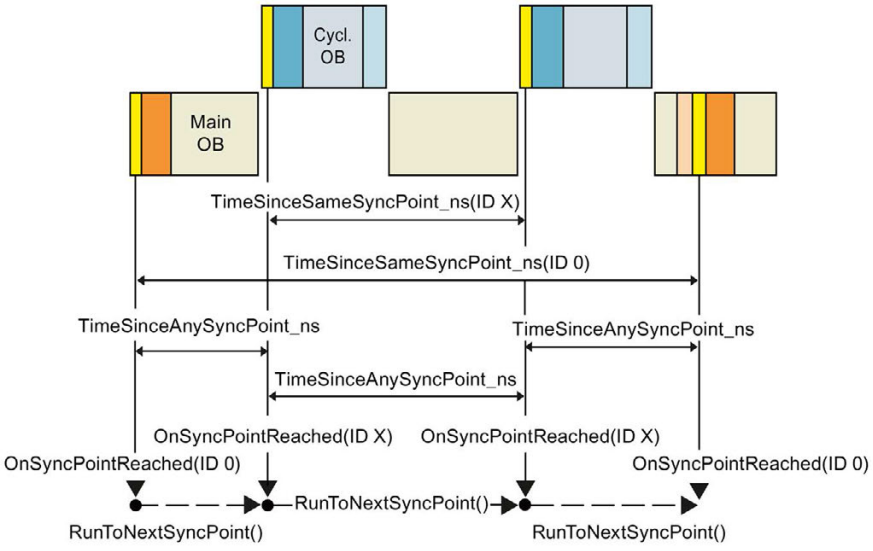

Figure 6-3 Example: Sequence in the SingleStep_CP operating mode

Changing the settings in the watch table

Note

Selecting triggers for monitoring of tags in the SingleStep operating modes

In TIA Portal the watch table in basic mode shows the values for outputs and bit memories **before** the processing.

In order to display the tag values **after** the processing, select the extended mode for the watch table and then select "Permanently, at end of scan cycle" in the "Monitor with trigger" column.

See also

Cycle control (Page 223)

6.3.2 Synchronize simulation partner time-controlled

TimespanSynchronized operating modes

Several simulation partners (clients) are synchronized time-controlled with the TimespanSynchronized operating modes of the virtual controller. The operating modes define the synchronization point at which the virtual controller changes to the freeze state and sends the `OnSyncPointReached` event.

Table 6- 2 Time-controlled operating modes (TimespanSynchronized)

Operating mode	Synchronization point	
	Cycle control point	Before reading in the process image partition
	"C"	"P"
`TimespanSynchronized_C`	✓	
`TimespanSynchronized_CP`	✓	✓
`TimespanSynchronized_P`		✓

API functions / events

- Settings for cycle control (Page 223)
- StartProcessing() (Page 227)
- OnSyncPointReached (Page 247)

Terminating the freeze state

The `StartProcessing(t)` function cancels the freeze state and induces the virtual controller to continue running at least as long as required (on the basis of the virtual time) before it changes back to the freeze state at the next synchronization point.

Switching to the Default operating mode also terminates the freeze state.

Example

The figure schematically shows the sequence in the `TimespanSynchronized_CP` operating mode.

In addition to the `OnSyncPointReached` event the virtual controller also sends the runtime since the last call of the `StartProcessing`(t) (`TimeSinceSameSyncPoint_ns` / `TimeSinceAnySyncPoint_ns`) function.

The `StartProcessing()` function cancels the freeze state.

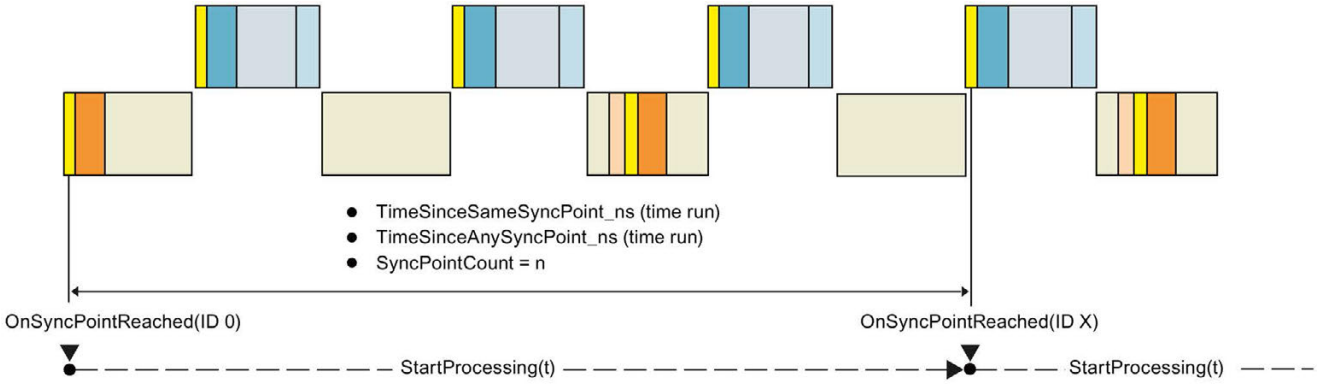

Figure 6-4 Example: Sequence in the TimespanSynchronized_CP operating mode

Description

At least two clients are synchronized on the basis of a virtual period for the time-controlled operating modes. A client can be an instance of a virtual controller or an application that uses the Runtime API (API client). The synchronization must be performed by a synchronization master.

The synchronization master instructs a client to run for a specific period. The time period is specified by the master in nanoseconds. The client then runs for the expected period before he goes into the freeze state at the next synchronization point. Before switching to the freeze state, the client sends the master the exact amount of time that he currently needed. Thereafter, the master signals the next client to catch up.

API client as master

The API client as master signals each client when it should start. The master receives events from every client when they occur.

An API client can only "time manage" instances of a virtual controller. The API client does not receive events from other API clients. It cannot send messages to other API clients.

User interfaces (API) 7

7.1 Introduction

Components of the Simulation Runtime

The following components are relevant for handling the Simulation Runtime of PLCSIM Advanced:

- Runtime
  - Siemens.Simatic.Simulation.Runtime.Manager.exe
  - Siemens.Simatic.Simulation.Runtime.Instance.exe
- Libraries
  - Siemens.Simatic.Simulation.Runtime.Api.x86.dll
  - Siemens.Simatic.Simulation.Runtime.Api.x64.dll
  - SimulationRuntimeApi.h
- Documentation of interfaces with examples in native C++ and .NET (Managed Code)

Description

Runtime and libraries	Description
Siemens.Simatic.Simulation. Runtime.Manager.exe	A Windows process that runs in the background. Main component of Runtime that manages all other Runtime components. The process is started automatically as soon as an application attempts to initialize the Runtime API. It is ended automatically as soon as there is no longer any application running that initialized the Runtime API.
Siemens.Simatic.Simulation. Runtime.Instance.exe	The process of the instance that loads a DLL of a virtual controller. Each virtual controller generates its own process.
Siemens.Simatic.Simulation. Runtime.Api.x86.dll Siemens.Simatic.Simulation. Runtime.Api.x64.dll	API libraries that must load an application to use the Simulation Runtime. The libraries contain interfaces for native code and managed code. The "Runtime.Api.x86.dll" is loaded exclusively by 32-bit applications, and the "Runtime.Api.x64.dll" by 64-bit applications.
SimulationRuntimeApi.h	Header file that describes all data types that require a native C++ application to use the API library.

External applications and Simulation Runtime

The following figure schematically presents the access of external applications to Simulation Runtime via the Runtime API. The Simulation Runtime Manager manages the Runtime instances. These load the libraries of the virtual controllers.

An external application can be other simulation software or a graphical user interface (GUI), for example.

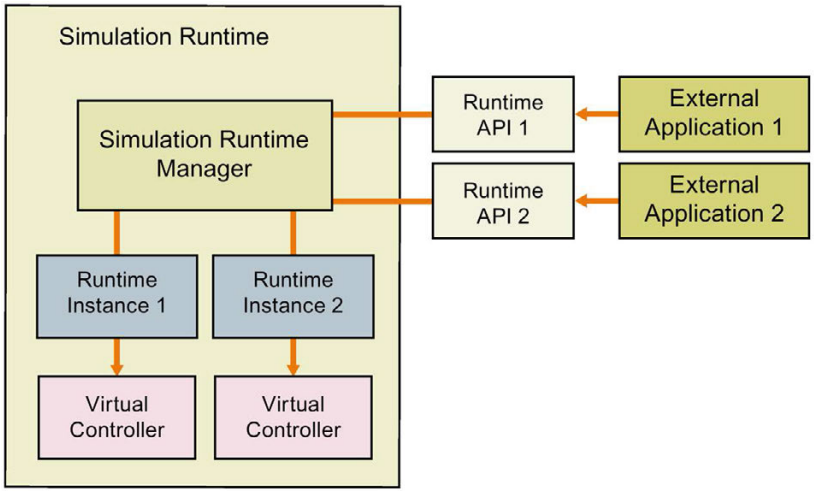

Figure 7-1 External applications and Simulation Runtime

7.1.1 Access to instances

Access via the Control Panel and the API

You can access only one instance that is available locally on the PC via the Control Panel. It does not matter on which PC an instance was created and started. With distributed communication, the Runtime API accesses the instance of the other PCs via the Simulation Runtime Manager.

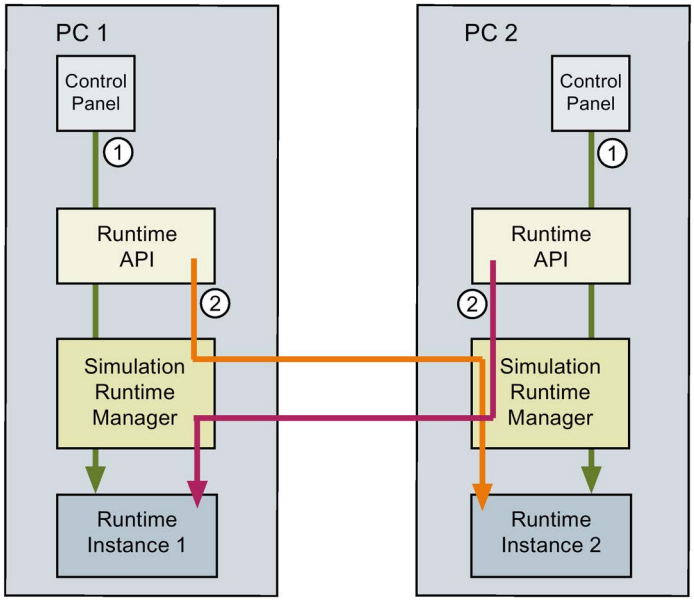

① Access to a local instance via the Control Panel

② Access to a remote instance on the Runtime API

Figure 7-2 Access to instances with distributed communication

API functions

- Table 7-7 Overview of IRemoteRuntimeManager functions - Native C++ (Page 89)
- Table 7-14 Overview of IRemoteRuntimeManager functions - .NET (C#) (Page 92)
- Table 7-5 Overview of IInstances functions - Native C++ (Page 87)
- Table 7-12 Overview of IInstances functions - .NET (C#) (Page 91)

See also

Overview of user interfaces for managed code (Page 90)

S7 PLCSIM Advanced Control Panel (Page 60)

7.1.2 User interfaces (API)

The user interfaces of Simulation Runtime include functions you use, for example, to create instances, to change the operating state of a virtual controller, or to exchange I/O data.

Simulation Runtime has the following user interfaces:

- ISimulationRuntimeManager
- IInstances
- IRemoteRuntimeManager

API and external applications

The Runtime API makes the interfaces available to an external application.

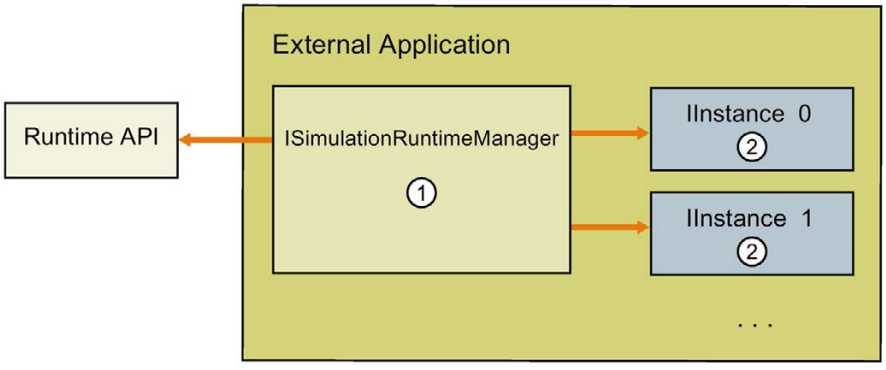

① **ISimulationRuntimeManager**

Interface of the Runtime Manager. It is used to register new Runtime instances, to search through existing Runtime instances, and to receive an interface of a registered instance.

Up to 16 instances can be registered in one Runtime Manager.

② **IInstances**

Interface of a Runtime instance. It is used to change the operating state of a virtual controller and to exchange I/O data.

Each instance has a unique name and an ID.

Figure 7-3 API and external applications

Access to API functions and data types

Required functions and data types are available for native C++ and .NET (C#).

- Overview of user interfaces for native C++ (Page 86)
- Overview of data types for native C++ (Page 93)
- Overview of user interfaces for managed code (Page 90)
- Overview of data types for managed code (Page 94)

Note

The list of tables in this manual gives you direct access to the description of the individual functions and data types.

7.1.3 Overview of user interfaces for native C++

Initializing and shutting down API

Table 7- 1 Overview of initializing and shutting down API - Native C++

Actions	Functions
Initialize API	InitializeApi (Page 96) RuntimeApiEntry_Initialize (Page 98)
Shut down API (Page 100)	`DestroyInterface` `RuntimeApiEntry_DestroyInterface`
Logging off API library (Page 103)	`FreeApi` `ShutdownAndFreeApi`

Global functions

Table 7- 2 Overview of global functions - Native C++

Actions	Functions

Global functions (Page 106)	`GetNameOfAreaSection()`
	`GetNameOfCPUType()`
	`GetNameOfCommunicationInterface()`
	`GetNameOfDataType()`
	`GetNameOfLEDMode()`
	`GetNameOfLEDType()`
	`GetNameOfOperatingMode()`
	`GetNameOfOperatingState()`
	`GetNameOfPrimitiveDataType()`
	`GetNameOfTagListDetails()`
	`GetNameOfErrorCode()`
	`GetNameOfRuntimeConfigChanged()`
	`GetNameOfInstanceConfigChanged()`
	`GetNameOfDiagSeverity()`
	`GetNameOfDirection()`
	`GetNameOfRackOrStationFaultType()`

API ISimulationRuntimeManager

Table 7- 3 Overview of API ISimulationRuntimeManager functions - Native C++

Settings and information	Functions

Interface (Page 111)	`GetVersion()`
	`IsInitialized()`
	`IsRuntimeManagerAvailable()`
	`Shutdown()`

Simulation Runtime instances (Page 113)	`GetRegisteredInstancesCount()`
	`GetRegisteredInstanceInfoAt()`
	`RegisterInstance()`
	`RegisterCustomInstance()`
	`CreateInterface()`

Remote connections (Page 119)	`OpenPort()`
	`ClosePort()`
	`GetPort()`
	`GetRemoteConnectionsCount()`
	`GetRemoteConnectionInfoAt()`
	`RemoteConnect()`

Table 7- 4 Overview of API ISimulationRuntimeManager events - Native C++

Events	Functions

OnConfigurationChanged (Page 252)	`RegisterOnConfigurationChangedCallback()`
	`UnregisterOnConfigurationChangedCallback()`
	`RegisterOnConfigurationChangedEvent()`
	`UnregisterOnConfigurationChangedEvent()`
	`WaitForOnConfigurationChangedEvent()`

OnRuntimeManagerLost (Page 127)	`RegisterOnRuntimeManagerLostCallback()`
	`UnregisterOnRuntimeManagerLostCallback()`
	`RegisterOnRuntimeManagerLostEvent()`
	`UnregisterOnRuntimeManagerLostEvent()`
	`WaitForOnRuntimeManagerLostEvent()`

API IInstances

Table 7- 5 Overview of IInstances functions - Native C++

Settings and information	Functions

Interface (Page 130)	`GetID()`
	`GetName()`
	`GetCPUType()`
	`SetCPUType()`
	`GetCommunicationInterface()`
	`SetCommunicationInterface()`
	`GetInfo()`
	`UnregisterInstance()`

Controller (Page 136)	`GetControllerName()`
	`GetControllerShortDesignation()`
	`GetControllerIPCount()`
	`GetControllerIP()`
	`GetControllerIPSuite4()`
	`SetIPSuite()`
	`GetStoragePath()`
	`SetStoragePath()`
	`ArchiveStorage()`
	`RetrieveStorage()`

Settings and information	Functions

Operating state (Page 144)	`GetOperatingState()`
	`PowerOn()`
	`PowerOff()`
	`MemoryReset()`
	`Run()`
	`Stop()`

Tag list (Page 152)	`UpdateTagList()`
	`GetTagListStatus()`
	`GetTagInfoCount()`
	`GetTagInfos()`
	`CreateConfigurationFile()`

I/O access via address - Reading (Page 158)	`GetAreaSize()`
	`ReadBit()`
	`ReadByte()`
	`ReadBytes()`
	`ReadSignals()`

I/O access via address - Writing (Page 166)	`WriteBit()`
	`WriteByte()`
	`WriteBytes()`
	`WriteSignals()`

I/O access via tag name - Reading (Page 173)	`Read()`
	`ReadBool()`
	`ReadChar(), ReadWChar()`
	`ReadDouble()`
	`ReadFloat()`
	`ReadInt8(), ReadInt16(), ReadInt32(), ReadInt64()`
	`ReadUInt8(), ReadUInt16(), ReadUInt32(), ReadUInt64()`
	`ReadSignals()`

I/O access via tag name - Writing (Page 191)	`Write()`
	`WriteBool()`
	`WriteChar(), WriteWChar()`
	`WriteDouble()`
	`WriteFloat()`
	`WriteInt8(), WriteInt16(), WriteInt32(), WriteInt64(),`
	`WriteUInt8(),WriteUInt16(), WriteUInt32(), WriteUInt64()`
	`WriteSignals()`

Virtual time (Page 220)	`GetSystemTime()`
	`SetSystemTime()`
	`GetScaleFactor()`
	`SetScaleFactor()`

Cycle control (Page 223)	`GetOperatingMode()`
	`SetOperatingMode()`
	`SetSendSyncEventInDefaultModeEnabled()`
	`IsSendSyncEventInDefaultModeEnabled`
	`GetOverwrittenMinimalCycleTime_ns()`
	`SetOverwrittenMinimalCycleTime_ns()`
	`RunToNextSyncPoint()`
	`StartProcessing()`

Acyclic services (Page 228)	

Table 7- 6 Overview of IInstances events - Native C++

Events	Functions

OnOperatingStateChanged (Page 243)	`RegisterOnOperatingStateChangedCallback()`
	`UnregisterOnOperatingStateChangedCallback()`
	`RegisterOnOperatingStateChangedEvent()`
	`UnregisterOnOperatingStateChangedEvent()`
	`WaitForOnOperatingStateChangedEvent()`

OnSyncPointReached (Page 247)	`RegisterOnSyncPointReachedCallback()`
	`UnregisterOnSyncPointReachedCallback()`
	`RegisterOnSyncPointReachedEvent()`
	`UnregisterOnSyncPointReachedEvent()`
	`WaitForOnSyncPointReachedEvent()`

OnConfigurationChanging (Page 249)	`RegisterOnConfigurationChangingCallback()`
	`UnregisterOnConfigurationChangingCallback()`
	`RegisterOnConfigurationChangingEvent()`
	`UnregisterOnConfigurationChangingEvent()`
	`WaitForOnConfigurationChangingEvent()`

OnConfigurationChanged (Page 252)	`RegisterOnConfigurationChangedCallback()`
	`UnregisterOnConfigurationChangedCallback()`
	`RegisterOnConfigurationChangedEvent()`
	`UnregisterOnConfigurationChangedEvent()`
	`WaitForOnConfigurationChangedEvent()`

OnLedChanged (Page 254)	`RegisterOnLedChangedCallback()`
	`UnregisterOnLedChangedCallback()`
	`RegisterOnLedChangedEvent()`
	`UnregisterOnLedChangedEvent()`
	`WaitForOnLedChangedEvent()`

API IRemoteRuntimeManager

Table 7- 7 Overview of IRemoteRuntimeManager functions - Native C++

Settings and information	Functions

Interface (Page 265)	`GetVersion()`
	`GetIP()`
	`GetPort()`
	`GetRemoteComputerName()`
	`Disconnect()`

Simulation Runtime instances (Page 268)	`GetRegisteredInstancesCount()`
	`GetRegisteredInstanceInfoAt()`
	`RegisterInstance()`
	`RegisterCustomInstance()`
	`CreateInterface()`

Table 7- 8 Overview of IRemoteRuntimeManager events - Native C++

Events	Functions

OnConnectionLost (Page 275)	`RegisterOnConnectionLostCallback()`
	`UnregisterOnConnectionLostCallback()`
	`RegisterOnConnectionLostEvent()`
	`UnregisterOnConnectionLostEvent()`
	`WaitForOnConnectionLostEvent()`

7.1.4 Overview of user interfaces for managed code

Initializing and shutting down API

Table 7- 9 Overview of initializing and shutting down API - .NET (C#)

Actions	Functions
Initialize API (Page 99)	`Siemens.Simatic.Simulation.Runtime.SimulationRuntimeManager`
Shut down API (Page 105)	

API ISimulationRuntimeManager

Table 7- 10 Overview of ISimulationRuntimeManager functions - .NET (C#)

Settings and information	Functions

Interface (Page 111)	`Version { get; }`
	`IsInitialized { get; }`
	`IsRuntimeManagerAvailable { get; }`
	`Shutdown()`

Simulation Runtime instances (Page 113)	`RegisterInstanceInfo { get; }`
	`RegisterInstance()`
	`RegisterCustomInstance()`
	`CreateInterface()`

Remote connections (Page 119)	`OpenPort()`
	`ClosePort()`
	`Port { get; }`
	`RemoteConnectionInfo { get; }`
	`RemoteConnect()`

Table 7- 11 Overview of ISimulationRuntimeManager events - .NET (C#)

Events	Functions

OnConfigurationChanged (Page 124)	`OnConfigurationChanged`
	`RegisterOnConfigurationChangedEvent()`
	`UnregisterOnConfigurationChangedEvent()`
	`WaitForOnConfigurationChangedEvent()`

OnRuntimeManagerLost (Page 127)	`OnRuntimeManagerLost()`
	`RegisterOnRuntimeManagerLostEvent()`
	`UnregisterOnRuntimeManagerLostEvent()`
	`WaitForOnRuntimeManagerLostEvent()`

API IInstances

Table 7- 12 Overview of IInstances functions - .NET (C#)

Settings and information	Functions

Interface (Page 130)	`Dispose ()`
	`ID { get; }`
	`Name { get; }`
	`CPUType { get; set; }`
	`CommunicationInterface { get; }`
	`Info { get; }`
	`UnregisterInstance()`

Controller - Information and settings (Page 136)	`ControllerName { get; }`
	`ControllerShortDesignation { get; }`
	`ControllerIPSuite4 { get; }`
	`SetIPSuite()`
	`StoragePath { get; set; }`
	`ArchiveStorage()`
	`RetrieveStorage()`

Operating state (Page 144)	`OperatingState { get; }`
	`PowerOn()`
	`PowerOff()`
	`MemoryReset()`
	`Run()`
	`Stop()`

Tag list (Page 152)	`UpdateTagList()`
	`GetTagListStatus()`
	`TagInfos { get; }`
	`CreateConfigurationFile()`

I/O access via address - Reading (Page 158)	`InputArea | MarkerArea | OutputArea { get; }`
	`AreaSize { get; }`
	`ReadBit()`
	`ReadByte()`
	`ReadBytes()`
	`ReadSignals()`

I/O access via address - Writing (Page 166)	`WriteBit()`
	`WriteByte()`
	`WriteBytes()`
	`WriteSignals()`

I/O access via tag name - Reading (Page 173)	`Read()`
	`ReadBool()`
	`ReadChar(), ReadWChar()`
	`ReadDouble()`
	`ReadFloat()`
	`ReadInt8(), ReadInt16(), ReadInt32(), ReadInt64()`
	`ReadUInt8(), ReadUInt16(), ReadUInt32(), ReadUInt64()`
	`ReadSignals()`

I/O access via tag name - Writing (Page 191)	`Write()`
	`WriteBool()`
	`WriteChar(), WriteWChar()`
	`WriteDouble()`
	`WriteFloat()`
	`WriteInt8(), WriteInt16(), WriteInt32(), WriteInt64(),`
	`WriteUInt8(),WriteUInt16(), WriteUInt32(), WriteUInt64()`
	`WriteSignals()`

Virtual time (Page 220)	`SystemTime { get; set; }` `ScaleFactor { get; set; }`

Cycle control (Page 223)	`OperatingMode { get; set; }`
	`IsSendSyncEventInDefaultModeEnabled { get; set; }`
	`OverwrittenMinimalCycleTime_ns { get; set; }`
	`RunToNextSyncPoint`
	`StartProcessing()`

Acyclic services (Page 228)	

Table 7- 13 Overview of IInstances events - .NET (C#)

Events	Functions

OnOperatingStateChanged (Page 243)	`OnOperatingStateChanged`
	`RegisterOnOperatingStateChangedEvent()`
	`UnregisterOnOperatingStateChangedEvent()`
	`WaitForOnOperatingStateChangedEvent()`

OnSyncPointReached (Page 247)	`OnSyncPointReached`
	`RegisterOnSyncPointReachedEvent()`
	`UnregisterOnSyncPointReachedEvent()`
	`WaitForOnSyncPointReachedEvent()`

OnConfigurationChanging (Page 249)	`OnConfigurationChanging`
	`RegisterOnConfigurationChangingEvent()`
	`UnregisterOnConfigurationChangingEvent()`
	`WaitForOnConfigurationChangingEvent()`

OnConfigurationChanged (Page 252)	`OnConfigurationChanged`
	`RegisterOnConfigurationChangedEvent()`
	`UnregisterOnConfigurationChangedEvent()`
	`WaitForOnConfigurationChangedEvent()`

OnLedChanged (Page 254)	`OnLedChanged`
	`RegisterOnLedChangedEvent()`
	`UnregisterOnLedChangedEvent()`
	`WaitForOnLedChangedEvent()`

API IRemoteRuntimeManager

Table 7- 14 Overview of IRemoteRuntimeManager functions - .NET (C#)

Settings and information	Functions

Interface (Page 265)	`Dispose()`
	`Version { get; }`
	`IP { get; }`
	`Port { get; }`
	`RemoteComputerName { get; }`
	`Disconnect()`

Simulation Runtime instances (Page 113)	`RegisterInstanceInfo { get; }`
	`RegisterInstance()`
	`RegisterCustomInstance()`
	`CreateInterface()`

Table 7- 15 Overview IRemoteRuntimeManager events - .NET (C#)

Events	Functions

OnConnectionLost() (Page 275)	`OnConnectionLost()`
	`RegisterOnConnectionLostEvent()`
	`UnregisterOnConnectionLostEvent()`
	`WaitForOnConnectionLostEvent()`

7.1.5 Overview of data types for native C++

The following table shows which data types are available for the simulation in Runtime Manager.

Table 7- 16 Overview of data types - Native C++

Data type	
DLL import functions (Page 280)	ApiEntry_Initialize ApiEntry_DestroyInterface
Event callback functions (Page 281)	EventCallback_VOID EventCallback_II_SREC_ST EventCallback_II_SREC_ST_SROS_SROS EventCallback_II_SREC_ST_SRLT_SRLM EventCallback_IRRTM EventCallback_SRCC_UINT32_UINT32_INT32 EventCallback_II_SREC_ST_SRICC_UINT32_UINT32_UINT32_UINT32 New in V2.0: EventCallback_II_SREC_ST_SDRI EventCallback_II_SREC_ST_SDR EventCallback_II_SREC_ST_UINT32_INT64_INT64_UINT32 EventCallback_II_SREC_ST_UINT32_EPPET_UINT32 EventCallback_II_SREC_ST_UINT32_UINT32_EPET_UINT32 EventCallback_II_SREC_ST_UINT32 EventCallback_II_SREC_ST_UINT32_UINT32 EventCallback_II_SREC_ST_UINT32_ERSFET
Definitions and constants (Page 306)	
Unions (Page 307)	UIP UDataValue
Structures (Page 309)	SDataValue SDVBNI SDataValueByAddress SDataValueByName SConnectionInfo SInstanceInfo SDimension STagInfo SIP SIPSuite4 SOnSyncPointReachedResult New in V2.0: SDataValueByAddressWithCheck SDataValueByNameWithCheck SDataRecordInfo SDataRecord SConfiguredProcessEvents SDiagExtChannelDescription

Data type	

Enumerations (Page 327)	`ERuntimeErrorCode`
	`EArea`
	`EOperatingState`
	`EOperatingMode`
	`ECPUType`
	`ECommunicationInterface`
	`ELEDType`
	`ELEDMode`
	`EPrimitiveDataTypes`
	`EDataType`
	`ETagListDetails`
	`ERuntimeConfigChanged`
	`EInstanceConfigChanged`
	New in V2.0:
	`EPullOrPlugEventType`
	`EProcessEventType`
	`EDirection`
	`EDiagProperty`
	`EDiagSeverity`
	`ERackOrStationFaultType`

7.1.6 Overview of data types for managed code

The following table shows which data types are available for the simulation in Runtime Manager.

Table 7- 17 Overview of data types - .NET (C#)

Data type	

Delegate definitions (Page 293)
- Event handler methods
	`Delegate_Void`
	`Delegate_II_EREC_DT`
	`Delegate_II_EREC_DT_EOS_EOS`
	`Delegate_II_EREC_DT_ELT_ELM`
	`Delegate_IRRTM`
	`Delegate_SRCC_UINT32_UINT32_INT32`
	`Delegate_II_EREC_DT_SRICC_UINT32_UINT32_UINT32_UINT32`
	New in V2.0:
	`Delegate_II_EREC_DT_UINT32_INT64_INT64_UINT32`
	`Delegate_II_EREC_DT_SDRI`
	`Delegate_II_EREC_DT_SDR`
	`Delegate_SREC_ST_UINT32_EPPET_UINT32`
	`Delegate_SREC_ST_UINT32_UINT32_EPET_UINT32`
	`Delegate_SREC_ST_UINT32`
	`Delegate_SREC_ST_UINT32_UINT32`
	`Delegate_SREC_ST_UINT32_ERSFET`

Definitions and constants (Page 306)	

Data type	
Structures (Page 309)	SDataValue SDVBNI SDataValueByAddress SDataValueByName SConnectionInfo SInstanceInfo SDimension STagInfo SIP SIPSuite4 SOnSyncPointReachedResult New in V2.0: SDataValueByAddressWithCheck SDataValueByNameWithCheck SDataRecordInfo SDataRecord SConfiguredProcessEvents SDiagExtChannelDescription
Enumerations (Page 326)	ERuntimeErrorCode EArea EOperatingState EOperatingMode ECPUType ECommunicationInterface ELEDType ELEDMode EPrimitiveDataTypes EDataType ETagListDetails ERuntimeConfigChanged EInstanceConfigChanged New in V2.0: EPullOrPlugEventType EProcessEventType EDirection EDiagProperty EDiagSeverity ERackOrStationFaultType

7.2 Initialize API

7.2.1 Load API library

Description

With PLCSIM Advanced the interfaces of the API V2.0 are not compatible with the interfaces of the API V1.0. However, the Runtime Manager of PLCSIM Advanced V2.0 is compatible with the API of PLCSIM Advanced V1.0.

Earlier versions of the API are also installed during the installation of PLCSIM Advanced V2.0.

The default path is:

- C:\Program Files (x86)\Common Files\Siemens\PLCSIMADV\API\1.0
- C:\Program Files (x86)\Common Files\Siemens\PLCSIMADV\API\2.0

The installation path of PLCSIM Advanced is contained in the registry:

- Key: "HKEY_LOCAL_MACHINE\SOFTWARE\Wow6432Node\Siemens\Shared Tools\PLCSIMADV_SimRT"
- Value: "Path"

To maintain the path to the API, add the character string of the following subdirectory at the end: "API\<API version>" (e.g. "API\2.0").

When you use this path the API library (DLL) is loaded directly from the installation directory.

Reference

Additional information can be found in:

- For Native C++ in section InitializeApi() (Page 96).
- For .NET via the call of the function "System.Reflection.Assembly.LoadFile(string)" in the online documentation for MSDN.

7.2.2 Native C++

7.2.2.1 InitializeApi()

Description

The `InitializeApi` function loads the API library (DLL) and initializes the API. The function loads the version of the DLL that is compatible with the architecture of your application and which is also compatible with the header file of the API (SimulationRuntimeApi.h).

To load the DLL, the function `InitializeApi` searches in the following directories one after the other:

- In the directory to which the parameter of the function leads (`in_SimulationRuntimeApiDllPath`)
- In the directory of your application that calls this function.
- In the installation directory of PLCSIM Advanced

If no DLL is available, the function accesses the next directory.

The function returns an interface to the Simulation Runtime Manager. Use this interface to create a new instance of the virtual controller or to obtain access to an existing instance.

Table 7- 18 InitializeApi() - Native C++

Syntax	`ERuntimeErrorCode InitializeApi( ISimulationRuntimeManager** out_SimulationRuntimeManagerInterface );` `ERuntimeErrorCode InitializeApi( WCHAR* in_SimulationRuntimeApiDllPath, ISimulationRuntimeManager** in-out_SimulationRuntimeManagerInterface );`	
Parameters	• `ISimulationRuntimeManager** out_SimulationRuntimeManagerInterface:` Pointer to a Runtime Manager interface pointer. The pointer must be initialized with `NULL`. The interface is created within the function. See Data types (Page 279). • `WCHAR* in_SimulationRuntimeApiDllPath:` The path to the Runtime API library.	
Return values	Runtime error code	Condition
	`SREC_OK`	The function is successful.
	`SREC_WRONG_ARGUMENT`	The pointer to the Runtime Manager interface does not equal `NULL`.
	`SREC_WRONG_VERSION`	• The required version of the interface is incompatible with the version used to compile the API. • The version of the API is not compatible with Runtime. See Compatibility during upgrade (Page 31).
	`SREC_CONNECTION_ERROR`	Unable to establish a connection to the Runtime Manager.
	`SREC_ERROR_LOADING_DLL`	The API library cannot be loaded.
	`SREC_RUNTIME_NOT_AVAILABLE`	No Runtime Manager runs in this Windows user session.

Example C++	`// Include The Headerfile Of The API`
	`#include "SimulationRuntimeApi.h"`
	
	`// Prepare The Variables`
	`ERuntimeErrorCode result = SREC_INVALID_ERROR_CODE;`
	`ISimulationRuntimeManager* api = NULL;`
	
	`// Initialize The API And Get The RuntimeManager Interface`
	`result = InitializeApi(&api);`	

Note

If you no longer require the interface, delete it.

See DestroyInterface() (Page 101).

7.2.2.2 RuntimeApiEntry_Initialize

Description

Use the function `RuntimeApiEntry_Initialize` only if the API library (DLL) is to be loaded from a different directory than the directory of your application that calls this function.

When the API is initialized, the API library is first loaded and the `Initialize` function is then imported and called.

The function returns an interface to the Simulation Runtime Manager. Use this interface to create a new instance of the virtual controller or to obtain access to an existing instance.

Table 7- 19 RuntimeApiEntry_Initialize - Native C++

Syntax	`__declspec(dllexport) ERuntimeErrorCode RuntimeApiEntry_Initialize( ISimulationRuntimeManager** out_SimulationRuntimeManagerInterface, UINT32 in_InterfaceVersion );`	
Parameters	• `ISimulationRuntimeManager** out_SimulationRuntimeManagerInterface:` Pointer to a Runtime Manager interface pointer. The pointer must be initialized with `NULL`. The interface is created within the function. See Data types (Page 279). • `UINT32 in_InterfaceVersion:` Version of the API interface to be downloaded: `DAPI_DLL_INTERFACE_VERSION`.	
Return values	Runtime error code	Condition
	`SREC_OK`	The function is successful.
	`SREC_WRONG_ARGUMENT`	The pointer to the Runtime Manager interface does not equal `NULL`.
	`SREC_WRONG_VERSION`	• The required version of the interface is incompatible with the version used to compile the API. • The version of the API is not compatible with Runtime. See Compatibility during upgrade (Page 31).
	`SREC_CONNECTION_ERROR`	Unable to establish a connection to the Runtime Manager.
	`SREC_RUNTIME_NOT_AVAILABLE`	No Runtime Manager runs in this Windows user session.

Example C++	`// Include The Headerfile Of The API`
	`#include "SimulationRuntimeApi.h"`
	
	`// Prepare The Variables`
	`ERuntimeErrorCode result = SREC_INVALID_ERROR_CODE;`
	`HMODULE dllHandle = NULL;`
	`ApiEntry_Initialize Initialize = NULL;`
	`ISimulationRuntimeManager* api = NULL;`
	
	`// Load The DLL And Import The "Initialize" Function (using the Win32 API)`
	`dllHandle = LoadLibrary(DAPI_DLL_NAME_X86);`
	`if ( dllHandle != NULL )`
	`{`
	`  Initialize = (ApiEntry_Initialize)GetProcAddress(dllHandle, DAPI_ENTRY_INITIALIZE);`
	`}`
	
	`// Initialize The API And Get The RuntimeManager Interface`
	`if ( Initialize != NULL )`
	`{`
	`  result = Initialize(&api, DAPI_DLL_INTERFACE_VERSION);`
	`}`

Note

If you no longer require the interface, delete it.

See DestroyInterface() (Page 101).

7.2.3 .NET (C#)

7.2.3.1 Initialize

Description

The entry point to the API is the static class `Siemens.Simatic.Simulation.Runtime.SimulationRuntimeManager`.
The API is initialized when a function of this class is used the first time.

Table 7- 20 Initialize - .NET (C#)

Exceptions	`Siemens.Simatic.Simulation.Runtime.SimulationInitializationException`	
	Runtime error code	Condition
	`ERuntimeError-Code.ConnectionError`	Unable to establish a connection to the Runtime Manager.
	`ERuntimeError-Code.WrongVersion`	The version of the API is not compatible with Runtime. See Compatibility during upgrade (Page 31).
	`ERuntimeError-Code.RuntimeNotAvailable`	No Runtime Manager runs in this Windows user session.

7.3 Shut down API

7.3.1 Native C++

Basic procedure for deleting the user interfaces

To delete all user interfaces, generally follow these steps:

1. Delete the interfaces IInstances and IRemoteRuntimeManager.
2. Call the `Shutdown()` function of the ISimulationRuntimeManager interface.
3. Delete the ISimulationRuntimeManager interface.
4. Unload the API library (DLL) with the Win32 API-Funktion `FreeLibrary()`.

Deleting the user interfaces via functions

Deleting the user interfaces is also possible via functions.

If the API was initialized using the `InitializeApi()` function, you delete the user interfaces using the following functions:

- FreeApi() (Page 103)
- ShutdownAndFreeApi() (Page 104)

7.3.1.1 DestroyInterface()

Description

A function pointer to the `RuntimeApiEntry_DestroyInterface` function. The function pointer `DestoyInterface()` is only valid if the `InitializeApi` function has been successfully called.

The function unloads the memory of an ISimulationRuntimeManager, IRemoteRuntimeManager or IInstance interface.

Table 7- 21 DestroyInterface() - Native C++

Syntax	`ERuntimeErrorCode DestroyInterface( IBaseInterface* in_Interface );`	
Parameters	• `IBaseInterface* in_Interface:` The interface to be deleted.	
Return values	Runtime error code	Condition
	`SREC_OK`	The function is successful.
	`SREC_WRONG_ARGUMENT`	The pointer to the interface is `NULL`.

Example C++	`// Include The Headerfile Of The API`
	`#include "SimulationRuntimeApi.h"`
	
	`// The Interfaces`
	`ERuntimeErrorCode result;`
	`ISimulationRuntimeManager* api = NULL;`
	`IInstance* instance = NULL;`
	
	`// Init the DLL and create an instance`
	`result = InitializeApi(&api);`
	`result = api->RegisterInstance(&instance);`
	
	`// Destroy Instance Interfaces`
	`result = DestroyInterface(instance);`
	`instance = NULL;`	

7.3.1.2 RuntimeApiEntry_DestroyInterface

Description

Use the `RuntimeApiEntry_DestroyInterface` function only if the API library (DLL) is to be loaded from a different directory than the Startup directory of the application that calls this function.

If the API was initialized using the `InitializeApi` function, you select the DestroyInterface() (Page 101) function.

The function unloads the memory of an ISimulationRuntimeManager, IRemoteRuntimeManager or IInstance interface.

Table 7- 22 RuntimeApiEntry_DestroyInterface() - Native C++

Syntax	`__declspec(dllexport) ERuntimeErrorCode RuntimeA-piEntry_DestroyInterface( IBaseInterface* in_Interface );`	
Parameters	• `IBaseInterface* in_Interface:` The interface to be deleted.	
Return values	Runtime error code	Condition
	`SREC_OK`	The function is successful.
	`SREC_WRONG_ARGUMENT`	The pointer to the interface is `NULL`.

Example C++	`// Include The Headerfile Of The API`
	`#include "SimulationRuntimeApi.h"`
	
	`// Prepare The Variables`
	`ERuntimeErrorCode result = SREC_INVALID_ERROR_CODE;`
	`HMODULE dllHandle = NULL;`
	`ApiEntry_DestroyInterface Destroy = NULL;`
	`IInstance* instance = NULL;`
	
	`// Load The DLL And Import The “DestroyInterface” Function (using the Win32 API)`
	`dllHandle = LoadLibraryA(DAPI_DLL_NAME_X86);`
	`if ( dllHandle != NULL )`
	`{`
	`Destroy = (ApiEntry_DestroyInterface)GetProcAddress(dllHandle, DAPI_ENTRY_DESTROY_INTERFACE);`
	`}`
	`…`
	`// Frees the memory of an IInstance interface`
	`result = Destroy(instance);`	

7.3.1.3 FreeApi()

Description

The `FreeApi()` function unloads the library of the Runtime API.

This function can only be called after the successful call of the `InitializeApi` function. If the `InitializeApi` function was not called, the library must be unloaded using the Win32 API function `FreeLibrary()`.

Table 7- 23 FreeApi() - Native C++

Syntax	`ERuntimeErrorCode FreeApi();`	
Parameters	None	
Return values	Runtime error code	Condition
	`SREC_OK`	The function is successful.
	`SREC_API_NOT_INITIALIZED`	The `InitializeApi` function was not called successfully.

Example C++	`// Include The Headerfile Of The API`
	`#include "SimulationRuntimeApi.h"`
	
	`// The Interfaces`
	`ERuntimeErrorCode result;`
	`ISimulationRuntimeManager* api = NULL;`
	`IInstance* instance = NULL;`
	
	`// Init the API`
	`result = InitializeApi(&api);`
	
	…
	
	`// Shutdown The API`
	`api->Shutdown();`
	`result = DestroyInterface(api);`
	`api = NULL;`
	`result = FreeApi();`	

7.3.1.4 ShutdownAndFreeApi()

Description

The `ShutdownAndFreeApi()` function shuts down the Runtime API, deletes the IRuntimeManager interface and unloads the library of the Runtime API.

This function can only be called after the successful call of the `InitializeApi` function. If the `InitializeApi` function was not called, the library must be unloaded using the Win32 API-Funktion `FreeLibrary()`.

Table 7- 24 ShutdownAndFreeApi() - Native C++

Syntax	`ERuntimeErrorCode ShutdownAndFreeApi( ISimulationRuntimeManager* in_SimulationRuntimeManagerInterface );`	
Parameters	• `ISimulationRuntimeManager* in_SimulationRuntimeManagerInterface:` The interface of the Runtime Manager to be deleted.	
Return values	Runtime error code	Condition
	`SREC_OK`	The function is successful.
	`SREC_API_NOT_INITIALIZED`	The `InitializeApi` function was not called successfully.
	`SREC_WRONG_ARGUMENT`	The pointer to the interface is `NULL`.

Example C++	`// Include The Headerfile Of The API`
	`#include "SimulationRuntimeApi.h"`
	
	`// The Interfaces`
	`ERuntimeErrorCode result;`
	`ISimulationRuntimeManager* api = NULL;`
	`IInstance* instance = NULL;`
	
	`// Init the API`
	`result = InitializeApi(&api);`
	
	…
	
	`// Shutdown The API`
	`result =` **ShutdownAndFreeApi**`(api);`
	`api = NULL;`	

7.3.2 .NET (C#)

7.3.2.1 Shut down API

You can terminate the .NET components of the API for the IInstance and IRemoteRuntimeManager interfaces by calling the Dispose (Page 130) function.

In addition these interfaces can also be cleared automatically by the .NET Garbage Collector.

Manually clearing the API

To manually clear the API, follow these steps:

1. Delete all interfaces. Interfaces - Information and settings (Page 130)
2. Call the Shutdown() (Page 111) function of the ISimulationRuntimeManager interface.

7.4 Global functions (Native C++)

The global functions `GetNameOf...` return the name of the enumeration entry.

GetNameOfAreaSection()

Table 7- 25 GetNameOfAreaSection() - Native C++

Syntax	`const WCHAR* GetNameOfAreaSection( EArea in_AreaSection );`
Parameters	• `EArea in_AreaSection:` Enumeration entry
Return values	`const WCHAR*:` Name of the enumeration entry

GetNameOfCPUType()

Table 7- 26 GetNameOfCPUType() - Native C++

Syntax	`const WCHAR* GetNameOfCPUType( ECPUType in_CPUType );`
Parameters	• `ECPUType in_CPUType:` Enumeration entry
Return values	`const WCHAR*:` Name of the enumeration entry

GetNameOfCommunicationInterface()

Table 7- 27 GetNameOfCommunicationInterface() - Native C++

Syntax	`const WCHAR* GetNameOfCommunicationInterface( ECommunicationInterface in_CommunicationInterface );`
Parameters	• `ECommunicationInterface in_CommunicationInterface:` Enumeration entry
Return values	`const WCHAR*:` Name of the enumeration entry

GetNameOfDataType()

Table 7- 28 GetNameOfDataType() - Native C++

Syntax	`const WCHAR* GetNameOfDataType( EDataType in_DataType );`
Parameters	• `EDataType in_DataType:` Enumeration entry
Return values	`const WCHAR*:` Name of the enumeration entry

GetNameOfErrorCode()

Table 7- 29 GetNameOfErrorCode() - Native C++

Syntax	`const WCHAR* GetNameOfErrorCode( ERuntimeErrorCode in_ErrorCode );`
Parameters	• `ERuntimeErrorCode in_ErrorCode:` Enumeration entry
Return values	`const WCHAR*:` Name of the enumeration entry

GetNameOfLEDMode()

Table 7- 30 GetNameOfLEDMode() - Native C++

Syntax	`const WCHAR* GetNameOfLEDMode( ELEDMode in_LEDMode );`
Parameters	• `ELEDMode in_LEDMode:` Enumeration entry
Return values	`const WCHAR*:` Name of the enumeration entry

GetNameOfLEDType()

Table 7- 31 GetNameOfLEDType() - Native C++

Syntax	`const WCHAR* GetNameOfLEDType( ELEDType in_LEDType );`
Parameters	• `ELEDType in_LEDType:` Enumeration entry.
Return values	`const WCHAR*:` Name of the enumeration entry

GetNameOfOperatingMode()

Table 7- 32 GetNameOfOperatingMode() - Native C++

Syntax	`const WCHAR* GetNameOfOperatingMode( EOperatingMode in_OperatingMode );`
Parameters	• `EOperatingMode in_OperatingMode:` Enumeration entry
Return values	`const WCHAR*:` Name of the enumeration entry

GetNameOfErrorCode()

Table 7- 33 GetNameOfErrorCode() - Native C++

Syntax	`const WCHAR* GetNameOfErrorCode( ERuntimeErrorCode in_ErrorCode );`
Parameters	• `ERuntimeErrorCode in_ErrorCode:` Enumeration entry
Return values	`const WCHAR*:` Name of the enumeration entry

GetNameOfOperatingState

Table 7- 34 GetNameOfOperatingState() - Native C++

Syntax	`const WCHAR* GetNameOfOperatingState( EOperatingState in_OperatingState );`
Parameters	• `EOperatingState in_OperatingState:` Enumeration entry
Return values	`const WCHAR*:` Name of the enumeration entry

GetNameOfPrimitiveDataType

Table 7- 35 GetNameOfPrimitiveDataType() - Native C++

Syntax	`const WCHAR* GetNameOfPrimitiveDataType( EPrimitiveDataType in_DataType );`
Parameters	• `EPrimitiveDataType in_DataType:` Enumeration entry
Return values	`const WCHAR*:` Name of the enumeration entry

GetNameOfTagListDetails

Table 7- 36 GetNameOfTagListDetails() - Native C++

Syntax	`const WCHAR* GetNameOfTagListDetails( ETagListDetails in_TagListDetails );`
Parameters	• `ETagListDetails in_TagListDetails:` Enumeration entry
Return values	`const WCHAR*:` Name of the enumeration entry

GetNameOfRuntimeConfigChanged()

Table 7- 37 GetNameOfRuntimeConfigChanged() - Native C++

Syntax	`const WCHAR* GetNameOfRuntimeConfigChanged( ERuntimeConfigChanged in_RuntimeConfigChanged); );`
Parameters	• `ERuntimeConfigChanged in_RuntimeConfigChanged:` Enumeration entry
Return values	`const WCHAR*:` Name of the enumeration entry

GetNameOfInstanceConfigChanged()

Table 7- 38 GetNameOfInstanceConfigChanged() - Native C++

Syntax	`const WCHAR* GetNameOfInstanceConfigChanged( EInstanceConfigChanged in_InstanceConfigChanged); );`
Parameters	• `EInstanceConfigChanged in_InstanceConfigChanged:` Enumeration entry
Return values	`const WCHAR*:` Name of the enumeration entry

GetNameOfDirection()

Table 7- 39 GetNameOfDirection() - Native C++

Syntax	`const WCHAR* GetNameOfDirection( EDirection in_Direction );`
Parameter	• `EDirection in_Direction:` Enumeration entry
Return values	`const WCHAR*:` Name of the enumeration entry

GetNameOfDiagSeverity()

Table 7- 40 GetNameOfDiagSeverity() - Native C++

Syntax	`const WCHAR* GetNameOfDiagSeverity( EDiagSeverity in_DiagSeverity );`
Parameter	• `EDiagSeverity in_DiagSeverity:` Enumeration entry
Return values	`const WCHAR*:` Name of the enumeration entry

GetNameOfRackOrStationFaultType()

Table 7- 41 GetNameOfRackOrStationFaultType() - Native C++

Syntax	`const WCHAR* GetNameOfRackOrStationFaultType( ERackOrStationFaultType in_RackOrStationFaultType );`
Parameter	• `ERackOrStationFaultType in_RackOrStationFaultType:` Enumeration entry
Return values	`const WCHAR*:` Name of the enumeration entry

See also

EPrimitiveDataType (Page 335)

EDataType (Page 338)

Enumerations (Page 326)

7.5 API ISimulationRuntimeManager

7.5.1 Interfaces - Information and settings

GetVersion() / Version { get; }

Returns the version of Runtime Manager. If the function fails, version 0.0 is returned.

Table 7- 42 GetVersion() - Native C++

Syntax	`UINT32 GetVersion();`
Parameters	None
Return values	`UINT32`: Runtime Manager Version (`HIWORD` = Major, `LOWORD` = Minor)

Table 7- 43 Version { get; } - .NET (C#)

Syntax	`UInt32 Version { get; }`
Parameters	None
Return values	`Uint32`: Runtime Manager Version (`HIWORD` = Major, `LOWORD` = Minor)

IsInitialized() / IsInitialized { get; }

Returns a value that indicates whether the API was successfully initialized.

Table 7- 44 IsInitialized() - Native C++

Syntax	`bool IsInitialized();`
Parameters	None
Return values	• `false`: If the API was not initialized. • `true`: If the API was initialized.

Table 7- 45 IsInitialized { get; } - .NET (C#)

Syntax	`bool IsInitialized { get; }`
Parameters	None
Return values	• `false`: If the API was not initialized. • `true`: If the API was initialized.

IsRuntimeManagerAvailable() / IsRuntimeManagerAvailable { get; }

The function returns `false` when the connection to Runtime Manager is interrupted. This happens only when the Runtime Manager process is closed.

Subscribe to the `OnRuntimeManagerLost()` event to find out whether the connection is interrupted. See Events (Page 124).

Table 7- 46 IsRuntimeManagerAvailable() - Native C++

Syntax	`bool IsRuntimeManagerAvailable();`
Parameters	None
Return values	• `false`: If the connection is interrupted. • `true`: If the connection is active.

Table 7- 47 IsRuntimeManagerAvailable { get; } - .NET (C#)

Syntax	`bool IsRuntimeManagerAvailable{ get; }`
Parameters	None
Return values	• `false`: If the connection is interrupted. • `true`: If the connection is active.

Shutdown()

Ends communication with Runtime Manager and clears the interfaces.

Call this function in the following cases:

- Immediately before the API library (DLL) is unregistered (native C++).
- When your application is no longer using Runtime Manager.

Table 7- 48 Shutdown() - Native C++

Syntax	`ERuntimeErrorCode Shutdown()`	
Parameters	None	
Return values	Runtime error code	Condition
	`SREC_OK`	The function is successful.

Table 7- 49 Shutdown() - .NET (C#)

Syntax	`void Shutdown()`
Parameters	None
Return values	None

7.5.2 Simulation Runtime instances

GetRegisteredInstancesCount()

Returns the number of instances that are registered in Runtime Manager. If the function fails, the return value is 0.

Table 7- 50 GetRegisteredInstancesCount() - Native C++

Syntax	`UINT32 GetRegisteredInstancesCount();`
Parameters	None
Return values	`UINT32`: Number of available instances.

GetRegisteredInstanceInfoAt()

Returns information about an already registered instance. You can use the ID or name to create an interface of this instance, see `CreateInterface()`.

Table 7- 51 GetRegisteredInstanceInfoAt() - Native C++

Syntax	`ERuntimeErrorCode GetRegisteredInstanceInfoAt(`
	`UINT32 in_Index,`
	`SInstanceInfo* out_InstanceInfo`
	`);`	

Parameters	• `UINT32 in_Index:` Index of the created instance from which you want to receive the information. The index must be less than the value you receive when you call `GetRegisteredInstanceCount()`. • `SInstanceInfo* out_InstanceInfo:` The information with name and ID of the instance. See Data types (Page 306).	
Return values	Runtime error code	Condition
	`SREC_OK`	The function is successful.
	`SREC_TIMEOUT`	The function does not return on time.
	`SREC_DOES_NOT_EXIST`	There is no instance information for this index.
	`SREC_INDEX OUT_OF_RANGE`	The index is greater than 15.

RegisteredInstanceInfo { get; }

Returns information about all already registered instances. Use the ID or name of this instance to create an interface of this instance, see `CreateInterface()`.

Table 7- 52 RegisteredInstanceInfo { get; } - .NET (C#)

Syntax	`SInstanceInfo[] RegisteredInstanceInfo { get; }`	
Parameters	None	
Return values	`SInstanceInfo[]`: An array of information about all registered instances.	
Exceptions	`Siemens.Simatic.Simulation.Runtime.SimulationRuntimeException`	
	Runtime error code	Condition
	`ERuntimeErrorCode.Timeout`	The function does not return on time.

RegisterInstance()

Registers a new instance of a virtual controller in Runtime Manager. Creates and returns an interface of this instance.

Table 7- 53 RegisterInstance() - Native C++

Syntax	`ERuntimeErrorCode RegisterInstance( IInstance** out_InstanceInterface );`
	`ERuntimeErrorCode RegisterInstance( WCHAR* in_InstanceName, IInstance** out_InstanceInterface );`
	`ERuntimeErrorCode RegisterInstance( ECPUType in_CPUType, IInstance** out_InstanceInterface );`
	`ERuntimeErrorCode RegisterInstance( ECPUType in_CPUType, WCHAR* in_InstanceName, IInstance** out_InstanceInterface );`	

Parameters	• `ECPUType in_CPUType:` Defines which CPU type is simulated at the start of the instance. The default setting is `"SRCT_1500_Unspecified"`. When a different CPU type is loaded via STEP 7 or from the Virtual Memory Card, this CPU type applies. • `WCHAR* in_InstanceName:` Name to be assigned to the instance. Every instance must have a unique name. If no name is assigned when registering a new instance, the instance is given the name `"Instance_#"` (# is the ID of the instance). If this name already exists, the name `"Instance_#.#"` is used, in which the second # is a counter that is incremented until the name is unique. The length of the name must be less than `DINSTANCE_NAME_LENGTH`. See Data types (Page 306). • `IInstance** out_InstanceInterface:` Pointer to a Simulation Runtime interface pointer. The pointer must be initialized with `ZERO`. The interface is created within the function.	
Return values	Runtime error code	Condition
	`SREC_OK`	The function is successful.
	`SREC_TIMEOUT`	The function does not return on time.
	`SREC_WRONG_ARGUMENT`	The name or the IInstance pointer is invalid.
	`SREC_LIMIT_REACHED`	There are already 16 instances registered in Runtime Manager.
	`SREC_ALREADY_EXISTS`	An instance with this name already exists.

Example C++	`ISimulationRuntimeManager * api = ZERO;`
	`ERuntimeErrorCode result = Initialize(&api);`
	
	`// Example: How To Create And Register An Instance`
	`IInstance* psa = ZERO;`
	`if (result == SREC_OK)`
	`{`
	`result = api->RegisterInstance(&psa);`
	`}`	

Note

Native C++

If you no longer require the interface, delete it.

See DestroyInterface() (Page 101).

Table 7- 54 RegisterInstance() - .NET (C#)

Syntax	`IInstance RegisterInstance();`
	`IInstance RegisterInstance(`
	`string in_InstanceName`
	`);`
	`IInstance RegisterInstance(`
	`ECPUType in_CPUType`
	`);`
	`IInstance RegisterInstance(`
	`ECPUType in_CPUType`
	`string in_InstanceName`
	`);`	

Parameters	• `ECPUType in_CPUType:` Defines which CPU type is simulated at the start of the instance. The default setting is `"ECPUType.Unspecified"`. When a different CPU type is loaded via STEP 7 or from the Virtual Memory Card, this CPU type applies. • `string in_InstanceName:` Name to be assigned to the instance. Every instance must have a unique name. If no name is assigned when registering a new instance, the instance is given the name `"Instance_#"` (# is the ID of the instance). If this name already exists, the name `"Instance_#.#"` is used, in which the second # is a counter that is incremented until the name is unique. The length of the name must be less than `DINSTANCE_NAME_LENGTH`. See Data types (Page 306).	
Return values	If the function is successful, an interface of a virtual controller, otherwise a null pointer.	
Exceptions	`Siemens.Simatic.Simulation.Runtime.SimulationRuntimeException`	
	Runtime error code	Condition
	`ERuntimeErrorCode.Timeout`	The function does not return on time.
	`ERuntimeErrorCode.WrongArgument`	The name is invalid.
	`ERuntimeErrorCode.LimitReached`	There are already 16 instances registered in Runtime Manager.
	`ERuntimeErrorCode.AlreadyExists`	An instance with this name already exists.

RegisterCustomInstance()

Registers a new instance of a virtual controller in Runtime Manager. Creates and returns an interface of this instance.

Table 7- 55 RegisterCustomInstance() - Native C++

Syntax	`ERuntimeErrorCode RegisterCustomInstance(`
	`  WCHAR* in_VplcDll,`
	`  IInstance** out_InstanceInterface`
	`);`
	`ERuntimeErrorCode RegisterCustomInstance(`
	`  WCHAR* in_VplcDll,`
	`  WCHAR* in_InstanceName,`
	`  IInstance** out_InstanceInterface`
	`);`	

Parameters	• `WCHAR* in_VplcDll:` The complete path to the DLL of the virtual controller that Siemens.Simatic.Simulation.Runtime.Instance.exe loads at PowerOn. • `WCHAR* in_InstanceName:` Name to be assigned to the instance. Every instance must have a unique name. If no name is assigned when registering a new instance, the instance is given the name `"Instance_#"` (# is the ID of the instance). If this name already exists, the name `"Instance_#.#"` is used, in which the second # is a counter that is incremented until the name is unique. The length of the name must be less than `DINSTANCE_NAME_LENGTH`. See Data types (Page 306). • `IInstance** out_InstanceInterface:` Pointer to a Simulation Runtime interface pointer. The pointer must be initialized with `ZERO`. The interface is created within the function.	
Return values	Runtime error code	Condition
	`SREC_OK`	The function is successful.
	`SREC_TIMEOUT`	The function does not return on time.
	`SREC_WRONG_ARGUMENT`	The DLL name, the instance name or the IInstance pointer is invalid.
	`SREC_LIMIT_REACHED`	There are already 16 instances registered in Runtime Manager.
	`SREC_ALREADY_EXISTS`	An instance with this name already exists.

Example C++	`ISimulationRuntimeManager * api = ZERO;`
	`ERuntimeErrorCode result = Initialize(&api);`
	
	`// Example: How To Create And Register An Instance`
	`IInstance* psa = ZERO;`
	`if (result == SREC_OK)`
	`{`
	`  result = api->`**RegisterCustomInstance**`("C:\\Temp\\vplc.dll");`
	`}`	

Note

Native C++

If you no longer require the interface, delete it.

See DestroyInterface() (Page 101).

Table 7- 56 RegisterCustomInstance() - .NET (C#)

Syntax	`IInstance RegisterCustomInstance(`
	`  string in_VplcDll`
	`);`
	`IInstance RegisterCustomInstance(`
	`  string in_VplcDll,`
	`  string in_InstanceName`
	`);`	

Parameters	• `string in_VplcDll:` The complete path to the DLL of the virtual controller that Siemens.Simatic.Simulation.Runtime.Instance.exe loads at PowerOn. • `string in_InstanceName:` Name to be assigned to the instance. Every instance must have a unique name. If no name is assigned when registering a new instance, the instance is given the name `"Instance_#"` (# is the ID of the instance). If this name already exists, the name `"Instance_#.#"` is used, in which the second # is a counter that is incremented until the name is unique. The length of the name must be less than `DINSTANCE_NAME_LENGTH`. See Data types (Page 306).	
Return values	If the function is successful, an interface of a virtual controller; otherwise a Null pointer.	
Exceptions	`Siemens.Simatic.Simulation.Runtime.SimulationRuntimeException`	
	Runtime error code	Condition
	`ERuntimeErrorCode.Timeout`	The function does not return on time.
	`ERuntimeErrorCode.WrongArgument`	The name or the ID is invalid.
	`ERuntimeErrorCode.LimitReached`	There are already 16 instances registered in Runtime Manager.
	`ERuntimeErrorCode.AlreadyExists`	An instance with this name already exists.

CreateInterface()

Creates and returns an interface of an already registered instance of a virtual controller.

The instance could have been registered via the application or another application that uses the Simulation Runtime API.

Table 7- 57 CreateInterface() - Native C++

Syntax	`ERuntimeErrorCode CreateInterface(`
	`  WCHAR* in_InstanceName,`
	`  IInstance** out_InstanceInterface`
	`);`
	`ERuntimeErrorCode CreateInterface(`
	`  INT32 in_InstanceID,`
	`  IInstance** out_InstanceInterface`
	`);`	

Parameters	• `INT32 in_InstanceID:` The ID of the registered instance from which you want to receive the interface. • `WCHAR* in_InstanceName:` The name of the registered instance from which you want to receive the interface. • `IInstance** out_InstanceInterface:` Pointer to a Simulation Runtime interface pointer. The pointer **must** be initialized with `ZERO`. The interface is created within the function.	
Return values	Runtime error code	Condition
	`SREC_OK`	The function is successful.
	`SREC_TIMEOUT`	The function does not return on time.
	`SREC_WRONG_ARGUMENT`	The name, the ID or the IInstance pointer is invalid.
	`SREC_DOES_NOT_EXIST`	The instance is not registered in Runtime Manager.

Example C++	`ISimulationRuntimeManager * api = ZERO;`
	`ERuntimeErrorCode result = Initialize(&api);`
	
	`IInstance* psa1 = ZERO;`
	`IInstance* psa2 = ZERO;`
	`if (result == SREC_OK)`
	`{`
	`  result = api->`**CreateInterface**`(0, &psa1);`
	`  result = api->`**CreateInterface**`(0, &psa2); // psa2 will be the same as psa1`
	`}`	

Example C++	`ISimulationRuntimeManager * api = ZERO;`
	`ERuntimeErrorCode result = Initialize(&api);`
	
	`IInstance* psa = ZERO;`
	`if (result == SREC_OK)`
	`{`
	`  result = api->`**CreateInterface**`(L"My SimulationRuntime Instance", &psa);`
	`}`	

Note

Native C++

If you no longer require the interface, delete it.

See DestroyInterface() (Page 101).

Table 7- 58 CreateInterface() - .NET (C#)

Syntax	`IInstance CreateInterface( string in_InstanceName );` `IInstance CreateInterface( INT32 in_InstanceID );`	
Parameters	• `INT32 in_InstanceID:` The ID of the registered instance from which you want to receive the interface. • `string in_InstanceName:` The name of the registered instance from which you want to receive the interface.	
Return values	If the function is successful, an interface of a virtual controller; otherwise a Null pointer.	
Exceptions	`Siemens.Simatic.Simulation.Runtime.SimulationRuntimeException`	
	Runtime error code	Condition
	`ERuntimeErrorCode.Timeout`	The function does not return on time.
	`ERuntimeErrorCode.WrongArgument`	The name or the ID is invalid.
	`ERuntimeErrorCode.DoesNotExists`	The instance is not registered in Runtime Manager.

7.5.3 Remote connections

OpenPort()

Opens a port to which another Runtime Manager can connect.

Table 7- 59 OpenPort() - Native C++

Syntax	`ERuntimeErrorCode OpenPort( UINT16 in_Port );`	
Parameters	• `UINT16 in_Port:` The port. The value must be greater than 1024.	
Return values	Runtime error code	Condition
	`SREC_OK`	The function is successful.
	`SREC_TIMEOUT`	The function does not return on time.
	`SREC_ALREADY_EXISTS`	A port is already open.
	`SREC_WRONG_ARGUMENT`	The port is invalid.
	`SREC_CONNECTION_ERROR`	The port cannot be opened.

Table 7- 60 OpenPort() - .NET (C#)

Syntax	`void OpenPort( UInt16 in_Port );`	
Parameters	• `UInt16 in_Port:` The port. The value must be greater than 1024.	
Return values	None	
Exceptions	`Siemens.Simatic.Simulation.Runtime.SimulationRuntimeException`	
	Runtime error code	Condition
	`ERuntimeErrorCode.Timeout`	The function does not return on time.
	`ERuntimeErrorCode.AlreadyExists`	A port is already open.
	`ERuntimeErrorCode.WrongArgument`	The port is invalid.
	`ERuntimeError-Code.ConnectionError`	The port cannot be opened.

ClosePort()

Closes an open port and all open connections that another Runtime Manager has created to this open port.

Table 7- 61 ClosePort() - Native C++

Syntax	`ERuntimeErrorCode ClosePort();`	
Parameters	None	
Exceptions	`Siemens.Simatic.Simulation.Runtime.SimulationRuntimeException`	
	Runtime error code	Condition
	`SREC_OK`	The function is successful.
	`SREC_TIMEOUT`	The function does not return on time.
	`SREC_WARNING_INVALID_CALL`	No port is open.

Table 7- 62 ClosePort() - .NET (C#)

Syntax	`void ClosePort( UInt16 in_Port );`	
Parameters	None	
Return values	None	
Exceptions	`Siemens.Simatic.Simulation.Runtime.SimulationRuntimeException`	
	Runtime error code	Condition
	`ERuntimeErrorCode.Timeout`	The function does not return on time.

GetPort() / Port { get; }

Returns the open port. If no port is open or the function fails, the return value is 0.

Table 7- 63 GetPort() - Native C++

Syntax	`UINT16 GetPort();`
Parameters	None
Return values	`UINT16:` The open port. 0, if no port is open.

Table 7- 64 Port { get; } - .NET (C#)

Syntax	`UInt16 Port { get; }`
Parameters	None
Return values	`UInt16`: The open port. 0, if no port is open.
Exceptions	None

GetRemoteConnectionsCount()

Supplies the number of open remote connections.

Table 7- 65 GetRemoteConnectionsCount() - Native C++

Syntax	`UINT32 GetRemoteConnectionsCount();`
Parameters	None
Return values	`UINT32`: Number of open remote connections.

GetRemoteConnectionInfoAt()

Returns information about an open connection.

Table 7- 66 GetRemoteConnectionInfoAt()- Native C++

Syntax	`ERuntimeErrorCode GetRemoteConnectionInfoAt(`
	`UINT32 in_Index,`
	`SConnectionInfo* out_ConnectionInfo`
	`);`	

Parameters	• `UINT32 in_Index:` Index of the connection information that is expected. • `SConnectionInfo* out_ConnectionInfo:` The connection information for this index.	
Return values	Runtime error code	Condition
	`SREC_OK`	The function is successful.
	`SREC_TIMEOUT`	The function does not return on time.
	`SREC_INDEX_OUT_OF_RANGE`	Connection information for this index does not exist.

RemoteConnectionInfo { get; }

Returns an array of information about all open connections.

Table 7- 67 RemoteConnectionInfo { get; } - .NET (C#)

Syntax	`SConnectionInfo[] RemoteConnectionInfo { get; }`	
Parameters	None	
Return values	`SConnectionInfo[]`: An array of information about all open connections.	
Exceptions	`Siemens.Simatic.Simulation.Runtime.SimulationRuntimeException`	
	Runtime error code	Condition
	`ERuntimeErrorCode.Timeout`	The function does not return on time.

RemoteConnect()

Creates a new connection to a remote Runtime Manager or uses an existing connection to create an IRemoteRuntimeManager interface.

Table 7- 68 RemoteConnect() - Native C++

Syntax	`ERuntimeErrorCode RemoteConnect(`
	`  UINT8 in_IP3,`
	`  UINT8 in_IP2,`
	`  UINT8 in_IP1,`
	`  UINT8 in_IP0,`
	`  UINT16 in_Port,`
	`  IRemoteRuntimeManager** out_RemoteRuntimeManagerInterface`
	`ERuntimeErrorCode RemoteConnect(`
	`  UIP in_IP,`
	`  UINT16 in_Port,`
	`  IRemoteRuntimeManager** out_RunTimeManagerInterface`
	`);`	

Parameters	• `UINT8 in_IP3:` First part of the IP address of the remote PC. • `UINT8 in_IP2:` Second part of the IP address of the remote PC. • `UINT8 in_IP1:` Third part of the IP address of the remote PC. `UINT8 in_IP0:` Last part of the IP address of the remote PC. • `UIP in_IP:` IP address of the remote PC. • `UINT16 in_Port:` The port that is open on the remote PC. • `IRemoteRuntimeManager** out_RemoteRuntimeManagerInterface:` Pointer to a remote Runtime Manager interface pointer. The pointer **must** be initialized with `ZERO`. The interface is created in the function.	
Return values	Runtime error code	Condition
	`SREC_OK`	The function is successful.
	`SREC_TIMEOUT`	The function does not return on time.
	`SREC_CONNECTION_ERROR`	The connection to the remote Runtime Manager cannot be established.
	`SREC_WRONG_ARGUMENT`	IP, port or IInstance pointer is invalid.
	`SREC_WRONG_VERSION`	The version of the API is not compatible with Runtime. See Compatibility during upgrade (Page 31).

Example C++	`ISimulationRuntimeManager* api = ZERO;`
	`ERuntimeErrorCode result = Initialize(&api);`
	
	`IRemoteRuntimeManager * client = ZERO;`
	
	`if (result == SREC_OK)`
	`{`
	`  result = api->`**RemoteConnect**`(192,203,145,144, 4444, &client);`
	`}`	

Note

Native C++

If you no longer require the interface, delete it.

See DestroyInterface() (Page 101).

Table 7- 69 RemoteConnect() - .NET (C#)

Syntax	`IRemoteRuntimeManager RemoteConnect(`
	`  string in_ConnectionString`
	`);`
	`IRemoteRuntimeManager RemoteConnect(`
	`  SIP in_IP,`
	`  UInt16 in_Port`
	`);`
	`IRemoteRuntimeManager RemoteConnect(`
	`  Byte in_IP3,`
	`  Byte in_IP2,`
	`  Byte in_IP1,`
	`  Byte in_IP0,`
	`  UInt16 in_Port`
	`);`	

Parameters	• `Byte in_IP3:` First part of the IP address of the remote PC. • `Byte in_IP2:` Second part of the IP address of the remote PC. • `Byte in_IP1:` Third part of the IP address of the remote PC. • `Byte in_IP0:` Last part of the IP address of the remote PC. • `string in_ConnectionString:` A string in the form of "<IP3>.<IP2>.<IP1>.<IP0>:<Port>" Example: "182.203.145.144:4444". • `SIP in_IP:` IP address of the remote PC. • `UInt16 in_Port:` The port that is open on the remote PC.	
Return values	`IRemoteRuntimeManager:` Interface to the remote Runtime Manager.	
Exceptions	`Siemens.Simatic.Simulation.Runtime.SimulationRuntimeException`	
	Runtime error code	Condition
	`ERuntimeError-Code.ConnectionError`	Connection to the remote Runtime Manager cannot be established.
	`ERuntimeErrorCode.Timeout`	The function does not return on time.
	`ERuntimeErrorCode.WrongArgument`	IP or port is invalid.
	`ERuntimeErrorCode.WrongVersion`	The version of the API is not compatible with Runtime. See Compatibility during upgrade (Page 31).

See also

Tag list (Page 152)
Data types (Page 279)

7.5.4 Events

Events for the ISimulationRuntimeManager interface

The following events are differentiated in the API:

Table 7- 70 Events for the ISimulationRuntimeManager interface

Event	Cause
OnConfigurationChanged (Page 124)	This event is triggered at a change of the Runtime Manager configuration. For example, when a new instance is registered, an instance is removed or a connection to a client is established. The Control Panel uses such an event to update the list of available instances.
OnRuntimeManagerLost (Page 127)	The event is triggered when the connection to Runtime Manager is interrupted.

7.5.4.1 OnConfigurationChanged events

OnConfigurationChanged

Registers or unregisters an event handler method.

Table 7- 71 OnConfigurationChanged - .NET (C#)

Syntax	`event Delegate_SRCC_UINT32_UINT32_INT32 OnConfigurationChanged;`
Parameters	None. See Delegate_SRCC_UINT32_UINT32_INT32 (Page 297).
Return values	None
Exceptions	None
Note	The event handler method runs in a separate thread.

RegisterOnConfigurationChangedCallback()

When the event occurs, the registered callback function is called. Only one callback function can be registered for the event. The registration of a new callback function causes the previous callback function to be deleted.

Table 7- 72 RegisterOnConfigurationChangedCallback() - Native C++

Syntax	`void RegisterOnConfigurationChangedCallback( EventCallback_SRCC_UINT32_UINT32_INT32 in_CallbackFunction );`
Parameters	• `EventCallback_SRCC_UINT32_UINT32_INT32 in_CallbackFunction`: A callback function to subscribe to an event. See EventCallback_SRCC_UINT32_UINT32_INT32 (Page 285).
Return values	None
Note	The event handler method runs in a separate thread.

RegisterOnConfigurationChangedEvent()

When the event occurs, the registered event object is set to the signaled state. Only one event object can be registered for the event. Registration of a new event object causes the previous event object to be deleted.

Table 7- 73 RegisterOnConfigurationChangedEvent() - Native C++

Syntax	`void RegisterOnConfigurationChangedEvent();` `void RegisterOnConfigurationChangedEvent( HANDLE* in_Event );`
Parameters	• `None:` An internal event object is registered. • `HANDLE* in_Event:` A handle for a user-specific event object. The event object is registered.
Return values	None

Table 7- 74 RegisterOnConfigurationChangedEvent() - .NET (C#)

Syntax	`void RegisterOnConfigurationChangedEvent();`
Parameters	None
Return values	None

UnregisterOnConfigurationChangedCallback()

Unregisters the callback function. When the event occurs, no callback function is called.

Table 7- 75 UnregisterOnConfigurationChangedCallback() - Native C++

Syntax	`void UnregisterOnConfigurationChangedCallback();`
Parameters	None
Return values	None

UnregisterOnConfigurationChangedEvent()

Unregisters the event object.

Table 7- 76 UnregisterOnConfigurationChangedEvent() - Native C++

Syntax	`void UnregisterOnConfigurationChangedEvent();`
Parameters	None
Return values	None

Table 7- 77 UnregisterOnConfigurationChangedEvent() - .NET (C#)

Syntax	`void UnregisterOnConfigurationChangedEvent();`
Parameters	None
Return values	None

WaitForOnConfigurationChangedEvent()

The function blocks the program until the registered event object is set to the signaled state or the timeout interval is exceeded.

Table 7- 78 WaitForOnConfigurationChangedEvent() - Native C++

Syntax	`bool WaitForOnConfigurationChangedEvent();`
	`bool WaitForOnConfigurationChangedEvent(`
	`  UINT32 in_Time_ms`
	`);`

Parameters	• `None:` The time limit is set to `INFINITE`. • `UINT32 in_Time_ms:` Value for the time limit in milliseconds.
Return values	• `true:` If the event object was set to the signaled state. • `false:` If no event was received during the defined time limit.

Table 7- 79 WaitForOnConfigurationChangedEvent - .NET (C#)

Syntax	`bool WaitForOnConfigurationChangedEvent();`
	`bool WaitForOnConfigurationChangedEvent(`
	`  UInt32 in_Time_ms`
	`);`

Parameters	• `None:` The time limit is set to `INFINITE`. • `UInt32 in_Time_ms:` Value for the time limit in milliseconds.
Return values	• `true:` If the event object was set to the signaled state. • `false:` If no event was received during the defined time limit.

7.5.4.2 OnRuntimeManagerLost events

OnRuntimeManagerLost

Registers or unregisters an event handler method.

Table 7- 80 OnRuntimeManagerLost - .NET (C#)

Syntax	`event Delegate_Void OnRuntimeManagerLost;`
Parameters	None. See Delegate_Void (Page 293).
Return values	None
Exceptions	None
Note	The event handler method runs in a separate thread.

RegisterOnRuntimeManagerLostCallback()

When the event occurs, the registered callback function is called. Only one callback function can be registered for the event. The registration of a new callback function causes the previous callback function to be deleted.

Table 7- 81 RegisterOnRuntimeManagerLostCallback() - Native C++

Syntax	`void RegisterOnRuntimeManagerLostCallback( EventCallback_VOID in_CallbackFunction );`
Parameters	• `EventCallback_VOID in_CallbackFunction:` A callback function that subscribes to the event. See EventCallback_VOID (Page 281).
Return values	None
Note	The event handler method runs in a separate thread.

RegisterOnRuntimeManagerLostEvent()

When the event occurs, the registered event object is set to the signaled state. Only one event object can be registered for the event. Registration of a new event object causes the previous event object to be deleted.

Table 7- 82 RegisterOnRuntimeManagerLostEvent() - Native C++

Syntax	`void RegisterOnRuntimeManagerLostEvent();` `void RegisterOnRuntimeManagerLostEvent( HANDLE* in_Event );`
Parameters	• `None:` An internal event handle is registered. • `HANDLE* in_Event:` A user-specific event handle is registered.
Return values	None

Table 7- 83 RegisterOnRuntimeManagerLostEvent() - .NET (C#)

Syntax	`void RegisterOnRuntimeManagerLostEvent();`
Parameters	None
Return values	None

UnregisterOnRuntimeManagerLostCallback()

Unregisters the callback function. When the event occurs, no callback function is called.

Table 7- 84 UnregisterOnRuntimeManagerLostCallback() - Native C++

Syntax	`void UnregisterOnRuntimeManagerLostCallback();`
Parameters	None
Return values	None

UnregisterOnRuntimeManagerLostEvent()

Unregisters the event object.

Table 7- 85 UnregisterOnRuntimeManagerLostEvent() - Native C++

Syntax	`void UnregisterOnRuntimeManagerLostEvent();`
Parameters	None
Return values	None

Table 7- 86 UnregisterOnRuntimeManagerLostEvent() - .NET (C#)

Syntax	`void UnregisterOnRuntimeManagerLostEvent();`
Parameters	None
Return values	None

WaitForOnRuntimeManagerLostEvent()

The function will block the program until the registered event object is set to the signaled state or the timeout interval is exceeded.

Table 7- 87 WaitForOnRuntimeManagerLostEvent() - Native C++

Syntax	`bool WaitForOnRuntimeManagerLostEvent();`
	`bool WaitForOnRuntimeManagerLostEvent(`
	`  UINT32 in_Time_ms`
	`);`

Parameters	• `None:` The time limit is set to `INFINITE`. • `UINT32 in_Time_ms:` Value for the time limit in milliseconds.
Return values	• `true:` If the event object was set to the signaled state. • `false:` If no event was received during the defined timeout interval.

Table 7- 88 WaitForOnRuntimeManagerLostEvent() - .NET (C#)

Syntax	`bool WaitForOnRuntimeManagerLostEvent();`
	`bool WaitForOnRuntimeManagerLostEvent(`
	`  UInt32 in_Time_ms`
	`);`

Parameters	• `None:` The time limit is set to `INFINITE`. • `UInt32 in_Time_ms:` Value for the time limit in milliseconds.
Return values	• `true:` If the event object was set to the signaled state. • `false:` If no event was received during the defined timeout interval.

7.6 API IInstances

7.6.1 Interfaces - Information and settings

Dispose()

Deletes the managed interface and unloads the native components of the user interfaces.

Table 7- 89 Dispose() - .NET (C#)

Syntax	`void Dispose()`
Parameters	None
Return values	None

GetID() / ID { get; }

Returns the instance ID. The ID is assigned by Runtime Manager when the instance is registered.

Table 7- 90 GetID() - Native C++

Syntax	`INT32 GetID();`
Parameters	None
Return values	`INT32`: Instance ID

Table 7- 91 ID { get; } - .NET (C#)

Syntax	`UInt32 ID { get; }`
Parameters	None
Return values	`Uint32`: Instance ID
Exceptions	None

GetName() / Name { get; }

Returns the name of the instance.

Table 7- 92 GetName() - Native C++

Syntax	`ERuntimeErrorCode GetName(`
	`  WCHAR inout_Name[],`
	`  UINT32 in_ArrayLength`
	`);`	

Parameters	• `WCHAR inout_Name[]:` A user-allocated storage for the name of the instance. The field length should be at least as long as `DINSTANCE_NAME_MAX_LENGTH`. See Definitions and constants (Page 306). • `UINT32 in_ArrayLength:` Field length (Wide character)	
Return values	Runtime error code	Condition
	`SREC_OK`	The function is successful.
	`SREC_INTERFACE_REMOVED`	The instance is not registered in Runtime Manager.
	`SREC_WRONG_ARGUMENT`	The name does not fit in the storage.

Example C++	`ISimulationRuntimeManager * api = NULL;`
	`ERuntimeErrorCode result = Initialize(&api);`
	
	`IInstance* psa = NULL;`
	`if (result == SREC_OK)`
	`{`
	`  result = api->RegisterInstance(&psa);`
	`}`
	
	`WCHAR name[DINSTANCE_NAME_MAX_LENGTH];`
	`if (result == SREC_OK)`
	`{`
	`  result = psa->GetName(name, DINSTANCE_NAME_MAX_LENGTH);`
	`}`	

Table 7- 93 Name { get; } - .NET (C#)

Syntax	`string Name { get; }`	
Parameters	None	
Return values	Name of the instance.	
Exceptions	`Siemens.Simatic.Simulation.Runtime.SimulationRuntimeException`	
	Runtime error code	Condition
	`ERuntimeError-Code.InterfaceRemoved`	The instance is not registered in Runtime Manager.

GetCPUType()

Returns the CPU type of the virtual controller.

Table 7- 94 GetCPUType() - Native C++

Syntax	`ECPUType GetCPUType();`
Parameters	None
Return values	An enumeration element that defines the CPU type. See ECPUType (Page 332).

SetCPUType()

Sets the CPU type of the virtual controller. A change of CPU type occurs only when the controller is restarted.

Table 7- 95 SetCPUType() - Native C++

Syntax	`void SetCPUType(ECPUType in_Value);`
Parameters	• `ECPUType in_Value:` Defines which CPU type is simulated at the start of the instance. When a different CPU type is loaded via STEP 7 or from the Virtual Memory Card, this CPU type applies.
Return values	None

CPUType { get; set; }

Returns or sets the CPU type of the virtual controller. A change of CPU type occurs only when the controller is restarted.

When a different CPU type is loaded via STEP 7 or from the Virtual Memory Card, this CPU type applies.

Table 7- 96 CPUType { get; set; } - .NET (C#)

Syntax	`ECPUType CPUType { get; set; }`
Parameters	None
Return values	An enumeration element that defines the CPU type.
Exceptions	None

GetCommunicationInterface()

Returns the communication interface of the virtual controller: Local communication (Softbus) or TCPIP. A change of communication interface occurs only when the controller is restarted. All instances that are started must use the same communication interface.

PowerOn is prevented if a communication interface that is not used by the started instances is selected.

Table 7- 97 GetCommunicationInterface() - Native C++

Syntax	`ECommunicationInterface GetCommunicationInterface();`
Parameters	None
Return values	• `SRCI_NONE` Cannot be selected. Is returned if the instance interface is no longer valid. • `SRCI_SOFTBUS` Is returned if the virtual controller uses the Softbus. • `SRCI_TCPIP` Is returned if the virtual controller communicates over the virtual adapter.

SetCommunicationInterface()

Sets the communication interface of the virtual controller: Local communication (Softbus) or TCPIP. A change of communication interface occurs only when the controller is restarted. All instances that are started must use the same communication interface.

PowerOn is prevented if a communication interface that is not used by the started instances is selected.

Table 7- 98 SetCommunicationInterface() - Native C++

Syntax	`void SetCommunicationInterface(ECommunicationInterface in_Value);`
Parameters	• `SRCI_NONE` Cannot be selected. • `SRCI_SOFTBUS` Is set to activate communication via Softbus. • `SRCI_TCPIP` Is set to activate communication over the virtual adapter.
Return values	None

CommunicationInterface { get; set; }

Sets or returns the communication interface of the virtual controller: Local communication (Softbus) or TCPIP. A change of communication interface occurs only when the controller is restarted. All instances that are started must use the same communication interface.

PowerOn is prevented if a communication interface that is not used by the started instances is selected.

Table 7- 99 CommunicationInterface { get; set; } - .NET (C#)

Syntax	`ECommunicationInterface CommunicationInterface { get; set; }`
Parameters	None
Return values	• `ECommunicationInterface.None` Cannot be selected. Is returned if the instance interface is no longer valid. • `ECommunicationInterface.Softbus` Is returned if the virtual controller uses the Softbus. • `ECommunicationInterface.TCPIP` Is returned if the virtual controller communicates over the virtual adapter.
Exceptions	None

GetInfo() / Info { get; }

Returns a structure that provides information about the instance.

Table 7- 100 GetInfo() - Native C++

Syntax	`SInstanceInfo GetInfo();`
Parameters	None
Return values	`SInstanceInfo`: A structure that provides information about the instance. See SInstanceInfo (Page 314).

Table 7- 101 Info { get; } - .NET (C#)

Syntax	`SInstanceInfo Info { get; }`
Parameters	None
Return values	`SInstanceInfo`: A structure that provides information about the instance.
Exceptions	None

UnregisterInstance()

Unregisters this instance from Runtime Manager.

Note

Loss of the interfaces

Other applications that are connected to this instance will lose their interface to this instance.

Table 7- 102 UnregisterInstance() - Native C++

Syntax	`ERuntimeErrorCode UnregisterInstance();`	
Parameters	None	
Return values	Runtime error code	Condition
	`SREC_OK`	The function is successful.
	`SREC_INTERFACE_REMOVED`	The instance is not registered in Runtime Manager.
	`SREC_TIMEOUT`	The function does not return on time.

Table 7- 103 UnregisterInstance() - .NET (C#)

Syntax	`void UnregisterInstance();`	
Parameters	None	
Return values	None	
Exceptions	`Siemens.Simatic.Simulation.Runtime.SimulationRuntimeException`	
	Runtime error code	Condition
	`ERuntimeError-Code.InterfaceRemoved`	The instance is not registered in Runtime Manager.
	`ERuntimeErrorCode.Timeout`	The function does not return on time.

7.6.2 Controller - Information and settings

GetControllerName() / ControllerName { get; }

Returns the downloaded name of the virtual controller.

Table 7- 104 GetControllerName() - Native C++

Syntax	`ERuntimeErrorCode GetControllerName( WCHAR inout_Name[], UINT32 in_ArrayLength );`	
Parameters	• `WCHAR inout_Name[]:` A user-allocated storage for the name. • `UINT32 in_ArrayLength:` The length of the storage.	
Return values	Runtime error code	Condition
	`SREC_OK`	The function is successful.
	`SREC_INTERFACE_REMOVED`	The instance is not registered in Runtime Manager.
	`SREC_TIMEOUT`	The function does not return on time.
	`SREC_INDEX_OUT_OF_RANGE`	The name does not fit in the storage.

Table 7- 105 ControllerName { get; } - .NET (C#)

Syntax	`string ControllerName { get; }`	
Parameters	None	
Return values	`string:` The downloaded name of the virtual controller.	
Exceptions	`Siemens.Simatic.Simulation.Runtime.SimulationRuntimeException`	
	Runtime error code	Condition
	`ERuntimeError-Code.InterfaceRemoved`	The instance is not registered in Runtime Manager.
	`ERuntimeErrorCode.Timeout`	The function does not return on time.

GetControllerShortDesignation() / ControllerShortDesignation { get; }

Returns the downloaded short designation of the virtual controller.

Table 7- 106 GetControllerShortDesignation() - Native C++

Syntax	`ERuntimeErrorCode GetControllerShortDesignation( WCHAR inout_ShortDesignation[], UINT32 in_ArrayLength );`	
Parameters	• `WCHAR inout_ShortDesignation[]:` A user-allocated storage for the short designation. • `UINT32 in_ArrayLength:` The length of the storage.	
Return values	Runtime error code	Condition
	`SREC_OK`	The function is successful.
	`SREC_INTERFACE_REMOVED`	The instance is not registered in Runtime Manager.
	`SREC_TIMEOUT`	The function does not return on time.
	`SREC_INDEX_OUT_OF_RANGE`	The name does not fit in the storage.

Table 7- 107 ControllerShortDesignation { get; } - .NET (C#)

Syntax	`string ControllerShortDesignation { get; }`	
Parameters	None	
Return values	`string:` The downloaded short designation of the virtual controller.	
Exceptions	`Siemens.Simatic.Simulation.Runtime.SimulationRuntimeException`	
	Runtime error code	Condition
	`ERuntimeError-Code.InterfaceRemoved`	The instance is not registered in Runtime Manager.
	`ERuntimeErrorCode.Timeout`	The function does not return on time.

GetControllerIPCount()

Returns the number of configured IP addresses of the virtual controller. If the function fails, the return value is 0.

Table 7- 108 GetControllerIPCount() - Native C++

Syntax	`UINT32 GetControllerIPCount();`
Parameters	None
Return values	`INT32:` Number of configured IP addresses of the virtual controller.

GetControllerIP() / ControllerIP { get; }

Returns a configured IP address of the instance.

Table 7- 109 GetControllerIP() - Native C++

Syntax	`UIP GetControllerIP();`
	`UIP GetControllerIP(`
	`  UINT32 in_Index`
	`);`

Parameters	• `WCHAR in_Index:` The index of the IP address you want to receive. The index must be less than the value you receive from `GetControllerIPCount()`. The default setting is 0.
Return values	`UIP:` IP address of the virtual controller. If the function fails, the return value is 0.

Table 7- 110 ControllerIP { get; } - .NET (C#)

Syntax	`string[] ControllerIP { get; }`
Parameters	None
Return values	`string:` All downloaded IP addresses of the virtual controller. If the function fails, the field is empty.
Exceptions	None

GetControllerIPSuite4() / ControllerIPSuite4 { get; }

Returns the IP suite instance. If the "Softbus" communication interface is used, the subnet mask and default gateway are 0.

Table 7- 111 GetControllerIPSuite4() Native C++

Syntax	`SIPSuite4 GetControllerIPSuite4();`
	`SIPSuite4 GetControllerIPSuite4(`
	`  UINT32 in_Index`
	`);`

Parameters	• `WCHAR in_Index:` The index of the IP address you want to receive. The index must be less than the value you receive from `GetControllerIPCount()`. The default setting is 0.
Return values	`SIPSuite4`: The IP suite of the virtual controller. If the function fails, the return values are 0.

Table 7- 112 ControllerIPSuite4 { get; } - .NET (#)

Syntax	`SIPSuite4[] ControllerIPSuite4 { get; };`
Parameters	None
Return values	`SIPSuite4[]`: All downloaded IP suites of the virtual controller. If the function fails, the field is empty.
Exceptions	None

SetIPSuite()

Sets the IP suite of the network interface of a virtual controller.

Table 7- 113 SetIPSuite() - Native C++

Syntax	`ERuntimeErrorCode SetIPSuite(`
	`  UINT32 in_InterfaceID,`
	`  SIPSuite4 in_IPSuite,`
	`  bool in_IsRemanent`
	`);`	

Parameters	• `UINT32 in_InterfaceID:` The ID of the network interface. • `SIPSuite4 in_IPSuite:` The IP suite that is to be assigned to the network interface. The IP suite contains the IP address, the subnet mask and the standard gateway. If the communication interface is "Softbus", the subnet mask and standard gateway are ignored. • `bool in_IsRemanent:` If `true`, the IP suite is saved after restart of the virtual controller. If the communication interface is "Softbus", this flag is ignored.	
Return values	Runtime error code	Condition
	`SREC_OK`	The function is successful.
	`SREC_INTERFACE_REMOVED`	The instance is not registered in Runtime Manager.
	`SREC_TIMEOUT`	The function does not return on time.
	`SREC_INSTANCE_NOT_RUNNING`	The process of the virtual controller is not running.
	`SREC_DOES_NOT_EXIST`	There is no network interface with this ID.
	`SREC_INVALID_OPERATING_STATE`	The virtual controller has not yet completed the boot process or is already in the shutdown phase.

Table 7- 114 SetIPSuite() - .NET (C#)

Syntax	`void SetIPSuite(`
	` UInt32 in_InterfaceID,`
	` SIPSuite4 in_IPSuite,`
	` bool in_IsRemanent );`	

Parameters	• `UInt32 in_InterfaceID:` The ID of the network interface. • `SIPSuite4 in_IPSuite:` If the communication interface is "Softbus", the subnet mask and standard gateway are ignored. • `bool in_IsRemanent:` If `true`, the IP suite is saved after restart of the virtual controller. If the communication interface is "Softbus", this flag is ignored.	
Return values	None	
Exceptions	`Siemens.Simatic.Simulation.Runtime.SimulationRuntimeException`	
	Runtime error code	Condition
	`ERuntimeError-Code.InterfaceRemoved`	The instance is not registered in Runtime Manager.
	`ERuntimeErrorCode.Timeout`	The function does not return on time.
	`ERuntimeError-Code.InstanceNotRunning`	The process of the virtual controller is not running.
	`ERuntimeErrorCode.DoesNotExist`	There is no network interface with this ID.
	`ERuntimeError-Code.InvalidOperatingState`	The virtual controller has not yet completed the boot process or is already in the shutdown phase.

GetStoragePath()

Returns the full directory in which the instance stores its data.

Table 7- 115 GetStoragePath() - Native C++

Syntax	`ERuntimeErrorCode GetStoragePath(`
	` WCHAR inout_StoragePath[],`
	` UINT32 in_ArrayLength`
	`);`	

Parameters	• `WCHAR inout_StoragePath[]:` A user-allocated storage for the storage path. The length of the array should be at least as long as `DSTORAGE_PATH_MAX_LENGTH`. See Data types (Page 279). • `UINT32 in_ArrayLength:` Length of the array (Wide character)	
Return values	Runtime error code	Condition
	`SREC_OK`	The function is successful.
	`SREC_INTERFACE_REMOVED`	The instance is not registered in Runtime Manager.
	`SREC_TIMEOUT`	The function does not return on time.
	`SREC_INDEX_OUT_OF_RANGE`	The path does not fit in the storage.

SetStoragePath()

Sets the full path of the directory in which the instance stores its data. This can also be a network share.

Set the path before you start the instance. A change to the path takes effect only when the controller is restarted.

If no path is set, the default setting:
<My Documents>>\Siemens\Simatic\Simulation\Runtime\Persistence\<Instance Name> is used.

Table 7- 116 SetStoragePath() - Native C++

Syntax	`ERuntimeErrorCode SetStoragePath( WCHAR* in_StoragePath );`	
Parameters	• `WCHAR* in_StoragePath:` Full name of the storage path. The length of the name must be less than `DSTORAGE_PATH_MAX_LENGTH`. See Data types (Page 279).	
Return values	Runtime error code	Condition
	`SREC_OK`	The function is successful.
	`SREC_INTERFACE_REMOVED`	The instance is not registered in Runtime Manager.
	`SREC_TIMEOUT`	The function does not return on time.
	`SREC_INDEX_OUT_OF_RANGE`	The length of the path exceeds the limit.
	`SREC_WRONG_ARGUMENT`	The path contains invalid characters.

StoragePath { get; set; }

Returns or sets the full path of the directory in which the instance stores its retentive data. This can also be a network share.

Set the path before you start the instance. A change to the path takes effect only when the controller is restarted.

If no path is set, the default setting:
<My Documents>>\Siemens\Simatic\Simulation\Runtime\Persistence\<Instance Name> is used.

Table 7- 117 StoragePath { get; set; } - .NET (C#)

Syntax	`string StoragePath { get; set; }`	
Parameters	None	
Return values	`string`: The configured storage path.	
Exceptions	`Siemens.Simatic.Simulation.Runtime.SimulationRuntimeException`	
	Runtime error code	Condition
	`ERuntimeError-Code.InterfaceRemoved`	The instance is not registered in Runtime Manager.
	`ERuntimeErrorCode.Timeout`	The function does not return on time.
	`ERuntimeError-Code.IndexOutOfRange`	The length of the path exceeds the limit.
	`ERuntimeErrorCode.WrongArgument`	The path contains invalid characters.

ArchiveStorage()

The user program, the hardware configuration and the retentive data are stored in a file, the Virtual SIMATIC Memory Card. `ArchiveStorage()` stores this file as a ZIP file. The instance of the virtual controller must be in OFF operating state for this.

Table 7- 118 ArchiveStorage() - Native C++

Syntax	`ERuntimeErrorCode ArchiveStorage( WCHAR* in_FullFileName );`	
Parameters	• `WCHAR in_FullFileName:` The full path to the ZIP file. The path relates to directories of the computer where the API is being called.	
Return values	Runtime error code	Condition
	`SREC_OK`	The function is successful.
	`SREC_INTERFACE_REMOVED`	The instance is not registered in Runtime Manager.
	`SREC_TIMEOUT`	The function does not return on time.
	`SREC_INVALID_OPERATING_STATE`	The instance is not in OFF operating state.
	`SREC_INVALID_ARCHIVE_PATH`	The archive path is invalid.
	`SREC_CREATE_DIRECTORIES_FAILED`	The directory for the ZIP file could not be created.
	`SREC_ARCHIVE_STORAGE_FAILED`	The ZIP file could not be created.
	`SREC_STORAGE_TRANSFER_ERROR`	Error during network data transfer. Memory data between client and server computers do not match.

Table 7- 119 ArchiveStorage() - .NET (C#)

Syntax	`void ArchiveStorage( string in_FullFileName );`	
Parameters	• `string in_FullFileName:` The full path to the ZIP file. The path relates to directories of the computer where the API is being called.	
Return values	None	
Exceptions	`Siemens.Simatic.Simulation.Runtime.SimulationRuntimeException`	
	Runtime error code	Condition
	`ERuntimeError-Code.InterfaceRemoved`	The instance is not registered in Runtime Manager.
	`ERuntimeErrorCode.Timeout`	The function does not return on time.
	`ERuntimeError-Code.InvalidOperatingState`	The instance is not in OFF operating state.
	`ERuntimeError-Code.InvalidArchivePath`	The archive path is invalid.
	`ERuntimeError-Code.CreateDirectoriesFailed`	The directory for the ZIP file could not be created.
	`ERuntimeError-Code.ArchiveStorageNotCreated`	The ZIP file could not be created.
	`ERuntimeError-Code.StorageTransferError`	Error during network data transfer. Memory data between client and server computers do not match.

RetrieveStorage()

`RetrieveStorage()` creates a Virtual SIMATIC Memory Card from the archived ZIP file. The virtual controller must be in OFF operating state for this.

Table 7- 120 RetrieveStorage() - Native C++

Syntax	`ERuntimeErrorCode RetrieveStorage( WCHAR* in_FullFileName );`	
Parameters	• `WCHAR* in_FullFileName:` The full path to the ZIP file. The path relates to directories of the computer where the API is being called.	
Return values	Runtime error code	Condition
	`SREC_OK`	The function is successful.
	`SREC_INTERFACE_REMOVED`	The instance is not registered in Runtime Manager.
	`SREC_TIMEOUT`	The function does not return on time.
	`SREC_INVALID_OPERATING_STATE`	The instance is not in OFF operating state.
	`SREC_INVALID_ARCHIVE_PATH`	The archive path is invalid.
	`SREC_DELETE_EXISTING_STORAGE_FAILED`	The old storage cannot be deleted.
	`SREC_RETRIEVE_STORAGE_FAILURE`	The ZIP file cannot be unzipped.
	`SREC_STORAGE_TRANSFER_ERROR`	Error during network data transfer. Memory data between client and server computers do not match.

Table 7- 121 RetrieveStorage() - .NET (C#)

Syntax	`void RetrieveStorage( string in_FullFileName );`	
Parameters	• `string in_FullFileName:` The full path to the ZIP file. The path relates to directories of the computer where the API is being called.	
Return values	None	
Exceptions	`Siemens.Simatic.Simulation.Runtime.SimulationRuntimeException`	
	Runtime error code	Condition
	`ERuntimeError-Code.InterfaceRemoved`	The instance is not registered in Runtime Manager.
	`ERuntimeErrorCode.Timeout`	The function does not return on time.
	`ERuntimeError-Code.InvalidOperatingState`	The instance is not in OFF operating state.
	`ERuntimeError-Code.InvalidArchivePath`	The archive path is invalid.
	`ERuntimeError-Code.DeleteExistingStorageFailed`	The old storage cannot be deleted.
	`ERuntimeError-Code.RetrieveStorageFailure`	The ZIP file cannot be unzipped.
	`ERuntimeError-Code.StorageTransferError`	Error during network data transfer. Memory data between client and server computers do not match.

7.6.3 Operating state

GetOperatingState() / OperatingState { get; }

Returns the operating state of the virtual controller. When the operating state changes, the OnOperatingStateChanged() (Page 243) event is triggered. For details about the operating state, see Data types (Page 330).

Table 7- 122 GetOperatingState() - Native C++

Syntax	`EOperatingState GetOperatingState();`
Parameters	None
Return values	• `SROS_INVALID_OPERATING_STATE:` If the function fails. • `SROS_OFF:` If the Simulation Runtime instance is not running. • `SROS_BOOTING:` If `PowerOn()` was called while in this state and the virtual controller is not yet ready to start the user program. • `SROS_STOP:` If the virtual controller is in STOP state. • `SROS_STARTUP:` If the user program is currently changing from STOP to RUN. • `SROS_RUN:` If the user program is running. • `SROS_FREEZE:` If the user program is being stopped (Freeze status). • `SROS_HOLD:` If the user program is set to HOLD when the breakpoint is reached. • `SROS_SHUTTING_DOWN:` If `PowerOff()` was called but the virtual controller is still in the Shutdown phase.

Table 7- 123 OperatingState { get; } - .NET (C#)

Syntax	`EOperatingState OperatingState { get; }`
Parameters	None
Return values	• `EOperatingState.InvalidOperatingState:` If the function fails. • `EOperatingState.Off:` If the Simulation Runtime instance is not running. • `EOperatingState.Booting:` If `PowerOn()` was called while in this state and the virtual controller is not yet ready to start the user program. • `EOperatingState.Stop:` If the virtual controller is in STOP state. • `EOperatingState.Startup:` If the user program is currently changing from STOP to RUN. • `EOperatingState.Run:` If the user program is running. • `EOperatingState.Freeze:` If the user program is being stopped (Freeze status). • `EOperatingState.Hold:` If the user program is set to HOLD when the breakpoint is reached. • `EOperatingState.ShuttingDown:` If `PowerOff()` was called but the virtual controller is still in the Shutdown phase.

PowerOn()

The function creates the process for the Simulation Runtime instance and starts the firmware of the virtual controller.

Table 7- 124 PowerOn() - Native C++

Syntax	`ERuntimeErrorCode PowerOn();`
	`ERuntimeErrorCode PowerOn(`
	`  UINT32 in_Timeout_ms`
	`);`	

Parameters	• `UINT32 in_Timeout_ms:` A timeout value in milliseconds. – If no timeout value is set, the function returns immediately. Subscribe to the `OnOperatingStateChanged()` event to find out when the operation has been completed. – If the value is greater than 0 (a value of 60000 is recommended), the function returns when the operation has been completed or after a timeout. – Expected operating states if this function is successful: `{ SROS_STOP , SROS_RUN }`	
Return values	Runtime error code	Condition
	`SREC_OK`	The function is successful.
	`SREC_INTERFACE_REMOVED`	The instance is not registered in Runtime Manager.
	`SREC_TIMEOUT`	The expected operating state does not occur on time.
	`SREC_ERROR_LOADING_DLL`	The Siemens.Simatic.Simulation.Runtime.Instance.exe cannot load the Siemens.Simatic.PlcSim.Vplc1500.dll.
	`SREC_STORAGE_PATH_ALREADY_IN_USE`	The selected path for this instance is already being used by another instance.
	`SREC_NO_STORAGE_PATH_SET`	The path could not be created. The length of the `DSTORAGE_PATH_MAX_LENGTH` characters may be exceeded.
	`SREC_WARNING_ALREADY_EXISTS`	Warning. The instance is started.
	`SREC_WARNING_TRIAL_MODE_ACTIVE`	No license available. You can use the instance without restrictions with the Trial License. Afterwards, the instance is shut down.
	`SREC_VIRTUAL_SWITCH_MISCONFIGURED`	The virtual switch is configured incorrectly.
	`SREC_INSTANCE_NOT_RUNNING`	The process of the virtual controller is no longer running.

Table 7- 125 PowerOn() - .NET (C#)

Syntax	`ERuntimeErrorCode PowerOn();`
	`ERuntimeErrorCode PowerOn(`
	`  UInt32 in_Timeout_ms`
	`);`	

Parameters	• `UInt32 in_Timeout_ms:` A timeout value in milliseconds. – If no timeout value is set, the function returns immediately. Subscribe to the `OnOperatingStateChanged()` event to find out when the operation has been completed. – If the value is greater than 0 (a value of 60000 is recommended), the function returns when the operation has been completed or after a timeout. Expected operating states when this function is successful: `{ EOperatingState.Run, EOperatingState.Stop }`	
Return values	Runtime error code	Condition
	`ERuntimeErrorCode.OK`	The function is successful.
	`ERuntimeError-Code.WarningAlreadyExists`	Warning: The instance is started.
	`ERuntimeError-Code.WarningTrialModeActive`	No license available. You can use the instance without restrictions with the Trial License. Afterwards, the instance is shut down.
Exceptions	`Siemens.Simatic.Simulation.Runtime.SimulationRuntimeException`	
	Runtime error code	Condition
	`ERuntimeError-Code.InterfaceRemoved`	The instance is not registered in Runtime Manager.
	`ERuntimeErrorCode.Timeout`	The expected operating state does not occur on time.
	`ERuntimeError-Code.ErrorLoadingDll`	The Siemens.Simatic.Simulation. Runtime.Instance.exe cannot load the Siemens.Simatic.PlcSim.Vplc1500.dll.
	`ERuntimeError-Code.StoragePathAlreadyInUse`	The selected path for this instance is already being used by another instance.
	`ERuntimeError-Code.NoStoragePathSet`	The path could not be created. The length of the `DSTORAGE_PATH_MAX_LENGTH` characters may be exceeded.
	`ERuntimeError-Code.VirtualSwitchMisconfigured`	The virtual switch is configured incorrectly.
	`ERuntimeError-Code.InstanceNotRunning`	The process of the virtual controller is no longer running.

PowerOff()

Shuts down the Simulation Runtime and closes its process.

Table 7- 126 PowerOff() - Native C++

Syntax	`ERuntimeErrorCode PowerOff();`
	`ERuntimeErrorCode PowerOff(`
	`  UINT32 in_Timeout_ms`
	`);`	

Parameters	• `UINT32 in_Timeout_ms:` A timeout value in milliseconds. – If no timeout value is set, the function returns immediately. Subscribe to the `OnOperatingStateChanged()` event to find out when the operation has been completed. – If the value is greater than 0 (a value of 60000 is recommended), the function returns when the operation has been completed or after a timeout. Expected operating states when this function is successful: `{ SROS_OFF }`	
Return values	Runtime error code	Condition
	`SREC_OK`	The function is successful.
	`SREC_INTERFACE_REMOVED`	The instance is not registered in Runtime Manager.
	`SREC_TIMEOUT`	The expected operating state does not occur on time.
	`SREC_INSTANCE_NOT_RUNNING`	The process of the virtual controller is not running.

Table 7- 127 PowerOff() - .NET (C#)

Syntax	`void PowerOff();`
	`void PowerOff(`
	`  UInt32 in_Timeout_ms`
	`);`	

Parameters	• `UInt32 in_Timeout_ms:` A timeout value in milliseconds. – If no timeout value is set, the function returns immediately. Subscribe to the `OnOperatingStateChanged()` event to find out when the operation has been completed. – If the value is greater than 0 (a value of 60000 is recommended), the function returns when the operation has been completed or after a timeout. Expected operating states when this function is successful: `{ EOperatingState.Off }`	
Return values	None	
Exceptions	`Siemens.Simatic.Simulation.Runtime.SimulationRuntimeException`	
	Runtime error code	Condition
	`ERuntimeError-Code.InterfaceRemoved`	The instance is not registered in Runtime Manager.
	`ERuntimeErrorCode.Timeout`	The expected operating state does not occur on time.
	`ERuntimeError-Code.InstanceNotRunning`	The process of the virtual controller is not running.

MemoryReset()

Shuts down the virtual controller, closes its processes and performs a restart.

Table 7- 128 MemoryReset() - Native C++

Syntax	`ERuntimeErrorCode MemoryReset();`
	`ERuntimeErrorCode MemoryReset(`
	`  UINT32 in_Timeout_ms`
	`);`	

Parameters	• `UINT32 in_Timeout_ms:` A timeout value in milliseconds. – If no timeout value is set, the function returns immediately. Subscribe to the `OnOperatingStateChanged()` event to find out when the operation has been completed. – If the value is greater than 0 (a value of 60000 is recommended), the function returns when the operation has been completed or after a timeout. Expected operating states when this function is successful: `{ SROS_STOP , SROS_RUN }`	
Return values	Runtime error code	Condition
	`SREC_OK`	The function is successful.
	`SREC_INTERFACE_REMOVED`	The instance is not registered in Runtime Manager.
	`SREC_TIMEOUT`	The expected operating state does not occur on time.
	`SREC_INSTANCE_NOT_RUNNING`	The process of the virtual controller is not running.

Table 7- 129 MemoryReset() - .NET (C#)

Syntax	`void MemoryReset();`
	`void MemoryReset(`
	`  UInt32 in_Timeout_ms`
	`);`	

Parameters	• `UInt32 in_Timeout_ms:` A timeout value in milliseconds. – If no timeout value is set, the function returns immediately. Subscribe to the `OnOperatingStateChanged()` event to find out when the operation has been completed. – If the value is greater than 0 (a value of 60000 is recommended), the function returns when the operation has been completed or after a timeout. Expected operating states when this function is successful: `{ EOperatingState.Run, EOperatingState.Stop }`	
Return values	None	
Exceptions	`Siemens.Simatic.Simulation.Runtime.SimulationRuntimeException`	
	Runtime error code	Condition
	`ERuntimeError-Code.InterfaceRemoved`	The instance is not registered in Runtime Manager.
	`ERuntimeErrorCode.Timeout`	The expected operating state does not occur on time.
	`ERuntimeError-Code.InstanceNotRunning`	The process of the virtual controller is not running.

Run()

Calls on the virtual controller to change to RUN operating state.

Table 7- 130 Run() - Native C++

Syntax	`ERuntimeErrorCode Run();`
	`ERuntimeErrorCode Run(`
	`  UINT32 in_Timeout_ms`
	`);`	

Parameters	• `UINT32 in_Timeout_ms:` A timeout value in milliseconds. – If no timeout value is set, the function returns immediately. Subscribe to the `OnOperatingStateChanged()` event to find out when the operation has been completed. – If the value is greater than 0 (a value of 60000 is recommended), the function returns when the operation has been completed or after a timeout. Expected operating states when this function is successful: `{ SROS_STOP , SROS_RUN }`	
Return values	Runtime error code	Condition
	`SREC_OK`	The function is successful.
	`SREC_INTERFACE_REMOVED`	The instance is not registered in Runtime Manager.
	`SREC_TIMEOUT`	The expected operating state does not occur on time.
	`SREC_INSTANCE_NOT_RUNNING`	The process of the virtual controller is not running.

Table 7- 131 Run() - .NET (C#)

Syntax	`void Run();`
	`void Run(`
	`  Uint32 in_Timeout_ms`
	`);`	

Parameters	• `UInt32 in_Timeout_ms:` A timeout value in milliseconds. – If no timeout value is set, the function returns immediately. Subscribe to the `OnOperatingStateChanged()` event to find out when the operation has been completed. – If the value is greater than 0 (a value of 60000 is recommended), the function returns when the operation has been completed or after a timeout. Expected operating states when this function is successful: `{ EOperatingState.Run }`	
Return values	None	
Exceptions	`Siemens.Simatic.Simulation.Runtime.SimulationRuntimeException`	
	Runtime error code	Condition
	`ERuntimeError-Code.InterfaceRemoved`	The instance is not registered in Runtime Manager.
	`ERuntimeErrorCode.Timeout`	The expected operating state does not occur on time.
	`ERuntimeError-Code.InstanceNotRunning`	The process of the virtual controller is not running.

Stop()

Calls on the virtual controller to change to STOP operating state.

Table 7- 132 Stop() - Native C++

Syntax	`ERuntimeErrorCode Stop();`
	`ERuntimeErrorCode Stop(`
	`  UINT32 in_Timeout_ms`
	`);`	

Parameters	• `UINT32 in_Timeout_ms:` A timeout value in milliseconds. – If no timeout value is set, the function returns immediately. Subscribe to the `OnOperatingStateChanged()` event to find out when the operation has been completed. – If the value is greater than 0 (a value of 60000 is recommended), the function returns when the operation has been completed or after a timeout. Expected operating states when this function is successful: `{ SROS_STOP }`	
Return values	Runtime error code	Condition
	`SREC_OK`	The function is successful.
	`SREC_INTERFACE_REMOVED`	The instance is not registered in Runtime Manager.
	`SREC_TIMEOUT`	The expected operating state does not occur on time.
	`SREC_INSTANCE_NOT_RUNNING`	The process of the virtual controller is not running.

Table 7- 133 Stop() - .NET (C#)

Syntax	`void Stop();`
	`void Stop(`
	`  bool in_IsSynchronous`
	`);`	

Parameters	• `UInt32 in_Timeout_ms:` A timeout value in milliseconds. – If no timeout value is set, the function returns immediately. Subscribe to the `OnOperatingStateChanged()` event to find out when the operation has been completed. – If the value is greater than 0 (a value of 60000 is recommended), the function returns when the operation has been completed or after a timeout. Expected operating states when this function is successful: `{ EOperatingState.Stop }`	
Return values	None	
Exceptions	`Siemens.Simatic.Simulation.Runtime.SimulationRuntimeException`	
	Runtime error code	Condition
	`ERuntimeError-Code.InterfaceRemoved`	The instance is not registered in Runtime Manager.
	`ERuntimeErrorCode.Timeout`	The expected operating state does not occur on time.
	`ERuntimeError-Code.InstanceNotRunning`	The process of the virtual controller is not running.

7.6.4 Tag list

UpdateTagList()

The function reads the tags from the virtual controller and writes them to the shared storage arranged by name.

If the tag is an array or a structure, there are multiple entries.

In the case of a structure, there is an entry for the structure itself and an additional entry for each structure element.

Entry_1: "StructName"

Entry_2: "StructName.ElementName_1"

..

Entry_N: "StructName.ElementName_n"

In the case of an array, in this example a two-dimensional array, there is an entry for the array itself and an additional entry for each array element.

Entry_1: "ArrayName"

Entry_2: "ArrayName[a,b]", where {a} and {b} correspond to the first index of the respective dimension

..

Entry_N: "ArrayName[x,y]", where {x} and {y} correspond to the last index of the respective dimension

Memory for up to 500000 entries (not PLC tags) is reserved for the list. If the list becomes too large, the function returns the error/exception "NOT_ENOUGH_MEMORY".

If there are problems with the maximum number of entries and not all tags are needed, two filters can be used when refreshing the tag table.

Table 7- 134 UpdateTagList() - Native C++

Syntax	`ERuntimeErrorCode UpdateTagList();`
	`ERuntimeErrorCode UpdateTagList( ETagListDetails in_TagListDetails );`
	`ERuntimeErrorCode UpdateTagList( ETagListDetails in_TagListDetails, bool in_IsHMIVisibleOnly );`
	`ERuntimeErrorCode UpdateTagList( ETagListDetails in_TagListDetails, bool in_IsHMIVisibleOnly, WCHAR* in_DataBlockFilterList );`

Parameters	• `ETagListDetails in_TagListDetails:` Every combination of the following four areas: **IO**: Inputs and Outputs **M**: Bit memory **CT**: Counters and Timers **DB**: Data Blocks The default setting is **IOMCTDB**. **Example: IOM** reads only the tags from the area Inputs / Outputs and Bit memory. • `bool in_IsHMIVisibleOnly:` If `true`, only tags marked with "HMI Visible" are read. The default setting is `true`. • `WCHAR* in_DataBlockFilterList:` A string that includes the name of all data blocks that are supposed to be available in the tag table. The string must be in quotation marks. **Example:** ""\"DB_1\", \"DB_2\" \"DB_3\"|\"DB_4\"\"DB_5\"" All characters within the quotation marks are interpreted as a DB name. If the data block does not exist in the PLC program, it is not added to the tag table memory. No error is triggered in the process. For this list to be taken into consideration, `in_DataBlockFilterList` has to be unequal to NULL and `in_TagListDetails` has to contain "DB".
Return values	

Runtime error code	Condition
`SREC_OK`	The function is successful.
`SREC_INTERFACE_REMOVED`	The instance is not registered in Runtime Manager.
`SREC_TIMEOUT`	The function does not return on time.
`SREC_INSTANCE_NOT_RUNNING`	The process of the virtual controller is not running.
`SREC_NOT_ENOUGH_MEMORY`	More than 500000 entries are requested.
`SREC_WARNING_ALREADY_EXISTS`	The tag table is current.
`SREC_WRONG_ARGUMENT`	The syntax of `in_DataBlockFilterList` is invalid. The list has to be 3 characters long; the first and last character have to be a quotation mark.

Table 7- 135 UpdateTagList() - .NET (C#)

Syntax	`void UpdateTagList();`
	`void UpdateTagList(`
	`  ETagListDetails in_TagListDetails`
	`);`
	`void UpdateTagList(`
	`  ETagListDetails in_TagListDetails,`
	`  bool in_IsHMIVisibleOnly`
	`);`
	`ERuntimeErrorCode UpdateTagList(`
	`  ETagListDetails in_TagListDetails,`
	`  bool in_IsHMIVisibleOnly,`
	`  string in_DataBlockFilterList`
	`);`	

Parameters	• `ETagListDetails in_TagListDetails:` Every combination of the following four areas: **IO**: Inputs and Outputs **M**: Bit memory **CT**: Counters and Timers **DB**: Data Blocks The default setting is **IOMCTDB**. **Example: IOM** reads only the tags from the area Inputs / Outputs and Bit memory. • `bool in_IsHMIVisibleOnly:` If `true`, only tags marked with "HMI Visible" are read. The default setting is `true`. • `string in_DataBlockFilterList:` A string that includes the name of all data blocks that are supposed to be available in the tag table. The string must be in quotation marks. **Example:** ""\"DB_1\", \"DB_2\" \"DB_3\"|\"DB_4\"\"DB_5\"" All characters within the quotation marks are interpreted as a DB name. If the data block does not exist in the PLC program, it is not added to the tag table memory. No error is triggered in the process. For this list to be taken into consideration, `in_DataBlockFilterList` has to be unequal to NULL and `in_TagListDetails` has to contain "DB".	
Return values	None	
Exceptions	`Siemens.Simatic.Simulation.Runtime.SimulationRuntimeException`	
	Runtime error code	Condition
	`ERuntimeError-Code.InterfaceRemoved`	The instance is not registered in Runtime Manager.
	`ERuntimeErrorCode.Timeout`	The function does not return on time.
	`ERuntimeError-Code.InstanceNotRunning`	The process of the virtual controller is not running.
	`ERuntimeError-Code.NotEnoughMemory`	More than 500000 entries are requested.
	`ERuntimeErrorCode.WrongArgument`	The syntax of `in_DataBlockFilterList` is invalid. The list has to be 3 characters long; the first and last character have to be a quotation mark.

GetTagListStatus()

Returns the current update status of the tag list storage.

"`inout_TagListDetails`" is `NONE`, if the list needs to be updated.

Table 7- 136 GetTagListStatus() - Native C++

Syntax	`ERuntimeErrorCode GetTagListStatus( ETagListDetails* out_TagListDetails, bool* out_IsHMIVisibleOnly );`	
Parameters	• `ETagListDetails out_TagListDetails:` Status of the tag list details. `SRTLD_NONE` when an update of the list is required. • `bool out_IsHMIVisibleOnly:` If `true`, only tags marked with "HMI Visible" are available in the list.	
Return values	Runtime error code	Condition
	`SREC_OK`	The function is successful.
	`SREC_INTERFACE_REMOVED`	The instance is not registered in Runtime Manager.
	`SREC_TIMEOUT`	The function does not return on time.

Table 7- 137 GetTagListStatus() - .NET (C#)

Syntax	`void GetTagListStatus( out ETagListDetails out_TagListDetails, out bool out_IsHMIVisibleOnly );`	
Parameters	• `out ETagListDetails out_TagListDetails:` Status of the tag list details. `ETagListDetails.None` when an update of the list is required. • `out bool out_IsHMIVisibleOnly:` If `true`, only tags marked with "HMI Visible" are available in the list.	
Return values	None	
Exceptions	`Siemens.Simatic.Simulation.Runtime.SimulationRuntimeException`	
	Runtime error code	Condition
	`ERuntimeError-Code.InterfaceRemoved`	The instance is not registered in Runtime Manager.
	`ERuntimeErrorCode.Timeout`	The function does not return on time.

GetTagInfoCount()

Returns the number of entries in the tag list storage. If the function fails, the return value is 0.

Table 7- 138 GetTagInfoCount() - Native C++

Syntax	`UINT32 GetTagInfoCount();`
Parameters	None
Return values	Number of entries in the tag list storage.

GetTagInfos() / TagInfos { get; }

Returns a list of all tags.

Table 7- 139 GetTagInfos() - Native C++

Syntax	`ERuntimeErrorCode GetTagInfos(`
	`  UINT32 in_BufferLength,`
	`  STagInfo* inout_TagInfos,`
	`  UINT32* out_TagCount`
	`);`	

Parameters	• `UINT32 in_BufferLength:` The number of elements that the storage can accommodate. • `STagInfo* inout_TagInfos:` The user-allocated storage that accommodates the tags. • `UINT32* out_TagCount:` Returns the number of tags that were written to the storage.	
Return values	Runtime error code	Condition
	`SREC_OK`	The function is successful.
	`SREC_INTERFACE_REMOVED`	The instance is not registered in Runtime Manager.
	`SREC_TIMEOUT`	The function does not return on time.
	`SREC_INSTANCE_NOT_RUNNING`	The process of the virtual controller is not running.
	`SREC_INDEX_OUT_OF_RANGE`	The elements do not fit in the storage.

Table 7- 140 TagInfos { get; } - .NET (C#)

Syntax	`STagInfo[] TagInfos { get; }`	
Parameters	None	
Return values	An array that contains all available entries of the storage.	
Exceptions	`Siemens.Simatic.Simulation.Runtime.SimulationRuntimeException`	
	Runtime error code	Condition
	`ERuntimeError-Code.InterfaceRemoved`	The instance is not registered in Runtime Manager.
	`ERuntimeErrorCode.Timeout`	The function does not return on time.
	`ERuntimeError-Code.InstanceNotRunning`	The process of the virtual controller is not running.

CreateConfigurationFile()

Writes all entries from the tag list to an XML file.

Table 7- 141 CreateConfigurationFile() - Native C++

Syntax	`ERuntimeErrorCode CreateConfigurationFile( WCHAR* in_FullFileName );`	
Parameters	• `WCHAR* in_FullFileName:` Full file name of the XML file: <Path> + <File name> + <File extension>.	
Return values	Runtime error code	Condition
	`SREC_OK`	The function is successful.
	`SREC_INTERFACE_REMOVED`	The instance is not registered in Runtime Manager.
	`SREC_TIMEOUT`	The function does not return on time.
	`SREC_WRONG_ARGUMENT`	The file name is invalid.

Table 7- 142 CreateConfigurationFile() - .NET (C#)

Syntax	`void CreateConfigurationFile( string in_FullFileName );`	
Parameters	None	
Return values	• `string in_FullFileName:` File name of the XML file that is to be written to: <Path> + <File name> + <File extension>.	
Exceptions	`Siemens.Simatic.Simulation.Runtime.SimulationRuntimeException`	
	Runtime error code	Condition
	`ERuntimeError-Code.InterfaceRemoved`	The instance is not registered in Runtime Manager.
	`ERuntimeErrorCode.Timeout`	The function does not return on time.
	`ERuntimeErrorCode.WrongArgument`	The file name is invalid.

7.6.5 I/O access

7.6.5.1 Synchronizing inputs and outputs

Description

In PLCSIM Advanced the complete scope of the input and output area is used (see GetAreaSize/AreaSize (Page 158)). This is also possible when no IO module is configured.

Inputs and outputs that are defined via configured IO modules are synchronized to the defined update of the process image partition (PIP).

Inputs and outputs that are not assigned to an IO module are synchronized in the cycle control point.

Note the following when synchronizing these inputs and outputs:

- Inputs can only be used as inputs.

  You can write the values via the API, but values which are written via the user program (TIA Portal) are not visible in the API.

- Outputs can be used as output and as input.

  You can write the values via the API and via the CPU / the user program (TIA Portal). If API and user program write to the same area, the values from the API will overwrite the vales from the user program.

7.6.5.2 I/O access via address - Reading

InputArea { get; }, MarkerArea { get; }, OutputArea { get; }

Returns an interface that you use to call the .NET functions in this section.

Table 7- 143 InputArea { get; } MarkerArea { get; } OutputArea { get; } - .NET (C#)

Syntax	`IIOArea InputArea { get; }`
	`IIOArea MarkerArea { get; }`
	`IIOArea OutputArea { get; }`

Parameters	None
Return values	`IIOArea:` The interface is used to call the "I/O access via address" functions.

GetAreaSize() / AreaSize { get; }

Returns the size of the area in bytes.

Table 7- 144 GetAreaSize() - Native C++

Syntax	`UINT32 GetAreaSize( EArea in_Area );`
Parameters	• `EArea in_Area:` The area whose size you want to receive. Permissible values: `{SRA_INPUT, SRA_MARKER, SRA_OUTPUT}`. See EArea (Page 330).
Return values	`UINT32:` Size of the area in bytes. If the function was successful, the value is not equal to 0.

Table 7- 145 AreaSize { get; } - .NET (C#)

Syntax	`UInt32 InputArea.AreaSize { get; }`
	`UInt32 MarkerArea.AreaSize { get; }`
	`UInt32 OutputArea.AreaSize { get; }`

Parameters	None
Return values	`Uint32:` Size of the area in bytes. If the function was successful, the value is not equal to 0.

ReadBit()

Reads an individual bit from the area.

Note

The function allows access to the entire storage area of the virtual controller.

Therefore, use access via the tag name (Page 173) and not via the address areas.

Table 7- 146 ReadBit() - Native C++

Syntax	`ERuntimeErrorCode ReadBit(`
	` EArea in_Area,`
	` UINT32 in_Offset,`
	` UINT8 in_Bit,`
	` bool* out_Value`
	`);`	

Parameters	• `EArea in_Area:` The area from which you want to read. Permissible values: `{SRA_INPUT, SRA_MARKER, SRA_OUTPUT}`. See EArea (Page 330). • `UINT32 in_Offset:` The byte offset within the area. The value must be between 0 and the value that `GetAreaSize()` returns. • `UINT8 in_Bit:` The bit offset within the byte. The value must be between 0 and 7. • `bool* out_Value:` Returns the bit value.	
Return values	Runtime error code	Condition
	`SREC_OK`	The function is successful.
	`SREC_INTERFACE_REMOVED`	The instance is not registered in Runtime Manager.
	`SREC_TIMEOUT`	The function does not return on time.
	`SREC_INSTANCE_NOT_RUNNING`	The process of the virtual controller is not running.
	`SREC_INDEX_OUT_OF_RANGE`	Offset or bits are invaid.
	`SREC_WRONG_ARGUMENT`	The area is invalid.

Table 7- 147 ReadBit() - .NET (C#)

Syntax	`bool InputArea.ReadBit(`
	` UInt32 in_Offset,`
	` Byte in_Bit`
	`);`
	`bool MarkerArea.ReadBit(`
	` UInt32 in_Offset,`
	` Byte in_Bit`
	`);`
	`bool OutputArea.ReadBit(`
	` UInt32 in_Offset,`
	` Byte in_Bit`
	`);`	

Parameters	• `UInt32 in_Offset:` The byte offset within the area. The value must be between 0 and the value that `AreaSize` returns. • `Byte in_Bit:` The bit offset within the byte. The value must be between 0 and 7.	
Return values	`bool:` Bit value	
Exceptions	`Siemens.Simatic.Simulation.Runtime.SimulationRuntimeException`	
	Runtime error code	Condition
	`ERuntimeError-Code.InterfaceRemoved`	The instance is not registered in Runtime Manager.
	`ERuntimeErrorCode.Timeout`	The function does not return on time.
	`ERuntimeError-Code.InstanceNotRunning`	The process of the virtual controller is not running.
	`ERuntimeError-Code.IndexOutOfRange`	Offset or bits are invaid.

ReadByte()

Reads an individual bit from the area.

Note

The function allows access to the entire storage area of the virtual controller.

Therefore, use access via the tag name and not via the address areas.

Table 7- 148 ReadByte() - Native C++

Syntax	`ERuntimeErrorCode ReadByte(`
	`  EArea in_Area,`
	`  UINT32 in_Offset,`
	`  BYTE* out_Value);`	

Parameters	• `EArea in_Area:` The area from which you want to read. Permissible values: `{SRA_INPUT, SRA_MARKER, SRA_OUTPUT}`. See EArea (Page 330). • `UINT32 in_Offset:` The byte offset within the area. The value must be between 0 and the value that `GetAreaSize()` returns. • `BYTE* out_Value:` Returns the byte value.	
Return values	Runtime error code	Condition
	`SREC_OK`	The function is successful.
	`SREC_INTERFACE_REMOVED`	The instance is not registered in Runtime Manager.
	`SREC_TIMEOUT`	The function does not return on time.
	`SREC_INSTANCE_NOT_RUNNING`	The process of the virtual controller is not running.
	`SREC_INDEX_OUT_OF_RANGE`	Offset is invalid.
	`SREC_WRONG_ARGUMENT`	The area is invalid.

Table 7- 149 ReadByte() - .NET (C#)

Syntax	`Byte InputArea.ReadByte( UInt32 in_Offset );`
	`Byte MarkerArea.ReadByte( UInt32 in_Offset );`
	`Byte OutputArea.ReadByte( UInt32 in_Offset );`	

Parameters	• `UInt32 in_Offset:` The byte offset within the area. The value must be between 0 and the value that `AreaSize` returns.	
Return values	`Byte:` Byte value.	
Exceptions	`Siemens.Simatic.Simulation.Runtime.SimulationRuntimeException`	
	Runtime error code	Condition
	`ERuntimeError-Code.InterfaceRemoved`	The instance is not registered in Runtime Manager.
	`ERuntimeErrorCode.Timeout`	The function does not return on time.
	`ERuntimeError-Code.InstanceNotRunning`	The process of the virtual controller is not running.
	`ERuntimeError-Code.IndexOutOfRange`	Offset is invalid.

ReadBytes()

Reads a byte array from the area.

Note

The function allows access to the entire storage area of the virtual controller.

Therefore, use access via the tag name and not via the address areas.

Table 7- 150 ReadByte() - Native C++

Syntax	`ERuntimeErrorCode ReadBytes(`
	`  EArea in_Area,`
	`  UINT32 in_Offset,`
	`  UINT32 in_BytesToRead,`
	`  UINT32* out_BytesRead,`
	`  BYTE inout_Values[]`
	`);`	

Parameters	• `EArea in_Area:` The area from which you want to read. Permissible values: `{SRA_INPUT, SRA_MARKER, SRA_OUTPUT}`. See EArea (Page 330). • `UINT32 in_Offset:` The byte offset within the area. The value must be between 0 and the value that `GetAreaSize()` returns. • `UINT32 in_BytesToRead:` Contains the size of the value storage. • `UINT32* out_BytesRead:` Returns the number of bytes that were just written to the value storage. • `BYTE inout_Values[]:` The storage for the bytes that are read from the area.	
Return values	Runtime error code	Condition
	`SREC_OK`	The function is successful.
	`SREC_INTERFACE_REMOVED`	The instance is not registered in Runtime Manager.
	`SREC_TIMEOUT`	The function does not return on time.
	`SREC_INSTANCE_NOT_RUNNING`	The process of the virtual controller is not running.
	`SREC_INDEX_OUT_OF_RANGE`	The offset is outside the area size. No byte could be read.
	`SREC_WRONG_ARGUMENT`	The area is invalid.

Table 7- 151 ReadBytes() - .NET (C#)

Syntax	`Byte[] InputArea.ReadBytes(`
	`  UInt32 in_Offset,`
	`  UInt32 in_BytesToRead`
	`);`
	`Byte[] MarkerArea.ReadBytes(`
	`  UInt32 in_Offset,`
	`  UInt32 in_BytesToRead`
	`);`
	`Byte[] OutputArea.ReadBytes(`
	`  UInt32 in_Offset,`
	`  UInt32 in_BytesToRead`
	`);`	

Parameters	• `UInt32 in_Offset:` The byte offset within the area. The value must be between 0 and the value that `AreaSize` returns. • `UInt32 in_BytesToRead:` The number of bytes to be read.	
Return values	`Byte[]:` The read bytes.	
Exceptions	`Siemens.Simatic.Simulation.Runtime.SimulationRuntimeException`	
	Runtime error code	Condition
	`ERuntimeError-Code.InterfaceRemoved`	The instance is not registered in Runtime Manager.
	`ERuntimeErrorCode.Timeout`	The function does not return on time.
	`ERuntimeError-Code.InstanceNotRunning`	The process of the virtual controller is not running.
	`ERuntimeError-Code.IndexOutOfRange`	The offset is outside the area size. No byte could be read.

ReadSignals()

Structures and fields can be emulated through signal lists and be read by using the `ReadSignals()` function.

The function also takes into consideration the byte order (Endianness).

Only primitive data type signals are supported, but the function is not type-safe.

Note

The function allows access to the entire storage area of the virtual controller.

Therefore, use access via the tag name (Page 173) and not via the address areas.

Table 7- 152 ReadSignals() - Native C++

Syntax	`ERuntimeErrorCode ReadSignals(`
	`  EArea in_Area,`
	`  SDataValueByAddress* inout_Signals,`
	`  UINT32 in_SignalCount`
	`);`
	`ERuntimeErrorCode ReadSignals(`
	`  EArea in_Area,`
	`  SDataValueByAddressWithCheck* inout_Signals,`
	`  UINT32 in_SignalCount,`
	`  bool* out_SignalsHaveChanged`
	`);`	

Parameters	• `EArea in_Area:` The area from which you want to read. Permissible values: `{SRA_INPUT, SRA_MARKER, SRA_OUTPUT}`. See EArea (Page 330). • `SDataValueByAddress* inout_Signals:` The signal list to be read. The result is stored in the structure. • `SDataValueByAddressWithCheck* inout_Signals:` The signal list that is read. The result is stored in the structure. `"ValueHasChanged"` is set to `true` if the value of the signal has changed since the preceding call. • `UINT32 in_SignalCount:` Number of signals in the list. • `bool* out_SignalsHaveChanged:` Returns `true` if the value of at least one signal has changed since the preceding call.	
Signal error	Error code	Condition
	`SREC_OK`	The signal operation is successful.
	`SREC_DOES_NOT_EXIST`	The entry does not exist in the stored tag table.
	`SREC_NOT_SUPPORTED`	Access to entire structures or arrays is not supported.
	`SREC_TYPE_MISMATCH`	The expected type does not match the stored type. See Compatible primitive data types (Page 335).
Return values	Runtime error code	Condition
	`SREC_OK`	The function is successful.
	`SREC_INTERFACE_REMOVED`	The instance is not registered in Runtime Manager.
	`SREC_TIMEOUT`	The function does not return on time.
	`SREC_INSTANCE_NOT_RUNNING`	The process of the virtual controller is not running.
	`SREC_WRONG_ARGUMENT`	The area is invalid.
	`SREC_SIGNAL_CONFIGURATION_ERROR`	At least one signal error is in the list.

Table 7- 153 ReadSignals() - .NET (C#)

Syntax	`void ReadSignals(`
	` ref SDataValueByAddress[] inout_Signals`
	`);`
	`void ReadSignals(`
	` ref SDataValueByAddressWithCheck[] inout_Signals`
	` out bool out_SignalsHaveChanged);`
	`);`	

Parameters	• `ref SDataValueByAddress[] inout_Signals:` The signal list to be read. • `ref SDataValueByAddressWithCheck[] inout_Signals:` The signal list that is read. The result is stored in the structure. "`ValueHasChanged`" is set to `true` if the value of the signal has changed since the preceding call. • `out bool out_SignalsHaveChanged:` Returns `true` if the value of at least one signal has changed since the preceding call.	
Return values	None	
Signal error	Runtime error code	Condition
	`ERuntimeErrorCode.OK`	The signal operation is successful.
	`ERuntimeError-Code.IndexOutOfRange`	Offset or bits are invalid.
Exceptions	`Siemens.Simatic.Simulation.Runtime.SimulationRuntimeException`	
	Runtime error code	Condition
	`ERuntimeError-Code.InterfaceRemoved`	The instance is not registered in Runtime Manager.
	`ERuntimeErrorCode.Timeout`	The function does not return on time.
	`ERuntimeError-Code.InstanceNotRunning`	The process of the virtual controller is not running.
	`ERuntimeError-Code.SignalConfigurationError`	At least one signal error is in the list.

7.6.5.3 I/O access via address - Writing

WriteBit()

Writes an individual bit to the area.

Note

Data can be overwritten

The function allows access to the entire storage area of the virtual controller.

Therefore, use access via the tag name (Page 191) and not via the address areas.

Table 7- 154 WriteBit() - Native C++

Syntax	`ERuntimeErrorCode WriteBit(`
	`  EArea in_Area,`
	`  UINT32 in_Offset,`
	`  UINT8 in_Bit,`
	`  bool in_Value`
	`);`	

Parameters	• `EArea in_Area:` The area that is to be written. Permissible values: `{SRA_INPUT, SRA_MARKER, SRA_OUTPUT}`. See EArea (Page 330). • `UINT32 in_Offset:` The byte offset within the area. The value must be between 0 and the value that `GetAreaSize()` returns. • `UINT8 in_Bit:` The bit offset within the byte. The value must be between 0 and 7. • `bool in_Value:` Bit value.	
Return values	Runtime error code	Condition
	`SREC_OK`	The function is successful.
	`SREC_INTERFACE_REMOVED`	The instance is not registered in Runtime Manager.
	`SREC_TIMEOUT`	The function does not return on time.
	`SREC_INSTANCE_NOT_RUNNING`	The process of the virtual controller is not running.
	`SREC_INDEX_OUT_OF_RANGE`	Offset or bits are invaid.
	`SREC_WRONG_ARGUMENT`	Area is invalid.

Table 7- 155 WriteBit() - .NET (C#)

Syntax	`void InputArea WriteBit(`
	`  UInt32 in_Offset,`
	`  Byte in_Bit,`
	`  bool in_Value`
	`);`
	`void MarkerArea WriteBit(`
	`  UInt32 in_Offset,`
	`  Byte in_Bit,`
	`  bool in_Value`
	`);`
	`void OutputArea WriteBit(`
	`  UInt32 in_Offset,`
	`  Byte in_Bit,`
	`  bool in_Value`
	`);`	

Parameters	• `UInt32 in_Offset:` The byte offset within the area. The value must be between 0 and the value that `AreaSize` returns. • `Byte in_Bit:` The bit offset within the byte. The value must be between 0 and 7. • `bool in_Value:` Bit value.	
Return values	None	
Exceptions	`Siemens.Simatic.Simulation.Runtime.SimulationRuntimeException`	
	Runtime error code	Condition
	`ERuntimeError-Code.InterfaceRemoved`	The instance is not registered in Runtime Manager.
	`ERuntimeErrorCode.Timeout`	The function does not return on time.
	`ERuntimeError-Code.InstanceNotRunning`	The process of the virtual controller is not running.
	`ERuntimeError-Code.IndexOutOfRange`	Offset or bits are invaid.

WriteByte()

Writes an individual byte to the area.

Note

Data can be overwritten

The function allows access to the entire storage area of the virtual controller.

Therefore, use access via the tag name (Page 191) and not via the address areas.

Table 7- 156 WriteByte() - Native C++

Syntax	`ERuntimeErrorCode WriteByte(`
	`  EArea in_Area,`
	`  UINT32 in_Offset,`
	`  BYTE in_Value);`	

Parameters	• `EArea in_Area:` The area that is to be written. Permissible values: `{SRA_INPUT, SRA_MARKER, SRA_OUTPUT}`. See EArea (Page 330). • `UINT32 in_Offset:` The byte offset within the area. The value must be between 0 and the value that `GetAreaSize()` returns. • `BYTE in_Value:` Byte value.	
Return values	Runtime error code	Condition
	`SREC_OK`	The function is successful.
	`SREC_INTERFACE_REMOVED`	The instance is not registered in Runtime Manager.
	`SREC_TIMEOUT`	The function does not return on time.
	`SREC_INSTANCE_NOT_RUNNING`	The process of the virtual controller is not running.
	`SREC_INDEX_OUT_OF_RANGE`	Offset is invalid.
	`SREC_WRONG_ARGUMENT`	Area is invalid.

Table 7- 157 WriteByte() - .NET (C#)

Syntax	`void InputArea.WriteByte(`
	`  UInt32 in_Offset,`
	`  Byte in_Value`
	`);`
	`void MarkerArea.WriteByte(`
	`  UInt32 in_Offset,`
	`  Byte in_Value`
	`);`
	`void OutputArea.WriteByte(`
	`  UInt32 in_Offset,`
	`  Byte in_Value`
	`);`	

Parameters	• `UINT32 in_Offset:` The byte offset within the area. The value must be between 0 and the value that `AreaSize` returns. • `BYTE in_Value:` Byte value.	
Return values	None	
Exceptions	`Siemens.Simatic.Simulation.Runtime.SimulationRuntimeException`	
	Runtime error code	Condition
	`ERuntimeError-Code.InterfaceRemoved`	The instance is not registered in Runtime Manager.
	`ERuntimeErrorCode.Timeout`	The function does not return on time.
	`ERuntimeError-Code.InstanceNotRunning`	The process of the virtual controller is not running.
	`ERuntimeError-Code.IndexOutOfRange`	Offset is invalid.

WriteBytes()

Writes a byte array to the area.

Note

Data can be overwritten

The function allows access to the entire storage area of the virtual controller.

In particular, do not write to bytes that belong to other applications or contain internal data, for example, qualifier bits for fail-safe I/O modules.

Therefore, use access via the tag name (Page 191) and not via the address areas.

Table 7- 158 WriteBytes() - Native C++

Syntax	`ERuntimeErrorCode WriteBytes(`
	` EArea in_Area,`
	` UINT32 in_Offset,`
	` UINT32 in_BytesToWrite,`
	` UINT32* out_BytesWritten,`
	` BYTE in_Values[])`
	`;`	

Parameters	• `EArea in_Area:` The area that is to be written. Permissible values: `{SRA_INPUT, SRA_MARKER, SRA_OUTPUT}`. See EArea (Page 330). • `UINT32 in_Offset:` The byte offset within the area. The value must be between 0 and the value that `GetAreaSize()` returns. • `UINT32 in_BytesToWrite:` Contains the size of the array value to be written. • `UINT32* out_BytesWritten:` Contains the number of bytes that were just written. • `BYTE in_Values[]:` Byte array that is to be written to the area.	
Return values	Runtime error code	Condition
	`SREC_OK`	The function is successful.
	`SREC_INTERFACE_REMOVED`	The instance is not registered in Runtime Manager.
	`SREC_TIMEOUT`	The function does not return on time.
	`SREC_INSTANCE_NOT_RUNNING`	The process of the virtual controller is not running.
	`SREC_INDEX_OUT_OF_RANGE`	The offset is outside the area size. No byte could be written.
	`SREC_WRONG_ARGUMENT`	The area is invalid.

Table 7- 159 WriteBytes() - .NET (C#)

Syntax	`UInt32 InputArea.WriteBytes(`
	`  UInt32 in_Offset,`
	`  Byte[] in_Values`
	`);`
	`UInt32 InputArea.WriteBytes(`
	`  UInt32 in_Offset,`
	`  UInt32 in_BytesToWrite,`
	`  Byte[] in_Values`
	
	`);`
	`UInt32 MarkerArea.WriteBytes(`
	`  UInt32 in_Offset,`
	`  Byte[] in_Values`
	`);`
	`UInt32 MarkerArea.WriteBytes(`
	`  UInt32 in_Offset,`
	`  UInt32 in_BytesToWrite,`
	`  Byte[] in_Values`
	`);`
	`UInt32 OutputArea.WriteBytes(`
	`  UInt32 in_Offset,`
	`  Byte[] in_Values`
	`);`
	`UInt32 OutputArea.WriteBytes(`
	`  UInt32 in_Offset,`
	`  UInt32 in_BytesToWrite,`
	`  Byte[] in_Values`
	`);`	

Parameters	• `UINT32 in_Offset:` The byte offset within the area. The value must be between 0 and the value that `AreaSize` returns. • `UInt32 in_BytesToWrite:` Contains the number of bytes to be written. The value must be between 1 and the size of the array value. • `BYTE in_Value:` Byte value.	
Return values	`Uint32:` Contains the number of bytes that were just written.	
Exceptions	`Siemens.Simatic.Simulation.Runtime.SimulationRuntimeException`	
	Runtime error code	Condition
	`ERuntimeError-Code.InterfaceRemoved`	The instance is not registered in Runtime Manager.
	`ERuntimeErrorCode.Timeout`	The function does not return on time.
	`ERuntimeError-Code.InstanceNotRunning`	The process of the virtual controller is not running.
	`ERuntimeError-Code.IndexOutOfRange`	The offset is outside the area size. No byte could be written.

WriteSignals()

Writes multiple signals within an API call. The function also takes into consideration the byte order (Endianness).

The function supports only primitive data type signals, but it is not typical.

Note

Data can be overwritten

The function allows access to the entire storage area of the virtual controller.

Therefore, use access via the tag name (Page 191) and not via the address areas.

Table 7- 160 WriteSignals() - Native C++

Syntax	`ERuntimeErrorCode WriteSignals(`
	`  EArea in_Area,`
	`  SDataValueByAddress* in_Signals,`
	`  UINT32 in_SignalCount`
	`);`	

Parameters	• `EArea in_Area:` The area that is to be written. Permissible values: `{SRA_INPUT, SRA_MARKER, SRA_OUTPUT}`. See EArea (Page 330). • `SDataValueByAddress* inout_Signals:` The signal list to be written. • `UINT32 in_SignalCount:` Number of signals in the list.	
Signal error	Error code	Condition
	`SREC_OK`	The signal operation is successful.
	`SREC_INDEX_OUT_OF_RANGE`	Offset or bits are invalid.
Return values	Runtime error code	Condition
	`SREC_OK`	The function is successful.
	`SREC_INTERFACE_REMOVED`	The instance is not registered in Runtime Manager.
	`SREC_TIMEOUT`	The function does not return on time.
	`SREC_INSTANCE_NOT_RUNNING`	The process of the virtual controller is not running.
	`SREC_SIGNAL_CONFIGURATION_ERROR`	At least one signal error is in the list.
	`SREC_WRONG_ARGUMENT`	The area is invalid.

Table 7- 161 WriteSignals() - .NET (C#)

Syntax	`void InputArea.WriteSignals( SDataValueByAddress[] in_Signals );`
	`void MarkerArea.WriteSignals( SDataValueByAddress[] in_Signals );`
	`void OutputArea.WriteSignals( SDataValueByAddress[] in_Signals );`	

Parameters	• `SDataValueByAddress[] in_Signals:` The signal list to be written.	
Return values	None	
Signal error	Error code	Condition
	`ERuntimeErrorCode.OK`	The signal operation is successful.
	`ERuntimeError-Code.IndexOutOfRange`	Offset or bits are invalid.
Exceptions	`Siemens.Simatic.Simulation.Runtime.SimulationRuntimeException`	
	Runtime error code	Condition
	`ERuntimeError-Code.InterfaceRemoved`	The instance is not registered in Runtime Manager.
	`ERuntimeErrorCode.Timeout`	The function does not return on time.
	`ERuntimeError-Code.InstanceNotRunning`	The process of the virtual controller is not running.
	`ERuntimeError-Code.SignalConfigurationError`	At least one signal error is in the list.

7.6.5.4 I/O access via tag name - Reading

Individual access to IO data is used for displaying and writing values that are not refreshed regularly in a graphical user interface (GUI).

Note

To simulate a regular exchange of signals, create a signal list for each set of signals. Use this signal list for all further accesses. Create a new list as soon as the set of signals changes.

For the signal lists use the functions `ReadSignals()` and `WriteSignals()`.

Read()

Reads the value of a PLC tag.

Table 7- 162 Read() - Native C++

Syntax	`ERuntimeErrorCode Read(`
	` WCHAR* in_Tag,`
	` SDataValue* inout_Value`
	`);`	

Parameters	• `WCHAR* in_Tag:` The name of the PLC tag that is to be read. • `SDataValue* inout_Value:` Contains the value and the expected type of the PLC tag. If the expected type is `UNSPECIFIC`, it is set to the stored type when the function was successful. The `STRUCT` type is not supported. Structures and fields can be emulated through signal lists and be read by using the `ReadSignals()` function.	
Return values	Runtime error code	Condition
	`SREC_OK`	The function is successful.
	`SREC_INTERFACE_REMOVED`	The instance is not registered in Runtime Manager.
	`SREC_TIMEOUT`	The function does not return on time.
	`SREC_INSTANCE_NOT_RUNNING`	The process of the virtual controller is not running.
	`SREC_DOES_NOT_EXIST`	The entry does not exist in the stored tag list.
	`SREC_NOT_SUPPORTED`	Access to entire structures or arrays is not supported.
	`SREC_TYPE_MISMATCH`	The expected type does not match the stored type. See Compatible primitive data types (Page 335).
	`SREC_NOT_UP_TO_DATE`	The stored tag list must be updated.

Table 7- 163 Read() - .NET (C#)

Syntax	`SDataValue Read(`
	`  string in_Tag`
	`)`	

Parameters	• `string in_Tag:` The name of the PLC tag that is to be read.	
Return values	`SDataValue:` Contains the value and the type of the PLC tag.	
Exceptions	`Siemens.Simatic.Simulation.Runtime.SimulationRuntimeException`	
	Runtime error code	Condition
	`ERuntimeError-Code.InterfaceRemoved`	The instance is not registered in Runtime Manager.
	`ERuntimeErrorCode.Timeout`	The function does not return on time.
	`ERuntimeError-Code.InstanceNotRunning`	The process of the virtual controller is not running.
	`ERuntimeErrorCode.DoesNotExist`	The entry does not exist in the stored tag list.
	`ERuntimeErrorCode.NotSupported`	Access to entire structures or arrays is not supported.
	`ERuntimeErrorCode.TypeMismatch`	The expected type does not match the stored type. See Compatible primitive data types (Page 336).
	`ERuntimeErrorCode.NotUpToData`	The stored tag list must be updated.

ReadBool()

Reads the value of a PLC tag.

Table 7- 164 ReadBool() - Native C++

Syntax	`ERuntimeErrorCode ReadBool(`
	`  WCHAR* in_Tag,`
	`  bool* out_Value`
	`);`	

Parameters	• `WCHAR* in_Tag:` The name of the PLC tag that is to be read. • `bool* out_Value:` Contains the value of the PLC tag.	
Return values	Runtime error code	Condition
	`SREC_OK`	The function is successful.
	`SREC_INTERFACE_REMOVED`	The instance is not registered in Runtime Manager.
	`SREC_TIMEOUT`	The function does not return on time.
	`SREC_INSTANCE_NOT_RUNNING`	The process of the virtual controller is not running.
	`SREC_DOES_NOT_EXIST`	The entry does not exist in the stored tag list.
	`SREC_NOT_SUPPORTED`	Access to entire structures or arrays is not supported.
	`SREC_TYPE_MISMATCH`	The expected type does not match the stored type. See Compatible primitive data types (Page 335).
	`SREC_NOT_UP_TO_DATE`	The stored tag list must be updated.

Table 7- 165 ReadBool() - .NET (C#)

Syntax	`bool ReadBool(`
	`  string in_Tag`
	`)`	

Parameters	• `string in_Tag:` The name of the PLC tag that is to be read.	
Return values	`bool:` Contains the value of the PLC tag.	
Exceptions	`Siemens.Simatic.Simulation.Runtime.SimulationRuntimeException`	
	Runtime error code	Condition
	`ERuntimeError-` `Code.InterfaceRemoved`	The instance is not registered in Runtime Manager.
	`ERuntimeErrorCode.Timeout`	The function does not return on time.
	`ERuntimeError-` `Code.InstanceNotRunning`	The process of the virtual controller is not running.
	`ERuntimeErrorCode.DoesNotExist`	The entry does not exist in the stored tag list.
	`ERuntimeErrorCode.NotSupported`	Access to entire structures or arrays is not supported.
	`ERuntimeErrorCode.TypeMismatch`	The expected type does not match the stored type. See Compatible primitive data types (Page 335).
	`ERuntimeErrorCode.NotUpToData`	The stored tag list must be updated.

ReadInt8()

Reads the value of a PLC tag.

Table 7- 166 ReadInt8() - Native C++

Syntax	`ERuntimeErrorCode ReadInt8(`
	`  WCHAR* in_Tag,`
	`  INT8* out_Value`
	`);`	

Parameters	• `WCHAR* in_Tag:` The name of the PLC tag that is to be read. • `INT8* out_Value:` Contains the value of the PLC tag.	
Return values	Runtime error code	Condition
	`SREC_OK`	The function is successful.
	`SREC_INTERFACE_REMOVED`	The instance is not registered in Runtime Manager.
	`SREC_TIMEOUT`	The function does not return on time.
	`SREC_INSTANCE_NOT_RUNNING`	The process of the virtual controller is not running.
	`SREC_DOES_NOT_EXIST`	The entry does not exist in the stored tag list.
	`SREC_NOT_SUPPORTED`	Access to entire structures or arrays is not supported.
	`SREC_TYPE_MISMATCH`	The expected type does not match the stored type. See Compatible primitive data types (Page 335).
	`SREC_NOT_UP_TO_DATE`	The stored tag list must be updated.

Table 7- 167 ReadInt8() - .NET (C#)

Syntax	`Int8 ReadInt8(`
	`  string in_Tag`
	`)`	

Parameters	• `string in_Tag:` The name of the PLC tag that is to be read.	
Return values	`Int8:` Contains the value and the type of the PLC tag.	
Exceptions	`Siemens.Simatic.Simulation.Runtime.SimulationRuntimeException`	
	Runtime error code	Condition
	`ERuntimeError-Code.InterfaceRemoved`	The instance is not registered in Runtime Manager.
	`ERuntimeErrorCode.Timeout`	The function does not return on time.
	`ERuntimeError-Code.InstanceNotRunning`	The process of the virtual controller is not running.
	`ERuntimeErrorCode.DoesNotExist`	The entry does not exist in the stored tag list.
	`ERuntimeErrorCode.NotSupported`	Access to entire structures or arrays is not supported.
	`ERuntimeErrorCode.TypeMismatch`	The expected type does not match the stored type. See Compatible primitive data types (Page 335).
	`ERuntimeErrorCode.NotUpToData`	The stored tag list must be updated.

ReadInt16()

Reads the value of a PLC tag.

Table 7- 168 ReadInt16() - Native C++

Syntax	`ERuntimeErrorCode ReadInt16(`
	`  WCHAR* in_Tag,`
	`  INT16* out_Value`
	`);`	

Parameters	• `WCHAR* in_Tag:` The name of the PLC tag that is to be read. • `INT16* out_Value:` Contains the value of the PLC tag.	
Return values	Runtime error code	Condition
	`SREC_OK`	The function is successful.
	`SREC_INTERFACE_REMOVED`	The instance is not registered in Runtime Manager.
	`SREC_TIMEOUT`	The function does not return on time.
	`SREC_INSTANCE_NOT_RUNNING`	The process of the virtual controller is not running.
	`SREC_DOES_NOT_EXIST`	The entry does not exist in the stored tag list.
	`SREC_NOT_SUPPORTED`	Access to entire structures or arrays is not supported.
	`SREC_TYPE_MISMATCH`	The expected type does not match the stored type. See Compatible primitive data types (Page 335).
	`SREC_NOT_UP_TO_DATE`	The stored tag list must be updated.

Table 7- 169 ReadInt16() - .NET (C#)

Syntax	`Int16 ReadInt16(`
	`  string in_Tag`
	`)`	

Parameters	• `string in_Tag:` The name of the PLC tag that is to be read.	
Return values	`Int16:` Contains the value and the type of the PLC tag.	
Exceptions	`Siemens.Simatic.Simulation.Runtime.SimulationRuntimeException`	
	Runtime error code	Condition
	`ERuntimeError-` `Code.InterfaceRemoved`	The instance is not registered in Runtime Manager.
	`ERuntimeErrorCode.Timeout`	The function does not return on time.
	`ERuntimeError-` `Code.InstanceNotRunning`	The process of the virtual controller is not running.
	`ERuntimeErrorCode.DoesNotExist`	The entry does not exist in the stored tag list.
	`ERuntimeErrorCode.NotSupported`	Access to entire structures or arrays is not supported.
	`ERuntimeErrorCode.TypeMismatch`	The expected type does not match the stored type. See Compatible primitive data types (Page 335).
	`ERuntimeErrorCode.NotUpToData`	The stored tag list must be updated.

ReadInt32()

Reads the value of a PLC tag.

Table 7- 170 ReadInt32() - Native C++

Syntax	`ERuntimeErrorCode ReadInt32(`
	`  WCHAR* in_Tag,`
	`  INT32* out_Value`
	`);`	

Parameters	• `WCHAR* in_Tag:` The name of the PLC tag that is to be read. • `INT32* out_Value:` Contains the value of the PLC tag.	
Return values	Runtime error code	Condition
	`SREC_OK`	The function is successful.
	`SREC_INTERFACE_REMOVED`	The instance is not registered in Runtime Manager.
	`SREC_TIMEOUT`	The function does not return on time.
	`SREC_INSTANCE_NOT_RUNNING`	The process of the virtual controller is not running.
	`SREC_DOES_NOT_EXIST`	The entry does not exist in the stored tag list.
	`ERuntimeErrorCode.NotSupported`	Access to entire structures or arrays is not supported.
	`ERuntimeErrorCode.TypeMismatch`	The expected type does not match the stored type. See Compatible primitive data types (Page 335).
	`SREC_NOT_UP_TO_DATE`	The stored tag list must be updated.

Table 7- 171 ReadInt32() - .NET (C#)

Syntax	`Int32 ReadInt32(`
	`  string in_Tag`
	`)`	

Parameters	• `string in_Tag:` The name of the PLC tag that is to be read.	
Return values	`Int32:` Contains the value and the type of the PLC tag.	
Exceptions	`Siemens.Simatic.Simulation.Runtime.SimulationRuntimeException`	
	Runtime error code	Condition
	`ERuntimeError-Code.InterfaceRemoved`	The instance is not registered in Runtime Manager.
	`ERuntimeErrorCode.Timeout`	The function does not return on time.
	`ERuntimeError-Code.InstanceNotRunning`	The process of the virtual controller is not running.
	`ERuntimeErrorCode.DoesNotExist`	The entry does not exist in the stored tag list.
	`ERuntimeErrorCode.NotSupported`	Access to entire structures or arrays is not supported.
	`ERuntimeErrorCode.TypeMismatch`	The expected type does not match the stored type. See Compatible primitive data types (Page 335).
	`ERuntimeErrorCode.NotUpToData`	The stored tag list must be updated.

ReadInt64()

Reads the value of a PLC tag.

Table 7- 172 ReadInt64() - Native C++

Syntax	`ERuntimeErrorCode ReadInt64(`
	`  WCHAR* in_Tag,`
	`  INT64* out_Value`
	`);`	

Parameters	• `WCHAR* in_Tag:` The name of the PLC tag that is to be read. • `INT64* out_Value:` Contains the value of the PLC tag.	
Return values	Runtime error code	Condition
	`SREC_OK`	The function is successful.
	`SREC_INTERFACE_REMOVED`	The instance is not registered in Runtime Manager.
	`SREC_TIMEOUT`	The function does not return on time.
	`SREC_INSTANCE_NOT_RUNNING`	The process of the virtual controller is not running.
	`SREC_DOES_NOT_EXIST`	The entry does not exist in the stored tag list.
	`ERuntimeErrorCode.NotSupported`	Access to entire structures or arrays is not supported.
	`ERuntimeErrorCode.TypeMismatch`	The expected type does not match the stored type. See Compatible primitive data types (Page 335).
	`SREC_NOT_UP_TO_DATE`	The stored tag list must be updated.

Table 7- 173 ReadInt64() - .NET (C#)

Syntax	`Int64 ReadInt64(`
	`  string in_Tag`
	`)`	

Parameters	• `string in_Tag:` The name of the PLC tag that is to be read.	
Return values	`Int64:` Contains the value and the type of the PLC tag.	
Exceptions	`Siemens.Simatic.Simulation.Runtime.SimulationRuntimeException`	
	Runtime error code	Condition
	`ERuntimeError-Code.InterfaceRemoved`	The instance is not registered in Runtime Manager.
	`ERuntimeErrorCode.Timeout`	The function does not return on time.
	`ERuntimeError-Code.InstanceNotRunning`	The process of the virtual controller is not running.
	`ERuntimeErrorCode.DoesNotExist`	The entry does not exist in the stored tag list.
	`ERuntimeErrorCode.NotSupported`	Access to entire structures or arrays is not supported.
	`ERuntimeErrorCode.TypeMismatch`	The expected type does not match the stored type. See Compatible primitive data types (Page 335).
	`ERuntimeErrorCode.NotUpToData`	The stored tag list must be updated.

ReadUInt8()

Reads the value of a PLC tag.

Table 7- 174 ReadUInt8() - Native C++

Syntax	`ERuntimeErrorCode ReadUInt8(`
	`  WCHAR* in_Tag,`
	`  UINT8* out_Value`
	`);`	

Parameters	• `WCHAR* in_Tag:` The name of the PLC tag that is to be read. • `UINT8* out_Value:` Contains the value of the PLC tag.	
Return values	Runtime error code	Condition
	`SREC_OK`	The function is successful.
	`SREC_INTERFACE_REMOVED`	The instance is not registered in Runtime Manager.
	`SREC_TIMEOUT`	The function does not return on time.
	`SREC_INSTANCE_NOT_RUNNING`	The process of the virtual controller is not running.
	`SREC_DOES_NOT_EXIST`	The entry does not exist in the stored tag list.
	`SREC_NOT_SUPPORTED`	Access to entire structures or arrays is not supported.
	`SREC_TYPE_MISMATCH`	The expected type does not match the stored type. See Compatible primitive data types (Page 335).
	`SREC_NOT_UP_TO_DATE`	The stored tag list must be updated.

Table 7- 175 ReadUInt8() - .NET (C#)

Syntax	`UInt8 ReadUInt8(`
	`  string in_Tag`
	`)`	

Parameters	• `string in_Tag:` The name of the PLC tag that is to be read.	
Return values	`UInt8:` Contains the value and the type of the PLC tag.	
Exceptions	`Siemens.Simatic.Simulation.Runtime.SimulationRuntimeException`	
	Runtime error code	Condition
	`ERuntimeError-Code.InterfaceRemoved`	The instance is not registered in Runtime Manager.
	`ERuntimeErrorCode.Timeout`	The function does not return on time.
	`ERuntimeError-Code.InstanceNotRunning`	The process of the virtual controller is not running.
	`ERuntimeErrorCode.DoesNotExist`	The entry does not exist in the stored tag list.
	`ERuntimeErrorCode.NotSupported`	Access to entire structures or arrays is not supported.
	`ERuntimeErrorCode.TypeMismatch`	The expected type does not match the stored type. See Compatible primitive data types (Page 335).
	`ERuntimeErrorCode.NotUpToData`	The stored tag list must be updated.

ReadUInt16()

Reads the value of a PLC tag.

Table 7- 176 ReadUInt16() - Native C++

Syntax	`ERuntimeErrorCode ReadUInt16(`
	`  WCHAR* in_Tag,`
	`  UINT16* out_Value`
	`);`	

Parameters	• `WCHAR* in_Tag:` The name of the PLC tag that is to be read. • `UINT16* out_Value:` Contains the value of the PLC tag.	
Return values	Runtime error code	Condition
	`SREC_OK`	The function is successful.
	`SREC_INTERFACE_REMOVED`	The instance is not registered in Runtime Manager.
	`SREC_TIMEOUT`	The function does not return on time.
	`SREC_INSTANCE_NOT_RUNNING`	The process of the virtual controller is not running.
	`SREC_DOES_NOT_EXIST`	The entry does not exist in the stored tag list.
	`SREC_NOT_SUPPORTED`	Access to entire structures or arrays is not supported.
	`SREC_TYPE_MISMATCH`	The expected type does not match the stored type. See Compatible primitive data types (Page 335).
	`SREC_NOT_UP_TO_DATE`	The stored tag list must be updated.

Table 7- 177 ReadUInt16() - .NET (C#)

Syntax	`UInt16 ReadUInt16(`
	`  string in_Tag`
	`)`	

Parameters	• `string in_Tag:` The name of the PLC tag that is to be read.	
Return values	`UInt16`: Contains the value and the type of the PLC tag.	
Exceptions	`Siemens.Simatic.Simulation.Runtime.SimulationRuntimeException`	
	Runtime error code	Condition
	`ERuntimeError-Code.InterfaceRemoved`	The instance is not registered in Runtime Manager.
	`ERuntimeErrorCode.Timeout`	The function does not return on time.
	`ERuntimeError-Code.InstanceNotRunning`	The process of the virtual controller is not running.
	`ERuntimeErrorCode.DoesNotExist`	The entry does not exist in the stored tag list.
	`ERuntimeErrorCode.NotSupported`	Access to entire structures or arrays is not supported.
	`ERuntimeErrorCode.TypeMismatch`	The expected type does not match the stored type. See Compatible primitive data types (Page 335).
	`ERuntimeErrorCode.NotUpToData`	The stored tag list must be updated.

ReadUInt32()

Reads the value of a PLC tag.

Table 7- 178 ReadUInt32() - Native C++

Syntax	`ERuntimeErrorCode ReadUInt32(`
	`  WCHAR* in_Tag,`
	`  UINT32* out_Value`
	`);`	

Parameters	• `WCHAR* in_Tag:` The name of the PLC tag that is to be read. • `UINT32* out_Value:` Contains the value of the PLC tag.	
Return values	Runtime error code	Condition
	`SREC_OK`	The function is successful.
	`SREC_INTERFACE_REMOVED`	The instance is not registered in Runtime Manager.
	`SREC_TIMEOUT`	The function does not return on time.
	`SREC_INSTANCE_NOT_RUNNING`	The process of the virtual controller is not running.
	`SREC_DOES_NOT_EXIST`	The entry does not exist in the stored tag list.
	`SREC_NOT_SUPPORTED`	Access to entire structures or arrays is not supported.
	`SREC_TYPE_MISMATCH`	The expected type does not match the stored type. See Compatible primitive data types (Page 335).
	`SREC_NOT_UP_TO_DATE`	The stored tag list must be updated.

Table 7- 179 ReadUInt32() - .NET (C#)

Syntax	`UInt32 ReadUInt32(`
	`  string in_Tag`
	`)`	

Parameters	• `string in_Tag:` The name of the PLC tag that is to be read.	
Return values	`Uint32:` Contains the value and the type of the PLC tag.	
Exceptions	`Siemens.Simatic.Simulation.Runtime.SimulationRuntimeException`	
	Runtime error code	Condition
	`ERuntimeError-Code.InterfaceRemoved`	The instance is not registered in Runtime Manager.
	`ERuntimeErrorCode.Timeout`	The function does not return on time.
	`ERuntimeError-Code.InstanceNotRunning`	The process of the virtual controller is not running.
	`ERuntimeErrorCode.DoesNotExist`	The entry does not exist in the stored tag list.
	`ERuntimeErrorCode.NotSupported`	Access to entire structures or arrays is not supported.
	`ERuntimeErrorCode.TypeMismatch`	The expected type does not match the stored type. See Compatible primitive data types (Page 335).
	`ERuntimeErrorCode.NotUpToData`	The stored tag list must be updated.

ReadUInt64()

Reads the value of a PLC tag.

Table 7- 180 ReadInt64() - Native C++

Syntax	`ERuntimeErrorCode ReadUInt64(`
	`  WCHAR* in_Tag,`
	`  UINT64* out_Value`
	`);`	

Parameters	• `WCHAR* in_Tag:` The name of the PLC tag that is to be read. • `UINT64* out_Value:` Contains the value of the PLC tag.	
Return values	Runtime error code	Condition
	`SREC_OK`	The function is successful.
	`SREC_INTERFACE_REMOVED`	The instance is not registered in Runtime Manager.
	`SREC_TIMEOUT`	The function does not return on time.
	`SREC_INSTANCE_NOT_RUNNING`	The process of the virtual controller is not running.
	`SREC_DOES_NOT_EXIST`	The entry does not exist in the stored tag list.
	`SREC_NOT_SUPPORTED`	Access to entire structures or arrays is not supported.
	`SREC_TYPE_MISMATCH`	The expected type does not match the stored type. See Compatible primitive data types (Page 335).
	`SREC_NOT_UP_TO_DATE`	The stored tag list must be updated.

Table 7- 181 ReadUInt64() - .NET (C#)

Syntax	`UInt64 ReadUInt64(`
	`  string in_Tag`
	`)`	

Parameters	• `string in_Tag:` The name of the PLC tag that is to be read.	
Return values	`UInt64`: Contains the value and the type of the PLC tag.	
Exceptions	`Siemens.Simatic.Simulation.Runtime.SimulationRuntimeException`	
	Runtime error code	Condition
	`ERuntimeError-Code.InterfaceRemoved`	The instance is not registered in Runtime Manager.
	`ERuntimeErrorCode.Timeout`	The function does not return on time.
	`ERuntimeError-Code.InstanceNotRunning`	The process of the virtual controller is not running.
	`ERuntimeErrorCode.DoesNotExist`	The entry does not exist in the stored tag list.
	`ERuntimeErrorCode.NotSupported`	Access to entire structures or arrays is not supported.
	`ERuntimeErrorCode.TypeMismatch`	The expected type does not match the stored type. See Compatible primitive data types (Page 335).
	`ERuntimeErrorCode.NotUpToData`	The stored tag list must be updated.

ReadFloat()

Reads the value of a PLC tag.

Table 7- 182 ReadFloat() - Native C++

Syntax	`ERuntimeErrorCode ReadFloat(`
	`  WCHAR* in_Tag,`
	`  float* out_Value`
	`);`	

Parameters	• `WCHAR* in_Tag:` The name of the PLC tag that is to be read. • `float* out_Value:` Contains the value of the PLC tag.	
Return values	Runtime error code	Condition
	`SREC_OK`	The function is successful.
	`SREC_INTERFACE_REMOVED`	The instance is not registered in Runtime Manager.
	`SREC_TIMEOUT`	The function does not return on time.
	`SREC_INSTANCE_NOT_RUNNING`	The process of the virtual controller is not running.
	`SREC_DOES_NOT_EXIST`	The entry does not exist in the stored tag list.
	`SREC_NOT_SUPPORTED`	Access to entire structures or arrays is not supported.
	`SREC_TYPE_MISMATCH`	The expected type does not match the stored type. See Compatible primitive data types (Page 335).
	`SREC_NOT_UP_TO_DATE`	The stored tag list must be updated.

Table 7- 183 ReadFloat() - .NET (C#)

Syntax	`float ReadFloat(`
	`  string in_Tag`
	`)`	

Parameters	• `string in_Tag:` The name of the PLC tag that is to be read.	
Return values	`float:` Contains the value and the type of the PLC tag.	
Exceptions	`Siemens.Simatic.Simulation.Runtime.SimulationRuntimeException`	
	Runtime error code	Condition
	`ERuntimeError-Code.InterfaceRemoved`	The instance is not registered in Runtime Manager.
	`ERuntimeErrorCode.Timeout`	The function does not return on time.
	`ERuntimeError-Code.InstanceNotRunning`	The process of the virtual controller is not running.
	`ERuntimeErrorCode.DoesNotExist`	The entry does not exist in the stored tag list.
	`ERuntimeErrorCode.NotSupported`	Access to entire structures or arrays is not supported.
	`ERuntimeErrorCode.TypeMismatch`	The expected type does not match the stored type. See Compatible primitive data types (Page 335).
	`ERuntimeErrorCode.NotUpToData`	The stored tag list must be updated.

ReadDouble()

Reads the value of a PLC tag.

Table 7- 184 ReadDouble() - Native C++

Syntax	`ERuntimeErrorCode ReadDouble( WCHAR* in_Tag, double* out_Value );`	
Parameters	• `WCHAR* in_Tag:` The name of the PLC tag that is to be read. • `double* out_Value:` Contains the value of the PLC tag.	
Return values	Runtime error code	Condition
	`SREC_OK`	The function is successful.
	`SREC_INTERFACE_REMOVED`	The instance is not registered in Runtime Manager.
	`SREC_TIMEOUT`	The function does not return on time.
	`SREC_INSTANCE_NOT_RUNNING`	The process of the virtual controller is not running.
	`SREC_DOES_NOT_EXIST`	The entry does not exist in the stored tag list.
	`SREC_NOT_SUPPORTED`	Access to entire structures or arrays is not supported.
	`SREC_TYPE_MISMATCH`	The expected type does not match the stored type. See Compatible primitive data types (Page 335).
	`SREC_NOT_UP_TO_DATE`	The stored tag list must be updated.

Table 7- 185 ReadDouble() - .NET (C#)

Syntax	`double ReadDouble( string in_Tag )`	
Parameters	• `string in_Tag:` The name of the PLC tag that is to be read.	
Return values	`double`: Contains the value and the type of the PLC tag.	
Exceptions	`Siemens.Simatic.Simulation.Runtime.SimulationRuntimeException`	
	Runtime error code	Condition
	`ERuntimeError-Code.InterfaceRemoved`	The instance is not registered in Runtime Manager.
	`ERuntimeErrorCode.Timeout`	The function does not return on time.
	`ERuntimeError-Code.InstanceNotRunning`	The process of the virtual controller is not running.
	`ERuntimeErrorCode.DoesNotExist`	The entry does not exist in the stored tag list.
	`ERuntimeErrorCode.NotSupported`	Access to entire structures or arrays is not supported.
	`ERuntimeErrorCode.TypeMismatch`	The expected type does not match the stored type. See Compatible primitive data types (Page 335).
	`ERuntimeErrorCode.NotUpToData`	The stored tag list must be updated.

ReadChar()

Reads the value of a PLC tag.

Table 7- 186 ReadChar() - Native C++

Syntax	`ERuntimeErrorCode ReadChar(`
	`  WCHAR* in_Tag,`
	`  char* out_Value`
	`);`	

Parameters	• `WCHAR* in_Tag:` The name of the PLC tag that is to be read. • `char* out_Value:` Contains the value of the PLC tag.	
Return values	Runtime error code	Condition
	`SREC_OK`	The function is successful.
	`SREC_INTERFACE_REMOVED`	The instance is not registered in Runtime Manager.
	`SREC_TIMEOUT`	The function does not return on time.
	`SREC_INSTANCE_NOT_RUNNING`	The process of the virtual controller is not running.
	`SREC_DOES_NOT_EXIST`	The entry does not exist in the stored tag list.
	`SREC_NOT_SUPPORTED`	Access to entire structures or arrays is not supported.
	`SREC_TYPE_MISMATCH`	The expected type does not match the stored type. See Compatible primitive data types (Page 335).
	`SREC_NOT_UP_TO_DATE`	The stored tag list must be updated.

Table 7- 187 ReadChar() - .NET (C#)

Syntax	`sbyte ReadChar(`
	`  string in_Tag`
	`)`	

Parameters	• `string in_Tag:` The name of the PLC tag that is to be read.	
Return values	`sbyte:` Contains the value and the type of the PLC tag.	
Exceptions	`Siemens.Simatic.Simulation.Runtime.SimulationRuntimeException`	
	Runtime error code	Condition
	`ERuntimeError-Code.InterfaceRemoved`	The instance is not registered in Runtime Manager.
	`ERuntimeErrorCode.Timeout`	The function does not return on time.
	`ERuntimeError-Code.InstanceNotRunning`	The process of the virtual controller is not running.
	`ERuntimeErrorCode.DoesNotExist`	The entry does not exist in the stored tag list.
	`ERuntimeErrorCode.NotSupported`	Access to entire structures or arrays is not supported.
	`ERuntimeErrorCode.TypeMismatch`	The expected type does not match the stored type. See Compatible primitive data types (Page 335).
	`ERuntimeErrorCode.NotUpToData`	The stored tag list must be updated.

ReadWChar()

Reads the value of a PLC tag.

Table 7- 188 ReadWChar() - Native C++

Syntax	`ERuntimeErrorCode ReadWChar(`
	`  WCHAR* in_Tag,`
	`  WCHAR* out_Value`
	`);`	

Parameters	• `WCHAR* in_Tag:` The name of the PLC tag that is to be read. • `WCHAR* out_Value:` Contains the value of the PLC tag.	
Return values	Runtime error code	Condition
	`SREC_OK`	The function is successful.
	`SREC_INTERFACE_REMOVED`	The instance is not registered in Runtime Manager.
	`SREC_TIMEOUT`	The function does not return on time.
	`SREC_INSTANCE_NOT_RUNNING`	The process of the virtual controller is not running.
	`SREC_DOES_NOT_EXIST`	The entry does not exist in the stored tag list.
	`SREC_NOT_SUPPORTED`	Access to entire structures or arrays is not supported.
	`SREC_TYPE_MISMATCH`	The expected type does not match the stored type. See Compatible primitive data types (Page 335).
	`SREC_NOT_UP_TO_DATE`	The stored tag list must be updated.

Table 7- 189 ReadWChar() - .NET (C#)

Syntax	`char ReadWChar(`
	`  string in_Tag`
	`)`	

Parameters	• `string in_Tag:` The name of the PLC tag that is to be read.	
Return values	`char:` Contains the value and the type of the PLC tag.	
Exceptions	`Siemens.Simatic.Simulation.Runtime.SimulationRuntimeException`	
	Runtime error code	Condition
	`ERuntimeError-Code.InterfaceRemoved`	The instance is not registered in Runtime Manager.
	`ERuntimeErrorCode.Timeout`	The function does not return on time.
	`ERuntimeError-Code.InstanceNotRunning`	The process of the virtual controller is not running.
	`ERuntimeErrorCode.DoesNotExist`	The entry does not exist in the stored tag list.
	`ERuntimeErrorCode.NotSupported`	Access to entire structures or arrays is not supported.
	`ERuntimeErrorCode.TypeMismatch`	The expected type does not match the stored type. See Compatible primitive data types (Page 335).
	`ERuntimeErrorCode.NotUpToData`	The stored tag list must be updated.

ReadSignals()

Reads multiple signals within an API call. When the function is called for the first time, it stores internal information in the structures `SDataValueByName*` to improve the performance of the subsequent calls.

Note

To simulate a regular exchange of signals, create a signal list for each set of signals. Use this signal list for all further accesses. Create a new list as soon as the set of signals changes.

Table 7- 190 ReadSignals() - Native C++

Syntax	`ERuntimeErrorCode ReadSignals(`
	`  SDataValueByName* inout_Signals,`
	`  UINT32 in_SignalCount`
	`);`
	`ERuntimeErrorCode ReadSignals(`
	`  SDataValueByNameWithCheck* inout_Signals,`
	`  UINT32 in_SignalCount`
	`  bool* out_SignalsHaveChanged`
	`);`	

Parameters	• `SDataValueByName* inout_Signals:` Contains the name, the value and the expected type of the PLC tag. If the expected type is `UNSPECIFIC`, it is set to the stored type when the function was successful. The `STRUCT` type is not supported. • `SDataValueByNameWithCheck* inout_Signals:` Contains the name, the value and the expected type of the PLC tag. If the expected type is `UNSPECIFIC`, it is set to the stored type when the function was successful. The `STRUCT` type is not supported. `"ValueHasChanged"` is set to `true` if the value of the signal has changed since the preceding call. • `UINT32 in_SignalCount:` The number of signals to be read. • `bool* out_SignalsHaveChanged:` Returns `true` if the value of at least one signal has changed since the preceding call.	
Signal error	Runtime error code	Condition
	`SREC_OK`	The signal operation is successful.
	`SREC_DOES_NOT_EXIST`	The entry does not exist in the stored tag table.
	`SREC_NOT_SUPPORTED`	Access to entire structures or arrays is not supported.
	`SREC_TYPE_MISMATCH`	The expected type does not match the stored type. See Compatible primitive data types (Page 335).
Return values	Runtime error code	Condition
	`SREC_OK`	The function is successful.
	`SREC_INTERFACE_REMOVED`	The instance is not registered in Runtime Manager.
	`SREC_TIMEOUT`	The function does not return on time.
	`SREC_INSTANCE_NOT_RUNNING`	The process of the virtual controller is not running.
	`SREC_NOT_UP_TO_DATE`	The stored tag list must be updated.
	`SREC_SIGNAL_CONFIGURATION_ERROR`	At least one signal error is in the list.

Table 7- 191 ReadSignals() - .NET (C#)

Syntax	`void ReadSignals(`
	` ref SDataValueByName[] inout_Signals`
	`)`
	`void ReadSignals(`
	` ref SDataValueByNameWithCheck[] inout_Signals`
	` out bool out_SignalsHaveChanged`
	`);`	

Parameters	• `ref SDataValueByName[] inout_Signals:` Contains the name, the value and the expected type of the PLC tag. If the expected type is `UNSPECIFIC`, it is set to the stored type when the function was successful. The `STRUCT` type is not supported. • `ref SDataValueByNameWithCheck[] inout_Signals:` Contains the name, the value and the expected type of the PLC tag. If the expected type is `UNSPECIFIC`, it is set to the stored type when the function was successful. The `STRUCT` type is not supported. `"ValueHasChanged"` is set to `true` if the value of the signal has changed since the preceding call. • `out bool out_SignalsHaveChanged:` Returns `true` if the value of at least one signal has changed since the preceding call.	
Return values	`SDataValue:` Contains the value and the type of the PLC tag.	
Signal error	Runtime error code	Condition
	`ERuntimeErrorCode.OK`	The signal operation is successful.
	`ERuntimeErrorCode.DoesNotExist`	The entry does not exist in the stored tag table.
	`ERuntimeErrorCode.NotSupported`	Access to entire structures or arrays is not supported.
	`ERuntimeErrorCode.TypeMismatch`	The expected type does not match the stored type. See Compatible primitive data types (Page 335).
Exceptions	`Siemens.Simatic.Simulation.Runtime.SimulationRuntimeException`	
	Runtime error code	Condition
	`ERuntimeError-Code.InterfaceRemoved`	The instance is not registered in Runtime Manager.
	`ERuntimeErrorCode.Timeout`	The function does not return on time.
	`ERuntimeError-Code.InstanceNotRunning`	The process of the virtual controller is not running.
	`ERuntimeErrorCode.NotUpToData`	The stored tag list must be updated.

7.6.5.5 I/O access via tag name - Writing

Individual access to IO data is used for displaying and writing values that are not refreshed regularly in a graphical user interface (GUI).

Note

To simulate a regular exchange of signals, create a signal list for each set of signals. Use this signal list for all further accesses. Create a new list as soon as the set of signals changes.

For the signal lists use the functions `ReadSignals()` and `WriteSignals()`.

Write()

Writes the value of a PLC tag.

Table 7- 192 Write() - Native C++

Syntax	`ERuntimeErrorCode Write(`
	`  WCHAR* in_Tag,`
	`  SDataValue* in_Value`
	`);`	

Parameters	• `WCHAR* in_Tag:` The name of the PLC tag that is to be written. • `SDataValue* in_Value:` Contains the value and the expected type of the PLC tag. The `UNSPECIFIC` and `STRUCT` types are not supported. Structures and fields can be emulated through signal lists and then be read by using the `ReadSignals()` function and written by using the `WriteSignals()` function.	
Return values	Runtime error code	Condition
	`SREC_OK`	The function is successful.
	`SREC_INTERFACE_REMOVED`	The instance is not registered in Runtime Manager.
	`SREC_TIMEOUT`	The function does not return on time.
	`SREC_INSTANCE_NOT_RUNNING`	The process of the virtual controller is not running.
	`SREC_DOES_NOT_EXIST`	The entry does not exist in the stored tag list.
	`SREC_NOT_SUPPORTED`	Access to entire structures or arrays is not supported.
	`SREC_TYPE_MISMATCH`	The expected type does not match the stored type. See Compatible primitive data types (Page 335).
	`SREC_NOT_UP_TO_DATE`	The stored tag list must be updated.
	`SREC_WRONG_ARGUMENT`	The expected type is `UNSPECIFIC`.

Table 7- 193 Write() - .NET (C#)

Syntax	`void Write(`
	`  string in_Tag`
	`  SDataValue in_Value`
	`)`	

Parameters	• `string in_Tag:` The name of the PLC tag that is to be written. • `SDataValue in_Value:` Contains the value and the expected type of the PLC tag. The `UNSPECIFIC` and `STRUCT` types are not supported. Structures and fields can be emulated through signal lists and then be written by using the `WriteSignals()` function.	
Return values	None	
Exceptions	`Siemens.Simatic.Simulation.Runtime.SimulationRuntimeException`	
	Runtime error code	Condition
	`ERuntimeError-Code.InterfaceRemoved`	The instance is not registered in Runtime Manager.
	`ERuntimeErrorCode.Timeout`	The function does not return on time.
	`ERuntimeError-Code.InstanceNotRunning`	The process of the virtual controller is not running.
	`ERuntimeErrorCode.DoesNotExist`	The entry does not exist in the stored tag list.
	`ERuntimeErrorCode.NotSupported`	Access to entire structures or arrays is not supported.
	`ERuntimeErrorCode.TypeMismatch`	The expected type does not match the stored type. See Compatible primitive data types (Page 335).
	`ERuntimeErrorCode.NotUpToData`	The stored tag list must be updated.
	`ERuntimeErrorCode.WrongArgument`	The expected type is `UNSPECIFIC`.

WriteBool()

Writes the value of a PLC tag.

Table 7- 194 WriteBool() - Native C++

Syntax	`ERuntimeErrorCode WriteBool(`
	`  WCHAR* in_Tag,`
	`  bool in_Value`
	`);`	

Parameters	• `WCHAR* in_Tag:` The name of the PLC tag that is to be written. • `bool in_Value:` Contains the value of the PLC tag.	
Return values	Runtime error code	Condition
	`SREC_OK`	The function is successful.
	`SREC_INTERFACE_REMOVED`	The instance is not registered in Runtime Manager.
	`SREC_TIMEOUT`	The function does not return on time.
	`SREC_INSTANCE_NOT_RUNNING`	The process of the virtual controller is not running.
	`SREC_DOES_NOT_EXIST`	The entry does not exist in the stored tag list.
	`SREC_NOT_SUPPORTED`	Access to entire structures or arrays is not supported.
	`SREC_TYPE_MISMATCH`	The expected type does not match the stored type. See Compatible primitive data types (Page 335).
	`SREC_NOT_UP_TO_DATE`	The stored tag list must be updated.

Table 7- 195 WriteBool() - .NET (C#)

Syntax	`void WriteBool(`
	`  string in_Tag`
	`  bool in_Value`
	`)`	

Parameters	• `string in_Tag:` The name of the PLC tag that is to be written. • `bool in_Value:` Contains the value of the PLC tag.	
Return values	None	
Exceptions	`Siemens.Simatic.Simulation.Runtime.SimulationRuntimeException`	
	Runtime error code	Condition
	`ERuntimeError-Code.InterfaceRemoved`	The instance is not registered in Runtime Manager.
	`ERuntimeErrorCode.Timeout`	The function does not return on time.
	`ERuntimeError-Code.InstanceNotRunning`	The process of the virtual controller is not running.
	`ERuntimeErrorCode.DoesNotExist`	The entry does not exist in the stored tag list.
	`ERuntimeErrorCode.NotSupported`	Access to entire structures or arrays is not supported.
	`ERuntimeErrorCode.TypeMismatch`	The expected type does not match the stored type. See Compatible primitive data types (Page 337).
	`ERuntimeErrorCode.NotUpToData`	The stored tag list must be updated.

WriteInt8()

Writes the value of a PLC tag.

Table 7- 196 WriteInt8() - Native C++

Syntax	`ERuntimeErrorCode WriteInt8(`
	`  WCHAR* in_Tag,`
	`  INT8 in_Value`
	`);`	

Parameters	• `WCHAR* in_Tag:` The name of the PLC tag that is to be written. • `INT8 in_Value:` Contains the value of the PLC tag.	
Return values	Runtime error code	Condition
	`SREC_OK`	The function is successful.
	`SREC_INTERFACE_REMOVED`	The instance is not registered in Runtime Manager.
	`SREC_TIMEOUT`	The function does not return on time.
	`SREC_INSTANCE_NOT_RUNNING`	The process of the virtual controller is not running.
	`SREC_DOES_NOT_EXIST`	The entry does not exist in the stored tag list.
	`SREC_NOT_SUPPORTED`	Access to entire structures or arrays is not supported.
	`SREC_TYPE_MISMATCH`	The expected type does not match the stored type. See Compatible primitive data types (Page 335).
	`SREC_NOT_UP_TO_DATE`	The stored tag list must be updated.

Table 7- 197 WriteInt8() - .NET (C#)

Syntax	`void WriteInt8(`
	`  string in_Tag`
	`  Int8 in_Value`
	`)`	

Parameters	• `string in_Tag:` The name of the PLC tag that is to be written. • `Int8 in_Value:` Contains the value of the PLC tag.	
Return values	None	
Exceptions	`Siemens.Simatic.Simulation.Runtime.SimulationRuntimeException`	
	Runtime error code	Condition
	`ERuntimeError-Code.InterfaceRemoved`	The instance is not registered in Runtime Manager.
	`ERuntimeErrorCode.Timeout`	The function does not return on time.
	`ERuntimeError-Code.InstanceNotRunning`	The process of the virtual controller is not running.
	`ERuntimeErrorCode.DoesNotExist`	The entry does not exist in the stored tag list.
	`ERuntimeErrorCode.NotSupported`	Access to entire structures or arrays is not supported.
	`ERuntimeErrorCode.TypeMissmatch`	The expected type does not match the stored type. See Compatible primitive data types (Page 335).
	`ERuntimeErrorCode.NotUpToData`	The stored tag list must be updated.

WriteInt16()

Writes the value of a PLC tag.

Table 7- 198 WriteInt16() - Native C++

Syntax	`ERuntimeErrorCode WriteInt16(`
	`  WCHAR* in_Tag,`
	`  INT16 in_Value`
	`);`	

Parameters	• `WCHAR* in_Tag:` The name of the PLC tag that is to be written. • `INT16 in_Value:` Contains the value of the PLC tag.	
Return values	Runtime error code	Condition
	`SREC_OK`	The function is successful.
	`SREC_INTERFACE_REMOVED`	The instance is not registered in Runtime Manager.
	`SREC_TIMEOUT`	The function does not return on time.
	`SREC_INSTANCE_NOT_RUNNING`	The process of the virtual controller is not running.
	`SREC_DOES_NOT_EXIST`	The entry does not exist in the stored tag list.
	`SREC_NOT_SUPPORTED`	Access to entire structures or arrays is not supported.
	`SREC_TYPE_MISMATCH`	The expected type does not match the stored type. See Compatible primitive data types (Page 335).
	`SREC_NOT_UP_TO_DATE`	The stored tag list must be updated.

Table 7- 199 WriteInt16() - .NET (C#)

Syntax	`void WriteInt16(`
	`  string in_Tag`
	`  Int16 in_Value`
	`)`	

Parameters	• `string in_Tag:` The name of the PLC tag that is to be written. • `Int16 in_Value:` Contains the value of the PLC tag.	
Return values	None	
Exceptions	`Siemens.Simatic.Simulation.Runtime.SimulationRuntimeException`	
	Runtime error code	Condition
	`ERuntimeError-Code.InterfaceRemoved`	The instance is not registered in Runtime Manager.
	`ERuntimeErrorCode.Timeout`	The function does not return on time.
	`ERuntimeError-Code.InstanceNotRunning`	The process of the virtual controller is not running.
	`ERuntimeErrorCode.DoesNotExist`	The entry does not exist in the stored tag list.
	`ERuntimeErrorCode.NotSupported`	Access to entire structures or arrays is not supported.
	`ERuntimeErrorCode.TypeMissmatch`	The expected type does not match the stored type. See Compatible primitive data types (Page 335).
	`ERuntimeErrorCode.NotUpToData`	The stored tag list must be updated.

WriteInt32()

Writes the value of a PLC tag.

Table 7- 200 WriteInt32() - Native C++

Syntax	`ERuntimeErrorCode WriteInt32(`
	`  WCHAR* in_Tag,`
	`  INT32 in_Value`
	`);`	

Parameters	• `WCHAR* in_Tag:` The name of the PLC tag that is to be written. • `INT32 in_Value:` Contains the value of the PLC tag.	
Return values	Runtime error code	Condition
	`SREC_OK`	The function is successful.
	`SREC_INTERFACE_REMOVED`	The instance is not registered in Runtime Manager.
	`SREC_TIMEOUT`	The function does not return on time.
	`SREC_INSTANCE_NOT_RUNNING`	The process of the virtual controller is not running.
	`SREC_DOES_NOT_EXIST`	The entry does not exist in the stored tag list.
	`SREC_NOT_SUPPORTED`	Access to entire structures or arrays is not supported.
	`SREC_TYPE_MISMATCH`	The expected type does not match the stored type. See Compatible primitive data types (Page 335).
	`SREC_NOT_UP_TO_DATE`	The stored tag list must be updated.

Table 7- 201 WriteInt32() - .NET (C#)

Syntax	`void WriteInt32(`
	`  string in_Tag`
	`  Int32 in_Value`
	`)`	

Parameters	• `string in_Tag:` The name of the PLC tag that is to be written. • `Int32 in_Value:` Contains the value of the PLC tag.	
Return values	None	
Exceptions	`Siemens.Simatic.Simulation.Runtime.SimulationRuntimeException`	
	Runtime error code	Condition
	`ERuntimeError-Code.InterfaceRemoved`	The instance is not registered in Runtime Manager.
	`ERuntimeErrorCode.Timeout`	The function does not return on time.
	`ERuntimeError-Code.InstanceNotRunning`	The process of the virtual controller is not running.
	`ERuntimeErrorCode.DoesNotExist`	The entry does not exist in the stored tag list.
	`ERuntimeErrorCode.NotSupported`	Access to entire structures or arrays is not supported.
	`ERuntimeErrorCode.TypeMissmatch`	The expected type does not match the stored type. See Compatible primitive data types (Page 335).
	`ERuntimeErrorCode.NotUpToData`	The stored tag list must be updated.

WriteInt64()

Writes the value of a PLC tag.

Table 7- 202 WriteInt64() - Native C++

Syntax	`ERuntimeErrorCode WriteInt64(`
	`  WCHAR* in_Tag,`
	`  INT64 in_Value`
	`);`	

Parameters	• `WCHAR* in_Tag:` The name of the PLC tag that is to be written. • `INT64 in_Value:` Contains the value of the PLC tag.	
Return values	Runtime error code	Condition
	`SREC_OK`	The function is successful.
	`SREC_INTERFACE_REMOVED`	The instance is not registered in Runtime Manager.
	`SREC_TIMEOUT`	The function does not return on time.
	`SREC_INSTANCE_NOT_RUNNING`	The process of the virtual controller is not running.
	`SREC_DOES_NOT_EXIST`	The entry does not exist in the stored tag list.
	`SREC_NOT_SUPPORTED`	Access to entire structures or arrays is not supported.
	`SREC_TYPE_MISMATCH`	The expected type does not match the stored type. See Compatible primitive data types (Page 335).
	`SREC_NOT_UP_TO_DATE`	The stored tag list must be updated.

Table 7- 203 WriteInt64() - .NET (C#)

Syntax	`void WriteInt64(`
	`  string in_Tag`
	`  Int64 in_Value`
	`)`	

Parameters	• `string in_Tag:` The name of the PLC tag that is to be written. • `Int64 in_Value:` Contains the value of the PLC tag.	
Return values	None	
Exceptions	`Siemens.Simatic.Simulation.Runtime.SimulationRuntimeException`	
	Runtime error code	Condition
	`ERuntimeError-Code.InterfaceRemoved`	The instance is not registered in Runtime Manager.
	`ERuntimeErrorCode.Timeout`	The function does not return on time.
	`ERuntimeError-Code.InstanceNotRunning`	The process of the virtual controller is not running.
	`ERuntimeErrorCode.DoesNotExist`	The entry does not exist in the stored tag list.
	`ERuntimeErrorCode.NotSupported`	Access to entire structures or arrays is not supported.
	`ERuntimeErrorCode.TypeMissmatch`	The expected type does not match the stored type. See Compatible primitive data types (Page 335).
	`ERuntimeErrorCode.NotUpToData`	The stored tag list must be updated.

WriteInt8()

Writes the value of a PLC tag.

Table 7- 204 WriteUInt8() - Native C++

Syntax	`ERuntimeErrorCode WriteUInt8(`
	`  WCHAR* in_Tag,`
	`  UINT8 in_Value`
	`);`	

Parameters	• `WCHAR* in_Tag:` The name of the PLC tag that is to be written. • `UINT8 in_Value:` Contains the value of the PLC tag.	
Return values	Runtime error code	Condition
	`SREC_OK`	The function is successful.
	`SREC_INTERFACE_REMOVED`	The instance is not registered in Runtime Manager.
	`SREC_TIMEOUT`	The function does not return on time.
	`SREC_INSTANCE_NOT_RUNNING`	The process of the virtual controller is not running.
	`SREC_DOES_NOT_EXIST`	The entry does not exist in the stored tag list.
	`SREC_NOT_SUPPORTED`	Access to entire structures or arrays is not supported.
	`SREC_TYPE_MISMATCH`	The expected type does not match the stored type. See Compatible primitive data types (Page 335).
	`SREC_NOT_UP_TO_DATE`	The stored tag list must be updated.

Table 7- 205 WriteUInt8() - .NET (C#)

Syntax	`void WriteUInt8(`
	`  string in_Tag`
	`  UInt8 in_Value`
	`)`	

Parameters	• `string in_Tag:` The name of the PLC tag that is to be written. • `UInt8 in_Value:` Contains the value of the PLC tag.	
Return values	None	
Exceptions	`Siemens.Simatic.Simulation.Runtime.SimulationRuntimeException`	
	Runtime error code	Condition
	`ERuntimeError-Code.InterfaceRemoved`	The instance is not registered in Runtime Manager.
	`ERuntimeErrorCode.Timeout`	The function does not return on time.
	`ERuntimeError-Code.InstanceNotRunning`	The process of the virtual controller is not running.
	`ERuntimeErrorCode.DoesNotExist`	The entry does not exist in the stored tag list.
	`ERuntimeErrorCode.NotSupported`	Access to entire structures or arrays is not supported.
	`ERuntimeErrorCode.TypeMissmatch`	The expected type does not match the stored type. See Compatible primitive data types (Page 335).
	`ERuntimeErrorCode.NotUpToData`	The stored tag list must be updated.

WriteUInt16()

Reads the value of a PLC tag.

Table 7- 206 WriteUInt16() - Native C++

Syntax	`ERuntimeErrorCode WriteUInt16(`
	`  WCHAR* in_Tag,`
	`  UINT16 in_Value`
	`);`	

Parameters	• `WCHAR* in_Tag:` The name of the PLC tag that is to be written. • `UINT16 in_Value:` Contains the value of the PLC tag.	
Return values	Runtime error code	Condition
	`SREC_OK`	The function is successful.
	`SREC_INTERFACE_REMOVED`	The instance is not registered in Runtime Manager.
	`SREC_TIMEOUT`	The function does not return on time.
	`SREC_INSTANCE_NOT_RUNNING`	The process of the virtual controller is not running.
	`SREC_DOES_NOT_EXIST`	The entry does not exist in the stored tag list.
	`SREC_NOT_SUPPORTED`	Access to entire structures or arrays is not supported.
	`SREC_TYPE_MISMATCH`	The expected type does not match the stored type. See Compatible primitive data types (Page 335).
	`SREC_NOT_UP_TO_DATE`	The stored tag list must be updated.

Table 7- 207 WriteUInt16() - .NET (C#)

Syntax	`void WriteUInt16(`
	`  string in_Tag`
	`  UInt16 in_Value`
	`)`	

Parameters	• `string in_Tag:` The name of the PLC tag that is to be written. • `UInt16 in_Value:` Contains the value of the PLC tag.	
Return values	None	
Exceptions	`Siemens.Simatic.Simulation.Runtime.SimulationRuntimeException`	
	Runtime error code	Condition
	`ERuntimeError-Code.InterfaceRemoved`	The instance is not registered in Runtime Manager.
	`ERuntimeErrorCode.Timeout`	The function does not return on time.
	`ERuntimeError-Code.InstanceNotRunning`	The process of the virtual controller is not running.
	`ERuntimeErrorCode.DoesNotExist`	The entry does not exist in the stored tag list.
	`ERuntimeErrorCode.NotSupported`	Access to entire structures or arrays is not supported.
	`ERuntimeErrorCode.TypeMissmatch`	The expected type does not match the stored type. See Compatible primitive data types (Page 335).
	`ERuntimeErrorCode.NotUpToData`	The stored tag list must be updated.

WriteUInt32()

Writes the value of a PLC tag.

Table 7- 208 WriteUInt32() - Native C++

Syntax	`ERuntimeErrorCode WriteUInt32(`
	`  WCHAR* in_Tag,`
	`  UINT32 in_Value`
	`);`	

Parameters	• `WCHAR* in_Tag:` The name of the PLC tag that is to be written. • `UINT32 in_Value:` Contains the value of the PLC tag.	
Return values	Runtime error code	Condition
	`SREC_OK`	The function is successful.
	`SREC_INTERFACE_REMOVED`	The instance is not registered in Runtime Manager.
	`SREC_TIMEOUT`	The function does not return on time.
	`SREC_INSTANCE_NOT_RUNNING`	The process of the virtual controller is not running.
	`SREC_DOES_NOT_EXIST`	The entry does not exist in the stored tag list.
	`SREC_NOT_SUPPORTED`	Access to entire structures or arrays is not supported.
	`SREC_TYPE_MISMATCH`	The expected type does not match the stored type. See Compatible primitive data types (Page 335).
	`SREC_NOT_UP_TO_DATE`	The stored tag list must be updated.

Table 7- 209 WriteUInt32() - .NET (C#)

Syntax	`void WriteUInt32(`
	`  string in_Tag`
	`  UInt32 in_Value`
	`)`	

Parameters	• `string in_Tag:` The name of the PLC tag that is to be written. • `UInt32 in_Value:` Contains the value of the PLC tag.	
Return values	None	
Exceptions	`Siemens.Simatic.Simulation.Runtime.SimulationRuntimeException`	
	Runtime error code	Condition
	`ERuntimeError-Code.InterfaceRemoved`	The instance is not registered in Runtime Manager.
	`ERuntimeErrorCode.Timeout`	The function does not return on time.
	`ERuntimeError-Code.InstanceNotRunning`	The process of the virtual controller is not running.
	`ERuntimeErrorCode.DoesNotExist`	The entry does not exist in the stored tag list.
	`ERuntimeErrorCode.NotSupported`	Access to entire structures or arrays is not supported.
	`ERuntimeErrorCode.TypeMissmatch`	The expected type does not match the stored type. See Compatible primitive data types (Page 335).
	`ERuntimeErrorCode.NotUpToData`	The stored tag list must be updated.

WriteUInt64()

Writes the value of a PLC tag.

Table 7- 210 WriteUInt64() - Native C++

Syntax	`ERuntimeErrorCode WriteUInt64(`
	`  WCHAR* in_Tag,`
	`  UINT64 in_Value`
	`);`	

Parameters	• `WCHAR* in_Tag:` The name of the PLC tag that is to be written. • `UINT64 in_Value:` Contains the value of the PLC tag.	
Return values	Runtime error code	Condition
	`SREC_OK`	The function is successful.
	`SREC_INTERFACE_REMOVED`	The instance is not registered in Runtime Manager.
	`SREC_TIMEOUT`	The function does not return on time.
	`SREC_INSTANCE_NOT_RUNNING`	The process of the virtual controller is not running.
	`SREC_DOES_NOT_EXIST`	The entry does not exist in the stored tag list.
	`SREC_NOT_SUPPORTED`	Access to entire structures or arrays is not supported.
	`SREC_TYPE_MISMATCH`	The expected type does not match the stored type. See Compatible primitive data types (Page 335).
	`SREC_NOT_UP_TO_DATE`	The stored tag list must be updated.

Table 7- 211 WriteUInt64() - .NET (C#)

Syntax	`void WriteUInt64(`
	`  string in_Tag`
	`  UInt64 in_Value`
	`)`	

Parameters	• `string in_Tag:` The name of the PLC tag that is to be written. • `UInt64 in_Value:` Contains the value of the PLC tag.	
Return values	None	
Exceptions	`Siemens.Simatic.Simulation.Runtime.SimulationRuntimeException`	
	Runtime error code	Condition
	`ERuntimeError-Code.InterfaceRemoved`	The instance is not registered in Runtime Manager.
	`ERuntimeErrorCode.Timeout`	The function does not return on time.
	`ERuntimeError-Code.InstanceNotRunning`	The process of the virtual controller is not running.
	`ERuntimeErrorCode.DoesNotExist`	The entry does not exist in the stored tag list.
	`ERuntimeErrorCode.NotSupported`	Access to entire structures or arrays is not supported.
	`ERuntimeErrorCode.TypeMissmatch`	The expected type does not match the stored type. See Compatible primitive data types (Page 335).
	`ERuntimeErrorCode.NotUpToData`	The stored tag list must be updated.

WriteFloat()

Writes the value of a PLC tag.

Table 7- 212 WriteFloat() - Native C++

Syntax	`ERuntimeErrorCode WriteFloat(`
	`  WCHAR* in_Tag,`
	`  float in_Value`
	`);`	

Parameters	• `WCHAR* in_Tag:` The name of the PLC tag that is to be written. • `float in_Value:` Contains the value of the PLC tag.	
Return values	Runtime error code	Condition
	`SREC_OK`	The function is successful.
	`SREC_INTERFACE_REMOVED`	The instance is not registered in Runtime Manager.
	`SREC_TIMEOUT`	The function does not return on time.
	`SREC_INSTANCE_NOT_RUNNING`	The process of the virtual controller is not running.
	`SREC_DOES_NOT_EXIST`	The entry does not exist in the stored tag list.
	`SREC_NOT_SUPPORTED`	Access to entire structures or arrays is not supported.
	`SREC_TYPE_MISMATCH`	The expected type does not match the stored type. See Compatible primitive data types (Page 335).
	`SREC_NOT_UP_TO_DATE`	The stored tag list must be updated.

Table 7- 213 WriteFloat() - .NET (C#)

Syntax	`void WriteFloat(`
	`  string in_Tag`
	`  float in_Value`
	`)`	

Parameters	• `string in_Tag:` The name of the PLC tag that is to be written. • `float in_Value:` Contains the value of the PLC tag.	
Return values	None	
Exceptions	`Siemens.Simatic.Simulation.Runtime.SimulationRuntimeException`	
	Runtime error code	Condition
	`ERuntimeError-Code.InterfaceRemoved`	The instance is not registered in Runtime Manager.
	`ERuntimeErrorCode.Timeout`	The function does not return on time.
	`ERuntimeError-Code.InstanceNotRunning`	The process of the virtual controller is not running.
	`ERuntimeErrorCode.DoesNotExist`	The entry does not exist in the stored tag list.
	`ERuntimeErrorCode.NotSupported`	Access to entire structures or arrays is not supported.
	`ERuntimeErrorCode.TypeMissmatch`	The expected type does not match the stored type. See Compatible primitive data types (Page 335).
	`ERuntimeErrorCode.NotUpToData`	The stored tag list must be updated.

WriteDouble()

Writes the value of a PLC tag.

Table 7- 214 WriteDouble() - Native C++

Syntax	`ERuntimeErrorCode WriteDouble(`
	`  WCHAR* in_Tag,`
	`  double in_Value`
	`);`	

Parameters	• `WCHAR* in_Tag:` The name of the PLC tag that is to be written. • `double in_Value:` Contains the value of the PLC tag.	
Return values	Runtime error code	Condition
	`SREC_OK`	The function is successful.
	`SREC_INTERFACE_REMOVED`	The instance is not registered in Runtime Manager.
	`SREC_TIMEOUT`	The function does not return on time.
	`SREC_INSTANCE_NOT_RUNNING`	The process of the virtual controller is not running.
	`SREC_DOES_NOT_EXIST`	The entry does not exist in the stored tag list.
	`SREC_NOT_SUPPORTED`	Access to entire structures or arrays is not supported.
	`SREC_TYPE_MISMATCH`	The expected type does not match the stored type. See Compatible primitive data types (Page 335).
	`SREC_NOT_UP_TO_DATE`	The stored tag list must be updated.

Table 7- 215 WriteDouble() - .NET (C#)

Syntax	`void WriteDouble(`
	`  string in_Tag`
	`  double in_Value`
	`)`	

Parameters	• `string in_Tag:` The name of the PLC tag that is to be written. • `double in_Value:` Contains the value of the PLC tag.	
Return values	None	
Exceptions	`Siemens.Simatic.Simulation.Runtime.SimulationRuntimeException`	
	Runtime error code	Condition
	`ERuntimeError-Code.InterfaceRemoved`	The instance is not registered in Runtime Manager.
	`ERuntimeErrorCode.Timeout`	The function does not return on time.
	`ERuntimeError-Code.InstanceNotRunning`	The process of the virtual controller is not running.
	`ERuntimeErrorCode.DoesNotExist`	The entry does not exist in the stored tag list.
	`ERuntimeErrorCode.NotSupported`	Access to entire structures or arrays is not supported.
	`ERuntimeErrorCode.TypeMissmatch`	The expected type does not match the stored type. See Compatible primitive data types (Page 335).
	`ERuntimeErrorCode.NotUpToData`	The stored tag list must be updated.

WriteChar()

Writes the value of a PLC tag.

Table 7- 216 WriteChar() - Native C++

Syntax	`ERuntimeErrorCode WriteChar( WCHAR* in_Tag, char in_Value );`	
Parameters	• `WCHAR* in_Tag:` The name of the PLC tag that is to be written. • `char in_Value:` Contains the value of the PLC tag.	
Return values	Runtime error code	Condition
	`SREC_OK`	The function is successful.
	`SREC_INTERFACE_REMOVED`	The instance is not registered in Runtime Manager.
	`SREC_TIMEOUT`	The function does not return on time.
	`SREC_INSTANCE_NOT_RUNNING`	The process of the virtual controller is not running.
	`SREC_DOES_NOT_EXIST`	The entry does not exist in the stored tag list.
	`SREC_NOT_SUPPORTED`	Access to entire structures or arrays is not supported.
	`SREC_TYPE_MISMATCH`	The expected type does not match the stored type. See Compatible primitive data types (Page 335).
	`SREC_NOT_UP_TO_DATE`	The stored tag list must be updated.

Table 7- 217 WriteChar() - .NET (C#)

Syntax	`void WriteChar(`
	`  string in_Tag`
	`  sbyte in_Value`
	`)`	

Parameters	• `string in_Tag:` The name of the PLC tag that is to be written. • `sbyte in_Value:` Contains the value of the PLC tag.	
Return values	None	
Exceptions	`Siemens.Simatic.Simulation.Runtime.SimulationRuntimeException`	
	Runtime error code	Condition
	`ERuntimeError-Code.InterfaceRemoved`	The instance is not registered in Runtime Manager.
	`ERuntimeErrorCode.Timeout`	The function does not return on time.
	`ERuntimeError-Code.InstanceNotRunning`	The process of the virtual controller is not running.
	`ERuntimeErrorCode.DoesNotExist`	The entry does not exist in the stored tag list.
	`ERuntimeErrorCode.NotSupported`	Access to entire structures or arrays is not supported.
	`ERuntimeErrorCode.TypeMissmatch`	The expected type does not match the stored type. See Compatible primitive data types (Page 335).
	`ERuntimeErrorCode.NotUpToData`	The stored tag list must be updated.

WriteWChar()

Writes the value of a PLC tag.

Table 7- 218 WriteWChar() - Native C++

Syntax	`ERuntimeErrorCode WriteWChar(`
	`  WCHAR* in_Tag,`
	`  WCHAR in_Value`
	`);`	

Parameters	• `WCHAR* in_Tag:` The name of the PLC tag that is to be written. • `WCHAR in_Value:` Contains the value of the PLC tag.	
Return values	Runtime error code	Condition
	`SREC_OK`	The function is successful.
	`SREC_INTERFACE_REMOVED`	The instance is not registered in Runtime Manager.
	`SREC_TIMEOUT`	The function does not return on time.
	`SREC_INSTANCE_NOT_RUNNING`	The process of the virtual controller is not running.
	`SREC_DOES_NOT_EXIST`	The entry does not exist in the stored tag list.
	`SREC_NOT_SUPPORTED`	Access to entire structures or arrays is not supported.
	`SREC_TYPE_MISMATCH`	The expected type does not match the stored type. See Compatible primitive data types (Page 335).
	`SREC_NOT_UP_TO_DATE`	The stored tag list must be updated.

Table 7- 219 WriteWChar() - .NET (C#)

Syntax	`void WriteWChar(`
	`  string in_Tag`
	`  char in_Value`
	`)`	

Parameters	• `string in_Tag:` The name of the PLC tag that is to be written. • `char in_Value:` Contains the value of the PLC tag.	
Return values	None	
Exceptions	`Siemens.Simatic.Simulation.Runtime.SimulationRuntimeException`	
	Runtime error code	Condition
	`ERuntimeError-Code.InterfaceRemoved`	The instance is not registered in Runtime Manager.
	`ERuntimeErrorCode.Timeout`	The function does not return on time.
	`ERuntimeError-Code.InstanceNotRunning`	The process of the virtual controller is not running.
	`ERuntimeErrorCode.DoesNotExist`	The entry does not exist in the stored tag list.
	`ERuntimeErrorCode.NotSupported`	Access to entire structures or arrays is not supported.
	`ERuntimeErrorCode.TypeMissmatch`	The expected type does not match the stored type. See Compatible primitive data types (Page 335).
	`ERuntimeErrorCode.NotUpToData`	The stored tag list must be updated.

WriteSignals()

Writes multiple signals within an API call. When the function is called for the first time, it stores internal information in the structures `SDataValueByName*` to improve the performance of the subsequent calls.

Note

To simulate a regular exchange of signals, create a signal list for each set of signals. Use this signal list for all further accesses. Create a new list as soon as the set of signals changes.

Table 7- 220 WriteSignals() - Native C++

Syntax	`ERuntimeErrorCode WriteSignals(`
	`  SDataValueByName* inout_Signals,`
	`  UINT32 in_SignalCount`
	`);`	

Parameters	• `SDataValueByName* inout_Signals:` Contains the name, the value and the expected type of the PLC tag. The `UNSPECIFIC` and `STRUCT` types are not supported. • `UINT32 in_SignalCount:` Number of signals.	
Return values	Runtime error code	Condition
	`SREC_OK`	The function is successful.
	`SREC_INTERFACE_REMOVED`	The instance is not registered in Runtime Manager.
	`SREC_TIMEOUT`	The function does not return on time.
	`SREC_INSTANCE_NOT_RUNNING`	The process of the virtual controller is not running.
	`SREC_DOES_NOT_EXIST`	The entry does not exist in the stored tag list.
	`SREC_NOT_SUPPORTED`	Access to entire structures or arrays is not supported.
	`SREC_TYPE_MISMATCH`	The expected type does not match the stored type. See Compatible primitive data types (Page 335).
	`SREC_NOT_UP_TO_DATE`	The stored tag list must be updated.
	`SREC_WRONG_ARGUMENT`	The expected type is `UNSPECIFIC`.

Table 7- 221 WriteSignals() - .NET (C#)

Syntax	`void WriteSignals( SDataValueByName[] in_Signals )`	
Parameters	• `SDataValueByName:` Contains the name, the value and the expected type of the PLC tag. The `UNSPECIFIC` and `STRUCT` types are not supported.	
Return values	None	
Exceptions	`Siemens.Simatic.Simulation.Runtime.SimulationRuntimeException`	
	Runtime error code	Condition
	`ERuntimeError-Code.InterfaceRemoved`	The instance is not registered in Runtime Manager.
	`ERuntimeErrorCode.Timeout`	The function does not return on time.
	`ERuntimeError-Code.InstanceNotRunning`	The process of the virtual controller is not running.
	`ERuntimeErrorCode.DoesNotExist`	The entry does not exist in the stored tag list.
	`ERuntimeErrorCode.NotSupported`	Access to entire structures or arrays is not supported.
	`ERuntimeErrorCode.TypeMismatch`	The expected type does not match the stored type. See Compatible primitive data types (Page 337).
	`ERuntimeErrorCode.NotUpToData`	The stored tag list must be updated.
	`ERuntimeErrorCode.WrongArgument`	The expected type is `UNSPECIFIC`.

7.6.6 Settings for the virtual time

GetSystemTime()

Returns the virtual system time of the virtual controller. Returns an empty structure when the function fails.

Table 7- 222 GetSystemTime() - Native C++

Syntax	`SYSTEMTIME GetSystemTime();`
Parameters	None
Return values	`SYSTEMTIME:` System time of the virtual controller.

SetSystemTime()

Sets the virtual system time of the virtual controller. A system time between "Jan 1 1970 00:00:00:000" and "Dec 31 2200 23:59:59:999" is valid.

Table 7- 223 SetSystemTime() - Native C++

Syntax	`ERuntimeErrorCode SetSystemTime( SYSTEMTIME in_SystemTime );`	
Parameters	• `SYSTEMTIME in_SystemTime:` System time that is to be set for the virtual controller.	
Return values	Runtime error code	Condition
	`SREC_OK`	The function is successful.
	`SREC_INTERFACE_REMOVED`	The instance is not registered in Runtime Manager.
	`SREC_TIMEOUT`	The function does not return on time.
	`SREC_WRONG_ARGUMENT`	The value is outside the limits.

SystemTime { get; set; }

Sets or returns the virtual system time of the virtual controller. A system time between "Jan 1 1970 00:00:00:000" and "Dec 31 2200 23:59:59:999" is valid.

Table 7- 224 SystemTime { get; set; } - .NET (C#)

Syntax	`DateTime SystemTime { get; set; }`	
Parameters	None	
Return values	`Siemens.Simatic.Simulation.Runtime.SimulationRuntimeException`	
	Runtime error code	Condition
	`ERuntimeError-Code.InterfaceRemoved`	The instance is not registered in Runtime Manager.
	`ERuntimeErrorCode.Timeout`	The function does not return on time.
	`ERuntimeErrorCode.WrongArgument`	The value is outside the limits.

GetScaleFactor()

Returns the scaling factor with which the virtual time advances.

Table 7- 225 GetScaleFactor() - Native C++

Syntax	`double GetScaleFactor();`
Parameters	None
Return values	`double:` Scaling factor of the virtual time.

SetScaleFactor()

Sets the scaling factor with which the virtual time advances.

Start with a small scaling factor and incrementally approach a scaling factor at which the virtual controller remains in RUN.

A value between 0.01 and 100 is valid. The default setting is 1.

- If the value is less than 1, the virtual time of the virtual controller runs X-times slower than the real time.
- If the value is greater than 1, the virtual time of the virtual controller runs X-times faster than the real time.

A change in the value during runtime only takes effect at the cycle control point.

Table 7- 226 SetScaleFactor() - Native C++

Syntax	`ERuntimeErrorCode SetScaleFactor ( double in_Value );`	
Parameters	• `double in_Value:` Scaling factor of the virtual time.	
Return values	Runtime error code	Condition
	`SREC_OK`	The function is successful.
	`SREC_INTERFACE_REMOVED`	The instance is not registered in Runtime Manager.
	`SREC_TIMEOUT`	The function does not return on time.
	`SREC_WRONG_ARGUMENT`	The value is outside the limits.

ScaleFactor { get; set; }

Sets or returns the scaling factor with which the virtual time advances.

Start with a small scaling factor and incrementally approach a scaling factor at which the virtual controller remains in RUN.

A value between 0.01 and 100 is valid. The default setting is 1.

- If the value is less than 1, the virtual time of the virtual controller runs X-times slower than the real time.
- If the value is greater than 1, the virtual time of the virtual controller runs X-times faster than the real time.

A change in the value during runtime only takes effect at the cycle control point.

Table 7- 227 ScaleFactor { get; set; } - .NET (C#)

Syntax	`double ScaleFactor { get; set; }`	
Parameters	None	
Return values	`double`: Scaling factor of the virtual time.	
Exceptions	`Siemens.Simatic.Simulation.Runtime.SimulationRuntimeException`	
	Runtime error code	Condition
	`ERuntimeError-Code.InterfaceRemoved`	The instance is not registered in Runtime Manager.
	`ERuntimeErrorCode.Timeout`	The function does not return on time.
	`ERuntimeErrorCode.WrongArgument`	The value is outside the limits.

7.6.7 Cycle control

GetOperatingMode()

Returns the operating mode (Page 331) of the virtual controller.

Table 7- 228 GetOperatingMode() - Native C++

Syntax	`EOperatingMode GetOperatingMode();`
Parameters	None
Return values	`EOperatingMode`: Operating mode of the virtual controller

SetOperatingMode()

Sets the operating mode of the virtual controller.

A change in the value during runtime only takes effect at the synchronization point.

Table 7- 229 SetOperatingMode() - Native C++

Syntax	`void SetOperatingMode( EOperatingMode in_OperatingMode );`	
Parameters	• `EOperatingMode in_OperatingMode`: Operating mode of the virtual controller	
Return values	Runtime error code	Condition
	`SREC_OK`	The function is successful.
	`SREC_INTERFACE_REMOVED`	The instance is not registered in Runtime Manager.
	`SREC_TIMEOUT`	The function does not return on time.

OperatingMode { get; set; }

Returns or sets the operating mode of the virtual controller.

A change in the value during runtime only takes effect at the synchronization point.

Table 7- 230 OperatingMode { get; set; } - .NET (C#)

Syntax	`EOperatingMode OperatingMode { get; set; }`	
Parameters	None	
Return values	`EOperatingMode`: Operating mode of the virtual controller	
Exceptions	`Siemens.Simatic.Simulation.Runtime.SimulationRuntimeException`	
	Runtime error code	Condition
	`ERuntimeError-Code.InterfaceRemoved`	The instance is not registered in Runtime Manager.
	`ERuntimeErrorCode.Timeout`	The function does not return on time.

SetSendSyncEventInDefaultModeEnabled()

Sets the `SendSyncEventInDefault` mode. In this mode the `OnSyncPointReached` event is triggered after each cycle end in the Default operating mode. See OnSyncPointReached (Page 247).

Table 7- 231 SetSendSyncEventInDefaultModeEnabled() - Native C++

Syntax	`ERuntimeErrorCode SetSendSyncEventInDefaultModeEnabled( bool in_Enable );`	
Parameters	• `bool in_Enable`: If `true`, the `OnSyncPointReached` event is triggered after each cycle in the Default operating mode.	
Return values	Runtime error code	Condition
	`SREC_OK`	The function is successful.
	`SREC_INTERFACE_REMOVED`	The instance is not registered in Runtime Manager.
	`SREC_TIMEOUT`	The function does not return on time.

IsSendSyncEventInDefaultModeEnabled()

Returns the `SendSyncEventInDefaultMode` mode. When the function fails, the return value is `false`.

Table 7- 232 IsSendSyncEventInDefaultModeEnabled() - Native C++

Syntax	`bool IsSendSyncEventInDefaultModeEnabled();`
Parameters	None
Return values	• `false`: The event is not triggered (unless the Sync-Freeze mode is active). • `true`: The event is triggered after every cycle.

IsSendSyncEventInDefaultModeEnabled { get; set; }

Returns or sets the `SendSyncEventInDefaultMode` *mode*. In this mode the `OnSyncPointReached` event is triggered after each cycle end for every operating mode. If the event is also to be received in the Default operating mode, set the return value to `true`. See OnSyncPointReached (Page 247).

Table 7- 233 IsSendSyncEventInDefaultModeEnabled { get; set; } - .NET (C#)

Syntax	`bool IsSendSyncEventInDefaultModeEnabled { get; set;}`	
Parameters	None	
Return values	• `false`: The event is not triggered (unless the Sync-Freeze mode is active). • `true`: The event is triggered after every cycle.	
Exceptions	`Siemens.Simatic.Simulation.Runtime.SimulationRuntimeException`	
	Runtime error code	Condition
	`ERuntimeError-Code.InterfaceRemoved`	The instance is not registered in Runtime Manager.
	`ERuntimeErrorCode.Timeout`	The function does not return on time.

GetOverwrittenMinimalCycleTime_ns()

Returns the overwritten minimum cycle time (in nanoseconds) that is used in the `SingleStep_CT` and `SingleStep_CPT` operating modes.

Table 7- 234 GetOverwrittenMinimalCycleTime_ns() - Native C++

Syntax	`INT64 GetOverwrittenMinimalCycleTime_ns();`
Parameters	None
Return values	`INT64`: The overwritten minimum cycle time in nanoseconds.

SetOverwrittenMinimalCycleTime_ns()

Sets the overwritten minimum cycle time (in nanoseconds) that is used in the `SingleStep_CT` and `SingleStep_CPT` operating modes.

A value between 0 and 6000000000 is valid. The default setting is 100 ms.

A change in the value during runtime only takes effect at the cycle control point.

Table 7- 235 SetOverwrittenMinimalCycleTime_ns() - Native C++

Syntax	`ERuntimeErrorCode SetOverwrittenMinimalCycleTime_ns( INT64 in_CycleTime_ns );`	
Parameters	• `INT64 in_CycleTime_ns:` The overwritten minimum cycle time in nanoseconds.	
Return values	Runtime error code	Condition
	`SREC_OK`	The function is successful.
	`SREC_INTERFACE_REMOVED`	The instance is not registered in Runtime Manager.
	`SREC_TIMEOUT`	The function does not return on time.
	`SREC_WRONG_ARGUMENT`	The value is outside the limits.

OverwrittenMinimalCycleTime_ns { get; set; }

Returns or sets the overwritten minimum cycle time in nanoseconds that is used in the `SingleStep_CT` and `SingleStep_CPT` operating modes.

A value between 0 and 6000000000 is valid. The default setting is 100 ms.

A change in the value during runtime only takes effect at the cycle control point.

Table 7- 236 OverwrittenMinimalCycleTime_ns { get; set; } - .NET (C#)

Syntax	`Int64 OverwrittenMinimalCycleTime_ns { get; set; }`	
Parameters	None	
Return values	`Int64`: The overwritten minimum cycle time in nanoseconds.	
Exceptions	`Siemens.Simatic.Simulation.Runtime.SimulationRuntimeException`	
	Runtime error code	Condition
	`ERuntimeError-Code.InterfaceRemoved`	The instance is not registered in Runtime Manager.
	`ERuntimeErrorCode.Timeout`	The function does not return on time.
	`ERuntimeErrorCode.WrongArgument`	The value is outside the limits.

RunToNextSyncPoint()

If the virtual controller is running in a SingleStep operating mode, it is stopped at the synchronization point (Freeze state). The `RunToNextSyncPoint()` function cancels the freeze state. The virtual controller continues to run until the next synchronization point.

Table 7- 237 RunToNextSyncPoint() - Native C++

Syntax	`ERuntimeErrorCode RunToNextSyncPoint();`	
Parameters	None	
Return values	Runtime error code	Condition
	`SREC_OK`	The function is successful.
	`SREC_INTERFACE_REMOVED`	The instance is not registered in Runtime Manager.
	`SREC_TIMEOUT`	The function does not return on time.
	`SREC_INSTANCE_NOT_RUNNING`	The process of the virtual controller is not running.

Table 7- 238 RunToNextSyncPoint() - .NET (C#)

Syntax	`void RunToNextSyncPoint();`	
Parameters	None	
Return values	None	
Exceptions	`Siemens.Simatic.Simulation.Runtime.SimulationRuntimeException`	
	Runtime error code	Condition
	`ERuntimeError-Code.InterfaceRemoved`	The instance is not registered in Runtime Manager.
	`ERuntimeErrorCode.Timeout`	The function does not return on time.
	`ERuntimeError-Code.InstanceNotRunning`	The process of the virtual controller is not running.

StartProcessing()

If the virtual controller is running in a TimespanSynchronized operating mode, it is stopped at the synchronization point (Freeze state). The `StartProcessing()` function cancels the freeze state. The virtual controller will now run for at least the requested time before it changes to Freeze state at the next synchronization point.

Table 7- 239 StartProcessing() - Native C++

Syntax	`ERuntimeErrorCode StartProcessing( INT64 in_MinimalTimeToRun_ns );`	
Parameters	• `INT64 in_MinimalTimeToRun_ns:` The minimum virtual time (in nanoseconds) that the virtual controller runs before it changes to Freeze state.	
Return values	Runtime error code	Condition
	`SREC_OK`	The function is successful.
	`SREC_INTERFACE_REMOVED`	The instance is not registered in Runtime Manager.
	`SREC_TIMEOUT`	The function does not return on time.
	`SREC_INSTANCE_NOT_RUNNING`	The process of the virtual controller is not running.
	`SREC_WRONG_ARGUMENT`	The value is less than 0.

Table 7- 240 StartProcessing() - .NET (C#)

Syntax	`void StartProcessing( Int64 in_MinimalTimeToRun_ns );`	
Parameters	• `Int64 in_MinimalTimeToRun_ns:` The minimum virtual time (in nanoseconds) that the virtual controller runs before it changes to Freeze state.	
Return values	None	
Exceptions	`Siemens.Simatic.Simulation.Runtime.SimulationRuntimeException`	
	Runtime error code	Condition
	`ERuntimeError-Code.InterfaceRemoved`	The instance is not registered in Runtime Manager.
	`ERuntimeErrorCode.Timeout`	The function does not return on time.
	`ERuntimeError-Code.InstanceNotRunning`	The process of the virtual controller is not running.
	`ERuntimeErrorCode.WrongArgument`	The value is less than 0.

Additional information

For further information, see sections Virtual time response (Page 73), Stop simulation (Page 76).

7.6.8 Acyclic services

7.6.8.1 Overview

The acyclic services of PLCSIM Advanced include:

- Interrupt and event information which the I/O modules send to the CPU.
- Read and write processes of parameter and status data from the user program of the PLC to the I/O modules.

API methods and associated events

Events which are triggered by the I/O modules and associated API methods:

Table 7- 241 Overview - API methods and associated events

OB	Name	API methods for triggering the OB (query)	API event after OB execution (alarm)
4x	Hardware Interrupt	ProcessEvent (Page 234)	OnProcessEventDone (Page 259)
55	Status	StatusEvent (Page 238)	OnStatusEventDone (Page 261)
56	Update	UpdateEvent (Page 240)	OnUpdateEventDone (Page 263)
57	Profile	ProfileEvent (Page 239)	OnProfileEventDone (Page 262)
82	Diagnostic error Interrupt	AlarmNotification (Page 232)	OnAlarmNotificationDone (Page 258)
83	Pull or Plug of module	PullOrPlugEvent (Page 236)	OnPullOrPlugEventDone (Page 260)
86	Rack or station failure	RackOrStationFaultEvent (Page 242)	OnRackOrStationFaultEvent-Done (Page 264)

Flowchart for the simulation of events which are triggered by the I/O modules.

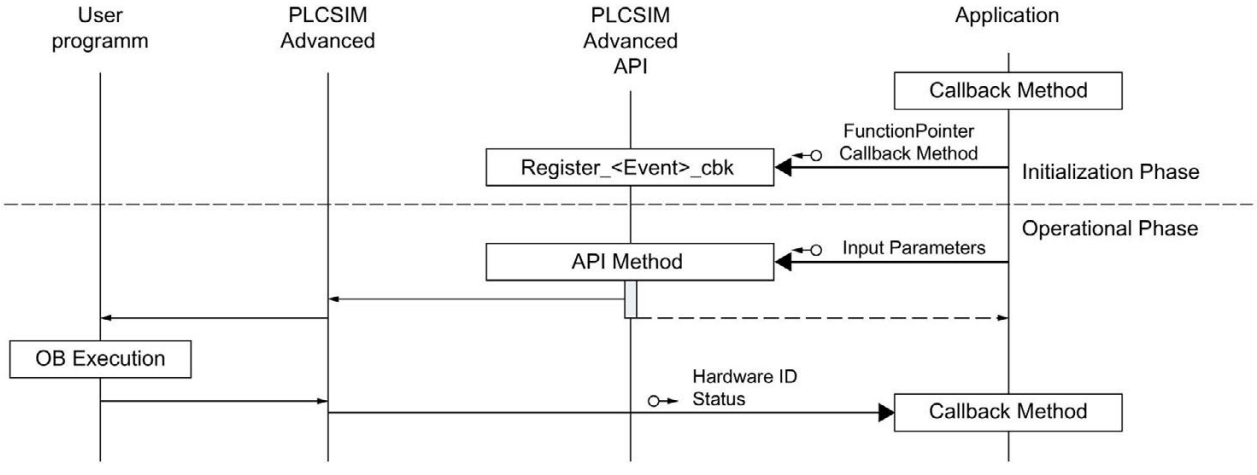

Figure 7-4 Flowchart for the simulation of events

Events

Events triggered by the user program (TIA Portal), which have logged on for the notification:

SFB	Name	API event for triggering the SFB	API method (alarm)
52	RDREC	OnDataRecordRead (Page 257)	ReadRecordDone (Page 230)
53	WRREC	OnDataRecordWrite (Page 257)	WriteRecordDone (Page 230)

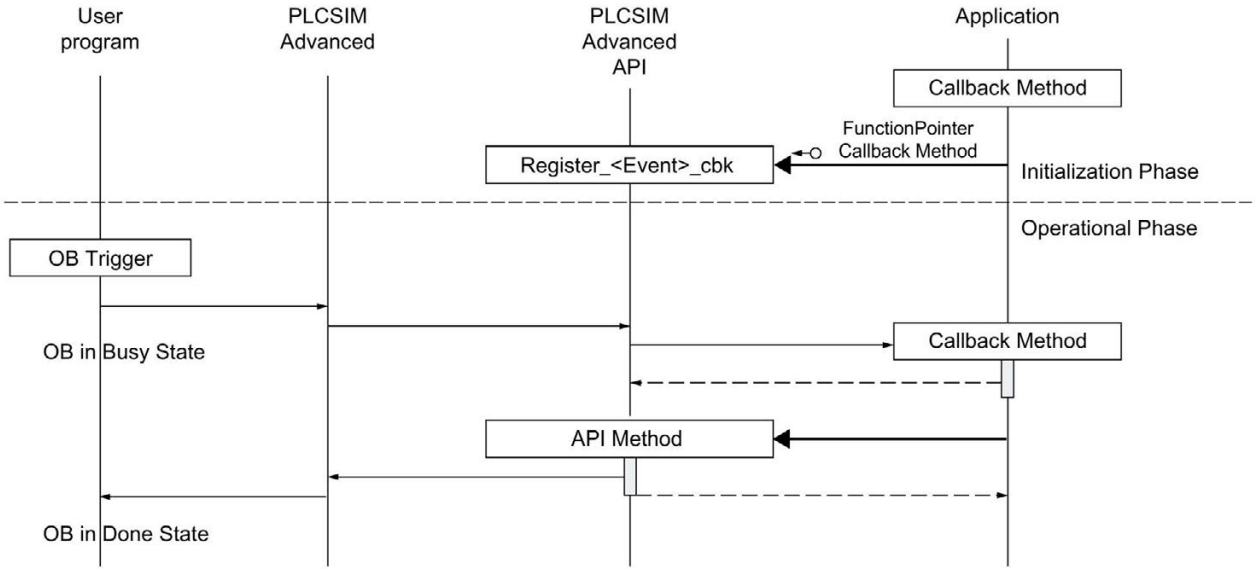

Figure 7-5 Flowchart

7.6.8.2 ReadRecordDone / WriteRecordDone

ReadRecordDone()

With this API method, the simulation of an I/O module signals to the CPU that the asynchronous reading of a data record has been completed. The simulation hereby makes the read information available.

Table 7- 242 ReadRecordDone() - Native C++

Syntax	`ERuntimeErrorCode ReadRecordDone(`
	` SDataRecordInfo in_RecordInfo,`
	` BYTE* in_Data,`
	` UINT32 in_Status`
	`);`	

Parameters	• `SDataRecordInfo in_RecordInfo:` Structure which contains the data record information. See SDataRecordInfo (Page 321). • `BYTE* in_Data:` Byte array of the read data record with the length defined by `DataSize` in the structure `SDataRecordInfo`. • `UINT32 in_Status:` Status of the job execution	
Return values	Runtime error code	Condition
	`SREC_OK`	The function is successful.
	`SREC_INTERFACE_REMOVED`	The instance is not registered in Runtime Manager.
	`SREC_DOES_NOT_EXIST`	No hardware identifier of the module.
	`SREC_TIMEOUT`	The function does not return on time.

Table 7- 243 ReadRecordDone() - .NET (C#)

Syntax	`void ReadRecordDone(`
	` SDataRecordInfo in_RecordInfo,`
	` BYTE[] in_Data,`
	` UInt32 in_Status`
	`);`	

Parameters	• `SDataRecordInfo in_RecordInfo:` Structure which contains the data record information. See SDataRecordInfo (Page 321). • `BYTE[] in_Data:` Byte array of the read data record with the length defined by `DataSize` in the structure `SDataRecordInfo`. • `UInt32 in_Status:` Status of the job execution	
Return values	None	
Exceptions	`Siemens.Simatic.Simulation.Runtime.SimulationRuntimeException`	
	Runtime error code	Condition
	`ERuntimeError-Code.InterfaceRemoved`	The instance is not registered in Runtime Manager.
	`ERuntimeErrorCode.DoesNotExist`	No hardware identifier of the module.
	`ERuntimeErrorCode.Timeout`	The function does not return on time.

WriteRecordDone()

With this API method, the simulation of an I/O module signals to the CPU that the asynchronous writing of a data record has been completed.

Table 7- 244 WriteRecordDone() - Native C++

Syntax	`ERuntimeErrorCode WriteRecordDone( SDataRecordInfo in_RecordInfo, UINT32 in_Status );`	
Parameters	• `SDataRecordInfo in_RecordInfo:` Structure which contains the data record information. See SDataRecordInfo (Page 321). • `UINT32 in_Status:` Status of the job execution	
Return values	Runtime error code	Condition
	`SREC_OK`	The function is successful.
	`SREC_INTERFACE_REMOVED`	The instance is not registered in Runtime Manager.
	`SREC_DOES_NOT_EXIST`	No hardware identifier of the module.
	`SREC_TIMEOUT`	The function does not return on time.

Table 7- 245 WriteRecordDone() - .NET (C#)

Syntax	`void WriteRecordDone( SDataRecordInfo in_RecordInfo, UInt32 in_Status );`	
Parameters	• `SDataRecordInfo in_RecordInfo:` Structure which contains the data record information. See SDataRecordInfo (Page 321). • `UInt32 in_Status:` Status of the job execution	
Return values	None	
Exceptions	`Siemens.Simatic.Simulation.Runtime.SimulationRuntimeException`	
	Runtime error code	Condition
	`ERuntimeError-Code.InterfaceRemoved`	The instance is not registered in Runtime Manager.
	`ERuntimeErrorCode.DoesNotExist`	No hardware identifier of the module.
	`ERuntimeErrorCode.Timeout`	The function does not return on time.

7.6.8.3 AlarmNotification

AlarmNotification()

This function triggers diagnostic alarms according to the PROFINET standard.

Each call of this function calls the OB 82 once, regardless of the number and the severity level of the transferred diagnostic entries.

Table 7- 246 AlarmNotification() - Native C++

Syntax	`ERuntimeErrorCode AlarmNotification(`
	`  UINT16 in_HardwareIdentifier,`
	`  UINT16 in_ModuleState,`
	`  UINT16 in_NumberOfDiagnosisEvents,`
	`SDiagExtChannelDescription* in_ArrayOfDiagnosisEvents,`
	`UINT16* out_SequenceNumber`
	`);`	

Parameters	• `UINT16 in_HardwareIdentifier:` The hardware identifier of the module or submodule which sends the diagnostics entry. The identifier must belong to a hardware component in the currently loaded project. • `UINT16 in_ModuleState:` Module status. The following statuses are valid: DMODULE_STATE_OK, DMODULE_STATE_ERROR, DMODULE_STATE_MAINT_DEMANDED, DMODULE_STATE_MAINT_REQUIRED • `UINT16 in_NumberOfDiagnosisEvents:` Multiple diagnostic entries can be sent to the CPU with a single API call. Valid range: 0 to 16. 0 means that no diagnostics entry should appear for the submodule or the channel. • `SDiagExtChannelDescription* in_ArrayOfDiagnosisEvents:` Pointer to a field with diagnostic entries. The field must match the number of diagnostic entries. It can also be a zero pointer. For definitions, see SDiagExtChannelDescription (Page 324). • `UINT16* out_SequenceNumber:` PLCSIM Advanced assigns a unique consecutive number to each interrupt event. According to PROFINET standard the sequence number is 10 bits wide (1 to $7FF_H$). When the highest number is reached the numbering starts again at 1.	
Return values	Runtime error code	Condition
	`SREC_OK`	The function is successful.
	`SREC_INTERFACE_REMOVED`	The instance is not registered in Runtime Manager.
	`SREC_DOES_NOT_EXIST`	No hardware identifier of the module.
	`SREC_INDEX_OUT_OF_RANGE`	The field size of `in_ArrayOfDiagnosisEvents` is less than the number of the currently available diagnostic events.
	`SREC_WRONG_MODULE_TYPE`	The channel number does not exist for the module.
	`SREC_WRONG_ARGUMENT`	The value for the module status is invalid.
	`SREC_TIMEOUT`	The function does not return on time.

Table 7- 247 AlarmNotification() - .NET (C#)

Syntax	`void AlarmNotification(`
	`ushort in_HardwareIdentifier,`
	`ushort in_ModuleState,`
	`ushort in_NumberOfDiagnosisEvents,`
	`SDiagExtChannelDescription [] in_ArrayOfDiagnosisEvents,`
	`Out ushort out_SequenceNumber`
	`);`

Parameters	• `ushort in_HardwareIdentifier:` The hardware identifier of the module or submodule which sends the diagnostics entry. The identifier must belong to a hardware component in the currently loaded project. • `ushort in_ModuleState:` Module status. The following statuses are valid: ModuleState.Ok, ModuleState.Error, ModuleState.MaintenanceDemanded, ModuleState.MaintenanceRequired • `ushort in_NumberOfDiagnosisEvents` Multiple diagnostic entries can be sent to the CPU with a single API call. Valid range: 0 to 16. 0 means that no diagnostics entry should appear for the submodule or the channel. • `SDiagExtChannelDescription [] in_ArrayOfDiagnosisEvents:` Pointer to a field with diagnostic entries. The field must match the number of diagnostic entries. It can also be a zero pointer. For definitions, see SDiagExtChannelDescription. • `Out ushort out_SequenceNumber:` PLCSIM Advanced assigns a unique consecutive number to each alarm event. According to PROFINET standard the sequence number is 10 bits wide (1 to $7FF_H$). When the highest number is reached the numbering starts again at 1.
Exceptions	`Siemens.Simatic.Simulation.Runtime.SimulationRuntimeException`

Runtime error code	Condition
`ERuntimeError-Code.InterfaceRemoved`	The instance is not registered in Runtime Manager.
`ERuntimeErrorCode.DoesNotExist`	No hardware identifier of the module.
`ERuntimeErrorCode.WrongArgument`	The value for the module status is invalid.
`ERuntimeError-Code.WrongModuleType`	The channel number does not exist for the module.
`ERuntimeError-Code.IndexOutOfRange`	The field size of `in_ArrayOfDiagnosisEvents` is less than the number of the currently available diagnostic events.
`ERuntimeErrorCode.Timeout`	The function does not return on time.

7.6.8.4 ProcessEvent

ProcessEvent()

Process events from central and distributed input modules can be simulated with this function.

Table 7- 248 ProcessEvent() - Native C++

Syntax	`ERuntimeErrorCode ProcessEvent(`
	` UINT16 in_HardwareIdentifier,`
	` UINT16 in_Channel,`
	`EProcessEventType in_ProcessEventType,`
	`UINT16* out_SequenceNumber);`	

Parameters	• `UINT16 in_HardwareIdentifier:` The hardware identifier of the module or submodule which sends the process event. The identifier must belong to a hardware component in the currently loaded project. • `UINT16 in_Channel:` The channel of the IO module which sends the process event. • `EProcessEventType in_ProcessEventType:` A value from the list of predefined types of events for S7 modules, see EProcessEventType (Page 344). • `UINT16* out_SequenceNumber:` PLCSIM Advanced assigns a unique consecutive number to each interrupt event. According to PROFINET standard the sequence number is 10 bits wide (1 to $7FF_H$). When the highest number is reached the numbering starts again at 1.	
Return values	Runtime error code	Condition
	`SREC_OK`	The function is successful.
	`SREC_INTERFACE_REMOVED`	The instance is not registered in Runtime Manager.
	`SREC_DOES_NOT_EXIST`	No hardware identifier of the module.
	`SREC_NOT_SUPPORTED_BY_MODULE`	The module is not supported by this user action.
	`SREC_TIMEOUT`	The function does not return on time.

Table 7- 249 ProcessEvent() - .NET (C#)

Syntax	`void ProcessEvent(`
	`ushort in_HardwareIdentifier,`
	`ushort in_Channel,`
	`EProcessEventType in_ProcessEventType,`
	`Out ushort out_SequenceNumber`
	`);`	

Parameters	• `ushort in_HardwareIdentifier:` The hardware identifier of the module or submodule which generates the process event. The identifier must belong to a hardware component in the currently loaded project. • `ushort in_Channel:` The channel of the IO module which generates the process event. • `EProcessEventType in_ProcessEventType:` A value from the list of predefined types of events for S7 modules, see EProcessEventType (Page 344). • `Out ushort out_SequenceNumber:` PLCSIM Advanced assigns a unique consecutive number to each interrupt event. According to PROFINET standard the sequence number is 10 bits wide (1 to $7FF_H$). When the highest number is reached the numbering starts again at 1.	
Return values	None	
Exceptions	`Siemens.Simatic.Simulation.Runtime.SimulationRuntimeException`	
	Runtime error code	Condition
	`ERuntimeError-Code.InterfaceRemoved`	The instance is not registered in Runtime Manager.
	`ERuntimeErrorCode.DoesNotExist`	No hardware identifier of the module.
	`ERuntimeError-Code.NotSupportedByModule`	The module is not supported by this user action.
	`ERuntimeErrorCode.Timeout`	The function does not return on time.

7.6.8.5 PullOrPlugEvent

PullOrPlugEvent()

This function triggers pull/plug events. The interrupt OB (OB 83) "Pull or plug of modules" is executed for these events.

Table 7- 250 PullOrPlugEvent() - Native C++

Syntax	`ERuntimeErrorCode PullOrPlugEvent(`
	`UINT16 in_HardwareIdentifier,`
	`EPullOrPlugEventType in_PullOrPlugEventType,`
	`UINT16* out_SequenceNumber`
	`);`	

Parameters	• `UINT16 in_HardwareIdentifier:` The hardware identifier of the module or submodule which generates the pull/plug event. The identifier must belong to a hardware component in the currently loaded project. • `EPullOrPlugEventType in_PullOrPlugEventType:` A value from the list of predefined types of pull/plug events, see EPullOrPlugEventType (Page 344). • `UINT16* out_SequenceNumber:` PLCSIM Advanced assigns a unique consecutive number to each interrupt event. According to PROFINET standard the sequence number is 10 bits wide (1 to $7FF_H$). When the highest number is reached the numbering starts again at 1.	
Return values	Runtime error code	Condition
	`SREC_OK`	The function is successful.
	`SREC_INTERFACE_REMOVED`	The instance is not registered in Runtime Manager.
	`SREC_WRONG_MODULE_STATE`	The module is currently unplugged.
	`SREC_WRONG_MODULE_TYPE`	The wrong module type was selected. For example, if an onboard IO of a compact CPU is to be pulled.
	`SREC_NOT_SUPPORTED_BY_MODULE`	The module is not supported by this user action.
	`SREC_DOES_NOT_EXIST`	No hardware identifier of the module.
	`SREC_TIMEOUT`	The function does not return on time.

Table 7- 251 PullOrPlugEvent() - .NET (C#)

Syntax	`void PullOrPlugEvent(`
	`ushort in_HardwareIdentifier,`
	`EPullOrPlugEventType in_PullOrPlugEventType,`
	`Out ushort out_SequenceNumber`
	`);`	

Parameters	• `ushort in_HardwareIdentifier:` The hardware identifier of the module or submodule which generates the pull/plug event. The identifier must belong to a hardware component in the currently loaded project. • `EPullOrPlugEventType in_PullOrPlugEventType:` A value from the list of predefined types of pull/plug events, see EPullOr-PlugEventType (Page 344). • `Out ushort out_SequenceNumber` PLCSIM Advanced assigns a unique consecutive number to each interrupt event. According to PROFINET standard the sequence number is 10 bits wide (1 to $7FF_H$). When the highest number is reached the numbering starts again at 1.	
Return values	None	
Exceptions	`Siemens.Simatic.Simulation.Runtime.SimulationRuntimeException`	
	Runtime error code	Condition
	`ERuntimeError-Code.InterfaceRemoved`	The instance is not registered in Runtime Manager.
	`ERuntimeError-Code.WrongModuleState`	The module is currently unplugged.
	`ERuntimeError-Code.WrongModuleType`	The wrong module type was selected. For example, if an onboard IO of a compact CPU is to be pulled.
	`ERuntimeErrorCode.DoesNotExist`	No hardware identifier of the module.
	`ERuntimeError-Code.NotSupportedByModule`	The module is not supported by this user action.
	`ERuntimeErrorCode.Timeout`	The function does not return on time.

7.6.8.6 StatusEvent

StatusEvent()

This function is used to trigger the status event OB (OB 55). Status events are only supported for modules in a distributed IO system.

Table 7- 252 StatusEvent() - Native C++

Syntax	`ERuntimeErrorCode StatusEvent(`
	`UINT16 in_HardwareIdentifier,`
	`UINT16 in_Specifier`
	`);`	

Parameters	• `UINT16 in_HardwareIdentifier:` The hardware identifier of the module that generates the status event. The identifier must belong to a hardware component in the currently loaded project. • `UINT16 in_Specifier:` The parameter is transferred to the interrupt frame as interrupt specifier. It is available as input parameter of the OB 55 call.	
Return values	Runtime error code	Condition
	`SREC_OK`	The function is successful.
	`SREC_INTERFACE_REMOVED`	The instance is not registered in Runtime Manager.
	`SREC_NOT_SUPPORTED_BY_MODULE`	The module is not supported by this user action.
	`SREC_DOES_NOT_EXIST`	No hardware identifier of the module.
	`SREC_TIMEOUT`	The function does not return on time.

Table 7- 253 StatusEvent() - .NET (C#)

Syntax	`void StatusEvent(`
	` ushort in_HardwareIdentifier,`
	`ushort in_Specifier`
	`);`	

Parameters	• `ushort in_HardwareIdentifier:` The hardware identifier of the module that generates the status event. The identifier must belong to a hardware component in the currently loaded project. • `ushort in_Specifier:` The parameter is transferred to the interrupt frame as interrupt specifier. It is available as input parameter of the OB 55 call.	
Return values	None	
Exceptions	`Siemens.Simatic.Simulation.Runtime.SimulationRuntimeException`	
	Runtime error code	Condition
	`ERuntimeError-Code.InterfaceRemoved`	The instance is not registered in Runtime Manager.
	`ERuntimeErrorCode.DoesNotExist`	No hardware identifier of the module.
	`ERuntimeError-Code.NotSupportedByModule`	The module is not supported by this user action.
	`ERuntimeErrorCode.Timeout`	The function does not return on time.

7.6.8.7 ProfileEvent

ProfileEvent()

This function is used to trigger the Profile event OB (OB 57). Profile events are only supported for modules in a distributed IO system.

Table 7- 254 ProfileEvent() - Native C++

Syntax	`ERuntimeErrorCode ProfileEvent(`
	`UINT16 in_HardwareIdentifier,`
	`UINT16 in_Specifier`
	`);`	

Parameters	• `UINT16 in_HardwareIdentifier:` The hardware identifier of the module that generates the profile event. The identifier must belong to a hardware component in the currently loaded project. • `UINT16 in_Specifier:` The parameter is transferred to the interrupt frame as interrupt specifier. It is available as input parameter of the OB 57 call.	
Return values	Runtime error code	Condition
	`SREC_OK`	The function is successful.
	`SREC_INTERFACE_REMOVED`	The instance is not registered in Runtime Manager.
	`SREC_NOT_SUPPORTED_BY_MODULE`	The module is not supported by this user action.
	`SREC_DOES_NOT_EXIST`	No hardware identifier of the module.
	`SREC_TIMEOUT`	The function does not return on time.

Table 7- 255 ProfileEvent() - .NET (C#)

Syntax	`void ProfileEvent(`
	`ushort in_HardwareIdentifier,`
	`ushort in_Specifier`
	`);`	

Parameters	• `ushort in_HardwareIdentifier:` The hardware identifier of the module that generates the profile event. The identifier must belong to a hardware component in the currently loaded project. • `ushort in_Specifier:` The parameter is transferred to the interrupt frame as interrupt specifier. It is available as input parameter of the OB 57 call.	
Return values	None	
Exceptions	`Siemens.Simatic.Simulation.Runtime.SimulationRuntimeException`	
	Runtime error code	Condition
	`ERuntimeError-Code.InterfaceRemoved`	The instance is not registered in Runtime Manager.
	`ERuntimeErrorCode.DoesNotExist`	No hardware identifier of the module.
	`ERuntimeError-Code.NotSupportedByModule`	The module is not supported by this user action.
	`ERuntimeErrorCode.Timeout`	The function does not return on time.

7.6.8.8 UpdateEvent

UpdateEvent()

This function is used to trigger the Update event OB (OB 56). Update events are only supported for modules in a distributed IO system.

Table 7- 256 UpdateEvent() - Native C++

Syntax	`ERuntimeErrorCode UpdateEvent(`
	`UINT16 in_HardwareIdentifier,`
	`UINT16 in_Specifier`
	`);`	

Parameters	• `UINT16 in_HardwareIdentifier:` The hardware identifier of the module that triggers the update event. The identifier must belong to a hardware component in the currently loaded project. • `UINT16 in_Specifier:` The parameter is transferred to the interrupt frame as interrupt specifier. It is available as input parameter of the OB 56 call.	
Return values	Runtime error code	Condition
	`SREC_OK`	The function is successful.
	`SREC_INTERFACE_REMOVED`	The instance is not registered in Runtime Manager.
	`SREC_NOT_SUPPORTED_BY_MODULE`	The module is not supported by this user action.
	`SREC_DOES_NOT_EXIST`	No hardware identifier of the module.
	`SREC_TIMEOUT`	The function does not return on time.

Table 7- 257 UpdateEvent() - .NET (C#)

Syntax	`void UpdateEvent(`
	`ushort in_HardwareIdentifier,`
	`ushort in_Specifier`
	`);`	

Parameters	• `ushort in_HardwareIdentifier:` The hardware identifier of the module that triggers the update event. The identifier must belong to a hardware component in the currently loaded project. • `ushort in_Specifier:` The parameter is transferred to the interrupt frame as interrupt specifier. It is available as input parameter of the OB 56 call.	
Return values	None	
Exceptions	`Siemens.Simatic.Simulation.Runtime.SimulationRuntimeException`	
	Runtime error code	Condition
	`ERuntimeError-Code.InterfaceRemoved`	The instance is not registered in Runtime Manager.
	`ERuntimeErrorCode.DoesNotExist`	No hardware identifier of the module.
	`ERuntimeError-Code.NotSupportedByModule`	The module is not supported by this user action.
	`ERuntimeErrorCode.Timeout`	The function does not return on time.

7.6.8.9 GetConfiguredProcessEvent

GetConfiguredProcessEvents()

With this API method, the process events configured in the TIA Portal can be read out during runtime.

If no process events are present, `SREC_OK` is returned. The value for `EventsCount` is then 0.

Table 7- 258 GetConfiguredProcessEvents() - Native C++

Syntax	`ERuntimeErrorCode GetConfiguredProcessEvents( UINT16* out_EventsCount, );`	
Parameters	• `SConfiguredProcessEvents* inout_ProcessEvents:` Pointer or reference to a user-defined memory which contains the field with the downloaded configured process events. The structure SConfiguredProcessEvents (Page 323) contains information about these process events. • `UINT16* out_EventsCount:` Pointer or reference to a tag which contains the number of configured process events.	
Return values	Runtime error code	Condition
	`SREC_OK`	The function is successful.
	`SREC_INTERFACE_REMOVED`	The instance is not registered in Runtime Manager.
	`SREC_TIMEOUT`	The function does not return on time.

Table 7- 259 GetConfiguredProcessEvents() - .NET (C#)

Syntax	`SConfiguredProcessEvents [] GetConfiguredProcessEvents( );`	
Parameters	None	
Return values	Field with configured process events and field size provide the number of configured process events.	
Exceptions	`Siemens.Simatic.Simulation.Runtime.SimulationRuntimeException`	
	Runtime error code	Condition
	`ERuntimeErrorCode.InterfaceRemoved`	The instance is not registered in Runtime Manager.
	`ERuntimeErrorCode.Timeout`	The function does not return on time.

7.6.8.10 RackOrStationFaultEvent

Description

This function is used to trigger the RackOrStationFault event OB (OB 86). These events are only supported for distributed devices.

Table 7- 260 RackOrStationFaultEvent() - Native C++

Syntax	`ERuntimeErrorCode RackOrStationFaultEvent( UINT16 in_HardwareIdentifier, ERackOrStationFaultType in_EventType );`	
Parameter	• `UINT16 in_HardwareIdentifier:` The hardware identifier of the device that sends the event. • `ERackOrStationFaultType in_EventType:` A value from the list of predefined types of events, see ERackOrStation-FaultType (Page 346).	
Return values	Runtime error code	Condition
	`SREC_OK`	The function is successful.
	`SREC_INTERFACE_REMOVED`	The instance is not registered in Runtime Manager.
	`SREC_WRONG_MODULE_TYPE`	The specified HW identifier is not that of a distributed device.
	`SREC_WRONG_MODULE_STATE`	The device with the specified HW identifier already reports the status Fault/Return.
	`SREC_DOES_NOT_EXIST`	The specified HW identifier of the device does not exist.
	`SREC_TIMEOUT`	The function does not return on time.

Table 7- 261 RackOrStationFaultEvent() - .NET (C#)

Syntax	`void RackOrStationFaultEvent( ushort in_HardwareIdentifier, ERackOrStationFaultType in_EventType );`	
Parameter	• `ushort in_HardwareIdentifier:` The hardware identifier of the device that sends the event. • `ERackOrStationFaultType in_EventType:` A value from the list of predefined types of events, see ERackOrStation-FaultType (Page 346).	
Exceptions	`Siemens.Simatic.Simulation.Runtime.SimulationRuntimeException`	
	Runtime error code	Condition
	`ERuntimeError-Code.InterfaceRemoved`	The instance is not registered in Runtime Manager.
	`ERuntimeErrorCode.DoesNotExist`	The specified HW identifier of the device does not exist.
	`ERuntimeError-Code.WrongModuleType`	The specified HW identifier is not that of a distributed device.
	`ERuntimeError-Code.WrongModuleState`	The device with the specified HW identifier already reports the status Fault/Return.
	`ERuntimeErrorCode.Timeout`	The function does not return on time.

7.6.9 Events

Events for IInstances

The following events are differentiated in the API:

Table 7- 262 Events for the IInstances interface

Event	Cause
OnOperatingStateChanged (Page 243)	This event is always triggered when the operating state of the virtual controller has changed.
OnSyncPointReached (Page 247)	This event is triggered when the virtual controller reaches a synchronization point. If the virtual controller is being operated in Default mode, the `SendSyncEventInDefaultMode` flag must be set to receive the event. See SendSyncEventInDefaultMode (Page 223).
OnConfigurationChanging (Page 249)	This event is triggered when changing of the configuration of the virtual controller starts. • During power up from the Virtual SIMATIC Memory Card • At the start of a download When this event is triggered, the stored tag list is reset.
OnConfigurationChanged (Page 252)	This event is triggered when the configuration of the virtual controller has changed: • After power up from the Virtual SIMATIC Memory Card • At the end of a download • When the IP address changes
OnLedChanged (Page 254)	This event is triggered when the LED display of the virtual controller has changed.

7.6.9.1 OnOperatingStateChanged events

OnOperatingStateChanged

Registers or unregisters an event handler method.

Table 7- 263 OnOperatingStateChanged - .NET (C#)

Syntax	`event Delegate_II_EREC_DT_EOS_EOS OnOperatingStateChanged;`
Parameters	None. See Delegate_II_EREC_DT_EOS_EOS (Page 294).
Return values	None
Exceptions	None
Note	The event handler method runs in a separate thread.

RegisterOnOperatingStateChangedCallback()

When the event occurs, the registered callback function is called. Only one callback function can be registered for the event. Registering a new callback function causes the previous callback function to be deleted.

Table 7- 264 RegisterOnOperatingStateChangedCallback() - Native C++

Syntax	`void RegisterOnOperatingStateChangedCallback( EventCallback_II_SREC_ST_SROS_SROS in_CallbackFunction );`
Parameters	• `EventCallback_II_SREC_ST_SROS_SROS in_CallbackFunction:` A callback function that subscribes to the event. See EventCallback_II_SREC_ST_SROS_SROS (Page 282).
Return values	None
Note	The callback function runs in a separate thread.

RegisterOnOperatingStateChangedEvent()

When the event occurs, the registered event object is set to the signaled state. Only one event object can be registered for the event. Registering a new event object causes the previous event object to be deleted.

Table 7- 265 RegisterOnOperatingStateChangedEvent() - Native C++

Syntax	`void RegisterOnOperatingStateChangedEvent();` `void RegisterOnOperatingStateChangedEvent( HANDLE* in_Event );`
Parameters	• `None:` An internal event object is registered. • `HANDLE* in_Event:` A handle for a user-specific event object. The event object is registered.
Return values	None

Example C++	`// Thread 1 ----------`
	`ISimulationRuntimeManager * api = NULL;`
	`ERuntimeErrorCode result = Initialize(&api);`
	
	`IInstance* psa = NULL;`
	`if (result == SREC_OK)`
	`{`
	`result = api->RegisterInstance(&psa);`
	`}`
	
	`// Register the internal event object`
	`psa->`**RegisterOnOperatingStateChangedEvent**`();`
	
	`// Thread 2 ----------`
	`while (condition)`
	`{`
	`// Wait for the event to be set (timeout after 10s)`
	`bool isEventSet = psa->WaitForOnOperatingStateChangedEvent(10000);`
	`if (isEventSet)`
	`{`
	`// Do Something`
	`…`
	`}`
	`}`

Example C++	`// Thread 1 ----------`
	`ISimulationRuntimeManager * api = NULL;`
	`ERuntimeErrorCode result = Initialize(&api);`
	
	`IInstance* psa = NULL;`
	`if (result == SREC_OK)`
	`{`
	`  result = api->RegisterInstance(&psa);`
	`}`
	
	`// Create an event object`
	`HANDLE eventHandle = CreateEvent(NULL, FALSE, FALSE, NULL);`
	
	`// Register the user created event object`
	`psa->`**RegisterOnOperatingStateChangedEvent**`(&eventHandle);`
	
	`// Do Something`
	`…`
	`// Clean up the handle`
	`CloseHandle(eventHandle);`
	
	`// Thread 2 ----------`
	`while (condition)`
	`{`
	`  // Wait for the event to be set //OR:`
	`  WaitForSingleObject(eventHandle, INFINITE); //psa->WaitForOnOperatingStateChangedEvent();`
	
	`  // Do Something`
	`  …`
	`}`

UnregisterOnOperatingStateChangedCallback()

Unregisters the callback function. When the event occurs, no callback function is called.

Table 7- 266 UnregisterOnOperatingStateChangedCallback() - Native C++

Syntax	`void UnregisterOnOperatingStateChangedCallback();`
Parameters	None
Return values	None

UnregisterOnOperatingStateChangedEvent()

Unregisters the event object.

Table 7- 267 UnregisterOnOperatingStateChangedEvent() - Native C++

Syntax	`void UnregisterOnOperatingStateChangedEvent();`
Parameters	None
Return values	None

Table 7- 268 UnregisterOnOperatingStateChangedEvent() - .NET (C#)

Syntax	`void UnregisterOnOperatingStateChangedEvent();`
Parameters	None
Return values	None

WaitForOnOperatingStateChangedEvent()

The function blocks the program until the registered event object is in the signaled state or the timeout interval is exceeded.

Table 7- 269 WaitForOnOperatingStateChangedEvent() - Native C++

Syntax	`bool WaitForOnOperatingStateChangedEvent();`
	`bool WaitForOnOperatingStateChangedEvent(`
	`  UINT32 in_Time_ms`
	`);`

Parameters	• `None:` The time limit is set to `INFINITE`. • `UINT32 in_Time_ms:` Value for the time limit in milliseconds.
Return values	• `true:` If the event object was set to the signaled state. • `false:` If no event was received during the defined time limit.

Table 7- 270 WaitForOnOperatingStateChangedEvent() - .NET (C#)

Syntax	`bool WaitForOnOperatingStateChangedEvent();`
	`bool WaitForOnOperatingStateChangedEvent(`
	`  UInt32 in_Time_ms`
	`);`

Parameters	• `None:` The time limit is set to `INFINITE`. • `UInt32 in_Time_ms:` Value for the time limit in milliseconds.
Return values	• `true:` If the event object was set to the signaled state. • `false:` If no event was received during the defined time limit.

7.6.9.2 OnSyncPointReached events

OnSyncPointReached

Registers or unregisters an event handler method.

Table 7- 271 OnSyncPointReached - .NET (C#)

Syntax	`event Delegate_II_EREC_DT_UINT32_INT64_INT64_UINT32 OnSyncPoin-tReached;`
Parameters	None. See Delegate_II_EREC_DT_UINT32_INT64_INT64_UINT32 (Page 296).
Return values	None
Exceptions	None
Note	The event handler method runs in a separate thread.

RegisterOnSyncPointReachedCallback()

When the event occurs, the registered callback function is called. Only one callback function can be registered for the event. Registering a new callback function causes the previous callback function to be deleted.

Table 7- 272 RegisterOnSyncPointReachedCallback() - Native C++

Syntax	`void RegisterOnSyncPointReachedCallback( EventCallback_II_SREC_ST_UINT32_INT64_INT64_UINT32 in_CallbackFunction );`
Parameters	• `EventCallback_II_SREC_ST in_CallbackFunction:` A callback function that subscribes to an event. See EventCallback_II_SREC_ST_UINT32_INT64_INT64_UINT32 (Page 281).
Return values	None
Note	The callback function runs in a separate thread.

RegisterOnSyncPointReachedEvent()

When the event occurs, the registered event object is set to the signaled state. Only one event object can be registered for the event. Registering a new event object causes the previous event object to be deleted.

Table 7- 273 RegisterOnSyncPointReachedEvent() - Native C++

Syntax	`void RegisterOnSyncPointReachedEvent();` `void RegisterOnSyncPointReachedEvent( HANDLE* in_Event );`
Parameters	• `None:` An internal event object is registered. • `HANDLE* in_Event:` A handle for a user-specific event object. The event object is registered.
Return values	None

UnregisterOnSyncPointReachedCallback()

Unregisters the callback function. When the event occurs, no callback function is called.

Table 7- 274 UnregisterOnSyncPointReachedCallback() - Native C++

Syntax	`void UnregisterOnSyncPointReachedCallback();`
Parameters	None
Return values	None

UnregisterOnSyncPointReachedEvent()

Unregisters the event object.

Table 7- 275 UnregisterOnSyncPointReachedEvent() - Native C++

Syntax	`void UnregisterOnSyncPointReachedEvent();`
Parameters	None
Return values	None

Table 7- 276 UnregisterOnSyncPointReachedEvent() - .NET (C#)

Syntax	`void UnregisterOnSyncPointReachedEvent();`
Parameters	None
Return values	None

WaitForOnSyncPointReachedEvent()

The function blocks the program until the registered event object is in the signaled state or the timeout interval is exceeded.

Table 7- 277 WaitForOnSyncPointReachedEvent() - Native C++

Syntax	`SOnSyncPointReachedResult WaitForOnSyncPointReachedEvent();`
	`SOnSyncPontReachedResult WaitForOnEndOfCycleOnSyncPoin-tReachedEvent(`
	`UINT32 in_Time_ms`
	`);`

Parameters	• `None:` The time limit is set to `INFINITE`. • `UINT32 in_Time_ms:` Value for the time limit in milliseconds.
Return values	• `SOnSyncPointReachedResult`: A structure that supplies information about the event. See SOnSyncPointReachedResult (Page 319).

Table 7- 278 WaitForOnSyncPointReachedEvent() - .NET (C#)

Syntax	`SOnSyncPointReachedResult WaitForOnSyncPointReachedEvent();`
	`SOnSyncPointReachedResult WaitForOnSyncPointReachedEvent(`
	`UInt32 in_Time_ms`
	`);`

Parameters	• `None:` The time limit is set to `INFINITE`. • `UInt32 in_Time_ms:` Value for the time limit in milliseconds.
Return values	• `SOnSyncPointReachedResult`: A structure that supplies information about the event. See SOnSyncPointReachedResult (Page 319).

7.6.9.3 OnConfigurationChanging events

OnConfigurationChanging

Registers or unregisters an event handler method.

Table 7- 279 OnConfigurationChanging - .NET (C#)

Syntax	`event Delegate_II_EREC_DT OnConfigurationChanging;`
Parameters	None. See Delegate_II_EREC_DT (Page 294).
Return values	None
Exceptions	None
Note	The event handler method runs in a separate thread.

RegisterOnConfigurationChangingCallback()

When the event occurs, the registered callback function is called. Only one callback function can be registered for the event. Registering a new callback function causes the previous callback function to be deleted.

Table 7- 280 RegisterOnConfigurationChangingCallback() - Native C++

Syntax	`void RegisterOnConfigurationChangingCallback( EventCallback_II_SREC_ST in_CallbackFunction );`
Parameters	• `EventCallback_II_SREC_ST in_CallbackFunction:` A callback function that subscribes to an event. See EventCallback_II_SREC_ST (Page 281).
Return values	None
Note	The callback function runs in a separate thread.

RegisterOnConfigurationChangingEvent()

When the event occurs, the registered event object is set to the signaled state. Only one event object can be registered for the event. Registration of a new event object causes the previous event object to be deleted.

Table 7- 281 RegisterOnConfigurationChangingEvent() - Native C++

Syntax	`void RegisterOnConfigurationChangingEvent();` `void RegisterOnConfigurationChangingEvent( HANDLE* in_Event );`
Parameters	• `None:` An internal event object is registered. • `HANDLE* in_Event:` A handle for a user-specific event object. The event object is registered.
Return values	None

UnregisterOnConfigurationChangingCallback()

Unregisters the callback function. When the event occurs, no callback function is called.

Table 7- 282 UnregisterOnConfigurationChangingCallback() - Native C++

Syntax	`void UnregisterOnConfigurationChangingCallback();`
Parameters	None
Return values	None

UnregisterOnConfigurationChangingEvent()

Unregisters the event object.

Table 7- 283 UnregisterOnConfigurationChangingEvent() - Native C++

Syntax	`void UnregisterOnConfigurationChangingEvent();`
Parameters	None
Return values	None

Table 7- 284 UnregisterOnConfigurationChangingEvent() - .NET (C#)

Syntax	`void UnregisterOnConfigurationChangingEvent();`
Parameters	None
Return values	None

WaitForOnConfigurationChangingEvent()

The function blocks the program until the registered event object is in the signaled state or the timeout interval is exceeded.

Table 7- 285 WaitForOnConfigurationChangingEvent() - Native C++

Syntax	`bool WaitForOnConfigurationChangingEvent();`
	`bool WaitForOnConfigurationChangingEvent(`
	`  UINT32 in_Time_ms`
	`);`

Parameters	• `None:` The time limit is set to `INFINITE`. • `UINT32 in_Time_ms:` Value for the time limit in milliseconds.
Return values	• `true:` If the event object was set to the signaled state. • `false:` If no event was received during the defined time limit.

Table 7- 286 WaitForOnConfigurationChangingEvent() - .NET (C#)

Syntax	`bool WaitForOnConfigurationChangingEvent();`
	`bool WaitForOnConfigurationChangingEvent(`
	`  UInt32 in_Time_ms`
	`);`

Parameters	• `None:` The time limit is set to `INFINITE`. • `UInt32 in_Time_ms:` Value for the time limit in milliseconds.
Return values	• `true:` If the event object was set to the signaled state. • `false:` If no event was received during the defined time limit.

7.6.9.4 OnConfigurationChanged events

OnConfigurationChanged

Registers or unregisters an event handler method.

Table 7- 287 OnConfigurationChanged - .NET (C#)

Syntax	`event Delegate_II_EREC_DT_SRICC_UINT32_UINT32_UINT32_UINT32 OnConfigurationChanged;`
Parameters	None. See Delegate_II_EREC_DT_SRICC_UINT32_UINT32_UINT32_UINT32 (Page 298).
Return values	None
Exceptions	None
Note	The event handler method runs in a separate thread.

RegisterOnConfigurationChangedCallback()

When the event occurs, the registered callback function is called. Only one callback function can be registered for the event. Registering a new callback function causes the previous callback function to be deleted.

Table 7- 288 RegisterOnConfigurationChangedCallback() - Native C++

Syntax	`void RegisterOnConfigurationChangedCallback( EventCallback_II_SREC_ST_SRICC_UINT32_UINT32_UINT32_UINT32 in_CallbackFunction );`
Parameters	• `EventCallback_II_SREC_ST_SRICC_UINT32_UINT32_UINT32_UINT32 in_CallbackFunction:` A callback function that subscribes to an event. See EventCallback_II_SREC_ST_SRICC_UINT32_UINT32_UINT32_UINT32 (Page 286) .
Return values	None
Note	The callback function runs in a separate thread.

RegisterOnConfigurationChangedEvent()

When the event occurs, the registered event object is set to the signaled state. Only one event object can be registered for the event. Registering a new event object causes the previous event object to be deleted.

Table 7- 289 RegisterOnConfigurationChangedEvent() - Native C++

Syntax	`void RegisterOnConfigurationChangedEvent();` `void RegisterOnConfigurationChangedEvent( HANDLE* in_Event );`
Parameters	• `None:` An internal event object is registered. • `HANDLE* in_Event:` A handle for a user-specific event object. The event object is registered.
Return values	None

UnregisterOnConfigurationChangedCallback()

Unregisters the callback function. When the event occurs, no callback function is called.

Table 7- 290 UnregisterOnConfigurationChangedCallback() - Native C++

Syntax	`void UnregisterOnConfigurationChangedCallback();`
Parameters	None
Return values	None

UnregisterOnConfigurationChangedEvent()

Unregisters the event object.

Table 7- 291 UnregisterOnConfigurationChangedEvent() - Native C++

Syntax	`void UnregisterOnConfigurationChangedEvent();`
Parameters	None
Return values	None

Table 7- 292 UnregisterOnConfigurationChangedEvent() - .NET (C#)

Syntax	`void UnregisterOnConfigurationChangedEvent();`
Parameters	None
Return values	None

WaitForOnConfigurationChangedEvent()

The function blocks the program until the registered event object is in the signaled state or the timeout interval is exceeded.

Table 7- 293 WaitForOnConfigurationChangedEvent() - Native C++

Syntax	`bool WaitForOnConfigurationChangedEvent();` `bool WaitForOnConfigurationChangedEvent( UINT32 in_Time_ms );`
Parameters	• `None:` The time limit is set to `INFINITE`. • `UINT32 in_Time_ms:` Value for the time limit in milliseconds.
Return values	• `true:` If the event object was set to the signaled state. • `false:` If no event was received during the defined time limit.

Table 7- 294 WaitForOnConfigurationChangedEvent() - .NET (C#)

Syntax	`bool WaitForOnConfigurationChangedEvent();` `bool WaitForOnConfigurationChangedEvent( UInt32 in_Time_ms );`
Parameters	• `None:` The time limit is set to `INFINITE`. • `UInt32 in_Time_ms:` Value for the time limit in milliseconds.
Return values	• `true:` If the event object was set to the signaled state. • `false:` If no event was received during the defined time limit.

7.6.9.5 OnLedChanged events

OnLedChanged

Registers or unregisters an event handler method.

Table 7- 295 OnLedChanged - .NET (C#)

Syntax	`event Delegate_II_EREC_DT_ELT_ELM OnLedChanged;`
Parameters	None. See Delegate_II_EREC_DT_ELT_ELM (Page 295).
Return values	None
Exceptions	None
Note	The event handler method runs in a separate thread.

RegisterOnLedChangedCallback()

When the event occurs, the registered callback function is called. Only one callback function can be registered for the event. Registering a new callback function causes the previous callback function to be deleted.

Table 7- 296 RegisterOnLedChangedCallback() - Native C++

Syntax	`void RegisterOnLedChangedCallback( EventCallback_II_SREC_ST_SRLT_SRLM in_CallbackFunction );`
Parameters	• `EventCallback_II_SREC_ST_SRLT_SRLM in_CallbackFunction:` A callback function that subscribes to an event. See EventCallback_II_SREC_ST_SRLT_SRLM (Page 283).
Return values	None
Note	The callback function runs in a separate thread.

RegisterOnLedChangedEvent()

When the event occurs, the registered event object is set to the signaled state. Only one event object can be registered for the event. Registering a new event object causes the previous event object to be deleted.

Table 7- 297 RegisterOnLedChangedEvent() - Native C++

Syntax	`void RegisterOnLedChangedEvent();` `void RegisterOnLedChangedEvent( HANDLE* in_Event );`
Parameters	• `None:` An internal event object is registered. • `HANDLE* in_Event:` A handle for a user-specific event object. The event object is registered.
Return values	None

UnregisterOnLedChangedCallback()

Unregisters the callback function. When the event occurs, no callback function is called.

Table 7- 298 UnregisterOnLedChangedCallback() - Native C++

Syntax	`void UnregisterOnLedChangedCallback();`
Parameters	None
Return values	None

UnregisterOnLedChangedEvent()

Unregisters the event object.

Table 7- 299 UnregisterOnLedChangedEvent() - Native C++

Syntax	`void UnregisterOnLedChangedEvent();`
Parameters	None
Return values	None

Table 7- 300 UnregisterOnLedChangedEvent() - .NET (C#)

Syntax	`void UnregisterOnLedChangedEvent();`
Parameters	None
Return values	None

WaitForOnLedChangedEvent()

The function blocks the program until the registered event object is in the signaled state or the timeout interval is exceeded.

Table 7- 301 WaitForOnLedChangedEvent() - Native C++

Syntax	`bool WaitForOnLedChangedEvent();`
	`bool WaitForOnLedChangedEvent(`
	`  UINT32 in_Time_ms`
	`);`

Parameters	• `None:` The time limit is set to `INFINITE`. • `UINT32 in_Time_ms:` Value for the time limit in milliseconds.
Return values	• `true:` If the event object was set to the signaled state. • `false:` If no event was received during the defined time limit.

Table 7- 302 WaitForOnLedChangedEvent() - .NET (C#)

Syntax	`bool WaitForOnLedChangedEvent();`
	`bool WaitForOnLedChangedEvent(`
	`  UInt32 in_Time_ms`
	`);`

Parameters	• `None:` The time limit is set to `INFINITE`. • `UInt32 in_Time_ms:` Value for the time limit in milliseconds.
Return values	• `true:` If the event object was set to the signaled state. • `false:` If no event was received during the defined time limit.

7.6.10 Events for acyclic services

7.6.10.1 OnDataRecordRead / OnDataRecordWrite events

OnDataRecordRead

Registers or unregisters an event handler method.

Table 7- 303 OnDataRecordRead - .NET (C#)

Syntax	`event Delegate_II_EREC_DT_SDRI OnDataRecordRead;`
Parameter	None. See Delegate_II_EREC_DT_SDRI (Page 300).
Return values	None
Exceptions	None
Note	The Event-Handler Methode runs in a separate thread.

OnDataRecordWrite

Registers or unregisters an event handler method.

Table 7- 304 OnDataRecordWrite - .NET (C#)

Syntax	`event Delegate_II_EREC_DT_SDR OnDataRecordWrite;`
Parameter	None. See Delegate_II_EREC_DT_SDR (Page 299).
Return values	None
Exceptions	None
Note	The event handler method runs in a separate thread.

RegisterOnDataRecordReadCallback()

When the event occurs, the registered callback function is called. Only one callback function can be registered for the event. Registering a new callback function causes the previous callback function to be deleted.

Table 7- 305 RegisterOnDataRecordReadCallback() - Native C++

Syntax	`void RegisterOnDataRecordReadCallback (`
	`  Event Callback_II_SREC_ST_SDRI in_CallbackFunction`
	`);`

Parameters	• `EventCallback_II_SREC_ST_SDRI in_CallbackFunction:` A callback function that subscribes to the event. See EventCallback_II_SREC_ST_SDRI (Page 288).
Return values	None
Note	The callback function runs in a separate thread.

UnregisterOnDataRecordReadCallback()

Unregisters the callback function. When the event occurs, no callback function is called.

Table 7- 306 UnregisterOnDataRecordReadCallback() - Native C++

Syntax	`void UnregisterOnDataRecordReadCallback();`
Parameters	None
Return values	None

7.6.10.2 OnAlarmNotification events

OnAlarmNotificationDone()

Registers or unregisters an event handler method.

Table 7- 307 OnAlarmNotificationDone() - .NET (C#)

Syntax	`event Delegate_SREC_ST_UINT32_UINT32 OnAlarmNotificationDone;`
Parameters	None. See Delegate_SREC_ST_UINT32_UINT32 (Page 304).
Return values	None
Exceptions	None
Note	The event handler method runs in a separate thread.

RegisterOnAlarmNotificationDoneCallback()

When the event occurs, the registered callback function is called. Only one callback function can be registered for the event. Registering a new callback function causes the previous callback function to be deleted.

Table 7- 308 RegisterOnAlarmNotificationDoneCallback() - Native C++

Syntax	`void RegisterOnAlarmNotificationDoneCallback (`
	` Event Callback_II_SREC_ST_SDRI in_CallbackFunction`
	`);`

Parameters	• `EventCallback_II_SREC_ST_UINT32_UINT32 in_CallbackFunction:` A callback function that subscribes to the event. See EventCallback_II_SREC_ST_UINT32_UINT32 (Page 292).
Return values	None
Note	The callback function runs in a separate thread.

UnregisterOnAlarmNotificationDoneCallback()

Unregisters the callback function. When the event occurs, no callback function is called.

Table 7- 309 UnregisterOnAlarmNotificationDoneCallback() - Native C++

Syntax	`void UnregisterOnAlarmNotificationDoneCallback ();`
Parameters	None
Return values	None

7.6.10.3 OnProcessEvent events

OnProcessEventDone()

Registers or unregisters an event handler method.

Table 7- 310 OnProcessEventDone() - .NET (C#)

Syntax	`event Delegate_SREC_ST_UINT32_UINT32_EPET_UINT32 OnProcessEvent-Done;`
Parameters	None. See Delegate_SREC_ST_UINT32_UINT32_EPET_UINT32. (Page 302)
Return values	None
Exceptions	None
Note	The event handler method runs in a separate thread.

RegisterOnProcessEventDoneCallback()

When the event occurs, the registered callback function is called. Only one callback function can be registered for the event. Registering a new callback function causes the previous callback function to be deleted.

Table 7- 311 RegisterOnProcessEventDoneCallback() - Native C++

Syntax	• `void RegisterOnProcessEventDoneCallback ( EventCallback_II_SREC_ST_UINT32_UINT32_EPET_UINT32 in_CallbackFunction );`
Parameters	• `EventCallback_II_SREC_ST_UINT32_UINT32_EPET_UINT32 in_CallbackFunction:` A callback function that subscribes to the event. See EventCallback_II_SREC_ST_UINT32_UINT32_EPET_UINT32 (Page 290)
Return values	None
Note	The callback function runs in a separate thread.

UnregisterOnProcessEventDoneCallback()

Unregisters the callback function. When the event occurs, no callback function is called.

Table 7- 312 UnregisterOnProcessEventDoneCallback() - Native C++

Syntax	`void UnregisterOnProcessEventDoneCallback ();`
Parameters	None
Return values	None

7.6.10.4 OnPullOrPlugEvent events

OnPullOrPlugEventDone()

Registers or unregisters an event handler method.

Table 7- 313 OnPullOrPlugEventDone() - .NET (C#)

Syntax	`event Delegate_SREC_ST_UINT32_EPPET_UINT32 OnPullOrPlugEventDone;`
Parameters	None. See Delegate_SREC_ST_UINT32_EPPET_UINT32 (Page 301).
Return values	None
Exceptions	None
Note	The event handler method runs in a separate thread.

RegisterOnPullOrPlugEventDoneCallback()

When the event occurs, the registered callback function is called. Only one callback function can be registered for the event. Registering a new callback function causes the previous callback function to be deleted.

Table 7- 314 RegisterOnPullOrPlugEventDoneCallback() - Native C++

Syntax	• `void RegisterOnPullOrPlugEventDoneCallback ( EventCallback_II_SREC_ST_UINT32_EPPET_UINT32 in_CallbackFunction );`
Parameters	• `EventCallback_II_SREC_ST_UINT32_EPPET_UINT32 in_CallbackFunction:` A callback function that subscribes to the event. See EventCallback_II_SREC_ST_UINT32_EPPET_UINT32 (Page 289).
Return values	None
Note	The callback function runs in a separate thread.

UnregisterOnPullOrPlugEventDoneCallback()

Unregisters the callback function. When the event occurs, no callback function is called.

Table 7- 315 UnregisterOnPullOrPlugEventDoneCallback() - Native C++

Syntax	`void UnregisterOnPullOrPlugEventDoneCallback ();`
Parameters	None
Return values	None

7.6.10.5 OnStatusEvent events

OnStatusEventDone()

Registers or unregisters an event handler method.

Table 7- 316 OnStatusEventDone() - .NET (C#)

Syntax	`event Delegate_SREC_ST_UINT32 OnStatusEventDone;`
Parameters	None. See Delegate_SREC_ST_UINT32 (Page 303).
Return values	None
Exceptions	None
Note	The event handler method runs in a separate thread.

RegisterOnStatusEventDoneCallback()

When the event occurs, the registered callback function is called. Only one callback function can be registered for the event. Registering a new callback function causes the previous callback function to be deleted.

Table 7- 317 RegisterOnStatusEventDoneCallback() - Native C++

Syntax	• `void RegisterOnStatusEventDoneCallback ( EventCallback_II_SREC_ST_UINT32 in_CallbackFunction );`
Parameters	• `EventCallback_II_SREC_ST_UINT32 in_CallbackFunction:` A callback function that subscribes to the event. See EventCallback_II_SREC_ST_UINT32 (Page 291).
Return values	None
Note	The callback function runs in a separate thread.

UnregisterOnStatusEventDoneCallback()

Unregisters the callback function. When the event occurs, no callback function is called.

Table 7- 318 UnregisterOnStatusEventDoneCallback() - Native C++

Syntax	`void UnregisterOnStatusEventDoneCallback ();`
Parameters	None
Return values	None

7.6.10.6 OnProfileEvent events

OnProfileEventDone()

Registers or unregisters an event handler method.

Table 7- 319 OnProfileEventDone() - .NET (C#)

Syntax	`event Delegate_SREC_ST_UINT32 OnProfileEventDone;`
Parameters	None. See Delegate_SREC_ST_UINT32 (Page 303).
Return values	None
Exceptions	None
Note	The event handler method runs in a separate thread.

RegisterOnProfileEventDoneCallback()

When the event occurs, the registered callback function is called. Only one callback function can be registered for the event. Registering a new callback function causes the previous callback function to be deleted.

Table 7- 320 RegisterOnProfileEventDoneCallback() - Native C++

Syntax	• `void RegisterOnProfileEventDoneCallback ( EventCallback_II_SREC_ST_UINT32 in_CallbackFunction );`
Parameters	• `EventCallback_II_SREC_ST_UINT32 in_CallbackFunction:` A callback function that subscribes to the event. See EventCallback_II_SREC_ST_UINT32 (Page 291).
Return values	None
Note	The callback function runs in a separate thread.

UnregisterOnProfileEventDoneCallback()

Unregisters the callback function. When the event occurs, no callback function is called.

Table 7- 321 UnregisterOnProfileEventDoneCallback() - Native C++

Syntax	`void UnregisterOnProfileEventDoneCallback ();`
Parameters	None
Return values	None

7.6.10.7 OnUpdateEvent events

OnUpdateEventDone()

Registers or unregisters an event handler method.

Table 7- 322 OnUpdateEventDone() - .NET (C#)

Syntax	`event Delegate_SREC_ST_UINT32 OnUpdateEventDone;`
Parameters	None. See Delegate_SREC_ST_UINT32 (Page 303).
Return values	None
Exceptions	None
Note	The event handler method runs in a separate thread.

RegisterOnUpdateEventDoneCallback()

When the event occurs, the registered callback function is called. Only one callback function can be registered for the event. Registering a new callback function causes the previous callback function to be deleted.

Table 7- 323 RegisterOnUpdateEventDoneCallback() - Native C++

Syntax	• `void RegisterOnUpdateEventDoneCallback ( EventCallback_II_SREC_ST_UINT32 in_CallbackFunction );`
Parameters	• `EventCallback_II_SREC_ST_UINT32 in_CallbackFunction:` A callback function that subscribes to the event. See EventCallback_II_SREC_ST_UINT32 (Page 291).
Return values	None
Note	The callback function runs in a separate thread.

UnregisterOnUpdateEventDoneCallback()

Unregisters the callback function. When the event occurs, no callback function is called.

Table 7- 324 UnregisterOnUpdateEventDoneCallback() - Native C++

Syntax	`void UnregisterOnUpdateEventDoneCallback ();`
Parameters	None
Return values	None

7.6.10.8 RackOrStationFault events

OnRackOrStationFaultEvent

Registers or unregisters an event handler method.

Table 7- 325 OnRackOrStationFaultEvent - .NET (C#)

Syntax	`event Delegate_SREC_ST_UINT32_ERSFET OnRackOrStationFault;`
Parameter	None. See Delegate_SREC_ST_UINT32_ERSFET (Page 305).
Return values	None
Exceptions	None
Note	The event handler method runs in a separate thread.

RegisterOnRackOrStationFaultEventCallback()

When the event occurs, the registered callback function is called. Only one callback function can be registered for the event. Registering a new callback function causes the previous callback function to be deleted.

Table 7- 326 RegisterOnRackOrStationFaultEventCallback() - Native C++

Syntax	`void RegisterOnRackOrStationFaultEventCallback ( EventCallback_II_SREC_ST_UINT32_ERSFET in_CallbackFunction );`
Parameter	• `EventCallback_II_ SREC_ST_UINT32_ERSFET in_CallbackFunction.` A callback function that subscribes to the event. See EventCallback_II_SREC_ST_UINT32_ERSFET (Page 293)
Return values	None
Note	The callback function runs in a separate thread.

UnregisterOnRackOrStationFaultEventCallback()

Unregisters the callback function. When the event occurs, no callback function is called.

Table 7- 327 UnregisterOnRackOrStationFaultEventCallback() - Native C++

Syntax	`void UnregisterOnRackOrStationFaultEventCallback ();`
Parameter	None
Return values	None

7.7 API IRemoteRuntimeManager

7.7.1 Interfaces - Information and settings

Dispose()

Deletes the managed interface and unloads the native components of the user interfaces.

Note

When the interface of the Remote Runtime Manager is deleted, no IInstance interface which was generated by the IRemoteRuntimeManager interface can be used.

The .NET Garbage Collector clears its IRemoteRuntimeManager interface when no active references are present.

Table 7- 328 Dispose() - .NET (C#)

Syntax	`void Dispose()`
Parameters	None
Return values	None

GetVersion()

Returns the version of the remote Runtime Manager. If the function fails, version 0.0 is returned.

Table 7- 329 GetVersion() - Native C++

Syntax	`UINT32 GetVersion();`
Parameters	None
Return values	`UINT32`: Remote Runtime Manager Version (`HIWORD` = Major, `LOWORD` = Minor)

Table 7- 330 Version { get; } - .NET (C#)

Syntax	`UInt32 Version { get; }`
Parameters	None
Return values	`Uint32`: Remote Runtime Manager Version (`HIWORD` = Major, `LOWORD` = Minor)

GetIP() / IP { get; }

Returns the IP address of the PC on which the remote Runtime Manager is running. If the function fails, the return value is 0.

Table 7- 331 GetIP() - Native C++

Syntax	`UIP GetIP();`
Parameters	None
Return values	`UIP`: Returns the IP address of the PC on which the Runtime Manager is running.

Table 7- 332 IP { get; } - .NET (C#)

Syntax	`SIP IP { get; }`
Parameters	None
Return values	`SIP`: Returns the IP address of the PC on which the Runtime Manager is running.

GetPort() / Port { get; }

Returns the open port of the PC on which the remote Runtime Manager is running. If the function fails, the return value is 0.

Table 7- 333 GetPort() - Native C++

Syntax	`UINT16 GetPort();`
Parameters	None
Return values	`UINT16`: Open port of the PC on which the remote Runtime Manager is running.

Table 7- 334 Port { get; } - .NET (C#)

Syntax	`UInt16 Port { get; }`
Parameters	None
Return values	`UInt16`: Open port of the PC on which the remote Runtime Manager is running.

GetRemoteComputerName() / RemoteComputerName { get; }

Returns the name of the PC on which the remote Runtime Manager is running.

Table 7- 335 GetRemoteComputerName() - Native C++

Syntax	`ERuntimeErrorCode GetRemoteComputerName( WCHAR* inout_Name, UINT32 in_ArrayLength );`	
Parameters	• `WCHAR* inout_Name:` A user-allocated array for the computer name. • `UINT32 in_ArrayLength:` The array length. The array should be longer than `MAX_COMPUTERNAME_LENGTH`.	
Return values	Runtime error code	Condition
	`SREC_OK`	The function is successful.
	`SREC_INTERFACE_REMOVED`	The interface is disconnected from the remote Runtime Manager.
	`SREC_INDEX_OT_OF_RANGE`	The array is too small to accommodate the computer name.

Table 7- 336 RemoteComputerName { get; } - .NET (C#)

Syntax	`string RemoteComputerName { get; }`	
Parameters	None	
Return values	`string:` Name of the PC on which the remote Runtime Manager is running.	
Exceptions	`Siemens.Simatic.Simulation.Runtime.SimulationRuntimeException`	
	Runtime error code	Condition
	`ERuntimeError-Code.InterfaceRemoved`	The interface is disconnected from the remote Runtime Manager.
	`ERuntimeError-Code.IndexOutOfRange`	The array is too small to accommodate the computer name.

Disconnect()

Closes the connection to the remote Runtime Manager.

Note

All applications that are connected to the remote Runtime Manager lose this connection.

Table 7- 337 Disconnect() - Native C++

Syntax	`ERuntimeErrorCode Disconnect();`	
Parameters	None	
Return values	Runtime error code	Condition
	`SREC_OK`	The function is successful.
	`SREC_INTERFACE_REMOVED`	The interface is disconnected from the remote Runtime Manager.
	`SREC_TIMEOUT`	The function does not return on time.

Table 7- 338 Disconnect() - .NET (C#)

Syntax	`void Disconnect();`	
Parameters	None	
Return values	None	
Exceptions	`Siemens.Simatic.Simulation.Runtime.SimulationRuntimeException`	
	Runtime error code	Condition
	`ERuntimeError-Code.InterfaceRemoved`	The interface is disconnected from the remote Runtime Manager.
	`ERuntimeErrorCode.Timeout`	The function does not return on time.

7.7.2 Simulation Runtime instances

7.7.2.1 Simulation Runtime instances (remote)

GetRegisteredInstancesCount()

Returns the number of instances that are registered in Runtime Manager. If the function fails, the return value is 0.

Table 7- 339 GetRegisteredInstancesCount() - Native C++

Syntax	`UINT32 GetRegisteredInstancesCount();`
Parameters	None
Return values	`UINT32`: Number of available instances.

GetRegisteredInstanceInfoAt()

Returns information about an already registered instance.

You can use the ID or name to create an interface of this instance (see `CreateInterface()`).

Table 7- 340 GetRegisteredInstanceInfoAt() - Native C++

Syntax	`ERuntimeErrorCode GetRegisteredInstanceInfoAt(`
	`  UINT32 in_Index,`
	`  SInstanceInfo* out_InstanceInfo`
	`);`	

Parameters	• `UINT32 in_Index:` Index of the created instance from which you want to receive the information. The index must be less than the value you receive when you call `GetRegis-teredInstanceCount()`. • `SInstanceInfo* out_InstanceInfo:` The information with name and ID of the instance. See SInstanceInfo (Page 314).	
Return values	Runtime error code	Condition
	`SREC_OK`	The function is successful.
	`SREC_INTERFACE_REMOVED`	The interface is disconnected from the remote Runtime Manager.
	`SREC_TIMEOUT`	The function does not return on time.
	`SREC_INDEX OUT_OF_RANGE`	There is no instance information for this index.

RegisteredInstanceInfo { get; }

Returns information about an already registered instance. You can use the ID or name of this instance to create an interface of this instance, see `CreateInterface()`.

Table 7- 341 RegisterInstanceInfo { get; } - .NET (C#)

Syntax	`SInstanceInfo[] RegisteredInstanceInfo { get; }`	
Parameters	None	
Return values	None	
Exceptions	`Siemens.Simatic.Simulation.Runtime.SimulationRuntimeException`	
	Runtime error code	Condition
	`ERuntimeError-Code.InterfaceRemoved`	The interface is disconnected from the remote Runtime Manager.
	`ERuntimeErrorCode.Timeout`	The function does not return on time.

RegisterInstance()

Registers a new instance of a virtual controller in Runtime Manager. Creates and returns an interface of this instance.

Table 7- 342 RegisterInstance() - Native C++

Syntax	`ERuntimeErrorCode RegisterInstance( IInstance** out_InstanceInterface );`
	`ERuntimeErrorCode RegisterInstance( WCHAR* in_InstanceName, IInstance** out_InstanceInterface );`
	`ERuntimeErrorCode RegisterInstance( ECPUType in_CPUType, IInstance** out_InstanceInterface );`
	`ERuntimeErrorCode RegisterInstance( ECPUType in_CPUType, WCHAR* in_InstanceName, IInstance** out_InstanceInterface );`

Parameters	• `ECPUType in_CPUType:` Defines which CPU type is simulated at the start of the instance. The default setting is `"SRCT_1500_Unspecified"`. When a different CPU type is loaded via STEP 7 or from the Virtual Memory Card, this CPU type applies. • `WCHAR* in_InstanceName:` Name to be assigned to the instance. Every instance must have a unique name. If no name is assigned when registering a new instance, the instance is given the name `"Instance_#"` (# is the ID of the instance). If this name already exists, the name `"Instance_#.#"` is used, in which the second # is a counter that is incremented until the name is unique. The length of the name must be less than `DINSTANCE_NAME_LENGTH`. See Data types (Page 306). • `IInstance** out_InstanceInterface:` Pointer to a Simulation Runtime interface pointer. The pointer **must** be initialized with `NULL`. The interface is created within the function.

Return values	Runtime error code	Condition
	SREC_OK	The function is successful.
	SREC_INTERFACE_REMOVED	The interface is disconnected from the remote Runtime Manager.
	SREC_TIMEOUT	The function does not return on time.
	SREC_WRONG_ARGUMENT	The name or the IInstance pointer is invalid.
	SREC_LIMIT_REACHED	There are already 16 instances registered in Runtime Manager.
	SREC_ALREADY_EXISTS	An instance with this name already exists.

Example C++	`ISimulationRuntimeManager * api = NULL;`
	`ERuntimeErrorCode result = Initialize(&api);`
	
	`// Example: How To Create And Register An Instance`
	`// And To Get An Interface Of The Instance The Same Time`
	`IInstance* psa = NULL;`
	`if (result == SREC_OK)`
	`{`
	`result = api->RegisterInstance(&psa);`
	`}`	

Note

Native C++

If you no longer require the interface, delete it.

See DestroyInterface() (Page 101).

Table 7- 343 RegisterInstance() - .NET (C#)

Syntax	`IInstance RegisterInstance();`
	`IInstance RegisterInstance(`
	`string in_InstanceName`
	`);`
	`IInstance RegisterInstance(`
	`ECPUType in_CPUType`
	`);`
	`IInstance RegisterInstance(`
	`ECPUType in_CPUType`
	`string in_InstanceName`
	`);`

Parameters	• `ECPUType in_CPUType:` Defines which CPU type is simulated at the start of the instance. The default setting is `"ECPUType.Unspecified"`. When a different CPU type is loaded via STEP 7 or from the Virtual Memory Card, this CPU type applies. • `string in_InstanceName:` Name to be assigned to the instance. Every instance must have a unique name. If no name is assigned when registering a new instance, the instance is given the name `"Instance_#"` (# is the ID of the instance). If this name already exists, the name `"Instance_#.#"` is used, in which the second # is a counter that is incremented until the name is unique. The length of the name must be less than `DINSTANCE_NAME_LENGTH`. See Data types (Page 306).
Return values	If the function is successful, an interface of a virtual controller. Otherwise, a Null pointer.
Exceptions	`Siemens.Simatic.Simulation.Runtime.SimulationRuntimeException`

Runtime error code	Condition
`ERuntimeError-Code.InterfaceRemoved`	The interface is disconnected from the remote Runtime Manager.
`ERuntimeErrorCode.Timeout`	The function does not return on time.
`ERuntimeErrorCode.WrongArgument`	The name is invalid.
`ERuntimeErrorCode.LimitReached`	There are already 16 instances registered in Runtime Manager.
`ERuntimeErrorCode.AlreadyExists`	An instance with this name already exists.

RegisterCustomInstance()

Registers a new instance of a virtual controller in Runtime Manager. Creates and returns an interface of this instance.

Table 7- 344 RegisterCustomInstance() - Native C++

Syntax	`ERuntimeErrorCode RegisterCustomInstance(`
	`  WCHAR* in_VplcDll,`
	`  IInstance** out_InstanceInterface`
	`);`
	`ERuntimeErrorCode RegisterCustomInstance(`
	`  WCHAR* in_VplcDll,`
	`  WCHAR* in_InstanceName,`
	`  IInstance** out_InstanceInterface`
	`);`	

Parameters	• `WCHAR* in_VplcDll:` The complete path to the DLL of the virtual controller that Siemens.Simatic.Simulation.Runtime.Instance.exe loads at PowerOn. • `WCHAR* in_InstanceName:` Name to be assigned to the instance. Every instance must have a unique name. If no name is assigned when registering a new instance, the instance is given the name `"Instance_#"` (# is the ID of the instance). If this name already exists, the name `"Instance_#.#"` is used, in which the second # is a counter that is incremented until the name is unique. The length of the name must be less than `DINSTANCE_NAME_LENGTH`. See Data types (Page 306). • `IInstance** out_InstanceInterface:` Pointer to a Simulation Runtime interface pointer. The pointer must be initialized with `NULL`. The interface is created within the function.	
Return values	Runtime error code	Condition
	`SREC_OK`	The function is successful.
	`SREC_INTERFACE_REMOVED`	The interface is disconnected from the remote Runtime Manager.
	`SREC_TIMEOUT`	The function does not return on time.
	`SREC_WRONG_ARGUMENT`	The DLL name, the instance name or the IInstance pointer is invalid.
	`SREC_LIMIT_REACHED`	There are already 16 instances registered in Runtime Manager.
	`SREC_ALREADY_EXISTS`	An instance with this name already exists.

Example C++	`ISimulationRuntimeManager * api = NULL;`
	`ERuntimeErrorCode result = Initialize(&api);`
	
	`// Example: How To Create And Register An Instance`
	`// And To Get An Interface Of The Instance The Same Time`
	`IInstance* psa = NULL;`
	`if (result == SREC_OK)`
	`{`
	`  result = api->`**RegisterCustomInstance**`("C:\\Temp\\vplc.dll");`
	`}`	

Note

Native C++

If you no longer require the interface, delete it.

See DestroyInterface() (Page 101).

Table 7- 345 RegisterCustomInstance() - .NET (C#)

Syntax	`IInstance RegisterCustomInstance(`
	`  string in_VplcDll`
	`);`
	`IInstance RegisterCustomInstance(`
	`  string in_VplcDll,`
	`  string in_InstanceName`
	`);`	

Parameters	• `string in_VplcDll:` The complete path to the DLL of the virtual controller that Siemens.Simatic.Simulation.Runtime.Instance.exe loads at PowerOn. • `string in_InstanceName:` Name to be assigned to the instance. Every instance must have a unique name. If no name is assigned when registering a new instance, the instance is given the name `"Instance_#"` (# is the ID of the instance). If this name already exists, the name `"Instance_#.#"` is used, in which the second # is a counter that is incremented until the name is unique. The length of the name must be less than `DINSTANCE_NAME_LENGTH`. See Data types (Page 306).	
Return values	If the function is successful, an interface of a virtual controller; otherwise a Null pointer.	
Exceptions	`Siemens.Simatic.Simulation.Runtime.SimulationRuntimeException`	
	Runtime error code	Condition
	`ERuntimeError-Code.InterfaceRemoved`	The interface is disconnected from the remote Runtime Manager.
	`ERuntimeErrorCode.Timeout`	The function does not return on time.
	`ERuntimeErrorCode.WrongArgument`	The name or the ID is invalid.
	`ERuntimeErrorCode.LimitReached`	There are already 16 instances registered in Runtime Manager.
	`ERuntimeErrorCode.AlreadyExists`	An instance with this name already exists.

CreateInterface()

Creates and returns an interface of an already registered instance of a virtual controller.

The instance could have been registered via the application or another application that uses the Simulation Runtime API.

Table 7- 346 CreateInterface() - Native C++

Syntax	`ERuntimeErrorCode CreateInterface(`
	`  WCHAR* in_InstanceName,`
	`  IInstance** out_InstanceInterface`
	`);`
	`ERuntimeErrorCode CreateInterface(`
	`  INT32 in_InstanceID,`
	`  IInstance** out_InstanceInterface`
	`);`	

Parameters	• `INT32 in_InstanceID:` The ID of the registered instance from which you want to receive the interface. • `WCHAR* in_InstanceName:` The name of the registered instance from which you want to receive the interface. • `IInstance** out_InstanceInterface:` Pointer to a Simulation Runtime interface pointer. The pointer must be initialized with `NULL`. The interface is created within the function.	
Return values	Runtime error code	Condition
	`SREC_OK`	The function is successful.
	`SREC_INTERFACE_REMOVED`	The interface is disconnected from the remote Runtime Manager.
	`SREC_TIMEOUT`	The function does not return on time.
	`SREC_WRONG_ARGUMENT`	The name, the ID or the IInstance- pointer is invalid.
	`SREC_DOES_NOT_EXIST`	The instance is not registered in Runtime Manager.

Example C++	`ISimulationRuntimeManager * api = NULL;`
	`ERuntimeErrorCode result = Initialize(&api);`
	
	`IInstance* psa1 = NULL;`
	`IInstance* psa2 = NULL;`
	`if (result == SREC_OK)`
	`{`
	`  result = api->CreateInterface(0, &psa1);`
	`  result = api->CreateInterface(0, &psa2); // psa2 will be the same as psa1`
	`}`	

Example C++	`ISimulationRuntimeManager * api = NULL;`
	`ERuntimeErrorCode result = Initialize(&api);`
	
	`IInstance* psa = NULL;`
	`if (result == SREC_OK)`
	`{`
	`  result = api->CreateInterface(L"My SimulationRuntime Instance", &psa);`
	`}`	

Note

Native C++

If you no longer require the interface, delete it.

See DestroyInterface() (Page 101)

Table 7- 347 CreateInterface() - .NET (C#)

Syntax	`IInstance CreateInterface( string in_InstanceName );` `IInstance CreateInterface( INT32 in_InstanceID );`	
Parameters	• `INT32 in_InstanceID:` The ID of the registered instance from which you want to receive the interface. • `string in_InstanceName:` The name of the registered instance from which you want to receive the interface.	
Return values	If the function is successful, an interface of a virtual controller; otherwise a Null pointer.	
Exceptions	`Siemens.Simatic.Simulation.Runtime.SimulationRuntimeException`	
	Runtime error code	Condition
	`ERuntimeError-Code.InterfaceRemoved`	The interface is disconnected from the remote Runtime Manager.
	`ERuntimeErrorCode.Timeout`	The function does not return on time.
	`ERuntimeErrorCode.WrongArgument`	The name or the ID is invalid.
	`ERuntimeErrorCode.DoesNotExists`	The instance is not registered in Runtime Manager.

7.7.3 Events

7.7.3.1 OnConnectionLost events

Description

The event is triggered when the connection to the Remote Runtime Manager has been terminated.

OnConnectionLost

Registers or unregisters an event handler method.

Table 7- 348 OnConnectionLost - .NET (C#)

Syntax	`event Delegate_IRRTM OnConnectionLost;`
Parameters	None. See Delegate_IRRTM (Page 297)
Return values	None
Exceptions	None
Note	The event handler method runs in a separate thread.

RegisterOnConnectionLostCallback()

When the event occurs, the registered callback function is called. Only one callback function can be registered for the event. Registering a new callback function causes the previous callback function to be unregistered.

Table 7- 349 RegisterOnConnectionLostCallback() - Native C++

Syntax	`void RegisterOnConnectionLostCallback( EventCallback_IRRTM in_CallbackFunction );`
Parameters	• `EventCallback_IRRTM in_CallbackFunction:` A callback function that subscribes to an event. See EventCallback_IRRTM (Page 285).
Return values	None
Note	The callback function runs in a separate thread.

RegisterOnConnectionLostEvent()

When the event occurs, the registered event object is set to the signaled state. Only one event object can be registered for the event. Registration of a new event object causes the previous event object to be deleted.

Table 7- 350 RegisterOnConnectionLostEvent() - Native C++

Syntax	`void RegisterOnConnectionLostEvent();` `void RegisterOnConnectionLostEvent( HANDLE* in_Event );`
Parameters	• `None:` An internal event object is registered. • `HANDLE* in_Event:` A handle for a user-specific event object. The event object is registered.
Return values	None

Table 7- 351 RegisterOnConnectionLostEvent() - .NET (C#)

Syntax	`void RegisterOnConnectionLostEvent();`
Parameters	None
Return values	None

UnregisterOnConnectionLostCallback()

Unregisters the callback function. When the event occurs, no callback function is called.

Table 7- 352 UnregisterOnConnectionLostCallback() - Native C++

Syntax	`void UnregisterOnConnectionLostCallback();`
Parameters	None
Return values	None

UnregisterOnConnectionLostEvent()

Unregisters the event object.

Table 7- 353 UnregisterOnConnectionLostEvent() - Native C++

Syntax	`void UnregisterOnConnectionLostEvent();`
Parameters	None
Return values	None

Table 7- 354 UnregisterOnConnectionLostEvent() - .NET (C#)

Syntax	`void UnregisterOnConnectionLostEvent();`
Parameters	None
Return values	None

WaitForOnConnectionLostEvent()

The function blocks the program until the registered event object is in the signaled state or the timeout interval is exceeded.

Table 7- 355 WaitForOnConnectionLostEvent() - Native C++

Syntax	`bool WaitForOnConnectionLostEvent();`
	`bool WaitForOnConnectionLostEvent(`
	`  UINT32 in_Time_ms )`
	`;`

Parameters	• `None:` The time limit is set to `INFINITE`. • `UINT32 in_Time_ms:` Value for the time limit in milliseconds.
Return values	• `true:` If the event object was set to the signaled state. • `false:` If no event was received during the defined time limit.

Table 7- 356 WaitForOnConnectionLostEvent() - .NET (C#)

Syntax	`bool WaitForOnConnectionLostEvent();` `bool WaitForOnConnectionLostEvent( UInt32 in_Time_ms ) ;`
Parameters	• `None:` The time limit is set to `INFINITE`. • `UInt32 in_Time_ms:` Value for the time limit in milliseconds.
Return values	• `true:` If the event object was set to the signaled state. • `false:` If no event was received during the defined time limit.

7.8 Data types

Note

Unsupported data types

The Runtime API does not support the `STRING` and `WSTRING` data types.

Supported data types

In PLCSIM Advanced V2.0, the Runtime API supports the data types of the S7-1500 CPUs.

Converting data types

When writing, data types are not transferred BCD-coded but mapped onto primitive data types.

The data types Counter, Date and Time must be transferred to the API BDC-coded so that the values are written to the counter and no incorrect values are returned when reading.

For these data types, you must perform a BCD conversion before writing and a BCD back-conversion after reading.

Example:

If the value 999 is transferred to the API as 2457_H, then `Write` modifies the value 2457_H to 999. Without BCD conversion, there is no `UInt16` value and `Write` writes no value at all.

Additional information

For information on data types and conversion, refer to section "Data types" in the STEP 7 Professional (https://support.industry.siemens.com/cs/ww/en/view/109747136) System Manual.

7.8.1 DLL import functions (Native C++)

7.8.1.1 ApiEntry_Initialize

Description

Type of the central entry point for the API library (DLL).

Table 7- 357 ApiEntry_Initialize - Native C++

Syntax	`typedef ERuntimeErrorCode(*ApiEntry_Initialize)( ISimulationRuntimeManager** out_RuntimeManagerInterface );`	
Parameters	• `ISimulationRuntimeManager** out_SimulationRuntimeManagerInterface:` Pointer to a Runtime Manager interface pointer. The pointer must be initialized with NULL. The interface is created within the function. • `UINT32 in_InterfaceVersion:` Version of the API interface to be downloaded: `API_DLL_INTERFACE_VERSION`.	
Return values	Runtime error code	Condition
	`SREC_OK`	The function is successful.
	`SREC_WRONG_ARGUMENT`	The pointer to the Runtime Manager interface is NULL.
	`SREC_WRONG_VERSION`	The version of the interface in use does not match the version of the API library (DLL).
	`SREC_CONNECTION_ERROR`	Unable to establish a connection to the Runtime Manager.

7.8.1.2 ApiEntry_DestroyInterface

Description

Type of the entry point for DestroyInterface (Page 101).

Table 7- 358 ApiEntry_DestroyInterface - Native C++

Syntax	`typedef ERuntimeErrorCode(*ApiEntry_DestroyInterface)( IBaseInterface* in_Interface );`	
Parameters	• `IBaseInterface* in_Interface:` The interface to be deleted.	
Return values	Runtime error code	Condition
	`SREC_OK`	The function is successful.
	`SREC_WRONG_ARGUMENT`	The pointer to the interface is NULL.

7.8.2 Event callback functions (Native C++)

7.8.2.1 EventCallback_VOID

Description

Table 7- 359 EventCallback_VOID - Native C++

Syntax	`typedef void (*EventCallback_VOID)();`
Parameters	None
Return values	None

7.8.2.2 EventCallback_II_SREC_ST

Description

Table 7- 360 EventCallback_II_SREC_ST - Native C++

Syntax	`typedef void (*EventCallback_II_SREC_ST)(`
	` IInstance* in_Sender,`
	` ERuntimeErrorCode in_ErrorCode,`
	` SYSTEMTIME in_SystemTime`
	`);`

Parameters	• `IInstance* in_Sender:` An interface of the instance that receives this event. • `ERuntimeErrorCode in_ErrorCode:` A possible error code. • `SYSTEMTIME in_SystemTime:` The virtual system time of the virtual controller at the time when this event was triggered.
Return values	None

7.8.2.3 EventCallback_II_SREC_ST_SROS_SROS

Description

Table 7- 361 EventCallback_II_SREC_ST_SROS_SROS - Native C++

Syntax	`typedef void (*EventCallback_II_SREC_ST_SROS_SROS)(`
	`IInstance* in_Sender,`
	`ERuntimeErrorCode in_ErrorCode,`
	`SYSTEMTIME in_SystemTime,`
	`EOperatingState in_PrevState,`
	`EOperatingState in_OperatingState`
	`);`	

Parameters	• `IInstance* in_Sender:` An interface of the instance that receives this event. • `ERuntimeErrorCode in_ErrorCode:` A possible error code. • `SYSTEMTIME in_SystemTime:` The virtual system time of the virtual controller at the time when this event was triggered. • `EOperatingState in_PrevState:` The operating state before the change. • `EOperatingState in_OperatingState:` The current operating state.	
Return values	None	
Error codes	Runtime error code	Condition
	`SREC_OK`	The function is successful.
	`SREC_WARNING_TRIAL_MODE_ACTIVE`	No license available. You can use the instance without restrictions with the Trial License. Afterwards, the instance is shut down.
	`SREC_LICENSE_NOT_FOUND`	Test mode has expired.
	`SREC_COMMUNICATION_INTERFACE_NOT_AVAILABLE`	A problem has occurred with the selected communication interface. Check your settings.

7.8.2.4 EventCallback_II_SREC_ST_SRLT_SRLM

Description

Table 7- 362 EventCallback_II_SREC_ST_SRLT_SRLM - Native C++

Syntax	`typedef void (*EventCallback_II_SREC_ST_SRLT_SRLM)(`
	`  IInstance* in_Sender,`
	`  ERuntimeErrorCode in_ErrorCode,`
	`  SYSTEMTIME in_SystemTime,`
	`  ELEDType in_LEDType,`
	`  ELEDMode in_LEDMode,`
	`);`

Parameters	• `IInstance* in_Sender:` An interface of the instance that receives this event. • `ERuntimeErrorCode in_ErrorCode:` A possible error code. • `SYSTEMTIME in_SystemTime:` The virtual system time of the virtual controller at the time when this event was triggered. • `ELEDType in_LEDType:` The LED type that changed its state. • `ELEDMode in_LEDMode:` The new state of the LED display.
Return values	None

7.8.2.5 EventCallback_II_SREC_ST_UINT32_INT64_INT64_UINT32

Description

Table 7- 363 EventCallback_II_SREC_ST_UINT32_INT64_INT64_UINT32 - Native C++

Syntax	`typedef void (*EventCallback_II_SREC_ST_UINT32_INT64_INT64_UINT32)( IInstance* in_Sender, ERuntimeErrorCode in_ErrorCode, SYSTEMTIME in_SystemTime, UINT32 in_PipId, INT64 in_TimeSinceSameSyncPoint_ns, INT64 in_TimeSinceAnySyncPoint_ns, UINT32 in_SyncPointCount );`
Parameters	• `IInstance* in_Sender:` An interface of the instance that receives this event. • `ERuntimeErrorCode in_ErrorCode:` A possible error code. • `SYSTEMTIME in_SystemTime:` The virtual system time of the virtual controller at the time when this event was triggered. • `UINT32 in_PipId:` The ID of the process image partition (PIP) that triggers this event. 0 for the cycle control point (End of cycle). • `INT64 in_TimeSinceSameSyncPoint_ns:` The virtual time (in nanoseconds) since the last synchronization point of the same process image partition ID was reached. For the time-controlled operating modes (Page 80): The runtime since the last call of the `StartProcessing()` function. • `INT64 in_TimeSinceAnySyncPoint_ns:` The virtual time (in nanoseconds) since the last synchronization point of any process image partition ID was reached. For the time-controlled operating modes: The runtime since the last call of the `StartProcessing()` function. • `UINT32 in_SyncPointCount:` The number of synchronization points since the last event. If the events are triggered faster than they are received, multiple events are combined into one event. In this case, this value contains the number of cycles since the last event was received.
Return values	None

7.8.2.6 EventCallback_IRRTM

Description

Table 7- 364 EventCallback_IRRTM - Native C++

Syntax	`typedef void (*EventCallback_IRRTM)( IRemoteRuntimeManager* in_Sender );`
Parameters	• `IRemoteRuntimeManager* in_Sender:` An interface of the remote Runtime Manager that receives this event.
Return values	None

7.8.2.7 EventCallback_SRCC_UINT32_UINT32_INT32

Description

Table 7- 365 EventCallback_SRCC_UINT32_UINT32_INT32 - Native C++

Syntax	`ERuntimeConfigChanged in_RuntimeConfigChanged, UINT32 in_Param1, UINT32 in_Param2, INT32 in_Param3 );`			
Parameters	`ERuntimeConfigChanged in_RuntimeConfigChanged`	`UInt32 in_Param1`	`UInt32 in_Param2`	`Int32 in_Param3`
	`SRCC_INSTANCE_REGISTERED`	-	-	ID of the registered instance
	`SRCC_INSTANCE_UNREGISTERED`	-	-	ID of the unregistered instance
	`SRCC_CONNECTION_OPENED`	IP of the remote Runtime Manager	Port of the remote Runtime Manager	-
	`SRCC_CONNECTION_CLOSED`	IP of the remote Runtime Manager	Port of the remote Runtime Manager	-
	`SRCC_PORT_OPENED`	The open port	-	-
	`SRCC_PORT_CLOSED`	-	-	-
Return values	None			

7.8.2.8 EventCallback_II_SREC_ST_SRICC_UINT32_UINT32_UINT32_UINT32

Description

Table 7- 366 EventCallback_II_SREC_ST_SRICC_UINT32_UINT32_UINT32_UINT32 - Native C++

<table>
<tr><td>Syntax</td><td colspan="5"><pre>typedef void
(*EventCallback_II_SREC_ST_SRICC_UINT32_UINT32_UINT32_UINT32)(
 IInstance* in_Sender,
 ERuntimeErrorCode in_ErrorCode, SYSTEMTIME in_SystemTime,
 EInstanceConfigChanged in_InstanceConfigChanged,
 UINT32 in_Param1,
 UINT32 in_Param2,
 UINT32 in_Param3,
 UINT32 in_Param4
);</pre></td></tr>
<tr><td rowspan="5">Parameters</td><td colspan="5"><code>IInstance in_Sender:</code>
An interface of the instance that receives this event.
<code>ERuntimeErrorCode in_ErrorCode:</code>
A possible error code.
<code>SYSTEMTIME in_SystemTime:</code>
The virtual system time of the virtual controller at the time when this event was triggered.</td></tr>
<tr><td>EIn-
stanceCon-
figChanged
in_Instance
Con-
figChanged</td><td>UINT32
in_Param1</td><td>UINT32
in_Param2</td><td>UINT32
in_Param3</td><td>UINT32
in_Param4</td></tr>
<tr><td>SRICC_HARDW
ARE_SOFTWAR
E_CHANGED</td><td>-</td><td>-</td><td>-</td><td>-</td></tr>
<tr><td>SRICC_IP_CH
ANGED</td><td>The ID of the interface</td><td>The new IP</td><td>The new sub-net mask</td><td>The new standard gateway</td></tr>
<tr><td></td><td></td><td></td><td></td><td></td></tr>
<tr><td>Return values</td><td colspan="5">None</td></tr>
</table>

7.8.2.9 EventCallback_II_SREC_ST_SDRI

Description

Table 7- 367 EventCallback_II_SREC_ST_SDRI - Native C++

Syntax	`typedef void (*EventCallback_II_SREC_ST_SDRI)(`
	`  IInstance* in_Sender,`
	`  ERuntimeErrorCode in_ErrorCode,`
	`  SYSTEMTIME in_SystemTime,`
	`  SDataRecordInfo in_DataRecordInfo`
	`);`

Parameters	• `IInstance* in_Sender:` An interface of the instance that receives this event. • `ERuntimeErrorCode in_ErrorCode:` A possible error code. • `SYSTEMTIME in_SystemTime:` The virtual system time of the virtual controller at the time when this event was triggered. • `SDataRecordInfo in_DataRecordInfo:` The structure `SDataRecordInfo` contains the following information: – The HW identifier from which the CPU wants to read the data record – The index of the collected data record – The maximum size of the data record which the IO device can transfer.
Return values	None

7.8.2.10 EventCallback_II_SREC_ST_SDR

Description

Table 7- 368 EventCallback_II_SREC_ST_SDR - .NET (C#)

Syntax	`typedef void (*EventCallback_II_SREC_ST_SDR)(`
	`IInstance* in_Sender,`
	`ERuntimeErrorCode in_ErrorCode,`
	`SYSTEMTIME in_SystemTime,`
	`SDataRecord in_DataRecord`
	`);`

Parameters	• `IInstance* in_Sender:` An interface of the instance that receives this event. • `ERuntimeErrorCode in_ErrorCode:` A possible error code. • `SYSTEMTIME in_SystemTime:` The virtual system time of the virtual controller at the time when this event was triggered. • `SDataRecord in_DataRecord:` The structure `SDataRecord` contains the following information: – The HW identifier to which the CPU wants to write the data record – The index of the supplied data record – Size of data record – The data record
Return values	None

7.8.2.11 EventCallback_II_SREC_ST_UINT32_EPPET_UINT32

Description

Table 7- 369 EventCallback_II_SREC_ST_UINT32_EPPET_UINT32 - Native C++

Syntax	`typedef void (*EventCallback_II_SREC_ST_UINT32_EPPET_UINT32)(`
	`IInstance* in_Sender,`
	`ERuntimeErrorCode in_ErrorCode,`
	`SYSTEMTIME in_SYSTEMTIME,`
	`UINT32 in_HardwareIdentifier,`
	`EPullOrPlugEventType in_PullOrPlugEventType,`
	`UINT32 in_SequenceNumber`
	`);`

Parameters	• `IInstance* in_Sender:` An interface of the instance that receives this event. • `ERuntimeErrorCode in_ErrorCode:` A possible error code. • `SYSTEMTIME in_SYSTEMTIME:` The virtual system time of the virtual controller at the time when this event was triggered. • `UINT32 in_HardwareIdentifier:` The hardware identifier of the module or submodule which sends the pull/plug event. • `EPullOrPlugEventType in_PullOrPlugEventType:` A value from the list of predefined types of events for S7 modules, see EPullOrPlugEventType (Page 344). • `UINT32 in_SequenceNumber:` PLCSIM Advanced assigns a unique consecutive number to each interrupt event. According to PROFINET standard the sequence number is 10 bits wide (1 to $7FF_H$). When the highest number is reached the numbering starts again at 1. **Note** In a real hardware system the IO controller uses the sequence number to check if it has lost a hardware interrupt. During the simulation, the sequence number creates the relation between interrupt request and the associated acyclic alarm.
Return values	None

7.8.2.12 EventCallback_II_SREC_ST_UINT32_UINT32_EPET_UINT32

Description

Table 7- 370 EventCallback_II_SREC_ST_UINT32_UINT32_EPET_UINT32 - Native C++

Syntax	`typedef void (*EventCallback_II_SREC_ST_UINT32_UINT32_EPET_UINT32)(`
	`IInstance* in_Sender,`
	`ERuntimeErrorCode in_ErrorCode,`
	`SYSTEMTIME in_SystemTime,`
	`UINT32 in_HardwareIdentifier,`
	`UINT32 in_Channel,`
	`EProcessEventType in_ProcessEventType,`
	`UINT32 in_SequenceNumber`
	`);`

Parameters	• `IInstance* in_Sender:` An interface of the instance that receives this event. • `ERuntimeErrorCode in_ErrorCode:` A possible error code. • `SYSTEMTIME in_SystemTime:` The virtual system time of the virtual controller at the time when this event was triggered. • `UINT32 in_HardwareIdentifier:` The hardware identifier of the IO module that sends the process event. • `UINT32 in_Channel:` The channel of the IO module which sends the process event. • `EProcessEventType in_ProcessEventType:` A value from the list of predefined types of events for S7 modules, see EProcessEventType (Page 344). • `UINT32 in_SequenceNumber:` PLCSIM Advanced assigns a unique consecutive number to each interrupt event. According to PROFINET standard the sequence number is 10 bits wide (1 to $7FF_H$). When the highest number is reached the numbering starts again at 1. **Note** In a real hardware system the IO controller uses the sequence number to check if it has lost a hardware interrupt. During the simulation, the sequence number creates the relation between interrupt request and the associated acyclic alarm.
Return values	None

7.8.2.13 EventCallback_II_SREC_ST_UINT32

Description

Table 7- 371 EventCallback_II_SREC_ST_UINT32 - Native C++

Syntax	`typedef void (*EventCallback_II_SREC_ST_UINT32)(`
	`IInstance* in_Sender,`
	`ERuntimeErrorCode in_ErrorCode,`
	`SYSTEMTIME in_SystemTime,`
	`UINT32 in_HardwareIdentifier);`
	`);`

Parameters	• `IInstance* in_Sender:` An interface of the instance that receives this event. • `ERuntimeErrorCode in_ErrorCode:` A possible error code. • `SYSTEMTIME in_SYSTEMTIME:` The virtual system time of the virtual controller at the time when this event was triggered. • `UINT32 in_HardwareIdentifier:` The hardware identifier of the module or submodule which generates the status, update or Profile event. The identifier must belong to a hardware component in the currently loaded project.
Return values	None

7.8.2.14 EventCallback_II_SREC_ST_UINT32_UINT32

Description

Table 7- 372 EventCallback_II_SREC_ST_UINT32_UINT32 - Native C++

Syntax	`typedef void (*EventCallback_II_SREC_ST_UINT32_UINT32)(`
	`IInstance* in_Sender,`
	`ERuntimeErrorCode in_ErrorCode,`
	`SYSTEMTIME in_SystemTime,`
	`UINT32 in_HardwareIdentifier),`
	`UINT32 in_SequenceNumber`
	`);`

Parameters	• `IInstance* in_Sender:` An interface of the instance that receives this event. • `ERuntimeErrorCode in_ErrorCode:` A possible error code. • `SYSTEMTIME in_SYSTEMTIME:` The virtual system time of the virtual controller at the time when this event was triggered. • `UINT32 in_HardwareIdentifier:` The hardware identifier of the module or submodule which sends the diagnostics event. • `UINT32 in_SequenceNumber:` PLCSIM Advanced assigns a unique consecutive number to each interrupt event. According to PROFINET standard the sequence number is 10 bits wide (1 to $7FF_H$). When the highest number is reached the numbering starts again at 1. **Note** In a real hardware system the IO controller uses the sequence number to check if it has lost a hardware interrupt. During the simulation, the sequence number creates the relation between interrupt request and the associated acyclic alarm.
Return values	None

7.8.2.15 EventCallback_II_SREC_ST_UINT32_ERSFET

Description

Table 7- 373 EventCallback_II_SREC_ST_UINT32_ERSFET - Native C++

Syntax	`typedef void (*EventCallback_II_SREC_ST_UINT32_ERSFET)(`
	`IInstance* in_Sender,`
	`ERuntimeErrorCode in_ErrorCode,`
	`SYSTEMTIME in_SystemTime,`
	`UINT32 in_HardwareIdentifier,`
	`ERackOrStationFaultType in_EventType`
	`);`

Parameters	• `IInstance* in_Sender:` An interface of the instance that receives this event. • `ERuntimeErrorCode in_ErrorCode:` A possible error code. • `SYSTEMTIME in_SYSTEMTIME:` The virtual system time of the virtual controller at the time when this event was triggered. • `UINT32 in_HardwareIdentifier:` The hardware identifier of the module or submodule which sends the diagnostics event. • `ERackOrStationFaultType in_EventType:` A value from the list of predefined RackOrStationFault event types. See ERackOrStationFaultType (Page 346).
Return values	None

7.8.3 Delegate definitions (managed code)

7.8.3.1 Delegate_Void

Description

Table 7- 374 Delegate_Void - .NET (C#)

Syntax	`delegate void Delegate_Void();`
Parameters	None
Return values	None

7.8.3.2 Delegate_II_EREC_DT

Description

Table 7- 375 Delegate_II_EREC_DT - .NET (C#)

Syntax	`delegate void Delegate_II_EREC_DT (`
	`  IInstance in_Sender,`
	`  ERuntimeErrorCode in_ErrorCode,`
	`  DateTime in_DateTime`
	`);`

Parameters	• `IInstance in_Sender:` An interface of the instance that receives this event. • `ERuntimeErrorCode in_ErrorCode:` A possible error code. • `DateTime in_DateTime:` The virtual system time of the virtual controller at the time when this event was triggered.
Return values	None

7.8.3.3 Delegate_II_EREC_DT_EOS_EOS

Description

Table 7- 376 Delegate_II_EREC_DT_EOS_EOS - .NET (C#)

Syntax	`delegate void Delegate_II_EREC_DT_EOS_EOS(`
	`  IInstance in_Sender,`
	`  ERuntimeErrorCode in_ErrorCode,`
	`  DateTime in_DateTime,`
	`  EOperatingState in_PrevState,`
	`  EOperatingState in_OperatingState`
	`);`

Parameters	• `IInstance in_Sender:` An interface of the instance that receives this event. • `ERuntimeErrorCode in_ErrorCode:` A possible error code. • `DateTime in_DateTime:` The virtual system time of the virtual controller at the time when this event was triggered. • `EOperatingState in_PrevState:` The operating state before the change. • `EOperatingState in_OperatingState:` The current operating state.

Return values	None	
Error codes	Runtime error code	Condition
	`ERuntimeErrorCode.OK`	The function is successful.
	`ERuntimeError-Code.WarningTrialModeActive`	No license available. You can use the instance without restrictions with the Trial License. Afterwards, the instance is shut down.
	`ERuntimeError-Code.LicenseNotFound`	Test mode has expired.
	`ERuntimeError-Code.CommunicationInterfaceNotAvailable`	A problem has occurred with the selected communication interface. Check your settings.

7.8.3.4 Delegate_II_EREC_DT_ELT_ELM

Description

Table 7- 377 Delegate_II_EREC_DT_ELT_ELM - .NET (C#)

Syntax	`delegate void Delegate_II_EREC_DT_ELT_ELM(`
	`IInstance in_Sender,`
	`ERuntimeErrorCode in_ErrorCode,`
	`DateTime in_DateTime,`
	`ELEDType in_LEDType,`
	`ELEDMode in_LEDMode,`
	`);`

Parameters	• `IInstance in_Sender:` An interface of the instance that receives this event. • `ERuntimeErrorCode in_ErrorCode:` A possible error code. • `DateTime in_DateTime:` The virtual system time of the virtual controller at the time when this event was triggered. • `ELEDType in_LEDType:` The LED type that changed its state. • `ELEDMode in_LEDMode:` The new state of the LED display.
Return values	None

7.8.3.5 Delegate_II_EREC_DT_UINT32_INT64_INT64_UINT32

Description

Table 7- 378 Delegate_II_EREC_DT_UINT32_INT64_INT64_UINT32 - .NET (C#)

Syntax	`delegate void Delegate_II_EREC_DT_UINT32_INT64_INT64_UINT32 (`
	`IInstance in_Sender,`
	`ERuntimeErrorCode in_ErrorCode,`
	`DateTime in_DateTime,`
	`UInt32 in_PipId,`
	`Int64 in_TimeSinceSameSyncPoint_ns,`
	`Int64 in_TimeSinceAnySyncPoint_ns,`
	`UInt32 in_SyncPointCount`
	`);`

Parameters	• `IInstance in_Sender:` An interface of the instance that receives this event. • `ERuntimeErrorCode in_ErrorCode:` A possible error code. • `DateTime in_DateTime:` The virtual system time of the virtual controller at the time when this event was triggered. • `UInt32 in_PipId:` The ID of the process image partition (PIP) that triggers this event. 0 for the cycle control point (End of cycle). • `Int64 in_TimeSinceSameSyncPoint_ns:` The virtual time (in nanoseconds) since the last synchronization point of the same process image partition ID was reached. Or the process time for the time-controlled operating modes (Page 80). • `Int64 in_TimeSinceAnySyncPoint_ns:` The virtual time (in nanoseconds) since the last synchronization point of any process image partition ID was reached. Or the process time for the time-controlled operating modes (Page 80). • `UInt32 in_SyncPointCount:` The number of synchronization points since the last event. If the events are triggered faster than they are received, multiple events are combined into one event. In this case, this value contains the number of cycles since the last event was received.
Return values	None

7.8.3.6 Delegate_IRRTM

Description

Table 7- 379 Delegate_IRRTM - .NET (C#)

Syntax	`delegate void Delegate_IRRTM(`
	`  IRemoteRuntimeManager in_Sender,`
	`);`

Parameters	• `IRemoteRuntimeManager in_Sender:` An interface of the remote Runtime Manager that receives this event.
Return values	None

7.8.3.7 Delegate_SRCC_UINT32_UINT32_INT32

Description

Table 7- 380 Delegate_SRCC_UINT32_UINT32_INT32 - .NET (C#)

Syntax	`delegate void Delegate_SRCC_UINT32_UINT32_INT32(`
	`  ERuntimeConfigChanged in_RuntimeConfigChanged,`
	`  UInt32 in_Param1,`
	`  UInt32 in_Param2,`
	`  Int32 in_Param3`
	`);`			

Parameters	`ERuntimeConfigChanged in_RuntimeConfigChanged`	`UInt32 in_Param1`	`UInt32 in_Param2`	`Int32 in_Param3`
	`InstanceRegistered`	-	-	ID of the registered instance
	`InstanceUnregistered`	-	-	ID of the unregistered instance
	`ConnectionOpened`	IP of the Remote Runtime Manager	Port of the remote Runtime Manager	-
	`ConnectionClosed`	IP of the Remote Runtime Manager	Port of the remote Runtime Manager	-
	`PortOpened`	The open port	-	-
	`PortClosed`	-	-	-
Return values	None			

7.8.3.8 Delegate_II_EREC_DT_SRICC_UINT32_UINT32_UINT32_UINT32

Description

Table 7- 381 Delegate_II_EREC_DT_SRICC_UINT32_UINT32_UINT32_UINT32 - .NET (C#)

<table>
<tr><td>Syntax</td><td colspan="5"><pre>delegate void Delegate_II_EREC_DT_SRICC_UINT32_UINT32_UINT32_UINT32(
 IInstance in_Sender,
 ERuntimeErrorCode in_ErrorCode,
 DateTime in_DateTime,
 EInstanceConfigChanged in_InstanceConfigChanged,
 UInt32 in_Param1,
 UInt32 in_Param2,
 UInt32 in_Param3,
 UInt32 in_Param4
);</pre></td></tr>
<tr><td rowspan="5">Parameters</td><td colspan="5">• <code>IInstance in_Sender:</code>
An interface of the instance that receives this event.
• <code>ERuntimeErrorCode in_ErrorCode:</code>
A possible error code.
• <code>DateTime in_DateTime:</code>
The virtual system time of the virtual controller at the time when this event was triggered.</td></tr>
<tr><td><code>EInstanceConfigChanged in_InstanceConfigChanged</code></td><td><code>UInt32 in_Param1</code></td><td><code>UInt32 in_Param2</code></td><td><code>UInt32 in_Param3</code></td><td><code>UInt32 in_Param4</code></td></tr>
<tr><td><code>HardwareSoftwareChanged</code></td><td>-</td><td>-</td><td>-</td><td>-</td></tr>
<tr><td><code>IPChanged</code></td><td>The ID of the interface</td><td>The new IP</td><td>The new subnet mask</td><td>The new standard gateway</td></tr>
<tr><td colspan="6"></td></tr>
<tr><td>Return values</td><td colspan="5">None</td></tr>
</table>

7.8.3.9 Delegate_II_EREC_DT_SDRI

Description

Table 7- 382 Delegate_II_EREC_DT_SDRI - .NET (C#)

Syntax	`delegate void Delegate_II_EREC_DT_SDRI (`
	`  IInstance in_Sender,`
	`  ERuntimeErrorCode in_ErrorCode,`
	`  DateTime in_DateTime,`
	`  SDataRecordInfo in_DataRecordInfo`
	`);`

Parameters	• `IInstance in_Sender:` An interface of the instance that receives this event. • `ERuntimeErrorCode in_ErrorCode:` A possible error code. • `DateTime in_DateTime:` The virtual system time of the virtual controller at the time when this event was triggered. • `SDataRecordInfo in_DataRecordInfo:` The structure `SDataRecordInfo` contains the following information: – The HW identifier to which the CPU wants to write the data record – The index of the supplied data record – Size of data record – The data record
Return values	None

7.8.3.10 Delegate_II_EREC_DT_SDR

Description

Table 7- 383 Delegate_II_EREC_DT_SDR - .NET (C#)

Syntax	`delegate void Delegate_II_EREC_DT_SDR (`
	`IInstance in_Sender,`
	`ERuntimeErrorCode in_ErrorCode,`
	`DateTime in_DateTime,`
	`SDataRecord in_DataRecord`
	`);`

Parameters	• `IInstance in_Sender:` An interface of the instance that receives this event. • `ERuntimeErrorCode in_ErrorCode:` A possible error code. • `DateTime in_DateTime:` The virtual system time of the virtual controller at the time when this event was triggered. • `SDataRecord in_DataRecord:` The structure `SDataRecord` contains the following information: – The HW identifier to which the CPU wants to write the data record – The index of the supplied data record – Size of data record – The data record
Return values	None

7.8.3.11 Delegate_SREC_ST_UINT32_EPPET_UINT32

Description

Table 7- 384 Delegate_SREC_ST_UINT32_EPPET_UINT32 - .NET (C#)

Syntax	`delegate void Delegate_SREC_ST_UINT32 (`
	`IInstance in_Sender,`
	`ERuntimeErrorCode in_ErrorCode,`
	`DateTime in_DateTime,`
	`UInt32 in_HardwareIdentifier,`
	`EPullOrPlugEventType in_PullOrPlugEventType,`
	`UInt32 in_SequenceNumber`
	`);`

Parameters	• `IInstance in_Sender:` An interface of the instance that receives this event. • `ERuntimeErrorCode in_ErrorCode:` A possible error code. • `DateTime in_DateTime:` The virtual system time of the virtual controller at the time when this event was triggered. • `UInt32 in_HardwareIdentifier:` The hardware identifier of the module or submodule which sends the pull/plug event. • `EPullOrPlugEventType in_PullOrPlugEventType:` A value from the list of predefined types of events for S7 modules, see EPullOrPlugEventType (Page 344). • `UInt32 in_SequenceNumber:` PLCSIM Advanced assigns a unique consecutive number to each interrupt event. According to the PROFINET standard, the sequence number is only 10 bits wide, from 1 to 0x7FF. When the highest number is reached the numbering starts again at 1. **Note** In a real hardware system the IO controller uses the sequence number to check if it has lost a hardware interrupt. During the simulation, the sequence number creates the relation between interrupt request and the associated acyclic alarm.
Return values	None

7.8.3.12 Delegate_SREC_ST_UINT32_UINT32_EPET_UINT32

Description

Table 7- 385 Delegate_SREC_ST_UINT32_UINT32_EPET_UINT32 - Native C++

Syntax	`delegate void Delegate_SREC_ST_UINT32_UINT32_EPET_UINT32(`
	` IInstance in_Sender,`
	` ERuntimeErrorCode in_ErrorCode,`
	` DateTime in_DateTime,`
	` UInt32 in_HardwareIdentifier`
	`UInt32 in_Channel,`
	` EProcessEventType in_ProcessEventType,`
	`UInt32 in_SequenceNumber`
	`);`

Parameters	• `IInstance in_Sender:` An interface of the instance that receives this event. • `ERuntimeErrorCode in_ErrorCode:` A possible error code. • `DateTime in_DateTime:` The virtual system time of the virtual controller at the time when this event was triggered. • `UInt32 in_HardwareIdentifier:` The hardware identifier of the module or submodule that sends the process event. • `UInt32 in_Channel:` The channel of the IO module which sends the process event. • `EProcessEventType in_ProcessEventType:` A value from the list of predefined types of events for S7 modules, see EProcessEventType (Page 344). • `UInt32 in_SequenceNumber:` PLCSIM Advanced assigns a unique consecutive number to each interrupt event. According to PROFINET standard the sequence number is 10 bits wide (1 to $7FF_H$). When the highest number is reached the numbering starts again at 1. **Note** In a real hardware system the IO controller uses the sequence number to check if it has lost a hardware interrupt. During the simulation, the sequence number creates the relation between interrupt request and the associated acyclic alarm.
Return values	None

7.8.3.13 Delegate_SREC_ST_UINT32

Description

Table 7- 386 Delegate_SREC_ST_UINT32 - .NET (C#)

Syntax	`delegate void Delegate_SREC_ST_UINT32 (`
	`IInstance in_Sender,`
	`ERuntimeErrorCode in_ErrorCode,`
	`DateTime in_DateTime,`
	`UInt32 in_HardwareIdentifier`
	`);`

Parameters	• `IInstance in_Sender:` An interface of the instance that receives this event. • `ERuntimeErrorCode in_ErrorCode:` A possible error code. • `DateTime in_DateTime:` The virtual system time of the virtual controller at the time when this event was triggered. • `UInt32 in_HardwareIdentifier:` The ID of the module which generates the status event, update event or profile event.
Return values	None

7.8.3.14 Delegate_SREC_ST_UINT32_UINT32

Description

Table 7- 387 Delegate_SREC_ST_UINT32_UINT32 - .NET (C#)

Syntax	`delegate void Delegate_SREC_ST_UINT32 (`
	`IInstance in_Sender,`
	`ERuntimeErrorCode in_ErrorCode,`
	`DateTime in_DateTime,`
	`UInt32 in_HardwareIdentifier`
	`UInt32 in_SequenceNumber`
	`);`

Parameters	• `IInstance in_Sender:` An interface of the instance that receives this event. • `ERuntimeErrorCode in_ErrorCode:` A possible error code. • `DateTime in_DateTime:` The virtual system time of the virtual controller at the time when this event was triggered. • `UInt32 in_HardwareIdentifier:` The hardware identifier of the module or submodule which sends the diagnostics entry. • `UInt32 in_SequenceNumber:` PLCSIM Advanced assigns a unique consecutive number to each interrupt event. According to PROFINET standard the sequence number is 10 bits wide (1 to $7FF_H$). When the highest number is reached the numbering starts again at 1. **Note** In a real hardware system the IO controller uses the sequence number to check if it has lost a hardware interrupt. During the simulation, the sequence number creates the relation between interrupt request and the associated acyclic alarm.
Return values	None

7.8.3.15 Delegate_SREC_ST_UINT32_ERSFET

Description

Table 7- 388 Delegate_SREC_ST_UINT32_ERSFET - .NET (C#)

Syntax	`delegate void Delegate_SREC_ST_UINT32_ERSFET(`
	`IInstance in_Sender,`
	`ERuntimeErrorCode in_ErrorCode,`
	`DateTime in_DateTime,`
	`UInt32 in_HardwareIdentifier,`
	`ERackOrStationFaultType in_EventType`
	`);`

Parameters	• `IInstance in_Sender:` An interface of the instance that receives this event. • `ERuntimeErrorCode in_ErrorCode:` A possible error code. • `DateTime in_DateTime:` The virtual system time of the virtual controller at the time when this event was triggered. • `UInt32 in_HardwareIdentifier:` The hardware identifier of the module or submodule which sends the diagnostics entry. • `ERackOrStationFaultType in_EventType:` A value from the list of predefined RackOrStationFault event types. See ERackOrStationFaultType (Page 346).
Return values	None

7.8.4 Definitions and constants

The following identifiers are used in the API:

Table 7- 389 Definitions - Native C++

Identifier	Value	Description
DINSTANCE_NAME_MAX_LENGTH	64	The unique name of an instance must be less than this value.
DSTORAGE_PATH_MAX_LENGTH	130	The maximum path length to the virtual memory card. Including ZERO termination.
DTAG_NAME_MAX_LENGTH	300	The maximum length of the name of a PLC tag. Including ZERO termination.
DTAG_ARRAY_DIMENSION	6	The maximum number of dimension for a multi-dimensional field.
DCONTROLLER_NAME_MAX_LENGTH	128	The maximum length of the controller name. Including ZERO termination.
DCONTROLLER_SHORT_DESIGNATION_MAX_LENGTH	32	The maximum length of the abbreviation of the controller (CPU type). Including ZERO termination.
DALARM_NOTIFICATION_MAX_DIAG_EVENTS	100	The maximum number of diagnostic events that are sent in a diagnostic alarm.
DPROCESS_EVENT_NAME_MAX_LENGTH	123	The maximum length of the name for the process event. Including NULL termination.
DPROCESS_EVENTS_MAX_ITEMS	256	The maximum number of configurable process events.
DMODULE_STATE_OK	0	AlarmNotification: Module status OK
DMODULE_STATE_ERROR	1	AlarmNotification: Module status faulty
DMODULE_STATE_MAINT_DEMANDED	2	AlarmNotification: Maintenance demanded
DMODULE_STATE_MAINT_REQUIRED	4	AlarmNotification: Maintenance required

Table 7- 390 Constants - .NET (C#)

Identifier	Value	Description
RuntimeConstants.InstanceNameLength	64	The unique name of an instance must be less than this value.
RuntimeConstants.StoragePathMaxLength	130	The maximum path length to the virtual memory card. Including ZERO termination.
RuntimeConstants.TagNameMaxLength	300	The maximum length of the name of a PLC tag. Including ZERO termination.
RuntimeConstants.TagArrayDimension	6	The maximum number of dimension for a multi-dimensional field.
RuntimeConstants.ControllerNameMaxLength	128	The maximum length of the controller name. Including ZERO termination.
RuntimeConstants.ControllerShortDesignationMaxLength	32	The maximum length of the abbreviation of the controller (CPU type). Including ZERO termination.
ModuleState.Ok	0	AlarmNotification: Module status OK
ModuleState.Error	1	AlarmNotification: Module status faulty
ModuleState. MaintenanceDemanded	2	AlarmNotification: Maintenance demanded
ModuleState. MaintenanceRequired	4	AlarmNotification: Maintenance required

7.8.5 Unions (Native C++)

7.8.5.1 UIP

Description

Contains an IPv4 address.

Table 7- 391 UIP - Native C++

Syntax	`union UIP`
	`{`
	`  DWORD IP;`
	`  BYTE IPs[4];`
	`};`

Member	• `DWORD IP:` The IP address in a single DWORD • `BYTE IPs[4]:` The four elements of IP in descending order
Example	Example for an IP address: 192.168.0.1 UIP.IP = 0xC0A80001 UIP.IPs[3] = 192, UIP.IPs[2] = 168, UIP.IPs[1] = 0, UIP.IPs[0] = 1

7.8.5.2 UDataValue

Description

Contains the value of a PLC tag.

Table 7- 392 UDataValue - Native C++

Syntax	`union UDataValue`
	`{`
	`bool Bool;`
	`INT8 Int8;`
	`INT16 Int16;`
	`INT32 Int32;`
	`INT64 Int64;`
	`UINT8 UInt8;`
	`UINT16 UInt16;`
	`UINT32 UInt32;`
	`UINT64 UInt64;`
	`float Float;`
	`double Double;`
	`CHAR Char;`
	`WCHAR WChar;`
	`};`

Member	• `bool Bool:` 1 byte boolean value • `INT8 Int8:` 1 byte integer with sign • `INT16 Int16:` 2 byte integer with sign • `INT32 Int32:` 4 byte integer with sign • `INT64 Int64:` 8 byte integer with sign • `UINT8 UInt8:` 1 byte integer without sign • `UINT16 UInt16:` 2 byte integer without sign • `UINT32 UInt32:` 4 byte integer without sign • `UINT64 UInt64:` 8 byte integer without sign • `float Float:` 4 byte floating-point value • `double Double:` 8 byte floating-point value • `CHAR Char:` 1 byte value character • `WCHAR WChar:` 2 byte value character

7.8.6 Structures

7.8.6.1 SDataValue

Description

The structure contains the value and type of a PLC tag.

Table 7- 393 SDataValue - Native C++

Syntax	`struct SDataValue`
	`{`
	`  UDataValue Value;`
	`  EPrimitiveDataType Type;`
	`};`

Member	• `UDataValue Value:` The value of the PLC tags • `EPrimitiveDataType Type:` Type of PLC tag

Table 7- 394 SDataValue - .NET (C#)

Syntax	`struct SDataValue`
	`{`
	`bool Bool { get; set; }`
	`Int8 Int8 { get; set; }`
	`Int16 Int16 { get; set; }`
	`Int32 Int32 { get; set; }`
	`Int64 Int64 { get; set; }`
	`UInt8 UInt8 { get; set; }`
	`UInt16 UInt16 { get; set; }`
	`UInt32 UInt32 { get; set; }`
	`UInt64 UInt64 { get; set; }`
	`float Float { get; set; }`
	`double Double { get; set; }`
	`sbyte Char { get; set; }`
	`char WChar { get; set; }`
	`EPrimitiveDataType Type { get; set; }`
	`}`

Member	• `bool Bool:` 1 byte boolean value • `Int8 Int8:` 1 byte integer with sign • `Int16 Int16:` 2 byte integer with sign • `Int32 Int32:` 4 byte integer with sign • `Int64 Int64:` 8 byte integer with sign • `UntT8 UInt8:` 1 byte integer without sign • `UInt16 UInt16:` 2 byte integer without sign • `UInt32 UInt32:` 4 byte integer without sign • `UInt64 UInt64:` 8 byte integer without sign • `float Float:` 4 byte floating-point value • `double Double:` 8 byte floating-point value • `sbyte Char:` 1 byte value character • `char WChar:` 2 byte value character • `EPrimitiveDataType Type:` Type of PLC tag

7.8.6.2 SDVBNI

Description

This structure is for internal use only. Do not change this structure.

Table 7- 395 SDVBNI - Native C++

Syntax	`struct SDVBNI`

Table 7- 396 SDVBNI - .NET (C#)

Syntax	`struct SDVBNI`

7.8.6.3 SDataValueByAddress

Description

This structure represents a PLC tag that is accessed via its address.

Table 7- 397 SDataValueByAddress - Native C++

Syntax	`struct SDataValueByAddress`
	`{`
	` UINT32 Offset;`
	` UINT8 Bit;`
	` SDataValue DataValue;`
	` ERuntimeErrorCode ErrorCode;`
	`};`

Table 7- 398 SDataValueByAddress - .NET (C#)

Syntax	`struct SDataValueByAddress`
	`{`
	` UInt32 Offset;`
	` UInt8 Bit;`
	` SDataValue DataValue;`
	` ERuntimeErrorCode ErrorCode;`
	`}`

7.8.6.4 SDataValueByAddressWithCheck

Description

This structure represents a PLC tag that is accessed via its address.

Table 7- 399 SDataValueByAddressWithCheck - Native C++

Syntax	`struct SDataValueByAddressWithCheck`
	`{`
	` UINT32 Offset;`
	` UINT8 Bit;`
	` SDataValue DataValue;`
	` ERuntimeErrorCode ErrorCode;`
	` bool ValueHasChanged;`
	`};`

Table 7- 400 SDataValueByAddressWithCheck - .NET (C#)

Syntax	`struct SDataValueByAddressWithCheck`
	`{`
	` UInt32 Offset;`
	` UInt8 Bit;`
	` SDataValue DataValue;`
	` ERuntimeErrorCode ErrorCode;`
	` bool ValueHasChanged;`
	`}`

7.8.6.5 SDataValueByName

Description

This structure represents a PLC tag that is called by its name.

Table 7- 401 SDataValueByName - Native C++

Syntax	`struct SDataValueByName`
	`{`
	` WCHAR Name[DTAG_NAME_MAX_LENGTH];`
	` SDataValue DataValue;`
	` ERuntimeErrorCode ErrorCode;`
	` SDVBNI Internal;`
	`};`

Table 7- 402 SDataValueByName - .NET (C#)

Syntax	`struct SDataValueByName`
	`{`
	` String Name;`
	` SDataValue DataValue;`
	` ERuntimeErrorCode ErrorCode;`
	` SDVBNI Internal;`
	`}`

7.8.6.6 SDataValueByNameWithCheck

Description

This structure represents a PLC tag that is called by its name.

Table 7- 403 SDataValueByNameWithCheck - Native C++

Syntax	`struct SDataValueByNameWithCheck`
	`{`
	` WCHAR Name[DTAG_NAME_MAX_LENGTH];`
	` SDataValue DataValue;`
	` ERuntimeErrorCode ErrorCode;`
	` SDVBNI Internal;`
	` bool ValueHasChanged;`
	`};`

Table 7- 404 SDataValueByNameWithCheck - .NET (C#)

Syntax	`struct SDataValueByNameWithCheck`
	`{`
	` String Name;`
	` SDataValue DataValue;`
	` ERuntimeErrorCode ErrorCode;`
	` SDVBNI Internal;`
	` bool ValueHasChanged;`
	`}`

7.8.6.7 SConnectionInfo

Description

This structure contains the IP address and port of a TCP/IP connection.

Table 7- 405 SConnectionInfo - Native C++

Syntax	`struct SConnectionInfo`
	`{`
	` UIP IP;`
	` UINT16 Port;`
	`};`

Table 7- 406 SConnectionInfo - .NET (C#)

Syntax	`struct SConnectionInfo`
	`{`
	` SIP IP;`
	` UInt16 Port;`
	`}`

7.8.6.8 SInstanceInfo

Description

This structure contains an IPv4 address.

Table 7- 407 SInstanceInfo - Native C++

Syntax	`struct SInstanceInfo`
	`{`
	`  INT32 ID;`
	`  WCHAR Name[DINSTANCE_NAME_MAX_LENGTH];`
	`};`

Member	• `INT32 ID:` The ID of the instance • `WCHAR Name[DINSTANCE_NAME_MAX_LENGTH]:` The name of the instance

Table 7- 408 SInstanceInfo - .NET (C#)

Syntax	`struct SInstanceInfo`
	`{`
	`  Int32 ID;`
	`  String Name;`
	`}`

Member	• `Int32 ID:` The ID of the instance • `String name:` The name of the instance

7.8.6.9 SDimension

Description

This structure contains information about the dimension of a field.

Table 7- 409 SDimension - Native C++

Syntax	`struct SDimension`
	`{`
	`  INT32 StartIndex;`
	`  UINT32 Count;`
	`};`

Table 7- 410 SDimension - .NET (C#)

Syntax	`struct SDimension`
	`{`
	`  Int32 StartIndex;`
	`  UInt32 Count;`
	`}`

7.8.6.10 STagInfo

Description

This structure contains information about a PLC tag.

Table 7- 411 STagInfo - Native C++

Syntax	`struct STagInfo`
	`{`
	`  WCHAR Name[DTAG_NAME_MAX_LENGTH];`
	`  EArea Area;`
	`  EDataType DataType;`
	`  EPrimitiveDataType PrimitiveDataType;`
	`  UINT16 Size;`
	`  UINT32 Offset;`
	`  UINT8 Bit;`
	`  UINT8 DimensionCount;`
	`  UINT32 Index;`
	`  UINT32 ParentIndex;`
	`  SDimension Dimension[DTAG_ARRAY_DIMENSION];`
	`};`

Member	• `WCHAR Name[DTAG_NAME_MAX_LENGTH]:` The name of the tag • `EArea area:` The CPU area where the tag is located. • `EDataType DataType:` The CPU data type of the tag • `EPrimitiveDataType PrimitiveDataType:` The primitive data type of the tag • `UINT16 size:` The size of the tag in bytes • `UINT32 offset:` The byte offset of the tag if it is not located in a data block. • `UINT8 bit:` The bit offset of the tag if it is not located in a data block. • `UINT8 DimensionCount:` The number of dimensions of the array. 0 if it is not a field for the tag. • `UINT32 index:` The index of the tag • `UINT32 ParentIndex:` If this tag is embedded in another tag (for example, an element of a structure), this value then displays the index of the parent tag. The value is 0 if the tag has no parent tag. • `SDimension Dimension[DTAG_ARRAY_DIMENSION]:` Information about each dimension of the field

Table 7- 412 STagInfo - .NET (C#)

Syntax	`public struct STagInfo`
	`{`
	`String Name;`
	`EArea Area;`
	`EDataType DataType;`
	`EPrimitiveDataType PrimitiveDataType;`
	`UInt16 Size;`
	`UInt32 Offset;`
	`UInt8 Bit;`
	`UInt32 Index;`
	`UInt32 ParentIndex;`
	`SDimension[] Dimension;`
	`}`

Member	• `String name:` The name of the tag • `EArea area:` The CPU area where the tag is located. • `EDataType DataType:` The CPU data type of the tag • `EPrimitiveDataType PrimitiveDataType:` The primitive data type of the tag • `UInt16 size:` The size of the tag in bytes. • `UInt32 offset:` The byte offset of the tag if it is not located in a data block. • `UInt8 bit:` The bit offset of the tag if it is not located in a data block. • `UInt32 index:` The index of the tag • `UInt32 ParentIndex:` If this tag is embedded in another tag (for example, an element of a structure), this value then displays the index of the parent tag. The value is 0 if the tag has no parent tag. • `SDimension[] Dimension:` Information about each dimension of the field. Empty, if the tag is not an array.

7.8.6.11 SIP

Description

This structure contains an IPv4 address.

Table 7- 413 SIP - .NET (C#)

Syntax	`struct SIP`
	`{`
	` byte[] IPArray { get; set; }`
	` UInt32 IPDWord { get; set; }`
	` string IPString { get; set; }`
	`}`

Member	• `UInt32 IPDWord:` The IP address in a single DWORD • `byte[] IPArray:` The four elements of IP in descending order • `string IPString:` The IPv4 address as a string
Example	Example for an IP address: 192.168.0.1 SIP.IPDWord = 0xC0A80001 SIP.IPArray[3] = 192, SIP.IPArray[2] = 168, SIP.IPArray[1] = 0, SIP.IPArray[0] = 1 SIP.IPString = "192.168.0.1"

7.8.6.12 SIPSuite4

Description

This structure contains an IPv4 suite.

Table 7- 414 SIPSuite4 - Native C++

Syntax	`struct SIPSuite4`
	`{`
	` UIP IPAddress;`
	` UIP SubnetMask;`
	` UIP DefaultGateway;`
	`};`

Member	• `UIP IPAddress:` The IP address • `UIP SubnetMask:` The subnet mask • `UIP DefaultGateway:` The standard gateway

Table 7- 415 SIPSuite4 - .NET (C#)

Syntax	`struct SIPSuite4`
	`{`
	`  SIP IPAddress;`
	`  SIP SubnetMask;`
	`  SIP DefaultGateway;`
	`}`

Member	• `SIP IPAddress:` The IP address • `SIP SubnetMask:` The subnet mask • `SIP DefaultGateway:` The standard gateway

7.8.6.13 SOnSyncPointReachedResult

Description

This structure contains the results of the OnSyncPointReached event.

Table 7- 416 SOnSyncPointReachedResult - Native C++

Syntax	`struct SOnSyncPointReachedResult`
	`{`
	`ERuntimeErrorCode ErrorCode;`
	`SYSTEMTIME SystemTime;`
	`UINT32 PipId;`
	`INT64 TimeSinceSameSyncPoint_ns;`
	`INT64 TimeSinceAnySyncPoint_ns;`
	`UINT32 SyncPointCount;`
	`};`

Member	• `ERuntimeErrorCode ErrorCode:` A possible error code (Page 327). If no event was triggered during the defined time interval: `SREC_TIMEOUT`. • `SYSTEMTIME SystemTime:` The virtual system time of the virtual controller at the time when this event was triggered. • `UINT32 PipId:` The ID of the process image partition (PIP) that triggers this event. 0 for the cycle control point (End of cycle). • `INT64 TimeSinceSameSyncPoint_ns:` The virtual time (in nanoseconds) since the last synchronization point of the same process image partition ID was reached. For the time-controlled operating modes (Page 80): The runtime since the last call of the `StartProcessing()` function. • `INT64 TimeSinceAnySyncPoint_ns:` The virtual time (in nanoseconds) since the last synchronization point of any process image partition ID was reached. For the time-controlled operating modes (Page 80): The runtime since the last call of the `StartProcessing()` function. • `UINT32 SyncPointCount:` The number of synchronization points since the last event. If the events are triggered faster than they are received, multiple events are combined into one event. In this case, this value contains the number of cycles since the last event was received.

Table 7- 417 SOnSyncPointReachedResult - .NET (C#)

Syntax	`struct SOnSyncPointReachedResult`
	`{`
	`  ERuntimeErrorCode ErrorCode;`
	`  DateTime SystemTime;`
	`  UInt32 PipId;`
	`  Int64 TimeSinceSameSyncPoint_ns;`
	`  Int64 TimeSinceAnySyncPoint_ns;`
	`  UInt32 SyncPointCount;`
	`}`

Member	• `ERuntimeErrorCode ErrorCode:` A possible error code (Page 327). If no event was triggered during the defined time interval: `ERuntimeErrorCode.Timeout`. • `DateTime DateTime:` The virtual system time of the virtual controller at the time when this event was triggered. • `UInt32 PipId:` The ID of the process image partition (PIP) that triggers this event. 0 for the cycle control point (End of cycle). • `Int64 TimeSinceSameSyncPoint_ns:` The virtual time (in nanoseconds) since the last synchronization point of the same process image partition ID was reached. For the time-controlled operating modes: The runtime since the last call of the `StartProcessing()` function. • `Int64 TimeSinceAnySyncPoint_ns:` The virtual time (in nanoseconds) since the last synchronization point of any process image partition ID was reached. For the time-controlled operating modes: The runtime since the last call of the `StartProcessing()` function. • `UInt32 SyncPointCount:` The number of synchronization points since the last event. If the events are triggered faster than they are received, multiple events are combined into one event. In this case, this value contains the number of cycles since the last event was received.

7.8.6.14 SDataRecordInfo

Description

This structure contains read/write data record information.

Table 7- 418 SDataRecordInfo - Native C++

Syntax	`struct SDataRecordInfo`
	`{`
	`  UINT32 HardwareId;`
	`  UINT32 RecordIdx;`
	`  UINT32 DataSize;`
	`};`

Member	• `UINT32 HardwareId:` The ID of the hardware module (hardware identifier) • `UINT32 RecordIdx:` The data record number • `UINT32 DataSize:` The data record size

Table 7- 419 SDataRecordInfo - .NET (C#)

Syntax	`struct SDataRecordInfo`
	`{`
	`  UInt32 HardwareId;`
	`  UInt32 RecordIdx;`
	`  UInt32 DataSize;`
	`}`

Member	• `UInt32 ID:` The ID of the hardware module • `UInt32 RecordIdx:` The data record number • `UInt32 DataSize:` The data record size

7.8.6.15 SDataRecord

Description

This structure contains read/write data record information and data records.

Table 7- 420 SDataRecord - Native C++

Syntax	`struct SDataRecord`
	`{`
	`SDataRecordInfo Info;`
	`BYTE Data[DDATARECORD_MAX_SIZE];`
	`};`

Member	• `SDataRecordInfo Info:` The data record information, see SDataRecordInfo (Page 321) • `BYTE Data[DDATARECORD_MAX_SIZE]:` The array length of the user data `DDATARECORD_MAX_SIZE`

Table 7- 421 SDataRecord - .NET (C#)

Syntax	`struct SDataRecord`
	`{`
	`UInt32 HardwareId;`
	`byte[] Data`
	`}`

Member	• `SDataRecordInfo Info:` The data record information, see SDataRecordInfo (Page 321) • `byte[] Data:` The array length

7.8.6.16 SConfiguredProcessEvents

Description

This structure contains information about the configured process events.

Table 7- 422 SConfiguredProcessEvents - Native C++

Syntax	`struct SConfiguredProcessEvents`
	`{`
	`  UINT16 HardwareIdentifier;`
	`  UINT16 Channel;`
	`  EProcessEventType ProcessEventType;`
	`  WCHAR Name[DPROCESS_EVENT_NAME_MAX_LENGTH];`
	`};`

Member	• `UINT16 HardwareIdentifier:` The HW identifier • `UINT16 Channel:` The channel of the IO module which generates the process event. • `EProcessEventType ProcessEventType:` The type of the configured process event • `WCHAR Name[DPROCESS_EVENT_NAME_MAX_LENGTH]:` The name of the process event

Table 7- 423 SConfiguredProcessEvents - .NET (C#)

Syntax	`public struct SConfiguredProcessEvents`
	`{`
	`  ushort HardwareIdentifier;`
	`  ushort Channel;`
	`  EProcessEventType ProcessEventType;`
	`  string Name;`
	`}`

Member	• `ushort HardwareIdentifier:` The HW identifier • `ushort Channel:` The channel of the IO module which generates the process event. • `EProcessEventType ProcessEventType:` The type of the configured process event • `String name:` The name of the process event

7.8.6.17 SDiagExtChannelDescription

Description

This structure contains read/write data record information and data records.

Table 7- 424 SDiagExtChannelDescription - Native C++

Syntax	`struct SDiagExtChannelDescription`
	`{`
	`UINT16 ChannelNumber;`
	`UINT16 ErrorType;`
	`UINT16 ExtErrorType;`
	`EDiagSeverity Severity;`
	`EDiagProperty Direction;`
	`};`

Member	• `UINT16 ChannelNumber:` If the interrupt relates to a specific channel of the IO device (e.g. short circuit), this parameter must contain the number of the faulty channel. If the interrupt was generated by a module or submodule, the number of the channel must be set to 0x8000. • `UINT16 ErrorType:` The parameter defines error types according to PROFINET standard, see "Error types" section. • `EDiagSeverity Severity:` The value of the severity for the diagnostics, see EDiagSeverity (Page 346). • `EDiagProperty Direction:` The value for the incoming/outgoing information, see EDiagProperty (Page 345). • `UINT16 ExtErrorType:` This parameter provides the option of defining more details for the diagnostic interrupt. This is helpful in combination with PDEV error types which are generated for CPU-internal modules. Should be 0 by default.

Table 7- 425 SDiagExtChannelDescription - .NET (C#)

Syntax	`struct SDiagExtChannelDescription`
	`{`
	`  UInt16 ChannelNumber;`
	`  UInt16 ErrorType;`
	`  UInt16 ExtErrorType;`
	`  EDiagSeverity Severity;`
	`  EDiagProperty Direction;`
	`};`

Member	• `UInt16 ChannelNumber:` If the interrupt relates to a specific channel of the IO device (e.g. short circuit), this parameter must contain the number of the faulty channel. If the interrupt was generated by a module or submodule, the number of the channel must be set to 0x8000. • `UInt16 ErrorType:` The parameter defines error types according to PROFINET standard, see "Error types" section. • `EDiagSeverity Severity:` The value of the severity for the diagnostics, see EDiagSeverity (Page 346). • `EDiagProperty Direction:` The value for the incoming/outgoing information, see EDiagProperty (Page 345). • `UInt16 ExtErrorType:` This parameter provides the option of defining more details for the diagnostic interrupt. This is helpful in combination with PDEV error types which are generated for CPU-internal modules. Should be 0 by default.

Error types

The following table contains important error types (`ErrorType`) according to PROFINET standard:

Table 7- 426 Error types according to PROFINET standard

Value	Meaning
0x0000	Reserved / unknown error
0x0001	Short-circuit
0x0002	Undervoltage
0x0003	Overvoltage
0x0004	Overload
0x0005	Overtemperature
0x0006	Wire break
0x0007	High limit violated
0x0008:	Low limit violated
0x0009	Error

The following table contains error types `ExtChannelErrorType` for `ChannelErrorType` "Remote mismatch":

Table 7- 427 ExtChannelErrType error types

Value	Meaning	Use
0x0000	Reserved	-
0x0001 to 0x7FFF	Manufacturer ID	Interrupt/diagnostics
0x8000	Peer name of station mismatch	Interrupt/diagnostics
0x8001	Peer name of port mismatch	Interrupt/diagnostics
0x8002	Peer RT_CLASS_3 mismatch	Interrupt/diagnostics
0x8003	Peer MAU Type mismatch	Interrupt/diagnostics

7.8.7 Enumerations

The following enumerations are available:

- ERuntimeErrorCode (Page 327)
- EArea (Page 330)
- EOperatingState (Page 330)
- EOperatingMode (Page 331)
- ECPUType (Page 332)
- ECommunicationInterface (Page 334)
- ELEDType (Page 334)
- ELEDMode (Page 335)
- EPrimitiveDataType (Page 335)
- EDataType (Page 338)
- ETagListDetails (Page 342)
- ERuntimeConfigChanged (Page 343)
- EInstanceConfigChanged (Page 343)
- EPullOrPlugEventType (Page 344)
- EProcessEventType (Page 344)
- EDirection (Page 345)
- EDiagProperty (Page 345)
- EDiagSeverity (Page 346)
- ERackOrStationFaultType (Page 346)

See also

Global functions (Native C++) (Page 106)

7.8.7.1 ERuntimeErrorCode

Description

This enumeration contains all error codes that are used by the Simulation Runtime API. Most API functions return one of these error codes. If the function is successful, the return value is always `SREC_OK`. Errors are returned with negative values, and alarms with positive values.

Table 7- 428 ERuntimeErrorCode - Native C++

Syntax	`enum ERuntimeErrorCode`
	`{`
	`SREC_ISyntaxenum ERuntimeErrorCode{`
	`SREC_OK = 0,`
	`SREC_INVALID_ERROR_CODE = -1,`
	`SREC_NOT_IMPLEMENTED = -2,`
	`SREC_INDEX_OUT_OF_RANGE = -3,`
	`SREC_DOES_NOT_EXIST = -4,`
	`SREC_ALREADY_EXISTS = -5,`
	`SREC_UNKNOWN_MESSAGE_TYPE = -6,`
	`SREC_INVALID_MESSAGE_ID = -7,`
	`SREC_WRONG_ARGUMENT = -8,`
	`SREC_WRONG_PIPE = -9,`
	`SREC_CONNECTION_ERROR = -10,`
	`SREC_TIMEOUT = -11,`
	`SREC_MESSAGE_CORRUPT = -12,`
	`SREC_WRONG_VERSION = -13,`
	`SREC_INSTANCE_NOT_RUNNING = -14,`
	`SREC_INTERFACE_REMOVED = -15,`
	`SREC_SHARED_MEMORY_NOT_INITIALIZED = -16,`
	`SREC_API_NOT_INITIALIZED = -17,`
	`SREC_WARNING_ALREADY_EXISTS = 18,`
	`SREC_NOT_SUPPORTED = -19,`
	`SREC_WARNING_INVALID_CALL = 20,`
	`SREC_ERROR_LOADING_DLL = -21,`
	`SREC_SIGNAL_NAME_DOES_NOT_EXIST = -22,`
	`SREC_SIGNAL_TYPE_MISMATCH = -23,`
	`SREC_SIGNAL_CONFIGURATION_ERROR = -24,`
	`SREC_NO_SIGNAL_CONFIGURATION_LOADED = -25,`
	`SREC_CONFIGURED_CONNECTION_NOT_FOUND = -26,`
	`SREC_CONFIGURED_DEVICE_NOT_FOUND = -27,`

	SREC_INVALID_CONFIGURATION = -28, SREC_TYPE_MISMATCH = -29, SREC_LICENSE_NOT_FOUND = -30, SREC_NO_LICENSE_AVAILABLE = -31, SREC_WRONG_COMMUNICATION_INTERFACE = -32, SREC_LIMIT_REACHED = -33, SREC_NO_STORAGE_PATH_SET = -34, SREC_STORAGE_PATH_ALREADY_IN_USE = -35, SREC_MESSAGE_INCOMPLETE = -36, SREC_ARCHIVE_STORAGE_NOT_CREATED = -37, SREC_RETRIEVE_STORAGE_FAILURE = -38 SREC_INVALID_OPERATING_STATE = -39, SREC_INVALID_ARCHIVE_PATH = -40, SREC_DELETE_EXISTING_STORAGE_FAILED = -41, SREC_CREATE_DIRECTORIES_FAILED = -42, SREC_NOT_ENOUGH_MEMORY = -43, SREC_WARNING_TRIAL_MODE_ACTIVE = 44, SREC_NOT_RUNNING = -45, SREC_NOT_EMPTY = -46, SREC_NOT_UP_TO_DATE = -47, SREC_COMMUNICATION_INTERFACE_NOT_AVAILABLE = -48, SREC_WARNING_NOT_COMPLETE = 49, SREC_VIRTUAL_SWITCH_MISCONFIGURED = -50, SREC_RUNTIME_NOT_AVAILABLE = -51, SREC_IS_EMPTY = -52, SREC_WRONG_MODULE_STATE = -53, SREC_WRONG_MODULE_TYPE = -54, SREC_NOT_SUPPORTED_BY_MODULE = -55, SREC_INTERNAL_ERROR = -56, SREC_STORAGE_TRANSFER_ERROR = -57, SREC_ANOTHER_VARIANT_OF_PLCSIM_RUNNING = -58, SREC_ACCESS_DENIED = -59, SREC_NOT_ALLOWED_DURING_DOWNLOAD = -60 };

Table 7- 429 ERuntimeErrorCode - .NET (C#)

Syntax	`enum ERuntimeErrorCode`
	`{`
	`OK = 0,`
	`InvalidErrorCode = -1,`
	`NotImplemented = -2,`
	`IndexOutOfRange = -3,`
	`DoesNotExist = -4,`
	`AlreadyExists = -5,`
	`UnknownMessageType = -6,`
	`InvalidMessageId = -7,`
	`WrongArgument = -8,`
	`WrongPipe = -9,`
	`ConnectionError = -10,`
	`Timeout = -11,`
	`MessageCorrupt = -12,`
	`WrongVersion = -13,`
	`InstanceNotRunning = -14,`
	`InterfaceRemoved = -15,`
	`SharedMemoryNotInitialized = -16,`
	`ApiNotInitialized = -17,`
	`WarningAlreadyExists = 18,`
	`NotSupported = -19,`
	`WarningInvalidCall = 20,`
	`ErrorLoadingDll = -21,`
	`SignalNameDoesNotExist = -22,`
	`SignalTypeMismatch = -23,`
	`SignalConfigurationError = -24,`
	`NoSignalConfigurationLoaded = -25,`
	`ConfiguredConnectionNotFound = -26,`
	`ConfiguredDeviceNotFound = -27,`
	`InvalidConfiguration = -28,`
	`TypeMismatch = -29,`
	`LicenseNotFound = -30,`
	`NoLicenseAvailable = -31,`
	`WrongCommunicationInterface = -32,`
	`LimitReached = -33,`
	`NoStartupPathSet = -34,`
	`StartupPathAlreadyInUse = -35,`
	`MesssageIncomplete = -36,`
	`ArchiveStorageNotCreated = -37,`
	`RetrieveStorageFailure = -38,`
	`InvalidOperatingState = -39,`
	`InvalidArchivePath = -40,`
	`DeleteExistingStorageFailed = -41,`
	`CreateDirectoriesFailed = -42,`
	`NotEnoughMemory = -43,`
	`WarningTrialModeActive = 44,`
	`NotRunning = -45,`
	`NotEmpty = -46,`
	`NotUpToData = -47,`
	`CommunicationInterfaceNotAvailable = -48,`
	`WarningNotComplete = 49,`
	`RuntimeNotAvailable = -51,`
	`IsEmpty = -52,`
	`WrongModuleState = -53,`
	`WrongModuleType = -54,`
	`NotSupportedByModule = -55,`
	`InternalError = -56,`
	`StorageTransferError = -57,`
	`AnotherVariantOfPlcsimRunning = -58,`
	`AccessDenied = -59,`
	`NotAllowedDuringDownload = -60`
	`}`

7.8.7.2 EArea

Description

This enumeration contains all PLC areas that contain the available PLC tags.

Table 7- 430 EArea - Native C++

Syntax	`enum EArea`
	`{`
	` SRA_INVALID_AREA = 0,`
	` SRA_INPUT = 1,`
	` SRA_MARKER = 2,`
	` SRA_OUTPUT = 3,`
	` SRA_COUNTER = 4,`
	` SRA_TIMER = 5,`
	` SRA_DATABLOCK = 6,`
	
	` SRA_ENUMERATION_SIZE = 7`
	`};`

Table 7- 431 EArea - .NET (C#)

Syntax	`public enum EArea`
	`{`
	` InvalidArea = 0,`
	` Input = 1,`
	` Marker = 2,`
	` Output = 3,`
	` Counter = 4,`
	` Timer = 5,`
	` DataBlock = 6,`
	`}`

7.8.7.3 EOperatingState

Description

This enumeration contains all the operating states of a virtual controller.

Table 7- 432 EOperatingState - Native C++

Syntax	`enum EOperatingState`
	`{`
	` SROS_INVALID_OPERATING_STATE = 0,`
	` SROS_OFF = 1,`
	` SROS_BOOTING = 2,`
	` SROS_STOP = 3,`
	` SROS_STARTUP = 4,`
	` SROS_RUN = 5,`
	` SROS_FREEZE = 6,`
	` SROS_SHUTTING_DOWN = 7,`
	` SROS_HOLD = 8,`
	
	` SROS_ENUMERATION_SIZE = 9`
	`};`

Table 7- 433 EOperatingState - .NET (C#)

Syntax	`enum EOperatingState`
	`{`
	`  InvalidOperatingState = 0,`
	`  Off = 1,`
	`  Booting = 2,`
	`  Stop = 3,`
	`  Startup = 4,`
	`  Run = 5,`
	`  Freeze = 6,`
	`  ShuttingDown = 7,`
	`  Hold = 8`
	`}`

7.8.7.4 EOperatingMode

Description

This enumeration contains all the operating modes of a virtual controller.

Table 7- 434 EOperatingMode - Native C++

Syntax	`enum EOperatingMode`
	`{`
	`  SROM_DEFAULT = 0,`
	`  SROM_SINGLE_STEP_C = 1,`
	`  SROM_SINGLE_STEP_CT = 2,`
	`  SROM_TIMESPAN_SYNCHNRONIZED_C = 3,`
	`  SROM_SINGLE_STEP_P = 4,`
	`  SROM_TIMESPAN_SYNCHNRONIZED_P = 5,`
	`  SROM_SINGLE_STEP_CP = 6,`
	`  SROM_SINGLE_STEP_CPT = 7,`
	`  SROM_TIMESPAN_SYNCHNRONIZED_CP = 8`
	`};`

Table 7- 435 EOperatingMode - .NET (C#)

Syntax	`public enum EOperatingMode`
	`{`
	`  Default = 0,`
	`  SingleStep_C = 1,`
	`  SingleStep_CT = 2,`
	`  TimespanSynchronized_C = 3,`
	`  SingleStep_P = 4,`
	`  TimespanSynchronized_P = 5,`
	`  SingleStep_CP = 6,`
	`  SingleStep_CPT = 7,`
	`  TimespanSynchronized_CP = 8`
	`}`

7.8.7.5 ECPUType

Description

This enumeration contains all CPU types that can be loaded in a virtual controller.

Table 7- 436 ECPUType - Native C++

Syntax	enum ECPUType
	{
	SRCT_1500_Unspecified = 0x000005DC,
	SRCT_1511 = 0x000005E7,
	SRCT_1511v2 = 0x010005E7,
	SRCT_1511v3 = 0x020005E7,
	SRCT_1513 = 0x000005E9,
	SRCT_1513v2 = 0x010005E9,
	SRCT_1513v3 = 0x020005E9
	SRCT_1515 = 0x000005EB,
	SRCT_1515v2 = 0x010005EB,
	SRCT_1516 = 0x000005EC,
	SRCT_1516v2 = 0x010005EC,
	SRCT_1517 = 0x000005ED,
	SRCT_1518 = 0x000005EE,
	SRCT_1511C = 0x000405E7,
	SRCT_1511Cv2 = 0x010405E7,
	SRCT_1512C = 0x000405E8,
	SRCT_1512Cv2 = 0x010405E8,
	SRCT_1511F = 0x000105E7,
	SRCT_1511Fv2 = 0x010105E7,
	SRCT_1511Fv3 = 0x020105E7,
	SRCT_1513F = 0x000105E9,
	SRCT_1513Fv2 = 0x010105E9,
	SRCT_1513Fv3 = 0x020105E9,
	SRCT_1515F = 0x000105EB,
	SRCT_1515Fv2 = 0x010105EB,
	SRCT_1516F = 0x000105EC,
	SRCT_1516Fv2 = 0x010105EC,
	SRCT_1517F = 0x000105ED,
	SRCT_1518F = 0x000105EE,
	SRCT_1511T = 0x000805E7,
	SRCT_1515T = 0x000805EB,
	SRCT_1516T = 0x000805EC,
	SRCT_1517T = 0x000805ED,
	SRCT_1511TF = 0x000905E7,
	SRCT_1515TF = 0x000905EB,
	SRCT_1516TF = 0x000905EC,
	SRCT_1517TF = 0x000905ED,
	SRCT_1518ODK = 0x001005EE,
	SRCT_1518FODK = 0x001105EE,
	SRCT_1518MFP = 0x004005EE,
	SRCT_1518FMFP = 0x004105EE,
	SRCT_ET200SP_Unspecified = 0x000205DC,
	SRCT_1510SP = 0x000205E6,
	SRCT_1510SPv2 = 0x010205E6,
	SRCT_1512SP = 0x000205E8,
	SRCT_1512SPv2 = 0x010205E8,
	SRCT_1510SPF = 0x000305E6,
	SRCT_1510SPFv2 = 0x010305E6,
	SRCT_1512SPF = 0x000305E8,
	SRCT_1512SPFv2 = 0x010305E8
	}

Table 7- 437 ECPUType - .NET (C#)

Syntax	enum ECPUType
	{
	CPU1500_Unspecified = 0x000005DC,
	CPU1511 = 0x000005E7,
	CPU1511v2 = 0x010005E7,
	CPU1513 = 0x000005E9,
	CPU1513v2 = 0x010005E9,
	CPU1511v3 = 0x020005E7,
	CPU1515 = 0x000005EB,
	CPU1515v2 = 0x010005EB,
	CPU1513v3 = 0x020005E9,
	CPU1516 = 0x000005EC,
	CPU1516v2 = 0x010005EC,
	CPU1517 = 0x000005ED,
	CPU1518 = 0x000005EE,
	CPU1511C = 0x000405E7,
	CPU1511Cv2 = 0x010405E7,
	CPU1512C = 0x000405E8,
	CPU1512Cv2 = 0x010405E8,
	CPU1511F = 0x000105E7,
	CPU1511Fv2 = 0x010105E7,
	CPU1511Fv3 = 0x020105E7,
	CPU1513F = 0x000105E9,
	CPU1513Fv2 = 0x010105E9,
	CPU1513Fv3 = 0x020105E9,
	CPU1515F = 0x000105EB,
	CPU1515Fv2 = 0x010105EB,
	CPU1516F = 0x000105EC,
	CPU1516Fv2 = 0x010105EC,
	CPU1517F = 0x000105ED,
	CPU1518F = 0x000105EE,
	CPU1511T = 0x000805E7,
	CPU1515T = 0x000805EB,
	CPU1516T = 0x000805EC,
	CPU1517T = 0x000805ED,
	CPU1511TF = 0x000905E7,
	CPU1515TF = 0x000905EB,
	CPU1516TF = 0x000905EC,
	CPU1517TF = 0x000905ED,
	CPU1518ODK = 0x001005EE,
	CPU1518FODK = 0x001105EE,
	CPU1518MFP = 0x004005EE,
	CPU1518FMFP = 0x004105EE,
	CPUET200SP_Unspecified = 0x000205DC,
	CPU1510SP = 0x000205E6,
	CPU1510SPv2 = 0x010205E6,
	CPU1512SP = 0x000205E8,
	CPU1512SPv2 = 0x010205E8,
	CPU1510SPF = 0x000305E6,
	CPU1510SPFv2 = 0x010305E6,
	CPU1512SPF = 0x000305E8,
	CPU1512SPFv2 = 0x010305E8
	}

7.8.7.6 ECommunicationInterface

Description

This enumeration contains the available communication interfaces of a virtual controller.

Table 7- 438 ECommunicationInterface - Native C++

Syntax	`enum ECommunicationInterface`
	`{`
	`  SRCI_NONE = 0,`
	`  SRCI_SOFTBUS = 1,`
	`  SRCI_TCPIP = 2,`
	`  SRCI_ENUMERATION_SIZE = 3`
	`};`

Table 7- 439 ECommunicationInterface - .NET (C#)

Syntax	`enum ECommunicationInterface`
	`{`
	`  None = 0,`
	`  Softbus = 1,`
	`  TCPIP = 2,`
	`}`

7.8.7.7 ELEDType

Description

This list includes all types of LEDs of a virtual controller.

Table 7- 440 ELEDType - Native C++

Syntax	`enum ELEDType`
	`{`
	`  SRLT_STOP = 0,`
	`  SRLT_RUN = 1,`
	`  SRLT_ERROR = 2,`
	`  SRLT_MAINT = 3,`
	`  SRLT_REDUND = 4,`
	`  SRLT_FORCE = 5,`
	`  SRLT_BUSF1 = 6,`
	`  SRLT_BUSF2 = 7,`
	`  SRLT_BUSF3 = 8,`
	`  SRLT_BUSF4 = 9,`
	
	`  SRLT_ENUMERATION_SIZE = 10`
	`};`

Table 7- 441 ELEDType - .NET (C#)

Syntax	`enum ELEDType`
	`{`
	`  Stop = 0,`
	`  Run = 1,`
	`  Error = 2`
	`  Maint = 3,`
	`  Redund = 4,`
	`  Force = 5,`
	`  Busf1 = 6,`
	`  Busf2 = 7,`
	`  Busf3 = 8,`
	`  Busf4 = 9`
	`}`

7.8.7.8 ELEDMode

Description

This list contains all the LED states of a virtual controller.

Table 7- 442 ELEDMode - Native C++

Syntax	`enum ELEDMode`
	`{`
	`  SRLM_OFF = 0,`
	`  SRLM_ON = 1,`
	`  SRLM_FLASH_FAST = 2,`
	`  SRLM_FLASH_SLOW = 3,`
	`  SRLM_INVALID = 4`
	`};`

Table 7- 443 ELEDMode - .NET (C#)

Syntax	`enum ELEDMode`
	`{`
	`  Off = 0,`
	`  On = 1,`
	`  FlashFast = 2,`
	`  FlashSlow = 3,`
	`  Invalid = 4`
	`}`

7.8.7.9 EPrimitiveDataType

Description

This list contains all the primitive data types that are used by the I/O access functions.

Table 7- 444 EPrimitiveDataType - Native C++

Syntax	`enum EPrimitiveDataType`
	`{`
	`  SRPDT_UNSPECIFIC = 0,`
	`  SRPDT_STRUCT = 1,`
	`  SRPDT_BOOL = 2,`
	`  SRPDT_INT8 = 3,`
	`  SRPDT_INT16 = 4,`
	`  SRPDT_INT32 = 5,`
	`  SRPDT_INT64 = 6,`
	`  SRPDT_UINT8 = 7,`
	`  SRPDT_UINT16 = 8,`
	`  SRPDT_UINT32 = 9,`
	`  SRPDT_UINT64 = 10,`
	`  SRPDT_FLOAT = 11,`
	`  SRPDT_DOUBLE = 12,`
	`  SRPDT_CHAR = 13,`
	`  SRPDT_WCHAR = 14`
	`};`

Table 7- 445 EPrimitiveDataType - .NET (C#)

Syntax	`enum EPrimitiveDataType`
	`{`
	`  Unspecific = 0,`
	`  Struct = 1,`
	`  Bool = 2,`
	`  Int8 = 3,`
	`  Int16 = 4,`
	`  Int32 = 5,`
	`  Int64 = 6,`
	`  UInt8 = 7,`
	`  UInt16 = 8,`
	`  UInt32 = 9,`
	`  UInt64 = 10,`
	`  Float = 11,`
	`  Double = 12,`
	`  Char = 13,`
	`  WChar = 14`
	`}`

Compatible primitive data types

The following tables shows the primitive data types of the user interface (API) and the data types of the PLCSIM Advanced instance that are configured in the stored tag list. The data types that can be used as compatible are marked with "X".

Table 7- 446 Compatible primitive data types - Reading

API	PLCSIM Advanced instance												
	Bool	INT8	INT16	INT32	INT64	UINT8	UINT16	UINT32	UINT64	Float	Double	Char	WChar
Bool	X												
INT8		X											
INT16		X	X			X							
INT32		X	X	X		X	X						
INT64		X	X	X	X	X	X	X					
UINT8						X							
UINT16						X	X						
UINT32						X	X	X					
UINT64						X	X	X	X				
Float										X			
Double											X		
Char												X	
WChar													X

Table 7- 447 Compatible primitive data types - Write

API	PLCSIM Advanced instance												
	Bool	INT8	INT16	INT32	INT64	UINT8	UINT16	UINT32	UINT64	Float	Double	Char	WChar
Bool	X												
INT8		X	X	X	X								
INT16			X	X	X								
INT32				X	X								
INT64					X								
UINT8			X	X	X	X	X	X	X				
UINT16							X	X	X				
UINT32								X	X				
UINT64									X				
Float										X			
Double											X		
Char												X	
WChar													X

7.8.7.10 EDataType

Description

This enumeration contains all the PLC data types (STEP 7).

Table 7- 448 EDataType - Native C++

Syntax	`enum EDataType`
	`{`
	`SRDT_UNKNOWN = 0,`
	`SRDT_BOOL = 1,`
	`SRDT_BYTE = 2,`
	`SRDT_CHAR = 3,`
	`SRDT_WORD = 4,`
	`SRDT_INT = 5,`
	`SRDT_DWORD = 6,`
	`SRDT_DINT = 7,`
	`SRDT_REAL = 8,`
	`SRDT_DATE = 9,`
	`SRDT_TIME_OF_DAY = 10,`
	`SRDT_TIME = 11,`
	`SRDT_S5TIME = 12,`
	`SRDT_DATE_AND_TIME = 14,`
	`SRDT_STRUCT = 17,`
	`SRDT_STRING = 19,`
	`SRDT_COUNTER = 28,`
	`SRDT_TIMER = 29,`
	`SRDT_IEC_Counter = 30,`
	`SRDT_IEC_Timer = 31,`
	`SRDT_LREAL = 48,`
	`SRDT_ULINT = 49,`
	`SRDT_LINT = 50,`
	`SRDT_LWORD = 51,`
	`SRDT_USINT = 52,`
	`SRDT_UINT = 53,`
	`SRDT_UDINT = 54,`
	`SRDT_SINT = 55,`
	`SRDT_WCHAR = 61,`
	`SRDT_WSTRING = 62,`
	`SRDT_LTIME = 64,`
	`SRDT_LTIME_OF_DAY = 65,`
	`SRDT_LDT = 66,`
	`SRDT_DTL = 67,`
	`SRDT_IEC_LTimer = 68,`
	`SRDT_IEC_SCounter = 69,`
	`SRDT_IEC_DCounter = 70,`
	`SRDT_IEC_LCounter = 71,`
	`SRDT_IEC_UCounter = 72,`
	`SRDT_IEC_USCounter = 73,`
	`SRDT_IEC_UDCounter = 74,`
	`SRDT_IEC_ULCounter = 75,`
	`SRDT_ERROR_STRUCT = 97,`
	`SRDT_NREF = 98,`

	SRDT_CREF = 101, SRDT_AOM_IDENT = 128, SRDT_EVENT_ANY = 129, SRDT_EVENT_ATT = 130, SRDT_EVENT_HWINT = 131, SRDT_HW_ANY = 144, SRDT_HW_IOSYSTEM = 145, SRDT_HW_DPMASTER = 146, SRDT_HW_DEVICE = 147, SRDT_HW_DPSLAVE = 148, SRDT_HW_IO = 149, SRDT_HW_MODULE = 150, SRDT_HW_SUBMODULE = 151, SRDT_HW_HSC = 152, SRDT_HW_PWM = 153, SRDT_HW_PTO = 154, SRDT_HW_INTERFACE = 155, SRDT_HW_IEPORT = 156, SRDT_OB_ANY = 160, SRDT_OB_DELAY = 161, SRDT_OB_TOD = 162, SRDT_OB_CYCLIC = 163, SRDT_OB_ATT = 164, SRDT_CONN_ANY = 168, SRDT_CONN_PRG = 169, SRDT_CONN_OUC = 170, SRDT_CONN_R_ID = 171, SRDT_PORT = 173, SRDT_RTM = 174, SRDT_PIP = 175, SRDT_OB_PCYCLE = 192, SRDT_OB_HWINT = 193, SRDT_OB_DIAG = 195, SRDT_OB_TIMEERROR = 196, SRDT_OB_STARTUP = 197, SRDT_DB_ANY = 208, SRDT_DB_WWW = 209, SRDT_DB_DYN = 210, SRDT_DB = 257 };

Table 7- 449 EDataType - .NET (C#)

Syntax	`public enum EDataType`
	`{`
	`Unknown = 0,`
	`Bool = 1,`
	`Byte = 2,`
	`Char = 3,`
	`Word = 4,`
	`Int = 5,`
	`DWord = 6,`
	`DInt = 7,`
	`Real = 8,`
	`Date = 9,`
	`TimeOfDay = 10,`
	`Time = 11,`
	`S5Time = 12,`
	`DateAndTime = 14,`
	`Struct = 17,`
	`String = 19,`
	`Counter = 28,`
	`Timer = 29,`
	`IEC_Counter = 30,`
	`IEC_Timer = 31,`
	`LReal = 48,`
	`ULInt = 49,`
	`LInt = 50,`
	`LWord = 51,`
	`USInt = 52,`
	`UInt = 53,`
	`UDInt = 54,`
	`SInt = 55,`
	`WChar = 61,`
	`WString = 62,`
	`LTime = 64,`
	`LTimeOfDay = 65,`
	`LDT = 66,`
	`DTL = 67,`
	`IEC_LTimer = 68,`
	`IEC_SCounter = 69,`
	`IEC_DCounter = 70,`
	`IEC_LCounter = 71,`
	`IEC_UCounter = 72,`
	`IEC_USCounter = 73,`
	`IEC_UDCounte = 74,`
	`IEC_ULCounter = 75,`
	`ErrorStruct = 97,`
	`NREF = 98,`
	`CREF = 101,`

	Aom_Ident = 128, Event_Any = 129, Event_Att = 130, Event_HwInt = 131, Hw_Any = 144, Hw_IoSystem = 145, Hw_DpMaster = 146, Hw_Device = 147, Hw_DpSlave = 148, Hw_Io = 149, Hw_Module = 150, Hw_SubModule = 151, Hw_Hsc = 152, Hw_Pwm = 153, Hw_Pto = 154, Hw_Interface = 155, Hw_IEPort = 156, OB_Any = 160, OB_Delay = 161, OB_Tod = 162, OB_Cyclic = 163, OB_Att = 164, Conn_Any = 168, Conn_Prg = 169, Conn_Ouc = 170, Conn_R_ID = 171, Port = 173, Rtm = 174, Pip = 175, OB_PCycle = 192, OB_HwInt = 193, OB_Diag = 195, OB_TimeError = 196, OB_Startup = 197, DB_Any = 208, DB_WWW = 209, DB_Dyn = 210, DB = 257 }

7.8.7.11 ETagListDetails

Description

This list contains all PLC areas that can be used as a filter to update the tag table.

Table 7- 450 ETagListDetails - Native C++

Syntax	`enum ETagListDetails`
	`{`
	` SRTLD_NONE = 0,`
	` SRTLD_IO = 1,`
	` SRTLD_M = 2,`
	` SRTLD_IOM = 3,`
	` SRTLD_CT = 4,`
	` SRTLD_IOCT = 5,`
	` SRTLD_MCT = 6,`
	` SRTLD_IOMCT = 7,`
	` SRTLD_DB = 8,`
	` SRTLD_IODB = 9,`
	` SRTLD_MDB = 10,`
	` SRTLD_IOMDB = 11,`
	` SRTLD_CTDB = 12,`
	` SRTLD_IOCTDB = 13,`
	` SRTLD_MCTDB = 14,`
	` SRTLD_IOMCTDB = 15`
	`};`

Table 7- 451 ETagListDetails - .NET (C#)

Syntax	`enum ETagListDetails`
	`{`
	` None = 0,`
	` IO = 1,`
	` M = 2,`
	` IOM = 3,`
	` CT = 4,`
	` IOCT = 5,`
	` MCT = 6,`
	` IOMCT = 7,`
	` DB = 8,`
	` IODB = 9,`
	` MDB = 10,`
	` IOMDB = 11,`
	` CTDB = 12,`
	` IOCTDB = 13,`
	` MCTDB = 14,`
	` IOMCTDB = 15`
	`}`

7.8.7.12 ERuntimeConfigChanged

Description

This list contains all possible causes of a OnConfigurationChanged event that the Runtime Manager sends.

Table 7- 452 ERuntimeConfigChanged - Native C++

Syntax	`enum ERuntimeConfigChanged`
	`{`
	` SRCC_INSTANCE_REGISTERED = 0,`
	` SRCC_INSTANCE_UNREGISTERED = 1`
	` SRCC_CONNECTION_OPENED = 2,`
	` SRCC_CONNECTION_CLOSED = 3,`
	` SRCC_PORT_OPENED = 4,`
	` SRCC_PORT_CLOSED = 5`
	`};`

Table 7- 453 ERuntimeConfigChanged - .NET (C#)

Syntax	`enum ERuntimeConfigChanged`
	`{`
	` InstanceRegistered = 0,`
	` InstanceUnregistered = 1,`
	` ConnectionOpened = 2,`
	` ConnectionClosed = 3,`
	` PortOpened = 4,`
	` PortClosed = 5`
	`}`

7.8.7.13 EInstanceConfigChanged

Description

This list contains all possible causes for a OnConfigurationChanged event that the virtual controller sends.

Table 7- 454 EInstanceConfigChanged - Native C++

Syntax	`enum EInstanceConfigChanged`
	`{`
	` SRICC_HARDWARE_SOFTWARE_CHANGED = 0,`
	` SRICC_IP_CHANGED = 1`
	`};`

Table 7- 455 EInstanceConfigChanged - .NET (C#)

Syntax	`enum EInstanceConfigChanged`
	`{`
	` HardwareSoftwareChanged = 0,`
	` IPChanged = 1`
	`}`

7.8.7.14 EPullOrPlugEventType

Description

This enumeration contains predefined types of pull/plug events for S7 modules.

Table 7- 456 EPullOrPlugEventType - Native C++

Syntax	`enum EPullOrPlugEventType`
	`{`
	` SR_PPE_UNDEFINED = 0,`
	` SR_PPE_PULL_EVENT = 1,`
	` SR_PPE_PLUG_EVENT = 2,`
	` SR_PPE_PLUG_EVENT_ERROR_REMAINS = 3,`
	` SR_PPE_PLUG_WRONG_MODULE_EVENT = 4`
	`};`

Table 7- 457 EPullOrPlugEventType - .NET (C#)

Syntax	`enum EPullOrPlugEventType`
	`{`
	` Undefined = 0,`
	` Pull = 1,`
	` Plug = 2,`
	` PlugErrorRemains = 3,`
	` PlugWrongModule = 4`
	`}`

7.8.7.15 EProcessEventType

Description

This enumeration contains predefined types of process events for S7 modules.

Table 7- 458 EProcessEventType - Native C++

Syntax	`enum EProcessEventType`
	`{`
	` SR_PET_UNDEFINED = 0,`
	` SR_PET_RISING_EDGE = 1,`
	` SR_PET_FALLING_EDGE = 2,`
	` SR_PET_LIMIT1_UNDERRUN = 3,`
	` SR_PET_LIMIT1_OVERRUN = 4,`
	` SR_PET_LIMIT2_UNDERRUN = 5,`
	` SR_PET_LIMIT2_OVERRUN = 6`
	`};`

Table 7- 459 EProcessEventType - .NET (C#)

Syntax	`enum EProcessEventType`
	`{`
	` Undefined = 0,`
	` RisingEdge = 1,`
	` FallingEdge = 2,`
	` Limit_1_Underrun = 3,`
	` Limit_1_Overrun = 4,`
	` Limit_2_Underrun = 5,`
	` Limit_2_Overrun = 6`
	`}`

7.8.7.16 EDirection

Description

This enumeration contains properties of the diagnostic alarm.

Table 7- 460 EDirection - Native C++

Syntax	`enum EDirection`
	`{`
	` SRD_DIRECTION_INPUT = 0,`
	` SRD_DIRECTION_OUTPUT = 1`
	`};`

Table 7- 461 EDirection - .NET (C#)

Syntax	`enum EDirection`
	`{`
	` Input = 0,`
	` Output = 1`
	`}`

7.8.7.17 EDiagProperty

Description

This enumeration contains the incoming/outgoing information of the diagnostic alarm.

Table 7- 462 EDiagProperty - Native C++

Syntax	`enum EDiagProperty`
	`{`
	` SRP_DIAG_APPEAR = 1,`
	` SRP_DIAG_DISAPPEAR = 2`
	`};`

Table 7- 463 EDiagProperty - .NET (C#)

Syntax	`enum EDiagProperty`
	`{`
	` Appear = 1,`
	` Disappear = 2`
	`}`

7.8.7.18 EDiagSeverity

Description

This enumeration contains the severity of the diagnostic alarm (error, maintenance demanded, maintenance required).

Table 7- 464 EDiagSeverity - Native C++

Syntax	`enum EDiagSeverity`
	`{`
	`  SRDS_SEVERITY_FAILURE = 0,`
	`  SRDS_SEVERITY_MAINTENANCE_DEMANDED = 1,`
	`  SRDS_SEVERITY_MAINTENANCE_REQUIRED = 2`
	`};`

Table 7- 465 EDiagSeverity - .NET (C#)

Syntax	`enum EDiagSeverity`
	`{`
	`  Failure = 0,`
	`  MaintDemanded = 1,`
	`  MaintRequired = 2`
	`}`

7.8.7.19 ERackOrStationFaultType

Description

This enumeration contains the types of the RackOrStationFault event.

Table 7- 466 ERackOrStationFaultType - Native C++

Syntax	`enum ERackOrStationFaultType`
	`{`
	`  SR_RSF_FAULT = 0,`
	`  SR_RSF_RETURN = 1`
	`};`

Table 7- 467 ERackOrStationFaultType - .NET (C#)

Syntax	`enum ERackOrStationFaultType`
	`{`
	`  Fault = 0,`
	`  Return = 1`
	`}`

Restrictions 8

8.1 Overview

Certain actions or events may lead to behavior in PLCSIM Advanced or in STEP 7 which deviates from that of a hardware CPU. Restrictions and possible remedies can be found in the following sections:

- Restrictions with fail-safe CPUs (Page 347)
- OPC UA server (Page 348)
- Web server (Page 349)
- Backing up and restoring the configuration of a PLCSIM Advanced instance (Page 350)
- Restrictions for file paths (Page 350)
- Restrictions for communications services (Page 351)
- Restrictions for instructions (Page 351)
- Restrictions with Motion Control (Page 352)
- Restrictions to local communication via Softbus (Page 354)
- Restrictions of security with VMware vSphere Hypervisor (ESXi) (Page 355)
- Error with overflow of cyclical events and motion OBs (Page 355)
- Deviating I/O values in the STEP 7 user program (Page 356)
- Multiple simulations and possible collision of IP addresses (Page 356)
- Lacking access to an IP address (Page 356)
- Simulation in standby mode (Page 356)
- Error installing the antivirus software from Kaspersky (Page 357)

8.2 Restrictions with fail-safe CPUs

Error downloading program changes

The error message "Corrupt" appears when downloading program changes to an F-CPU. The F-CPU remains in STOP mode when the "Start all" check box is selected.

Remedy

Deselect the "Start all" check box in the "Load results" dialog.

Once the download is complete, set the CPU to RUN mode manually using the RUN button.

8.3 OPC UA server

With OPC UA, data exchange is performed through an open, standardized and manufacturer-independent communication protocol. The CPU acting as the OPC UA server can communicate with OPC UA clients, for example, with HMI panels V14 and SCADA systems.

For technical reasons, the security settings in PLCSIM Advanced differ from a hardware CPU. Some features are disabled for simulations or are available to a limited extent.

Configuring OPC UA server

Start the instances via the communication interface "PLCSIM Virtual Ethernet Adapter" (TCP/IP) to use the OPC UA server.

The OPC UA server functionality is not available if communication takes place via the Softbus.

OPC UA security settings

Based on the OPC UA security settings, the same settings can be made in STEP 7 for the hardware CPU. However, PLCSIM Advanced does not take these security settings into consideration. This ensures that the user does not have his project change to perform a simulation.

Certificate

Note

Server certificate

PLCSIM Advanced uses its own certificate in the firmware and not that of STEP 7. The certificate need not be changed for simulations. However, it does not have the same security level as a downloaded server certificate and cannot be used for secure connections!

- **Server Security Endpoints**

  PLCSIM Advanced only supports Security Endpoint "none".

- **Client certificate**

  PLCSIM Advanced does not evaluate certificates the imported and configured in STEP 7 . PLCSIM Advanced accepts all client certificates automatically. This setting cannot be changed.

- **User authentication**

  PLCSIM Advanced does not use the user name configured in STEP 7.

  Only one logon is possible as "guest" or "anonymous".

User authorization for OPC UA

The PLCSIM Advanced license also contains the user authorization for OPC UA.

The user authorization applies for three instances.

8.4 Web server

The Web server integrated in a CPU enables monitoring and administering of the CPU by authorized users over a network. This permits evaluation and diagnostics over long distances.

Each PLCSIM Advanced instance can simulate its own Web server.

The simulation of the Web server is restricted under S7-PLCSIM Advanced V2.0.

- It is not possible to back up and restore a configuration via the Web server.
- The freeze state of a virtual controller is not shown as an internal operating state.

Configuring the Web server

S7 PLCSIM Advanced

Start the instances via the communication interface "PLCSIM Virtual Ethernet Adapter" (TCP/IP) to use the Web server.

The Web server functionality is not available if the communication is performed via the Softbus.

STEP 7

Configure the Web server in STEP 7 in the CPU properties.

Restricted Web server functionality

- Logon

  "PLCSIM" is preset as the user. There is no logon for users.

  A user configured in STEP 7 and his rights have no effect on the "PLCSIM" user.
- There is no access via the secure transmission protocol "HTTPS".
- The information may not be fully displayed on some websites due to different data handling.
- There is no topology information.
- "Online Backup&Restore" is not available.
- FW updates are not supported.

Number of maximum connections

A fixed value of 384 is displayed in the Web server for the maximum possible number of connections.

Remedy

The correct value can be found in the technical data for the loaded CPU.

8.5 Backing up and restoring the configuration of a PLCSIM Advanced instance

Backing up and restoring the configuration

As of PLCSIM Advanced V2.0 it is possible to back up and restore a PLCSIM Advanced instance.

You can create as many backups as you want and store a variety of configurations for a PLCSIM Advanced instance.

You perform the backup and restore in the TIA Portal as you would in a real CPU.

Backup and restore via the Web server and (simulated) display are not supported.

A backup that was created with PLCSIM Advanced can only be used with PLCSIM Advanced.

It is not possible to restore the configuration of a real CPU with a backup from PLCSIM Advanced.

Requirements

- The configuration of a PLCSIM Advanced instance is backed up and restored over the TCP/IP protocol, Softbus is not supported.
- It is only possible to restore the configuration of a PLCSIM Advanced instance with the corresponding backup from PLCSIM Advanced.

8.6 Restrictions for file paths

The following restrictions apply for user interfaces which expect a path or a complete file name as the transfer parameter:

Restrictions for local paths	Write permissions to system-critical directories such as the Windows directory (%Windows%) or the program directories (%Program Files%, %Program Files (x86)%) are not allowed. In this case the C++ user interface returns the error code `SREC_WRONG_ARGUMENT`. In this case the managed user interface returns an exception with the error code `RuntimeErrorCode.WrongArgument`.
Restrictions for network paths	In order to be able to use network paths, you must incorporate them as a network drive. Otherwise, the C++ user interface returns the error code `SREC_WRONG_ARGUMENT`. The managed user interface returns an exception with the error code `RuntimeErrorCode.WrongArgument`.

8.7 Restrictions for communications services

TUSEND / TURCV

When you run the UDP blocks TUSEND and TURCV via the "PLCSIM" communication interface (Softbus), you get error code 0x80C4 at the transmission end and receiving end:

Temporary communications error. The specified connection is temporarily down.

Remedy

Set "PLCSIM Virtual Ethernet Adapter" (TCP/IP) as the communication interface in PLCSIM Advanced.

Secure TCP connections

PLCSIM Advanced does not support TLS (Transport Layer Security) and has no certificate management. It is therefore not possible to establish secure TCP connections from the simulation.

This means that the following connections are not supported:

- Secure OUC connections (Secure Open User Communication)
- Secure connections to a mail server using TMAIL_C
- HTTPS connections to the Web server

8.8 Restrictions for instructions

PLCSIM Advanced simulates instructions for CPUs S7-1500 and ET 200SP as close to reality as possible. PLCSIM Advanced checks the input parameters for validity and returns outputs that are valid but do not necessarily correspond to those that a real CPU with physical inputs/outputs would return.

Instructions not supported

Unsupported instructions are handled as not ready, their value is always "OK". PLCSIM Advanced does not support the following instructions:

- DP_TOPOL
- PORT_CFG

8.9 Restrictions with Motion Control

8.9.1 MCR and EMCR

There are Motion Control resources (MCR) and Extended Motion Control resources (EMCR) on each CPU that can be distributed to the technology objects.

Note

PLCSIM Advanced does not support the complete quantity structure of MCR und EMCR. The simulation of motion control is therefore restricted for the following CPUs:

Table 8- 1 CPUs with limited Motion Control resources (MCR, EMCR) during the simulation

Type	Motion Control resources	
	MCR	EMCR
CPU 1516T-3 PN/DP CPU 1516TF-3 PN/DP	5120	128
CPU 1517-3 PN/DP CPU 1517F-3 PN/DP	5120	-
CPU 1517T-3 PN/DP CPU 1517TF-3 PN/DP	5120	128
CPU 1518-4 PN/DP CPU 1518F-4 PN/DP CPU 1518-4 PN/DP ODK[1] CPU 1518F-4 PN/DP ODK[1] CPU 1518-4 PN/DP MFP[1] CPU 1518F-4 PN/DP MFP[1]	5120	-

[1] The ODK functionality of this CPU is not simulated.

Exceeding the quantity structure

STEP 7 checks whether the quantity structure for a configured CPU is complied with, and alerts you when it is exceeded. When you load a project into a CPU, another message appears.

Note

A project that uses more MCRs / EMCRs than PLCSIM Advanced supports can be downloaded to a virtual controller. However, there is no message indicating that the quantity structure has been exceeded.

Only when the user program accesses the technology objects do you recognize by the error message at the block and the value 0 of the object that motion control objects cannot be used due to an overrun of the quantity structure.

8.9.2 Technology modules

PLCSIM Advanced simulates the real CPU, but not configured, connected technology modules or other I/O devices.

It is possible to download a project with technology modules for operation of motion control. However, the built-in logic of the technology modules is not part of the simulation, which is why the associated Motion Control instructions are not supported.

Additional information

For more information on Motion Control, refer to the following manuals:

- Device manuals to support SIMATIC controllers (https://support.industry.siemens.com/cs/ww/en/view/109744173)
- Function manual S7-1500 Motion Control (https://support.industry.siemens.com/cs/ww/en/view/109739589)
- Function manual S7-1500T Motion Control (https://support.industry.siemens.com/cs/ww/en/view/109481326)

8.9.3 OB 91 and OB 92

If you convert a Motion Control project which contains the OB 91 and OB 92 from STEP 7 V13, then you cannot load this project to a PLCSIM Advanced.

Remedy

Delete OB 91 and OB 92 in the project and recompile the project.

The OBs are thus created again with the simulation support required for PLCSIM Advanced. Compilation resets the properties of the blocks to the default values.
Restore the required settings in the properties.

8.10 Restrictions to local communication via Softbus

Identical IP addresses for instances

If the "PLCSIM" communication interface (Softbus) is set, then identical IP addresses are created automatically for all instances when creating the instances through the Control Panel.

In STEP 7, only one instance is therefore displayed in the lifelist.

Remedy

Use the API function `SetIPSuite()` to assign a unique address for each instance, then all instances are displayed in STEP 7 with their IP addresses.

API function

- SetIPSuite() (Page 139)

Online and diagnostics

If the "PLCSIM" (Softbus) communication interface is set, no details are displayed for the "Online and Diagnostics" function under the PROFINET interface (IP address, MAC address, etc.).

See also

Controller - Information and settings (Page 136)

8.11 Restrictions of security with VMware vSphere Hypervisor (ESXi)

When you use the virtualization platform VMware vSphere Hypervisor (ESXi), you must change the policy exception to communicate over TCP/IP.

Remedy

Accept the "Promiscuous mode and "Forged transmit" options for the Virtual Switch of the ESXi.

NOTICE
Restrictions of security For security reasons, Promiscuous mode is disabled by default. If you accept the Promiscuousmode, the real Ethernet adapter even receives telegrams that are not addressed to it.

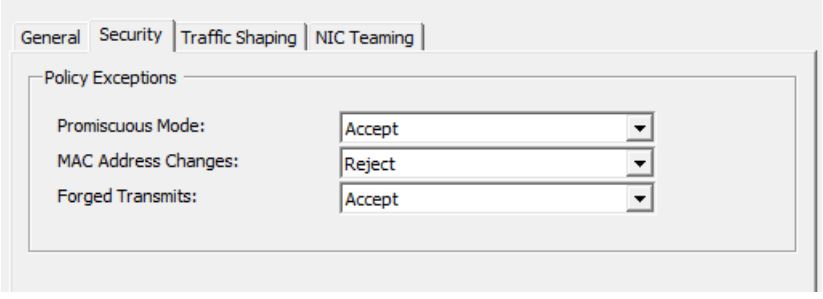

Figure 8-1 Policy exceptions for VMware vSphere Hypervisor (ESXi)

8.12 Error with overflow of cyclical events and motion OBs

If your simulation contains cyclic interrupts, the queue of PLCSIM Advanced may overflow for cyclic events and for motion OBs. Due to the execution speed of PLCSIM Advanced compared to real hardware, the time required to create the diagnostics buffer entry may be longer than the time until the next cyclic interrupt.

In this case, an additional entry is placed in the queue, causing another overflow. In the event of an overflow, PLCSIM Advanced provides visual information in the form of diagnostics buffer messages and a red error icon in the project tree.

See also

Speed up and slow down simulation (Page 75)

8.13 Deviating I/O values in the STEP 7 user program

Updated values

Each value change made by a STEP 7 user program in the I/O address areas is overwritten in the cycle control point with the updated value that was written via the API functions `Write...()`. The API functions `Read...()` only return this updated value and not the value from STEP 7 **for the input range**.

Non-updated values

If the value was not updated via the API functions `Write...()`, the API functions `Read...()` return the value from STEP 7 **for the output range**.

See also

Simulate peripheral I/O (Page 68)

8.14 Multiple simulations and possible collision of IP addresses

You can simultaneously simulate multiple CPUs, but each simulated CPU interface requires a unique IP address.

Make sure your CPUs have different IP addresses before starting the simulation.

8.15 Lacking access to an IP address

Special feature of distributed communication

If you use multiple network nodes on the same subnet through different virtual or real adapters, the operating system may search for the node on the wrong adapter.

Remedy

Repeat your requests or enter "arp -d <IP address>" in the command line editor of Windows.

8.16 Simulation in standby mode

If your computer or programming device goes into standby or hibernation mode, the simulation may be stopped. In this case, the communication between STEP 7 and PLCSIM Advanced is stopped. When your computer or programming device starts up again, the communication may need to be reestablished. In some cases, it may also be necessary to open the simulation project again.

To prevent this situation, disable the standby mode on your computer or programming device.

8.17 Error installing the antivirus software from Kaspersky

When using the Anti-Virus virus scanner from Kaspersky, the network settings may not be set correctly during the installation of PLCSIM Advanced. The result is that communication via TCP/IP cannot be used (error code -50 in the Control Panel).

Remedy

Check your network settings as described in the sectionEnable distributed communication (Page 56).

List of abbreviations

A

Abbreviation	Term
ALM	Automation License Manager Tool for managing license keys in STEP 7
API	Application Programming Interface user interface
arp	Address resolution protocol
BCD	Binary Coded Decimal
CPU	Central Processing Unit (Synonym for PLC)
EMCR	Extended Motion Control resources
ES	Engineering System
HMI	Human Machine Interface user interface
IE	Industrial Ethernet
GUI	Graphical User Interface
LAN	Local Area Network Computer network that is limited to a local area.
MCR	Motion Control resources
OB	Organization Block
ODK	Open Development Kit
OPC UA	Open Platform Communications Unified Architecture
PG	Programming device
PLC	Programmable Logic Controller
PN	PROFINET
RAM	Random Access Memory
RT	Runtime
TCP/IP	Transmission Control Protocol/Internet Protocol
TIA	Totally Integrated Automation
PIP	Process Image Partition
UTC	Coordinated Universal Time
VM	Virtual Machine
VPLC	Virtual Programmable Logic Controller
WinCC	Windows Control Center

SIEMENS

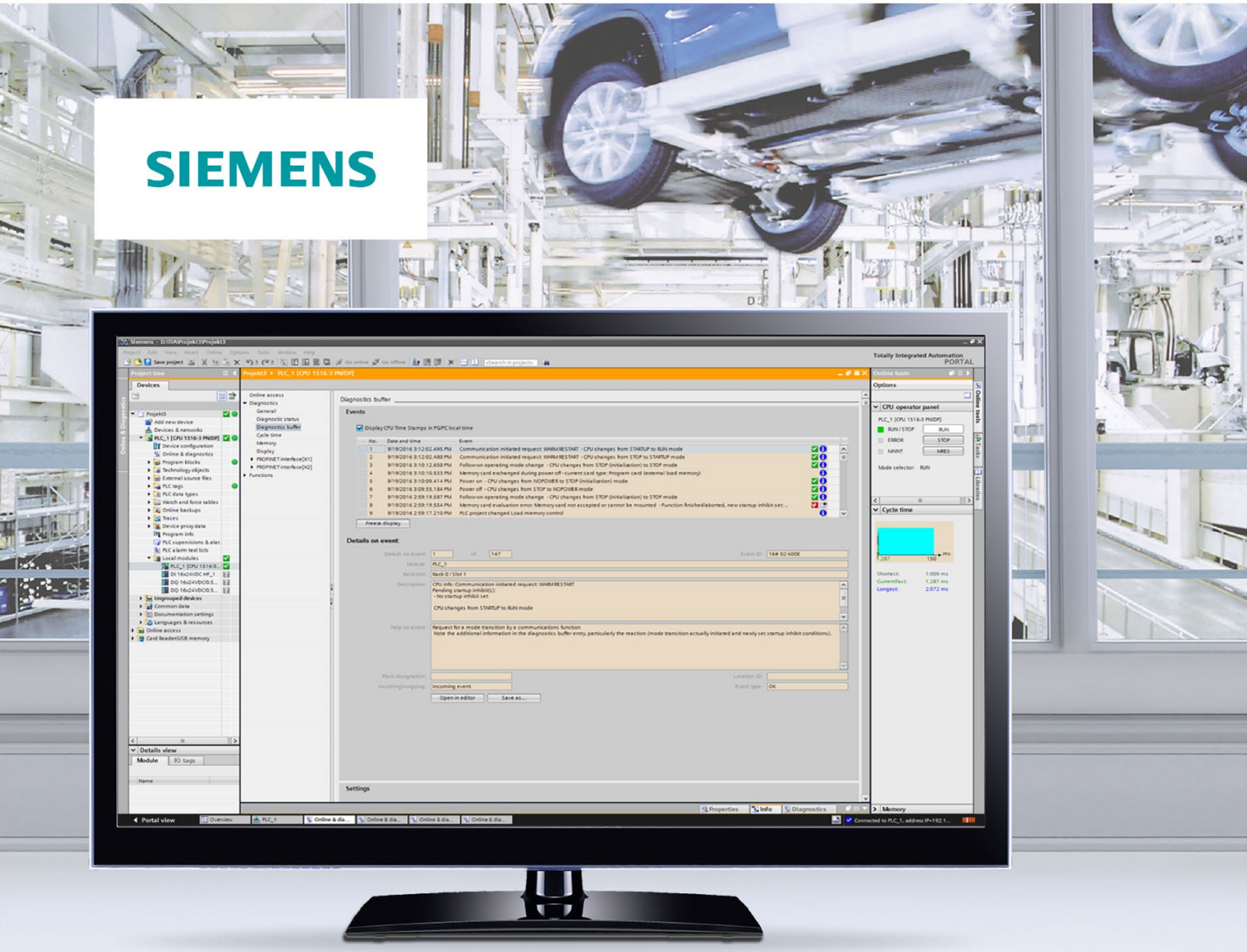

Function manual

SIMATIC

S7-1500, ET 200MP, ET 200SP, ET 200AL, ET 200pro

Diagnostics

Edition 10/2018

support.industry.siemens.com

SIEMENS

SIMATIC

S7-1500, ET 200MP, ET 200SP, ET 200AL, ET 200pro Diagnostics

Function Manual

Preface

Documentation guide 1

Overview of system diagnostics 2

Quick start 3

Setting and determining system diagnostics 4

System diagnostics by means of the user program 5

Alarms 6

Diagnostics of the S7-1500R/H redundant system 7

10/2018

A5E03735838-AE

Legal information

Warning notice system

This manual contains notices you have to observe in order to ensure your personal safety, as well as to prevent damage to property. The notices referring to your personal safety are highlighted in the manual by a safety alert symbol, notices referring only to property damage have no safety alert symbol. These notices shown below are graded according to the degree of danger.

⚠ DANGER

indicates that death or severe personal injury **will** result if proper precautions are not taken.

⚠ WARNING

indicates that death or severe personal injury **may** result if proper precautions are not taken.

⚠ CAUTION

indicates that minor personal injury can result if proper precautions are not taken.

NOTICE

indicates that property damage can result if proper precautions are not taken.

If more than one degree of danger is present, the warning notice representing the highest degree of danger will be used. A notice warning of injury to persons with a safety alert symbol may also include a warning relating to property damage.

Qualified Personnel

The product/system described in this documentation may be operated only by **personnel qualified** for the specific task in accordance with the relevant documentation, in particular its warning notices and safety instructions. Qualified personnel are those who, based on their training and experience, are capable of identifying risks and avoiding potential hazards when working with these products/systems.

Proper use of Siemens products

Note the following:

⚠ WARNING

Siemens products may only be used for the applications described in the catalog and in the relevant technical documentation. If products and components from other manufacturers are used, these must be recommended or approved by Siemens. Proper transport, storage, installation, assembly, commissioning, operation and maintenance are required to ensure that the products operate safely and without any problems. The permissible ambient conditions must be complied with. The information in the relevant documentation must be observed.

Trademarks

All names identified by ® are registered trademarks of Siemens AG. The remaining trademarks in this publication may be trademarks whose use by third parties for their own purposes could violate the rights of the owner.

Disclaimer of Liability

We have reviewed the contents of this publication to ensure consistency with the hardware and software described. Since variance cannot be precluded entirely, we cannot guarantee full consistency. However, the information in this publication is reviewed regularly and any necessary corrections are included in subsequent editions.

Siemens AG
Division Digital Factory
Postfach 48 48
90026 NÜRNBERG
GERMANY

A5E03735838-AE
℗ 09/2018 Subject to change

Copyright © Siemens AG 2013 - 2018.
All rights reserved

Preface

Purpose of the documentation

This function manual provides an overview of the diagnostics options for the automation system SIMATIC S7-1500, for CPU 1516pro-2 PN based on SIMATIC S7-1500, and for the distributed I/O systems SIMATIC ET 200MP, ET 200SP and ET 200AL.

The documentation covers the following:

- Illustration of the uniformity and consistency of system diagnostics
- Overview of the options for establishing system diagnostics information

Basic knowledge required

The following knowledge is required in order to understand the function manual:

- General knowledge in the field of automation technology
- Knowledge of the industrial automation system SIMATIC
- Knowledge of working with STEP 7 and WinCC
- Knowledge about the use of Microsoft Windows operating systems

Scope of the documentation

This documentation is the basic documentation for all products of the S7-1500, ET 200MP, ET 200SP and ET 200AL systems, as well as for CPU 1516pro-2 PN. The product documentation is based on this documentation.

What's new compared to the previous version of the function manual (09/2016 edition)

What's new?		What are the customer benefits?	Where can I find the information?
New contents	Description of the diagnostics of the S7-1500R/H redundant system	You obtain information in compact form on the special features of the diagnostics in the S7-1500R/H redundant systems.	Section Diagnostics of the S7-1500R/H redundant system (Page 100)
Changed contents	Scope of the function manual expanded to include the S7-1500R/H redundant system	Functions with which you are familiar from the SIMATIC S7-1500 automation system are implemented for the S7-1500R/H redundant system.	Redundant System S7-1500R/H System Manual (https://support.industry.siemens.com/cs/ww/en/view/109754833)

What's new compared to the previous version of the function manual (06/2014 edition)

What's new?		What are the customer benefits?	Where can I find the information?
New contents	Extended functionality of the Web server	• You obtain information about: – Know-how protection or copy protection of the PLC program – Program/communication load and cycle time – F-collective signatures, cycle times and runtimes of the F-runtime group(s) (with an F-CPU) • You can monitor statuses, errors, technology alarms and the current values of technology objects (TOs) with the Web server. • You can read, view and save trace recordings via the Web server and thus obtain plant and project information for diagnostics and maintenance without STEP 7. • You can set four additional languages for the Web interface.	Section Diagnostics information using the web server (Page 51), Web server (http://support.automation.siemens.com/WW/view/en/59193560) function manual, Using the trace and logic analyzer function (https://support.industry.siemens.com/cs/ww/en/view/64897128) function manual
	Assignment of different project languages extended	You can assign up to three different project languages for comments and alarm texts to the user interface languages of display devices.	Section Editing alarms in the alarm editor (Page 81)
Changed contents	Scope of the function manual expanded to include CPU 1516pro-2 PN	Functions that you will be familiar with from the SIMATIC S7-1500 CPUs are implemented in the CPU 1516pro-2 PN (degree of protection IP65, IP66 and IP67).	Operating instructions CPU 1516pro-2 PN (https://support.industry.siemens.com/cs/ww/en/view/109482416)
	Security events added	You know which types of events are registered as security events in the diagnostics buffer and can configure group alarms for them.	Section CPU diagnostics buffer (Page 45)
	Influence of the value status explained	You know which factors influence the bit in the value status and can take this into account during configuration.	Section System diagnostics using process image inputs (Page 76)
	Note added on the maximum configuration limits of program alarms.		Section Creating alarms with the "Program_Alarm" instruction (Page 80).

Conventions

STEP 7: We refer to "STEP 7" in this documentation as a synonym for the configuration and programming software "STEP 7 as of V12 (TIA Portal)" and subsequent versions.

This document contains illustrations of the described devices. The illustrations may differ slightly from the device supplied.

You should also pay particular attention to notes such as the one shown below:

Note

A note contains important information on the product, on the handling of the product or on the section of the documentation to which particular attention should be paid.

Security information

Siemens provides products and solutions with industrial security functions that support the secure operation of plants, systems, machines and networks.

In order to protect plants, systems, machines and networks against cyber threats, it is necessary to implement – and continuously maintain – a holistic, state-of-the-art industrial security concept. Siemens' products and solutions constitute one element of such a concept.

Customers are responsible for preventing unauthorized access to their plants, systems, machines and networks. Such systems, machines and components should only be connected to an enterprise network or the internet if and to the extent such a connection is necessary and only when appropriate security measures (e.g. firewalls and/or network segmentation) are in place.

For additional information on industrial security measures that may be implemented, please visit (https://www.siemens.com/industrialsecurity).

Siemens' products and solutions undergo continuous development to make them more secure. Siemens strongly recommends that product updates are applied as soon as they are available and that the latest product versions are used. Use of product versions that are no longer supported, and failure to apply the latest updates may increase customers' exposure to cyber threats.

To stay informed about product updates, subscribe to the Siemens Industrial Security RSS Feed under (https://www.siemens.com/industrialsecurity).

Siemens Industry Online Support

You can find current information on the following topics quickly and easily here:

- **Product support**

  All the information and extensive know-how on your product, technical specifications, FAQs, certificates, downloads, and manuals.

- **Application examples**

  Tools and examples to solve your automation tasks – as well as function blocks, performance information and videos.

- **Services**

  Information about Industry Services, Field Services, Technical Support, spare parts and training offers.

- **Forums**

  For answers and solutions concerning automation technology.

- **mySupport**

  Your personal working area in Industry Online Support for messages, support queries, and configurable documents.

This information is provided by the Siemens Industry Online Support in the Internet (https://support.industry.siemens.com).

Industry Mall

The Industry Mall is the catalog and order system of Siemens AG for automation and drive solutions on the basis of Totally Integrated Automation (TIA) and Totally Integrated Power (TIP).

Catalogs for all the products in automation and drives are available on the Internet (https://mall.industry.siemens.com).

Table of contents

Preface 3

1 Documentation guide 9

2 Overview of system diagnostics 14

2.1 Properties of system diagnostics 14

2.2 Benefits of innovative system diagnostics 16

3 Quick start 17

3.1 Using the display of the CPU 18

3.2 Using STEP 7 20

4 Setting and determining system diagnostics 25

4.1 Configuring alarms for system diagnostics 26

4.2 Options for displaying system diagnostics 28
4.2.1 Diagnostics information at the devices 29
4.2.1.1 LEDs 29
4.2.1.2 Display of the CPU 30
4.2.2 Diagnostics information in STEP 7 32
4.2.2.1 Explanation of diagnostics symbols 32
4.2.2.2 Accessible devices (without project) 34
4.2.2.3 Devices & networks 36
4.2.2.4 Online & diagnostics 39
4.2.2.5 "Diagnostics" tab in the Inspector window 42
4.2.2.6 CPU diagnostics buffer 45
4.2.2.7 "Online tools" task card 48
4.2.2.8 Configuring the settings for I/O modules in STEP 7 50
4.2.3 Diagnostics information using the web server 51
4.2.4 Diagnostics information using the HMI diagnostics view 62
4.2.4.1 Configuring system diagnostics 63
4.2.4.2 Different views of the HMI diagnostics view 66
4.2.4.3 Inserting system diagnostics indicator 69
4.2.4.4 Configuring button as system diagnostics indicator 71

5 System diagnostics by means of the user program 74

5.1 Options of system diagnostics in the user program 74

5.2 System diagnostics using process image inputs 76

6 Alarms 79
6.1 Creating alarms with the "Program_Alarm" instruction 80
6.2 Editing alarms in the alarm editor 81
6.3 Display of program alarms 84
6.4 Output of the alarm state with the "Get_AlarmState" instruction 85
6.5 Example program for program alarms 86
6.5.1 Task 86
6.5.2 Example 1: Program alarm without associated values 87
6.5.3 Example 2: Program alarm with associated value 92
6.5.4 Displaying the alarm 99
7 Diagnostics of the S7-1500R/H redundant system 100
7.1 Online and Diagnostics view 103
7.2 "Online Tools" task card 106
7.3 Diagnostics view in the project tree and in the device view and network view 109
7.4 Diagnostics in the RUN-Redundant system state 114
7.5 Restrictions in the RUN-Solo system state 120
7.6 System diagnostics by means of the user program 121
Glossary 122
Index 126

Documentation guide

1

The documentation for the SIMATIC S7-1500 automation system, for CPU 1516pro-2 PN based on SIMATIC S7-1500, and for the distributed I/O systems SIMATIC ET 200MP, ET 200SP and ET 200AL is divided into three areas.
This division allows you easier access to the specific information you require.

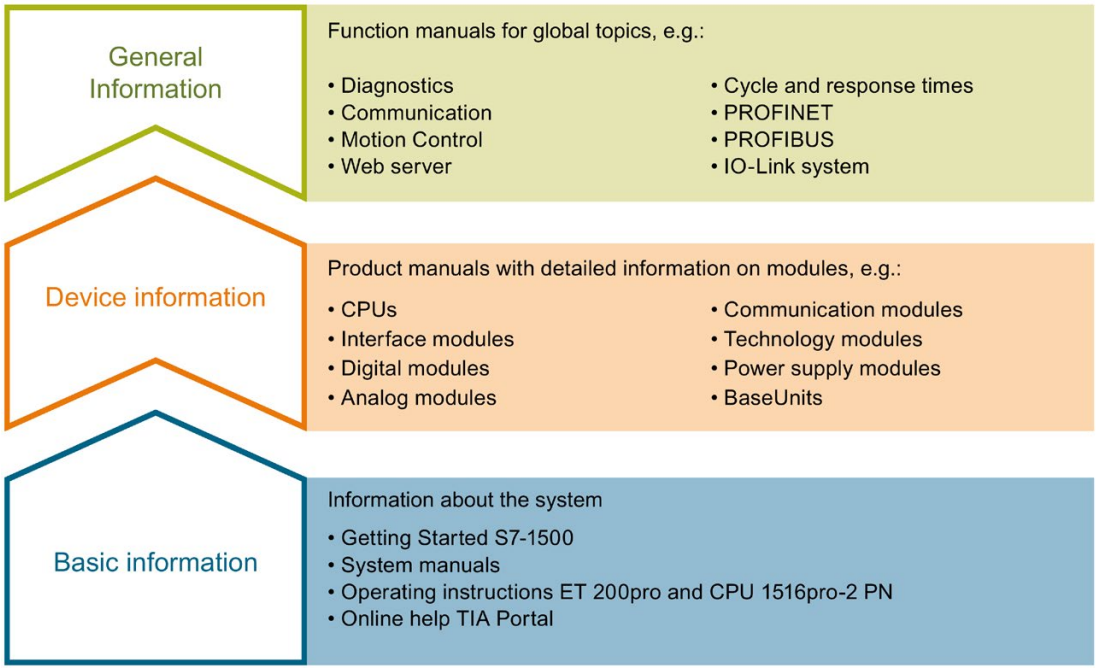

Basic information

System manuals and Getting Started manuals describe in detail the configuration, installation, wiring and commissioning of the SIMATIC S7-1500, ET 200MP, ET 200SP and ET 200AL systems; use the corresponding operating instructions for CPU 1516pro-2 PN. The STEP 7 online help supports you in configuration and programming.

Device information

Product manuals contain a compact description of the module-specific information, such as properties, terminal diagrams, characteristics and technical specifications.

General information

The function manuals contain detailed descriptions on general topics such as diagnostics, communication, Motion Control, Web server, OPC UA.

You can download the documentation free of charge from the Internet (https://support.industry.siemens.com/cs/ww/en/view/109742705).

Changes and additions to the manuals are documented in product information sheets.

You will find the product information on the Internet:

- S7-1500/ET 200MP (https://support.industry.siemens.com/cs/us/en/view/68052815)
- ET 200SP (https://support.industry.siemens.com/cs/us/en/view/73021864)
- ET 200AL (https://support.industry.siemens.com/cs/us/en/view/99494757)

Manual Collections

The Manual Collections contain the complete documentation of the systems put together in one file.

You will find the Manual Collections on the Internet:

- S7-1500/ET 200MP (https://support.industry.siemens.com/cs/ww/en/view/86140384)
- ET 200SP (https://support.industry.siemens.com/cs/ww/en/view/84133942)
- ET 200AL (https://support.industry.siemens.com/cs/ww/en/view/95242965)

"mySupport"

With "mySupport", your personal workspace, you make the best out of your Industry Online Support.

In "mySupport", you can save filters, favorites and tags, request CAx data and compile your personal library in the Documentation area. In addition, your data is already filled out in support requests and you can get an overview of your current requests at any time.

You must register once to use the full functionality of "mySupport".

You can find "mySupport" on the Internet (https://support.industry.siemens.com/My/ww/en).

"mySupport" - Documentation

In the Documentation area in "mySupport" you can combine entire manuals or only parts of these to your own manual.
You can export the manual as PDF file or in a format that can be edited later.

You can find "mySupport" - Documentation on the Internet (https://support.industry.siemens.com/My/ww/en/documentation).

"mySupport" - CAx data

In the CAx data area in "mySupport", you can access the current product data for your CAx or CAe system.

You configure your own download package with a few clicks.

In doing so you can select:

- Product images, 2D dimension drawings, 3D models, internal circuit diagrams, EPLAN macro files
- Manuals, characteristics, operating manuals, certificates
- Product master data

You can find "mySupport" - CAx data on the Internet (https://support.industry.siemens.com/my/ww/en/CAxOnline).

Application examples

The application examples support you with various tools and examples for solving your automation tasks. Solutions are shown in interplay with multiple components in the system - separated from the focus on individual products.

You will find the application examples on the Internet (https://support.industry.siemens.com/sc/ww/en/sc/2054).

TIA Selection Tool

With the TIA Selection Tool, you can select, configure and order devices for Totally Integrated Automation (TIA).
This tool is the successor of the SIMATIC Selection Tool and combines the known configurators for automation technology into one tool.
With the TIA Selection Tool, you can generate a complete order list from your product selection or product configuration.

You can find the TIA Selection Tool on the Internet (https://w3.siemens.com/mcms/topics/en/simatic/tia-selection-tool).

SIMATIC Automation Tool

You can use the SIMATIC Automation Tool to run commissioning and maintenance activities simultaneously on different SIMATIC S7 stations as a bulk operation, independently of the TIA Portal.

The SIMATIC automation tool provides a variety of functions:

- Scanning of a PROFINET/Ethernet plant network and identification of all connected CPUs
- Address assignment (IP, subnet, gateway) and station name (PROFINET device) to a CPU
- Transfer of the date and programming device/PC time converted to UTC time to the module
- Program download to CPU
- Operating mode switchover RUN/STOP
- CPU localization by means of LED flashing
- Reading out CPU error information
- Reading of CPU diagnostic buffer
- Reset to factory settings
- Updating the firmware of the CPU and connected modules

You can find the SIMATIC Automation Tool on the Internet (https://support.industry.siemens.com/cs/ww/en/view/98161300).

PRONETA

With SIEMENS PRONETA (PROFINET network analysis), you analyze the plant network during commissioning. PRONETA features two core functions:

- The topology overview independently scans PROFINET and all connected components.
- The IO check is a fast test of the wiring and the module configuration of a plant.

You can find SIEMENS PRONETA on the Internet (https://support.industry.siemens.com/cs/ww/en/view/67460624).

SINETPLAN

SINETPLAN, the Siemens Network Planner, supports you in planning automation systems and networks based on PROFINET. The tool facilitates professional and predictive dimensioning of your PROFINET installation as early as in the planning stage. In addition, SINETPLAN supports you during network optimization and helps you to exploit network resources optimally and to plan reserves. This helps to prevent problems in commissioning or failures during productive operation even in advance of a planned operation. This increases the availability of the production plant and helps improve operational safety.

The advantages at a glance

- Network optimization thanks to port-specific calculation of the network load
- Increased production availability thanks to online scan and verification of existing systems
- Transparency before commissioning through importing and simulation of existing STEP 7 projects
- Efficiency through securing existing investments in the long term and optimal exploitation of resources

You can find SINETPLAN on the Internet (https://www.siemens.com/sinetplan).

Overview of system diagnostics 2

2.1 Properties of system diagnostics

Introduction

In the SIMATIC environment, the term "system diagnostics" refers to diagnostics of devices and modules.

All SIMATIC products have integrated diagnostic functions that you can use to detect and remedy faults. The components automatically flag a potential fault in the operation and provide detailed information. You can minimize unscheduled standstill times with plant-wide diagnostics.

The SIMATIC automation system monitors the following states in the running plant:

- Device failure/recovery
- Insert/remove event
- Module fault
- I/O access error
- Channel fault
- Parameter assignment error
- Failure of the external auxiliary voltage

Properties of SIMATIC system diagnostics

- Integrated as standard in the hardware
- System-wide across bus limits
- Automatic localization of the error source
- Automatic output of the cause of the error in plain text
- Plant-wide diagnostics of all components
- Archiving and logging of alarms
- Configurability of alarms

Consistent diagnostics from the field level all the way to the management level

The various diagnostics media give you a uniform view of maintenance-related information of every automation component in the plant: System status (module and network status, alarms for system errors) are available plant-wide in a uniform display.

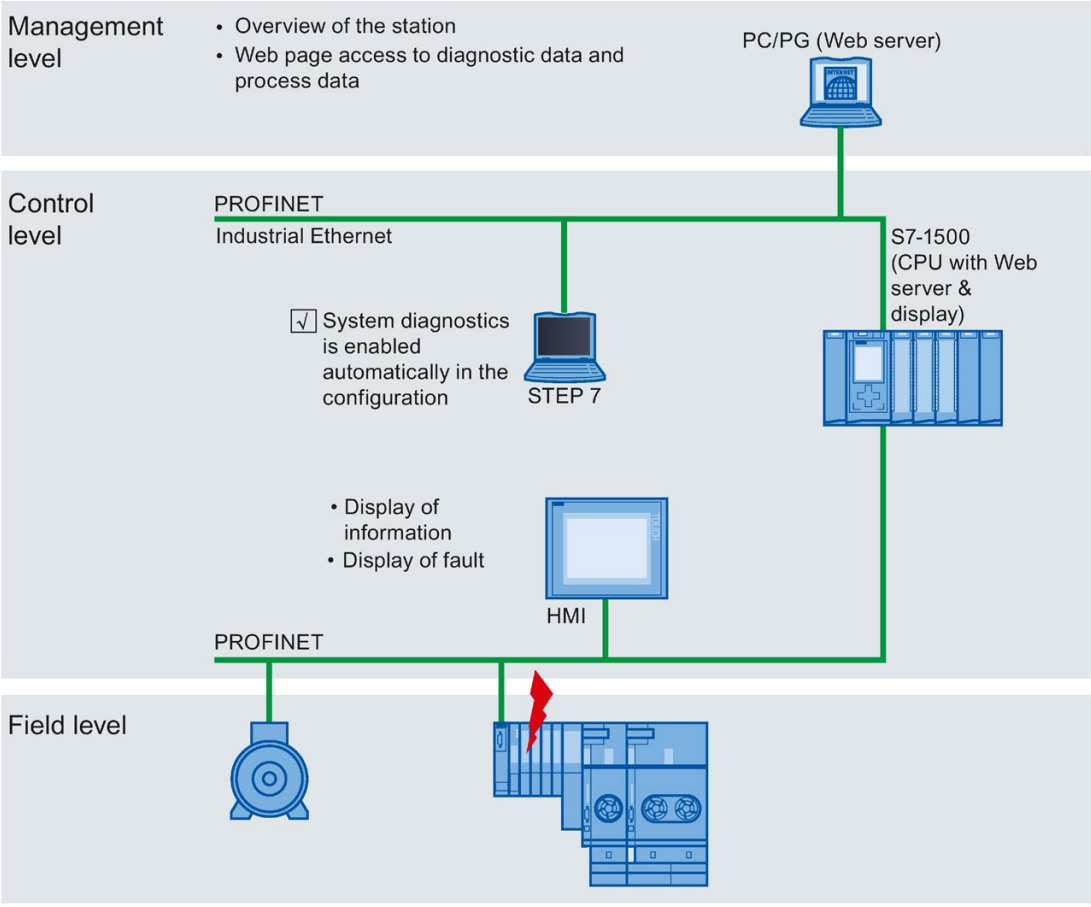

Figure 2-1 Overview of system diagnostics in a plant

2.2 Benefits of innovative system diagnostics

System diagnostics is also possible in STOP

The system diagnostics is integrated in the firmware of the CPU and works independently of the cyclic user program. This means it is also available in the STOP CPU operating mode. Faults are detected immediately and signaled to the higher-level HMI devices, the Web server and the display of the SIMATIC S7-1500 CPU, even in STOP mode. This makes system diagnostics consistent with the actual plant state at all times.

Uniform display concept

All clients of a system are provided with diagnostics information by a uniform mechanism. The same system diagnostics information is used regardless of the display medium.

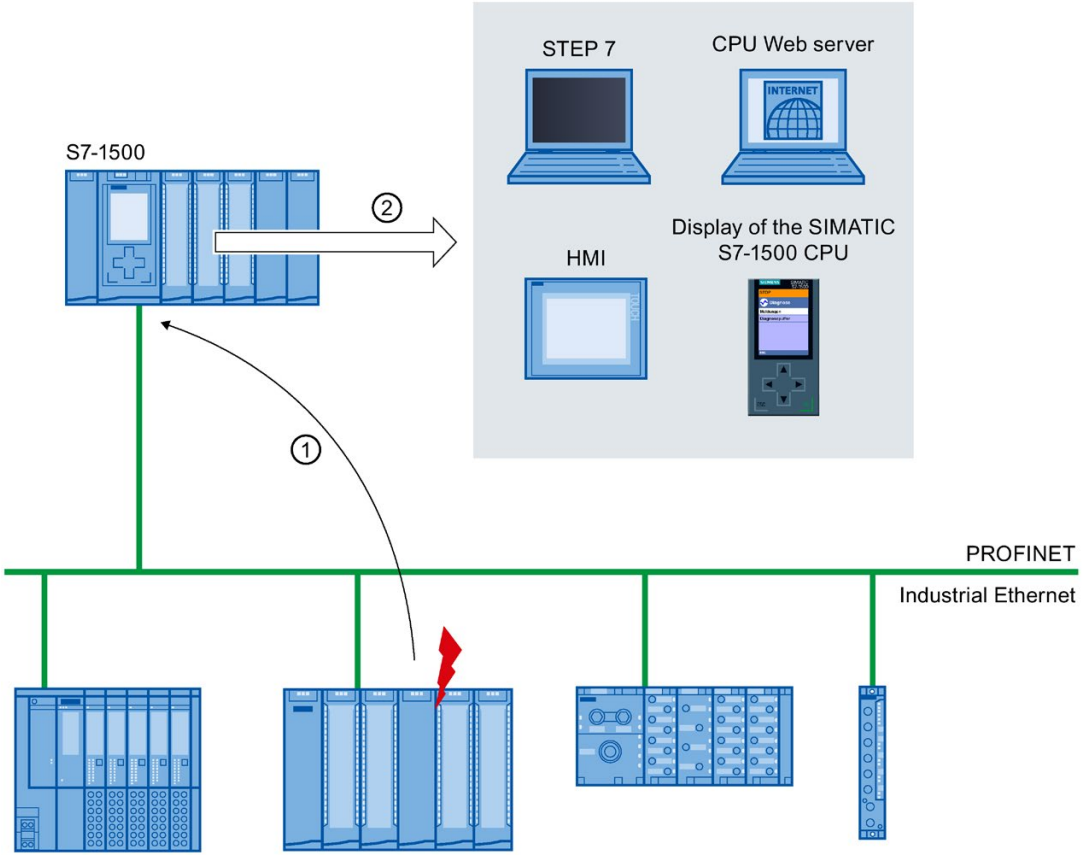

Step	Description
①	The device detects an error and sends diagnostics data to the assigned CPU.
②	The CPU informs the connected display media. The display of the system diagnostics is updated.

Figure 2-2 Sequence of the system diagnostics

Quick start

3

Introduction

The following chapters of this documentation describe the different options for establishing system diagnostics. All described options can be used independently of one another.

This chapter gives you an overview of the basic procedure to get initial diagnostics information fast.

Note

System diagnostics is generally available for the devices of the SIMATIC series.

3.1 Using the display of the CPU

The display of the SIMATIC S7-1500 CPU offers a fast and direct option to get diagnostics information. You can call up status information in different menus on the display.

Requirements

- A project has been created.
- The project has been downloaded to the CPU.

Determining diagnostics information using the display of the SIMATIC S7-1500 CPU

To determine diagnostics information using the display, follow these steps:

1. Select the "Diagnostics" menu on the display.
2. Select the "Diagnostics buffer" command from the "Diagnostics" menu.

Figure 3-1 Display of SIMATIC S7-1500 CPU

Result

The diagnostics events are displayed in the diagnostics buffer in the sequence in which they occur.

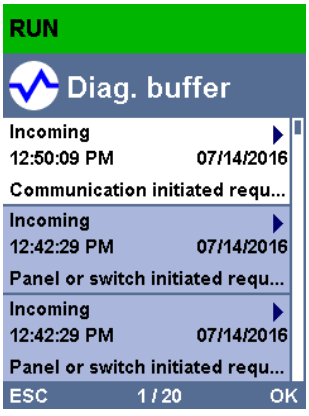

Figure 3-2 Display of the diagnostics buffer in the display of the SIMATIC S7-1500 CPU

Note

Automatic updating of diagnostics information

You set automatic updating of the diagnostics information under: "Display" > "DiagnosticRefresh".

Additional information

You can find information about the configuration of alarms in the section Configuring alarms for system diagnostics (Page 26).

3.2 Using STEP 7

Getting started with STEP 7 gives you fast access to detailed diagnostics information.

Requirements

- A project has been created.
- The project has been downloaded to the CPU.
- An error has occurred.
- The programming device must be able to establish a connection to the CPU via an interface.

Determining diagnostics information using STEP 7

To determine diagnostics information using STEP 7, follow these steps:

1. Open the respective project in STEP 7.
2. Open the portal view of STEP 7.
3. Select the "Online & Diagnostics" portal.
4. Select the "Online status" action.

   The "Select device" dialog opens. The dialog is an image of the configured devices in the project.

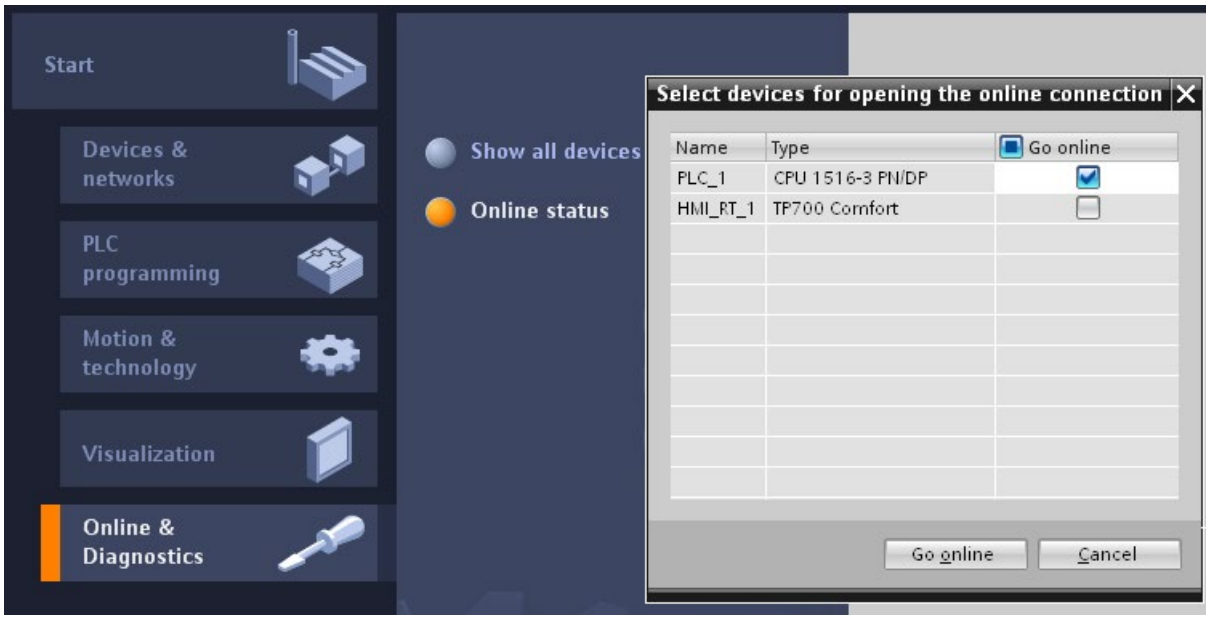

Figure 3-3 Device selection for online connection in the portal view

5. Activate the "Go online" option button for the device that you want to use to establish an online connection.
6. Click on the "Go online" button.

7. The "Go online" dialog opens.

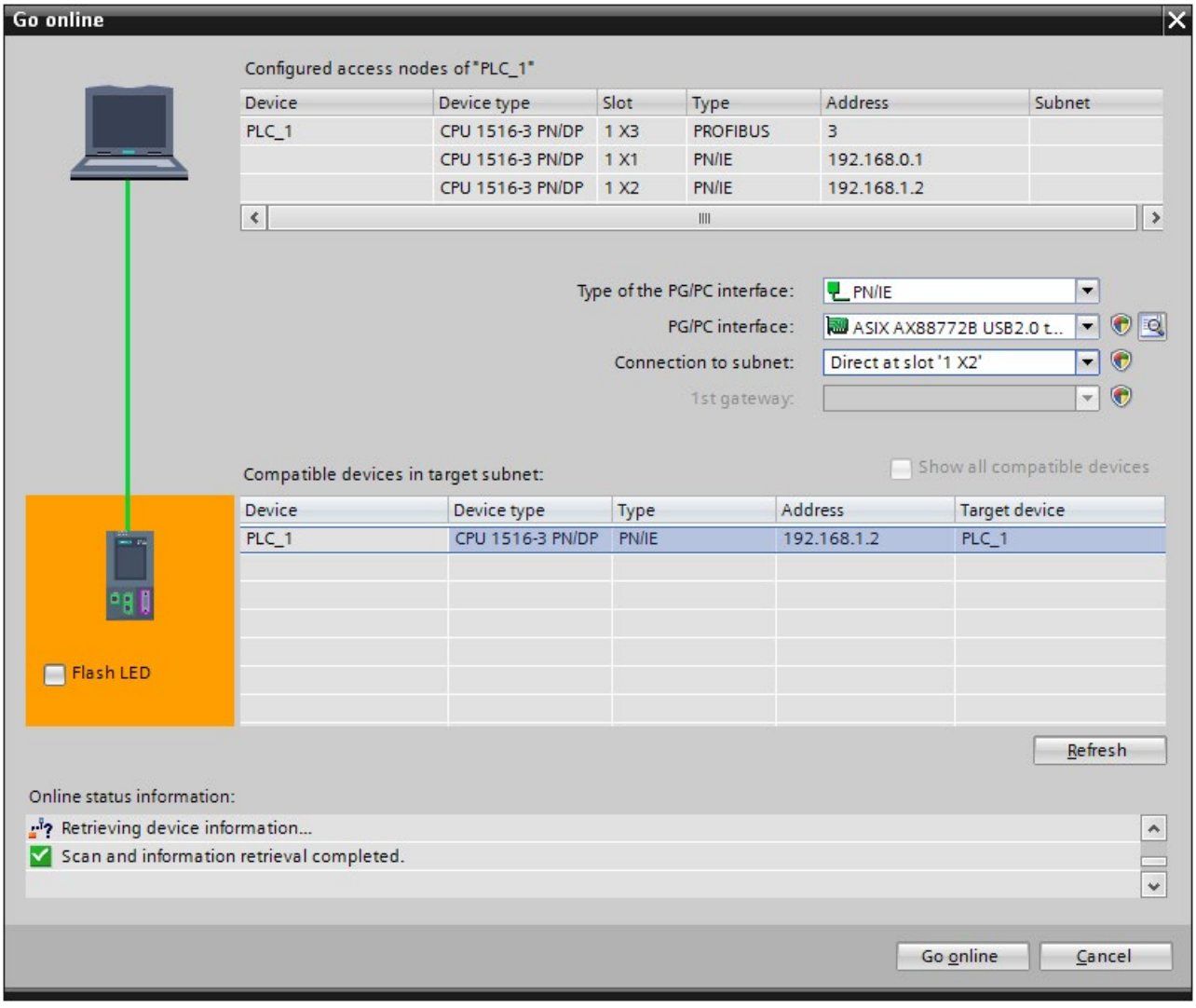

Figure 3-4 Establishing an online connection

8. Make the settings for the interface.

9. Click on the "Go online" button.

   The project view of STEP 7 opens. The network view is opened in the work area.

   The symbols in the project tree provide initial information about the faulty modules.

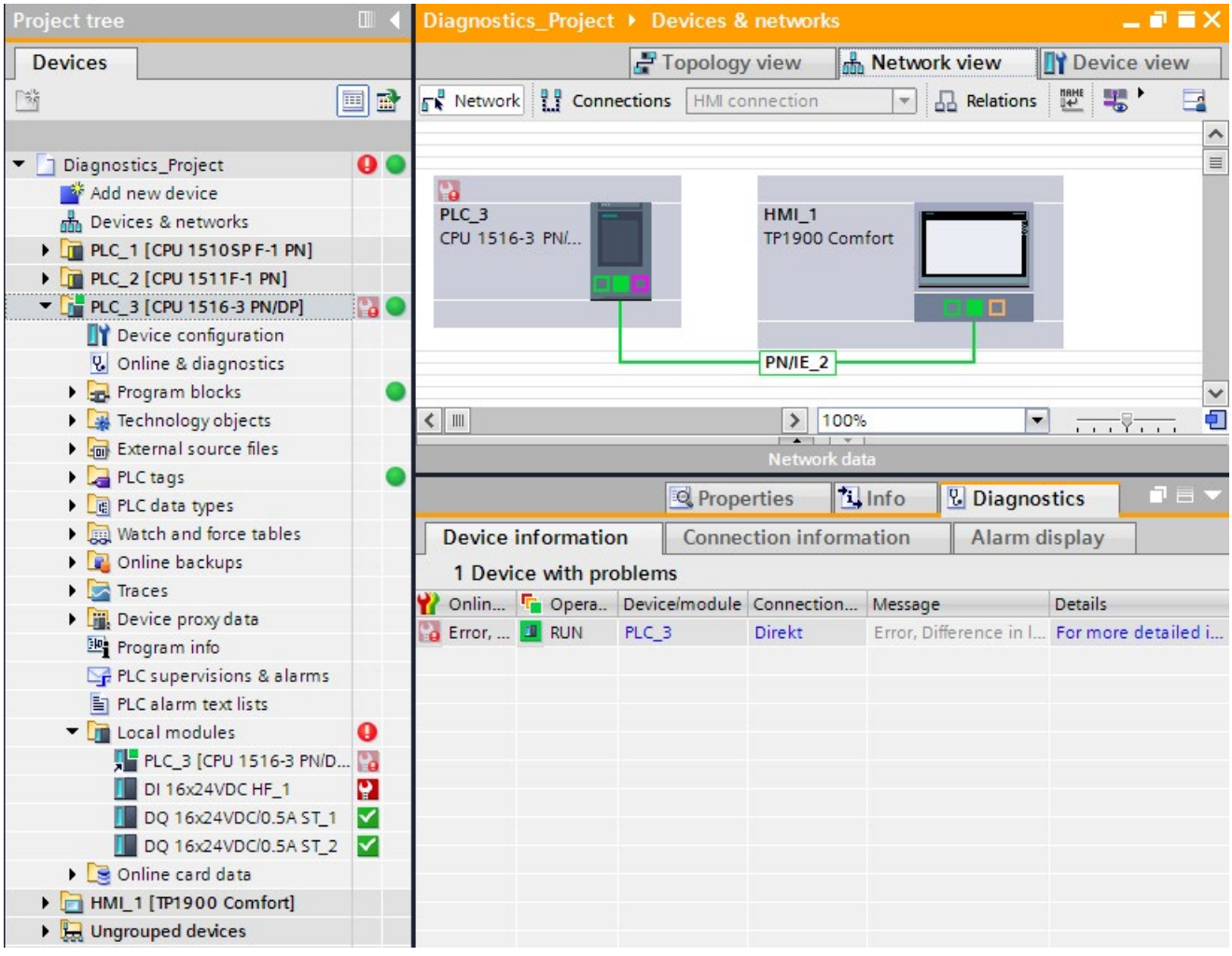

Figure 3-5 Display of the fault in the network view

10. Double-click the device which displays an alarm message to access the faulty module directly. This is the CPU in the example.

    The device view of the CPU is opened in the work area. In this view you can see directly in which module the error has occurred.

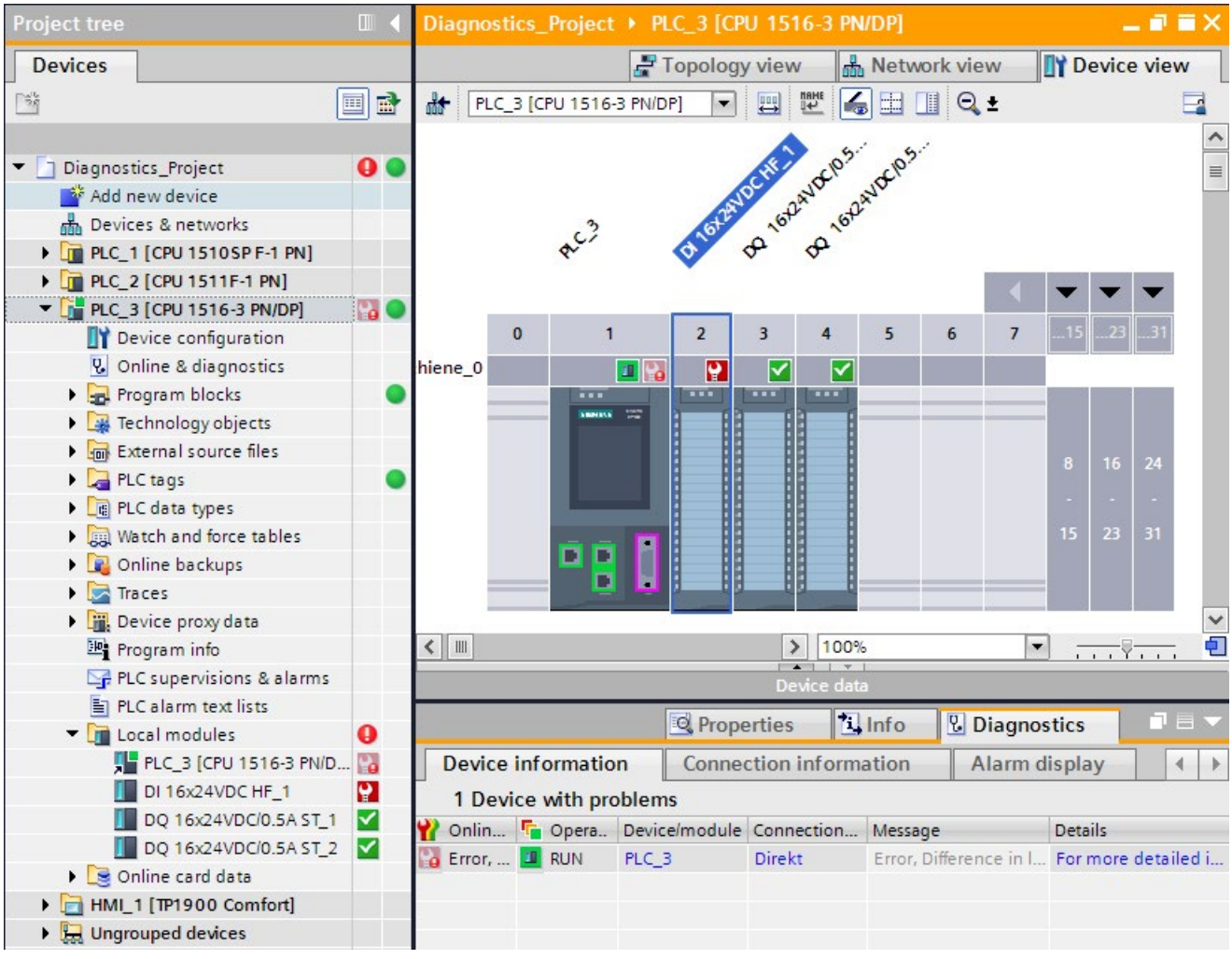

Figure 3-6 Display of the faulty module in the device view

11. Open the "Diagnostics" tab and the subordinate "Device information" tab in the Inspector window for a more detailed error description.

Result

The link in the "Details" table column takes you to the online and diagnostics view of the device and to the diagnostics buffer there, for example. This includes more information on all diagnostics events in the order in which they occurred.

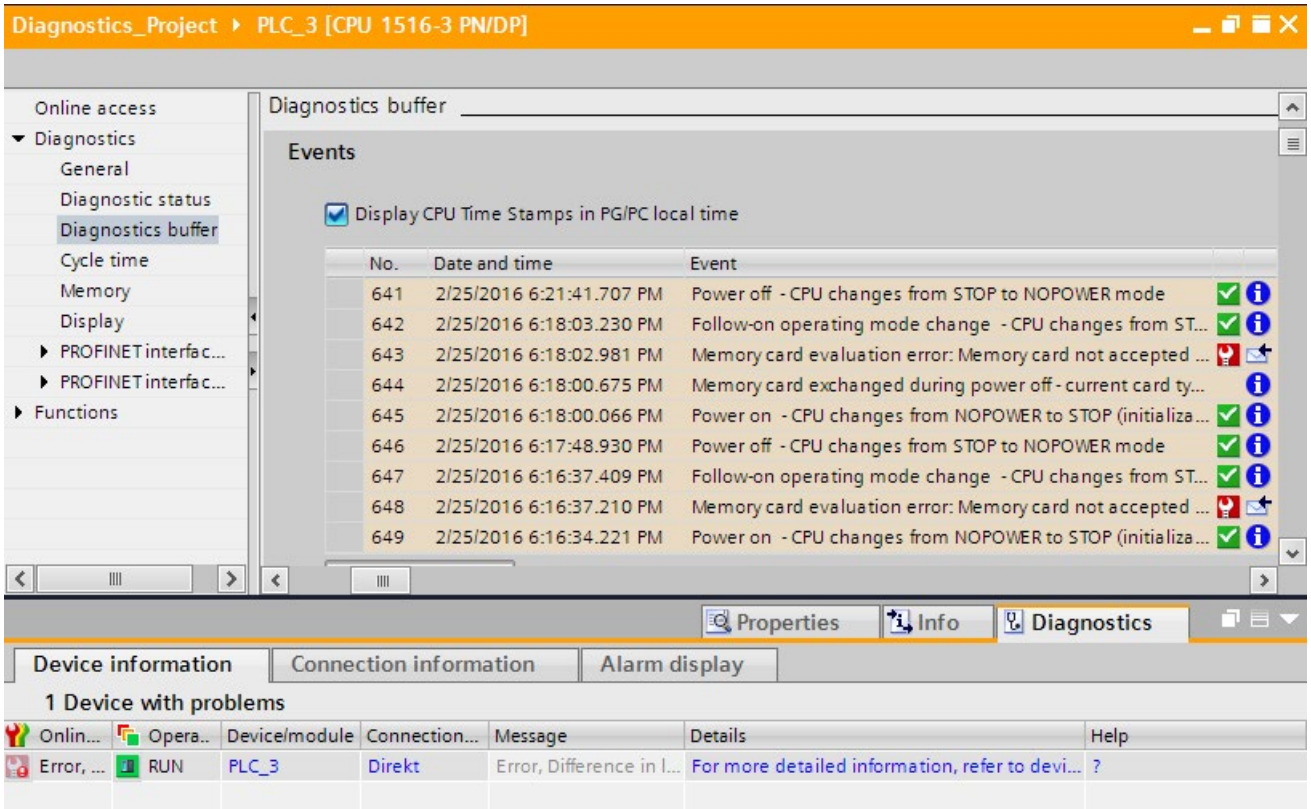

Figure 3-7 Diagnostics buffer with detailed error description

---

Note

Symbols and their meaning

You can find a legend with the meaning of each symbol in Explanation of diagnostics symbols (Page 32) and in the online help for STEP 7.

Setting and determining system diagnostics 4

Introduction

System diagnostics is generally available for the devices of the SIMATIC series.

In the properties of each individual CPU, you can specify if you want to receive alarms for system diagnostics on your display device. Alarms are provided on the display of the SIMATIC S7-1500 CPU, the CPU Web server and the HMI device. Alarms are enabled by default. If you do not want to receive alarms for system diagnostics on your display devices, you can disable the sending of alarms.

4.1 Configuring alarms for system diagnostics

Predefined alarm texts are available for establishing the system diagnostics.

Requirements

- STEP 7 is open.
- A project is open.

Procedure

To make alarm settings for system diagnostics of the project in STEP 7, follow these steps:

1. Open the "Common data" folder in the project tree.
2. Double-click the "System diagnostics settings" entry.

   You now have access to the alarm settings. System diagnostics is enabled by default. System diagnostics cannot be disabled for the use of a CPU from the SIMATIC S7-1500 product series.

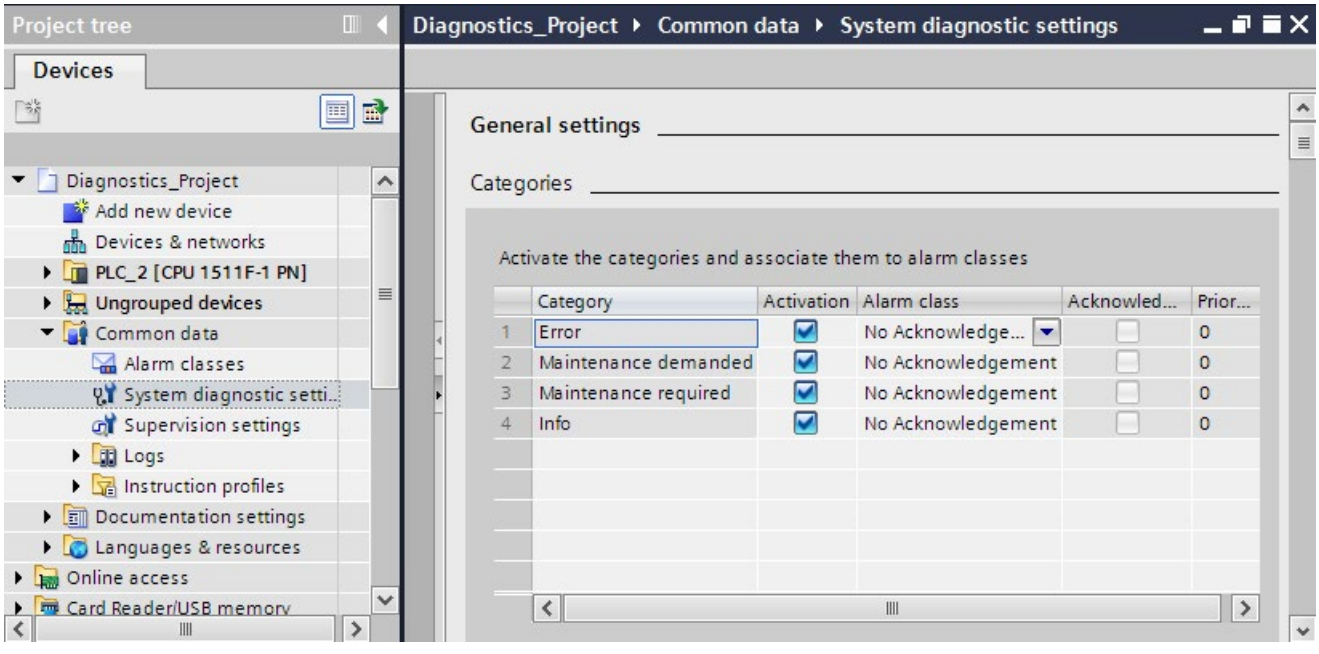

Figure 4-1 Properties of system diagnostics and alarm settings

3. In the settings, specify the alarm category that is to be displayed and if it needs to be acknowledged.

   The check boxes in the "Activation" column are enabled by default. When you disable all check boxes, the status of the HMI system diagnostics view is still updated with the "Info Report" functionality.

Result

You have configured the alarms for system diagnostics of the project in STEP 7.

The settings are saved with the project and become effective after the compiling and downloading of the hardware configuration to the involved components.

Maintenance events (maintenance demanded, maintenance required) are entered in the alarm buffer of the CPU just like any other event.

4.2 Options for displaying system diagnostics

Example

This section includes a diagnostics example to show how system diagnostics is established with the help of different display options. The example includes a CPU from the SIMATIC S7-1500 product series that is connected to an ET 200S distributed I/O system and an HMI Comfort Panel via PROFINET.

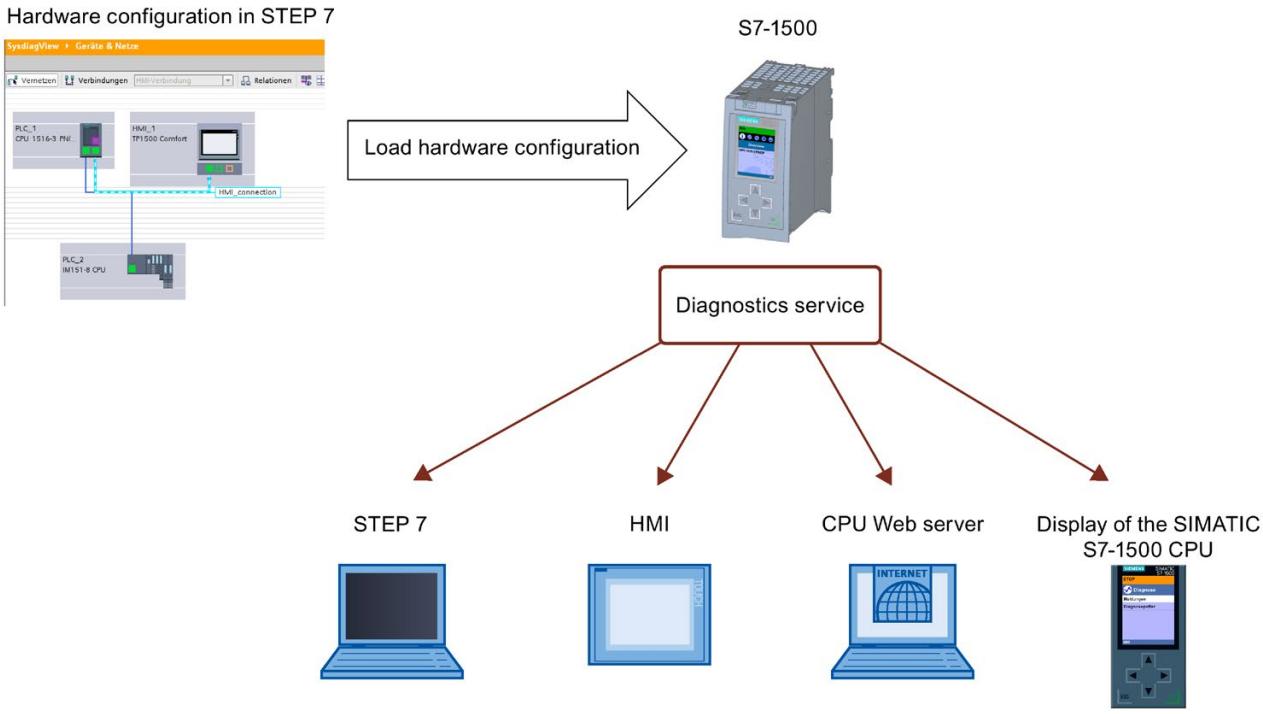

Figure 4-2 System diagnostics display options

The following sections include figures that illustrate how diagnostics information is displayed with the help of different display options.

- Using the LEDs on the hardware (Page 29)
- Local error analysis via the display of the CPU (Page 30)
- Using STEP 7 as of V12 (Page 32)
- Remote diagnostics using the Web server (Page 51)
- Stationary system diagnostics using the HMI diagnostics view (Page 62)

4.2.1 Diagnostics information at the devices

4.2.1.1 LEDs

Overview

All hardware components, such as CPUs, interface modules and modules, provide information about their operating mode as well as internal and external errors through their LEDs. Diagnostics by means of LEDs is an initial tool for error localization.

The graphics below include examples for the arrangement of LEDs on some modules.

Table 4- 1 LED displays on the modules

	CPU 1516-3 PN/DP	IM 155-5 PN ST	DI 32x24VDC HF	PS 25W 24VDC
	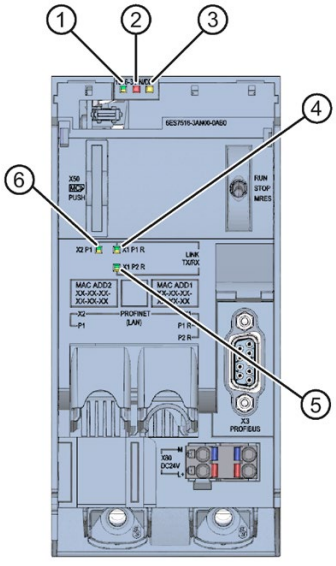	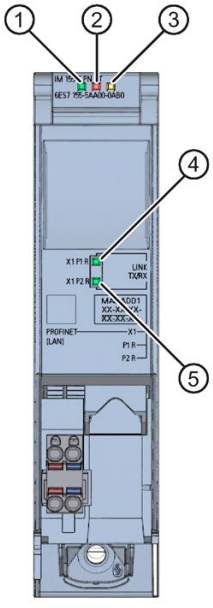	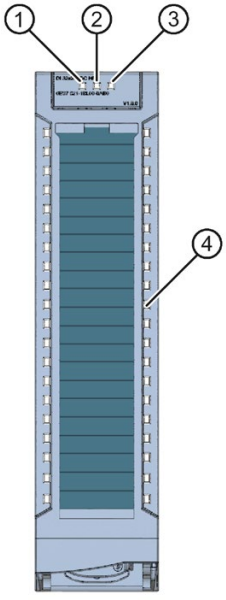	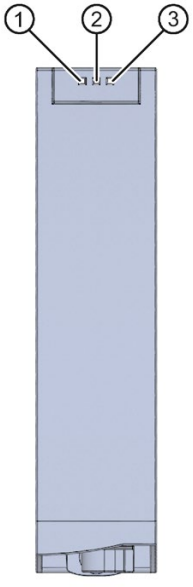
①	RUN/STOP LED (two-colored LED: green/yellow)	RUN LED (two-colored LED: green/yellow)	RUN LED (single-colored LED: green)	RUN LED (single-colored LED: green)
②	ERROR LED (single-colored LED: red)	ERROR LED (single-colored LED: red)	ERROR LED (single-colored LED: red)	ERROR LED (single-colored LED: red)
③	MAINT LED (single-colored LED: yellow)	MAINT LED (single-colored LED: yellow)	without function	MAINT LED (single-colored LED: yellow)
④	X1 P1 (two-colored LED: green/yellow)	X1 P1 (single-colored LED: green)	LED CHx (two-colored LED: green/red)	
⑤	X1 P2 (two-colored LED: green/yellow)	X1 P2 (single-colored LED: green)		
⑥	X2 P1 (two-colored LED: green/yellow)			

Additional information

The meaning of the individual LED displays, their different combinations and the remedial measures resulting from them in case of errors are device-specific. The explanation can be found in the manuals of the modules.

4.2.1.2 Display of the CPU

Introduction

Each CPU in the S7-1500 automation system has a front cover with a display and operating keys. You can display status information in various menus on the display of the CPU. You use the operating keys to navigate through the menus.

Figure 4-3 Display - diagnostics screen

Display options

The display of the SIMATIC S7-1500 CPU shows the following diagnostics information:

- CPU operating state

"Diagnostics" menu

- Error and alarm texts (system diagnostics alarms)
- Information entered in the diagnostics buffer
- Watch tables
- Information on the cycle times of the user program
- Utilization of the CPU memory

"Modules" menu

- Information on modules and the network
- Detailed device view with diagnostics symbols
- Order number, CPU version and central I/O modules
- Module status for central and distributed modules
- Information about the currently installed firmware

Additional information

For additional information on the topic "Functions and operation of the display of the SIMATIC S7-1500 CPU", see the documentation for the S7-1500 automation system (http://support.automation.siemens.com/WW/view/en/59191792).

You can find detailed information on the individual options, a training course and a simulation of the available menu commands of the display for the CPU in the SIMATIC S7-1500 Display Simulator (http://www.automation.siemens.com/salesmaterial-as/interactive-manuals/getting-started_simatic-s7-1500/disp_tool/start_en.html).

4.2.2 Diagnostics information in STEP 7

4.2.2.1 Explanation of diagnostics symbols

Diagnostics symbols for modules and devices

When the online connection to a device is established in STEP 7, the diagnostics status of the device and its lower-level components and, if applicable, the device operating mode are also determined. The following table shows the possible symbols and their meaning.

Table 4- 2 Diagnostics symbols for modules and devices

Symbol	Meaning
	The connection with a CPU is being established.
	The CPU is not reachable at the set address.
	The configured CPU and the CPU actually present are of incompatible types. Example: An existing CPU 315-2 DP is incompatible with a configured CPU 1516-3 PN/DP.
	On establishment of the online connection to a protected CPU, the password dialog was terminated without specification of the correct password.
	No fault
	Maintenance required
	Maintenance demanded
	Error
	The module or device is deactivated.
	The module or the device cannot be reached from the CPU (valid for modules and devices below a CPU).
	Diagnostics data is not available because the current online configuration data differ from the offline configuration data.
	The configured module or device and the module or device actually present are incompatible (valid for modules or devices under a CPU).
	The configured module does not support display of the diagnostics status (valid for modules under a CPU).
	The connection is established, but the module status has not yet been determined or is unknown.
	Hardware error in lower-level component: A hardware fault has occurred in at least one lower-level hardware component (occurs as a separate symbol only in the project tree).

Symbols for the comparison status

The diagnostics symbols can be combined at the bottom right with additional smaller symbols that indicate the result of the online/offline comparison. The following table shows the possible comparison symbols and their meaning.

Table 4- 3 Symbols for the comparison status

Symbol	Meaning
	Hardware error in lower-level component: The online and offline versions differ (only in the project tree) in at least one lower-level hardware component.
	Software error in lower-level component: The online and offline versions differ (only in the project tree) in at least one lower-level software component.
	Online and offline versions of the object are different
	Object only exists online
	Object only exists offline
	Online and offline versions of the object are the same

Operating mode symbols for CPUs and CPs

The following table shows the possible symbols and their respective operating states.

Table 4- 4 Operating mode symbols for CPUs and CPs

Symbol	Operating mode
	RUN
	STOP
	STARTUP
	DEFECTIVE
	Unknown operating mode
	The configured module does not support display of the operating mode.

Event table

The following information is displayed in the table for each diagnostics event:

- Sequential number of the entry

  The first entry contains the latest event.
- Date and time of the diagnostics event

  If no date and time are shown, the module has no integrated clock.
- Short designation of the event and, if applicable, the reaction of the CPU
- Symbol for information on incoming/outgoing status

The following table shows the possible symbols and their meaning.

Table 4- 5 Symbols in the event table

Symbol	Meaning
	Incoming event
	Outgoing event
	Incoming event for which there is no independent outgoing event
	User-defined diagnostics event

Additional information

For additional information on the individual symbols, please refer to the online help for STEP 7.

4.2.2.2 Accessible devices (without project)

Accessible devices

Accessible devices are all devices that are connected to a PG/PC either directly by an interface or by means of a subnet and that are switched on. These devices can display diagnostic information even without an offline project.

Requirements

- STEP 7 is open.
- The portal view or project view is open.

Procedure

To display diagnostic information for specific devices even without an offline project, follow these steps:

1. Establish a connection to the respective CPU.
2. Select the command "Accessible devices" from the "Online" menu.

   The "Accessible devices" dialog opens.

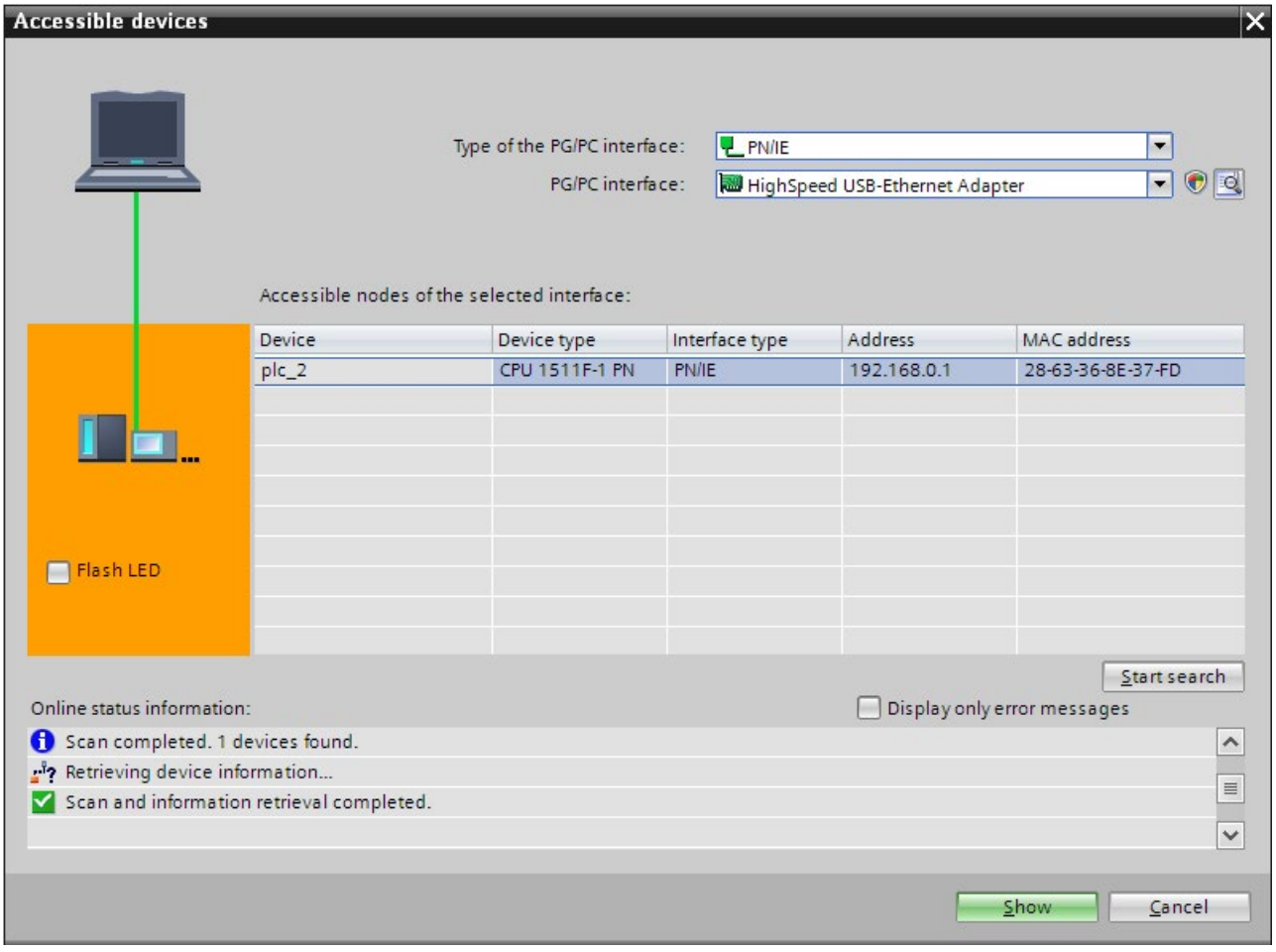

Figure 4-4 "Accessible devices" dialog

3. Make the settings for the interface.
4. Select the respective device under "Accessible nodes of the selected interface".
5. Confirm the dialog with the "Display" button.

Result

The device is displayed in the project tree. You open the diagnostic information in the work area with a double-click on "Online & Diagnostics".

Information is available on the diagnostic status, cycle times, memory usage and the diagnostics buffer.

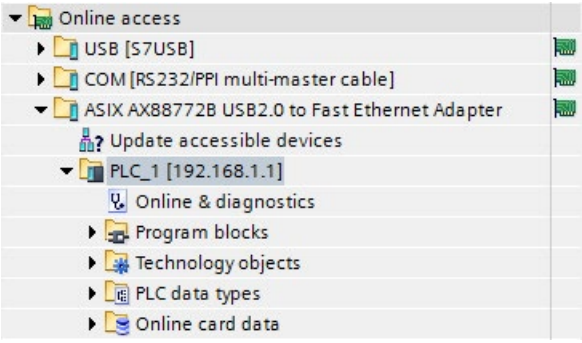

Figure 4-5 Device in the project tree

4.2.2.3 Devices & networks

Devices & networks - Go online

You can get an overview of the current state of your automation system in the device view or network view.

You implement the following tasks in the device view:

- Device configuration and parameter assignment
- Module configuration and parameter assignment

You implement the following tasks in the network view:

- Device configuration and parameter assignment
- Networking devices

Requirements

- STEP 7 is open.
- A project is open.
- The project view is open.

Procedure

To get an overview of the current state of your automation system, follow these steps:

1. Open the "Network view" in the working area.
2. Select the CPU.
3. Click the "Go online" Go online button in the toolbar.

   The "Go online" dialog opens.

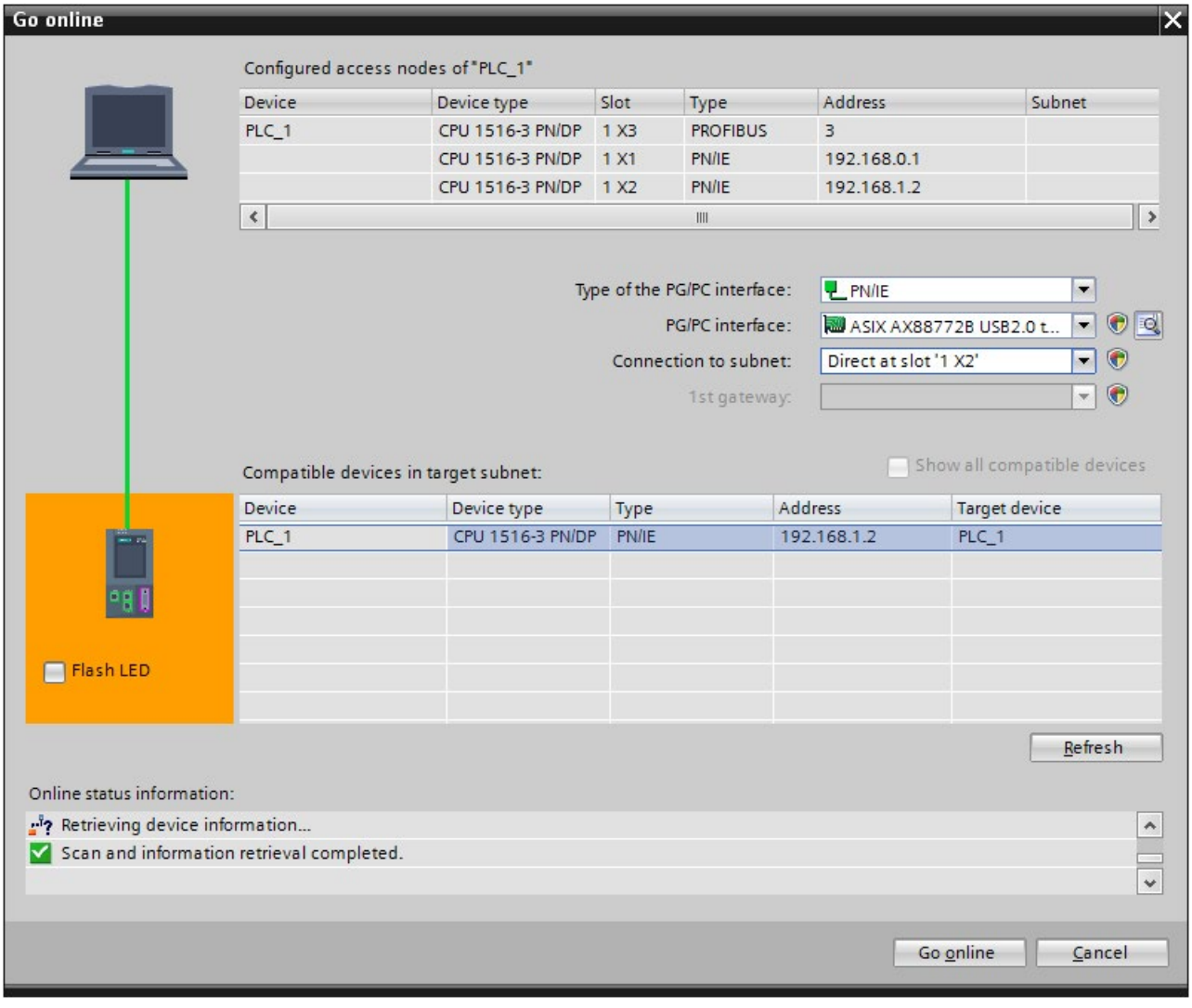

Figure 4-6 Go online

4. Make the settings for the interface.
5. Select the respective device under "Compatible devices in the target subnet".
6. Confirm the dialog with the "Connect" button.

   The online mode is started.

Result

The connected devices are now displayed with diagnostic information in the network view in the working area. Here you get an overview of the current state of your automation device.

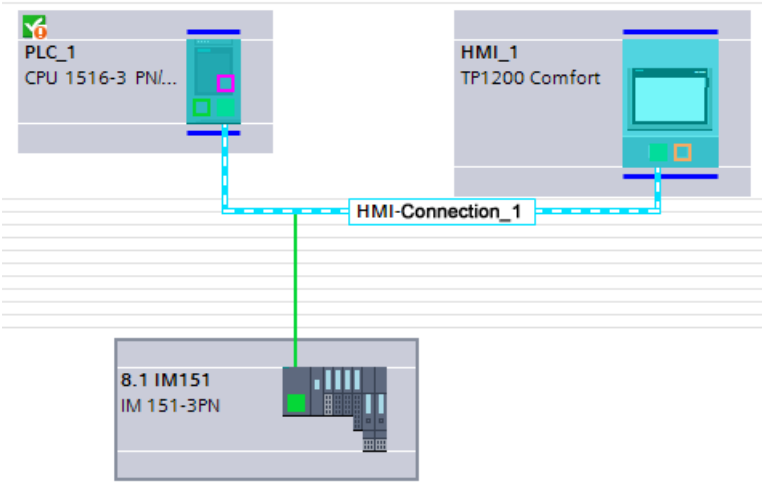

Figure 4-7 CPU with diagnostic information

You get to the "Device view" with a double-click on the device. The diagnostic information for the individual modules is displayed in this view.

Note

Symbols and their meaning

You will find a legend with the meaning of each symbol in Explanation of diagnostics symbols (Page 32) and in the online help for STEP 7.

4.2.2.4 Online & diagnostics

Online mode

In online mode there is an online connection between your PG/PC and one or several devices. Depending on the properties of a device, you are offered specific diagnostics options and certain functions in online mode.

- Diagnostics
  - General module information
  - Diagnostics status
  - Cycle time
  - Memory
  - Diagnostics buffer
  - Display
  - Interface information (e.g. IP parameter, port information)
- Functions
  - Assign IP address
  - Set time and date of the CPU
  - Firmware update (e.g. for PLC, display)
  - Assign device name
  - Reset to factory settings
  - Format memory card
  - Save service data

To establish an online connection at least one PG/PC interface must be installed that is physically connected with a device, for example, with an Ethernet cable. The current online status of a device is indicated by a symbol to the right of the device in the project tree.

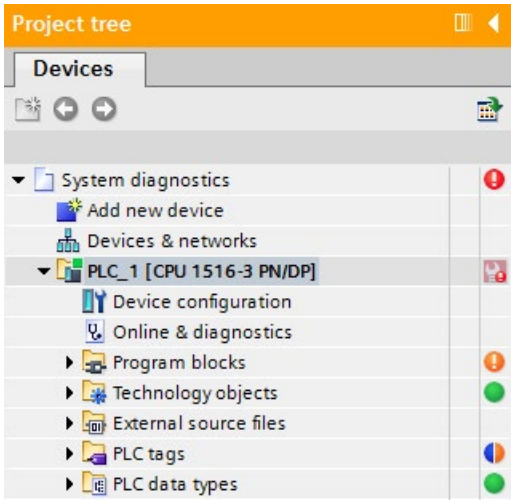

Figure 4-8 Partial view of network view

Requirements

- STEP 7 is open.
- A project is open.
- The project view is open.

Procedure

To display an overview of the faulty devices, follow these steps:

1. Select the affected device folder in the project tree.
2. Select the shortcut menu command "Online & Diagnostics".

   The online and diagnostics view of the module to be diagnosed is started.

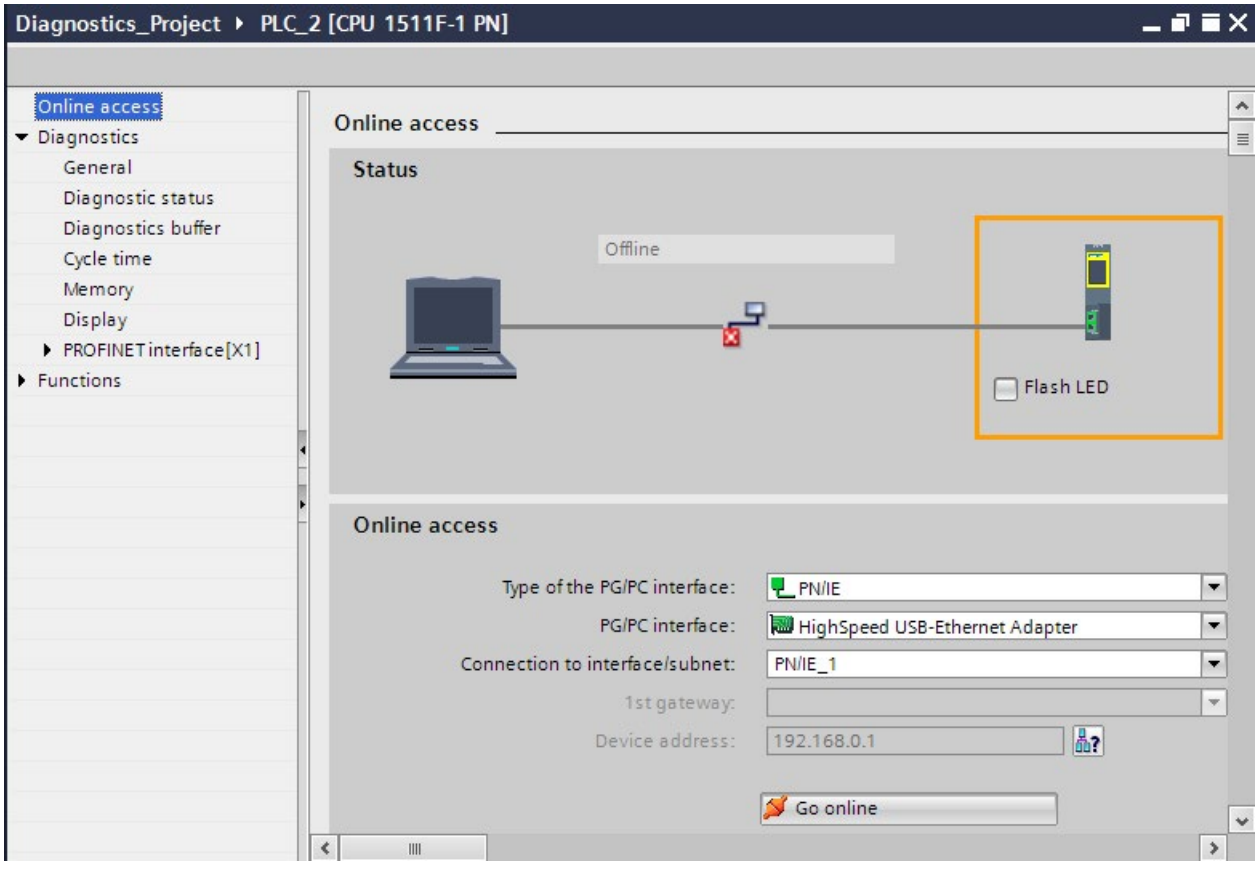

Figure 4-9 Setting online access

3. Make the settings for the interface.

   Here you can change an interface access that has already been set for an online connection that was successfully established previously.
4. Click on the "Go online" button.

   The online connection is established.

Result

You can find detailed diagnostics information on each device in the Inspector window, in the "Diagnostics" section of the area navigation on the "Properties" tab.

4.2.2.5 "Diagnostics" tab in the Inspector window

"Diagnostics" tab in the Inspector window

The "Diagnostics" tab of the Inspector window includes information on diagnostics events and configured alarm events.

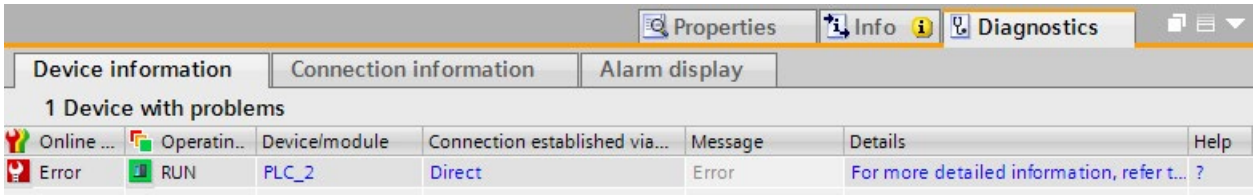

Figure 4-10 Diagnostics in the Inspector window, "Device information" tab

---

Note

Symbols and their meaning

You can find a legend with the meaning of each symbol in Explanation of diagnostics symbols (Page 32) and in the online help for STEP 7.

Subordinate "Device information" tab

This tab gives you an overview of faulty devices to which an online connection exists or has existed. The table provides the following diagnostics information on the faulty devices:

- Online status: Includes the online status as diagnostics symbol and in words
- Operating mode: Includes the operating mode as symbol and in words
- Device/module: Name of the affected device or the affected module
- Connection established via ...: Specifies the path used to establish the connection to the failed device.
- Alarm: This explains the entry in the previous columns and displays an alarm, if necessary
- Details: The link opens the online and diagnostics view associated with the device or puts it in the foreground.
  If the device cannot be reached, the link opens the "Go online" dialog.
- Help: The link provides additional information on the fault.

Note

Communication and access errors

Errors that occur in the user program (e.g., communication errors, access errors) are not reported in the "Diagnostics" tab of the device information. You must read out the diagnostics buffer of the CPU in the online and diagnostics view to get this information. The link in the "Details" column opens the diagnostics buffer.

Subordinate "Connection information" tab

The "Connection information" tab displays detailed diagnostics information for connections.

There will only be information on the "Connection information" tab if there is an active online connection to at least one end point of the relevant connection.

If a connection has been selected (connection table), the tab contains the following groups:

- Connection details
- Address details of the connection

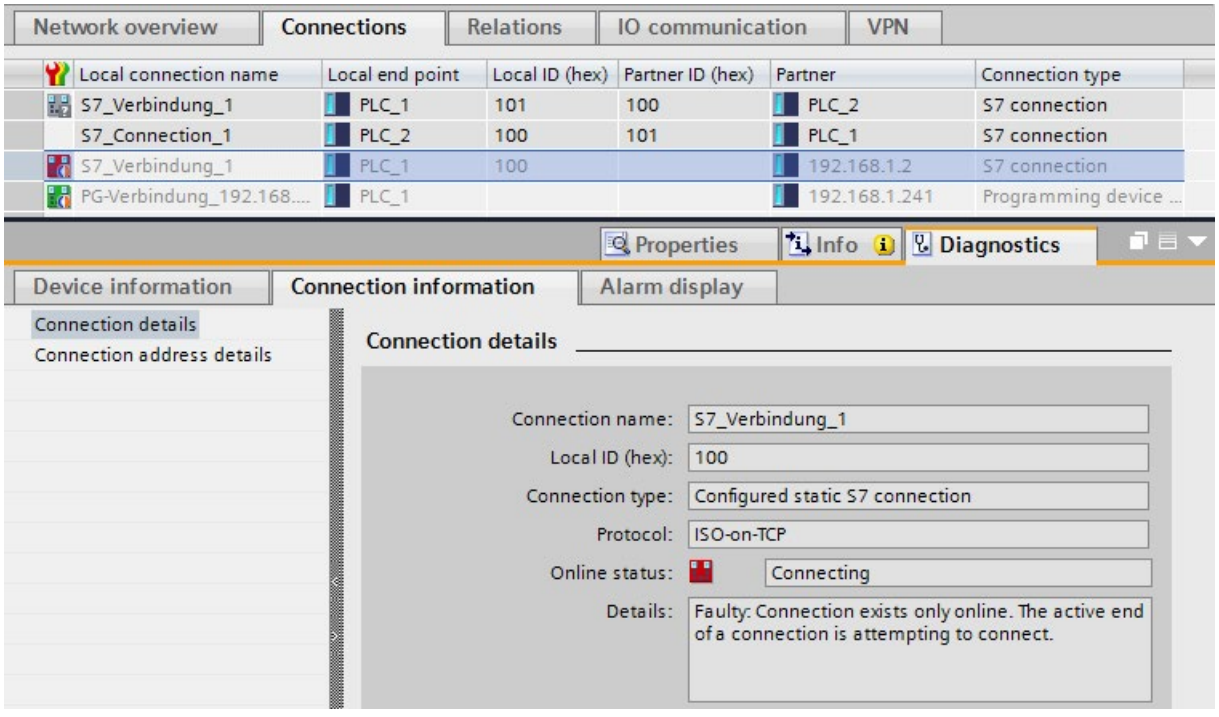

Figure 4-11 "Connection information" tab and open connection overview

If a module has been selected (network view), the tab contains the following group:

- Connection resources

Subordinate "Alarm display" tab

System diagnostics alarms are output in the "Alarm display" tab.

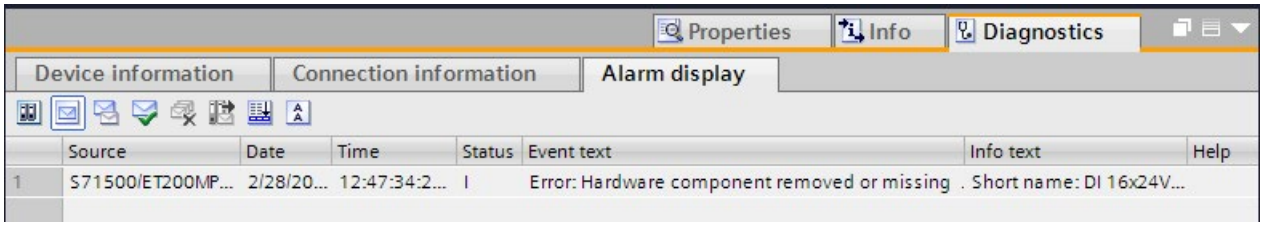

Figure 4-12 "Alarm display" tab

To receive alarms in STEP 7, follow these steps:

1. Open the project view.
2. Select the required CPU in the project tree.
3. To connect online with the respective CPU, select the shortcut menu command "Go online".
4. Select the required CPU once again in the project tree and select the shortcut menu command "Receive alarms".

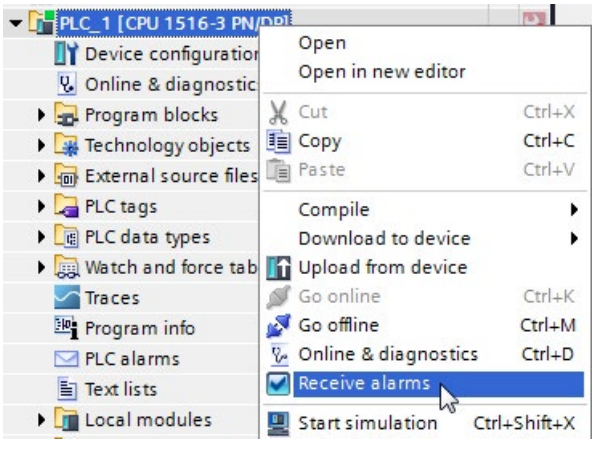

Figure 4-13 Receive alarms

5. Alarms are now displayed in the alarm display. "Archive view" is enabled by default.
6. To display the latest alarms, click the "Active alarms" icon .

4.2.2.6 CPU diagnostics buffer

Definition

Each CPU and some other modules have their own diagnostics buffer, in which detailed information on all diagnostic events is entered in the order in which they occurred.

The CPU diagnostics buffer can be displayed on all display media (STEP 7, SIMATIC HMI devices, SIMATIC S7-1500 Web server and display of the CPU).

Diagnostic events

The entries available in the diagnostics buffer include:

- Internal and external errors on a module
- System errors in the CPU
- Operating mode transitions (e.g., from RUN to STOP)
- Errors in the user program
- Removal/insertion of modules
- Security events

The contents of the diagnostics buffer are stored in the retentive memory in case of a memory reset of the CPU. Errors or events can be evaluated even after a longer period of time thanks to the diagnostics buffer to determine the cause of a STOP or to trace the occurrence of a single diagnostic event and to be able to assign it.

Procedure

To display the diagnostics buffer of a CPU in STEP 7, follow these steps:

1. Select the respective CPU.
2. Select the shortcut menu command "Online & Diagnostics".

   The "Online access" view is opened in the work area.

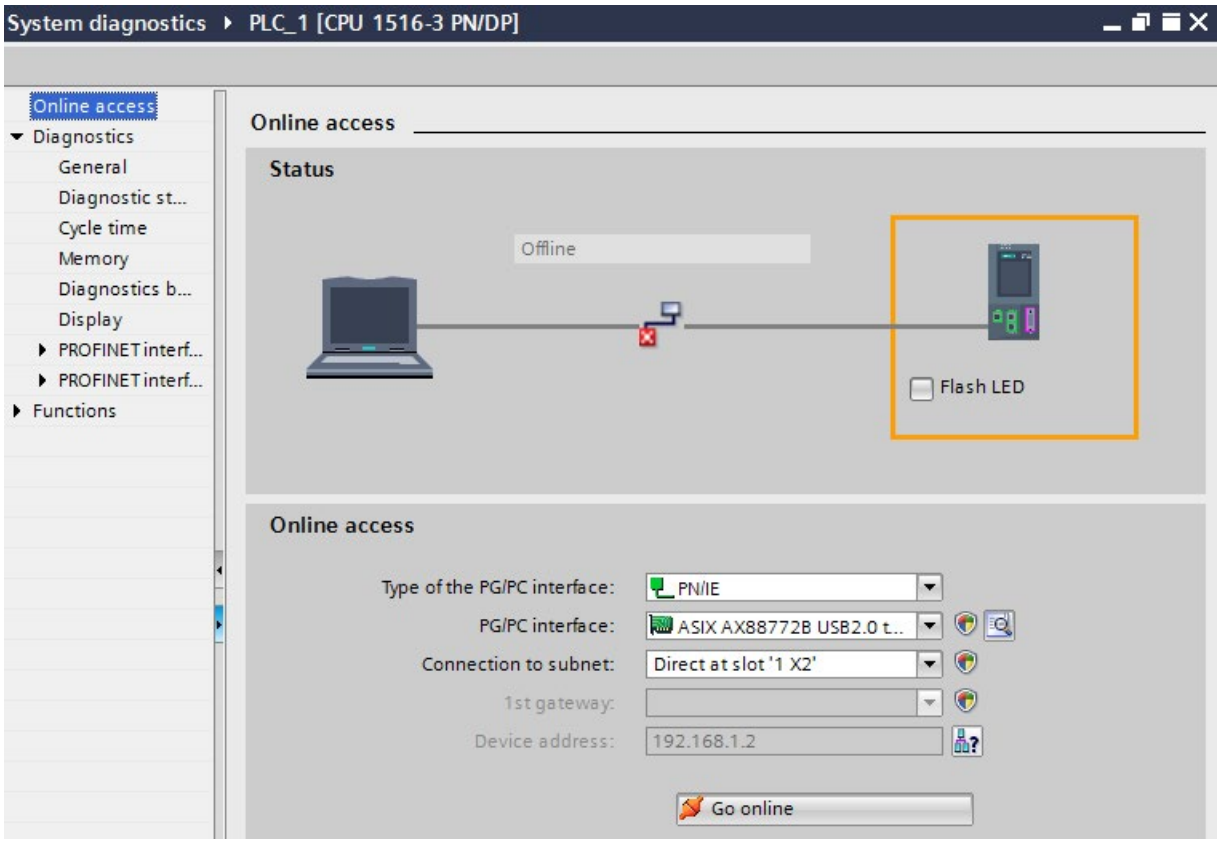

Figure 4-14 Setting up online access

3. Set the interface.

4. Click Go online.
5. Select the area "Diagnostics buffer".

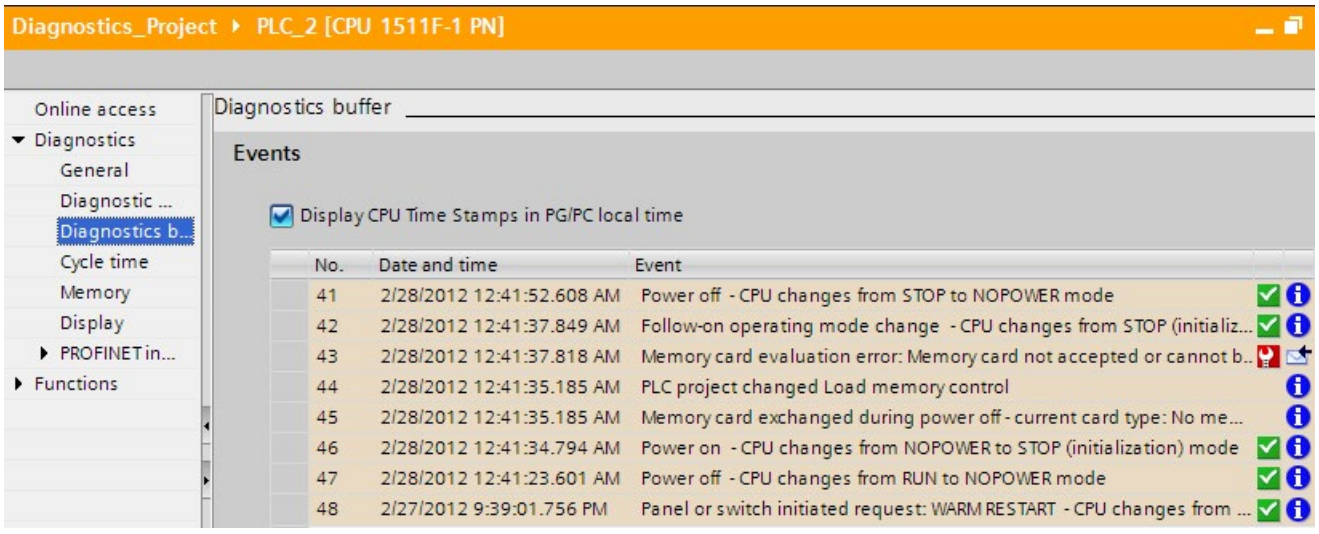

Figure 4-15 Diagnostics buffer in STEP 7

Note

Filtering events

You can filter the entries in the diagnostics buffer in the settings of the "Diagnostics buffer" area to only display specific types of events. This means that specific events, such as "CPU and configuration-internal events" or "Connection diagnostics events", can be displayed separately.

Security events

The following security events (event types) result in an entry in the diagnostics buffer.

- Going online with the correct or incorrect password
- Manipulated communications data detected
- Manipulated data detected on memory card
- Manipulated firmware update file detected
- Changed protection level (access protection) downloaded to the CPU
- Password legitimization restricted or enabled (by instruction or CPU display)
- Online access denied due to the possible number of simultaneous access attempts being exceeded
- Timeout when an existing online connection is inactive
- Logging on to the Web server with the correct or incorrect password
- Creating a backup of the CPU
- Restoring the CPU configuration (Restore)

To prevent the diagnostics buffer being "swamped" by large numbers of identical security events, you can set parameters so that these events are entered in the diagnostics buffer as a group alarm. For every interval (monitoring time), the CPU then only generates one group alarm per event type.

Configuring a group alarm for security events

To configure group alarms for security events, follow these steps:

1. Click on the CPU icon in the network view.

   The properties of the CPU are displayed in the Inspector window.
2. Navigate to the "Protection" > "Security event" area.
3. Click "Security event".
4. Select the option "Summarize security events in case of high message volume" to enable group alarms for security events.
5. Set the duration of an interval (monitoring period); the default is 20 seconds.

4.2.2.7 "Online tools" task card

Online view in the "Online tools" task card

The following requirements must be met to display the online view of the "Online tools" task card in STEP 7:

- An online connection to the CPU is available.
- You have selected the CPU in the topology view, network view or device view.

The "Online tools" task card provides an overview of the CPU state, the cycle time and the memory usage.

- The "CPU operator panel" pane displays the current state of some LEDs and the mode selector of a CPU.
- The "Cycle time" pane displays the cycle time diagram and below it the measured cycle times as absolute values.
- The "Memory" pane contains the current memory usage of the associated CPU. The free memory is shown both as a bar graph and as a numerical value (percentage).
  The display for "Load memory" contains, in addition to the online project data (program code, data blocks, hardware configuration etc.), all other data that may be on the SIMATIC memory card, such as recipes, data logs, HMI backups or non-SIMATIC files that have been copied to the memory card via the Web server of the CPU or offline in Explorer (for example, PDF files).

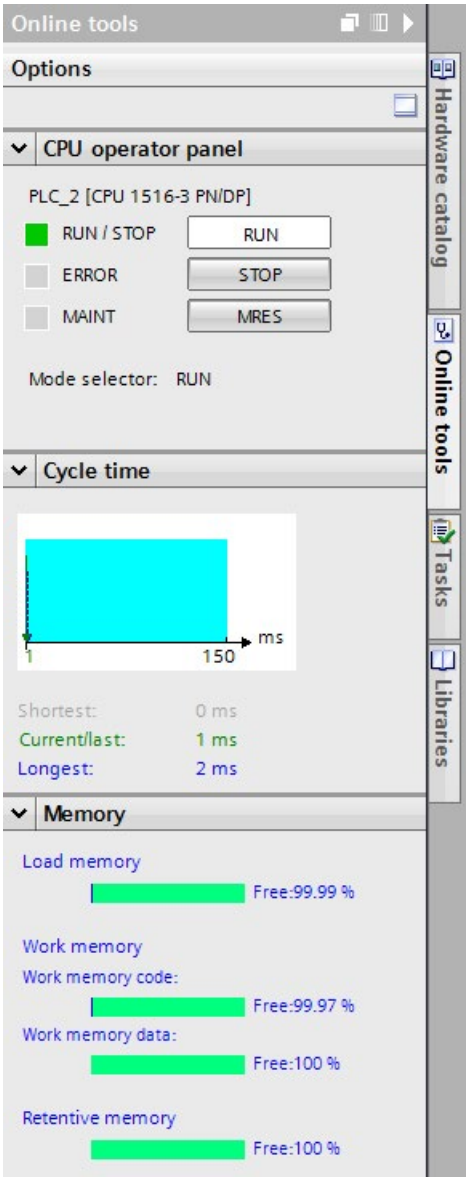

Figure 4-16 "Online tools" task card

4.2.2.8 Configuring the settings for I/O modules in STEP 7

You can also make settings for system diagnostics in STEP 7 for I/O modules. The parameters you have to configure depend on the I/O module.

The settings are optional.

Requirements

- STEP 7 is open.
- A project is open.
- The project view is open.
- A design with I/O modules has been configured.

Procedure

To make settings for system diagnostics of I/O modules in STEP 7, follow these steps:

1. Select the respective I/O module in the device view.
2. Open the "Properties" tab in the Inspector window.
3. Select the area "Inputs", for example.

   You have access to the settings for system diagnostics of the I/O module. If you select "Wire break", for example, a possible wire break for the channel is signaled during operation.

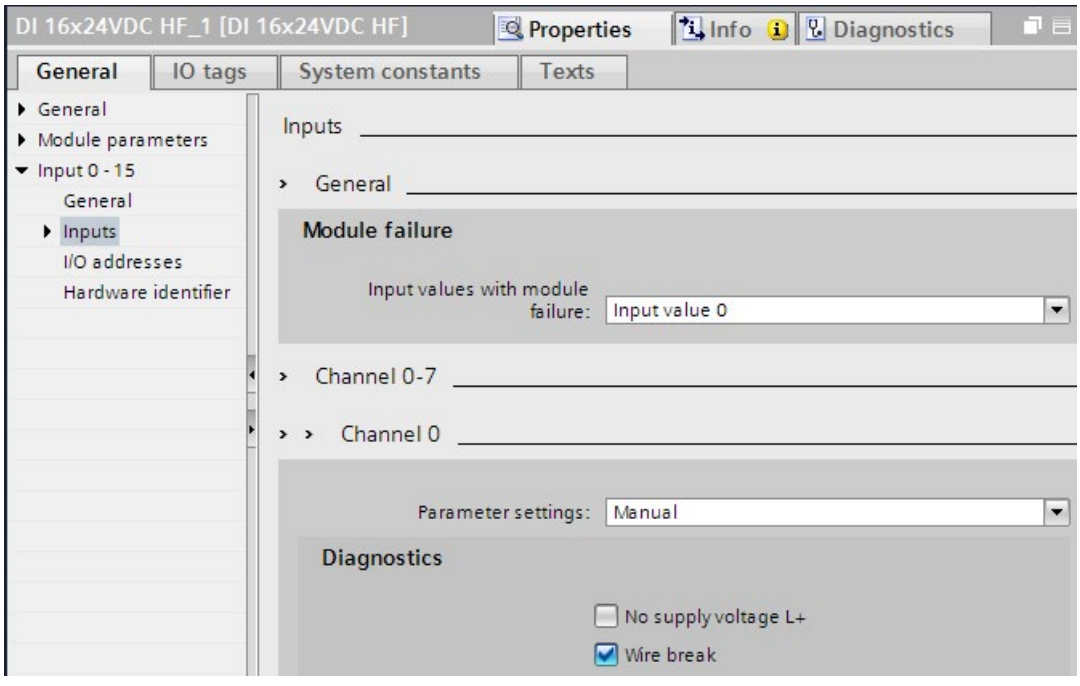

Figure 4-17 I/O setting with a digital input module

4. Save the hardware configuration.
5. Download the new hardware configuration to the CPU.

Additional information

The documentation for the respective module includes additional information on parameter assignment of I/O modules.

4.2.3 Diagnostics information using the web server

System diagnostics using the CPU Web server

The CPUs of the SIMATIC series have an integrated Web server and let you display the system diagnostics information by means of PROFINET. Any terminal devices, such as PCs or smartphones, can thus access module data, user program data and diagnostics data of a CPU by using an Internet browser. This means access to CPUs is possible without installed STEP 7.

In addition to normal websites, the Web server provides so-called basic websites with reduced content that are adapted to the requirements of small screens with low resolution.

Using CPU 1516-3 PN/DP as an example, the following figure shows the start page of the Web server:

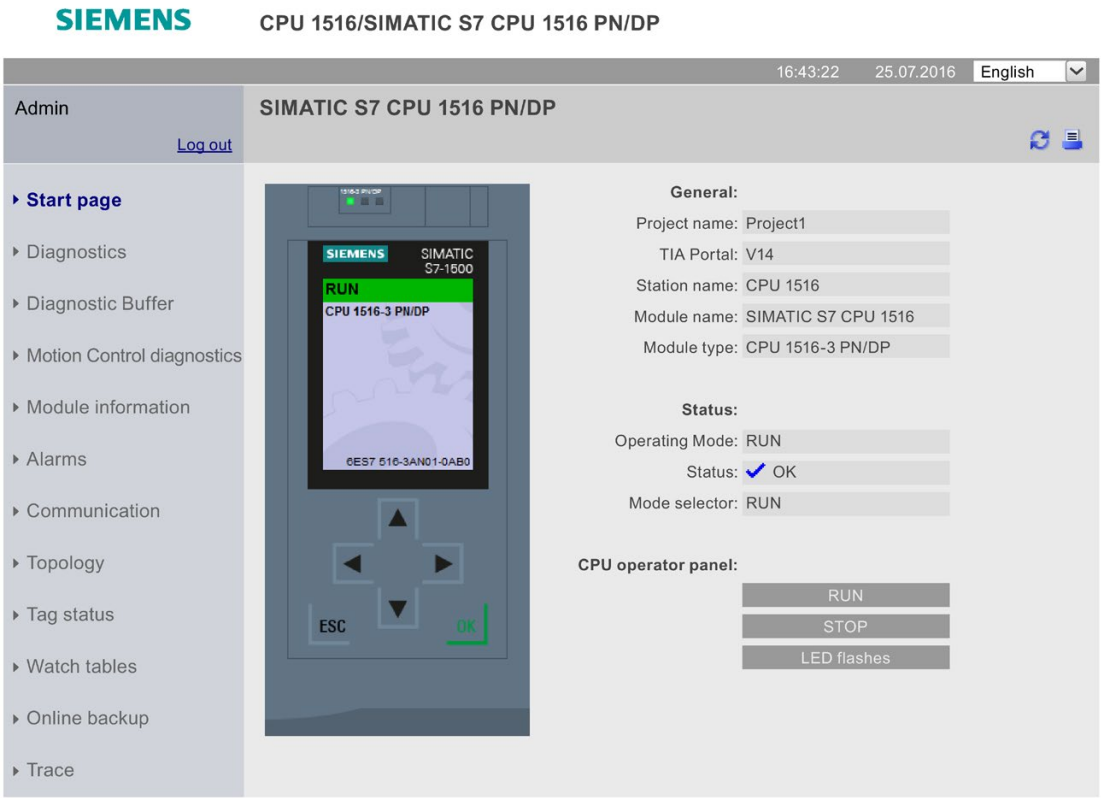

Figure 4-18 Web server, Start page

The following diagnostics options are available with the integrated Web server:

- Start page with general CPU information
- Information on diagnostics
- Contents of the diagnostics buffer
- Module information
- Alarms
- Information about communication
- PROFINET topology
- Motion Control diagnostics
- Trace

Configuring the Web server in STEP 7

Proceed as follows to activate the Web server:

Requirements

- You have opened STEP 7.
- You have added a CPU to the project.
- You have opened the project view.

Procedure

1. Open the network view.
2. Select the CPU.
3. Open the "Properties" tab in the Inspector window.
4. Select the entry "Web server" in the "General" area navigation.

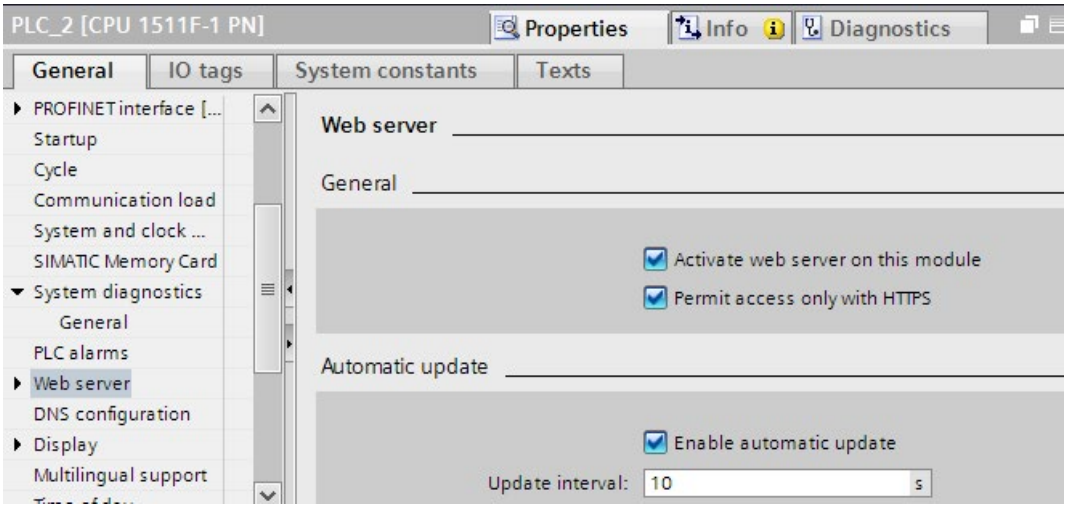

Figure 4-19 Activate the Web server

5. Select the "Activate web server on this module" check box.
6. "Permit access only with HTTPS": The activation of the Web server using the secure transmission protocol "HTTPS" requires a valid Web server certificate in the CPU.

NOTICE
Utilizing the full functionality of the Web server A valid CA-signed Web server certificate in the CPU is a requirement for: • User management with password-protected users • The use of safety-related functions (online backup and restore of the CPU configuration, saving and downloading diagnostic information in csv files) To use the full functionality of the Web server, we recommend that you create a CA-signed server certificate and assign it to the CPU. To create a CA-signed Web server certificate, you must enable the Certificate Manager in the global security settings of STEP 7 and assign a CA-signed server certificate to the Web server in the properties of the CPU. You can find additional information on handling Web server certificates in the "Configuring the Web server" section of the Web server function manual (http://support.automation.siemens.com/WW/view/en/59193560). Detailed information on Certification Authority (CA) certificates, device certificates (End Entity certificate), "Public Key Infrastructure" (PKI) and certificate management can be found in the Communication function manual (https://support.industry.siemens.com/cs/ww/en/view/59192925) and in the online help for STEP 7, keyword "Secure communication".

7. Automatic updating is activated in the default setting of a configured CPU.
8. Activate the Web server also for each interface via which you want to access the Web server.
   To do this, open the "Properties" tab in the Inspector window and select the "Web server" entry in the "General" area navigation. In the "Overview of interfaces" area, select the "Enabled web server access" check box for the corresponding interface.
9. Compile and load the configuration into the CPU.

Accessing the Web server

To access the Web server, proceed as follows:

1. Connect the display device (PG/PC, HMI, mobile terminal device) with the CPU or a communication module using a PROFINET interface.
   If you are working with WLAN, activate the WLAN on the display device and establish a connection to the access point (e.g. SCALANCE W788-1RR or SCALANCE W784-1), which is in turn connected to the CPU.
2. Open the web browser on the display device.
3. Enter the IP address of the interface of the CPU which is connected to the client in the "Address" field of the web browser in the following format: http://a.b.c.d or https://a.b.c.d (example input: https://192.168.3.141).
   The intro page of the CPU opens.
4. You need to perform the installation of the CA certificate again for each display device you want to use. A valid CA certificate is available for download from the "Intro" web page under "Download certificate". You can find instructions for installing the certificate in the help system of your Web browser and in the FAQ with the entry ID 103528224 at the Service&Support (https://support.industry.siemens.com/cs/ww/en/view/103528224) website.
5. Click the NEXT link to go to the Web server pages.

Note

Managing access rights

In STEP 7, you can create users, define access rights and assign passwords under "Web server > User management". Users only have access to the options that are permanently linked to the access rights.

You can find additional information on managing access rights in the "Configuring the Web server" section of the Web server function manual (http://support.automation.siemens.com/WW/view/en/59193560).

"Diagnostics" option

The "Diagnostics" web page provides more information about the tabs:

- Identification

  This tab contains the characteristics of the CPU (serial number, article number, hardware and firmware version, etc.).

- Program protection

  This tab provides information on whether the PLC program contains know-how protection or copy protection.

- Memory

  This tab contains current values on the memory currently in use.

- Runtime information

  Current information on program/communication load and cycle time can be found in this tab.

- Fail-safe (only with an F CPU)

  The safety program of an F-CPU consists of one or two F-runtime groups. You can find their cycle time (F-monitoring time) and runtime in this tab.

Figure 4-20 Web server, "Diagnostics" Web page

Diagnostics option "Diagnostics buffer"

The browser displays the content of the diagnostics buffer on the "Diagnostics buffer" Web page.

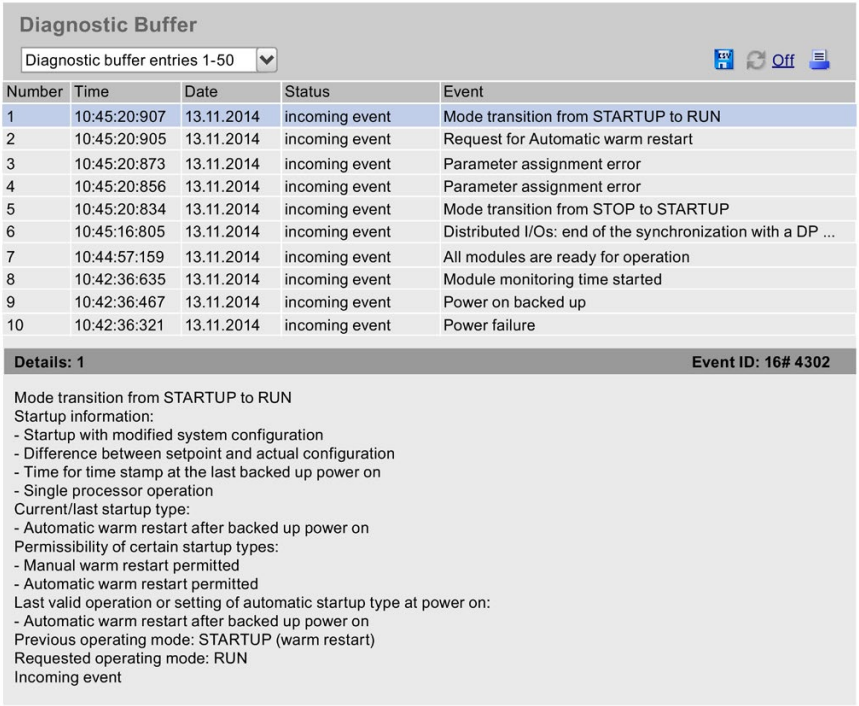

Diagnostic Buffer

Diagnostic buffer entries 1-50 Off

Number	Time	Date	Status	Event
1	10:45:20:907	13.11.2014	incoming event	Mode transition from STARTUP to RUN
2	10:45:20:905	13.11.2014	incoming event	Request for Automatic warm restart
3	10:45:20:873	13.11.2014	incoming event	Parameter assignment error
4	10:45:20:856	13.11.2014	incoming event	Parameter assignment error
5	10:45:20:834	13.11.2014	incoming event	Mode transition from STOP to STARTUP
6	10:45:16:805	13.11.2014	incoming event	Distributed I/Os: end of the synchronization with a DP ...
7	10:44:57:159	13.11.2014	incoming event	All modules are ready for operation
8	10:42:36:635	13.11.2014	incoming event	Module monitoring time started
9	10:42:36:467	13.11.2014	incoming event	Power on backed up
10	10:42:36:321	13.11.2014	incoming event	Power failure

Details: 1 **Event ID: 16# 4302**

Mode transition from STARTUP to RUN
Startup information:
- Startup with modified system configuration
- Difference between setpoint and actual configuration
- Time for time stamp at the last backed up power on
- Single processor operation
Current/last startup type:
- Automatic warm restart after backed up power on
Permissibility of certain startup types:
- Manual warm restart permitted
- Automatic warm restart permitted
Last valid operation or setting of automatic startup type at power on:
- Automatic warm restart after backed up power on
Previous operating mode: STARTUP (warm restart)
Requested operating mode: RUN
Incoming event

Figure 4-21 Web server, "Diagnostics buffer" Web page

Diagnostics option "Module information"

The status of a device is indicated by the Web browser with symbols and comments on the "Module information" Web page.

Modules are displayed on the "Module information" Web page in the "Name" column with a link. You can thus get to the faulty module in hierarchical order.

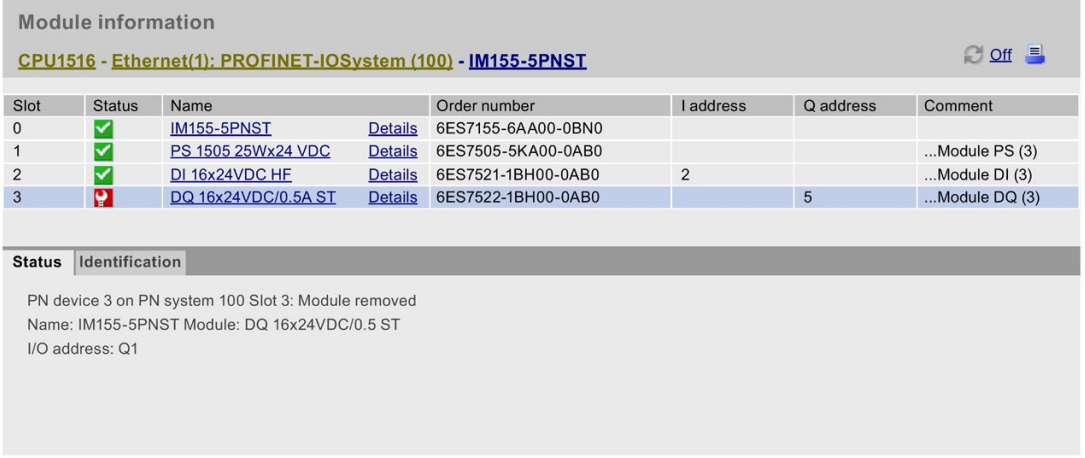

Figure 4-22 Web server, "Module information" Web page

Diagnostics option "Messages"

The Web browser displays the content of the message buffer on the "Messages" Web page. The messages can be acknowledged via the Web server if you have the appropriate user rights.

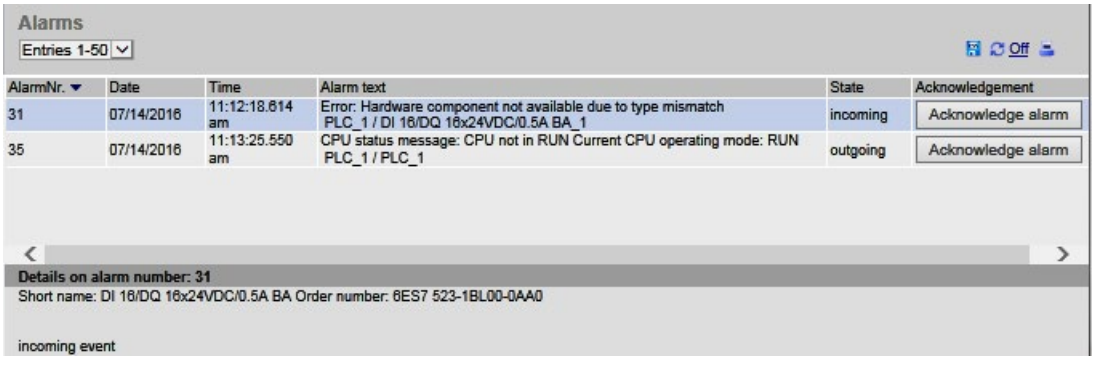

Figure 4-23 Web server, "Messages" Web page

Diagnostics option "Communication"

The "Communication" web page provides detailed information about the following tabs:

- Parameter

  A summary of the information on the PROFINET and Ethernet interfaces of the selected CPU is available in this tab.

- Statistics

  You will find information on data transmission in this tab.

- Resources

  Information about the resource consumption of the connections is available in this tab.

- Connections

  Information about the status of the communication connections is available in this tab.

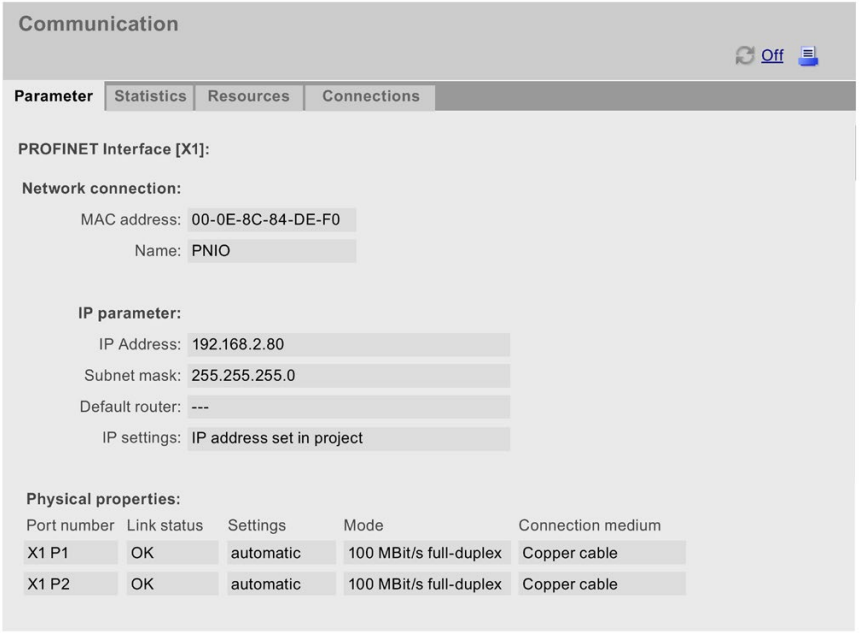

Figure 4-24 Web server, "Communication" Web page

"Topology" diagnostics option

The "Topology" Web page provides information on the topological configuration and status of the PROFINET devices in your PROFINET IO system.

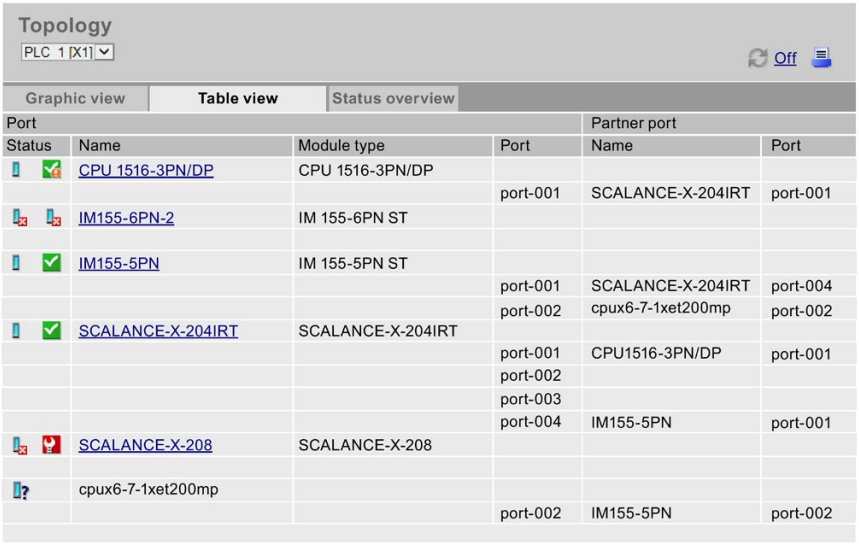

Topology

PLC 1 [X1]

Off

Graphic view | Table view | Status overview

Port				Partner port	
Status	Name	Module type	Port	Name	Port
	CPU 1516-3PN/DP	CPU 1516-3PN/DP			
			port-001	SCALANCE-X-204IRT	port-001
	IM155-6PN-2	IM 155-6PN ST			
	IM155-5PN	IM 155-5PN ST			
			port-001	SCALANCE-X-204IRT	port-004
			port-002	cpux6-7-1xet200mp	port-002
	SCALANCE-X-204IRT	SCALANCE-X-204IRT			
			port-001	CPU1516-3PN/DP	port-001
			port-002		
			port-003		
			port-004	IM155-5PN	port-001
	SCALANCE-X-208	SCALANCE-X-208			
	cpux6-7-1xet200mp				
			port-002	IM155-5PN	port-002

Figure 4-25 Web server, "Topology" Web page

"Motion Control Diagnostics" diagnostic option

The Web server displays statuses, errors, technology alarms and the current values of the configured technology objects (TOs).

The "Motion Control Diagnostics" web page provides detailed information on the configured technology objects in the following views:

- Diagnostics

  This view provides an overview list of configured technology objects, the status and error messages of a selected technology object, as well as values and limits of the movement status for a selected axis.

- Service overview

  This view contains diagnostic information for multiple technology objects and a filter option for selecting the displayed technology objects.

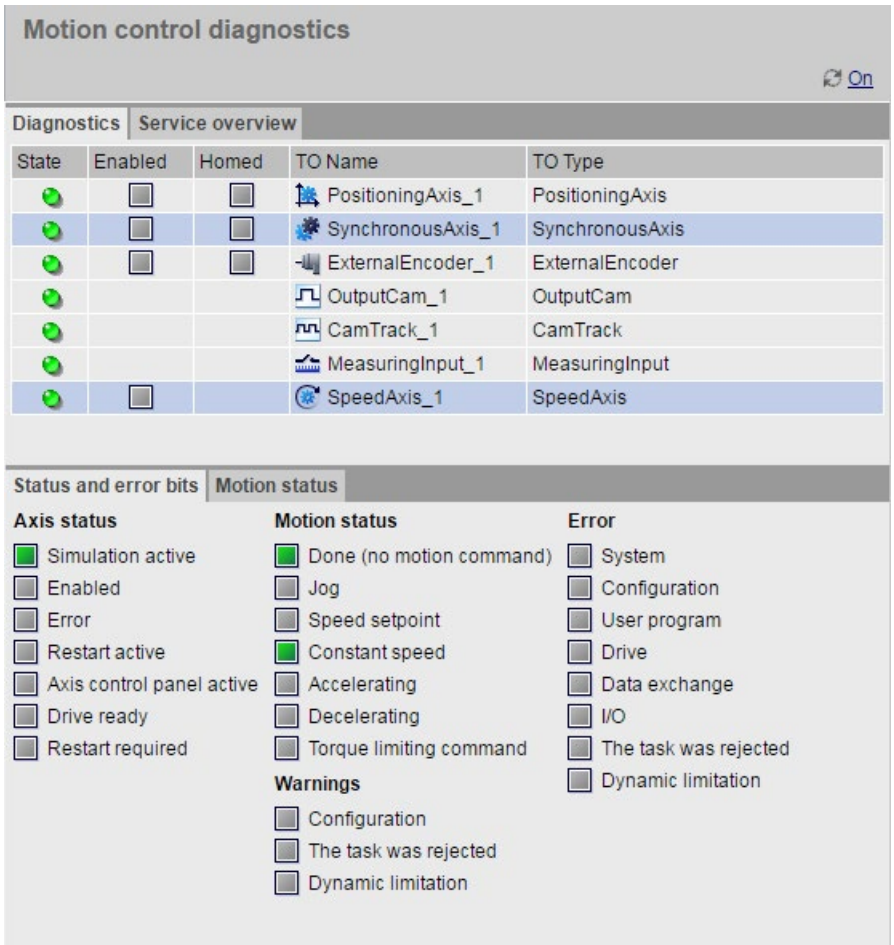

Figure 4-26 Web server, "Motion Control diagnostics" webpage

"Trace" diagnostic options

You can read, view and save the trace recordings via the Web server and thus obtain plant and project information for diagnostics and maintenance.

The web page of the trace and logic analyzer function consists of several areas. The example in the figure below shows how the Web server user interface is divided when the "Trace" web page is first called.

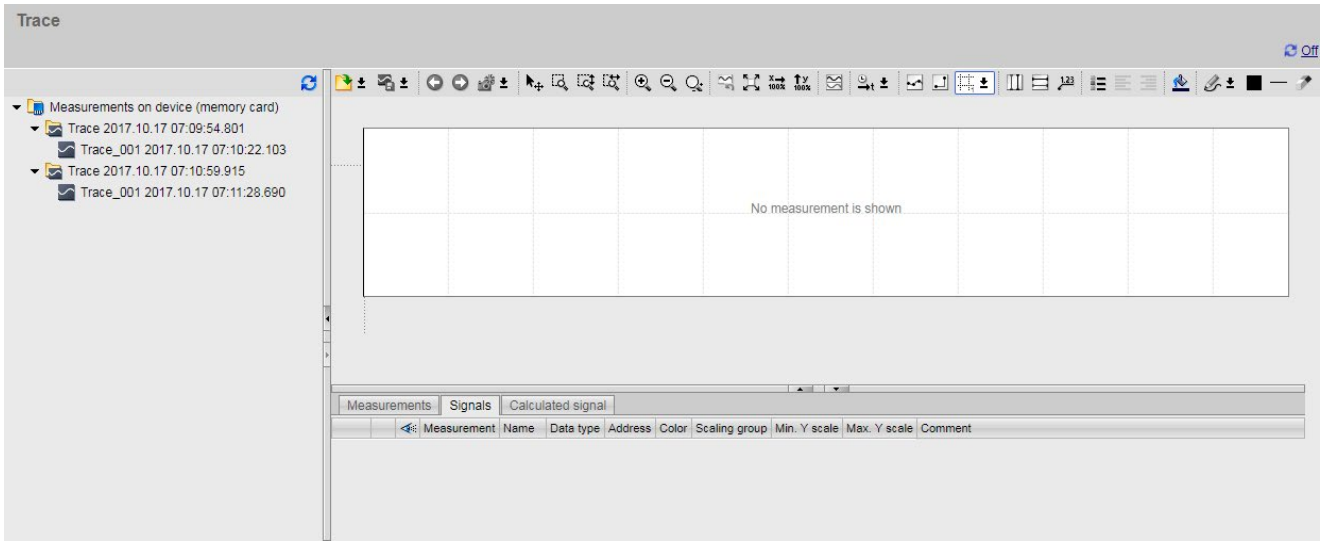

Figure 4-27 Web server, "Trace" home page (without measurement)

Additional information

Additional information on the topic is available in the Web server function manual (http://support.automation.siemens.com/WW/view/en/59193560).

You can find additional information on the trace function in the Using the trace and logic analyzer function (https://support.industry.siemens.com/cs/ww/en/view/64897128) function manual.

4.2.4 Diagnostics information using the HMI diagnostics view

Objects for system diagnostics

The full functionality of the HIM diagnostics view is only available with Comfort Panels and WinCC RT Advanced . Basic Panels do not support the complete range of system diagnostics functions.

Two objects are available for system diagnostics on an HMI device.

System diagnostics view

The system diagnostics view reflects the current status of all accessible devices in your plant. You navigate directly to the cause of the error and the associated device. You have access to all diagnostics-capable devices that you have configured in the STEP 7 hardware and network editor.

System diagnostics window

The system diagnostics window is an operating element and display object.

The functions of the system diagnostics window are the same as for the system diagnostics view. Because the system diagnostics window is configured in the "Global screen", you can also specify, for example, if the object can be closed in WinCC Runtime.

Note

Compatibility with Basic Panels

Only the "System diagnostics view" object is available with Basic Panels.

Basic Panels do not support the "System diagnostics window" object or the graphic symbol "System diagnostics indicator".

4.2.4.1 Configuring system diagnostics

Introduction

You add a system diagnostics view or a system diagnostics window to your project to get an overview of all devices available in your plant.

The system diagnostics window behaves like the system diagnostics view but is only available in the global screen.

Requirements

- At least one CPU has been set up in the project.
- An HMI device (e.g., Comfort Panel) has been set up in the project.
- CPU and the HMI device are connected with each other by an HMI connection.
- You have created a screen (for the system diagnostics view).
- The global screen is open (for the system diagnostics window).
- The Inspector window is open.

Procedure

Proceed as follows to configure the system diagnostics:

1. Double-click the "System diagnostics view" object in the "Tools" task card. The object is added to the screen.

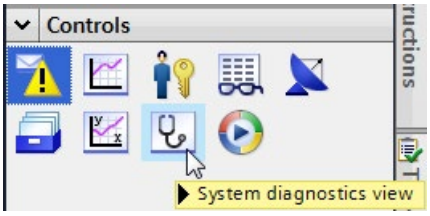

Figure 4-28 Adding a system diagnostics view

2. Select the "Properties" tab in the Inspector window.
3. Select the area "Columns".
4. Enable the columns that you require in the device view for WinCC Runtime, for example:
   - Status
   - Name
   - Operating mode
   - Slot
   - Address
5. Enable the columns that you require in the detail view for WinCC Runtime, for example:
   - Status
   - Name
   - Operating mode
   - Plant designation
   - Address
6. You can change the column headers in the "Columns" area, if necessary.
7. Select the "Display" area.
8. Enable "Column settings > Columns moveable" to move the columns in WinCC Runtime.
9. To close the system diagnostics window in WinCC Runtime, select "Properties > Window > Closable" in the "Properties" tab of the Inspector window.

Result

The system diagnostics view has been added to the screen. The diagnostics status of the entire plant is displayed in the system diagnostics view in WinCC Runtime.

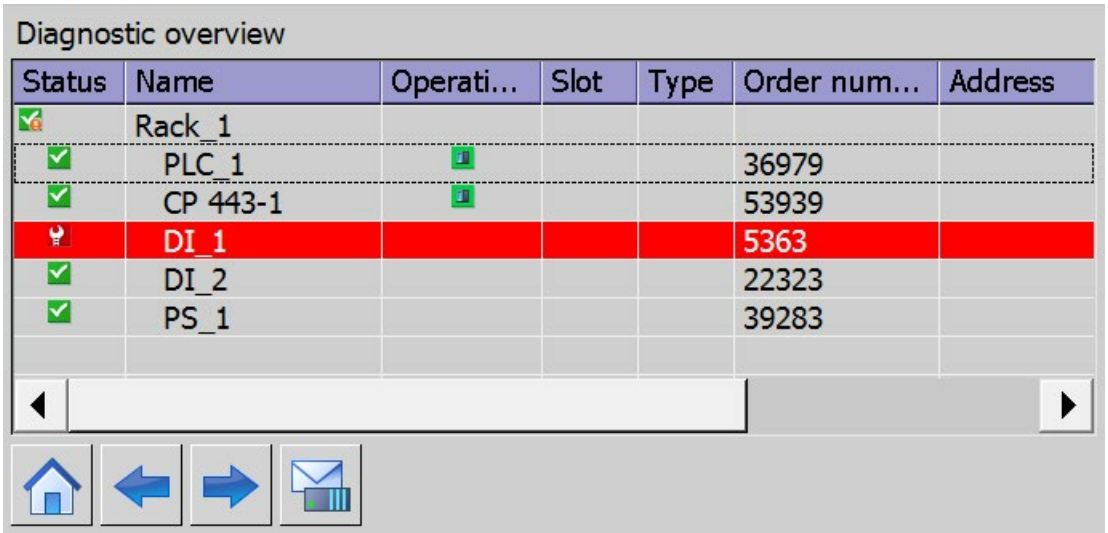

Figure 4-29 System diagnostics view in the screen

The system diagnostics window has been added to the global screen. If there is an error message in the plant, the system diagnostics window responds and displays the affected device.

4.2.4.2 Different views of the HMI diagnostics view

Introduction

There are three different views available in the system diagnostics view and the system diagnostics window.

- Device view
- Details view
- Distributed I/O view (only for PROFIBUS and PROFINET systems)

Device view

The device view shows all the available devices of a layer in a table. Double-clicking on a device opens either the lower-level devices or the detail view. Symbols in the first column provide information about the current state of the device.

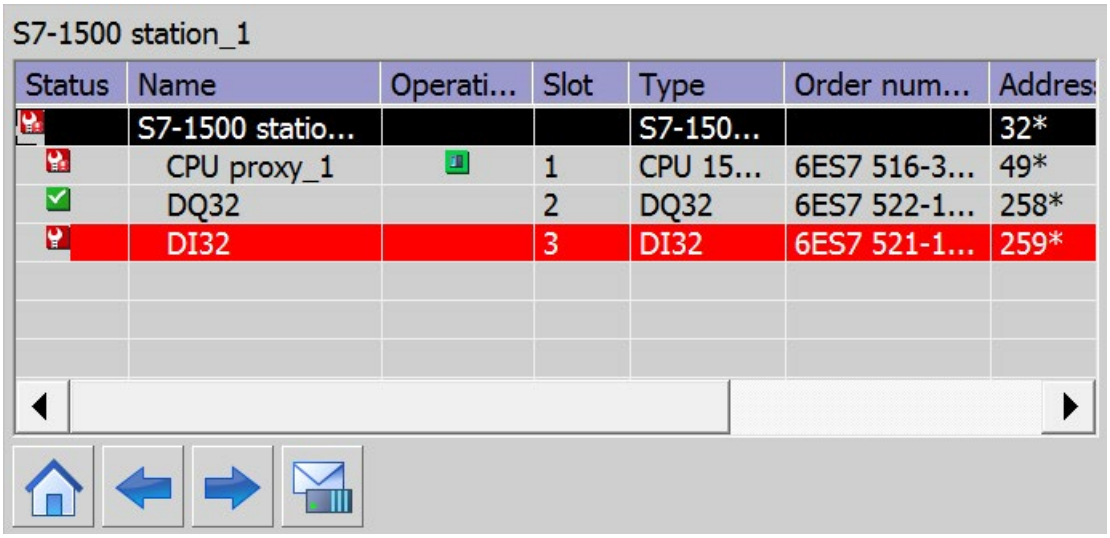

Figure 4-30 Device view

Details view

The detail view gives detailed information about the selected device and any pending errors. Check whether the data is correct in the detail view.

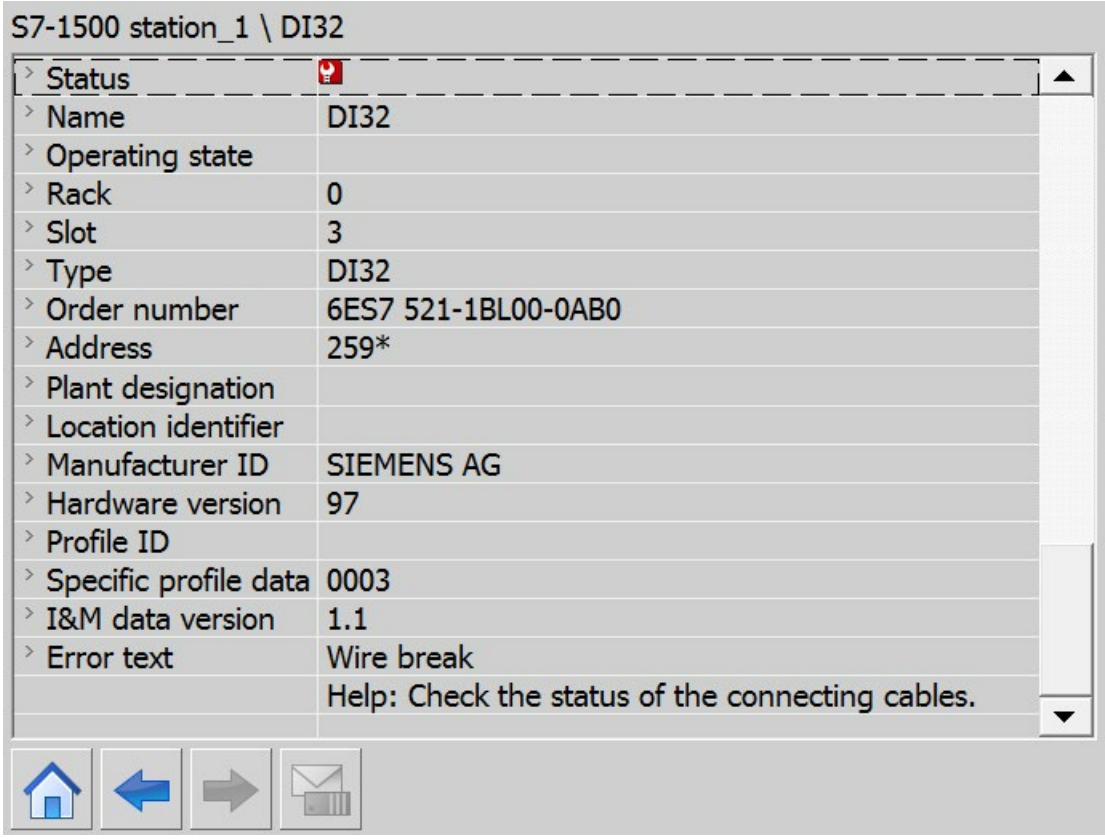

Figure 4-31 Details view

Distributed I/O view

The distributed I/O view is only available for distributed I/O systems. The distributed I/O view shows the status of the devices of the PROFIBUS/PROFINET subnet.

Each element in the view shows the device name, the device type and the IP address or the PROFIBUS address.

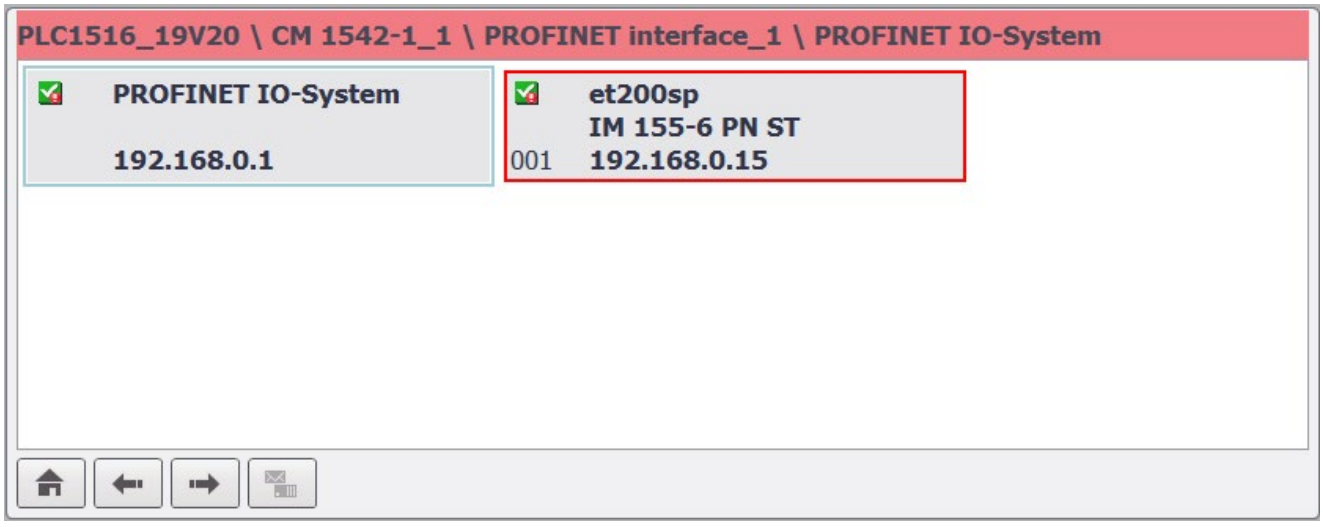

Figure 4-32 Distributed I/O view

Navigation buttons

Button	Function
	Opens the lower-level devices or the detail view if there are no lower-level devices.
	Opens the higher-level device or the device view if there is no higher-level device.
	Opens the device view.

4.2.4.3 Inserting system diagnostics indicator

Introduction

The system diagnostics indicator is a predefined graphic symbol of the library which alerts you to errors in your plant.

The library object shows two different states:

- No error
- Error

Requirements

- An HMI device (e.g., Comfort Panel) has been set up in the project.
- The "Libraries" task card is opened.
- The global library "Buttons and Switches > DiagnosticsButtons" is open.
- A screen is open.
- The system diagnostics window has been set up in the global screen.

Procedure

1. Select the "DiagnosticsIndicator" object in the library.
2. Drag-and-drop the library object to the position in the work area where you want to insert the object.

   The library object is added.

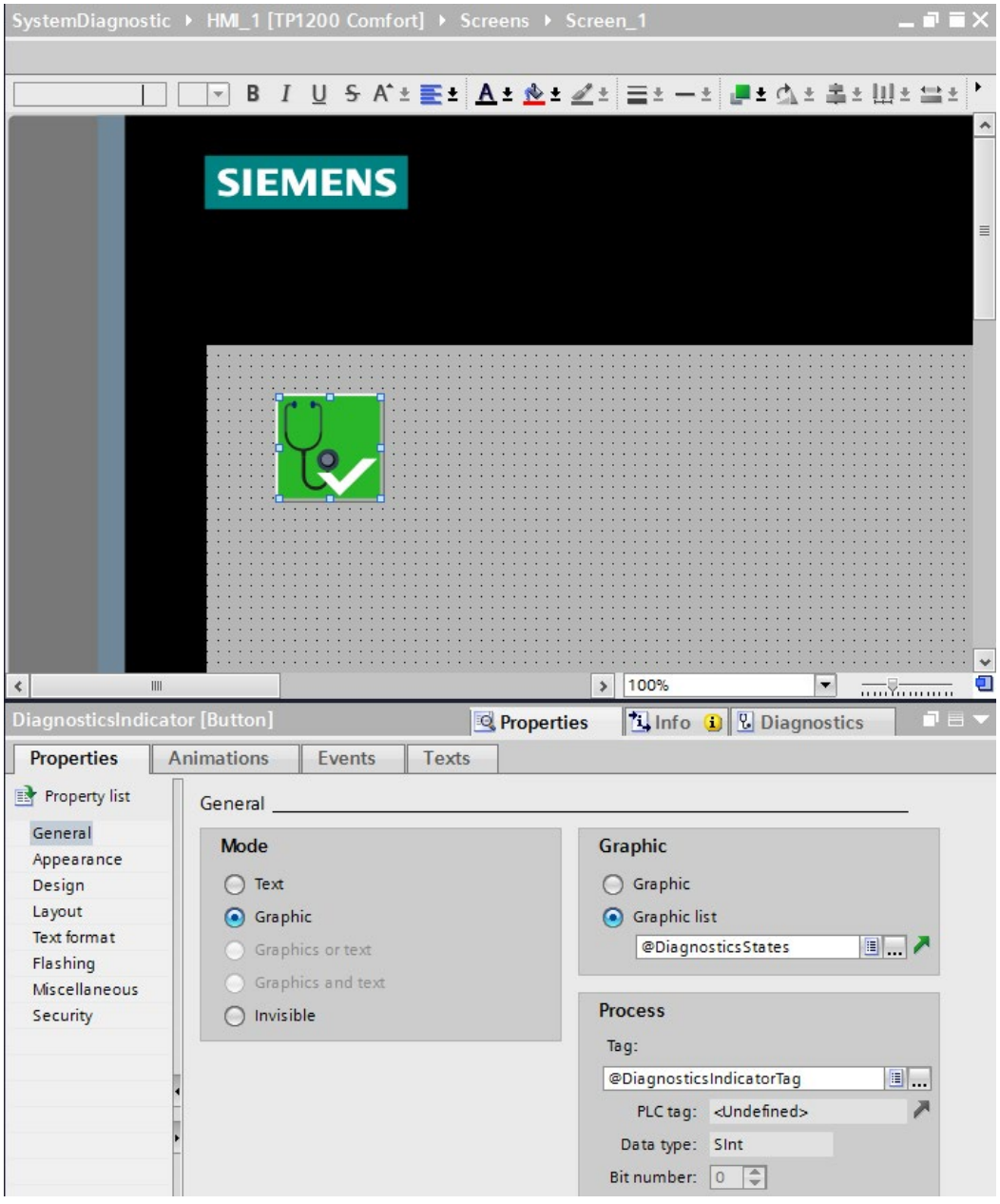

Figure 4-33 Inserting library object in the work area

3. Select the library object.
4. Open the "Events" tab in the Inspector window.

   The "ShowSystemDiagnosticsWindow" is preset for the event "Click".

Result

The system diagnostics indicator has been added to the project and connected with the system diagnostics window.

The system diagnostics indicator changes its appearance if an error message is output in WinCC Runtime. The system diagnostics window opens when you click on the system diagnostics indicator. The system diagnostics window shows the detail view of the affected device.

Configuring access protection for the system diagnostics window

Configure access protection for the system diagnostics indicator to prevent unauthorized access to the system diagnostics windows.

1. Select the "DiagnosticsIndicator" object in the screen.
2. Open the "Properties" tab in the Inspector window.
3. Select an authorization in the "Security in Runtime" area.

A logon dialog opens when you click on the system diagnostics indicator in WinCC Runtime. The system diagnostics window does not open unless you have the required authorization.

4.2.4.4 Configuring button as system diagnostics indicator

Introduction

Instead of using the object "DiagnosticsIndicator" from the library, you can, for example, configure a button in "Graphic" mode to indicate errors in your plant.

Requirements

- At least one CPU has been created.
- An HMI device (e.g., Comfort Panel) has been set up in the project.
- The "Tools" task card is open.
- A bit graphics list has been created with two different graphics for the states.
- A screen is open.
- You have created a system diagnostics view.

Procedure

Follow these steps to configure a button as system diagnostics indicator:

1. Double-click the "Button" object in the "Tools" task card. A button is added to the screen.
2. Enable the "Properties" tab in the Inspector window and the "Graphic" mode in the "General" area.
3. Select the bit graphics list as graphics list.
4. Select the "Properties" tab in the Inspector window and select the tag @DiagnosticsIndicatorTag under "Tag" in the "General" area.
5. To assign a function to the button, select the "Events" tab in the Inspector window.
6. Select the "Click" event.
7. Click on "Add function" in the table.
8. Select "EnableSystemDiagnosticsView".
9. Select the system diagnostics view.

Result

You have configured an interface that reacts to error events from the CPU. The button changes when an error event occurs in Runtime.

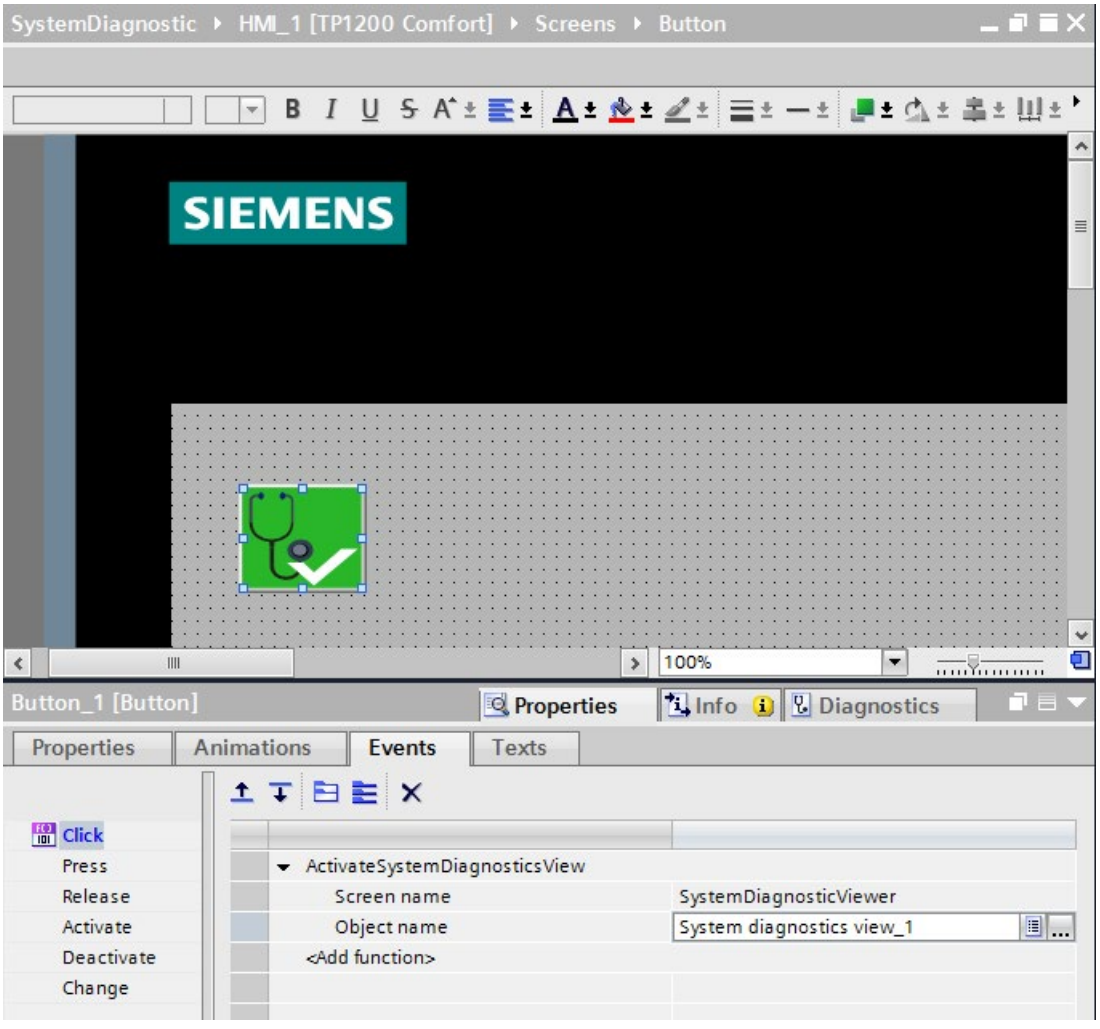

Figure 4-34 Configured button

The button has two states.

- Error

  The system diagnostics view opens when you click on the button. The system diagnostics view shows the detail view of the affected device.

- No error

  The system diagnostics view opens when you click on the button. The system diagnostics view shows the device view.

System diagnostics by means of the user program 5

5.1 Options of system diagnostics in the user program

Introduction

You can configure responses to diagnostics alarms in the user program. You can, for example, specify that your plant is stopped in case of specific diagnostics alarms.

Instructions

A vendor-independent structure of data records with diagnostics information applies. The following instructions are available for determining the system diagnostics of a device:

Table 5- 1 Instructions for determining the system diagnostics

Instruction	Description
RDREC	• Reads data records of a component (module or submodule) of a DP slave/IO device that may contain error information • Works asynchronously, which means processing takes place across several calls
RALRM	• Reads the start information of the OB when calling the diagnostics interrupt OB (OB 82) • Provides information on cause and location of error
DPNRM_DG	• Reads the current diagnostics data of a DP slave (DP standard diagnostics)
GEN_DIAG	• Generates diagnostics information • To generate diagnostics information, the module or submodule is identified with its logical address
Gen_UsrMsg	• Generates an alarm that is entered in the diagnostics buffer
GET_DIAG	• Provides diagnostics information • To provide diagnostics information, the module or submodule is selected
GET_NAME	• Reads the name of an IO device
T_DIAG	• Provides diagnostics and status information on a connection • Works asynchronously, which means processing takes place across several calls
RD_SINFO	• Reads the start information of the OB called last that has not been processed completely and the startup OB started last • Provides general error information
LED	• Reads the status of the module LED
Get_IM_Data	• Reads the Information&Maintenance data of the CPU • Works asynchronously, which means processing takes place across several calls
Transfer_IM_Data	• Transmits the Information&Maintenance data of the CPU
DeviceStates	• Outputs the state of all devices of an IO system
ModuleStates	• Outputs the state of all modules of a device

Additional information

Online help

In the online help for STEP 7, you can find:

- Additional information on instructions for system diagnostics
- Information about further options for evaluating diagnostic information in the user program (e.g. with the "RDREC", "RALRM", "GET_DIAG" instructions)
- Information on SIMATIC ProDiag. This functionality enables targeted and fast machine and plant diagnostics for SIMATIC S7-1500 and SIMATIC HMI:
  - Standardized diagnostics concept for different SIMATIC components
  - No additional configuration work for diagnostics functionality
  - Reduces the load on PLC memory and program run time

  You can find details in the online help under "Supervising machinery and plants with ProDiag".

Manuals

You can find additional information about evaluating diagnostic information in the user program in the following manuals:

- PROFINET function manual (http://support.automation.siemens.com/WW/view/en/49948856)
- From PROFIBUS DP to PROFINET IO (https://support.industry.siemens.com/cs/ww/en/view/19289930) programming manual
- Manual for the respective module

Application examples

You can find detailed application examples with further documentation and example projects on the Service&Support Website:

- Diagnostics in the user program with S7-1500 (https://support.industry.siemens.com/cs/ww/en/view/98210758)
- System diagnostics with S7-1500 and TIA Portal (https://support.industry.siemens.com/cs/ww/en/view/68011497)

FAQ

For more information about how to realize channel diagnostics in the user program of the SIMATIC S7-1500, refer to the FAQ with entry ID 109480387 on the Service&Support Website (https://support.industry.siemens.com/cs/ww/en/view/109480387).

5.2 System diagnostics using process image inputs

Introduction

In addition to event-driven system diagnostics, the input and output modules of the SIMATIC series provide diagnostics information using the process image input.

The system diagnostics described in the preceding sections is made available asynchronously to the program processing. To ensure the correct processing of the input and output data in the case of faults while reading the input and output data, some modules offer the so-called value status (QI = Quality Information) for evaluation.

Requirement for evaluation of the value status

The diagnostics information about the process image input is transmitted synchronized with the user data. Select the "Value status" check box in the properties of the I/O module in STEP 7 if you want to evaluate the value status of the channel.

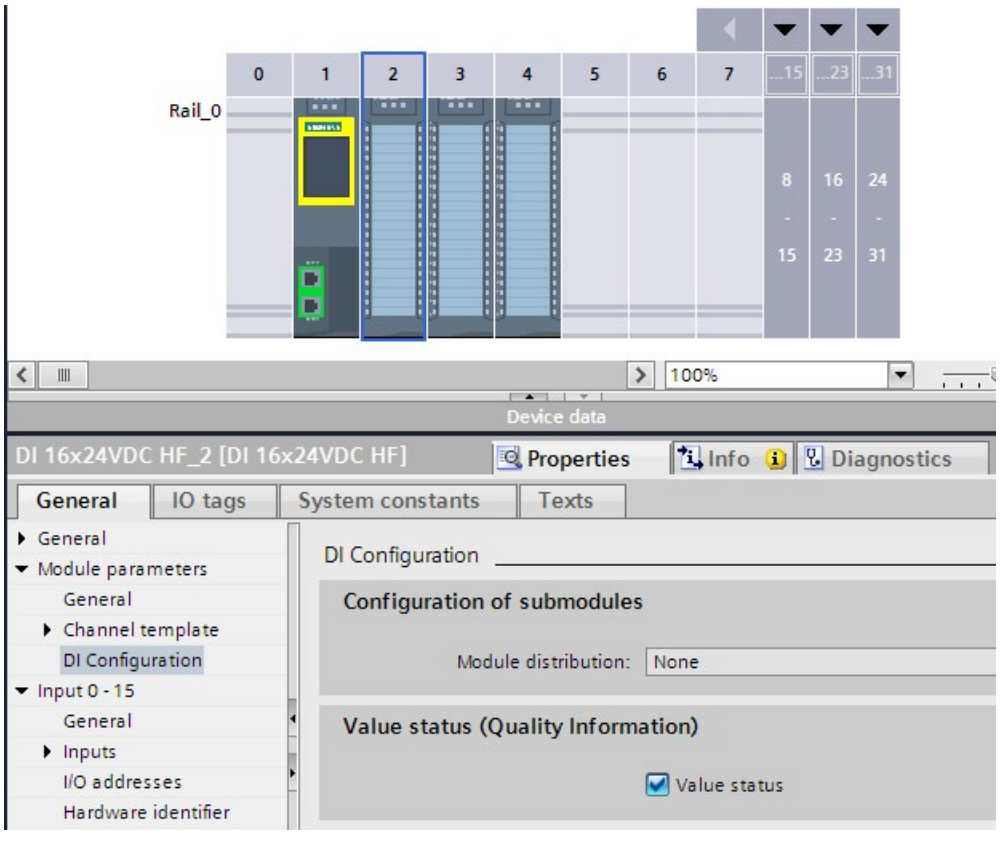

Figure 5-1 Enable value status

Evaluation of the value status

If you have enabled the value status for an I/O module, this module provides additional information on the value status in addition to the user data. This information is directly available in the process image input and can be called with simple binary operations.

Each channel is uniquely assigned one bit in the value status. The bit in the value status indicates the validity of the read-in value in the user data.

Table 5- 2 Example for evaluation of the user datum in case of a wire break for a digital input module

	Bit in user datum	Bit in value status	Value in user datum
Faulty channel	Logical 0	0	Invalid
Fault-free channel	Logical 0 (actual value)	1	Valid

Influence of the value status

The value status of an active channel is "Invalid" when any **one** of the following factors is given:

- Channel diagnostics pending (regardless of whether diagnostics, for example wire break, is configured for this channel)
- For output channels: "Reaction to CPU STOP" feature is active (due to CPU STOP, interrupted connection)
- For output channels of the digital on-board I/O of compact CPUs: If a channel is used for technology functions, it returns the value status 0 ("Invalid"). It does not matter in this context whether the output value is incorrect or not.
- PROFIenergy is active, i.e. hibernation is enabled (except in "Continue working mode")

When working with non-fail-safe modules, note that an invalid active channel also sets the value status of all other active channels to "Invalid". We therefore recommend that you disable all unconnected or unused channels.

Example - Evaluation of the value status for the input channel of an analog input module

The example below shows the basic evaluation of the value status for the input channel of an analog input module in the user program. The diameter of a cylinder is measured by means of a channel and its circumference is calculated.

- If the value status indicates the channel is error-free, the circumference is to be calculated.
- If the value status indicates the channel is defective, the value "0" is to be output as substitute value for the circumference.

The figure below shows the evaluation of the value status in the user program.

Perimeter

	Name	Data type	Default value	Comment
1	Input			
2	Diameter	Real	0.0	Tag for analog input channel
3	QualityInformation	Bool	false	Tag for QI of analog input channel
4	Output			
5	Perimeter	Real	0.0	Tag for result of calculation
6	InOut			
7	Static			
8	Temp			
9	Constant			
10	PI	Real	3.14	Constant for pi
11	SubstituteValue	Real	0.0	Constant for substitute value

IF... CASE... OF... FOR... TO DO... WHILE... DO... (*...*)

```
1 IF #QualityInformation = true                //Validity check of diameter
2
3     THEN                                     //Program run, if quality information is positive
4         #Perimeter := #Diameter * #PI;       //Calculation of perimeter
5
6     ELSE                                     //Program run, if quality information is negative
7         #Perimeter := #SubstituteValue;      //Substitute value assigned to perimeter
```

Figure 5-2 Example - Evaluation of the value status in the user program

Additional information

Depending on the I/O module, the value status reserves different addresses in the process image input. The manual for the module used includes specific information on the assignment and arrangement.

Alarms 6

Introduction

Alarms allow you to display events from processing in the automation system and to quickly detect errors, to precisely localize them and to remove them. Downtimes are significantly reduced in a plant.

Before alarms can be output, they need to be configured.

You can create, edit and compile event-dependent alarms along with their alarm texts and alarm attributes and display them on display devices.

In STEP 7, you create program alarms in the user program with the "Program_Alarm" instruction. You edit the attributes and alarm texts in the alarm editor in STEP 7.

You can output the alarm status with the "Get_AlarmState" instruction.

Advantages of program alarms

Compared to other alarm methods, such as HMI discrete alarms, program alarms offer the following advantages:

- Central engineering in STEP 7: You only configure a program alarm once for the CPU. The program alarm is automatically transferred from the CPU to all registered HMI devices.
- System-supported acknowledgment: The acknowledgment of a program alarm on an HMI device is automatically updated on other HMI devices by the CPU.
- Time stamping close to the event in the CPU
- Identical time stamps of the alarms on multiple HMI devices without time synchronization

6.1 Creating alarms with the "Program_Alarm" instruction

"Program_Alarm" instruction

You create a program alarm in STEP 7 with the "Program_Alarm" instruction.

The figure below shows the "Program_Alarm" instruction with the most important input tags.

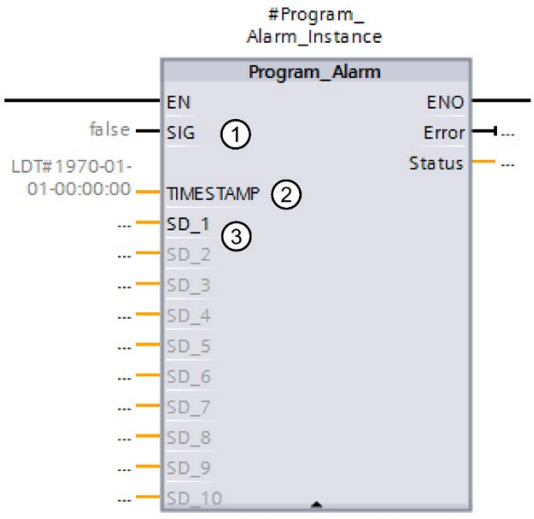

① The "Program_Alarm" instruction monitors the signal at the SIG block input and generates a program alarm in case of a signal change at the SIG parameter. The instruction generates an incoming alarm when the signal changes from 0 to 1 and an outgoing program alarm if the signal changes from 1 to 0. The program alarm is triggered synchronously to program execution.

② The time stamp is automatically created when the alarm event occurs in the automation system and is passed along with the alarm.

③ You can append up to ten associated values to the program alarm at the parameters SD_i (1 ≤ i ≤10). The associated values are acquired at the time of the signal change at the SIG parameter and assigned to the program alarm.
Associated values are used to display dynamic contents in alarms.
Example: The temperature in the tank <associated value 1> is <associated value 2> °C.
You can find more information on associated values in the STEP 7 online help.

Figure 6-1 "Program_Alarm" instruction

Note

The "Program_Alarm" instruction can only be called in a function block.

A program alarm can be up to 256 bytes long in total (with associated values and texts from the text list).

The associated values can be a maximum of 512 bytes in length. Text lists are not affected by this.

The CPUs of the SIMATIC S7-1500 product series have the following memory for text lists:

- CPU 1510-x to CPU 1513-x: 2.25 MB
- CPU 1515-x to CPU 1516-x: 4.5 MB
- CPU 1517-x to CPU 1518-x: 6.75 MB

The number of configurable program alarms depends on the CPU used. With a CPU 1515-2 PN, for example, a maximum of 10,000 program alarms are possible. You can find this information in the device manual for the respective CPU under "Number of configurable alarms".

The number of simultaneously active "Program_Alarms" depends on the CPU used. With a 1515-2 PN CPU, for example, a maximum of 600 program alarms are possible. You can find this information in the device manual for the respective CPU under "Number of reserved user interrupts".

Sometimes, it is not possible for all program alarms that are active at the same time to be output within one cycle. Query the status of each "Program_Alarm" and activate the instruction again, if necessary. The cycle time is increased for a short time by simultaneously activating/sending multiple "Program_Alarms".

A maximum of 40,000 program alarms should be configured in a STEP 7 project on a 64-bit operating system.

Additional information

You can find more information on creating program alarms in the STEP 7 online help under "Creating and editing alarms".

6.2 Editing alarms in the alarm editor

Introduction

You can edit the created alarms in STEP 7 either in the program editor or in the alarm editor.

You can find additional information on editing alarms in the program editor in the STEP 7 online help under "Creating and editing alarms".

Editing alarms in the alarm editor

You can edit alarm texts in the alarm editor and specify attributes such as alarm class or priority for the alarms.

1. Double-click "PLC supervisions & alarms" in the project tree. Select the "Alarms" tab. The alarm editor opens.
2. Enter the required texts and attributes in the appropriate columns.

The figure below shows the layout of the alarm editor.

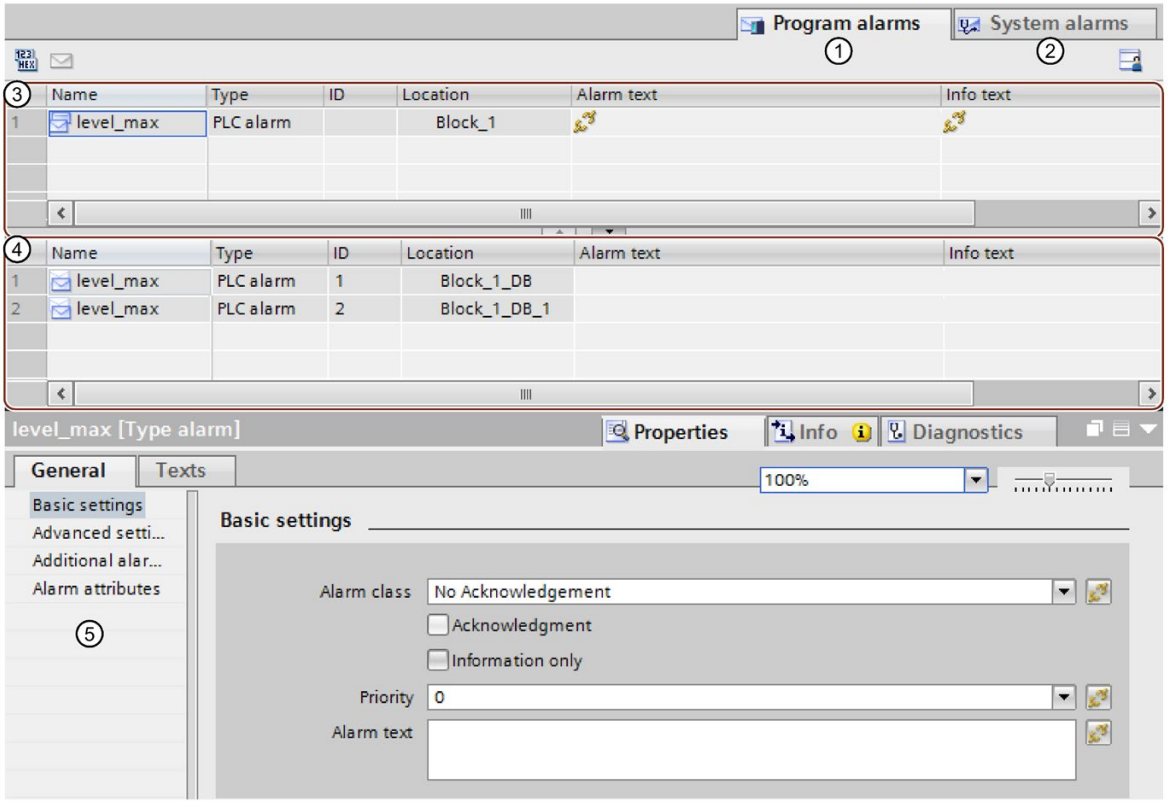

① "Program alarms" tab: You can edit program alarms here.

② "System alarms" tab: System alarms can only be viewed but not edited. To edit these alarms, you must navigate to the device view ("Go to device" menu command), where you can modify the system diagnostics alarms in the Inspector window.

③ "Type alarms" area:

This is where the type alarms created in a function block with the "Program_Alarm" instruction are displayed. Type alarms serves as templates for instance alarms (④).
All the inputs you make for the type alarm are automatically included in the instance alarms derived from it.

You can find more information on type alarms in the STEP 7 online help under "Alarm types and alarms".

④ "Instance alarms" area:

When you assign an instance DB to the message block (for example, call in an OB, FB, FC), instance alarms are automatically generated based on the template of the type alarm and alarm numbers are assigned.
You can modify the instance alarms for specific instances.

You can find more information on instance alarms in the STEP 7 online help under "Alarm types and alarms".

⑤ Properties of the selected type and instance alarm in the Inspector window

Figure 6-2 Layout of the alarm editor

You can enter or modify the necessary parameters, texts and attributes in the table or in the Inspector window.

Multilingual alarms

You can have program alarms displayed in multiple languages by assigning different project languages to the interface languages of the display devices.

Note

The project languages you want to assign must be activated and the corresponding texts (translations) must be available in the project. The project language selection can be found in the project tree under "Languages & Resources".

To create the texts of the program alarm as multilingual, follow these steps:

1. In the Inspector window of the alarm editor, open the "Properties" tab and the lower-level "Texts" tab.
2. Enter the text in the desired project language.
3. Open the "Properties" tab in the Inspector window of the CPU and select the "Display" command in the "General" area navigation. Under "Multilingual", assign one of the activated project languages to each interface language of the display devices. Overall, you can assign up to three different project languages to the user interface languages. All assigned project languages are loaded into the CPU.

Additional information

You can find additional information on texts and attributes in the STEP 7 online help under "Texts and attributes".

You can find more information on text lists in the STEP 7 online help under "Text lists for alarms".

6.3 Display of program alarms

Program alarms you create with the "Program_Alarm" instruction are automatically made available to the display devices.

You have the following options to display the alarms:

- STEP 7
- HMI
- Web server of the CPU
- Display of the CPU

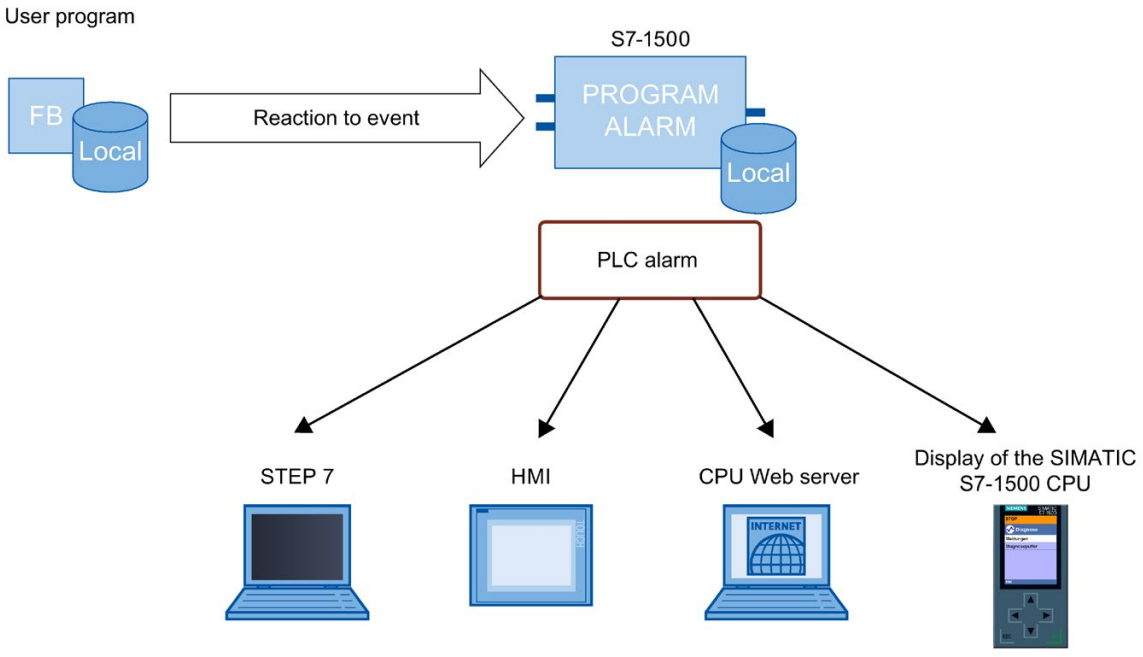

Figure 6-3 Display of program alarms

Multilingual alarms

You can have program alarms displayed in multiple languages by assigning different project languages to the interface languages. See section Editing alarms in the alarm editor (Page 81).

6.4 Output of the alarm state with the "Get_AlarmState" instruction

"Get_AlarmState" instruction

The "Get_AlarmState" instruction outputs the alarm state of a program alarm. The output of the alarm state always refers to a program alarm that was created using the "Program_Alarm" instruction.

The program alarm is selected with the "Alarm" input parameter. Specify the instance DB of the "Program_Alarm" instruction at the "Alarm" parameter.

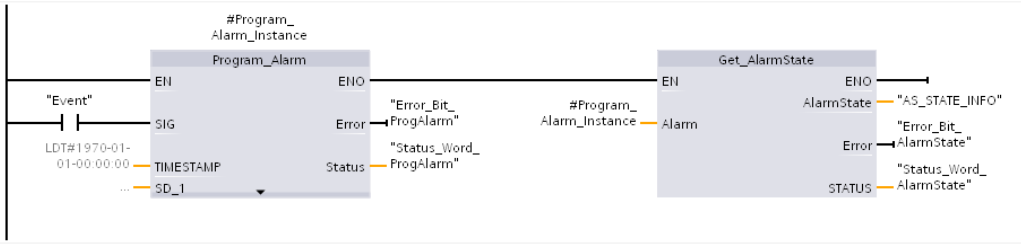

Figure 6-4 Call - Get_AlarmState

Additional information

You can find additional information on evaluation of the "Get_AlarmState" instruction in the STEP 7 online help.

6.5 Example program for program alarms

6.5.1 Task

Introduction

This section describes the basic configuration of program alarms with the "Program_Alarm" instruction based on two examples. The two examples solve the same problem but use a different approach. Example 1 does not use associated values. In example 2, an associated value is assigned to the program alarm to reference a text list.

Example - Minimum/maximum fill level of a tank

A tank is filled with a liquid. The fill level is monitored by two sensors.

If the liquid in the tank drops below a minimum fill level, an alarm is output for low fill level.

If the liquid in the tank exceeds a maximum fill level, an alarm is output for high fill level.

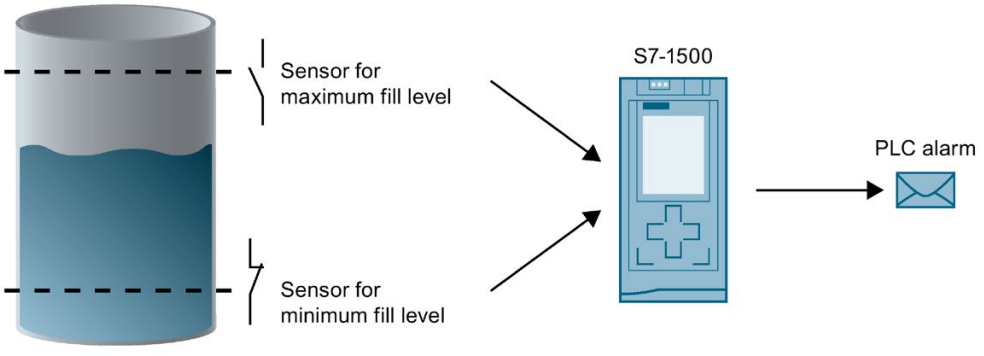

Figure 6-5 Example for fill level alarms

6.5.2 Example 1: Program alarm without associated values

Introduction

In this example, you create a program alarm for the maximum and the minimum fill level.

How the example works

When the maximum fill level is exceeded in the tank, a program alarm with the alarm text for the excessive fill level is output.

When the minimum fill level is undershot in the tank, a program alarm with the alarm text indicating that the fill level is too low is output.

Steps

The following steps are necessary for this example:

1. Define tags for signal acquisition
2. Create function block
3. Create program alarms
4. Call function block
5. Edit alarm text

Define tags for signal acquisition

The following table shows the tags that are used in this example. Define these tags in the standard tag table. The standard tag table is available in the project tree under "PLC tags".

Table 6- 1 Tags for fill level alarms

Name	Data type	Description
max	BOOL	Tag for maximum fill level If "max" = 1, the maximum fill level is exceeded.
min	BOOL	Tag for minimum fill level If "min" = 1, the minimum fill level is undershot.

The figure below shows the standard tag table with the defined tags "max" and "min".

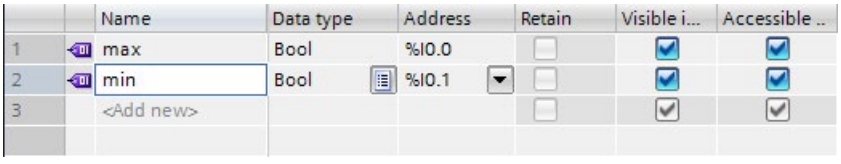

Figure 6-6 Define tags

Create function block

To create a function block, follow these steps:

1. Open the "Program blocks" folder in the project tree.
2. Double-click "Add new block".
   The "Add new block" dialog opens.
3. Select the button "Function block".

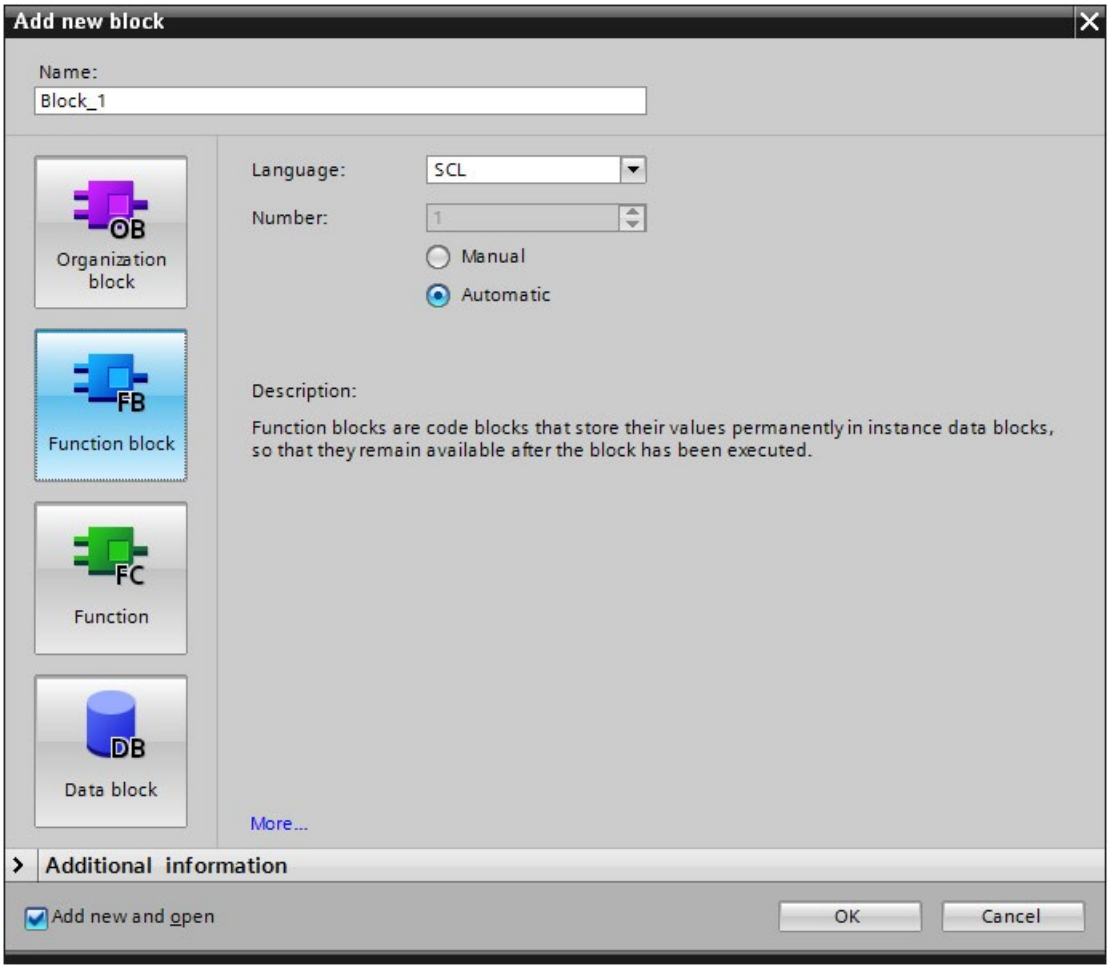

Figure 6-7 Create FB

4. Enter a name for the new block.
5. Select the language SCL.
6. Click on "OK" to confirm your input.

Result: You have created a function block.

Create program alarms

To create the program alarm for the example program, follow these steps:

1. Select the created function block (FB) in the "Program blocks" folder in the project tree and double-click the function block to open it.
2. Insert the call of the "Program_Alarm" instruction in the instruction part of the function block. The "Program_Alarm" instruction is available in the "Instructions" task card under "Extended instructions" > "Alarms".

   The "Call options" window opens.

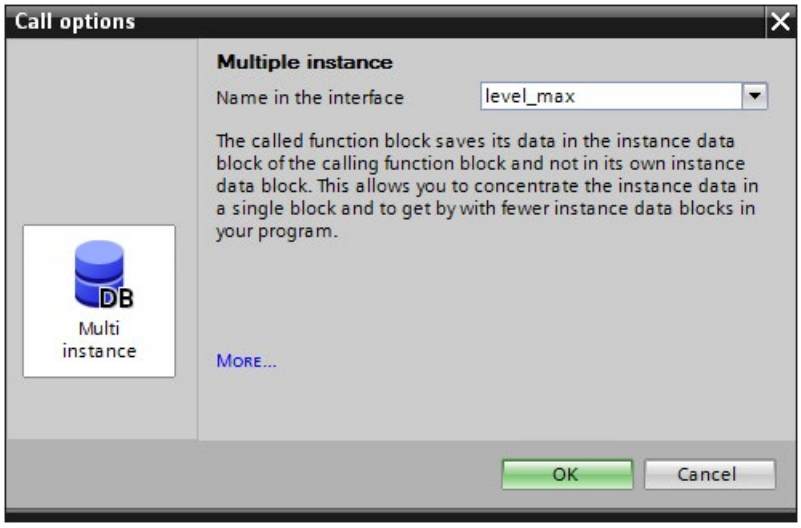

Figure 6-8 Call Program_Alarm

3. Enter "level_max" as the name and confirm the call options by clicking "OK".

   Result: The input tags of the "Program_Alarm" instruction are displayed in the instruction part.
4. Supply the SIG input tag of the "Program_Alarm" instruction with the tags for the maximum fill level.

   ```
   #level_max(SIG:="max");
   ```

   SIG: If a signal change occurs at the SIG input tag, the "Program_Alarm" instruction generates a program alarm.
5. Insert another call of the "Program_Alarm" instruction.
   The "Call options" window opens.
6. Enter "level_min" as the name and confirm the call options by clicking "OK".

   Result: The input tags of the "Program_Alarm" instruction are displayed in the instruction part.
7. Supply the SIG input tag of the "Program_Alarm" instruction with the tags for the minimum fill level.

   ```
   #level_min(SIG:="min");
   ```

Result: You have created two type alarms.

Call function block

To call the function block in the user program, follow these steps:

1. In the "Program blocks" folder, select the cycle OB (e.g., OB1) in which you want to call the function block and open the cycle OB with a double-click.
2. Select the function block you want to call in the "Program blocks" folder.
3. Drag the function block into the instruction part of the cycle OB.
   The "Call options" window opens.

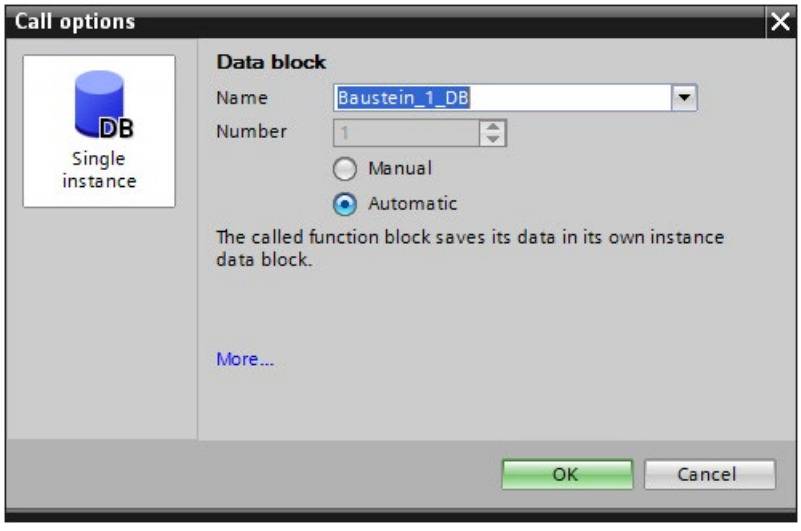

Figure 6-9 Call function block

4. Confirm the call options by clicking "OK".

Result: You have called the alarm block in the user program and created an instance alarm.

Edit alarm text

To edit the alarm text, follow these steps:

1. Double-click "PLC supervisions & alarms" in the project tree. Select the "Alarms" tab. The alarm editor opens.
2. Select the type alarm for the maximum fill level.
3. Enter the alarm text for the maximum fill level in the "Alarm text" column.
4. Select the type alarm for the minimum fill level.
5. Enter the alarm text for the minimum fill level in the "Alarm text" column.

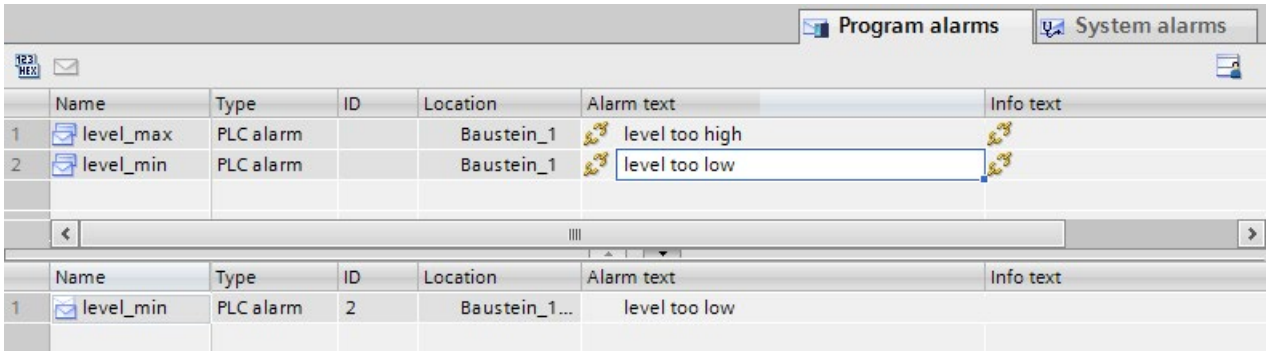

Figure 6-10 Edit alarm text

Result: You have created the alarm texts for both type alarms.

Additional information

You can learn how to create multilingual texts under "Multilingual alarms" in the section Editing alarms in the alarm editor (Page 81).

6.5.3 Example 2: Program alarm with associated value

Introduction

In this example, you create a shared program alarm for the maximum and the minimum fill level. The program alarm is given an associated value. The program alarm uses the associated value to access a text list entry and outputs a separate alarm text for the minimum and the maximum fill level.

How the example works

The program alarm is output if either the minimum fill level is undershot or the maximum fill level is exceeded.

The associated value 1 of the "Program_Alarm" instruction is assigned the tag for the maximum fill level. The associated value references a text list with the entries "0" and "1".

The following scenarios are possible for output of the alarm text:

- Associated value is "0": The entry "0" of the text list with the alarm text for the undershot fill level is output.
- Associated value is "1": The entry "1" of the text list with the alarm text for the excessive fill level is output.

Steps

The following steps are necessary for this example:

1. Define tags for signal acquisition
2. Create function block
3. Create program alarm
4. Call function block
5. Create a text list
6. Edit alarm text

Define tags for signal acquisition

The following table shows the tags that are used in this example. Define these tags in the standard tag table. The standard tag table is available in the project tree under "PLC tags".

Table 6- 2 Tags for fill level alarms

Name	Data type	Description
max	BOOL	Tag for maximum fill level If "max" = 1, the maximum fill level is exceeded.
min	BOOL	Tag for minimum fill level If "min" = 1, the minimum fill level is undershot.

The figure below shows the standard tag table with the defined tags "max" and "min".

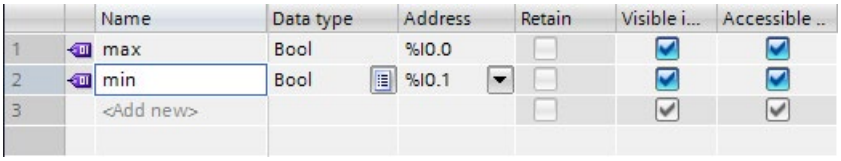

Figure 6-11 Define tags

Create function block

To create a function block, follow these steps:

1. Open the "Program blocks" folder in the project tree.
2. Double-click "Add new block".
   The "Add new block" dialog opens.
3. Select the button "Function block".

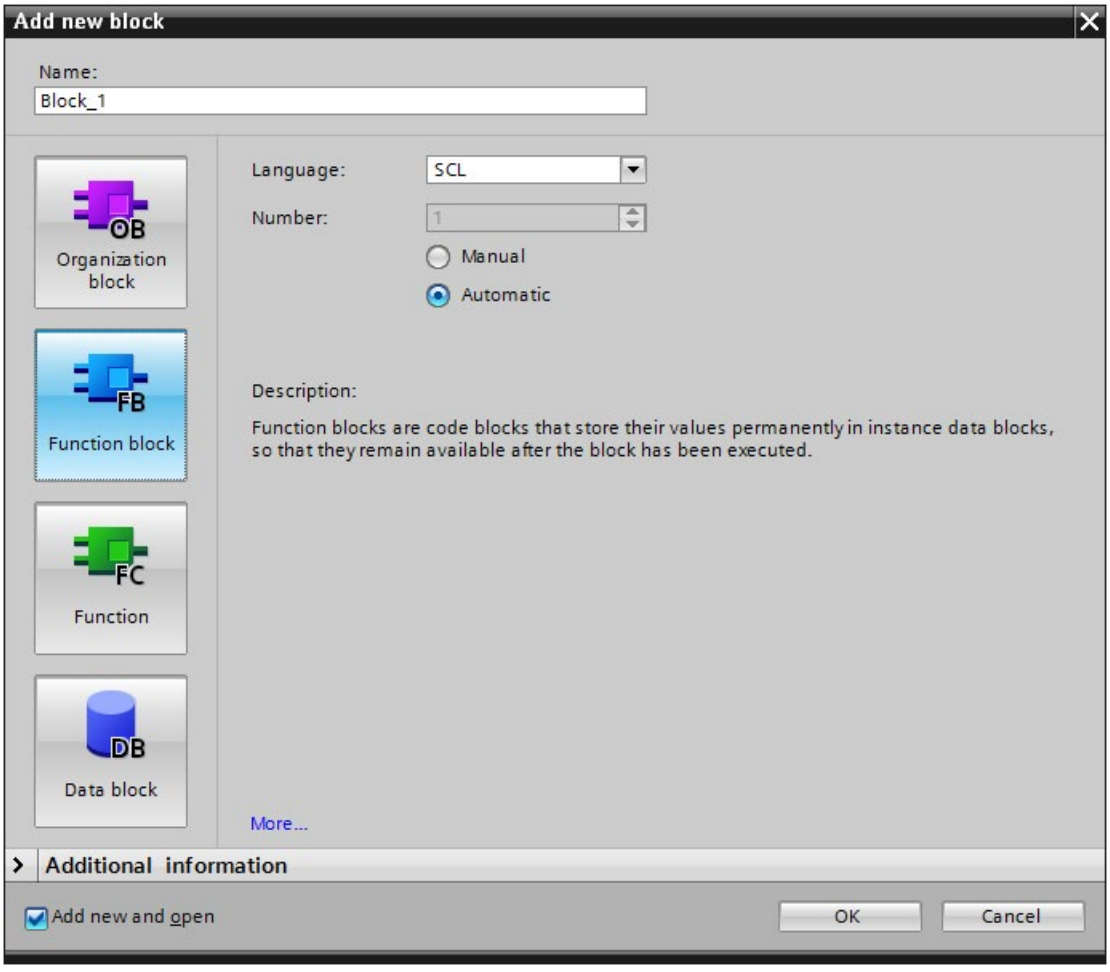

Figure 6-12 Create FB

4. Enter a name for the new block.
5. Select the language SCL.
6. Click on "OK" to confirm your input.

Result: You have created a function block.

Create program alarm

To create the program alarm for the example program, follow these steps:

1. Select the created function block (FB) in the "Program blocks" folder in the project tree.
2. Insert the call of the "Program_Alarm" instruction in the instruction part of the function block. The "Program_Alarm" instruction is available in the "Instructions" task card under "Extended instructions" > "Alarms".
   The "Call options" window opens.

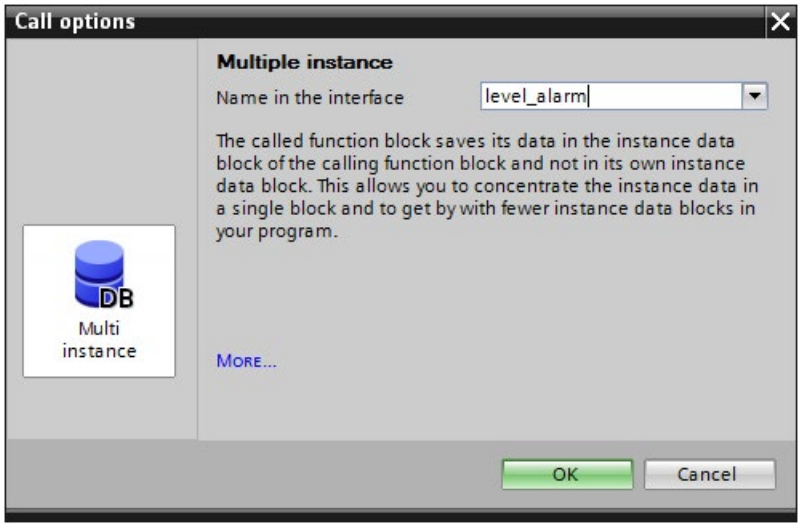

Figure 6-13 Call Program_Alarm

3. Enter "level_alarm" as the name and confirm the call options by clicking "OK".

   Result: The input tags of the "Program_Alarm" instruction are displayed in the instruction part.
4. Supply the SIG input tag of the "Program_Alarm" instruction with the XOR logic operation of the tags for minimum and maximum fill level and the input tag SD_1 with the tag for the maximum fill level.
   ```
   #level_alarm(SIG:="min"XOR"max",SD_1:="max");
   ```
   SIG: If a signal change occurs at the SIG input tag, the "Program_Alarm" instruction generates a program alarm.
   SD_1: The associated value is acquired at the time of the signal change at the input tag and assigned to the program alarm.

Result: You have created a type alarm.

Call function block

To call the function block in the user program, follow these steps:

1. In the "Program blocks" folder, select the cycle OB (e.g., OB1) in which you want to call the function block and open the cycle OB with a double-click.
2. Select the function block you want to call in the "Program blocks" folder.
3. Drag the function block into the instruction part of the cycle OB.
   The "Call options" window opens.

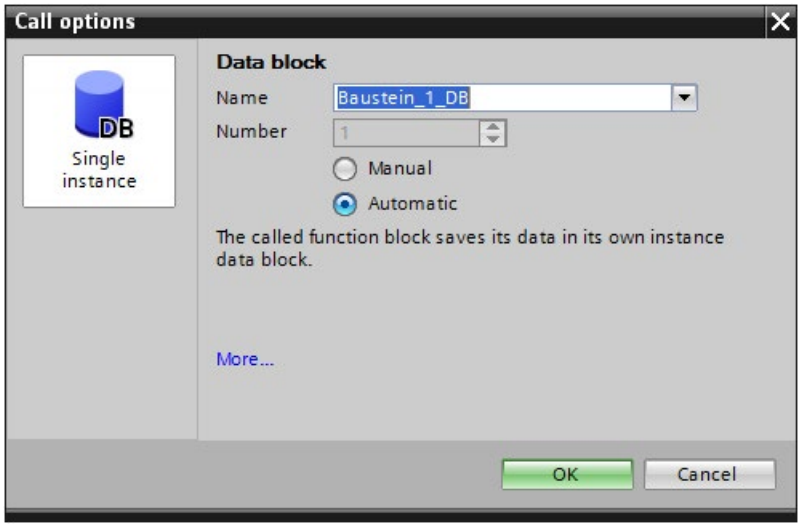

Figure 6-14 Call function block

4. Confirm the call options by clicking "OK".

Result: You have called the alarm block in the user program and created an instance alarm.

Creating a text list

To create the text list for the example program, follow these steps:

1. Double-click on the "Text lists" command in the program tree.
   The text list editor opens.
2. Double-click "<Add>" in the Text lists area.
   A new text list is added.
3. Name the text list "level_textlist".
4. Double-click "<Add>" in the Text list entries area of level_textlist.
   A new text list entry is added in the level_textlist text list.
5. Enter the alarm text for the maximum fill level in the "Entry" column.
6. Add another entry in the text list.
7. Enter the alarm text for the minimum fill level in the "Entry" column.

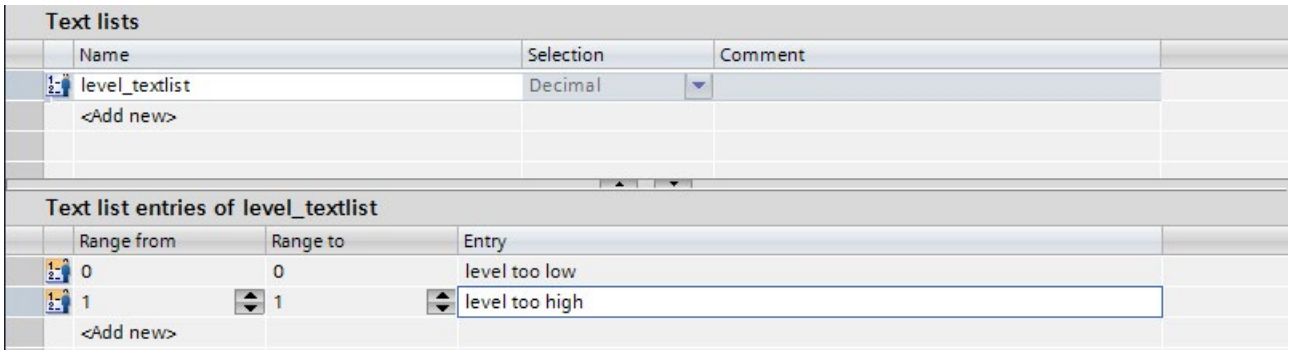

Figure 6-15 Creating a text list

Result: You have created the text list for the alarm text.

Edit alarm text

To edit the alarm text for the example program, follow these steps:

1. Double-click "PLC supervisions & alarms" in the project tree. Select the "Alarms" tab. The alarm editor opens.
2. Select the type alarm created for the example.
3. Click in the "Alarm text" column.
4. Open the shortcut menu and select the command "Insert a dynamic parameter (text list)".

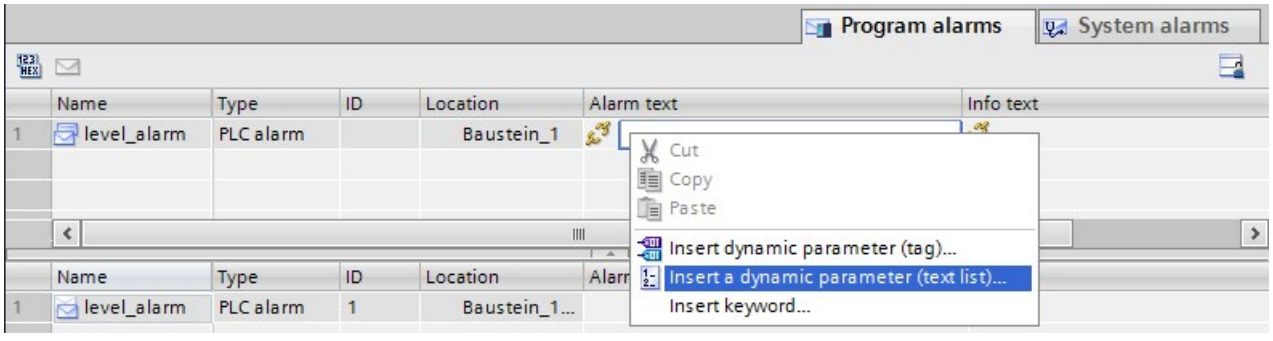

Figure 6-16 Edit alarm text

The window below opens.

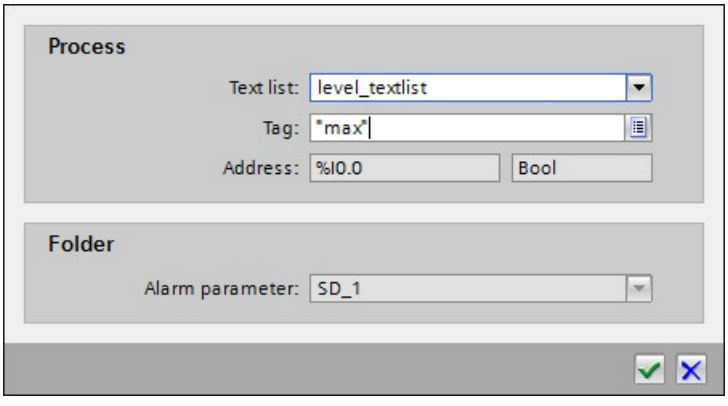

Figure 6-17 Insert a dynamic parameter (text list)

5. Select the text list "level_textlist" and the tag "max". Confirm your selection by clicking "OK".

Result: You have created the alarm text for the type alarms.
If the tag "max" (associated value 1) is 0, the alarm text "level too low" is output.
If the tag "max" (associated value 1) is 1, the alarm text "level too high" is output.

Additional information

You can learn how to create multilingual texts under "Multilingual alarms" in the section Editing alarms in the alarm editor (Page 81).

6.5.4 Displaying the alarm

Displaying the alarm in the Web server

The figure below shows the display of the alarm in the Web server for both examples.

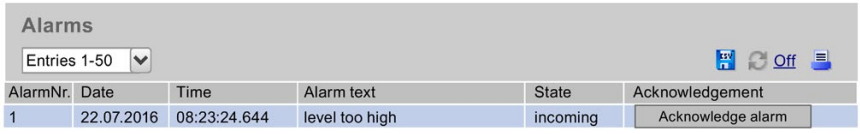

Figure 6-18 Displaying the alarm in the Web server

Displaying the alarm in STEP 7

Note

Displaying alarms in STEP 7

To display alarms in STEP 7, enable the option "Receive alarms" in the shortcut menu of the CPU.

The figure below shows the display of the alarm in STEP 7 for both examples.

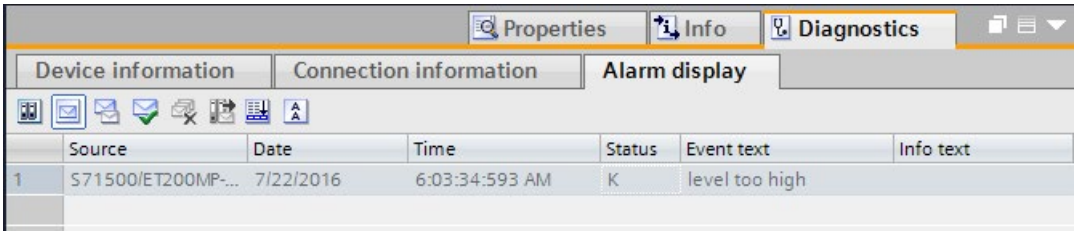

Figure 6-19 Display in STEP 7

Diagnostics of the S7-1500R/H redundant system 7

S7-1500R/H diagnostics

Diagnostics for a S7-1500R/H redundant system is basically the same as a standard S7-1500. You have the following display options:

- Via STEP 7
- Via HMI devices
- Via the display of the CPUs

The CPUs provide information about their operating states as well as internal and external errors through their LEDs.

The special features of the diagnostics of S7-1500R/H redundant systems are described below. In addition, the information of the current function manual and the STEP 7 online help also apply to S7-1500R/H redundant systems.

Diagnostics information in STEP 7

Hardware diagnostics can be performed as follows:

- Via the Online and Diagnostics view
- Via the "Online Tools" task card
- Via the "Diagnostics > Device Information" area of the Inspector window
- Via diagnostics icons, for example, in the device view and in the project tree

Diagnostics view in STEP 7 in dependence on the online connection and system states

The diagnostics view for S7-1500R/H redundant systems is partly dependent on:

- Which of the two CPUs the programming device / PC currently has a connection to
- The current system state in the redundant system

The table below provides an overview. The following sections illustrate the diagnostics view for S7-1500R/H using examples.

Table 7- 1 Diagnostics view in dependence on the online connection and system states

Diagnostics view in STEP 7	An online connection is available to the	System state	Examples in section
Online data and diagnostics of the redundant system	Primary CPU or backup CPU	RUN-Redundant	Online and Diagnostics view (Page 103)
Online data and diagnostics of the primary CPU The following are not displayed: Online data and diagnostics from the backup CPU	Primary CPU	RUN-Solo or STOP	Online and Diagnostics view (Page 103) and Restrictions in the RUN-Solo system state (Page 120)
Online data and diagnostics of the backup CPU The following are not displayed: • Online data and diagnostics from the primary CPU • Online data and diagnostics of the distributed I/O	Backup CPU	RUN-Solo or STOP	
Display of the 3 operator panels in the "Online Tools" task card	Primary CPU or backup CPU	Not relevant	"Online Tools" task card (Page 106)
Cycle time of the primary CPU (of the system) and memory of the primary CPU in "Online Tools" task card	Primary CPU or backup CPU	RUN-Redundant	
Cycle time and memory of the primary CPU in the "Online Tools" task card	Primary CPU	RUN-Solo or STOP	
Cycle time and memory of the backup CPU in the "Online Tools" task card	Backup CPU	RUN-Solo or STOP	
Memory reset of the primary CPU via "Online Tools" task card	Primary CPU	STOP	
Memory reset of the backup CPU via "Online Tools" task card	Backup CPU	RUN-Solo or STOP	
"Alarm display" tab: Alarms from the primary CPU	Primary CPU	Not relevant	Diagnostics view in the project tree and in the device view and network view (Page 109)
"Alarm display" tab: Alarms from the backup CPU	Backup CPU	Not relevant	
Diagnostics of the distributed I/O	Primary CPU or backup CPU	RUN-Redundant	Diagnostics in the RUN-Redundant system state (Page 114)
Diagnostics of the distributed I/O	Primary CPU	RUN-Solo	Restrictions in the RUN-Solo system state (Page 120)

Accessible devices

As for standard S7-1500 systems, the following can be displayed in STEP 7:

- All devices accessible from programming device/PC
- The diagnostics information of devices of a redundant system, for example, from the R/H CPUs

The procedure is described in the section Accessible devices (without project) (Page 34).

7.1 Online and Diagnostics view

Introduction

You open the Online and Diagnostics view for the redundant system or for each CPU of the redundant system.

Online & diagnostics for the redundant system

"Online access":

For the S7-1500R/H redundant system, it is displayed whether an online connection exists between the programming device/PC and a CPU. The additional note "Online (via Primary CPU)" or "Online (via Backup CPU)" indicates which role the "Online" connected CPU has.

If you enable "Receive alarms", you receive asynchronous alarms of diagnostics events from the CPU with online connection. The display corresponds to the representation for standard CPUs.

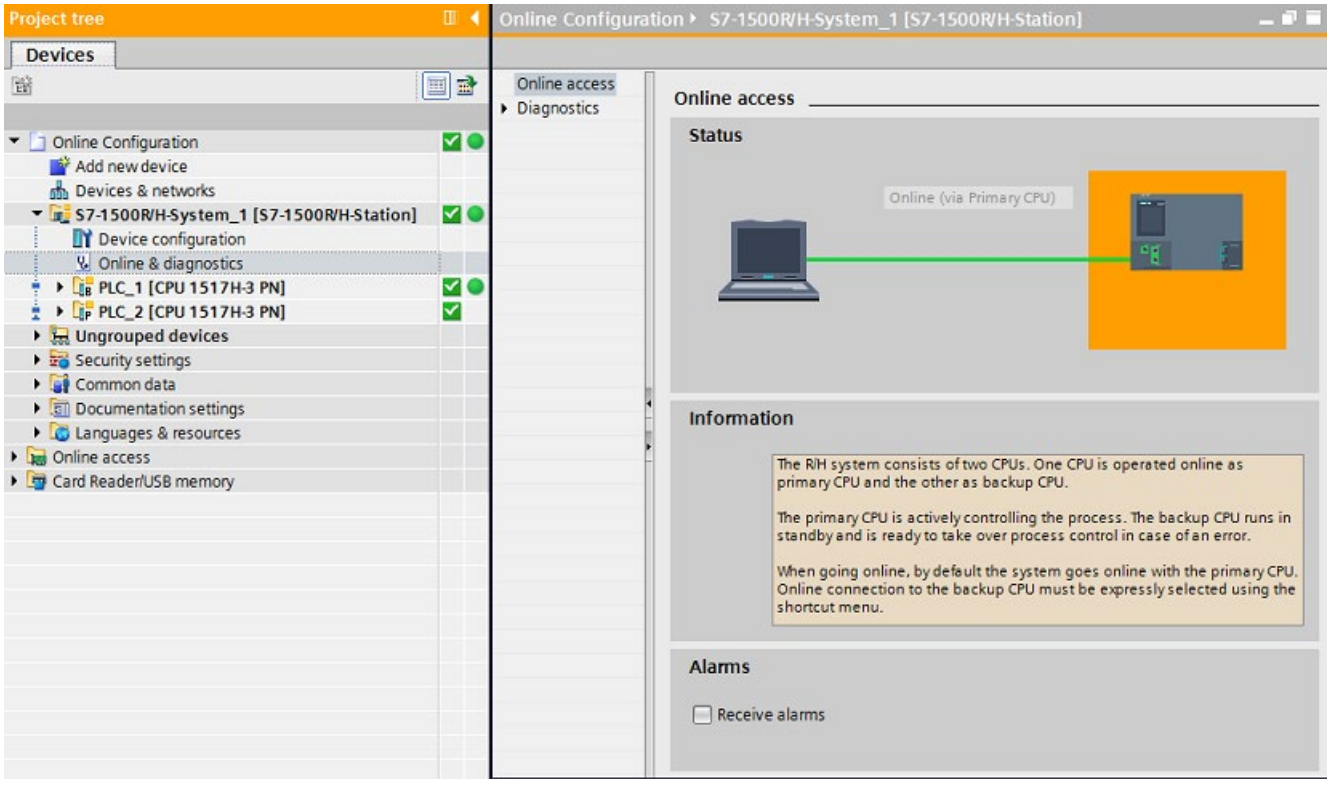

Figure 7-1 Online and Diagnostics view: Redundant system S7-1500R/H

"Diagnostics":

"Diagnostics" provides an overview for the redundant system about the:

- System state
- Pairing state
- Operating states of the CPU
- Status of which CPU is the primary CPU and which CPU is the backup CPU

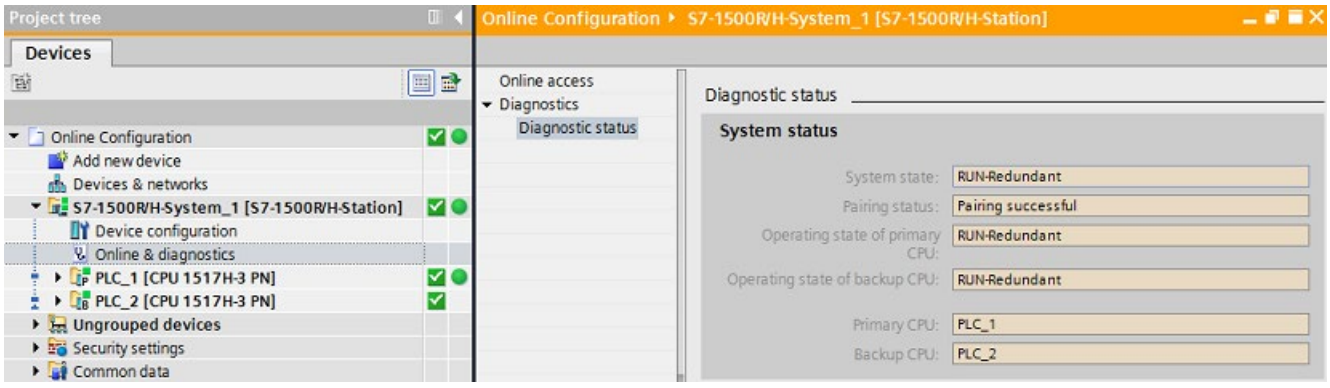

Figure 7-2 Online and Diagnostics view: Diagnostics status of the S7-1500R/H system

Online & diagnostics for the primary CPU or backup CPU

The Online and Diagnostics view for the CPUs of the redundant system match the display for standard CPUs.

In the RUN-Redundant system state, the primary and backup CPU display the online data of the redundant system irrespective of which of the two CPUs the online connection has been made.

In the RUN-Solo system state, the programming device/PC displays the data of the CPU for which there is an online connection, i.e. either the primary CPU or of the backup CPU.

You select the CPU for display of the online data in the project tree.

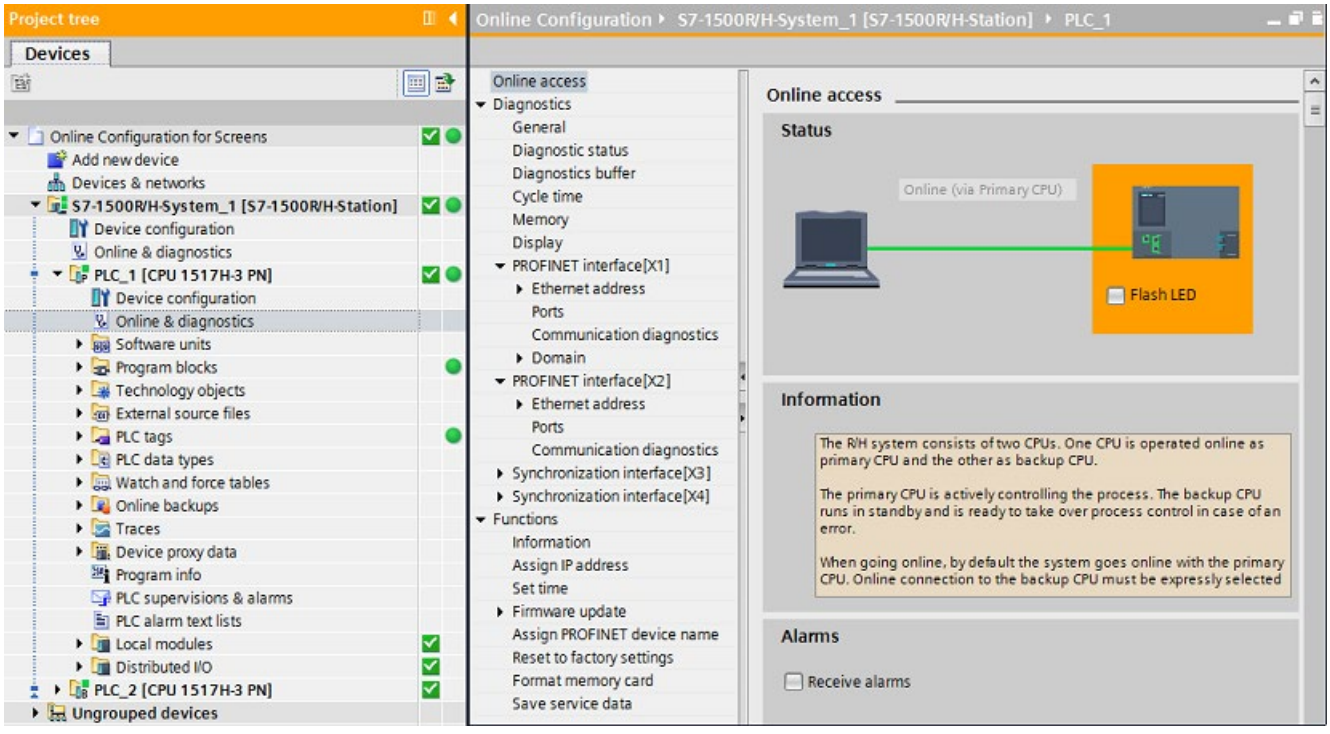

Figure 7-3 Online and Diagnostics view: CPU (RUN-Redundant system state)

Reference

You can find information on the operating and system states in the Redundant System S7-1500R/H System Manual (https://support.industry.siemens.com/cs/ww/en/view/109754833).

7.2 "Online Tools" task card

Introduction

If an online connection exists to a CPU of the redundant system, the "Online Tools" task card displays online information for the redundant system.

For a S7-1500R/H redundant system, "Online Tools" displays:

- 3 panes operator panel
- Cycle time
- Memory

R/H system operator panel

For the redundant system, the "R/H system operator panel" pane shows the:

- Current states of the LEDs of the primary CPU
- System state
- Status of which CPU is the primary CPU and which CPU is the backup CPU with their current operating states

The "STOP R/H-System" button can be used to switch the S7-1500R/H system to the system state STOP.

Note

Reaching RUN-Redundant system state

Note that you cannot switch the S7-1500R/H to RUN-Redundant system state using the R/H-System operator panel. You reach the RUN-Redundant system state by switching the operating state for each CPU to RUN in the operator panel of the respective CPU.

CPU operator panel

The two "CPU operator panel" panes show for the respective CPU of the redundant system:

- The role of the CPU, primary CPU or backup CPU
- The current states of the LEDs
- The operating state of the CPU

Use the "RUN / STOP" button to change the operating state for the respective CPU.

Use the "MRES" button to perform a memory rest for the CPU, under the following conditions:

- Online connection to this CPU is available
- The CPU is in STOP operating state.

Example

The following figure shows an example of the "Online Tools" task card for the RUN-Solo system state. The primary CPU is in RUN operating state, the backup CPU in STOP operating state.

As long as the backup CPU is in STOP operating state, the backup CPU does not establish any connection to the I/O devices. Therefore, the ERROR LED of the backup CPU always flashes red in the system states STOP and RUN-Solo.

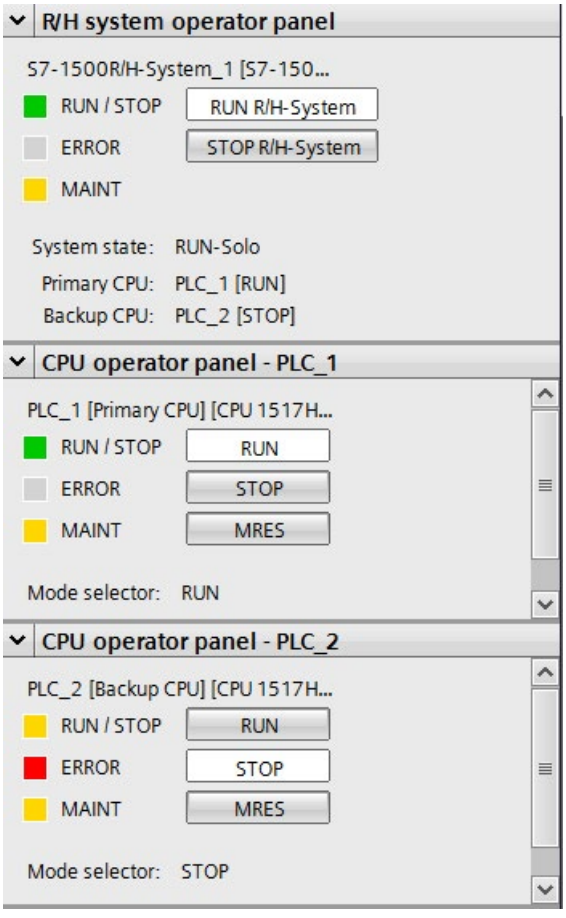

Figure 7-4 "Online Tools" task card: Operator panel (RUN-Solo system state)

Cycle time and memory

In the RUN-Redundant system state, the "Cycle time" and "Memory" panes show the current values of the primary CPU. In redundant mode, the cycle time of the primary CPU matches the cycle time of the system.

In the RUN-Solo system state, the panes show the current values for the CPU for which there is an online connection.

The display corresponds to the representation for standard CPUs.

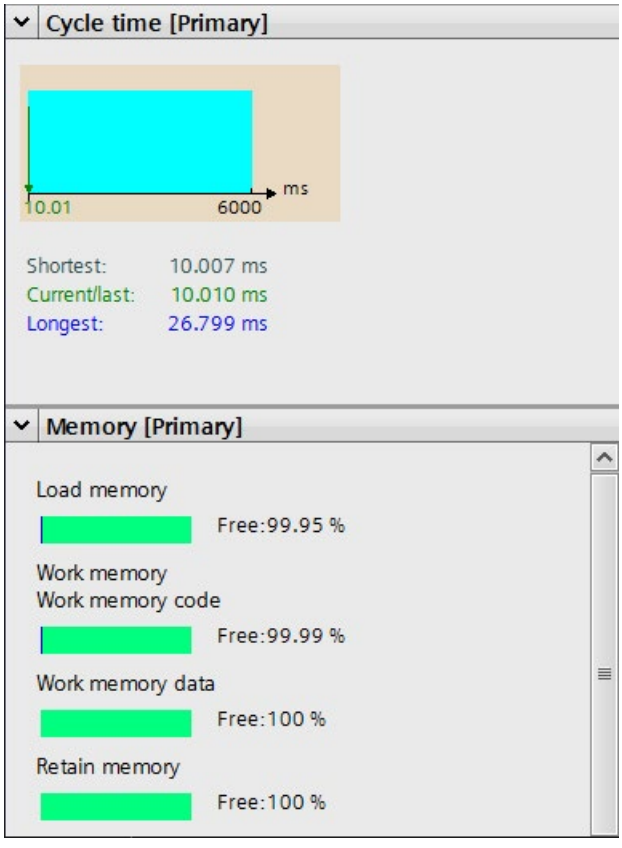

Figure 7-5 "Online Tools" task card: Cycle time and memory of the primary CPU

Reference

You can find information on the operating and system states in the Redundant System S7-1500R/H System Manual (https://support.industry.siemens.com/cs/ww/en/view/109754833).

7.3 Diagnostics view in the project tree and in the device view and network view

Additional icons for redundant systems in the project tree

Table 7- 2 Icons for redundant systems in the project tree of STEP 7

Icon in the project tree	Meaning
	Identifier of the folder S7-1500R/H-System: RUN-Redundant system state
	Identifier of the folder S7-1500R/H-System: RUN-Solo system state
	Identifier of the folder S7-1500R/H-System: STARTUP system state
	Identifier of the folder S7-1500R/H-System: STOP system state
	Identifier of the folder for the primary CPU: RUN operating state
	Identifier of the folder for the backup CPU: RUN operating state
	Identifier of the folder for the primary CPU: STARTUP operating state
	Identifier of the folder for the backup CPU: STARTUP operating state
	Identifier of the folder for the primary CPU: STOP operating state
	Identifier of the folder for the backup CPU: STOP operating state
	Identifier of the folder of a CPU of the redundant system: "Online via partner": The other CPU of the redundant system is connected online to the programming device / PC.

Example: Diagnostics view in the project tree and in the device view and network view

An example of the diagnostics view for a S7-1500R/H system is shown below.

The sample configuration consists of two CPUs S7-1517H-3 PN and one interface module IM 155-6 PN HF as PROFINET IO device. PLC_1 is the primary CPU (in RUN operating state). PLC_2 is the backup CPU (in STOP operating state). The hardware configuration and the user program were loaded in the primary CPU.

The system is connected online via PLC_1 (primary CPU) and is in RUN-Solo system state.

View of the system in the project tree

The system is in RUN-Solo system state . PLC_1 is in RUN operating state , PLC_2 is in STOP operating state .

Because the system is in RUN-Solo system state, the following is displayed:

- For the system, maintenance demanded with problem in lower-level component
- For PLC_1, maintenance demanded

For PLC_2, online connection via partner is displayed, as the programming device/PC is connected online to PLC_1.

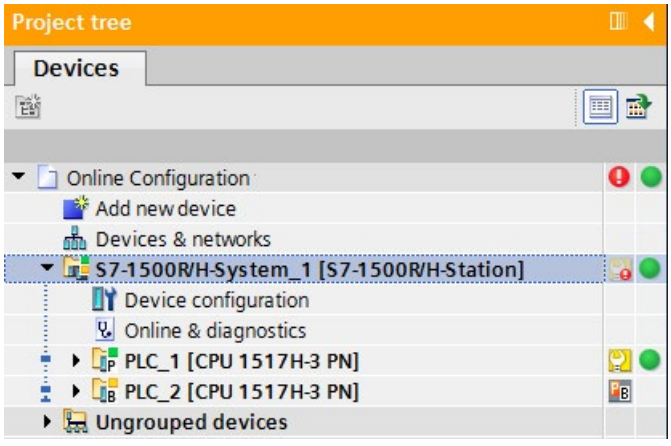

Figure 7-6 Diagnostics example: Redundant system project tree (RUN-Solo)

Network view of the system

The network view shows no faults for the H-CPUs or the IO device.

Maintenance demanded in lower-level component indicated for the system, since the system is in RUN-Solo system state.

No operating states and system states of the redundant system are displayed in the network view.

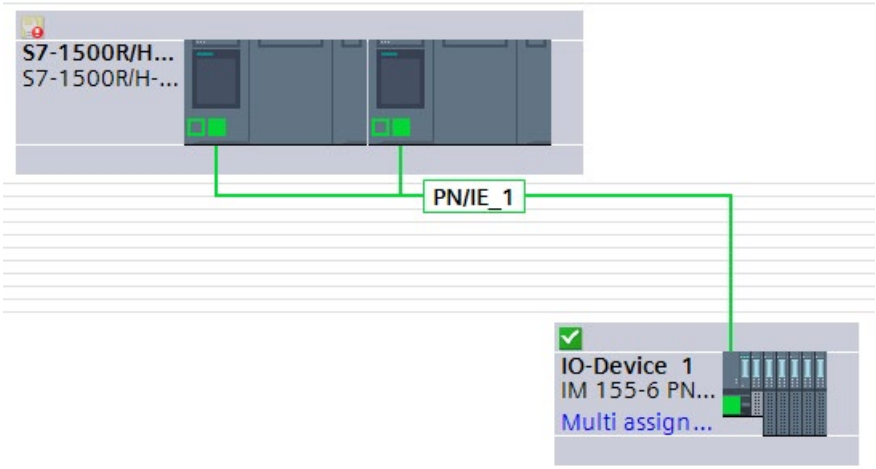

Figure 7-7 Diagnostics example: Network view of redundant system (RUN-Solo)

Doubling-clicking on the system gives you access to the device view of both CPUs.

Device view of the system

In the device view, you see the operating states of the CPUs based on the icons above PLC_1:

- Green icon: PLC_1 is in the RUN operating state.
- Yellow icon for maintenance demanded: PLC_2 is in the STOP operating state.

PLC_2 indicates that the online connection is available through the partner (PLC_1).

You can find more detailed information on the system faults in the "Diagnostics" tab, in "Device information". The device information indicates maintenance demanded and RUN operating state for PLC_1.

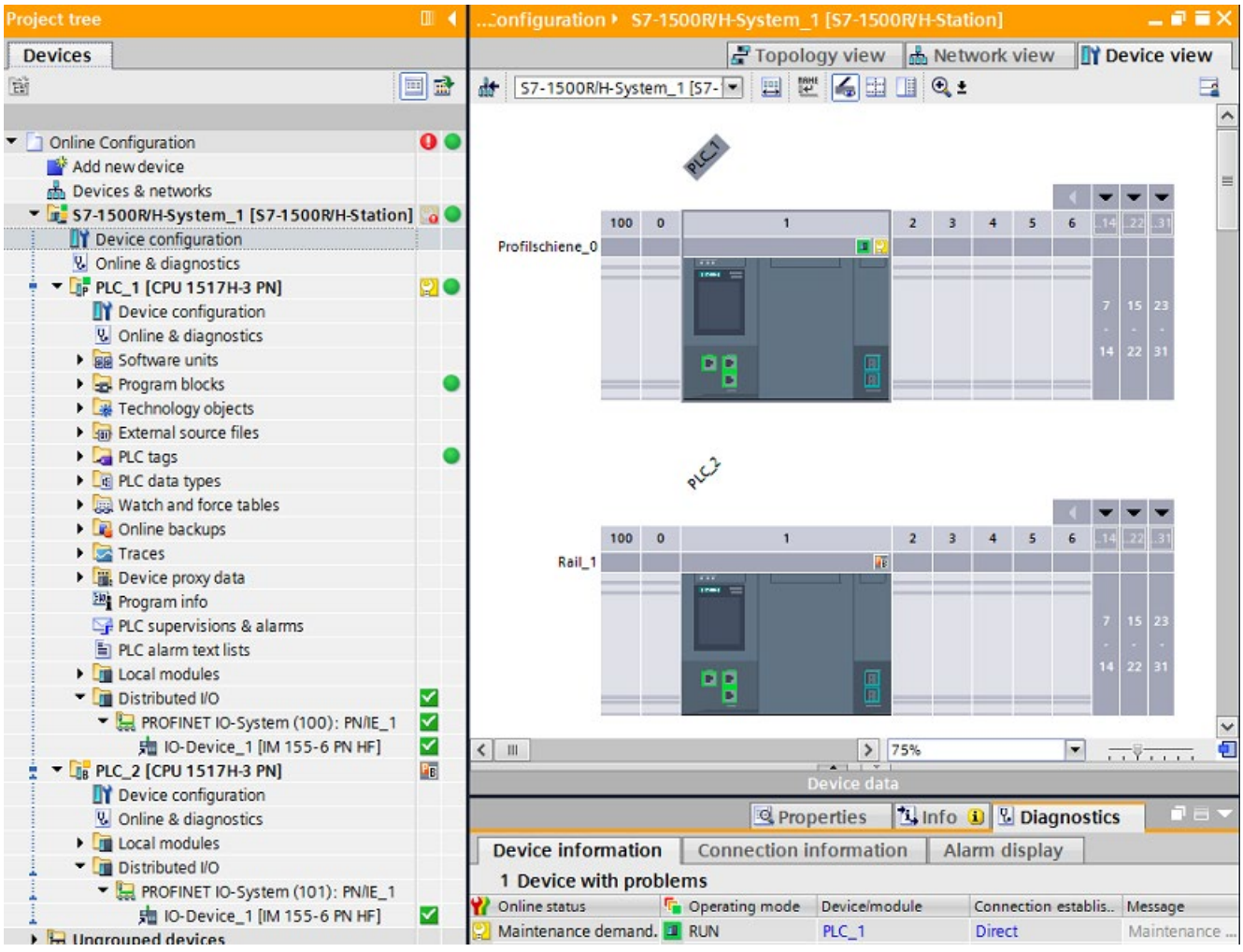

Figure 7-8 Diagnostics example: Device view of redundant system (RUN-Solo)

Alarm display of the system

As in the RUN-Solo system state, the alarms of the CPU for which there is an online connection are displayed via the "Alarm display" tab (in the example from PLC_1).

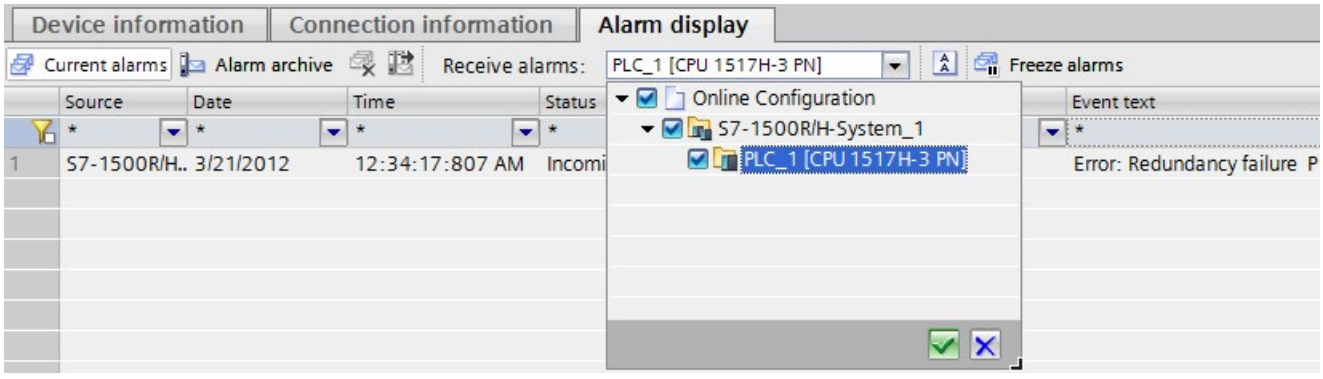

Figure 7-9 Diagnostics example: Alarm display of redundant system (RUN-Solo)

Device view of the IO device

The IO device is an interface module IM 155-6 PN HF with two I/O modules and one server module. The device view shows that there is no faults in the modules.

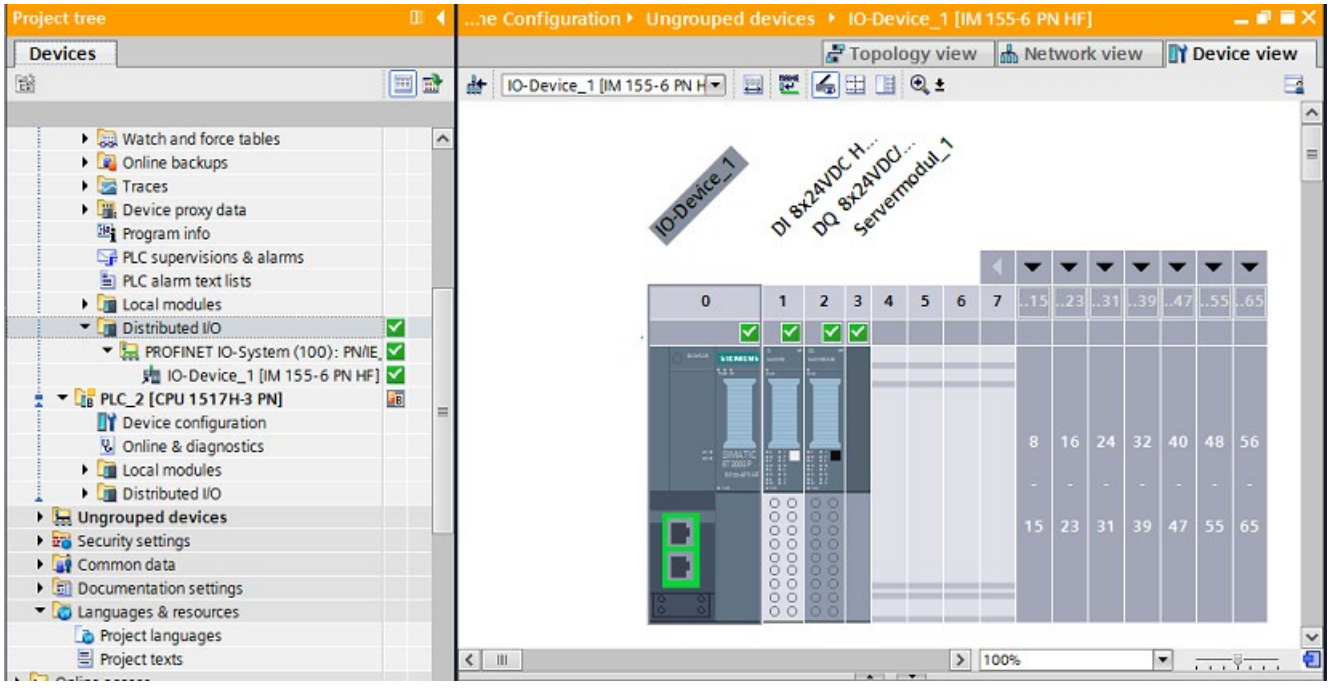

Figure 7-10 Diagnostics example: Device view of IO device

7.4 Diagnostics in the RUN-Redundant system state

Diagnostics view in redundant mode

Primary CPU and backup CPU are each in the RUN-Redundant operating state.

In the RUN-Redundant system state, the primary and backup CPU display the online data of the redundant system irrespective of which of the two CPUs the online connection has been made.

The diagnostics between the two CPUs is synchronized (diagnostics entries, diagnostics events).

As in the RUN-Solo system state, the alarms of the CPU to which there is an online connection are displayed via the "Alarm display" tab. You can find more information in the Diagnostics view in the project tree and in the device view and network view (Page 109).

No error in RUN-Redundant system state

If no error is detected in the RUN-Redundant system state, all diagnostics icons in the navigation tree and in the network view show "No fault"✅.

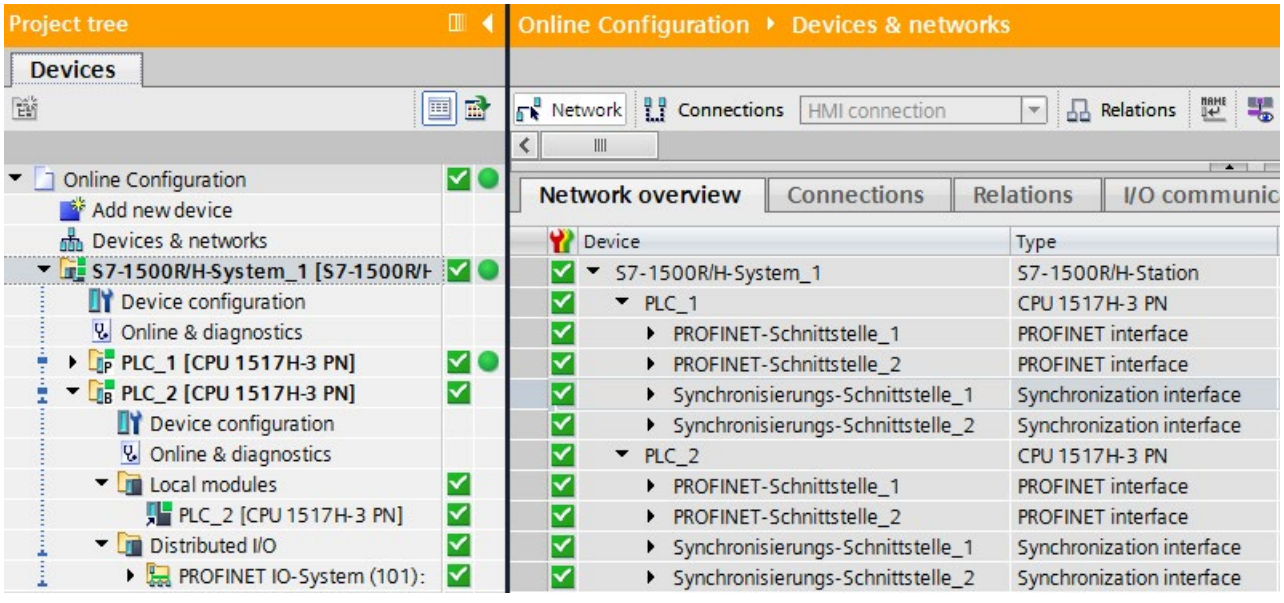

Figure 7-11 Diagnostics example: No fault in the RUN-Redundant project tree

Error in the RUN-Redundant system state

If there are too many errors in the redundant system, the RUN-Redundant system state is retained, for example, if a module in an IO device fails. The diagnostics view is similar to the standard S7-1500 systems.

Special examples of a redundant system S7-1500H are shown below:

S7-1500H Example 1:

The PROFINET ring was interrupted.

Evaluate diagnostics via LINK TX/RX LEDs on the CPU

TX/RX X1 P1 LED is not illuminated. This means:

- No Ethernet connection between the P1 port of the respective PROFINET interface and the communication partner

Diagnostics in STEP 7

The diagnostics in the project tree shows:

- Maintenance demanded in lower-level component in the S7-1500H system
- Maintenance demanded in lower-level component for PLC_1 and PLC_2
- Maintenance demanded in lower-level components of local modules of PLC_2

The diagnostics in the network view indicates errors at the affected port of the PROFINET interfaces of PLC_2.

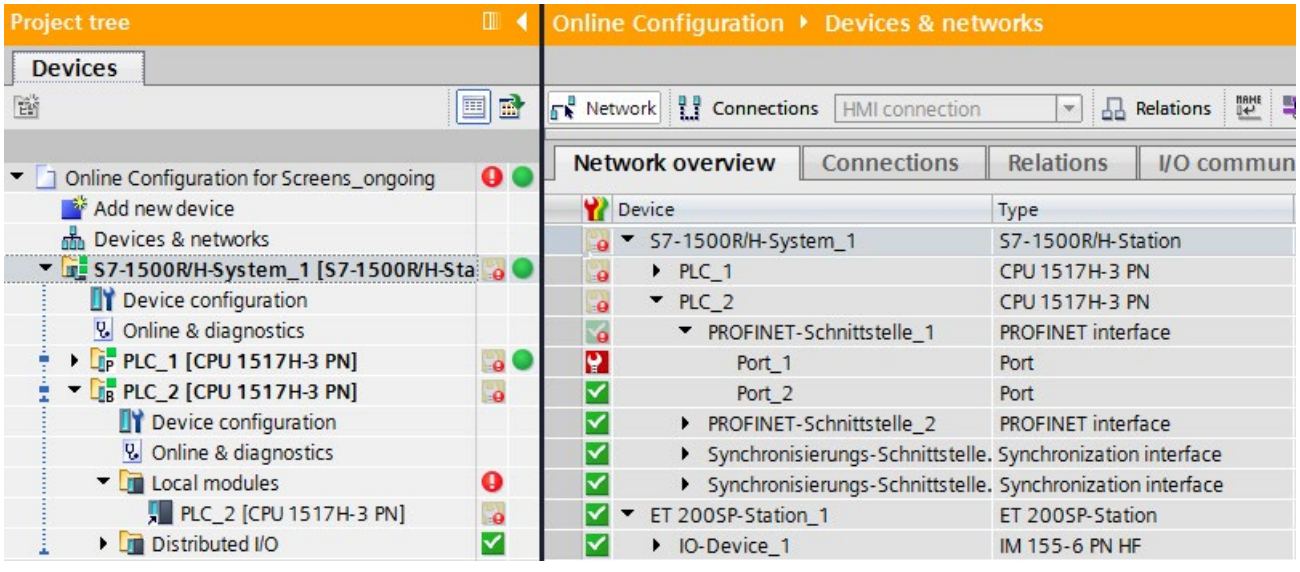

Figure 7-12 Diagnostics example: RUN-Redundant system state, open PROFINET ring

You can evaluate the diagnostics using the displays of the CPUs via the "Diagnostics" menu as with standard CPUs. You can find additional information in the section Display of the CPU (Page 30).

S7-1500H Example 2:

A synchronization module has been removed in S7-1500H.

Evaluating diagnostics via X3 and X4 LEDs on the CPU

The X3 LED on PLC_2 CPU is not illuminated. This means:

- The redundancy connection on the synchronization module was interrupted at the H-Sync interface X3.

  or

- There is no synchronization module at the H-Sync interface X3.

Diagnostics in STEP 7

The diagnostics in the project tree shows:

- Maintenance demanded in lower-level component in the S7-1500H system
- Maintenance demanded for PLC_1
- Maintenance demanded in lower-level component for PLC_2
- Hardware fault in local modules of PLC_1 and PLC_2

The diagnostics in the network view indicates that synchronization module 1 of PLC_2 is not accessible.

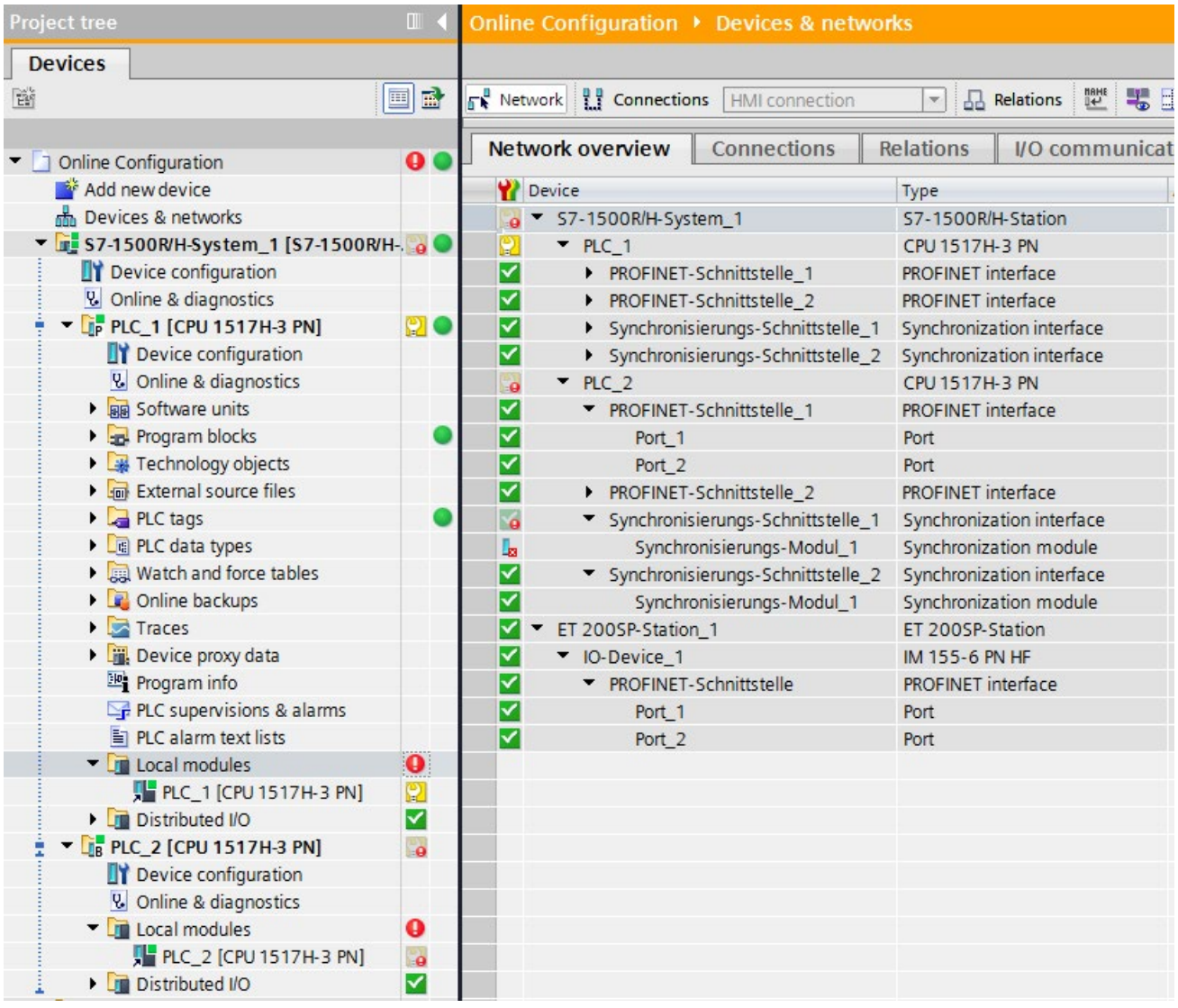

Figure 7-13 Diagnostics example: RUN-Redundant system state, a synchronization module fails

Evaluate diagnostics on the display

For example 2, display of the PLC_2 CPU shows:

- In the "Overview" menu command: A message is available in the next lower level page.
- In the "Diagnostics" menu command: A message is available in the next lower level page.
- In the Module menu command: An error has occurred.

To evaluate the display, proceed as follows:

1. Navigate to "Pairing state" via the menu commands "Overview" > "Redundancy".
2. This is displayed as the pairing state: Single paired (X4).

   This means that the redundancy connection is available at the H-Sync interface X4, but not at the X3.
3. Navigate to "Alarms" via the "Diagnostics" menu command.
4. View the details of the alarm (evaluate diagnostics buffer).

S7-1500H Example 3:

A redundancy connection in S7-1500H is interrupted.

Evaluating diagnostics via X3 and X4 LEDs on the CPU

The X4 LED on PLC_2 CPU is not illuminated. This means:

- The redundancy connection on the synchronization module was interrupted at the H-Sync interface X4.

  or that
- There is no synchronization module at the H-Sync interface X4.

Diagnostics in STEP 7

The diagnostics in the project tree shows:

- Maintenance demanded in lower-level component in the S7-1500H system
- Maintenance demanded for PLC_1 and PLC_2
- Hardware fault in local modules of PLC_1 and PLC_2

Maintenance demanded is displayed for both CPUs in the network view. The lower-level components have no fault.

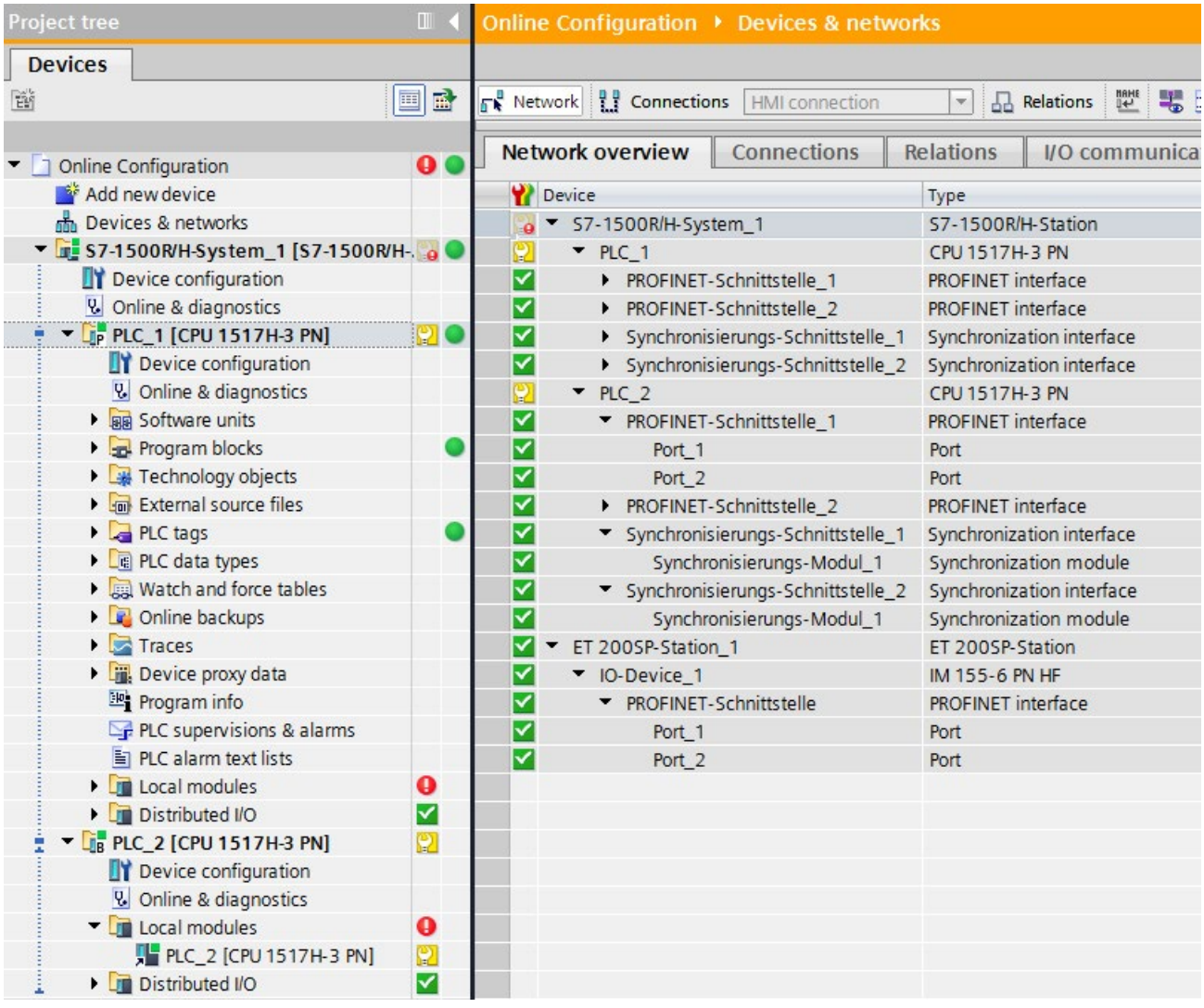

Figure 7-14 Diagnostics example: RUN-Redundant system state, a redundancy connection has failed

Evaluate diagnostics on the display

Perform the analysis of the display of PLC_2 CPU exactly as for example 2.

7.5 Restrictions in the RUN-Solo system state

The primary CPU is in RUN operating state. The Backup CPU is in STOP operating state, is switched off, defective, or not available.

Restrictions in the RUN-Solo system state

The primary CPU records the diagnostics states of the distributed I/O.

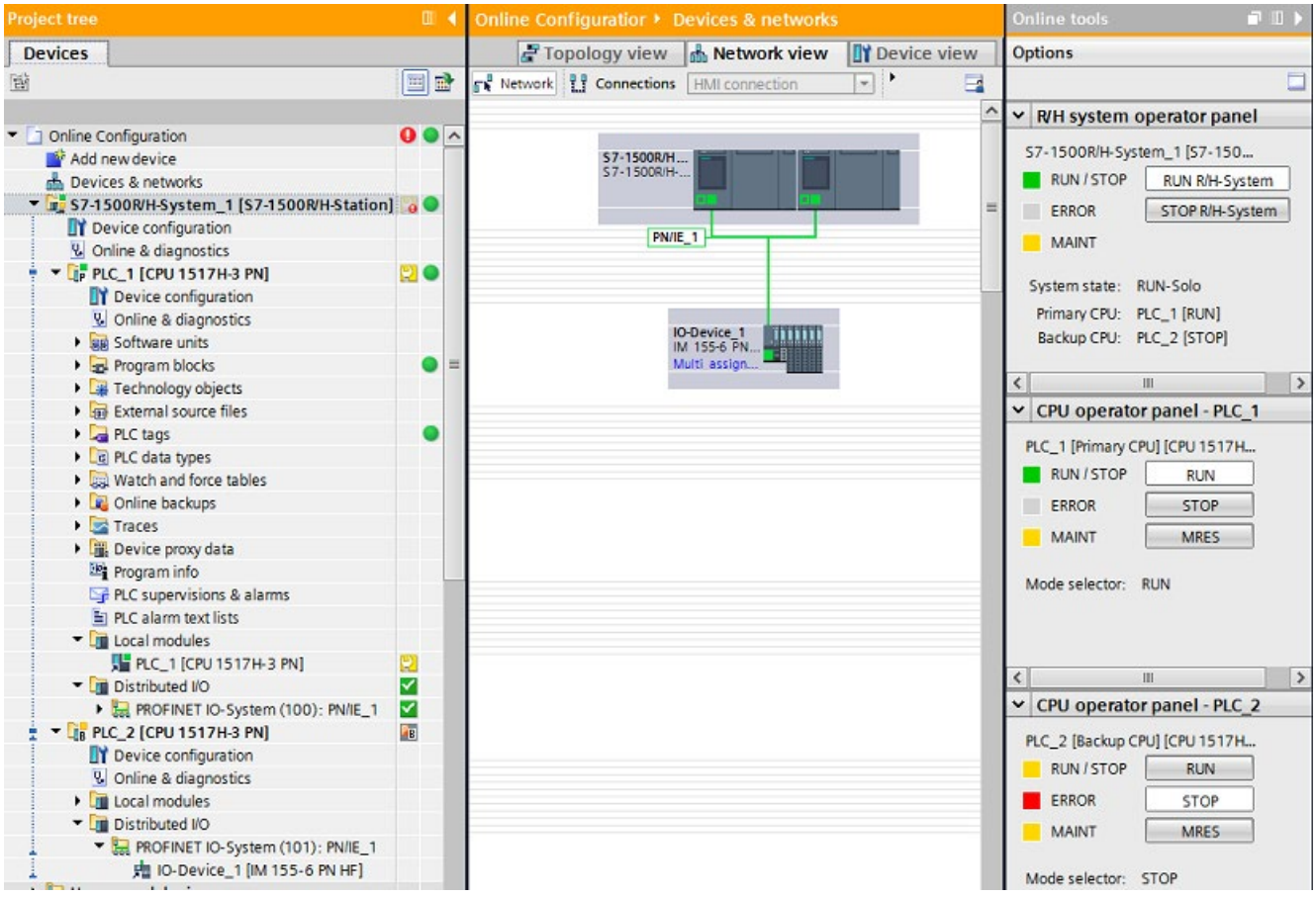

Figure 7-15 Diagnostics of the primary CPU and backup CPU in RUN-Solo system state

Diagnostics of the backup CPU

The following restrictions apply to the backup CPU:

- Diagnostics information from the backup CPU is only available when there is an online connection to the backup CPU.
- The distributed I/O is not accessible from the backup CPU. As a result the ERROR LED of the backup CPU always flashes red in the STOP and RUN-Solo system states.
- A memory reset can only be performed with the backup CPU operator panel when an online connection to the backup CPU is available.

Reference

You can evaluate the diagnostics using the displays of the CPUs via the "Diagnostics" menu as with standard CPUs. You can find additional information in the section Display of the CPU (Page 30).

7.6 System diagnostics by means of the user program

Instructions

Instructions for determining the system diagnostics are listed in the section System diagnostics options in the user program (Page 74).

The following instructions for diagnostics **cannot** be used for S7-1500R/H redundant systems:

- GEN_DIAG: Generate diagnostics information
- GEN_UsrMsg: Generate user diagnostic alarms
- GetStationInfo: Read information of an IO device
- DeviceStates: Read module state information in an IO system

  Please note: The "DeviceStates" instruction can be selected in STEP 7. The S7-1500R/H CPUs with firmware version V2.6 do not support the "DeviceStates" instruction. Do **not** use the "DeviceStates" instruction. To read out the module state information, use the "Get_DIAG" instruction.

Glossary

Alarm

An message sent to the operator due to events or states of the system.

Backup CPU

Role of a CPU in the S7-1500R/H redundant system. If the R/H system is in RUN-Redundant system state, the primary CPU controls the process. The backup CPU processes the user program synchronously and can take over the process control if the primary CPU fails.

Button (WinCC)

Object in WinCC that points out faults in the plant

Channel fault

Channel-related error of an individual channel - an I/O with inputs, for example, wire break or short circuit

Device

Modules with a network connection are referred to as device. Devices are installed on racks where they can be interconnected with other modules.

Diagnostics buffer

A buffered memory area in the CPU; it stores diagnostics events in the order of their occurrence

Firmware of the CPU

In SIMATIC, a distinction is made between the firmware of the CPU and user programs.

The firmware is a software embedded in electronic devices, which means it is permanently connected with the hardware functionally. It is usually saved in a flash memory, such as EPROM, EEPROM or ROM, and cannot be replaced by the user or only with special means or functions.

User program: see glossary entry "User program"

Global screen (WinCC)

A screen that is opened in the system diagnostics window is a global screen.

HMI device

Human Machine Interface, device for visualization and control of automation processes.

HMI diagnostics view (WinCC)

The HMI diagnostics view is an object in WinCC. The HMI diagnostics view can only be used with Comfort Panels and WinCC Advanced RT.

I/O module

Device of the distributed I/O that is used as interface between the controller and the process.

Industrial Ethernet

Guideline for setting up Ethernet in an industrial environment. The main difference to the standard Ethernet is the mechanical current carrying capacity and interference immunity of the individual components.

Memory reset

Procedure to set the memories of the CPU to a defined initial state.

Operating states

Operating states describe the behavior of a single CPU at a specific time.

The CPUs of the SIMATIC standard systems feature the STOP, STARTUP and RUN operating states.

The primary CPU of the S7-1500R/H features the STOP, STARTUP, RUN, RUN-Syncup and RUN-Redundant operating states. The backup CPU features the STOP, SYNCUP and RUN-Redundant operating states.

PLC

Programmable Logic Controller: Component of the CNC by which the machine manufacturer coordinates the interaction between the NC requirements (part program), the inputs of the machine operator and the current machine state.

Primary CPU

Role of a CPU in the S7-1500R/H redundant system. If the R/H system is in RUN-Redundant system state, the primary CPU controls the process. The backup CPU processes the user program synchronously and can take over the process control if the primary CPU fails.

PROFIBUS

Standard for fieldbus communication in automation technology.

PROFINET

PROcess FIeld NETwork, open industrial Ethernet standard which further develops PROFIBUS and industrial Ethernet. A cross-manufacturer communication, automation, and engineering model defined by PROFIBUS International e.V., as an automation standard.

Redundant systems

Redundant systems are identified by the fact that important automation components are available in multiple units (redundant). Process control is maintained if a redundant component fails.

Subnet

Part of a network whose parameters must be synchronized with the devices (e.g., with PROFINET). It includes the bus components and all connected stations. Subnets can be linked by means of gateways, for example, to form a network.

Synchronization module

The synchronization module is used to provide a redundant connection between the CPUs of the S7-1500H redundant system. You require two synchronization modules per CPU, which you connect using a fiber-optic cable.

System diagnostics

In the SIMATIC environment, the term "system diagnostics" refers to diagnostics of devices and modules. System diagnostics is used, for example, to monitor the states of the following components in the system: Power supply, device, I/O.

System diagnostics indicator (WinCC)

The system diagnostics indicator is a predefined graphic symbol of the library which alerts you to errors in your plant and displays two states: No error, error

System states

The system states of the S7-1500R/H redundant system result from the operating states of the primary and backup CPU. The term 'system state' is used as simple expression that identifies the operating states of the two CPUs that occur at the same time. The S7-1500R/H redundant system features the system states STOP, STARTUP, RUN-Solo, SYNCUP and RUN-Redundant.

Topology

Structure of a network. Common structures include:

- Linear bus topology
- Ring topology
- Star topology
- Tree topology

User program

In SIMATIC, a distinction is made between user programs and the firmware of the CPU.

The user program contains all instructions, declarations and data by which a plant or process can be controlled. It is assigned to a programmable module (for example, CPU, FM) and can be structured in smaller units.

Firmware: see glossary entry "Firmware of the CPU"

Value status

The value status describes a specific signal state. The value status is constantly updated and cyclically transmitted by the field device as quality statement together with the measured value.

Web server

Software/ communication service for data exchange using Ethernet. The web server provides the documents by means of standardized transmission protocols (HTTP, HTTPS) to a web browser. Documents can be static or dynamic upon request by the web browser composed from different sources by the web server.

WinCC

Windows **C**ontrol **C**enter: a PC-based process visualization system

WinCC Runtime

Component of the basic software WinCC

Index

"

"Diagnostics" tab
- Alarm display, 42
- Connection information, 42
- Device information, 42
- Inspector window, 42

A

Accessible devices
- Diagnostics status, 34
- Offline project, 34
- S7-1500R/H, 102

Alarm display
- Active alarms, 44
- Archive view, 44

Alarms
- Editing in the alarm editor, 82
- Multilingual, 83

Application examples
- Diagnostics in the user program with S7-1500, 75
- System diagnostics with S7-1500 and TIA Portal, 75

B

Backup CPU, 105, 120

D

Device information
- Online status, 42
- Operating mode, 42

Devices & networks
- Current state, 36
- Go online, 36

Diagnostics buffer
- Diagnostic events, 45
- Retentive memory, 45

Display of the CPU
- Display options, 30
- Input options, 30
- Status information, 30

dynamize
- Object appearance, 71

F

FAQs
- Download certificate, 54
- Implementing channel diagnostics in the user program, 75

H

HMI
- System diagnostics view, 62
- System diagnostics window, 62

HMI diagnostics view
- Comfort Panels, 62
- Details view, 66
- Device view, 66
- Distributed I/O view, 66
- Views, 66
- WinCC Advanced RT, 62

I

I/O module
- Inputs, 50
- Settings, 50

L

LED arrangement, 29

Library
- System diagnostics indicator, 69

O

Online & diagnostics
- Activities, 39
- Information, 39
- Online access, 39
- Online mode, 39
- S7-1500R/H, 103

Online tools
- CPU operator panel, 48
- Cycle time, 48
- Memory, 48
- Memory usage, 48

Online view, 48
S7-1500R/H, 106
Task card, 48

P

Primary CPU, 105, 120
Process image inputs, 76
Quality Information, 76
User datum, 76
Value status, 76

Q

Quick start, 17
Using display, 18
Using STEP 7, 20

R

Redundancy connection, 118
Redundant mode
Diagnostics, 114
Redundant system, 103
RUN-Redundant system state
Diagnostics, 114
RUN-Solo system state
Diagnostics, 120

S

S7-1500H, 116
S7-1500R/H
Diagnostics, 100
Instructions, 121
Security events, 48
Setting options, 25
Symbol
For comparison, 33
For hardware diagnostics, 32
For operating mode, 33
For software diagnostics, 33
Synchronization module, 116
System diagnostics
Advantages, 16
Alarm settings, 26
Button, 71
Display concept, 16
Properties, 14
System diagnostics indicator
Button as system diagnostics indicator, 71
Inserting, 69
System diagnostics window, 69
System diagnostics view, 62
Configuring, 63
System diagnostics indicator, 69
System diagnostics window, 62
Configuring, 63
Global screen, 63

U

User program
Instructions, 74
Response to diagnostics alarms, 74

W

Web server
Access to, 54
Activating, 52
Alarms, 57
Browser, 51
Certificate, 52
Configuring, 52
Diagnostics, 55
Diagnostics buffer, 56
HTTPS, 52
Integrated Web server, 51
Module information, 57
Motion Control diagnostics, 60
Topology, 59
Trace, 61
Web pages, 51

SIEMENS

Function manual

SIMATIC/ SINAMICS

S7-1500, S7-1200 / S120, G120

Using the trace and logic analyzer function

Edition 12/2017

support.industry.siemens.com

SIEMENS

Preface

Description 1

Software user interface 2

Operation 3

Devices 4

SIMATIC / SINAMICS

S7-1500, S7-1200 / S120, G120 Using the trace and logic analyzer function

Function Manual

12/2017

A5E31277292-AE

Legal information

Warning notice system

This manual contains notices you have to observe in order to ensure your personal safety, as well as to prevent damage to property. The notices referring to your personal safety are highlighted in the manual by a safety alert symbol, notices referring only to property damage have no safety alert symbol. These notices shown below are graded according to the degree of danger.

⚠ DANGER

indicates that death or severe personal injury **will** result if proper precautions are not taken.

⚠ WARNING

indicates that death or severe personal injury **may** result if proper precautions are not taken.

⚠ CAUTION

indicates that minor personal injury can result if proper precautions are not taken.

NOTICE

indicates that property damage can result if proper precautions are not taken.

If more than one degree of danger is present, the warning notice representing the highest degree of danger will be used. A notice warning of injury to persons with a safety alert symbol may also include a warning relating to property damage.

Qualified Personnel

The product/system described in this documentation may be operated only by **personnel qualified** for the specific task in accordance with the relevant documentation, in particular its warning notices and safety instructions. Qualified personnel are those who, based on their training and experience, are capable of identifying risks and avoiding potential hazards when working with these products/systems.

Proper use of Siemens products

Note the following:

⚠ WARNING

Siemens products may only be used for the applications described in the catalog and in the relevant technical documentation. If products and components from other manufacturers are used, these must be recommended or approved by Siemens. Proper transport, storage, installation, assembly, commissioning, operation and maintenance are required to ensure that the products operate safely and without any problems. The permissible ambient conditions must be complied with. The information in the relevant documentation must be observed.

Trademarks

All names identified by ® are registered trademarks of Siemens AG. The remaining trademarks in this publication may be trademarks whose use by third parties for their own purposes could violate the rights of the owner.

Disclaimer of Liability

We have reviewed the contents of this publication to ensure consistency with the hardware and software described. Since variance cannot be precluded entirely, we cannot guarantee full consistency. However, the information in this publication is reviewed regularly and any necessary corrections are included in subsequent editions.

Siemens AG
Division Digital Factory
Postfach 48 48
90026 NÜRNBERG
GERMANY

A5E31277292-AE
℗ 12/2017 Subject to change

Copyright © Siemens AG 2012 - 2017.
All rights reserved

Preface

Purpose of the documentation

The diagnostics options available with the trace and logic analyzer function are described in this documentation. Depending on the device used, the recording options can vary.

Required basic knowledge

In order to understand this documentation, the following knowledge is required:

- General knowledge in the field of automation
- Knowledge about the use of Windows-based computers
- S7-1200/1500 CPUs, ET 200SP, ET 200Pro
  - Knowledge of the SIMATIC industrial automation system
  - Knowledge of working with STEP 7
- SINAMICS Drives
  - Knowledge of working with the drive
- SIRIUS SIMOCODE pro, SIRIUS Soft Starter 3RW
  - Proficiency in using these systems

Validity of the documentation

This documentation applies to all products of the product series S7-1200, S7-1500, S7-1500 Software Controller, ET 200SP, CPU 1516(F)pro-2 PN, SINAMICS drives, SIRIUS SIMOCODE pro and SIRIUS Soft Starter 3RW as of TIA Portal V15.

Conventions

This documentation contains pictures of the devices described. The pictures may differ slightly from the devices supplied.

Please also observe notes marked as follows:

Note

A note contains important information on the product described in the documentation, on the handling of the product and on the section of the documentation to which particular attention should be paid.

"mySupport"

With "mySupport", your personal working area, you make the most of your Industry Online Support.

In "mySupport" you can store filters, favorites and tags, request CAx data and put together your personal library in the Documentation area. Furthermore, your data is automatically filled into support requests and you always have an overview of your current requests.

You need to register once to use the full functionality of "mySupport".

You can find "mySupport" on the Internet (https://support.industry.siemens.com/My/ww/en/).

"mySupport" - Documentation

In the Documentation area of "mySupport", you have the possibility to combine complete manuals or parts of them to make your own manual.
You can export the manual in PDF format or in an editable format.

You can find "mySupport" - Documentation on the Internet (http://support.industry.siemens.com/My/ww/en/documentation).

Further support

- The range of technical documentation for the individual SIMATIC products and automation systems can be found on the Internet (http://www.siemens.com/simatic-tech-doku-portal).
- The online catalog and the online ordering system is available on the Internet (https://mall.industry.siemens.com).

Security information

Siemens provides products and solutions with industrial security functions that support the secure operation of plants, systems, machines and networks.

In order to protect plants, systems, machines and networks against cyber threats, it is necessary to implement – and continuously maintain – a holistic, state-of-the-art industrial security concept. Siemens' products and solutions constitute one element of such a concept.

Customers are responsible for preventing unauthorized access to their plants, systems, machines and networks. Such systems, machines and components should only be connected to an enterprise network or the internet if and to the extent such a connection is necessary and only when appropriate security measures (e.g. firewalls and/or network segmentation) are in place.

For additional information on industrial security measures that may be implemented, please visit (https://www.siemens.com/industrialsecurity).

Siemens' products and solutions undergo continuous development to make them more secure. Siemens strongly recommends that product updates are applied as soon as they are available and that the latest product versions are used. Use of product versions that are no longer supported, and failure to apply the latest updates may increase customers' exposure to cyber threats.

To stay informed about product updates, subscribe to the Siemens Industrial Security RSS Feed under (https://www.siemens.com/industrialsecurity).

Table of contents

Preface 4

1 Description 8

1.1 Supported hardware 8

1.2 Recording of measured values with the trace function 8

1.3 Trace configuration, recording, installed trace and measurement 11

1.4 Data storage 13

2 Software user interface 14

2.1 Project navigator 16
2.1.1 User interface - “Traces” project tree folder 16
2.1.2 User interface - “Measurements” project tree folder 18
2.1.3 User interface - “Installed measurements (memory card)” project tree folder 19
2.1.4 User interface - “Overlay measurements” project tree folder 20

2.2 Working area 21
2.2.1 User interface - trace toolbar 21
2.2.2 User interface - Configuration tab 22
2.2.2.1 User interface - Configuration 22
2.2.3 User interface - Diagram tab 23
2.2.3.1 User interface - curve diagram 23
2.2.3.2 User interface - signal table 29
2.2.3.3 Interface - Formula editor 33
2.2.3.4 User interface - Measurements (overlay measurements) 37
2.2.4 User interface - Signal selection tab (overlay measurements) 40
2.2.4.1 User interface - Signal selection (overlay measurements) 40

2.3 Trace task card 41
2.3.1 User interface - Measurement cursor pane 41
2.3.2 User interface - Snapshots pane 43

2.4 Inspector window 44
2.4.1 Interface - Inspector window 44

3 Operation 45

3.1 Quick start 45

3.2 Using the trace function - overview 49

3.3 Project tree 50
3.3.1 Creating a trace 50
3.3.2 Displaying a configuration 50
3.3.3 Displaying a diagram 51
3.3.4 Apply overlay measurement 51
3.3.5 Configuring objects in groups 52

3.4 Working area - general 53
3.4.1 Transferring the trace configuration to the device 53
3.4.2 Activating/deactivating an installed trace 54
3.4.3 Displaying the recording 55
3.4.4 Analyze an ongoing recording 56
3.4.5 Saving measurements in the project 57
3.4.6 Exporting and importing measurements 58
3.4.7 Transferring the trace configuration from the device to the project 59
3.4.8 Deleting installed traces 60

3.5 Working area - Configuration tab 61
3.5.1 Configuring the trace 61

3.6 Working area - Diagram tab 62
3.6.1 Use of the curve diagram 62
3.6.2 Use of the signal table 64
3.6.3 Using the signal group in the signal table 65
3.6.4 Observation of fast signals 66
3.6.5 Compare records (overlay measurements) 67
3.6.6 Align measurements precisely (overlay measurements) 69
3.6.7 Printing a recording 70

4 Devices 71

4.1 S7-1200/1500 CPUs 71
4.1.1 Recordable variables 71
4.1.2 Lifetime of the installed trace configuration and recorded values 72
4.1.3 Recording levels 73
4.1.4 Quantity structure 73
4.1.5 CPU load through trace recording 73
4.1.6 Software user interface of the configuration 74
4.1.6.1 Structure of the user interface 74
4.1.6.2 User interface - Signals 75
4.1.6.3 Recording conditions 77
4.1.7 Configuration 87
4.1.7.1 Trace configuration - overview 87
4.1.7.2 Selecting signals 88
4.1.7.3 Configuring the recording cycle and duration 88
4.1.7.4 Configuring the trigger conditions 89
4.1.7.5 Configure installed measurements (memory card) 90

Glossary 91

Index 93

Description 1

1.1 Supported hardware

If a device supports the trace and logic analyzer function, "Traces" is offered for selection in the project tree below the device.

The following devices (Page 71) support the trace and logic analyzer function:

- SIMATIC S7-1200 CPUs (as of firmware version V4.0)
- SIMATIC S7-1500, ET 200SP and CPU 1516pro-2 PN CPUs
- SIMATIC S7-1500 Software Controller
- SINAMICS drives that are supported in Startdrive
- SIRIUS SIMOCODE pro (with Simocode ES)
- SIRIUS Soft Starter 3RW (with Soft Starter ES)

1.2 Recording of measured values with the trace function

Introduction

The trace and logic analyzer function can be called in the project navigator (Page 14) by double-clicking an entry in the "Traces" system folder. The measurements on the memory card can also be read and displayed via the diagnostic interface of the Web server.

You record device tags and evaluate the recordings with the trace and logic analyzer function. Tags are, for example, drive parameters or system and user tags of a CPU. The number of installed traces is hardware-dependent.

The recordings are saved on the device and, when required, can be read out with the engineering system (ES) and saved permanently. The trace and logic analyzer function is therefore suitable for monitoring highly dynamic processes. The recorded values are overwritten when the recording is activated again.

The trace and logic analyzer functions are also used in the commissioning editors of technology objects (for example, axle control panels). Active recordings from the axis control panel are displayed in the "Traces" system folder as installed traces. Recordings can be added to the measurements in the curve diagram of the axis control panel or the PID via a shortcut menu command.

Depending on the device (Page 71) used, the recording options can vary.

A quick start (Page 45) for working with the trace and logic analyzer function can be found in the Operation section.

The following figure shows the method of operation of the "Traces":

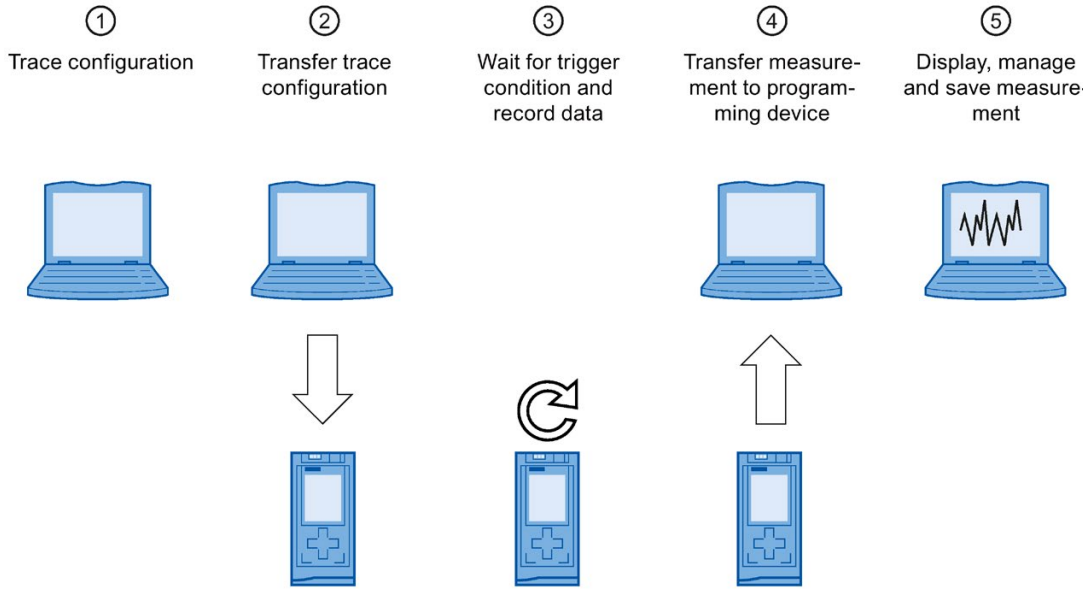

① Trace configuration on the programming device (PG) in the TIA Portal

You can specify the signals to be recorded, the duration of the recording and the trigger condition in the trace configuration. The trace configuration depends on the device and is described at the respective device (Page 71).

② Transferring the trace configuration from the PG to the device

You can transfer the complete trace configuration (Page 53) to the device when an online connection is established.

③ Waiting for the recording

If the installed trace configuration is activated (Page 54), then the recording is performed independently of the PG. The recording is started as soon as the trigger condition is satisfied.

④ Transferring the measurement from the device to the PG

The saving of the measurement in the project (Page 57) stores the measurement in the opened project of the TIA Portal. The measurement can be saved at any time after completing the recording, irrespective of the time of the measurement.

⑤ Evaluating, managing and saving the measurement

Numerous options are available for the evaluation of the measurement in the curve diagram and in the signal table (Page 55). Various display types are possible, for example, a bit representation for binary signals.
Signal waves from different measurements can be put together as an overlay measurement and compared with each other.
Measurements can also be exported and imported as a file.
With the saving of the project (Page 57) in the TIA Portal, the measurements transferred to the project are also saved.

Additional features

The following features are supported as of TIA Portal V14:

- Saving of trace configurations and measurements in libraries
- Multiuser support for trace configurations and measurements (device-dependent)
- Global search in the project

1.3 Trace configuration, recording, installed trace and measurement

This section explains the meaning and relationships of the terms: trace configuration, recording, installed trace and measurement.

Trace configuration

Implement the following settings in the trace configuration:

- Signals to be recorded
- Recording conditions
  - Sampling
  - Trigger
  - Installed measurements (memory card)

Recording

A recording is performed in the device. There is only one recording for each installed trace configuration. When a new recording is started, the old recording is overwritten.

An installed recording is not retentive (it is lost when the device is switched off/on) but can be saved permanently in the project as a measurement.

Installed trace

An installed trace consists of a trace configuration and optionally a recording. The maximum number of installed traces depends on the device.

The trace configuration is stored retentively on the device. The retentivity of the trace configuration may also be configurable depending on the device, e.g. with the S120.

Measurement

A measurement consists of a trace configuration and a recording, provided that recorded data is present. Each installed trace can be saved as a measurement in the project.

The recording of a measurement can be viewed offline.

The configuration for a measurement can be transferred to the “Traces” folder using drag & drop.

Installed measurements (memory card)

The folder contains measurements that are saved on the device (e.g. on the memory card). These measurements are retentive and can only be deleted by the user.

The installed measurements can be transferred to the Measurements folder using drag & drop and are then saved as measurements in the project.

Trace configuration with an installed trace of the same name

Usually, there is a trace configuration in the project with the same name for an installed trace. When there is an online connection, this trace is displayed with the icon in the project tree.

See also User interface - “Traces” project tree folder (Page 16).

Overlay measurement

The overlay measurement allows a comparison and analysis of signals from different measurements with each other.

The measurements can be synchronized with each other and displayed as overlay measurements.

1.4 Data storage

The trace toolbar and the curve diagram also enable the transfer of the trace configuration and the viewing of the recording.

The following figure is a schematic diagram of the data storage:

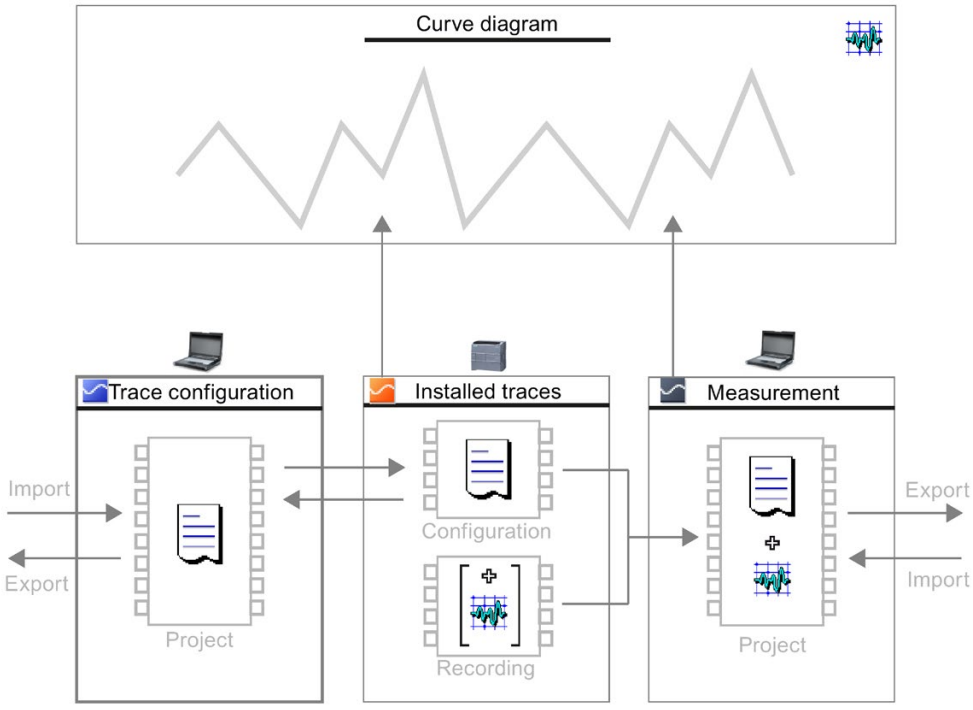

Note

Saving the trace configuration and measurement

You save the trace configuration and measurement with the project in the TIA Portal.

If you close the project without saving, the trace configurations and the measurements transferred to the project are discarded. The trace editor can be closed and reopened without loss of data until the project is closed.

Software user interface

2

Display areas

The user interface of the trace and logic analyzer function consists of several areas.

The example in the figure below shows the division of the user interface in the TIA Portal:

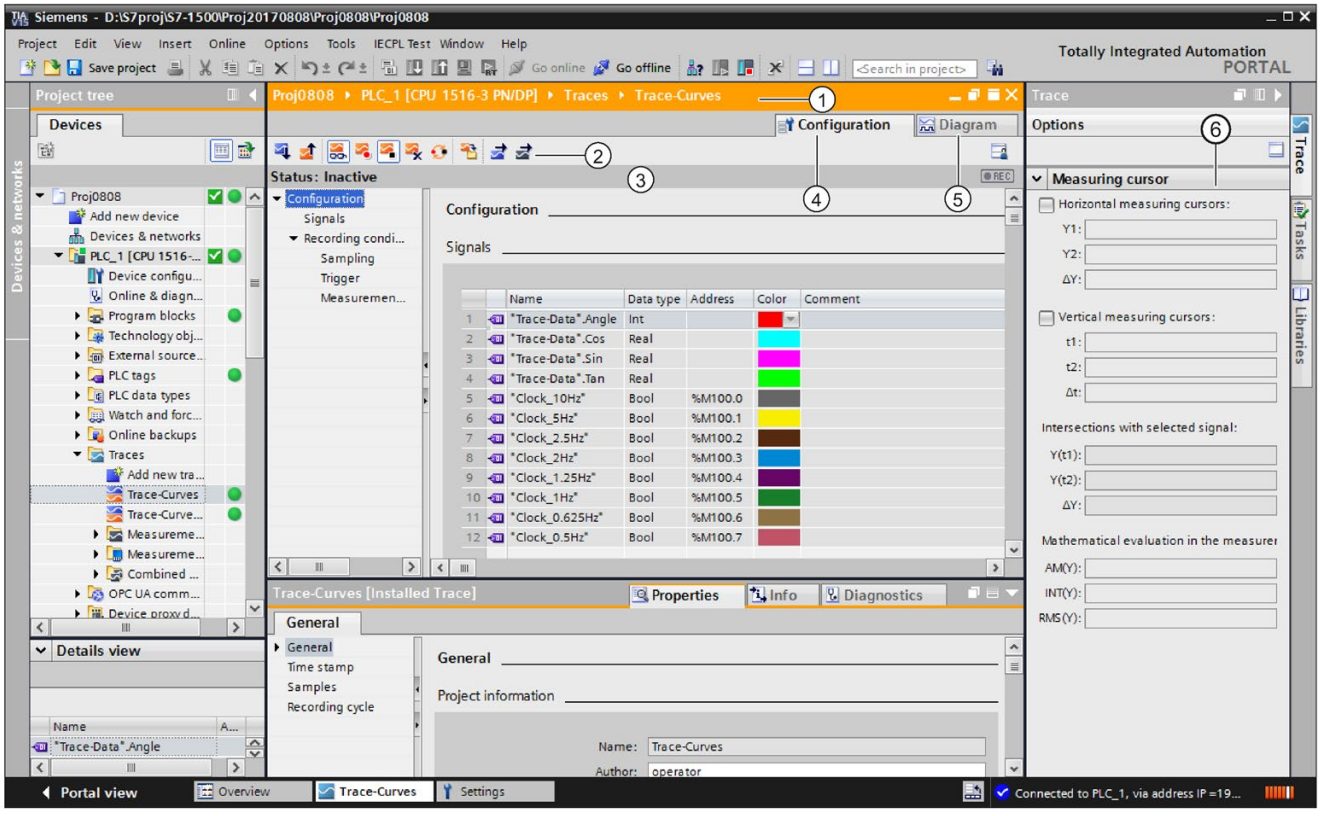

Project navigator Management and creation of the trace and measurements directly in the project tree and via context menu commands.	
Working area	
	① Title bar of the working area Shows the device to which the current display belongs.
	① Trace toolbar Buttons for managing the trace in the project and device: • Activation/deactivation of installed traces • Deletion of installed traces • Transfer of trace configurations and measurements between the device and the project • Export of trace configurations and measurements • Switchover between offline and online display
	③ Status display of the trace Display of the current status of the recording.
	④ Configuration tab Device-specific configuration of the recording duration, trigger condition and signal selection. See Device-specific descriptions (Page 71).
	⑤ Diagram tab Display of the recorded values as a curve diagram and the signals from the displayed measurement.
	Signal selection tab Display of all signals that are contained in the overlay measurements.
"Trace" task card Display of the measurement cursor data with mathematical evaluation ⑥ and snapshots.	
Inspector window Display of general information about the trace configuration	

2.1 Project navigator

2.1.1 User interface - “Traces” project tree folder

Trace configurations and installed traces are displayed in the "Traces" folder.

More information about the “Traces” sub-folder is provided in the following sections.

Double-click a trace to open the corresponding "Diagram" or "Configuration" tab in the working area.

Icons in the "Traces" folder

The following table explains the icons in the "Traces" folder:

Icon	Description
	Add trace configuration Double-click the icon to add a new trace configuration.
	Trace configuration (offline) Double-click the icon to open the "Configuration" tab.
	Installed trace (online) The icon is only displayed when there is no offline trace configuration of the same name for the installed trace. Double-click the icon to open the "Diagram" tab.
	Trace configuration with an installed trace of the same name If the button is deactivated, the trace configuration from the project is displayed. The trace corresponds to a trace configuration. If the button is activated, the trace configuration from the device is displayed. The trace corresponds to an installed trace. Double-click on the symbol to open the "Diagram" tab of the trace in the device.

Status

When there is an online connection, the status is displayed in the right-hand column of the project tree. The status is also displayed as tooltip above the respective icon.

The following table shows the meaning of the icons:

Icon	Description
	Online and offline configuration are identical
	Online and offline configuration are different
	Configuration only exists online

Shortcut menu commands

The following table shows the shortcut menu commands for the "Traces" system folder:

Shortcut menu command	Description
“Add new group”	Inserts a new folder.
“Add new trace”	Inserts a new trace configuration and opens the configuration tab.
"Import trace configuration"	Imports a trace configuration from a file.

The following table shows the shortcut menu commands for trace configurations and installed traces / :

Shortcut menu command	Trace configuration	Installed trace	Description
"Copy"	x	-	Copies the trace configuration or trace to the clipboard.
"Paste"	x	-	Inserts a trace configuration or measurement from the clipboard.
"Delete"	x	x	Deletes the selected objects from the project tree or from the device.
"Rename"	x	-	Switches the selected object to the editing mode.
"Export trace configuration"	x	-	Export a trace configuration as a file with the file extension "* .ttcfgx" or a trace in the device with the file extension "* .ttrecx". For reasons of compatibility, the "* .ttcfg" and "* .ttrec" file extensions are supported by TIA Portal V12, although they do not contain any information about the device family.

The trace configuration can also be copied across devices within the same device family.

Several objects can be selected.

2.1.2 User interface - “Measurements” project tree folder

The “Measurements" folder shows the saved measurements.

Icons in the “Measurements" folder

The following table explains the icons in the “Measurements" folder:

Icon	Description
	Measurement (offline) Double-click the icon to open the "Diagram" tab. The configuration for a measurement can be transferred to the “Traces” folder using drag & drop.

Shortcut menu commands

The following table shows the shortcut menu commands for the "Measurements" system folder:

Shortcut menu command	Description
“Add new group”	Inserts a new folder.
"Import measurement"	Imports a measurement from a file with the "*.ttrecx" file extension. The import is device-independent. For reasons of compatibility, the "*.ttrec" file extension is supported in V12, although it does not contain any information about the device family.

The following table shows the shortcut menu commands for measurements :

Shortcut menu command	Description
"Copy"	Copies the trace configuration of the selected objects to the clipboard.
"Paste"	Inserts a measurement from the clipboard.
"Delete"	Deletes the selected objects from the project tree or from the device.
"Rename"	Switches the selected object to the editing mode.
“Generate new overlay measurement”	Generates a new overlay measurement with the selected measurements.
"Export measurement"	Exports a measurement with the last saved standard view The measurement is saved with the extension "*.ttrecx" or "*.csv". For reasons of compatibility, the "*.ttrec" file extension is supported in V12, although it does not contain any information about the device family.

The measurements can also be copied independent of the device family.

Several objects can be selected.

2.1.3 User interface - “Installed measurements (memory card)” project tree folder

The folder shows all measurements present on the memory card. The folder is only displayed when there is an online connection to the device.

Drag folders or measurements contained here to the “Measurements” system folder using drag & drop. This transfers the measurements to the project.

Icons in the "Traces" folder

The following table explains the icons in the system folder :

Icon		Description
		Folders generated automatically with information on the recording activation time: The name of the folder cannot be changed.
		Installed measurement Double-click the icon to open the "Diagram" tab. The time stamp in the name shows the occurrence of the trigger event.

Shortcut menu commands

The following table shows the shortcut menu commands for the folder :

Shortcut menu command	Description
"Copy"	Copies the selected objects to the clipboard.
"Delete"	Deletes the selected objects from the project tree and from the device.

The following table shows the shortcut menu commands for measurements :

Shortcut menu command	Description
“Open”	Opens the measurement in the “Diagram” tab.
"Copy"	Copies the selected objects to the clipboard.
"Delete"	Deletes the selected objects from the project tree and from the device.
"Export measurement"	Exports a measurement as a file with the extension "*.ttrecx" or "*.csv". For reasons of compatibility, the "*.ttrec" file extension is supported in V12, although it does not contain any information about the device family.
“Properties”	Displays the general properties of the measurement (Page 44).

Several objects can be selected.

2.1.4 User interface - “Overlay measurements” project tree folder

The system folder “Overlay measurements" shows the configured overlay measurements.

Icons in the “Overlay measurements" folder

The following table explains the icons in the system folder “Overlay measurements”:

Icon	Description
	Add new overlay measurements Double-click the icon to add a new overlay measurement and open the “Diagram” tab.
	Overlay measurement Double-click the icon to open the "Diagram" tab.

Shortcut menu commands

The following table shows the shortcut menu commands for the system folder “Overlay measurements" or for a group folder contained within this:

Shortcut menu command	Description
“Add new group”	Inserts a new folder.
“Add new overlay measurement”	Inserts a new overlay measurement and opens the “Diagram” tab.
"Import overlay measurement"	Imports an overlay measurement from a file with the file extension "*.ttcbmx"

The following table shows the shortcut menu commands for overlay measurements:

Shortcut menu command	Description
“Open”	Opens the selected overlay measurements in the working area.
"Import measurement"	Imports a measurement from a file with the file extension "*.ttrecx" For reasons of compatibility, the "*.ttrec" file extension is supported in V12, although it does not contain any information about the device family.
"Export overlay measurement"	Exports an overlay measurement The overlay measurement is saved with the extension "*.ttcbmx" or "*.csv". The "*.ttcbmx" format can also be imported again.
"Copy"	Copies the selected objects to the clipboard.
"Paste"	Pastes measurements, measurements from traces in the device or from an overlay measurement from the clipboard. Multiple objects can be inserted from the clipboard if they are all of the same type.
"Delete"	Deletes the selected objects from the project tree or from the device.
"Rename"	Switches the selected object to the editing mode.
“Properties”	Displays the general properties for the overlay measurements.

The overlay measurements can also be copied device-wide.

Several objects can be selected.

2.2 Working area

2.2.1 User interface - trace toolbar

Tools are available for handling the trace via buttons.

The following table shows the functions of the buttons:

Icon	Description
	Transfer the selected trace configuration to the device The selected trace configuration is transferred to the device.
	Transfer the selected trace configuration from the device The selected trace configuration is transferred from the device to the project.
	Observe on/off Change of the display between online and offline. **Note** Once monitor and automatic scaling are activated at the same time, no more actions can be undone using the “Undo” button. **Note** When an installed trace is first started the display in the curve diagram is set to automatic scaling by default. Make sure when the recording is restarted that any changes to the scaling settings are retained. Reactivate automatic scaling manually if necessary in order to monitor the recording.
	Activate recording If the recording of an installed trace is repeated, then the settings relevant for the display (curve diagram and signal table) are also retained for the new recording. **Note** When a recording is restarted, the previously recorded values are lost. To save the recorded values, save the measurement in the project (Page 57) before you activate the recording again.
	Deactivate recording
	Delete installed trace Deletes the selected trace from the device.
	Automatically repeat recording After a recording, the recording is automatically activated again. The display of the curve is refreshed when the recording is completed. This type of refresh is particularly suitable for monitoring fast signals (Page 66).
	Transfer the selected measurement from the device to the project The measurement is added to the "Measurements" system folder. **Note** In order to be able to save the installed trace data as a measurement, it must first have been displayed once in the curve diagram. The recording data is loaded from the device when displayed. If necessary wait until the display is updated, as only the displayed data is transferred to the project in all cases.

Icon	Description
	Export trace configuration Exports a trace configuration as a file with the file extension "*.ttcfgx". For reasons of compatibility, the "*.ttcfg" file extension is supported by V12, although it does not contain information about the device family.
	Generate a trace configuration Generates a new trace configuration from the measurement.
	Export measurement with the settings from the current view Exports a measurement as a file with the file extension "*.ttrecx" or "*.csv". For reasons of compatibility, the "*.ttrec" file extension is supported in V12, although it does not contain any information about the device family.
	Import measurement (only with overlay measurements) Imports a measurement from a file with the file extension "*.ttrecx". For reasons of compatibility, the "*.ttrec" file extension is supported in V12, although it does not contain any information about the device family.
	Export overlay measurement (only with overlay measurements) The overlay measurement is saved with the extension "*.ttcbmx" or "*.csv". The "*.ttcbmx" format can also be imported again.
	Select a measurement (only with overlay measurements) The drop down list box contains the imported measurements. Select the desired measurement to display the configuration.

2.2.2 User interface - Configuration tab

2.2.2.1 User interface - Configuration

The trace configuration depends on the device and is described at the respective device (Page 71).

2.2.3 User interface - Diagram tab

2.2.3.1 User interface - curve diagram

The curve diagram displays the selected signals of a recording. Analog signals are displayed in the upper curve diagram. Binary signals are displayed as bit track in the lower diagram. You can adjust the display of the signals in the signal table (Page 29) and with the toolbar of the curve diagram.

Setting options and displays in the curve diagram

The following figure shows an example of the display in the TIA Portal:

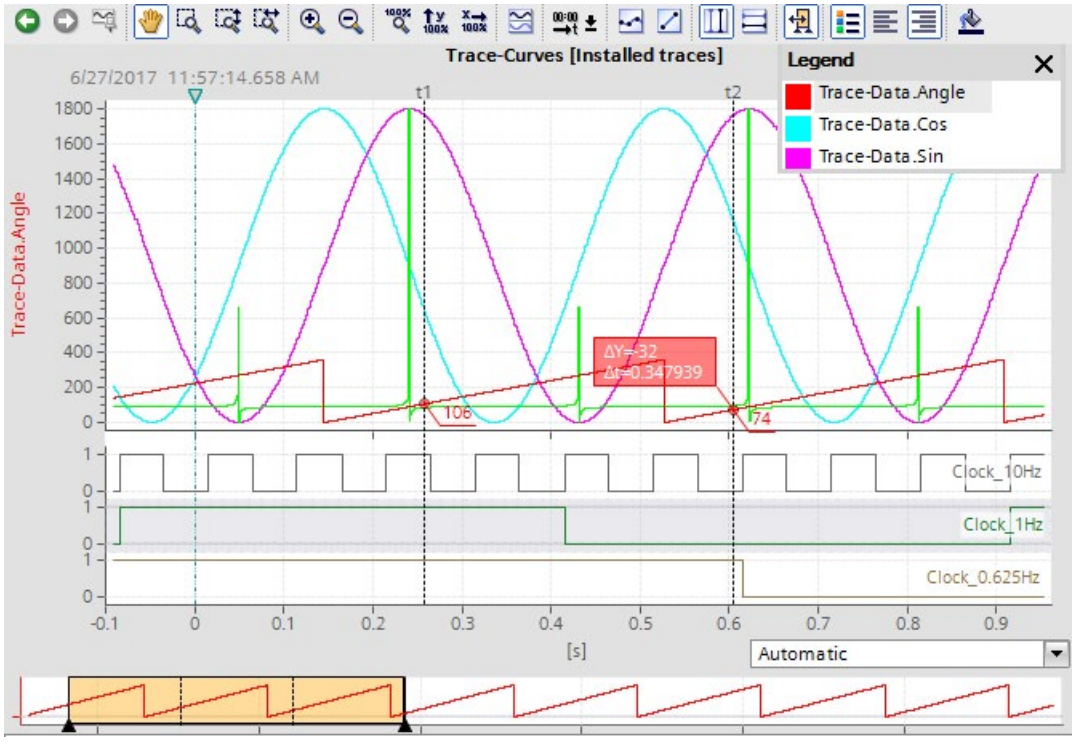

The scale in the diagram applies to the selected (highlighted in gray) signal in the legend. The legend can be moved and its size can be adjusted with the mouse.

The ▽ icon shows the device trigger time with a vertical line.

A drop-down list for selecting the unit is available below the curve for the "Time" setting for the time axis. The "Automatic" setting automatically adjusts the unit based on the displayed time range.

Note

Non-interpretable data types

Some data types require a defined format, e.g. the S7 data type `LTime_of_Day`. If this format is not available, the data type is interpreted as INT.

Functions using the mouse wheel

The following table shows which functions are possible in the curve diagram using the mouse wheel:

Function of the mouse wheel	Description
Move the curve diagram vertically	Turning the mouse wheel moves the display in the upper curve diagram up or down. If the signals are arranged in traces the display for the group is shifted that is located below the cursor. The mouse pointer must be positioned above the curve with the analog signals.
Move the curve diagram horizontally	Turning the mouse wheel with the <Shift> button pressed down moves the display in the curve diagram to the left or the right. The cursor must be positioned above the curve diagram.
Zoom in and zoom out	Turning the mouse wheel with the <Ctrl> button pressed down zooms in or out of the display in the curve diagram. The cursor position is the starting point for zooming in or out. The value axis of the lower curve diagram (bit tracks) is not affected. The cursor must be positioned above the curve diagram.

Functions using the keyboard

The following table shows which keyboard commands are possible with a focus on the curve diagram:

Shortcut key	Description
Selecting a measurement cursor	
<Ctrl+Shift+1>	The vertical measurement cursor t1 is selected or deselected.
<Ctrl+Shift+2>	The vertical measurement cursor t2 is selected or deselected.
<Ctrl+Shift+3>	The horizontal measurement cursor Y1 is selected or deselected.
<Ctrl+Shift+4>	The horizontal measurement cursor Y2 is selected or deselected.
<Tab>	The next measurement cursor is selected.
Positioning a vertical measurement cursor	
<Left>, <Right>	With the unit "Samples", the selected measurement cursor is moved by one sample by the signal in the foreground. With the unit "Time", it is moved by one pixel.
<Shift+Left>, <Shift+Right>	With the unit "Samples", the selected measurement cursor is moved by 10 samples by the signal in the foreground. With the unit "Time", it is moved by 10 pixels.
Positioning a horizontal measurement cursor	
<Up>, <Down>	The selected measurement cursor is moved by one pixel along the value axis.
<Shift+Up>, <Shift+Down>	The selected measurement cursor is moved by 10 pixels along the value axis.
Display of vertical measurement cursors	
<Ctrl+Space>	The vertical measurement cursors are shown or hidden.
<Ctrl+Shift+Space>	The vertical measurement cursors are shown and centered for the current view.
Changing the view	
<Space>	Move view
<Ctrl+0>	Set 100% view in open editor
<Ctrl++>	Apply zoom in with 10%
<Ctrl+->	Apply zoom out with 10%

Shortcut menu commands

The following table shows the shortcut menu commands in the curve diagram:

Shortcut menu command	Description
"Save diagram as image"	Exports the current display in graphic format, e.g. as a bitmap.
"Copy image to clipboard"	Copies the current display to the clipboard.
"Center measurement cursors"	Positions the activated measurement cursors at a central point in the current display.
"Add to measurements" (only axis control panel and PID)	Adds the displayed recording to the "Measurements" system folder.
“Automatic bit track height"	Automatically adjusts the height of the bit tracks and thereby determines the size of the lower curve diagram. The setting is automatically deactivated once you change the space allocation between the curve diagrams manually. **Note** You can change the vertical space allocation between the upper and lower curve diagram. To do this drag the time axis of the upper curve diagram up or down with the mouse.

Toolbar of the curve diagram

Tools are available for adapting the display via buttons.

The following table shows the functions of the buttons:

Icon	Function	Description
	Undo zoom	Undoes the zoom function executed last. If several zoom functions have been executed, they can be undone step-by-step.
	Redo zoom	Redoes the last undone zoom function. If several zoom functions have been undone, they can be redone step-by-step.
	Standard view	Uses the current view as standard for this recording. If the trace recording is shown again later, the standard view is restored.
	Move view	Moves the display with the mouse button pressed.
	Zoom selection	Selection of an arbitrary range with the mouse button pressed. The display is scaled to the range selection.
	Vertical zoom selection	Selection of a vertical range with the mouse button pressed. The display is scaled to the range selection.
	Horizontal zoom selection	Selection of a horizontal range with the mouse button pressed. The display is scaled to the range selection.
	Zoom in	Enlargement of the display. The ranges of the time axis and value axis are reduced every time the button is clicked. The curves are displayed larger.
	Zoom out	Reduction of the display. The ranges of the time axis and value axis are increased every time the button is clicked. The curves are displayed smaller.

Icon	Function	Description
	Display all	Scales the display of the available data so that the entire time range and all values are displayed.
	Automatic scaling of the value axis	Scaling of the display so that all values are displayed for the currently displayed time range. The relative scaling ratio between the signals may change. **Note** The automatic scaling of the value axis is stopped when the zoom function is activated for the value axis. This button reactivates the automatic adjustments to the minimum/maximum values.
	Show the overall time range	Scaling of the display so that the values in the value range currently displayed are displayed for the overall time range. The value range displayed only then changes if "Display all values" is activated. **Note** The automatic scaling of the time axis is stopped when a zoom function is activated for the time axis. This button reactivates the automatic adjustments for the time range.
	Arrange in tracks	Activate or deactivate the trace arrangement. When the trace arrangement is activated the signals are arranged among themselves with the relevant value axes. Signal groups are displayed in the same trace. This setting does not affect the display for the bit tracks.
	Unit changeover of the time axis	Switching the unit of the time axis The following units are adjustable: • Measurement points • Time (relative time related to the trigger time) • Trigger stamp of the measurement points
	Display samples	The samples are displayed as small circles on the curves.
	Interpolated representation	Linear interpolation between two consecutive measuring points for floating point numbers If linear interpolation is not enabled (default), the connection between the measuring points is drawn in steps.

Icon	Function	Description
	Display vertical measurement cursors	Display of the vertical measurement cursors. The vertical position of the two measurement cursors can be moved with the mouse. The associated measured values and the difference of the measurement cursors corresponding to the position are shown in the signal table. Display the “Measurement cursor” pane (Page 41) in the Trace task card in order to display further information. Also use the cursor keys. The following actions are possible for vertical measurement cursors with the cursor keys: • Select • Positioning • Show or hide measurement cursor • Center measurement cursors
	Display horizontal measurement cursors	Display of the horizontal measurement cursors. The horizontal position of the two measurement cursors can be moved with the mouse. Display the “Measurement cursor” pane (Page 41) in the Trace task card in order to display the values or to reposition the measurement cursor through entering the position. Also use the cursor keys. The following actions are possible for horizontal measurement cursors with the cursor keys: • Select • Positioning
	Time range display	Show or hide the time range display below the curve The time range display shows the area in the curve in yellow based on a selected signal. The yellow area can be moved with the mouse and the borders can be changed horizontally. 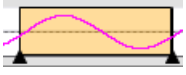
	Display chart legend	Showing or hiding of the legend in the curve diagram and the bit track labels.
	Align the chart legend to the left	Display of the legend and the bit track labels on the left side of the curve diagram.
	Align the chart legend to the right	Display of the legend and the bit track labels on the right side of the curve diagram.
	Change background color	Changeover between various background colors.

2.2.3.2 User interface - signal table

The signal table lists the signals of the selected measurement and provides setting options for some properties. If recording data of installed traces is displayed and the settings are changed in the signal table, these settings are retained until there is a change to the offline mode. If the installed trace is added to the measurements, the current settings of the signal table are saved in the measurement.

The signals can be sorted using drag-and-drop. The bits of a signal can be resorted within a signal.

Setting options and displays in the signal table

The following figure shows an example of the display in the TIA Portal:

			Si...	Name	Data type	Display format	Address	Formula		Color	Scaling gro...	Min. Y scale	Max. Y scale	Y(t1)	Y(t2)	Delt...	Unit	Comment
1			$0	"Trace-Data"....	Int	Dec +/-					Temp	0	1800	106	74	-32		
2			$1	"Trace-Data".C..	Real	Floating point					Temp	0	1800	-27....	27....	55....		
3			$2	"Trace-Data".Sir	Real	Floating point						-99.99971	99.99997	96....	96....	-0.0...		

The following table shows the settings and displays of the recorded signals:

Column	Description
Signal or error symbol	
	Signal
	Failsafe signal
	Signal from a data block
	Signal from a failsafe data block
	Calculated signal (formula)
	Error in the formula of the calculated signal
	Selection for the display in the curve diagram - a maximum of 16 signals can be selected. The point indicates that at least one bit has been selected for display as bit track for the signal in the bit selection.
"Signal reference"	Automatically generated number of the signal The signal can be accessed via the signal reference in the formulas.
"Name"	Display of the signal name A click on the name of a displayed signal updates the scale in the curve diagram. You can enter a name for a calculated signal in the last line without a signal symbol. The calculated signal is entered with its name.
“Measurement”	Display of the measurement (in the “Diagram” tab only with overlay measurements) Shows the name of the measurement to which the signal belongs.
	Open bit selection Individual bits can also be selected for the following data types for display as a bit track in the lower curve diagram. • Byte, Word, DWord, LWord • SInt, USInt, Int, UInt, DInt, UDInt, LInt, ULInt Example of an opened bit selection for the DWORD data type: 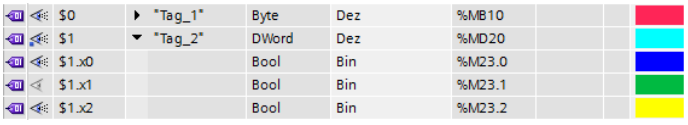 Select or deselect the relevant bit for display by clicking the icon.
"Data type"	Display of the data type
"Display format"	Display format of the signal The display formats supported for the signal are offered for selection. A display format suitable for the data type is set with "Default".
"Address"	Display of the address of the signal The field remains empty with optimized / type correct tags.

Column		Description
"Formula"		Display or entry of a formula A formula can contain mathematical functions with numbers and signals. Use the formula editor to conveniently create formulas.
		Call of the formula editor for calculated signals Click on the icon to open the formula editor.
"Color"		Display and setting option for the color of the signal
"Signal group"		Display or input of the signal group name for one signal group The Y-scales are scaled identically for all signals of one signal group. Enter an identical signal group name for those signals that are to be scaled identically. Signals can be removed from the signal group by deleting the signal group name. The signal groups can be saved via the function "Use current view as standard" (button). **Notes** Binary signals cannot be grouped. In hex display format, group only the signals with a format compatible to the sign for the display.
	Gray field for chain icon	Move the cursor over the gray field or the chain icon (or) to add the signal to a signal group or delete the signal from the signal group. Clicking the chain icon adds the signal to a signal group or creates a new signal group. Clicking the chain icon removes the signal from the signal group. For a selected signal with signal group, the chain icon displays all signals of the same signal group.
	Input field	The input field displays the signal group name. As an alternative to the chain icon, you can assign or delete a group name via text input in this field.
"Min. Y-scale"		Display or input of the minimum value for the scaling of the signal
"Max. Y-scale"		Display or input of the maximum value for the scaling of the signal
"Y(t1)"		Display of the value at the position of the first measurement cursor
"Y(t2)"		Display of the value at the position of the second measurement cursor
"ΔY"		Display of the value difference between the first and the second measurement cursor
"Unit"		Display of the unit (e.g. for used-based values from technology objects)
"Comment"		Display and input option for a comment about the signal

Shortcut menu commands

The following table shows the shortcut menu commands of the signal table:

Shortcut menu command	Description
"Insert calculated signal"	Inserts a new calculated signal at the top of the table
"Edit formula"	Opens the formula editor for the calculated signal
"Cut"	Cannot be selected.
"Copy"	Copies the contents of the selected lines to the clipboard.
"Paste"	Cannot be selected.
"Delete"	Cannot be selected.
"Rename"	Cannot be selected
"Display format"	Allows you to switch the display format The display formats supported for the signal are offered for selection.
“Display signal(s)”	Displays the selected signals in the curve diagram.
“Hide signal(s)”	Hides the selected signals in the curve diagram.

See also

Use of the signal table (Page 64)

Using the signal group in the signal table (Page 65)

2.2.3.3 Interface - Formula editor

The formula editor provides various mathematical functions for analyzing signals. Open the editor in the signal table by clicking the button.

Configuration options and displays in the formula editor

The following figure shows an example of the display in the TIA Portal:

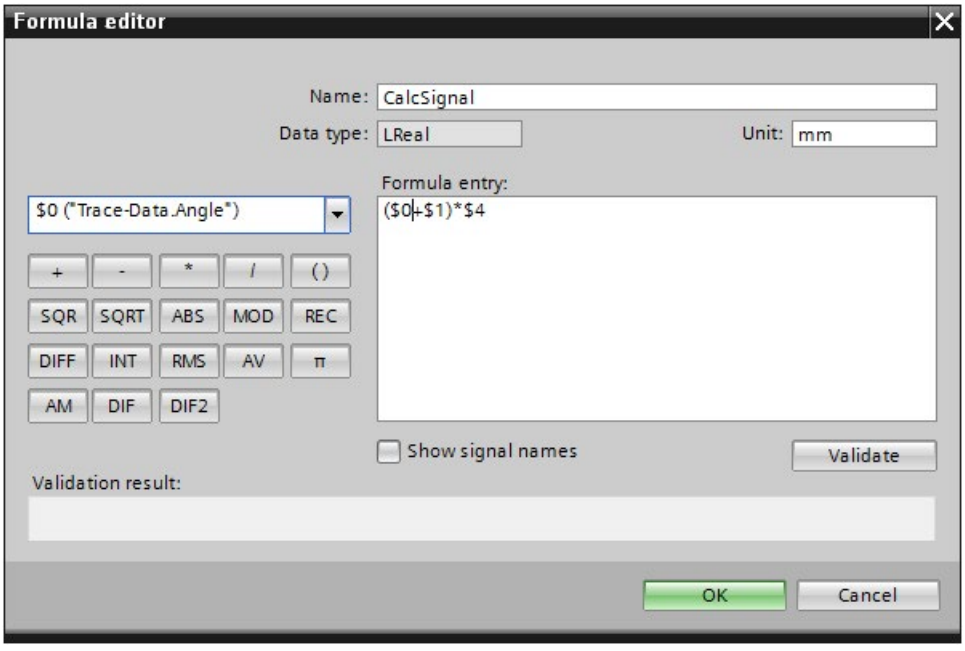

Figure 2-1 Formula editor

The following table shows the configuration options and displays of the formula editor:

Field/Button		Description
"Name"		Display and input of the name for the created formula The name must be unique and only contain characters that are allowed in Windows file names.
"Data type"		Display of formula data type The data type is pre-assigned with a floating-point number of LREAL type and cannot be changed.
"Unit"		Display and input of a unit Freely specified user-defined unit.
Drop-down list with signals		Selection of the signals The drop-down list contains the signals from the signal table and inserts a selected signal into the formula.
"Formula entry"		Text field to display and enter the formula Create a formula by typing into this text box or by using the buttons for the mathematical functions. Signals can be referenced in the text box using the signal reference with a prefixed $ character or the name in double quotes in the formula. Mixed input is possible. Bits from a bit selection (e.g. below the INT data type) are not allowed in the formula.
Mathematical functions		
	+	Addition
	-	Subtraction
	*	Multiplication
	/	Division
	()	Brackets Grouping expressions
	SQR	Square
	SQRT	Square root
	ABS	Absolute value Calculates the size of a number. **Examples** `ABS(5)` → 5 `ABS(-3)` → 3 `ABS(-3.14)` → 3.14
	MOD	Modulo Calculates the residual value of a division **Examples** `MOD(5,3)` → 2 `MOD(3.14,3)` → 0.14
	REC	Reciprocal value (1/x)

Field/Button		Description
	DIFF [1)]	Numerical differentiation **Examples** Formula: `DIFF($0,SAMPLETIME)`
	INT [1)]	Numerical integration **Examples** Formula: `INT($0,SAMPLETIME)`
	RMS [1)]	Quadratic mean The quadratic mean is given by first adding the squares of all the measured values and dividing them by the number of measured values. The quadratic mean is the square root of this value. **Examples** Formula: `RMS($0,SAMPLETIME)`
	AV	Mean value filter from 1st to 5th order If the specification of an order is missing, the mean filter of the 1st order is used. **Examples** `AV($0,1)` → Mean filter 1st order `AV($0,5)` → Mean filter 5th order
	π	Mathematical constant Pi
	AM	Arithmetic mean The arithmetic mean is a moving average over five measuring points.
	DIF	Simple subtraction with mean filter from 1st to 5th order If the specification of an order is missing, simple subtraction is performed with a 1st order filter. **Examples** `DIF($0,1)` → Single subtraction with 1st order filter `DIF($0,5)` → Single subtraction with 5th order filter `DIF($0)` → Single subtraction with 1st order filter **Example: Calculate an acceleration curve from a velocity signal** `$0`: Velocity signal in meters per second Cycle time of the constant cycle velocity recording: 1 ms Formula: `DIF($0,1)/0.001` Unit: m/s^2
	DIF2	Double subtraction with mean filter from 1st to 5th order If the specification of an order is missing, then double subtraction is executed with a 1st order filter. **Examples** `DIF2($0,1)` → Double subtraction with 1st order filter `DIF2($0,5)` → Double subtraction with 5th order filter `DIF2($0)` → Double subtraction with 1st order filter **Example: Calculate an acceleration curve from a position sequence** `$0`: Position sequence in meters Cycle time of the constant cycle position recording: 1 ms Formula: `DIF2($0,1)/SQR(0.001)` Unit: m/s^2

Field/Button	Description
"Show signal name"	Display of the signal names If the check box is selected, the signal names in the formula are displayed instead of the signal references.
"Validate"	Check the validity of the formula
"Result of validation"	Result of validation Displays the result of the validation and indicates errors and error locations.
"OK"	Transfer the entries in the formula editor
"Cancel"	Discard the entries in the formula editor

1) The constant `SAMPLETIME` is only available for equidistant recording cycles. Time unit for `SAMPLETIME` is always µs.

2.2.3.4 User interface - Measurements (overlay measurements)

The Measurements tab displays the individual measurements and among other things provides the setting options for synchronization.

Setting options and displays in the Measurements tab

The following figure shows an example of the display in the TIA Portal:

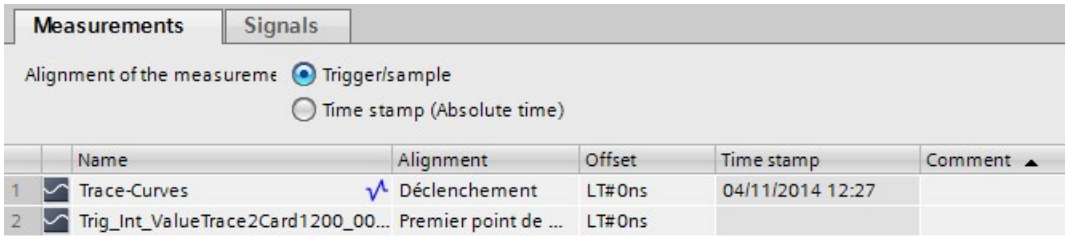

The following table shows the settings and displays for the measurements:

Column		Description
Alignment of the measurements		
	“Trigger/ measurement point"	Alignment of the measurements in accordance with the trigger or measurement point The individual zero point for the measurement is predefined in the table under the “Alignment” column.
	“Time stamp (absolute time)”	Alignment of the measurements in accordance with their time stamp The signals are aligned in accordance with the time from the absolute time stamp.
Table columns		
		Static display of the measurement icon
	"Name"	Display and change options for the measurement name The name must be a unique one and can be changed.
	“Alignment”	Alignment of the measurement (only adjustable with the “Trigger/ measurement point” check box activated) Determines the individual zero point for a measurement. All signals for the measurement are displayed in relation to this zero point. The following settings are possible: • Trigger • First measurement point following the trigger event • First measurement point • Last measurement point
	"Offset"	Offset related to the time axis Moves the measurement left or right by the offset stated on the time axis. The offset can also be transferred via the clipboard to the cell from the ΔX value of the measurement cursor. See Align measurements precisely (overlay measurements) (Page 69).
	“Time stamp"	Display of the trigger time
	"Comment"	Display and input option for a comment about the signal

Shortcut menu commands

The following table shows the shortcut menu commands of the signal table:

Shortcut menu command	Description
"Cut"	Cannot be selected.
"Copy"	Copies the contents of the selected lines to the clipboard.
"Paste"	Cannot be selected.
"Delete"	Cannot be selected.
"Rename"	Switches the selected cell to the editing mode.
"Import measurement"	Imports a measurement from a file, e.g. with the "*.ttrecx" file extension. The import is device-independent and also suitable, for example, for comparing measurements of a PLC with the measurements of a drive device. For reasons of compatibility, the "*.ttrec" file extension is supported in V12, although it does not contain any information about the device family.
"Export measurement"	Exports a measurement as a file with the extension "*.ttrecx" or "*.csv". For reasons of compatibility, the "*.ttrec" file extension is supported in V12, although it does not contain any information about the device family.

2.2.4 User interface - Signal selection tab (overlay measurements)

2.2.4.1 User interface - Signal selection (overlay measurements)

The Signal selection tab shows the signals for all measurements and allows signals that are presented in the signal table of the diagram to be preselected.

Setting options and displays in the Signal selection tab.

The following figure shows an example of the display in the TIA Portal:

		Availa...	Measurement	Name	Data type	Address	Comment
1		☑	Trace-Curves	"Trace-Data".Angle	Int		
2		☑	Trace-Curves	"Trace-Data".Cos	Real		
3		☑	Trace-Curves	"Trace-Data".Sin	Real		
4		☐	Trace-Curves	"Trace-Data".Tan	Real		
5		☑	Trace-Curves	"Clock_10Hz"	Bool	%M100.0	
6		☑	Trace-Curves	"Clock_5Hz"	Bool	%M100.1	

The following table shows the settings and displays for the table:

Column	Description
	Static display of the signal icon
"Available in the diagram"	Selection for the display in the curve diagram When the selection is activated the signal is transferred to the signal table for the curve diagram.
“Measurement”	Display of the measurement to which the signal belongs
“Name”	Display of the signal name
“Data type “	Display of the data type
"Address"	Display of the address (not for symbolic tags)
"Comment"	Display of a comment on the signal

You will find further information on the specific settings in User interface - signal table (Page 29).

Shortcut menu commands

The following table shows the shortcut menu commands for the signal selection:

Shortcut menu command	Description
"Copy"	Copies the content of the selected lines to the clipboard.
“Display selection in the signal table”	The selected signals are displayed in the signal table and are available in the diagram.
“Remove selection from the signal table”	The removed signals are not available in the diagram.

Several objects can be selected.

2.3 Trace task card

2.3.1 User interface - Measurement cursor pane

The “Measurement cursor” pane shows the position of the measurement cursor in the curve diagram and the values at the intersection points.

Setting options and displays of the "Measurement cursor” pane

The figure below shows the "Measurement cursor” pane:

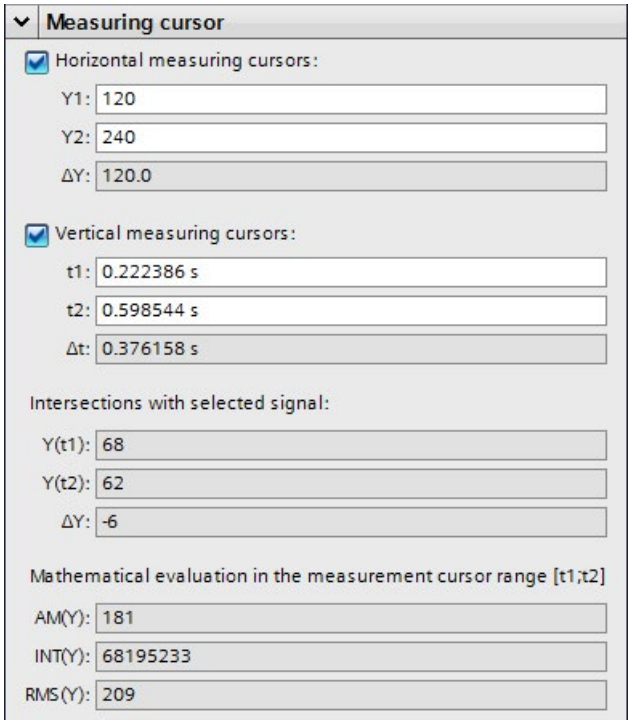

The following table describes the settings and displays:

Setting/display		Description
Horizontal measurement cursor		
	Y1	Position of first measurement cursor The value states the position in relation to the scale of the signal currently selected. You also have the option of specifying a new position for the measurement cursor in this entry field for moving with the mouse.
	Y2	Position of the second measurement cursor The value states the position in relation to the scale of the signal currently selected. You also have the option of specifying a new position for the measurement cursor in this entry field for moving with the mouse.
	ΔY	Display of the position difference between the first and the second measurement cursor
Vertical measurement cursor		
	t1	Position of first measurement cursor You also have the option of specifying a new position for the measurement cursor in this entry field for moving with the mouse.
	t2	Position of the second measurement cursor You also have the option of specifying a new position for the measurement cursor in this entry field for moving with the mouse.
	Δt	Display of the position difference between the first and the second measurement cursor
Intersection points with selected signal		
	Y(t1)	Display of the value at the position of the first measurement cursor
	Y(t2)	Display of the value at the position of the second measurement cursor
	ΔY	Display of the value difference between the first and the second measurement cursor
Mathematical analysis in the range of the measurement cursor·[t1;t2] for the selected signal		
	AM(Y)	Mean The arithmetic mean is calculated for the range between the vertical measurement cursors.
	INT(Y)	Integral The integral is calculated for the range between the vertical measurement cursors.
	RMS(Y)	RMS value The root-mean square (RMS value) is calculated for the range between the vertical measurement cursors.

See also

User interface - curve diagram (Page 23)

2.3.2 User interface - Snapshots pane

The “Snapshots” pane allows the user to save and restore different views for a measurement.

A snapshot is taken of the current view in the “Diagram” tab. The snapshots are saved in the measurement with the project.

Setting options and displays of the “Snapshots” pane

The figure below shows the “Snapshots” pane:

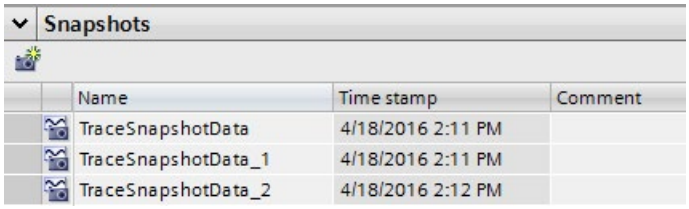

The following table shows the functions of the buttons:

Icon	Description
	Generate snapshot of the current view Saves the current view as a snapshot in the “Diagram” tab.

The following table shows the settings and displays:

Column	Description
	Static display of the snapshot symbol
“Name”	Display and change options for the name
“Time stamp"	Display of the snapshot generation time
"Comment"	Display and input option for a comment

Several rows can be selected and deleted.

Double-clicking on a row opens the measurement with the saved view in the “Diagram” tab.

Shortcut menu commands

The following table shows the shortcut menu commands of the table:

Shortcut menu command	Description
“Restore snapshot”	Shows the measurement with the saved view in the “Diagram” tab.
"Delete"	Deletes the snapshot
"Rename"	Switches the cell to the editing mode

Several rows can be selected and deleted.

2.4 Inspector window

2.4.1 Interface - Inspector window

The Inspector window displays general information about the trace.

Additional information is available for measurements:

- Time stamp range

  The availability of the time stamps depends on the configured recording conditions.
- Measuring point range
- Cycle time range

  For equidistant cycle recordings, the time duration between two measurement points is displayed.

  This time, for example, can be used in the formula editor.

Sample time stamp

The following figure shows the time stamps for a measurement:

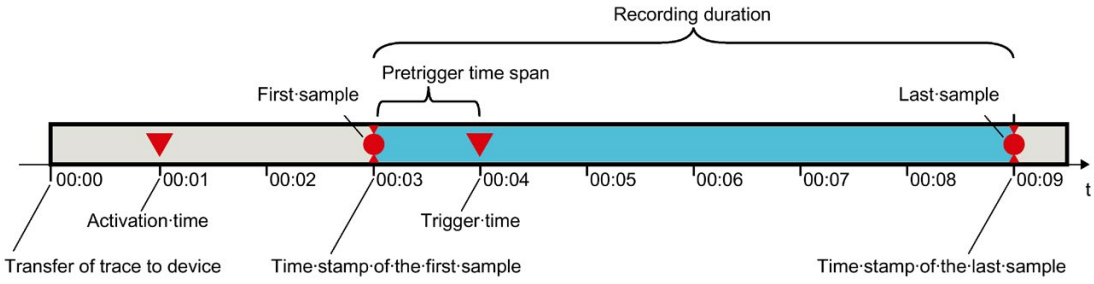

Note

Analysis of measurements with sporadically occurring recording condition

When evaluating your measurements, keep in mind that the recording condition between the activation time and the trigger time may not have been fulfilled.

Operation

3

3.1 Quick start

This description shows the steps for a recording of the S7-1500 CPU as an example. The displayed settings can differ depending on the device.

Requirement

A device is configured that supports the trace and logic analyzer function.

Creating a trace

The following figure shows the project tree with the "Traces" system folder below the device:

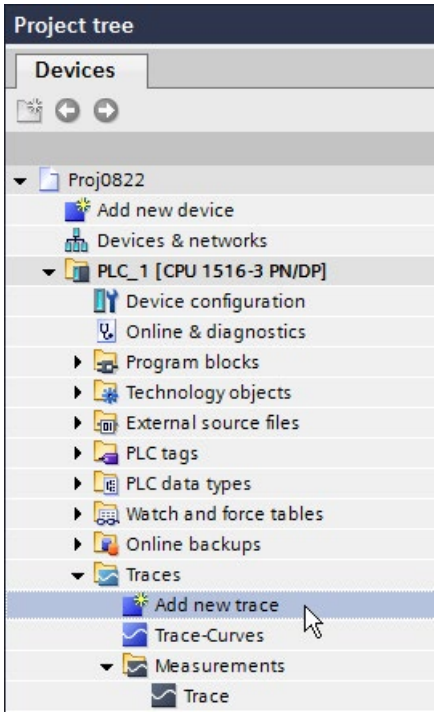

Procedure:

1. Double-click the "Add new trace" entry.

   A new trace configuration is created and the “Configuration" tab opens in the working area.

2. Adapt the name of the trace configuration by clicking the text.

Selecting signals

The following figure shows the configuration of the signals:

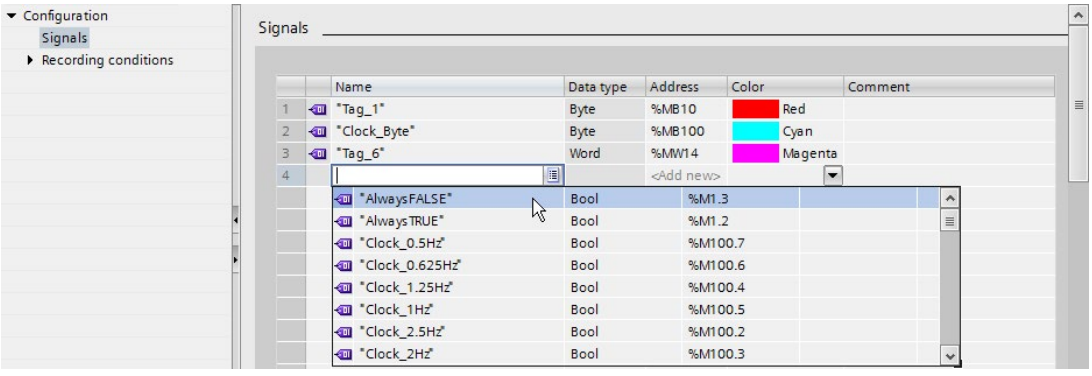

Procedure:

1. Select the signals to be recorded in the "Signals" area.

   Or:

2. Drag one or more signals, e.g. from a tag table, and drop them in the signal table.

Configuring the recording cycle

The following figure shows the configuration of the sampling:

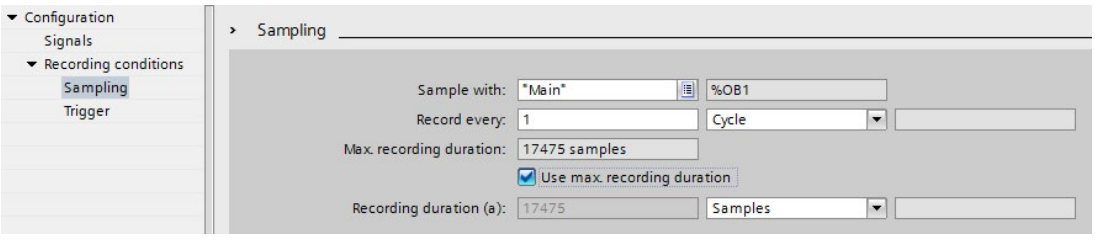

Procedure:

1. Configure the sampling.

Configuring the trigger

The following figure shows the configuration of the trigger:

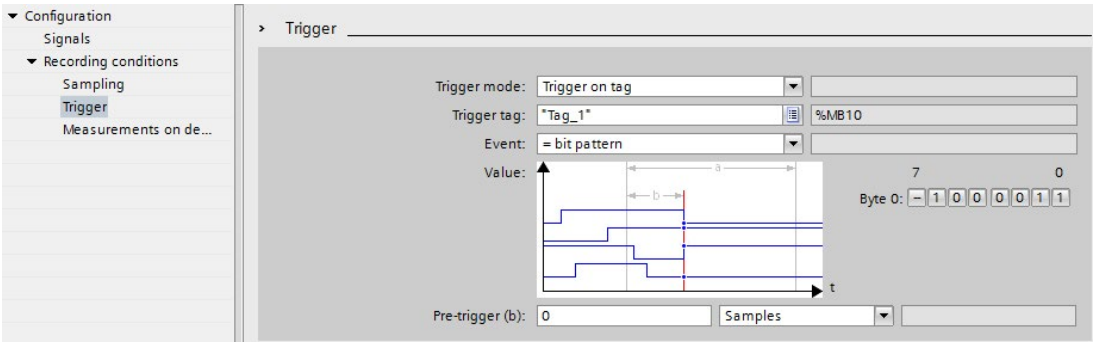

Procedure:

1. Configure the trigger mode and the condition for the selected trigger.

Transferring the trace configuration to the device

Procedure:

1. Transfer the trace configuration to the device with the button.

   The following functions are executed:

   – An online connection is established to the device.
   – The trace configuration is transferred to the device.
   – The monitoring is activated.
   – The display switches to the "Diagram" tab.

Activating a recording

Procedure:

1. Click the button.

Displaying the recording

The following figure shows the curve diagram with a recording:

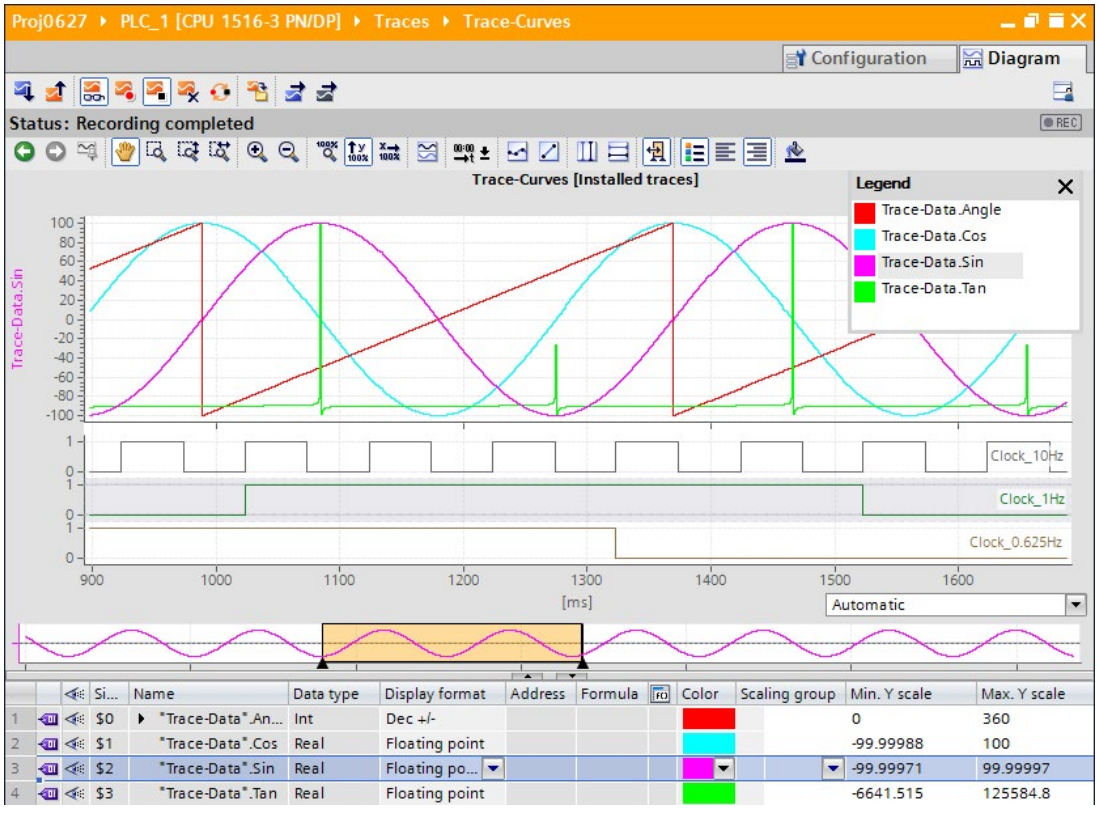

Procedure:

1. Wait until the "Recording" or "Recording completed" status is displayed in the status display of the trace.
2. Switch to the "Diagram" tab.
3. Click the ▸ icon of a signal in the signal table.

   The individual bits of the signal are offered for display as a bit track.
4. In the signal table, select or deselect the individual signals and bits for display with the icon.

Saving the measurement in the project

Procedure:

1. Transfer the measurement to the project with the button.

   The measurement is displayed in the project tree under the "Measurements" system folder.

See also

User interface - trace toolbar (Page 21)

3.2 Using the trace function - overview

Requirement

A device is configured in the TIA Portal that supports the trace and logic analyzer function and to which an online connection has been established.

Procedure

The following table shows a procedural overview with typical steps when working with the trace and logic analyzer function.

Step	Description
1	Creating a trace (Page 50)
2	Configuring the trace (Page 61)
3	Transferring the trace configuration to the device (Page 53)
4	Activating/deactivating an installed trace (Page 54)
5	Monitoring the recording (Page 55)
6	Saving measurements in the project (Page 57)
7	Displaying the recording (Page 55)
8	Analyze an ongoing recording (Page 56)
9	Compare records (overlay measurements) (Page 67)

See also

Displaying a configuration (Page 50)

3.3 Project tree

3.3.1 Creating a trace

Traces can be created in the form of trace configurations in the project navigator.

The following instructions describe how you can create a trace configuration under the "Traces" system folder

Procedure

To create a trace configuration, proceed as follows:

1. Double-click the "Add new trace" entry.

A new trace configuration is created.

3.3.2 Displaying a configuration

Requirement

A trace configuration, an installed trace, a measurement or an overlay measurement is available in the "Traces" system folder.

Procedure

To display a trace configuration, proceed as follows:

1. Double-click the appropriate icon of a trace configuration, an installed trace, a measurement or an overlay measurement in the project tree.

   The "Configuration" or "Diagram" tab opens in the working area.

2. If required, click the "Configuration" tab for the display.

Note

Write protection

The configuration data of an installed trace and in all measurements is displayed with write protection.

See also

User interface - “Traces” project tree folder (Page 16)

3.3.3 Displaying a diagram

Requirement

An installed trace, a measurement or an overlay measurement is available in the "Traces" system folder.

Procedure

To display a diagram, proceed as follows:

1. Double-click the appropriate icon of an installed trace, a measurement or an overlay measurement in the project tree.

   The "Configuration" or "Diagram" tab opens in the working area.

2. If required, click the "Diagram" tab for the display.

See also

User interface - “Traces” project tree folder (Page 16)

3.3.4 Apply overlay measurement

Overlay measurements can be applied in the project tree with a comparison function for different measurements.

The following instructions describe how you can create an overlay measurement under the “Overlay measurements" system folder

Requirement

A device is configured that supports the trace and logic analyzer function.

Procedure

To apply an overlay measurement, proceed as follows:

1. Select one or more measurements in the “Measurements" system folder.
2. Drag the measurements to the “Overlay measurements” system folder.

A new overlay measurement is created. This contains copies of the selected measurements.

3.3.5 Configuring objects in groups

You can set up groups in system folders in the project navigator. Use this option to configure the view for multiple objects.

The following instructions use measurements as an example in order to describe how to consolidate the measurements into groups. The same functionality is also available for the Traces and Overlay measurements system folders.

Note

Traces in the device can also be displayed in groups

A trace configuration in a group with a trace of the same name in the device is displayed under the group. Therefore, all traces in the device on the first level in the "Traces" folder are not necessarily displayed.

Requirement

Measurements are available in the “Measurements" system folder.

Procedure

Proceed as follows to configure measurements into groups:

1. Select the shortcut menu command “Add new group” by right-clicking on the “Measurements" system folder.

   A new group folder is created.
2. Assign a meaningful name to the new group.
3. Repeat step 1 until all required groups have been created.

   (Sub-groups (groups within groups) can also be created.)
4. Drag & drop the corresponding measurements to the group folder that has been created.

3.4 Working area - general

3.4.1 Transferring the trace configuration to the device

Requirement

- A valid trace configuration is in the "Traces" system folder.
- The maximum number of installed traces has not been reached yet.

Procedure

To transfer a trace configuration to the device, proceed as follows:

1. Open a valid trace configuration in the working area.
2. Click the button.

Result

The trace configuration is transferred to the device.

3.4.2 Activating/deactivating an installed trace

Requirement

- There is an online connection to the device.
- There is a trace in the device.
- The installed trace is displayed in the working area.
- The button is activated for viewing the displayed trace.

Activating an installed trace

To activate the recording for an installed trace, proceed as follows:

1. Click the button.

   The installed trace is activated and starts the recording according to the configured trigger condition. The trigger condition is device-specific and described in Section "Configuration" below the respective device (Page 71).

   The current status of the recording is displayed in the status display of the trace.

   Note

   When a recording is restarted, the previously recorded values are lost.

   To save the recorded values, save the measurement in the project (Page 57) before you activate the recording again.

Deactivating an installed trace

To deactivate an activated installed trace, proceed as follows:

1. Click the button.

   The installed trace is deactivated.

   The status display of the trace changes to "Inactive".

3.4.3 Displaying the recording

Requirement

- There is an online connection to the device.
- There is a trace with recording in the device.

Or:

- A measurement is in the "Measurements" system folder.

Procedure

To display the recording, proceed as follows:

1. Select an installed trace.
2. Double-click the selected trace.
3. If required, activate the button for viewing.

Or:

1. Select a measurement in the "Measurements" system folder.
2. Double-click the selected measurement.

Result

The recording is displayed in the "Diagram" tab.

See also

User interface - “Traces” project tree folder (Page 16)

3.4.4 Analyze an ongoing recording

Requirements

- An ongoing recording is displayed in the "Diagram" tab.

Save the data currently recorded as a measurement

To analyze a certain time range for an ongoing recording, follow these steps:

1. Click the button.

   The data recorded up to now is added to the measurements.
   The current recording is not affected by this and continues running uninterrupted.

Analyze the measurement

To display the saved measurement, follow these steps:

1. In the “Measurements" system folder double-click the measurement that has just been saved in order to open it

   The “Diagram” tab for the measurement opens in the working area.

See also

Displaying the recording (Page 55)

Working area - Diagram tab (Page 62)

3.4.5 Saving measurements in the project

Requirement

- There is an online connection to the device.
- There is a trace with recording in the device.
- The installed trace data must have been displayed at least once in the curve diagram. The recording data is loaded from the device for the display.

Procedure

To save a recording in the project, proceed as follows:

1. Open the installed trace with the recorded data.
2. If required, make sure that the current data is loaded from the device by activating the button.
3. After activating the button wait until all data has been loaded and displayed.
4. Click the button.

   The measurement is added to the "Measurements" system folder.
5. Save the project in the TIA Portal.

Note

Generate measurements

A measurement of an installed trace can be generated at any time.

Use this functionality e.g. to save the data recorded up until this point in a recording and to analyze it as a static measurement.

3.4.6 Exporting and importing measurements

Requirement

At least one measurement is in the "Measurements" system folder for export.

Exporting measurements

To export a measurement, proceed as follows:

1. Right-click a measurement in the "Measurements" system folder and select the shortcut menu command “Export measurement".
2. Select a folder, a file name and a data type to save the measurement.
3. Click the "Save" button.

Importing measurements

To import a measurement, proceed as follows:

1. Right-click in the "Measurements" system folder and select the shortcut menu command "Import measurement".
2. Select the file e.g. of the "*.ttrecx" file type with the measurement to be imported.
3. Click the "Open" button.

   The imported measurement is displayed with the file name in the "Measurements" system folder.

Note

Export and import trace configurations

The same functionality is available for exporting and importing trace configurations.

3.4.7 Transferring the trace configuration from the device to the project

Requirement

- There is an online connection to the device.
- There is a trace in the device.

Procedure

To transfer a trace configuration to the project, proceed as follows:

1. Open an installed trace.
2. If required, activate the button for viewing.
3. Click the button to transfer the trace configuration from the device.

Result

The configuration is taken over as new trace configuration in the "Traces" system folder.

A trace configuration of the same name is overwritten in the system folder.

3.4.8 Deleting installed traces

Requirement

- There is an online connection to the device.
- There is a trace in the device.

Procedure

To delete an installed trace, proceed as follows:

1. Open an installed trace.
2. If required, activate the button for viewing.
3. Click the button.

   A confirmation prompt opens.
4. Confirm the prompt for deletion.

Or

1. Select one or more installed traces / in the project tree.
2. Press <Delete> to delete the installed traces.

   A confirmation prompt opens.
3. If required, select an option for deletion and confirm the prompt.

3.5 Working area - Configuration tab

3.5.1 Configuring the trace

Requirement

The "Configuration" tab is open in the working area.

Configuring the trace

In the configuration, you specify the recording and trigger conditions and select the signals to be recorded.

See Section "Configuration" below the respective device (Page 71).

Note

Saving the trace configuration

You save the trace configuration with the project in the TIA Portal.

If you close the project without saving, the configuration is discarded.

See also

Displaying a configuration (Page 50)

3.6 Working area - Diagram tab

3.6.1 Use of the curve diagram

The curve diagram shows the signals of a recording selected in the signal table.

The display area can be zoomed as required. Measurement cursors can be used to select individual values for display in the signal table.

The following operating instructions describe the use of the curve diagram and of the measurement cursors as examples.

Requirements

- An installed trace or a measurement has been selected for display.
- The button is activated to monitor an installed trace.
- The "Diagram" tab is open in the working area.

Monitor an ongoing recording.

To display all of the data in an ongoing recording, proceed as follows:

1. Activate “Display all" via the button.

The entire time range and all values for the ongoing recording are displayed.

To display a consistent time window in an ongoing recording, proceed as follows:

1. Activate “Display all" via the button.
2. Select the desired time range via the button.

The trend view is updated while the scaling of the time range remains the same.

Evaluation of a certain instant of a recording

To display the values for a specific sample, proceed as follows:

1. Display the vertical measurement cursors via the button.
2. Move a measurement cursor with the mouse to the required position in the recording.

   The values of the signals are displayed in the signal table and in the “Measurement cursor” pane of the “Trace” task card.

Evaluation of the difference between two samples

To display the difference, proceed as follows:

1. Display the vertical measurement cursors via the button.
2. Move both measurement cursors with the mouse to the required samples in the recording.

   The values of the signals and the difference are displayed in the signal table and in the “Measurement cursor” pane of the “Trace” task card.

Using horizontal measurement cursors

To check whether a certain value has been reached, proceed as follows:

1. Display the horizontal measurement cursors via the button.
2. Move a measurement cursor with the mouse to the required value of the recording.

   The values of the measurement cursors for the selected signal are displayed in the “Measurement cursor” pane of the “Trace” task card.

Moving the time range displayed

Proceed as follows to move the time range displayed:

1. Select a time range via the button.
2. Move the curve to the desired time range by turning the mouse wheel with the <Shift> key pressed down.

Bringing a signal into the foreground

1. Display the legend via the button.
2. Click a signal in the legend.

Or:

1. Click a signal in the curve diagram.

The signal is displayed in the foreground and is highlighted/selected in the signal table. The value axis is updated for the selected signal.

See also

Displaying a diagram (Page 51)

User interface - curve diagram (Page 23)

User interface - signal table (Page 29)

3.6.2 Use of the signal table

The signal table shows the signals of an installed trace or a measurement. The preselected signals in the signal selection are displayed with an overlay measurement. You can show or hide individual signals for the display in the table and adapt the properties for the display. Individual bits can be selected for some data types and displayed as a bit track.

The following operating instructions describe the operation of the signal table.

Requirements

- An installed trace or a measurement has been opened in the "Diagram" tab.
- The button is activated to monitor an installed trace.
- For the display of individual bits as a bit track:
  at least one recorded signal supports the display as a bit track.

Display or hide individual signals and change the color

To adapt the display to suit your requirements, proceed as follows:

1. Click the icon of the respective signal in the column to select or deselect it for the display.
2. Click in the "Color" column for the respective signal and select a color.

   The default color for the signal changes.

Bringing a signal into the foreground

1. In the signal table, select the line of the signal.

   The Y-scale of the signal is displayed.

   The signal curve is brought into the foreground in the curve diagram.

Selecting individual bits for display as a bit track

To display individual bits as a bit track in the lower curve diagram, proceed as follows:

1. Click the icon of a signal in the signal table.
2. Click the icon in the open bit selection of the signal.

   The bits are selected or deselected for display.

See also

Displaying the recording (Page 55)

3.6.3 Using the signal group in the signal table

Individual signals can be scaled identically in a signal group, which makes it easier to compare the curve characteristics.

Binary signals cannot be grouped.

The following operating instructions describe how to work with the signal group.

Note

Saving signal groups

The signal groups can be saved individually for each measurement via the "Use current view as standard" function (button).

If the signal groups and the project are not saved then the signal groups created will be lost when the "Diagram" tab is closed.

Requirements

- An installed trace or a measurement is displayed.
- The button is activated to monitor an installed trace.
- The "Diagram" tab is open in the working area.
- There are at least two signals in the signal table that are not of the BOOL type.

Assigning signals to a signal group

To apply a signal group and assign signals to this group, proceed as follows:

1. In the signal table, select the line or cell of the required signal.
2. Click the gray field in the "Signal group" column.

   The sequence icon is displayed in the gray field and the name of the signal group is pre-assigned: Group
3. Click the gray fields of further signals that are to be assigned to this signal group.

Or:

1. Click in the text field of the "Signal group" column for a signal to be grouped.
2. Enter a name for the group.
3. Enter the same group name in the respective text fields for further signals or select the group name via the drop-down list.

The Y-scales of the grouped signals are scaled with the values of the signal that was selected first. Changes to a scale value always affect the entire group.

Removing signals from a signal group

To delete the assignment of a signal to a signal group, proceed as follows:

1. Click the sequence icon for the required signal in the "Signal group" column.

Or:

1. Click the text field for the required signal in the "Signal group" column.
2. Press the <Del> key.

Or:

1. Select the respective text field in the "Signal group" column for several signals using the <Shift> and <Ctrl> keys.
2. Press the <Del> key.

The signals are removed from the signal group or the signal group is deleted.

3.6.4 Observation of fast signals

Requirements

- There is an online connection to the device.
- There is a trace in the device.

Procedure

To monitor the progress of a fast signal, proceed as follows:

1. Select a trace in the device.
2. Double-click the selected trace.
3. Click on the button for monitoring.
4. Click on the button to automatically repeat the recording.

Result

The recording is automatically re-activated at the end of each recording. The display in the curve is similar to the display of an oscilloscope.

3.6.5 Compare records (overlay measurements)

Requirement

- An overlay measurement is created or is created implicitly by dragging the measurements to the system folder “Overlay measurements”.

  See also Apply overlay measurement (Page 51).

Adding measurements for comparison

To compare measurements, insert the measurements to be compared to the overlay measurements. Proceed as follows for this:

1. In the project tree drag one or more measurements from the system folder “Measurements" to the icon for the overlay measurement .

Or:

1. Import saved measurements via the “Import measurement” shortcut menu command.

A copy of the measurements is added to the overlay measurement.

Note

Changes to the settings for measurements within the overlay measurement have no impact on the original measurements. The original measurements remain unchanged.

Select signals of the measurements for the signal table

Proceed as follows to select the signals for the signal table in the “Diagram” tab:

1. Double-click on the icon for the overlay measurement in the project tree.

   The tabs for the overlay measurement will be displayed in the working area.
2. Click the “Signal selection" tab in the working area.

   The signals for all measurements are displayed in the table.
3. Activate or deactivate the signal check box for those signals that should be visible or should not be visible in the signal table.

The activated signals are displayed in the signal table of the “Diagram” tab.

Use of the signal table

Proceed as follows to open and use the signal tables:

1. Click the “Diagram" tab in the working area.
2. Click on the “Signals” tab within the “Diagram” tab.
3. Use the signal tables as described under Use of the signal table (Page 64).

Align measurements

Proceed as follows to align the time axis for the measurements for the comparison:

1. Click on the “Measurements” tab within the “Diagram” tab.
2. Select the alignment for the measurements via the check box.
3. Adjust the alignment and if necessary set an offset for the alignment of the individual measurements.

The measurements are aligned with each other accordingly on the time axis.

(The precise alignment of two measurements is described in the next section.)

Use of the curve diagram

Proceed as follows to open and use the curve diagram:

1. Click the “Diagram" tab in the working area.
2. Use the curve diagram as described under Use of the curve diagram (Page 62).

See also

Align measurements precisely (overlay measurements) (Page 69)

3.6.6 Align measurements precisely (overlay measurements)

Requirement

- An overlay measurement is applied.
- Measurements for comparison are added to the overlay measurement.
- Signals of the measurements for the signal table are selected.
- The “Diagram” tab for the overlay measurement opens in the working area.

Align measurements precisely with position difference ΔX

Proceed as follows to align the time axis for two measurements precisely:

1. Display the vertical measurement cursors via the button.
2. Zoom into the time range, e.g. with the button until you are able to position the first measurement cursor precisely on the desired reference point for the first measurement.
3. Move the first measurement cursor with the mouse to the required position.
4. Search for the reference point for the second measurement, e.g. by switching to “Display all” with the button.
5. Zoom into the time range, e.g. with the button until you are able to position the second measurement cursor precisely on the desired reference point for the second measurement.
6. Move the second measurement cursor with the mouse to the required position.
7. Open the “Trace" task card.
8. In the “Measurement cursor” pane select the position difference value ΔX.
9. Copy the value to the clipboard.
10. Insert the value from the clipboard into the Offset cell of the first or second measurement.

Both measurements are precisely aligned with each other at the desired measurement points.

Note

When inserting the position difference as the offset make sure that you also adjust the leading character as necessary.

3.6.7 Printing a recording

The curve diagram supports the saving of the display as a graphic and the copying of the display to the clipboard. Also use these functions (Page 23) for printing.

Devices 4

4.1 S7-1200/1500 CPUs

4.1.1 Recordable variables

Device-dependent recording of tags

The following list shows the operand areas from which tags can be recorded:

- Process image input
- Process image output
- Bit memory
- Data blocks

Data types

A selection of elementary and composite data types can be recorded. The availability of the individual data types depends on the device used:

For more information, see the help under "Overview of valid data types".

The following table lists the supported data types:

Data types	Note
Binary numbers	
BOOL	-
Bit strings	
BYTE	-
WORD	-
DWORD	-
LWORD [1)]	Symbolic name required
Integers	
SINT	-
USINT	-
INT	-
UINT	-
DINT	-
UDINT	-
LINT [1)]	Symbolic name required
ULINT [1)]	Symbolic name required

Data types	Note
Floating-point numbers	
REAL	-
LREAL	Symbolic name required
Timers	
TIME	-
LTIME [1)]	-
Date and time	
DATE	-
TOD	-
LTOD [1)]	-
LDT [1)]	-

1) Not supported by S7-1200.

4.1.2 Lifetime of the installed trace configuration and recorded values

Installed trace configurations are retained after POWER OFF. The recording is activated again after the restart of the CPU.

Recorded values are lost during the restart.

Note

Downloading a configuration to the device in the "STOP" operating state

Note that after downloading a configuration in the "STOP" operating state, you must check the installed traces and, if required, reactivate them or transfer them again.

Note

If trigger tags that affect the address are changed, the trace configuration must also be transferred to the device again.

This is the case for example, when a data block is shortened or extended or the data type is changed.

4.1.3 Recording levels

All runtime levels can be used for the recording cycle. The cyclic execution levels are offered for selection via the button . In non-periodic recording levels, the recording time is undefined.

Note

The measured values are recorded at the end of the OB after the processing of the user program.

4.1.4 Quantity structure

The following table shows the maximum quantity structure that can be recorded with the trace and logic analyzer function:

Device	Maximum number of installed traces	Maximum number of signals per trace configuration
S7-1200 (as of firmware version V4.0)	2	16
S7-1500, ET 200SP, CPU 1516pro-2 PN, S7-1500 Software Controller	At least 4 (depending on the CPU type)	16

Example CPU 1516-3 PN/DP

- Maximum of 3854 samples for 16 signals from PLC tags of the DWORD data type
- Maximum of 21844 samples for 16 signals from PLC tags of the BOOL data type
- Maximum of 58250 samples for 1 signal from a PLC tag of the BOOL data type

Further information can also be found in the form of FAQs under the ID 102781176 (http://support.automation.siemens.com/WW/view/en/102781176).

4.1.5 CPU load through trace recording

A trace recording increases the runtime of the respective recording level that can result in an execution level overflow with high utilization of the CPU.

Remedy for execution level overflow:

- **Change the trace configuration**

  1) Configure fewer tags and signals.

  2) Then increase the number of tags and signals up to the maximum number of signals step-by-step without an execution level overflow.

- **Select a slower recording level**

4.1.6 Software user interface of the configuration

4.1.6.1 Structure of the user interface

Display areas in the "Configuration" tab of the working area

The settings options differ depending on the configured device.

The following figure shows an example of the display in the TIA Portal:

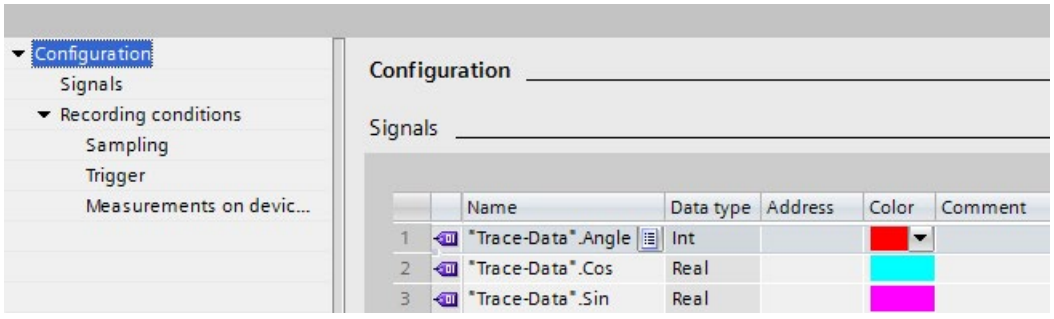

The area navigation provides the following entries for selection:

- Configuration
  - Signals (Page 75)
  - Recording conditions (Page 77)

Displaying and changing properties of a trace configuration

A trace is selected in the project tree and displayed in the "Configuration" tab.

The trace configuration can only be changed offline and is displayed online with the write protection.

4.1.6.2 User interface - Signals

The "Signals" area shows a table in which the signals to be recorded are configured for the selected trace configuration.

Signals can also be inserted in the table using drag-and-drop.
The signals can be sorted using drag-and-drop.

Setting options and displays in "Signals"

The following figure shows an example of the display in the TIA Portal:

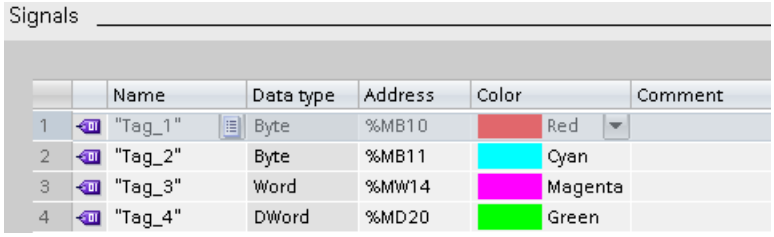

The following table shows the settings and displays:

Column	Icon	Description
		Display of the signal icon for a selected signal.
"Name"	-	Input field for the name or address of the signal. **Examples:** • “Data_block_1”.pressure • M0.0 • DB1.DBW3
-		Button to open the signal selection table. The button is displayed when the table line is selected. Clicking the icon opens a table which offers possible signals for selection. The selected signal is displayed in the input field.
"Data type"	-	Text field with display of the data type for the signal.
"Address"	-	Input field for the address of the signal. The field remains empty with optimized / type correct tags.
"Color"	-	Text field for display and selection of the color. Click the signal color to open the color selection dialog.
"Comment"		Input field for a comment on the signal.

Shortcut menu commands

The following table shows the shortcut menu commands of the table:

Shortcut menu command	Description
"Cut"	Cannot be selected.
"Copy"	Copies the contents of the selected lines to the clipboard.
"Paste"	Pastes the contents of the clipboard to the selected line. The existing contents are overwritten.
"Delete"	Deletes the selected lines from the table or deletes the content of the selected cell.
"Rename"	Switches the selected cell to the editing mode.

4.1.6.3 Recording conditions

User interface - Recording conditions

The "Recording conditions" area shows the trigger condition for the selected trace configuration and in which cycle, how fast and how long the recording is made. Configuration is possible when the trace configuration is displayed in offline mode or online mode with deactivated viewing .

Setting options and displays in "Recording conditions"

The following figure shows an example of the settings for the sampling in the TIA Portal:

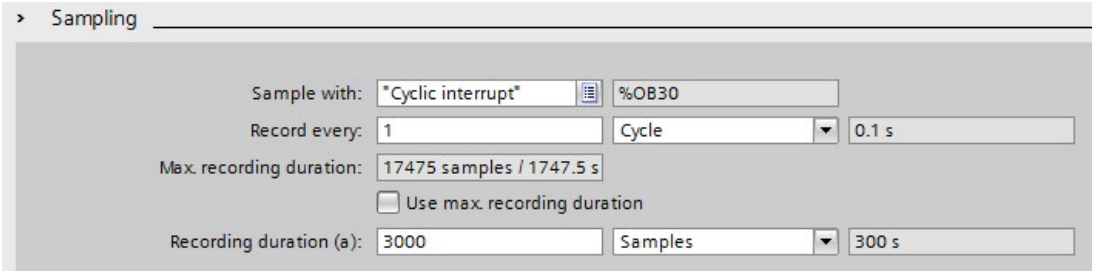

The following table explains the settings and displays:

Setting/display		Description
"Recording time"		
	Recording level entry field	Selection of the recording time. See Recording levels (Page 73)
	Address of the OB text field	Detailed information on the selected recording time.
"Record every"		
	Reduction entry field	Input of the reduction in relation to the reduction ratio and the unit.
	Reduction ratio drop-down list	Selection of the reduction ratio unit The following settings are possible: • "Cycle" • "s" (setting option depends on the recording level selected under “recording time”)
	Sampling time text field	Display of the sampling time, taking into account the configured reduction and the selected unit (only for constant bus cycle time OBs).
"Max. recording duration"		
	Max. recording duration text field	Displays the calculated maximum recording duration. The "Max. recording duration" depends on how many signals are recorded and the data type of these signals.
	"Use max. recording duration"	Set the recording duration to the maximum value. When the checkbox is activated, the recording duration is set to the maximum possible recording duration. The set reduction in the "Record every" input field is taken into account. The recording duration is also adapted when additional signals are added. Further information can also be found in the form of FAQs under the ID 102781176 (http://support.automation.siemens.com/WW/view/en/102781176).
"Recording duration"		
	Recording duration entry field	Input of the recording duration in relation to the selected unit. If the "Recording duration = max. recording duration" checkbox is activated, entries are overwritten by the value displayed in "Max. recording duration".
	Unit drop-down list	Selection of the unit for the recording duration. The following settings are possible: • "Samples" The maximum number of samples recorded is the number for which parameters are assigned under recording duration. • "s" (setting option depends on the recording level selected under “recording time”)
	Calculated recording duration text field	Display of the calculated recording duration (only for constant bus cycle time OBs)

The following figure shows an example of the settings for the trigger in the TIA Portal:

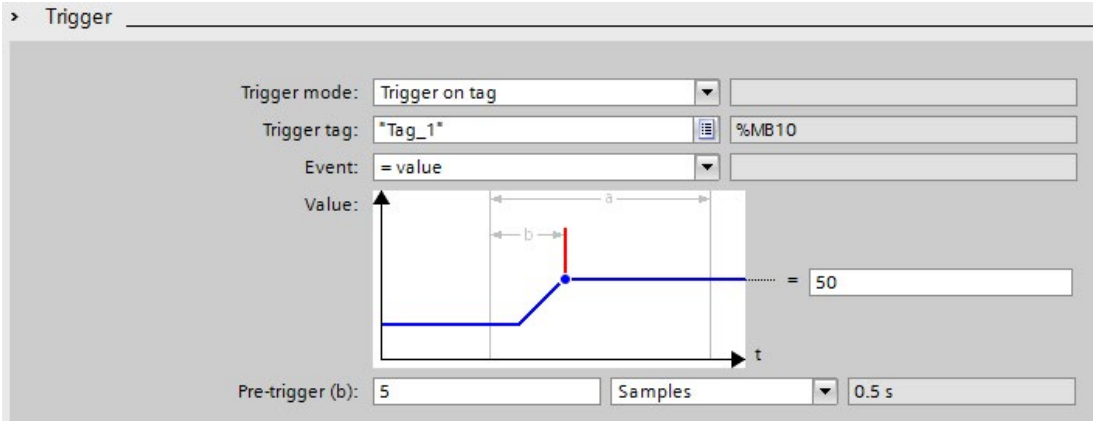

The following table explains the settings and displays:

Setting/display			Description
"Trigger mode"			Selection of the trigger mode.
	Trigger mode drop-down list		The following settings are possible: • "Record immediately" The recording is made immediately after the device is activated. • "Trigger on tag" The recording is made as soon as the installed trace is activated and the configured trigger condition is fulfilled.
	Text field		-
"Trigger tag"			The "Trigger tag" specifies a signal that triggers the recording.
	Trigger tag entry field		Enter a signal. **Examples:** • "DataBlock_1".Temperature • M0.0 • DB1.DBW3 See also Data types for trigger tags (Page 84).
			Opens the signal selection table. Clicking the icon opens a table which offers possible signals for selection as trigger tag. The selected signal is displayed in the input field.
	Trigger tag address text field		Display of the trigger tag address. With purely symbolic signals the field remains empty.
"Event"			The events that can be used on this trigger tag are offered for selection according to the data type of the trigger tag. The event can only be configured when a valid signal has been entered as trigger tag.
	Trigger events drop-down list		Event selection for which the trigger tag is checked. The entries in the drop-down list are described in Section Trigger event (Page 84).
	Text field		-
"Value"			Configuration of the selected event. The configuration options differ depending on the format of the trigger tag and the selected event. SeeTrigger event (Page 84).

Setting/display		Description
"Pre-trigger"		"Pre-trigger" defines the number of samples that are already recorded before the actual trigger condition is fulfilled. If the trigger event occurs immediately or shortly after the activation of the recording, this may result in a shorter recording duration. Examples of "Recording duration (a)" = 20 samples and "Pre-trigger (b)" = 5 samples: • Case 1: Trigger event occurs 50 samples after activation of the recording Actual recording duration (a) = 20 samples • Case 2: Trigger event occurs 2 samples after activation of the recording Actual recording duration (a) = 17 samples
	Duration entry field	Input of the duration in relation to the selection in the drop-down list.
	Unit drop-down list	Selection of the unit The following settings are possible: • "Samples" • "s" (setting option depends on the recording level selected under “recording time”)
	Resulting pre-trigger duration text field	Display of the calculated "Pre-trigger" duration (only for recording in constant bus cycle time OBs)

The following figure shows an example of the settings for the saving of installed measurements:

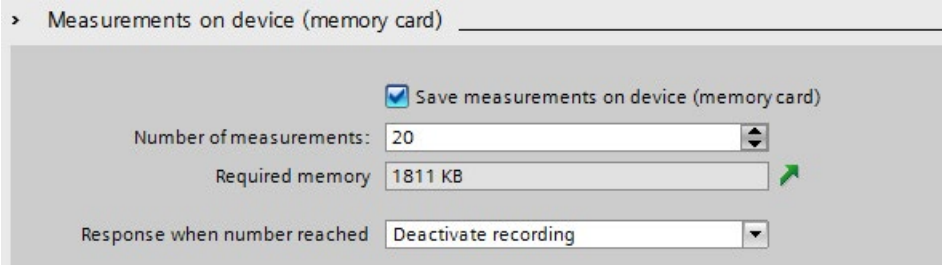

Note

Available memory in the device (memory card)

The memory in the device (memory card) is partly used by system-relevant functions or reserved for that purpose.

Thus it is not possible for the entire memory to be used for saving measurements.

For further information please refer to the Function Manual Structure and Use of the CPU Memory (https://support.industry.siemens.com/cs/us/en/view/59193101).

Note

Memory requirements upon restart

Following a device reboot the maximum number of measurements saved in the device is the number configured under “Number of measurements”.

With repeated restarts note that the measurements already saved are not overwritten and the “Number of measurements” configured in the device is saved once again.

The following table explains the settings and displays:

Setting/display	Description
“Saving of installed measurements (memory card)”	Repeat measurement automatically and store in the device retentively This setting is only possible with “Trigger on tag” trigger mode. The measurements are stored on the “primary” memory card. For traces which have been saved in the device (memory card), the function for automatically repeating the recording is not available. **Note** Only completed measurements are saved on the device. Any recording deactivated by the user is not saved on the device. **This function is available with the following firmware versions:** • S7-1200 as of V4.2 • S7-1500 as of V2.0 The function is not supported by CPU S7-1500 R/H.
“Number of measurements”	Input of the number of measurements to be saved on the card.
“Memory requirements”	Display of the expected memory requirement for all measurements
	Displaying memory usage Shows the tab with the memory usage
“Behavior if number reached”	Selection for the behavior once “Number of measurements” is reached The following settings are possible: • “Deactivating a recording” The measurements are repeated until the “Number of measurements on the card” is reached. • “Overwrite oldest recording” The measurements are saved in a ring buffer and repeated until the user deactivates the recording. Once the number of measurements exceeds the “Number of measurements on the card” the oldest measurement on the card is overwritten in each case. **Note** Note that write processes that are repeated frequently may damage the card.

Data types for trigger tags

The following table shows the supported data types for the trigger tag:

Memory requirement and format of the number	Data type
1 byte	BOOL
8-bit integers	SINT, USINT, BYTE
16-bit integers	INT, UINT, WORD, DATE
32-bit integers	DINT, UDINT, DWORD, TIME, TOD
64-bit integers [1)]	LINT, ULINT, LWORD, LTIME, LTOD, LDT
32-bit floating-point numbers	REAL
64-bit floating-point numbers	LREAL

1) Not supported by S7-1200.

Trigger event

Depending on the selection in the drop-down list, the further settings differ for the "event".

The individual events are described below.

"=TRUE"

Supported data types: Bit (Page 84)

The recording starts when the state of the trigger is TRUE.

"=FALSE"

Supported data types: Bit (Page 84)

The recording starts when the state of the trigger is FALSE.

"Rising edge"

Supported data types: Bit (Page 84)

The recording is started when the trigger state changes from FALSE to TRUE.
After activation of the installed trace, at least two cycles are required to identify the edge.

"Rising signal"

Supported data types: Integers and floating-point numbers (Page 84) (no times, date and time of day)

The recording is started when the rising value of the trigger reaches or exceeds the value configured for this event.
After activation of the installed trace, at least two cycles are required to identify the edge.

"Falling edge"

Supported data types: Bit (Page 84)

The recording is started when the trigger state changes from TRUE to FALSE.
After activation of the installed trace, at least two cycles are required to identify the edge.

"Falling signal"

Supported data types: Integers and floating-point numbers (Page 84)
(no times, date and time of day)

The recording is started when the falling value of the trigger reaches or falls below the value configured for this event.
After activation of the installed trace, at least two cycles are required to identify the edge.

"In the range"

Supported data types: Integers and floating-point numbers (Page 84)

The recording starts as soon as the value of the trigger is in the value range configured for this event.

"Outside of the range"

Supported data types: Integers and floating-point numbers (Page 84)

The recording starts as soon as the value of the trigger is outside the value range configured for this event.

"Value change"

All data types are supported.

The value is checked for change when the recording is activated. The recording starts when the value of the trigger changes.

This trigger event is supported as of V13 SP1. Older versions of the TIA Portal cannot interpret the trigger. Note that no explicit information is output in this case. This can occur, for example, when the trace is transferred from a CPU to a TIA Portal less than V13 SP1 or a trace configuration is imported.

"= value"

Supported data types: Integers (Page 84)

The recording starts when the value of the trigger is equal to the value configured for this event.

"<> value"

Supported data types: Integers (Page 84)

The recording starts when the value of the trigger is not equal to the value configured for this event.

"= bit pattern"

Supported data types: Integers and floating-point numbers (Page 84)
(no times, date and time of day)

The recording starts when the value of the trigger matches the bit pattern configured for this event.

The following figure shows the setting options for a "bit pattern":

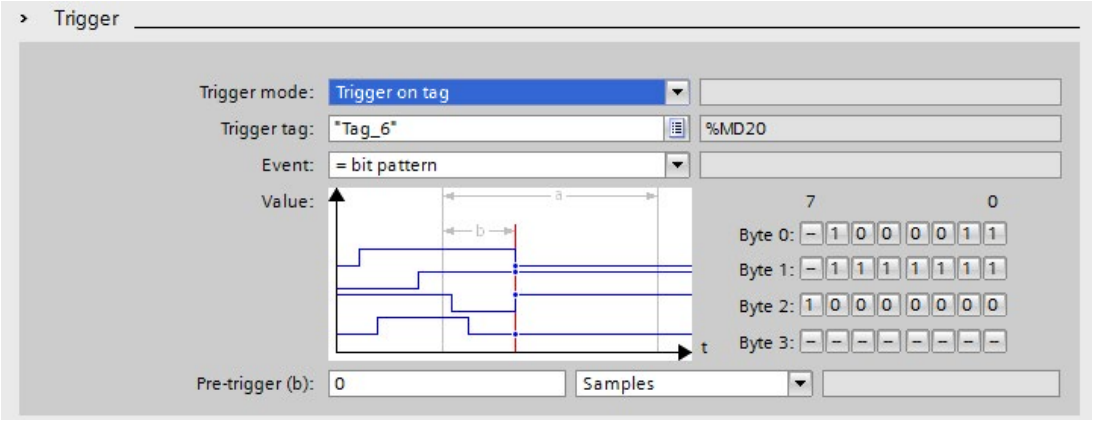

It is possible to switch between the icons by clicking the respective button.

The following table shows the icons:

Icon	Description
–	Bit is not evaluated
0	Bit is checked for FALSE
1	Bit is checked for TRUE

"<> bit pattern"

Supported data types: Integers and floating-point numbers (Page 84)
(no times, date and time of day)

The recording starts when the value of the trigger does not match the bit pattern configured for this event.

See also

Configuring the trigger conditions (Page 89)

Recordable variables (Page 71)

4.1.7 Configuration

4.1.7.1 Trace configuration - overview

The configuration of the recording conditions and the signals to be recorded is device-specific.

Requirement

A trace configuration has been created and opened in the working area of the "Configuration" tab.

Procedure

The following table shows the procedure for configuring.

Step	Description
1	Documentation of the configuration (optional) Enter a comment and an author for the configuration in the Inspector window.
2	Selecting signals (Page 88) Select the signals to be recorded in the "Signals" area.
3	Select a recording time, a cycle and the duration in the "Recording conditions" area.
4	Configuring the trigger conditions (Page 89) In the "Recording conditions" area, select whether the recording is to be performed immediately or depending on a trigger condition.
5	Configure installed measurements (memory card) (Page 90) In the "Recording conditions" area, select whether the recording is to be saved on the device (memory card).

4.1.7.2 Selecting signals

Requirement

- A trace configuration has been created and opened.
- The "Signals" area is open in the "Configuration" tab.

Procedure

To configure the signals to be recorded, proceed as follows:

1. Select a signal. The following options are available:
   – In the "Name" column, click the button and select a tag.
   – Enter the symbolic tag name in the cell in the "Name" column.
   – Enter the address directly in the "Address" column.
   – Drag a signal to the table using drag-and-drop.
2. Click in the "Color" column and select a color for the display of the signal.
3. Click in the "Comment" column and enter a comment for the signal.
4. Repeat the procedure from step 1 until all the signals to be recorded have been entered in the table.

4.1.7.3 Configuring the recording cycle and duration

Requirement

- A trace configuration has been created and opened.
- The "Recording conditions" area is open in the "Configuration" tab.

Procedure

To configure the cycle and the duration of a recording, proceed as follows:

1. Click the button for the recording time.
2. Select an OB for the recording time (Page 73).
3. Select a unit for the reduction factor in the drop-down list for "Record every".
4. Enter the factor for the reduction in the input field for "Record every".
5. Select a unit in the drop-down list for "Recording duration".
6. Specify the recording duration.
   The following options are available:
   – Enter a value for the duration in the input field for "Recording duration".
   – Activate the "Use max. recording duration" checkbox.

4.1.7.4 Configuring the trigger conditions

Requirement

- A trace configuration has been created and opened.
- The "Recording conditions" area is open in the "Configuration" tab.

"Record immediately" trigger condition

To start the recording immediately, proceed as follows:

1. Select the "Record immediately" entry in the drop-down list for "Trigger mode".

   The input fields for the trigger tag are hidden.

"Trigger on tag" trigger condition

To start the recording depending on a condition, proceed as follows:

1. Select the "Trigger on tag" entry in the drop-down list for "Trigger mode".
2. Select a trigger tag. The following options are available:
   - Click the button for the trigger tag and select a tag.
   - Enter the address or the symbolic name of the tag directly in the input field for the trigger tag.

   A drop-down list with events and input fields is displayed. The display depends on the data type of the tag.
3. Configure the event.
4. Select a unit for the pre-trigger in the drop-down list for "Pre-trigger".
5. In order to record a period before the trigger event, enter a value greater than 0 in the input field for the pre-trigger.

Note

Cyclic test of the trigger condition

The trigger condition is checked in every cycle irrespective of the setting in "Record every". To reliably identify the trigger, the trigger signal must be present for at least one full cycle.

4.1.7.5 Configure installed measurements (memory card)

Requirement

- A trace configuration has been created and opened.
- The "Recording conditions" area is open in the "Configuration" tab.
- The “Trigger on tag” trigger mode is set.
- The firmware on the device supports the recording of an installed measurement.

Procedure

Proceed as follows to save the installed measurement (on the memory card):

1. Select the "Save measurements on device (memory card)" check box.
2. Enter the number of measurements that ought to be saved on the card in the “Number of measurements” entry field.
3. Set the desired behavior once the “Number of measurements” has been reached in the “Behavior if number reached” drop-down list.

Note

No evaluation of the trigger during saving

No new trigger can be evaluated as long as the recording is saved.

Glossary

Curve diagram

Displays the selected signals of a recording.

Installed trace

Consists of a trace configuration and optionally a recording.

Measurement

Consists of a trace configuration with an associated recording.

Overlay measurement

Permits a comparison and analysis of signals from different measurements.

Pre-trigger

Defines the interval in which the signals are already recorded before the actual trigger condition is fulfilled.

Recording

Is performed in the device. There is only one recording for each installed trace configuration.

Recording condition

Sampling and trigger for a trace configuration.

Recording duration

Factor in number of samples. The factor of 100 means, for example, that 100 samples are recorded.

Reduction

Factor in number of cycles. A factor of 2 means, for example, that a recording is made every second cycle.

Sampling

Setting, in which cycle, how fast and how long the recording is to be made.

Signal table

Lists the signals of the selected measurement and provides setting options for some properties.

Snapshot

Contains the settings for the view for a measurement.

Trace configuration

Contains all the information required to record values in a device.

Trigger

Specifies the trigger mode and the condition for the "Trigger on tag" mode.

Trigger mode

Specifies whether the recording should be started immediately or based on a trigger tag.

Trigger tag

Signal to trigger the recording.

Trigger time

The meaning of the measurement trigger time depends on the device.

e.g. SIMATIC S7-1200/1500 CPUs: Specifies the absolute time of the control system at the start of recording.

Index

C

CPU load through trace, 73

L

Logic analyzer function, 8

M

Measurements
- Project navigator, 18

T

Trace, 8, 8, (Trigger time)
- Align overlay measurements, 69
- Analyze an ongoing recording, 56
- Apply overlay measurement, 51
- Bit track, 23
- Configure project navigator into groups, 52
- CPU load, 73
- Creating a trace configuration, 50
- Curve diagram, 23, 62
- Data storage, 13
- Displaying a diagram, 51
- Displaying a trace configuration, 50
- Inspector window, 44
- Installed measurements (memory card), 11, 19
- Installed trace, 11
- Keyboard operation, 25
- Lifetime of the values, 72
- Mathematical functions, 33
- Measurement, 11, 13, 57, 58
- Measurement cursor, 62
- Measurement cursor pane, 41
- Monitor fast signals, 66
- Mouse wheel, 24
- Overlay measurement, 12, 20, 37, 67
- Pre-trigger, 81
- Printing, 70
- Project navigator, 16
- Quantity structure, 73
- Quick start, 45
- Recordable tags, 71
- Recording, 11, 54, 55
- Recording conditions, 77, 84, 84
- Recording cycle, 46, 88
- Recording duration, 88
- Recording levels, 73
- Reduction, 78
- Sampling, 46
- Save installed measurements, 83, 90
- Saving the trace configuration, 61
- Signal group, 65
- Signal table, 29, 64
- Signals, 75, 88
- Snapshots pane, 43
- Status, 16
- Supported devices, 8
- Time stamp, 44
- Trace configuration, 11, 13, 53, 59, 60, 61, 87
- Trigger, 89
- Trigger mode, 80
- Trigger tag, 80, 84
- User interface, 14, 44, 74

Trace function, 8

Trace S7-1200/1500, 71

SIEMENS

Function manual

SIMATIC

S7-1500, ET 200MP, ET 200SP, ET 200AL, ET 200pro

Communication

Edition 10/2018

support.industry.siemens.com

SIEMENS

SIMATIC

S7-1500, ET 200MP, ET 200SP, ET 200AL, ET 200pro Communication

Function Manual

Preface

Documentation guide 1

Product overview 2

Communications services 3

PG communication 4

HMI communication 5

Open User Communication 6

S7 communication 7

Point-to-point link 8

OPC UA communication 9

Routing 10

Connection resources 11

Diagnostics and fault correction 12

Communication with the redundant system S7-1500R/H 13

Industrial Ethernet Security with CP 1543-1 14

10/2018

A5E03735815-AG

Legal information

Warning notice system

This manual contains notices you have to observe in order to ensure your personal safety, as well as to prevent damage to property. The notices referring to your personal safety are highlighted in the manual by a safety alert symbol, notices referring only to property damage have no safety alert symbol. These notices shown below are graded according to the degree of danger.

⚠ DANGER

indicates that death or severe personal injury **will** result if proper precautions are not taken.

⚠ WARNING

indicates that death or severe personal injury **may** result if proper precautions are not taken.

⚠ CAUTION

indicates that minor personal injury can result if proper precautions are not taken.

NOTICE

indicates that property damage can result if proper precautions are not taken.

If more than one degree of danger is present, the warning notice representing the highest degree of danger will be used. A notice warning of injury to persons with a safety alert symbol may also include a warning relating to property damage.

Qualified Personnel

The product/system described in this documentation may be operated only by **personnel qualified** for the specific task in accordance with the relevant documentation, in particular its warning notices and safety instructions. Qualified personnel are those who, based on their training and experience, are capable of identifying risks and avoiding potential hazards when working with these products/systems.

Proper use of Siemens products

Note the following:

⚠ WARNING

Siemens products may only be used for the applications described in the catalog and in the relevant technical documentation. If products and components from other manufacturers are used, these must be recommended or approved by Siemens. Proper transport, storage, installation, assembly, commissioning, operation and maintenance are required to ensure that the products operate safely and without any problems. The permissible ambient conditions must be complied with. The information in the relevant documentation must be observed.

Trademarks

All names identified by ® are registered trademarks of Siemens AG. The remaining trademarks in this publication may be trademarks whose use by third parties for their own purposes could violate the rights of the owner.

Disclaimer of Liability

We have reviewed the contents of this publication to ensure consistency with the hardware and software described. Since variance cannot be precluded entirely, we cannot guarantee full consistency. However, the information in this publication is reviewed regularly and any necessary corrections are included in subsequent editions.

Siemens AG
Division Digital Factory
Postfach 48 48
90026 NÜRNBERG
GERMANY

A5E03735815-AG
℗ 09/2018 Subject to change

Copyright © Siemens AG 2013 - 2018.
All rights reserved

Preface

Purpose of the documentation

This function manual provides you with an overview of the communication options, the CPUs, communication modules and processors and PC systems of the SIMATIC S7-1500, ET 200MP, ET 200SP, ET 200AL and ET 200pro systems. This function manual describes the connection-oriented, asynchronous communication.

The documentation covers the following:

- Overview of the communication services
- Properties of the communication services
- Overview of the user activities for setting up the communication services

Basic knowledge required

The following knowledge is required in order to understand the Function manual:

- General knowledge of automation technology
- Knowledge of the industrial automation system SIMATIC
- Knowledge about how to use STEP 7 (TIA Portal)

Scope of the documentation

This documentation is the basic documentation for all products of the SIMATIC S7-1500, ET 200MP, ET 200SP, ET 200AL and ET 200pro systems. The product documentation is based on this documentation.

What's new in the Communication Function Manual, Edition 10/2018 as compared to Edition 12/2017?

What's new?		What are the customer benefits?	Where can I find information?
New contents	Description of communication with the redundant system S7-1500R/H	You receive information on the particularities of communication with the redundant system S7-1500R/H	Section Communication with the redundant system S7-1500R/H (Page 283)
	Scope of the function manual expanded to include the redundant system S7-1500R/H	Functions with which you are familiar from the SIMATIC S7-1500 automation system are implemented for the redundant system S7-1500R/H.	Redundant System S7-1500R/H System Manual (https://support.industry.siemens.com/cs/ww/en/view/109754833)

What's new in the Communication Function Manual, Edition 12/2017 compared to Edition 09/2016

What's new?		What are the customer benefits?	Where can I find the information?
New contents	OPC UA Companion Specification	Through OPC UA Companion Specification, methods can be specified in a uniform and manufacturer-neutral way. Using these specified methods, you can easily integrate devices from various manufacturers into the plant and the production processes.	Section AUTOHOTSPOT
	Setting up a secure connection to a mail server over the CPU interface	You can set up a secure connection to a mail server without additional hardware.	Section Secure OUC via e-mail (Page 109)
	Secure communication over Modbus TCP	You can establish secure TCP connections between a Modbus TCP client and a Modbus TCP server.	Section Secure OUC with Modbus TCP (Page 108)

What's new in the Communication Function Manual, Edition 09/2016 compared to Edition 12/2014

What's new?		What are the customer benefits?	Where can I find the information?
New contents	OPC UA server	OPC UA is a uniform standard for data communication and is independent of any particular operating system platforms. OPC UA uses integrated safety mechanisms on various automation systems, for example with data exchange, at application level, for the legitimation of the user. The OPC UA server provides a large amount of data: • Values of PLC tags that clients can access • Data types of these PLC tags • Information about the OPC UA server itself and the CPU In this way, clients can gain an overview of the tag management and can read and write values.	Section AUTOHOTSPOT
	Secure Open User Communication	Secure data exchange with other devices.	Section Secure Open User Communication (Page 94)
	Certificate handling in STEP 7	You can manage certificates for the following applications in STEP 7: • OPC UA server • Secure Open User Communication • Web server of the CPU	Section Managing certificates with STEP 7 (Page 46)
	Deactivating SNMP for the CPU	You can deactivate SNMP for the CPU. This can make sense under certain conditions, for example if the security guidelines in your network do not permit SNMP.	Section Disabling SNMP (Page 60)

Conventions

STEP 7: We refer to "STEP 7" in this documentation as a synonym for the configuration and programming software "STEP 7 as of V12 (TIA Portal)".

"S7-1500 CPUs" also refers to the CPU variants S7-1500F, S7-1500T, S7-1500TF, S7-1500C as well as S7-1500pro CPUs, ET200SP CPUs as well as the SIMATIC S7-1500 SW controller.

This documentation contains pictures of the devices described. The figures may differ slightly from the device supplied.

You should also pay particular attention to notes such as the one shown below:

Note

A note contains important information on the product, on handling of the product and on the section of the documentation to which you should pay particular attention.

Security information

Siemens provides products and solutions with industrial security functions that support the secure operation of plants, systems, machines and networks.

In order to protect plants, systems, machines and networks against cyber threats, it is necessary to implement – and continuously maintain – a holistic, state-of-the-art industrial security concept. Siemens' products and solutions constitute one element of such a concept.

Customers are responsible for preventing unauthorized access to their plants, systems, machines and networks. Such systems, machines and components should only be connected to an enterprise network or the internet if and to the extent such a connection is necessary and only when appropriate security measures (e.g. firewalls and/or network segmentation) are in place.

For additional information on industrial security measures that may be implemented, please visit (https://www.siemens.com/industrialsecurity).

Siemens' products and solutions undergo continuous development to make them more secure. Siemens strongly recommends that product updates are applied as soon as they are available and that the latest product versions are used. Use of product versions that are no longer supported, and failure to apply the latest updates may increase customers' exposure to cyber threats.

To stay informed about product updates, subscribe to the Siemens Industrial Security RSS Feed under (https://www.siemens.com/industrialsecurity).

Siemens Industry Online Support

You can find current information on the following topics quickly and easily here:

- **Product support**

  All the information and extensive know-how on your product, technical specifications, FAQs, certificates, downloads, and manuals.

- **Application examples**

  Tools and examples to solve your automation tasks – as well as function blocks, performance information and videos.

- **Services**

  Information about Industry Services, Field Services, Technical Support, spare parts and training offers.

- **Forums**

  For answers and solutions concerning automation technology.

- **mySupport**

  Your personal working area in Industry Online Support for messages, support queries, and configurable documents.

This information is provided by the Siemens Industry Online Support in the Internet (https://support.industry.siemens.com).

Industry Mall

The Industry Mall is the catalog and order system of Siemens AG for automation and drive solutions on the basis of Totally Integrated Automation (TIA) and Totally Integrated Power (TIP).

You can find catalogs for all automation and drive products on the Internet (https://mall.industry.siemens.com).

Table of contents

Preface 3

1 Documentation guide 12

2 Product overview 17

3 Communications services 22

3.1 Overview of communication options 22

3.2 Communications protocols and port numbers used for Ethernet communication 25

3.3 Overview of connection resources 30

3.4 Setting up a connection 30

3.5 Data consistency 34

3.6 Secure Communication 37
3.6.1 Basics of Secure Communication 37
3.6.2 Confidentiality through encryption 40
3.6.3 Authenticity and integrity through signatures 43
3.6.4 Managing certificates with STEP 7 46
3.6.5 Examples for the management of certificates 50
3.6.6 Example: HTTP over TLS 56

3.7 SNMP 60
3.7.1 Disabling SNMP 60
3.7.2 Example: Disabling SNMP for a CPU 1516-3 PN/DP 61

4 PG communication 63

5 HMI communication 65

6 Open User Communication 67

6.1 Overview of Open User Communication 67

6.2 Protocols for Open User Communication 68

6.3 Instructions for Open User Communication 70

6.4 Open User Communication with addressing via domain names 75

6.5 Setting up Open User Communication via TCP, ISO-on-TCP, UDP and ISO 77

6.6 Setting up communication over FDL 83

6.7 Setting up communication with Modbus TCP 86

6.8 Setting up communication via e-mail 89

6.9 Setting up communication via FTP 90

6.10 Establishment and termination of communications relations 93

6.11 Secure Open User Communication 94
6.11.1 Secure OUC of an S7-1500 CPU as TLS client to an external PLC (TLS server) 94
6.11.2 Secure OUC of an S7-1500 CPU as TLS server to an external PLC (TLS client) 97
6.11.3 Secure OUC between two S7-1500 CPUs 99
6.11.4 Secure OUC via CP interface 103
6.11.5 Secure OUC with Modbus TCP 108
6.11.6 Secure OUC via e-mail 109

7 S7 communication 114

8 Point-to-point link 123

9 OPC UA communication 128

9.1 What you need to know about OPC UA 128
9.1.1 OPC UA and Industrie 4.0 128
9.1.2 OPC UA for S7-1500 CPUs 128
9.1.3 General features of OPC UA 130
9.1.4 From the Classic OPC interface to OPC UA 131
9.1.5 Addressing nodes 132
9.1.6 Mapping of data types 136
9.1.7 What you need to know about OPC UA clients 138

9.2 Security at OPC UA 143
9.2.1 Security settings 143
9.2.2 Certificates pursuant to ITU X.509 144
9.2.3 Certificates with OPC UA 147
9.2.4 Creating self-signed certificates 148
9.2.5 Generating PKI key pairs and certificates yourself 149
9.2.6 Secure transfer of messages 152

9.3 Using the S7-1500 as an OPC UA server 155
9.3.1 Useful information about the S7-1500 CPU OPC UA server 155
9.3.1.1 The OPC UA server of the S7-1500 CPUs 155
9.3.1.2 End points of the OPC UA server 157
9.3.1.3 Runtime behavior of the OPC UA server 159
9.3.1.4 Diagnostics of the OPC UA server 161
9.3.2 Configuring access to PLC tags 163
9.3.2.1 Managing write and read rights 163
9.3.2.2 Managing write and read rights for a complete DB 165
9.3.2.3 Accessing OPC UA server data 166
9.3.2.4 Export OPC UA XML file 167
9.3.3 Configuring the OPC UA server of the S7-1500 CPU 168
9.3.3.1 Enabling the OPC UA server 168
9.3.3.2 Access to the OPC UA server 170
9.3.3.3 General settings of the OPC UA server 172
9.3.3.4 Settings of the server for subscriptions 173
9.3.3.5 Handling client and server certificates 175
9.3.3.6 Handling of the client certificates of the S7-1500 CPU 180
9.3.3.7 Generating server certificates with STEP 7 183
9.3.3.8 Editing the security settings of the OPC UA server. 186
9.3.3.9 User authentication 189
9.3.3.10 Users and roles with OPC UA function rights 190
9.3.3.11 Licenses for the OPC UA server 192

9.3.4 Providing methods on the OPC UA server ... 193
9.3.4.1 Important facts about server methods ... 193
9.3.4.2 Boundary conditions for using server methods ... 196
9.3.5 OPC UA server interface configuration ... 198
9.3.5.1 What is a server interface? ... 198
9.3.5.2 Create a server interface ... 199
9.3.5.3 Using OPC UA companion specifications ... 202
9.3.5.4 Missing namespaces ... 217
9.3.5.5 Coordinating write and read rights for CPU tags ... 218
9.3.5.6 Consistency of CPU tags ... 220
9.3.5.7 Notes on configuration limits when using server interfaces ... 222

9.4 Using the S7-1500 CPU as an OPC UA client ... 223
9.4.1 Overview and requirements ... 223
9.4.2 Useful information about the client instructions ... 224
9.4.3 Number of client instructions that can be used simultaneously ... 226
9.4.4 Example configuration for OPC UA ... 227
9.4.5 Creating client interfaces ... 228
9.4.6 Determine server interface online ... 237
9.4.7 Using multilingual texts ... 241
9.4.8 Rules for the access to structures ... 243
9.4.9 Using connection parameter assignment ... 245
9.4.9.1 Creating and configuring connections ... 245
9.4.9.2 Handling of the client certificates of the S7-1500 CPU ... 249
9.4.9.3 User authentication ... 252
9.4.9.4 Using a configured connection ... 253

10 Routing ... 260

10.1 S7 routing ... 260

10.2 Data record routing ... 265

11 Connection resources ... 267

11.1 Connection resources of a station ... 267

11.2 Allocation of connection resources ... 271

11.3 Display of the connection resources ... 275

12 Diagnostics and fault correction ... 279

12.1 Connection diagnostics ... 279

12.2 Emergency address ... 282

13 Communication with the redundant system S7-1500R/H ... 283

13.1 System IP addresses ... 284

13.2 Response to Snycup ... 289

13.3 Response to primary-backup switchover ... 289

13.4 Connection resources of the redundant system S7-1500R/H ... 290

13.5 HMI communication with the redundant system S7-1500R/H ... 292
13.5.1 HMI connection via the system IP address ... 292

13.6 Open User Communication with the redundant system S7-1500R/H ... 294
13.6.1 Setting up an Open User Communication connection via the system IP address ... 295

14 Industrial Ethernet Security with CP 1543-1 300

14.1 Firewall 301

14.2 Logging 302

14.3 NTP client 302

14.4 SNMP 303

14.5 VPN 303

Glossary 304

Index 316

Documentation guide 1

The documentation for the SIMATIC S7-1500 automation system, for CPU 1516pro-2 PN based on SIMATIC S7-1500, and for the distributed I/O systems SIMATIC ET 200MP, ET 200SP and ET 200AL is divided into three areas.
This division allows you easier access to the specific information you require.

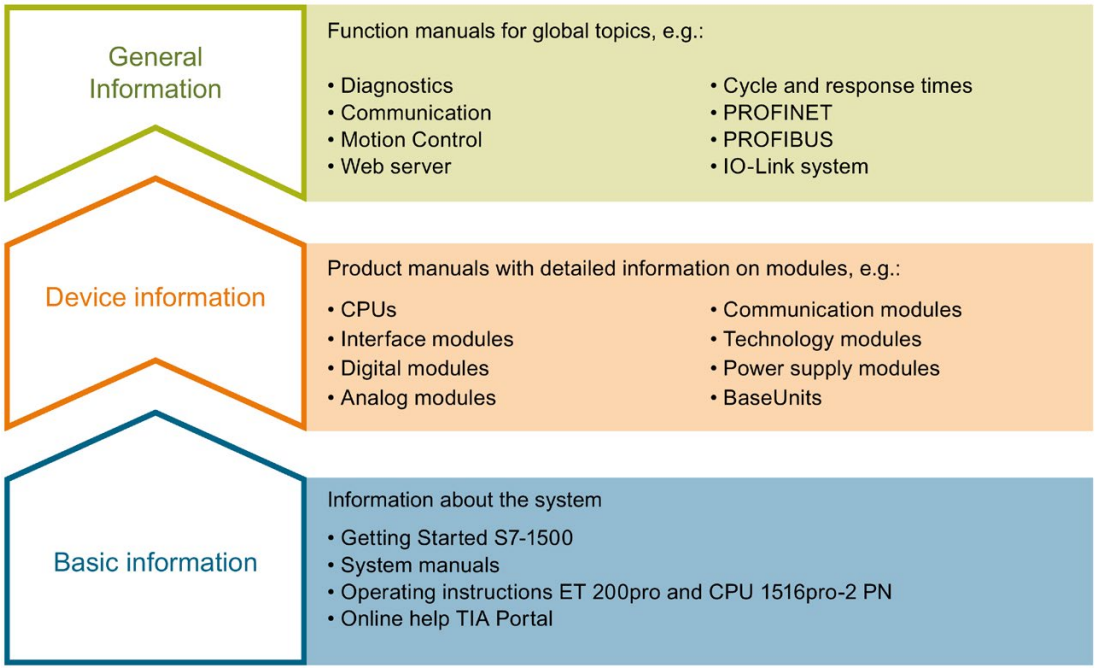

Basic information

System manuals and Getting Started manuals describe in detail the configuration, installation, wiring and commissioning of the SIMATIC S7-1500, ET 200MP, ET 200SP and ET 200AL systems; use the corresponding operating instructions for CPU 1516pro-2 PN. The STEP 7 online help supports you in configuration and programming.

Device information

Product manuals contain a compact description of the module-specific information, such as properties, terminal diagrams, characteristics and technical specifications.

General information

The function manuals contain detailed descriptions on general topics such as diagnostics, communication, Motion Control, Web server, OPC UA.

You can download the documentation free of charge from the Internet (https://support.industry.siemens.com/cs/ww/en/view/109742705).

Changes and additions to the manuals are documented in product information sheets.

You will find the product information on the Internet:

- S7-1500/ET 200MP (https://support.industry.siemens.com/cs/us/en/view/68052815)
- ET 200SP (https://support.industry.siemens.com/cs/us/en/view/73021864)
- ET 200AL (https://support.industry.siemens.com/cs/us/en/view/99494757)

Manual Collections

The Manual Collections contain the complete documentation of the systems put together in one file.

You will find the Manual Collections on the Internet:

- S7-1500/ET 200MP (https://support.industry.siemens.com/cs/ww/en/view/86140384)
- ET 200SP (https://support.industry.siemens.com/cs/ww/en/view/84133942)
- ET 200AL (https://support.industry.siemens.com/cs/ww/en/view/95242965)

"mySupport"

With "mySupport", your personal workspace, you make the best out of your Industry Online Support.

In "mySupport", you can save filters, favorites and tags, request CAx data and compile your personal library in the Documentation area. In addition, your data is already filled out in support requests and you can get an overview of your current requests at any time.

You must register once to use the full functionality of "mySupport".

You can find "mySupport" on the Internet (https://support.industry.siemens.com/My/ww/en).

"mySupport" - Documentation

In the Documentation area in "mySupport" you can combine entire manuals or only parts of these to your own manual.
You can export the manual as PDF file or in a format that can be edited later.

You can find "mySupport" - Documentation on the Internet (https://support.industry.siemens.com/My/ww/en/documentation).

"mySupport" - CAx data

In the CAx data area in "mySupport", you can access the current product data for your CAx or CAe system.

You configure your own download package with a few clicks.

In doing so you can select:

- Product images, 2D dimension drawings, 3D models, internal circuit diagrams, EPLAN macro files
- Manuals, characteristics, operating manuals, certificates
- Product master data

You can find "mySupport" - CAx data on the Internet (https://support.industry.siemens.com/my/ww/en/CAxOnline).

Application examples

The application examples support you with various tools and examples for solving your automation tasks. Solutions are shown in interplay with multiple components in the system - separated from the focus on individual products.

You will find the application examples on the Internet (https://support.industry.siemens.com/sc/ww/en/sc/2054).

TIA Selection Tool

With the TIA Selection Tool, you can select, configure and order devices for Totally Integrated Automation (TIA).
This tool is the successor of the SIMATIC Selection Tool and combines the known configurators for automation technology into one tool.
With the TIA Selection Tool, you can generate a complete order list from your product selection or product configuration.

You can find the TIA Selection Tool on the Internet (https://w3.siemens.com/mcms/topics/en/simatic/tia-selection-tool).

SIMATIC Automation Tool

You can use the SIMATIC Automation Tool to run commissioning and maintenance activities simultaneously on different SIMATIC S7 stations as a bulk operation, independently of the TIA Portal.

The SIMATIC automation tool provides a variety of functions:

- Scanning of a PROFINET/Ethernet plant network and identification of all connected CPUs
- Address assignment (IP, subnet, gateway) and station name (PROFINET device) to a CPU
- Transfer of the date and programming device/PC time converted to UTC time to the module
- Program download to CPU
- Operating mode switchover RUN/STOP
- CPU localization by means of LED flashing
- Reading out CPU error information
- Reading of CPU diagnostic buffer
- Reset to factory settings
- Updating the firmware of the CPU and connected modules

You can find the SIMATIC Automation Tool on the Internet (https://support.industry.siemens.com/cs/ww/en/view/98161300).

PRONETA

With SIEMENS PRONETA (PROFINET network analysis), you analyze the plant network during commissioning. PRONETA features two core functions:

- The topology overview independently scans PROFINET and all connected components.
- The IO check is a fast test of the wiring and the module configuration of a plant.

You can find SIEMENS PRONETA on the Internet (https://support.industry.siemens.com/cs/ww/en/view/67460624).

SINETPLAN

SINETPLAN, the Siemens Network Planner, supports you in planning automation systems and networks based on PROFINET. The tool facilitates professional and predictive dimensioning of your PROFINET installation as early as in the planning stage. In addition, SINETPLAN supports you during network optimization and helps you to exploit network resources optimally and to plan reserves. This helps to prevent problems in commissioning or failures during productive operation even in advance of a planned operation. This increases the availability of the production plant and helps improve operational safety.

The advantages at a glance

- Network optimization thanks to port-specific calculation of the network load
- Increased production availability thanks to online scan and verification of existing systems
- Transparency before commissioning through importing and simulation of existing STEP 7 projects
- Efficiency through securing existing investments in the long term and optimal exploitation of resources

You can find SINETPLAN on the Internet (https://www.siemens.com/sinetplan).

Product overview

2

CPUs, communications modules and processors, and PC systems of the S7-1500, , ET 200MPET 200SPET 200pro and ET 200AL systems provide you with interfaces for communication via PROFINET, PROFIBUS and point-to-point connections.

CPUs, communications modules and communications processors

PROFINET and PROFIBUS DP interfaces are integrated in the S7-1500 CPUs. The CPU 1516-3 PN/DP for example has two PROFINET interfaces and one PROFIBUS DP interface. Other PROFINET and PROFIBUS DP interfaces are available by using communications modules (CM) and communications processors (CP).

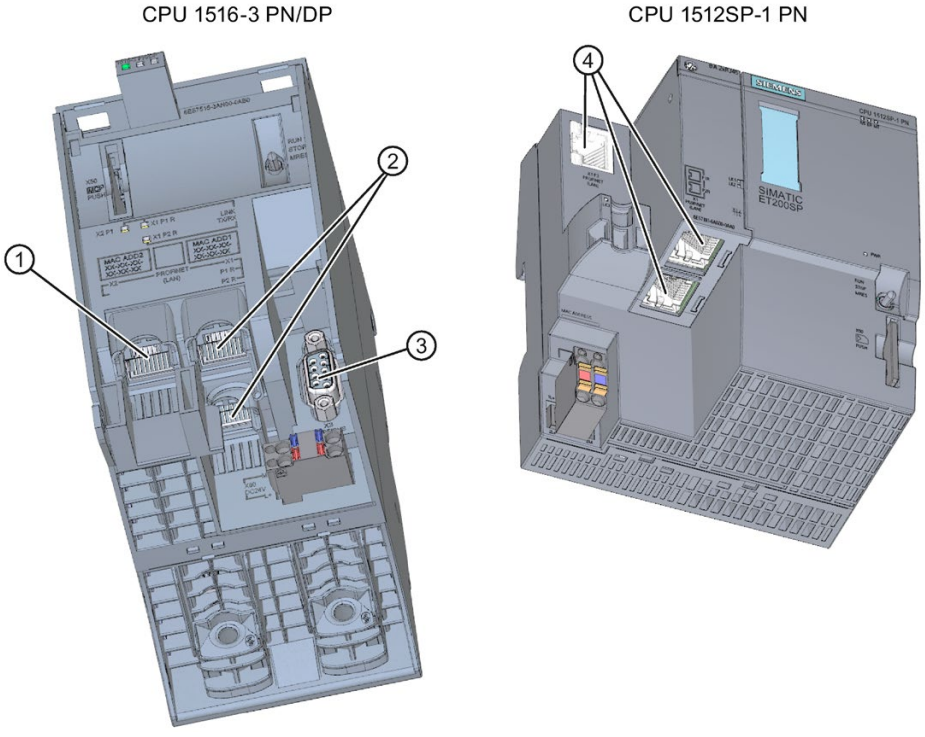

① PROFINET interface (X2) with 1 port
② PROFINET interface (X1) with 2-port switch
③ PROFIBUS DP interface (X3)
④ PROFINET interface (X1) with 3-port switch

Figure 2-1 Interfaces of the CPU 1516-3 PN/DP and CPU 1512SP-1 PN

Interfaces of communications modules

Interfaces of communications modules (CMs) extend the interfaces of CPUs (for example, the communication module CM 1542-5 adds a PROFIBUS interface to S7-1500 automation system).

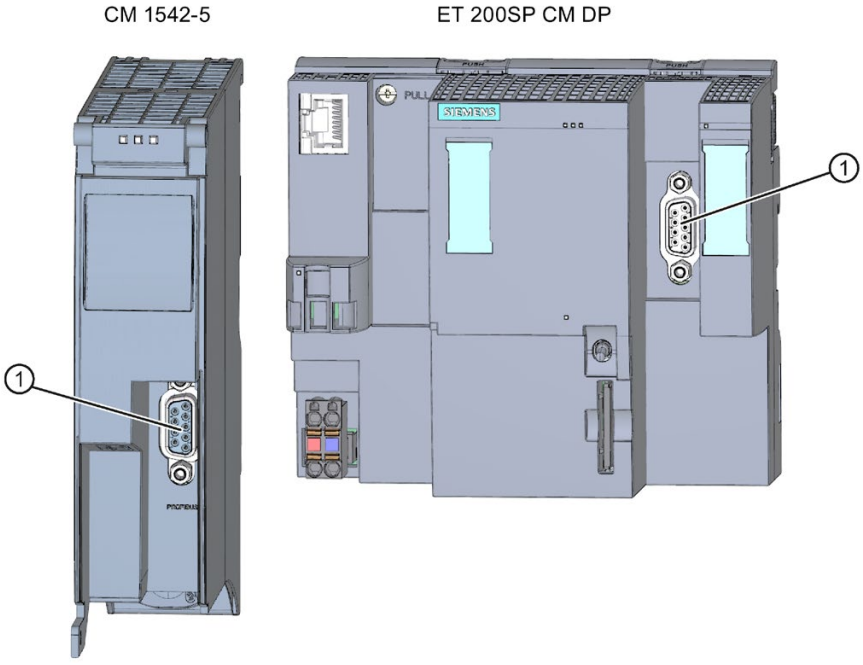

① PROFIBUS DP interface

Figure 2-2 PROFIBUS DP interface of the CM 1542-5 and CM DP

Interfaces of communications processors

Interfaces of communications processors (CPs) provide an additional functionality compared with the integrated interfaces of the CPUs. CPs allow special applications, for example the CP 1543-1 provides Industrial Ethernet security functions for protecting Industrial Ethernet networks via its Industrial Ethernet interface.

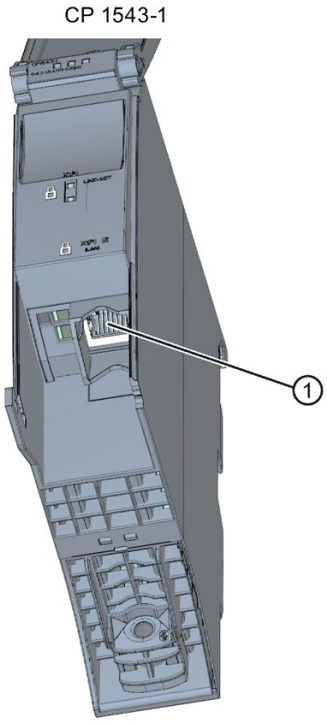

① Industrial Ethernet interface

Figure 2-3 Industrial Ethernet interface of the CP 1543-1

Interfaces of communications modules for point-to-point connections

The communication modules for point-to-point connections provide communication via their RS 232-, RS 422- and RS 485 interfaces, for example, Freeport or Modbus communication.

CM PtP RS422/485 BA

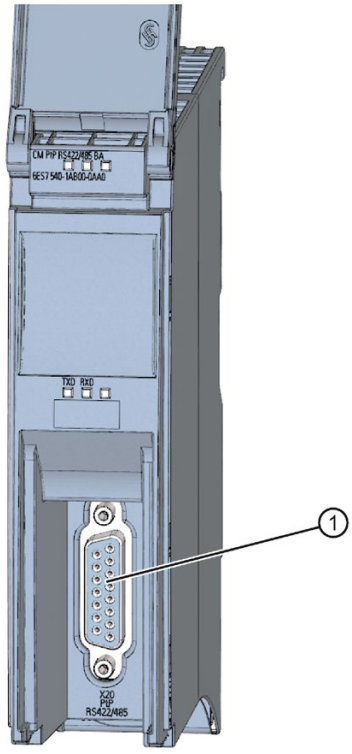

① Interface for point-to-point connections

Figure 2-4 Example of interface for point-to-point connection at the CM PtP RS422/485 BA

Interfaces of interface modules

PROFINET and PROFIBUS DP interfaces of the interface modules (IM) in ET 200MP, ET 200SP and ET 200AL are used to connect the distributed I/O ET 200MP, ET 200SP and ET 200AL to PROFINET or PROFIBUS of the higher-level IO controller or DP master.

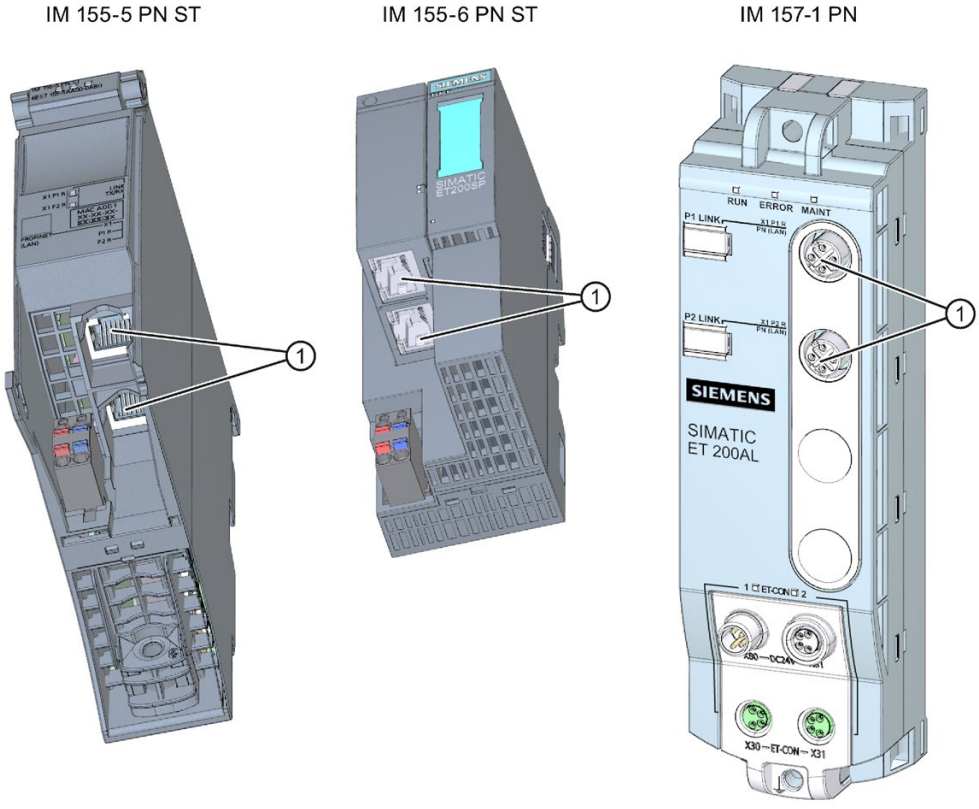

① PROFINET interface with 2-port switch

Figure 2-5 PROFINET interfaces IM 155-5 PN ST (ET 200MP), IM 155-6 PN ST (ET 200SP), and IM 157-1 PN (ET 200AL)

Communications services

The communications services described below use the interfaces and communication mechanisms provided by the system via CPUs, communication modules and processors.

Communications services 3

3.1 Overview of communication options

Overview of communications options

The following communications options are available for your automation task.

Table 3- 1 Communications options

Communications options	Functionality	Via interface:		
		PN/IE[1]	DP	serial
PG communication[2]	On commissioning, testing, diagnostics	X	X	-
HMI communication[2]	On operator control and monitoring	X	X	-
Open communication via TCP/IP[2]	Data exchange via PROFINET/Industrial Ethernet with TCP/IP Instructions: • TSEND_C/TRCV_C • TSEND/TRCV • TCON • T_DISCON	X	-	-
Open communication using ISO-on-TCP[2]	Data exchange via PROFINET/Industrial Ethernet with ISO-on-TCP Instructions: • TSEND_C/TRCV_C • TSEND/TRCV • TCON • T_DISCON	X	-	-
Open communication via UDP[2]	Data exchange via PROFINET/Industrial Ethernet with UDP Instructions: • TSEND_C/TRCV_C • TUSEND/TURCV • TCON • T_DISCON	X	-	-

Communications options	Functionality	Via interface:		
		PN/IE[1]	DP	serial
Open communication via ISO (only CPs with PROFINET/Industrial Ethernet interface)	Data exchange via PROFINET/Industrial Ethernet with the ISO protocol Instructions: • TSEND_C/TRCV_C • TSEND/TRCV • TCON • T_DISCON	X	-	-
Open communication with FDL (only CM 1542-5 as of firmware V2.0)	Data exchange via PROFIBUS with the FDL protocol Instructions: • TSEND_C/TRCV_C • TSEND/TRCV • TUSEND/TURCV • TCON • T_DISCON	-	X	-
OPC UA server (only via internal PROFINET interfaces of the CPU)	Data exchange with OPC UA clients	X	-	-
Communication via Modbus TCP	Data exchange via PROFINET with Modbus TCP protocol Instructions: • MB_CLIENT • MB_SERVER	X	-	-
E-mail	Sending process alarms via e-mail Instruction: • TMAIL_C	X	-	-
FTP (only CPs with PROFINET/Industrial Ethernet interface)	File management and file access via FTP (File Transfer Protocol); CP can be FTP client and FTP server Instruction: • FTP_CMD	X	-	-
Fetch/Write (only CPs with PROFINET/Industrial Ethernet interface)	Server services via TCP/IP, ISO-on-TCP and ISO Via special instructions for Fetch/Write	X	-	-
S7 communication	Data exchange via PROFINET/PROFIBUS with the S7 protocol. Instructions: • PUT/GET • BSEND/BRCV • USEND/URCV	X	X	-

Communications options	Functionality	Via interface:		
		PN/IE[1]	DP	serial
Serial point-to-point connection	Data exchange via point-to-point with Freeport, 3964(R), USS or Modbus protocol Via special instructions for PtP, USS or Modbus RTU	-	-	X
Web server	Data exchange via HTTP(S), for example for diagnostics	X	-	-
SNMP (Simple Network Management Protocol)	For monitoring and error recognition of IP networks, possibly parameterization of the IP network components via standard SNMP protocol	X	-	-
Time-of-day synchronization	Via PN/IE interface: CPU is NTP client (Network Time Protocol)	X	-	-
	Via DP interface: CPU/CM/CP is time-of-day master or time slave	-	X	-

[1] IE - Industrial Ethernet

[2] Observe the special characteristics for S7-1500R/H

Information on S7-1500R/H

You can find information on the communication possibilities with the redundant system S7-1500R/H in the section Communication with the redundant system S7-1500R/H (Page 283).

Additional information

- Application example: CPU-CPU communication with SIMATIC controllers (compendium) You can find the application example on the Internet (https://support.industry.siemens.com/cs/ww/en/view/20982954).
- This FAQ (https://support.industry.siemens.com/cs/ww/en/view/102420020) describes how to configure fetch/write communication via CP1543-1 with S7-1500.
- Additional information about the Fetch/Write services is available in the STEP 7 online help.
- You can find additional information on the PtP link in the function manual CM PtP - Configurations for Point-to-Point Connections (http://support.automation.siemens.com/WW/view/en/59057093).
- You will find the description of the web server functionality in the function manual Web server (http://support.automation.siemens.com/WW/view/en/59193560).
- You will find information about the standard protocol SNMP on the Service & Support pages on the Internet (http://support.automation.siemens.com/WW/view/en/15166742).
- You will find information about time-of-day synchronization in this FAQ (https://support.industry.siemens.com/cs/ww/en/view/86535497).

3.2 Communications protocols and port numbers used for Ethernet communication

This section provides an overview of the supported protocols and port numbers used for communication over PN/IE interfaces. For each protocol the address parameters, the respective communications layer as well as the communications role and the communications direction are specified.

This information makes it possible to match the security measures for protection of the automation system to the used protocols (for example firewall). Because security measures are limited to Ethernet or PROFINET networks, the tables do not include PROFIBUS protocols.

Note

Port numbers used

The specified port numbers are the standard port numbers used by the S7-1500 CPU. Many communication protocols and implementations enable you to use other port numbers.

The tables below show the different layers and protocols that are being used.

The following table shows the protocols supported by the S7-1500 CPUs, ET 200SP CPUs and the CPU 1516pro-2 PN. The S7-1500 software controllers also support the protocols listed in the following table for the Ethernet interfaces that are assigned to the software controller.

Table 3- 2 Layers and protocols of the S7-1500 CPUs and software controllers (via PROFINET interface of the CPU)

Protocol	Port number	(2) Link layer (4) Transport layer	Function	Description
PROFINET protocols				
DCP Discovery and basic configuration protocol	Not relevant	(2) Ethertype 0x8892 (PROFINET)	Accessible devices PROFINET Discovery and configuration	DCP is used by PROFINET to discover PROFINET devices and provide basic settings.
LLDP Link Layer Discovery protocol	Not relevant	(2) Ethertype 0x88CC (LLDP)	PROFINET Link Layer Discovery protocol	LLDP is used by PROFINET to discover and manage neighbor relationships between PROFINET devices. LLDP uses the special multicast MAC address: 01-80-C2-00-00-0E
MRP Media Redundancy Protocol	Not relevant	(2) Ethertype 0x88E3 (IEC 62493-2-2010)	PROFINET medium redundancy	MRP provides control of redundant transmission paths by means of a ring topology. MRP uses standard-compliant Multicast MAC addresses.
PTCP Precision Transparent Clock Protocol	Not relevant	(2) Ethertype 0x8892 (PROFINET)	PROFINET send clock and time synchronization, based on IEEE 1588	PTC provides a time delay measurement between RJ45 ports and thus send clock synchronization and time synchronization. PTCP uses standard-compliant Multicast MAC addresses.

Protocol	Port number	(2) Link layer (4) Transport layer	Function	Description
PROFINET IO data	Not relevant	(2) Ethertype 0x8892 (PROFINET)	PROFINET Cyclic IO data transfer	The PROFINET IO frames are used to transmit IO data cyclically between PROFINET IO controller and IO devices via Ethernet.
PROFINET Context Manager	34964	(4) UDP	PROFINET connection less RPC	The PROFINET Context Manager provides an endpoint mapper in order to establish an application relation (PROFINET AR).
Connection-oriented communications protocols				
SMTP Simple mail transfer protocol	25	(4) TCP	Simple mail transfer protocol	SMTP is used for sending e-mails.
SMTPS (SMTP over TLS)	465	(4) TCP	Secure SMTP	SMTP is used for sending e-mails over secure connections.
SMTP with STARTTLS	25 587	(4) TCP	Simple mail transfer protocol with the SMTP command "STARTTLS"	SMTP with STARTTLS is used for sending e-mails over secure connections.
HTTP Hypertext transfer protocol	80	(4) TCP	Hypertext transfer protocol	HTTP is used for communication with the CPU-internal web server.
ISO-on-TCP (according to RFC 1006)	102	(4) TCP	ISO-on-TCP protocol	ISO-on-TCP (according to RFC 1006) is used for message-oriented data exchange with remote CPU or software controller. S7 communication with ES, HMI, OPC server, etc.
NTP Network time protocol	123	(4) UDP	Network time protocol	NTP is used for synchronization of the CPU system time with the time of an NTP server.
SNMP Simple network management protocol	161 162 (trap)	(4) UDP	Simple network management protocol	SNMP is used for reading and setting of network management data (SNMP managed Objects) by the SNMP Manager.
HTTPS Secure Hypertext transfer protocol	443	(4) TCP	Secure Hypertext transfer protocol	HTTPS is used for communication with the CPU-internal web server via Secure Socket Layer (SSL).
Modbus TCP Modbus Transmission Control Protocol	502	(4) TCP	Modbus/TCP protocol	Modbus/TCP is used by MB_CLIENT/MB_SERVER instructions in the user program.

Protocol	Port number	(2) Link layer (4) Transport layer	Function	Description
OPC UA Open Platform Communications Unified Architecture	4840	(4) TCP	Based on the TCP/IP protocol	Communication standard ranging from the enterprise level to the field level.
OUC[1] Open User Communication and Secure OUC	1 ... 1999 can be used to limited extent[2]	(4) TCP (4) UDP	Open User Communication (TCP/UDP) Secure Open User Communication (TLS)	OUC instructions provide connection establishment, connection termination and data transfer based on the socket layer.
	2000 ... 5000 Recommended			
	5001 ... 49151 can be used to limited extent[2]			
IGMPv2 Internet Group Management Protocol	Not relevant	(3) Network layer	Internet Group Management Protocol	Network protocol for the organization of multicast groups.
Reserved	49152 ... 65535	(4) TCP (4) UDP	-	Dynamic port area used for active connection end point if the application does not determine the local port number.

1 Note: The open communication provides direct access to the UDP/TCP for the user. The user is responsible for observing the port restrictions/definitions of the IANA (Internet Assigned Numbers Authority).

2 Do not use ports for OUC, which are already used by other protocols.

The following table shows the protocols that are supported by the S7-1500 software controller via the Ethernet interfaces assigned to Windows.

Table 3- 3 Layers and protocols of the S7-1500 Software Controller (via Ethernet interface on the Windows side)

Protocol	Port number	(2) Link layer (4) Transport layer	Function	Description
PROFINET protocols				
DCP Discovery and basic configuration protocol	Not relevant	(2) Ethertype 0x8892 (PROFINET)	Accessible devices PROFINET Discovery and configuration	DCP is used by PROFINET to discover PROFINET devices and provide basic settings.

Protocol	Port number	(2) Link layer (4) Transport layer	Function	Description
Connection-oriented communications protocols				
SMTP Simple mail transfer protocol	25	(4) TCP	Simple mail transfer protocol	SMTP is used for sending e-mails.
HTTP Hypertext transfer protocol	Adjustable [1]	(4) TCP	Hypertext transfer protocol	HTTP is used for communication with CPU-internal web server. You can change the port number to avoid conflict with other web servers on Windows. If you want to use web server access, you must activate the port in the Windows Firewall.
ISO-on-TCP (according to RFC 1006)	102	(4) TCP	ISO-on-TCP protocol	ISO-on-TCP (according to RFC 1006) for S7 communication with PG/PC or HMI.
OUC[2] Open User Communication and Secure OUC	1 ... 1999 can be used to limited extent[3, 4]	(4) TCP (4) UDP	Open User Communication (TCP/UDP) Secure Open User Communication (TLS)	OUC instructions provide connection establishment, connection termination and data transfer based on the socket layer. If you want to use OUC, you must activate the ports in the Windows Firewall.
	2000 ... 5000 recommended[4]			
	5001 ... 49151 can be used to limited extent[3, 4]			
IGMPv2 Internet Group Management Protocol	Not relevant	(3) Network layer	Internet Group Management Protocol	Network protocol for the organization of multicast groups.
Reserved	49152 ... 65535	(4) TCP (4) UDP	-	Dynamic port range that is used for the active connection end point, if the application does not determine the local port number. If you wish to use this communication, you must activate the ports in the Windows Firewall.

1 Default setting for Windows assigned interfaces: 81

2 Note: The open user communication provides direct access to the UDP/TCP for the user. The user is responsible for observing the port restrictions/definitions of the IANA (Internet Assigned Numbers Authority).

3 Do not use ports for OUC, which are already used by other protocols.

4 Do not use ports for OUC, which are already used by other Windows applications.

The following table shows the protocols that are supported in addition to those listed in the tables for the S7-1500 communications modules (e.g. CP 1543-1).

Table 3- 4 Layers and protocols of S7-1500 communications modules

Protocol	Port number	(2) Link layer (4) Transport layer	Function	Description
PROFINET/Industrial Ethernet protocols				
Connection-oriented communications protocols				
FTP File transfer protocol	20 (data) 21 (control)	(4) TCP	File transfer protocol	FTP is used for the transmission of files (only in connection with CP 1543-1).
secureFTP File transfer protocol	20 (data) 21 (control)	(4) TCP	File transfer protocol	SecureFTP is used for the transmission of files by means of a TSL connection (only in connection with CP 1543-1).
DHCP Dynamic Host Configuration Protocol	68	(4) UDP	Dynamic Host Configuration Protocol	DHCP is used to retrieve the IP Address Suite from a DHCP server when starting up the IE interface.
Secure NTPv3 Network time protocol	123	(4) UDP	Network time protocol	Secure NTP is used to synchronize the CP 1543-1 internal system clock with an NTP server.
SNMP Simple network management protocol	161 162 (trap)	(4) UDP	Simple network management protocol	SNMPv3 permits the CP 1543-1 to read network management data (MIBs) from SNMPv3 agent with authentication.

Special consideration S7-1500 MFP:
Port 111: The S7-1500 MFP uses Port 111 to the NFS service for internal communication.

3.3 Overview of connection resources

Connection resources

Some communications services require connections. Connections allocate resources on the CPUs, CPs and CMs involved (for example memory areas in the CPU operating system). In most cases one resource per CPU/CP/CM is allocated for a connection. In HMI communication, up to 3 connection resources are required per HMI connection.

The connection resources available depend on the CPU being used, the CPs and CMs and must not exceed a defined high limit for the automation system.

Available connection resources in a station

The maximum number of resources of a station is determined by the CPU.

Each CPU has reserved connection resources for PG, HMI and web server communication. There are also resources available that can be used for SNMP, e-mail connections, HMI, S7 communication as well as for open communication.

When are connection resources allocated?

The time for allocation of connection resources depends on how the connection is set up, automatic, programmed or configured (see section Setting up a connection (Page 30)).

Additional information

You will find more detailed information on the allocation of connection resources and the display of connection resources in STEP 7 in the section Connection resources (Page 267).

3.4 Setting up a connection

Automatic connection

STEP 7 sets up a connection automatically (for example PG or HMI connection) if you have connected the PG/PC interface to an interface of the CPU physically and have made the interface assignment in STEP 7 in the "Go online" dialog.

Setting up a programmed connection

You set up the programmed connection in the program editor of STEP 7 in the context of a CPU by assigning instructions for communication, for example TSEND_C.

When specifying the connection parameters (in the Inspector window, in the properties of the instruction), you are supported by the easy-to-use user interface.

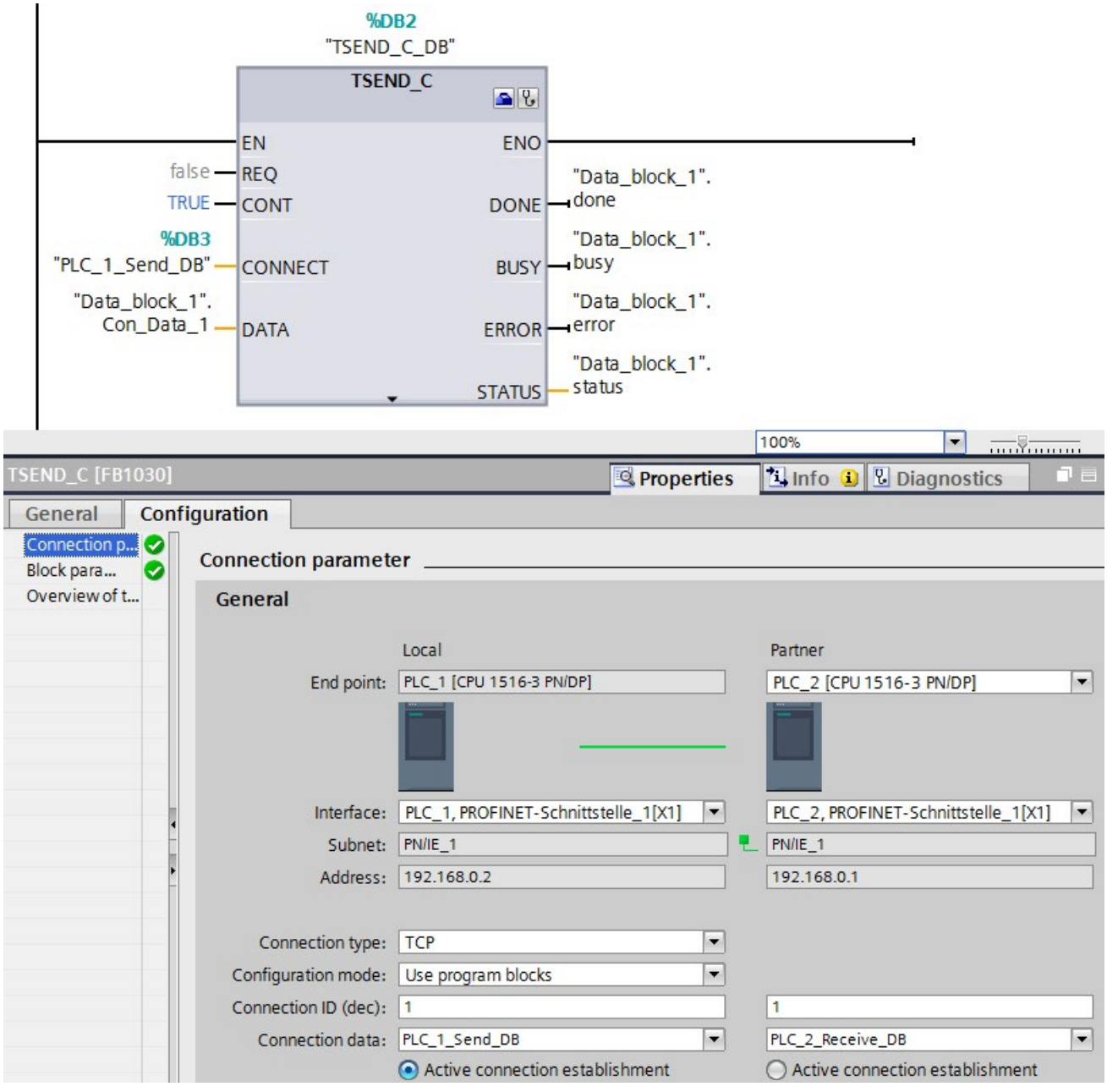

Figure 3-1 Programmed setup

Setting up a configured connection

You set up the configured connection in the network view of the Devices & networks editor of STEP 7 in the context of a CPU or a software controller.

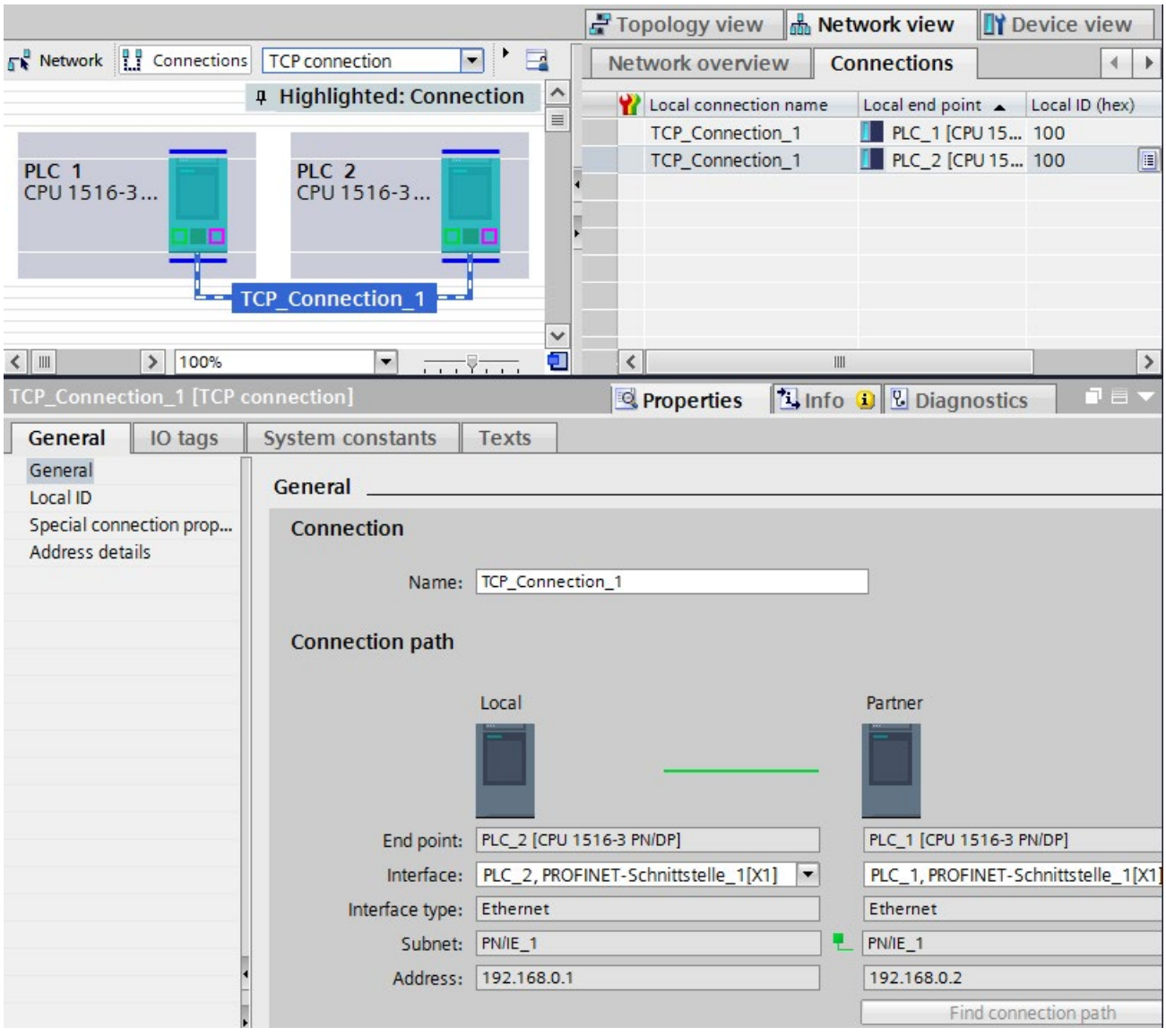

Figure 3-2 Configured setup

Effects on the connection resources of the CPU

You can often choose between a configured or a programmed connection. Programmed connection setup allows connection resources to be released following data transfer. Like routed connections, programmed connections are not guaranteed, meaning that they are only established when resources are available. With configured connection setup, the resource is available after download of the configuration until the configuration changes again. Corresponding resources are therefore reserved for connection establishment via configured connections. The "Connection resources" table in the Inspector window of the CPU displays an overview of connection resources already used and those still available.

How do I set up a connection?

Table 3- 5 Setting up the connection

Connection	Automatically	Programmed setup	Configured setup
Programming device connection	X	-	-
HMI connection	X	-	X
Open communication via TCP/IP connection	-	X	X
Open communication via ISO-on-TCP connection	-	X	X
Open communication via UDP connection	-	X	X
Open communication via ISO connection	-	X	X
Open communication via FDL connection	-	X	X
Communication via Modbus TCP connection	-	X	-
E-mail connection	-	X	-
FTP connection	-	X	-
S7 connection*	-	-	X

* Note that for an S7-1500 CPU with firmware version lower than V2.0, the use of PUT/GET communication must be enabled in the properties of the CPU. You can find more information on this topic in the STEP 7 online help.

Additional information

You will find further information on the allocation of connection resources and the display of connection resources in STEP 7 in the section Connection resources (Page 267).

3.5 Data consistency

Definition

Data consistency is important for data transfer and you need to take this into account when configuring the communication task. Otherwise, malfunctions may occur.

A data area which cannot be modified by concurrent processes is called a consistent data area. This means that a data area which belongs together and which is larger than the maximum size of the consistent data area can consist in part of new and of old data at the same time.

An inconsistency can occur when an instruction for communication is interrupted, for example by a hardware interrupt OB with higher priority. This interrupts the transfer of the data area. If the user program in this OB now changes the data that has not yet been processed by the communication instruction, the transferred data originates from different times:

The following figure shows a data area that is smaller than the maximum size of the consistent data area. In this case, when transferring the data area, it is ensured that there is no interruption by the user program during data access so that the data is not changed.

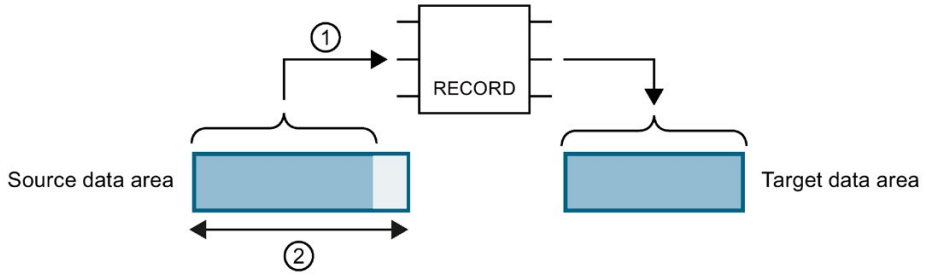

① The source data area is smaller than the maximum size of the consistent data area (②). The instruction transfers the data together to the destination data area.

② Maximum size of the consistent data area

Figure 3-3 Consistent transfer of data

The following figure shows a data area that is larger than the maximum size of the consistent data area. In this case, the data can be changed during an interruption of the data transfer. An interruption also occurs if, for example, the data area needs to be transferred in several parts. If the data is changed during the interruption, the transferred data originates from different times.

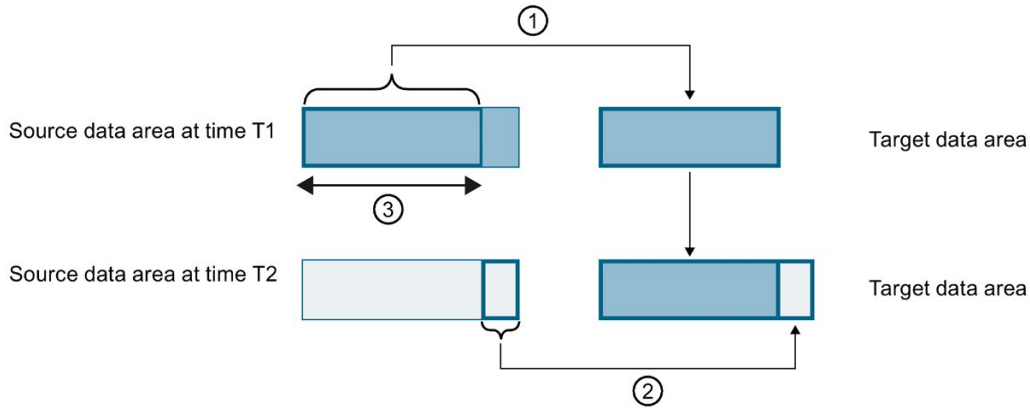

① The source data area is larger than the maximum size of the consistent data area (③). At time T1, the instruction only transfers as much data from the source data area into the destination data area as fits in the consistent data area.

② At time T2, the instruction transfers the rest of the source data area to the destination data area. After the transfer, data from different points in time exist in the destination data area. If the data in the source data area has changed in the meantime, an inconsistency may result.

③ Maximum size of the consistent data area

Figure 3-4 Transfer of data larger than the maximum consistency area

Example of an inconsistency

The figure below shows an example of changing data during the transfer. The destination data area contains data from different points in time.

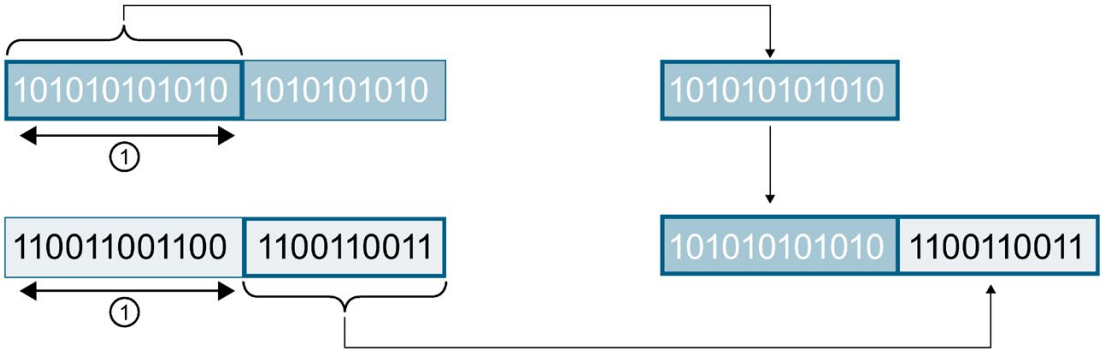

① Maximum size of the consistent data area

Figure 3-5 Example: Changing data during the transfer

System-specific maximum data consistency for S7-1500:

No inconsistency occurs if the system-specific maximum size of the consistent data is kept to. With an S7-1500, communication data is copied consistently into or out of the user memory in blocks of up to 512 bytes during the program cycle. Data consistency is not ensured for larger data areas. Where defined data consistency is required, the length of communication data in the user program of the CPU must not exceed 512 bytes. You can then access these data areas consistently, for example from an HMI device by reading/writing tags.

If more data than the system-specific maximum size needs to be transferred consistently, you yourself must ensure the data consistency with suitable measures in the user program.

Ensuring data consistency

Use of instructions for access to common data:

If the user program contains instructions for communication that access common data, for example TSEND/TRCV, you can coordinate access to this data area yourself, for example using the "DONE" parameter. The data consistency of the data areas that are transferred with an instruction for communication can therefore be ensured in the user program.

Note

Measures in the user program

To achieve data consistency, you can copy transferred data to a separate data area (for example, global data block). While the user program continues to work with the original data, you can transfer the data saved in the separate data area consistently with the communication instruction.

For the copying, use uninterruptible instructions such as UMOVE_BLK or UFILL_BLK. These instructions ensure data consistency up to 16 KB.

Use of PUT/GET instructions or Write/Read via HMI communication:

In S7 communication with the PUT/GET instructions or Write/Read via HMI communication, you need to take into account the size of the consistent data areas during programming or configuration. In the user program of an S7-1500 as server, there is no instruction available that can coordinate the data transfer in the user program. The data exchanged using PUT/GET instructions updates the S7-1500 while the user program is running. There is no point in time within the processing of the cyclic user program at which the data is exchanged consistently. The length of the data area to be transferred should be smaller than 512 bytes.

Additional information

- You will also find the maximum amount of consistent data in the device manuals of the communications modules in the Technical Specifications.
- You will find further information on data consistency in the description of the instructions in the STEP 7 online help.

3.6 Secure Communication

3.6.1 Basics of Secure Communication

For STEP 7 (TIA Portal) as of V14 and for S7-1500 CPUs as of firmware V2.0, the options for secure communication have been broadened considerably.

Introduction

The attribute "secure" is used for the identification of communication mechanisms that are based on a Public Key Infrastructure (PKI) (for example RFC 5280 for Internet X.509 Public Key Infrastructure Certificate and Certificate Revocation List Profile). A Public Key Infrastructure (PKI) is a system that can issue, distribute and check digital certificates. The digital certificates issued are used in the PKI to secure computer-based communication. If a PKI uses asymmetric key cryptography, the messages in a network can be digitally signed and encrypted.

Components that you have configured in STEP 7 (TIA Portal) for secure communication use an asymmetric key encryption scheme with a Public Key and Private Key. TLS (Transport Layer Security) is used as the encryption protocol. TLS is the successor for the SSL (Secure Sockets Layer) protocol.

Objectives of secure communication

Secure communication is used to achieve the following objectives:

- Confidentiality
  i.e. the data are secret / cannot by read by eavesdroppers.
- Integrity
  i.e. the message that reaches the recipient is the same message, unchanged, that the sender sent. The message has not been altered on the way.
- End point authentication
  i.e. the end point communication partner is exactly who it claims to be and the party who is to be reached. The identity of the partner has been checked.

These objectives were in the past primarily relevant to IT and networked computers. Now, industrial machinery and control systems with sensitive data are at equally high risk, as they are also networked, and consequently pose strict security requirements for data exchange.

Protection of the automation cell by means of the cell protection concept through firewall, or via connection through VPN, for example with the security module, was common in the past and remains so.

However, it is becoming increasingly necessary to also transfer data to external computers in encrypted form via Intranet or public networks.

Common principles of secure communication

Independent of the context, secure communication is based on the concept of the Public Key Infrastructure (PKI) and contains the following components:

- An asymmetric encryption scheme that allows:
  - Encryption or decryption of messages using public or private keys.
  - The verification of signatures in messages and certificates.

    The messages/certificates are signed by the sender/certificate subject with their private key. The recipient/verifier checks the signature with the public key of the sender/certificate subject.
- Transport and storage of the public key using X.509 certificates:
  - X.509 certificates are digitally signed data that allow public key authentication in terms of the bound identity.
  - X.509 certificates can contain information that describes in more detail or restricts use of the public key. For example the date as of which a public key in a certificate is valid and when it expires.
  - X.509 certificates contain information about the issuer of the certificate in secure form.

The following paragraphs give an overview of these basic concepts, which are required for managing certificates in STEP 7 (TIA Portal), for example, and for programming communication instructions for secure Open User Communication (sOUC).

Secure communication with STEP 7

STEP 7 as of V14 provides the required PKI for the configuration and operation of secure communication.

Examples:

- The Hypertext Transfer Protokoll (HTTP) turns into Hypertext Transfer Protokoll Secure (HTTPS) with the help of the TLS (Transport Layer Security) protocol. Since HTTPS is a combination of HTTP and TLS, it is called "HTTP over TLS" in the corresponding RFC. You can see in the browser that HTTPS is being used; this is indicated by the URL "https://" instead of "http://" in the address bar of the browser. Most browsers highlight such secure connections.
- Open User Communication turns into secure Open User Communication. The underlying protocol is also TLS.
- E-mail providers also offer access over the "Secure SMTP over TLS" protocol to increase the security of e-mail communication.

The figure below shows the TLS protocol in the context of communication layers.

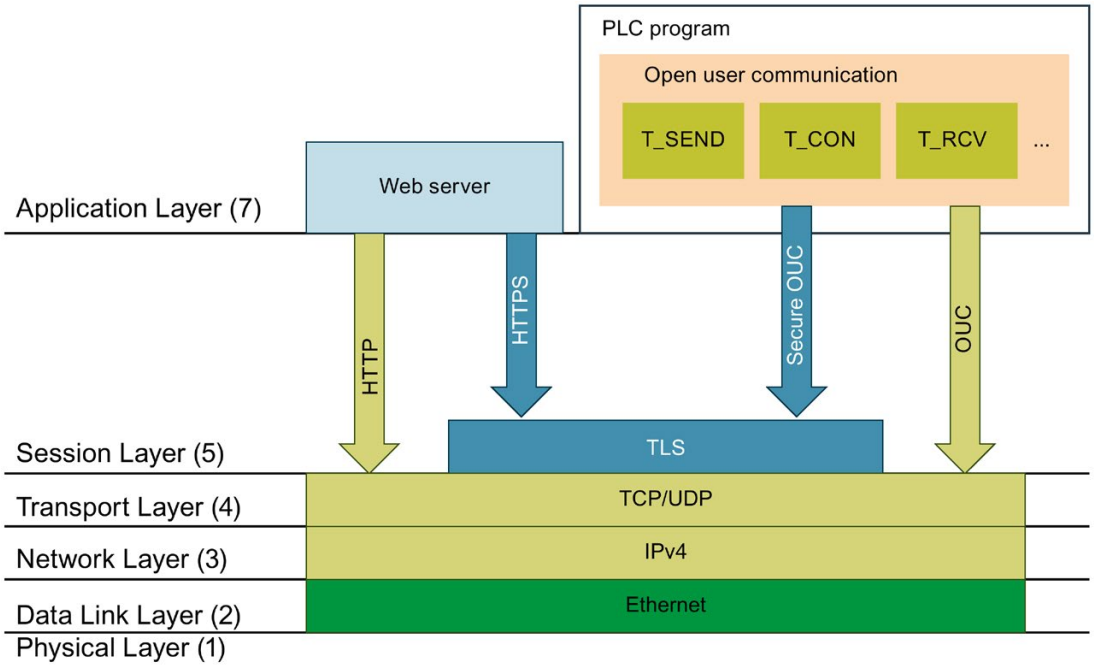

Figure 3-6 TLS protocol in the context of communication layers

Secure communication with OPC UA

An OPC UA server is implemented in S7-1500 CPUs as of firmware V2.0. OPC UA Security also covers authentication, encryption and data integrity with digital X.509 certificates and also uses a Public Key Infrastructure (PKI). Depending on the requirements placed by the application, you can select different security levels for the end point security. You will find the description of the OPC UA server functionality in the section AUTOHOTSPOT.

3.6.2 Confidentiality through encryption

Message encryption is an important element of data security. When encrypted messages are intercepted by third parties during communication, these potential eavesdroppers cannot access the information they contain.

There is a wide range of mathematical processes (algorithms) for encrypting messages.

All algorithms process a "key" parameter to encrypt and decrypt messages.

- Algorithm + key + message => encrypted message
- Encrypted message + key + algorithm => (decrypted) message

Symmetric encryption

The central aspect of symmetric encryption is that both communication partners use the same key for message encryption and decryption, as shown in the figure below. Bob uses the same key for encryption as Alice uses for decryption. In general, we also say that the two sides share the secret key with which they encrypt or decrypt a message as a secret.

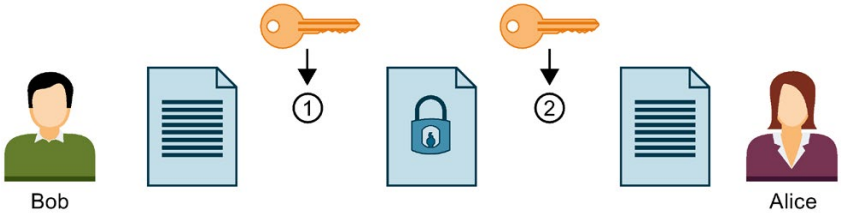

① Bob encrypts his message with the symmetric key
② Alice decrypts the encrypted message with the symmetric key

Figure 3-7 Symmetric encryption

The process can be compared to a briefcase to which the sender and recipient have the same key, which both locks and opens the case.

- Advantage: Symmetric encryption algorithms (such as AES, Advanced Encryption Algorithm) are fast.
- Disadvantages: How can the key be sent to a recipient without getting into the wrong hands? This is a key distribution problem. If enough messages are intercepted, the key can also be worked out and must therefore be changed regularly.

If there are a large number of communication partners, there is also a large number of keys to distribute.

Asymmetric encryption

Asymmetric encryption works with a pair of keys consisting of one public key and one private key. Used with a PKI, it is also known as Public Key cryptography or simply PKI cryptography. A communication partner, Alice in the figure below, has a private key and a public key. The public key is provided to the public, in other words any potential communication partner. Anyone with the public key can encrypt messages for Alice. In the figure below, this is Bob.

Alice's private key, which she must not disclose, is used by Alice to decrypt an encrypted message addressed to her.

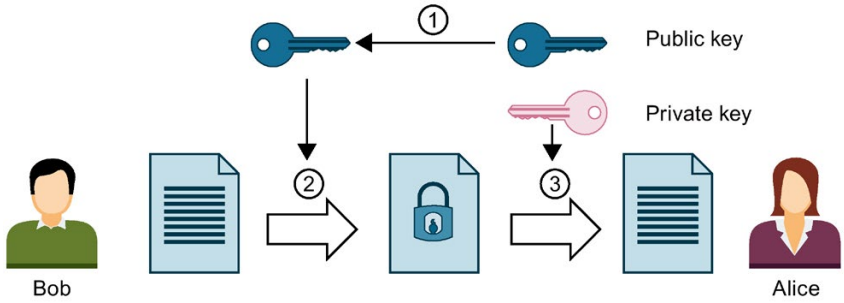

① Alice provides Bob with her public key. No precautionary measures are required to this purpose: Anyone can use the public key for messages to Alice if they are sure that it is actually Alice's public key.

② Bob encrypts his message with Alice's public key.

③ Alice decrypts the encrypted message from Bob with her private key. As only Alice has the private key and never discloses it, only she can decrypt the message. With her private key, she can decrypt any message encrypted with her public key - not only messages from Bob.

Figure 3-8 Asymmetric encryption

The system can be compared to a mailbox into which anyone can put a message, but from which only the person with the key can remove messages.

- Advantages: A message encrypted with a public key can only be decrypted by the owner of the private key. As another (private) key is required for decryption, it is also much harder to work out the decryption key on the basis of large numbers of encrypted messages. This means that the public key does not have to be kept strictly confidential, unlike with symmetric keys.

  Another advantage is easier distribution of public keys. No specially secured channel is required in asymmetric cryptography to transfer the public key from the recipient to the sender encrypting the messages. Less work is thus required in managing the keys than would be the case in symmetric encryption procedures.

- Disadvantages: Complex algorithm (e.g. RSA, named after the three mathematicians Rivest, Shamir and Adleman), and therefore poorer performance than with symmetric encryption.

Encryption processes in practice

In practice, for example with a CPU Web server and Secure Open User Communication, the TLS protocol is used below the relevant application layer. Application layers are HTTP or SMTP, for example, as detailed above.

TLS (Transport Layer Security) uses a combination of asymmetric encryption and symmetric encryption (hybrid encryption) for secure data transfer, for example, over the Internet, and uses the following subprotocols:

- TLS Handshake Protocol, responsible for authentication of communication partners and negotiation of the algorithms and keys to be used for subsequent data transfer on the basis of asymmetric encryption.
- TLS Record Protocol, responsible for encryption of user data with symmetric encryption and data exchange.

Both asymmetric and symmetric encryption are considered secure encryption schemes - there is basically no difference in security between the two procedures. The degree of security depends on parameters such as the selected key length.

Abuse of encryption

You cannot tell what identity is assigned to a public key from the bit string. A fraud could provide their public key and claim to be someone else. If a third party then uses this key thinking that they are addressing their required communication partner, confidential information could end up with the fraud. The fraud then uses their private key to decrypt the message that was not intended for them, and sensitive information falls into the wrong hands.

To prevent this type of abuse, the communication partners must be confident that they are dealing with the right communication partner. This trust is established by using digital certificates in a PKI.

3.6.3 Authenticity and integrity through signatures

Attacks from programs that intercept communication between the server and client and act as if they themselves were client or server, are called man-in-the-middle attacks. If the false identity of these programs is not detected, they can obtain important information about the S7 program, for example, or set values in the CPU and attack a machine or plants. Digital certificates are used to avoid such attacks.

Secure communication uses digital certificates that meet the X.509 standard of the International Telecommunication Union (ITU). This allows the identity of a program, a computer or an organization to be checked (authenticated).

How certificates establish trust

The main role of X.509 certificates is to bind an identity with the data of a certificate subject (for example, e-mail address or computer name) to the public key of the identity. Identities can be people, computers or machines.

Certificates are issued by certificate authorities (Certificate Authority, CA) or by the subject of a certificate itself. PKI systems specify how users can trust the certificate authorities and the certificates that they issue.

The certificate process:

1. Anyone wishing to own a certificate submits a certificate application to a registration authority linked to the certificate authority.
2. The certificate authority assesses the application and applicant on the basis of set criteria.
3. If the identity of the applicant can be clearly established, the certificate authority confirms that identity by issuing a signed certificate. The applicant has now become the certificate subject.

The figure below is a simplified overview of the process. It does not show how Alice can check the digital signature.

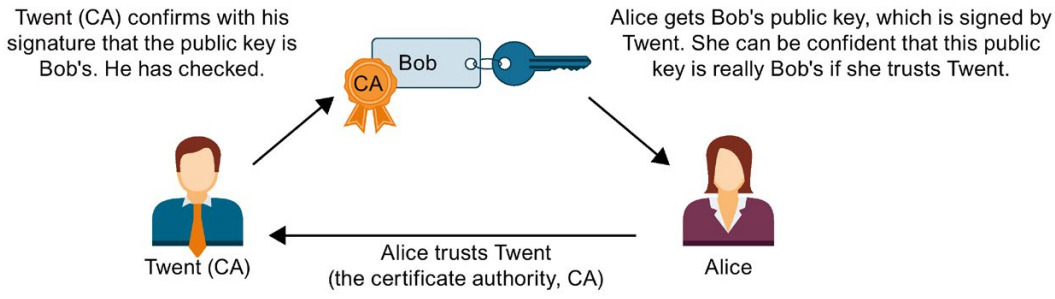

Figure 3-9 Signing of a certificate by a certificate authority

Self-signed certificates

Self-signed certificates are certificates whose signature comes from the certificate subject and not from an independent certificate authority.

Examples:

- You can create and sign a certificate yourself, for example, to encrypt messages to a communication partner. In the example above, Bob (instead of Twent) could himself sign his certificate with his private key. Using Bob's public key, Alice can check that the signature and public key from Bob match. This procedure is sufficient for simple internal plant communication that is to be encrypted.
- A root certificate is, for example, a self-signed certificate, signed by the certificate authority (CA), that contains the public key of the certificate authority.

Features of self-signed certificates

The "CN" (Common Name of Subject) for the certificate subject and "Issuer" attributes of self-signed certificates are identical: You have signed your certificate yourself. The field "CA" (Certificate Autority) must be set to "False"; the self-signed certificate should not be used to sign other certificates.

Self-signed certificates are not embedded in a PKI hierarchy.

Certificate content

A certificate to the X.509 V3 standard, the standard that is also used by STEP 7 and the S7-1500 CPUs, consists primarily of the following elements:

- Public key
- Details of the certificate subject (i.e. the holder of the key), for example, the Common Name (CN) of Subject .
- Attributes such as serial number and validity period
- Digital signature from the certificate authority (CA) confirming that the information is correct.

There are also extensions, for example:

- Specification of what the public key may be used for (Key Usage), for example, signing or key encryption.
  When you create a new certificate with STEP 7, for example in the context of Secure Open User Communication, select the correct entry from the list of possible usages, e.g. "TLS".
- Specification of a Subject Alternative Name (SAN), which is used in secure communication with Web servers (HTTP over TLS), for example, to ensure that the certificate in the address bar of the Web browser also belongs to the Web server specified in the URL.

How signatures are generated and verified

Asymmetric key usage ensures that certificates can be verified: The example of the "MyCert" certificate illustrates the "Sign" and "Verify signature" processes.

Generating a signature:

1. The issuer of the "MyCert" certificate generates a hash value from the certificate data using a specific hash function (for example SHA-1, Secure Hash Algorithm).

   The hash value is a bit string of a constant length. The advantage of the constant length of the hash value is that it always takes the same amount of time to sign.

2. Using the hash value generated in this way and the private key, the issuer of the certificate then generates a digital signature. The RSA signature scheme is often used.
3. The digital signature is saved in the certificate. The certificate is now signed.

Verifying a signature:

1. The authenticator of the "MyCert" certificate obtains the certificate of the issuer and thus the public key.
2. A new hash value is formed from the certificate data with the same hash algorithm that was used for signing (for example SHA-1).
3. This hash value is then compared with the hash value that is determined by means of the public key of the certificate issuer and the signature algorithm for checking the signature.
4. If the signature check produces a positive result, both the identity of the certificate subject as well as the integrity, meaning authenticity and genuineness, of the certificate content are proven. Anyone who has the public key, i.e. the certificate from the certificate authority, can check the signature and thus recognize that the certificate was actually signed by the certificate authority.

The figure below shows how Alice uses the public key in the certificate from Twent (who represents the certificate authority, CA) to verify the signature on Bob's public key. All that is required for verification is therefore the availability of the certificate from the certificate authority at the moment of checking. The validation itself is executed automatically in the TLS session.

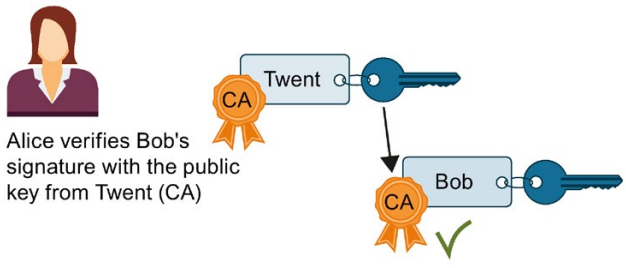

Figure 3-10 Verification of a certificate with the public key of the certificate of a certificate authority

Signing messages

The method described above for signing and verifying also uses the TLS session for signing and verifying messages.

If a hash value is generated by a message and this hash value is signed with the private key of the sender and attached to the original message, the recipient of the message is able to check the integrity of the message. The recipient decrypts the hash value with the public key of the sender, puts together the hash value from the message received and compares the two values. If the values are not the same, the message has been tampered with on the way.

Chain of certificates to root certificate

The certificates of a PKI are often organized hierarchically: The top of the hierarchy is formed by root certificates. Root certificates are certificates that are not signed by a higher-level certificate authority. The certificate subject and certificate issuer of root certificates are identical. Root certificates enjoy absolute trust. They form the "anchor" of trust and must therefore be known to the receiver as trusted certificates. They are stored in an area provided for trusted certificates.

Depending on the PKI, the function of root certificates is, for example, to sign certificates from lower-level certificate authorities, so-called intermediate certificates. This transfers the trust from the root certificate to the intermediate certificate. An intermediate certificate can sign a certificate just like a root certificate; both are therefore referred to as "CA certificates".

This hierarchy can be continued over multiple intermediate certificates until the end-entity certificate. The end-entity certificate is the certificate of the user who is to be identified.

The validation process runs through the hierarchy in the opposite direction: As described above, the certificate issuer is established and the signature checked with the issuer's public key, then the certificate of the higher-level certificate issuer is established along the entire chain of trust to the root certificate.

Conclusion: The chain of intermediate certificates to the root certificate, the certificate path, must be available in every device that is to validate an end-entity certificate of the communication partner, irrespective of the type of secure communication that you configure.

3.6.4 Managing certificates with STEP 7

STEP 7 as of version V14 together with the S7-1500-CPUs as of firmware version 2.0 support the Internet PKI (RFC 5280) in as far as an S7-1500-CPU is able to communicate with devices that also support the Internet PKI.

The usage of X.509 certificates for verifying certificates as described in the preceding sections, for example, is a result of this.

STEP 7 as of V14 uses a PKI similar to Internet PKI. Certificate Revocation Lists (CRLs), for example, are not supported.

Creating or assigning certificates

You create certificates for various applications in STEP 7 for devices with security properties, such as an S7-1500 CPU as of firmware V2.0.

The following areas in the Inspector window of the CPU allow the creation of new certificates or the selection of existing ones:

- "Protection & Security > Certificate manager" - for the generation and assignment of all types of certificates. TLS certificates for Secure Open User Communication are preset for the generation of certificates.
- "Web server > Security" - for the generation and assignment of Web server certificates.
- "OPC UA > Server > Security" - for the generation and assignment OPC UA certificates.

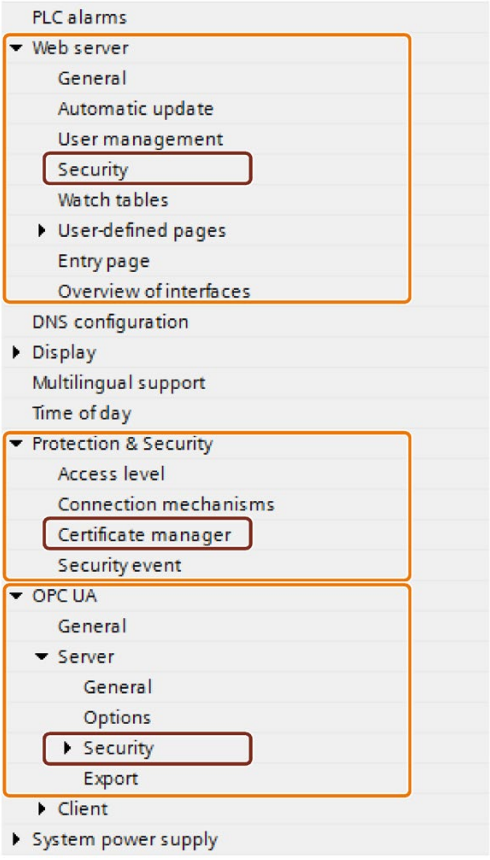

Figure 3-11 Security settings for an S7-1500 CPU in STEP 7

Special features of the section "Protection & Security > Certificate manager"

Only in this section of the Inspector window do you switch between the global, i.e. project-wide, and the local, i.e. device-specific, certificate manager (option "Use global security settings for the certificate manager"). The option decides whether you have access to all the certificates in the project or not.

- If you do **not** use the certificate manager in the global security settings, you only have access to the local certificate memory of the CPU. You do not have access, for example, to imported certificates or root certificates. Without these certificates only a restricted functionality is available. You can, for example, only generate self-signed certificates.
- If you use the certificate manager in the global security settings and you are logged on as an administrator, you have access to the global, project-wide certificate memory. You can, for example, assign imported certificates to the CPU, or create certificates that are issued and signed by the project CA (certificate authority of the project).

The figure below shows how the "Global security settings" are shown in the project tree after the "Use global security settings for certificate manager" option has been activated in the Inspector window of the CPU.

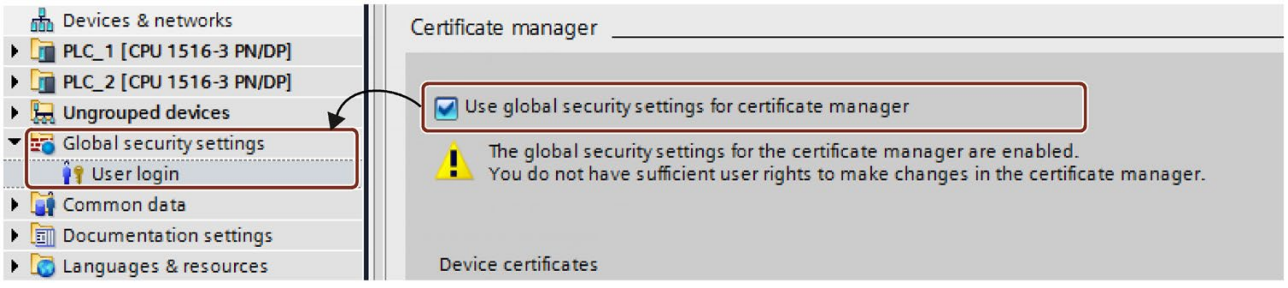

When you double-click "User login" in the project tree below the global security settings and log in, a line called "Certificate manager" is displayed, among other data.

When you double-click the "Certificate manager" line, you obtain access to all the certificates in the project, divided into the tabs "CA" (certificate authorities), "Device certificates" and "Trusted certificates and root certificate authorities".

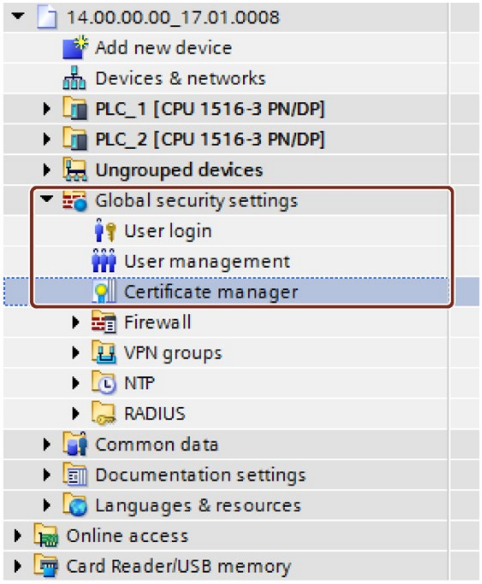

Private keys

STEP 7 generates private keys while generating device certificates and server certificates (end-entity certificates). The location where the private key is stored encrypted depends on the use of the global security settings for the certificate manager:

- If you use global security settings, the private key is stored encrypted in the global (project-wide) certificate memory.
- If you do not use global security settings, the private key is stored encrypted in the local (CPU-specific) certificate memory.

The existence of the private key, which is required to decrypt data, for example, is displayed in the "Private key" column of the "Device certificates" tab of the certificate manager in the global security settings.

When the hardware configuration is loaded, the device certificate, the public key as well as the private key are loaded into the CPU.

NOTICE
The "Use global security settings for certificate manager" option influences the previously used private key: If you have already created certificates without using the certificate manager in the global security settings and then change the option for using the certificate manager, the private keys are lost and the certificate ID can change. A warning draws your attention to this fact. Therefore specify at the beginning of the project configuration which option is required for the certificate manager.

3.6.5 Examples for the management of certificates.

As explained in the preceding sections, certificates are required for every type of secure communication. The following section shows as an example how you handle the certificates with STEP 7 so that the requirements for Secure Open User Communication are fulfilled.

The devices which are involved at the respective communication partners are differentiated below. The respective steps for supplying the required certificates to the communications participants are described. An S7-1500 CPU or an S7-1500 software controller as of firmware version 2.0 is always required.

The general rule is:

While a secure connection is being established (handshake"), the communication partners as a rule only communicate their end-entity certificates (device certificates).

Therefore the CA certificates required to verify the transmitted device certificate must be located in the certificate memory of the respective communication partner.

Secure Open User Communication between two S7-1500 CPUs

Two S7-1500-CPUs, PLC_1 and PLC_2, are to exchange data with each other via Secure Open User Communication.

You generate the required device certificates with STEP 7 and assign them to the CPUs as described below.

STEP 7 project certificate authorities (CA of the project) are used to sign the device certificates.

The certificates are to be referenced by their certificate ID in the user program (TCON communication instruction in combination with the associated system data type, for example TCON_IPV4_SEC). STEP 7 assigns the certificate ID automatically during the generation or creation of certificates.

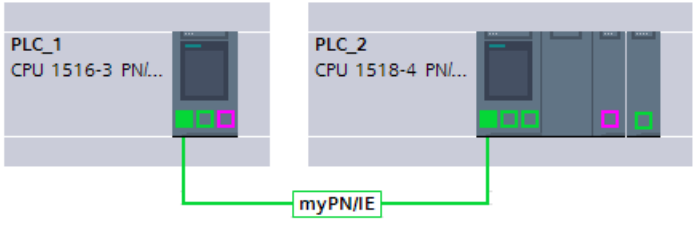

Procedure

STEP 7 automatically loads the required CA certificates together with the hardware configuration to the participating CPUs so that the requirements for certificate verification exist for both CPUs. You therefore only have to generate the device certificates for the respective CPU; STEP 7 does the rest for you.

1. Mark PLC_1 and activate the "Use global security settings for certificate manager" option in the "Protection & Security" section.
2. Log in as a user in the project tree in the "Global security settings" section. For a new project, the "Administrator" role is planned for the first login.
3. Return to the PLC-1 in the "Protection & Security" section. Click in an empty line in the "Certificate subject" column in the "Device certificates" table to add a new certificate.
4. In the drop-down list for selecting a certificate click the "Add" button.

   The "Create Certificate" dialog opens.
5. Leave the default settings in this dialog. They are tailored to the usage of Secure Open User Communication (usage: TLS).

   Tip: Supplement the default name of the certificate subject, in this case the CPU name. In order to differentiate you better leave the default CPU name in case you have to manage a large number of device certificates.

   Example: PLC_1/TLS becomes PLC_1-SecOUC-Chassis17FactoryState.
6. Compile the configuration.

   The device certificate and the CA certificate are part of the configuration.
7. Repeat the steps described above for PLC_2.

In the next step you have to create the user programs for the data exchange and load the configurations together with the program.

Using self-signed certificates instead of CA certificates

When creating device certificates you can select the "Self-signed" option. You can create self-signed certificates without being logged in for the global security settings. This procedure is not recommended because the resulting certificates do not exist in the global certificate memory and can therefore not be assigned directly to a partner CPU.

As described above, you should select the name of the certificate subject with care so that the right certificate can be assigned to a device without any doubt.

Verification with the CA certificates of the STEP 7 project is not possible for self-signed certificates. To ensure that self-signed certificates can be verified you have to include the self-signed certificates of the communication partner into the list of trusted partner devices for each CPU. To this purpose you must have activated the "Use global security settings for certificate manager" option and be logged in as a user in the global security settings.

Proceed as follows to add the self-signed certificate of the communication partner of the CPU:

1. Mark PLC_1 and navigate to the "Certificates of partner devices" table in the "Protection & Security" section.
2. Click in an empty line in the "Certificate subject" column in the "Device certificates" table to add a new certificate.
3. Select the self-signed certificate of the communication partner from the drop-down list and confirm the selection.

In the next step you have to create the user programs for the data exchange and load the configurations together with the program.

Secure Open User Communication between S7-1500 CPU as a TLS client and an external device as a TLS server

Two devices are to exchange data with each other via TLS connection or TLS session, for example, exchanging recipes, production data or quality data:

- An S7-1500 CPU (PLC_1) as TLS client; the CPU uses Secure Open User Communication
- An external device, for example a Manufacturing Execution System (MES), as TLS server

The S7-1500 CPU establishes the TLS connection / session to the MES system as TLS client.

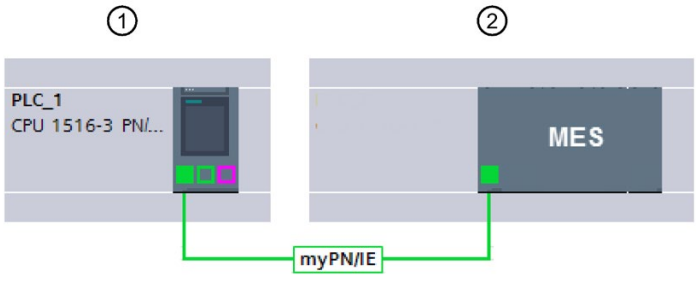

① TLS client
② TLS server

The S7-1500 CPU requires the CA certificates of the MES system to authenticate the TLS server: The root certificate and, if appropriate, the intermediate certificates for verifying the certificate path.

You have to import these certificates into the global certificate memory of the S7-1500 CPU.

Proceed as follows to import certificates of the communication partner:

1. Open the certificate manager in the global security settings in the project tree.
2. Select the appropriate table (trusted certificates and root certificate authorities) for the certificate to be imported.
3. Right-click in the table to open the shortcut menu. Click "Import" and import the required certificate or the required CA certificates.

   Through the import the certificate has a certificate ID assigned to it and can be assigned to a module in the next step.
4. Mark PLC_1 and navigate to the "Certificates of partner devices" table in the "Protection & Security" section.
5. Click in an empty line in the "Certificate subject" column to add the imported certificates.
6. Select the required CA certificates of the communication partner from the drop-down list and confirm the selection.

Optionally the MES system can also request a device certificate of the CPU to authenticate the CPU (i.e., the TLS client). In this case, the CA certificates of the CPU must be made available to the MES system. The prerequisite for importing the certificates into the MES system is a preceding export of the CA certificates from the STEP 7 project of the CPU. Follow these steps:

1. Open the certificate manager in the global security settings in the project tree.
2. Select the matching table (CA certificate) for the certificate to be exported.
3. Right-click the selected certificate to open the shortcut menu.
4. Click "Export".
5. Select the export format of the certificate.

In the next step you have to create the user programs for the data exchange and load the configurations together with the program.

Secure Open User Communication between an S7-1500 CPU as TLS server and an external device as TLS client

If the S7-1500 CPU acts as TLS server and the external device, for example an ERP system (Enterprise Resource Planning System) establishes the TLS connection / session, you require the following certificates:

- For the S7-1500 CPU, you generate a device certificate (server certificate) with a private key and download it with the hardware configuration into the S7-1500 CPU. You use the "Signed by certificate authority" option when generating the server certificate.

  The private key is required for the key exchange as explained in the figure for the example "HTTP over TLS".

- You have to export the CA certificate of the STEP 7 project for the ERP system and import / load it into the ERP system. With the CA certificate the ERP system verifies the server certificate of the S7-1500 that was transferred from the CPU to the ERP system during the establishment of the TLS connection / session.

① TLS server
② TLS client

Figure 3-12 Secure OUC between an S7-1500 CPU and ERP system

The required steps are described in the preceding sections.

Secure Open User Communication to a mail server (SMTP over TLS)

An S7-1500 CPU can establish a secure connection to an e-mail server with the communication instruction TMAIL-C.

The system data types TMail_V4_SEC and TMail_QDN_SEC allow you to determine the partner port of the e-mail server and thus to reach the e-mail server via "SMTP over TLS".

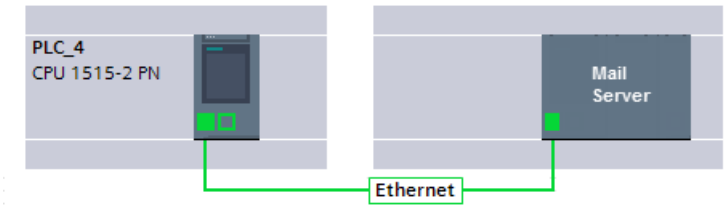

Figure 3-13 Secure OUC between a S7-1500 CPU and a mail server

Requirement for secure e-mail connection is the importing of the root certificate and the intermediate certificates of the mail server (provider) into the global certificate memory of the S7-1500 CPU. By means of these certificates the CPU can check the server certificate that is sent by the mail server during the establishment of the TLS connection / session.

Proceed as follows to import certificates of the mail server:

1. Open the certificate manager in the global security settings in the project tree.
2. Select the appropriate table (trusted certificates and root certificate authorities) for the certificate to be imported.
3. Right-click in the table to open the shortcut menu. Click "Import" and import the required certificate or the required CA certificates.

   As a result of the import, the certificate has a certificate ID assigned to it and can be assigned to a module in the next step.
4. Mark PLC_1 and navigate to the "Certificates of partner devices" table in the "Protection & Security" section.
5. Click in an empty line in the "Certificate subject" column to add the imported certificates.
6. Select the required CA certificates of the communication partner from the drop-down list and confirm the selection.

In the next step you have to create the user programs for the e-mail client function of the CPU and load the configurations together with the program.

3.6.6 Example: HTTP over TLS

The following paragraphs show how the mechanisms described are used to establish a secure communication between a Web browser and the Web server of an S7-1500 CPU.

Initially the changes for the "Permit access only with HTTPS" option in STEP 7 are described. As of STEP 7 V14 you have the possibility to influence the server certificate of the Web server of an S7-1500 CPU as of firmware V2.0: The server certificate is generated as of these versions with STEP 7.

In addition it illustrates the processes that are executed when a website of the CPU Web server is called with a Web browser of a PC through an encrypted HTTPS connection.

Using Web server certificates for S7-1500 CPUs, FW V2.0 or higher

For S7-1500 CPUs with a firmware version before V2.0, you were able to set "Permit access only with HTTPS" when setting the Web server properties, without specific requirements applying.

You did not have to handle certificates for these CPUs; the CPU automatically generates the certificates required for the Web server.

For S7-1500 CPUs as of firmware V2.0, STEP 7 generates the server certificate (end-entity certificate) for the CPU. You assign a server certificate to the Web server in the properties of the CPU (Web server > Security).

Because a server certificate name is always preset, there is no change to the easy configuration of the Web server: You activate the Web server. The "Permit access only with HTTPS" option is enabled by default - STEP 7 generates a server certificate with the default name during compiling.

Irrespective of whether you use the certificate manager in the global security settings or not: STEP 7 has all the information required to generate the server certificate.

In addition, you have the possibility to determine the properties of the server certificate, for example, the name or the validity period.

Loading the Web server certificate

The server certificate generated by STEP 7 is then automatically also loaded to the CPU when the hardware configuration is loaded.

- If you use the certificate manager in the global security settings, the certificate authority of the project (CA certificate) signs the server certificate of the Web server: During loading the CA certificate of the project is loaded as well automatically.
- If you do not use the certificate manager in the global security settings, STEP 7 generates the server certificate as a self-signed certificate.

When you address the Web server of the CPU over the IP address of the CPU, a new server certificate (end-entity certificate) must be generated and loaded with each change in the IP address of an Ethernet interface of the CPU. This is necessary because the identity of the CPU changes with the IP address – and the identity requires a signature in accordance with the PKI rules.

You can avoid this problem by addressing the CPU with a domain name instead of its IP address, for example "myconveyer-cpu.room13.myfactory.com". For this purpose, you have to manage the domain names of the CPU via a DNS server.

Supplying a Web browser with a CA certificate of the Web server

In the Web browser the user who accesses the websites of the CPU through HTTPS should install the CA certificate of the CPU. If no certificate is installed, a warning is output recommending that you do not use the page. To view this page, you must explicitly "Add an exception".

The user receives the valid root certificate for download from the "Intro" Web page of the CPU Web server under "Download certificate".

STEP 7 offers a different possibility: Export the CA certificate of the project with the certificate manager into the global security settings in STEP 7. Subsequently import the CA certificate into the browser.

Course of the secure communication

The figure below shows, in simplified terms, how communication is established ("handshake") focusing on the negotiation of keys used for data exchange (here with HTTP over TLS).

However, the course can be applied to all communication options that are based on the usage of TLS, i.e. also for Secure Open User Communication (see Basics for secure communication).

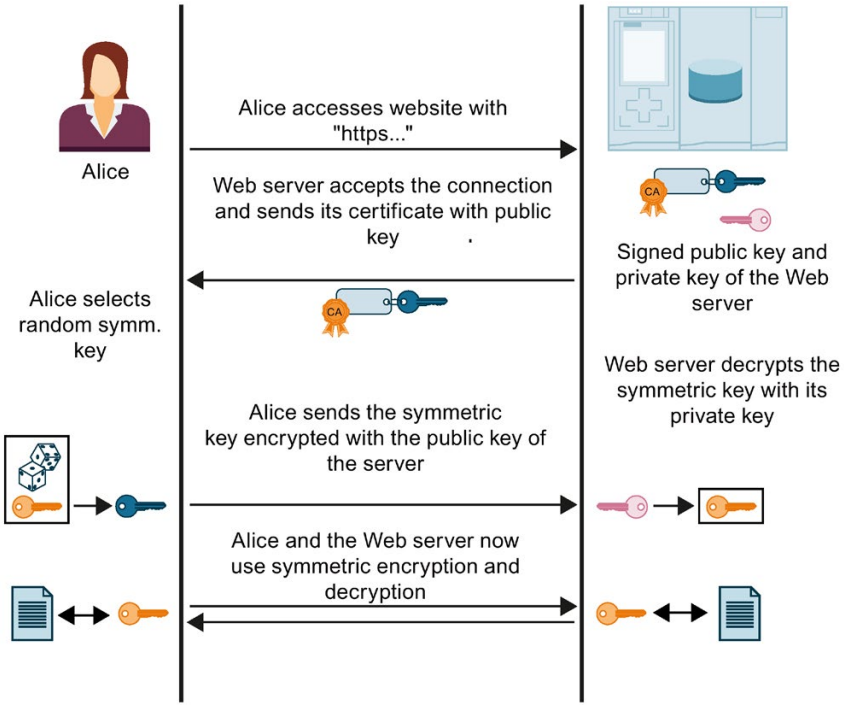

Figure 3-14 Handshake with https

The figure does not show the measures taken at Alice's end (browser) to verify the certificate sent by the Web server. Whether Alice can trust the Web server certificate received and therefore the identity of the Web server, and can accept the exchange of data, depends on positive verification.

The steps for verifying the authenticity of the Web server:

1. Alice must know the public keys of all relevant certificate authorities, which means she requires the complete certificate chain to verify the Web server certificate (i.e. the end-entity certificate of the Web server):

   Alice will generally have the required root certificate in her certificate memory. When a Web browser is installed, a range of trusted root certificates is also installed. If she does not have the root certificate, she has to download it from the certificate authority and install it in the certificate store of the browser. The certificate authority can also be the device on which the Web server is located.

   You have the following options for obtaining the intermediate certificates:

   – The server itself sends the required intermediate certificates to Alice along with its end-entity certificate – in the form of a signed message so that Alice can verify the integrity of the certificate chain.

   – The certificates often contain the URLs of the certificate issuer. Alice can load the required intermediate certificates from these URLs.

   When you work with certificates in STEP 7 it is always assumed that you have imported the intermediate certificates and the root certificate into the project and assigned them to the module.

2. Alice validates the signatures in the certificate chain with the public keys of the certificates.

3. The symmetric key must be generated and transferred to the Web server.

4. If the Web server is addressed by its domain name, Alice also verifies the identity of the Web server in accordance with the Internet PKI rules defined in RFC 2818. She is able to do this because the URL of the Web server, in this case the "Fully Qualified Domain Name" (FQDN), is saved in the end-entity certificate of the Web server. If the certificate entry in the "Subject Alternative Name" field corresponds to the entry in the address bar of the browser, everything is fine.

The process continues with the exchange of data with the symmetric key, as shown in the figure above.

3.7 SNMP

3.7.1 Disabling SNMP

The network management protocol SNMP (Simple Network Management Protocol) is a protocol that uses various services and tools for detection and diagnostics of the network topology.

Which SNMP requests the S7-1500 CPUs and the S7-1200 CPUs can receive, is described in this FAQ (https://support.industry.siemens.com/cs/ww/en/view/79993228).

SNMP uses the transport protocol UDP. SNMP recognizes two network components, the SNMP manager and the SNMP client. The SNMP manager monitors the network nodes: The SNMP clients collect the various network-specific information in the individual network nodes and store it in a structured form in the MIB (Management Information Base). Various services and tools can run detailed network diagnostics with the help of these data.

Under certain conditions, it is useful to disable SNMP. Examples:

- The security guidelines in your network do not allow the use of SNMP.
- You use your own SNMP solution, e.g. with your own communications instructions.

If you disable SNMP for a device, various options for diagnostics of the network topology (e.g. using the PRONETA tool or the Web server of the CPU) are no longer available to you.

Disabling SNMP

To disable SNMP for one of the integrated interfaces of a S7-1500 CPU, follow these steps:

1. In STEP 7, create a data block that contains the structure of data record $B071_H$.
   – The following table shows the structure of the data record $B071_H$.

Byte	Element	Code	Explanation
0-1	BlockID	$F003_H$	Header The data record length is counted starting at byte 4 "Version".
2-3	BlockLength	8	
4	Version	01_H	
5	Subversion	00_H	
6-7	Reserved	-	-
8-11	SNMP controller	Disable/enable SNMP	If you want to disable SNMP, enter the value 0. If you want to enable SNMP, enter the value 1.

2. Transfer the data record $B071_H$ in the startup OB (OB100) with the WRREC instruction (write data record) to the CPU.
   Use the hardware ID of an integrated interface of the CPU here.

3.7.2 Example: Disabling SNMP for a CPU 1516-3 PN/DP

Task

As the security guidelines in your network do not allow SNMP, you want to disable SNMP for a CPU 1516-3 PN/DP.

Requirements

- CPU 1516-3 PN/DP with firmware version V2.0
- STEP 7 as of V14

Solution

First, create a data block that contains the structure of data record B071H. The figure below shows the data block "Deactivate SNMP". The data block "Deactivate SNMP" contains the data record B071H as well as additional tags that you use to transfer the data record. The tag "snmp_deactivate" is used to trigger the job for WRREC. Place this tag in the retentive memory area so that the value is also available in the startup OB (OB100).

Deactivate SNMP

	Name	Data type	Start value	R...	A...	W...	V...	Comment
1	Static							
2	snmp_deactivate	Bool	TRUE	✓	✓		✓	Tag for deactivation
3	snmp_record	Struct		✓	✓		✓	Data record 16#B071
4	BlockID	UInt	16#F003	✓	✓		✓	
5	BlockLenght	UInt	8	✓	✓		✓	
6	Version	USInt	1	✓	✓		✓	
7	Subversion	USInt	0	✓	✓		✓	
8	Reserved	UInt	0	✓	✓		✓	
9	SNMPControl	UDInt	0	✓	✓		✓	
10	snmp_done	Bool	false		✓		✓	
11	snmp_error	Bool	false		✓		✓	
12	snmp_status	DWord	16#0		✓		✓	

Figure 3-15 Example: Data block for disabling SNMP

Transfer the data record B071H in the startup OB (OB100) to CPU 1516-3 PN/DP with the WRREC instruction (write data record).

In the following program code, the data record B071H is transferred with the WRREC instruction in a REPEAT UNTIL loop.

```
ORGANIZATION_BLOCK "Startup"
TITLE = "Complete Restart"
{ S7_Optimized_Access := 'TRUE' }
VERSION : 0.1
BEGIN
 REPEAT
 "WRREC_DB_1"
 (REQ := "Deactivate SNMP".snmp_deactivate,
  //Transfer data record
 INDEX:=16#B071,
  //Data record number for SNMP deactivation
 ID:="Local~PROFINET_interface_1",
  //any integrated PROFINET Interface
 DONE => "Deactivate SNMP".snmp_done,
 ERROR => "Deactivate SNMP".snmp_error,
 STATUS => "Deactivate SNMP".snmp_status,
 RECORD := "Deactivate SNMP".snmp_record)
  //Data record
 UNTIL "Deactivate SNMP".snmp_done OR "Deactivate SNMP".snmp_error
 END_REPEAT;
END_ORGANIZATION_BLOCK
```

Using program code

You will find the full program code here.

Follow these steps to apply the program code to your project:

1. Copy the entire program code to the clipboard with Ctrl+A, Ctrl+C.
2. Open a text editor (e.g. "Editor").
3. Paste the content of the clipboard to the text editor with Ctrl+V.
4. Save the document as an scl file, e.g. SNMP_DEACT.scl.
5. Open your project in STEP 7.
6. Import the scl file as an external source.
   You will find further information on importing external sources in the STEP 7 online help.
7. Generate the startup OB and the data blocks. (right-click on the scl file, shortcut menu: "Generate blocks from source")

Re-enabling SNMP

With small changes, you can use the program code used above to enable SNMP.

In the user program, assign the "Deactivate SNMP".snmp_record.SNMPControl tag the value "1":

```
"Deactivate SNMP".snmp_record.SNMPControl := 1;
```

SNMP will then be enabled again the next time the CPU is started.

PG communication 4

Properties

Using PG communication, the CPU or another module capable of communication exchanges data with an engineering station (for example PG, PC). The data exchange is possible via PROFIBUS and PROFINET subnets. The gateway between S7 subnets is also supported.

PG communication provides functions needed to load programs and configuration data, run tests, and evaluate diagnostic information. These functions are integrated in the operating system of the module capable of communication.

A PG/PC can be connected to a CPU online. The PG/PC can operate a maximum of 4 online connections at one time (for example to 4 CPUs).

Requirements

- The PG/PC is physically connected to the communication-capable module.
- If the communication-capable module is to be reached via S7 routing, the hardware configuration has to be loaded in the participating stations (S7 router and end point).

Procedure for connecting online

You must establish an online connection to the CPU for the programming device communication:

1. Select the CPU in the project tree in STEP 7.
2. Select the "Online > Go online" menu command.
3. In the "Go online" dialog, make the following settings for your online connection:
   - Select interface type (e.g. PN/IE) in the "Type of PG/PC interface" drop-down list.
   - In the "PG/PC interface" drop-down list, select the PG/PC interface (e.g. Ind. Ethernet card) you want to use to establish the online connection.
   - Select the interface or the S7 subnet with which the programming device/PC is physically connected from the "Connection to interface/subnet" drop-down list.

– If the communication-capable module can be reached via an S7 router (gateway), select the S7 router that connects the subnets in question from the "1st gateway" drop-down list.

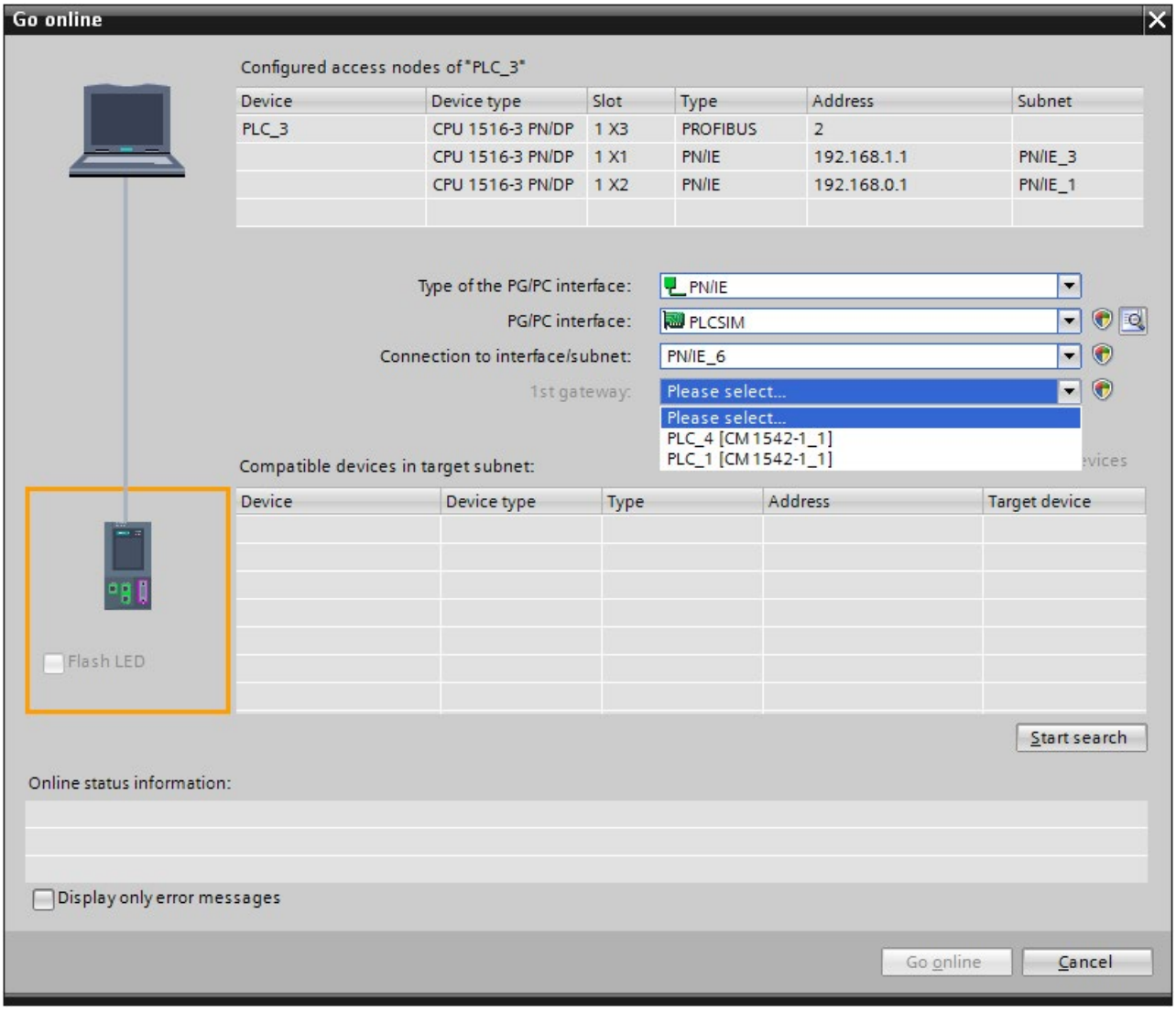

Figure 4-1 Setting up PG communication

4. Click "Start search".
   All devices that you can address with PG communication appear shortly thereafter in the table "Compatible devices in target subnet".
5. In the "Compatible devices in target subnet" table, select the relevant CPU and confirm with "Go online".

Additional information

You can find more information on "Go online" in the STEP 7 online help.

HMI communication 5

Properties

Using HMI communication, one or more HMI devices (for example HMI Basic/Comfort/Mobile Panel) exchanges data with a CPU for operator control and monitoring with via the PROFINET or PROFIBUS DP interface. The data exchange is via HMI connections.

If you want to set up several HMI connections to a CPU, use for example:

- The PROFINET and PROFIBUS DP interfaces of the CPU
- CPs and CMs with the relevant interfaces

Procedure for setting up HMI communication

As soon as you drag-and-drop a tag, for example a tag from a global data block into an HMI screen or into the HMI tag table, STEP 7 automatically sets up an HMI connection. Alternatively, you can also set up the HMI connection yourself.

To set up an HMI connection, follow these steps.

1. Configure the HMI device in an existing configuration with a CPU in the network view of the Devices & networks editor of STEP 7.
2. Select the "Connections" button and then "HMI connection" from the drop-down list.
3. Drag-and-drop a line between the end points of the connection (HMI device and CPU). The end points are highlighted in color. If the required S7 subnet does not yet exist, it is created automatically.

4. In the "Connections" tab, select the row of the HMI connection.

   In the "General" area of the "Properties" tab, you see the properties of the HMI connection, some of which you can change.

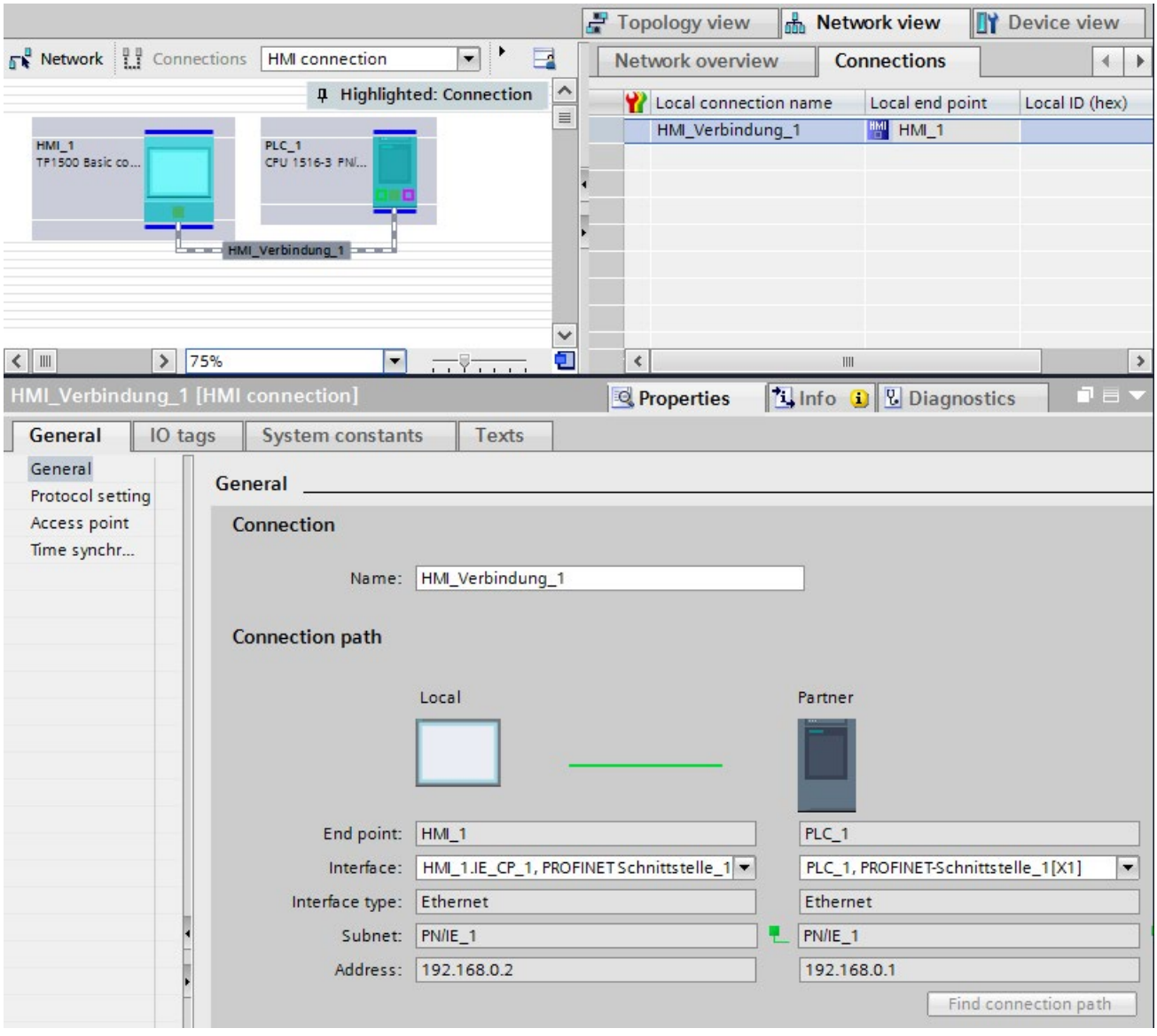

Figure 5-1 Setting up HMI communication

5. Download the hardware configuration to the CPU.
6. Download the hardware configuration to the HMI device.

Additional information

You can find information on S7 routing for HMI connections in the section S7 Routing (Page 260).

You can find more information on setting up HMI connections in the STEP 7 online help.

Open User Communication 6

6.1 Overview of Open User Communication

Features of Open User Communication

Through Open User Communication, also called "open communication", the CPU exchanges data with another device capable of communication. Open User Communication has the following features and characteristics:

- Open standard (communication partners can be two SIMATIC CPUs or a SIMATIC CPU and a suitable third-party device).
- Communication via various protocols (in STEP 7 known as "Connection types")
- High degree of flexibility in terms of the data structures transferred; this allows open data exchange with any communications devices as long as these support the connection types available.
- Secure Communication: To protect your automation system, you can exchange data securely over Open User Communication. With Secure Open User Communication, the data is sent signed and encrypted.
- Open User Communication is possible in various automation systems, see technical specifications of the respective manuals.
  Examples:
  - Integrated PROFINET / Ind. Ethernet interfaces of CPUs (S7-1500, ET 200SP CPU, S7-1500 Software Controller, CPU 1516pro-2 PN)
  - PROFINET / Ind. Ethernet interfaces of communications modules (for example CP 1543-1, CM 1542-1)

Information on Secure Open User Communication is available in the section Secure Communication (Page 37).

Information on S7-1500R/H

You can find information on Open User Communication with the S7-1500R/H redundant system in section Communication with the redundant system S7-1500R/H (Page 283).

6.2 Protocols for Open User Communication

Protocols for Open User Communication

The following protocols are available for open communication:

Table 6- 1 Transport protocols for open communication

Transport protocol	Via interface
TCP according to RFC 793	PROFINET/Industrial Ethernet
ISO-on-TCP according to RFC 1006 (Class 4)	PROFINET/Industrial Ethernet
ISO according to ISO/IEC 8073	Industrial Ethernet (only CP 1543-1)
UDP according to RFC 768	PROFINET/Industrial Ethernet
FDL	PROFIBUS

Table 6- 2 Application protocols for open communication

Application protocol	Used transport protocol
Modbus TCP	**TCP** according to RFC 793
E-mail	**TCP** according to RFC 793
FTP	**TCP** according to RFC 793

TCP, ISO-on-TCP, ISO, UDP

Prior to data transfer, these protocols (except UDP) establish a transport connection to the communications partner. Connection-oriented protocols are used when potential loss of data needs to be avoided.

The following is possible with UDP:

- Unicast to one device or broadcast to all devices on PROFINET via the PROFINET interface of the CPU or the Industrial Ethernet interface of the CP 1543-1
- Multicast to all recipients of a multicast group via the PROFINET interface of the CPU* or the PROFINET / Industrial Ethernet interface of the CP 1543-1

* As of firmware version V2.0, the PROFINET interface of the CPU supports a maximum of 5 multicast groups

Maximum user data lengths UDP: Which maximum user data length is supported for the UPD is described in the technical specifications in the respective manuals.

Protocol for communication via PROFIBUS: FDL

Data transfer via an FDL connection (Fieldbus Data Link) is suitable for the transfer of related blocks of data to a communications partner on PROFIBUS that supports the sending and receiving of data according to the FDL service SDA (Send Data with Acknowledge) according to EN 50170, Vol 2. Both partners have the same rights; in other words, each partner can initiate sending and receiving event-driven.

In keeping with the FDL service SDN (Send Data with No Acknowledge) according to EN 50170, Vol 2, the following is possible with FDL:

- Broadcast to all devices on PROFIBUS via the PROFIBUS interface of the CM 1542-5
- Multicast to all recipients of a multicast group via the PROFIBUS interface of the CM 1542-5

Modbus TCP

The Modbus protocol is a communication protocol with linear topology based on a master/slave architecture. In the Modbus TCP (Transmission Control Protocol), the data is transmitted as TCP/IP packets.

Communication is controlled solely by suitable instructions in the user program.

E-mail and FTP

You can use email to send for example, data block contents (e.g. process data) as an attachment.

You can use the FTP connection (FTP = File Transfer Protocol) to transmit files to and from S7 devices.

The communication is controlled by instructions in the user program at the client end.

Application example: MQTT Publisher for the SIMATIC S7-1500 CPU

The "Message Queue Telemetry Transport" (MQTT) is a simple protocol on the TCP/IP level. It is suitable for the exchange of messages between devices with lower functionality and for the transfer via unreliable networks.

The application example provides a function block with which you can implement the MQTT protocol into the SIMATIC S7-1500.

You can find the application example on the Internet (https://support.industry.siemens.com/cs/ww/en/view/109748872).

Block library for SYSLOG messages

Syslog is a simply structured binary profile on UDP/IP level. It enables applications to send messages, warnings or error states to a Syslog server. Syslog is typically used for computer system management and security monitoring, and has established itself as a standard in the field of protocols.

The "LSyslog" library offers you a solution to implement the Syslog protocol in an S7-1500. In addition to the library, an application example is provided that shows you how to generate Syslog messages in your controller and send them to the Syslog server.

You can find the block library "LSyslog" and the associated application example on the Internet (https://support.industry.siemens.com/cs/ww/en/view/51929235).

6.3 Instructions for Open User Communication

Introduction

You set up Open User Communication via the corresponding connection (for example, TCP connection) as follows:

- By programming in the user programs of the communications partners or
- By configuring the connection in STEP 7 in the hardware and network editor

Regardless of whether you set up the connection by programming or configuring, instructions are always required in the user programs of both communications partners for sending and receiving the data.

Setting up the connection via the user program

If the connection is set up by programming, the connection establishment and termination is implemented using instructions in the user program.

In certain areas of application it is an advantage not to set up the communications connections statically by configuring in the hardware configuration, but to have them set up by the user program. You can set up the connections via a specific application program-controlled and therefore when necessary. Programmed connection setup also allows connection resources to be released following data transfer.

A data structure is necessary for each communications connection that contains the parameters for establishing the connection (for example system data type "TCON_IP_v4" for TCP).

The system data types (SDT) are provided by the system and have a predefined structure that cannot be changed.

The various protocols have their own data structures (see table below). The parameters are stored in a data block ("connection description DB") for example of the system data type TCON_IP_v4.

There are two ways in which you can specify the DB with the data structure:

- Recommendation: Have the data block created automatically in the properties in the program editor during parameter assignment of the connection for the TSEND_C, TRCV_C and TCON instructions.
- Create the data block manually, assign parameters to it and write it directly to the instruction
  Necessary for:
  - Secure OUC
  - Connection over DNS
  - E-mail
  - FTP

You can modify the connection parameters in the "connection description DB".

This FAQ (https://support.industry.siemens.com/cs/ww/en/view/58875807) describes how to program the TCON instruction to set up a connection for Open User Communication between two S7-1500 CPUs.

Protocols, system data types and employable instructions for programmed setup

The following table shows the protocols of the Open User Communication and the matching system data types and instructions.

Table 6- 3 Instructions for programmed setup of the connection

Protocol	System data type	Instructions
TCP	• TCON_QDN • TCON_IP_v4	Establish connection and send/receive data via: • TSEND_C/TRCV_C or • TCON, TSEND/TRCV or • TCON, TUSEND/TURCV (connection can be terminated via TDISCON)
ISO-on-TCP	• TCON_IP_RFC	
ISO according to ISO/IEC 8073 (Class 4)	• TCON_ISOnative[1] • TCON_Configured	
UDP	• TCON_IP_v4 • TADDR_Param • TADDR_SEND_QDN • TADDR_RCV_IP	Establish connection and send/receive data via: • TSEND_C/TRCV_C • TUSEND/TURCV/TRCV (connection can be terminated via TDISCON)
FDL[1]	• TCON_FDL	Establish connection and send/receive data via: • TSEND_C/TRCV_C or • TCON, TSEND/TRCV or • TCON, TUSEND/TURCV (connection can be terminated via TDISCON)
Modbus TCP	• TCON_IP_v4 • TCON_QDN	• MB_CLIENT • MB_SERVER
E-mail	• TMAIL_v4 • TMAIL_v6 • TMAIL_FQDN	• TMAIL_C
FTP[2]	• FTP_CONNECT_IPV4[3] • FTP_CONNECT_IPV6[3] • FTP_CONNECT_NAME[3]	• FTP_CMD

1 This protocol can only be used with the CM 1542-5

2 This protocol can only be used with the CP 1543-1

3 User-defined data type

The following table shows you the different connections of the Secure Open User Communication and the matching system data types and instructions.

Secure OUC connection	System data type	Instructions
Secure TCP connection from an S7-1500 CPU as TLS client to a third-party PLC (TLS server) Secure TCP connection from an S7-1500 CPU as TLS server to a third-party PLC (TLS client)	• TCON_QDN_SEC	• TSEND_C/TRCV_C • TCON
Secure TCP connection between two S7-1500 stations	• TCON_IP_V4_SEC[1]	
Secure connection to a mail server[2]	• TMAIL_V4_SEC • TMAIL_QDN_SEC	• TMAIL_C (V5.0 or higher)
Secure Modbus TCP connection	• TCON_IP_V4_SEC[1]	• MB_Client • MB_Server
	• TCON_QDN_SEC	

[1] Also possible for CP 1543-1

[2] Secure connection to a mail server also possible with CP1543-1 und TMAIL_C (V4.0)

Setting up the connection with connection configuration

When setting up through the configuration of the connection, the address parameters of the connection are specified in the hardware and network editor of STEP 7.

To send and receive the data, use the same instructions as when the connections are set up by programming:

Table 6- 4 Instructions for sending/receiving with configured connections

Protocol	Send/receive with configured connections
Supported instructions:	
TCP	Send/receive data via: • TSEND_C/TRCV_C or • TSEND/TRCV or • TUSEND/TURCV
ISO-on-TCP	
ISO according to ISO/IEC 8073 (Class 4)	
UDP	Send/receive data via: • TSEND_C/TRCV_C or • TUSEND/TURCV
FDL	Send/receive data via: • TSEND_C/TRCV_C or • TSEND/TRCV or • TUSEND/TURCV
Modbus TCP	Not supported
E-mail	Not supported
FTP	Not supported

Additional instructions for open communication

You can use the following instructions for connections set up in the user program as well as for configured connections:

- T_RESET: Terminating and establishing a connection
- T_DIAG: Check the connection

Basic examples for Open User Communication

The Siemens Online Support offers you function blocks (FBs) that facilitate the handling of the instructions of the Open User Communication. You can find the function block with corresponding examples on the Internet (https://support.industry.siemens.com/cs/ww/en/view/109747710).

Additional information

The STEP 7 online help describes:

- The user and system data types
- The instructions for open communication
- The connection parameters

You will find information about the allocation and release of connection resources in the section Allocation of connection resources (Page 271).

See also

Secure Open User Communication (Page 94)

6.4 Open User Communication with addressing via domain names

As of firmware version V2.0, S7-1500 CPUs, ET 200SP CPUs and the CPU 1516pro-2 PN support Open User Communication with addressing via Domain Name System (DNS). A DNS client is integrated in the CPU. In the case of communication via DNS, you use domain names as an alias for IP addresses to address communication partners. Addressing of the communication partners via domain names is possible for open communication via TCP and UDP.

At least one DNS server must be located in your network as a requirement for communication via DNS.

The S7-1500 software controller supports communication via DNS for all interfaces that are assigned to the software controller.

Setting up communication via DNS

The DNS client of the CPU must know the IPv4 address of at least one DNS server so that a CPU can establish a connection to a communication partner via its domain name. The CPU supports up to 4 different DNS servers.

To set up communication via domain names for an S7-1500 CPU, follow these steps:

1. Select the CPU in the network view of STEP 7.
2. In the Inspector window go to "Properties" > "General" > "DNS configuration".
3. Enter the IPv4 address of a DNS server in the "DNS server addresses" column of the "Server list" table.
   You can enter up to 4 IPv4 addresses of DNS servers.

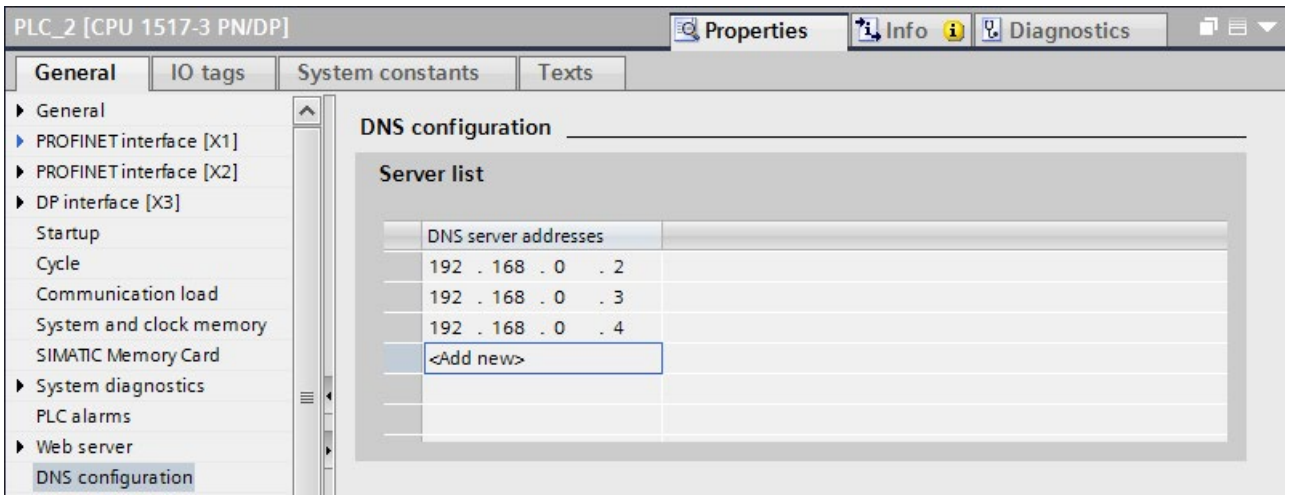

Figure 6-1 Entering DNS server addresses using a CPU 1516-3 PN/DP as an example

Setting up a TCP connection via the domain name of the communication partner

For TCP communication via the domain name you need to create a data block with the TCON_QDN system data type yourself, assign parameters and call it directly at the instruction. The TCON, TSEND_C and TRCV_C instructions support the system data type TCON_QDN:
To set up a TCP connection via the domain name of the communication partner, follow these steps:

1. Create a global data block in the project tree.
2. Define a tag of the data type TCON_QDN in the global data block.

   The example below shows the global data block "Data_block_1" in which the tag "DNS Connection1" of data type TCON_QDN is defined.

Data_block_1

	Name	Datentyp	Startwert	Kommentar
1	Static			
2	DNS Connection1	TCON_QDN		
3	InterfaceId	HW_ANY	0	not relevant
4	ID	CONN_OUC	16#0	connection reference / identifier
5	ConnectionType	Byte	16#0B	type of connection: 16#0B=11=TCP/IP, 16#13=19=UDP
6	ActiveEstablished	Bool	false	active/passive connection establishment
7	RemoteQDN	String[254]	''	fully or partially qualified domain name of remote partner
8	RemotePort	UInt	0	remote UDP / TCP port number
9	LocalPort	UInt	0	local UDP / TCP port number

Figure 6-2 Data type TCON_QDN

3. Program the parameters of the TCP connection (for example the fully qualified domain name (FQDN)) in the tag of data type TCON_QDN.
4. Create a TCON instruction in the program editor.
5. Interconnect the CONNECT parameter of the TCON instruction with the tag of the data type TCON_QDN.

   In the example below, the CONNECT parameter of the TCON instruction is interconnected with the tag "DNS connection1" (data type TCON_QDN).

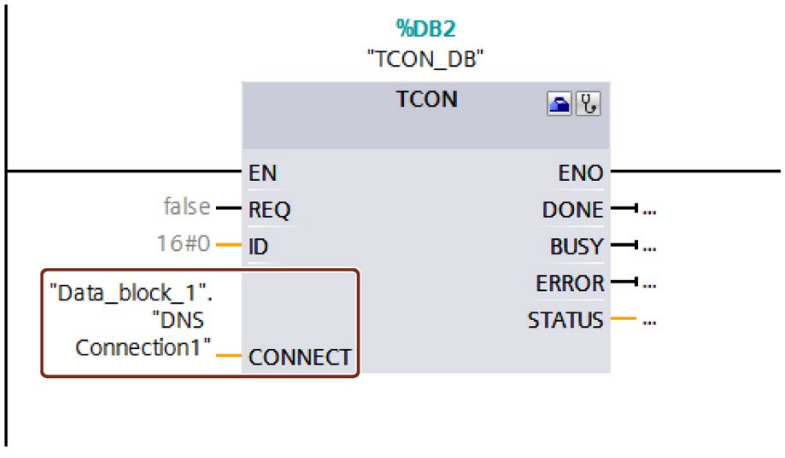

Figure 6-3 TCON instruction

Addressing a UDP connection via the domain name of the communication partner

For S7-1500 CPUs as of firmware version V2.0, you can address the recipient with its fully qualified domain name (FQDN) when sending data via UDP. With the instruction TUSEND at the parameter ADDR, you hereby reference a structure of the type TADDR_SEND_QDN.

The receiver can return an IPv4 or an IPv6 address. With the TURCV instruction at the ADDR parameter, you therefore reference a structure of the TADDR_RCV_IP type. Only this structure can include both IP address types.

Note

Network load

In contrast to the TCP the UDP protocol does not work connection-oriented. For every edge at the block parameter REQ, the TUSEND or TURCV command performs queries of the DNS server. This can lead to high network load or load on the DNS server.

Additional information

You can find more information about the system data types TCON_QDN, TADDR_SEND_QDN and TADDR_RCV_IP in the STEP 7 online help.

How to set up a secure TCP connection via the domain name of the communication partner is described in the section Secure Open User Communication (Page 94).

6.5 Setting up Open User Communication via TCP, ISO-on-TCP, UDP and ISO

Configuring a connection for the TSEND_C, TRCV_C or TCON instructions

Requirement: A TSEND_C, TRCV_C or TCON instruction is created in the programming editor.

1. Select a TCON, TSEND_C or TRCV_C block of Open User Communication in the program editor.
2. Open the "Properties > Configuration" tab in the inspector window.

3. Select the "Connection parameters" group. Until you select a connection partner, only the empty drop-down list for the partner end point is enabled. All other input options are disabled.

   The connection parameters already known are displayed:

   – Name of the local end point
   – Interface of the local end point
   – IPv4 address of the local end point

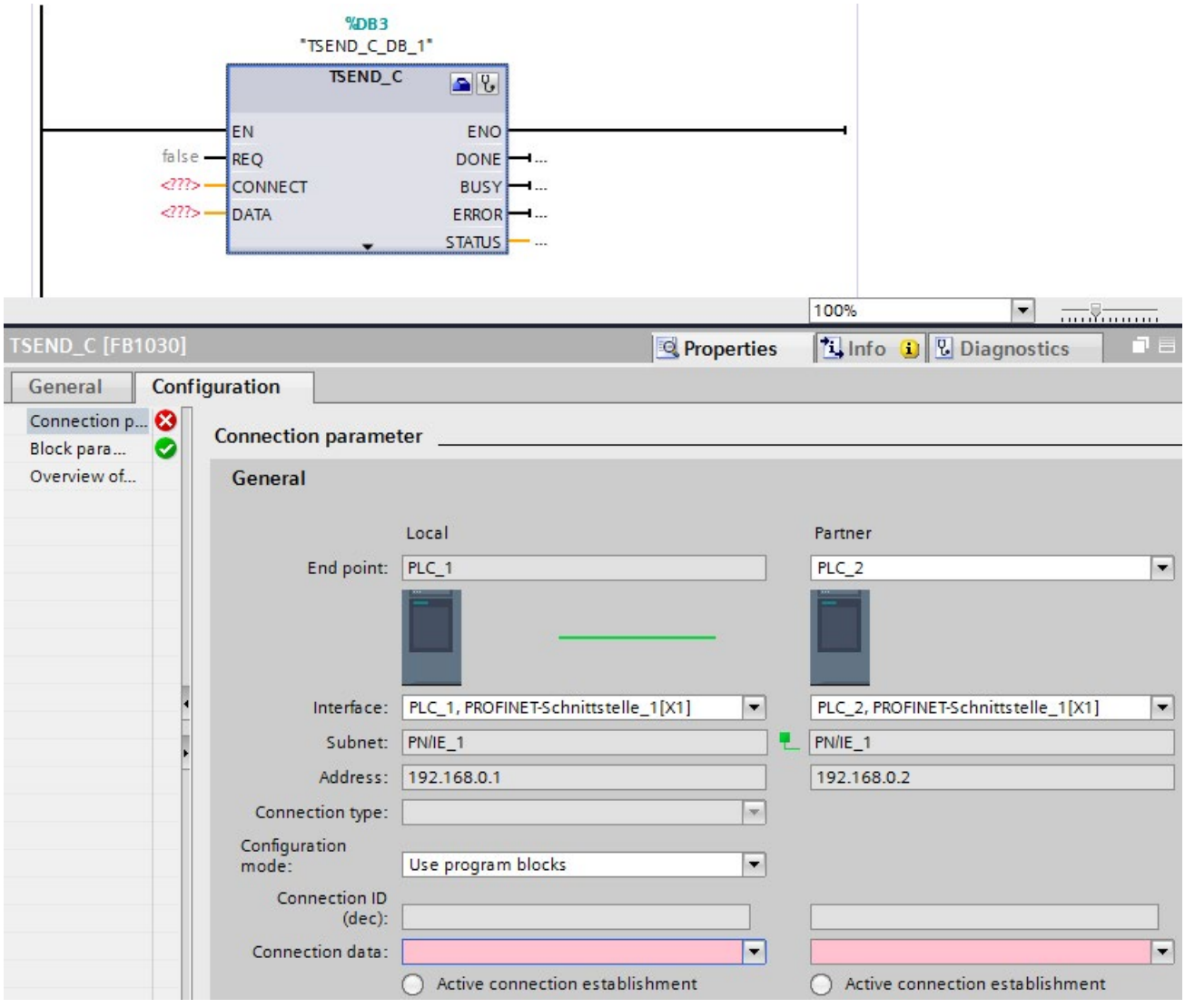

Figure 6-4 Connection parameters for TSEND_C

4. In the drop-down list box of the partner end point, select a connection partner. You can select an unspecified device or a CPU in the project as the communication partner. Certain connection parameters are then entered automatically.

   The following parameters are set:

   – Name of the partner end point
   – Interface of the partner end point

- IPv4 address of the partner end point

If the connection partners are networked, the name of the subnet is displayed.

5. In the "Configuration type" drop-down list, select between using program blocks or configured connections.
6. Select an existing connection description DB in the "Connection data" drop-down list or for configured connections select an existing connection under "Connection name". You can also create a new connection description DB or a new configured connection. Later, you can still select other connection description DBs or configured connections or change the names of the connection description DBs in order to create new data blocks:
   - You can also see the selected data block at the interconnection of the CONNECT input parameter of the selected TCON, TSEND_C or TRCV_C instruction.
   - If you have already specified a connection description DB for the connection partner using the CONNECT parameter of the TCON, TSEND_C or TRCV_C instruction, you can either use this DB or create a new DB.
   - If you edit the name of the displayed data block in the drop-down list, a new data block with the changed name but with the same structure and content is generated and used for the connection.
   - Changed names of a data block must be unique in the context of the communication partner.
   - A connection description DB must have the structure TCON_Param, TCON_IP_v4 or TCON_IP_RFC, depending on CPU type and connection.
   - A data block cannot be selected for an unspecified partner.

   Additional values are determined and entered after the selection or creation of the connection description DB or configured connection.

   The following is valid for specified connection partners:
   - ISO-on-TCP connection type
   - Connection ID with default of 1
   - Active connection establishment by local partner
   - TSAP ID
     for S7-1200/1500: E0.01.49.53.4F.6F.6E.54.43.50.2D.31

   The following is valid for unspecified connection partners:
   - TCP connection type
   - Partner port 2000

   The following applies for a configured connection with a specified connection partner:
   - TCP connection type
   - Connection ID with default of 257
   - Active connection establishment by local partner
   - Partner port 2000

   The following applies for a configured connection with an unspecified connection partner:
   - TCP connection type
   - Local port 2000

7. Enter a connection ID as needed for the connection partner. No connection ID can be assigned to an unspecified partner.

   Note

   You must enter a unique value for the connection ID at a known connection partner. The uniqueness of the connection ID is not checked by the connection parameter settings and there is no default value entered for the connection ID when you create a new connection.

8. Select the desired connection type in the relevant drop-down list. Default values are set for the address details depending on the connection type. You can choose between the following:
   - TCP
   - ISO-on-TCP
   - UDP
   - ISO (only with Configuration mode "Use configured connection")

   You can edit the input boxes in the address details. Depending on the selected protocol, you can edit the ports (for TCP and UDP) or the TSAPs (for ISO-on-TCP and ISO).
9. Use the "Active connection establishment" check box to set the connection establishment characteristics for TCP, ISO and ISO-on-TCP. You can decide which communication partner establishes the connection actively.

Changed values are checked immediately for input errors by the connection configuration and entered in the data block for the connection description.

Note

Open User Communication between two communication partners can only work when the program section for the partner end point has been downloaded to the hardware. To achieve fully functional communication, make sure that you load not only the connection description of the local CPU on the device but also that of the partner CPU as well.

Configuring connections, e.g. for TSEND/TRCV

If you want to use the instructions for TSEND/TRCV for open communication, for example, you first need to configure a connection (e.g. TCP connection).

To configure a TCP connection, follow these steps:

1. Configure the communications partners in the network view of the Devices & networks editor of STEP 7.
2. Click the "Connections" button and select the "TCP connection" connection type from the drop-down list.
3. Using drag-and-drop, connect the communication partner with each other (via an interface or local end point). If the required S7 subnet does not yet exist, it is created automatically.

   You can also set up a connection to unspecified partners.
4. Select the created connection in the network view.
5. Set the properties of the connection in the "Properties" tab in the "General" area, for example the name of the connection and the interfaces of the communications partner that will be used.

   For connections to an unspecified partner, set the address of the partner.
   You can find the local ID (reference of the connection in the user program) in the "Local ID" area.
6. In the Project tree, select the "Program blocks" folder for one of the CPUs and open OB1 in the folder by double-clicking on it. The program editor opens.
7. Select the required instruction from the "Instructions" task card, "Communication" area, "Open user communication", for example TSEND and drag it to a network of OB1.
8. At the ID parameter of the instruction, assign the local ID of the configured connection to be used for the transmission of data.
9. Interconnect the "DATA" parameter of the TSEND instruction with the user data, for example in a data block.
10. Download the hardware configuration and user program to the CPU.

Based on the procedure described above, set up the connection on the partner CPU with the instruction for receiving, TRCV, and download it to the CPU.

Point to note with ISO connections with CP 1543-1

If you use the "ISO connection" connection type, you will need to select the "Use ISO protocol" check box in the properties of the CP so that addressing using MAC addresses will work.

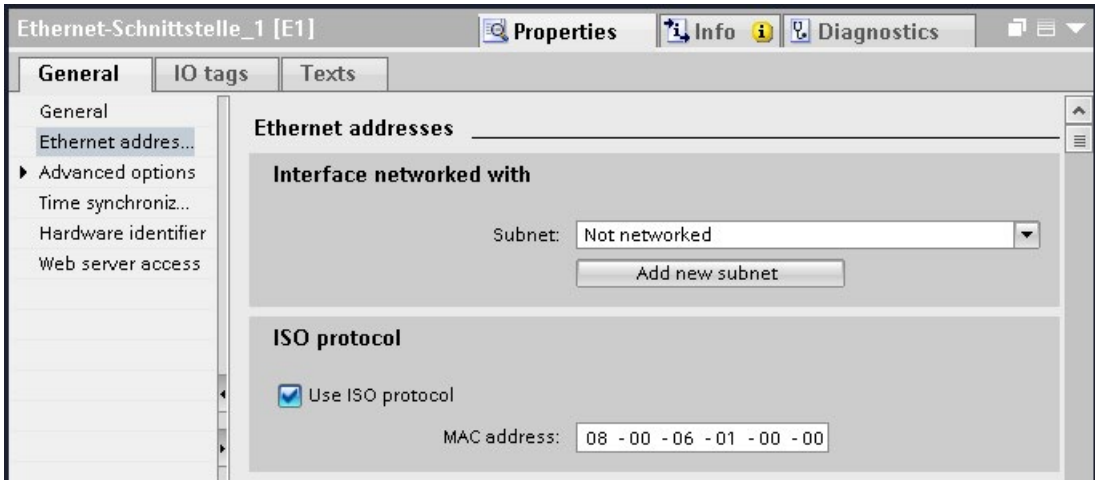

Figure 6-5 Select CP 1543-1 ISO protocol

Additional information

The STEP 7 online help describes:

- The instructions for open communication
- The connection parameters

This FAQ (https://support.industry.siemens.com/cs/ww/en/view/109479564) describes how the instructions TSEND_C and TRCV_C behave in the S7-1500.

6.6 Setting up communication over FDL

Requirements

- Configuration software: STEP 7 Professional V14
- End point of the connection: CPU S7-1500 firmware version V2.0 or higher with communication module CM 1542-5 with firmware version V2.0

Setting up a configured FDL connection

Proceed as follows to set up a configured FDL connection in STEP 7:

1. Create a TSEND_C instruction in the program editor.
2. Select the TSEND_C instruction and go to "Properties" > "General" > "Connection parameters" in the Inspector window.
3. Under End point, select the partner end point. Use one of the two partner end points below:
   - CPU S7-1500 with CM 1542-5
   - Unspecified
4. Under Configuration type, select "Use configured connection".
5. Under Connection type, select "FDL".
6. Under Interface, select the following interfaces:
   - Local: PROFIBUS interface of CM 1542-5
   - Specified partner: PROFIBUS interface of CM 1542-5
7. Under Connection data, select the setting <new>.

The figure below shows a fully configured FDL connection in STEP 7.

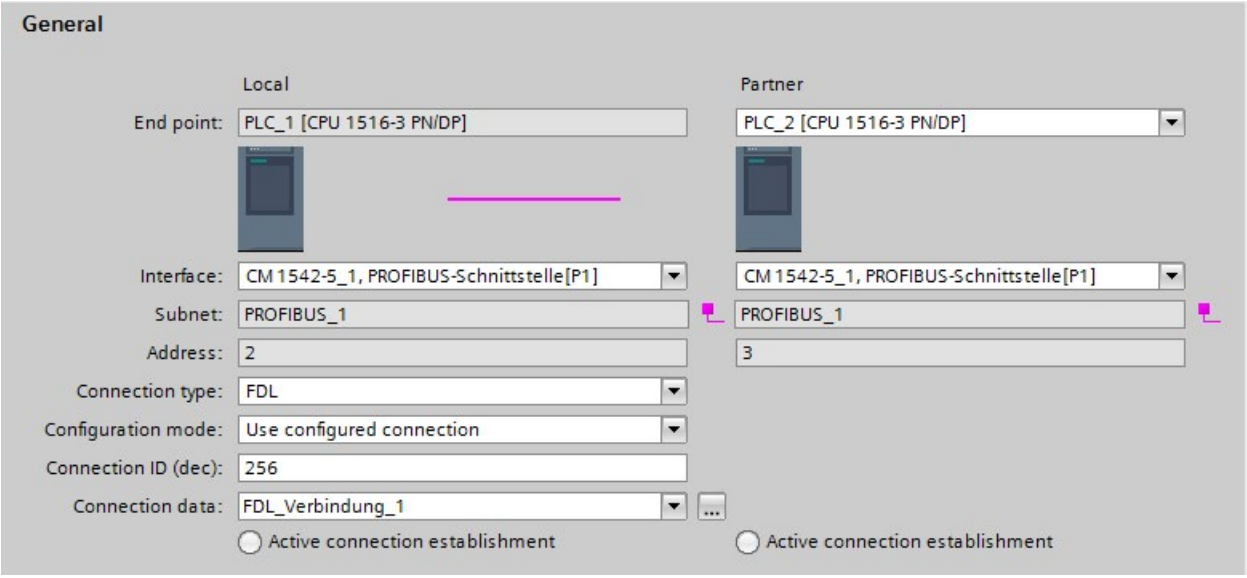

Figure 6-6 Configuring the FDL connection

Setting up an FDL connection in the user program

For communication via FDL, you need to create the data block of the TCON_FDL system data type yourself in each case, assign parameters and call it directly at the instruction. Follow these steps:

1. Create a global data block in the project tree.
2. In the global data block, define a tag of the data type TCON_FDL.

   The example below shows the global data block "FDL_connection" in which the tag "FDL_connection" of the data type TCON_FDL is defined.

FDL_connection

	Name	Data type	Start val..	R...	A...	...	V...	S...	Super...	Comment
1	Static									
2	FDL_connection	TCON_FDL			☑	☑	☑			
3	InterfaceId	HW_ANY	0		☑	☑	☑			HW identifier of PB interface submodule
4	ID	CONN_OUC	16#0		☑	☑	☑			connection reference / identifier
5	ConnectionType	Byte	16#15		☑	☑	☑			type of connection: 21= FDL connection
6	ActiveEstablished	Bool	false		☑	☑	☑			active/passive connection establishment
7	ServiceId	Byte	16#0		☑	☑	☑			service id: 0 – default, 1 – SDA, 2 – SDN
8	RemotePBAddress	Byte	16#0		☑	☑	☑			remote ProfiBus partner address
9	LocalPBAddress	Byte	16#0		☑	☑	☑			local ProfiBus partner address
10	RemoteLSAP	Byte	16#0		☑	☑	☑			remote PB link-layer service access point
11	LocalLSAP	Byte	16#0		☑	☑	☑			local PB link-layer service access point

Figure 6-7 Programming an FDL connection

3. Program the parameters of the FDL connection (e.g. the PROFIBUS addresses) in the tag of the data type TCON_FDL.

4. Create a TCON instruction in the program editor.
5. Interconnect the CONNECT parameter of the TCON instruction with the tag of the data type TCON_FDL.

   In the example below, the CONNECT parameter of the TCON instruction is interconnected with the tag "FDL_Connection" (data type TCON_FDL).

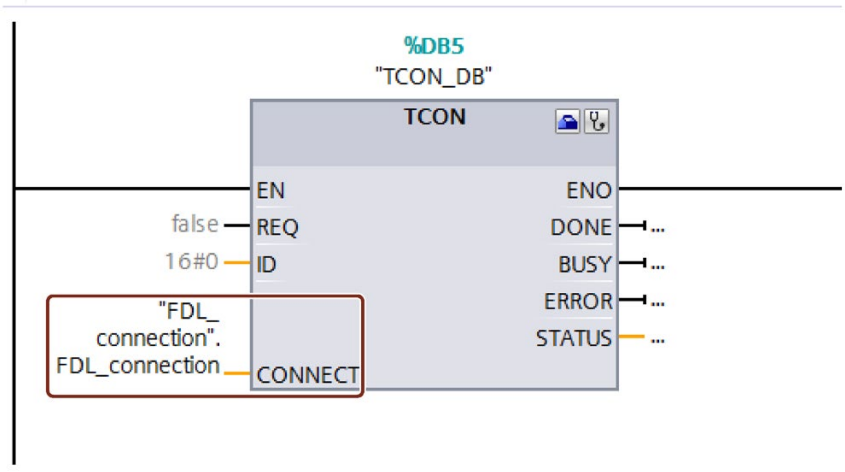

Figure 6-8 Example: TCON Instruction for FDL connection

6.7 Setting up communication with Modbus TCP

Setting up a connection for Modbus TCP via the user program

The parameter assignment takes place in the program editor at the instruction MB_CLIENT or MB_SERVER.

Procedure for setting up communication using Modbus TCP

The MB_CLIENT instruction communicates as a Modbus TCP client via the TCP connection. You establish a connection between the client and the server with the instruction, send Modbus requests to the server and receive the corresponding Modbus responses. You also control the setup of the TCP connection with this instruction.

The MB_SERVER instruction communicates as a Modbus TCP server via the TCP connection. The instruction processes connection requests of a Modbus client, receives and processes Modbus requests and sends responses. You also control the setup of the TCP connection.

Requirement: The client can reach the server via IP communication in the network.

1. Configure an S7-1500 automation system with CPU in the network view of the Devices & networks editor of STEP 7.
2. In the Project tree, select the "Program blocks" folder and open OB1 in the folder by double-clicking on it. The program editor opens.
3. Select the required instruction, for example MB_CLIENT, from the "Instructions" task card, "Communication" area, "Other", "MODBUS TCP" and drag it to a network of OB1.

4. Assign the parameters of the MB_CLIENT or MB_SERVER instruction. Observe the following rules:

   An IPv4 server address must be specified for each MB_CLIENT connection.

   Each MB_CLIENT or MB_SERVER connection must use a unique instance DB with one of the data structures TCON_IP_v4 or TCON_QDN.

   Each connection requires a unique connection ID. The connection ID and instance DB belong together in pairs and must be unique for each connection.

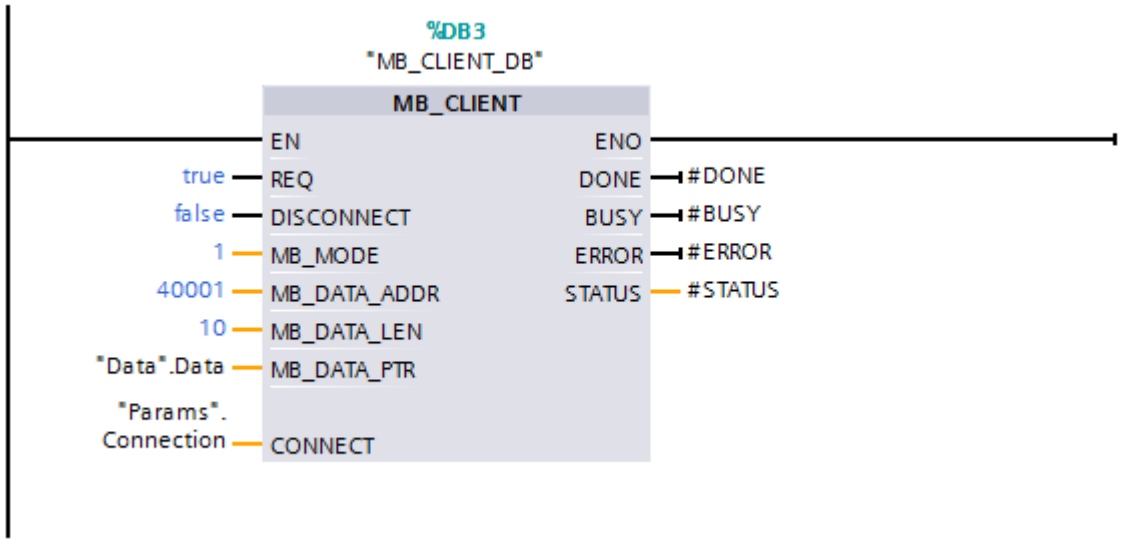

Figure 6-9 MB_CLIENT

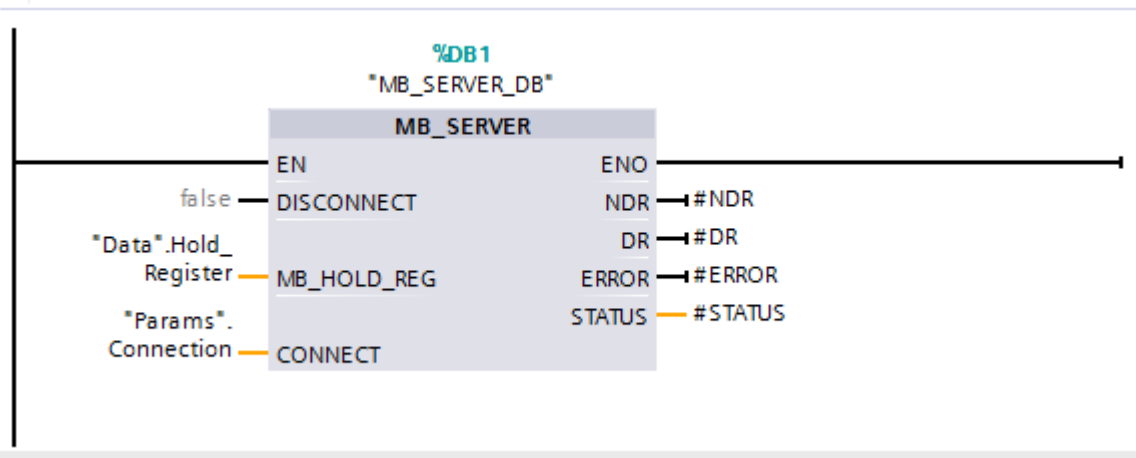

Figure 6-10 MB_SERVER

5. Download the hardware configuration and user program to the CPU.

Modbus TCP server as gateway to Modbus RTU

If you use a Modbus TCP server as a gateway to a Modbus RTU protocol, address the slave device in the serial network using the static parameter, MB_UNIT_ID. The MB_UNIT_ID parameter corresponds to the field of the slave address in the Modbus RTU protocol. The MB_UNIT_ID parameter in this case would forward the request to the correct Modbus RTU slave address.

You do not have to program the gateway function yourself.

You can find the MB_UNIT_ID parameter in the instance data block associated with MB_CLIENT instruction.

You can find more information on the MB_UNIT_ID parameter in the STEP 7 online help.

Reference

- This FAQ (https://support.industry.siemens.com/cs/ww/en/view/94766380) describes how to program and configure the Modbus TCP communication between two S7-1500 CPUs.
- This FAQ (https://support.industry.siemens.com/cs/ww/en/view/102020340) describes how to program and configure Modbus TCP communication between an S7-1500 CPU and an S7-1200 CPU.

6.8 Setting up communication via e-mail

Setting up a connection for e-mail via the user program

For communication using e-mail, you need to create the data block of the relevant system data type yourself, assign parameters and call the instruction directly. This procedure is introduced below.

Procedure for setting up communication using e-mail

A CPU can send e-mails. To send e-mails from the user program of the CPU, use the TMAIL_C instruction.

Requirement: The SMTP server can be reached via the IPv4 network.

1. Configure an S7-1500 automation system with CPU in the network view of the Devices & networks editor of STEP 7.
2. Assign parameters to the instruction TMAIL_C, for example enter the subject of the e-mail in Subject.
3. In a global data block create a variable of the type TMAIL_v4, TMAIL_v6 (only CP 1543-1) or TMAIL_FQDN (only CP 1543-1).
4. Set the connecting parameters of the TCP connection in the variable in the "Start value" column. Enter the IPv4 address of the mail server, for example, for the "MailServerAddress" (for TMAIL_v4)

   Note

   Connection parameters InterfaceId and ID

   Note that you can enter the value "**0**" for the interface ID and the ID with instruction version V5.0 or higher of the instruction TMAIL_C in the data type TMAIL_V4_SEC. In this case the CPU itself searches for a matching local CPU interface or a free connection ID.

   Interconnect the variable to the MAIL_ADDR_PARAM parameter of the TMAIL_C instruction.
5. Download the hardware configuration and user program to the CPU.

Additional information

The STEP 7 online help describes:

- The system data types
- The instructions for open communication
- The connection parameters

6.9 Setting up communication via FTP

Setting up a connection for FTP via the user program

For communication via FTP, you need to create the data block of the relevant system data type yourself, assign parameters and call the instruction directly. This procedure is introduced below.

FTP client and server functionality

Files can be sent by a CPU to an FTP server and can be received from the FTP server. Communication with FTP is only possible for the S7-1500 using the CP 1543-1. The CP can be an FTP server, FTP client or both. FTP clients can also be third-party systems/PCs.

For the FTP server functionality, configure the CP accordingly in STEP 7.

You can use the FTP client functionality to implement, for example, the establishment and termination of an FTP connection, the transfer and deletion of files on the server. For the FTP client functionality, use the FTP_CMD instruction.

Procedure for setting up FTP server functionality

Requirement: The FTP server can be reached via the IPv4 network.

1. Configure an S7-1500 automation system with CPU and CP 1543-1 in the device view of the Devices & networks editor of STEP 7.

   At the same time, you need to select the check box "Permit access with PUT/GET communication from remote partner (PLC, HMI, OPC, ...)" in the HW configuration of the S7-1500 CPU under the "Protection" area navigation in the section "Connection mechanisms".

2. Make the following settings in the properties of the CP under "FTP configuration":
   - Select the "Use FTP server for S7 CPU data" check box.
   - Assign the CPU, a data block and a file name under which the DB for FTP will be stored.

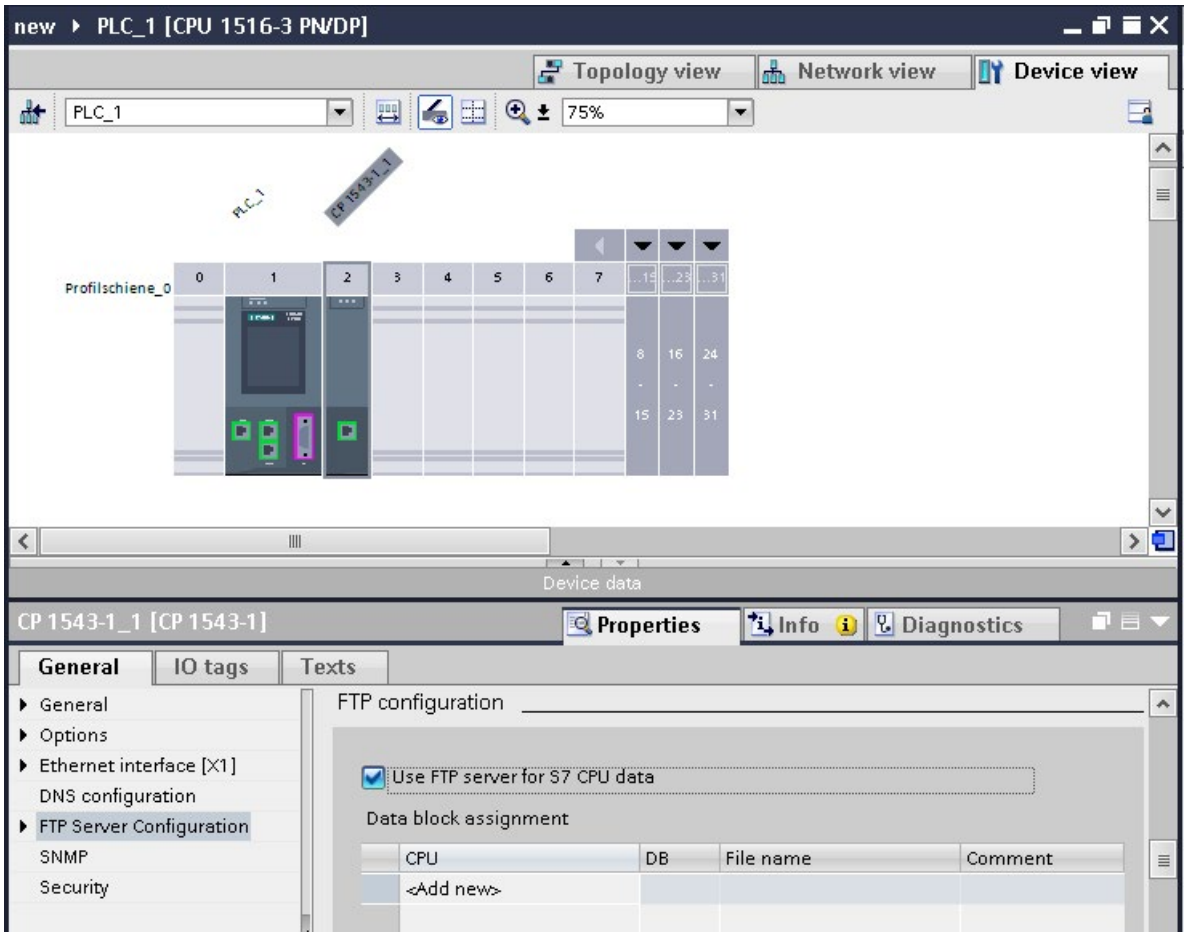

Figure 6-11 Setting up the FTP configuration

3. Download the hardware configuration to the CPU.

Procedure for setting up FTP client functionality

Requirement: The FTP server can be reached via the IPv4 network.

1. Configure an S7-1500 automation system with CPU and CP 1543-1 in the device view of the Devices & networks editor of STEP 7.

   At the same time, you need to select the check box "Permit access with PUT/GET communication from remote partner (PLC, HMI, OPC, ...)" in the HW configuration of the S7-1500 CPU under the "Protection" area navigation in the section "Connection mechanisms".
2. Call the FTP_CMD instruction in the user program of the CPU.
3. Set the connection parameters for the FTP server in the FTP_CMD instruction.
4. Create a global DB and within this DB a tag of the type FTP_CONNECT_IPV4, FTP_CONNECT_IPV6 or FTP_CONNECT_NAME.
5. Interconnect the tag within the data block with the FTP_CMD instruction.
6. For the connection to the FTP server, specify the following in the DB:
   - The user name, the password and the IP address for the FTP access in the relevant data type (FTP_CONNECT_IPV4, FTP_CONNECT_IPV6 or FTP_CONNECT_NAME)
7. Download the hardware configuration and user program to the CPU.

Application examples

- Application example: FTP communication with S7-1500 and CP 1543-1
  You can find the application example on the Internet (https://support.industry.siemens.com/cs/ww/en/view/103550797).
- Application example: FTP client communication with S7-1200/1500
  You can find the application example on the Internet (https://support.industry.siemens.com/cs/ww/en/view/81367009).

Additional information

The STEP 7 online help describes:

- The system data types
- The instructions for open communication
- The connection parameters

6.10 Establishment and termination of communications relations

Establishment and termination of communications

The table below shows the establishment and termination of communications as part of open communication.

Table 6- 5 Establishment and termination of communications

Setting up the connection	Establishing communication	Terminating communication
With the user program	After downloading the user program to the CPUs: The passive communications partner sets up the local connection access by calling TSEND_C/TRCV_C or TCON. Calling TSEND_C/TRCV_C or TCON on the active partner starts connection establishment. If the connection could be established, there is positive feedback to the instructions in the user program. After you have terminated a connection using the instruction T_RESET, the connection is reestablished. If the connection aborts, the active partner attempts to re-establish the connection. This applies only if the connection was successfully established beforehand with TCON.	• Using the TSEND_C/TRCV_C, TDISCON and T_RESET instructions • When the CPU changes from RUN to STOP mode • With POWER OFF/POWER ON on a CPU
By configuring a connection	After downloading the connection configuration and the user program to the CPUs.	By deleting the connection configuration in STEP 7 and downloading the changed configuration to the CPU.

6.11 Secure Open User Communication

6.11.1 Secure OUC of an S7-1500 CPU as TLS client to an external PLC (TLS server)

The following section describes how you can set up Open User Communication via TCP from an S7-1500 CPU as TLS client to a TLS server.

Setting up a secure TCP connection from an S7-1500 CPU as TLS client to a TLS server

S7-1500 CPUs as of firmware version V2.0 support secure communication with addressing via a Domain Name System (DNS).

For secure TCP communication over the domain name you need to create a data block with the TCON_QDN_SEC system data type yourself, assign parameters and call it directly at one of the instructions TSEND_C, TRCV_C or TCON.

Requirements:

- Current date and time are set in the CPU.
- Your network includes at least one DNS server.
- You have configured at least one DNS server for the S7-1500 CPU.
- TLS client and TLS server have all the required certificates.

To set up a secure TCP connection to a TLS server, follow these steps:

1. Create a global data block in the project tree.
2. Define a tag of the data type TCON_QDN_SEC in the global data block.

   The example below shows the global data block "Data_block_1" in which the tag "DNS ConnectionSEC" of the data type TCON_QDN_SEC is defined.

Data_block_1

	Name	Data type	Start value	Comment
1	Static			
2	DNS Connection SEC	TCON_QDN_SEC		
3	ConnPara	TCON_QDN		parameter of the TCP connection
4	InterfaceId	HW_ANY	0	not relevant
5	ID	CONN_OUC	5	connection reference / identifier
6	ConnectionType	Byte	11	type of connection: 16#0B=11=TCP/IP, 16#13
7	ActiveEstablished	Bool	true	active/passive connection establishment
8	RemoteQDN	String[254]	'plc_1.factory127.'	fully or partially qualified domain name of rem
9	RemotePort	UInt	4000	remote UDP / TCP port number
10	LocalPort	UInt	0	local UDP / TCP port number
11	ActivateSecureConn	Bool	true	activate the security functionality of that conn
12	TLSServerReqClientCert	Bool	false	Just for server side: The TLS server requests a
13	ExtTLSCapabilities	Word	16#0	Bit 0: Just for client side: validate given IPv4 a
14	TLSServerCertRef	UDInt	7	for Server side: Reference to own X.509 V3 se
15	TLSClientCertRef	UDInt	0	for Client side: add id of own X.509 V3 client c

Figure 6-12 Data type TCON_QDN_SEC

3. Set the connection parameters of the TCP connection in the "Start value" column. Enter the fully qualified domain name (FQDN) of the TLS server, for example, for "RemoteQDN".
4. Set the parameters for secure communication in the "Start value" column.
   - "ActivateSecureConn": Activation of secure communication for this connection. If this parameter has the value FALSE, the subsequent security parameters are irrelevant. You can set up a non-secure TCP or UDP connection in this case.
   - "ExtTLSCapabilities": If you enter the value 1, the client validates the subjectAlternateName in the X.509-V3 certificate of the server to verify the identity of the server. This validation is executed in the context of the instruction.
   - "TLSServerCertRef": ID of the X.509-V3 certificate (usually a CA certificate) that is used by the TLS client to validate the TLS server authentication. If this parameter is 0, the TLS client uses all (CA) certificates currently loaded in the client certificate store to validate the server authentication.

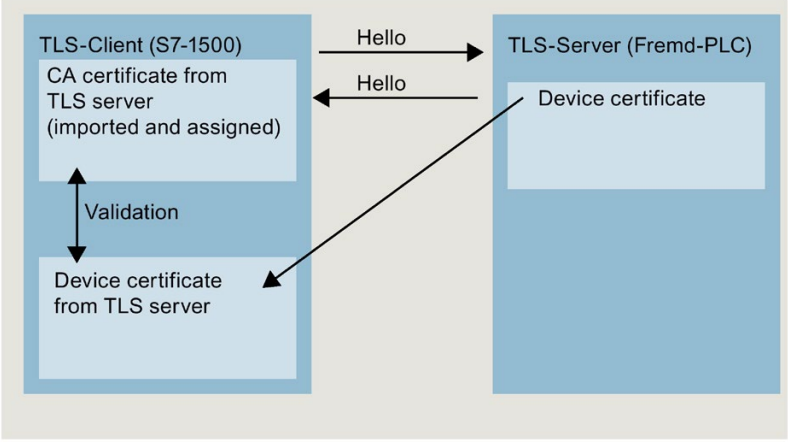

Figure 6-13 Certificate handling from the perspective of the S7-1500 as a TLS client

   - "TLSClientCertRef": ID of the own X.509-V3 certificate.

5. Create one of the instructions TSEND_C, TRCV_C or TCON in the program editor.
6. Interconnect the CONNECT parameter of one of the instructions TSEND_C, TRCV_C or TCON with the tags of the data type TCON_QDN_SEC.

   In the example below, the CONNECT parameter of the TCON instruction is interconnected with the tag "DNS connectionSEC" (data type TCON_QDN_SEC).

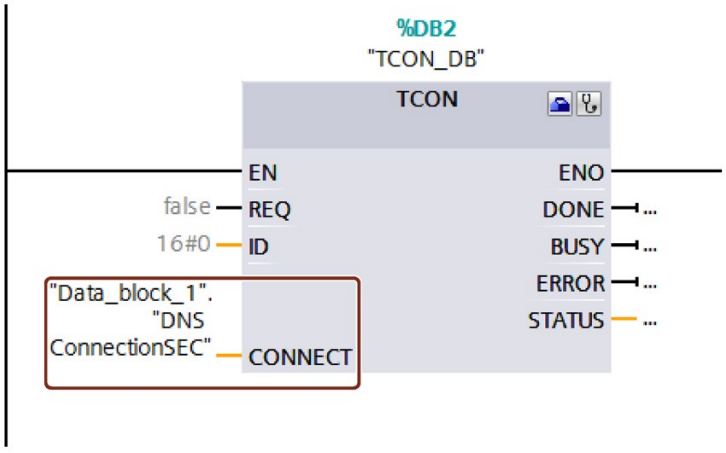

Figure 6-14 TCON instruction

Additional information

You can find more information on the TCON_QDN_SEC system data type in the STEP 7 online help.

For additional information on secure communication, refer to the section Secure Communication (Page 37).

6.11.2 Secure OUC of an S7-1500 CPU as TLS server to an external PLC (TLS client)

The following section describes how you can set up Open User Communication via TCP from an S7-1500 CPU as TLS server to a TLS client.

Setting up a secure TCP connection via the domain name of the communication partner

S7-1500 CPUs as of firmware version V2.0 support secure communication with addressing via a Domain Name System (DNS).

For secure TCP communication over the domain name you need to create a data block with the TCON_QDN_SEC system data type yourself, assign parameters and call it directly at one of the instructions TSEND_C, TRCV_C or TCON.

Requirements:

- Current date and time are set in the CPU.
- Your network includes at least one DNS server.
- You have configured at least one DNS server for the S7-1500 CPU.
- TLS client and TLS server have all the required certificates.

To set up a secure TCP connection to a TLS client, follow these steps:

1. Create a global data block in the project tree.
2. Define a tag of the data type TCON_QDN_SEC in the global data block.

   The example below shows the global data block "Data_block_1" in which the tag "DNS ConnectionSEC" of the data type TCON_FDL_SEC is defined.

Data_block_1

	Name	Data type	Start value	Comment
1	Static			
2	DNS Connection SEC2	TCON_QDN_SEC		
3	ConnPara	TCON_QDN		parameter of the TCP connection
4	InterfaceId	HW_ANY	0	not relevant
5	ID	CONN_OUC	8	connection reference / identifier
6	ConnectionType	Byte	11	type of connection: 16#0B=11=TCP/IP, 16#13
7	ActiveEstablished	Bool	false	active/passive connection establishment
8	RemoteQDN	String[254]	''	fully or partially qualified domain name of rem
9	RemotePort	UInt	0	remote UDP / TCP port number
10	LocalPort	UInt	2010	local UDP / TCP port number
11	ActivateSecureConn	Bool	true	activate the security functionality of that conn
12	TLSServerReqClientCert	Bool	false	Just for server side: The TLS server requests a
13	ExtTLSCapabilities	Word	16#0	Bit 0: Just for client side: validate given IPv4 a
14	TLSServerCertRef	UDInt	5	for Server side: Reference to own X.509 V3 se
15	TLSClientCertRef	UDInt	0	for Client side: add id of own X.509 V3 client c

Figure 6-15 TCON_QDN_SEC_Server

3. Set the connection parameters of the TCP connection in the "Start value" column. Enter, for example, the local ID of the TCP connection for "ID".

4. Set the parameters for secure communication in the "Start value" column.
   - "ActivateSecureConn": Activation of secure communication for this connection. If this parameter has the value FALSE, the subsequent security parameters are irrelevant. You can set up a non-secure TCP or UDP connection in this case.
   - "TLSServerReqClientCert": Request for an X.509-V3 certificate from the TLS client.
   - "TLSServerCertRef": ID of the own X.509-V3 certificate.

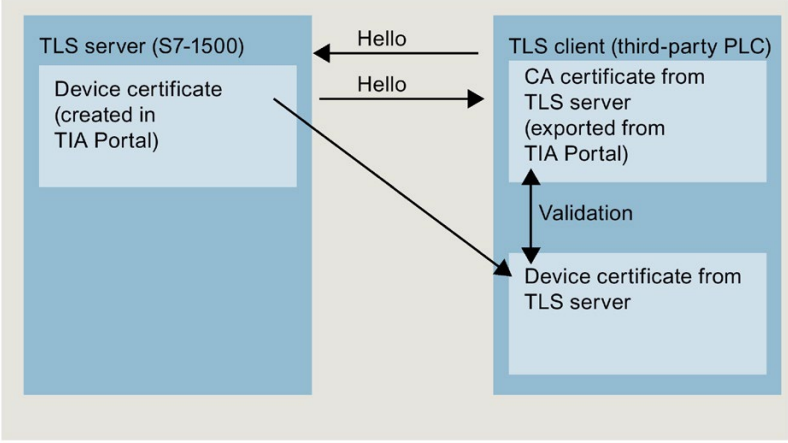

Figure 6-16 Certificate handling from the perspective of the S7-1500 as TLS server

   - "TLSClientCertRef": ID of the X.509-V3 certificate (or a group of X.509-V3 certificates) that is used by the TLS server to validate TLS client authentication. If this parameter is 0, the TLS server uses all (CA) certificates currently loaded in the server certificate store to validate the client authentication.
5. Create one of the instructions TSEND_C, TRCV_C or TCON in the program editor.
6. Interconnect the CONNECT parameter of one of the instructions TSEND_C, TRCV_C or TCON with the tags of the data type TCON_QDN_SEC.

   In the example below, the CONNECT parameter of the TCON instruction is interconnected with the tag "DNS connectionSEC" (data type TCON_QDN_SEC).

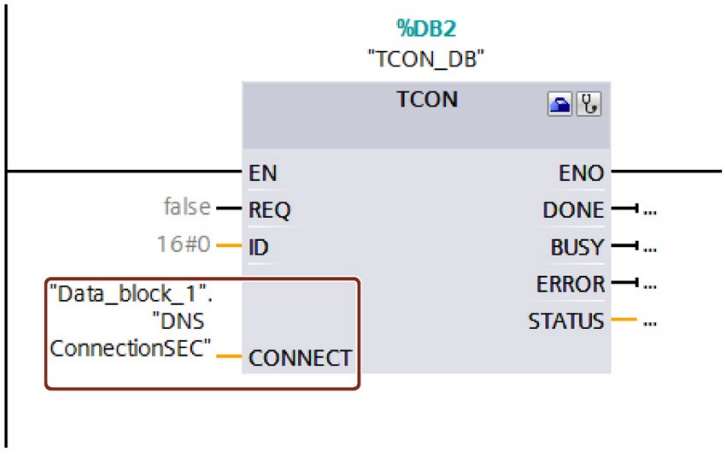

Figure 6-17 TCON instruction

Additional information

You can find more information about the system data types TCON_QDN_SEC in the STEP 7 online help.

For additional information on secure communication, refer to the section Secure Communication (Page 37).

6.11.3 Secure OUC between two S7-1500 CPUs

The following section describes how you can set Secure Open User Communication via TCP between two S7-1500 CPUs. In the process one S7-1500 CPU acts as TLS client (active establishing of the connection) and the other S7-1500 CPU as TLS server (passive establishing of the connection).

Setting up a secure TCP connection between two S7-1500 CPUs

For secure TCP communication between two S7-1500 CPUs you need to create a data block with the TCON_IP_V4_SEC system data type yourself in every CPU, assign parameters and call it directly at one of the instructions TSEND_C, TRCV_C or TCON.

Requirements:

- Current date and time are set in the CPU.
- Both S7-1500 CPUs have at least firmware version V2.0
- TLS client and TLS server have all the required certificates.

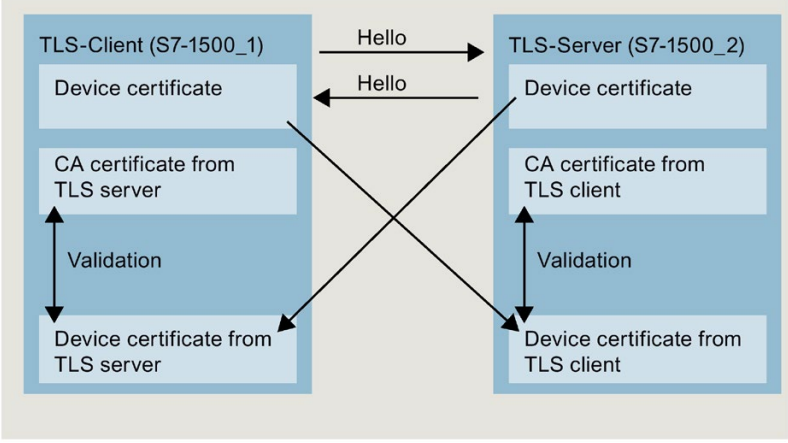

Figure 6-18 Certificate handling for Secure OUC between two S7-1500 CPUs

Settings at the TLS client

To set up a secure TCP connection in the TLS client, follow these steps:

1. Create a global data block in the project tree.
2. Define a tag of the data type TCON_IP_4_SEC in the global data block.

   The example below shows the global data block "Data_block_1" in which the tag "SEC connection 1 TLS-Client" of the data type TCON_IP_V4_SEC is defined.

Data_block_1

	Name	Data type	Start value	Comment
1	Static			
2	SEC connection 1 TLS-Client	TCON_IP_V4_SEC		
3	ConnPara	TCON_IP_v4		parameter of the TCP connection
4	InterfaceId	HW_ANY	72	HW-identifier of IE-interface submodule
5	ID	CONN_OUC	10	connection reference / identifier
6	ConnectionType	Byte	11	type of connetion: 11=TCP/IP, 19=UDP (17=TCP/IP)
7	ActiveEstablished	Bool	true	active/passive connection establishment
8	RemoteAddress	IP_V4		remote IP address (IPv4)
9	ADDR	Array[1..4] of Byte		IPv4 address
10	ADDR[1]	Byte	192	IPv4 address
11	ADDR[2]	Byte	168	IPv4 address
12	ADDR[3]	Byte	1	IPv4 address
13	ADDR[4]	Byte	100	IPv4 address
14	RemotePort	UInt	4711	remote UDP/TCP port number
15	LocalPort	UInt	4711	local UDP/TCP port number
16	ActivateSecureConn	Bool	true	activate the security functionality of that connection in general
17	TLSServerReqClientCert	Bool	false	Just for server side: The TLS server requests a client certificate
18	ExtTLSCapabilities	Word	16#0	Bit 0: Just for client side: validate given IPv4 address against th
19	TLSServerCertRef	UDInt	1	for Server side: Reference to own X.509 V3 server certificate; fo
20	TLSClientCertRef	UDInt	5	for Client side: add id of own X.509 V3 client certificate; for Serv

Figure 6-19 IP_V4_SEC_Client

3. Set the connection parameters of the TCP connection in the "Start value" column. For example, enter the IPv4 address of the TLS server for "RemoteAddress".

Note

Connection parameters InterfaceId and ID

Note that you can enter the value "**0**" for the interface ID and the ID in the data type TMAIL_V4_SEC. In this case the CPU itself searches for a matching local CPU interface or a free connection ID.

---

4. Set the parameters for secure communication in the "Start value" column.
   - "ActivateSecureConn": Activation of secure communication for this connection. If this parameter has the value FALSE, the subsequent security parameters are irrelevant. You can set up a non-secure TCP or UDP connection in this case.
   - "TLSServerCertRef": Enter the value 2 (reference to the CA certificate of the TIA Portal project (SHA256) or the value 1 (reference to the CA certificate of the TIA Portal project (SHA1)). If you use a different CA certificate, enter the corresponding ID from the certificate manager of the global security settings.
   - "TLSClientCertRef": ID of the own X.509-V3 certificate.
5. Create one of the instructions TSEND_C, TRCV_C or TCON in the program editor.
6. Interconnect the CONNECT parameter of one of the instructions TSEND_C, TRCV_C or TCON with the tags of the data type TCON_IP_V4_SEC.

Settings at the TLS server

To set up a secure TCP connection in the TLS server, follow these steps:

1. Create a global data block in the project tree.
2. Define a tag of the data type TCON_IP_4_SEC in the global data block.

   The example below shows the global data block "Data_block_1" in which the tag "SEC connection 1 TLS-Server" of the data type TCON_IP_V4_SEC is defined.

Data_block_1

	Name	Data type	Start value	Comment
1	Static			
2	SEC connection 1 TLS-Server	TCON_IP_V4_SEC		
3	ConnPara	TCON_IP_v4		parameter of the TCP connection
4	InterfaceId	HW_ANY	120	HW-identifier of IE-interface submodule
5	ID	CONN_OUC	10	connection reference / identifier
6	ConnectionType	Byte	11	type of connetion: 11=TCP/IP, 19=UDP (17=TCP/IP)
7	ActiveEstablished	Bool	false	active/passive connection establishment
8	RemoteAddress	IP_V4		remote IP address (IPv4)
9	ADDR	Array[1..4] of Byte		IPv4 address
10	ADDR[1]	Byte	192	IPv4 address
11	ADDR[2]	Byte	168	IPv4 address
12	ADDR[3]	Byte	1	IPv4 address
13	ADDR[4]	Byte	10	IPv4 address
14	RemotePort	UInt	4711	remote UDP/TCP port number
15	LocalPort	UInt	4711	local UDP/TCP port number
16	ActivateSecureConn	Bool	true	activate the security functionality of that connection in general
17	TLSServerReqClientCert	Bool	true	Just for server side: The TLS server requests a client certificate
18	ExtTLSCapabilities	Word	16#0	Bit 0: Just for client side: validate given IPv4 address against the
19	TLSServerCertRef	UDInt	6	for Server side: Reference to own X.509 V3 server certificate; fo
20	TLSClientCertRef	UDInt	1	for Client side: add id of own X.509 V3 client certificate; for Serv

Figure 6-20 IP_V4_SEC_Server

3. Set the connection parameters of the TCP connection in the "Start value" column. For example, enter the IPv4 address of the TLS client for "RemoteAddress".

4. Set the parameters for secure communication in the "Start value" column.
   - "ActivateSecureConn": Activation of secure communication for this connection. If this parameter has the value FALSE, the subsequent security parameters are irrelevant. You can set up a non-secure TCP or UDP connection in this case.
   - "TLSServerReqClientCert ": Request for an X.509-V3 certificate from the TLS client. Enter the value "true".
   - "TLSServerCertRef": ID of the own X.509-V3 certificate.
   - "TLSClientCertRef": Enter the value 2 (reference to the CA certificate of the TIA Portal project (SHA256) or the value 1 (reference to the CA certificate of the TIA Portal project (SHA1)). If you use a different CA certificate, enter the corresponding ID from the certificate manager of the global security settings.
5. Create one of the instructions TSEND_C, TRCV_C or TCON in the program editor.
6. Interconnect the CONNECT parameter of one of the instructions TSEND_C, TRCV_C or TCON with the tags of the data type TCON_IP_V4_SEC.

   In the example below, the CONNECT parameter of the TSEND_C instruction is interconnected with the "SEC connection 1 TLS client" tags (data type TCON_IP_4_SEC).

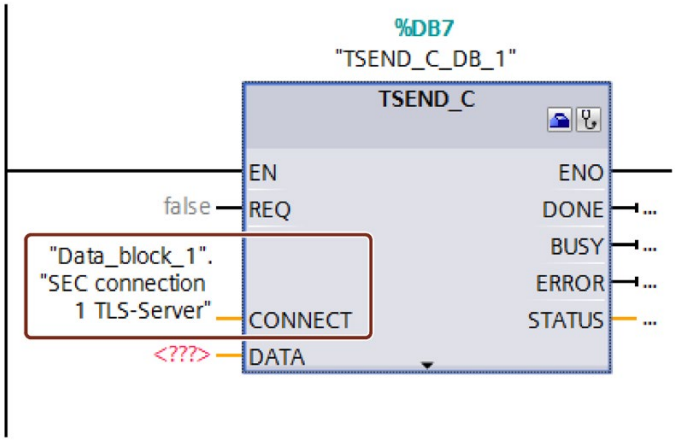

Figure 6-21 TSEND_C

Additional information

You can find more information about the system data types TCON_IP_4_SEC in the STEP 7 online help.

For additional information on secure communication, refer to the section Secure Communication (Page 37).

6.11.4 Secure OUC via CP interface

The following sections describes the particular points to be taken into consideration in the case of Secure Open User Communication via a CP interface. At least one station is an S7-1500 station with the following modules:

- S7-1500 CPU as of firmware version V2.0 (with the exception of S7-1500 Software Controller)
- CP 1543-1 as of firmware version V2.0 or CP 1543SP-1 as firmware version V1.0

The CP acts in an S7-1500 station as a TLS client (active connection establishment) or a TLS server (passive connection establishment).

The fundamental procedure and the concept for using secure communication via a CP interface is similar to that of secure communication via the interfaces of the S7-1500 CPUs. Essentially, you have to assign the certificates to the CPU in the role of a TLS server or TLS client and not to the CPU. Other rules and procedures therefore apply. These are described below.

Handling certificates for CPs

The following applies in general: You have to be logged on at the certificate manager in the global security settings. The generation of self-signed certificates also requires logon for the global security settings. You have to have sufficient rights as a user (administrator or user with the "Standard" role with the right to "Configure security").

The starting point for the generation or assignment of certificates at the CP is the section "Security > Security properties". In this section, you log on for the global security settings.

Procedure:

1. In the network view of STEP 7, mark the CP and select the section "Security > Security properties" in the Inspector window.
2. Click on the "User logon" button.
3. Log on using your user name and password.
4. Enable the "Activate security functions" option.

   The security properties are initialized.
5. Click in the first line of the "Device certificates" table to generate a new certificate or select an existing device certificate.
6. If the communication partner is also an S7-1500 station, you also have to assign a device certificate to the communication partner with STEP 7 as described here or for the S7-1500 CPU.

Example: Setting up a secure TCP connection between two S7-1500 CPUs via CP interfaces

For secure TCP communication between two S7-1500 CPUs you need to create a data block with the TCON_IPv4_SEC system data type yourself in every CPU, assign parameters and call it directly at the one of the instructions TSEND_C, TRCV_C or TCON.

Requirements:

- Both S7 1500 CPUs have at least firmware version V2.0. If you use the CP 1543SP-1: Firmware version as of V1.0.
- Both CPs (for example CP 1543-1) must have at least firmware version V2.0
- TLS client and TLS server have all the required certificates.
  - A device certificate (end-entity certificate) for the CP must be generated and be located in the certificate memory of the CP. If a communication partner is an external device (for example an MES or ERP system), a device certificate also has to exist for this device.
  - The root certificate (CA certificate) with which the device certificate of the communication partner is signed must also be located in the certificate memory of the CP or in the certificate memory of the external device. If you use intermediate certificates, you have to ensure that the complete certificate path exists in the validating device. A device uses these certificates to validate the device certificate of the communication partner.
- The communication partner must always be addressed via its IPv4 address, not via its domain name.

The following figure shows the different certificates in the devices for the case that both communication partners communicate via a CP 1543-1. In addition, the figure shows the transfer of the device certificates during establishment of the connection ("Hello").

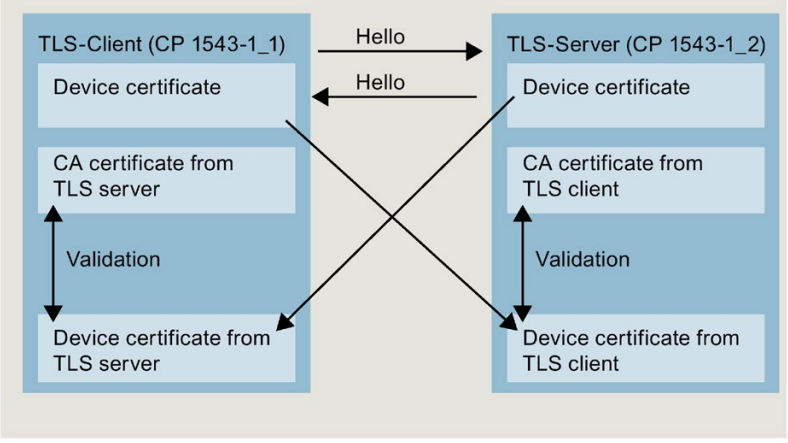

Figure 6-22 Certificate handling in secure OUC between two S7-1500 CPUs via CP interfaces.

Settings at the TLS client

To set up a secure TCP connection in the TLS client, follow these steps:

1. Create a global data block in the project tree.
2. Define a tag of the data type TCON_IP_4_SEC in the global data block. To do so, enter the string "TCON_IP_V4_SEC" in the "Data type" field.

   The example below shows the global data block "Data_block_1" in which the tag "SEC connection 1 TLS-Client" of the data type TCON_IP_V4_SEC is defined.

   The Interface ID has the value of the HW identifier of the IE interface of the local CP (TLS client).

Data_block_1

	Name	Data type	Start value	Comment
1	Static			
2	SEC connection 1 TLS-Client	TCON_IP_V4_SEC		
3	ConnPara	TCON_IP_v4		parameter of the TCP connection
4	InterfaceId	HW_ANY	258	HW-identifier of IE-interface submodule
5	ID	CONN_OUC	10	connection reference / identifier
6	ConnectionType	Byte	11	type of connetion: 11=TCP/IP, 19=UDP (17=TCP/IP)
7	ActiveEstablished	Bool	true	active/passive connection establishment
8	RemoteAddress	IP_V4		remote IP address (IPv4)
9	ADDR	Array[1..4] of Byte		IPv4 address
10	ADDR[1]	Byte	192	IPv4 address
11	ADDR[2]	Byte	168	IPv4 address
12	ADDR[3]	Byte	1	IPv4 address
13	ADDR[4]	Byte	100	IPv4 address
14	RemotePort	UInt	4711	remote UDP/TCP port number
15	LocalPort	UInt	4711	local UDP/TCP port number
16	ActivateSecureConn	Bool	true	activate the security functionality of that connection in general
17	TLSServerReqClientCert	Bool	false	Just for server side: The TLS server requests a client certificate
18	ExtTLSCapabilities	Word	16#0	Bit 0: Just for client side: validate given IPv4 address against th
19	TLSServerCertRef	UDInt	1	for Server side: Reference to own X.509 V3 server certificate; fo
20	TLSClientCertRef	UDInt	5	for Client side: add id of own X.509 V3 client certificate; for Serv

Figure 6-23 IP_V4_SEC_Client

3. Set the connection parameters of the TCP connection in the "Start value" column. For example, enter the IPv4 address of the TLS server for "RemoteAddress".
4. Set the parameters for secure communication in the "Start value" column.
   - "ActivateSecureConn": Activation of secure communication for this connection. If this parameter has the value FALSE, the subsequent security parameters are irrelevant. You can set up a non-secure TCP or UDP connection in this case.
   - "TLSServerCertRef": Enter the value 2 (reference to the CA certificate of the TIA Portal project (SHA256) or the value 1 (reference to the CA certificate of the TIA Portal project (SHA1)). If you use a different CA certificate, enter the corresponding ID from the certificate manager of the global security settings.
   - "TLSClientCertRef": ID of the own X.509-V3 certificate.

5. Create one of the instructions TSEND_C, TRCV_C or TCON in the program editor.
6. Interconnect the CONNECT parameter of one of the instructions TSEND_C, TRCV_C or TCON with the tags of the data type TCON_IP_V4_SEC.

Settings at the TLS server

To set up a secure TCP connection in the TLS server, follow these steps:

1. Create a global data block in the project tree.
2. Define a tag of the data type TCON_IP_4_SEC in the global data block.

   The example below shows the global data block "Data_block_1" in which the tag "SEC connection 1 TLS-Server" of the data type TCON_IP_V4_SEC is defined.

   The interface ID has the value of the HW identifier of the IE interface of the local CP (TLS server).

Data_block_1

	Name	Data type	Start value	Comment
1	Static			
2	SEC connection 1 TLS-Server	TCON_IP_V4_SEC		
3	ConnPara	TCON_IP_v4		parameter of the TCP connection
4	InterfaceId	HW_ANY	260	HW-identifier of IE-interface submodule
5	ID	CONN_OUC	10	connection reference / identifier
6	ConnectionType	Byte	11	type of connetion: 11=TCP/IP, 19=UDP (17=TCP/IP)
7	ActiveEstablished	Bool	false	active/passive connection establishment
8	RemoteAddress	IP_V4		remote IP address (IPv4)
9	ADDR	Array[1..4] of Byte		IPv4 address
10	ADDR[1]	Byte	192	IPv4 address
11	ADDR[2]	Byte	168	IPv4 address
12	ADDR[3]	Byte	1	IPv4 address
13	ADDR[4]	Byte	10	IPv4 address
14	RemotePort	UInt	4711	remote UDP/TCP port number
15	LocalPort	UInt	4711	local UDP/TCP port number
16	ActivateSecureConn	Bool	true	activate the security functionality of that connection in general
17	TLSServerReqClientCert	Bool	true	Just for server side: The TLS server requests a client certificate
18	ExtTLSCapabilities	Word	16#0	Bit 0: Just for client side: validate given IPv4 address against the
19	TLSServerCertRef	UDInt	6	for Server side: Reference to own X.509 V3 server certificate; fo
20	TLSClientCertRef	UDInt	1	for Client side: add id of own X.509 V3 client certificate; for Serv

Figure 6-24 IP_V4_SEC_Server

3. Set the connection parameters of the TCP connection in the "Start value" column. For example, enter the IPv4 address of the TLS client for "RemoteAddress".

4. Set the parameters for secure communication in the "Start value" column.
   - "ActivateSecureConn": Activation of secure communication for this connection. If this parameter has the value FALSE, the subsequent security parameters are irrelevant. You can set up a non-secure TCP or UDP connection in this case.
   - "TLSServerReqClientCert ": Request for an X.509-V3 certificate from the TLS client. Enter the value "true".
   - "TLSServerCertRef": ID of the own X.509-V3 certificate.
   - "TLSClientCertRef": Enter the value 2 (reference to the CA certificate of the TIA Portal project (SHA256) or the value 1 (reference to the CA certificate of the TIA Portal project (SHA1)). If you use a different CA certificate, enter the corresponding ID from the certificate manager of the global security settings.
5. Create one of the instructions TSEND_C, TRCV_C or TCON in the program editor.
6. Interconnect the CONNECT parameter of the instruction TSEND_C, TRCV_C or TCON with the tags of the data type TCON_IP_V4_SEC.

Upload device as new station

When you upload a configuration with certificates and configured secure Open User Communication as a new station into your STEP 7 project, the certificates of the CP are not uploaded, in contrast to the certificates of the CPU. After the device has been loaded as a new station, no more certificates are contained in the corresponding tables of the CPs for the device certificates.

You have to perform configuration of certificates again after the upload. Otherwise, renewed loading of the configuration results in the certificates that originally exist in the CP being deleted so that secure communication does not function.

Secure OUC connections via CPU and CP interfaces - similarities

- Connection resources:
  No differences between OUC and secure OUC. A programmed secure OUC connection uses a connection resource just like an OUC connection, irrespective of which IE/PROFINET interface communicates with the station.
- Connection diagnostics:
  No differences between OUC and secure OUC connection diagnostics.
- Loading of projects with secure OUC connections into the CPU:
  Only possible in STOP of the CPU, if certificates are loaded as well.
  Recommendation: Load to device > Hardware and software. Reason: Ensuring the consistency between the program with secure OUC, hardware configuration and certificates.
  Certificates are loaded with the hardware configuration - therefore loading requires a stop of the CPU. The reloading of blocks that utilize further secure OUC connections is only possible in RUN if the certificates required for this purpose are already located on the module.

6.11.5 Secure OUC with Modbus TCP

For secure Modbus TCP connection you need to create a data block with one of the system data types TCON_IP_V4_SEC or TCON_QDN_SEC yourself, assign parameters and call it directly at the MB_Server or MB_CLIENT instruction.

Requirements:

- S7-1500 CPU CPU firmware version V2.5 or higher
- The Modbus client (TLS client) can reach the Modbus server (TLS server) over IP communication in the network.
- TLS client and TLS server have all the required certificates.

Example of setting up a secure Modbus TCP connection to a Modbus TCP server

The following section describes how you can set up a Secure Open User Communication over Modbus TCP from a Modbus TCP client to a Modbus TCP server.

To set up a secure connection from a Modus TCP client (TLS client) to a Modbus TCP server (TLS server) and set up the IPv4 address of the mail server, follow these steps:

1. Create a global data block in the project tree.
2. Define a tag of the data type TCON_IP_V4 SEC in the global data block.

Data_block_1

	Name	Data type	Start value	Comment
1	Static			
2	SEC_ModbusTCP_1	TCON_IP_V4...		
3	ConnPara	TCON_IP_v4		parameter of the TCP connection
4	InterfaceId	HW_ANY	64	HW-identifier of IE-interface submodule
5	ID	CONN_OUC	15	connection reference / identifier
6	ConnectionType	Byte	11	type of connection: 11=TCP/IP, 19=UDP (17=TCP/IP)
7	ActiveEstablished	Bool	true	active/passive connection establishment
8	RemoteAddress	IP_V4		remote IP address (IPv4)
9	ADDR	Array[1..4] of B...		IPv4 address
10	ADDR[1]	Byte	192	IPv4 address
11	ADDR[2]	Byte	168	IPv4 address
12	ADDR[3]	Byte	10	IPv4 address
13	ADDR[4]	Byte	100	IPv4 address
14	RemotePort	UInt	502	remote UDP/TCP port number
15	LocalPort	UInt	502	local UDP/TCP port number
16	ActivateSecureConn	Bool	true	activate the security functionality of that connection in general
17	TLSServerReqClientCert	Bool	false	Just for server side: The TLS server requests a client certificate
18	ExtTLSCapabilities	Word	0	Bit 0: Just for client side: validate given IPv4 address against the subjectAlt
19	TLSServerCertRef	UDInt	2	for Server side: Reference to own X.509 V3 server certificate; for Client side:
20	TLSClientCertRef	UDInt	7	for Client side: add id of own X.509 V3 client certificate; for Server side: add

Figure 6-25 TCON_IP_V4_SEC

3. Set the connection parameters of the TCP connection in the "Start value" column. Enter the IPv4 address of the mail server, for example, for the "MailServerAddress".

4. Set the parameters for secure communication in the "Start value" column. Enter the certificate ID of the CA certificate of the communication partner, for example, for "TLSServerCertRef".
   - "ActivateSecureConn": Activation of secure communication for this connection. If this parameter has the value FALSE, the subsequent security parameters are irrelevant. In this case you can set up an unsecured Modbus TCP connection.
   - "TLSServerCertRef": Reference to the X.509 V3 (CA) certificate of the Modbus TCP server, which is used by the TLS client to validate the authentication of the Modbus TCP server.
5. Create an MB_CLIENT instruction in the program editor.
6. Interconnect the CONNECT parameter of the MB_Client instruction with the tags of the data type TCON_IP_4_SEC.

6.11.6 Secure OUC via e-mail

Setting up a secure connection to a mail server over the CPU interface

For secure communication to a mail server you need to create a data block with one of the system data types TMAIL_V4_SEC, TMAIL_QDN_SEC yourself, assign parameters and call it directly at the TMAIL_C instruction.

Requirements:

- TMAIL_C instruction version V5.0 or higher
- STEP 7 V15 and higher
- S7-1500 CPU V2.5 and higher
- You have assigned all the CA certificates of the mail server (TLS server) to the CPU (TLS client) and have downloaded the configuration to the CPU.
- Current date and time are set in the CPU.

Process for establishing a secure connection to the mail server

You can choose between two processes for establishing the secure connection to the mail server:

- SMTPS: The client attempts to immediately establish a TLS connection to the mail server ("handshake" process). If the mail server does not support TLS, then no connection is established.
- STARTTLS: Client establishes a TCP connection to the mail server. The client sends a request to "upgrade" the existing connection to a secure TLC connection over the TCP connection. If the mail server supports TLS, the client sends the command to establish a secure connection. The mail server uses the SMTP command "STARTTLS" to do this. The client then establishes a secure connection to the mail server. Advantage: If the mail server does not support TLS, client and mail server can communicate unsecured with each other.

You use the "Remote Port" setting in the data types at the block parameter "MAIL_ADDR_PARAM" to define which process is used for the communication.

Table 6- 6 Port numbers for the SMTPS and STARTTLS processes

Process	Port
SMTPS:	465[1]
STARTTLS	Any (≠465)[2]

[1] The instruction TMAIL_C uses SMTPS only for Port 465. For all other ports STARTTLS is used.

[2] According to RFC, mail servers use Ports 25 and 587 for secure connections with STARTTLS. The use of other port numbers for SMTP is not RFC-compliant, successful communication with such a mail server is not guaranteed.

Example: Setting up a secure connection to a mail server over IPv4

The following section describes how to set up a secure connection to an IPv4 mail server with the TMAIL_C communication instruction.

To set up a secure connection via the IP4 address of the mail server, follow these steps:

1. Create a global data block in the project tree.
2. Define a tag of the data type TMAIL_V4_SEC in the global data block.

   The example below shows the global data block "MailConnDB" in which the tag "MailConnectionSEC" of the data type TMAIL_V4_SEC is defined.

MailConnDB

Name	Datentyp	Startwert	Kommentar
Static			
MailConnectionSEC	TMail_V4_SEC		
InterfaceId	HW_ANY	"Local~CP_1543-1_1~Ethernet-Schnittstelle_1"	Use HW-identifier of the IE-interface to specify th
ID	CONN_OUC	100	connection reference / identifier
ConnectionType	Byte	16#20	type of connection 16#20=32=TMail_V4 or TMai
ActiveEstablished	Bool	true	active / passive connection establishment
WatchDogTime	Time	T#5000ms	watchdog time to monitor SMTP server associat
MailServerAddress	IP_V4		IPv4 address of mail server
ADDR	Array[1..4] of Byte		IPv4 address
ADDR[1]	Byte	144	IPv4 address
ADDR[2]	Byte	145	IPv4 address
ADDR[3]	Byte	2	IPv4 address
ADDR[4]	Byte	20	IPv4 address
UserName	String[254]	'myName'	user name which is necessary to login into the
PassWord	String[254]	'myPW'	user password which is necessary to login into
From	EMAIL_ADDR		source mail address
LocalPartPlusAt...	String[64]	'Mustermann@'	local part of e-mail address plus "@" sign
FullQualifiedD...	String[254]	'siemens.com'	full qualified domain name part of e-mail addre
RemotePort	UInt	587	remote TCP port number
ActivateSecureConn	Bool	TRUE	activate the security functionality of that conne
ExtTLSCapabilities	Byte	16#0	for further capability extensions of the TLS hand
TLSServerCertRef	UDInt	7	Reference to the X.509 V3 (CA-) certificate of the

Figure 6-26 Data type TMAIL_V4_SEC

3. Set the connection parameters of the TCP connection in the "Start value" column. Enter the IPv4 address of the mail server, for example, for the "MailServerAddress".

Note

Connection parameters InterfaceId and ID

Note that you can enter the value "**0**" for the interface ID and the ID with instruction version V5.0 or higher of the instruction TMAIL_C in the data type TMAIL_V4_SEC. In this case the CPU itself searches for a matching local CPU interface or a free connection ID.

---

4. Set the parameters for secure communication in the "Start value" column. Enter the certificate ID of the CA certificate of the communication partner, for example, for "TLSServerCertRef".
   - "ActivateSecureConn": Activation of secure communication for this connection. If this parameter has the value FALSE, the subsequent security parameters are irrelevant. You can set up a non-secure TCP or UDP connection in this case.
   - "TLSServerCertRef": Reference to the X.509 V3 (CA) certificate of the mail server, which is used by the TLS client to validate the authentication of the mail server.
5. Create a TMAIL_C instruction in the program editor.
6. Interconnect the MAIL_ADDR_PARAM parameter of the TMAIL_C instruction with the tag of the data type TMAIL_V4_SEC.

   In the following example the MAIL_ADDR_PARAM parameter of the TMAIL_C instruction is interconnected with the tag "MailConnectionSEC" (data type TMAIL_V4_SEC).

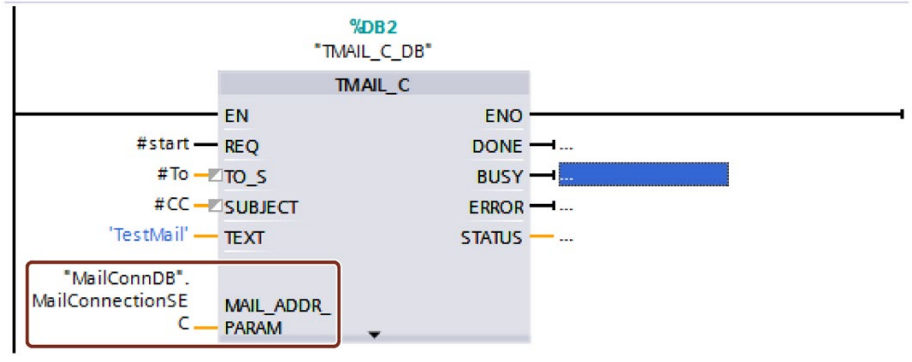

Figure 6-27 TMAIL_C instruction

Setting up a secure connection to a mail server over the interface of a communication module

For secure communication to a mail server over a communication module, you need to create a data block with one of the system data types TMAIL_V4_SEC, TMAIL_QDN_SEC or TMAIL_V6_SEC yourself, assign parameters and call it directly at the TMAIL_C instruction.

Requirements:

- TMAIL_C instruction with version **V4.0**
- S7-1500 CPU as of firmware version V2.0 with communication module CP 1543-1 as of firmware version V2.0
- ET 200SP CPU as of firmware version V2.0 with communication module CP 1542SP-1 (IRC) as of firmware version V1.0
- You have assigned all the CA certificates of the mail server (TLS server) to the CP (TLS client) and have downloaded the configuration to the CPU.
- Current date and time are set in the CPU.

The STEP 7 online help describes how to set up a secure connection to a mail server over the interface of a communication module.

Application example

This application example (https://support.industry.siemens.com/cs/ww/en/view/46817803) show how you can use the CP of an S7-1500 or S7-1200 station to set up a secure connection to an email server and send an email with the default application "TMAIL_C" from the S7 CPU.

Additional information

You can find more information about the system data types TMail_V4_SEC and TMAIL_QDN_SEC in the STEP 7 online help.

For additional information on secure communication, refer to the section Secure Communication (Page 37).

S7 communication 7

Characteristics of S7 communication

S7 communication as homogeneous SIMATIC communication is characterized by vendor-specific communication between SIMATIC CPUs (not an open standard). S7 communication is used for migration and for connecting to existing systems (S7-300, S7-400).

For data transfer between two S7-1500 automation systems, we recommend that you use open communication (see section Open User Communication (Page 67)).

Properties of S7 communication

Using S7 communication, the CPU exchanges data with another CPU. Once the user has received the data at the receiver end, the reception data is automatically acknowledged to the sending CPU.

The data is exchanged via configured S7 connections. S7 connections can be configured at one end or at both ends.

S7 communication is possible via:

- Integrated PROFINET or PROFIBUS DP interface of a CPU
- Interface of a CP/CM

S7 connections configured at one end

For an S7 connection configured at one end, the configuration for this connection takes place in only one communication partner and is only downloaded to it.

A one-sided S7 connection can be configured to a CPU that is only a server of an S7 connection (e.g. CPU 315-2 DP). The CPU is configured and the address parameters and interfaces are thus known.

In addition, a one-sided S7 connection can be configured to a partner who is not in the project and whose address parameters and interface and therefore are not known. You need to enter the address; it is not checked by STEP 7. The partner is initially unspecified (no partner address is registered when you create the S7 connection). Once you enter the address, it is "unknown" (i.e. it is named, but the project is unknown).

This makes it possible to use S7 connections beyond the boundaries of a project. The communication partner is unknown to the local project (unspecified) and is configured in another STEP 7 or third-party project.

S7 connections configured at both ends

When an S7 connection is configured at both ends, the configuration and download of the configured S7 connection parameters takes place in both communication partners.

Instructions for S7 communication

For S7 communication with S7-1500, the following instructions can be used:

- PUT/GET

  You write data to a remote CPU with the PUT instruction. You can use the GET instruction to read data from a remote CPU. The PUT and GET instructions and are one-sided instructions, i.e. you need only an instruction in one communication partner. You can can easily set up the PUT and GET instructions via the connection configuration.

  Note

  Data blocks for PUT/GET instructions

  When using the PUT/GET instructions, you can only use data blocks with absolute addressing. Symbolic addressing of data blocks is not possible.

  You must also enable this service for protection in the CPU configuration in the "Protection" area.

  This FAQ (https://support.industry.siemens.com/cs/ww/en/view/82212115) provides information about how to configure and program an S7 instruction and the GET and PUT communication instructions for data exchange between two S7-1500 CPUs.

- BSEND/BRCV

  The BSEND instruction sends data to a remote partner instruction of the type BRCV. The BRCV instruction receives data from a remote partner instruction of the type BSEND. You use the S7 communication via the BSEND/BRCV instruction pair for secure transmission of data.

- USEND/URCV

  The USEND instruction sends data to a remote partner instruction of the type URCV. The URCV instruction receives data from a remote partner instruction of the type USEND. You use the S7 communication via the USEND/URCV instruction pair for fast, non-secure transmission of data regardless of the timing of the processing by the communications partner; for example for operating and maintenance messages.

S7 communication via PROFIBUS DP interface in slave mode

You can find the "Test, commissioning, routing" check box in STEP 7 in the properties of the PROFIBUS DP interface of communications modules (e.g. CM 1542-5). Using this check box, you decide whether the PROFIBUS DP interface of the DP slave is an active or passive device on PROFIBUS.

- Check box selected: The slave is an active device on PROFIBUS.
- Check box cleared: The DP slave is a passive device on PROFIBUS. You can only set up S7 connections configured at one end for this DP slave.

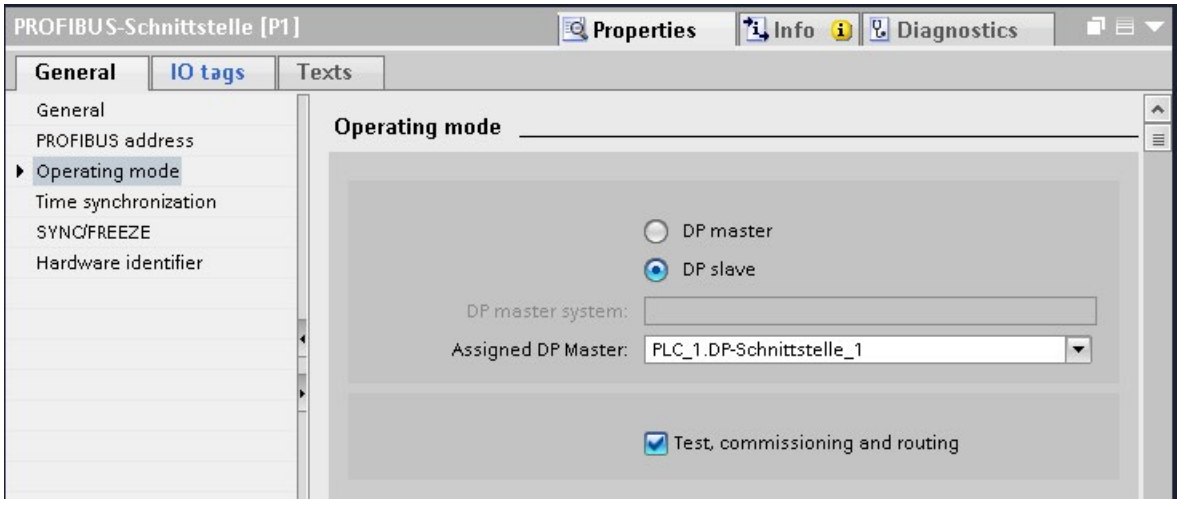

Figure 7-1 "Test, commissioning, routing" check box

Configuring S7 connections for PUT/GET instructions

You can create S7 connections and assign the parameters for these in the connection parameter assignment of the PUT/GET instructions. Changed values are checked immediately by the connection parameter assignment for input errors.

Requirement: A PUT or GET instruction is created in the programming editor.

To configure an S7 connection using PUT/GET instructions, follow these steps:

1. In the program editor, select the call of the PUT or GET instruction.
2. Open the "Properties > Configuration" tab in the inspector window.
3. Select the "Connection parameters" group. Until you select a connection partner, only the empty drop-down list for the partner end point is enabled. All other input options are disabled.

   The connection parameters already known are displayed:

   – Name of the local end point
   – Interface of the local end point
   – IPv4 address of the local end point

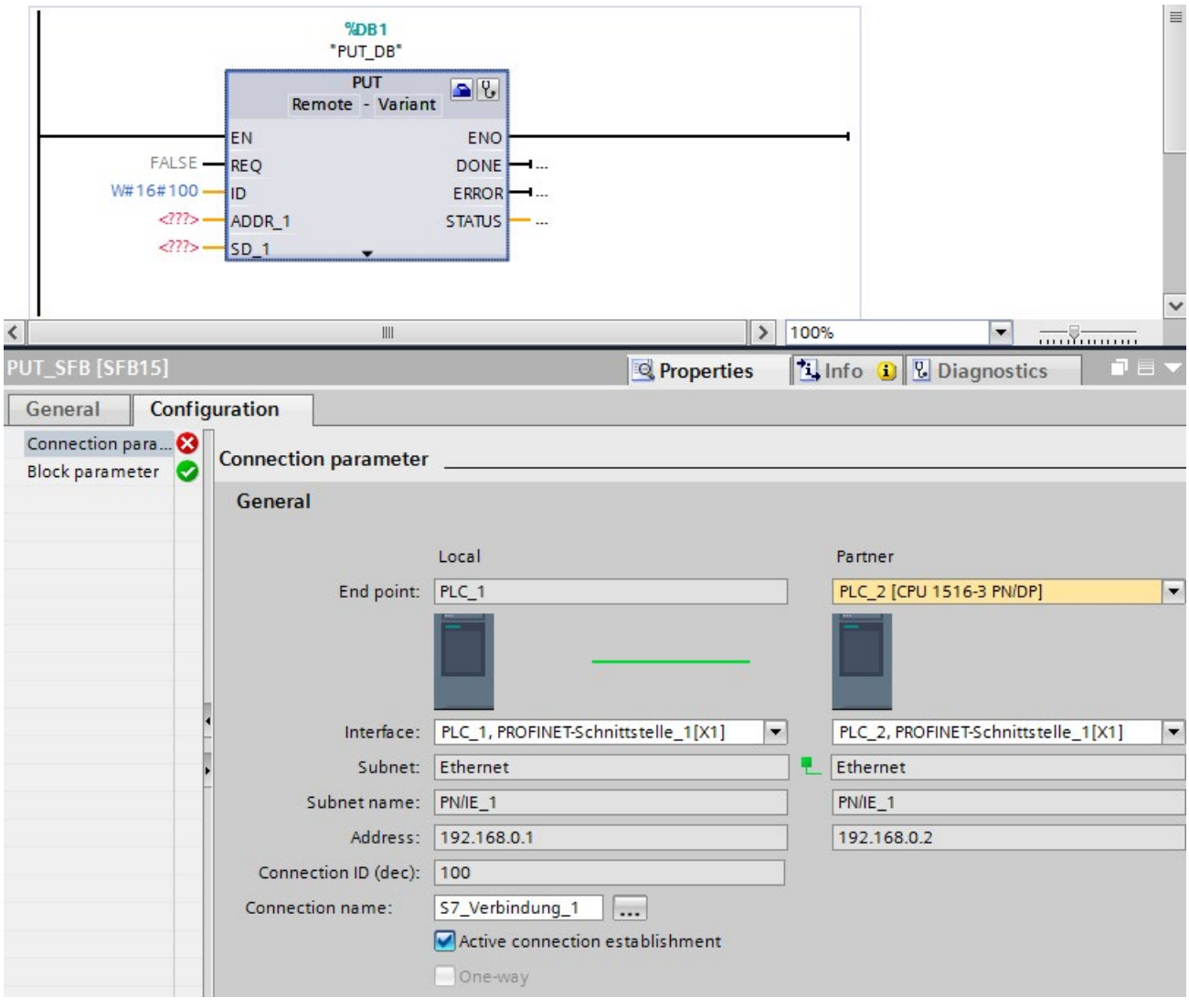

Figure 7-2 Connection configuration for PUT instruction

4. In the drop-down list box of the partner end point, select a connection partner. You can select an unspecified device or a CPU in the project as the communication partner.

   The following parameters are automatically entered as soon as you have selected the connection partner:

   – Name of the partner end point
   – Interface of the partner end point. If several interfaces are available, you can change the interface as required.
   – Interface type of the partner end point
   – Subnet name of both end points
   – IPv4 address of the partner end point
   – Name of the connection which is used for the communication.

5. If required, change the connection name in the "Connection name" input box. If you want to create a new connection or edit an existing connection, click on the "Select connection" button on the right side next to the input box for the connection name.

Note

The PUT and GET instructions between two communication partners can only run if both the hardware configuration and the program part for the partner end point have been loaded into the hardware. To achieve fully functional communication, make sure that you load not only the connection description of the local CPU on the device but also that of the partner CPU as well.

Configuring S7 connections for e.g. BSEND/BRCV

If you want to use the instructions for BSEND/BRCV for S7 communication, for example, you first need to configure an S7 connection.

To configure a S7 connection, follow these steps:

1. Configure the communications partners in the network view of the Devices & networks editor of STEP 7.
2. Select the "Connections" button and the "S7 connection" entry from the drop-down list.
3. Using drag-and-drop, connect the communication partner with each other (via an interface or local end point). If the required S7 subnet does not yet exist, it is created automatically.

   You can also set up a connection to unspecified partners.
4. In the "Connections" tab, select the row of the S7 connection.
5. Set the properties of the S7 connection in the "Properties" tab in the "General" area, for example the name of the connection and the interfaces of the communications partner that will be used.

   For S7 connections to an unspecified partner, set the address of the partner.
   You can find the local ID (reference of the S7 connection in the user program) in the "Local ID" area.
6. In the Project tree, select the "Program blocks" folder for one of the CPUs and open OB1 in the folder by double-clicking on it. The program editor opens.
7. In the program editor, call the relevant instructions for S7 communication in the user program of the communication partner (configured at one end) or in the user programs of the communication partners (configured at both ends). Select the BSEND and BRCV instructions from the "Communication" area of the "Instructions" task card, for example, and drag them to a network of OB1.
8. At the ID parameter of the instruction, assign the local ID of the configured connection to be used for the transmission of data.
9. Assign the parameters for the instructions indicating which data will be written to where and which data will be read from where.
10. Download the hardware configuration and user program to the CPU(s).

S7 communication via CP 1543-1

If you set up S7 communication via the Industrial Ethernet interface of the CP 1543-1, you can select the transport protocol for data transfer in the properties of the S7 connection under "General":

- "TCP/IP" check box selected (default): ISO-on-TCP (RFC 1006): for S7 communication between S7-1500 CPUs
- "TCP/IP" check box cleared: ISO protocol (ISO/IEC 8073): Addressing using MAC addresses

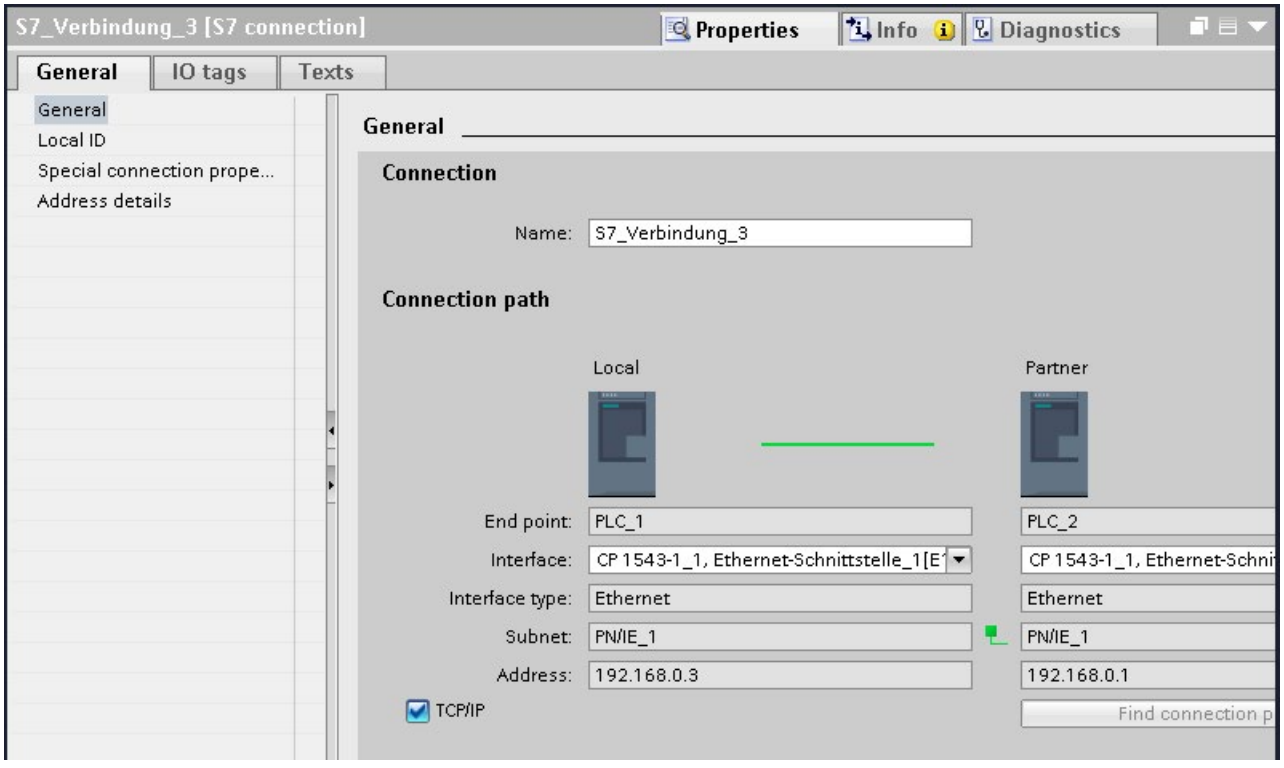

Figure 7-3 Selecting the CP 1543-1 transport protocol

Procedure for setting up an S7 connection via different S7 subnets

You have the option of using an S7 connection over multiple S7 subnets (PROFIBUS, PROFINET/Industrial Ethernet) (S7 routing (Page 260)).

1. Configure the communications partners in the network view of the Devices & networks editor of STEP 7.
2. Select the "Network" button.
3. Connect the relevant interfaces with the S7 subnets (PROFIBUS, PROFINET/Industrial Ethernet) using drag-and-drop.
4. Select the "Connections" button and the "S7 connection" entry from the drop-down list.
5. Using drag-and-drop in our example, connect PLC_1 in the left S7 subnet (PROFIBUS) to PLC_3 in the right S7 subnet (PROFINET).

   The S7 connection between CPU 1 and CPU 3 is configured.

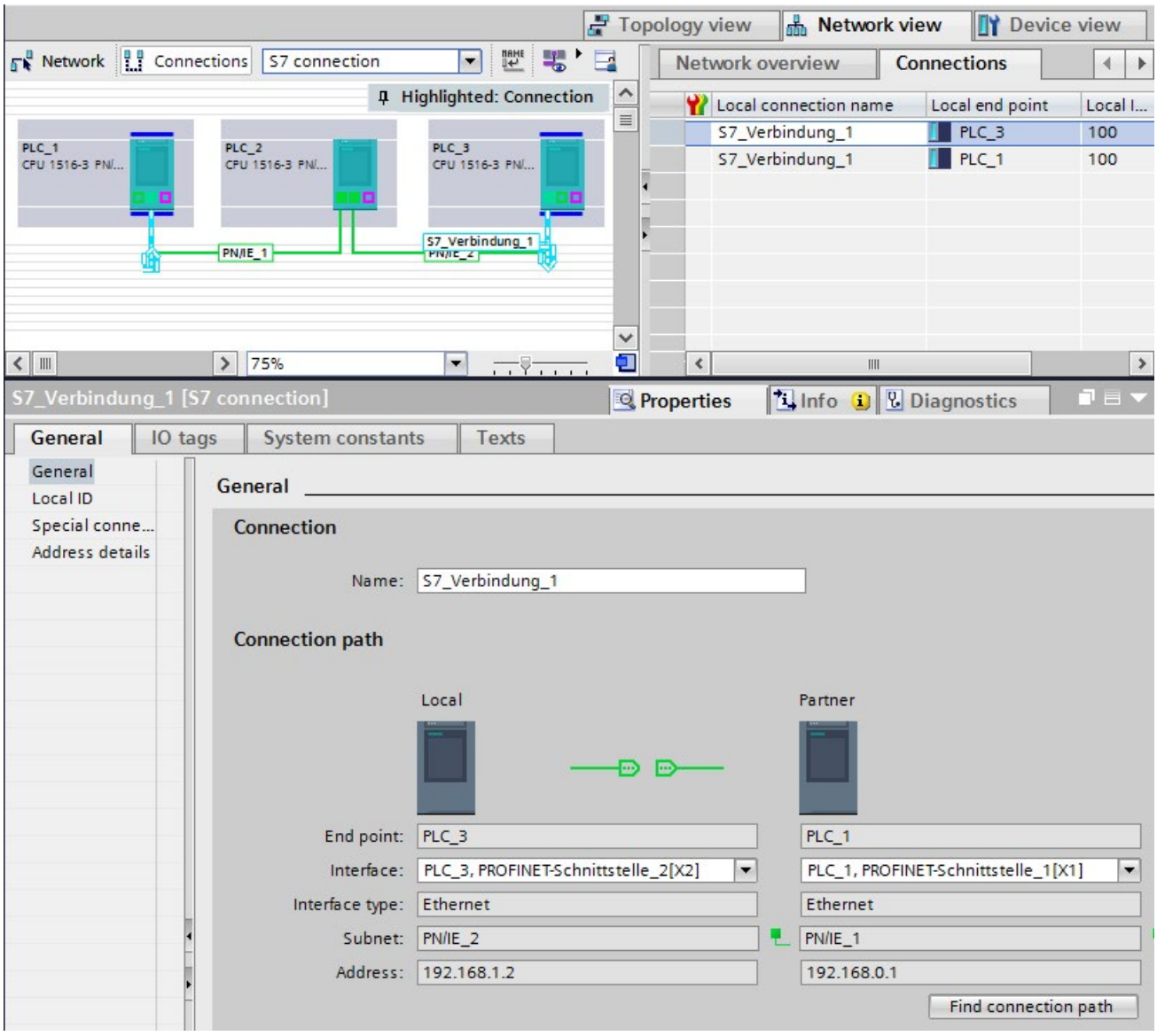

Figure 7-4 S7 connections via different subnets

ET 200SP Open Controller as router for S7 connections

If you assign the "PROFINET onboard [X2]" interface to the CPU 1515SP PC (F) of the SIMATIC PC station, the CPU 1515SP PC (F) can be used as a router for S7 connections. If you use the CP interface for "None, or a different Windows setting", you cannot use the Open Controller as a router for routed S7 connections.

An existing S7 connection routed by the CPU 1515SP PC (F) becomes invalid if the assignment of the interface of the CPU 1515SP PC (F) is changed from "SIMATIC PC station" to "None, or a different Windows setting". Since the PLC now no longer handles routing functions for this connection, when the CPU 1515SP PC (F) is compiled, no message relating to the invalid connection is displayed. The invalid routed S7 connection is displayed only when the end points of the connection are compiled.

The interfaces required for routed S7 connections must remain explicitly assigned on the CPU 1515SP PC (F) . You can edit the assignment of the interface of the CPU 1515SP PC (F) in the properties under "PROFINET onboard [X2] > Interface assignment".

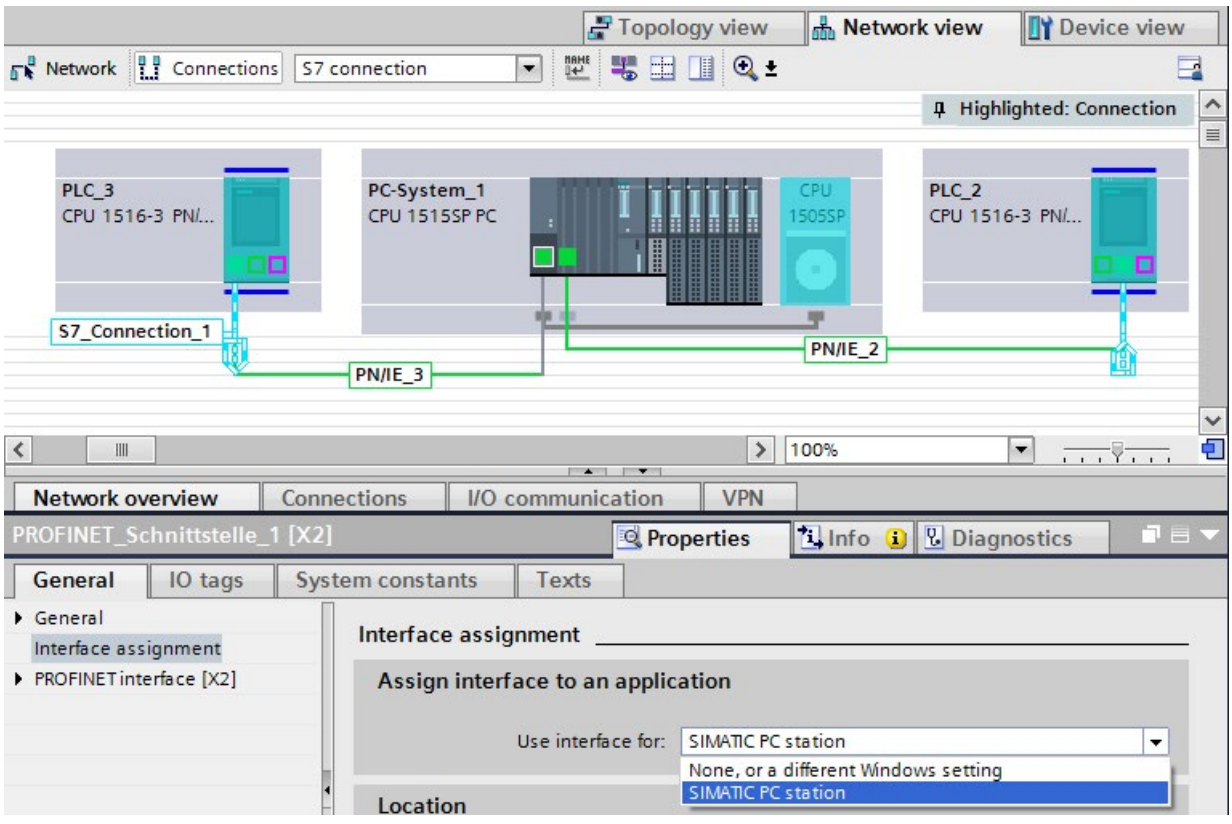

Figure 7-5 S7 routing PC station

Additional information

You can find detailed information on configuring S7 connections and how to use the instructions for S7 communication in the user program in the STEP 7 online help.

Point-to-point link

8

Functionality

A point-to-point connection for S7-1500, ET 200MP and ET 200SP is established via communications modules (CMs) with serial interfaces (RS232, RS422 or RS485):

- S7-1500/ET 200MP:
  - CM PtP RS232 BA
  - CM PtP RS422/485 BA
  - CM PtP RS232 HF
  - CM PtP RS422/485 HF
- ET 200SP:
  - CM PtP

The bidirectional data exchange via a point-to-point connection works between communications modules or third-party systems or devices capable of communication. At least 2 communication partners are required for communication ("point-to-point"). With RS422 and RS485, more than two communications partners are possible.

Protocols for communication via a point-to-point connection

- Freeport protocol (also called ASCII protocol)
- Procedure 3964(R)
- Modbus protocol in RTU format (RTU: Remote Terminal Unit)
- USS protocol (universal serial interface protocol)

The protocols use different layers according to the ISO/OSI reference model:

- Freeport: Uses layer 1 (physical layer)
- 3964 (R), USS and Modbus: Use layer 1 and 2 (physical layer and data link layer; therefore greater transmission reliability than with Freeport). USS and Modbus use additionally layer 4.

Properties of the Freeport protocol

- The recipient recognizes the end of the data transfer by means of a selectable end criterion (e.g. character delay time elapsed, receipt of end character, receipt of a fixed amount of data).
- The sender cannot recognize whether the sent data arrived free of errors at the recipient.

Properties of procedure 3964 (R)

- When the data is sent, control characters are added (start, end and block check characters). Make sure that these control characters are not included as data in the frame.
- Connection establishment and termination makes use of control characters.
- If transfer errors occur, data transfer is automatically repeated.

Data exchange using Freeport or 3964 (R) communication

The data to be sent is stored in the user program of the corresponding CPU in data blocks (send buffer). A receive buffer is available on the communications module for the received data. Check the properties of the receive buffer and adapt them if necessary. You must create a data block for receiving in the CPU.

In the user program of the CPU, the "Send_P2P" and "Receive_P2P" instructions handle the data transfer between the CPU and CM.

Procedure for setting up Freeport or 3964 (R) communication

1. Configure an S7-1500 configuration with CPU and CM in the device view of the hardware and network editor of STEP 7.
2. Select the interface of the CM in the device view of STEP 7.
3. Assign the parameters of the interface (for example connection communication, configuration of message sending) in the Inspector window of STEP 7 under "Properties" > "General".
4. Select the "Send_P2P" or "Receive_P2P" instruction in the "Instructions" task card under "Communication" > "Communications processor" and drag-and-drop the instruction into the user program (for example into a FB).
5. Assign the parameters for the instructions according to your configuration.
6. Download the hardware configuration and user program to the CPU.

Otherwise: Dynamic parameter assignment of the communications module

In certain types of application it is an advantage to set up communication dynamically; in other words, program-controlled by a specific application.

Typical applications for this, could be, for example manufacturers of serial machines. To make the user interfaces as convenient as possible for their customers, these manufacturers adapt the communications services to the particular operator entries.

Instructions for Freeport communication

There are 3 instructions available for the dynamic configuration in the user program for Freeport communication. The following applies to all 3 instructions: the previously valid configuration data is overwritten but not stored permanently in the target system.

- The "Port_Config" instruction is used for the program-controlled configuration of the relevant port of the communications module.
- The "Send_Config" instruction is used for the dynamic configuration, for example of time intervals and breaks in transmission (serial transmission parameters) for the relevant port.
- The "Receive_Config" instruction is used for dynamic configuration, for example of conditions for the start and end of a message to be transferred (serial receive parameters) for the relevant port.

Instructions for 3964 (R) communication

There are 2 instructions available for dynamic configuration in the user program for 3964 (R) communication. The following applies to the instructions: the previously valid configuration data is overwritten but not stored permanently in the target system.

- The "Port_Config" instruction is used for the program-controlled configuration of the relevant port of the communications module.
- The "P3964_Config" instruction is used for the dynamic configuration of protocol parameters.

Properties of the USS protocol

- Simple, serial data transfer protocol with cyclic message frame traffic in half duplex mode that is tailored to the requirements of drive technology.
- Data transfer works according to the master-slave principle.
  - The master has access to the functions of the drive and can, among other things, control the drive, read status values and read and write the drive parameters.

Data exchange using USS communication

The communications module is the master. The master continuously sends frames (job frames) to the up to 16 drives and expects a response frame from each addressed drive.

A drive sends a response frame under the following conditions:

- When a frame is received without errors
- When the drive is addressed in this frame

A drive must not send if these conditions are not met or the drive was addressed in the broadcast.

The connection to the relevant drives exists for the master once it receives a response frame from the drive after a specified processing time (response delay time).

Procedure for setting up USS communication

1. Configure an S7-1500 configuration with CPU and CM in the device view of the hardware and network editor of STEP 7.
2. In the Project tree, select the "Program blocks" folder and open OB1 in the folder by double-clicking on it. The program editor opens.
3. Select the instructions for USS communication according to your task in the "Communication" area, "Communications processor" folder of the "Instructions" task card and drag them to a network of OB1:
   - The "USS_Port_Scan" instruction allows you to communicate via the USS network.
   - The "USS_Drive_Control" instruction prepares send data for the drive and evaluates the response data of the drive.
   - The "USS_Read_Param" instruction is used to read out parameters from the drive.
   - The "USS_Write_Param" instruction is used to change parameters on the drive.
4. Assign the parameters for the instructions according to your configuration.
5. Download the hardware configuration and user program to the CPU.

Properties of the Modbus protocol (RTU)

- Communication takes the form of serial, asynchronous transfer with a transmission speed of up to 115.2 kbps, half duplex.
- Data transfer works according to the master-slave principle.
- The Modbus master can send jobs for reading and writing operands to the Modbus slave:
  - Reading inputs, timers, counters, outputs, memory bits, data blocks
  - Writing outputs, memory bits, data blocks
- Broadcast to all slaves is possible.

Data exchange using Modbus communication (RTU)

The communications module can be a Modbus master or Modbus slave. A Modbus master can communicate with one or more Modbus slaves (the number depends on the physical interface). Only the Modbus slave explicitly addressed by the Modbus master is permitted to return data to the Modbus master. The slave detects the end of the data transfer and acknowledges it. If an error occurs, it provides an error code to the master.

Procedure for setting up Modbus communication (RTU)

1. Configure an S7-1500 configuration with CPU and CM in the device view of the hardware and network editor of STEP 7.
2. In the Project tree, select the "Program blocks" folder and open OB1 in the folder by double-clicking on it. The program editor opens.
3. Select the instructions for Modbus communication according to your task in the "Communication" area, "Communications processor" folder of the "Instructions" task card and drag them to a network of OB1:
   - The "Modbus_Comm_Load" instruction configures the port of the CM for Modbus communication.
   - The "Modbus_Master" instruction is used for Modbus master functionality.
   - The "Modbus_Slave" instruction is used for Modbus slave functionality.
4. Assign the parameters for the instructions according to your configuration.
5. Download the hardware configuration and user program to the CPU.

Additional information

- You can find more detailed information on communication via point-to-point connections and basics of serial data transmission in the function manual CM PtP communication module - Configurations for point-to-point connections (http://support.automation.siemens.com/WW/view/en/59057093).
- You can find a description of how to use the instructions for point-to-point connections in the user program in the STEP 7 online help.
- You can find information about the communications modules with a serial interface in the manual of the particular communications module.

OPC UA communication 9

9.1 What you need to know about OPC UA

9.1.1 OPC UA and Industrie 4.0

Uniform standard for information and data exchange

Industry 4.0 stands for the intensive utilization, evaluation and analysis of the large volumes of data from production in IT systems at the enterprise level. With Industry 4.0, data exchange between the production and enterprise levels is rapidly increasing. However, a prerequisite for success is a uniform standard for the information and data exchange.

The OPC UA (OPC Unified Architecture) standard is particularly suitable for data exchange across different levels thanks to its independence from specific operating systems, its secure transfer procedures and the semantic description of data. OPC UA makes available not only data but also information about the data (data types), at the same time making possible machine-interpretable access to the data.

9.1.2 OPC UA for S7-1500 CPUs

In OPC UA, one system operates as a server and provides data the existing information to other systems (clients).

OPC UA clients, for example, have read and write access to data on an OPC UA server. OPC UA clients call methods on the OPC UA server.

You can access this data online with a client, including e.g. information on performance and diagnostics. In OPC UA terminology, this function is called "Browsen". The "Subscription" function saves the regular reading of a tag - a client only has values sent to it from the server when a change has occurred.

A system can be both a client and a server.

OPC UA server of the S7-1500 CPU

As of firmware version 2.0, an S7-1500 CPU is equipped with an OPC UA server.

The following sections describe how you configure the OPC UA server of the S7-1500 CPU to make data and methods available for OPC UA clients so that clients have read or write access to PLC tags on the CPU and can call server methods.

The following sections also set out how to integrate companion specifications into the address space of the OPC UA server.

OPC UA client of the S7-1500 CPU

As of firmware version V2.6, an S7-1500 CPU is additionally equipped with an OPC UA client.

The following sections show how to use standardized instructions (PLCopen function blocks) to create a user program that, as an OPC UA client, reads data from an OPC UA server or writes data to an OPC UA server or calls methods from an OPC UA server.

STEP 7 (TIA Portal) assists you in creating user programs by providing an editor for client interfaces and a parameter assignment for OPC UA connections:

The OPC UA instructions for an S7-1500 CPU as client are described in detail in the help to the instructions (Instructions > Communication > OPC UA).

OPC UA client for test purposes

The following description uses various different OPC UA clients to illustrate the use of OPC UA clients:

- "UaExpert" of Unified Automation. An extensive client that can be used free of charge: Link for downloading UaExpert (https://www.unified-automation.com/downloads/opc-ua-clients.html)
- "UA Sample Client" of the OPC Foundation. This client is available free of charge for users who are registered with the OPC Foundation :
  Link for downloading the example client of the OPC Foundation (https://opcfoundation.org)

Application example in Industry online support

Siemens Industry Online Support provides an application example with a client API free of charge. .NET developers can use the functions of this interface to access the OPC UA server of an S7-1500. The client API is based on the .NET OPC UA stack of the OPC Foundation.

The application example shows how to establish connections between servers and clients, for example. It also demonstrates the reading and writing of PLC tags.

Link to download: OPC UA .NET client for the SIMATIC S7-1500 OPC UA Server (http://support.automation.siemens.com/WW/view/en/109737901)

9.1.3 General features of OPC UA

The key features of OPC UA

- OPC UA does not depend on a specific operating system platform.

  OPC UA can, for example, be used with Windows, Linux, Mac OS X, a real-time operating system or a mobile operating system (such as Android).

- OPC UA is implemented in various different programming languages.

  The OPC Foundation has implemented the OPC UA standard in several programming languages: Stacks for ANSI C, .NET and Java are available.

- The OPC Foundation offers the Java stack and .NET stack as well as example programs as open source software. See Github (https://github.com/opcfoundation).

- A number of companies offer Software Development Kits (SDK) containing the OPC Foundation stacks and other functions to facilitate the development of solutions.

  Advantages of using SDKs:

  – Support from the supplier

  – Tested software

  – Detailed documentation

  – Clear license conditions (important for selling of solutions)

- Scalability

  OPC UA can be used in sensors, embedded systems, controllers, PC systems and smartphones, as well as in servers running MES and ERP applications.

  OPC UA and PROFINET can also be used together. The two protocols use the same network infrastructure.

- Simple client-server principle

  An OPC UA server provides information within a network and an OPC UA client retrieves this information.

- Integrated security mechanisms

  OPC UA uses security mechanisms at various levels:

  – A secure connection can only be established between an OPC UA server and an OPC UA client if the client and server can register with X.509-v3 certificates and accept each other's certificates (security at the application level). Various security policies are possible, including a non-secure connection between server and client (Security Policy: "No security").

  – Before allowing access, a server can request the following information from the user:

    - A certificate (cannot be configured in STEP 7)

    - User name and password

    - No user authorization

The security mechanisms are optional and configurable.

- Independence of a specific transport layer

  The following transport mechanisms are currently supported by OPC UA:

  – The transfer of messages as a binary stream directly via TCP/IP

  – The transfer of messages with XML over TCP/IP and HTTP. This transport mechanism allows only a slow transfer and is therefore almost never used. The S7-1500 CPUs do not support this transport mechanism.

  Binary data exchange is supported by all OPC UA applications (required in OPC UA specification).

- PLC tag mapping

  The information of the OPC UA server (for example the PLC tags) is modeled as nodes connected to one another via references. This makes it possible to browse from node to node with an OPC UA client and find out what content can be read, monitored or written.

- Information

  OPC UA servers provide a lot of information, for example about the CPU, the OPC UA server itself, the data and the data types.

- Instance concept

  OPC UA is based on a type instance concept. Both instances and their type definitions are available in runtime.

- Differentiation of the functionality with profiles: S7-1500 supports the Embedded UA Server Profile, for example

9.1.4 From the Classic OPC interface to OPC UA

Standardized interface

Classic OPC only runs on Windows operating systems.

To get around this restriction, the OPC Foundation developed the OPC UA standard.

The standard is not platform-specific and uses an optimized, TCP-based binary protocol for high-performance applications.

Different systems are therefore able to exchange data, for example:

- Controllers with MES and ERP systems
- Siemens controllers with controllers from other manufacturers
- Smartphones with controllers
- Embedded systems with controllers
- Smart sensors with controllers

9.1.5 Addressing nodes

Nodes in the OPC UA address space are uniquely identified by a NodeId (Node ID or Node Identifier).

The NodeId consists of an identifier, identifier type and a namespace index. Namespaces are used to avoid naming conflicts. The OPC Foundation has defined a wide range of nodes that provide information about the given OPC UA server. These nodes can be found in the namespace of the OPC Foundation and have the index 0.

The OPC Foundation also defines data types and tag types.

Namespace

All the tags or methods of an S7-1500 are contained in the namespace (Namespace) "http://www.siemens.com/simatic-s7-opcua". By default this namespace has the Index 3. The index may change later if additional namespaces are inserted into the server or if existing ones are deleted. The current index of the namespace therefore needs to be requested from the server before values are read or written.

The figure below shows the result of such a query. The Siemens "UaClient" program is used as an example.

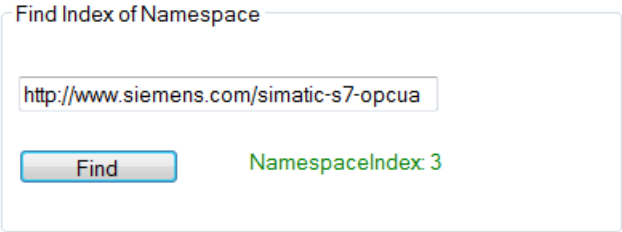

Identifier

The Identifier corresponds to the name of the PLC tag in quotation marks. The quotation mark is the only sign that is not permitted as part of a name in STEP 7. Quotation marks avoid naming conflicts.

The following example reads the value of the "StartTimer" tag:

The Identifier can consist of several components. The individual components are then separated by a dot. The following example reads the "MyDB" array data block completely. This data block contains an array with ten integer values. All ten values should be read in one pass. Therefore, "0:9" is entered at the array range.

PLC tags in the address space of the OPC UA server

The figure below shows where the PLC tags in the example are located in the address space of the OPC UA server (excerpt from UA client):

The "MyDB" data block is a global data block. The data block is therefore located below the node "DataBlocksGlobal". "StartTimer" is a memory tag and is therefore stored below the "Memory" node.

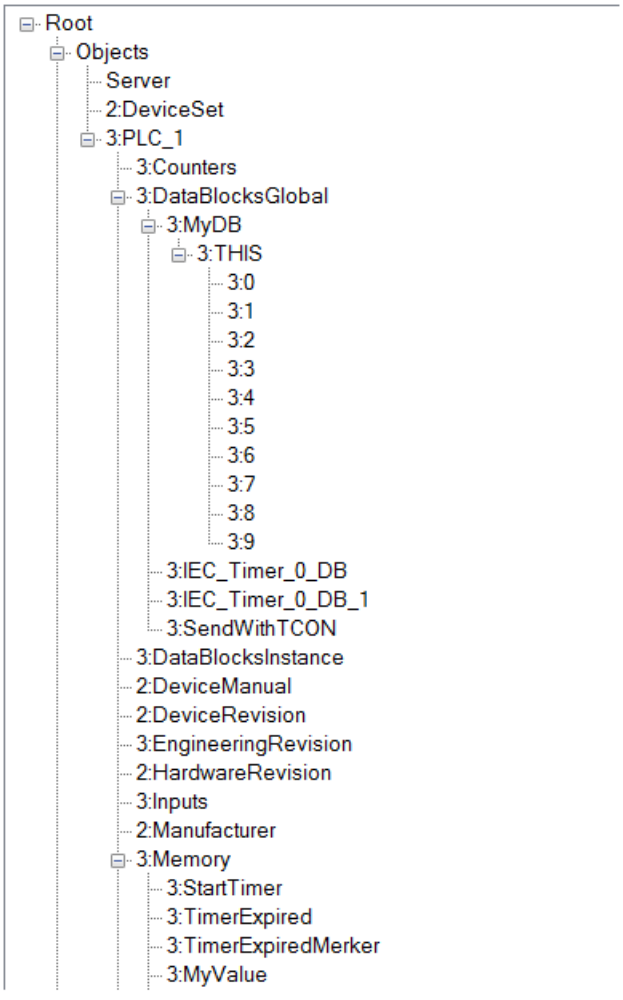

Figure 9-1 PLC tags in the address space of the OPC UA server

Methods in the address space of the OPC UA server

If you implement a method via your user program, this takes the following form in the address space of the OPC UA Server (see AUTOHOTSPOT):

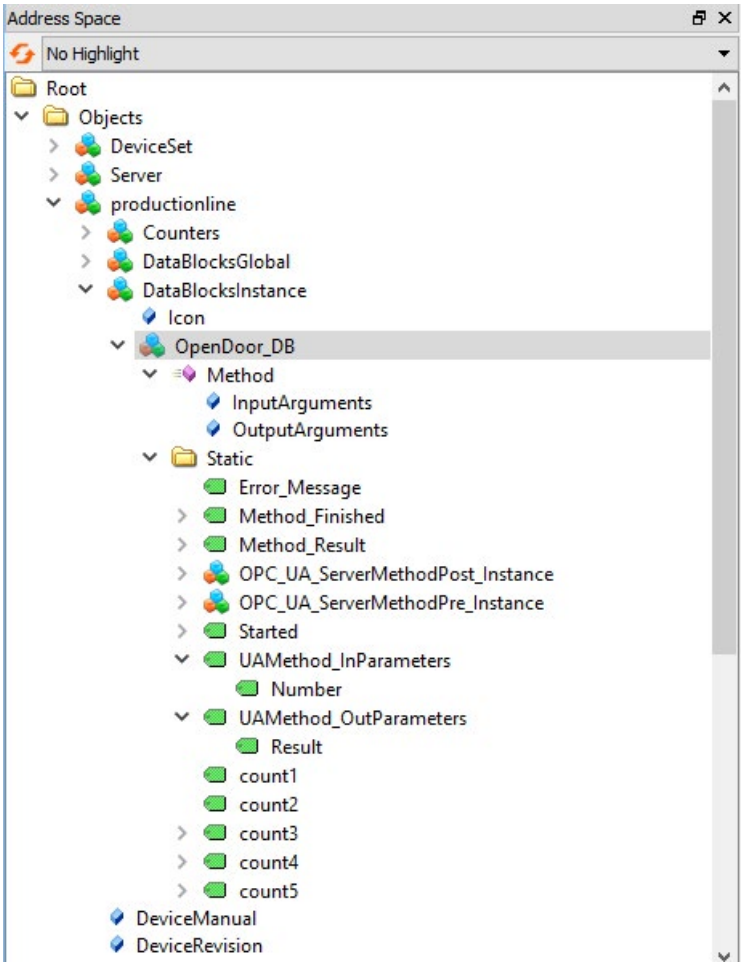

Figure 9-2 Methods in the address space of the OPC UA server

9.1.6 Mapping of data types

SIMATIC and OPC UA data types

SIMATIC data types do not always correspond with OPC UA data types.

S7-1500 CPUs provide SIMATIC tags (with SIMATIC data types) to their own OPC UA server as OPC UA data types so that OPC UA clients can access these tags over the server interface with OPC UA data types.

A client can read the attribute "DataType" from such a tag and reconstruct the original data type in SIMATIC.

Example

A tag has the SIMATIC data type "COUNTER". You read COUNTER → UInt16 in the table. You now know that you do not need to convert; the COUNTER value is sent over the line as a UInt16 data type.

The client detects from the attribute "DataType" that the tag is actually the SIMATIC data type "COUNTER". With this knowledge, the client reconstructs the data type.

Table 9- 1 SIMATIC and OPC UA data types

SIMATIC data type	OPC UA data type
BOOL	Boolean
BYTE	BYTE → Byte
WORD	WORD → UInt16
DWORD	DWORD → UInt32
LWORD	LWORD → UInt64
SINT	SByte
INT	Int16
DINT	Int32
LINT	Int64
USINT	Byte
UINT	UInt16
UDINT	UInt32
ULINT	UInt64
REAL	Float
LREAL	Double
S5TIME	S5TIME → UInt16
TIME	TIME → Int32

SIMATIC data type	OPC UA data type
LTIME	LTIME → Int64
DATE	DATE → UInt16
TIME_OF_DAY (TOD)	TOD → UInt32
LTIME_OF_DAY (LTOD)	LTOD → UInt64
DATE_AND_TIME (DT)	DT → Byte[8]
LDT	DateTime
DTL Special note: You can only describe the structure completely with an OPC UA client. You have read-only access individual elements of this structure (e.g. "YEAR")	mapped as structure
CHAR	CHAR → Byte
WCHAR	WCHAR → UInt16
STRING (Code page 1252 or Windows-1252)	STRING → String
WSTRING (UCS-2; Universal Coded Character Set)	String
TIMER	TIMER → UInt16
COUNTER	COUNTER → UInt16

Arrays

A read or write job with OPC UA is always an array access, which means that it always has an index and length. A single tag is a special case of an array (index 0 and length 1). The data type is simply sent repeatedly on the line. For the tags, the "DataType" attribute indicates the basic data type. The attributes "ValueRank" and "ArrayDimensions" show whether or not you are dealing with an array and how large the array is.

Data types based on arrays

There are SIMATIC data types for which an OPC UA value is mapped to an array of bytes. An array of these data types is then mapped to a two-dimensional array.

Example: The SIMATIC data type DATE_AND_TIME (DT) is mapped to an 8-byte array (Byte[8]), see table above. When you define an array of the SIMATIC data type DATE_AND_TIME (DT), it is considered a two-dimensional array.

This fact affects the use of system data types such as OPC_UA_NodeAdditionalInfo and OPC_UA_NodeAdditionalInfoExt, for example:

For the data types described above, you must use the system data type OPC_UA_NodeAdditionalInfoExt for multidimensional arrays instead of OPC_UA_NodeAdditionalInfo.

Structures

Structures are transferred as ExtensionObject. The S7-1500 server uses binary representation for transmission of the ExtensionObjects over the line; the individual structure elements come one after the other. At the front is the NodeId of the data type; this is used by the client to establish the structure.

For the OPC UA specification <= V1.03, a client must read, decode and interpret the complete DataTypeDictionary for this purpose (unless it has already done so offline with an XML import).

Additional information

More details on mapping of basic data types, arrays and structures can be found in the OPC UA Specification Part 6, "Mappings" (see OPC UA BINARY there).

9.1.7 What you need to know about OPC UA clients

Basics of OPC UA clients

OPC UA clients are programs that do the following:

- Access the information from an OPC UA server (for example an S7-1500 CPU): read, write, subscriptions
- Execute methods through the OPC UA server

However, OPC US clients can access data that is enabled for this purpose (see "Managing write and read rights").

You need the endpoint of the server to establish a connection to an OPC UA server (see "Endpoints of the OPC UA servers (Page 157)").

Reading out information from the OPC UA server

When a connection to an end point of the server exists, you can use the navigation function of the client: You navigate starting from a defined starting point (from the "root" node) through the address space of the server.

The following information is provided in the process:

- Enabled PLC tags, data blocks and data block components
- Namespace index and identifiers of these PLC tags, data blocks and DB components
- Data types of the PLC tags and DB components
- Number of components in arrays (required for reading and writing arrays)

In addition, you receive information about the OPC UA server itself as well as information about the S7-1500 based on the "OPC UA for Devices" standard of the OPC Foundation (for example, serial number, firmware version).

Reading data from the server and writing to the server

You now know the namespace, identifier and data type of PLC tags. This means that you can now specifically read individual PLC tags and DB components as well as complete arrays and structures. Examples for reading Boolean tags and array data blocks are available under Addressing nodes (Page 132).

Rules for access to structures are available here (Page 243).

With the information that you obtain while navigating through the address space of the server (index, identifier and data type), you can also transfer values to the S7-1500 with the OPC UA client. The following example overwrites the first three values in the array data block "MyDB".

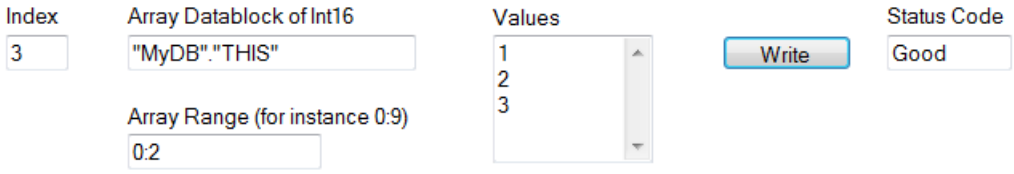

For "Array Range" you specify which components of the array you want to overwrite. The "Good" status code indicates that the values were transferred successfully. However, you can only write the values to the S7-1500 but not the time stamps of these values. The time stamps can only be read.

Faster access through registration

The examples up to now use strings as Identifier, for example, "MyBD2"."THIS". If, however, an Identifier is used as a numeric Node ID instead of a String Node ID, access is much faster. If you access specific tags regularly, you should use the functions "RegisteredRead" and "RegisteredWrite":

In this case, your client first logs in the PLC tag on the server., The server returns an Identifier that the client uses for the actual access. This Identifier applies solely to the current session and has to be queried again when the session connection is terminated/lost.

In the following example, the "StartTimer" tag is first registered on the server. Afterwards, the rapid function "RegisteredWrite" is used for setting the value.

In accordance with the same scheme, the "RegisteredRead" function can also be used, which is particularly useful for recurring data readouts. Take into account, however, that depending on the application it may be advisable to use a Subscription instead.

Recommendation: It is best to place registrations in the startup program of the OPC UA client, since the registration takes up time.

Please note that you can set the maximum number of registered nodes in the properties of the S7-1500 CPU and that the Clients have to respect this number, see AUTOHOTSPOT.

Subscription

The term "Subscription" is used for a function in which only those tags for which an OPC UA client has registered at the OPC UA server are transferred. The OPC UA server only sends a message to the OPC UA client for these registered tags (Subscriptions) when a value has changed. The monitoring of these tags makes constant sampling by the OPC UA client (Polling) superfluous, which reduces the network load.

You have to create a Subscription to use this function. For this purpose, you specify the "Publishing Interval" at the UA client and click the "Create" button. The publishing interval is the time interval in which the server sends new values to the client in a notification (data change notification).

In the following example a subscription has been created: The client receives a message with the new values (publishing interval 50 ms) every 50 milliseconds here.

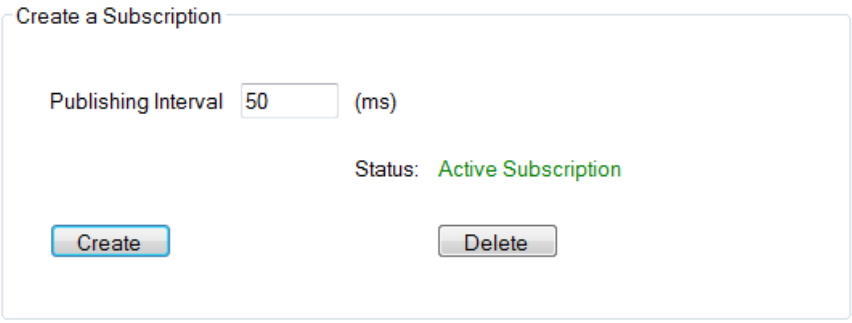

Preventing server overload

You can set the OPC UA server of the S7-1500 CPU by means of the "Minimum publishing interval" in such a way that it does not serve extremely short send intervals requested by the client; see Settings of the OPC UA server.

Example: A client wants to be operated at a publishing interval of 50 ms as detailed above. Such a short publishing interval would, however, result in a high network and server load. You should therefore set 1000 ms as the "Minimum publishing interval" for the server. Clients whose subscription requires shorter publishing intervals are "slowed" to 1000 ms and the server is protected from overload.

Sampling and transmission (Sampling & Publishing) within the scope of a subscription are communication processes which, like other communication processes (TCP/UDP/Web server communication...), are processed by the CPU with priority 15. OBs with higher priority interrupt the communication. If you set the sampling and publishing intervals too short, this setting causes a high communication load. Therefore, select intervals as large as possible, which are still sufficient for the application.

For information about the consistency of tags, refer to Consistency of CPU tags (Page 220).

Monitoring of PLC tags

When the Subscription has been created, you inform the server which tags are to be monitored with it. In the following example, the "Voltage" tag was added to the subscription.

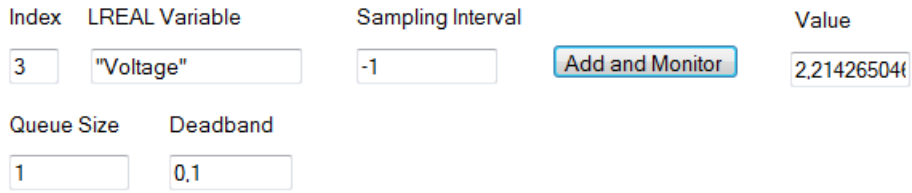

The "Voltage" tag contains the value of a voltage that is detected by an S7-1500 CPU.

The sampling interval ("Sampling Interval") contains a negative value (-1). This determines that the default setting of the OPC UA server is used for the sampling interval. The default setting is defined by the "Publishing Interval" of the subscription. If you want to set the smallest possible sampling interval, select the value "0".

In this example, the length of the queue is set to "1": Only one value is read from the CPU at an interval of 50 milliseconds and subsequently sent to the OPC UA client when the value has changed.

The "Deadband" parameter in this example is "0.1": Changes in value have to amount to 0.1 Volt; only then does the sender send the new value to the client. The server does not send smaller changes in value. You can use this parameter, for example, to disable signal noise: Slight changes in a process variable which do not have a real meaning.

9.2 Security at OPC UA

9.2.1 Security settings

Addressing risks

OPC UA allows the exchange of data between different systems, both within the process and production levels and to systems at the control and enterprise level.

This possibility also entails security risks. That is why OPC UA uses a range of security mechanisms:

- Verification of the identity of OPC UA server and clients.
- Checking of the identity of the users.
- Signed/encrypted data exchange between OPC UA server and clients.

These security policies should only be bypassed in cases where it is absolutely necessary:

- During commissioning
- In stand-alone projects without external Ethernet connection

If you have selected the endpoint "None" for "UA Sample Client" of the OPC Foundation, for example, the program issues a clear warning:

Warning: Selected Endpoint has no security.

When STEP 7 compiles your project it also checks whether you have considered the setting options for the protection and warns you of possible risks. This also includes an OPC UA security policy with the setting "no security", which corresponds to the end point "None".

Note

Disabling security policies you do not want

If you have selected all security policies (default setting) in the secure channel settings of the S7-1500 OPC UA server – in other words the end point "None" (no security) – non-secure data traffic (neither signed nor encrypted) between the server and client is also possible. The OPC UA server of the S7-1500 CPU also sends its public certificate to the client at "None" (No security). And some clients check this certificate. However, the client is not forced to send a certificate to the server. The identity of the client may possibly remain unknown. Each OPC UA client can then connect to the server irrespective of any subsequent security settings.

When configuring the OPC UA server, make sure that only security policies that are compatible with the security concept for your machine or plant are selected. All other security policies should be disabled.

Recommendation: Use the setting "Basic256Sha256 - Sign and Encrypt", which means that the server only accepts Sha256 certificates. The security policy "Basic128Rsa15" is disabled by default and should not be used as an end point. Select end points with a higher security policy.

Additional security rules

- Only use the end point "None" in exceptional cases.
- Only use the "guest authentication" of the user in exceptional cases.
- Only allow access to PLC tags and DB components via OPC UA if it is genuinely necessary.
- Use the list of trusted clients in the settings of the S7-1500 OPC UA client to allow access to certain clients only.

9.2.2 Certificates pursuant to ITU X.509

Security mechanisms are integrated in several layers in OPC UA. Digital certificates have an important role here. An OPC UA client can only establish a secure connection to an OPC UA server when the server accepts the digital certificate of the client and classifies it as trusted.

See section "Configuring the OPC UA server of the S7-1500 CPU".

The client must also check and trust the certificate of the server. The server and client must show their identities and prove that they are what they claim to be: They must prove their identity. Mutual authentication of client and server, for example, prevents man-in-the-middle attacks.

Man-in-the-middle attacks

A "man-in-the-middle" could have positioned itself between server and client. A man-in-the-middle is a program that intercepts communication between server and client and claims to be a client or server, and is thus able to obtain information about the S7 program or to set values in the CPU and attack a machine or plant.

OPC UA uses digital certificates that meet standard X.509 of the International Telecommunication Union (ITU).

This allows the identity of a program, a computer or an organization to be proven (authenticated).

X.509 certificates

An X.509 certificate includes the following information:

- Version number of the certificate
- Serial number of the certificate
- Information on the algorithm used by the certificate authority to sign the certificate.
- Name of the certificate authority
- Start and end of the validity period of the certificate
- Name of the program, person or organization for which/whom the certificate has been signed by the certificate authority.
- The public key of the program, person or organization.

An X509 certificate thus links an identity (name of a program, person or an organization) to the public key of the program, person or organization.

Check during connection establishment

When a connection is being established between the client and server, the devices check all information from the certificate that is required to establish integrity, for example signature, validity, application name (URN) and as of firmware V2.5 also the IP addresses of the client in the client certificate.

The validity period stored in the certificate is also checked. The CPU clock must therefore be set and date/time must be within the validity period, otherwise no communication takes place.

Signing and encryption

To allow you to check whether a certificate has been manipulated, certificates are signed.

There are various possible procedures here:

- Within the TIA Portal you have the possibility to generate and sign certificates. If you have protected your project and are logged in as a user with the function right to make security settings, you can use the global security settings. The global security settings allow access to the certificate manager and therefore to the certificate authority (CA) of the TIA Portal.
- Additional options are available for creating and signing certificates. In the TIA Portal, you can import certificates into the global certificate manager.
  - You contact a certificate authority (CA) and have your certificate signed.

    In this case, the certificate authority checks your identity and signs your certificate with the private key of the certificate authority. For this purpose you send a CSR (Certificate Signing Request) to the certificate authority. The process of creating a CSSR with the OpenSSL tool yourself is described here. (Page 148)
  - You yourself create a certificate and sign it.

    To this purpose you use, for example, the "Opc.Ua.CertificateGenerator" program of the OPC Foundation. The procedure is described here (Page 37). Or use OpenSSL: Instructions are available under Generating PKI key pairs and certificates yourself (Page 149).

Useful information: Certificate types

- Self-signed certificate:

  Each device generates and signs its own certificate. Application examples: Static configuration with limited number of communication nodes.

  No new certificates can be derived from a self-signed certificate. However, you need to load all self-signed certificates from partner devices to the CPU (STOP required).

- CA certificate:

  All certificates are generated and signed by a certificate authority. Application examples: Dynamically growing plants.

  You only need to download the certificate from the certificate authority to the CPU. The certificate authority can generate new certificates (partner devices can be added without CPU STOP).

Signing

The signature makes it possible to prove the integrity and source of a message as detailed below.

Signing starts with the sender creating a hash value from the plain text (plain text message). The sender then encrypts the hash value with its private key and subsequently transfers the plain text together with the encrypted hash value to the recipient. To verify the signature, the recipient needs the public key of the sender (this is contained in the X509 certificate of the sender). The recipient uses the sender's public key to decrypt the hash value received. The recipient then forms the hash value themselves from the plain text received (the hash process is contained in the sender's certificate). The recipient compares the two hash values:

- If the two hash values are identical, the plain text message has reached the receiver unchanged and has not been manipulated.
- If the two hash values do not match, the plain text message has not reached the receiver unchanged. The plain text message has been manipulated or has been distorted during transfer.

Encryption

Encrypting data prevents unauthorized parties from reading the content. X509 certificates are not encrypted; they are public and can be viewed by anyone.

Encryption involves the sender encrypting the plain text message with the public key of the recipient. To do so, the sender requires the recipient's X509 certificate, as it contains the public key of the recipient. The recipient decrypts the message with their private key. Only the recipient can decrypt the message: They alone hold the private key. The private key must therefore never be disclosed.

Secure channel

OPC UA uses the private and public key of client and server to establish a secure connection, the secure channel. Once the secure connection has been established, the client and server generate an internal key. The internal key is only known to the client and server. The client and server use this internal key to sign and encrypt messages. This symmetric process (a shared key) is much faster than asymmetric processes (private and public key).

9.2.3 Certificates with OPC UA

Usage of X509 certificates with OPC UA

OPC UA uses three types of X.509 certificates for establishing connections from client to server:

- OPC UA application certificates

  Such X.509 certificates identify the software instance, the installation of client or server software. For the "Organization name" attribute, you enter the name of the company that uses the software.

  Note

  The OPC UA server of the S7-1500 uses application certificates also for the security setting "None" (No security). This ensures compatibility to OPC UA V1.1 and earlier versions.

- OPC UA software certificates

  This X-509 certificate identifies a specific version of the client or server software. These certificates contain attributes that describe which tests this version of the software has passed during certification by the OPC Foundation (or recognized test laboratories). For the "Organization name" attribute, you enter the name of the company that has developed or markets the software.

  Note

  Software certificates are not supported in STEP 7.

- OPC UA user certificates

  This X.509 certificate identifies the specific user who, for example, accesses process data from the OPC UA server of an S7-1500 CPU. This certificate is not required if the user can authenticate themselves with a password, or if anonymous access is configured.

  Note

  User certificates are not supported in STEP 7.

These certificates are end-entity certificates: They identify, for example, a person, an organization, a company or an instance (installation) of a software.

9.2.4 Creating self-signed certificates

Using the client's certificate generator

Many OPC UA client applications or SDKs are integrated in a sample application that allows you to generate certificates for the client from this application.

The description for certificate generation can generally be found in the context for describing the OPC UA client application.

Example client from the online support

The OPC UA .NET client for the SIMATIC S7-1500 OPC UA server (https://support.industry.siemens.com/cs/ww/en/view/109737901) creates a self-signed software certificate of the client application in the Windows Certificate Store during the first program start. The documentation on this example describes the procedure for handling these certificates.

Using the certificate generator of the TIA Portal

If you use an OPC UA client that does not generate a client certificate, self-signed certificates can be created with STEP 7.

To do this, follow these steps:

1. In the properties of the CPU, double-click "<Add new>" under "Protection & Security > Certificate manager > Device certificates".
2. Click "Add".
3. In the "Create a new certificate" dialog, select the "OPC UA client" option for "Usage".
4. Click "OK".

In the field "Subject Alternative Name" STEP 7 automatically enters the URI for the generated certificate. In the program-specific certificate generation by means of the .NET stack of the OPC Foundation, the field is called, for example, "ApplicationUri" - it can have a different name in other tools for certificate generation.

9.2.5 Generating PKI key pairs and certificates yourself

This section is only relevant if you want to use an OPC UA client that cannot itself create a PKI key pair and a client certificate. In this case, you generate a private and a public key using OpenSSL, generate an X.509 certificate, and sign the certificate yourself.

Using OpenSSL

OpenSSL is a tool for Transport Layer Security that you can use to create certificates. You can also use other tools, for example XCA, a type of key management software with a graphical user interface for an improved overview of certificates issued.

To work with OpenSSL under Windows, follow these steps:

1. Install OpenSSL under Windows. If you are using a 64-bit version of the operating system, install OpenSSL in the "C:\OpenSSL-Win64" directory, for example. You can obtain OpenSSL-Win64 as a download from various providers for open source software.
2. Create a directory, for example "C:\demo".
3. Open the command line (cmd.exe). To do so, click "Start" and enter "cmd" in the search field. Right-click "cmd.exe" in the results list and run the program as an administrator. Windows then opens the command line (DOS prompt)
4. Change to the "C:\demo" directory. To do this, enter the following command: "cd C:\demo".
5. Set the following network variables:
   – set RANDFILE=c:\demo\.rnd
   – set OPENSSL_CONF=C:\OpenSSL-Win64\bin\openssl.cfg

   The figure below shows the command line with the following commands:

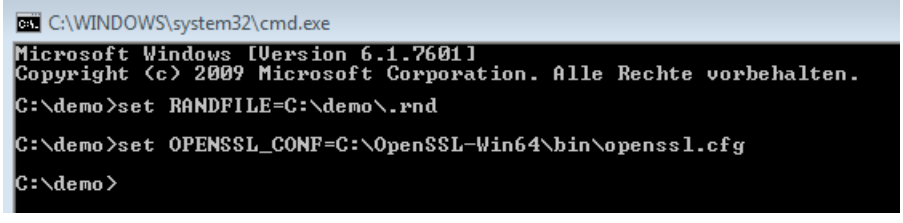

6. Now start OpenSSL. If OpenSSL has been installed in the C:\OpenSSL-Win64 directory, enter the following: C:\OpenSSL-Win64\bin\openssl.exe The figure below shows the command line with the following command:

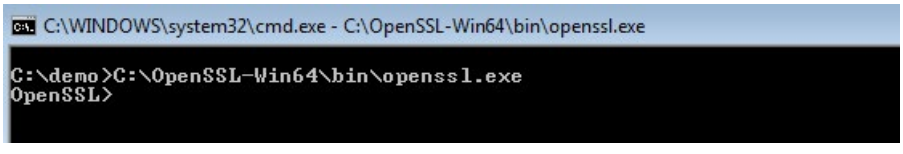

7. Generate a private key. Save the key to the "myKey.key" file. The key in this example is 1024 bits long; for greater RSA security, use 2048 bits in practice. Enter the following command: "genrsa -out myKey.key 2048" ("genrsa -out myKey.key 1024" in the example). The figure below shows the command line with the command and the output of OpenSSL:

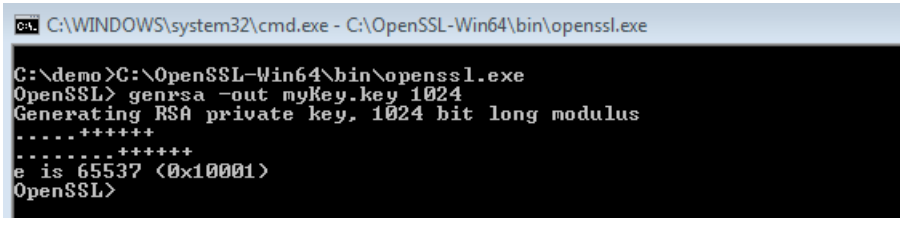

8. Generate a CSR (Certificate Signing Request). To do this, enter the following command: "req -new -key myKey.key -out myRequest.csr". During execution of this command, OpenSSL queries information about your certificate:
   - Country name: for example "DE" for Germany, "FR" for France
   - State or province name: for example "Bavaria".
   - Location Name: for example "Augsburg".
   - Organization Name: Enter the name of your company.
   - Organizational Unit Name: for example "IT"
   - Common Name: for example "OPC UA client of machine A"
   - Email Address:

Important: Both the IP address and the URL of the client program (application) have to be stored in the "Subject Alternative Name" field of the created certificate; otherwise, the CPU will not accept the certificate.

The information you enter is added to the certificate. The figure below shows the command line with the command and the output of OpenSSL:

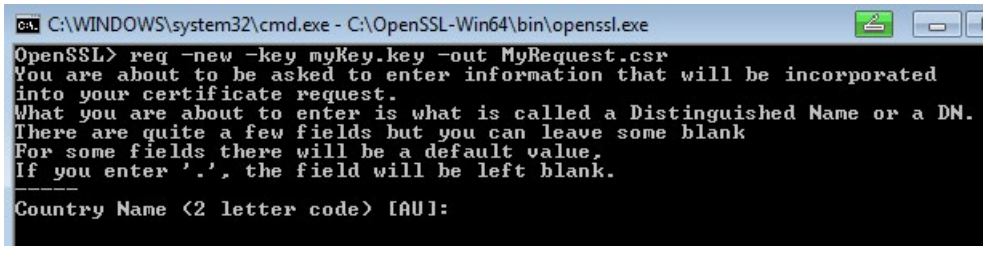

The command creates a file in the C:\demo directory containing the Certificate Signing Request (CSR); in the example, this is "myRequest.csr".

Using the CSR

There are two ways to use a CSR:

- You send the CSR to a certificate authority (CA): Read the information of the respective certification authority. The certificate authority (CA) checks your information and identity (authentication) and signs the certificate with the private key of the certificate authority. You receive the signed X.509 certificate and use this certificate for OPC UA, HTTPS or Secure OUC (secure open user communication), for example. Your communication partners use the public key of the certificate authority to check whether your certificate was really issued and signed by that CA. The certificate authority has confirmed your information in the certificate.
- You sign the CSR yourself: Using your private key. This option is shown in the next step.

Signing the certificate yourself

Enter the following command so that you can generate and sign your certificate (self-signed certificate) yourself: "x509 -req -days 365 -in myRequest.csr -signkey myKey.key -out myCertificate.crt".

The figure below shows the command line with the command and OpenSSL:

The command generates an X.509 certificate with the attributes that you transfer with the CSR (in the example "myRequest.csr"), for example with a validity of one year (-days 365). The command also signs the certificate with your private key ("myKey.key" in the example). Your communication partners can use your public key (contained in your certificate) to check that you are in possession of the private key that belongs to this public key. This also prevents your public key from being misused by an attacker.

With self-signed certificates, you yourself confirm that the information in your certificate is correct. There is no independent body that checks your information.

9.2.6 Secure transfer of messages

Establishing secure connections with OPC UA

OPC UA uses secure connections between client and server. OPC UA checks the identity of the communication partners. OPC UA uses certificates in accordance with X.509-V3 from the ITU (International Telecommunication Union) for client and server authentication. Exception: A secure connection is not established with the "No security" security policy.

Message security mode

OPC UA uses the following security policies to protect messages:

- No security

  All messages are unsecured. In order to use this security policy, establish a connection to a None end point of a server.

- Signing

  All message are signed. This allows the integrity of the messages received to be checked. Manipulations are detected. In order to use this security policy, establish a connection to a Sign end point of a server.

- Sign & Encrypt

  All messages are signed and encrypted. This allows the integrity of the messages received to be checked. Manipulations are detected. What is more, no attacker can read the contents of the message (protection of confidentiality). In order to use this security policy, establish a connection to a "SignAndEncrypt" end point of a server.

The security policies are also named according to the algorithms used. Example: "Basic256Sha256 - Sign & Encrypt" means: Secure endpoint, supports a series of algorithms for 256-bit hashing and 256-bit encryption.

Layers required

The figure below shows the three layers that are always required for establishing a connection: the transport layer, the secure channel and the session.

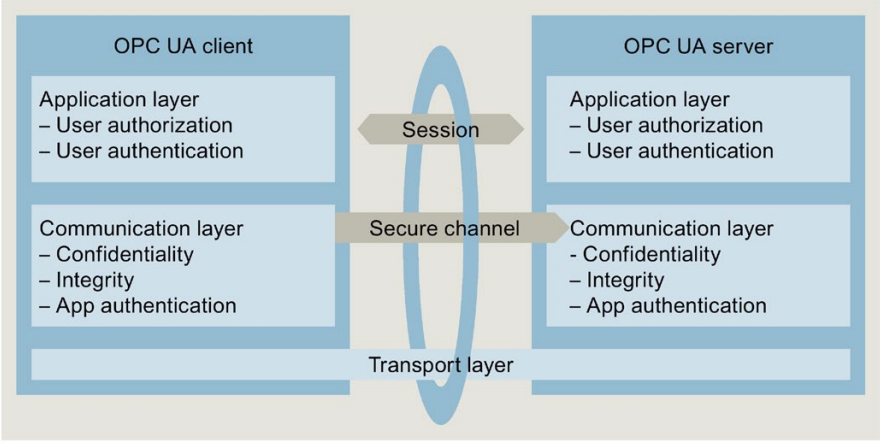

Figure 9-3 Necessary layers: transport layer, secure channel and session

- Transport layer:

  This layer sends and receives messages. OPC UA uses an optimized TCP-based binary protocol here. The transport layer is the basis for the subsequent secure channel.

- Secure channel

  The secure channel receives the data received from the transport layer, and forwards that data to the session. The secure channel forwards data of the session that is to be sent to the transport layer.

  In "Sign" security mode, the secure channel signs the data (messages) that is sent. When a message is received, the secure channel checks the signature to detect any manipulations.

  With a "SignAndEncrypt" security policy, the secure channel signs and encrypts the send data. Data received is decrypted by the secure channel, and the secure channel then checks the signature.

  With the "No security" security policy, the message packages pass the secure channel unchanged (the messages are received and sent in plain text).

- Session

  The session forwards the messages from the secure channel to the application, or receives from the application the messages that are to be sent. The application uses the process values or provides the values.

Establishing the secure channel

The secure channel is established as follows:

1. The server starts establishing the secure channel when it receives a request to this effect from the client. This request is signed or signed and encrypted, or the message is sent in plain text (security mode of the selected server end point). With "Sign" and "Sign & Encrypt", the client sends a "secret" (random number) with the request.
2. The server validates the client certificate (contained in the request, unencrypted) and checks the identity of the client. If the server trusts the client certificate,
   - it decrypts the message and checks the signature ("Sign & Encrypt"),
   - checks the signature only ("Sign"),
   - or leaves the message unchanged ("No security")
3. The server then sends a response to the client (same level of security as the request). The server secret is contained in the response. The client and server calculate a symmetric key from the client and server secret. The secure channel is now established.

The symmetric key (instead of the private and public key of client and server) is now used for signing and encrypting messages.

Establishment of the session

The session is executed as follows:

1. The client starts establishing the session by sending a CreateSessionRequest to the server. This message contains a Nonce, a random number that is only used once. The server must sign this random number (Nonce) to prove that it is the owner of the private key. The private key belongs to the certificate that the server uses to establish the secure channel. This message (and all subsequent messages) is secured in line with the security policies for the selected server endpoint (selected security policies).
2. The server responds with the CreateSession Response. This message contains the public key of the server and the signed Nonce. The client checks the signed Nonce.
3. If the server passes the test, the client sends a SessionActivateRequest to the server. This message contains the information that is required for user authentication:
   - Either the user name and password
   - Or the X.509 certificate of the user (not supported in STEP 7 V15)
   - Or no data (if anonymous access is configured).
4. If the user has the necessary rights, the server returns a message to the client (ActivateSessionResponse). This activates the session.

The secure connection between the OPC UA client and server has been established.

Establishing a connection to PLCopen function block

The PLCopen specification defines a range of IEC 61131 function blocks for OPC UA clients. The instruction UA_Connect initiates both a secure channel and a session following the pattern described above.

9.3 Using the S7-1500 as an OPC UA server

9.3.1 Useful information about the S7-1500 CPU OPC UA server

9.3.1.1 The OPC UA server of the S7-1500 CPUs

The S7-1500 CPUs as of firmware V2.0 are equipped with an OPC UA server. Apart from the Standard-S7-1500 CPUs this applies to the variants S7-1500F, S7-1500T, S7-1500C, S7-1500pro CPUs, ET 200SP CPUs, SIMATIC S7-1500 SW controllers and PLCSIM Advanced.

Convention: "S7-1500 CPUs" also includes the above-mentioned CPU variants.

S7-1500 CPU OPC UA server basics

Access to the OPC UA server of the CPU is possible via all integrated PROFINET interfaces of the S7-1500 CPU.

Direct access to the OPC UA server of the CPU over the backplane bus of the automation system is not possible via a CP or CM.

For access by clients, the server saves the enabled PLC tags and other information in the form of nodes (see Configuring access to PLC tags). These nodes are interconnected and form a network. OPC UA defines access points to this network (well-known nodes) that enable navigation to subordinate nodes.

With an OPC UA client you can read, observe or write values of tags of the PLC program as well as call methods that are available to the server. As of firmware version 2.5 you can implement methods, see AUTOHOTSPOT.

Node classes

OPC UA servers provide information in the form of nodes. A node can be, for example, an object, a tag, a method or a property.

The example below shows the address space of the OPC UA server of an S7-1500 CPU (extract from the OPC UA client "UaExpert" from Unified Automation).

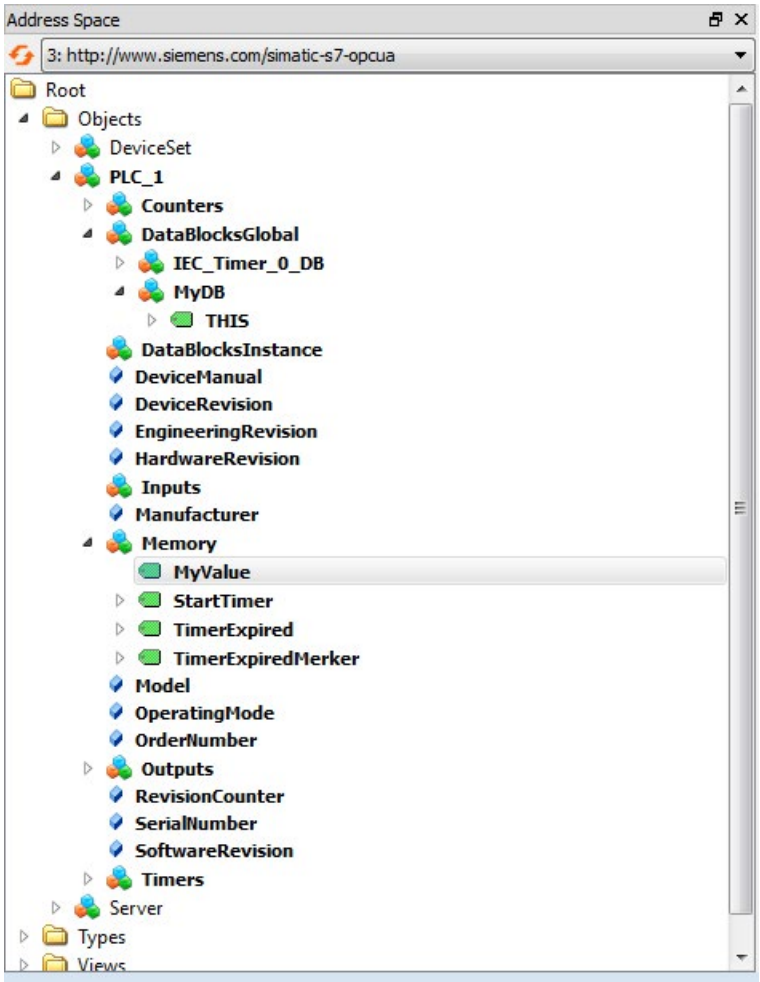

Figure 9-4 Example of the address space of the OPC UA server of an S7-1500 CPU

In the figure above, the "MyValue" tag is selected (highlighted in gray).

This tag is located below the "Memory" node, which has the node class "Object".

"Memory" is below the "PLC_1" node (also an Object).

Address space

The nodes are linked over references, for example, the reference "HasComponent, which represents a hierarchical relationship between a node and its subordinate nodes. With their references, the nodes form a network that can, for example, take the form of a tree.

A network of nodes is also called an address space. Starting from the root, all nodes can be reached in the address space.

9.3.1.2 End points of the OPC UA server

The end points of the OPC UA server define the security level for a connection. Depending on the purpose of use or desired security level, you have to carry out the corresponding settings for the connection at the end point.

Different security settings

Before establishing a secure connection, OPC UA clients ask the server with which security settings connections are possible. The server returns a list with all the security settings (endpoints) that the server offers.

Structure of end points

End points consist of the following components:

- Identifier for OPC: "opc.tcp"
- IP address: 192.168.178.151 (in the example)
- Port number for OPC UA: 4840 (standard port)

  The port number can be configured, see "Settings of the OPC UA server".
- Security setting for messages (Message Security Mode): None, Sign, SignAndEncrypt.
- Encryption and hash procedures (Security Policy): None, Basic128Rsa15, Basic256, Basic256Sha256 (in the example).

The following figure shows the "UA Sample Client" of the OPC Foundation.

The client has established a secure connection to the OPC UA server of an S7-1500 CPU to the end point "opc.tcp://192.168.178.151:4840 - [SignAndEncrypt: Basic128Rsa15:Binary]". The security settings "SignAndEncrypt:Basic128Rsa15" are contained in the end point.

Note

Select an endpoint with as strict as possible a security policy

Select an application-appropriate security policy for the end point and disable the less strict security policy at the OPC UA server.

A Sha256 certificate is required for the most secure end points (Basic256Sha256) of the S7-1500 CPU OPC UA server.

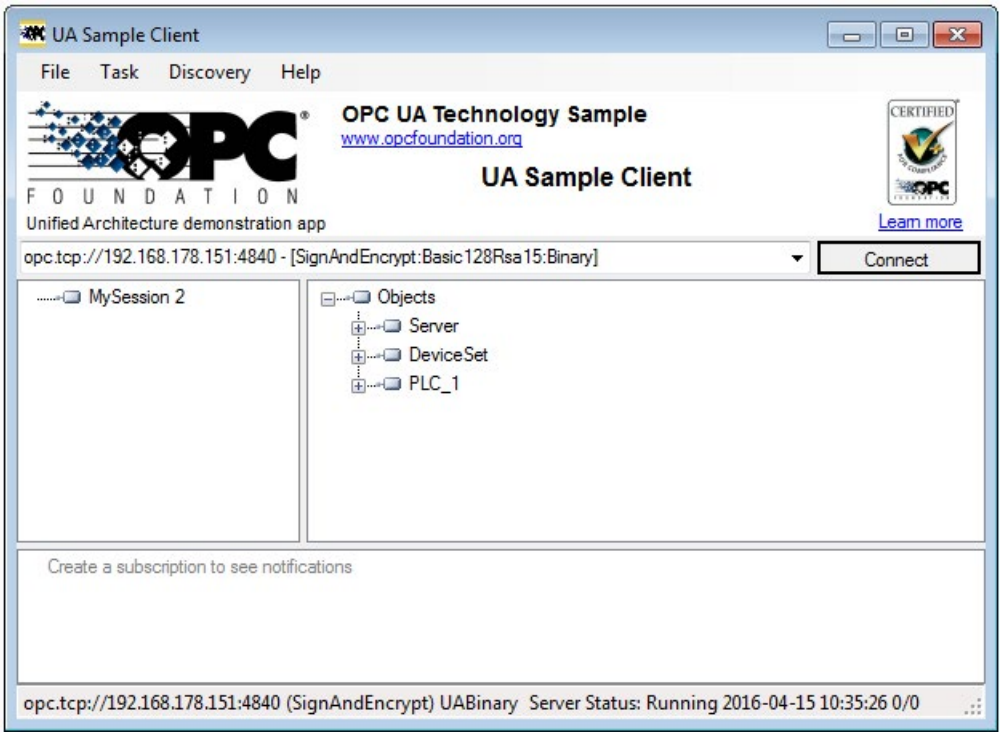

Figure 9-5 "UA Sample Client" program of the OPC Foundation

A connection to a server end point is only established if the OPC UA client complies with the security policies of that end point.

Through the information provided by the OPC UA server

OPC UA servers provide a wide range of information:

- The values of PLC tabs and DB components which clients may access.
- The data types of these PLC tags and DB components.
- Information on the OPC UA server itself and on the CPU.

This gives clients an overview and allows them to read out specific information. Previous knowledge of the PLC program and the CPU data is not required. You do not need to ask the developer of the PLC program when PLC tags are to be read. All necessary information is stored on the server itself (for example, the data types of the PLC tags).

Display of the information of the OPC UA server

You have the following options:

- Online: You have all the available information displayed during the runtime of the OPC UA server. To do so, navigate (browse) the address space of the server.
- Offline: You export an XML file that is based on the XML schemes of the OPC Foundation.

  Server methods created by the user (FB instance that can be called by an OPC UA client) are not exported as of STEP 7 V15.1), see AUTOHOTSPOT.
- Offline with the Openness API: In your program, you use the API (Application Programming Interface) of the TIA Portal to access the function for exporting all PLC tags that can be read by OPC UA. This requires .NET Framework 4.0; see TIA Portal Openness, Automating SIMATIC projects with scripts (https://support.industry.siemens.com/cs/ww/en/view/109477163).
- If you already know the syntax and the PLC program, you can access the OPC UA server without first researching the information.

9.3.1.3 Runtime behavior of the OPC UA server

OPC UA server in operation

The OPC UA server of the S7-1500 CPU starts when you activate the server and download the project to the CPU.

How to activate the OPC UA server is described here.

Response to CPU STOP

An activated OPC UA server remains in operation even if the CPU switches to "STOP". The OPC UA server continues to respond to requests from OPC UA clients.

Server response in detail:

- If you request the values of PLC tags, you will get what were the latest values before the CPU switched to or was set to "STOP".
- If you write values to the OPC UA server, the OPC UA server will accept those values.

  However, the CPU will not process the values because the user program is not executed in "STOP" mode.

  An OPC UA client can nonetheless read the values written at STOP from the OPC UA server of the CPU.

  During restart, the CPU overwrites the values written at STOP with the start of the PLC tags.
- If you call a server method, the error message 16#00AF_0000 (BadInvalidState) is output because the server method (user program) is not running.

Server restart

The OPC UA server is stopped upon each download to the CPU (for example after a configuration or block is downloaded) and then restarts. The duration of the restart depends on the scope of the data structure.

Reading CPU operating mode over OPC UA server

The OPC UA server allows you to read out the CPU mode, see figure below:

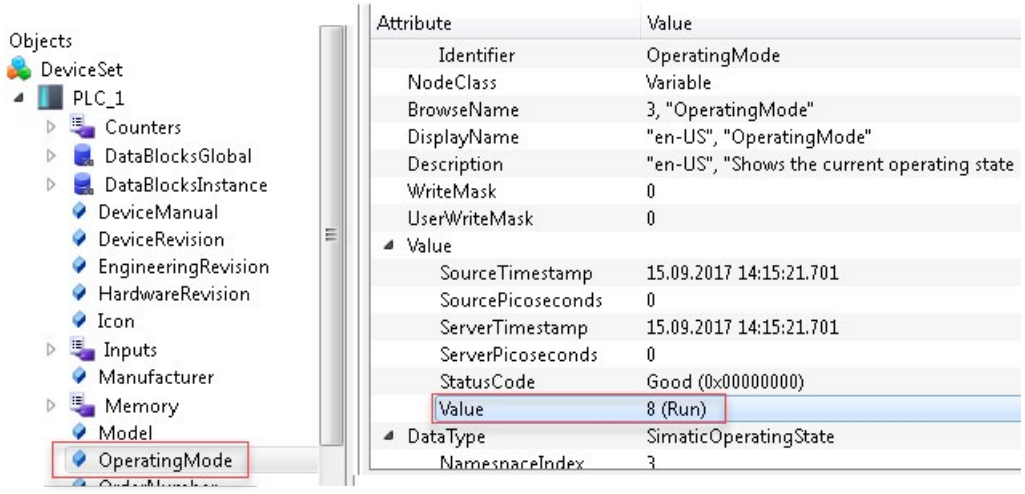

Figure 9-6 Reading CPU operating mode over OPC UA server

In addition to the operating mode of the CPU you can, for example, read out the diagnostics status of the CPU (Good).

9.3.1.4 Diagnostics of the OPC UA server

Online diagnostics of the OPC UA server

The S7-1500 CPU OPC UA server can be diagnosed online with standard OPC UA clients, such as UaExpert.

The diagnostic information is subdivided into the following areas:

- Server Diagnostics
- Sessions Diagnostics
- Subscriptions Diagnostics

In the address space of the server, for example, the following nodes are available with diagnostic information:

- **ServerDiagnosticsSummary**: Server diagnostics summary
  - CurrentSessionCount: Number of active sessions
- **SessionsDiagnosticsSummary**: Session diagnostics summary
  - SessionTimeout: Set time that a session lasts, e.g. in the event of disconnection
  - SecurityRejectedSessionCount: Number of sessions rejected due to mismatching end point security settings between client and server
- **SubscriptionsDiagnosticsArray**: Array with one element per subscription for each session

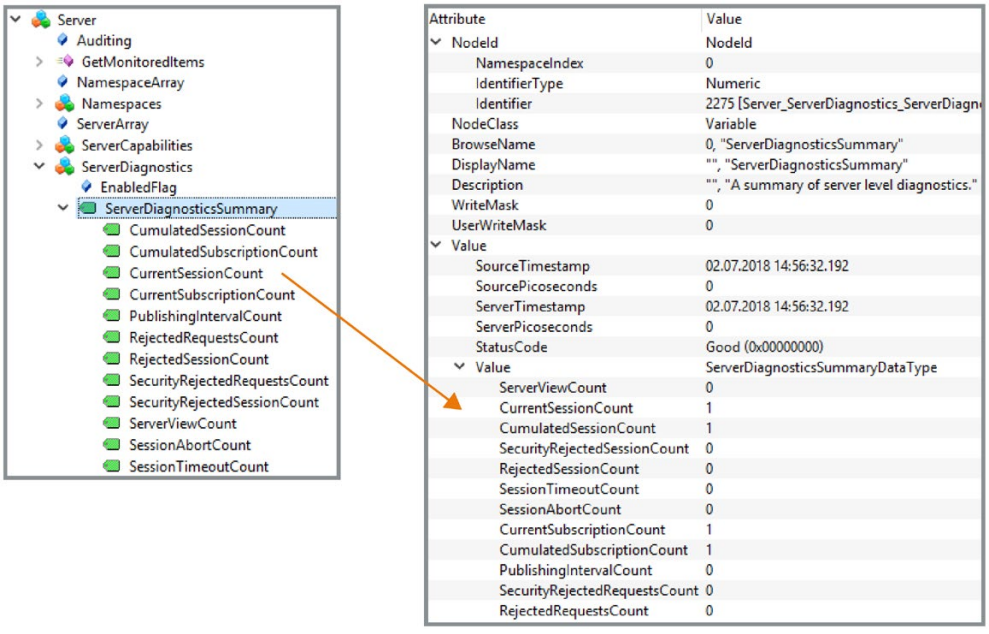

Figure 9-7 Server Diagnostics

The SessionsDiagnosticsSummary node also shows the properties of the client application accessing the server within the session.

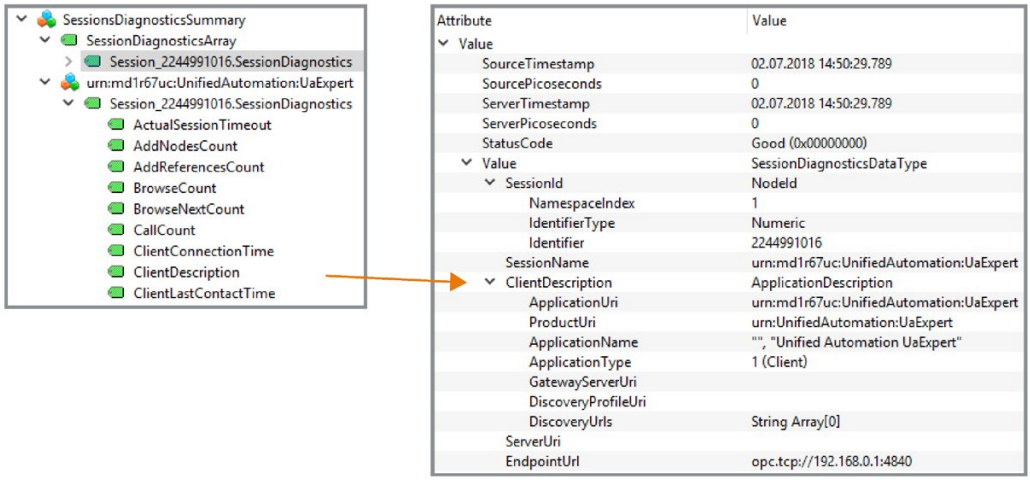

Figure 9-8 Sessions Diagnostics with the properties of the client application

Diagnostics of the connection between client and server

To diagnose the status of the connection during program runtime in the client, use the following instruction:

OPC_UA_ConnectionGetStatus: Read connection status.

9.3.2 Configuring access to PLC tags

9.3.2.1 Managing write and read rights

Enabling PLC tags and DB tags for OPC UA

OPC UA clients can have read and write access to PLC tags and DB tags if the tags are enabled for OPC UA (default setting). For an enabled tag the check box "Accessible from HMI/OPC UA" is activated.

The following example shows an array data block:

MyDB

Name	Data type	Accessible from HMI/OPC UA	Writable from HMI/OPC UA	Visible in HMI engineering
MyDB	Array[0..9] o...	☑	☑	☑
MyDB[0]	Int	☑	☑	☑
MyDB[1]	Int	☑	☑	☑
MyDB[2]	Int	☑	☑	☑
MyDB[3]	Int	☑	☑	☑
MyDB[4]	Int	☑	☑	☑
MyDB[5]	Int	☑	☑	☑
MyDB[6]	Int	☑	☑	☑
MyDB[7]	Int	☑	☑	☑
MyDB[8]	Int	☑	☑	☑
MyDB[9]	Int	☑	☑	☑

Figure 9-9 Enabling PLC tags and DB tags for OPC UA

This array can be read completely in one pass by OPC UA clients (see Addressing nodes). The check boxes at "Accessible from HMI/OPC UA" and "Writable from HMI/OPC UA" are activated for all the components of the array.

Result: OPC UA clients can both read and write these components.

Removing write rights

If you want to write-protect a tag, deselect the "Writable from HMI/OPC UA" option for that tag. This removes the write right for the OPC UA clients and HMI devices.

Result: Only read access by OPC UA clients and HMI devices is possible. OPC UA clients cannot assign values to this tag and therefore cannot influence execution of the S7 program.

Removing write and read rights

To write-protect and read-protect a tag, disable the "Accessible from HMI/OPC UA" option for that tag (checkbox not selected). This makes the OPC UA server remove the tag from its address space. OPC UA clients can no longer see that CPU tag.

Result: OPC UA clients and HMI devices can neither read nor write the tag.

Write and read rights of structures

If you remove the read or write right for the component of a structure, the structure or the data block cannot be written or read as a whole.

If you remove read and write rights for individual components of a PLC data type (UDT), the rights will also be removed from any data block based on the UDT.

Visible in HMI engineering

The option "Visible in HMI Engineering" applies to Siemens engineering tools. If you disable the option "Visible in HMI Engineering" (check mark not set), you can no longer configure the tag in WinCC (TIA Portal).

The option does not have any effect on OPC UA.

Rules

- Only allow read access to PLC tags and tags of data blocks in STEP 7 if this is necessary for communication with other systems (controllers, embedded systems or MES).

  You should not enable other PLC tags.
- Only allow write access over OPC UA if write rights are genuinely necessary for specific PLC tags and tags of data blocks.
- If you have reset the "Accessible from HMI/OPC UA" option for all elements of a data block, the data block for an OPC UA client is no longer visible in the address space of the OPC UA server of the S7-1500 CPU.
- You can also prevent access to an entire data block centrally (see AUTOHOTSPOT). This setting "overrules" the settings for the components in the DB editor.

9.3.2.2 Managing write and read rights for a complete DB

Hiding DBs or DB contents for OPC UA clients

As of STEP 7 V15, you have the option of easily preventing access to a complete data block by an OPC UA client.

With this option, the data of the corresponding DB, including instance DBs of function blocks, remains hidden for OPC UA clients.

In the default setting, data blocks can be read and written from OPC UA clients.

Procedure

Proceed as follows to completely hide a data block for OPC UA clients or to protect a data block from write access from OPC UA clients:

1. Select the data block to be protected in the project tree.
2. Select the "Properties" shortcut menu.
3. Select the "Attributes" area.
4. Select/clear the "DB accessible from OPC UA" checkbox as required.

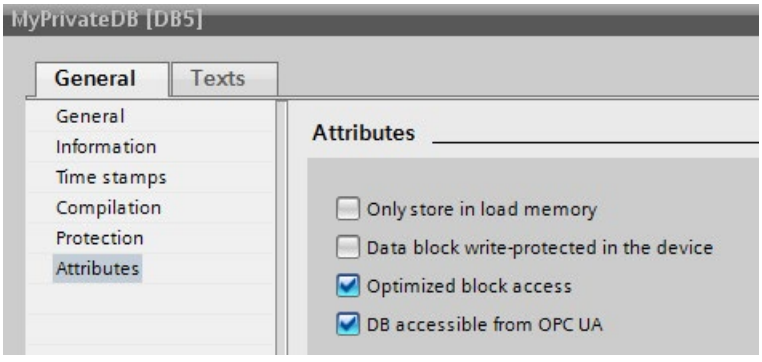

Figure 9-10 Hiding DBs or DB contents for OPC UA clients

Note

Effect on settings in the DB editor

If you hide a DB using the DB attribute described here, the settings for the components in the DB editor are no longer relevant; individual components can no longer be accessed or written.

9.3.2.3 Accessing OPC UA server data

High performance in line with application

OPC UA is designed for the transfer of a high volume of data within a short period of time. You can increase the performance significantly if you do not access individual PLC tags, but rather read and write arrays and structures as a whole.

It is fastest to access arrays. Therefore, you should combine the data for OPC UA clients into arrays.

Recommendations for access to the OPC UA server by the OPC UA client

- For one-off or infrequent data access, use standard read/write access.
- For cyclic access to small amounts of data (up to ca. every 5 seconds), use subscriptions.

  Optimize the settings for the smallest publishing interval and the smallest sampling interval at the OPC UA server.
- If you access specific tags regularly (recurring access), you should use the functions "RegisteredRead" and "RegisteredWrite".

Allow a greater communication load for the PLC by increasing the value for "Cycle load due to communication". Make sure that your application still works properly with the changed settings.

Procedure for creating an array DB

You can create arrays for example in global data blocks, in the instance data block of a function block or as an array DB . The following sections describe how to create an Array-DB.

To create a data block with an array (array data block), follow these steps:

1. Select the CPU with the OPC UA server in the project tree.
2. Double-click "Program blocks".
3. Double-click "Add new block".
4. Click "Data block".
5. Select a unique name for the data block and accept the name that is already entered.
6. Select the "Array DB" entry from the drop-down list for "Type".
7. Select the data type for the individual components of the array from the drop-down list for "Array data type".
8. Enter the high limit of the array for "Array limit".
9. Click "OK".

9.3.2.4 Export OPC UA XML file

Generating an OPC UA export file

OPC UA specifies an information model XML scheme with a standard syntax, with which manufacturers can define their information model of a system component, for example, and make it available in machine-readable form. A file that uses this scheme is also known as a node set file.

With STEP 7 (TIA Portal) you can easily export the standard SIMATIC information model of the S7-1500 CPU as a server to an OPC UA XML file (node set file); including all PLC variables and methods you have enabled for OPC UA.

You use the OPC UA XML file for the offline configuration of an OPC UA client; it is structured according to the OPC UA specification and acts as a standard SIMATIC server interface.

To create and export the OPC UA XML file, follow these steps:

1. Select the CPU. Click on the CPU symbol (for example in the network view).
2. Click "General > OPC UA > Server > Export" in the properties of the CPU.
3. Click "Export OPC UA XML file".
4. Select the directory in which you want to save the export file.
5. Select a new name for the file or keep the name that is already entered.
6. Click "Save".

Note

As of STEP 7 (TIA Portal) V15.1, server methods are contained in the OPC UA export file (node set) together with their input and output parameters.

Exporting all array elements separately

If the "Export all array elements as separate nodes" option is selected in the CPU properties under "OPC UA > Server > Export", the OPC UA XML file contains all elements of arrays as individual XML elements. In addition, the arrays themselves are each described in an XML element in the XML file.

If an array contains many array elements, the XML file can be very large.

Tip

The following FAQ contains a converter with which you can convert the export file into CSV format. You then obtain a list of the tags of the CPU that can be accessed by OPC UA.

You can find the FAQ on the Internet (https://support.industry.siemens.com/cs/ww/en/view/109742903).

9.3.3 Configuring the OPC UA server of the S7-1500 CPU

9.3.3.1 Enabling the OPC UA server

Requirement

- You have acquired a Runtime license for the operation of the OPC UA server; see Licenses for the OPC UA server (Page 192).
- When using certificates for secure communication (for example, HTTPS, secure OUC, OPC UA), make sure that the corresponding modules have the current time of day and the current date. Otherwise, the modules will evaluate the certificates used as invalid and secure communication will not work.

Commissioning an OPC UA server

By default, the OPC UA server of the CPU is not enabled for reasons of security: OPC UA clients have neither write nor read access to the S7-1500 CPU.

Follow these steps to activate the OPC UA server of the CPU:

1. Select the CPU. Click on the CPU symbol (for example in the network view).
2. Click "OPC UA > Server" in the properties of the CPU.
3. Activate the OPC UA server of the CPU.
4. Confirm the security notes.
5. Go to the CPU properties, select "Runtime licenses" and set the runtime license acquired for the OPC UA server.
6. Compile the project.
7. Download the project to the CPU.

   The OPC UA server of CPU now starts.

Settings remain stored

If you have already enabled the server and made settings, those settings are not lost if the server is disabled. The settings are saved as before and are available when you enable the server again.

Application name

The application name is the name of the OPC UA application. The name is displayed under "OPC UA > General":

- The default setting for the server name is: "SIMATIC.S7-1500.OPC-UAServer:PLC1".
- The default consists of "SIMATIC.S7-1500.OPC-UAServer:" and the name of the CPU selected under "General > Product information > Name", in this case "PLC_1".
- Clients identify the server using the application name.

The example below originates from UaExpert:

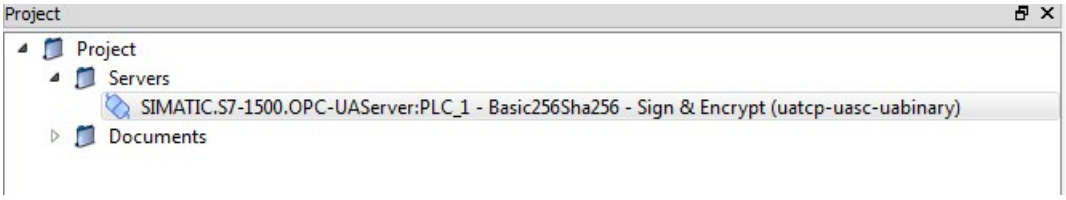

If you have activated the server, you can also use a different name that is meaningful in your project and which fulfills the requirements of your project, e.g. for worldwide uniqueness.

Changing the application name

To change the name of the OPC UA server, follow these steps:

1. Select the CPU. Click on the CPU symbol (for example in the network view).
2. Click "OPC UA > General" in the properties of the CPU.
3. Enter a meaningful name.

Please note that the application name is also entered on the certificate (Subject Alternative Name) and you may have to generate an existing certificate again after changing the application name.

9.3.3.2 Access to the OPC UA server

Server addresses

The OPC UA server of the S7-1500 CPU can be accessed over all internal PROFINET interfaces of the CPU (as of firmware V2.0), but not over the PROFINET interfaces of CP/CM.

With SIMATIC S7-1500 SW controllers, access to the OPC UA server is only possible via PROFINET interfaces that are assigned to the software PLC.

In the example, connections to the OPC UA server of the CPU can be established over the following URLs (Uniform Resource Locator):

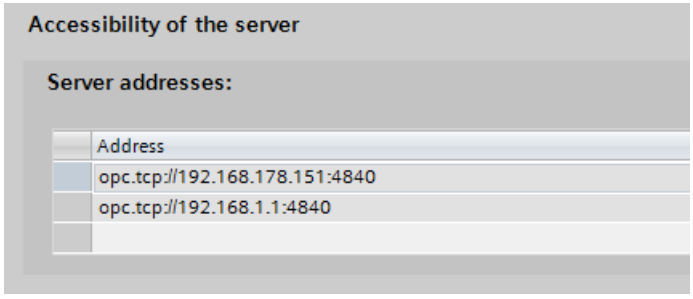

The URLs are structured as follows:

- Protocol identifier "opc.tcp://"
- IP address
  - 192.168.178.151

    The IP address at which the OPC UA server can be accessed from the Ethernet subnet 192.168.178.
  - 192.168.1.1

    The IP address at which the OPC UA server can be accessed from the Ethernet subnet 192.168.1.
- TCP Port number
  - Default: 4840 (standard port)

    The port number can be changed under "OPC > UA > Server > Port".

Dynamic IP addresses

In the example below, the IP address for the PROFINET interface [X2] has not yet been specified.

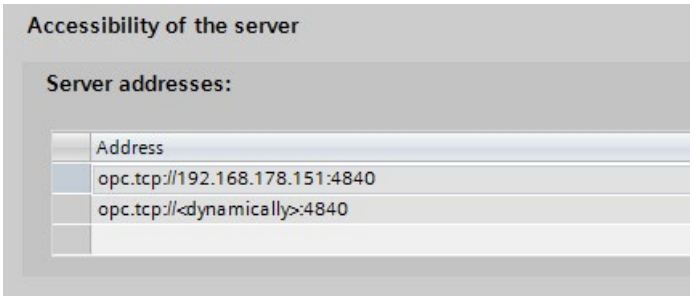

The placeholder "<dynamically>" appears in the table.

The IP address of this PROFINET interface is set later on the device, e.g. via the display of the CPU.

Activating the standard SIMATIC Server interface

If the "Activate Standard SIMATIC server interface" option is selected, the OPC UA server of the CPU provides the enabled PLC tags and server methods to the clients, as is specified in the OPC UA specification.

This option is selected in the default setting.

Leave the option selected so that OPC UA clients can automatically connect to the OPC UA server of the CPU and exchange data.

If you do not select this option, you must add the server interface by entering the "OPC UA communication" entry in the project tree. This interface is then used as OPC UA server interface, see OPC UA server interface configuration (Page 198).

Backward compatible data type definitions according to OPC UA specification ≤ V1.03

The OPC UA specification (<= V1.03) defines mechanisms in order to read out data type definitions, for example for user-defined structures (UDTs), from a server by means of the TypeDictionaries.

In the OPC UA server properties of the CPU, you can set whether the CPU generates these backward compatible data type definitions according to the OPC UA specification ≤ V1.03 for the standard SIMATIC server interface or not.

Because TypeDictionaries are complex and result in large OPC UA XML files (server interfaces) which the client has to interpret, a simpler solution was introduced with OPC UA Specification V1.04 (attribute "DataTypeDefinition" at the data type node). If your client supports the OPC UA specification V1.04 or higher, then disable the option.

9.3.3.3 General settings of the OPC UA server

TCP port for OPC UA

By default, OPC UA uses TCP port 4840. You can, however, select a different port. Entries from 1024 to 49151 are possible. You must, however, make sure that there are no conflicts with other applications. OPC UA clients must use the selected port when establishing a connection.

In the example below, port 48400 is selected:

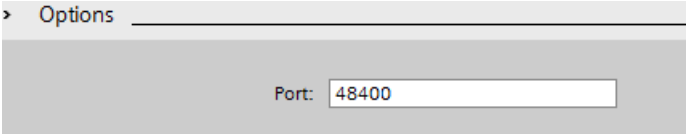

Settings for sessions

- Maximum timeout for sessions

  In this field, you specify the maximum time period before the OPC UA server closes a session without data exchange.

  Possible values between 1 and 600000 seconds.

- Maximum number of OPC UA sessions

  In this field, you specify the maximum number of sessions the OPC UA server starts and simultaneously operates.

  The maximum number of sessions is dependent on the performance capability of the CPU. Each session ties up resources.

Maximum number of registered nodes

In this field, you specify the maximum number of nodes the OPC UA server registers.

The maximum number of registered nodes depends on the capacity of the CPU and is displayed when you configure the field content (place cursor in field). Each registration ties up resources.

Note

No error message following attempt to register more than the configured maximum number of registrable nodes

If a client tries to register more nodes during runtime than the configured maximum number, the server of the S7-1500 CPU only registers the configured maximum number. From the configured maximum number of registrable nodes, the server sends the client the regular string node IDs so the speed advantage gained by registration for these nodes is lost. The client does not receive an error message.

When configuring, make sure you have a sufficient reserve or have the client calculate the maximum number of nodes allowed before registration.

Additional information

Details on which ports are used by the various services for data transfer via TCP and UDP, and what are the points to note when using routers and firewalls can be found in the FAQ (https://support.industry.siemens.com/cs/ww/en/view/8970169).

9.3.3.4 Settings of the server for subscriptions

Subscription instead of cyclic queries

An alternative to cyclic queries for a PLC tag (polling) is to monitor this value. Use a Subscription: The server informs the client if the value of PLC tags changes. See "The OPC UA client".

One server usually monitors a large number of PLC values. At regular intervals, the server therefore sends the client messages (notifications) containing the new values of the PLC tags.

How frequently does the server send notifications?

When a Subscription is set up, the OPC UA client specifies the intervals at which it wants to be sent the new values in the event of changes. To limit the communication load through OPC UA, set a minimum interval for the messages. For this purpose, use the parameters for the minimum publishing interval and the minimum sampling interval.

Minimum publishing interval

With "Minimum publishing interval", you set the time intervals at which the server sends a message to the client with the new values in the event of changes.

250 ms is used as the "Minimum sampling interval" in the figure below. The value 200 ms is entered as the "Minimum publishing interval".

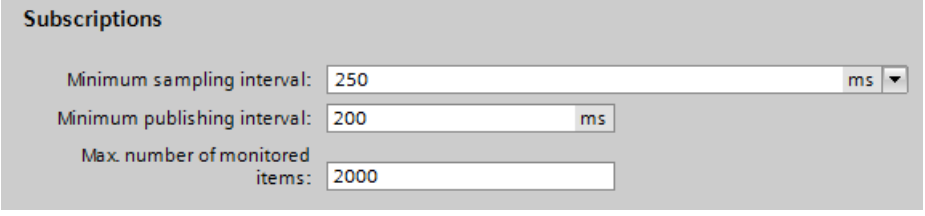

In the example, following a value change the OPC UA server will send a new message every 200 ms if the OPC UA client requests an update.

If the OPC UA client requests an update every 1000 ms, the OPC UA server will only send a message with the new values once every 1000 ms (one second).

If the OPC UA client requests an update every 100 ms, the server will still only send a message every 200 ms (minimum publishing interval).

Minimum sampling interval

With "Minimum sampling interval", you set the time intervals at which the OPC UA server records the value of a CPU tag and compares it with the previous value to detect any changes.

If the sampling interval is selected smaller than the publishing interval and an OPC UA client requests a high sampling rate for certain PLC tags, two or more values may be measured during each publishing interval.

In this case, the OPC UA server writes the value changes into the queue and sends all value changes to the client after the completion of the publishing interval. If more value changes occur in the publishing interval than fit in the queue, the OPC UA server overwrites the oldest values. (depending on the set "Discard Policy", the option "Discard Oldest" has to be activated in this case). The most recent values are sent to the client.

Maximum number of monitored elements (monitored items)

In this field, you specify the maximum number of elements that the OPC UA server of the CPU simultaneously monitors for a value change.

The monitoring ties up resources. The maximum number of monitored elements is dependent on the utilized CPU.

Additional information

Information about the system limits of the OPC UA server of the S7-1500 CPUs (firmware V2.0 and V2.1) regarding subscriptions, sampling intervals and publishing intervals can be found in the following FAQ (https://support.industry.siemens.com/cs/ww/en/view/109755846).

When using subscriptions, certain status codes of errors provide information on the error that occurred. For information on causes and remedies for status codes of OPC UA client that appear, see the list of error codes in the online help of Step 7 (TIA Portal) or in the following FAQ (https://support.industry.siemens.com/cs/ww/en/view/109755860).

9.3.3.5 Handling client and server certificates

A secure connection between the OPC UA server and an OPC UA client is only established when the server can prove its identity to the client. This is done with the server certificate.

Certificate of the OPC UA server

When you have activated the OPC UA server and have confirmed the security prompts, STEP 7 automatically generates the certificate for the server and saves it in the local certificate directory of the CPU. You can view and manage this directory with the local certificate manager of the CPU (exporting or deleting certificates).

The figure below shows the local certificate manager of the CPU with the automatically generated certificate for the OPC UA server:

Figure 9-11 Local certificate manager of the CPU

Alternatively, you can also generate a server certificate yourself.

The certificate of the server is transferred from the server to the client during establishment of a connection. The client checks the certificate.

The client user decides whether the server certificate is to be trusted.

The user at the client side now has to decide whether the server certificate is to be trusted. If the user trusts the server certificate, the client stores the server certificate in its directory containing the trusted server certificates.

The following example shows a dialog of the client "UA Sample Client". When the user clicks the "Yes" button, the client trusts the server certificate:

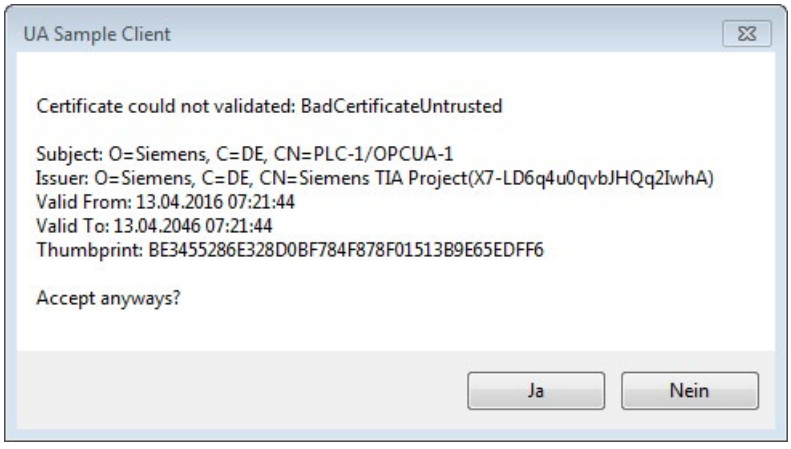

Figure 9-12 Dialog of the client "UA Sample Client"

See also

Generating server certificates with STEP 7 (Page 183)

Secured transferring of messages

Where does a client certificate come from?

When you use UA clients from manufacturers or the OPC Foundation, a client certificate is generated automatically during installation or upon the first program call. You have to import these certificates via the global certificate manager in STEP 7 and use them for the corresponding CPU (as shown above).

When you program an OPC UA client yourself, you can have the certificates generated by the program; see the section "Instance certificate for the client". Alternatively, you can generate certificates with tools, for example with OpenSSL or the certificate generator of the OPC Foundation:

- The procedure for OpenSSL is described here: "Generating PKI key pairs and certificates yourself".
- Working with the certificate generator of the OPC Foundation is described here: "Creating self-signed certificates".

Announcing client certificates to the server

You need to send client certificates to the server to allow a secure connection to be established.

To do this, follow these steps:

1. Select the "Use global security settings for certificate manager" option in the local certificate manager of the server. This makes the global certificate manager available.

   You will find this option under "Protection & Security > Certificate manager" in the properties of the CPU that is acting as server.

   If the project is not yet protected, select "Security settings > Settings" in the STEP 7 project tree, click the "Protect this project" button and log on.

   The "Global security settings" item is now displayed under "Security settings" in the STEP 7 project tree.
2. Double click "Global security settings".
3. Double click "Certificate manager".

   STEP 7 opens the global certificate manager.
4. Click on the "Trusted certificates" tab.
5. Right-click in the tab on a free area (not on a certificate).
6. Select the "Import" command from the shortcut menu.

   The dialog for importing certificates is displayed.
7. Select the client certificate that the server is to trust.
8. Click "Open" to import the certificate.

   The certificate of the client is now contained in the global certificate manager.

   Note the ID of the client certificate just imported.
9. Click the "General" tab in the properties of the CPU that is acting as server.
10. Click "OPC UA > Server > Security > Secure Channel".
11. Scroll down in the "Secure Channel" dialog to the section "Trusted clients".
12. Double-click in the table on the empty row with "<add new>". A browse button is displayed in the row.
13. Click this button.
14. Select the client certificate that you have imported.
15. Click the button with the green check mark.
16. Compile the project.
17. Load the configuration onto the S7-1500 CPU.

Result

The server now trusts the client. If the server certificate is also considered trusted, the server and client can establish a secure connection.

Accepting client certificates automatically

When you select the option "Automatically accept all client certificates during runtime" (below the "Trusted clients" list), the server automatically accepts all client certificates.

NOTICE
Setting after commissioning In order to avoid security risks, deactivate the "Automatically accept client certificates during runtime" option again after commissioning.

Configuring security settings of the server

The figure below shows the available server security settings for signing and encrypting messages.

Figure 9-13 Configuring security settings of the server

By default, a server certificate is created that uses SHA256 signing. The following security policies are released:

- None
  Insecure end point

  Note

  Disabling security policies you do not want

  If you have selected all security policies (default setting) in the secure channel settings of the S7-1500 OPC UA server – in other words the end point "No Security" – non-secure data traffic (neither signed nor encrypted) between the server and client is also possible. The identity of the client remains unknown with "No security". Each OPC UA client can then connect to the server irrespective of any subsequent security settings.

  When configuring the OPC UA server, make sure that only security policies that are compatible with the security concept for your machine or plant are selected. All other security policies should be disabled.

  Recommendation: If possible, use the setting "Basic256Sha256".

- Basic128Rsa15 -Sign
  Insecure end point, supports a series of algorithms that use the hash algorithm RSA15 and 128-bit encryption.
  This endpoint protects the integrity of the data through signing.
- Basic128Rsa15 -Sign & Encrypt
  Secure endpoint, supports a series of algorithms that use the hash algorithm RSA15 and 128-bit encryption.
  This endpoint protects the integrity and confidentiality of the data through signing and encrypting.
- Basic256Rsa15 -Sign
  Secure endpoint, supports a series of algorithms that use the hash algorithm RSA15 and 256-bit encryption.
  This endpoint protects the integrity of the data through signing.
- Basic256Rsa15 -Sign & Encrypt
  Secure endpoint, supports a series of algorithms that use the hash algorithm RSA15 and 256-bit encryption.
  This end point protects the integrity and confidentiality of the data through signing and encrypting.
- Basic256Sha256 - Sign
  Secure endpoint, supports a series of algorithms for 256-bit hashing and 256-bit encryption.
  This endpoint protects the integrity of the data through signing.
- Basic256Sha256 - Sign & Encrypt
  Secure endpoint, supports a series of algorithms for 256-bit hashing and 256-bit encryption.
  This endpoint protects the integrity and confidentiality of the data through signing and encryption.

To enable the security setting, click the check box in the relevant line.

Note

If you use the settings "Basic256Sha256 -Sign" and "Basic256Sha256 -Sign & Encrypt", the OPC UA server and OPC UA clients must use "SHA256"-signed certificates.

For the settings "Basic256Sha256 -Sign" and "Basic256Sha256 -Sign & Encrypt", the certificate authority of STEP 7 automatically signs the certificates with "SHA256".

"No Security" security policy and authentication via user name and password

You can set the following combination:

Security policy = "No Security" and authentication via user name and password.

- The OPC UA server of the S7-1500 supports this combination. OPC UA clients can connect and encrypt the authentication data or not.
- OPC UA client of the S7-1500 CPU also supports this combination: However, in runtime it only connects if it can send the authentication data encrypted via cable!

9.3.3.6 Handling of the client certificates of the S7-1500 CPU

Where does the client certificate come from?

If you are using the OPC UA client of an S7-1500 CPU (OPC UA client enabled), you can create certificates for these clients with STEP 7 V15 and higher as described in the following sections.

When you use UA clients from manufacturers or the OPC Foundation, a client certificate is generated automatically during installation or upon the first program call. You have to import these certificates with the global certificate manager in STEP 7 and use them for the respective CPU.

When you program an OPC UA client yourself, you can have the certificates generated by the program; see the section "Instance certificate for the client". Alternatively, you can generate certificates with tools, for example with OpenSSL or the certificate generator of the OPC Foundation:

- The procedure for OpenSSL is described here: "Generating PKI key pairs and certificates yourself".
- Working with the certificate generator of the OPC Foundation is described here: "Creating self-signed certificates".

Certificate of the OPC UA client of the S7-1500 CPU

A secure connection between the OPC UA server and an OPC UA client is only established if the server classifies the certificate of the client as trusted.

Therefore you have to make the client certificate known to the server.

The following sections describe how you can initially generate a certificate for the OPC UA Client of the S7-1500 CPU and then make it available to the Server.

1. Generate and export a certificate for the client

For a secure connection you have to generate a client certificate and export the certificate.

To do this, follow these steps:

1. In the "Project tree" area, select the CPU you want to use as a client.
2. Double-click "device configuration".
3. In the properties of the CPU click "Protection & Security > Certificate manager".
4. Double-click "<add>" in the "Device certificates" table.

   STEP 7 opens a dialog.
5. Click "Add".
6. Select the "OPC UA client" entry from the list at the "Usage".

   Attention:

   Under "Alternative name of the certificate holder (SAN)" the IP addresses under which the CPU in your system can be accessed has to be entered.

   You must therefore configure the IP interface of the CPU before you have generate a Client certificate.
7. Click "OK".

   STEP 7 now lists the client certificate in the "Device certificates" table.
8. Right-click this row and select the "Export certificate" entry from the shortcut menu.
9. Select a directory in which you store the Client certificate.

2. Announcing the Client certificate to the server

You have to make the Client certificate available to the server to allow a secure connection to be established.

To do this, follow these steps:

1. Select the "Use global security settings for certificate manager" option in the local certificate manager of the server. This makes the global certificate manager available.

   You will find this option under "Protection & Security > Certificate manager" in the properties of the CPU that is acting as server.

   If the project is not yet protected, select "Security settings > Settings" in the STEP 7 project tree, click the "Protect this project" button and log on.

   The "Global security settings" item is now displayed under "Security settings" in the STEP 7 project tree.
2. Double click "Global security settings".
3. Double click "Certificate manager".

   STEP 7 opens the global certificate manager.
4. Click on the "Trusted certificates" tab.
5. Right-click in the tab on a free area (not on a certificate).
6. Select the "Import" command from the shortcut menu.

   The dialog for importing certificates is displayed.
7. Select the client certificate that the server is to trust.
8. Click "Open" to import the certificate.

   The certificate of the client is now contained in the global certificate manager.

   Note the ID of the client certificate just imported.
9. Click the "General" tab in the properties of the CPU that is acting as server.
10. Click "OPC UA > Server > Security > Secure Channel".
11. Scroll down in the "Secure Channel" dialog to the section "Trusted clients".
12. Double-click in the table on the empty row with "<add new>". A browse button is displayed in the row.
13. Click this button.
14. Select the client certificate that you have imported.
15. Click the button with the green check mark.
16. Compile the project.
17. Load the configuration onto the S7-1500 CPU.

Result

The server now trusts the client. If the server certificate is also considered trusted, the server and client can establish a secure connection.

9.3.3.7 Generating server certificates with STEP 7

The description below shows the procedure for generating new certificates with STEP 7 and applies in principle to various uses of the certificates. STEP 7 sets the appropriate purpose - in this case "OPC UA Client & Server" - depending on which area of the CPU properties is used to start the following dialog.

Recommendation: To use the full functionality for the security of the OPC UA server, use the global security settings.

The global security settings are enabled in the CPU properties under "Protection & Security > Certificate manager".

Customizing server certificates

STEP 7 automatically generates a certificate for the OPC UA server of the S7-1500 when you activate the server (see "Activating the OPC UA server (Page 168)"). In the process STEP 7 uses the default values for the parameters of the certificate. If you want to change the parameters, follow these steps:

1. Click the Browse button under "General > OPC UA > Server > Security > Secure channel > Server certificate" in the properties of the CPU. A dialog is displayed that shows the certificates available locally.
2. Click the "Add" button.

3. The dialog for generating new certificates is displayed (figure below). The values for an example are already entered:

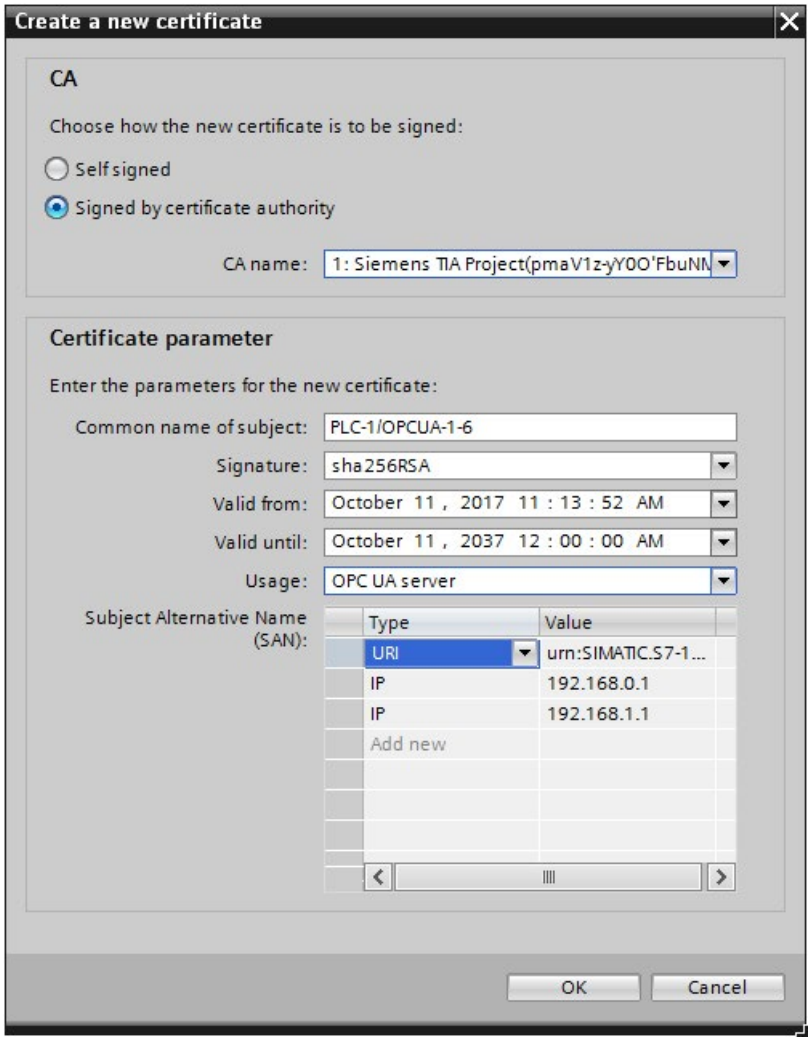

Figure 9-14 Customizing server certificates

4. Use other parameters if this is necessary in accordance with the security specifications in your company or your customer.

Explanation of fields for certificate generation

- CA

  Select whether the certificate is to be self-signed or signed by one of the CA certificates of the TIA Portal. The certificates are described under "Certificates with OPC UA". If you want to generate a certificate that is to be signed by one of the CA certificates of the TIA-Portal, the project must be protected and you must be logged in as a user with all the required function rights. Further information can be found under "Basics of user administration in the TIA Portal".
- Certificate holder

  The default setting always consists of the name of the project and "\OPCUA-1". In the example, the project name is "PLC1". In the properties of the CPU set the project name under "General > Project information" > Name". Keep the default or enter a different name that is more meaningful for the OPC-UA server under "Certificate holder".
- Signature

  Here you select the hash and encryption process that is to be used when signing the server certificate. The following entries are available:
  - "sha1RSA",
  - "sha256RSA".
- Valid from

  Here you enter the date and time for the beginning of the validity of the server certificate.
- Valid until

  Here you enter the date and time for the end of the validity of the server certificate. Ensure that the certificate is valid not only for one year or a few years. In the example the certificate is valid for 30 years. However, for reasons of security you should renew the certificate at much shorter intervals. The long period of validity gives you the opportunity to decide when a suitable moment would be, for example, when the system is being serviced.
- Usage

  The default is "OPC UA client & server". Keep this default for the OPC UA server. The "Generate new certificate" dialog can be called from several points in STEP 7. If, for example, you call this dialog for the Web server of the CPU, "Web server" is entered under "Application". The following entries are available in the Usage drop-down list:
  - "OPC UA client"
  - "OPC UA client & server"
  - "OPC UA server"
  - "TLS"
  - "Web server"
- Alternative name of the certificate holder

  The following is entered in the example above: "URI:urn:SIMATIC.S7-1500.OPC-UAServer:PLC1,IP:192.168.178.151,IP:192.168.1.1". The following entry would also be valid: "IP: 192.168.178.151, IP: 192.168.1.1". It is important that the IP addresses over which the OPC UA server of the CPU can be accessed are entered here (see "Access to the OPC UA server (Page 170)"). This allows OPC UA clients to verify whether a connection to the OPC UA server of the S7-1500 is really to be established or whether in fact an attacker is trying to send manipulated values from another PC to the OPC UA client.

9.3.3.8 Editing the security settings of the OPC UA server.

OPC UA uses secure connections between client and server. OPC UA checks the identity of the communication partners. OPC UA uses certificates in accordance with X.509-V3 from the ITU (International Telecommunication Union) for client and server authentication.

Exception: A secure connection is not established with the "No security" security policy.

Configuring security settings of the server

The figure below shows the available server security settings for signing and encrypting messages.

The security policies are named according to the algorithms used. Example: "Basic256Sha256 - Sign & Encrypt" means: Secure endpoint, supports a series of algorithms for 256-bit hashing and 256-bit encryption.

Figure 9-15 Configuring security settings of the server

By default, a server certificate is created that uses SHA256 signing. The following security policies are released:

- None
  Insecure end point

  Note

  Disabling security policies you do not want

  If you have selected all security policies (default setting) in the secure channel settings of the S7-1500 OPC UA server – in other words the end point "No Security" – non-secure data traffic (neither signed nor encrypted) between the server and client is also possible. The identity of the client remains unknown with "No security". Each OPC UA client can then connect to the server irrespective of any subsequent security settings.

  When configuring the OPC UA server, make sure that only security policies that are compatible with the security concept for your machine or plant are selected. All other security policies should be disabled.

  Recommendation: If possible, use the setting "Basic256Sha256".

- Basic128Rsa15 -Sign
  Insecure end point, supports a series of algorithms that use the hash algorithm RSA15 and 128-bit encryption.
  This endpoint protects the integrity of the data through signing.
- Basic128Rsa15 -Sign & Encrypt
  Secure endpoint, supports a series of algorithms that use the hash algorithm RSA15 and 128-bit encryption.
  This endpoint protects the integrity and confidentiality of the data through signing and encrypting.
- Basic256Rsa15 -Sign
  Secure endpoint, supports a series of algorithms that use the hash algorithm RSA15 and 256-bit encryption.
  This endpoint protects the integrity of the data through signing.
- Basic256Rsa15 -Sign & Encrypt
  Secure endpoint, supports a series of algorithms that use the hash algorithm RSA15 and 256-bit encryption.
  This end point protects the integrity and confidentiality of the data through signing and encrypting.
- Basic256Sha256 - Sign
  Secure endpoint, supports a series of algorithms for 256-bit hashing and 256-bit encryption.
  This endpoint protects the integrity of the data through signing.
- Basic256Sha256 - Sign & Encrypt
  Secure endpoint, supports a series of algorithms for 256-bit hashing and 256-bit encryption.
  This endpoint protects the integrity and confidentiality of the data through signing and encryption.

To enable the security setting click the check box in the relevant line.

Note

If you use the settings "Basic256Sha256 -Sign" and "Basic256Sha256 -Sign & Encrypt", the OPC UA server and OPC UA clients must use "SHA256"-signed certificates.

For the settings "Basic256Sha256 -Sign" and "Basic256Sha256 -Sign & Encrypt", the certificate authority of STEP 7 automatically signs the certificates with "SHA256".

"No Security" security policy and authentication via user name and password

You can set the following combination:

Security policy = "No Security" and authentication via user name and password.

- The OPC UA server of the S7-1500 supports this combination. OPC UA clients can connect and encrypt the authentication data or not.
- OPC UA client of the S7-1500 CPU also supports this combination: However, in runtime it only connects if it can send the authentication data encrypted via cable!

9.3.3.9 User authentication

Types of user authentication

For the OPC UA server of the S7-1500, you can set what authentication is required for a user of the OPC UA client wishing to access the server.

You have the following options:

- **Guest authentication**

  The user does not have to prove their authorization (anonymous access). The OPC UA server does not check the authorization of the client user

  If you want to use this type of user authentication, select the "Enable guest authentication" option under "OPC UA > Server > Security > User authentication".

  Note

  To increase security, you should only allow access to the OPC UA server with user authentication.

- **User name and password authentication**

  The user has to prove their authorization (no anonymous access). The OPC UA server checks whether the client user is authorized to access the server. Authorization is given by the user name and the correct password.

  If you want to use this type of user authentication, select the "Enable user name and password authentication" option under "OPC UA > Server > Security > User authentication".

  Deactivate the guest authentication.

  Enter the user in the "User management" table.

  To do so, click the "<Add new user>" entry. A new user is created with an automatically assigned name. You can edit the user name and enter the password for the user name. You can add a maximum of 21 users.

- **Additional user administration via the security settings of the project**

  If you select this option, the user management for the open project will also be used for user authentication for the OPC UA server: The same user names and passwords are then valid in OPC UA as in the current project.

  Proceed as follows to activate user management for the project:

  – Click "Security settings > Settings" in the project tree.
  – Click the "Protect this project" button.
  – Enter your user name and your password.
  – Enter additional users under "Security settings > Users and roles".

- If you configure an additional OPC UA server in your project, also select the option "Enable additional user administration via the security settings of the project". Repeated input of user names and passwords is then unnecessary.

9.3.3.10 Users and roles with OPC UA function rights

The following options for user authentication use central project settings for project users:

- For the server:

  For configuration of CPU properties (OPC UA > Server > Security > User authentication). Option: "Enable additional user administration via the security settings of the project"

- For the client:

  For configuration of client interface ("Configuration" tab, "Security"). Option: "User (TIA Portal - security settings)"

Requirement

Before you can edit the security settings, the project must be protected and you must be logged on with sufficient rights, for example as administrator.

Settings in the project tree > "Security settings"

You access the central user settings and roles in the protected project in the project tree under "Security settings". This is where you centrally define users with user name, password and function rights. You can simply use these settings elsewhere.

Reusing central security settings

Examples for reusing elsewhere:

- User selection for user authentication for OPC UA server

  With this setting, you tell the server which client (user) with which user name and which password is allowed to access the server.

- User selection for OPC UA client authentication

  With this setting, you tell the client the user name and password that it is to use for client authentication for the server.

The settings for the client and server must correspond: The user name and password used by the client to log on must have been set up on the server and assigned the required authorizations.

Function rights for server and client

The corresponding function rights for the client or the server must also be enabled for users of the client function and users of the server function on an S7-1500 CPU. It is not enough simply to save the user name and password centrally.

Here is an example to illustrate this type of rights use.

1. Under "Security settings > Users and roles", you define a new role in the "Roles" tab with the name "PLC-opcua-role-all-inclusive", for example.
   Tip: The tab may be covered by an information window ("The current status has not yet been checked..."). In this case, first close the information window.
2. In the "Categories of function rights" section, you navigate to the runtime rights and then to the CPU function rights, and select the CPU whose function rights you want to set, for example PLC_2.
3. You will find the following function rights in the "Function rights" section:
   – OPC UA server access

     This function right apples on the OPC UA server of the S7-1500 CPU. Only when this option is selected does a user of the CPU PLC_2 server who has been assigned the role "PLC-opcua-role-all-inclusive" have the following right: For the establishment of a session with the server, the user requires client authentication with one of the user names and corresponding passwords that have been centrally defined (and loaded to the CPU).
   – User authentication of the OPC UA client

     This function right apples on the OPC UA client of the S7-1500 CPU (with client instructions). Only when this option is selected can the user of the client of CPU PLC_2 who has been assigned the role "PLC-opcua-role-all-inclusive" use the user name and password for authentication to establish a session with a server.

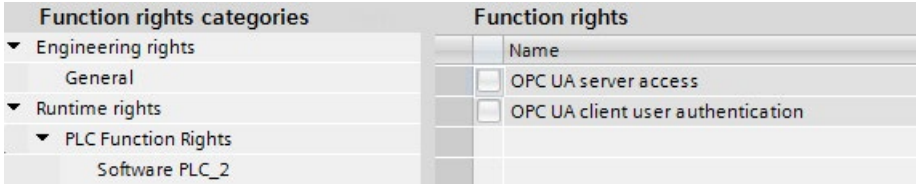

4. The role "PLC-opcua-role-all-inclusive" still needs to be assigned to the relevant users ("Users" tab under "Security settings" in the project tree).

9.3.3.11 Licenses for the OPC UA server

Runtime licenses

A license is required to run the OPC UA server of the S7-1500 CPU. The type of license required depends on the performance of the respective CPU. The following license types are differentiated:

- SIMATIC OPC UA S7-1500 small (required for CPU 1511, CPU 1512, CPU 1513, ET 200SP CPUs, CPU 1515SP PC)
- SIMATIC OPC UA S7-1500 medium (required for CPU 1515, CPU 1516, Software Controller CPU 1507, CPU 1516pro-2PN)
- SIMATIC OPC UA S7-1500 large (required for CPU 1517, CPU 1518)

The required license type is displayed under "Properties > General > Runtime licenses > OPC-UA > Type of required license":

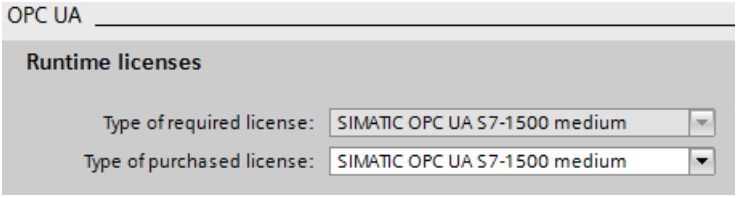

To confirm purchase of the required license, follow these steps:

1. Click "Runtime licenses > OPC UA" in the properties of the CPU.
2. Select the required license from the "Type of purchased license" drop-down list.

9.3.4 Providing methods on the OPC UA server

9.3.4.1 Important facts about server methods

Providing user program for server methods

On the OPC UA server of an S7-1500 CPU (as of firmware V2.5), you have the option of providing methods via your user program. These methods can be used by OPC UA clients, for example to start a manufacturing job using the method call of the S7-1500 CPU.

OPC UA methods, an implementation of "Remote Procedure Calls", provide an efficient mechanism for interactions between different communication nodes. The mechanism provides both job confirmation and feedback values so you no longer have to program handshaking mechanisms.

Using OPC UA methods, you can transfer data consistently without trigger bits/handshaking, for example, or trigger specific actions on the controller.

How does an OPC UA method work?

An OPC UA method in principle operates like a know-how protected function block that is called by an external OPC UA client in runtime.

The OPC UA client only "sees" the defined inputs and outputs. The content of the function block, the method or algorithm, remains hidden to the external OPC UA client. The OPC UA client receives feedback on successful execution and values returned by the function block (method), or an error message if execution has not been successful.

As the programmer, you have full control over and responsibility for the program context in which the OPC UA method runs.

Rules for programming a method and runtime behavior

- Make sure that the values returned by the OPC UA method are consistent with the input values provided by the OPC UA client.
- Follow the rules on assigning name and the structure of parameters, and the permitted data types (see description of the OPC UA server instructions).
- Behavior during runtime: The OPC UA server accepts **one** call per instance. The method instance is not available for other OPC UA clients until the call has been processed by the user program or has timed out.

The basic procedure for implementing a user program as a server method is set out below.

Implementing a server method

A program (function block) for implementing a server method is structured as follows:

1. **Querying the server method call with OPC_UA_ServerMethodPre**

   You first call the "OPC_UA_ServerMethodPre" instruction in your user program (i.e. in your server method).

   This instruction has the following tasks:

   – With this instruction you ask the OPC UA server of the CPU whether your server method was called from an OPC UA client.

   – If the method was called and the server method has input parameters, your server method now receives the input parameters.

     The input parameters of the server method come from the calling OPC UA client.

2. **Editing the server method**

   In this section of the server method, you provide the actual user program.

   You have the same options as in any other user program (for example, access to other function blocks or global data blocks).

   If the server method uses input parameters, these parameters are available to you.

   This section of the server method should only be executed if an OPC UA client has called the server method.

   After successful execution of the method, you set the output parameters of the server method if the method has output parameters.

3. **Responding to server method with OPC_UA_ServerMethodPost**

   To complete the server method, call the "OPC_UA_ServerMethodPost" instruction.

   Use the parameters to notify the "OPC_UA_ServerMethodPost" instruction whether or not the user program has been processed.

   If the user program has been successfully executed, the OPC UA server is notified via the relevant parameters. The OPC UA server then sends the output parameters of the server method to the OPC UA client.

Always call the instructions "OPC_UA_ServerMethodPre" and "OPC_UA_ServerMethodPost" as a pair irrespective of whether the user program is processed by both instructions or continued in the next cycle.

You will find an example of a server method implementation in the STEP 7 online help.

Integrating the server method

The diagram below shows how an OPC UA client (A) calls the server method "Cool":

The CPU executes the instance "Cool1" of the server method "Cool" in the cyclic user program ⑥.

The CPU first uses the instruction "OPC_UA_ServerMethodPre" to query ④ whether an OPC UA client has called the server method "Cool" ①.

- If the server method has not been called, program execution returns directly to the cyclic user program over ④ and ⑥. The CPU resumes the cyclic user program after "Cool1".
- If the server method has been called, this information is returned to the server method "Cool" over ④. The actual functionality is now executed in the Cool server method, see"<Method Functionality>" in the graphic.

The server method then uses the instruction "OPC_UA_ServerMethodPost" ⑤ to notify the firmware (B) that the instruction has been executed ③.

The firmware returns this information over ② to the calling OPC UA client (A).

The CPU resumes the cyclic user program after "Cool1".

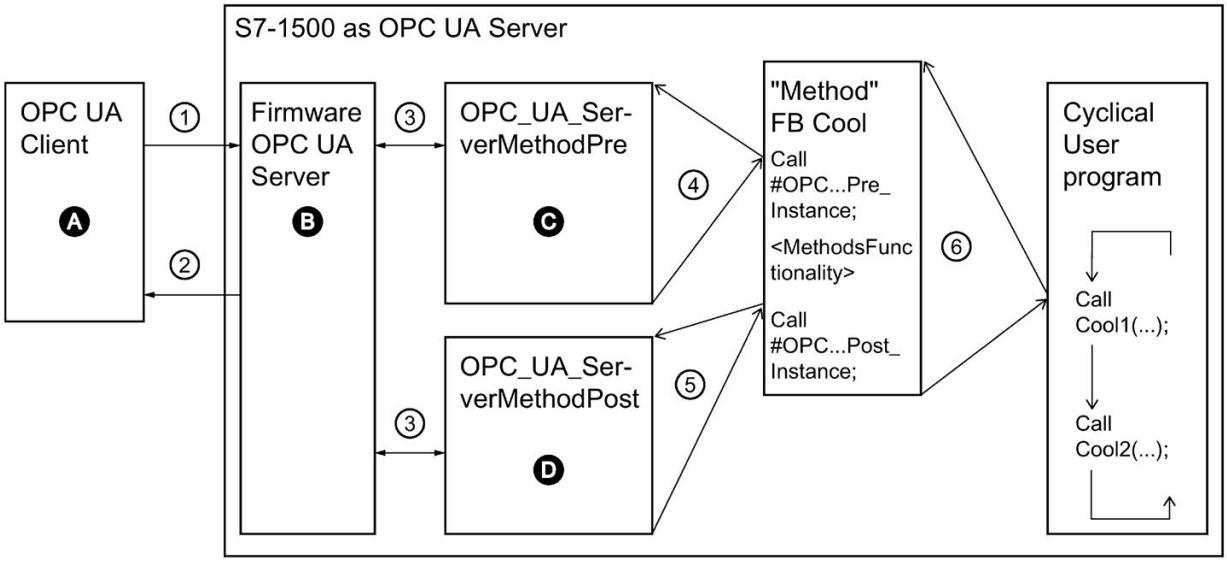

A Call of the server method and management of the "Done" information (method complete)

① Asynchronous call of the server method

② Asynchronous "Done" information for the method called (method complete)

B Wait for OPC UA client calls, management of calls in the queue, forwarding of "Done" information from the cyclic user program to the OPC UA client

③ Data transfer from the OPC UA server to the method instances of the user program and vice versa

C Check whether method has been called.

If it has, forwarding of input data from the OPC UA server to the method instance of the user program and feedback to the method instance that the method has been called ("called")

④ Synchronous call of the instruction OPC_UA_ServerMethodPre as a multi-instance stating the storage area for the input data from the OPC UA server.

The return value indicates whether or not the method has been called by the OPC UA client.

⑤ Check whether the method has been completed or is still active ("busy").

D Check whether the method has been completed.

If it has, the output data of the method instance is forwarded to the OPC UA server and the method instance is notified that the method has been completed. The OPC UA server is notified.

⑥ Call of the method FB (in this case: FB Cool) with the required instance and the process parameters

Information about server instructions

The "OPC_UA_ServerMethodPre" and "OPC_UA_ServerMethodPost" are described in detail in the help to the Instructions > Communication > OPC UA > OPC UA server.

9.3.4.2 Boundary conditions for using server methods

Permitted data types

If you provide server methods, observe the following rule:

- Assign the data types as shown below (SIMATIC data type - OPC UA data type). Other assignments are not permitted.

STEP 7 does not check the observance of this rule and does not prevent an incorrect assignment. You are responsible for the rule-compliant selection and assignment of the data types.

You can also use the listed data types, for example, as elements of structures/UDTs for input and output parameters of self-created server methods (UAMethod_InParameters and UAMethod_OutParameters).

SIMATIC data type	OPC UA data type
BOOL	Boolean
SINT	SByte
INT	Int16
DINT	Int32
LINT	Int64
USINT	Byte
UINT	UInt16
UDINT	UInt32
ULINT	UInt64
REAL	Float
LREAL	Double
LDT	DateTime
WSTRING	String
DINT	Enumeration (Encoding Int32) and all derived data types
User-defined data type required (UDT, user-defined data type) The user-defined data type must be created with the prefix "Union_", for example "Union_MyDatatype". The first element (Selector) in this UDT must have the data type "UDINT".	UNION and all derived data types

Number of implementable server methods and number of arguments

If you implement server methods via your user program, the number of usable methods is limited depending on the CPU type, see the following table.

Technical specification value	CPU 1510SP (F) CPU 1511 (C/F/T/TF) CPU 1512C CPU 1512SP (F) CPU 1513 (F)	CPU 1505 (S/SP/SP F/SP T/SP TF) CPU 1515 (F/T/TF) CPU 1515 SP PC (F/T/TF) CPU 1516 (F/T/TF)	CPU 1507S (F) CPU 1517 (F/T/TF) CPU 1518 (F)
Maximum number of usable server methods or max. number of server method instances (OPC_UA_ServerMethodPre, OPC_UA_ServerMethodPost instructions)	20	50	100
Maximum number of arguments per method (More than the specified number of arguments can be configured and loaded into the CPU, but an OPC UA client cannot call the method).	20	20	20

Error message when exceeded

If the maximum number of server methods is exceeded, the OPC_UA_ServerMethodPre or OPC_UA_ServerMethodPost instructions report the error code 0xB080_B000 (TooManyMethods).

Supply of structured data types with nested arrays

If a structured data type (Struct/UDT) contains an array, the OPC UA server does not provide information about the length of this array.

If you use such a structure as the input or output parameter of a server method, for example, you must ensure that the nested array is supplied with the correct length when the method is called.

If you do not adhere to this rule, the method fails with the error code "BadInvalidArgument".

9.3.5 OPC UA server interface configuration

9.3.5.1 What is a server interface?

Definition

A server interface combines related nodes of an OPC UA address space of a CPU into a unit, so that a specific view of this CPU is provided for OPC UA clients.

1st example:

A CPU controls an injection molding machine.

In this example, a server interface contains all OPC UA nodes of the CPU,

- which you can read with an OPC UA client, to get information about this injection molding machine (from readable PLC tags),
- which you can write with an OPC UA client write, to transfer values to the injection molding machine (in writable PLC tags),
- which you can call with an OPC UA client to start injection molding machine functions (via server methods).

This server interface allows a view of a CPU which can be used to control an injection molding machine.

For injection molding machines, the companion specification "Euromap" defines a whole series of OPC UA nodes that you can combine in a server interface.

Other OPC UA nodes of the CPU are not included in this view.

This provides a better overview.

The section "Create server interface (Page 199)" shows how to create a server interface and add related OPC UA nodes to this server interface.

The "Euromap77" serves as an example for related OPC UA nodes.

2nd example

Plant-specific or customer-specific tasks

You can also define a server interface which, for example, meets the requirements in a customer-specific project.

Specify all required OPC UA nodes in an XML file.

Use a tool for this purpose, for example the free program "SiOME" from Siemens; you can find the explanations and download link here (https://support.industry.siemens.com/cs/ww/en/view/109755133).

9.3.5.2 Create a server interface

Create server interfaces

To create an Server interface, follow these steps:

1. Select the project view in the TIA Portal.
2. Select the CPU that you want to use as an OPC UA server.
3. Click "OPC UA communication > Server interfaces".
4. Double-click "Add new server interface".

   STEP 7 creates a new server interface, names it "Server interface_1" and opens the editor for server interfaces.
5. Change the name of the new server interface so that it is descriptive in your project.
6. Click the "Import companion specification" button in the top right of the Server Interfaces view.

   STEP 7 displays the "Import" dialog.
7. Select an XML file which contains an instance (or multiple instances) of a companion specification.

   The "Using OPC UA companion specification (Page 202)" section describes how to create such an XML file.

   STEP 7 imports the XML file and displays the new server interface in the editor.

   The following figure shows a section of a server interface which uses an instance of the "Euromap" companion specification:

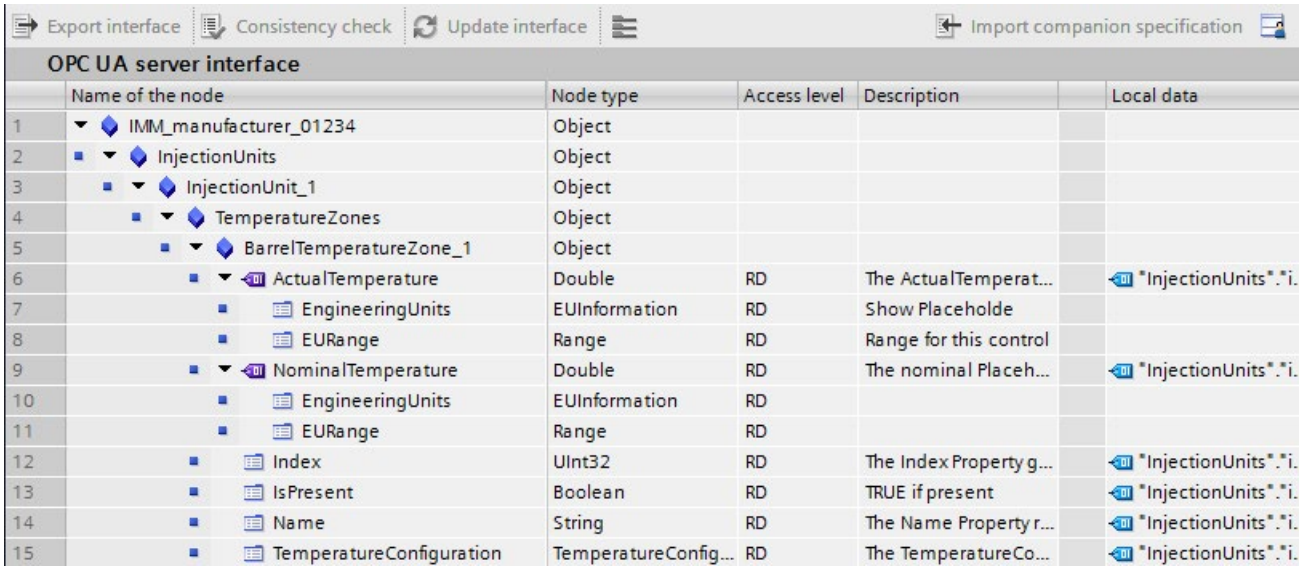

	Name of the node	Node type	Access level	Description	Local data
1	IMM_manufacturer_01234	Object			
2	InjectionUnits	Object			
3	InjectionUnit_1	Object			
4	TemperatureZones	Object			
5	BarrelTemperatureZone_1	Object			
6	ActualTemperature	Double	RD	The ActualTemperat...	"InjectionUnits"."i.
7	EngineeringUnits	EUInformation	RD	Show Placeholde	
8	EURange	Range	RD	Range for this control	
9	NominalTemperature	Double	RD	The nominal Placeh...	"InjectionUnits"."i.
10	EngineeringUnits	EUInformation	RD		
11	EURange	Range	RD		
12	Index	UInt32	RD	The Index Property g...	"InjectionUnits"."i.
13	IsPresent	Boolean	RD	TRUE if present	"InjectionUnits"."i.
14	Name	String	RD	The Name Property r...	"InjectionUnits"."i.
15	TemperatureConfiguration	TemperatureConfig...	RD	The TemperatureCo...	"InjectionUnits"."i.

Information on the server interface

The editor for server interfaces is structured as table and provides a range of information about the imported node set file (OPC UA-XML file).

The tables provides the following information:

- Name of the node

  The top node is named "IMM_manufacturer_01234" in the example.

  This name stands for the injection molding machine as a whole. It is the name of the instance of the "Euromap" companion specification that is used here.

  According to the companion specification, the instance name should begin with "IMM", followed by the name of the manufacturer of the injection molding machine; the serial number of the machine is added to the end. This allows a unique identification of the machine.

  The name of this node is assigned by the user.

  The names of all other (lower-level) nodes are defined by the specification (in the example above by the "Euromap" companion specification). These node names must not be changed by the user. This ensures a uniform view of all injection molding machines, which complies with the specification.

- Node type

  Type of the node. The type is specified by the companion specification that is used.

  STEP 7 shows a node type in red in the table when the imported XML file contains no type definition.

  In this case, you can find the referenced but missing namespaces in the properties of the server interface under "Namespaces".

  Import the referenced XML files that contain the missing namespaces (and all data types defined in them) into a server interface to be created.

- Access level

  Nodes (tags) can only be readable (RD) or readable and writeable (RD/WR).

  The server methods of a specification can always be called. If they were not callable, they would not have been included in the specification.

- Description

  The imported XML file may contain descriptions of the nodes in several languages.

  If you have imported such a file, STEP 7 displays the description in the project language.

  If no description is available in the XML file in the project language, then the English description is displayed.

- **Local data**

  STEP 7 displays the data block which is assigned to the node in the CPU (mapping).

  The CPU reads the value of the OPC UA node from this data block.

  The OPC UA server then makes this value available for OPC UA clients.

  If a data block is displayed in red, then the specified data block is not available in the CPU.

  In this case you have to create the missing data block in the CPU (of user program) and supply it with a value.

  Alternative: Change the mapping of the OPC UA node to a local data block (or to a tag of a tag table of your user program) in the XML file.

  The "Using OPC UA companion specification (Page 202)" section describes how to change mapping.

- **Data type**

  This is the data type of the data block in the CPU, from which the value of an OPC UA node is read, or to which a value is written.

Consistency check

You have the option of checking the server interface. STEP 7 hereby checks whether the nodes (e.g. tags) are mapped correctly in the imported node set file (OPC UA XML file).

1. Select the nodes that you want to check.
2. Click "Consistency check".

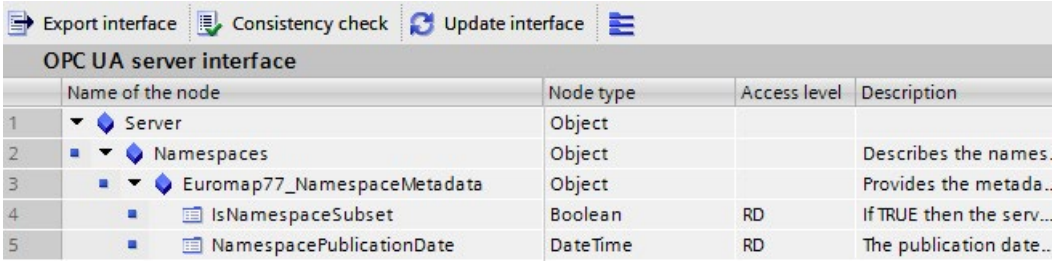

	Name of the node	Node type	Access level	Description
1	Server	Object		
2	Namespaces	Object		Describes the names.
3	Euromap77_NamespaceMetadata	Object		Provides the metada..
4	IsNamespaceSubset	Boolean	RD	If TRUE then the serv...
5	NamespacePublicationDate	DateTime	RD	The publication date..

The consistency check checks the mapping of the local data against the displayed server interface:

– Do the names of the PLC tags in the CPU program correspond to those of the imported server interface?

– Do the data types of the PLC tags correspond to the corresponding nodes in the server interface? STEP 7 displays corresponding warnings and errors if the above conditions are not met.

9.3.5.3 Using OPC UA companion specifications

Introduction

OPC UA is universally applicable: The standard itself does not, for example, specify how PLC tags are to be named. It is also up to the individual user (application developer) to program and name server methods that can be called over OPC UA.

Information modeling and standardization for devices and sectors

For applications of the same kind, it is worth standardizing your device or machine interface with the "OPC UA toolkit".

Many different bodies and working groups have driven forward standardization and developed a range of companion specifications.

These specifications define:

- The objects, methods and tags with which a typical device or machine is to be described.
- The namespace intended for the specified objects.

Machines are typically structured in functional or technological units, and these units are then standardized.

Companion specifications offer machine and plant operators the benefits of a standardized interface. For example, all RFID readers that comply with the AutoID specifications can be integrated in the same way. This means that all RFID readers that comply with the AutoID specifications can be addressed by OPC UA clients in the same way irrespective of manufacturer.

Another example of companion specifications is the Euromap 77 Companion Specifications from the injection molding machinery sector.

The following section uses the example of Euromap 77 to detail how to apply companion specifications in STEP 7 (TIA Portal) and create the necessary PLC tags.

Example: Euromap 77

Euromap 77 standardizes the exchange of data between injection molding machines and the higher-level MES (manufacturing execution system). This allows the MES to connect all lower-level injection molding machines in the same way.

The standardized data interface facilitates the integration of injection molding machines into a plant.

Using companion specifications: Overview

Euromap 77 is described in the OPC UA XML file "Opc_Ua.EUROMAP77.NodeSet2.xml".

Note

Euromap 77, Euromap 83 and OPC UA for Devices (DI)

With Release Candidate 2, some of the Euromap definitions have been transferred from Euromap 77 to Euromap 83. You will therefore also need to import the OPC UA server interface of Euromap 83.

"OPC UA for Devices" is a generally applicable information model for the configuration of hardware and software components. The information model also serves as the basis for other companion standards and is therefore also imported.

The OPC UA XML files are available here:

Euromap77 (http://www.euromap.org/euromap77)

Euromap83 (http://www.euromap.org/euromap83)

OPC UA for Devices (https://opcfoundation.org/UA/schemas/DI/)

The Euromap OPC UA XML files define the interface of the OPC UA server of an injection molding machine that complies with the Euromap 77 companion standard.

Proceed as follows to model the OPC UA server of the S7-1500 CPU in accordance with the Euromap 77 standard:

1. Generate an XML file by creating an instance of the type "IMM_MES_InterfaceType".

   "IMM_MES_InterfaceType" is the highest-level node in Euromap 77: This data type is directly derived from the OPC UA data type BaseObjectType".

   All Euromap 77 (83) tags and methods are defined under "IMM_MES_InterfaceType".

   "Step 1" sets out the procedure in detail.
2. Assign PLC tags and FB instances (server methods) from your S7-1500 CPU to the tags and methods of Euromap 77 (the Euromap 77 information model).

   "Step 2" sets out the procedure in detail.
3. Import the XML file as "Server interface".

   "Step 3" sets out the procedure in detail.

   Compile the STEP 7 project.

   Download the project to the CPU that acts as the controller for an injection molding machine.
4. In your STEP 7 project, create the PLC tags and server methods to which you have assigned Euromap 77 tags and methods under 2.

   The PLC tags must have compatible data types; see "Mapping data types".

   Enable read and write access to these PLC tags for OPC UA clients in accordance with Euromap 77.

   Save the PLC tags in a data block, for example.

   "Step 4" sets out the procedure in detail.

Result: The Euromap 77 tags and server methods are available for OPC UA clients in the address space of the OPC UA server of your CPU.

Step 1: Creating an instance

The following section describes how to use the free program "SiOME", the "Siemens OPC UA Modelling Editor".

With SiOME, you can create an OPC UA XML file, which describes the server interface (an information model).

To load and publish the new interface into the OPC UA server of an S7-1500 CPU, import the server interface into the STEP 7 project, see section "Create server interface (Page 199)".

When the project is loaded into the CPU, the new server interface is available for OPC UA clients.

Other tools for designing information models

You can also work with other tools to design information models to create a server interface, such as the program "UaModeler" from Unified Automation. You can download the "UaModeler" program from here (https://www.unified-automation.com/downloads/opc-ua-development.html).

The tools for designing information models are constantly being honed and improved. You should therefore always use the documentation provided by the manufacturer.

SiOME

With the help of SiOME (Siemens OPC UA Modeling Editor), a tool for implementing OPC UA companion specifications, you can design information models / address spaces for your OPC UA server and can create new types and instances of OPC UA nodes.

You can also use SiOME to map UA tags to PLC tags and UA methods to PLC function blocks (instances).

Download link and explanations about SIOME are available here (https://support.industry.siemens.com/cs/ww/en/view/109755133).

Proceed as follows to create an XML file with an instance of "IMM_MES_InterfaceType":

1. Download the files "Opc_Ua.EUROMAP77.NodeSet2.xml" and "Opc_Ua_EUROMAP83_NodeSet2.xml" from the Euromap website (see above).
2. Download the file "Opc.Ua.Di.NodeSet2.xml" from the OPC Foundation website.

   Euromap77/83 is an OPC UA Companion specification, this means that it is based on OPC UA and uses data types defined in the file "Opc.Ua.Di.NodeSet2.xml".
3. Start SiOME.

4. First, import the namespace "http://opcfoundation.org/UA/DI/".

   To do so, click the ""Import XML" button in the "Information model" area.

   Select the file "OPCUaDiNodeSet2 "xml" and click "Open" to import the file.

   SiOME imports the XML file and shows the namespace "http://opcfoundation.org/UA/DI/" in the "Namespaces" area.

   The standard namespace "http://opfoundation.org/UA/" is always available in SiOME and does not have to be imported.

5. Now import the namespace "http://www.euromap.org/euromap83/"

   To do so, click the ""Import XML" button in the "Information model" area.

   Select the file "Opc_Ua.EUROMAP83.NodeSet2.xml".

   SiOME imports the XML file and shows the namespace "http://www.euromap.org/euromap83/" in the "Namespaces" area.

6. Now import the namespace "http://www.euromap.org/euromap77/"

   To do so, click the ""Import XML" button again in the "Information model" area.

   Select the file "Opc_Ua.EUROMAP77.NodeSet2.xml".

7. **Defining your own namespace and creating an instance**

   So far, you have imported Euromap77.

   Now use the companion specification for an injection molding machine, i.e. you create an instance of Euromap77 (a usage).

   In the "Namespaces" area, right-click "Models" and select "Add Model".

   SiOME opens the "Add Model" dialog.

8. Click "New Model", to create a new model.

   SiOME now shows in green the switch in front "New Model":

   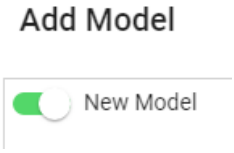

9. Add your own namespace to the XML file.

   Use a unique name for this purpose.

   In the example, enter "YourCompany.com":

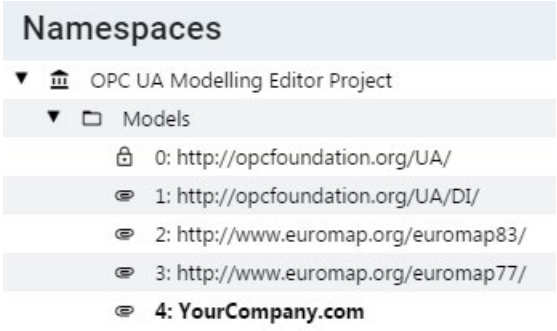

10. **Create new sequence**

    Now create now a new instance of Euromap77. This allows you to use the Euromap77 for an injection molding machine.

    Right-click on "Objects" in the "Information model" area.

    SiOME shows a shortcut menu.

11. Click "Add Instance" to add a new instance.

    SiOME displays the "Add Instance" dialog.

    At "Name" insert a descriptive name for your instance, i.e. for the machine you are using for Euromap77.

    In the example, enter "IMM_Manufacturer_01234".

    For "TypeDefinition", select "IMM_MES_InterfaceType".

    Click "OK".

    SiOME shows the new instance in the "Information model" area under "Objects":

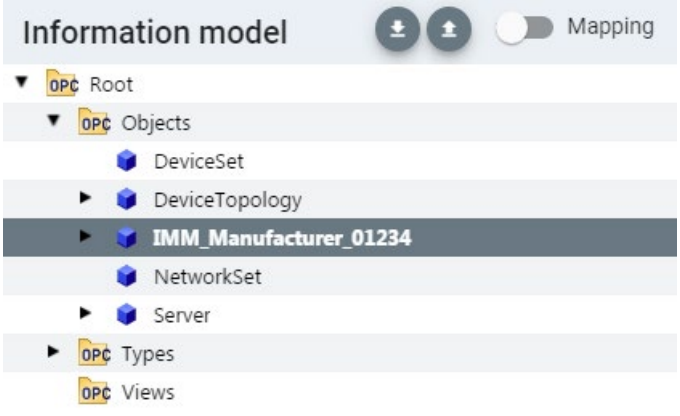

12. Click the black arrow in front of "IMM_Manufacturer_01234", to open the instance:

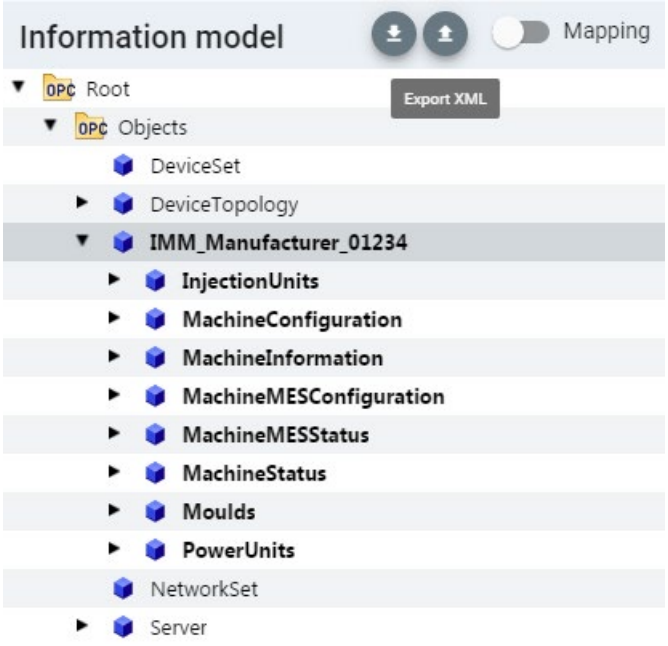

13. Now create a new instance for "InjectionUnits".

    Right-click "InjectionUnits".

    SiOME displays the "Add Instance" dialog.

    At "Name", insert a descriptive name for your instance.

    In the example, enter "InjectionUnit_1.

    For "TypeDefinition", select "InjectionUnitType".

    Click "OK".

14. Now create a new instance each for "Molds" and "PowerUnits", as described above for "InjectionUnits".

15. Now save the XML file.

    Export the file for this purpose.

    Click the ""Export XML" button in the "Information model" area.

    SiOME shows the "Export XML" dialog.

16. Leave the "Include mappings" option unselected, because the file still contains no mappings (UAtags on PLC tags, UAmethods on server methods of the CPU).

    The imported namespaces are required for Euromap77. Therefore, SiOME displays these in grey.

    Click "OK".

    SiOME shows a dialog.

17. Select a descriptive name for the XML file and save the file.

Result:

You have now created an XML file containing the companion specification "Euromap77" and the instances you added. Euromap77 is used for this purpose.

Step 2: Assigning PLC tags

The description below uses the example of a tag to show how you assign specific PLC tags and server methods to the tags and methods of Euromap 77.

The easy way

We recommend using the SiOME tool here as well. You have to enable mapping in SiOME for this purpose:

In the "TIA Portal" area, select the data blocks whose tags you want to assign ("map") to the OPC UA tags of the information model.

The tags from the TIA Portal project can easily be connected to the OPC UA tags using drag-and-drop.

To link methods, you must use drag-and-drop to link the instance data blocks of the corresponding TIA Portal function blocks to the methods of the information model.

When exporting, select the "Include mappings" option, since the information model for an OPC UA server is required here.

This option is not required if you need the information model for an OPC UA client.

A detailed description can be found in the online support application example (OPC UA for Devices (https://opcfoundation.org/UA/schemas/DI/)).

Assigning PLC tags manually

If you do not assign the data with SiOME, proceed as follows:

1. Use an editor to open the file "demo.xml" that you created in "Step 1".

   In the XML file, search for the UA tag with NodeId="ns=1;s=MyIMM_MES_Interface.InjectionUnits.NodeVersion".

   These tags are assigned a PLC tag in the next step.

2. To assign this OPC UA tag a PLC tag, add an extension to the XML element of the OPC UA tag.

   In turn, you then add an element of the type "<si:VariableMapping>" to this extension:

```
<UAVariable DataType="String" ParentNodeId="ns=1;s=MyIMM_MES_Interface.InjectionUnits" NodeId=
"ns=1;s=MyIMM_MES_Interface.InjectionUnits.NodeVersion" BrowseName="NodeVersion">
    <DisplayName>NodeVersion</DisplayName>
    <References>
        <Reference ReferenceType="HasProperty" IsForward="false">
        ns=1;s=MyIMM_MES_Interface.InjectionUnits</Reference>
        <Reference ReferenceType="HasTypeDefinition">i=68</Reference>
    </References>
    <Extensions>
        <Extension>
            <si:VariableMapping>"MyIMM_MES_Interface"."InjectionUnits.NodeVersion"
            </si:VariableMapping>
        </Extension>
    </Extensions>
    <Value>
</UAVariable>
```

3. The XML element "<si:VariableMapping>" is defined in the XML namespace "http://www.siemens.com/OPCUA/2017/SimaticNodeSetExtensions".

   You therefore need to assign this namespace to the XML element "<UANodeSet>", for example in a one-off operation with the following code line at the start of the XML file:

```
<UANodeSet xmlns:si="http://www.siemens.com/OPCUA/2017/SimaticNodeSetExtensions"
```

   If you do not add the namespace, the element "<si:VariableMapping>" will not be known in the file.

4. Save the "demo.xml" file and close the editor.

Useful information: Assigning PLC methods

As well as assigning tags, you can also assign methods to an FB instance (user program or function block as representation of the method).

To assign an OPC UA method to an FB instance, you also need to add an extension to the OPC UA XML file following the procedure outlined below. Please note that the suffix ".Method" without quotation marks must be added to the instance name.

You add an element of the <si:MethodMapping> type to the extension:

The properties of an OPC UA method with the BrowseName "InputArguments" and "OutputArguments" are OPC UA tags and are **not** assigned.

```
<UAMethod ParentNodeId="ns=1;i=5003" NodeId=
"ns=1;s=MyIMM_MES_Interface.MachineConfiguration.SetServerTime" BrowseName="4:SetServerTime"
MethodDeclarationId="ns=2;i=7005">
    <DisplayName>SetServerTime</DisplayName>
    <References>
        <Reference ReferenceType="HasProperty">
        ns=1;s=MyIMM_MES_Interface.MachineConfiguration.SetServerTime.InputArguments</Reference>
        <Reference ReferenceType="HasComponent" IsForward="false">ns=1;i=5003</Reference>
    </References>
    <Extensions>
        <Extension>
            <si:MethodMapping>"MachineConfiguration.SetServerTime_IDB".Method</si:MethodMapping>
        </Extension>
    </Extensions>
</UAMethod>
```

Step 3: Importing server interfaces

Proceed as follows to import an OPC UA XML file as "Server interface":

1. Open the STEP 7 project.
2. Click "OPC UA communication > Server interfaces".
3. Double-click on "Import server interface".
4. In the "Import" dialog, select the file that you want to import as server interface.

   In the example, this is the file "demo.xml".
5. Click the "Import" button.
6. Also import the files "Opc.Ua.Di.NodeSet2.xml", "Opc_Ua.EUROMAP77.NodeSet2.xml" and "Opc_Ua.EUROMAP83.NodeSet2.xml".

   The "demo.xml" file relates to the files just specified.

   Always use the latest versions of these files as STEP 7 does not compile OPC UA XML files with errors.

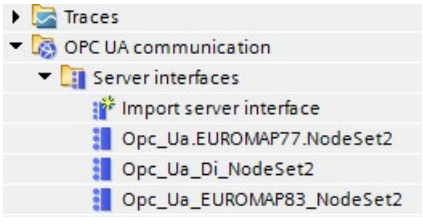

The above image of the machine generated in accordance with Euromap 77 specifications is now available in the address space of the OPC UA server.

Step 4: Creating PLC tags and server methods in the STEP 7 project

In the example, you have assigned the PLC tag "MyIMM_MES_Interface"."InjectionUnits.NodeVersion" to the UA tag with NodeId="ns=1;s=MyIMM_MES_Interface.InjectionUnits.NodeVersion"; see "Step 2: Assigning PLC tags".

Proceed as follows to create the required PLC tag with STEP 7 (TIA Portal):

1. Generate a "MyIMM_MES_Interface" data block.
2. Generate the DB element "InjectionUnits.NodeVersion". Use the SIMATIC data type compatible with the OPC UA data type. The UA tag in the example has the OPC UA data type "String" (DataType="String"). The compatible SIMATIC data type is WSTRING.

3. Compile the project.
4. Download the project to the CPU.

Importing exported OPC UA XML files to an S7-1500 CPU

Please note the following information when importing server interfaces that come from the OPC UA XML export of an S7-1500.

Note

Import blocked for namespace "http://www.siemens.com/simatic-s7-opcua"

You cannot import server interfaces with the namespace "http://www.siemens.com/simatic-s7-opcua" to an S7-1500 CPU because this namespace is reserved for S7-1500 CPUs (standard SIMATIC server interface) and is not available for imports.

If you want to import a server interface with the namespace "http://www.siemens.com/simatic-s7-opcua", open the server interface to be imported (OPC UA XML file) and change the namespace in the relevant places. The file thus changed can then be imported.

Integrity of the OPC UA XML files

OPC UA XML files represent the server address space. These files are, for example, imported by you in the context of OPC UA Companion specifications as a server interface after adaptation to the application, loaded with the hardware configuration into the S7-1500 CPU and tested.

WARNING
No checking of imported OPC UA XML files Protect these OPC UA XML files against unauthorized manipulation since STEP 7 does not check the integrity of these files.

Recommendation

To minimize risks in the case of an extension or adaptation of the server address space, follow these steps:

1. Protect the project (project navigation: Security settings > Settings).
2. Export the corresponding server interface before the extension or adaptation.
3. Revise this OPC UA XML file.
4. Import the file again as a server interface.

Mapping data types

The table below shows the compatible SIMATIC data type for each OPC UA data type.

Assign the data types as shown below (SIMATIC data type – OPC UA data type). Other assignments are not permitted. STEP 7 does not check the observance of this rule and does not prevent an incorrect assignment. You are responsible for the rule-compliant selection and assignment of the data types.

You can also use the listed data types, for example, as elements of structures/UDTs for input and output parameters of self-created server methods (UAMethod_InParameters and UAMethod_OutParameters).

Table 9- 2 Mapping of data types

SIMATIC data type	OPC UA data type
BOOL	Boolean
SINT	SByte
INT	Int16
DINT	Int32
LINT	Int64
USINT	Byte
UINT	UInt16
UDINT	UInt32
ULINT	UInt64

SIMATIC data type	OPC UA data type
REAL	Float
LREAL	Double
LDT	DateTime
WSTRING	String
DINT	Enumeration (Encoding Int32) and all derived data types
User-defined data type required (UDT, user-defined data type) The user-defined data type must be created with the prefix "Union_", for example "Union_MyDatatype"; see example below the table. The first element (Selector) in this UDT must have the data type "UDINT".	UNION and all derived data types

User-defined data type for UNION required

The figure below shows the tag "MyVariable", which has the data type "Union_MyDatatype".

This SIMATIC data type corresponds to an OPC UA tag with the data type UNION.

The figure shows an example of the declaration: When Selector = 1, Union accepts one ByteString; when Selector = 2, Union accepts one WString.

Name	Data type
Static	
Selector	UDInt
ByteArray	Array[0..1] of Byte
WString	WString[42]

Using other OPC UA basic data types

Apart from the OPC UA data types listed in the section "Mapping of data types" and their correspondences on the SIMATIC side, there are the following OPC UA basic data types which you can also use:

- OpcUa_NodeId
- OpcUa_QualifiedName
- OpcUa_Guid
- OpcUa_LocalizedText
- OpcUa_ByteString
- OpcUa_XmlElement

Requirement for the use of the basic data types listed above as variables in the application program: The basic data types have to exist as complex data types that are structured exactly like the corresponding OPC UA basic data types.

- OpcUa_NodeId and OpcUa_QualifiedName exist as system data types; that's why you can use these data types not only for single variables but also as elements of a structure.
- For the remaining basic data types, you have to create a PLC data type in accordance with the OPC UA specification and subsequently use it as an element in a structure so that the data types of the elements can be resolved. What each PLC data type must look like is described below for every single basic data type. "EUInformation" is an example of a data structure in which, for example, the UDT "LocalizedText" is used. EUInformation contains information on EngineeringUnits. You can find an example of the implementation of the EUInformation data structure at the end of the PLC data type descriptions.

System data type "OPC_UA_NodeId"

For the OPC UA basic data type "OpcUa_NodeId", please refer to the following table for the meaning of the parameters. Use OPC_UA_NodeId for the identification of a node in the OPC UA server.

Parameter	S7 data type	Meaning
NamespaceIndex	UINT	Namespace index of the node in the OPC UA server. A node can, for example, be a tag.
Identifier	WSTRING[254]	The designation of the node (object or tag) depends on the identifier type: • Numeric identifier: The node is labeled with a number, for example "12345678". • String identifier: The node is labeled with a name, for example "MyTag". No distinction is made between upper and lower case.
IdentifierType	UDINT	Type of identifier • 0: Numeric identifier • 1: String identifier • 2: GUID • 3: Opaque

System data type "OPC_UA_QualifiedName"

See the following table for the structure of the system data type "OPC_UA_QualifiedName":

Name	S7 data type	Meaning
NamespaceIndex	UINT	The namespace index of the name.
Name	WSTRING[64]	Name of the node or tag.

UDT "Guid"

For the basic data type "Guid", create the following PLC data type. The default values used as examples can also be set differently.

Guid

	Name	Data type	Default value
1	Data1	UDInt	16#11223344
2	Data2	UInt	16#5566
3	Data3	UInt	16#7788
4	Data4	ULInt	16#99AABBCCDDEEFF11

UDT "LocalizedText"

For the basic data type "LocalizedText", create the following PLC data type:

LocalizedText

	Name	Data type	Default value
1	EncodingByte	Byte	16#3
2	Locale	WString[5]	WSTRING#'de-DE'
3	Text	WString[255]	WSTRING#'Text'

The EncodingByte indicates which fields (Locale or Text) are available:

EncodingByte	Meaning
0	The fields Locale and Text are empty
1	The field Locale has content, the field Text is empty
2	The field Locale is empty, the field Text has content
3	The fields Locale and Text have content

UDT "ByteString"

For the basic data type "ByteString", create the following PLC data type; in this case, for example, a ByteString array with 12 elements:

ByteString			
	Name	Data type	Default value
1	ByteString	Array[0..11] of Byte	
2	ByteString[0]	Byte	16#0
3	ByteString[1]	Byte	16#0
4	ByteString[2]	Byte	16#0
5	ByteString[3]	Byte	16#0
6	ByteString[4]	Byte	16#0
7	ByteString[5]	Byte	16#0
8	ByteString[6]	Byte	16#0
9	ByteString[7]	Byte	16#0
10	ByteString[8]	Byte	16#0
11	ByteString[9]	Byte	16#0
12	ByteString[10]	Byte	16#0
13	ByteString[11]	Byte	16#0

UDT "XmlElement"

An XmlElement is a serialized XML fragment (UTF-8 string)

For the basic data type "XmlElement", create the following PLC data type:

XmlElement			
	Name	Data type	Default value
1	XmlElement	WString	WSTRING#''

Example: Structure of EUInformation with UDT "LocalizedText"

Velocity	"EUInformation"		
NamespaceUri	WString[255]	WSTRING#'http://yourorganization.org'	Identifies the organization (company, standards organization) that defines the EUInformation
UnitId	DInt	1	Identifier for programmatic evaluation. –1 is used if a unitId is not available.
DisplayName	"LocalizedText"		
Encoding...	Byte	16#3	
Locale	WString[5]	WSTRING#'en-EN'	
Text	WString[255]	WSTRING#'m/s'	
Description	"LocalizedText"		
Encoding...	Byte	16#3	
Locale	WString[5]	WSTRING#'en-EN'	
Text	WString[255]	WSTRING#'meter per second'	

MinimumSamplingInterval attribute of tags

In addition to "Value", "DataType" and "AccessLevel", you can also set the "MinimumSamplingInterval" attribute for a tag in the XML file that represents the server address space.

The attribute specifies how fast the server can sample the tag value.

The OPC UA server of the S7-1500 CPU handles the values for MinimumSamplingInterval as follows:

- Negative values and values greater than 4294967 are set to -1 (meaning: Default setting of the server should be used for the sampling interval for sampling. This is defined by the publishing interval of the subscription, see OPC UA specification part 4).
- Decimal numbers are rounded to three decimal places.

9.3.5.4 Missing namespaces

Introduction

A node set file (OPC UA XML file) may contain references to other OPC UA XML files that provide type definitions in other namespaces. You must import all required definitions for the information model in order for the server interface to work properly.

Example for list of namespaces (NamespaceUris) in an OPC UA XML file

```
<NamespaceUris>
    <Uri>http://www.siemens.com/SimaticIdent/RF600R/</Uri>
    <Uri>http://opcfoundation.org/UA/DI/</Uri>
    <Uri>http://opcfoundation.org/UA/AutoID/</Uri>
</NamespaceUris>
```

Importing additional namespaces

If namespaces are still missing after the import of an OPC UA XML file, STEP 7 generates an error message.

In this case, import the OPC UA XML files with the missing namespaces into a new server interface. You must create a new server interface, otherwise the additional imported XML file would overwrite the current companion specification (the current information model).

The missing namespaces are displayed in red in the properties of the server interface.

After importing the XML files, you must click the "Refresh interface" button to refresh the view.

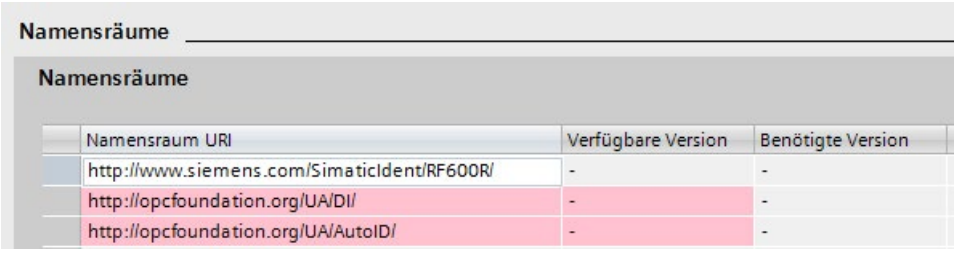

9.3.5.5 Coordinating write and read rights for CPU tags

Definition of write and read rights in the information model (OPC UA XML)

In the OPC UA information model, the attribute "AccessLevel" regulates access to tags.

AccessLevel is defined bit by bit:

Bit 0 = CurrentRead and Bit 1 = CurrentWrite. The meaning of the bit combinations is as follows:

- AccessLevel = 0: no access
- AccessLevel = 1: read only
- AccessLevel = 2: write only
- AccessLevel = 3: read+write

Example of the assignment of write and read rights (read+write)

```
<UAVariable NodeId="ns=3;s=&quot;Data_block_2&quot;.&quot;Static_1&quot;"
BrowseName="3:Static_1"
ParentNodeId="ns=3;s=&quot;Data_block_2&quot;"
DataType="INT"
AccessLevel="3">
    <DisplayName>Static_1</DisplayName>
```

Definition of write and read rights in STEP 7

When you define tags, you specify the access rights using the properties "Accessible from HMI/OPC UA" and "Writable from HMI/OPC UA".

Example of the assignment of write and read rights

Name	Data type	Accessible from HMI/OPC UA	Writable from HMI/OPC UA
Static_1	Int	☑	☑
<Add new>		☑	☑

Interaction between write and read rights

If you have imported an OPC UA server interface and AccessLevel attributes are set in this OPC UA XML file, the write and read rights are defined by the following rule: The least extensive access rights for each setting apply.

Example

- AccessLevel = 1 (read only) in the OPC UA server interface
- Both "Accessible from HMI/OPC UA" and "Writable from HMI/OPC UA" are selected in the PLC tag table

Result: The tag is only read.

Rules

If write rights are required:

- AccessLevel = 2 oder 3
- "Writable from HMI/OPC UA" enabled

If read rights are required:

- AccessLevel = 1 (AccessLevel 3 is also possible, but misleading. The settings suggests that an OPC UA client has write and read rights)
- "Accessible from HMI/OPC UA" enabled, "Writable from HMI/OPC UA" disabled

If neither read nor write rights are to be granted (no access):

- AccessLevel = 0
- "Accessible from HMI/OPC UA" disabled

  Only one of the two conditions needs to be met to block all access. In this case, review whether the tag in the OPC UA server interface is actually necessary at all.

Access table

"Accessible from HMI/OPC UA" must be set if access over OPC UA is to be possible at all. "Writable from HMI/OPC UA" must be set to allow an OPC UA client to write a tag / DB element.

Please see the table for the resulting access right.

Table 9- 3 Access table

OPC UA XML	STEP 7 (TIA Portal), for example tag table		
AccessLevel	Accessible from HMI/OPC UA	Writable from HMI/OPC UA	Resulting access right
0	x	x	No access
x	0	x	No access
1	Enabled	x	Read only
2	Enabled	Disabled	No access
3	Enabled	Disabled	Read only
2	Enabled	Enabled	Write only
3	Enabled	Enabled	Read+write

(x = don't care)

9.3.5.6 Consistency of CPU tags

"AccessLevelEx" attribute extends access properties

As of firmware version V2.6, the OPC UA server of the S7-1500 CPU supports not only the attribute "AccessLevel" (see Coordinating write and read rights for CPU tags (Page 218)) but also the attribute "AccessLevelEx" which, in addition to the already explained bits for read access and write access, provides information on the consistency of a OPC UA tag. The new attribute was introduced with version V1.04 of the OPC UA specification (Part 3, Address Space Model).

Reading consistency properties

In the OPC UA information model of the OPC UA server, the attribute "AccessLevel" defines the access.

AccessLevelEx is defined bit by bit; in this case, the relevant bits are:

- Bit 0 = CurrentRead
- Bit 1 = CurrentWrite
- Bits 2 to 7 are not relevant for the OPC UA server of an S7-1500 CPU

The meaning of the bit combinations is explained in the section on read and write rights.

The following bits for consistency are also added:

- Bit 8 = NonatomicRead; the bit is set if the tag cannot be read consistently. For read consistency of tags, bit 8=0.
- Bit 9 = NonatomicWrite; is set if the tag cannot be written consistently. For write consistency of tags, or if no write access is granted, bit 9=0.

Examples

An OPC UA tag (structure) is readable and writable; but inconsistent for reading and writing access.

Consequently: Bits 0, 1, 8 and 9 are set: AccessLevelEx = "771" (1+2+256+512).

Another structure is read-only.

Consequently: Bits 0 and 8 are set, bit 1 and bit 9 are not set: AccessLevelEx = "257" (1+0+256+0).

Handling of the attribute in the server

The "AccessLevelEx" attribute is only available in the OPC UA server. The attribute is not present in a node set file (XML export file).

However, the attribute "AccessLevel", which is exported, includes the information from "AccessLevelEx", see next section.

Export

With XML export of the standard Simatic server interface, the server sets the attribute "AccessLevel", which was extended to 32 Bit Advanced in V1.04 compared to V1.03, to the value of attribute "AccessLevelEx".

Import

When importing a node set file (e.g. from an export of a server interface), the S7-1500 CPU sets the attribute "AccessLevelEx" according to its own estimate of the consistency of the imported data type, see next section. The imported value is ignored.

Consistency of data types at the server interface

The consistency of tags ("atomicity" in the language usage of OPC UA) within a program cycle of an S7-1500 CPU is ensured at the nodes of the server interface for the following data types:

- BOOL, BYTE, WORD, DWORD, LWORD
- SINT, INT, LINT, DINT, USINT, UINT, ULINT, UDINT
- REAL, LREAL
- DATE, LDT, TIME, LTIME, TIME_OF_DAY, LTIME_OF_DAY, S5TIME
- CHAR, WCHAR
- System data types and hardware data types that are based on the above-mentioned data types are also consistent.

  Example: HW_ANY, derived from UINT (UInt16).

Tip: If you browse in the address space of the S7-1500 CPU (e.g. with the OPC UA Client UaExpert), you can find the consistent data types under Types > BaseDataType > Enumeration/Number/String.

Tags of the following data types are **not** consistent ("nonatomic" in the language usage of OPC UA):

- SIMATIC structures are generally not consistent. This means that all tags which, for example, have unknown structures or a UDT data type are not consistent.
- System data types such as DTL, IEC_Counter, IEC_TIMER, etc. are data types that are derived from structures.

Tip: If you browse in the address space of the S7-1500 CPU (e.g. with the OPC UA Client UaExpert), you can find data types based on structures under Types > BaseDataType > Structure.

9.3.5.7 Notes on configuration limits when using server interfaces

When you use OPC UA server interfaces, you must comply with limits for the following objects in line with the S7-1500 CPU performance class:

- Number of server interfaces
- Number of OPC UA nodes
- Load object data volume
- If you have implemented methods: Number of server methods or server method instances

Configuration limits for OPC UA server interfaces and methods

The table below sets out the configuration limits for S7-1500 CPUs; these must also be taken into account when you compile and load a configuration.

A violation of configuration limits results in an error message.

Table 9- 4 Configuration limits for OPC UA server interfaces

Technical specification value	CPU 1510SP (F) CPU 1511 (C/F/T/TF) CPU 1512C CPU 1512SP (F) CPU 1513 (F)	CPU 1505 (S/SP/SP F/SP T/SP TF) CPU 1515 (F/T/TF) CPU 1515 SP PC (F/T/TF) CPU 1516 (F/T/TF)	CPU 1507S (F) CPU 1517 (F/T/TF) CPU 1518 (F)
Use of imported companion specifications (information models)			
• Maximum number of OPC UA server interfaces	10	10	10
• Maximum number of OPC UA nodes in user-defined server interfaces	1000	5000	30000
• Maximum size of loadable OPC UA server interfaces	1024 KB	5120 KB	15360 KB
Provision of methods			
Maximum number of usable server methods or max. number of server method instances (instructions OPC_UA_ServerMethodPre, OPC_UA_ServerMethodPost)	20	50	100

9.4 Using the S7-1500 CPU as an OPC UA client

9.4.1 Overview and requirements

With STEP 7 (TIA Portal) Version 15.1 and higher, you can configure and program an OPC UA client that can read PLC tags in an OPC UA server. Furthermore it is possible to transfer new values for PLC tags to an OPC UA server. In addition, you can call methods that an OPC UA server provides in your user program. You use the new instructions for OPC UA clients for this purpose in your user program.

The instructions of the OPC UA client are based on the standard "PLCopen OPC UA Client for IEC61131-3".

PLCopen companion specification

With these standardized instructions, you can use OPC UA client functions in your user program that can be executed in an S7-1500 CPU.

In addition, it is possible with just a few adaptations to run this user program in controllers of other manufacturers if these manufacturers also implemented the OPC UA Companion Specification "PLCopen OPC UA client for IEC61131-3".

Convenient editors in STEP 7

For the parameter assignment of the instructions for OPC UA clients, a convenient editor is available in the TIA Portal – the connection parameter assignment (Page 245).

As of Version 15.1, STEP 7 also features an editor for client interfaces (Page 228).

This section describes how you work with these editors.

First, you will be shown how to create and configure a new interface with the interface editor, because you need this type of interface for the subsequent connection parameter assignment.

The description uses an example for better comprehensibility, see Description of the example (Page 227).

Requirement

To use the client of the S7-1500 CPU, you must enable it:

1. Select the area "OPC UA > Client" in the properties of the CPU.
2. Select the "Enable OPC UA client" option.

If you do not enable the client, the connection is not established. You receive a corresponding error message at the instructions, for example "OPC_UA_Connect".

Overview

To use the editor and the connection parameter assignment, follow these steps:

1. First, specify a client interface. Add to the interface the PLC tags and PLC methods that you want to access ("First step (Page 228)").
2. Next, configure the connection to the OPC UA server (Second step (Page 245)).
3. Finally, use the configured connection for the OPC UA client instructions (Third step (Page 253)).

9.4.2 Useful information about the client instructions

With the standardized OPC UA client instructions you are able to control communication for the following tasks with the S7-1500 CPU as an OPC UA client:

- Read/write tags of the OPC UA server
- Call methods in the OPC UA server

Optional instructions can be used to determine the status of the connection between the OPC UA client and OPC UA server or to determine nodes along a know hierarchy.

Standardized sequence of OPC UA communication

The sequence of the communication, and thus the order of the instructions, follows a pattern that is illustrated in the following.

Run sequence for a read or write operation

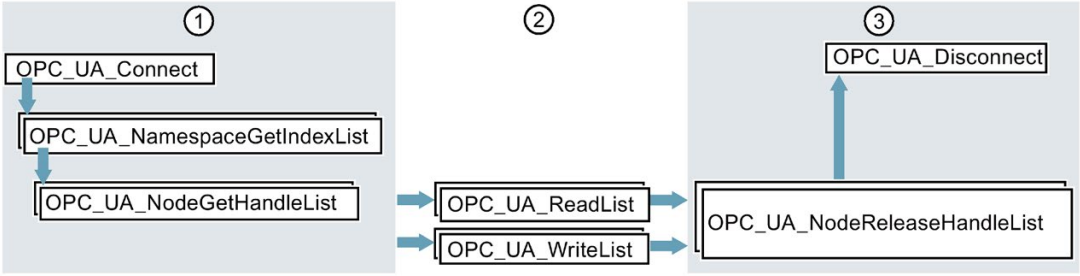

① Instructions for preparation of read and write operations
② Read and write instructions
③ Instructions for "clean-up" after a completed read or write operation

Run sequence for a method call in the OPC UA server

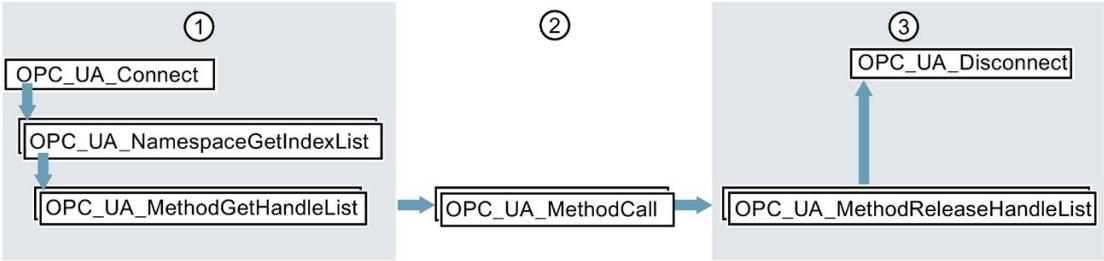

① Instructions for preparation of method calls
② Method calls
③ Instructions for "clean-up" after completed method calls

Optional instructions for reading out the status of a connection between the OPC UA client and OPC UA server and for reading out complete paths from the OPC UA server.

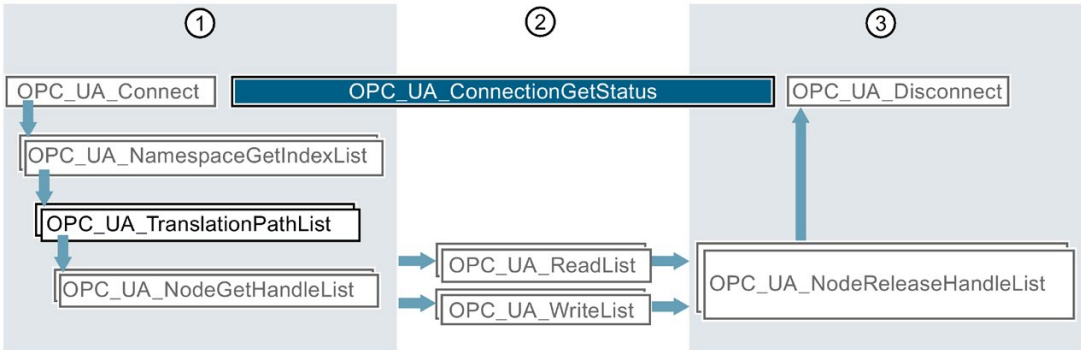

① Instructions for preparation of read and write operations with inserted instruction for requesting, for example, the NodeIDs of nodes of the OPC UA server.
② You can determine the connection status between the establishment and termination of the connection in parallel with other instructions.
③ Instructions for "clean-up"

Convenient editors in STEP 7

The OPC UA client instructions are described in detail in the reference part (STEP 7 information system). For parameter assignment of the instructions, a convenient editor is available in the TIA Portal – the connection parameter assignment (Page 245).

We recommend starting with the connection parameter assignment for the first program draft and using additional instructions and manually optimizing the program as required.

Information about the client instructions

The client instructions are described in detail in the help to the Instructions > Communication > OPC UA > OPC UA client.

9.4.3 Number of client instructions that can be used simultaneously

SIMATIC error codes for OPC UA client instructions

The following limits apply to the simultaneous use of OPC UA client instructions:

Table 9- 5 Quantity structures for OPC UA client instructions

OPC UA instruction	Maximum number for CPU 1510SP (F) CPU 1511 (C/F/T/TF) CPU 1512C CPU 1512SP (F) CPU 1513 (F)	Maximum number for CPU 1505 (S/SP/SP F/SP T/SP TF) CPU 1515 (F/T/TF) CPU 1515 SP PC (F/T/TF) CPU 1516 (F/T/TF)	Maximum number for CPU 1507S (F) CPU 1517 (F/T/TF) CPU 1518 (F)
OPC_UA_Connect	4	10	40
OPC_UA_NamespaceGetIndexList	4	10	40
OPC_UA_NodeGetHandleList	4	10	40
OPC_UA_MethodGetHandleList	4	10	40
OPC_UA_TranslatePathList	4	10	40
OPC_UA_ReadList	20 in total (max. 5 per connection, see OPC_UA_Connect)	50 in total (max. 5 per connection, see OPC_UA_Connect)	200 in total (max. 5 per connection, see OPC_UA_Connect)
OPC_UA_WriteList	20	50	200
OPC_UA_MethodCall	20	50	200
OPC_UA_NodeReleaseHandleList	4	10	40
OPC_UA_MethodReleaseHandleList	4	10	40
OPC_UA_Disconnect	4	10	40
OPC_UA_ConnectionGetStatus	4	10	40

Maximum number of usable OPC UA client interfaces

If you create OPC UA client interfaces using the connection parameter assignment, the number of client interfaces is limited to 40.

Create the OPC UA client interfaces by double-clicking the "Add new client interface" symbol in the project tree of the "OPC UA communication" area.

The maximum number of OPC UA client interfaces is independent of whether you also use the CPU as OPC UA server.

9.4.4 Example configuration for OPC UA

The following sections describe how you can use the client interfaces editor and the connection parameter assignment.

The description is based on a specific example: Two S7-1500 CPUs operate in the system: One CPU serves as the OPC UA client and the other as the OPC UA server.

You can, of course, also use controllers, sensors and IT systems of other manufacturers as OPC UA clients or servers. In particular, the data exchange between different systems (interoperability) is a major advantage of OPC UA.

Connection parameter assignment using an example:

The plant produces blanks in a production line.

The following controllers are used:

1. An S7-1511 CPU serves as the controller of the production line.

   The controller is named "**Productionline**" in the example.

   The OPC UA server of the controller is enabled.

   The CPU has the IP address 192.168.1.1 in the example.

   This CPU publishes the values of following tags via the OPC UA server:

   – **NewProduct**

     The tag has the data type "BOOL".

     When this PLC tag has the value TRUE, the production line has processed a blank.

     The blank is ready for pick-up.

   – **ProductNumber**

     This tag contains the identification number of the blank.

     The tag has the data type "Int".

   – **Temperature**

     This tag contains temperature values recorded during the production of the blank.

     The tag is an array with elements of the "Real" data type.

   In addition, this CPU provides the following writable tag:

   – **ProductionEnabled**

     The tag is set by the OPC UA client.

     The tag has the data type "BOOL".

     If the value is set to TRUE, the production line is released and may produce blanks.

   In addition, this CPU provides the following method via the OPC UA server:

   – **OpenDoor**.

     OPC UA clients can hereby arrange for an access door to be opened to the production line.

2. An S7-1516 CPU controls the interaction with other production lines.

   This CPU is named "**Supervisor**" in the example.

   The OPC UA client of this CPU is enabled.

   Using OPC UA, this CPU can read the NewProduct and ProductNumber tags, set the ProductionEnabled tag and call the OpenDoor method.

   The CPU has the IP address 192.168.1.2 in the example.

The following figure shows the example in the network view of the TIA Portal:

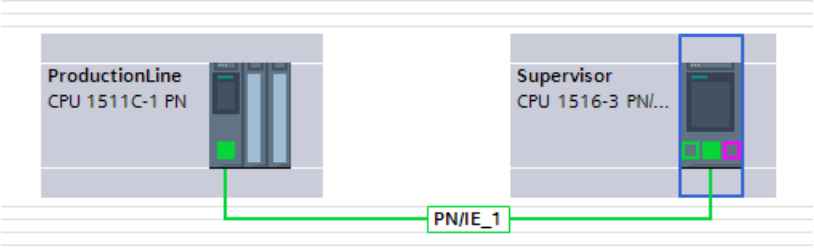

9.4.5 Creating client interfaces

As of Version 15.1, the TIA Portal has an editor for client interfaces.

You group all PLC tags that you want to read or write from an OPC UA server in a client interface.

In addition, the client interface contains all methods that the OPC UA server provides and that you want to call with your user program (that acts as an OPC UA client).

If you create a client interface, STEP 7 also creates data blocks for the parameter assignment of the connection to the OPC UA server from which you want to read data or to which you want to write data.

Maximum number of client interfaces

You can create a maximum of 40 client interfaces.

Editor for client interfaces

To create a client interface, follow these steps:

1. Select the project view in the TIA Portal.
2. In the "Devices" area, select the CPU you want to use as an OPC UA client.
3. Click "OPC UA communication > Client interfaces".
4. Double-click "Add new client interface".

   STEP 7 creates a new client interface and display in the editor.

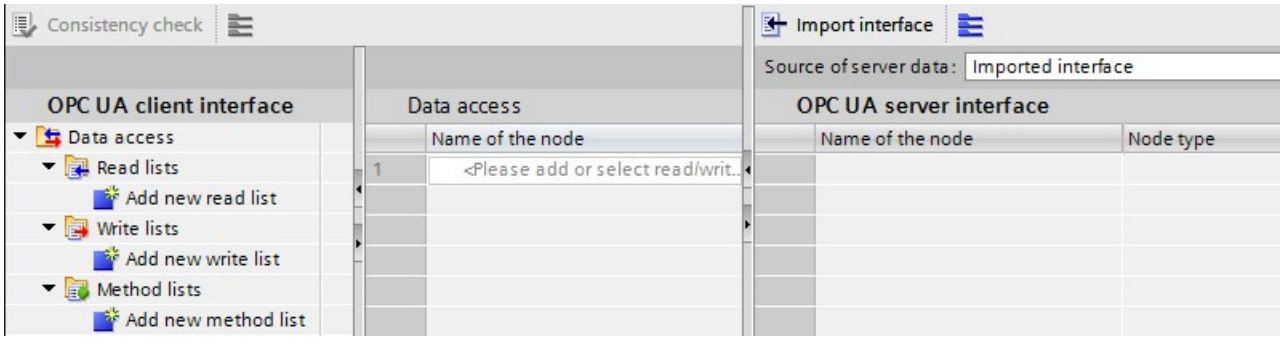

   STEP 7 names the new interface "Client interface_1". If a "Client interface_1" already exists, the new interface receives the designation "Client interface_2" etc.

   In addition, STEP 7 creates the following data blocks:

   – Client_Interface_1_Configuration

     The data block already contains all system data types that are needed for the instructions of the OPC UA client.

     This data block is filled when you configure the connection to the OPC UA server.

     You configure a connection in the properties of the client interface, see: Example configuration for OPC UA (Page 227).

   – Client_Interface_1_Data

     A data block for the PLC tags that you want to read or write from an OPC UA server.

     You use this data block in your user program.

     This data block is currently still empty.

5. Select a descriptive name for the new client interface.

   Select "Productionline" in the example.

   This also changes the names of the associated data blocks to:

   – Productionline_Data
   – Productionline_Configuration

6. To import an OPC UA server interface, click the "Import interface" button in the top right of the editor.

   This allows you to import an XML file which describes the server interface of an OPC UA server.

   Alternative: To determine online the server interface of a connected OPC UA server, see: Determine server interface online (Page 237).

7. STEP 7 displays a dialog with which you can select an XML file.

   This XML file describes a server interface (address space of an OPC UA server).

   A server interface is the grouping of all PLC tags and server methods which an OPC UA server publishes.

   OPC UA clients can access the server interface:

   - Read PLC tags

   - Write PLC tags

   - Calling Server Methods

   For information on how to create a server interface for an OPC UA server, see Create a server interface (Page 199).

8. Create a read list in this client interface.

   To do this, follow these steps:

   – Click "Add new read list" in the left section of the editor.

     STEP 7 adds a new list named "ReadList_1".

     For the example, change the name to "ReadProduct"

   – Now add the new read list of the PLC tags that you want to read from the OPC UA server.

     In the example the "NewProduct" and "ProductNumber" tags are added to the "ReadProduct" read list.

     Select the "NewProduct" tag in the right-hand field of the editor ("OPC UA Server interface"). Drag the "NewProduct" tag to the "ReadProduct" read list in the middle field of the editor. Follow the same procedure with the "ProductNumber" tag.

The figure below shows the right field of the editor.

OPC UA server interface

Name of the node	Node type	Access level	Node ID
Productionline	Object		http://www.sie...
DataBlocksGlobal	Folder		http://www.sie...
Data_for_OPC_UA_Clients	Object		http://www.sie...
NewProduct	Boolean	RD	http://www.sie...
ProductNumber	Int16	RD	http://www.sie...
Temperature	Array of Float	RD	http://www.sie...
Data_from_OPC_UA_Clients	Object		http://www.sie...
ProductionEnabled	Boolean	RD/WR	http://www.sie...
DataBlocksInstance	Folder		http://www.sie...
OpenDoor_DB	Object		http://www.sie...
InOuts	Folder		http://www.sie...
Static	Folder		http://www.sie...
Method	Method		http://www.sie...

Alternative:

You can also select a new read list by dragging the right field of the editor ("OPC UA Server interface") to a node of the type Object or Folder and then dragging it to "Add new read list" in the left field of the editor. The new read list then contains all PLC tags of the node that has been moved.

In the example, select the object "Data_for_OPC_UA_Clients", which contains the tags "NewProduct" and "ProductNumber". STEP 7 generates the new write list "Data_for_OPC_UA_Clients". In addition, the object contains the tag "Temperature". Delete the "Temperature" tag from the read list. The OPC UA server should not query the "Temperature" tag.

Change the name of the read list in "ReadProduct".

The following figure shows the content of the read list:

ReadProduct

Name of the node	Node type	Access level	Node ID
NewProduct	BOOL	RD	http://www.siemen...
ProductNumber	INT	RD	http://www.siemen...

9. If you want assign new values to PLC tags, create a write list in this client interface.

   To do this, follow these steps:

   – Click "Add new write list" in the left section of the editor.

     STEP 7 adds a new list with the name "ReadList_1".

     For the example, change the name to "WriteStatus".

   – Now add the new write list of all OPC UA server tags to which you want to assign new values.

     In the example, add the "WriteStatus" tag to the write list "ProductionEnabled".

     Select the Tag of right field of the editor ("OPC UA Server interface"). Drag the tag to the write list in the middle field of the editor.

   Alternative:

   You can also create a new write list by selecting a node of the type Object or Folder in the right field of the editor ("OPC UA server interface") and then dragging to "Add new write list" in the left field of the editor.

   The new write list then contains all tags of the relevant node.

   In the example, select the object "Data_from_OPC_UA_Clients", which contains the tag "ProductionEnabled". STEP 7 generates the new write list "Data_from_OPC_UA_Clients". Change the name in "WriteStatus".

   The following figure shows the content of the write list:

   WriteStatus

Name of the node	Node type	Access level	Node ID
ProductionEnabled	BOOL	RD/WR	http://www.siemen...

10. If you want to call a method of this OPC UA server, generate a new method list.

    To do this, follow these steps:

    – In the left section of the editor, click "Add new method list".

      STEP 7 adds a new list with the name "Method list_1".

      For the example, change the name to "CallOpenDoor".

    – Now add a method of the OPC UA server to the new method list.

      In this example, add the method "OpenDoor" to the method list "CallOpenDoor".

      Select the method of right field of the editor ("OPC UA Server interface"). Drag the method to the method list in the middle field of the editor.

Alternative:

You can also generate a new method list by selecting a method (node of the type Object) in the right field of the editor (OPC UA Server interface) and then dragging it to "Add new method list" in the left field of the editor. The new method list then contains the method of the relevant node.

The following figure shows the content of the method list:

CallOpenDoor

Name of the node	Node type	Access level	Node ID
Method			http://www.siemen...

If you want to call another method of the OPC UA server, you must create a new method list. Each method list contains only one method.

11. Compile the project.

    To do so, select the project and click the following button in the toolbar:

STEP 7 compiles the project and updates the data blocks that belong to the "ProductionLine" client interface.

Note

During compilation, STEP 7 overwrites all data in the data blocks belonging to the client interface. For this reason, you should neither add to nor correct these data blocks manually.

Note

Renaming nod names (DisplayNames)

In read lists, write lists and method lists you can rename the name of a node by means of the shortcut menu. This is the "DisplayName" in the OPC UA language usage.

If you rename the name of a method list node and the node is already used in a programmed block for the method call "OPC_UA_MethodCall", the compilation of the project leads to consistency errors: During the compilation the UDTs of the method are generated with the changed name. The references to the method used in the program are then no longer correct.

To correct the consistency errors, you can either undo the name change of the method in the client interface or navigate to the method call and assign the relevant parameters again there under "Properties > Block parameters" ("Configuration" tab).

Data blocks of client interface

The following data blocks belong to the "Productionline" client interface:

- **Productionline_Configuration**

  A data block for the configuration.

  In the example, this data block is called "Productionline_Configuration".

  The data block already contains all system data types that are needed for the instructions of the OPC UA client.

  In addition, the data block contains general default values for parameter assignment of the connection to an OPC UA server.

  If you are working with connection parameter assignment, this data block will be filled.

- **ProductionLine_Data**

  A data block for the PLC tags that you have entered in the client interface editor.

  In the example, this data block is called "Productionline_Data".

  The figure below shows the data block.

Static	
ReadProduct	Struct
Variable	"Productionline.ReadProduct"
NewProduct	Bool
ProductNumber	Int
NodeStatusList	Array[0..1] of DWord
NodeStatusList[0]	DWord
NodeStatusList[1]	DWord
TimeStamps	Array[0..1] of LDT
TimeStamps[0]	LDT
TimeStamps[1]	LDT
WriteStatus	Struct
Variable	"Productionline.WriteStatus"
ProductionEnabled	Bool
NodeStatusList	Array[0..0] of DWord
NodeStatusList[0]	DWord
CallOpenDoor	Struct
MethodStatusList	Array[0..0] of DWord
MethodStatusList[0]	DWord
Method	Struct

Use the "ProductionLine_Data" data block in your user program and access the read values of the "NewProduct" and "ProductNumber" PLC tags. This is explained in the following section using an example.

Reading and writing PLC tags of the client interface

Example: Reading the "ProductNumber" value

For example, you write in an SCL program:

```
#MyLocalVariable :=
"ProductionLine_Data".ReadProduct.Variable.ProductNumber;
```

You use this, for example, to assign the number of the blank that was just produced in the production line to the local tag "#MyLocalVariable".

Requirements:

- A connection exists to the OPC UA server of the CPU, which controls the production line.
- The OPC UA client has read the current values.

For this reason you check whether a read value is valid:

- Check whether the value in "ProductionLine_Data".Product.NodeStatusList[1]" is equal to 0.
- Check when this value was sent from the OPC UA server. This value is in "ProductionLine_Data".Product.TimeStamps[1].

Example: Writing the "ProductEnabled" value

Transfer the new values for PLC tags, in the example for the "ProductionEnabled" tag, to the OPC UA server using the data block.

With the following assignment, you enable the production line in the example plant:

```
"ProductionLine_Data".WriteStatus.Variable.ProductionEnabled :=
TRUE;
```

This is only successful, however, if the following requirements are met:

- A connection exists to the OPC UA server of the CPU, which controls the production line.
- Current values are being written via the OPC UA client

Consistency check

Finally, check the consistency of the read/write list or method list.

1. Select the list that you want to check.
2. Click the "Consistency check" button above the "OPC UA client interface" area.

A green check mark indicates an error-free assignment of the tags or methods to the corresponding elements of the server interface.

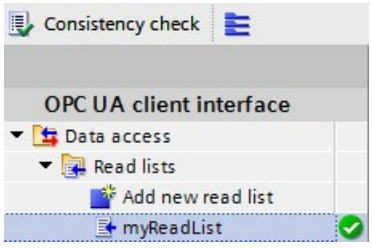

You can assume that the data exchange between client and server and method calls operate without problem in runtime.

In the event of an error a list appears in the Inspector window. From this list you can jump to the respective error.

During the consistency check, STEP 7 checks

- whether all elements that you use in the respective list are also present in the server.
- Do the data types used match?
- For methods: Do the number, name, order, and data types of method arguments match?

9.4.6 Determine server interface online

With STEP 7 (TIA Portal) you can determine the interface of an OPC UA server online. This provides information on which tags of a connected OPC UA server you can read or set (write) with OPC UA clients. It also provides information on which server methods of the OPC UA server are available for OPC UA clients.

If you are work offline you can create the interface of the OPC UA server by means of an OPC UA XML file. The address space of the server is described in the OPC UA XML file, see: Export OPC UA XML file (Page 167).

Determine online server interfaces

To determine a server interface online, follow these steps:

1. In the STEP 7 project tree, select the CPU which is configured as OPC UA client (Supervisor in the example).
2. Select the client interface (in the example, OPC UA Communication > Client interfaces > Productionline).

   If no client interface has been created, double-click "Add new client interface".
3. Double-click the selected client interface.

   The editor for client interfaces is displayed.

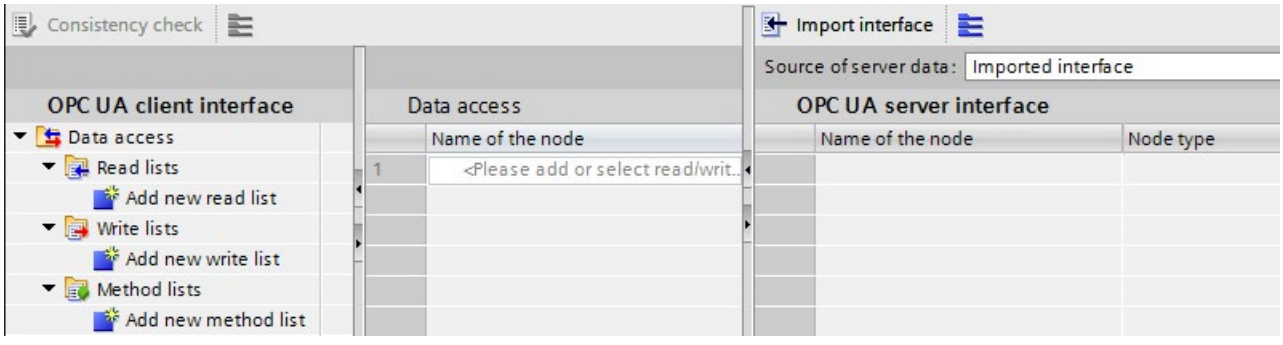

4. In the left section of the editor, click "Add new read list", "Add new write list", or "Add new method list".
5. In the right field of the editor, select "Online[]" as data source for "Source of server data":

6. Click the "Online access" button.

   STEP 7 displays the "Connect to OPC UA server" dialog:

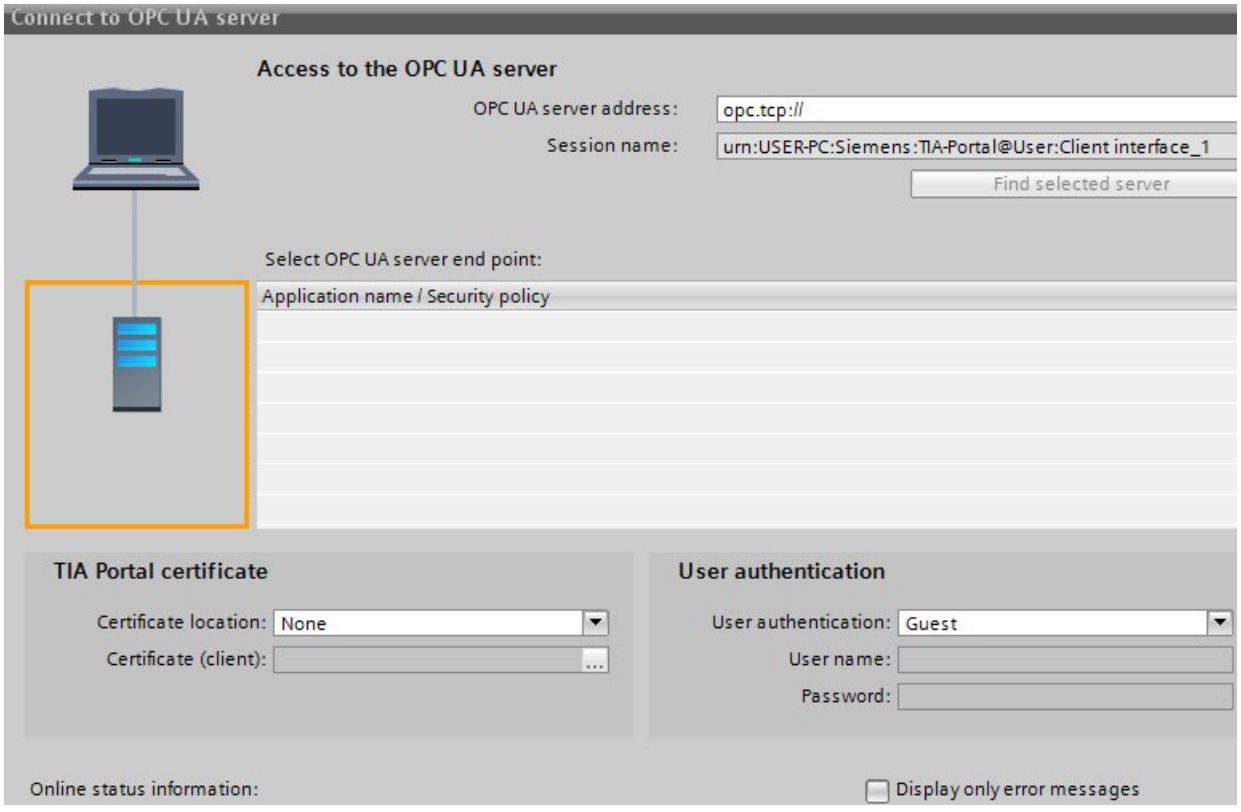

   Tip: When you are establishing an online connection to an OPC UA server for the first time, use the "Online access" button. When reconnecting after a disconnection, select the "Connect to online server" button next to the "Online" selection field.

   In the top right, enter the IP address of the OPC UA server whose server interface you want to determine online (in the example, 192.168.1.1).

7. Click "Find selected server".

   STEP 7 establishes a connection to the OPC UA server and determines all security settings (server endpoints) which the server provides.

   STEP 7 displays the end points as list:

8. Click on the end point you want to use for a connection of step 7 to the OPC UA server.

9. Do you want to use a secure connection?
   - If you have selected a secure end point, then select the entry "TIA Portal" for the "Certificate location".

     And under "Certificate (Client)", select a client certificate for your PC on which STEP 7 (TIA Portal) is currently running.

     If a client certificate does not yet exist for your PC, you can generate a client certificate here in the TIA Portal.

     Proceed as follows to generate a certificate for your PC:

     - Click on the button in the "Certificate (Client)" input field.

     - Click "Add".

     - For "Common name of subject", enter "STEP 7 (TIA Portal)".

     - Select the "OPC UA client" entry at "Usage".

     - For "Subject Alternative Name (SAN)", enter the IP address of your PC on which you are currently running STEP 7 (TIA Portal) under "Value". Overwrite the already entered IP address.

     - If your PC uses a second IP address, enter this address as well. If your PC does not use a second IP address, delete the second IP address already entered.

     - Click "OK".
   - If you have not selected a secure end point, keep the default setting ("None").
10. How do you want log on?
   - If you want to log onto the OPC UA server as guest, then apply the default with "User authentication".
   - If you want to log on with user name and password, select "User name and password".

     Use the user name and password which was stored during the configuration of the OPC UA server in the properties of the CPU under "General > OPC UA > Server > Security > User authentication > User management".
11. Click "Connect".

    When a secure connection is established, a message appears that you must accept the server certificate for the secure connection to be established. In the message window, you can display further details about the server certificate via a link.

    This standard Windows window only provides information about the server certificate. If you click on the button to install the server certificate, the server certificate is not included in the certificate memory of the TIA Portal, i.e. the next time you connect you will be prompted to accept the server certificate again.

    STEP 7 then establishes a connection to the OPC UA server and again displays the editor for client interfaces.

    In the right field of the editor, STEP 7 displays the uppermost level of the address space of the OPC UA server:

12. Click on the small black triangle next to "Objects".

    STEP 7 now also displays the level below Objects.

13. Click on the small black triangle next to "Productionline".

    STEP 7 now also displays the level below Productionline.

14. Now open additional lower-level folders:

OPC UA server interface

Name of the node	Node type	Access level
Server	Object	
DeviceSet	Object	
Productionline	Object	
Counters	Object	
DataBlocksGlobal	Object	
Icon	ImagePNG	RD
Data_from_OPC_UA_Clients	Object	
ProductionEnabled	Boolean	RD/WR
Data_for_OPC_UA_Clients	Object	
ProductNumber	Int16	RD
Temperature	Array of Float	RD
NewProduct	Boolean	RD
DataBlocksInstance	Object	
Icon	ImagePNG	RD
OpenDoor_DB	Object	
DeviceManual	String	RD

Alternative:

To open the server interface in one stop, click the following symbol:

STEP 7 now displays the fully expanded server interface.

If you click on this symbol again, STEP 7 again displays only the uppermost level of the server address space.

9.4.7 Using multilingual texts

In the client interface editor, you are also importing texts that can be displayed in different languages with the OPC UA XML files (information models). Multilingualism is optional, and each node can be defined differently regarding the languages it offers.

In the XML file, these are the following fields that can be prepared for different languages:

- DisplayName
- Description

Example for multilingual texts in an OPC UA XML file

In the XML file below, the display name and the description, for example, are entered with a "default" text and multiple localizable texts.

- Default text is the first entry without localization information.
- Localized text is the text after "Locale=" followed by a language code, e.g. "it-IT" for Italian

```
<UAVariable NodeId="ns=3;i=6070" BrowseName="3:EngineeringRevision" ParentNodeId="ns=3;i=1002"
DataType="String">
    <DisplayName>EngineeringRevision</DisplayName>
    <DisplayName Locale="en-US">EngineeringRevision</DisplayName>
    <DisplayName Locale="de-DE">Revisionsstand</DisplayName>
    <Description>Revision Level of the engineering environment.</Description>
    <Description Locale="en-US">Revision Level of the engineering environment.</Description>
    <Description Locale="de-DE">Revisionsstand der Engineeringumgebung.</Description>
    <Description Locale="fr-FR">Niveau de révision de l'environnement d'ingénierie.</Description>
    <Description Locale="it-IT">Livello di revisione dell'ambiente di ingegneria.</Description>
<References>
    <Reference ReferenceType="HasTypeDefinition">i=68</Reference>
    <Reference ReferenceType="HasModellingRule">i=78</Reference>
</References>
</UAVariable>
```

Display of multilingual texts

When importing a server interface, the available multilingual texts are saved internally and downloaded to a CPU together with the project.

The client editor displays the text from the OPC UA XML file in the columns "Name of the node" (corresponds to "DisplayName") and "Description" (corresponds to "Description").

The following cascading rules determine which language is shown for a node:

- When the node contains text in the currently used editing language, the text is also displayed in the editing language.

  (Setting the editing language: In the project tree, select the area "Languages & resources > Project languages")

- When the node does not contain text in the editing language but a default text is defined there (without language code), the default text is displayed.
- "Name of the node" column: If no default text is defined either but a text in any other language exists, the DisplayName text is displayed in the first available language. This rule does not apply to description texts (Description).
- If none of the conditions listed above is met, no text is displayed.

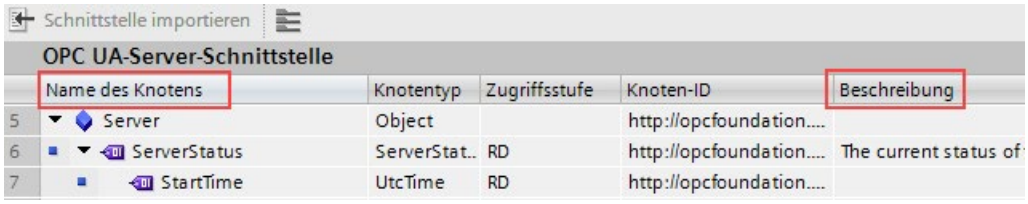

When you change the editing language, the multilingual text in the imported interface will also change according to the rules explained above.

You can then apply the nodes in the corresponding lists (read list, write list, method list) with drag and drop.

You cannot change the language in the lists (read list, write list, method list).

Applying the displayed description texts as comment in PLC data types

When you compile the program, STEP 7 automatically creates PLC data types (UDTs) for each read list, for each write list and for inputs or outputs of each method. These UDTs each have one element for each node.

The UDTs apply the description text as comment according to the rules stated above. STEP 7 creates the comment in only one language, just like the texts in the OPC UA server interface can only be displayed in one language.

9.4.8 Rules for the access to structures

The rules for the access to structures are explained below. Note these rules when reading and writing values of complete structures provided by an OPC UA server.

How the client of the S7-1500 CPU accesses structures

The OPC UA client of the S7-1500 CPU uses neither TypeDictionaries nor DataTypeDefinition attributes, which a server offers for the resolution of these structures.

These options of the OPC UA client for checking structural elements in runtime are limited in the client.

Rules for the access to structures

If you use the client interfaces to configure the read and write lists (connection parameterization) and assign the PLC data types to the imported or online determined address model of the server, the read and write accesses to structures operate trouble-free in runtime.

The configuration by means of client interface automatically ensures that the sequence and the data type of the structural elements are coordinated on client and server side.

In runtime the OPC UA client only checks the total length of the transmitted value; more detailed checks are not possible.

Mapping rules apply to the assignment of OPC UA structures to PLC tags or DB tags (see AUTOHOTSPOT). Non-executed data type (such as OPC UA byte strings) are not supported.

Example of an error-free assignment of the structure elements

In the imported node set file (XML export), the structure is defined as follows:

opcUaStruct	Object
allOk	Boolean
myOPCstruct1	myOPCUAstruct
varA	Int64
VarB	Byte
nestedStructZ	"myOPCUAstruct"."nestedStructZ"
varD	Float
varE	Double
varC	Double
DeviceManual	String

The structure mapped in the read list matches, both in the order and in the assigned data types, the corresponding nodes of the node set file.

myOPCstruct1	myOPCUAstruct
varA	LINT
VarB	USINT
nestedStructZ	"myOPCUAstruct"."nestedStructZ"
varD	REAL
varE	LREAL
varC	LREAL

If the structure now changes on the server, for example tagA and tagB are swapped, and the read list remains the same in the client, the assignment is no longer correct:

- The total length of the data remains the same (only the order has changed)
- The configuration of the structure is different for client and server.

WARNING

No error message in the case of different structure configuration between client and server

If the structures of client and server do not match, this rule violation will possibly not generate any error during compilation and also not in runtime.

Make sure not to change the configured assignments for structures in runtime. If required, reconfigure the assignment in the read and write lists.

9.4.9 Using connection parameter assignment

9.4.9.1 Creating and configuring connections

With the instructions for OPC UA clients, you create a user program that exchanges data with an OPC UA server. A series of system data types are required for this.

To simplify your work with these system data types, a connection parameter assignment for OPC UA clients is available starting in STEP 7 (TIA Portal) Version 15.1.

Use of the connection parameter assignment is optional and not mandatory. You can also manually create the required system data types.

We use an example to make the description easier to follow, see description of the example (Page 227).

Opening the connection parameter assignment

To configure the connection to an OPC UA server, follow these steps:

1. In the "OPC UA communication" area, double-click the client interface whose parameters you want to assign in the project tree.

   For the example configuration: Double-click the "ProductionLine" client interface.

   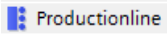

   The section "Create client interface (Page 228)" describes how to create a client interface.

2. Click the "Properties" tab (Inspector window) if the tab is not already displayed.

   STEP 7 now displays the connection parameter assignment for the instructions of the OPC UA client.

   The "General" tab is open.

3. Click the "Configuration" tab.

Setting the connection parameters

You set the connection to the OPC UA server in the "Configuration" tab.

1. Select a descriptive name for the session. For the example, select the name "OPC UA Connection to ProductionLine".
2. In the "Address" field, enter the IP address of the OPC UA server to which your user program (that operates as an OPC UA client) is to establish a connection.

   In the example configuration, the CPU that controls the production line has the IP address "192.168.1.1". A connection to the OPC UA server of this CPU is to be established. For this reason, you enter this IP address in the "Address" field.

3. If the OPC UA server is not using the standard port 4840, you must insert the port number here.

   For example, enter the number 48040 in the field, if the OPC UA server to which you want to establish a connection uses this port number.

   For the example, we accept the default setting "4840" because the OPC UA server of the example is accessible via port 4840.

4. Enter a path within the OPC UA server to restrict access to this path.

   When you specify a path, it is automatically entered at the "ServerEndpointUrl" entry in the configuration DB for the client interface. The entry then consists of the components "OPC Schematic Prefix", "IP address", "Port number" and "Server path", for example: "opc.tcp://192.168.0.10:4840/example/path".

   The information is optional. However, some servers only establish a connection if a server path is specified.

5. In addition, you accept the default settings for session timeout (30 seconds) and monitoring time (5 seconds).

   The following figure shows the connection parameters of the example:

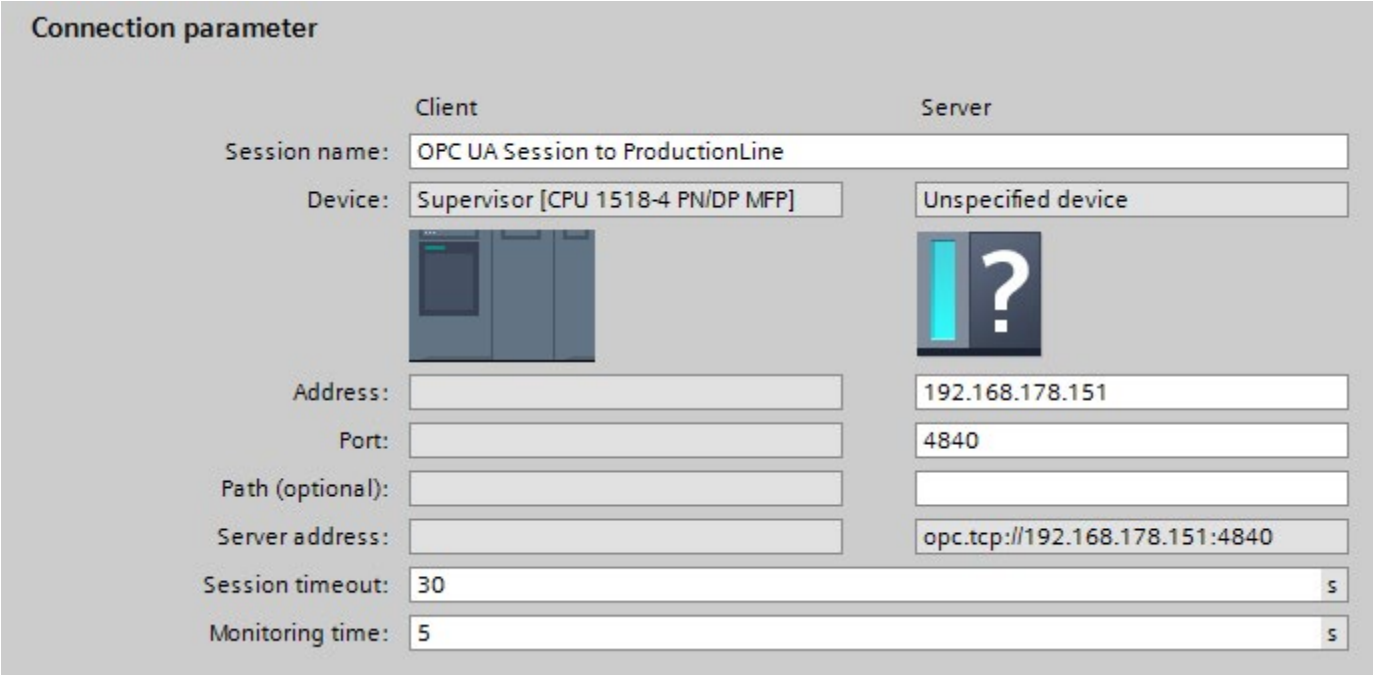

Setting the security parameters

1. Click the "Security" area in the "Configuration" tab.

   This area contains all security settings for the connection to the OPC UA server.

The following settings are possible:

"General" area

Security mode:

Select the security mode that the connection to the OPC UA server must meet from the drop-down list.

If the server does not meet the selected mode, a session is not established.

The following settings are available:

- No security: No secure connection.
- Sign: OPC UA server and OPC UA client sign the data transmission (all messages): Manipulations can thus be detected.
- Sign & Encrypt: OPC UA server and OPC UA client sign and encrypt the data transmission (all messages):

Security policy:

Set the encryption techniques for the signing and encryption of messages.

The following settings are possible:

- No security
- Basic128Rsa15
- Basic256
- Basic256Sha256

To configure a secure connection, you must observe the following items:

- A certificate is required for the client for a secure connection.
- You have to make the client certificate known to the server.

To find out how to proceed, see the section "Handling of the server and client certificates" under "Certificate of the OPC UA clients".

"Certificates" area

Client certificate:

The certificate confirms the authenticity of the OPC UA client.

To select a certificate, click the following symbol

STEP 7 displays a list of certificates.

Select the certificate that you have introduced to the server, see the paragraphs under "Certificate of the OPC UA clients" in the section "Handling of the server and client certificates".

Click the symbol with the green check mark:

Or, create a new certificate. To do so, click the "Add" symbol.

When you create a new certificate, you must introduce it to the server, see the paragraphs under "Certificate of the OPC UA clients" in the section "Handling of the server and client certificates".

"User authentication" area

The following settings are possible for user authentication:

- Guest
- User name and password
- Users (TIA Portal - Security Settings)

For more information, see AUTOHOTSPOT.

Setting languages

UA tags of the String type can be localized with OPC UA, that is, texts (values for the UA tag) can be available in different languages for the server. For example, localized texts can be available for DisplayName (Name of the node) and Description (Description).

In the "Languages" area of the "Configuration" tab you can, for example, influence the language of the texts returned by the server as follows:

In the "Languages" area, enter a number of languages that the server transfers to the client during connection setup.

The language or the local ID ("language code") associated with it that you enter in the first line is the language preferred by the client.

- If the server can provide the UA tag in the requested language, it is transferred to the client.
- If the server cannot provide the UA tag in the requested language, it checks whether it can provide the UA tag in the language you have entered in the second line (first substitute language).
- The server works its way down the list, and when it can provide neither the requested language nor a substitute language, it will provide the default language.

9.4.9.2 Handling of the client certificates of the S7-1500 CPU

Where does the client certificate come from?

If you are using the OPC UA client of an S7-1500 CPU (OPC UA client enabled), you can create certificates for these clients with STEP 7 V15.1 and higher as described in the following sections.

When you use UA clients from manufacturers or the OPC Foundation, a client certificate is generated automatically during installation or upon the first program call. You have to import these certificates with the global certificate manager in STEP 7 and use them for the respective CPU.

If you program an OPC UA client yourself, you can generate certificates through the program. Alternatively, you can generate certificates with tools, for example with OpenSSL or the certificate generator of the OPC Foundation:

- The procedure for OpenSSL is described here: "Generating PKI key pairs and certificates yourself (Page 149)".
- Working with the certificate generator of the OPC Foundation is described here: "Creating self-signed certificates (Page 148)".

Certificate of the OPC UA client of the S7-1500 CPU

A secure connection between the OPC UA server and an OPC UA client is only established if the server classifies the certificate of the client as trusted.

Therefore you have to make the client certificate known to the server.

The following sections describe how you can initially generate a certificate for the OPC UA client of the S7-1500 CPU and then make it available to the server.

1. Generate and export a certificate for the client

For a secure connection, you have to generate a client certificate and - if the server and client are located in different projects - export the certificate.

If client and server are in the same project, exporting the client certificate and subsequent import are not necessary.

Requirements

The IP interface of the CPU is configured, an IP address is available.

Background: The IP address under which the CPU can be accessed in your system is entered under "Subject Alternative Name (SAN)".

Generating an OPC UA client certificate

The easiest way to generate a client certificate for an S7-1500 CPU is to configure a client interface.

The configuration of the client interface provides for the selection or generation of a client certificate, see Creating and configuring connections (Page 245).

Alternatively, you can create the client as follows:

1. In the "Project tree" area, select the CPU you want to use as a client.
2. Double-click "Device configuration".
3. In the properties of the CPU click "Protection & Security > Certificate manager".
4. Double-click "<add>" in the "Device certificates" table.

   STEP 7 opens a dialog.
5. Click "Add".
6. Select the "OPC UA client" entry from the list at the "Usage".
7. Click "OK".

   STEP 7 now lists the client certificate in the "Device certificates" table.
8. If the server is in another project: Right-click this line and select "Export certificate" from the shortcut menu.
9. Select a directory in which you store the client certificate.

2. Announcing the client certificate to the server

You have to make the client certificate available to the server to allow a secure connection to be established.

To do so, proceed as follows:

1. If the client was configured in another project and you created and exported the client certificate there:
   - Select the "Use global security settings for certificate manager" option in the local certificate manager of the server. This makes the global certificate manager available.

     You will find this option under "Protection & Security > Certificate manager" in the properties of the CPU that is acting as server.
   - If the project is not yet protected, select "Security settings > Settings" in the STEP 7 project tree, click the "Protect this project" button and log on.

     The "Global security settings" item is now displayed under "Security settings" in the STEP 7 project tree.
   - Double click "Global security settings".
   - Double click "Certificate manager".

     STEP 7 opens the global certificate manager.
   - Click the "Device certificates" tab.
   - Right-click in the tab on a free area (not on a certificate).
   - Select the "Import" shortcut menu.

     The dialog for importing certificates is displayed.
   - Select the client certificate that the server is to trust.
   - Click "Open" to import the certificate.

     The certificate of the client is now contained in the global certificate manager. Note the ID of the client certificate just imported.
2. Click the "General" tab in the properties of the CPU that is acting as server.
3. Click "OPC UA > Server > Security > Secure Channel".
4. Scroll down in the "Secure Channel" dialog to the section "Trusted clients".
5. Double-click in the table on the empty row with "<add new>". A browse button is displayed in the row.
6. Click this button.
7. Select the prepared client certificate.
8. Click the button with the green check mark.
9. Compile the project.
10. Load the configuration into the S7-1500 CPU (server).

Result

The server now trusts the client. If the server certificate is also considered trusted, the server and client can establish a secure connection.

9.4.9.3 User authentication

In the OPC UA client interface of the S7-1500, you can set what authentication is required for a user of the OPC UA client wishing to access the server. To do so, you must select the corresponding client interface in the project tree of the requested S7-1500 CPU under "OPC UA communication > Client interfaces" and select the type of user authentication in the Inspector window under "Properties > Configuration > Security".

Types of user authentication

The following options are available for user authentication:

- **Guest**

  The user does not need to verify authorization (anonymous access). The CPU creates an anonymous session for the user, and the OPC UA server does not check the authorization of the client user.

- **User name and password**

  The user must prove authorization (no anonymous access). The OPC UA server checks whether the client user is authorized to access the server. Authorization is given by the user name and the correct password. These inputs cannot be checked by the client interface, which means all values are accepted as being valid.

  Note

  STEP 7 stores user name and password unencrypted in the data block/instance data block. Recommendation: Use the user authentication "User (TIA Portal - Security Settings)".

- **Users (TIA Portal - Security Settings)**

  You can enter a user name from the list of users entered in the project for authentication. The names of the registered users for the current project are available in the user administration in the project tree under "Security Settings > Users and roles". There you can also enter additional users.

  You can also enter a name that is not listed in the user administration of the project or leave the field blank. This is necessary when the corresponding user name is only provided by a different source during runtime, for example, via HMI or from a different OPC UA client.

"No Security" security policy and authentication via user name and password

You can set the following combination:

Security policy = "No Security" and authentication via user name and password.

- The OPC UA server of the S7-1500 supports this combination. OPC UA clients can connect and encrypt the authentication data or not.
- OPC UA client of the S7-1500 CPU also supports this combination: However, in runtime it only connects if it can send the authentication data encrypted via cable!

Result: With the following configuration, not connection can be established in runtime.

- S7-1500 as OPC UA client
- OPC UA server which supports no encryption of authentication data when "No Security" (="none") is set as security policy.

Additional information

See Users and roles with OPC UA function rights (Page 190)

9.4.9.4 Using a configured connection

Introduction

This section shows you how to use a configured connection for OPC UA instructions (third step).

Requirements

- You have created a client interface and added PLC tags and PLC methods to this interface, see ("First step (Page 228)").
- You have configured a connection to an OPC UA server (Second step (Page 245)).

Overview

To read data from an OPC UA server or write data to an OPC UA server, use the following instructions:

- OPC_UA_Connect
- OPC_UA_NamespaceGetIndexList
- OPC_UA_NodeGetHandleList
- OPC_UA_ReadList or OPC_UA_WriteList
- OPC_UA_NodeReleaseHandleList
- OPC_UA_Disconnect

Order of the OPC UA instructions

The following figure shows the order in which the OPC UA instructions are called in a user program in order to use these instructions to read or write PLC tags:

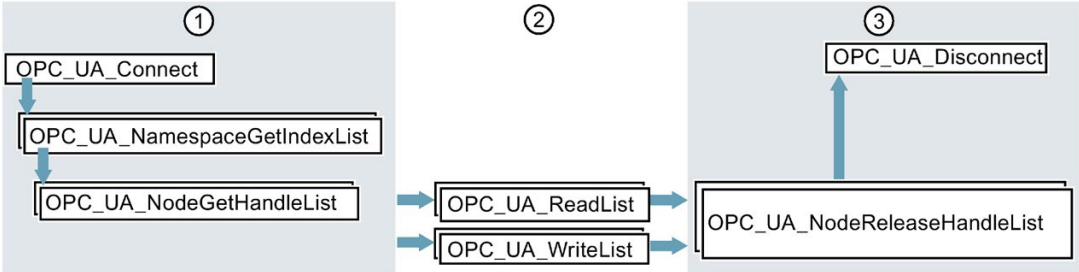

① Instructions for preparation of read and write operations

② Read and write instructions

③ Instructions for "clean-up" after a completed read or write operation

The "OPC_UA_NodeReleaseHandleList" instruction can be omitted if "OPC_UA_Disconnect" is called immediately afterwards.

STEP 7 (TIA Portal) automatically supplies the parameters of these instructions if you are using a client interface and a configured connection to an OPC UA server.

The procedure is shown in the following section.

Using a client interface and configured connection

To use a configured OPC UA connection, follow these steps:

1. Open your user program in the TIA Portal.
2. Using drag-and-drop, move the "**UA_Connect**" instruction into the program editor.

   You will find the instruction under "Instructions > Communication > OPC UA" in the TIA Portal.
3. Select a call option for the instruction

   The example uses a multi-instance.

   STEP 7 displays the instruction in the program editor.

   The editor for the Function Block Diagram (FBD) programming language uses the following display:

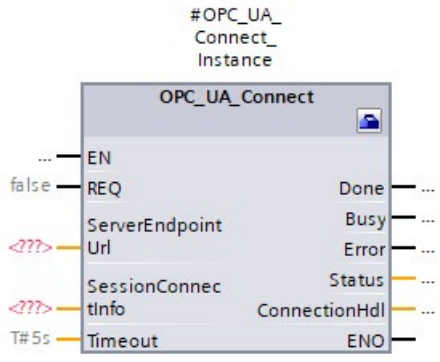

   The editor for the Ladder Logic (LAD) programming language displays the instruction similarly.
4. Click the toolbox symbol in the editor for FBD or LAD.

   The symbol is located in the heading of the instruction:

   If you are using the editor for STL or SCL: Click the small green rectangle below the first character of the instance name:

   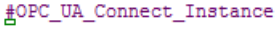

   The example (Page 227) uses "#OPC_UA_Connect_Instance" as the instance name.

   STEP 7 displays the properties of the instruction in a separate dialog.

5. For "Client interface" select the client interface that you want to use for the instruction.

   We select the "ProductionLine" client interface in the example.

   STEP 7 now interconnects the "ProductionLine" client interface with the parameters of the OPC_UA_Connect instruction:

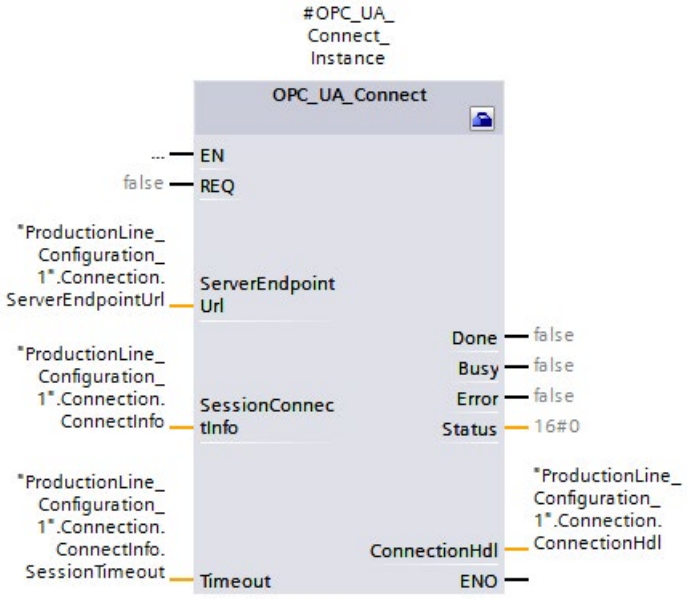

   "ProductionLine" is the interface that the OPC UA client of the example (Page 227) uses for data exchange with the OPC UA server "ProductionLine".

6. Using drag-and-drop, move the "**UA_NamespaceGetIndexList**" instruction into the program editor.

   You will find the instruction under "Instructions > Communication > OPC UA" in the TIA Portal.

   Select the "Multi-instance" call option.

   Click the toolbox symbol (LAD and FBD) or the small green box below the instance name (STL and SCL) if the editor is not already open.

   Select the client interface that you want to use ("ProductionLine" in the example).

   STEP 7 now automatically interconnects all parameters of the "OPC_UA_NamespaceGetIndexList" instruction:

7. Using drag-and-drop, move the "**UA_NodeGetHandleList**" instruction into the program editor.

   Select the "Multi-instance" call option.

   Click the toolbox symbol (LAD and FBD) or the small green box below the instance name (STL and SCL) if the editor is not already open.

   Select the client interface that you want to use. The example uses the "ProductionLine" client interface.

   Under "Data access > Read/Writelist" select the read list that you want to use (in the example the read list "Product").

   STEP 7 now automatically interconnects all parameters of the "OPC_UA_NodeGetHandleList" instruction:

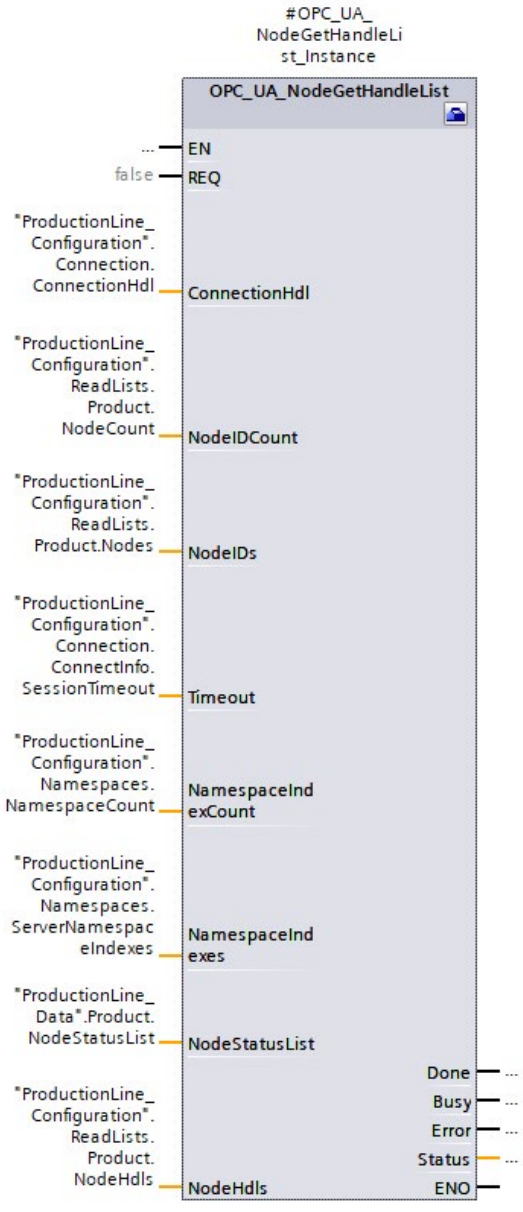

If you want to write data to an OPC UA server, select the write list you want to use under "Data access > Read/Writelist" (the "ProductionStatus" write list in the example).

8. Using drag-and-drop, move the "**UA_ReadList**" instruction into the program editor.

   Select the "Multi-instance" call option.

   Click the toolbox symbol (LAD and FBD) or the small green box below the instance name (STL and SCL) if the editor is not already open.

   Select the client interface that you want to use. The example uses the "ProductionLine" client interface.

   Under "Data access > Read/Writelist" select the read list that you want to use (in the example the "Product" read list).

   STEP 7 now automatically interconnects all parameters of the "OPC_UA_ReadList" instruction.

   If you want to write data to an OPC UA server, use the "**OPC_UA_Write**" instruction and select the list of tags you want to send to the server under "Data access > Writelist" ("ProductionStatus" write list in the example).

9. If you use different read lists or write lists as program-controlled lists in your user program, move the "**UA_NodeReleaseHandleList**" instruction to the program editor using drag-and-drop operation.

   Select the client interface that you want to use.

   Now select a read list or write list that you want to release: Only release read or write lists that you rarely use, since re-registering is time-consuming.

   Then, repeat the steps starting with step 7 with the "UA_NodeGetHandleList" instruction.

10. Using drag-and-drop, move the "**UA_Disconnect**" instruction into the program editor.

    Select the "Multi-instance" call option.

    Click the toolbox symbol (LAD and FBD) or the small green box below the instance name (STL and SCL) if the editor is not already open.

    Select the client interface that you want to use. The example uses the "ProductionLine" client interface.

    STEP 7 now automatically interconnects all parameters of the "OPC_UA_Disconnect" instruction.

Supported instructions

For the following instructions, STEP 7 automatically supplies the parameters if you are using a client interface and a configured connection to an OPC UA server:

- OPC_UA_Connect
- OPC_UA_NamespaceGetIndexList
- OPC_UA_NodeGetHandleList
- OPC_UA_MethodGetHandleList
- OPC_UA_MethodReleaseHandleList
- OPC_UA_ReadList
- OPC_UA_WriteList
- OPC_UA_MethodCall
- OPC_UA_NodeReleaseHandleList
- OPC_UA_Disconnect

Routing 10

10.1 S7 routing

Definition of S7 routing

S7 routing is the transfer of data beyond S7 subnet boundaries. You can send information from a transmitter to a receiver across several s7 subnets. The gateway from one S7 subnet to one or more other subnets is provided by the S7 router The S7 router is a device which has interfaces to the respective S7 subnets. S7 routing is possible via various S7 subnets (PROFINET/Industrial Ethernet and/or PROFIBUS).

Requirements for S7 routing

- All devices that can be reached in a network have been configured in a project in STEP 7 and downloaded.
- All devices involved in the S7 routing must receive routing information about the S7 subnets that can be reached through specific S7 routers. The devices obtain the routing information by downloading the hardware configuration to the CPUs, since the CPUs play the role of an S7 router.

  In a topology with several consecutive S7 subnets, the following order must be kept to when downloading: First download the hardware configuration to the CPU(s) directly connected to the same S7 subnet as the PG/PC, then download one by one the CPUs of the S7 subnets beyond this starting with the nearest S7 subnet through to the S7 subnet furthest away.
- The PG/PC you want to use to establish a connection via a S7 router must be assigned to the S7 subnet it is physically connected to. You can assign the PG/PC to a PG/PC in STEP 7 under Online & Diagnostics > Online accesses > Connection to interface/subnet.
- For S7 subnets of the type PROFIBUS: Either the CPU must be configured as DP master or, if it is configured as a DP slave, the "Test, commissioning, routing" check box must be selected in the properties of the DP interface of the DP slave.
- S7 routing for HMI connections is possible as of STEP 7 V13 SP1.

Note

Firewall and S7 routing

A firewall does not recognize the IP address of the sender during S7 routing when the sender is located outside the S7 subnet adjacent to the firewall.

An overview of the devices that support the "S7 routing" function is provided in this FAQ (https://support.industry.siemens.com/cs/ww/en/view/584459).

S7 routing for online connections

With the PG/PC, you can reach devices beyond S7 subnets, for example to do the following:

- Download user programs
- Download a hardware configuration
- Execute test and diagnostics functions

In the following figure, CPU 1 is the S7 router between S7 subnet 1 and S7 subnet 2.

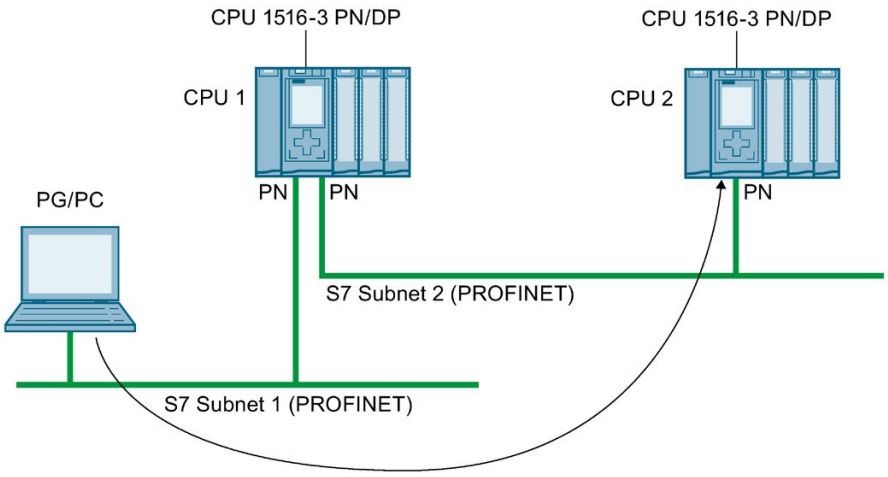

Figure 10-1 S7 routing: PROFINET - PROFINET

The following figure shows the access from a PG via PROFINET to PROFIBUS. CPU 1 is the S7 router between S7 subnet 1 and S7 subnet 2; CPU 2 is the S7 router between S7 subnet 2 and S7 subnet 3.

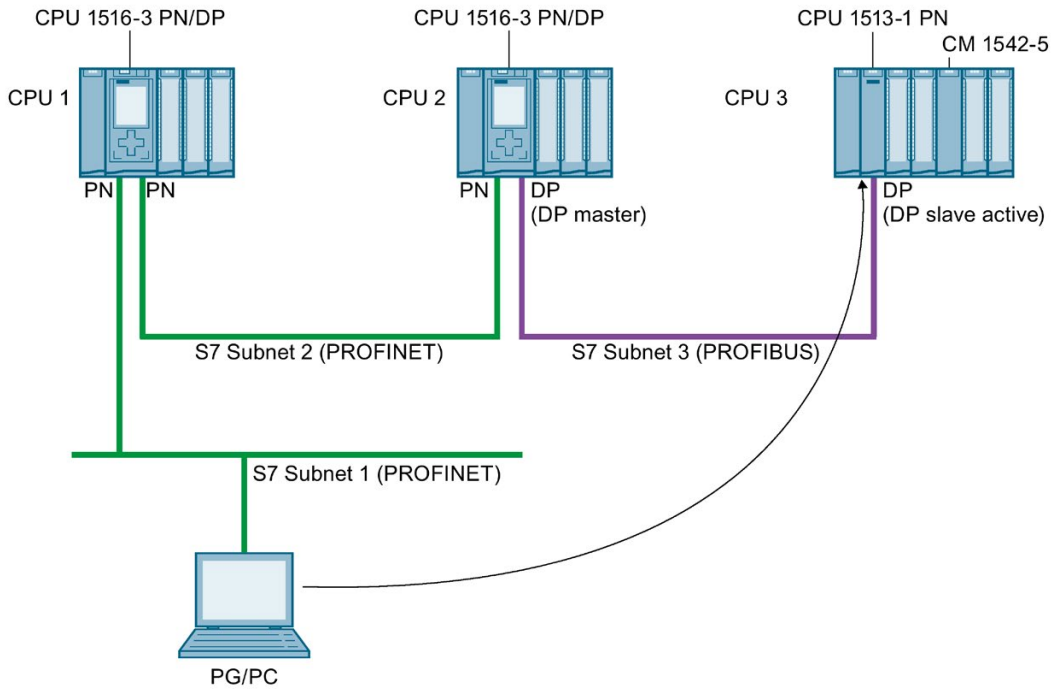

Figure 10-2 S7 routing: PROFINET - PROFIBUS

S7 routing for HMI connections

You have the option of setting up an S7 connection from an HMI to a CPU via different subnets (PROFIBUS and PROFINET or Industrial Ethernet). In the following figure, CPU 1 is the S7 router between S7 subnet 1 and S7 subnet 2.

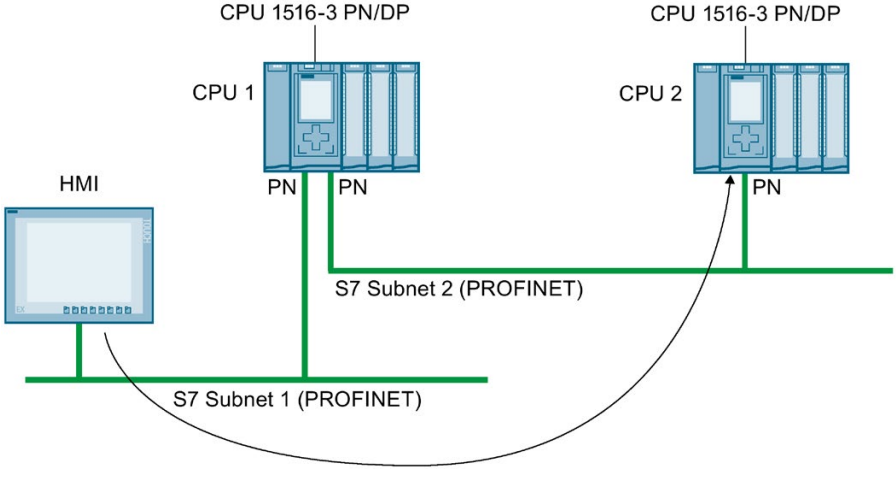

Figure 10-3 S7 routing via HMI connections

S7 routing for CPU-CPU communication

You have the option of setting up an S7 connection from a CPU to another CPU via different subnets (PROFIBUS and PROFINET or Industrial Ethernet). The procedure is described based on examples in the section S7 communication (Page 114).

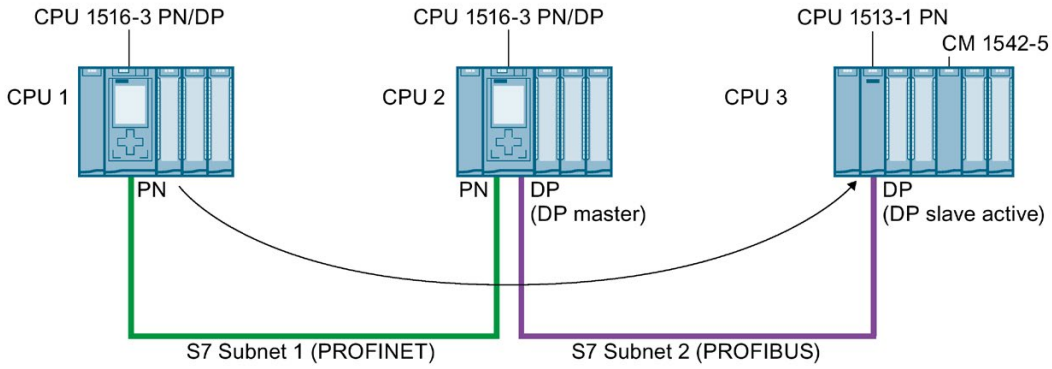

Figure 10-4 S7 routing via CPU-CPU communication

Using S7 routing

For the CPU, select the PG/PC interface and the S7 subnet in the "Go online" dialog of STEP 7. S7 routing is performed automatically.

Number of connections for S7 routing

The number of connections available for S7 routing in the S7 routers (CPUs, CMs or CPs) can be found in the technical specifications in the manuals of the relevant CPU/CM/CP.

S7 routing: Example of an application

The figure below shows the example of an application for remote maintenance of a system using a PG. The connection is made here beyond two S7 subnets via a modem connection.

You configure a remote connection via TeleService in STEP 7 using "Online access" or "Go online".

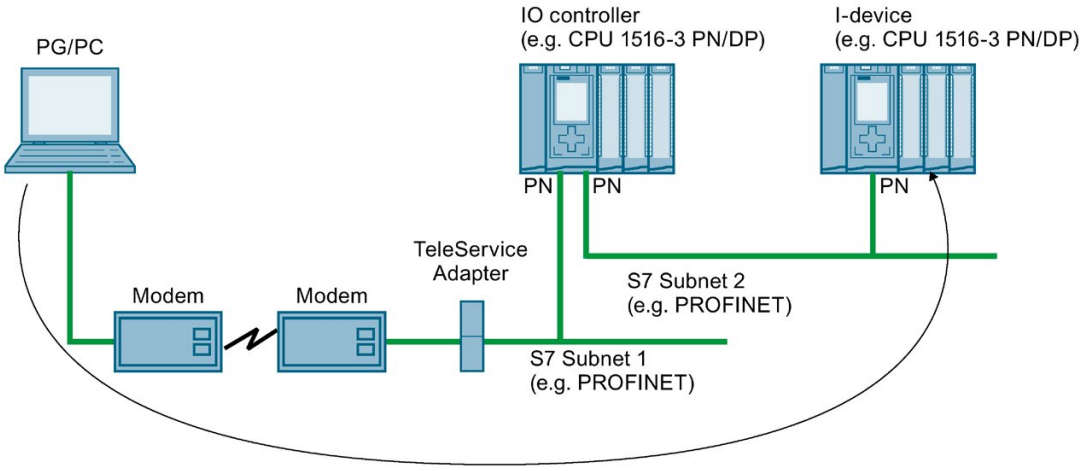

Figure 10-5 Remote maintenance of a plant using TeleService

Additional information

- The allocation of connection resources with S7 routing is described in the section Allocation of connection resources (Page 271).
- You can find more information on setting up TeleService in the STEP 7 online help.
- You can find more information on S7 routing and TeleService adapters when you search the Internet using the following links:
  - Device manual Industrial Software Engineering Tools TS Adapter IE Basic (http://support.automation.siemens.com/WW/view/en/51311100)
  - Downloads for the TS Adapter (http://support.automation.siemens.com/WW/view/en/10805406/133100)

See also

HMI communication (Page 65)

10.2 Data record routing

Definition of data record routing

Data can be sent over PROFINET from an engineering station to field devices via multiple networks. Since the engineering station addresses the field devices using standardized records and these records are routed via S7 devices, the term "data record routing" is used to refer to this type of routing.

The data sent using data record routing include the parameter assignments for the participating field devices (slaves) and device-specific information (e.g. setpoint values, limit values).

Data record routing is used, for example, when field devices of different manufacturers are used. The field devices are addressed using standardized data records (PROFINET) for configuration and diagnostics.

Data record routing with STEP 7

You can perform data routing with STEP 7 by calling a device tool (for example, PCT) via the TCI interface (Tool Calling Interface) and passing call parameters. The device tool uses the communication paths that STEP 7 also uses for communication with the field device.

No configuration is required for this type of routing except the installation of the TCI tools on the STEP 7 computer.

Example: Data record routing with the Port Configuration Tool (PCT)

You can use the Port Configuration Tool (PCT) to configure the IO link master of the ET200 and assign parameters to connected IO link devices. The subnets are connected via data record routers. Data record routers are, for example, CPUs, CPs, IMs, IO link master.

You can learn about the constellations of data record routers supported by the PCT in this FAQ (http://support.automation.siemens.com/WW/view/en/87611392).

The figure below shows an example configuration with the data record routing with PCT.

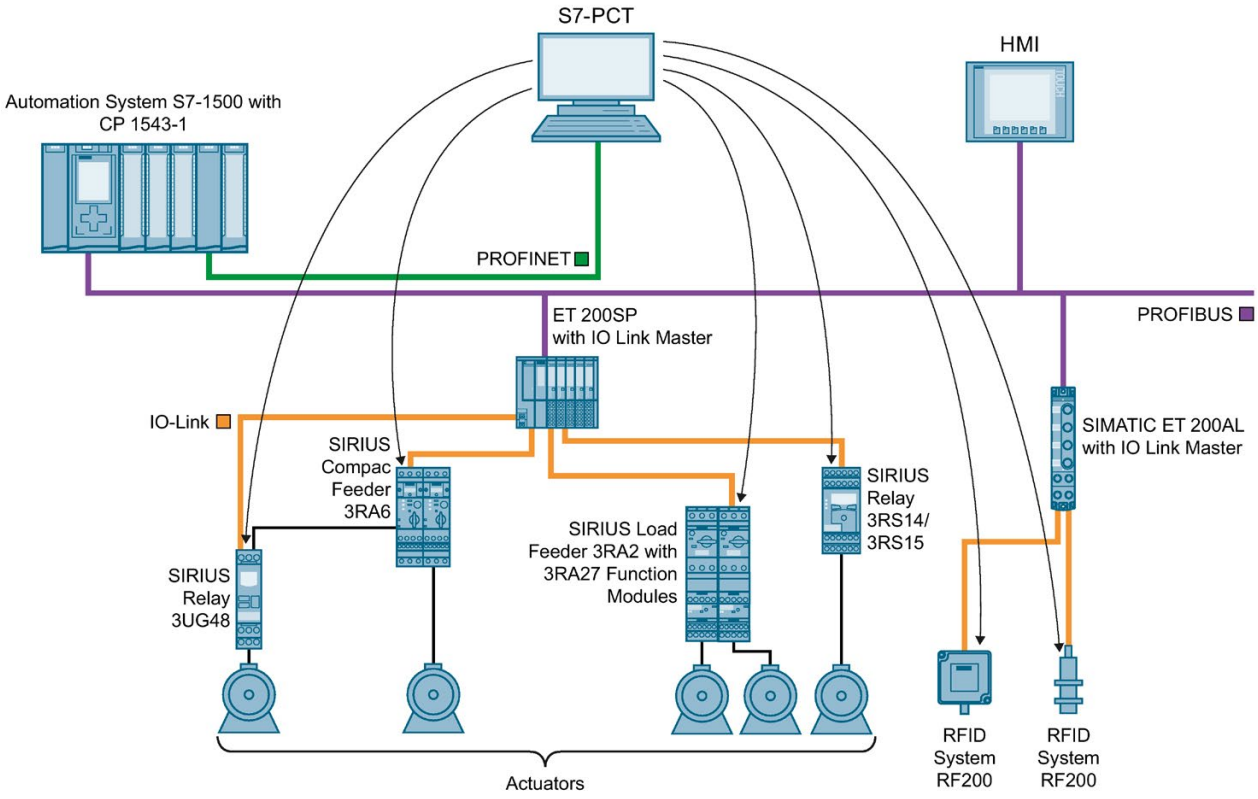

Figure 10-6 Example configuration for data record routing with PCT

Additional information

- The differences that exist between "normal" routing and data record routing are described in this FAQ (https://support.industry.siemens.com/cs/ww/en/view/7000978).
- Whether or not the CPU, CP or CM you are using supports data record routing can be found in the relevant manuals.
- The allocation of connection resources with data record routing is described in the section Allocation of connection resources (Page 271).
- You can find additional information on configuration with STEP 7 in the STEP 7 online help.

Connection resources 11

11.1 Connection resources of a station

Introduction

Some communications services require connections. Connections occupy resources in the automation system (station). The connection resources are made available to the station by the CPUs, communications processors (CPs) and communications modules (CMs).

Connection resources of a station

The connection resources available depend on the CPUs, CPs and CMs being used and must not exceed a maximum number per station.

The maximum number of resources of a station is determined by the CPU.

Each CPU has reserved connection resources for PG, HMI and Web server communication. This ensures, for example, that a PG can always establish at least one online connection with the CPU regardless of how many other communications services are already using connection resources.

In addition, dynamic resources exist. The difference between the maximum number of connection resources and the number of reserved connection resources is the maximum number of dynamic connection resources. The communications services PG communication, HMI communication, S7 communication, Open User Communication, Web communication and other communication (for example OPC UA) use the dynamic connection resources from the pool.

The figure below shows an example of how individual components make connection resources available to an S7-1500 station.

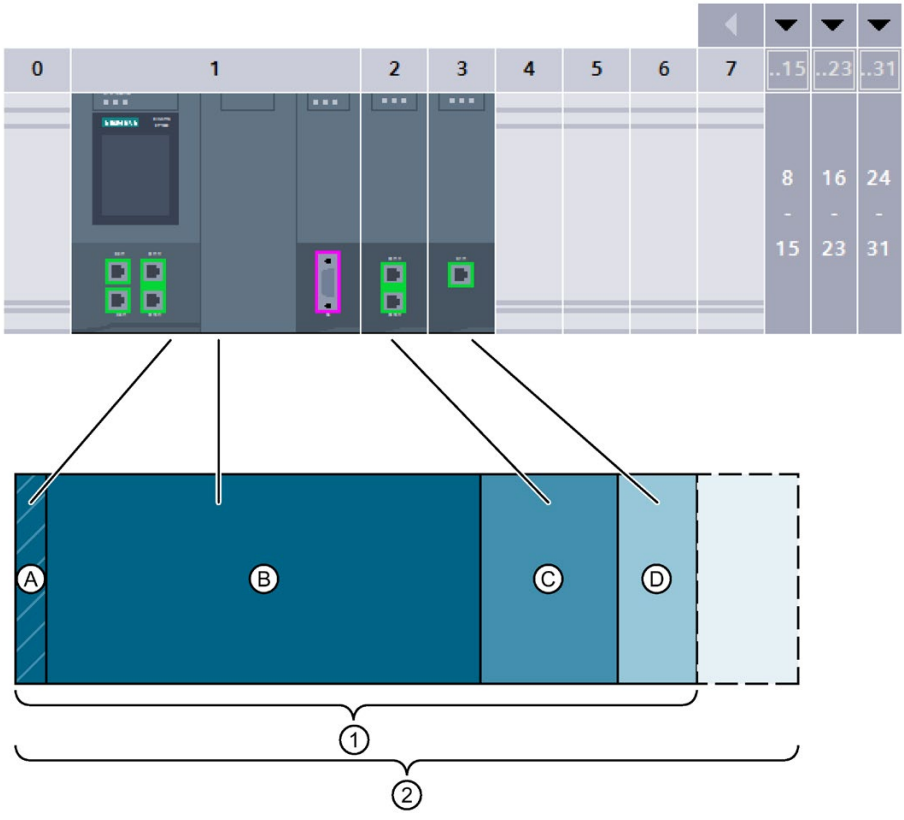

① Available connection resources of the station, of which

A	Reserved connection resources of the station
A + B	Connection resources of CPU 1518
C	Connection resources of communications module CM 1542-1
D	Connection resources of communications processor CP 1543-1

② Maximum communications resources of the station using the example of a configuration from CPU 1518, CM 1542-1 and CP 1543-1

Figure 11-1 Connection resources of a station

Number of connection resources of a station

Table 11- 1 Maximum number of connection resources supported for some CPU types

Connection resources of a station	1511 1511C	1512C 1513	1515	1516	1517	1518
Maximum connection resources of the station	96	128	192	256	320	384
of which reserved	10					
of which dynamic	86	118	182	246	310	374
Connection resources of the CPU	64	88	108	128	160	192
Max. additionally usable connection resources by plugging in CMs/CPs	32	40	84	128	160	192
Additional connection resources CM 1542-1	64					
Additional connection resources CP 1543-1	118					
Additional connection resources CM 1542-5	40					
Additional connection resources CP 1542-5	16					

The number of connection resources that a CPU or a communication module supports is specified in the device manuals in the Technical Specifications.

Example

You have configured a CPU 1518-4PN/DP with a communications module CM 1542-1 and a communications processor CP 1542-5.

- Maximum connection resources of the station: **384**
- Available connection resources:
  - CPU 1518-4 PN/DP: 192
  - CM 1542-1: 64
  - CP 1542-5: 16
  - Total: **272**

The setup provides 272 connection resources. By adding additional communications modules, the station can support a maximum of 112 additional connection resources.

Reserved connection resources

10 connection resources are reserved for stations with S7-1500 CPU, ET 200SP CPU and ET 200pro CPU based on S7-1500:

- 4 for PG communication required by STEP 7, for example, for test and diagnostics functions or downloading to the CPU
- 4 for HMI communication which are occupied by the first HMI connections configured in STEP 7
- 2 for communication with the Web server

11.2 Allocation of connection resources

Overview - occupation of connection resources

The following figure shows how different connections occupy the resources of the S7-1500.

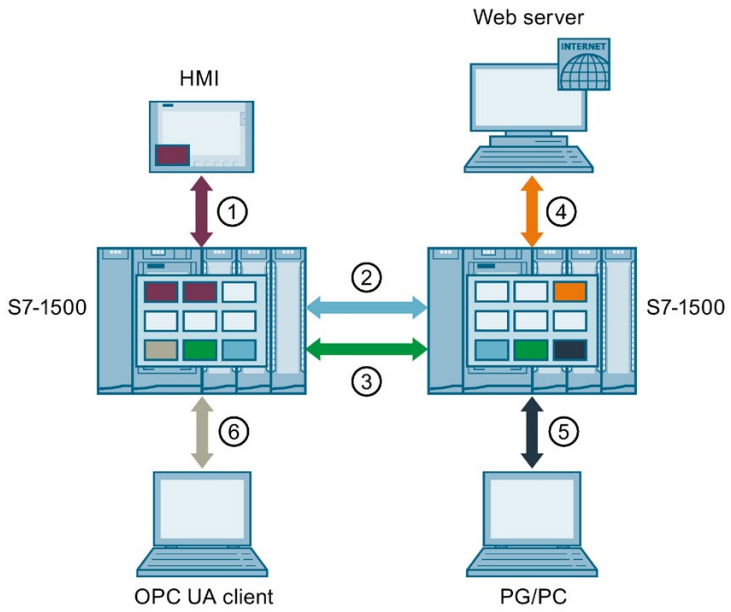

① HMI communication: See below.

② Open User Communication: Connections of Open User Communication occupy a connection resource in every end point.

③ S7 communication: Connections of S7 communication occupy a connection resource in every end point.

④ Web communication: The Web server connection occupies at least one connection resource in the station. The number of occupied connections depends on the browser.

⑤ PG communication: The PG connection occupies one connection resource in the station.

⑥ OPC UA communication: Each session that the OPC UA server of the CPU establishes with an OPC UA client as a rule occupies one connection resource (other communication) in the station.

Connection resource for HMI communication

Connection resource for Open User Communication

Connection resource for S7 communication

Connection resource for Web communication

Connection resource for PG communication

Connection resource for other communication (for example OPC UA)

Figure 11-2 Allocation of connection resources

Connection resources for HMI communication

With HMI communication, the occupation of connection resources in the station depends on the HMI device being used.

Table 11- 2 Maximum occupied connection resources for different HMI devices

HMI device	Maximum occupied connection resources of the station per HMI connection
Basic Panel	1
Comfort Panel	2[1]
RT Advanced	2[1]
RT Professional	3

[1] If you do not use system diagnostics or alarm configuration, the station occupies only one connection resource per HMI connection.

Example: You have configured the following HMI connections for a CPU 1516-3 PN/DP:

- Two HMI connections to an HMI TP700 Comfort. (2 connection resources each)
- One HMI connection to an HMI KTP1000 Basic. (1 connection resource)

In total 5 connection resources are occupied for HMI communication in the CPU.

Connection resources for routing

To transfer data beyond S7 subnets ("S7 routing"), an S7 connection is established between two CPUs. The S7 subnets are connected via gateways known as S7 routers. CPUs, CMs and CPs in S7-1500 are S7 routers.

The following applies for a routed S7 connection:

- A routed connection occupies one connection resource each in both end points. STEP 7 shows these connection resources in the "Connection resources" table.
- On the S7 router, two special connection resources are occupied for S7 routing. STEP 7 does not show the special connection resources for S7 routing in the "Connection resources" table. The number of resources for S7 routing depends on the CPU. You will find the resources for S7 routing in the technical specifications of the CPU in "Number of S7 routing connections".

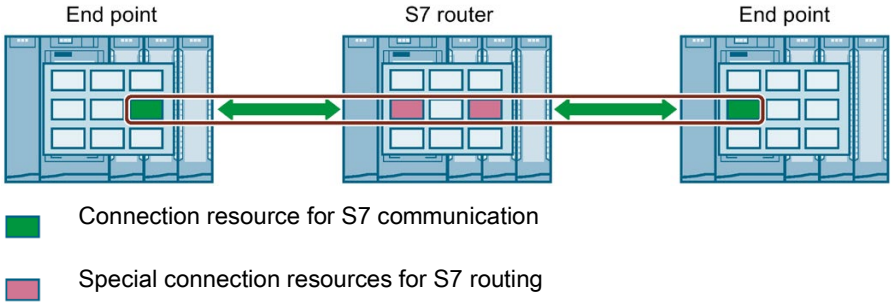

Figure 11-3 Connection resources with S7 routing

Data record routing also enables transfer of data beyond S7 subnets from an engineering station connected to PROFINET to various field devices via PROFIBUS.

With data record routing, as with S7 routing, two of the special connection resources for S7 routing are also occupied on every data record router.

Note

Connection resources with data record routing

With data record routing, on the data record router, two special connection resources for S7 routing are occupied. Neither the data record connection nor the allocated connection resources are displayed in the table of connection resources.

When are connection resources occupied?

The time for the occupation of connection resources depends on how the connection is set up (see section Setting up a connection (Page 30)).

- **Programmed setup of a connection**:
  As soon as an instruction to establish a connection is called in the user program (TSEND_C/TRCV_C or TCON), a connection resource is occupied.

  With suitable parameter assignment of the CONT parameter of the TSEND_C/TRCV_C instructions or by calling the TDISCON instruction, the connection can be terminated following data transfer and the connection resource is available again. When the connection is terminated, the connection resources on the CPU/CP/CM are available again.
- **Configured connections** (e.g. HMI connection):
  If you have configured a connection in STEP 7, the connection resource is occupied as soon as the hardware configuration is downloaded to the CPU.

  After using a configured connection for data transfer, the connection is not terminated. The connection resource is permanently occupied. To release the connection resource again, you need to delete the configured connection in STEP 7 and download the modified configuration to the CPU.
- **PG connection**:
  As soon as you have connected the PG to a CPU online in STEP 7, connection resources are occupied.
- **Web server**:
  As long as you have opened the Web server of the CPU in a browser, connection resources are occupied in the CPU.
- **OPC UA server**:
  A connection resource is occupied in the CPU as long as a session exists between the OPC UA server of the CPU and an OPC UA client.

Monitoring the maximum possible number of connection resources

Offline

During configuration of connections, STEP 7 monitors the occupation of the connection resources. If the maximum possible number of connection resources is exceeded, STEP 7 signals this with a suitable warning.

Online

The CPU monitors the use of connection resources in the automation system. If you establish more connections in the user program than those provided by the automation system, the CPU acknowledges the instruction to establish the connection with an error.

S7-1500 and S7-300 comparison

You will find a comparison of how the communication resources of the S7-1500 and S7-300 are managed in this FAQ (https://support.industry.siemens.com/cs/ww/en/view/109747092).

11.3 Display of the connection resources

Display of the connection resources in STEP 7 (offline view)

You can display the connection resources of an automation system in the hardware configuration. You will find the connection resources in the Inspector window in the properties of the CPU.

Connection resources

	① Station resources			② Module reso...	Module reso..	Module reso...
	Reserved		Dynamic ⚠	PLC_1 [CPU ...	CP 1543-1_...	CM 1542-5_...
Maximum number of resources:		10	246	128	118	48
	Maximum	Configured	Configured	Configured	Configured	Configured
PG communication:	4	-	-	-	-	-
HMI communication:	4	4	6	6	4	0
S7 communication:	0	-	23	2	0	21
Open user communication:	0	-	52	39	13	0
Web communication:	2	-	-	-	-	-
Other communication:	-	-	0	0	0	0
Total resources used:		4	81	47	17	21
Available resources:		6	165	81	101	27

Figure 11-4 Example: Reserved and available connection resources (offline view)

① Station-specific connection resources

The columns of the station-specific connection resources provide information about the used and available connection resources of the station.

In the example, a maximum of 256 station-specific connection resources are available for the automation system.

- 10 reserved connection resources, of which 4 are already in use and a further 6 available. The used resources are divided up as follows:
  - 4 Resources for HMI communication
- 246 dynamic connection resources, of which 81 are already in use and a further 165 available.
  The used resources are divided up as follows:
  - 6 resources for HMI communication
  - 23 Resources for S7 communication
  - 52 resources for Open User Communication

The warning triangle in the column of the dynamic station resources is therefore displayed because the sum of the maximum available connection resources of CPU, CP and CM (= 294 connection resources) exceeds the station limit of 256.

Note

Available connection resources exceeded

STEP 7 signals the exceeding of the station-specific connection resources with a warning. To make full use of the connection resources from the CPU, CP and CM, either use a CPU with a higher maximum number of available station-specific connection resources or reduce the number of communications connections.

---

② Module-specific connection resources

The columns of the module-specific connection resources provide information about the use of resources on the CPUs, CPs and CMs of an automation system:

The display is per module and not per interface.

In the example, the CPU makes 128 connection resources available, of which 47 are already in use and a further 81 still available.
The used resources are divided up as follows:

- 6 resources for HMI communication
- 2 resources for S7 communication
- 39 resources for Open User Communication

Display of the connection resources in STEP 7 (online view)

If you are connected to the CPU online, you can also see how many resources are currently being used under "Connection information".

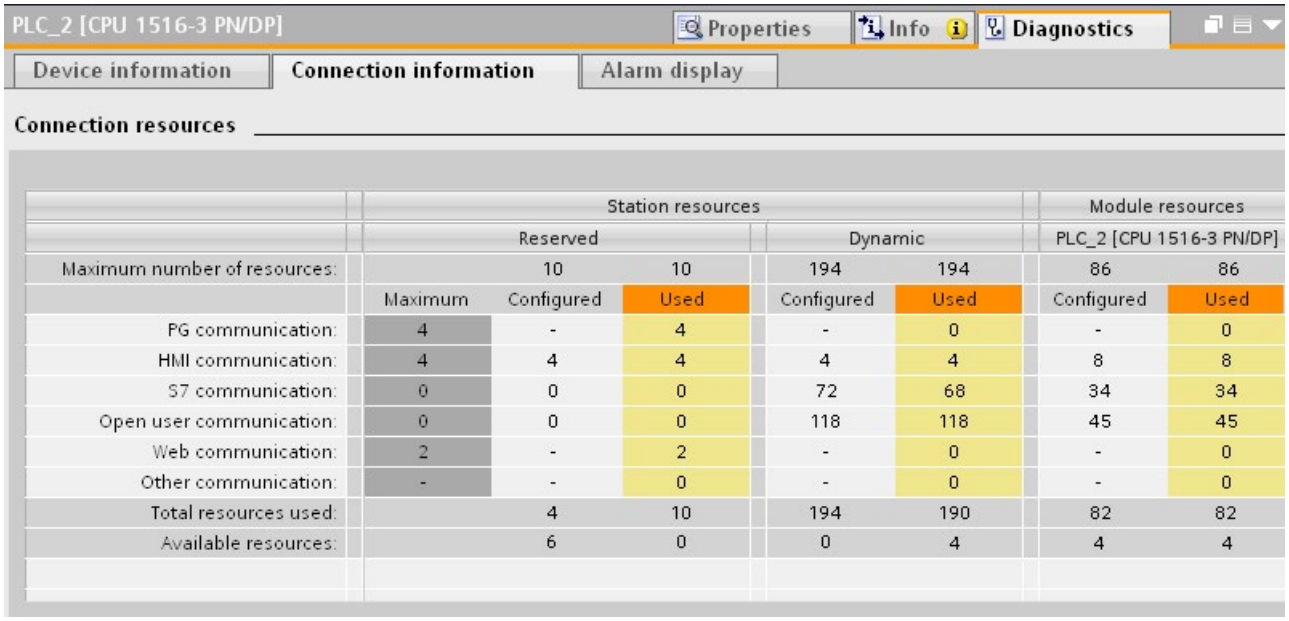

	Station resources					Module resources	
	Reserved			Dynamic		PLC_2 [CPU 1516-3 PN/DP]	
Maximum number of resources:		10	10	194	194	86	86
	Maximum	Configured	Used	Configured	Used	Configured	Used
PG communication:	4	-	4	-	0	-	0
HMI communication:	4	4	4	4	4	8	8
S7 communication:	0	0	0	72	68	34	34
Open user communication:	0	0	0	118	118	45	45
Web communication:	2	-	2	-	0	-	0
Other communication:	-	-	0	-	0	-	0
Total resources used:		4	10	194	190	82	82
Available resources:		6	0	0	4	4	4

Figure 11-5 Connection resources - online

The online view of the "Connection resources" table in addition to the offline view also contains columns with the connection resources currently being used. Thus, the online view displays **all** used connection resources in the automation system, regardless of how the connection was set up.

The "Other communication" row displays connection resources assigned for communication with external devices. The table is updated automatically.

Note

If a routed S7 connection goes through a CPU, the required connection resources of the CPU do not appear in the table of connection resources.

Display of the connection resources for HMI

For information regarding the availability and assignment of connection resources for HMI connections, refer to the "Connection resources" properties in the Inspector window of the offline view (in the context of the HMI device).

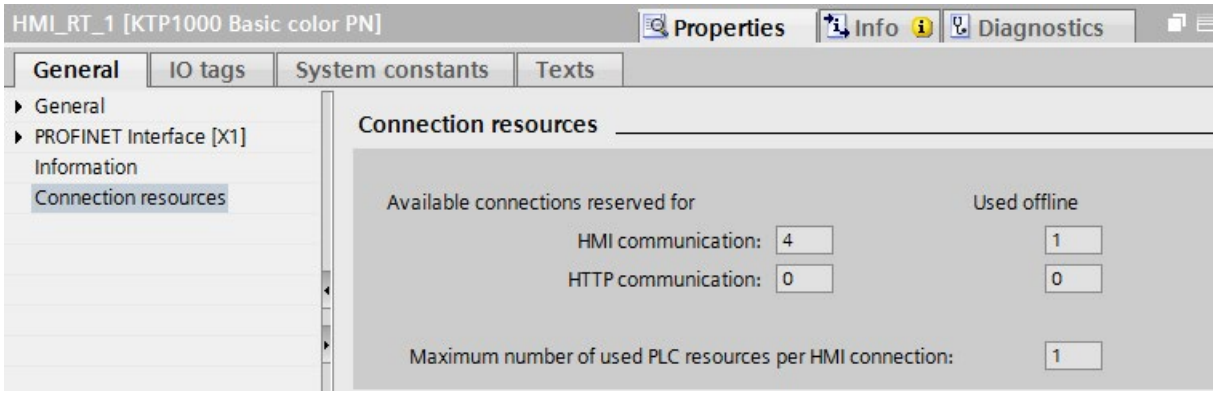

Figure 11-6 Connection resources - HMI communication

The following is displayed in the connection resources area:

- Number of available connections on the HMI reserved for HMI communication and HTTP communication
- Number of connection resources for HMI communication and HTTP communications used offline in the HMI

  If the maximum number of available connection resources for an HMI device is exceeded, a corresponding message is output by STEP 7.
- "Maximum number of used PLC resources per HMI connection". This parameter is a factor that is to be multiplied by the number of HMI connections used offline. The product is the number of HMI resources occupied on the CPU.

Displaying the connection resources in the Web server

You can display the connection resources not only in STEP 7, but also with a browser that displays the relevant page of the Web server.

You will find information on displaying connection resources in the Web server in the Web Server (http://support.automation.siemens.com/WW/view/en/59193560)function manual.

Diagnostics and fault correction 12

12.1 Connection diagnostics

Connections table in the online view

After selecting a CPU in the Devices & networks editor of STEP 7, you will see the status of your connections displayed in the online view of the connections table.

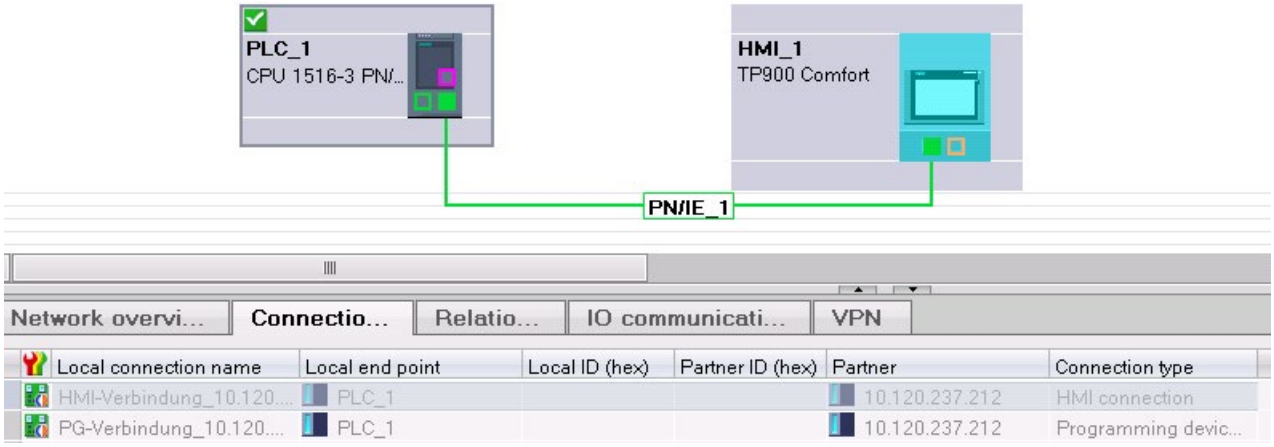

Figure 12-1 Online view of the connections table

After selecting the connection in the connections table, you obtain detailed diagnostic information in the "Connection information" tab.

"Connection information" tab: Connection details

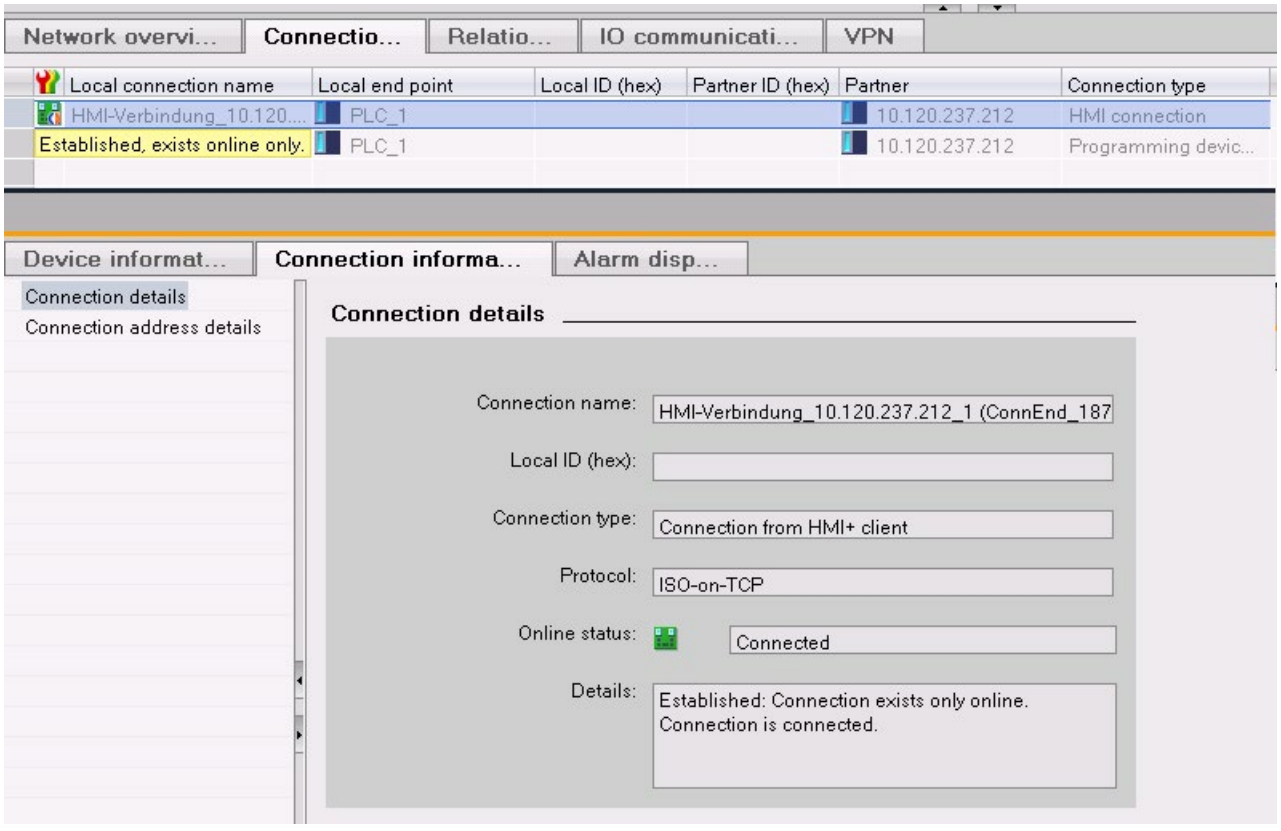

Figure 12-2 Diagnostics of connections - connection details

"Connection information" tab: Address details

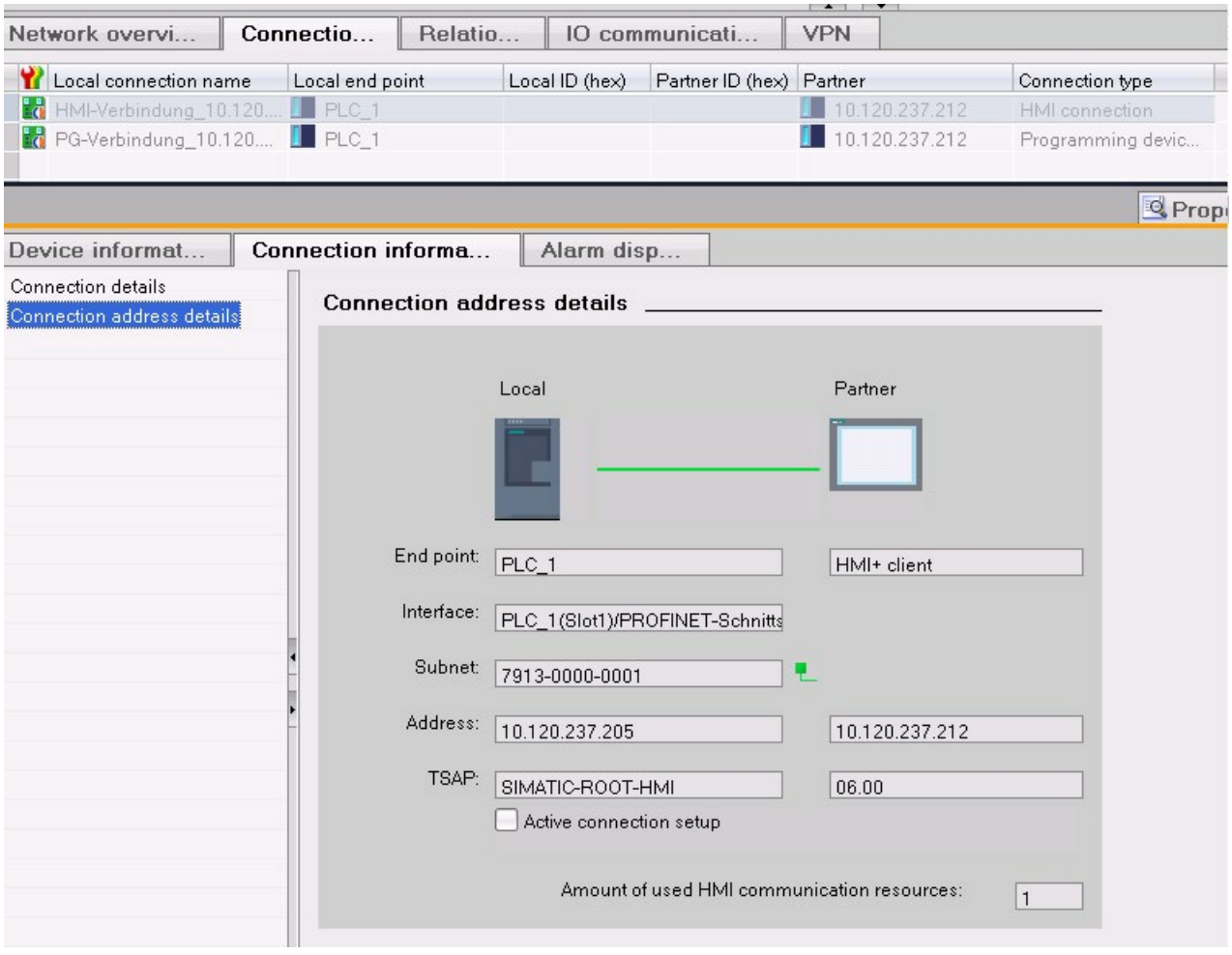

Figure 12-3 Diagnostics of connections - address details

Diagnostics via web server

You can evaluate diagnostic information from the CPU using a web browser via the integrated web server of a CPU.

On the "Communication" Web page, you will find the following information about communication via PROFINET in various tabs:

- Information on the PROFINET interfaces of the CPU (for example addresses, subnets, physical properties).
- Information on the quality of the data transfer (for example number of data packets sent/received error-free).
- Information about the allocation/availability of connection resources.
- The "Connection status" page is similar to the online view in STEP 7 and also provides an overview of all connections with detail view.

Diagnostics with the user program

When you program the T_DIAG instruction, you can evaluate diagnostic information about the configured and programmed connections of the CPU using the user program.

Additional information

You will find the description of the web server functionality in the function manual Web server (http://support.automation.siemens.com/WW/view/en/59193560).

12.2 Emergency address

If you cannot reach the CPU via the IP address, you can set a temporary emergency address (emergency IP) for the CPU. Via this emergency address, you can re-establish the connection with a CPU in order to load a device configuration with a valid IP address.

You can set an emergency address regardless of the protection level of the CPU

When do you need an emergency address?

Your CPU cannot be reached in the following cases:

- The IP address of your PROFINET interface is assigned twice.
- The subnet mask is set incorrectly.

Requirements

- You have selected "Set IP address in the project" for the IP protocol in the device configuration in STEP 7.
- The CPU is in STOP mode.

Restoring a valid device configuration with an emergency address

1. Set the emergency address for the interface of the CPU with a DCP tool. For example, the SIMATIC Automation Tool has a DCP command "Define IP address".
   The maintenance LED of the CPU lights up. The diagnostic buffer also shows that an emergency address was activated for an Ethernet interface.
2. Load a STEP 7 project with a valid IP address into the CPU.
3. Switch the CPU off and on again.
   The emergency address is reset.

Result

The CPU starts up with the valid IP address.

Communication with the redundant system S7-1500R/H

13

Introduction

Communication with the S7-1500R/H redundant system basically functions as with the S7-1500 standard system.

This chapter describes the special features and restrictions for communication with the S7-1500R/H redundant system.

Communication options for the S7-1500R/H redundant system

- Open User Communication via TCP/IP, UDP and ISO-on-TCP
- S7 communication as server
- HMI communication
- PG communication
- SNMP
- Time-of-day synchronization via NTP

Restrictions for communication with the S7-1500R/H redundant system

- Open User Communication:
  - no configured connections
  - Secure Open User Communication: Not supported as certificate management is not possible for the R/H CPUs:

    If you have activated Secure OUC, then although you can compile the user program and load it, you cannot add certificates to the R/H-CPUs.
  - no FDL connections
  - Email: The S7-1500R/H CPUs with firmware version V2.6 do not support versions < V5.0 of the "TMAIL_C" instruction. Version V5.0 is not supported.
  - No support of connection descriptions according to "TCON_Param"
- no OPC UA
- no S7 communication as client
- no web server
- PG communication:
  - It is not possible to access two CPUs online at the same time. You can either access the primary CPU or the backup CPU.
  - Downloading blocks in redundant mode is not possible.
  - No support of the function "Upload device as new station"
- No S7-routing between the PROFINET interface X1 and the PROFINET-interface X2 of the CPUs
- The CPUs of the S7-1500R/H do not support any central communication modules

13.1 System IP addresses

The system IP address of the S7-1500R/H redundant system

In addition to the device IP addresses of the CPUs, the S7-1500R/H redundant system supports system IP addresses:

- System IP address for the PROFINET interfaces X1 of the two CPUs (system IP-address X1)
- System IP address for the PROFINET interfaces X2 of the two CPUs (system IP-address X2)

You use the system IP addresses for communication with other devices (for example, HMI devices, CPUs, PG/PC). The devices always communicate via the system IP address with the primary CPU of the redundant system. This ensures, for example, that the communication partner can communicate with the new primary CPU (previously backup CPU) in the RUN-Solo system state after failure of the original primary CPU in redundant operation.

There is a virtual MAC address for each system IP address.

You enable the system IP addresses in STEP 7.

Advantages of the system IP addresses compared to device IP addresses

- The communication partner communicates specifically with the primary CPU.
- Communication of the S7-1500R/H redundant system via a system IP address still also works in the event of the failure of the primary CPU.

Applications

You use the system IP addresses for the following applications:

- HMI communication with the S7-1500R/H redundant system: With an HMI you manage or monitor the process on the S7-1500R/H redundant system.
- Open User Communication with the S7-1500R/H redundant system:
  - Another CPU or an application on a PC accesses data of the S7-1500R/H redundant system.
  - The S7-1500R/H redundant system accesses a different device.

  TCP, UDP and ISO-on-TCP-connections are possible.

Requirements

- The communication partner and the PROFINET interfaces of the two CPUs are located in the same subnet.
- The communication partner is connected to both CPUs, each via the same interface (e.g. X2).
- The system IP address is enabled.

Communication via the system IP address X2

If the CPUs of the S7-1500R/H redundant system have two PROFINET interfaces, preferably use the PROFINET interface X2 for communication with other devices.

The following figure shows a configuration in which the communication partners are connected via the respective PROFINET interfaces X2 with the CPUs of the redundant system S7-1500R/H.

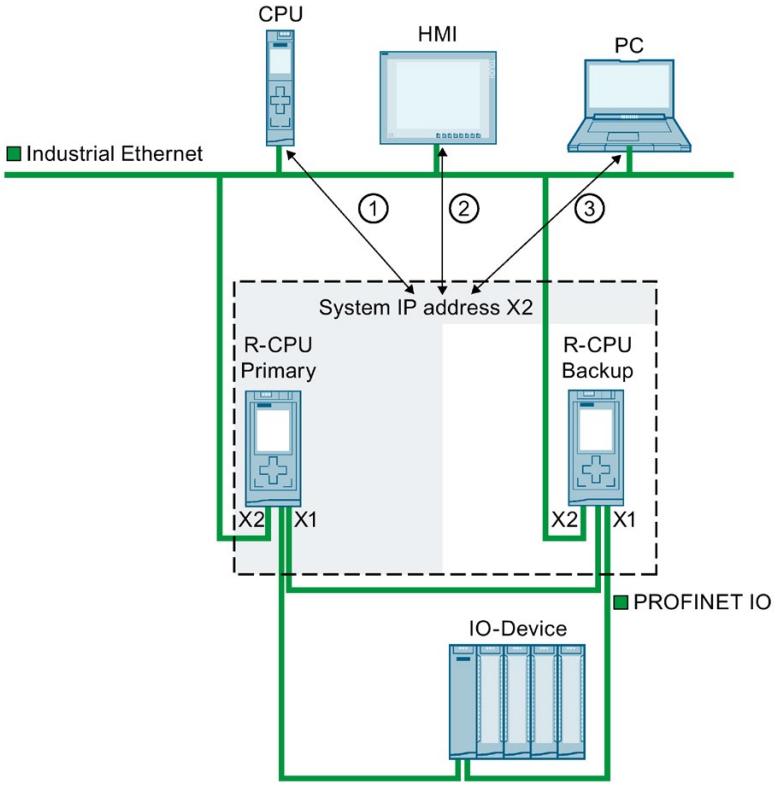

① Open User Communication between a different CPU and the S7-1500R/H redundant system
② HMI communication with the S7-1500R/H redundant system
③ Open User Communication between the S7-1500R/H redundant system and a PC

Figure 13-1 Example: Communication of the S7-1515R redundant system via the system IP address X2

Communication via the system IP address X1

The following diagram shows a configuration where the communication partners are connected with a switch to the PROFINET ring of the S7-1500R/H redundant system. The PROFINET ring connects the communication partners with the respective PROFINET interfaces X1 of the two CPUs.
As the CPU 1513R only has one PROFINET interface, connection via the PROFINET ring is the only possibility of communicating via the system IP address X1.

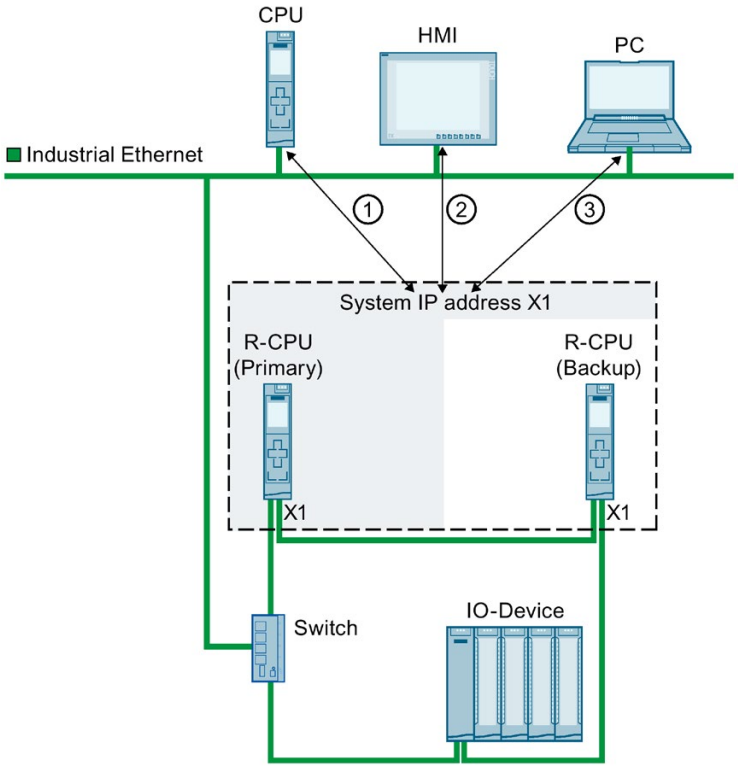

① Open User Communication between the S7-1500R/H redundant system and a different CPU
② HMI communication with the S7-1500R/H redundant system
③ Open User Communication between the S7-1500R/H redundant system and a PC

Figure 13-2 Example: Communication of the S7-1513R redundant system via the system IP address X1

Communication via the system IP addresses X1 and X2

If the CPUs of the redundant system S7-1500R/H have two PROFINET interfaces (X1 and X2), you can use the a system IP address for each PROFINET interface. PROFINET devices which are connected to the interfaces X1 of the CPUs communicate via the system IP address X1. PROFINET devices which are connected to the interfaces X2 of the CPUs communicate via the system IP address X2.

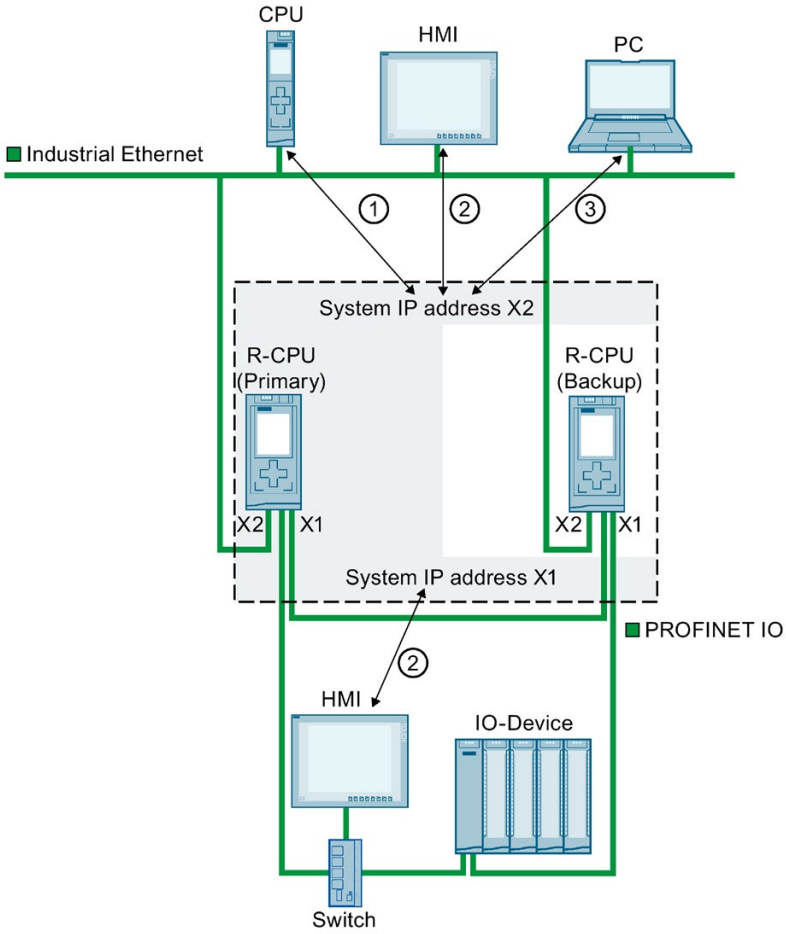

① Open User Communication between the S7-1500R/H redundant system and a different CPU.

② HMI communication with the S7-1500R/H redundant system

③ Open User Communication between the S7-1500R/H redundant system and a PC

Figure 13-3 Example: Communication of the S7-1515R redundant system via the system IP addresses X1 and X2

Enable system IP addresses

Requirements:

- STEP 7 V15.1 or higher
- redundant system S7-1500R/H with two CPUs, e.g. two CPUs 1513R-1PN

If the CPUs of the S7-1500R/H redundant system have two PROFINET interfaces (X1 and X2), then you can use a system IP address for both PROFINET interfaces. The following section describes how to enable the system IP address for the interface X1.

Proceed as follows to enable the system IP address for your S7-1500R/H redundant system:

1. In the network view of STEP 7, select the interface X1 of one of the two CPUs.
2. In the Inspector window go to "Properties" > "General" > "Ethernet addresses" in the area "System IP address for switched communication".
3. Select the check box "Enable the system IP address for switched communication".

   STEP 7 automatically creates a system IP address.

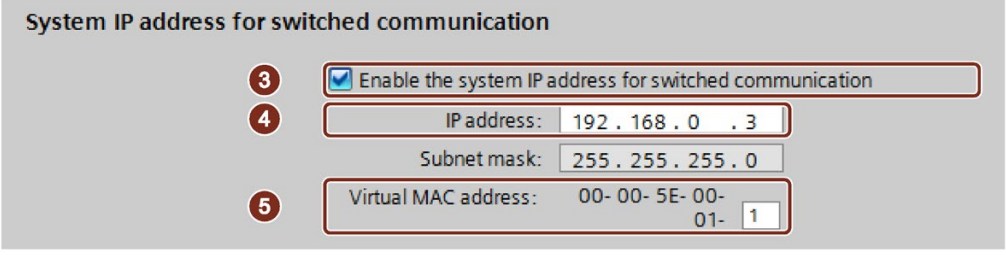

Figure 13-4 Configure IP address

4. Change the system IP address if necessary.
5. If required, change the virtual MAC address. To do this, in "Virtual MAC address", assign a project-wide unique value (value range 01_H to FF_H) for the last byte.

Note

Uniqueness of the virtual MAC address

The redundant system S7-1500R/H uses the Virtual Router Redundancy Protocol (VRRP) for the system IP address and associated virtual MAC address.
If you use further devices with VRRP, e.g. switches, ensure the uniqueness of the Mac addresses within an Ethernet-Broadcast-Domain.

Result: The system IP address X1 for the PROFINET interface X1 of the two CPUs is enabled.

13.2 Response to Snycup

Response of communication connections via the system IP address in the system state SYNCUP

- HMI, PG- and S7-connections are temporarily closed. For a short time during the SYNCUP it is not possible to establish connections to the S7-1500R/H redundant system.
- All existing connections of Open User Communication are interrupted:
  - Connections set up by the CPUs of the redundant system as an active connection partner are set up again after the SYNCUP.
  - The S7-1500R/H redundant system sets up connection endpoints again for the passive connection establishment after the SYNCUP.
- The processing of running instances of the instructions TSEND and TRCV is stopped. The block parameter STATUS returns $80C4_H$ (temporary communication error).

13.3 Response to primary-backup switchover

Response of communication connections via the system IP address during a primary-backup switchover

- Running instances of the instructions TSEND and TRCV are stopped and return the status $80C4_H$ (temporary communication error).
- Connections successfully established by the S7-1500R/H redundant system are established again by the new primary CPU.
- The new primary CPU sets up connection endpoints again for the passive connection establishment.

13.4 Connection resources of the redundant system S7-1500R/H

Maximum number of connection resources of the S7-1500R/H redundant system

The S7-1500R/H redundant system supports a maximum number of connection resources.

The CPU used defines the maximum number of resources for an S7-1500R/H station:

- CPU 1513R: max. 88 connection resources
- CPU 1515R: max. 108 connection resources
- CPU 1517H: max. 160 connection resources

Allocation of connection resources

Communication connections occupy communication resources in the S7-1500R/H redundant system.

Each communication connection to the S7-1500R/H redundant system occupies communication resources in the S7-1500R/H station. Depending on the IP address used, a communication connection also occupies resources in one or both CPUs of the S7-1500R/H redundant system.

The following table shows in which CPU a communication connection occupies connection resources depending on the IP address used.

Connect via...	Connection resources of the station	Connection resources CPU with redundancy ID 1	Connection resources CPU with redundancy ID 2
a system IP address	X	X	X
a device IP address of the CPU with redundancy ID 1	X	X	-
a device IP address of the CPU with redundancy ID 2	X	-	X

Display of the occupied connection resources in STEP 7

Requirements: Online connection to the redundant system S7-1500R/H

You will find the online display of the connection resources in the inspector window under "Diagnostics" > "Connection information". STEP 7 always displays the connection resources of the selected CPU and the S7-1500R/H-station.

Connection resources

	Station resources					Module resources	
	Reserved			Dynamic		CPU 1517H-3 PN (R0/S1)	
Maximum number of resources:		10	10	150	150	160	160
	Maximum	Configured	Used	Configured	Used	Configured	Used
PG communication:	4	-	2	-	0	-	2
HMI communication:	4	0	0	0	0	0	0
S7 communication:	0	-	0	0	0	0	0
Open user communication:	0	-	0	0	0	0	0
Web communication:	2	-	0	-	0	-	0
Other communication:	-	-	0	0	0	0	0
Total resources used:		0	2	0	0	0	2
Available resources:		10	8	150	150	160	158

Figure 13-5 Display of the connection resources of the S7-1500R/H redundant system in STEP 7

13.5 HMI communication with the redundant system S7-1500R/H

13.5.1 HMI connection via the system IP address

Requirements

- redundant system S7-1500R/H, e.g. CPU 1513R-1PN
- System IP address is enabled
- HMI device with PROFINETI-interface

Procedure

To set up a HMI connection to an S7-1500R/H redundant system, follow these steps:

1. In the network view of STEP 7, select a PROFINET interface of the HMI device.
2. Using a drag&drop operation, draw a line between the PROFINET interface of the HMI device and a PROFINET-interface of the S7-1500R/H redundant system.
   The HMI-device and the S7-1500R/H redundant system are networked together.

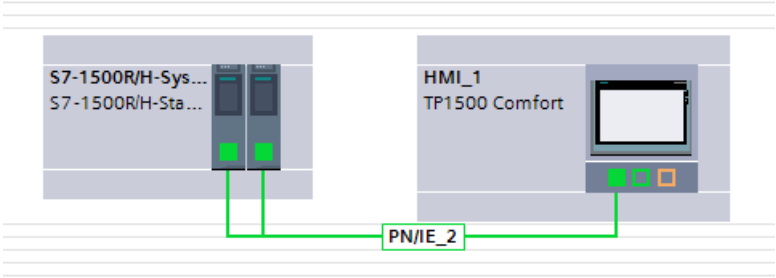

Figure 13-6 Networking an HMI device with the S7-1500R/H redundant system

3. In the list of functions, click the "Connections" icon. This activates connection mode.
4. Using a drag-and-drop operation, draw a line between the HMI device and a CPU of the S7-1500R/H redundant system.
   The list "Connection partners" opens.

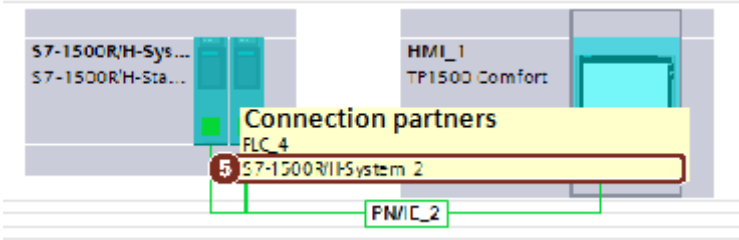

Figure 13-7 Setting up an HMI connection to the S7-1500R/H redundant system

5. Select the S7-1500R/H redundant system in the list "Connection partners".

Result: You have set up a HMI connection between the HMI device and the S7-1500R/H redundant system. The HMI connection uses the system IP address. The HMI device always connects to the primary-CPU.

Changing the HMI connection over to the device IP address

To permanently change the HMI connection over to the selected CPU, clear the check box "Use the system IP address for switched communication" in the properties of the HMI connection. The HMI connection then uses the device IP address of the PROFINET interface. In the event of the failure of this CPU, then the HMI connection to this CPU permanently fails.

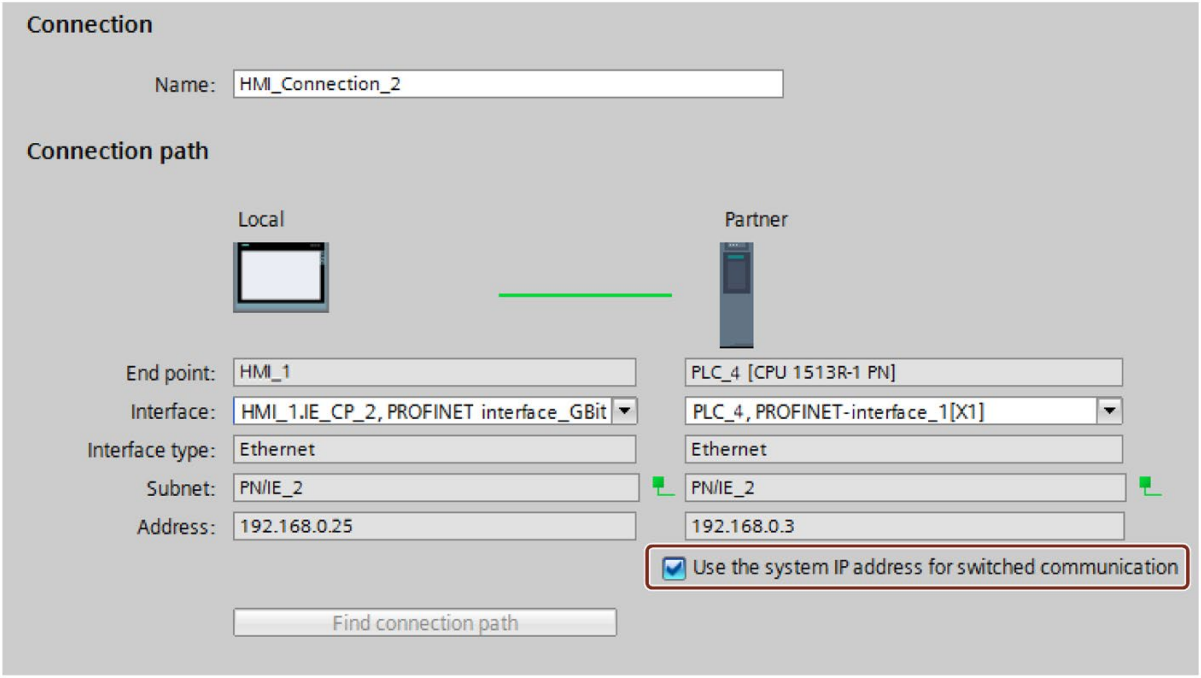

Figure 13-8 Properties of the HMI connection

Note

Automatic setup of HMI connection

When you drag-and-drop a tag from the S7-1500R/H redundant system into an HMI screen or into the HMI tag table, STEP 7 automatically sets up an HMI connection. This HMI connection exists by default between the PROFINET interface of the HMI device and the PROFINET interface X1 of the CPU with redundancy ID 1. The connection uses the device IP address of the PROFINET interface X1.

You can change the HMI connection to a system IP address in the properties of the HMI connection.

13.6 Open User Communication with the redundant system S7-1500R/H

The following table shows which protocols of the Open User Communication you can use for the S7-1500R/H redundant system and the matching system data types and instructions.

Table 13- 1 Protocols, system data types and usable instructions for Open User Communication with the redundant system S7-1500R/H

Protocol	System data type	Instructions
TCP	• TCON_QDN • TCON_IP_v4	Establish connection and send/receive data via: • TSEND_C/TRCV_C or • TCON, TSEND/TRCV or • TCON, TUSEND/TURCV (connection can be terminated via TDISCON)
ISO-on-TCP	• TCON_IP_RFC	
UDP	• TCON_IP_v4 • TADDR_Param • TADDR_SEND_QDN • TADDR_RCV_IP	Establish connection and send/receive data via: • TSEND_C/TRCV_C • TUSEND/TURCV/TRCV (connection can be terminated via TDISCON)
Modbus TCP	• TCON_IP_v4 • TCON_QDN	• MB_CLIENT • MB_SERVER

13.6.1 Setting up an Open User Communication connection via the system IP address

Introduction

The S7-1500R/H redundant system can communicate with other devices via Open User Communication.

You set up the connections in the user program, e.g. via the "TSEND_C" instruction. The S7-1500R/H redundant system does not support configured connections.

You can either set up the connections either via the device IP addresses or via the system IP addresses of the PROFINET interfaces.

Open User Communication via the system IP addresses of the S7-1500R/H redundant system

If you set up the connection via a system IP address, then communication always takes place via the primary CPU.

Recommendation: Always use a system IP address for Open User Communication.

Open User Communication via the device IP addresses of the S7-1500R/H redundant system

In redundant mode, the redundant system can establish or terminate connections and send or receive data via every device IP address.

If you set up the connection via a device IP address, then communication takes place via the associated CPU. In the event of the failure of the CPU, then the entire communication via the device IP addresses of this CPU fails.

Setting a connection via the system IP address

How to set up a connection from the S7-1500R/H redundant system to a different CPU via the system IP address is described below.

You set up the connection in the user program of the redundant system S7-1500R/H with a TSEND_C instruction. You create a corresponding TRCV_C instruction in the user program of the other CPU.

The procedure is described using the example of a TCP connection between the S7-1500R/H redundant system and a CPU 1516-3PN/DP.

Requirements

- S7-1500R redundant system with two CPUs 1513-1PN
- System IP address of the PROFINET interface X1 is enabled.
- CPU 1516-3PN/DP
- The PROFINET interfaces X1 of the CPUs 1513R and the PROFINET interface X2 of the CPU 1516-3PN/DP are located in the same subnet.

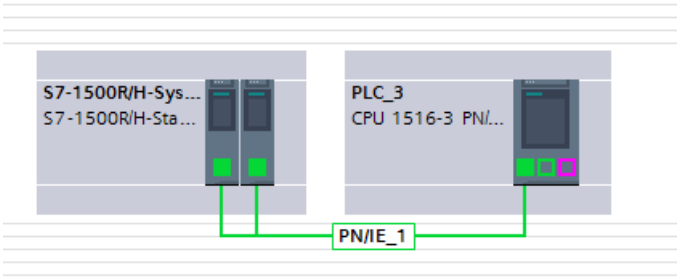

Figure 13-9 Example configuration for TCP-connection

TSEND_C instruction in the user program of the S7-1500R/H redundant system

To set up a TCP-connection to a different CPU, follow these steps:

1. Create a "TSEND_C" instruction in the user program.

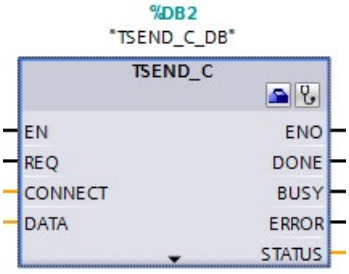

Figure 13-10 S7-1500R/H: "TSEND_C" instruction

2. Select the "TSEND_C" instruction.

3. In the Inspector window, go to "Properties" > "Configuration" > "Connection parameters". On the left-hand side you can see the S7-1500R/H redundant system as a local end point of the connection:
   - "Interface:": X1 is the preset interface.
   - "Subnet:": If the interface X1 is assigned to an S7-subnet, then STEP 7 displays the name of the S7-subnet.
   - The check box "Use address of the H-system" is selected. The system IP address of the S7-1500R/H redundant system is in "Address".

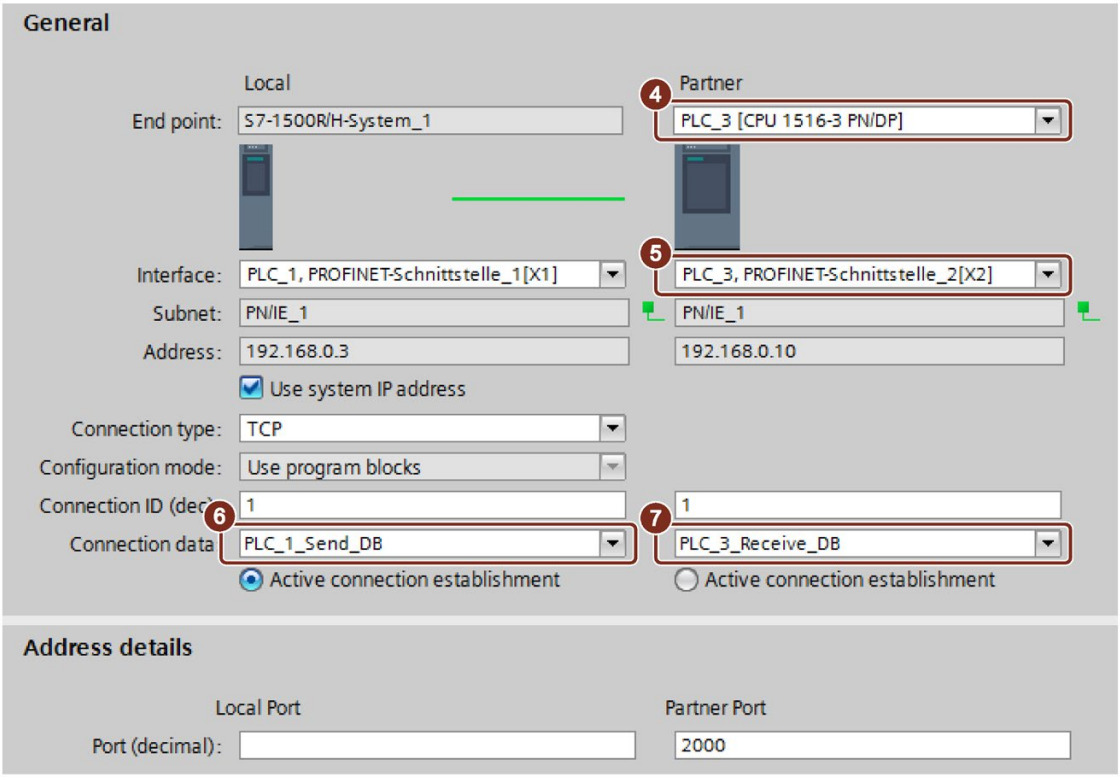

Figure 13-11 S7-1500R/H: Assigning parameters to the TSEND_C instruction in STEP 7

4. In "Partners" under "End point:" select the CPU 1516-3PN/DP as the communication partner.
5. In "Partners" under "Interface:" select the PROFINET interface X2 of the CPU 1516-3PN/DP.
6. In "Local" under "Connection data" select the setting "<new>".
   STEP 7 creates a data block for the connection data in the user program of the S7-1500R/H redundant system.
7. In "Partners" under "Connection type" select the setting "TCP".
   STEP 7 creates a data block for the connection data in the user program of the other CPU.

TRCV_C instruction in the user program of the CPU 1516

Create a TRCV_C instruction in the user program of the CPU 1516-3PN/DP and assign parameters as below:

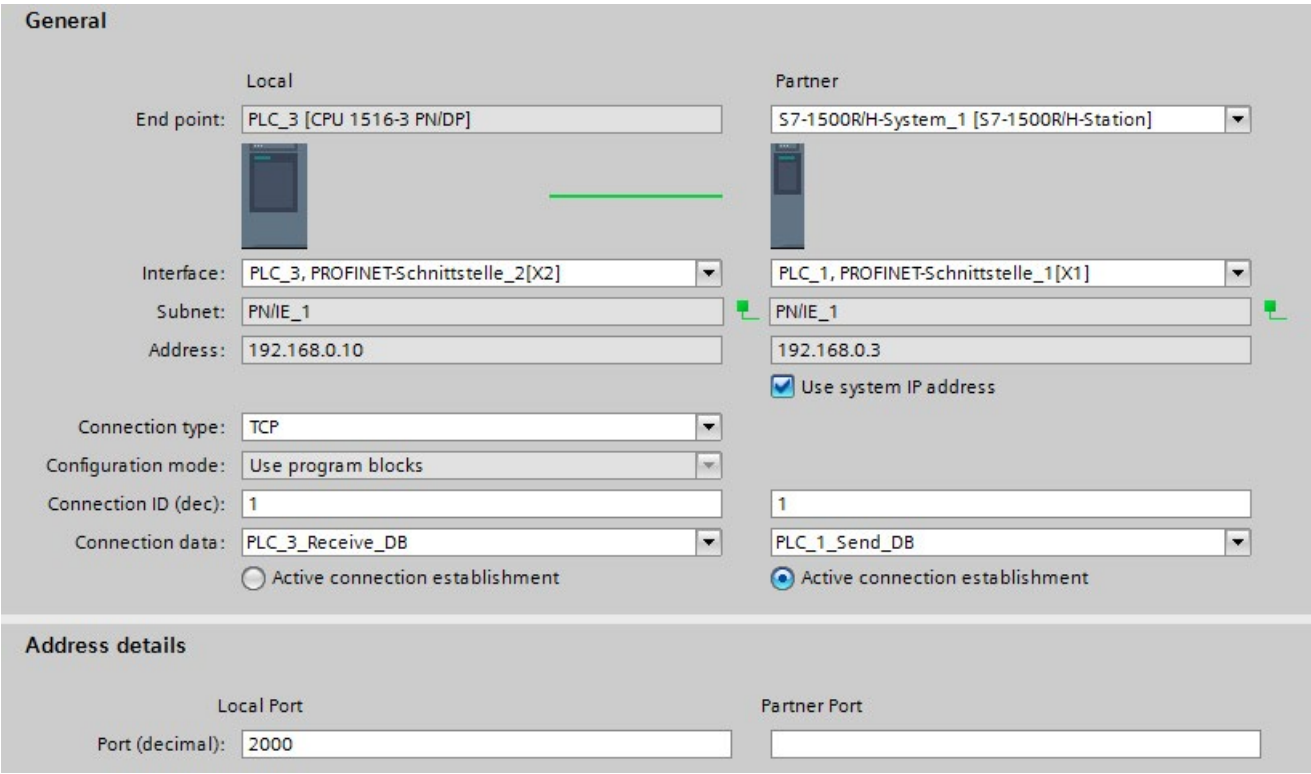

Figure 13-12 S7-1500R/H: Assigning parameters to the TRCV_C instruction in STEP 7

Setting up a connection via a device IP address

To set up an OUC-connection via a device IP address of one of the two CPUs:

- Select a suitable PROFINET interface of the S7-1500R/H redundant system.
- Deselect the "Use address of H-system" check box.

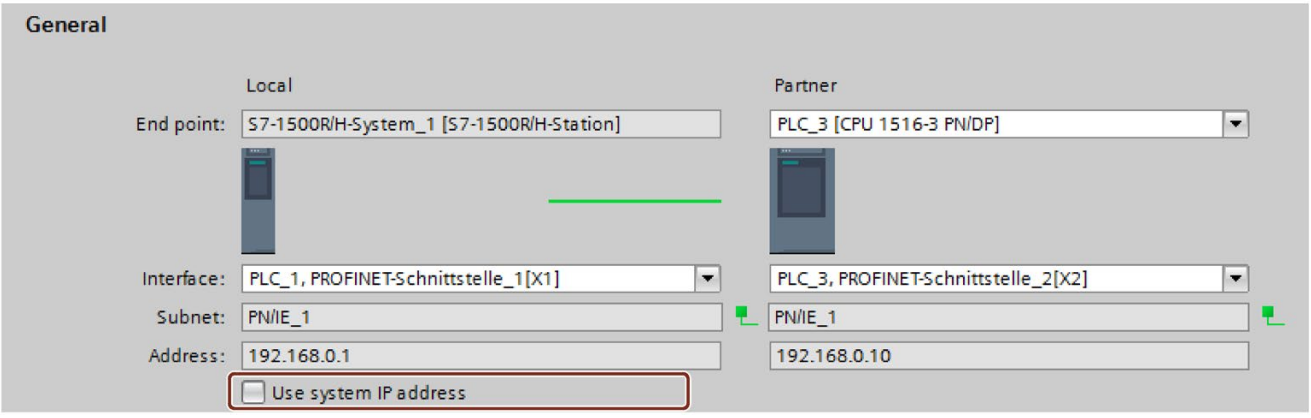

Figure 13-13 OUC-connection via a device IP address

Reference

You can find additional information on system states in the S7-1500R/H (https://support.industry.siemens.com/cs/ww/en/view/109754833) system manual.

Industrial Ethernet Security with CP 1543-1 14

All-round protection - the task of Industrial Ethernet Security

With Industrial Ethernet Security, individual devices, automation cells or network segments of an Ethernet network can be protected. Data transfer can also be protected by a combination of different security measures:

- Data espionage
- Data manipulation
- Unauthorized access

Security measures

- Firewall
  - IP firewall with stateful packet inspection (layer 3 and 4)
  - Firewall also for Ethernet "non-IP" frames according to IEEE 802.3 (layer 2)
  - Bandwidth limitation
  - Global firewall rules

  All network nodes located in the internal network segment of a CP 1543-1 are protected by its firewall.
- Logging

  To allow monitoring, events can be stored in log files that can be read out using the configuration tool or can be sent automatically to a Syslog server.
- HTTPS

  For encrypted transfer of websites, for example during process control.
- FTPS (explicit mode)

  For encrypted transfer of files.
- Secure NTP

  For secure time-of-day synchronization and transmission.
- SNMPv3

  For secure transmission of network analysis information safe from eavesdropping.
- VPN groups
  You can combine the CP 1543-1 with other security modules into VPN groups through configuration. IPsec tunnels are established between all the security modules of a VPN group (VPN). All internal nodes of these security modules can communicate securely with each other through this tunnel.
- Protection for devices and network segments

  The firewall and VPN groups protective functions can be applied to the operation of single devices, multiple devices, or entire network segments.

Additional information

An overview with links to the most important contributions on Industrial Security is available in this FAQ (https://support.industry.siemens.com/cs/ww/en/view/92651441).

14.1 Firewall

Tasks of the firewall

The purpose of the firewall functionality is to protect networks and stations from outside influences and disturbances. This means that only certain previously specified communications relations are permitted.

To filter the data traffic, IPv4 addresses, IPv4 subnets, port numbers or MAC addresses among other things can be used.

The firewall functionality can be configured for the following protocol levels:

- IP firewall with stateful packet inspection (layer 3 and 4)
- Firewall also for Ethernet "non-IP" frames according to IEEE 802.3 (layer 2)

Firewall rules

Firewall rules describe which packets are permitted or forbidden in which direction.

14.2 Logging

Functionality

For test and monitoring purposes, the security module has diagnostics and logging functions.

- Diagnostics functions

  These include various system and status functions that you can use in online mode.

- Logging functions

  This involves the recording of system and security events. Depending on the event type, the recording is made in volatile or non-volatile local buffer areas of the CP 1543-1. As an alternative, it is also possible to record on a network server.

  The parameter assignment and evaluation of these functions is only possible with a network connection.

Recording events with logging functions

You specify which events should be recorded with the log settings. Here you can configure the following recording variants:

- Local logging

  With this variant, you record the events in local buffers of the CP 1543-1. In the online dialog of the Security Configuration Tool, you can then access these recordings, visualize them and archive them on the service station.

- Network Syslog

  With the network Syslog, you use a Syslog server in the network. This records the events according to the configuration in the log settings.

14.3 NTP client

Functionality

To check the time validity of a certificate and the time stamp of log entries, the date and time are maintained on the CP 1543-1 as on the CPU. This time can be synchronized with NTP. The CP 1543-1 forwards the synchronized time to the CPU via the backplane bus of the automation system. This way the CPU also receives a synchronized time for the time events in program execution.

The automatic setting and periodic synchronization of the time takes place either via a secure or non-secure NTP server. You can assign a maximum of 4 NTP servers to the CP 1543-1. A mixed configuration of non-secure and secure NTP servers is not possible.

14.4 SNMP

Functionality

Like the CPU, the CP 1543-1 supports the transfer of management information using the Simple Network Management Protocol (SNMP). To achieve this, an "SNMP agent" is installed on the CP/CPU that receives and responds to the SNMP queries. Information about the properties of devices capable of SNMP is contained in so-called MIB files (Management Information Base) for which the user needs to have the appropriate rights.

With SNMPv1, the "community string" is also sent. The "community string" is like a password that is sent along with the SNMP query. The requested information is sent when the "community string" is correct. The request is discarded when the string is incorrect.

With SNMPv3, data can be transferred encrypted. To do this, select either an authentication method or an authentication and encryption method.

Possible selection:

- Authentication algorithm: none, MD5, SHA-1
- Encryption algorithm: none, AES-128, DES

You can deactivate the use of SNMP for the CP/CPU. Deactivate SNMP if the security guidelines in your network do not permit SNMP or if you use your own SNMP solution.

To find out how to deactivate SNMP for the CPU, refer to section Disabling SNMP (Page 60).

14.5 VPN

Functionality

For security modules that protect the internal network, VPN (Virtual Private Network) tunnels provide a secure data connection through the non-secure external network.

The module uses the IPsec protocol (tunnel mode of IPsec) for tunneling.

In STEP 7 you can assign VPN groups to security modules. VPN tunnels are automatically established between all modules of a VPN group. A module in one project can belong to several different VPN groups at the same time in the process.

Glossary

Automation system

Programmable logic controller for the open-loop and closed-loop control of process chains of the process engineering industry and manufacturing technology. The automation system consists of different components and integrated system functions according to the automation task.

Backup CPU

If the R/H system is in RUN-Redundant system state, the primary CPU controls the process. The backup CPU processes the user program synchronously and can take over process control if the primary CPU fails.

Bus

Transmission medium that connects several devices together. Data transmission can be performed electrically or via optical fibers, either in series or in parallel.

Client

Device in a network that requests a service from another device in the network (server).

CM

→ *Communications module*

Communications module

Module for communications tasks used in an automation system as an interface expansion of the CPU (for example PROFIBUS) and providing additional communications options (PtP).

Communications processor

Module for expanded communications tasks covering special applications, for example in the area of security.

Consistent data

Data that belongs together in terms of content and must not be separated when transferred.

CP

→ *Communications processor*

CPU

Central Processing Unit - Central module of the S7 automation system with a control and arithmetic unit, memory, operating system and interface for programming device.

Device

Generic term for:

- Automation systems (PLC, PC, for example)
- Distributed I/O systems
- Field devices (for example, PLC, PC, hydraulic devices, pneumatic devices) and
- Active network components (for example, switches, routers)
- Gateways to PROFIBUS, AS interface or other fieldbus systems

Device certificates

Such certificates are signed by a certificate authority (CA).

The signature of an end-entity certificate is checked with the public key of the certificate authority certificate.

The "Subject" attribute must not be identical to the "Issuer" attribute.

The "Subject", for example, contains the name of a program as with the OPC UA application certificate.

"Issuer" is the certificate authority that signed the certificate.

The "CA" field must be set to "False".

DP master

Within PROFIBUS DP, a master in the distributed I/O that behaves according to the EN 50170 standard, Part 3.

→ *See also DP slave*

DP slave

Slave in the distributed I/O that is operated on PROFIBUS with the PROFIBUS DP protocol and behaves according to the EN 50170 standard, Part 3.

→ *See also DP master*

Duplex

Data transmission system; a distinction is made between full and half duplex.

Half duplex: One channel is available for alternate data exchange (sending or receiving alternately but not at the same time).

Full duplex: Two channels are available for simultaneous data exchange in both directions (simultaneous sending and receiving in both directions).

End-entity certificate

→ *See also device certificate*

Ethernet

International standard technology for local area networks (LAN) based on frames. It defines types of cables and signaling for the physical layer and packet formats and protocols for media access control.

Ethernet network adapter

Electronic circuitry for connecting a computer to an Ethernet network. It allows the exchange of data / communication within the network.

FETCH/WRITE

Server services using TCP/IP, ISO-on-TCP and ISO for access to system memory areas of S7 CPUs. Access (client function) is possible from a SIMATIC S5 or a third-party device/PC. FETCH: Read data directly; WRITE: Write data directly.

Field device

→ *Device*

Freeport

Freely programmable ASCII protocol; here for data transfer via a point-to-point connection.

FTP

File **T**ransfer **P**rotocol; a network protocol for transferring files via IP networks. FTP is used to download files from the server to the client or to upload files from the client to the server. FTP directories can also be created and read out and directories and files can be renamed or deleted.

HMI

Human **M**achine **I**nterface, device for visualization and control of automation processes.

IE

→ *Industrial Ethernet*

IM

→ *Interface module*

Industrial Ethernet

Guideline for setting up an Ethernet network in an industrial environment. The essential difference compared with standard Ethernet is the mechanical ruggedness and immunity to noise of the individual components.

Instruction

The smallest self-contained unit of a user program characterized by its structure, function or purpose as a separate part of the user program. An instruction represents an operation procedure for the processor.

Interface module

Module in the distributed I/O system. The interface module connects the distributed I/O system via a fieldbus to the CPU (IO controller/DP master) and prepares the data for the I/O modules.

Intermediate CA certificate

This is a certificate authority certificate that is signed with the private key of a root certificate authority.

An intermediate certificate authority signs end-entity certificates with its private key.

The signature of these end-entity certificates is verified with the public key of the intermediate certificate authority.

The "Subject" and "Issuer" attributes of the intermediate CA certificate must not be identical. This certificate authority has after all not signed its certificate itself.

The "CA" field must be set to "True".

IO controller, PROFINET IO controller

Central device in a PROFINET system, usually a classic programmable logic controller or PC. The IO controller sets up connections to the IO devices, exchanges data with them, thus controls and monitors the system.

IO device, PROFINET IO device

Device in the distributed I/O of a PROFINET system that is monitored and controlled by an IO controller (for example distributed inputs/outputs, valve islands, frequency converters, switches).

IP address

Binary number that is used as a unique address in computer networks in conjunction with the Internet Protocol (IP). It makes these devices uniquely addressable and individually accessible. An IPv4 address can be evaluated using a binary subnet mask that results in a network part or a host part as a structure. The textual representation of an IPv4 address consists, for example, of 4 decimal numbers with the value range 0 to 255. The decimal numbers are separated by periods.

IPv4 subnet mask

Binary mask, with which an IPv4 address (as a binary number) is divided into a "network part" and a "host part".

ISO protocol

Communications protocol for message or packet-oriented transfer of data in an Ethernet network. This protocol is hardware-oriented, very fast and allows dynamic data lengths. The ISO protocol is suitable for medium to large volumes of data.

ISO-on-TCP protocol

Communications protocol capable of S7 routing for packet-oriented transfer of data in an Ethernet network; provides network addressing. The ISO-on-TCP protocol is suitable for medium and large volumes of data and allows dynamic data lengths.

Linear bus topology

Network topology characterized by the arrangement of the devices in a line (bus).

MAC address

Worldwide unique device identification for all Ethernet devices. The MAC address is assigned by the manufacturer and has a 3-byte vendor ID and 3-byte device ID as a consecutive number.

Master

Higher-level, active participant in the communication/on a PROFIBUS subnet. The master has rights to access the bus (token) and can request and send data.

→ *See also DP master*

Modbus RTU

Remote **T**erminal **U**nit; Open communications protocol for serial interfaces based on a master/slave architecture.

Modbus TCP

Transmission **C**ontrol **P**rotocol; Open communications protocol for Ethernet based on a master/slave architecture. The data are transmitted as TCP/IP packets.

Network

A network consists of one or more interconnected subnets with any number of devices. Several networks can exist alongside each other.

NTP

The **N**etwork **T**ime **P**rotocol (NTP) is a standard for synchronizing clocks in automation systems via Industrial Ethernet. NTP uses the connectionless UDP transport protocol for the Internet.

OPC UA

OPC Unified **Automation** is a protocol for communication between machines, developed by the OPC Foundation.

Operating states

Operating states describe the behavior of a single CPU at a specific time.

The CPUs of the SIMATIC standard systems have the STOP, STARTUP and RUN operating states.

The primary CPU of the redundant system S7-1500R/H has the operating states STOP, STARTUP, RUN, RUN-Syncup and RUN-Redundant. The backup CPU has the operating states STOP, SYNCUP and RUN-Redundant.

Operating system

Software that allows the use and operation of a computer. The operating system manages resources such as memory, input and output devices and controls the execution of programs.

PG

→ *Programming device*

PNO

→ *PROFIBUS user organization*

Point-to-point connection

Bidirectional data exchange via communications modules with a serial interface between two communications partners (and two only).

Port

Physical connector to connect devices to PROFINET. PROFINET interfaces have one or more ports.

Primary CPU

If the R/H system is in RUN-Redundant system state, the primary CPU controls the process. The backup CPU processes the user program synchronously and can take over process control if the primary CPU fails.

Process image (I/O)

The CPU transfers the values from the input and output modules to this memory area. At the start of the cyclic program, the CPU transfers the process image output as a signal state to the output modules. The CPU then reads the signal states of the input modules into the process image input. The CPU then executes the user program.

PROFIBUS

Process **Fi**eld **Bus** - European Fieldbus standard.

PROFIBUS address

Unique identifier of a device connected to PROFIBUS. The PROFIBUS address is sent in the frame to address a device.

PROFIBUS device

Device with at least one PROFIBUS interface either electrical (for example RS-485) or optical (for example Polymer Optical Fiber).

PROFIBUS user organization

Technical committee dedicated to the definition and development of the PROFIBUS and PROFINET standard.

PROFIBUS DP

A PROFIBUS with DP protocol that complies with EN 50170. DP stands for distributed I/O = fast, real-time capable, cyclic data exchange. From the perspective of the user program, the distributed I/O is addressed in exactly the same way as the centralized IO.

PROFINET

Open component-based industrial communications system based on Ethernet for distributed automation systems. Communications technology promoted by the PROFIBUS user organization.

PROFINET device

Device that always has a PROFINET interface (electrical, optical, wireless).

PROFINET interface

Interface of a module capable of communication (for example CPU, CP) with one or more ports. A MAC address is assigned to the interface in the factory. Along with the IP address and the device name (from the individual configuration), this interface address ensures that the PROFINET device is identified uniquely in the network. The interface can be electrical, optical or wireless.

PROFINET IO

IO stands for input/output; distributed I/O (fast, cyclic data exchange with real-time capability). From the perspective of the user program, the distributed I/O is addressed in exactly the same way as the centralized IO.

PROFINET IO as the Ethernet-based automation standard of PROFIBUS & PROFINET International defines a cross-vendor communication, automation, and engineering model.

With PROFINET IO, a switching technology is used that allows all devices to access the network at any time. In this way, the network can be used much more efficiently through the simultaneous data transfer of several devices. Simultaneous sending and receiving is enabled via the full-duplex operation of Switched Ethernet.

PROFINET IO is based on switched Ethernet with full-duplex operation and a bandwidth of 100 Mbps.

Programming device

Programming devices are essentially compact and portable PCs which are suitable for industrial applications. They are identified by a special hardware and software configuration for programmable logic controllers.

Protocol

Agreement on the rules by which the communication between two or more communication partners transpires.

PtP

Point-**t**o-**P**oint, interface and/or transmission protocol for bidirectional data exchange between two (and only two) communications partners.

Redundant systems

Redundant systems have multiple (redundant) instances of key automation components. Process control is maintained if a redundant component fails.

Ring topology

All devices of a network are connected together in a ring.

Root CA certificates

→ *See also root certificate*

Root certificate

This is the certificate of a certificate authority: It signs end-entity certificates and intermediate CA certificates with its private key.

The "Subject" attribute and the "Issuer" of this certificate must be identical. This certificate authority has signed its certificate itself.

The "CA" field must be set to "True".

TIA Portal V14 has such a root CA certificate:

If you configure the OPC UA server of an S7-1500 in the TIA Portal, the TIA Portal generates an end-entity certificate for the OPC UA server and signs that certificate with its own private key.

The signature of this end-entity certificate can be verified with the public key of the TIA Portal. This key can be found in the root CA certificate of the TIA Portal.

Router

Network node with a unique identifier (name and address) that connects subnets together and allows transportation of data to uniquely identified communications nodes in the network.

RS232, RS422 and RS485

Standard for serial interfaces.

RTU

Modbus RTU (RTU: **R**emote **T**erminal **U**nit, transfers the data in binary form; allows a good data throughput. The data must be converted to a readable format before it can be evaluated.

S7 routing

Communication between S7 automation systems, S7 applications or PC stations in different S7 subnets via one or more network nodes functioning as S7 routers.

SDA service

Send Data with Acknowledge. SDA is an elementary service with which an initiator (for example DP master) can send a message to other devices and then receives acknowledgment of receipt immediately afterwards.

SDN service

Send Data with No Acknowledge. This service is used primarily to send data to multiple stations and the service therefore remains unacknowledged. Suitable for synchronization tasks and status messages.

Security

Generic term for all the measures taken to protect against

- Loss of confidentiality due to unauthorized access to data
- Loss of integrity due to manipulation of data
- Loss of availability due to the destruction of data

Self-signed certificates

These are certificates that you sign with your private key and use as end-entity certificates.

The signature of these end-entity certificates is verified with your public key.

The "Subject" and "Issuer" attributes of self-signed certificates must be identical: You have signed your certificate yourself.

The "CA" field must be set to "False".

You can, for example, use self-signed certificates as application certificates for an OPC UA client.

The procedure required to generate a self-signed certificate with the certificate generator of the OPC Foundation is described here (Page).

Server

A device or more generally an object that can provide certain services; the service is performed at the request of a client.

Slave

Distributed device in a fieldbus system that can only exchange data with a master after the master has requested this.

→ *See also DP slave*

SNMP

Simple **N**etwork **M**anagement **P**rotocol, uses the wireless UDP transport protocol. SNMP works in much the same way as the client/server model. The SNMP manager monitors the network nodes. The SNMP agents collect the various network-specific information in the individual network nodes and makes this information available in a structured form in the MIB (**M**anagement **I**nformation **B**ase). This information allows a network management system to run detailed network diagnostics.

Subnet

Part of a network whose parameters must be matched up on the devices (for example in PROFINET). A subnet includes the bus components and all connected stations. Subnets can be linked together, for example using gateways or routers to form one network.

Switch

Network components used to connect several terminal devices or network segments in a local network (LAN).

System states

The system states of the redundant system S7-1500R/H result from the operating states of the primary and backup CPUs. The term system state is used as a simplified expression that refers to the operating states that occur simultaneously on both CPUs. The redundant system S7-1500R/H has the system states STOP, STARTUP, RUN-Solo, SYNCUP and RUN-Redundant.

System IP address

In addition to the device IP addresses of the CPUs, the redundant system S7-1500R/H supports system IP addresses:

- System IP address for the X1 PROFINET interfaces of the two CPUs (system IP address X1)
- System IP address for the X2 PROFINET interfaces of the two CPUs (system IP address X2)

You use the system IP addresses for communication with other devices (for example, HMI devices, CPUs, PG/PC). The devices always communicate over the system IP address with the primary CPU of the redundant system. This ensures that the communication partner can communicate with the new primary CPU (previously backup CPU) in the RUN-Solo system state after failure of the original primary CPU in redundant operation.

TCP/IP

Transmission **C**ontrol **P**rotocol / **I**nternet **P**rotocol, connection-oriented network protocol, generally recognized standard for data exchange in heterogeneous networks.

Time-of-day synchronization

Capability of transferring a standard system time from a single source to all devices in the system so that their clocks can be set according to the standard time.

Tree topology

Network topology characterized by a branched structure: Two or more bus nodes are connected to each bus node.

Twisted-pair

Fast Ethernet via twisted-pair cables is based on the IEEE 802.3u standard (100 Base-TX). The transmission medium is a shielded 2x2 twisted-pair cable with an impedance of 100 Ohms (22 AWG). The transmission characteristics of this cable must meet the requirements of category 5.

The maximum length of the connection between the terminal and the network component must not exceed 100 m. The connectors are designed according to the 100Base-TX standard with the RJ-45 connector system.

UDP

User **D**atagram **P**rotocol; communications protocol for fast and uncomplicated data transfer, without acknowledgment. There are no error checking mechanisms as found in TCP/IP.

User program

In SIMATIC, a distinction is made between the CPU operating system and user programs. The user program contains all instructions, declarations and data by which a system or process can be controlled. The user program is assigned to a programmable module (for example, CPU, FM) and can be structured in smaller units.

USS

Universal Serial Interface protocol (**U**niverselles **S**erielles **S**chnittstellen-Protokoll); defines an access method according to the master-slave principle for communication via a serial bus.

Web server

Software/communications service for data exchange via the Internet. The web server transfers the documents using standardized transmission protocols (HTTP, HTTPS) to a Web browser. Documents can be static or put together dynamically from different sources by the web server on request from the Web browser.

Index

A

Advanced Encryption Algorithm, 40
AES, 40
Applicant, 43
Asymmetric encryption, 41

B

BRCV, 115
BSEND, 115

C

Certificate authorities, 43
Certificate subject, 43
CM, 17
Communication
  Data record routing, 265
  HMI communication, 65
  Open communication, 67
  Open User Communication, 67
  PG communication, 63
  Point-to-point connection, 123
  S7 communication, 114
  S7 routing, 260
Communication options
  Overview, 22
Communication via PUT/GET instruction
  Creating and configuring a connection, 117
Communications
  Communication protocols, 68
  Establishment and termination, 93
Communications module, 17
Communications processor, 17
Communications services
  Connection resources, 30
Connection
  Diagnostics, 279
  Instructions for Open User Communication, 70
Connection diagnostics, 279
Connection resources
  Data record routing, 273
  Display in STEP 7, 275
  Display in the Web server, 278
  HMI communication, 272
  Module-specific, 276
  occupying, 274
  Overview, 30, 267
  S7 routing, 273
  Station specific, 275
Consistency of data, 34
CP, 17

D

Data consistency, 34
Data record routing, 265
Digital certificates, 43

E

E-mail, 22, 69, 89
End-entity certificate, 46
Establishment and termination of communications, 93
Export file for OPC UA, 167

F

FDL, 69
Fetch, 22
Firewall, 301
Freeport protocol, 123
FTP, 22, 69, 89, 90

G

GET, 115

H

Handshake Protocol, 42
HMI communication, 22, 65

I

IM, 21
Industrial Ethernet Security, 300
Interface module, 21
Interfaces for communication, 18

Interfaces of communications modules
Point-to-point connection, 20
Interfaces of communications processors, 19
IP address, emergency address (temporary), 282
ISO, 22, 68
ISO-on-TCP, 68, 77

L

Logging, 302

M

Man-in-the-middle attack, 43
Modbus protocol (RTU), 123
Modbus TCP, 69

N

NTP, 22, 302

O

Occupation of connection resources, 274
OPC UA
Certificate generator, 148
DB tags, 163
End points, 157
Identifier, 133
Introduction, 129, 130, 131
Layer model, 153
Namespace, 132
OpenSSL, 149
PLC tags, 163
Secure channel, 152
Secure connection, 152
Security mechanisms, 143
Security settings, 157
Signing and encryption, 145
X.509 certificates, 147
OPC UA client
Authentication, 252
Basics, 138
Certificate, 181, 249
OPC UA server
Address space, 134
Addressing, 170
Application name, 169
Authentication, 189
Basics, 155
Commissioning, 168
Customizing the server certificate, 183
Generating a server certificate, 175
Performance, 166
Performance increase, 166
Publishing interval, 173
Runtime licenses, 192
Sampling interval, 174
Security settings, 178, 186
Subscription, 172
TCP port, 172, 173
Write and read rights, 163
XML export file, 167
Open communication
Connection configuration, 77
Setting up e-mail, 89
Setting up FTP, 90
Setting up TCP, ISO-on-TCP, UDP, 77
Open User Communication
Features, 67
Instructions, 70
Protocols, 68
OpenSSL, 149

P

PCT, 266
PG communication, 22, 63
Point-to-point connection, 22, 123
Private Key, 38
Procedure 3964(R), 123
Protocols for Open User Communication, 68
Public Key, 38
PUT, 115

R

Record Protocol, 42
RFC 5280, 38
Root certificate, 46

S

S7 communication, 22, 114, 273
S7 routing, 260
Connection resources, 273
Secure communication, 38
Secure Socket Layer, 42
Security, 300
Security measures, 300
Firewall, 301

Logging, 302
NTP, 302
SNMP, 303
Self-signed certificates, 44
Server certificate, 183
Setting up a connection, 30
By configuring, 81
ISO connection with CP 1543-1, 82
Signature, 45
SNMP, 22, 303
SSL, 42
Symmetric encryption, 40
Syslog, 302
System data type, 72

T

TCON, 71
TCP, 22, 68, 77
TDISCON, 71
Time-of-day synchronization, 22
TLS, 42
Transport Layer Security, 42
TRCV, 71
TRCV_C, 71
TSEND, 71
TSEND_C, 71

U

UDP, 22, 68, 77
URCV, 115
USEND, 115
USS protocol, 123

W

Web server, 22
Write, 22

X

X.509, 38

SIEMENS

Function manual

SIMATIC

PROFINET

PROFINET with STEP 7 V15

Edition 10/2018

support.industry.siemens.com

SIEMENS

SIMATIC

PROFINET
PROFINET mit STEP 7 V15

Function Manual

Preface

Documentation guide 1

Description 2

Parameter assignment/addressing 3

Diagnostics and maintenance 4

Functions 5

PROFINET with the redundant S7-1500R/H system 6

10/2018

A5E03444486-AH

Legal information

Warning notice system

This manual contains notices you have to observe in order to ensure your personal safety, as well as to prevent damage to property. The notices referring to your personal safety are highlighted in the manual by a safety alert symbol, notices referring only to property damage have no safety alert symbol. These notices shown below are graded according to the degree of danger.

⚠ DANGER

indicates that death or severe personal injury **will** result if proper precautions are not taken.

⚠ WARNING

indicates that death or severe personal injury **may** result if proper precautions are not taken.

⚠ CAUTION

indicates that minor personal injury can result if proper precautions are not taken.

NOTICE

indicates that property damage can result if proper precautions are not taken.

If more than one degree of danger is present, the warning notice representing the highest degree of danger will be used. A notice warning of injury to persons with a safety alert symbol may also include a warning relating to property damage.

Qualified Personnel

The product/system described in this documentation may be operated only by **personnel qualified** for the specific task in accordance with the relevant documentation, in particular its warning notices and safety instructions. Qualified personnel are those who, based on their training and experience, are capable of identifying risks and avoiding potential hazards when working with these products/systems.

Proper use of Siemens products

Note the following:

⚠ WARNING

Siemens products may only be used for the applications described in the catalog and in the relevant technical documentation. If products and components from other manufacturers are used, these must be recommended or approved by Siemens. Proper transport, storage, installation, assembly, commissioning, operation and maintenance are required to ensure that the products operate safely and without any problems. The permissible ambient conditions must be complied with. The information in the relevant documentation must be observed.

Trademarks

All names identified by ® are registered trademarks of Siemens AG. The remaining trademarks in this publication may be trademarks whose use by third parties for their own purposes could violate the rights of the owner.

Disclaimer of Liability

We have reviewed the contents of this publication to ensure consistency with the hardware and software described. Since variance cannot be precluded entirely, we cannot guarantee full consistency. However, the information in this publication is reviewed regularly and any necessary corrections are included in subsequent editions.

Siemens AG
Division Digital Factory
Postfach 48 48
90026 NÜRNBERG
GERMANY

A5E03444486-AH
Ⓟ 09/2018 Subject to change

Copyright © Siemens AG 2013 - 2018.
All rights reserved

Preface

Purpose of the documentation

This function manual provides an overview of the PROFINET communication system with SIMATIC STEP 7 V15.

STEP 7 V15 is integrated into the high-performance graphical Totally Integrated Automation Portal (TIA Portal), the new integration platform for all automation software tools.

This function manual supports you in planning a PROFINET system. The manual is structured into the following subject areas:

- PROFINET basics
- PROFINET diagnostics
- PROFINET functions

Basic knowledge required

The following knowledge is required in order to understand the manual:

- General knowledge of automation technology
- Knowledge of the industrial automation system SIMATIC
- Knowledge about the use of Windows-based computers
- Knowledge about how to use STEP 7 (TIA Portal)

Scope

This documentation is the basic documentation for all SIMATIC products from the PROFINET environment. The product documentation is based on this documentation.

The examples are based on the functionality of the S7-1500 automation system.

What's new in the PROFINET Function Manual, Edition 10/2018 compared to Edition 12/2017

This manual (version 10/2018) includes the following new functions compared to the previous version (version 12/2017):

Function	Applications	Your benefits
PROFINET IO with the redundant S7-1500R/H system	In a PROFINET IO system with the redundant S7-1500R/H system, the IO communication continues even when one CPU fails.	The redundant S7-1500R/H system offers a high degree of reliability and system availability. A redundant configuration of the most important automation components reduces the probability of production downtimes and the consequences of component failures.

What's new in the PROFINET function manual, version 12/2017 compared to version 09/2016

This manual (version 12/2017) encompasses the following new functions compared to the previous version (version 09/2016):

Function	Applications	Your benefits
Specifying the router for a PROFINET IO device	You can specify the IP address of a router for each IO device. You reach the IO device from outside the IP subnet through the router.	In the past, it was only possible to specify a router for a PROFINET IO interface at the IO controller. The IO devices inherited the setting of the IO controller interface. Now you can set the router address independently of the IO controller setting. This allows, for example, a router address at the IO device although you have not set a router address or have set a different address at the IO controller.
Configuring an IO device through hardware detection	You can detect an existing IO device and enter it in your project.	STEP 7 inserts the IO device with all the modules and submodules into the project. Article numbers and firmware versions between real and configured IO devices match. You reduce the project planning work required.
Asset management	You can centrally manage non-PROFINET components (assets) of a PROFINET device. The PROFINET device makes the identification data of the assets available for evaluation via a standardized data record.	The new standardized PROFINET service makes it possible to manage all the hardware and firmware components of PROFINET devices centrally. The possibilities available for filtering device data, for example, depend on the range of performance of the evaluating application.
Asset management data record for I-devices	Special application of asset management: From the point of view of a higher-level IO controller, the modules plugged into the I-device represent assets. The user program in the I-device compiles the asset management data record. The IO controller can read identification data of the I-device modules through this data record.	See Asset management.

What's new in the PROFINET function manual, Version 09/2016 compared to Version 12/2014

This manual (version 09/2016) encompasses the following new functions compared to the previous version (version 12/2014):

Function	Applications	Your benefits
PROFINET IO on the 2nd PROFINET interface	You can operate another PROFINET IO system on the CPU or connect additional IO devices.	You use a fieldbus type in the plant. The CPU can perform fast and deterministic data exchange as an I-device with a higher-level controller (PROFINET/Ethernet) through the second line.
IRT with very short data cycle times down to 125 µs	You realize high-end applications with IO communication which place very high performance demands on the IO processing.	You make PROFINET IO communication and standard communication possible via one cable even with a send clock of 125 µs.
MRPD: Media Redundancy with Planned Duplication of frames	PROFINET IO IRT enables you to realize applications that place particularly high demands on the reliability and accuracy (isochronous mode).	By sending the cyclic IO data in both directions in the ring, the communication to the IO devices is maintained even when the ring is interrupted and does not result in device failure even with fast update times. You achieve higher reliability than with MRP.
PROFINET performance upgrade	You can implement applications with high speed and send clock requirements. This is of interest to applications with high demands on performance.	Better utilization of the bandwidth results in short reaction times.
Limitation of the data infeed into the network	You limit the network load for standard Ethernet communication to a maximum value.	You flatten peaks in the data feed. You share the remaining bandwidth based on demand.

Conventions

STEP 7: We refer to "STEP 7" in this documentation as a synonym for the configuration and programming software "STEP 7 as of V12 (TIA Portal)" and subsequent versions.

This documentation contains pictures of the devices described. The figures may differ slightly from the device supplied.

You should also pay particular attention to notes such as the one shown below:

Note

A note contains important information on the product, on handling of the product and on the section of the documentation to which you should pay particular attention.

Security information

Siemens provides products and solutions with industrial security functions that support the secure operation of plants, systems, machines and networks.

In order to protect plants, systems, machines and networks against cyber threats, it is necessary to implement – and continuously maintain – a holistic, state-of-the-art industrial security concept. Siemens' products and solutions constitute one element of such a concept.

Customers are responsible for preventing unauthorized access to their plants, systems, machines and networks. Such systems, machines and components should only be connected to an enterprise network or the internet if and to the extent such a connection is necessary and only when appropriate security measures (e.g. firewalls and/or network segmentation) are in place.

For additional information on industrial security measures that may be implemented, please visit (https://www.siemens.com/industrialsecurity).

Siemens' products and solutions undergo continuous development to make them more secure. Siemens strongly recommends that product updates are applied as soon as they are available and that the latest product versions are used. Use of product versions that are no longer supported, and failure to apply the latest updates may increase customers' exposure to cyber threats.

To stay informed about product updates, subscribe to the Siemens Industrial Security RSS Feed under (https://www.siemens.com/industrialsecurity).

Siemens Industry Online Support

You can find current information on the following topics quickly and easily here:

- **Product support**

  All the information and extensive know-how on your product, technical specifications, FAQs, certificates, downloads, and manuals.

- **Application examples**

  Tools and examples to solve your automation tasks – as well as function blocks, performance information and videos.

- **Services**

  Information about Industry Services, Field Services, Technical Support, spare parts and training offers.

- **Forums**

  For answers and solutions concerning automation technology.

- **mySupport**

  Your personal working area in Industry Online Support for messages, support queries, and configurable documents.

This information is provided by the Siemens Industry Online Support in the Internet (https://support.industry.siemens.com).

Industry Mall

The Industry Mall is the catalog and order system of Siemens AG for automation and drive solutions on the basis of Totally Integrated Automation (TIA) and Totally Integrated Power (TIP).

You can find catalogs for all automation and drive products on the Internet (https://mall.industry.siemens.com).

Table of contents

Preface 3

1 Documentation guide 12

2 Description 17

2.1 Introduction to PROFINET 17
2.1.1 PROFINET terms 19
2.1.2 Basic terminology of communication 23
2.1.3 PROFINET interface 25
2.1.4 Implementation of the PROFINET device model in SIMATIC 28

2.2 Setting up PROFINET 30
2.2.1 Active Network Components 31
2.2.2 Cabling technology 33
2.2.3 Wireless design 35
2.2.3.1 Basics 35
2.2.3.2 Tips on assembly 37
2.2.4 Network security 39
2.2.4.1 Basics 39
2.2.4.2 Network components and software 41
2.2.4.3 Application example 42

3 Parameter assignment/addressing 44

3.1 Assigning an IO device to an IO controller 45

3.2 Device name and IP address 47
3.2.1 Device name 48
3.2.2 IP address 49
3.2.3 Assigning a device name and IP address 52
3.2.4 Assign device name via communication table 57
3.2.5 Permitting changes to the device name and IP address directly on the device 60

3.3 Configuring an IO device through hardware detection 62

3.4 Specifying the router for a PROFINET IO device 64

3.5 Configuring topology 68
3.5.1 Topology view in STEP 7 71
3.5.2 Interconnecting ports in the topology view 73
3.5.3 Interconnecting ports - Inspector window 74
3.5.4 Automatic assignment of devices by offline/online comparison 75
3.5.5 Apply the port interconnections identified online manually to the project 76
3.5.6 Include the devices identified online manually in the project 77
3.5.7 Automatic assignment of devices by advanced offline/online comparison 77

4 Diagnostics and maintenance 78

4.1 Diagnostics mechanisms of PROFINET IO 78
4.1.1 Diagnostics levels in PROFINET IO 80
4.1.2 Maintenance 82
4.1.2.1 I&M data (identification and maintenance) 82
4.1.2.2 Loading I&M data to PROFINET IO devices and your modules 82
4.1.2.3 Asset management 84

4.2 Diagnostics using status LEDs 97

4.3 Diagnostics via the display of the S7-1500 CPUs 98

4.4 Diagnostics via Web server 101

4.5 Diagnostics in STEP 7 104

4.6 Extended maintenance concept 107

4.7 Diagnostics of the network topology 109

4.8 Diagnostics in the user program 110
4.8.1 Diagnostics and configuration data records 110
4.8.2 Evaluate diagnostics in the user program 112

5 Functions 115

5.1 Connecting other bus systems 115
5.1.1 Linking PROFINET and PROFIBUS 117
5.1.2 Connect the DP slave via the IE/PB Link to a PROFINET IO system 118

5.2 Intelligent IO devices (I-devices) 120
5.2.1 I-device functionality 120
5.2.2 Properties and Advantages of the I-Device 121
5.2.3 Characteristics of an I-Device 122
5.2.4 Data Exchange between higher- and lower-level IO system 126
5.2.5 Configuring the I-device 128
5.2.6 Program examples 130
5.2.7 Diagnostics and interrupt characteristics 133
5.2.8 Rules for the Topology of a PROFINET IO System with I-Device 137
5.2.9 Boundary conditions when using I-devices 140
5.2.10 Configuring PROFIenergy with I-devices 141

5.3 Shared device 143
5.3.1 Useful information on shared devices 143
5.3.2 Configuring shared device 147
5.3.3 Configuring an I-device as a shared device 151
5.3.4 Module-internal shared input/shared output (MSI/MSO) 161

5.4 Media redundancy (ring topologies) 168
5.4.1 Media Redundancy Protocol (MRP) 170
5.4.2 Configuring media redundancy 173
5.4.3 Media redundancy with planned duplication of frames (MRPD; not for S7-1500R/H) 176
5.4.4 Multiple rings 178

5.5 Real-time communication ... 182
5.5.1 Introduction ... 182
5.5.2 RT ... 183
5.5.3 IRT ... 184
5.5.4 Comparison of RT and IRT ... 187
5.5.5 Configuring PROFINET IO with IRT ... 188
5.5.6 Setting the bandwidth usage for the send clock ... 191
5.5.7 Setup recommendations for optimizing PROFINET ... 192
5.5.8 Limitation of the data infeed into the network ... 196

5.6 PROFINET with performance upgrade ... 197
5.6.1 Dynamic frame packing ... 198
5.6.2 Fragmentation ... 200
5.6.3 Fast forwarding ... 201
5.6.4 Configuration of IRT with high performance ... 202
5.6.5 Sample configuration for IRT with high performance ... 206

5.7 Isochronous mode ... 207
5.7.1 What is isochronous mode? ... 207
5.7.2 Use of isochronous mode ... 208
5.7.3 Time sequence of synchronization on PROFINET IO ... 210
5.7.4 Configuring isochronous mode ... 211
5.7.4.1 Introduction ... 211
5.7.4.2 Configuring isochronous mode on PROFINET IO ... 213
5.7.4.3 Setting the application cycle and delay time ... 216
5.7.5 Programming isochronous mode ... 217
5.7.5.1 Basics of Programming ... 217
5.7.5.2 Program execution according to the IPO model ... 218
5.7.5.3 Program execution according to the OIP model ... 220

5.8 Device replacement without exchangeable medium ... 222
5.8.1 Device replacement without exchangeable medium/PG function ... 223
5.8.2 Replacing an IO device without exchangeable medium ... 224
5.8.3 Permit overwriting of PROFINET device name ... 226

5.9 Standard machine projects ... 229
5.9.1 Multiple use IO systems ... 230
5.9.1.1 What you should know about multiple use IO systems ... 230
5.9.1.2 Configuring multiple use IO systems ... 234
5.9.1.3 Adapt multiple use IO systems locally ... 236
5.9.2 Configuration control for IO systems ... 239
5.9.2.1 Information about configuration control of IO systems ... 239
5.9.2.2 Configuring IO devices as optional ... 242
5.9.2.3 Enabling optional IO devices in the program ... 244
5.9.2.4 Configuring flexible order of IO devices ... 250
5.9.2.5 Customizing arrangement of IO devices in the program ... 253
5.9.2.6 System behavior and rules ... 256

5.10 Saving energy with PROFIenergy ... 258

5.11 Docking systems ... 260
5.11.1 Configuring docking systems ... 263

5.12 Accelerating startup 265
5.12.1 Options for accelerating the startup of IO devices....265
5.12.2 Prioritized startup 267
5.12.3 Configuring prioritized startup 268
5.12.4 Optimize the port settings 270
5.12.5 Optimize the cabling of the ports 271
5.12.6 Measures in the user program 272

6 PROFINET with the redundant S7-1500R/H system 273

6.1 Configuring PROFINET IO on a redundant S7-1500R/H system....274

6.2 Configuring an IO device with system redundancy S2 in the redundant S7-1500R/H system....282

6.3 Configuring media redundancy (MRP) for a configuration with the redundant S7-1500R/H system 283

Glossary 285

Index.... 299

Documentation guide

1

The documentation for the SIMATIC S7-1500 automation system, for CPU 1516pro-2 PN based on SIMATIC S7-1500, and for the distributed I/O systems SIMATIC ET 200MP, ET 200SP and ET 200AL is divided into three areas.
This division allows you easier access to the specific information you require.

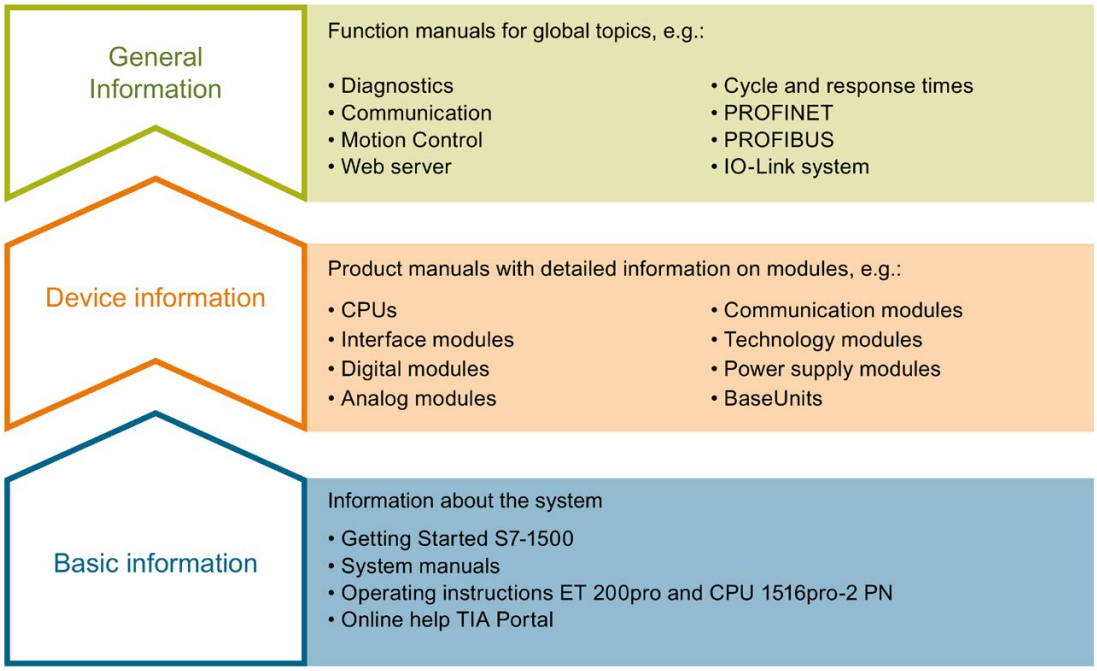

Basic information

System manuals and Getting Started manuals describe in detail the configuration, installation, wiring and commissioning of the SIMATIC S7-1500, ET 200MP, ET 200SP and ET 200AL systems; use the corresponding operating instructions for CPU 1516pro-2 PN. The STEP 7 online help supports you in configuration and programming.

Device information

Product manuals contain a compact description of the module-specific information, such as properties, terminal diagrams, characteristics and technical specifications.

General information

The function manuals contain detailed descriptions on general topics such as diagnostics, communication, Motion Control, Web server, OPC UA.

You can download the documentation free of charge from the Internet (https://support.industry.siemens.com/cs/ww/en/view/109742705).

Changes and additions to the manuals are documented in product information sheets.

You will find the product information on the Internet:

- S7-1500/ET 200MP (https://support.industry.siemens.com/cs/us/en/view/68052815)
- ET 200SP (https://support.industry.siemens.com/cs/us/en/view/73021864)
- ET 200AL (https://support.industry.siemens.com/cs/us/en/view/99494757)

Manual Collections

The Manual Collections contain the complete documentation of the systems put together in one file.

You will find the Manual Collections on the Internet:

- S7-1500/ET 200MP (https://support.industry.siemens.com/cs/ww/en/view/86140384)
- ET 200SP (https://support.industry.siemens.com/cs/ww/en/view/84133942)
- ET 200AL (https://support.industry.siemens.com/cs/ww/en/view/95242965)

"mySupport"

With "mySupport", your personal workspace, you make the best out of your Industry Online Support.

In "mySupport", you can save filters, favorites and tags, request CAx data and compile your personal library in the Documentation area. In addition, your data is already filled out in support requests and you can get an overview of your current requests at any time.

You must register once to use the full functionality of "mySupport".

You can find "mySupport" on the Internet (https://support.industry.siemens.com/My/ww/en).

"mySupport" - Documentation

In the Documentation area in "mySupport" you can combine entire manuals or only parts of these to your own manual.
You can export the manual as PDF file or in a format that can be edited later.

You can find "mySupport" - Documentation on the Internet (https://support.industry.siemens.com/My/ww/en/documentation).

"mySupport" - CAx data

In the CAx data area in "mySupport", you can access the current product data for your CAx or CAe system.

You configure your own download package with a few clicks.

In doing so you can select:

- Product images, 2D dimension drawings, 3D models, internal circuit diagrams, EPLAN macro files
- Manuals, characteristics, operating manuals, certificates
- Product master data

You can find "mySupport" - CAx data on the Internet (https://support.industry.siemens.com/my/ww/en/CAxOnline).

Application examples

The application examples support you with various tools and examples for solving your automation tasks. Solutions are shown in interplay with multiple components in the system - separated from the focus on individual products.

You will find the application examples on the Internet (https://support.industry.siemens.com/sc/ww/en/sc/2054).

TIA Selection Tool

With the TIA Selection Tool, you can select, configure and order devices for Totally Integrated Automation (TIA).
This tool is the successor of the SIMATIC Selection Tool and combines the known configurators for automation technology into one tool.
With the TIA Selection Tool, you can generate a complete order list from your product selection or product configuration.

You can find the TIA Selection Tool on the Internet (https://w3.siemens.com/mcms/topics/en/simatic/tia-selection-tool).

SIMATIC Automation Tool

You can use the SIMATIC Automation Tool to run commissioning and maintenance activities simultaneously on different SIMATIC S7 stations as a bulk operation, independently of the TIA Portal.

The SIMATIC automation tool provides a variety of functions:

- Scanning of a PROFINET/Ethernet plant network and identification of all connected CPUs
- Address assignment (IP, subnet, gateway) and station name (PROFINET device) to a CPU
- Transfer of the date and programming device/PC time converted to UTC time to the module
- Program download to CPU
- Operating mode switchover RUN/STOP
- CPU localization by means of LED flashing
- Reading out CPU error information
- Reading of CPU diagnostic buffer
- Reset to factory settings
- Updating the firmware of the CPU and connected modules

You can find the SIMATIC Automation Tool on the Internet (https://support.industry.siemens.com/cs/ww/en/view/98161300).

PRONETA

With SIEMENS PRONETA (PROFINET network analysis), you analyze the plant network during commissioning. PRONETA features two core functions:

- The topology overview independently scans PROFINET and all connected components.
- The IO check is a fast test of the wiring and the module configuration of a plant.

You can find SIEMENS PRONETA on the Internet (https://support.industry.siemens.com/cs/ww/en/view/67460624).

SINETPLAN

SINETPLAN, the Siemens Network Planner, supports you in planning automation systems and networks based on PROFINET. The tool facilitates professional and predictive dimensioning of your PROFINET installation as early as in the planning stage. In addition, SINETPLAN supports you during network optimization and helps you to exploit network resources optimally and to plan reserves. This helps to prevent problems in commissioning or failures during productive operation even in advance of a planned operation. This increases the availability of the production plant and helps improve operational safety.

The advantages at a glance

- Network optimization thanks to port-specific calculation of the network load
- Increased production availability thanks to online scan and verification of existing systems
- Transparency before commissioning through importing and simulation of existing STEP 7 projects
- Efficiency through securing existing investments in the long term and optimal exploitation of resources

You can find SINETPLAN on the Internet (https://www.siemens.com/sinetplan).

Description 2

2.1 Introduction to PROFINET

What is PROFINET IO?

Within the framework of Totally Integrated Automation (TIA), PROFINET IO is the logical further development of:

- PROFIBUS DP, the established fieldbus and
- Industrial Ethernet

PROFINET IO is based on 20 years of experience with the successful PROFIBUS DP and combines the normal user operations with the simultaneous use of innovative concepts of Ethernet technology. This ensures the integration of PROFIBUS DP into the PROFINET world.

PROFINET IO as the Ethernet-based automation standard of PROFIBUS/PROFINET International defines a cross-vendor communication, automation, and engineering model.

Objectives of PROFINET

The objectives of PROFINET:

- Industrial networking, based on Industrial Ethernet (open Ethernet standard)
- Compatibility of Industrial Ethernet and standard Ethernet components
- High robustness due to Industrial Ethernet devices. Industrial Ethernet devices are suited to the industrial environment (temperature, noise immunity, etc.).
- Use of IT standards such as TCP/IP, http.
- Real-time capability
- Seamless integration of other fieldbus systems

Implementation of PROFINET in SIMATIC

PROFINET is implemented in SIMATIC as follows:

- We have implemented communication between field devices in SIMATIC with **PROFINET IO**.
- Installation technology and network components are available as SIMATIC NET products.
- Ethernet standard protocol and procedures (e.g., SNMP = Simple Network Management Protocol for network parameter assignment and diagnostics) are used for remote maintenance and network diagnostics.

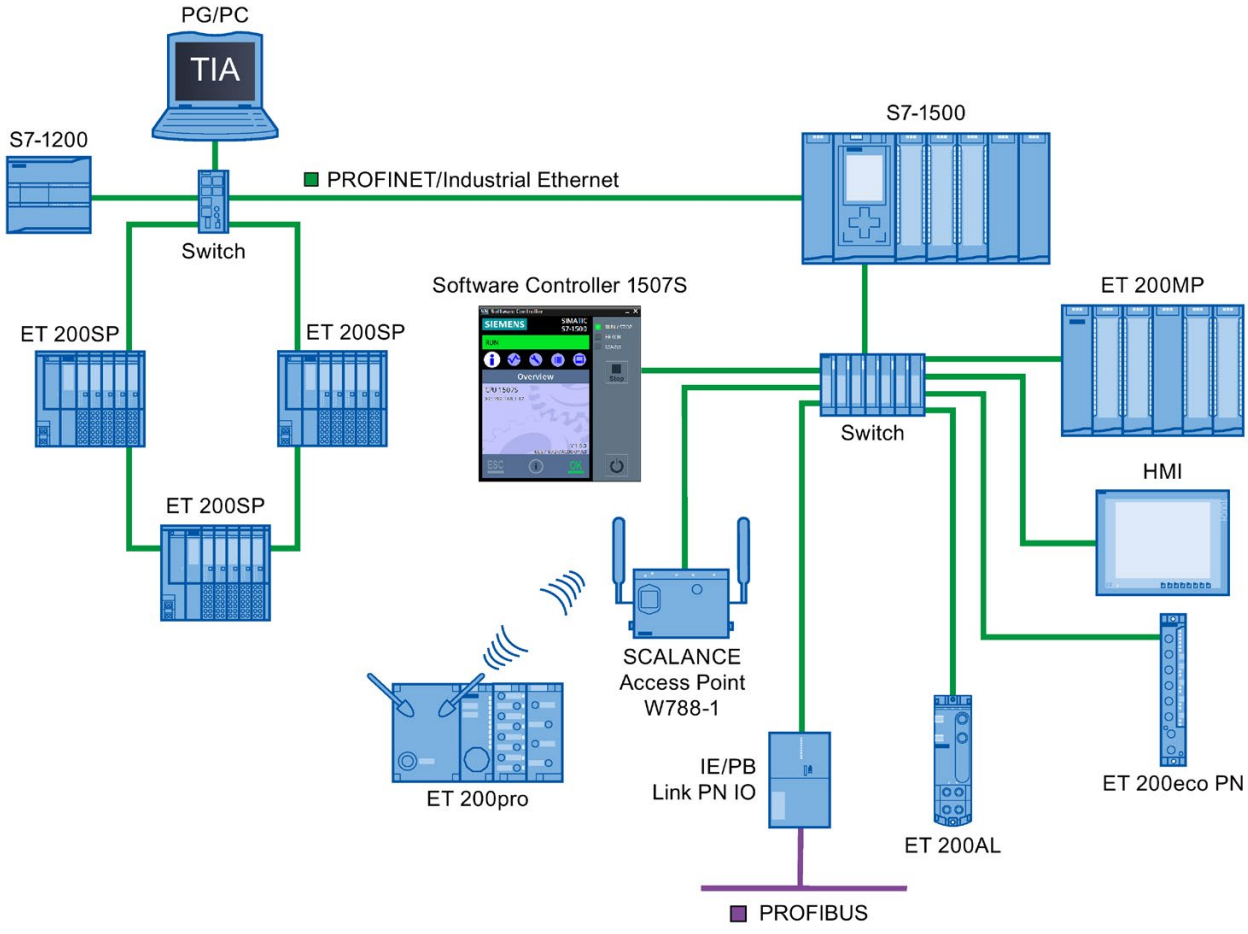

Figure 2-1 PROFINET overview configuration

STEP 7

The STEP 7 engineering tool supports you in setting up and configuring an automation solution. STEP 7 provides a uniform application view over all bus systems.

Documentation from PROFIBUS & PROFINET International on the Internet

You will find numerous documents on the topic of PROFINET at the Internet address (http://www.profibus.com) of the "PROFIBUS & PROFINET International" PROFIBUS user organization, which is also responsible for PROFINET.

Additional information can be found on the Internet (http://www.siemens.com/profinet).

Overview of the most important documents and links

A compilation of the most important PROFINET application examples, FAQs and other contributions in the Industry Online Support is available in this FAQ (https://support.industry.siemens.com/cs/ww/en/view/108165711).

2.1.1 PROFINET terms

Definition: Devices in the PROFINET environment

In the PROFINET environment, "device" is the generic term for:

- Automation systems (PLC, PC, for example)
- Distributed I/O systems
- Field devices (for example, hydraulic devices, pneumatic devices)
- Active network components (for example, switches, routers)
- Gateways to PROFIBUS, AS interface or other fieldbus systems

PROFINET IO devices

The following graphic shows the general names used for the most important devices in PROFINET. In the table below the graphic you can find the names of the individual components in the PROFINET IO context.

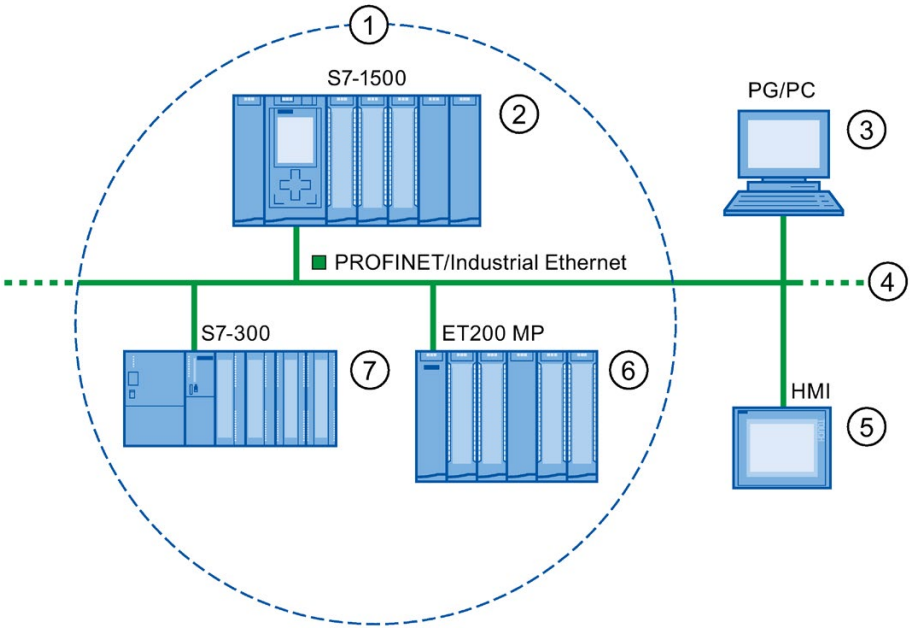

Number	PROFINET	Explanation
①	PROFINET IO System	
②	IO controller	Device used to address the connected IO devices. This means that: The IO controller exchanges input and output signals with field devices.
③	Programming device / PC (PROFINET IO supervisor)	PG/PC/HMI device used for commissioning and for diagnostics
④	PROFINET/Industrial Ethernet	Network infrastructure
⑤	HMI (Human Machine Interface)	Device for operating and monitoring functions.
⑥	IO device	A distributed field device that is assigned to one of the IO controllers (e.g., Distributed IO, valve terminals, frequency converters, switches with integrated PROFINET IO functionality)
⑦	I-device	Intelligent IO device

Figure 2-2 PROFINET devices

IO communication via PROFINET IO

The inputs and outputs of distributed I/O devices are read and written by means of PROFINET IO using what is referred to as IO communication. The following figure provides an overview of IO communication by means of PROFINET IO.

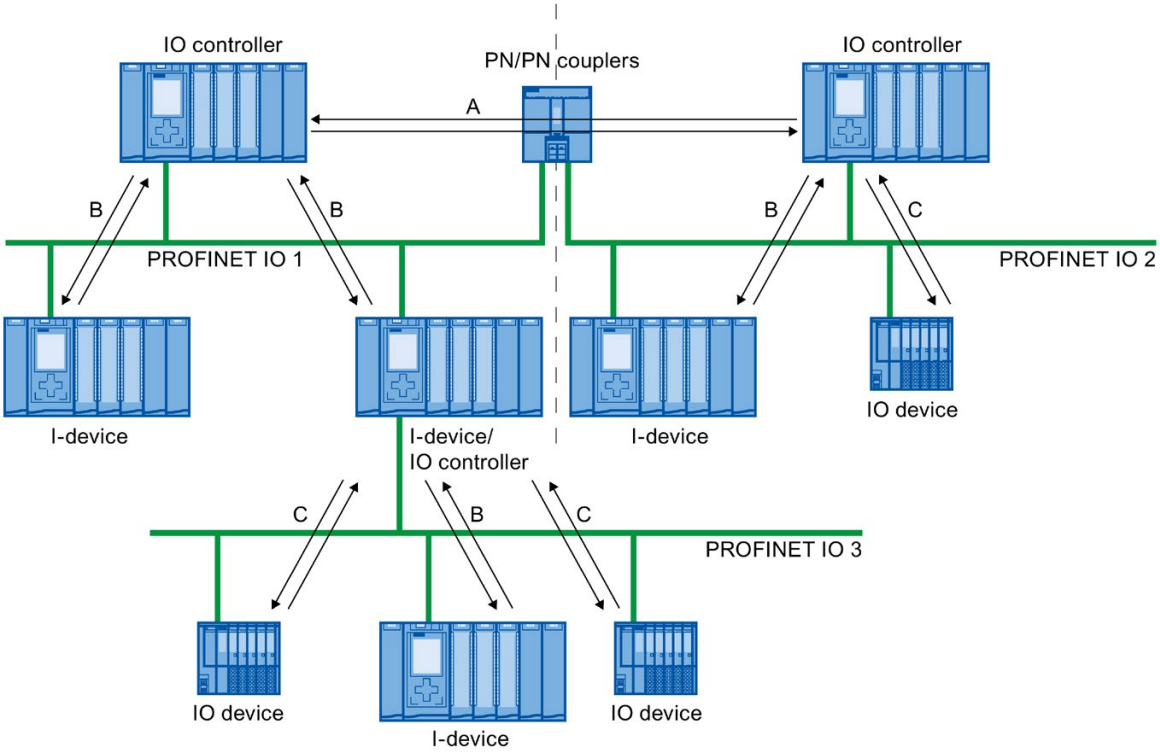

A IO controller - IO controller communication via PN/PN coupler

B IO controller - I-device communication

C IO controller - IO-device communication

Figure 2-3 IO communication via PROFINET IO

IO communication via PROFINET IO

Table 2- 1 IO communication via PROFINET IO

Communication between ...	Explanation
IO controllers and IO devices	The IO controller sends data cyclically to the IO devices of its PROFINET IO system and receives data from these devices.
IO controller and I-device	A fixed quantity of data is transferred cyclically between the user programs in CPUs of IO controllers and I-devices. The IO controller does not access the I/O module of the I-device, but instead accesses configured address ranges, i.e. transfer ranges, which may be located inside our outside the process image of the CPU of the I-device. If parts of the process image are used as transfer ranges, it is not permitted to use these for real I/O modules. Data transfer takes place using load- and transfer operations via the process image or via direct access.
IO controller and IO controller	A fixed quantity of data is cyclically transferred between the user programs in CPUs of IO controllers. A PN/PN coupler is required as additional hardware. The IO controllers mutually access configured address ranges, i.e. transfer ranges, which may be located inside or outside the process image of the CPU. If parts of the process image are used as transfer ranges, it is not permitted to use these for real I/O modules. Data transfer takes place using load- and transfer operations via the process image or via direct access.

See also

Communication (http://support.automation.siemens.com/WW/view/en/59192925)

Network security (Page 39)

Functions (Page 115)

2.1.2 Basic terminology of communication

PROFINET communication

PROFINET communication takes place via Industrial Ethernet. The following transmission types are supported:

- Acyclic transmission of engineering and diagnostics data and interrupts
- Cyclic transmission of user data

The PROFINET-IO communication takes place in real-time.

For additional information on the real-time communication, refer to chapter Real-time communication (Page 182).

Transparent data access

Access to process data from different levels of the factory is supported by PROFINET communication. By using Industrial Ethernet, standard mechanisms of communication and information technology such as OPC/XML can now be used along with standard protocols such as UDP/TCP/IP and HTTP in automation engineering. This allows transparent access from company management level directly to the data from the automation systems at the control level and production level.

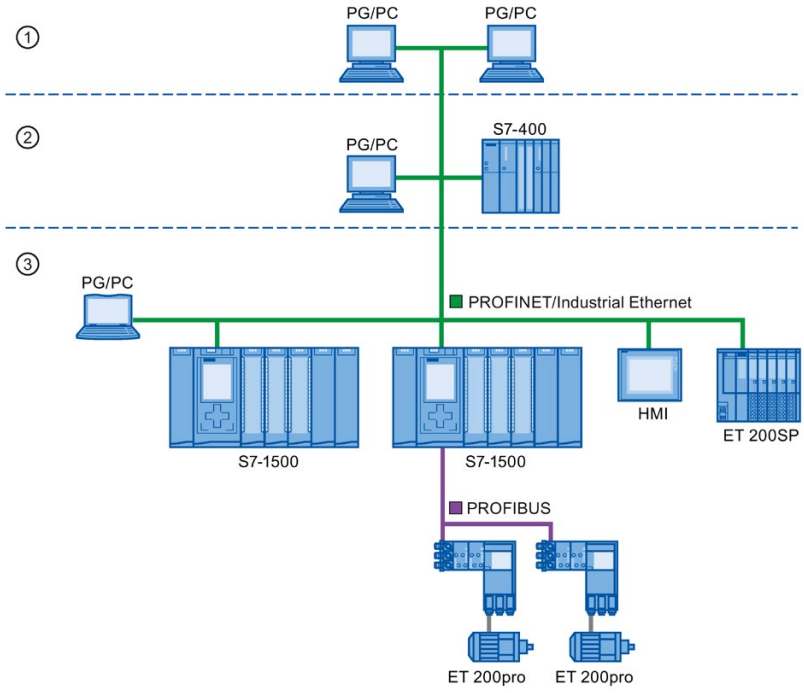

① Management level
② Control level
③ Production level

Figure 2-4 Access to process data

Update time

The update time is a time interval. IO controller and IO device/I-device exchange IO data cyclically in the IO system within this time interval. The update time can be configured separately for each IO device and determines the interval at which output data is sent from the IO controller to the IO device (output module/submodule) as well as input data from the IO device to the IO controller (input module/submodule).

STEP 7 calculates the update time automatically in the default setting for each IO device of the PROFINET IO system, taking into account the volume of data to be exchanged as well as the set send clock.

For additional information on the update time, refer to section Real-time communication (Page 182).

Watchdog time

The watchdog time is the time interval that an IO controller or IO device permits, without receiving IO data. If the IO device is not supplied by the IO controller with data within the watchdog time, the device detects the missing frames and outputs substitute values. This is reported in the IO controller as a station failure.

In STEP 7, the watchdog time is made up from an integral multiple of the update time and can be set by the user.

Send clock

The period of time between two consecutive communication cycles. The send clock is the shortest possible interval in data exchange.

Relationship between the update time and send clock

The calculated update times are reduction ratios (1, 2, 4, 8, ..., 512) of the send clock. The minimum possible update time thus depends on the minimum send clock of the IO controller that can be set and the efficiency of the IO controller and IO device. Depending on the send clock, it can be that only some of the reduction ratios are available (STEP 7 guarantees this through a pre-selection).
The following tables illustrate the dependency of the update time that can be set on the send clock, using an example of the CPU 1516-3 PN/DP. The update times satisfy the requirements of the PROFINET standard IEC 61158.

Table 2- 2 With real-time communication the following applies:

Send clock	Update time	Reduction ratios
250 µs	250 µs to 128 ms	1,2, ..., 512
500 µs	500 µs to 256 ms	1,2, ..., 512
1 ms	1 ms to 512 ms	1,2, ..., 512
2 ms	2 ms to 512 ms	1,2, ..., 256
4 ms	4 ms to 512 ms	1,2, ..., 128

Additional information

For information on real-time communication, refer to the section Real-Time Communication (RT) (Page 183).

2.1.3 PROFINET interface

Overview

PROFINET devices of the SIMATIC product family have one or more PROFINET interfaces (Ethernet controller/interface). The PROFINET interfaces have one or more ports (physical connection options).

In the case of PROFINET interfaces with multiple ports, the devices have an integrated switch.

PROFINET devices with two ports on one interface allow you to configure the system in a line or ring topology. PROFINET devices with three or more ports on one interface are also ideal for setting up tree topologies.

Properties and rules for naming the PROFINET interface and its representation in STEP 7 are explained in the following.

Properties

Every PROFINET device on the network is uniquely identified via its PROFINET interface. For this purpose, each PROFINET interface has:

- A MAC address (factory default)
- An IP address
- A PROFINET device name

Identification and numbering of the interfaces and ports

Interfaces and ports for all modules and devices in the PROFINET system are identified with the following characters:

Table 2- 3 Identification for interfaces and ports of PROFINET devices

Element	Symbol	Interface number
Interface	X	In ascending order starting from number 1
Port	P	In ascending order starting from number 1 (for each interface)
Ring port	R	

Examples of identification

Three examples illustrate the rules for identifying PROFINET interfaces:

Table 2- 4 Examples for identifying PROFINET interfaces

Sample labeling	Interface number	Port number
X2 P1	2	1
X1 P2	1	2
X1 P1 R	1	1 (ring port)

Representation of PROFINET Interfaces in the Topology Overview in STEP 7

You can find the PROFINET interface in the topology overview in STEP 7. The PROFINET interface for an IO controller and an IO device is represented as follows in STEP 7:

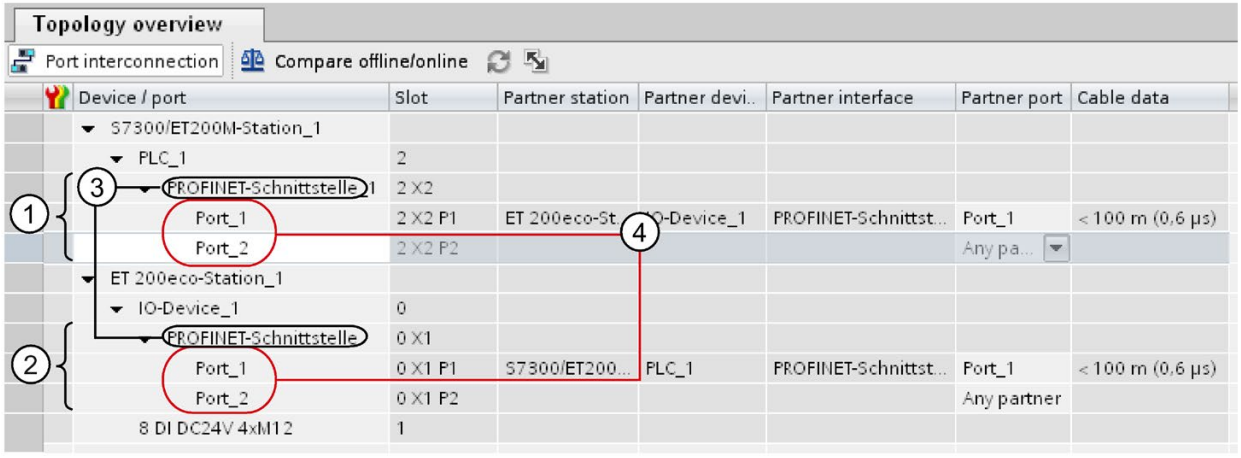

Number	Description
①	PROFINET interface of an IO controller in STEP 7
②	PROFINET interface of an IO device in STEP 7
③	These lines represent the PROFINET interface.
④	These lines represent the "ports" of a PROFINET interface.

Figure 2-5 Representation of the PROFINET interfaces in STEP 7

Schematic Representation of a PROFINET Interface with Integrated Switch

The following schematic diagram shows the PROFINET interface with integrated switch and its ports for all PROFINETdevices.

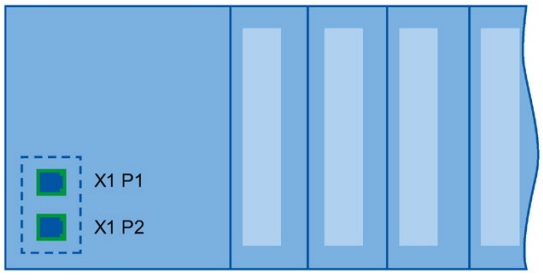

Figure 2-6 PROFINET interface with integrated switch

Functional differences of the PROFINET interfaces

PROFINET interfaces can provide different functions. PROFINET interface functions include identification, configuration, diagnostics and communication services (e.g., open communication). PROFINET interfaces that provide PROFINET IO functions and network security functions are also available.

The following table illustrates the differences using the example of the CPU 1516-3 PN/DP (as of firmware version V2.0), which features two PROFINET interfaces with different functionality.

Table 2- 5 Differences between the PROFINET interfaces of the CPU 1516-3 PN/DP (as of firmware version V2.0)

PROFINET interface (X1)	PROFINET interface (X2)
2 ports with PROFINET IO functionality:	1 port with PROFINET IO functionality:
Identification, configuration and diagnostics	
PG communication	
HMI communication	
S7 communication	
Time-of-day synchronization	
Web server	
Open communication	
OPC UA server	
IO controller	
I-device	
RT	
IRT	-
Isochronous mode	-
Media redundancy	-
Prioritized startup	-

Additional Information on the Functionality of PROFINET interfaces

You can find information on the number and functionality of the interfaces of a PROFINET device in the documentation for the specificPROFINET device.

PROFINET communication services are described in the Communication function manual.

In the Network security section you can find components that are used to protect networks against hazards.

The Functions section describes the PROFINET IO functions.

2.1.4 Implementation of the PROFINET device model in SIMATIC

Slots and modules

A PROFINET device can have a modular and compact structure. A modular PROFINET device consists of slots into which the modules are inserted. The modules have channels which are used to read and output process signals. A compact device has the same design and can include modules, however, it cannot be physically expanded, which means that no modules can be inserted.

This is illustrated by the following graphic.

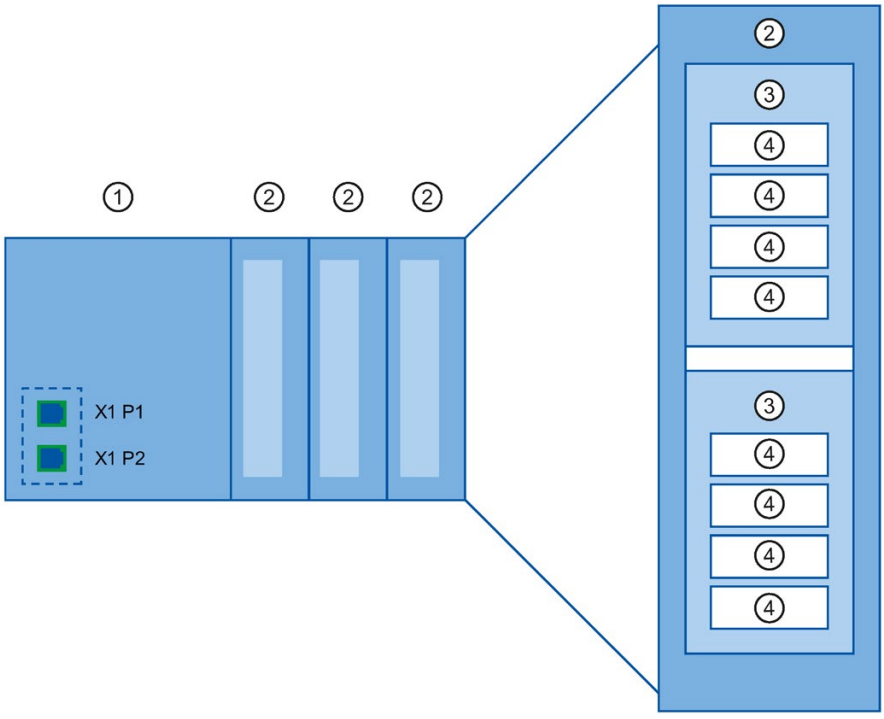

Figure 2-7 Configuration of a PROFINET device

Number	Description
①	Slot with bus interface
②	Slot with module
③	Subslot with submodule
④	Channel

A module can contain multiple submodules.

Representation of PROFINET Device Model in the Device View of STEP 7

The following figure shows the representation of the PROFINET device model in the device view of STEP 7, based on the example of a distributed I/O system ET 200MP:

Device overview

Module	Rack	Slot	I address	Q address	Type
IO-Device_1	0	1			IM 155-5 PN ST
PROFINET-Schnittstelle	0	1 X1			PROFINET interface
Port_1	0	1 X1 P1			Port
Port_2	0	1 X1 P2			Port
DI 32x24VDC HF_1	0	2	16...19		DI32 x 24VDC HF
DQ 32x24VDC/0.5A ST_1	0	3		0...3	DQ32 x 24VDC / 0.5A ST

Figure 2-8 PROFINET device model in the device view of STEP 7

2.2 Setting up PROFINET

Contents of this chapter

The following chapter provides background information on building your communication network.

- Overview of the most important passive network components: These are network components that forward a signal without the possibility of actively influencing it, for example, cables, connectors, etc.
- Overview of the most important active network components: These are network components that actively affect a signal, for example switches, routers, etc.
- Overview of the most common network structures (topologies).

Physical connections of industrial networks

PROFINET devices can be networked in industrial systems in two different physical ways:

- Connected line
  - By means of electrical pulses via copper cables
  - By means of optical pulses via fiber-optic cables
- Wireless via wireless network using electromagnetic waves

PROFINET devices and cabling technology in SIMATIC are suited for industrial use, as they are based on Fast Ethernet and Industrial Ethernet.

- **Fast Ethernet**

  You can use Fast Ethernet to transfer data at a speed of 100 Mbps. This transmission technology uses the 100 Base-T standard for this.

- **Industrial Ethernet**

  Structure of Ethernet in industrial environment.

  The biggest difference from standard Ethernet is the mechanical current carrying capacity and noise immunity of the individual components.

2.2.1 Active Network Components

Introduction

The following active network components are available for PROFINET:

- Switch
- Router

Switched Ethernet

PROFINET IO is based on switched Ethernet with full-duplex operation and a bandwidth of 100 Mbps. In this way, the network can be used much more efficiently through the simultaneous data transfer of several devices. The PROFINET IO frames are processed with high priority.

Switches

Switches are network components used to connect several terminal devices or network segments in a local network (LAN).

For the communication of a device with several other devices on PROFINET, the device is connected to the port of a switch. Other communication devices (including switches) can then be connected to the other ports of the switch. The connection between a communication device and the switch is a point-to-point connection.

A switch has the task of receiving and distributing frames. The switch "learns" the Ethernet address(es) of a connected PROFINET device or additional switches and only forwards those frames that are intended for the connected PROFINET device or the connected switch.

Switch variants

Switches are available in two models:

- Integrated into a PROFINET device

  For PROFINET devices with multiple ports (two or more), we are dealing with devices with an integrated switch (for example, CPU 1516-3 PN/DP).
- As autonomous device (for example, switches of the SCALANCE product family)

Selection Guide for Switches

To use PROFINET with the RT class "RT", you can use any switch of "PROFINET Conformance Class A" or higher. All switches of the SCALANCE product family meet these requirements.

If you want to use PROFINET functions that provide an additional value, such as topology recognition, diagnostics, device exchange without exchangeable medium/programming device, you have to use a switch of the "PROFINET Conformance Class B" or higher.

To use PROFINET with the RT class "IRT", you must use a switch of "PROFINET Conformance Class C". With switches of the SCALANCE product family, watch out for the catalog feature "IRT PROFINET IO switch".

To select appropriate switches, we recommend the SIMATIC NET Selection Tool on the Internet (http://support.automation.siemens.com/WW/view/en/39134641).

Switches of the SCALANCE product family

Use the switches of the SCALANCE product family if you want to use the full scope of PROFINET. They are optimized for use in PROFINET IO.

In the SCALANCE X device family, you will find switches with electrical and optical ports and with a combination of both variants. SCALANCE X202-2IRT, for example, has two electrical ports and two optical ports and supports IRT communication.

Beginning with the SCALANCE X200, you can configure, diagnose and address switches of the SCALANCE X device series as PROFINET IO devices using STEP 7.

Router

A router connects separated network segments with each other (e.g. management level and control level). The volume of data volume must be coordinated with the services of the respective network segment. A router also separates two networks and acts as a mediator between both networks. It thus reduces the network load. Routing functionality is provided in the SCALANCE X device family, with SCALANCE X300 or higher.

Communication devices on different sides of a router can only communicate with one another if you have explicitly enabled communication between them via the router.

If you want to access manufacturing data directly from SAP, for example, use a router to connect your Industrial Ethernet in the factory with the Ethernet in your office.

Note

If devices need to communicate beyond the limits of a network, you must configure the router so that it allows this communication to take place.

Information on routing with STEP 7 is available in the function manual Communication (http://support.automation.siemens.com/WW/view/en/59192925).

2.2.2 Cabling technology

Cables for PROFINET

Electrical and optical cables are available for PROFINET. The type of cable depends on the data transfer requirements and on the ambient conditions.

Simple method for the prefabrication of twisted pair cables

When you set up your PROFINET system, you can cut the twisted-pair cable to the required length on site, strip it with the *stripping tool* (for Industrial Ethernet), and fit the *Industrial Ethernet Fast Connect RJ45 plugs* using the cut-and-clamp method. For more information on installation, refer to the installation instructions in the "SIMATIC NET Industrial Ethernet Network Manual" (http://support.automation.siemens.com/WW/view/en/8763736).

Note

A maximum of four plug-in pairs are allowed between two switches per Ethernet path.

Simple method for the prefabrication of fiber-optic cables

The FastConnect FO cabling system is available for the easy, fast and error-free prefabrication of fiber-optic cables. The glass-fiber optic cable consists of:

- FC FO Termination Kit for SC and BFOC plug (cleave tool, Kevlar scissors, buffer grip, fiber remains container)
- FC BFOC Plug
- FC SC Duplex plug
- FO FC Standard cable
- FO FC Trailing cable

Simple method for the prefabrication of POF and PCF cables

The following special tools provide an easy and safe way to prefabricate POF / PCF cables and fit the SC RJ POF plugs:

- POF cable

  Prefabrication case IE Termination Kit SC RJ POF plug
- PCF cable

  Prefabrication case IE Termination Kit SC RJ PCF plug

Overview of transmission media with PROFINET

The following table summarizes the technical specifications of a PROFINET interface with integrated switch or an external switch, and possible transmission media.

Table 2- 6 Transmission media with PROFINET

Physical properties	Connection methods	Cable type / transmission medium standard	Transmission rate / mode	Max. segment length (between two devices)	Advantages
Electrical	RJ45 connector ISO 60603-7	100Base-TX 2x2 twisted, symmetrical and shielded copper cable, CAT 5 transmission requirement IEEE 802.3	100 Mbps, full duplex	100 m	Simple and cheap cable connection
Optical	SCRJ 45 ISO/IEC 61754-24	100Base-FX POF fiber-optic cable (Polymer Optical Fiber, POF) 980/1000 µm (core diameter / external diameter) ISO/IEC 60793-2	100 Mbps, full duplex	50 m	Use when there are large differences in potential Insensitive towards electromagnetic radiation Low line attenuation Considerably longer segments possible[1]
		Plastic-cladded glass fiber (Polymer Cladded Fiber, PCF) 200/230 µm (core diameter / external diameter) ISO/IEC 60793-2	100 Mbps, full duplex	100 m	
	BFOC (Bayonet Fiber Optic Connector) and SC (Subscriber Connector) ISO/IEC 60874	Monomode glass fiber optic cable 10/125 µm (core diameter / external diameter) ISO/IEC 60793-2	100 Mbps, full duplex	26 km	
		Multimode glass fiber optic cable 50/125 µm and 62.5/125 µm (core diameter / external diameter) ISO/IEC 9314-4	100 Mbps, full duplex	3000 m	
Electromagnetic waves	-	IEEE 802.11 x	Depends on the extension used (a, g, h, etc.)	100 m	Greater mobility Cost-effective networking to remote, difficult to access devices

[1] Applies for fiber-optic cables only

See also

PROFINET interface (Page 25)

Assembly Instructions for SIMATIC NET Industrial Ethernet (http://support.automation.siemens.com/WW/view/en/27069465)

PROFINET Installation Guideline (http://www.profibus.com/nc/download/installation-guide/downloads/profinet-installation-guide/display/)

2.2.3 Wireless design

2.2.3.1 Basics

What is Industrial Wireless LAN?

In addition to data communication in accordance with the IEEE 802.11 standard, the SIMATIC NET Industrial Wireless LAN provides a number of enhancements which offer significant benefits for industrial customers. IWLAN is particularly suitable for demanding industrial applications that require reliable wireless communication. This is supported by the following properties:

- Automatic roaming when the connection to Industrial Ethernet is interrupted (Forced Roaming)
- Cost savings generated by using a single wireless network for reliable operation of a process with both process-critical data (alarm message, for example) and non-critical communication (service and diagnostics, for example)
- Cost-effective connection to devices in remote environments that are difficult to access
- Predictable data traffic (deterministic) and defined response times
- Cyclical monitoring of the wireless link (link check)

Objectives and advantages of Industrial Wireless LAN

Wireless data transmission achieves the following objectives:

- Seamless integration of PROFINET devices into the existing bus system via the wireless interface
- Mobile use of PROFINET devices for different production-linked tasks
- Flexible configuration of the system components for fast development in accordance with customer requirements
- Maintenance costs are minimized by savings in cables

Application examples

- Communication with mobile subscribers (mobile controllers and devices, for example), conveyor lines, production belts, translation stages , and rotating machines
- Wireless coupling of communication segments for fast commissioning or cost-effective networking where routing of wires is extremely expensive (e.g. public streets, railroad lines)
- Stacker trucks, automated guided vehicle systems and suspended monorail systems

The following graphic illustrates the many possible applications and configurations for SIMATIC device family wireless networks.

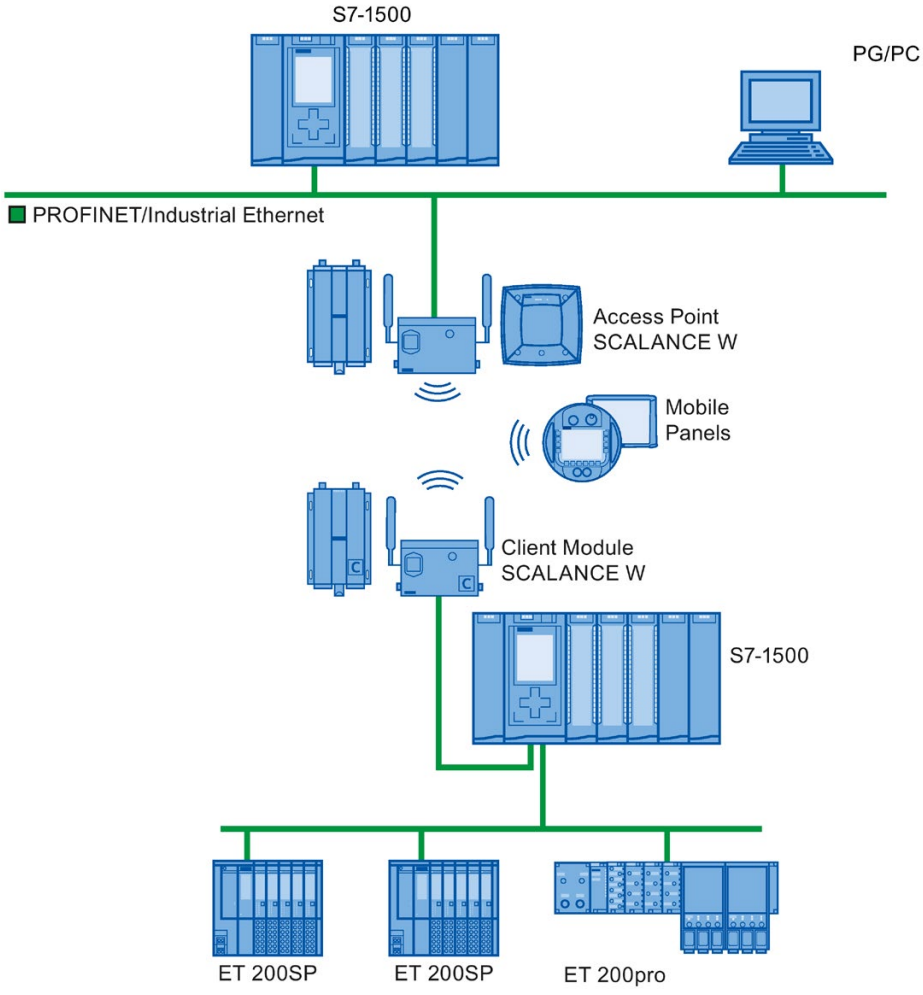

Figure 2-9 Application example for the use of Industrial Wireless LAN

Data transmission rate

In Industrial Wireless LAN, gross data transmission rates of 11 Mbps or 54 Mbps without full duplex are permitted.

Range

With SCALANCE W (access points), wireless networks can be set up indoors and outdoors. Multiple access points can be installed to create large wireless networks in which mobile subscribers are transferred seamlessly from one access point to another (roaming).

As an alternative to a wireless network, point-to-point connections of Industrial Ethernet segments can also be set up over large distances (several hundred meters). In this case, the range and characteristics of the RF field are determined by the antennas used.

Note

Range

The range can be considerably less, depending on spatial factors, the wireless standard used, the data rate, and the antennas on the send and receive sides.

2.2.3.2 Tips on assembly

Wireless networks, SCALANCE device family

With PROFINET, you can also set up wireless networks with Industrial Wireless Local Area Network (IWLAN) technology. We recommend implementing the SCALANCE W device line for this.

Update time in STEP 7

If you set up PROFINET with Industrial Wireless LAN, you may have to increase the update time for the wireless devices. The IWLAN interface provides lower performance than the wired data network: Several communication stations have to share the limited transmission bandwidth. For wired solutions, 100 Mbps is available for each communication device.

The Update time parameter can be found in the "Realtime settings" section in the Inspector window of IO devices in STEP 7.

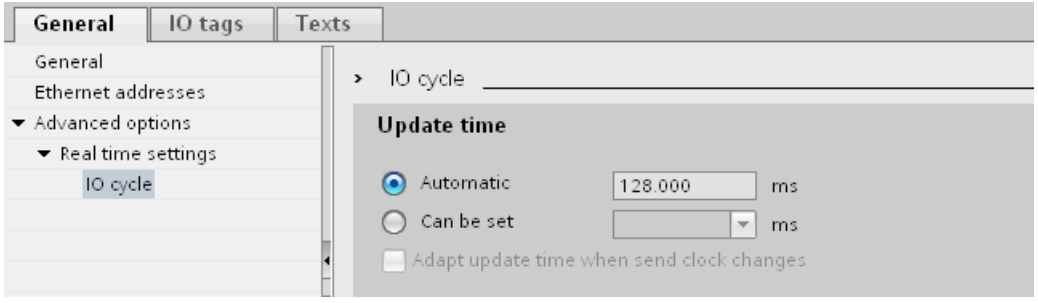

Figure 2-10 Update time in STEP 7

Additional information

More information about SCALANCE W Industrial Wireless LAN components can be found in the manual SIMATIC NET SCALANCE W-700 (http://support.automation.siemens.com/WW/view/en/42784493).

More information about wired data transmission can be found in the manual SIMATIC NET Twisted Pair and Fiber Optic Networks (http://support.automation.siemens.com/WW/view/en/8763736).

More information about wireless data transmission can be found in the manual Basics for configuring an industrial wireless LAN (http://support.automation.siemens.com/WW/view/en/9975764).

You should also read the PROFINET installation guideline of the PROFIBUS User Organization on the Internet (http://www.profibus.com/nc/download/installation-guide/downloads/profinet-installation-guide/display/). Various documents that assist with the setting up of your PROFINET automation solution are available here:

- PROFINET planning guideline
- PROFINET installation guideline
- PROFINET commissioning guideline
- Additional documents for setup of PROFINET

2.2.4 Network security

2.2.4.1 Basics

Introduction

The topic of data security and access protection (Security) has become increasingly important in the industrial environment. The increased networking of entire industrial systems, vertical integration and networking of levels within a company and new techniques such as remote maintenance all result in higher requirements for protecting the industrial plant.

Data security solutions for office environments cannot simply be transferred one-to-one to industrial applications to protect against manipulation in sensitive systems and production networks.

Requirements

Additional security requirements arise from the specific communication requirements in the industrial environment (real-time communication, for example):

- Protection against interaction between automated cells
- Protection of network segments
- Protection against faulty and unauthorized access
- Scalability of network security
- Must not influence the network structure

Definition of security

Generic term for all the measures taken to protect against:

- Loss of confidentiality due to unauthorized access to data
- Loss of integrity due to manipulation of data
- Loss of availability due to destruction of data, for example, through faulty configuration and denial-of-service attacks

Threats

Threats can arise from external and internal manipulation. The loss of data security is not always caused by intentional actions.

Internal threats can arise due to:

- Technical errors
- Operator errors
- Defective programs

Added to these internal threats there are also external ones. The external threats are not really any different to the known threats in the office environment:

- Software viruses and worms
- Trojans
- Man-in-the-middle attacks
- Password Phishing
- Denial of Service

Protective measures

The most important precautions to prevent manipulation and loss of data security in the industrial environment are:

- Filtering and control of data traffic by means of firewall
- A virtual private network (VPN) is used to exchange private data on a public network (Internet, for example).

  The most common VPN technology is IPsec. IPsec (Internet Protocol Security) is a collection of security protocols that are used as the basis for the IP protocol at the mediation level and allow a secured communication via potentially unsecure IP networks.
- Segmenting in protected automation cells

  This concept has the aim of protecting the lower-level network devices by means of security modules. A group of protected devices forms a protected automation cell.
- Authentication (identification) of the devices

  The security modules identify each other over a safe (encrypted) channel using authentication procedures. It is therefore impossible for unauthorized parties to access a protected segment.
- Encrypting the data traffic

  The confidentiality of data is ensured by encrypting the data traffic. Each security module is given a VPN certificate which includes the encryption key.

2.2.4.2 Network components and software

Protection against unauthorized access

The following solutions may be used to connect industrial networks to the intranet and Internet to protect against internal and external threats:

- Communication processors, such as the SIMATIC CP 1543-1
- SCALANCE X-300 and SCALANCE S - the data security components of the SIMATIC NET product family
- SOFTNET security client for use on PCs

Features

Both of these products have a wide variety of features, such as:

- Easy integration of existing networks without configuration, with integrated firewall.
- Segmenting in protected automation cells
- Authentication (identification) of the devices
- Encrypting the data traffic

2.2.4.3 Application example

Data security at the office and production levels

The following graphic contains an application example with protected areas at different levels of the company created using SCALANCE S and the security client. The protected areas are highlighted in light gray.

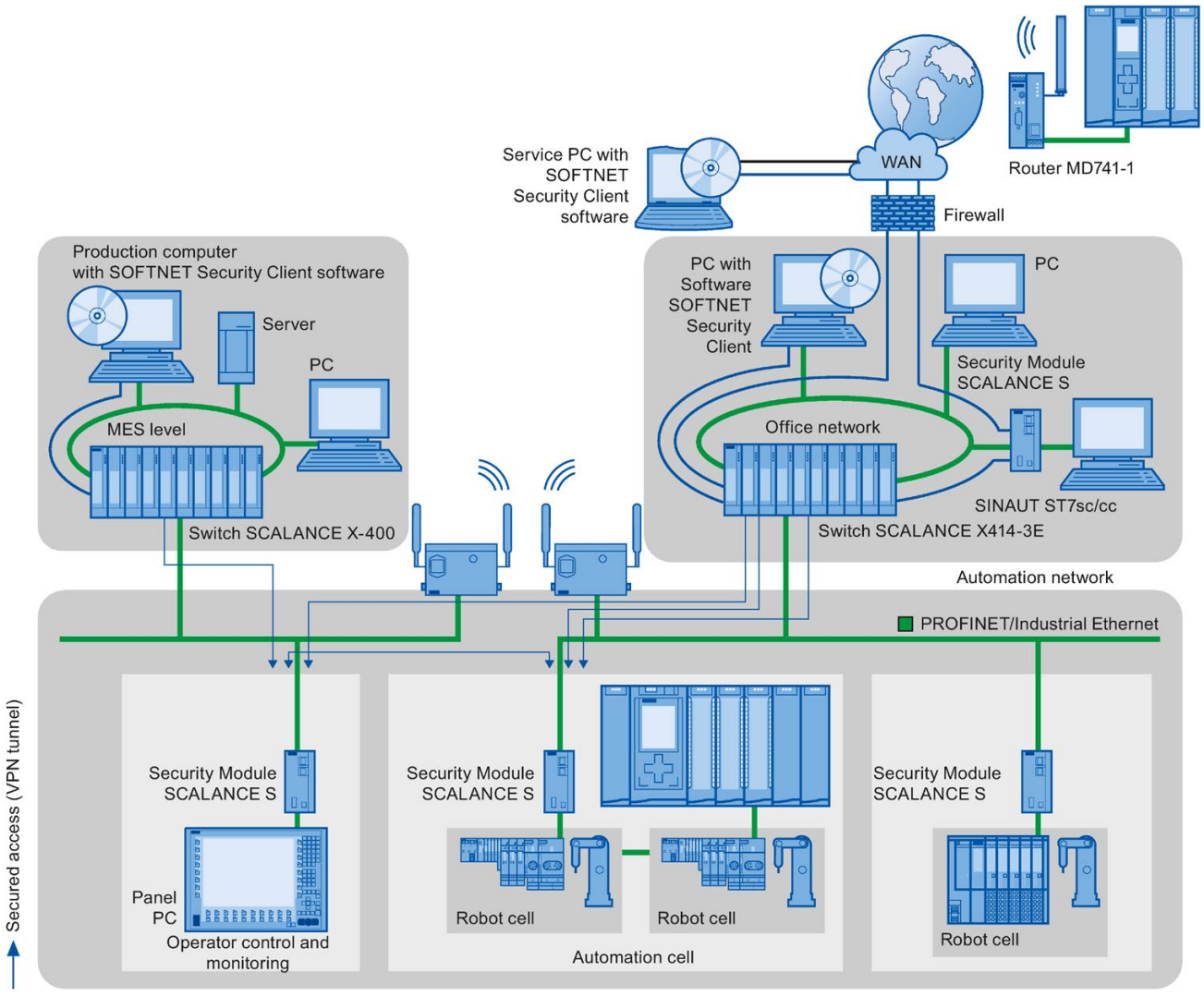

Figure 2-11 Network configuration with the SCALANCE S security module and the SOFTNET security client

Additional information

Additional information on the configuration of a security standard in PROFINET, is available:

- In the PROFINET security guideline. These guidelines can be found on the homepage of the PROFIBUS user organization on the Internet (http://www.profinet.com).
- In the Industrial Ethernet Security (http://support.automation.siemens.com/WW/view/en/56577508) manual
- In the SCALANCE S and SOFTNET Security Client (http://support.automation.siemens.com/WW/view/en/21718449) manual

You can find general information on industrial security concepts, functions and news on the Industrial Security website (http://www.siemens.com/industrialsecurity).

Parameter assignment/addressing 3

To set up an automation system, you will need to configure, assign parameters and interlink the individual hardware components. In STEP 7, the work needed for this is undertaken in the device, topology and network view.

Configuring

"Configuring" is understood to mean arranging, setting and networking devices and modules within the device, topology or network view.

An I/O address is automatically assigned to each module. The I/O addresses can be subsequently modified.

The CPU compares the configuration preset in STEP 7 with the actual current configuration of the system. In this way, potential errors can be detected and reported straight away.

The exact procedure for configuring devices is described in detail in the STEP 7 online help.

Assigning parameters

"Assigning parameters" is understood to mean setting the properties of the components used. The settings for the hardware components and for data communication are configured at the same time.

In STEP 7, you can "assign parameters" for the following settings PROFINET:

- Device names and IP address parameters
- Port interconnection and topology
- Module properties / parameters

The parameters are loaded into the CPU and transferred to the corresponding modules when the CPU starts up. Modules are easy to replace from spare parts, as the parameters assigned for the SIMATIC CPUs are automatically loaded into the new module at each startup.

Adjusting the hardware to the project requirements

You need to configure hardware if you want to set up, expand or change an automation project. To do this, add hardware components to your structure, link these with existing components, and adapt the hardware properties to the tasks.

The properties of the automation systems and modules are preset such that in many cases they do not have to be assigned parameters again.

Parameter assignment is however needed in the following cases:

- You want to change the default parameter settings of a module.
- You want to use special functions.
- You want to configure communication connections.

3.1 Assigning an IO device to an IO controller

PROFINET IO System

A PROFINET IO system is comprised of a PROFINET IO controller and its assigned PROFINET IO devices. After these devices have been placed in the network or topology view, STEP 7 assigns default values for them. Initially, you only have to worry about the assignment of IO devices to an IO controller.

Requirement

- You are in the network view of STEP 7.
- A CPU has been placed (e.g., CPU 1516-3 PN/DP).
- An IO device has been placed (e.g., IM 155-6 PN ST).

Procedure

To assign IO devices to an IO controller, proceed as follows:

1. Place the pointer of the mouse over the interface of the IO device.
2. Press and hold down the left mouse button.
3. Move the pointer.

   The pointer now uses the networking symbol to indicate "Networking" mode. At the same time, you see the lock symbol on the pointer. The lock symbol disappears only when the pointer is over a valid target position.

4. Now move the pointer onto the interface of the IO controller. You can keep the left mouse button pressed or release it when performing this action.
5. Now release the left mouse button or press it again (depending on your previous action).

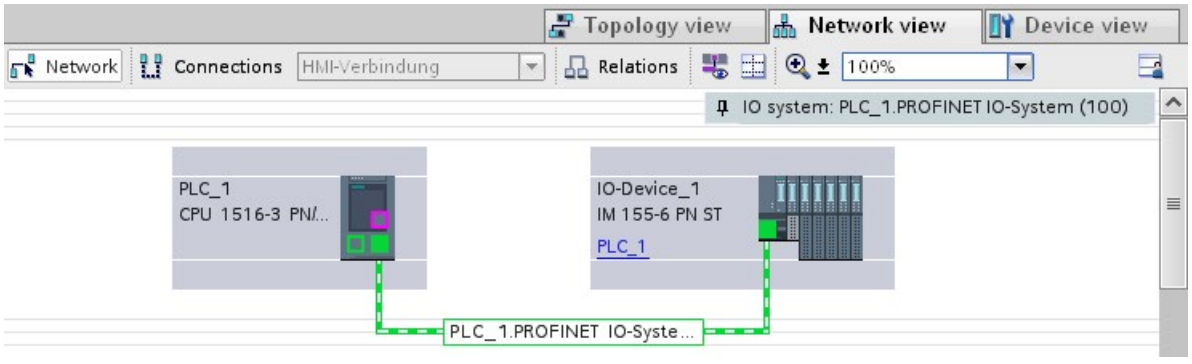

Figure 3-1 Assigning an IO device to an IO controller in the network view of STEP 7

Result

You have assigned an IO device to an IO controller.

Checking the assignment

You can find an overview of the communication relationships in the "IO communication" tab in the tabular area of the network view. This table is context-sensitive for selection in the graphic area:

- Selection of the interface shows the I/O communication of the respective interface.
- Selection of the CPU shows all I/O communication of the CPU (including PROFIBUS).
- Selection of the station (as in the above figure) interface shows the I/O communication of the complete station.

Information on S7-1500R/H

You can find the procedure for assigning an IO device with system redundancy S2 to the redundant S7-1500R/H system in section Configuring an IO device with system redundancy S2 in the redundant S7-1500R/H system (Page 282).

3.2 Device name and IP address

Introduction

In order that the PROFINET device can be addressed as node on PROFINET, the following are required:

- A unique PROFINET device name
- A unique IP address in the relevant IP subnet

STEP 7 assigns a device name during the arrangement of a PROFINET device in the hardware and network editor. The IP addresses are typically assigned automatically by STEP 7 and assigned to the devices based on the device name.

You can change the name and IP address manually.

In STEP 7

You can find the device name and the IP address under "Ethernet addresses" in the properties of the PROFINET interface in the Inspector window.

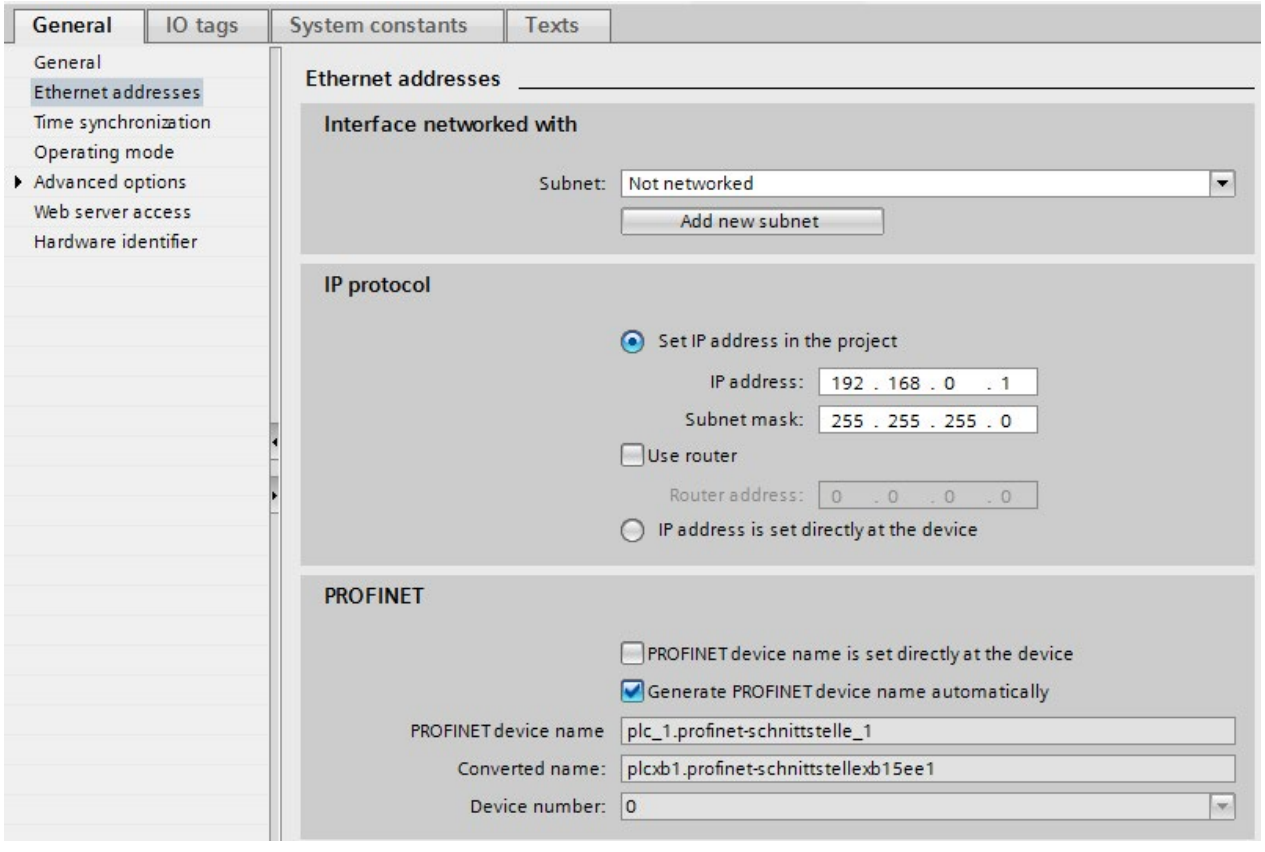

Figure 3-2 Device name and IP address in STEP 7

The function, the assignment and the changing of the device name and the IP address are described in the following sections.

3.2.1 Device name

Device names

Before an IO device can be addressed by an IO controller, it must have a device name. In PROFINET, this method was selected because it is simpler to work with names than with complex IP addresses.

The assignment of a device name for a specific IO device can be compared to setting the PROFIBUS address of a DP slave.

In delivery state, an IO device does not have a device name. A device name must first be assigned before an IO device can be addressed by an IO controller, for example, for transferring configuration data during startup or for exchanging user data in cyclic mode. You assign the device names to the IO device, for example, with the programming device / PC.

IO devices that have a slot for removable storage media provide the option of writing the device name directly to the removable storage medium in the programming device.

When a device is replaced by a device without removable medium, the IO controller assigns the device name based on topological configuration (see section Configuring topology (Page 68)).

Structured device names

The device name is automatically assigned by default for PROFINET devices S7-1200, S7-1500, ET 200MP, ET 200SP and ET 200AL when these are configured in STEP 7. The device names are formed from the name of the CPU or the name of the interface module. For devices with several PROFINET interfaces, the name of the interface is enhanced, for example, "plc_1.profinet-interface_2" or "io-device_1".

You can structure the device names using DNS conventions.

These conventions are defined by "Internationalizing Domain Names in Applications (IDNA). According to this, device names are written in lower case.

The "Domain Name System" (DNS) is a distributed database (http://iana.org), which manages the name space on the Internet. To structure the names, you use the dot ("."). The hierarchy is shown in ascending order from left to right.

...<Subdomain name>.<Domain name>.<Top-level domain name>

If the name is not DNS-compliant, the name will be converted by STEP 7, for example, to "plcxb1.profinet-schnittstellexb2022c" or "io-devicexb15b32".

Device number

In addition to the device name, STEP 7 also assigns a device number beginning with "1" when an IO device is allocated.

The device number is located in the Inspector window in the properties of the PROFINET interface, under "Ethernet addresses" in the area PROFINET.

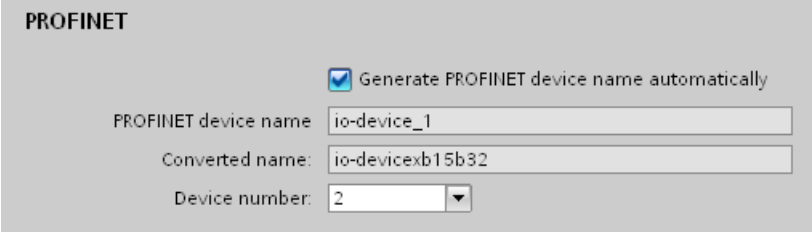

Figure 3-3 Device number

This device number can be used to identify an IO device in the user program (for example, with the instruction "LOG2GEO").

3.2.2 IP address

IP address

To allow a PROFINET device to be addressed as a device on Industrial Ethernet, this device also requires an IP address that is unique within the network. The IP addresses are typically assigned automatically by STEP 7 and assigned to the devices based on the device name. If it is a standalone network, you can apply the IP address and subnet mask suggested by STEP 7. If the network is part of an existing Ethernet company network, obtain the information from your network administrator.

Configuration of the IP address

In accordance with Internet Protocol version 4 (IPv4), the IP address is made up of four decimal numbers with a range of values from 0 through 255. The decimal numbers are separated by periods (for example, 192.162.0.0).

The IP address consists of the following:

- Address of the network
- Address of the device (PROFINET interface of the IO controller/IO device)

Generating IP addresses

The IP addresses of the IO devices are generated by STEP 7 and first assigned to the IO devices when the CPU starts up. In addition, for some IO devices (e.g., SCALANCE X, S7-300 CPs), it is possible not to obtain the IP address during startup of the IO controller, but rather to set it beforehand on the device (see Permitting changes to the device name and IP address directly on the device (Page 60)).

The IP addresses of the IO devices always have the same subnet mask as the IO controller and are assigned from the IP address of the IO controller in ascending order. The IP address can be changed manually, if necessary.

For devices with several PROFINET interfaces (e.g., CPU 1516-3 PN/DP), the IP addresses must be located in different subnets.

Default router

The default router is used when data has to be forwarded via TCP/IP or UDP to a partner located outside the local network.

In STEP 7, the default router is named Router. You can activate the use of a router in the Inspector window of a CPU with the "Use router" check box in the "IP protocol" section. STEP 7 assigns the local IP address to the default router by default.

The router address that is set on the PROFINET interface of the IO controller is automatically transferred for the configured IO devices.

Subnet mask

The bits set in the subnet mask decide the part of the IP address that contains the address of the network.

In general, the following applies:

- The network address is obtained from the AND operation of the IP address and subnet mask.
- The device address is obtained from the AND NOT operation of the IP address and subnet mask.

Example of the subnet mask

Subnet mask: 255.255.0.0 (decimal) = 11111111.11111111.00000000.00000000 (binary)

IP address: 192.168.0.2 (decimal) = 11000000.10101000.00000000.00000010 (binary)

Meaning: The first 2 bytes of the IP address determine the network - i.e., 192.168. The last two bytes address the device, i.e. 0.2.

Relation between IP address and default subnet mask

An agreement exists relating to the assignment of IP address ranges and so-called "Default subnet masks". The first decimal number (from the left) in the IP address determines the structure of the default subnet mask with respect to the number of "1" values (binary) as follows:

IP address (decimal)	IP address (binary)	Address class	Default subnet mask
0 to 126	0xxxxxxx.xxxxxxxx....	A	255.0.0.0
128 to 191	10xxxxxx.xxxxxxxx...	B	255.255.0.0
192 to 223	110xxxxx.xxxxxxxx...	C	255.255.255.0

Note

Range of values for the first decimal point

A value between 224 and 255 is also possible for the first decimal number of the IP address (address class D etc.). However, this is not recommended because there is no address check for these values.

Masking other subnets

You can use the subnet mask to add further structures and form "private" subnets for a subnet that is assigned one of the address classes A, B or C. This is done by setting other, less significant bits of the subnet mask to "1". For each bit set to "1", the number of "private" networks doubles and the number of devices they contain is halved. Externally, the network continues to function as an individual network.

Example:

You have a subnet of address class B (for example, IP address 129.80.xxx.xxx) and change the default subnet mask as follows:

Masks	Decimal	Binary
Default subnet mask	255.255.0.0	11111111.11111111.00000000.00000000
Subnet mask	255.255.128.0	11111111.11111111.10000000.00000000

Result:

All devices with addresses from 129.80.001.000 to 129.80.127.254 are located in a subnet, all devices with addresses from 129.80.128.000 to 129.80.255.254 in a different subnet.

Reading out an IP address in the user program

You can read out the IP address of a PROFINET device in the user program of a S7-1500 CPU. You can find information in this FAQ (https://support.industry.siemens.com/cs/ww/en/view/82947835).

3.2.3 Assigning a device name and IP address

Assigning an IP address and subnet mask for an IO controller for the first time

You have the following options:

- **Using a programming device or PC:**

  Connect your programming device/PC to the same network as the relevant PROFINET device. The interface of the programming device/PC must be set to TCP/IP mode. During the download, first of all display all available devices via the "Accessible devices" download dialog box. Select the target device via its MAC address and then assign its IP address before you download the hardware configuration including the configured IP address (IP address is saved retentively).

- **Using the display of a S7-1500 CPU:**

  The S7-1500 CPUs have a front cover with a display and operating keys. You can use this display to assign or change the IP address. To set the IP address, navigate on the display via the menu items "Settings" > "Addresses" > "X1 (IE/PN)" > "Parameters".

- **Using a memory card:**

  If your PROFINET device is equipped for a memory card (Micro Memory Card/SIMATIC memory card), plug this into your programming device/PC and save the hardware configuration together with the configured IP address on this memory card. Then plug the memory card into the PROFINET device. Once inserted, the PROFINET device automatically applies the IP address.

  If you have saved a configuration to the memory card with the "IP address is set directly at the device" option, you must assign the IP address using a different method after inserting the memory card (see section Permitting changes to the device name and IP address directly on the device (Page 60)).

Assigning device names and IP address for "Device replacement without exchangeable medium/programming device"

For devices without exchangeable medium (e.g., ET 200MP, ET 200SP) and devices that support "Device replacement without exchangeable medium/PG" (e.g., ET 200S), the IO controller can identify the device without name from the neighbor relationships specified by the set topology and from actual neighbor relationships determined by the real PROFINET devices. The IO controller then assigns the PROFINET device the configured name and incorporates the PROFINET device in the user data traffic. (See also Device replacement without exchangeable medium (Page 222)).

IP address assignment when replacing IO devices with exchangeable mediumPG

The following is contained on the memory card of the programmable logic controller:

- On the IO controller: Device name and IP address
- On the IO device: Device name

When you remove the memory card from a PROFINET device and insert it in another PROFINET device with exchangeable medium (e.g., ET 200S), device-specific information and the device name are loaded to the device.

If an IO device has to be replaced in its entirety due to a device or module defect, the IO controller automatically assigns parameters and configures the replaced device or module. The cyclic exchange of user data is then restarted. In addition to this, before the power ON of the IO device, the memory card with the valid name must be removed from the faulty IO device and added to the replaced device.

In the event of an error in the PROFINET device, the memory card allows you to replace a module without a programming device/PC. You can also transfer the device data directly from the programming device/PC to the memory card.

Procedure: Changing the device name using properties of the PROFINET interface

You can change the PROFINET name via the properties of the PROFINET interface. This is useful when the PROFINET device has not received its previous name from the automatic generation, for example, in the case of a migration.

1. In the network or device view of the STEP 7 hardware and network editor, select the PROFINET interface of a PROFINET device.
2. In the Inspector window, go to "Ethernet addresses" in the PROFINET area.
3. Clear the "Generate PROFINET device name automatically" check box.
4. Enter the new PROFINET device name in the relevant field.

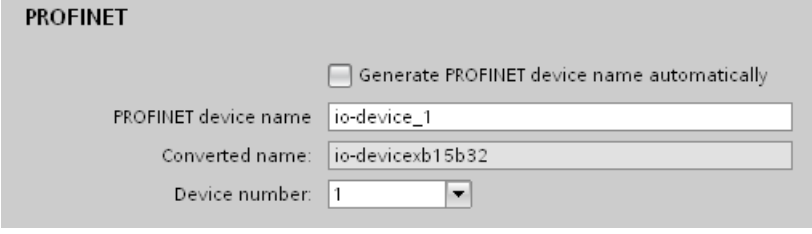

Figure 3-4 Changing the device name of a PROFINET device in the properties

Alternative procedure: Changing the device name of a PROFINET device in the network view

Requirement: The "Generate PROFINET device name automatically" check box is selected.

1. In STEP 7, select the "Network overview" tab in the tabular area of the network view.
2. In the "Device" column, overwrite the name in the row of the relevant PROFINET device.

The name is also changed accordingly in the graphic area of the network view.

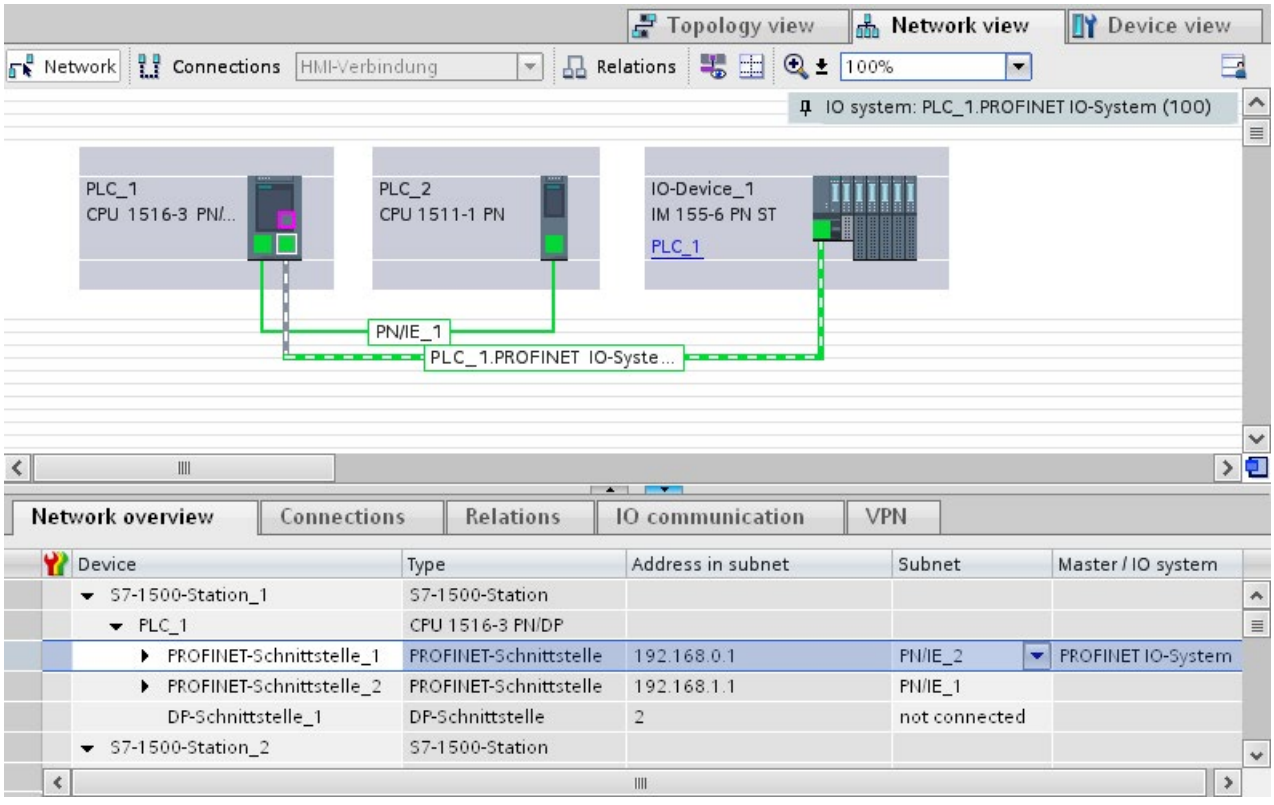

Figure 3-5 Changing the device name of a PROFINET device in STEP 7

Procedure: Changing the IP address

To change the IP address, follow these steps:

1. In the network or device view of the STEP 7 hardware and network editor, select the PROFINET interface of a PROFINET device.
2. In the Inspector window, go to "Ethernet addresses" in the "IP protocol" area.
3. Check that the option "Set IP address in the project" is selected.
4. Enter the new IP address in the relevant field.

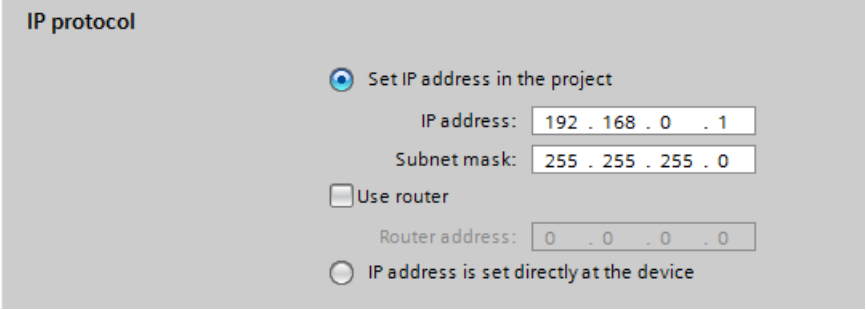

Figure 3-6 Changing the IP address of a PROFINET device in STEP 7

Downloading configured device name to IO device

To load the configured device names to the IO device, follow these steps:

1. Connect your programming device/PC to the same network as the relevant IO device. The interface of the programming device/PC must be set to TCP/IP mode.
2. In STEP 7, select the relevant IO device in the "Accessible devices" dialog based on the MAC address.
3. Click "Assign name" to download the configured device name to the IO device.

   The IO controller recognizes the IO device automatically by its device name and automatically assigns the configured IP address to it.

Identification of the PROFINET device

To clearly identify a device from several identical devices in a control cabinet, for example, you can flash the link LED of the PROFINET device.

To do this, select the menu command **Online > Accessible devices...** in STEP 7. In the "Accessible devices" dialog, set the "PG/PC" interface by means of which you are connected to the devices. STEP 7 now automatically searches for the accessible devices and displays them in the "Accessible devices in target subnet" table. Select the desired PROFINET device and click on the "Flash LED" button. The PROFINET device is identified based on its MAC address.

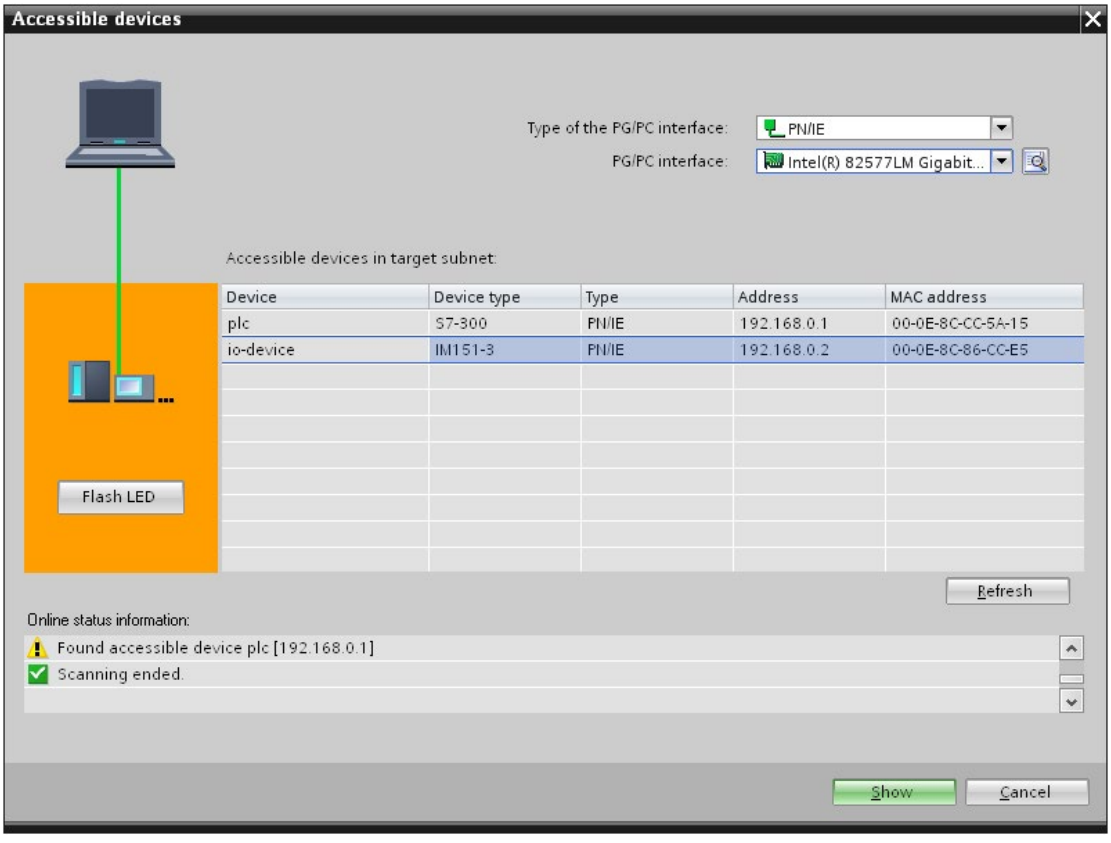

Figure 3-7 "Accessible devices" dialog

Using an different way to assign IP addresses for IO devices

Various IO devices, for example, SCALANCE X,S7-300 CPs, support the option of not having the IP addresses assigned by the IO controller during startup. In this case, the IP address is assigned in a different way. For additional information, refer to the manual of the respective PROFINET device of the SIMATIC device family.

Additional information

You can find a detailed description of the operation and functions of the display of the S7-1500 CPUs in the system manual S7-1500, ET 200MP (http://support.automation.siemens.com/WW/view/en/59191792).

3.2.4 Assign device name via communication table

Introduction

You can assign the device names of PROFINET IO devices configured offline to the devices online. You can do this in the table area of the network view in the table "I/O communication". You can also assign the device names to several devices at the same time.

"Online assignment" tab

In the I/O communication table, you will find the tabs "Offline configuration" and "Online assignment". In the "Online assignment" tab, you can assign the PROFINET device names that were assigned offline to the corresponding IO devices online. To do this, use the buttons "Check devices" and "Assign now".

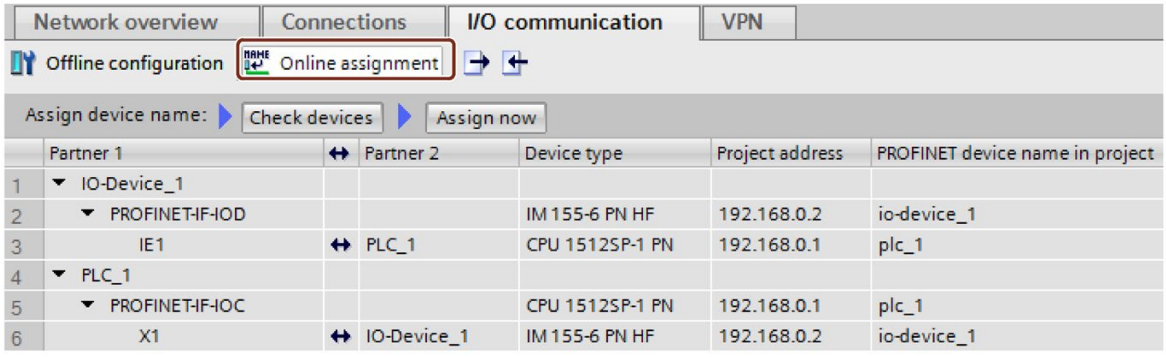

	Partner 1		Partner 2	Device type	Project address	PROFINET device name in project
1	IO-Device_1					
2	PROFINET-IF-IOD			IM 155-6 PN HF	192.168.0.2	io-device_1
3	IE1	↔	PLC_1	CPU 1512SP-1 PN	192.168.0.1	plc_1
4	PLC_1					
5	PROFINET-IF-IOC			CPU 1512SP-1 PN	192.168.0.1	plc_1
6	X1	↔	IO-Device_1	IM 155-6 PN HF	192.168.0.2	io-device_1

Figure 3-8 Assign device name via communication table

The objects displayed in the table of the "Online assignment" tab depend on the setting of the filter function. If only selected objects should be displayed, only objects of the corresponding context are displayed depending on the selection in the network view.

- PROFINET subnet: All connected devices and their PROFINET interfaces
- IO system All devices involved and their PROFINET interfaces
- Sync domain: All devices involved and their PROFINET interfaces
- Devices: The device and any existing PROFINET interfaces
- Other subnets or interfaces such as MPI or PROFIBUS are not displayed

If the display is set for all devices using the filter function, all devices are displayed that have a PROFINET interface, regardless of whether they are connected via a PROFINET subnet or are part of an IO system. Devices without a PROFINET interface, for example only with a DP or MPI interface, are not displayed.

General procedure

To assign PROFINET device names, you must first detect the IO devices available online. With this procedure, it matters whether the MAC addresses are known or unknown. This results in a general procedure in two steps:

1. Detecting the IO devices available online
2. Assigning configured PROFINET device names to the IO devices available online

Requirements

- You are in the network view.
- There is an online connection to the devices.

Procedure (step 1)

To detect IO devices available online from the I/O communication table, follow these steps:

1. Optional: Entered known MAC addresses in the "MAC address" column. After every valid entry, the check box under "Assign device" is selected for the relevant row.

   Note

   You can enter, insert or import the MAC address in different formats. The correct format is automatically entered in the cell. The following entries are supported and then converted to the required format:

   - "08:00:06:BA:1F:20"
   - "08 00 06 BA 1F 20"
   - "080006BA1F20"

   The formats used in the example are automatically converted to "08-00-06-BA-1F-20".

2. Click "Check devices" to start the check of the IO devices available online.
3. Set the PG/PC interface in the dialog window and click "Start".

Intermediate result

After the check, the result is displayed for every device in the table. Online data found is automatically entered in the table and the check box "Assign device" is set to "checked" in the rows in which a MAC address was entered or found online. The result of the check is shown as an icon in the "Status" column.

Status	Meaning
	Matching device and compatible type
	Matching device and incompatible type
	Non-matching device
	Device cannot be reached (with a known MAC address)
	Ready for assignment (with known MAC address)

Note

The icon "Ready for assignment" appears when a MAC address exists and matching device data was found, but no PROFINET device name was found online.

You can update the data of the detected devices again via their MAC addresses at any time. To do this, you specify the MAC address and the status of the device is displayed immediately without having to re-detect the device.

Procedure (step 2)

All PROFINET device names configured offline will be assigned to the devices available online in a bulk operation.

1. Click the "Assign now" button.

   Note

   The bulk operation cannot be reversed. A message to this effect appears in a dialog window.

2. Click "Start" in the dialog window to start the assignment of the PROFINET device names.

Result

The PROFINET device names configured offline will be assigned to the devices available online. This relates to devices in whose row the check box under "Assign device" is selected, that have a MAC address and have the status "Ready for assignment".

Importing and exporting data

Using the import and export button, you can import or export the data of the I/O communication table for the online assignment:

- When you export, the currently displayed data of the table is exported to a CSV file. Using the filter function of the table, you can select which data will be exported.
- When you import, the data of the CSV file is written to the table. If there are conflicts with values already existing in the table, you can decide whether the data should be overwritten or whether the import needs to be stopped.

3.2.5 Permitting changes to the device name and IP address directly on the device

Introduction

Machines are frequently commissioned on site or integrated into the existing infrastructure without STEP 7. You can find typical applications in all areas of the series machine building. Alternative means for assigning the IP address are available for this.

Procedure

1. In the network or device view of the STEP 7 Hardware and Network editor, select the PROFINET interface of an IO controller.
2. Navigate in the Inspector window to "Ethernet addresses".
3. Select the "IP address is set directly at the device" option in the "IP protocol" area.

4. In the "PROFINET" area, select the " PROFINET device name is set directly at the device" check box.

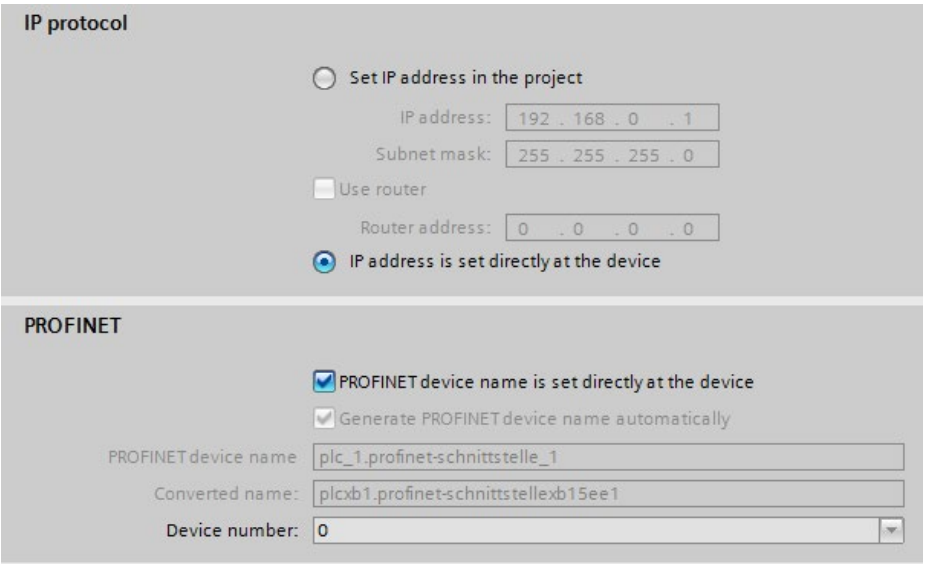

Figure 3-9 Setting the device name and IP address on the device

Note

Gateway

When you operate a PROFINET device with the option "Allow adaption of the device name/IP address directly on device", you cannot use this PROFINET device as gateway for S7 routing.

Options for assigning IP addresses and device names

Apart from the known address and device name assignment in the "Ethernet addresses" section of the Inspector window, there are other ways in which the IP address and name can be assigned:

- Assigning by means of the user program with the instruction "T_CONFIG"
- Assignment when downloading the configuration to the target system via the "Extended download to device" dialog box.
- Assignment via the Primary Setup Tool (PST)
- Assignment via the PRONETA ("PROFINET network analysis") commissioning and diagnostics tool
- Assignment via the SIMATIC Automation Tool

Additional information

For information on the "T_CONFIG" instruction and on downloading to the target system, refer to the STEP 7 online help.

A free Download (http://support.automation.siemens.com/WW/view/en/14929629) of the Primary Setup Tool (PST) can be found on the Internet. On this Internet page, you will also find a list of devices for which the PST is approved.

3.3 Configuring an IO device through hardware detection

Introduction

As of STEP 7 V15, you have the possibility to detect a real existing IO device and to import it into your project.

You find the IO device in STEP 7 through the "Hardware detection" function. A detected device can be imported into your project. STEP 7 inserts the IO device with all the modules and submodules.

Requirements

- STEP 7 (TIA Portal) as of V15
- It must be possible to technically access the IO device via IP

Procedure

To detect one or more existing IO devices in STEP 7 and add them to the project, follow these steps:

1. In STEP 7, navigate to "Online" > "Hardware detection".
2. Click "IO devices".
   STEP 7 opens the "Hardware detection of IO devices" window.
3. Select the interface of your programming device at "PG/PC interface:".
4. Click "Start search".
   STEP 7 begins with the hardware detection. When the hardware detection is completed, STEP 7 displays all the detected IO devices.
5. Select the IO devices that you want to add to the project by clicking the corresponding check box before the IO device.
6. Click "Add devices".
   After a brief moment, a window is opens to report about the success or failure of the hardware detection.

Result of the hardware detection

If the hardware detection is successful, STEP 7 inserts the IO device with all the modules and submodules into the project.

An IO device configured via hardware detection responds as follows:

- Modules configured through the "Hardware detection" are configured as if they have been inserted from the catalog.
- MAC address: STEP 7 imports the MAC address of the detected IO device into the project.
- IP settings:
  - If the detected IO device already has an IP address, STEP 7 imports the IP address into the project.
  - If the detected IO device does not have an IP address, STEP 7 automatically assigns an IP address in the project.

  PROFINET device name:
  - If the detected IO device already has a PROFINET device name, STEP 7 imports the PROFINET device name into the project.
  - If the detected IO device does not have a PROFINET device name, STEP 7 automatically assigns a PROFINET device name in the project.
- IO devices configured through "Hardware detection" have neither an IP subnet nor an IO controller assigned.

3.4 Specifying the router for a PROFINET IO device

Introduction

You always require a router (also referred to as a "Standard Gateway") when the PROFINET device has to communicate with a node whose IP addresses lie outside the own IP subnet. If the PROFINET device sends an IP packet to an IP address outside its own IP subnet, the IP packet first goes to the configured router. The router in turn checks the IP address. If this lies outside its own subnet, the router passes the IP packet on to the next router. The IP packet is routed to the next router until it has reached the target address.

Like all S7-1500 CPUs, S7-1500 CPUs with several PROFINET interfaces provide the possibility to configure the IP address of a router. However, there is the restriction that you can only enter the IP address of a router at a PROFINET interface.

You cannot include an IP address of a router on the other PROFINET interfaces of the CPU. IO devices that are connected to this PROFINET interface adopt this setting. Up to and including STEP 7 V14 SP1, these IO devices did not have any possibility to reach devices in a different IP subnet.

As of STEP 7 V15, you have the possibility to assign the address of a router for an IO device independent of the setting of the IO controller. You can now, for example, set a router address at the IO device in the following cases as well:

- You have not set an IP address of a router for the interface of the associated IO controller.
- You have already set a router address for a different interface in the CPU.

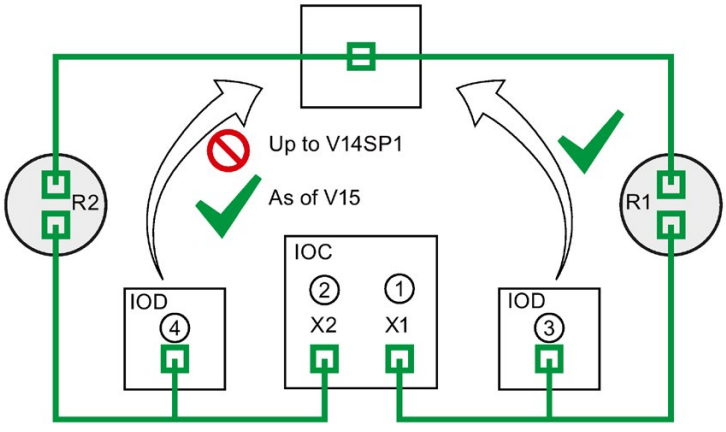

① Router R1 configured at PROFINET X1

② If a router is configured at X1, you cannot configure a router at X2.

③ Because a router is configured at X1, the IO device adopts the IP address of the router R1. The IO device can be reached from a different IP subnet.

④ As of STEP 7 V15, you set the IP address of the router R2 at the IO device irrespective of the setting at the interface X2. The IO device can be reached from a different IP subnet.

Figure 3-10 Specifying the router for an IO device

Further information about the "User router" setting

You have the possibility to configure the use of a router including IP address of the router in the "IP protocol" section of the settings for the PROFINET interface (Ethernet addresses).

Rules

Observe the following rules if you want to configure a router for the PROFINET interface of an IO controller:

- A PROFINET IO device supports exactly one router, irrespective of the number of interfaces.
- You can configure a router for exactly one PROFINET interface. All IO devices that are assigned to the PROFINET interface adopt the configured router from the IO controller.
- You cannot configure a router for the further PROFINET interfaces of the CPU. The further PROFINET interfaces take on the IP address "0.0.0.0" as the router and pass it on to their IO devices.

As of STEP 7 V15, you can configure the use of a router for an IO device. This allows the IO device to communicate with a node outside its own IP subnet, irrespective of the setting of the PROFINET interface of the IO controller.

Configuration example: Configuring a router for an IO device

The following example shows a configuration in which you configure a router at the IO device so that the IO device reaches IP addresses in the higher-level network.

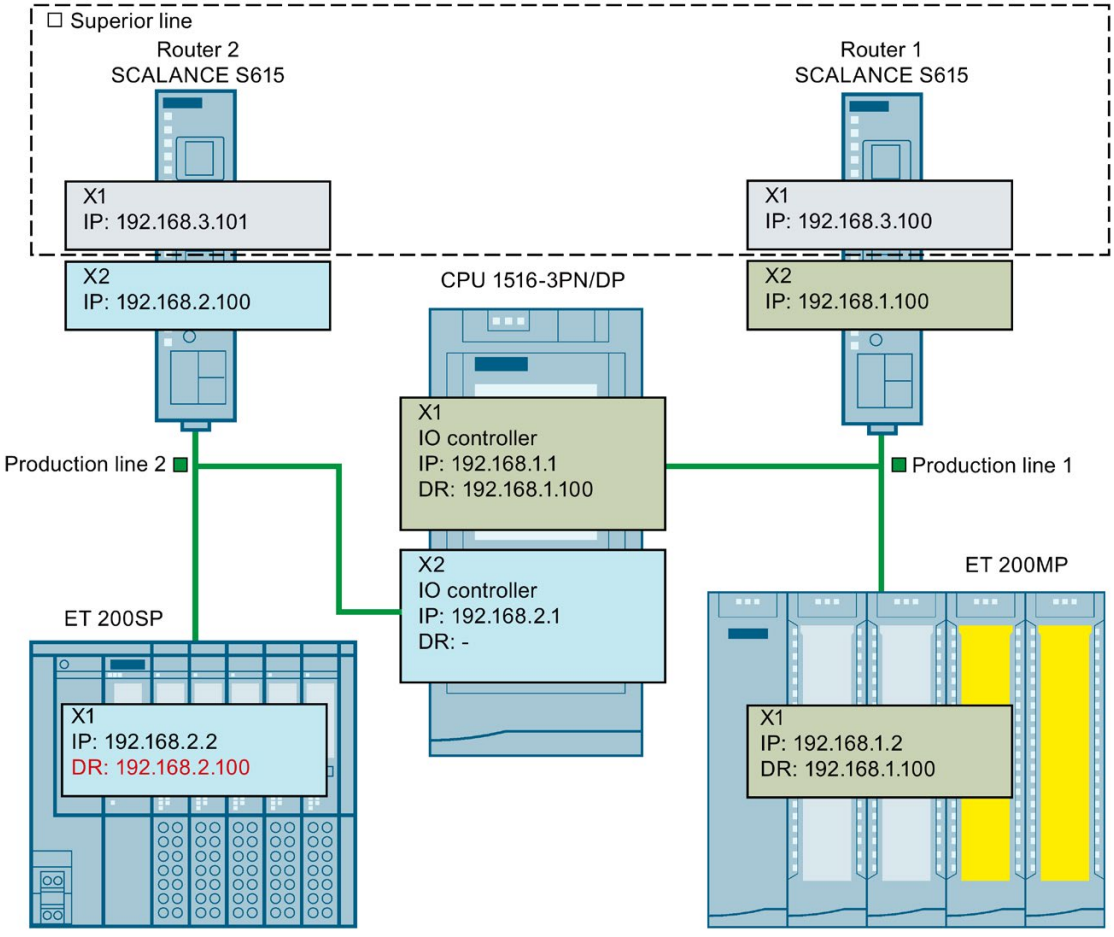

Figure 3-11 Configuration example: Configuring a router for an IO device

You have a CPU 1516-3PN/DP. The two PROFINET interfaces X1 and X2 of the CPU work in the "IO controller" operating mode. The PROFINET interface X1 is connected with the subnet "Production line 1". PROFINET interface X2 is connected with the subnet "Production line 2". The two subnets "Production line 1" and "Production line 2" are each connected via a router with the higher-level network "Superior line".

For PROFINET X1, you configure the router "Router 1" with the IP address 192.168.1.100.

The IO device (ET 200SP) in the "Production line 1" subnet adopts the router from the IO controller.

You cannot configure a router for the PROFINET interface X2 because you have already configured a router for the PROFINET interface X1 of the CPU.

No router is transferred by the PROFINET interface X2 to the IO device in the subnet "Production line 2".

In order for the IO device in the subnet "Production line 2" to reach nodes in the higher-level "Superior line", configure the router "Router 2" with the IP address 192.168.2.100 for the IO device.

Configuring the router for the IO controller

Requirements: You use the "Set IP address in the project" option for the PROFINET interface.

Follow these steps to configure a router for the IO controller in STEP 7:

1. In the network view of STEP 7, select the PROFINET interface of the IO controller.
2. In the Inspector window, navigate to "Properties" > "General" > "Ethernet addresses".
3. Select the "Use router" check box in the "IP protocol" field.
4. Enter the IP address of the router at "Router address".

Configuring a router for an IO device

Requirements:

- STEP 7 as of V15
- CPU 1500 as of firmware version V2.5
- IO device is assigned to the PROFINET interface of an IO controller. The PROFINET interface of the IO controller uses the "Set IP address in the project" option.

Follow these steps to configure a router for the IO device in STEP 7:

1. In the network view of STEP 7, select the PROFINET interface of the IO device.
2. In the Inspector window, navigate to "Properties" > "General" > "Ethernet addresses".
3. Clear the "Synchronize router settings with IO controller" check box.
4. Select the "Use router" check box.
5. Enter the IP address of the router at "Router address".

3.5 Configuring topology

Introduction

If an IO device is assigned to an IO controller, this does not yet specify how the ports are connected to each other.

A port interconnection is not required to use RT, but it provides the following advantages:

- A set topology is assigned with the port interconnection. Based on an online-offline comparison, it is possible to conduct a set-actual comparison with all devices that support this function.
- The "Device replacement without exchangeable medium" function can be used.

A port interconnection is an essential requirement for using IRT.
An overview of various options for setting up a PROFINET network is given below.

Line

All the communication devices are connected in a linear bus topology.

In PROFINET, the linear bus topology is implemented with switches that are already integrated into the PROFINET devices. Therefore, the linear bus topology at PROFINET is merely a special form of tree / star topology.

If a link element (switch, for example) fails, communication across the failed link element is no longer possible. The network is then divided into 2 subsegments.

Linear bus topology structures require the least cabling.

Star

If you connect communication devices to a switch with more than two PROFINET ports, you automatically create a star network topology.

If an individual PROFINET device fails, this does not automatically lead to failure of the entire network, in contrast to other structures. It is only if a switch fails that part of the communication network will fail as well

Tree

If you interconnect several star structures, you obtain a tree network topology.

Ring

In order to increase the availability of a network, use ring structures. In principle, a linear bus topology is connected to a ring through a so-called redundancy manager.

The task of the redundancy manager is managed by an external switch SCALANCE X, a CPU that supports the Media Redundancy Protocol MRP (e.g., CPU 1516-3 PN/DP) or a CP (e.g., CP 343-1 Lean).

If there is a break in the network, the redundancy manager ensures that the data is redirected over an alternative network connection in the ring.

Example for topology

The following example shows a combination of different topologies.

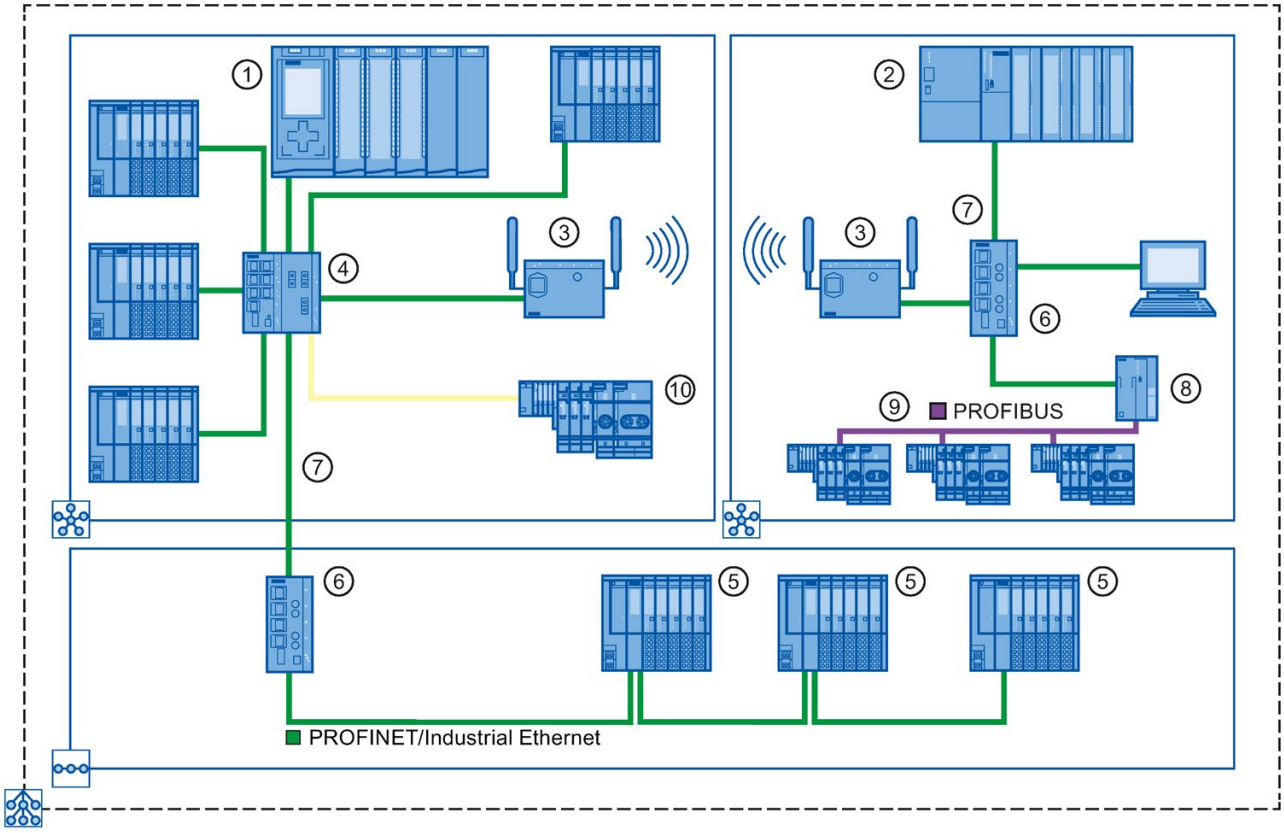

Number	Meaning
①	S7-1500 as IO controller
②	S7-300 as IO controller
③	Industrial WLAN with SCALANCE W
④	SCALANCE X 307-3 with seven electrical and three optical ports
⑤	ET 200SP with integrated 2-port switch
⑥	SCALANCE X 204 with four electrical ports
⑦	PROFINET/Industrial Ethernet
⑧	IE/PB-Link PN IO
⑨	PROFIBUS DP
⑩	ET 200S with two optical ports
	Star topology
	Linear bus topology
	The combination of topology forms results in a tree topology.

Figure 3-12 Combined topology

Additional information

Observe the PROFINET Installation Guideline (http://www.profibus.com/nc/download/installation-guide/downloads/profinet-installation-guide/display/) of the PROFIBUS User Organization when planning your PROFINET topology.

For more detailed information, see the SIMATIC NET Twisted Pair and Fiber Optic Networks (http://support.automation.siemens.com/WW/view/en/8763736) manual.

You can find basic information in the Communication with SIMATIC (http://support.automation.siemens.com/WW/view/en/1254686) manual.

3.5.1 Topology view in STEP 7

Introduction

The topology view is one of three working areas of the hardware and network editor. You undertake the following tasks here:

- Displaying the Ethernet topology
- Configuring the Ethernet topology
- Identify and minimize differences between the set and actual topology (online)

The topology view in STEP 7 consists of a graphic area and a table area.

Graphic area

The graphic area of the topology view displays PROFINET devices with their appropriate ports and port connections. Here you can add more PROFINET devices.

The following figure shows the graphic area of the topology view.

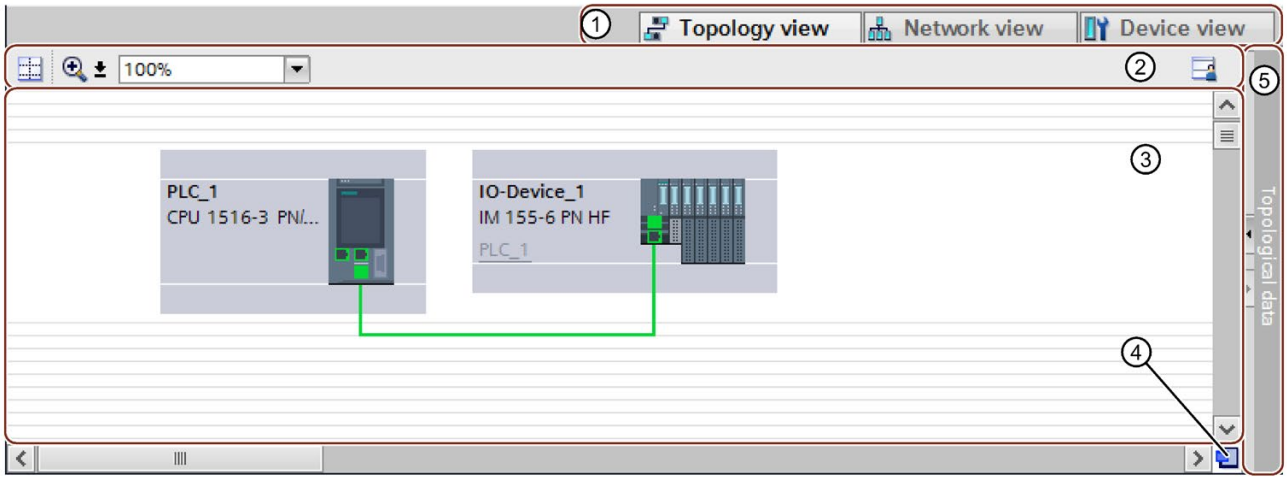

① Selector: Device view/Network view/Topology view
② Toolbar
③ Graphic area of the topology view
④ Overview navigation
⑤ Selector for the table area of the topology view

Figure 3-13 Graphic area of the topology view

Overview navigation

Click in the overview navigation to obtain an overview of the created objects in the graphic area. By holding down the mouse button, you can quickly navigate to the desired objects and display them in the graphic area.

Table area

- Topology overview: This displays the Ethernet or PROFINET devices with their appropriate ports and port connections in a table. This table corresponds to the network overview table in the network view.
- Topology comparison: Here you can import devices and port interconnections automatically through offline/online comparison or extended Offline/Online comparison into STEP 7.

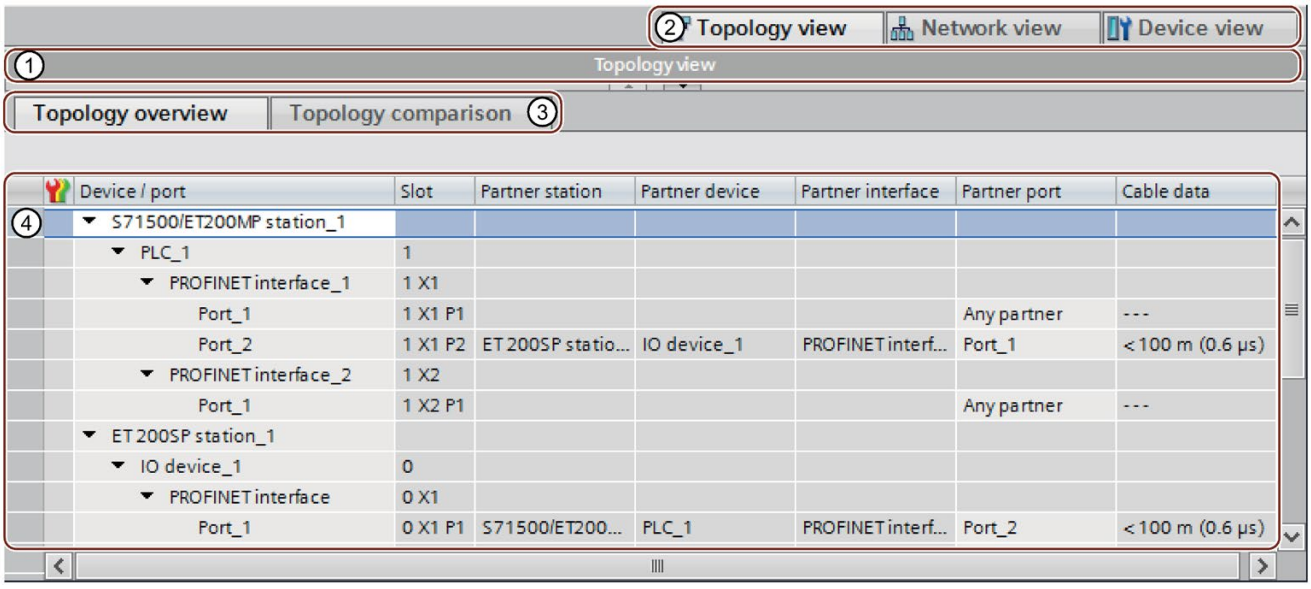

① Selector for the graphic area of the topology view
② Selector: Device view/Network view/Topology view
③ Selector: Topology overview/Topology comparison
④ Table area of the topology view

Figure 3-14 Table area of the topology view

3.5.2 Interconnecting ports in the topology view

Requirement

You are in the graphic view of the topology view.

Procedure

To interconnect ports in the topology view, follow these steps:

1. Place the pointer of the mouse on the port you want to interconnect.
2. Press and hold down the left mouse button.
3. Move the pointer.

   The pointer now uses the networking symbol to indicate "Interconnecting" mode. At the same time, you see the lock symbol on the pointer. The lock symbol disappears only when the pointer is over a valid target position.
4. Now drag the pointer to the target port. You can keep the left mouse button pressed or release it when performing this action.
5. Now release the left mouse button or press it again (depending on your previous action).

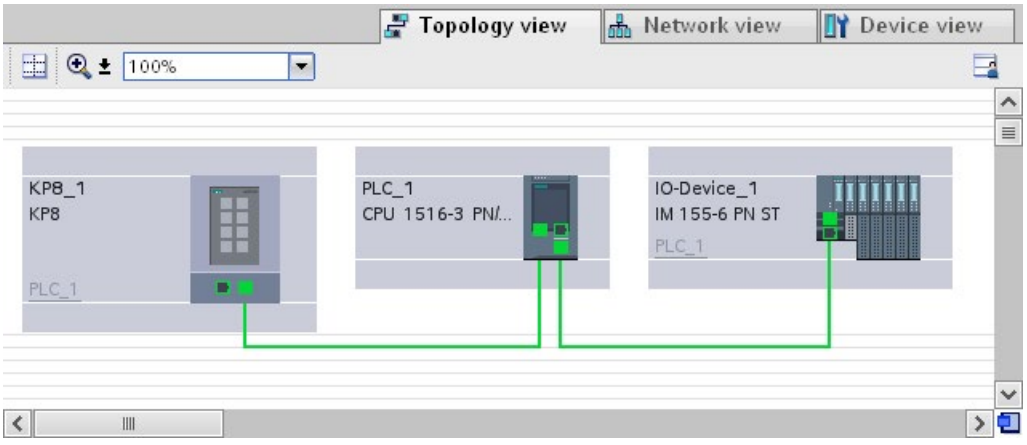

Figure 3-15 Interconnecting ports in the topology view

Result

You have created a port interconnection.

3.5.3 Interconnecting ports - Inspector window

Interconnecting ports in the Inspector window

To interconnect ports, follow these steps:

1. In the device or network view, select the PROFINET device or PROFINET interface.
2. In the Inspector window, navigate to the port property "Port interconnection".

   When the PROFINET interface is selected, you can find this setting in the Inspector window as follows: "Properties > General > Advanced Options > Port [...] > Port Interconnection."
3. In the "Local port" section, you can find the settings at the local port. In the case of fiber-optic cable you can, for example, set the cable names here.

   In the "Partner port" area, select the drop-down list for "Partner port" in order to display the available partner ports and make a selection.

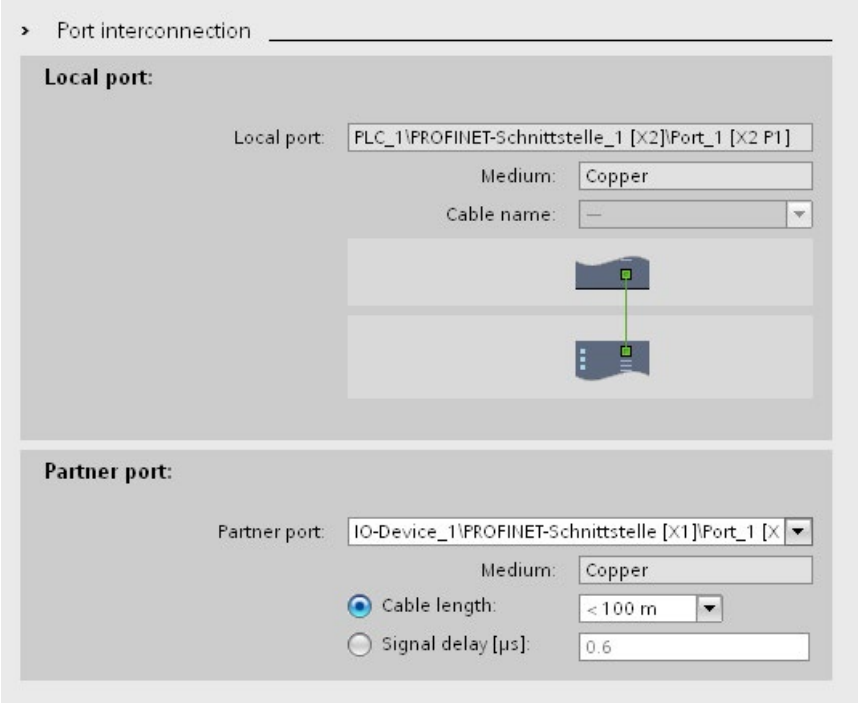

Figure 3-16 Interconnecting ports in the Inspector window in STEP 7

If the PROFINET interface was disconnected, it is automatically connected by this action. In the properties of the subnet you can set whether this subnet should or should not be used for the networking.

3.5.4 Automatic assignment of devices by offline/online comparison

Overview

During the offline/online comparison, the configured topology is compared with the actual existing topology. Devices identified online are automatically assigned to configured devices as far as this is possible.

Start of availability detection

You start the availability detection the first time by clicking the "Compare offline/online" button in the toolbar of the "Topology comparison" tab.

You restart availability detection by clicking the "Update" button.

Note

The availability detection can take several seconds. During this time, no user input is possible.

Automatic assignment of a PNIO device

A PNIO device identified online is automatically assigned to a configured device if the following properties of the two devices match up:

- Article no.
- Type
- PROFINET device name

No automatic assignment

In the following situations, no automatic assignment is possible:

- No device can be identified online to match a configured device. (This means that the corresponding columns in the "Online topology" area of the topology comparison table are empty.)

  In this case, you should add the already configured device to your system or delete the configured device from the configuration.
- A device identified online can be assigned to a configured device, but there are differences in the port interconnections.

  In this case, you can Apply the port interconnections identified online manually to the project (Page 76).
- A device identified online cannot be assigned to a configured device. (In this case, the corresponding columns in the "Offline topology" area of the topology comparison table are empty.)

  In this case, you can Include the devices identified online manually in the project (Page 77).

3.5.5 Apply the port interconnections identified online manually to the project

Requirements

You have run an offline/online comparison in the topology view. The result of this is that at least one device identified online was automatically assigned to a configured device, but that there are differences relating to the interconnection.

Procedure

To adopt one more port interconnections identified online in the project manually, follow these steps:

1. Select the row belonging to the port interconnection.
2. If applicable, select further roles using multi-selection.
3. Select "Apply" > "Use selected" in the shortcut menu.

   The content of the corresponding table cells in the "Action" column changes to "Apply".
4. If you have mistakenly prepared too many port interconnections to be included in the project:

   Select the rows belonging to the port interconnections you have mistakenly prepared for inclusion in the project using multi-selection.

   Select "Reset" > "Reset selected" in the shortcut menu.

   The content of the corresponding table cells in the "Action" column change to "No action".
5. Click the "Synchronize" button.

Result

The port interconnections identified online for the corresponding devices are included in the project. Successful adoption is indicated by the diagnostics icon "Identical topology information" for each port.

Note

If other port interconnections are recognized for a device identified online and these differ from those that exist in the project, adopting these in the project means that the port interconnections that were previously in the project are replaced by those identified online. If no port interconnections are detected for a device identified online, adopting in the project means that all the port interconnections of this device are deleted in the project.

3.5.6 Include the devices identified online manually in the project

Requirements

You have run an offline/online comparison in the topology view. The result of this is that at least one device identified online could not be assigned to any configured device.

Procedure

To adopt one more devices identified online in the project manually, follow these steps:

1. For a configured device without an online partner, move the mouse pointer to the "Device/port" column of the online topology.
2. Select the device you want to assign to the configured device from the drop-down list of this box.
3. Repeat the previous steps if necessary for other configured devices without an online partner.

Result

The selected device that was identified online is moved up from the end of the table. Following this, it is in the row of the configured device to which you have just assigned it.

3.5.7 Automatic assignment of devices by advanced offline/online comparison

Overview

With the advanced offline/online comparison, ICMP is also used alongside DCP to be able to detect devices that do not support DCP.

Automatic assignment of devices detected by ICMP

With devices detected by ICMP, no type is available.

With passive devices, no article number is available. For this reason, passive devices can only be assigned automatically if you have not assigned an article number in the configured data and the offline and online IP addresses match.

With switches, automatic assignment is possible if the offline and online article number, IP address and PROFINET device name match.

Diagnostics and maintenance 4

4.1 Diagnostics mechanisms of PROFINET IO

Totally Integrated Diagnostics Concept

All SIMATIC products have integrated diagnostics functions that they can use to detect and remedy faults. The components automatically flag a potential fault in the operation and provide detailed information.

Each individual error or several errors occurring concurrently are transferred from the IO device to the IO controller. If you require the full status of the IO device including any pending errors, you can also read the status directly from the IO device.

The following sections provide basic information on using diagnostics via PROFINET IO. You can find a detailed description of the system diagnostics for S7-1500, ET 200MP, ET 200SP and ET 200AL in the Diagnostics (http://support.automation.siemens.com/WW/view/en/59192926) function manual.

Accessing the status of an IO device with a PG/PC or an HMI device

If you are connected to the Industrial Ethernet via a PG/PC with STEP 7 or an HMI device, you can also call up diagnostics information online. This is illustrated by the following graphic.

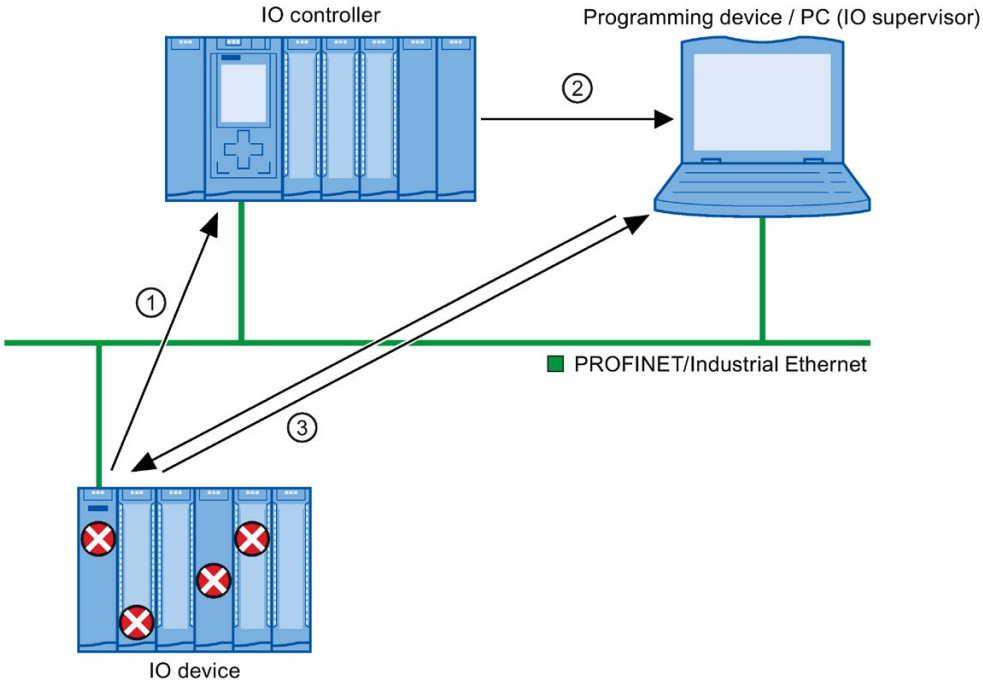

Number	Description
①	The IO device detects an error and sends diagnostics data to the IO controller.
②	The IO controller notifies the programming/HMI device. The display of the system diagnostics is updated.
③	In STEP 7, you can read the station status for "Accessible devices" directly from the IO device regardless of the IO controller. This is only possible if the programming device is connected to Industrial Ethernet. This means that you can access diagnostics information during the commissioning phase or for servicing even if the IO controller is not operational.

Figure 4-1 PROFINET IO diagnostics with PG/PC or HMI device

4.1.1 Diagnostics levels in PROFINET IO

Concept

The IO device sends all error messages that occur to the IO controller. The scope and volume of diagnostics information varies according to the level of diagnostics data evaluation and the PROFINET devices you are using.

Diagnostics levels

You can evaluate diagnostics data at different levels. The number and type of channels is selected, for example, at the diagnostics level 4.

The following figure shows the diagnostics levels with PROFINET IO.

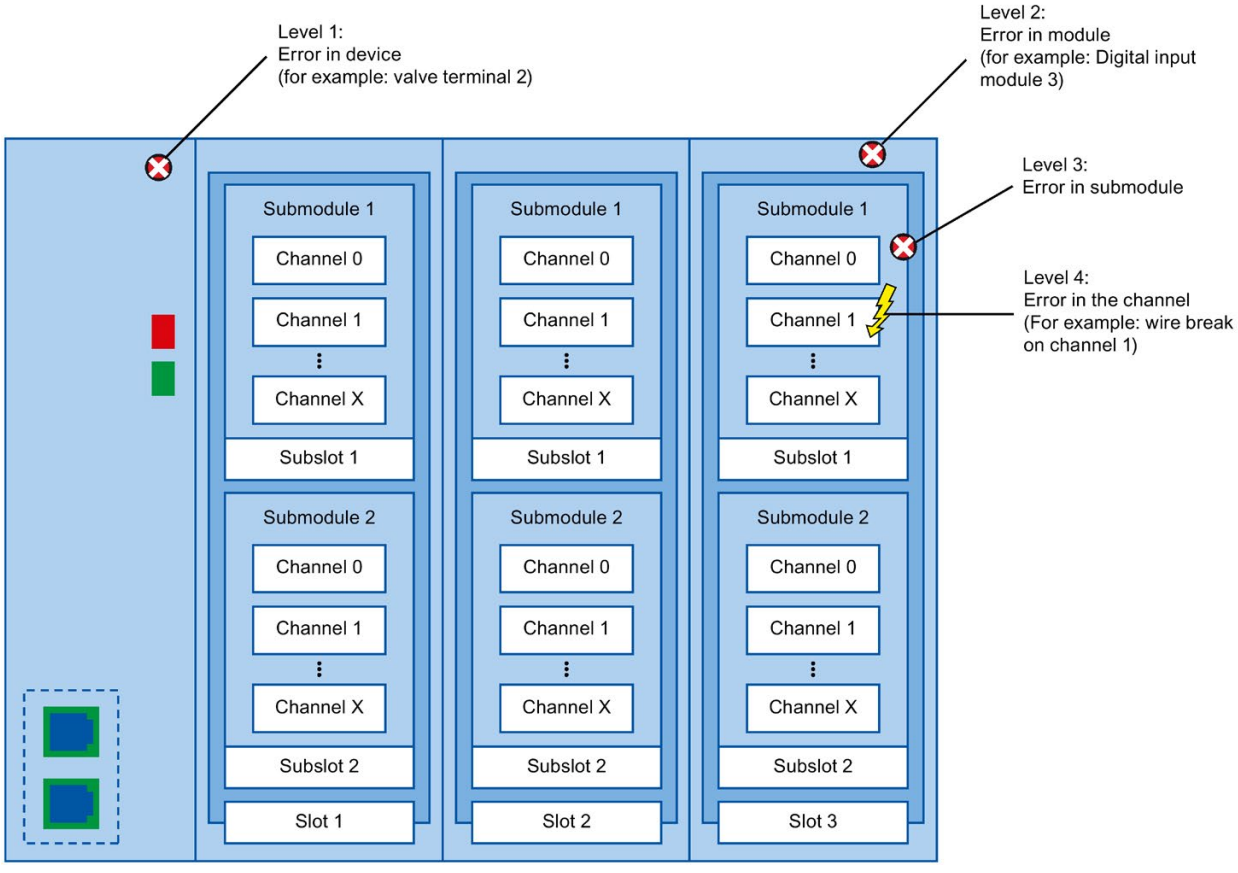

Figure 4-2 Diagnostics levels with PROFINET IO

Representation of diagnostics levels in the device view in STEP 7

The following figure shows the representation of the PROFINET device model in the device view of STEP 7, based on the example of a distributed I/O system ET 200MP:

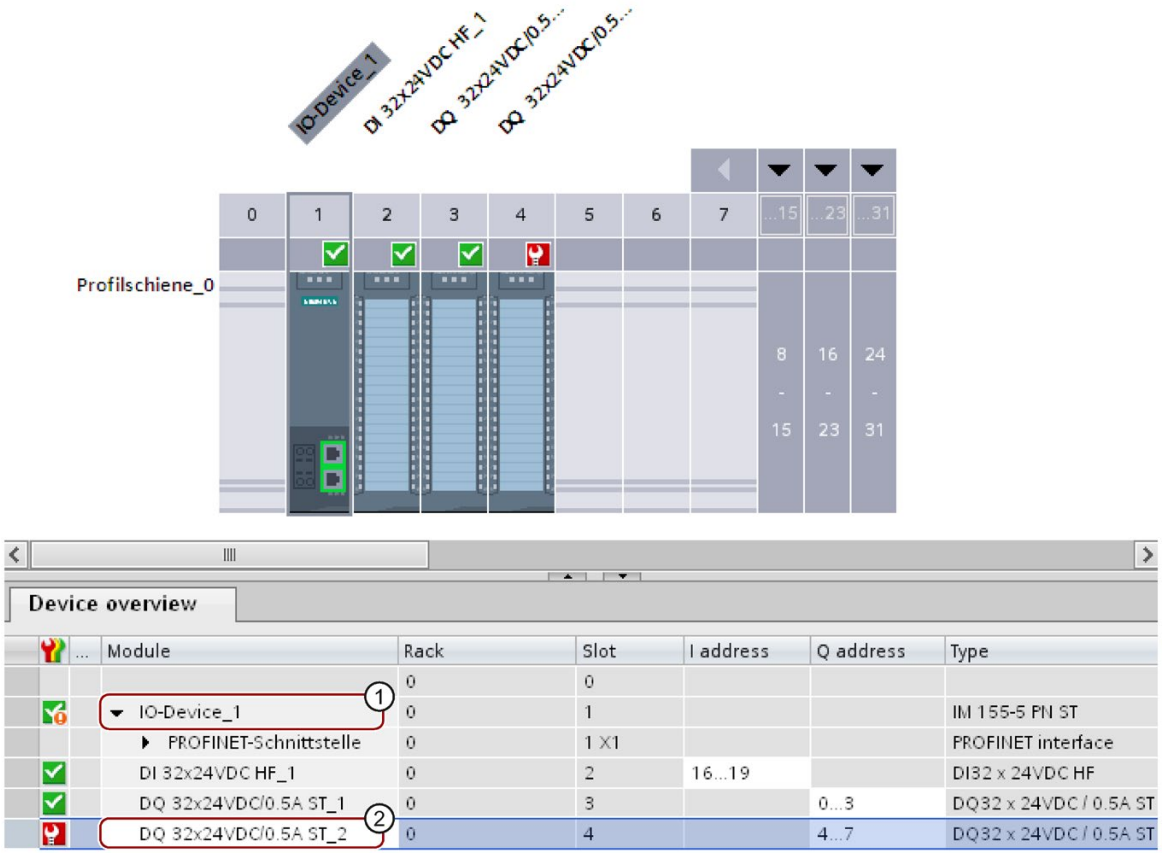

Number	Description	
①	Level 1:	Error(s) in the device
②	Level 2:	Error(s) in the module

Figure 4-3 Diagnostics levels in the device view of STEP 7

Which PROFINET nodes support the extended PROFINET diagnostics?

An overview of the PROFINET nodes that support extended PROFINET diagnostics and of what you have to configure is provided in this FAQ (https://support.industry.siemens.com/cs/ww/en/view/23678970).

4.1.2 Maintenance

4.1.2.1 I&M data (identification and maintenance)

Definition and properties

Identification and maintenance data (I&M) is information saved to module memory in order to provide support when:

- Checking the plant configuration
- Locating hardware changes in a plant

Identification data (I data) is module information (some of which may be printed on the module housing) such as the order and serial number. I data is read-only vendor-specific module data.

Maintenance data (M data) is plant-specific information such as the location identifier and installation date. M data is created during configuration.

The modules can be uniquely identified in online mode by means of the I&M data.

Further information

To find out whether and to what extent a PROFINET device supports I&M data, refer to the documentation of the relevant device.

4.1.2.2 Loading I&M data to PROFINET IO devices and your modules

Which I&M data can be loaded to PROFINET IO devices and your modules?

You can load I&M 1 data (plant designation and location identifier) and/or I&M 2 data (installation date) and/or I&M 3 data (additional information) to the actual hardware.

Requirements

- In the project settings (Options > Settings, Hardware configuration > Compiling and downloading), the option "Download I&M data" must be enabled.
- There is an online connection to the PROFINET IO devices and the modules to which you want to load I&M data.
- You have entered the I&M data you want to download in the properties of the respective PROFINET IO devices and your modules (Inspector window: "Properties" tab > "General" tab, Settings > Identification & Maintenance).

Where do I specify which I&M data is downloaded to which PROFINET IO devices?

You specify which I&M data you want to download to which PROFINET IO devices in the "Load preview" dialog. You will find the following alternatives in the drop-down list of the "Identification and maintenance data (I&M)" row:

- Load nothing

  The check boxes for all PROFINET IO devices as well as the check boxes for the loadable I&M data are cleared.

  No I&M data is transferred to the actual hardware during loading with this setting.

- Load data

  The check boxes for all PROFINET IO devices as well as the check boxes for the loadable I&M data are selected.

  The respective I&M 1, I&M 2 and I&M 3 data is transferred to all PROFINET IO devices during loading with this setting.

- Load selected

  You select the check boxes of those PROFINET IO devices to which you want to load I&M data. You also select the check boxes of the identification data you want to load.

  With this setting, you transfer the selected I&M data to the selected PROFINET IO devices during loading.

Note

Language dependency of the I&M data to be loaded

The I&M data are loaded to the real hardware in the form that you specified in the properties of the relevant PROFINET IO devices and your modules. There is no language dependency.

4.1.2.3 Asset management

Further information about asset management at PROFINET

Operation of machines and plants without a detailed knowledge of devices and assets is difficult to imagine.

Maintenance requires data for this – data that is extensive and up-to-date as far as possible.

The requirement of greater transparency with regard to the data made available by plant components has been fulfilled by PROFIBUS & PROFINET International (PI): The identification and maintenance data familiar since PROFIBUS times have been extended.

The current PROFINET fulfills this requirement through the definition of a special data record: the Asset Management Record (AMR).

The aim of this definition is to enable you to acquire **all** the components to be maintained online - and not only those components that can be addressed and accessed through the PROFINET device model (Device / Module / Submodule). PROFINET now also reaches non-PROFINET components!

Assets general and asset management data records

Assets are components (hardware and software / firmware) of a machine, for example a laser welding machine, or a plant.

A large number of these device components can already be identified through tried-and-tested I&M functions or corresponding data records (I&M0 to I&M5) in the PROFINET context: The device itself as well as its modules and submodules. Meaning all components that can be addressed through the PROFINET device model.

Components that **cannot** be addressed via the PROFINET device model, but whose data it should be possible to acquire online for operation and maintenance, can be identified through **asset management** functions. This asset management data (short: AM data) is stored in a defined structure in a special data record, the **asset management record** (AMR) mentioned above.

The PROFINET Guideline "Identification & Maintenance Functions" differentiates here between I&M functions (I&M data) and asset management functions (AM data): The following sections only deal with the AM data.

The components that can be read additionally online through asset management data records include both hardware components, such as backplane bus modules of a device as well as firmware components such as a drive control unit with own versioning.

Application examples

Importing asset management records enables you to read the following information during installation or operation, for example:

- Are only approved devices being used (whitelist check)?
- A firmware update is due. Obtain a fast overview: Which devices or components are affected and have to be upgraded?

Making asset management data available

The concept for the asset management of PROFINET devices stipulates that the manufacturers of PROFINET devices have to ensure that non-PROFINET automation components are made available through an asset management record. This data record is assigned to the PROFINET device.

In contrast to a "standard" IO device, with an I-device the project engineer has to make the asset management record available. In this case, the central modules of the I-device are assets. From the perspective of PROFINET, these central modules are not visible from the point of view of the higher-level IO controller. The higher-level IO controller only "sees" the transfer areas through which it exchanges IO data with the I-device.

The principle of this provision is explained in the section.

Reading asset management data

The asset management record has the index 0xF880 and is read with standard PROFINET mechanisms by the user of the records, for example a tool or program for evaluating these data.

A user program in the S7-1500 IO controller, for example, can read out the AMR of an IO device with the RDREC instruction (Index 0xF880).

It is not possible to write to this data record.

Further information

Whether and to which extent a PROFINET device supports asset management data, meaning whether it makes an AMR available, is specified in the documentation of the respective device.

Content and structure of an asset management record

Basic structure of the asset management record

You are first provided with an overview of the general structure of the record. The following table describes the framework within which the asset management data blocks are embedded. Each data block represents an asset, a terminal block for example.

Element of the data structure	Designation according to IEC 61158-6-10	Code	Data type / length in bytes
Header AssetManagement-Data	BlockType	0x0035	UINT / 2
	BlockLength	Number of bytes without counting the bytes for BlockType and BlockLength	UINT / 2
	BlockVersion	0x0100	UINT / 2
AssetManagementInfo AssetManagementBlocks (n)	NumbersOfEntries	Number of AssetManage-mentBlocks	UINT / 2
	AssetManagementBlock 1	See the table below	
	AssetManagementBlock 2		
	...		
	AssetManagementBlock n		

Structure of asset management blocks

Each AssetManagementBlock contains identification data and localization information for an asset. An AssetManagementBlock has a substructure with basic characteristics described below.

The header of an AssetManagementBlock contains the coded information about which of the three possible AM data compilations the data record contains. Devices make a suitable BlockType available in accordance with the various device types:

- Complex devices with information about the hardware and firmware (BlockType "AM_FullInformation")
- Complex devices with information about the hardware (BlockType "AM_HardwareOnlyInformation")
- Devices with information about the firmware (BlockType "AM_FirmwareOnlyInformation")

The differentiation provides an efficient data structure below the header. Nevertheless, the data record can have a considerable size (maximum of 64 KB, depending on the number of assets that the IO device supplies).

Table 4- 1 Structure of AssetManagementBlock

Element of the data structure	Designation according to IEC 61158-6-10	Code	Data type / length in bytes
Header AssetManage-mentBlock	BlockType	0x0036 (AM_FullInformation) 0x0037 (AM_HardwareOnlyInformation) 0x0038 (AM_FirmwareOnlyInformation)	UINT / 2
	BlockLength	Number of bytes without counting the bytes for BlockType and BlockLength	UINT / 2
	BlockVersion	0x0100	UINT / 2
	Padding	0x0000 (padding byte)	USINT / 1
	Padding	0x0000 (padding byte)	USINT / 1
AssetManagementBlock (Structure depends on the BlockType. Here it is shown using AM_FullInformation as an example)	IM_UniqueIdentifier	Manufacturer-generated Universal Unique Identifier (UUID) conforming to ISO/IEC 9834-8. Used as a reference key to uniquely identify this asset. Example: 550c5300-d34a-22b4-11d3-5533991111	Array of Byte / 16
	AM_Location	Description of the location of the asset: Either slot-oriented ("Slot and SubslotNum-ber format") or hierarchical ("Twelve level tree format"). See following description	Array of Byte / 16
	IM_Annotation	Manufacturer-specific notation Example: "Terminal block, Type xyz123 ". 64 bytes are always used. Spaces are used for padding if the string is shorter.	Array of Char / 64
	IM_OrderID	Manufacturer-specific article number Example: "6ES7 131-6BF00-0BA0 ". 64 bytes are always used. Spaces are used for padding if the string is shorter.	Array of Char / 64
	AM_SoftwareRevision (not at AM_HardwareOnlyInformatio n)	Manufacturer-specific SW version Example: "V6.3.8 ". 64 bytes are always used. Spaces are used for padding if the string is shorter. If the asset supports IM_Software_Revision, the AM_SoftwareRevision is padded with spaces.	Array of Char / 64
	AM_HardwareRevision (not at AM_FirmwareOnlyInformation)	Manufacturer-specific hardware version Example: "A4 ". 64 bytes are always used. Spaces are used for padding if the string is shorter. If the asset supports IM_Hardware_Revision, the AM_HardwareRevision is padded with spaces.	Array of Char / 64

Element of the data structure	Designation according to IEC 61158-6-10	Code	Data type / length in bytes
	IM_Serial_Number	Manufacturer-specific unique production-related number. The characters come from the visible range (0x20 ... 0x7E), no control characters. Example: "A78C-1C82 ". 16 bytes are always used. Spaces are used for padding if the string is shorter.	Array of Char / 16
	IM_Software_Revision (not at AM_HardwareOnlyInformation)	Software version, follows a strict structure (SW version prefix, for example "V", digits for functional extension, digits for BugFix, digits for internal change). Example: 'V' 0x01 0x2 0x3 If AM_SoftwareRevision is padded with spaces, you should evaluate IM_Software_Revision. If the asset does not support any hardware, the coding 'V' 0x00 0x00 0x00.	Array of Byte / 4 Prefix (character "V", "R", "P", "U", or "T"), then 3 digits "0" to "9"
	AM_DeviceIdentification	Identification of the device. The structure is as follows: AM_DeviceIdentification.DeviceSubID (for SIEMENS e.g. 0x0000) AM_DeviceIdentification.DeviceID (Device ID from manufacturer, 0x0000 to 0xFFFF) AM_DeviceIdentification.VendorID (Example for Siemens assets: 0x002A) AM_DeviceIdentification.Organization: Example for Siemens assets: 0x0000 (PROFINET)	Array of Byte / 8
	AM_TypeIdentification	Manufacturer-allocated type identification: 0x0000: Unspecified 0x0001: Controller (PLC) 0x0002: PC-based 0x0003: IO module, IO submodule 0x0004: Communications module / submodule 0x0005: Interface module / submodule 0x0006: Active network component 0c0007: Media attached unit (bus adapter) 0x0100 to 0x7FF: Manufacturer-specific	UINT / 2
	IM_Hardware_Revision (not at AM_FirmwareOnlyInformation)	Version of the hardware (0x0000 to 0xFFFF) Example: 0x0003 If AM_HardwareRevision is padded with spaces, you should evaluate IM_Hardware_Revision.	UINT / 2

AM_Location

Asset management at PROFINET supports two formats for coding the location of an asset:

- Slot-oriented format ("Slot and SubslotNumber format")
- Hierarchical format ("Twelve **L**evel **T**ree format" abbreviated **LT** format)

Assets that are part of the PROFINET device use the slot-oriented format. These assets are bound completely to the PROFINET modules and submodules.

Assets that are located outside the PROFINET device use the hierarchical format (LT format) for coding the location of an asset.

These assets are localized by their tree level. The tree level begins with Level 0. The value of Level 0 provides information about the proximity to the PROFINET device:

- If the asset is connected to a module that can be addressed through the PROFINET device model, Level 0 has the value 0. The subsequent levels (Level 1 to Level 3) then have the meaning of slot address, subslot address and channel number. If further assets are connected to this asset, the next Level 4 is used. The limit is reached at Level 11.
- If the asset belongs to a PROFINET device but is not connected to a module that can be addressed through the PROFINET device model, Level 0 has a value between 1 and 0x1FF. An example of such an asset is a power supply unit in the PROFINET device. If a further asset is connected to this power supply unit, for example a sensor, the next tree level is used to localize this sensor (Level 1).
- If the asset is located outside the PROFINET device, but, for example, belongs to a machine into which the PROFINET device is installed, Level 0 has a value between 0x200 and 0x3FE.

The value 0x3FF for a tree level shows that this tree level is not used. This means that no further asset is connected. In this case, all the lower tree levels down to Level 11 must also have this value.

Example AM_Location slot-oriented

A rack and the terminal blocks located on it each supply AM data. The slot assignments are shown in the figure.

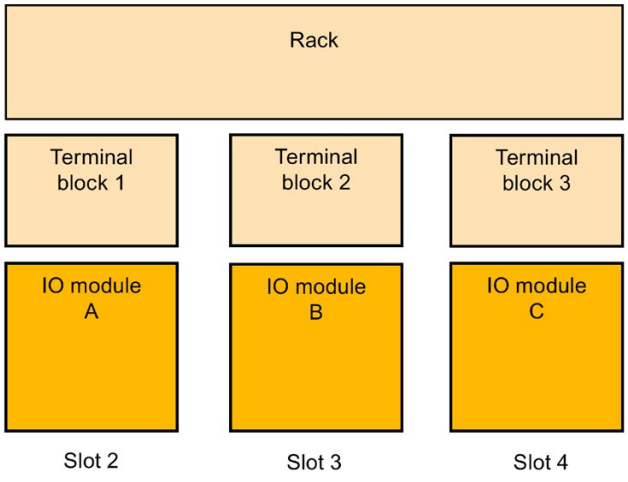

Figure 4-4 Example of assets with slot-oriented AM_Location coding.

Code the AM_Location as an asset for each module as follows:

Bit 0 – 7: AM_Location.Structure = 0x02 (coding "Slot and SubslotNumber format")

Bit 8 – 15: AM_Location.Reserved1 = 0x00 (padding byte)

Bit 16 – 31: AM_Location.BeginSlotNumber = 2 (the "Rack" asset begins from Slot 2 on)

Bit 32 – 47: AM_Location.BeginSubslotNumber = 0xFFFF (the asset encompasses all the subslots of Slot 2. Otherwise you specify the no. of the subslot at which the asset begins)

Bit 48 – 63: AM_Location.EndSlotNumber = 4 (the asset ends at Slot 4)

Bit 64 – 79: AM_Location.EndSubslotNumber = 0xFFFF (the asset encompasses all the subslots of Slot 4. Otherwise you specify the no. of the subslot at which the asset ends)

Bit 80 – 95: AM_Location.Reserved2 = 0x0000 (padding byte)

Bit 96 – 111: AM_Location.Reserved3 = 0x0000

Bit 112 – 127: AM_Location.Reserved4 = 0x0000

Example AM_Location level-oriented

A complex sensor is connected to an IO module (Slot 5, Subslot 1, Channel 1). Two simple sensors, in turn, are connected to the complex sensor. The module can be addressed within the PROFINET device model. Level 0 therefore has the value 0x0000. The next level (Level 1) is specified by the assigned slot. This is followed by the further levels for the subslot and channel and, if appropriate, further subordinate layers.

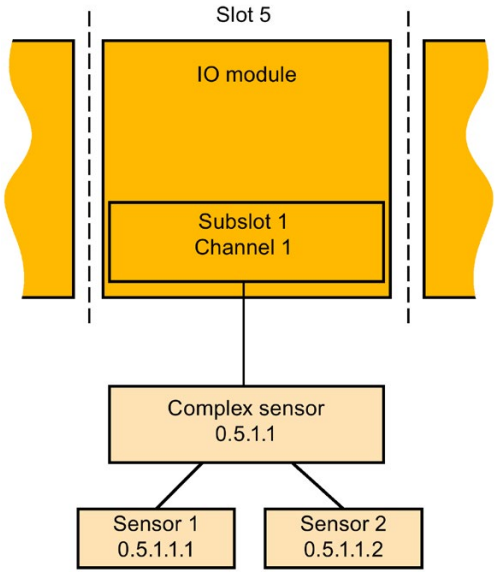

Figure 4-5 Example of assets with hierarchical AM_Location coding.

Detailed coding for the example:

Bit 0 – 7: AM_Location.Structure = 0x01 (LT format)

Bit 8 – 17: AM_Location.Level0 = 0x000 (assets that are assigned to modules always have the Level 0 value 0x000)

Bit 18 – 27: AM_Location.Level1 = 0x005 (Slot 5)

Bit 28 – 37: AM_Location.Level2 = 0x001 (Subslot 1)

Bit 38 – 47: AM_Location.Level3 = 0x001 (Channel 1)

Bit 48 – 57: AM_Location.Level4 = 0x3FF (coding for "Level not used")

Bit 58 – 67: AM_Location.Level5 = 0x3FF (coding for "Level not used")

...

Bit 118 – 127: AM_Location.Level11 = 0x3FF (coding for "Level not used")

Notation used in the screen for the LT coding of complex sensors: 0.5.1.1

The following correspondingly applies for the remaining sensors:

LT coding for simple Sensor 1 at complex sensor: 0.5.1.1.1

LT coding for second simple Sensor 2 at complex sensor: 0.5.1.1.2

Asset management data record for I-devices

With STEP 7 (TIA Portal) as of V15 and with S7-1500 CPUs as of firmware V2.5, you have the option of compiling an asset management data record via a user program. Configured as an I-device, these CPUs then supply the data from centrally plugged modules to a requesting IO controller as assets.

"S7-1500 CPUs" also refers to the CPU variants S7-1500F, S7-1500T, S7-1500C, S7-1500 SW Controller, S7-1500pro CPUs and ET 200SP CPUs.

Asset management records for I-devices

I-devices often represent machines. The PROFINET IO controller to which the I-device is assigned only sees the PROFINET interface (also configured as an IO device) and the transfer areas of the I-device configured by the machine manufacturer. The local modules of the I-device are not visible or cannot be accessed.

The assigned IO controller can read the central modules as assets of the I-device by means of an asset management record that the user program of the I-device compiles.

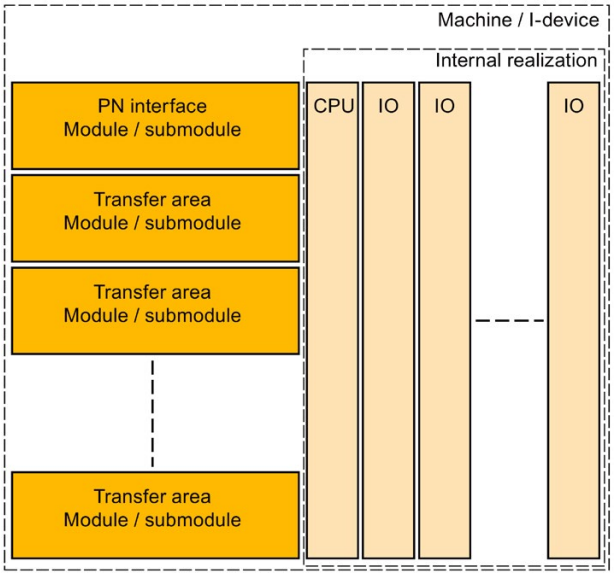

Figure 4-6 Assets of an I-device

Requirement

- S7-1500-CPU as of firmware V2.5, configured as an I-device
- STEP 7 (TIA Portal) as of V15
- If an IO controller is to read the asset management record:

  The PROFINET IO controller is programmed correspondingly to read an asset management record.

  For a SIMATIC IO controller, for example, you call a read instruction (RDREC) with record index 0xF880. The instruction addresses any submodule of the I-device, for example the first configured transfer area submodule.

Basic procedure

The following steps are fundamentally required to create the requirements so that an I-device can make its local modules available as an asset management record to a requesting IO controller:

1. Make the settings in the properties of the PROFINET interface of the CPU.
   - Activate "IO device" operating mode
   - Activate the "Activate asset management using user program" option

     PROFINET interface forwards a request of an IO controller to the user program of the I-device for reading the asset management record only if the option is selected.

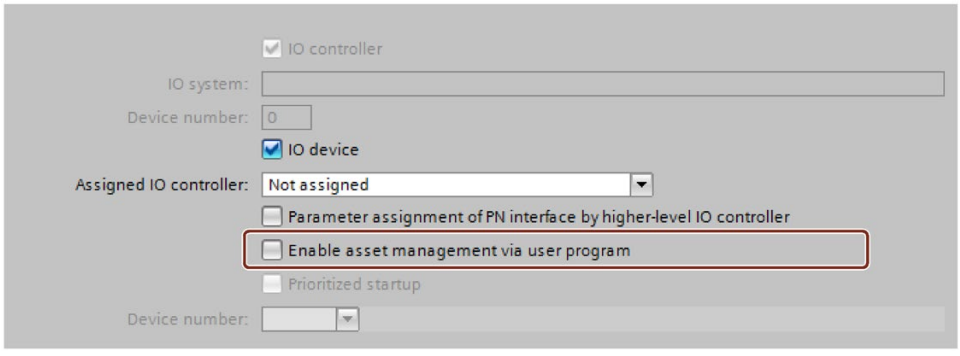

Figure 4-7 Activating asset management using a data record

2. Configure the program routine for compiling the asset management record. The program part collects the required I&M0 data of the plugged central modules and stores them in the corresponding fields of the data record structure of the asset management record.
3. Configure the program part for coordinating the data record provision:
   For this, call the instruction PRVREC (Provide Record) in accordance with the following templates in the corresponding modes:
   - Cyclic calling (for example in the cycle OB) of the PRVREC instruction with Mode 0, in order to recognize the AMR request.
   - When the AM record request is recognized, the PRVREC program has to acknowledge within one second that the request has been recognized. This means that PRVREC must be called with the Mode 2, and with the required AM record. If the I-device does not adhere to the time frame, the I-device acknowledges the record request of the IO controller as negative.

     Particular aspect for configuration of the PRVREC call: PRVREC has to be called with **F_ID = 0**. This codes that this is an IO-device-specific data record. The SLOT and SUBSLOT output parameters therefore also return the value 0.
   - Within 10 seconds the AM record now has to be completed and PRVREC be called with Mode 3 (positive response to the IO controller with provision of the AM record). If the I-device does not adhere to the time frame, the I-device acknowledges the record request of the IO controller as negative.

   A detailed description of the PRVREC instruction and possible error codes for evaluating the function can be found in the online help of STEP 7 (TIA Portal).

Compilation of the asset management record

You have various possibilities for compiling the asset management record for an I-device:

- Recommendation: The Siemens Industry Online Support makes an application available to you that helps you to compile the asset management record.
  The data area of the asset management record is divided in two. The first part consists of an automatically determined area that packages the IM0 data of the slots of the I-device into an asset management block. The second part consists of the user-specific asset management blocks. You configure the user-specific asset management blocks based on pre-configured asset management record structures, fill them with information and make them available to the application.
  The application performs the following:
  - The application determines the required size of all the asset management blocks.
  - The application fills the data block in accordance with the specifications of an asset management record with the automatically determined asset management blocks and your user-specific asset management blocks.
  - The application makes this asset management record available to the higher-level IO controller.

  The application is described in this application example (https://support.industry.siemens.com/cs/ww/en/view/109748894)
- You create the asset management record yourself.
  The following section describes how you can compile an asset management record for an I-device yourself.
  The concept assumes you yourself determine the I&M data for each centrally plugged module and fill the asset management record with this information. The I&M0 data of a module contains basic information about the module such as the manufacturer's code, article number, serial number, hardware and firmware version. These are the data that are also required in the AM record for an asset.

Determine the I&M data of centrally plugged modules

The central structure consists of an optionally plugged power supply unit (Slot 0), followed by the I-device CPU (Slot 1), and then followed by the further modules, such as digital modules, analog modules, etc. (as of Slot 2).

You determine the I&M data with the "Get_IM_Data" instruction for the plugged modules with exception of the CPU:

To assign parameters for the "Get_IM_Data" instruction, you require the hardware identifier (LADDR input parameter). You determine the hardware identifier for each occupied slot with the "GEO2LOG" instruction (Determine hardware identifier from slot).

Summary of the theoretical steps:

1. In a loop, determine the hardware identifiers of the plugged modules with the "GEO2LOG" instruction.
2. For each hardware identifier found, determine the I&M data by using the "Get_IM_Data" instruction and store these data in a data block that you address with the input parameter DATA. Use ARRAY of BYTE for the data storage. This corresponds to the description of the AM record contents in the preceding section.

Forming an AM record with the determined I&M data

The following sections are based on the description of the fundamental structure of the AM record, see the preceding section.

Since each module of an S7-1500 contains hardware and firmware information, select the coding for "AM_FullInformation" for the assigned BlockType.

For the data types used:

- IM_Annotation, IM_OrderID, AM_SoftwareRevision and AM_HardwareRevision: Characters (UTF-8)
- IM_Serial_Number: Characters ("ASCII characters") with the exception of the characters for DEL (0x7F)
- Do not use String data types. They require additional bytes and therefore do not conform to the conventions of the PROFINET standard 61158-6-10 "Application layer protocol specification".

Form the AM_FullInformationBlock for each module as follows:

Table 4- 2 AM_FullInformationBlock for modules

Data record element	Description
IM_UniqueIdentifier	Generate a (pseudo) random UUID (hash value) in accordance with ISO 9834-8 as follows: • Generate an 8-byte hash value across the I&M0 data of the module (as of Slot 2). Use the algorithm Fowler-Noll-Vo (in short: FNV); an algorithm for generating variance coefficients (hash values) across data field, see corresponding example code in the Internet or online support. • Generate an 8-byte hash value across the I&M0 data of the CPU. (Use the algorithm Fowler-Noll-Vo (in short: FNV) as described above) • IM_UniqueIdentifier Byte 0 to 7: Hash value of module I&M0 data Bytes 8 to 15: Hash value for CPU-I&M0 data Required customizations to ISO 9834-8: Byte 8, Bit 7 has to be set to 1, and Byte 8, Bit 6 to 0 (result of the AND operator with **00**11 1111, subsequent OR operator with **10**00 0000) Byte 6, Bit 4 to 7 have to be set to 0100 (result of the AND operation with 0000 1111, then OR operation with 0001 0000) Since this algorithm is based on the I&M0 data of the CPU as well as of the modules, it generates a constant IM_UniqueIdentifier for an individual module. When the configuration changes the IM_UniqueIdentifier also changes.
AM_Location	Byte 0 = 0x02 (slot-oriented coding), see description in the preceding section.
IM_Annotation	Example: "S7-1500 module" and pad the remaining bytes of IM_Annotation with spaces (0x20).
IM_OrderID	Copy 20 bytes of the I&M0 data of the module (beginning with offset 2 of the I&M0 data). Pad the remaining 44 bytes with spaces (0x20)
AM_SoftwareRevision	Pad the field with 64 spaces (0x20)
AM_HardwareRevision	Pad the field with 64 spaces (0x20)
IM_Serial_Number	Copy 16 bytes of the I&M0 data of the module (beginning with offset 22 of the I&M0 data)
IM_Software_Revision	Copy 4 bytes of the I&M0 data of the module (beginning with offset 40 of the I&M0 data)
AM_DeviceIdentification	Byte 0, 1, 2, 6, 7 = 0x00 Byte 3 = 0x2A (Vendor = Siemens) Byte 4 = 01, Byte 5 = DeviceID (e.g. CPU 15xx = 0x0E)
AM_TypeIdentification	Copy 2 bytes of the I&M0 data of the module (beginning with offset 48 of the I&M0 data)
IM_Hardware_Revision	Copy 2 bytes of the I&M0 data of the module (beginning with offset 38 of the I&M0 data)

4.2 Diagnostics using status LEDs

LEDs for diagnostics on PROFINET

Each port of a PROFINET interface of a SIMATIC device has one LED.

The following table shows a summary of the meaning of these LEDs in the S7-1500, ET 200MP, ET 200SP and ET 200AL systems.

Table 4- 3 S7-1500, ET 200MP, ET 200SP, ET 200AL: LEDs for diagnostics on PROFINET

LED image	Meaning	S7-1500	ET 200MP	ET 200SP	ET 200AL
		LINK/TX/RX LED		LK LED	P1 Link LED P2 Link LED
LED off	There is no Ethernet connection between the PROFINET interface of the PROFINET device and the communication partner. No data is currently being sent/received via the PROFINET interface.	X	X	X	X
LED green	There is an Ethernet connection between the PROFINET interface of your PROFINET device and a communication partner.	X	X	X	X
LED flashes green	The "LED flashing test" is being performed.	X	X	X	X
LED flickers yellow	Data is currently being received from or sent to a communications partner on Ethernet via the PROFINET interface of the PROFINET device.	X	X	-	-

Additional information

You can find a detailed description of all LEDs of the module with cause of the error and remedies in the relevant documentation for the module.

4.3 Diagnostics via the display of the S7-1500 CPUs

Display

The S7-1500 CPU has a display and operating keys. The display of the CPU shows you the control and status information in different menus. You use operating keys to navigate through the menus and make a variety of settings in the process.

Diagnostics via the display

The following indicators can be evaluated for diagnostics purposes on the display:

- Error and alarm texts (system diagnostics, alarm messages)
- Module status for central and distributed modules

In the following example of a display of the CPU 1516-3 PN/DP, you can see a warning on the diagnostics icon and an exclamation mark on the icon for module.

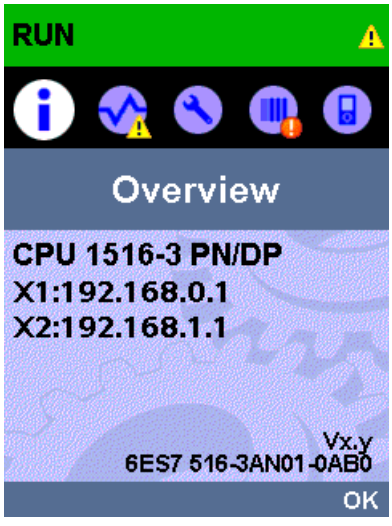

Figure 4-8 Display of overview

Module status

To show the module status, navigate on the display through the menu items "Module" > "PROFINET I/O (X1)" > "Station" > "Slot" > "Status" > "Module status".

The module status indicates that a fault has occurred in the module. The "lower-level status" is the status of the module in the diagnostics level below this. In the example, the status is "good", i.e., the fault is not in the lower diagnostics level submodule or channel, but instead in the module.

Figure 4-9 Display of module status

Error and alarm texts

You can show diagnostics buffer entries and alarm messages for the relevant automation system on the display.

To show the diagnostics buffer entries of the CPU, navigate on the display via the menu items "Diagnostics" > "Diagnostics buffer".

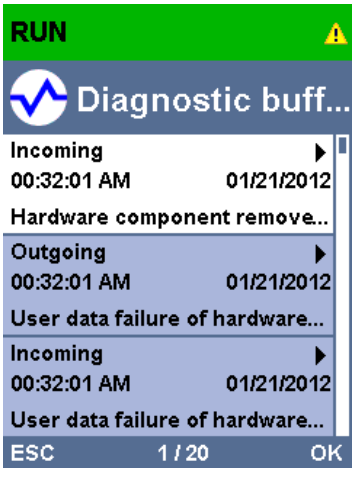

Figure 4-10 Display of diagnostics buffer

To show the alarm messages of the automation system, navigate through the menu items "Diagnostics" > "Alarms" > "Alarm text" on the display.

Note

Updating the alarm display

The display shows the currently read status of the CPU in static form, the display is not automatically updated. The alarm display is updated after it has been exited and opened again.

You set the automatic updating of the diagnostics information under: "Display" > "DiagnosticRefresh".

Figure 4-11 Display of alarms

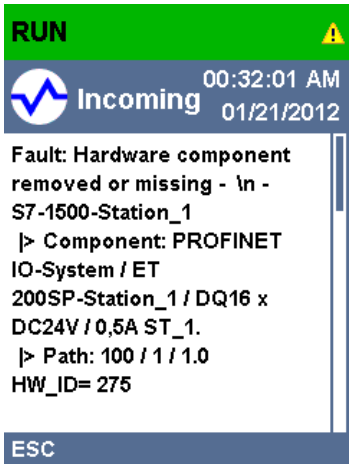

Figure 4-12 Display of alarm message

Additional information

You can find the description of the operation and functions of the display in the SIMATIC S7-1500 Display Simulator (http://www.automation.siemens.com/salesmaterial-as/interactive-manuals/getting-started_simatic-s7-1500/disp_tool/start_de.html).

4.4 Diagnostics via Web server

The CPUs belonging to the S7 family have their own integrated Web server with a wide range of functions.

The following diagnostics options are available to you:

- Start page with general CPU information
- Information on diagnostics
- Contents of the diagnostics buffer
- Module information
- Alarms
- Information about communication
- PROFINET topology
- Motion Control diagnostics
- Trace
- Contents of the diagnostic buffer
- Module status
- Actual topology of the PROFINET system
- Set topology of the PROFINET system (from the configuration)

Set topology and actual topology - graphic view

Requirements for displaying the set and actual topology:

- You have configured the PROFINET ports in the topology editor of the hardware and network editor of STEP 7.
- You have loaded the entire project with STEP 7 in the CPU.

The following shows an example of the graphic view.

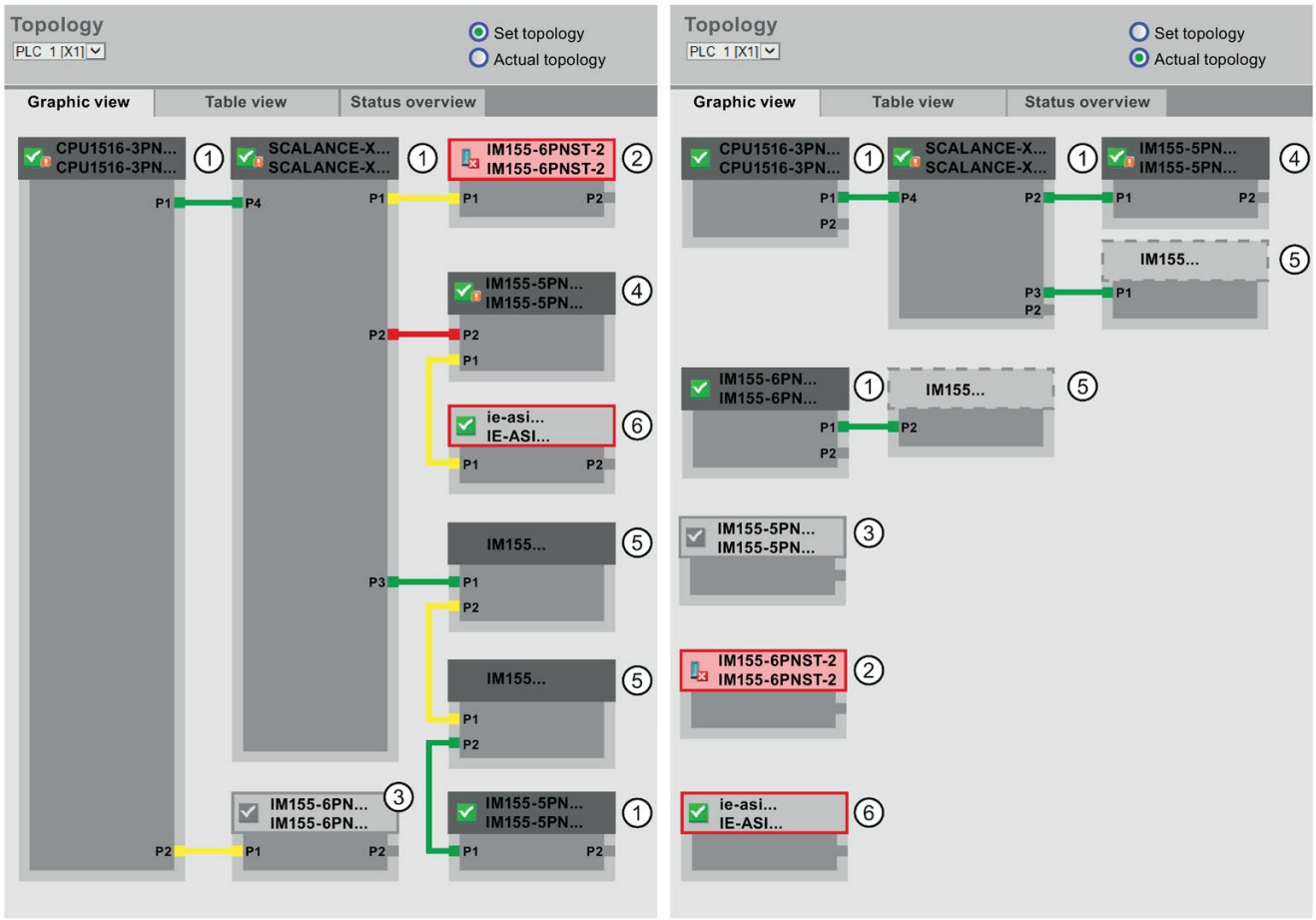

Figure 4-13 Topology - graphic view via the Web server

Meaning of the colored connections in the set/actual topology:

Table 4- 4 Meaning of the colored connections in the set/actual topology:

Connection	Meaning	
	Set topology	Actual topology
green	The current actual connection matches the configured set connection.	detected connections
red	The current actual connection does not match the configured set connection (e.g., port interchanged).	-
yellow	The connection cannot be diagnosed. Causes: • The communication to an IO device has been disrupted (e.g., cable removed) • Connection to a passive component • Connection to PROFINET devices of another IO controller or PROFINET system	-

① Configured and accessible PROFINET devices

Configured and accessible PROFINET devices are displayed dark-gray. Connections show the ports through which the PROFINET devices of a station are connected.

① Configured but not accessible PROFINET devices

The configured but not accessible PROFINET devices are displayed in pink with red border (e.g., device has failed, cable disconnected).

③ Disabled devices

All disabled, configured PROFINET devices are displayed light-gray.

④ Interchanged ports

Interchanged ports are marked red in the set topology view. The currently connected ports are displayed in the actual topology, the configured set connection in the set topology.

⑤ PROFINET devices of another PROFINET IO system

- In the set topology:

  A PROFINET device of another PROFINET IO system is displayed with a green connection (or red connected if the ports have been interchanged), when it is directly adjoining a configured and accessible PROFINET device ① and it is also accessible. When the PROFINET device of another PROFINET IO system is not accessible, a yellow connection line is displayed.

  The connection between two PROFINET devices that both belong to a different PROFINET IO system, cannot be determined and is always displayed in yellow.
- In the actual topology:

  A PROFINET device of another PROFINET IO system is only displayed if the PROFINET device is in direct proximity to a configured PROFINET device. The PROFINET device is displayed light-gray and with dashed line.

For PROFINET devices of a different PROFINET IO system, **no** status display is shown on the device head.

⑥ Representation of faulty neighbor relations

The devices whose neighbor relations cannot be read out completely or correctly are displayed light-gray with red border.

Additional information

The tabular view of the actual topology and the status overview of the PROFINET devices in the project are possible.

You can find these views, additional topology examples, and detailed information on the operation and the functions of the Web server in the Web server (http://support.automation.siemens.com/WW/view/en/59193560) manual.

4.5 Diagnostics in STEP 7

For PROFINET, you have the following options to evaluate diagnostics in STEP 7:

- Online & diagnostics - Devices & networks
- Online & diagnostics - diagnostics of PROFINET ports

Online & diagnostics network view

In the hardware and network editor (launched from the "Project tree" by double-clicking "Devices & networks"), you can get an overview of the current state of your system by clicking on the "Go online" button. It also shows the configuration information (for example, non-configured modules). This option is also available in the topology view in similar form.

Schematic drawing of the network view (online):

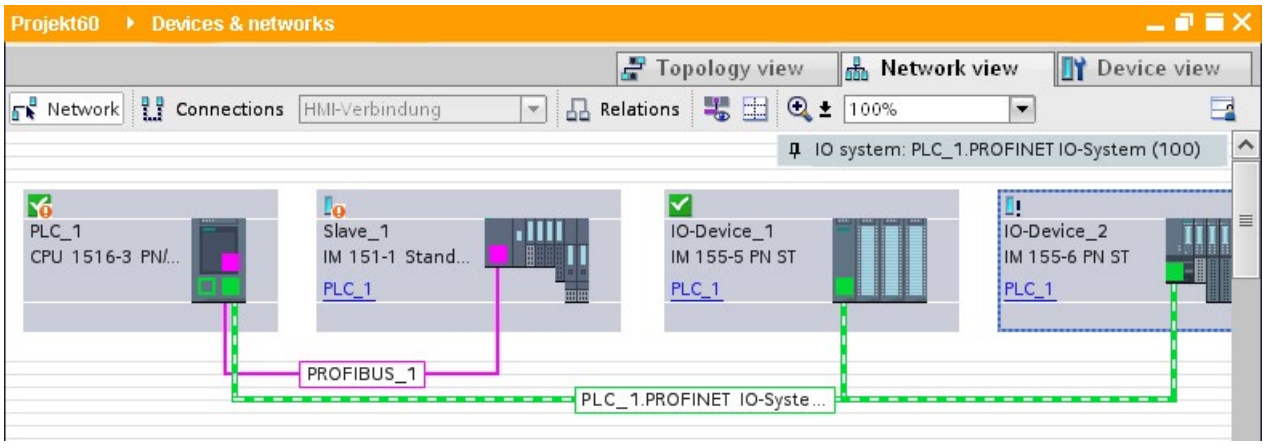

Figure 4-14 Online & diagnostics network view

Online & diagnostics device view

In STEP 7, you can display an overview of the modules in which faults have occurred. To do this, select the menu command "Online > Online & diagnostics". Once you are connected, you can see the status of the accessible devices in the project tree.

Double-click the device which displays an alarm message to access the faulty module directly. The device view is opened in the work area. In the device view of the device that reports the fault you can see directly in which module the fault occurs.

Open the "Diagnostics" tab and the subordinate "Device information" tab in the Inspector window for a more detailed error description.

Schematic drawing of the device view (online):

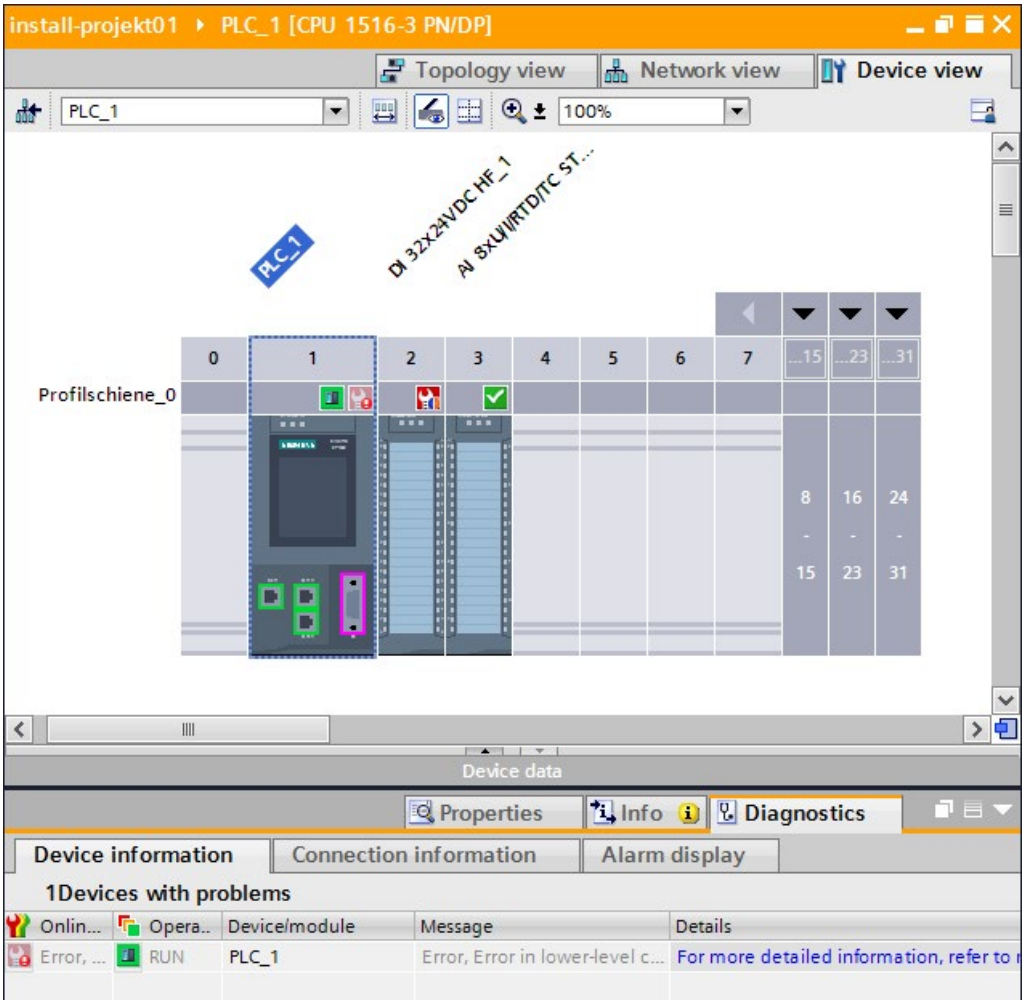

Figure 4-15 Online & diagnostics device view

Diagnostics of PROFINET ports

If you select "PROFINET interface > Ports" in the Diagnostics area in the online & diagnostics device view of a PROFINET device, the ports of the PROFINET interface are listed in a table.

The table provides you with the following information about the ports of the PROFINET interface.

- Name
- Status
- Settings
- Operating mode

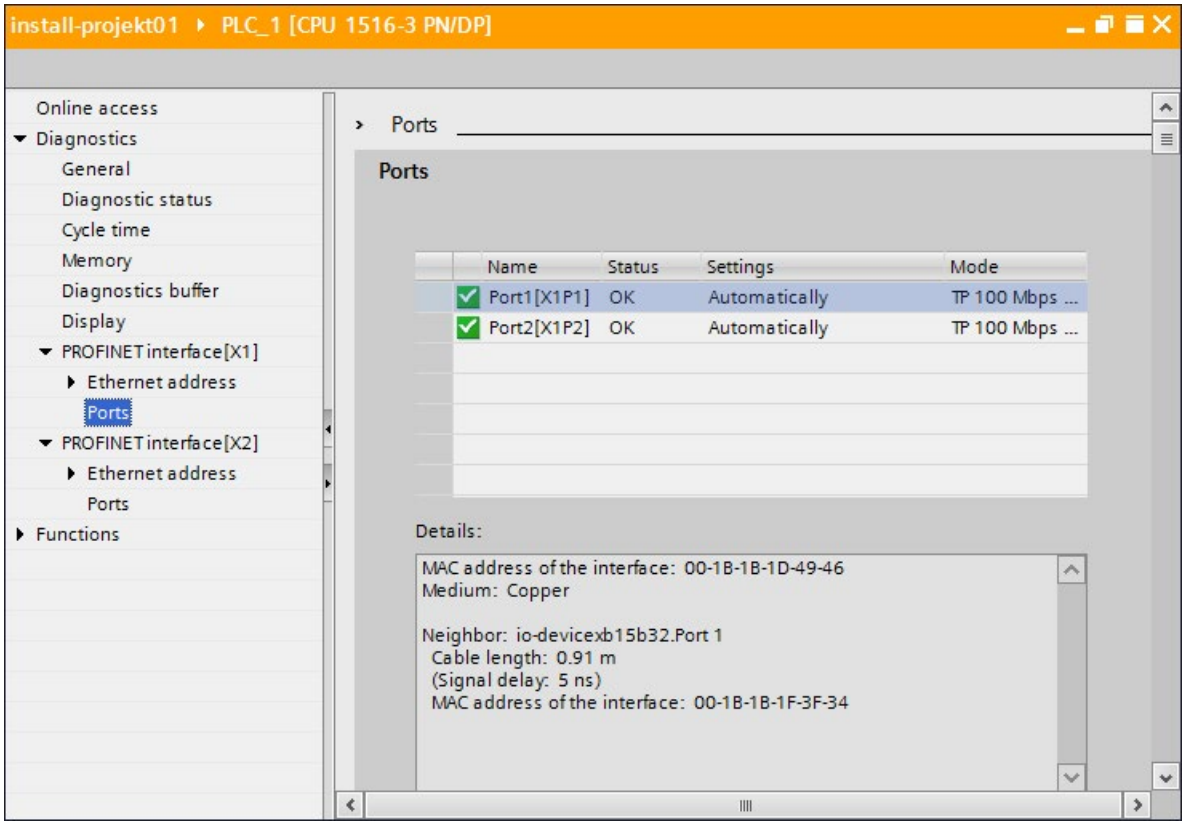

Figure 4-16 Diagnostics of PROFINET ports in STEP 7

Additional information

You can find information on the system diagnostics for S7-1500, ET 200MP, ET 200SP and ET 200AL in the Diagnostics (http://support.automation.siemens.com/WW/view/en/59192926) function manual and online help for STEP 7.

4.6 Extended maintenance concept

Extended maintenance concept

The PROFINET interfaces with integrated switch of the SIMATIC devices support the four-level diagnostics concept in accordance with PROFINET specification Version V2.3 or higher with the following status:

Table 4- 5 Classification of the diagnostic status

Diagnostic status	Symbol		Severity of the error
Good	Green checkmark		low
Maintenance required	Green wrench		
Maintenance demanded	Yellow wrench		
Bad	Red wrench		high

The aim of the diagnostics concept is the early detection and elimination of potential faults - before they cause a production outage.

Other status information is defined in addition to the Good (no fault) and Bad (fault) status information for a PROFINET device.

The maintenance information is generated with the following system alarms:

- Maintenance required (symbolized by a green wrench) and
- Maintenance demanded (symbolized by a yellow wrench)

The times at which the two system alarms are generated can be customized for most wear parameters.

Example: Maintenance demanded for a PROFINET cable

The following graphic illustrates how diagnostics information is exchanged when the transmission quality on the optical cable decreases due to ageing, for example. In this example, the scenario is considered after a maintenance required has already been diagnosed.

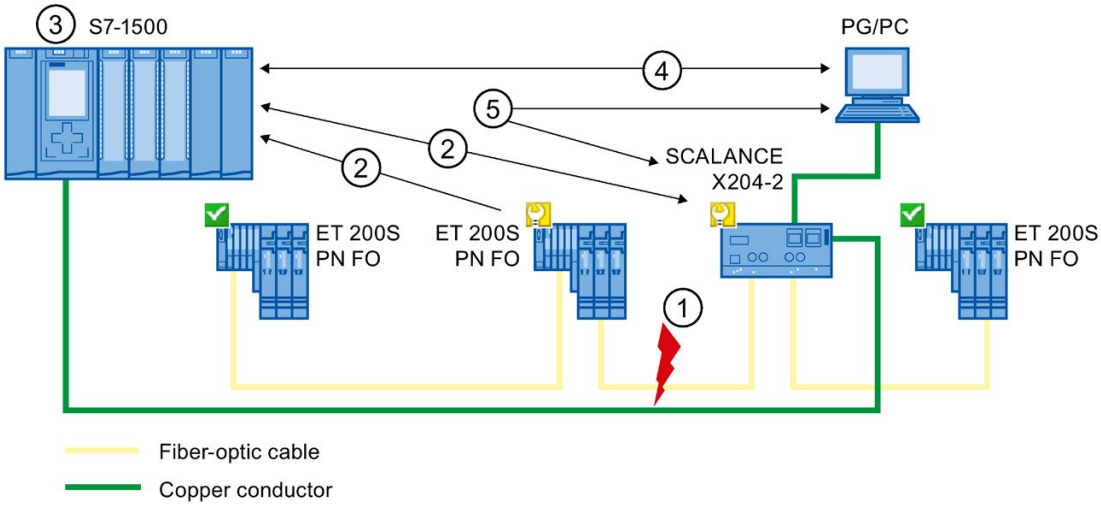

Number	Description
①	The system reserve of the fiber-optic cable drops below 0 dB.
②	Both the ET 200S PN FO and the switch send the maintenance demanded alarm to the IO controller.
③	Based on the interrupts, the IO controller detects the maintenance demanded from the switch and from the IO device. The module information data is updated in the IO controller and the corresponding error OBs are called. Note: To be able to start the error OBs in the IO controller, the "Call the user program if communication errors occur" property must be selected in STEP 7 for the relevant IO controller.
④	In STEP 7 (on the programming device/PC), the maintenance demanded message is indicated on the IO device and at the switch by a yellow wrench symbol.
⑤	STEP 7 can also read out detailed information directly from the switch.

Figure 4-17 Maintenance demanded for a PROFINET cable

4.7 Diagnostics of the network topology

Availability

As an open standard, you can use any SNMP based systems or software solutions for diagnostics in PROFINET.

Network diagnostics

The network management protocol SNMP (Simple Network Management Protocol) uses the wireless UDP transport protocol. It consists of two network components, similar to the client/server model. The SNMP manager monitors the network nodes and the SNMP clients collect the various network-specific information in the individual network nodes and store it in a structured form in the **MIB** (Management Information Base). This information allows a network management system to run detailed network diagnostics.

MIB

The MIB (Management Information Base) is the database of a device. SNMP clients access this database in the device. The S7 device family supports the following standard MIBs:

- MIB II, standardized in the RFC 1213
- LLDP-MIB, standardized in the international standard IEC 802.1AB
- LLDP-PNIO-MIB, standardized in the international standard IEC 61158-6-10

Detecting the network topology

LLDP (Link Layer Discovery Protocol) is a protocol that is used to detect the closest neighbor. LLDP enables a device to send information about itself and to receive information from its neighbor devices. This information is then saved in the LLDP MIB, for example, and can be queried using SNMP. This information allows a network management system to determine the network topology.

Use of SNMP (Simple Network Management Protocol)

SNMP can be used as follows:

- By users to integrate network diagnostics into a central HMI/SCADA system using the SIMATIC NET OPC server
- By the IT administration of machine and plant operators to monitor their Industrial Ethernet network using standard network management systems.
- By the IT administration, to monitor the automation network, alongside the office network, using standard network management systems.

Use of SNMP in the SIMATIC NET environment

SNMP-compliant devices from the SIMATIC NET family can be monitored and operated via a conventional standard Internet browser. The management system known as web-based management offers a wide range of device-specific information (network statistics, status of redundant supply, for example).

4.8 Diagnostics in the user program

4.8.1 Diagnostics and configuration data records

Diagnostics mechanism

The IO device outputs a diagnostics interrupt to the IO controller when it detects faults such as wire break on an IO module. This interrupt calls a corresponding organization block in the user program (diagnostics interrupt OB82), in order to generate a defined (programmed) response to the fault and passes a diagnostics data record.

Diagnostics data records in PROFINET IO

There are two different types of diagnostics data record:

1. Channel diagnostics data records

   Channel diagnostics data records are generated if a channel is in an error state and / or has triggered an interrupt.

   A diagnostics data record of length 0 is returned if there is no fault.

2. Vendor-specific diagnostics data records

   The structure and size of vendor-specific diagnostics data records depend on the vendor's settings.

   For information about vendor-specific diagnostics data records, refer to the appropriate device manual.

Addressing levels of diagnostics data records

Diagnostics and configuration data is evaluated at the following addressing levels:

- Device level
- AR (Application Relation)
- API (Application Process Identifier)
- Slot
- Subslot

A group of diagnostics and configuration data records are available for each address level (exception: device level always 0xF80c). In HEX representation, the individual groups of data records are distinguished by the first letter of the data record number.

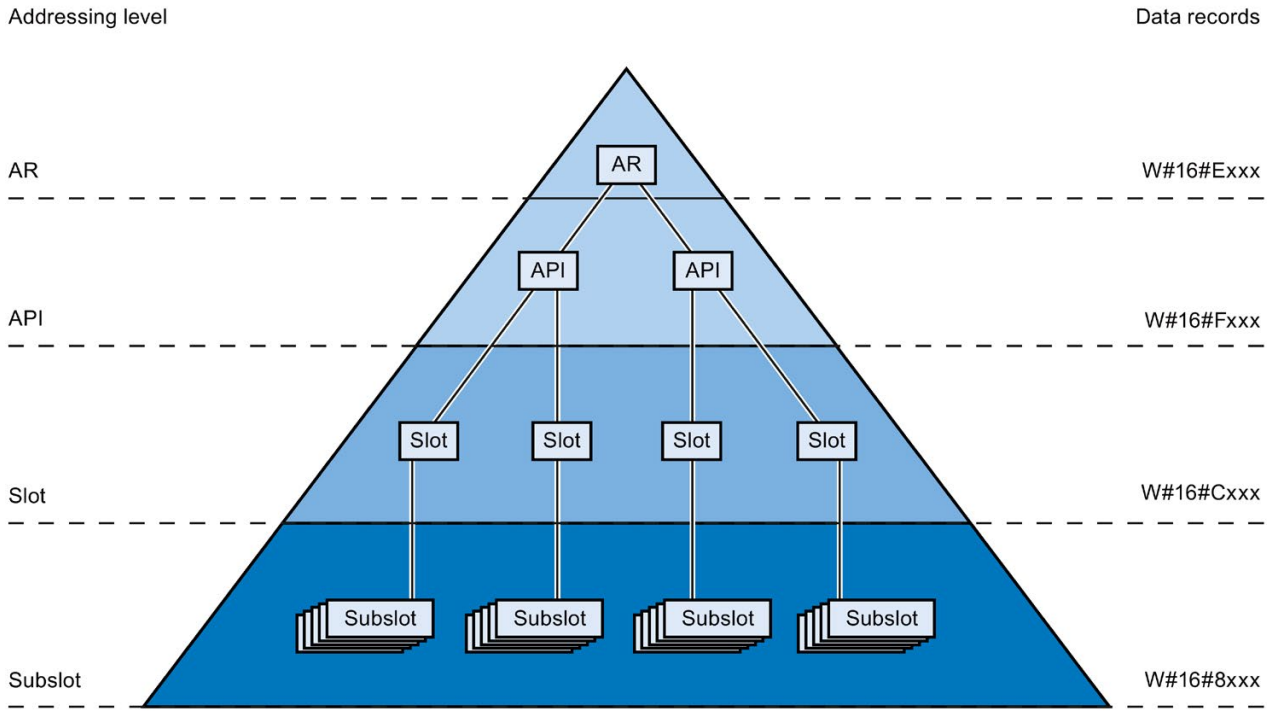

Figure 4-18 Addressing levels of diagnostics data records

The information for each IO device (addressing level AR), module (addressing level slot) or submodule (addressing level subslot) is always transferred in separate diagnostics or configuration data records. The data record returns diagnostics data or configuration data for one or more subslots, slots and APIs, depending on the addressing level.

Note

The diagnostics information is only generated for configured modules / submodules / channels.

Library for PROFINET data records

The "LPNDR" block library contains various function blocks. You can use these blocks to read out various device and status information from a PROFINET device and write parameters.

You can execute the following functions using the library blocks:

- Read device information:
  - Information about the interface, e.g. IP and MAC address
  - Information about the device interface, e.g. status, medium, name
  - Information about the link status of the interfaces, e.g. link down, link up
  - Information about the role of the device for MRP, e.g. client, manager
  - Information about the port statistics, e.g. number of received bytes
- Read the MRP status
- Modification of the parameters of analog input module of the ET 200SP in runtime, e.g. in order to disable/enable the channel diagnostics.

The finished functions are freely adaptable and can therefore be used universally.

The "LPNDR" block library with an example project can be found on the Internet (https://support.industry.siemens.com/cs/ww/en/view/109753067).

4.8.2 Evaluate diagnostics in the user program

Diagnostics in the user program

For PROFINET IO, a cross-vendor structure of data records with diagnostics information applies. Diagnostics information is created only for channels on which a fault has occurred. With PROFINET, there are two basic ways to obtain diagnostics information.

1. Evaluating the diagnostics status

Read out the diagnostics of your PROFINET IO system using the instructions "DeviceStates" and "ModuleStates", to localize those stations / modules or station / modules with maintenance demanded or maintenance required that have faults within a PROFINET IO system.

The instruction RDREC (read data record) is then used to read various diagnostics data records directly from the module concerned and thus obtain detailed information about the error.

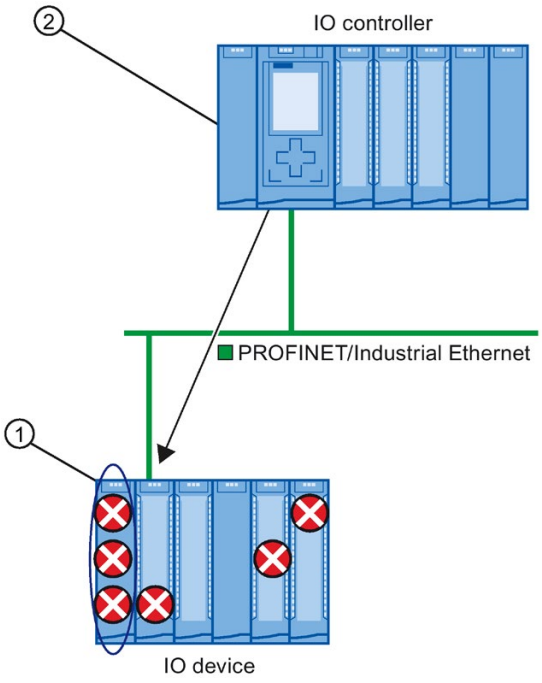

Number	Description
①	All individual errors are collected in a single data record on the interface module.
②	In your user program, the instruction "RDREC" reads the entire station status asynchronously directly from the IO device.

Figure 4-19 Example: Evaluating diagnostics data records with the instruction "RDREC"

2. Evaluation of interrupts

When the error OB (OB 82) is called, the OB's start information provides you with information on the cause and location of the error. Detailed information on the error event can be obtained in the error OB using the instruction "RALRM" (read additional interrupt information).

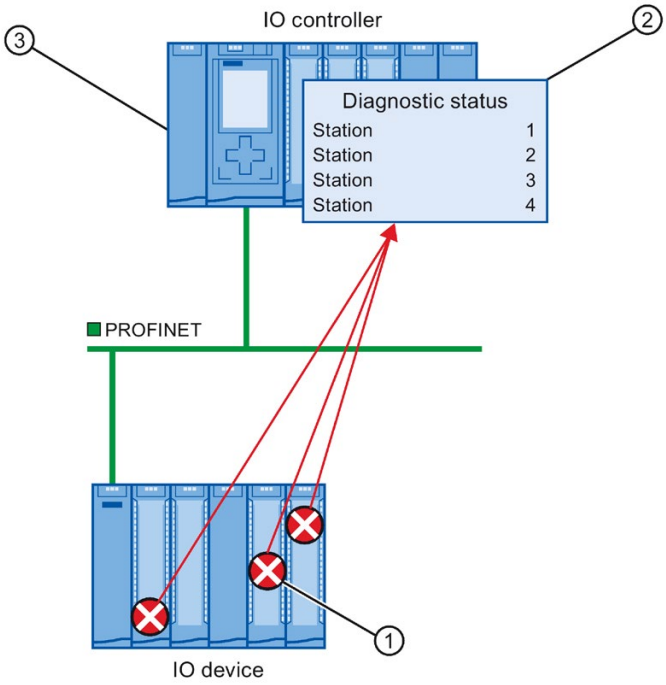

Number	Description
①	Every error is sent to the IO controller individually as channel diagnostics information in the form of an interrupt.
②	In the IO controller, the module status data is updated automatically and the error OB (OB 82) is started.
③	In your user program in the error OB (OB 82), the instruction "RALRM" reads the error synchronously from the IO controller without addressing the IO device.

Figure 4-20 Diagnostics with OB 82 and the instruction "RALRM"

Instructions and OBs

You will find information on the instructions and OBs in the STEP 7 online help.

Functions

5

Introduction

The following section describes the PROFINET IO functions for field of application, properties and configuration in STEP 7.

Refer to the documentation for the respective device to see to what extent the PROFINET devices support the described functions.

You can find a tabular overview of the PROFINET devices and the functions these support on the Internet (https://support.industry.siemens.com/cs/ww/en/view/102325771).

5.1 Connecting other bus systems

Fieldbus integration

PROFINET allows you to use a proxy-capable PROFINET device to integrate existing fieldbus systems (for example, PROFIBUS, AS interface). The devices of these fieldbus systems are mapped on proxy PROFINET devices. In this way, you can set up any hybrid systems consisting of fieldbus and Ethernet-based subsystems. This allows a continuous exchange of information.

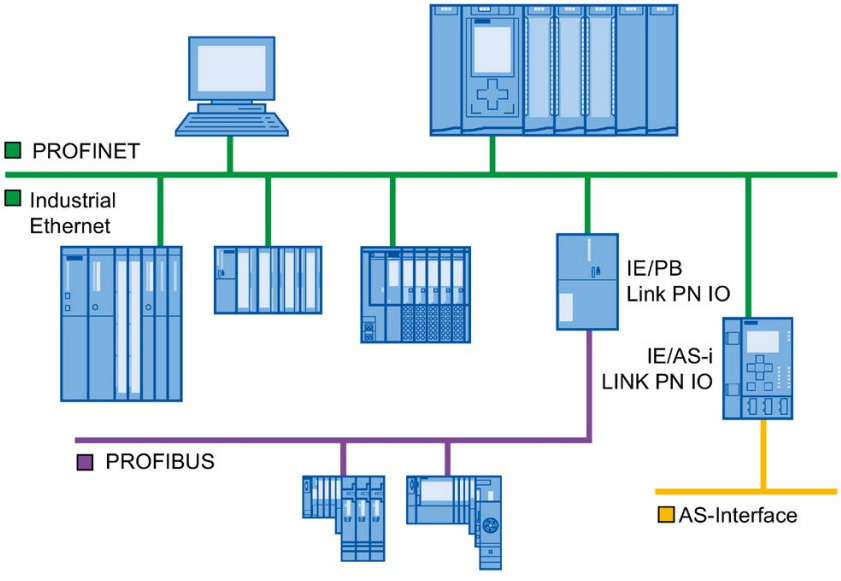

Figure 5-1 Gateways on PROFINET IO

Gateways of an S7-1500 CPU

An overview of the gateways at an S7-1500 CPU is provided in this FAQ (https://support.industry.siemens.com/cs/ww/en/view/88778900).

Connecting to building busses

- BACnet: You can find the procedure for configuring communication between a SIMATIC PLC and a BACnet network with a gateway in this application example (https://support.industry.siemens.com/cs/ww/en/view/109476182).
- M-bus: You can find the procedure for configuring communication between a SIMATIC PLC and an M-bus network with a gateway in this application example (https://support.industry.siemens.com/cs/ww/en/view/109478527).
- DALI: You can find the procedure for configuring communication between a SIMATIC PLC and a DALI network with a gateway in this application example (https://support.industry.siemens.com/cs/ww/en/view/109740160).
- KNX: You can find the procedure for configuring communication between a SIMATIC PLC and a KNX network with a gateway in this application example (https://support.industry.siemens.com/cs/ww/en/view/109739689).

5.1.1 Linking PROFINET and PROFIBUS

Linking PROFINET and PROFIBUS

With a proxy-capable PROFINET device which is equipped with a PROFINET interface in addition to a PROFIBUS interface (for example, IE/PB Link PN IO), you can integrate existing PROFIBUS configurations into the PROFINET configuration.

The following figures shows how a PROFIBUS system is connected via IE/PB Link to a CPU S7-1500 (as of firmware version 1.7).

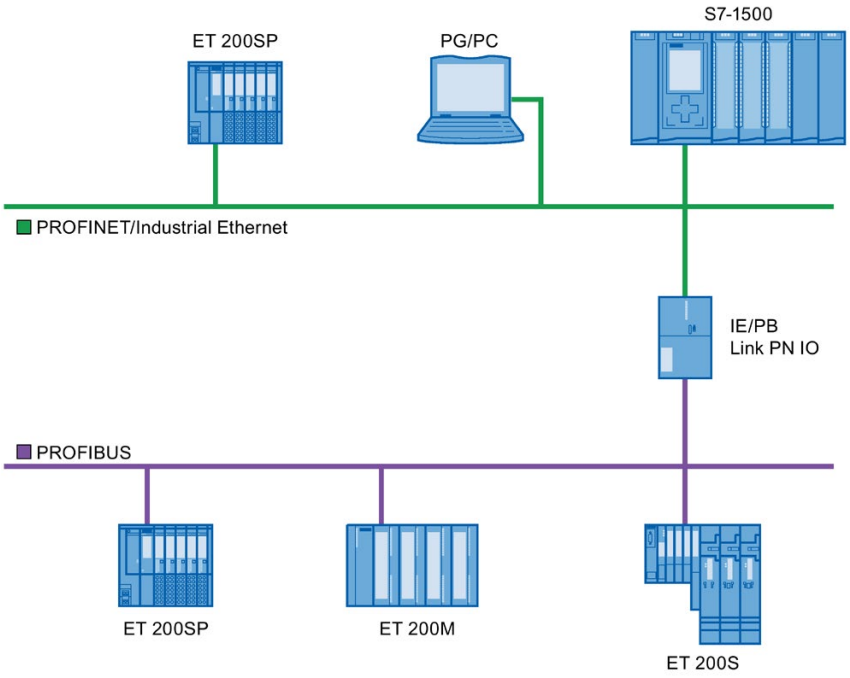

Figure 5-2 Gateway from PROFINET and PROFIBUS via IE/PB link

PROFINET device with proxy functionality

The PROFINET device with proxy functionality is the substitute for a PROFIBUS device on Ethernet. The proxy functionality allows a PROFIBUS device to communicate not only with its master but also with all devices on PROFINET.

With PROFINET you can connect an existing PROFIBUS system to an IO controller, for example with the help of an IE/PB Link PN IO.

From the IO controller perspective, the PROFIBUS DP slaves are connected to the same network as the IE/PB Link PN IO. These slaves have the same device name and IP address as the IE/PB Link PN IO, but different device numbers. Furthermore, each also has a specific PROFIBUS address.

In this way, you can link both DPV0 and DPV1 slaves to PROFINET.

For information on how to connect a DP slave to a PROFINET IO system, refer to section Connect the DP slave via the IE/PB Link to a PROFINET IO system (Page 118).

Diagnostic options with a CPU S7-1500 as IO controller

The CPU S7-1500 (as of firmware version 1.7) as IO controller detects disrupted DP slaves behind the IP/PB link.

5.1.2 Connect the DP slave via the IE/PB Link to a PROFINET IO system

Requirements

- STEP 7 as of V13 SP1
- S7-1500 CPU as of firmware version 1.7
- ET 200SP CPU as of firmware version 1.7
- CPU 1516pro-2 PN as of firmware version 2.0
- S7-1500 Software Controller as of firmware version 1.7
- S7-300/400 CPU

Procedure for connecting a DP slave via an IE/PB Link

To connect a DP slave to a PROFINET IO system via an IE/PB Link in STEP 7, follow these steps:

1. Drag-and-drop a PROFINET CPU, for example CPU 1513-1 PN, from the hardware catalog into the network view of STEP 7.
2. Drag-and-drop an IE/PB Link PN IO from the hardware catalog into the network view of STEP 7. The IE/PB Link PN IO is located under Network components > Gateways > IE/PB Link PN IO.
3. Assign the IE/PB Link PN IO to the CPU.

4. Drag a PROFIBUS interface module e.g. IM155-6 DP HF, from the hardware catalog to the network view.
5. Assign the interface module to the IE/PB Link.

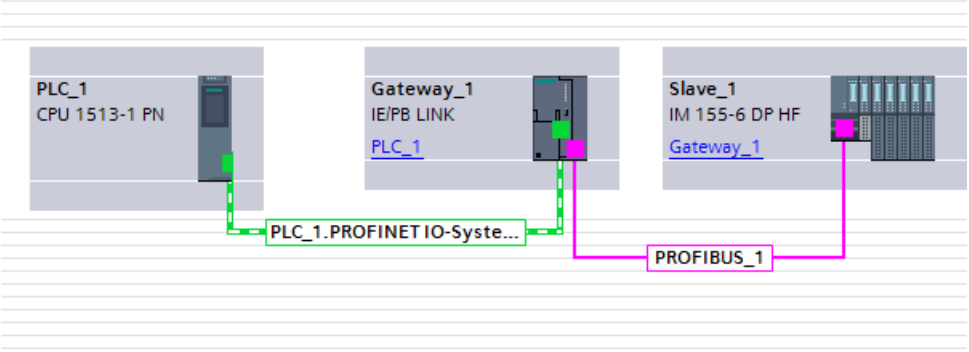

Figure 5-3 Configuring an IE/PB link

6. Select the IE/PB Link PN IO in the network view of STEP 7.
7. In the Inspector window, go to the "Gateway" area and select the "Network gateway as PROFINET IO proxy" option.

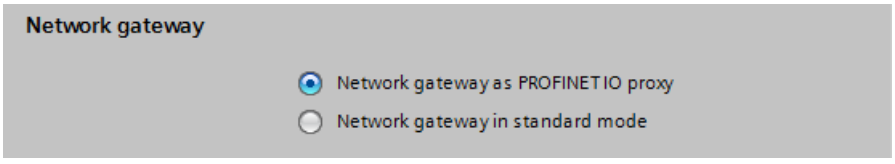

Figure 5-4 Setting a gateway

8. In the PROFINET device number area, you can assign a PROFINET device number for the DP slave.
   If you have selected the "Device number = PB address" check box (default), STEP 7 automatically assigns the device number according to the PROFIBUS address of the slave. In addition, you no longer need to update the device number if the PROFIBUS address changes.

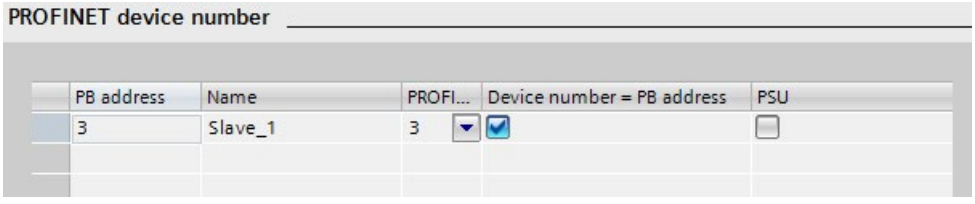

Figure 5-5 Assigning PN device numbers for IE/PB link

Result

You have connected the DP slave to the PROFINET IO system.

Reference

Additional information on the IE/PB link is available in the manual Gateway IE/PB Link PN IO (http://support.automation.siemens.com/WW/view/en/19299692).

5.2 Intelligent IO devices (I-devices)

5.2.1 I-device functionality

I-device functionality

The "I-device" (intelligent IO device) functionality of a CPU facilitates data exchange with an IO controller and operation of the CPU as intelligent preprocessing unit of sub processes, for example. The I-device is linked as an IO device to a "higher-level" IO controller.

The preprocessing is handled by the user program in the I-device. The process values acquired in the centralized or distributed (PROFINET IO or PROFIBUS DP) I/O are preprocessed by the user program and made available to the IO controller.

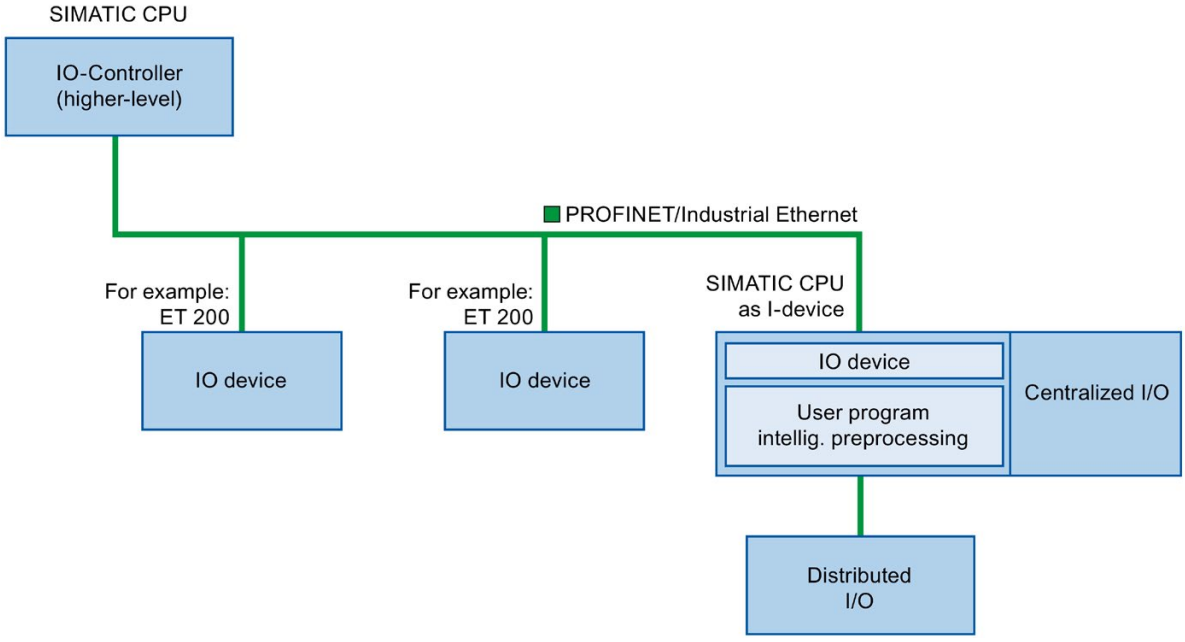

Figure 5-6 I-device

"I-device" naming conventions

In the remainder of this description, a CPU or a CP with I-device functionality is simply called an "I-device".

Application example: Configuration and application of the PROFINET I-device function

A detailed application example is available here (https://support.industry.siemens.com/cs/ww/en/view/109478798).

5.2.2 Properties and Advantages of the I-Device

Fields of application

Fields of application of the I-device:

- Distributed processing

  A complex automation task can be divided into smaller units/subprocesses. This results in manageable processes which lead to simplified subtasks.

- Separating subprocesses

  Complicated, widely distributed and extensive processes can be subdivided into several subprocesses with manageable interfaces by using I-devices. These subprocesses can be stored in individual STEP 7 projects if necessary, which can later be merged to form one master project.

- Know-how protection

  Components can only be delivered with a GSD file for the I-device interface description instead of with a STEP 7 project. The know-how of the user program may no longer be published.

Properties

Properties of the I-device:

- Unlinking STEP 7 projects

  Creators and users of an I-device can have completely separated STEP 7 automation projects. The GSD file forms the interface between the STEP 7 projects. This allows a link to standard IO controllers via a standardized interface.

- Real-time communication

  The I-device is provided with a deterministic PROFINET IO system via a PROFINET IO interface and therefore supports RT (real-time communication) and IRT (isochronous real time).

Advantages

The I-device has the following advantages:

- Simple linking of IO controllers
- Real-time communication between IO controllers
- Relieving the IO controller by distributing the computing capacity to I-devices.
- Lower communication load by processing process data locally.
- Manageable, due to processing of subtasks in separate STEP 7 projects

5.2.3 Characteristics of an I-Device

Principle

An I-device is included in an IO system like a standard IO device.

I-device without lower-level PROFINET IO system

The I-device does not have its own distributed I/O. The configuration and parameter assignment of the I-devices in the role of an IO device is the same as for a distributed I/O system (for example ET 200).

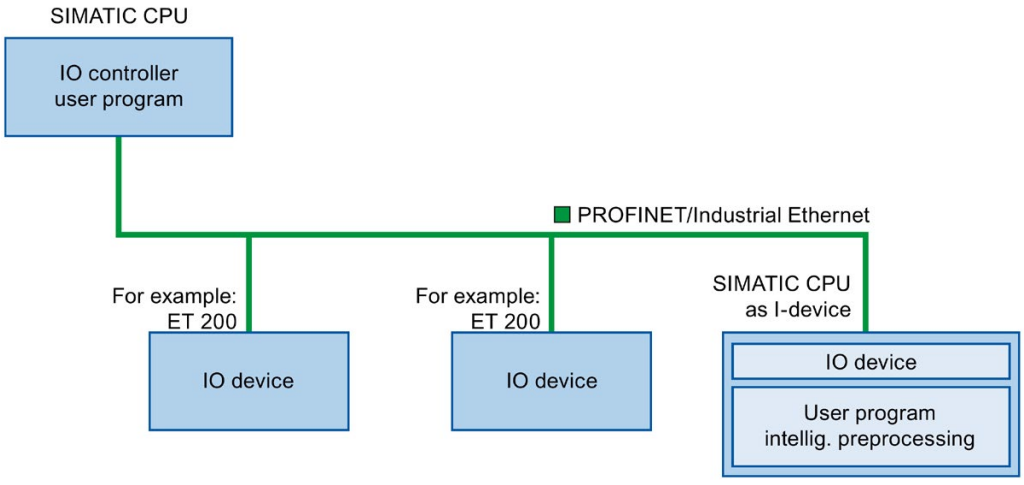

Figure 5-7 I-device without lower-level PROFINET IO system

I-device with lower-level PROFINET IO system

Depending on the configuration, an I-device can also be an IO controller on a PROFINET interface in addition to having the role of an IO device.

This means that the I-device can be part of a higher-level IO system via its PROFINET interface and as an IO controller can support its own lower-level IO system.

The lower-level IO system can, in turn, contain I-devices (see figure below). This makes hierarchically structured IO systems possible.

In addition to its role as IO controller, an I-device can also be used via a PROFIBUS interface as DP master for a lower-level PROFIBUS system.

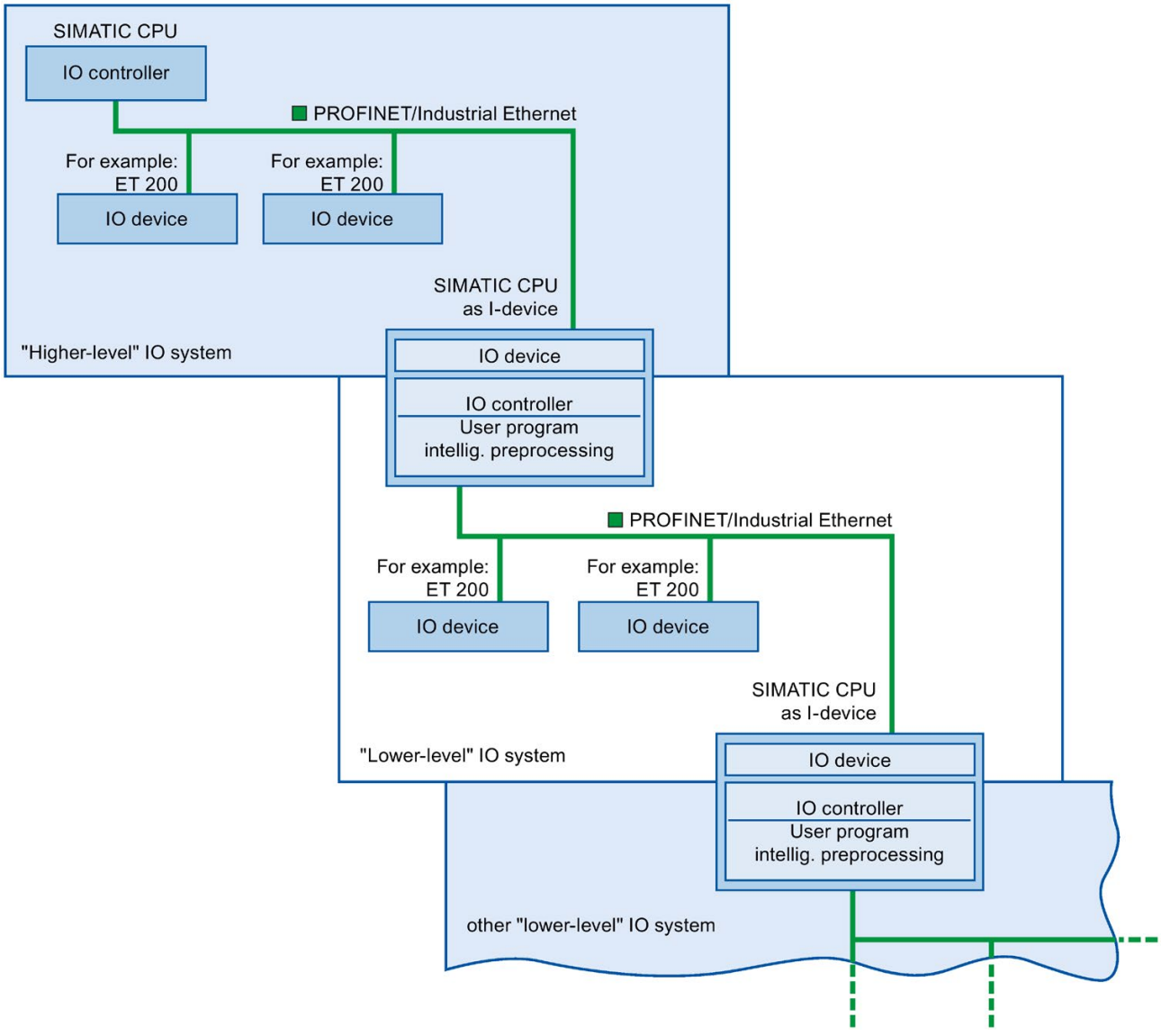

Figure 5-8 I-device with lower-level IO system

Example - the I-device as IO device and IO controller

The I-device as IO device and IO controller is explained based on the example of a print process. The I-device controls a unit (a subprocess). One unit is used, for example, to insert additional sheets such as flyers or brochures in a package of printed material.

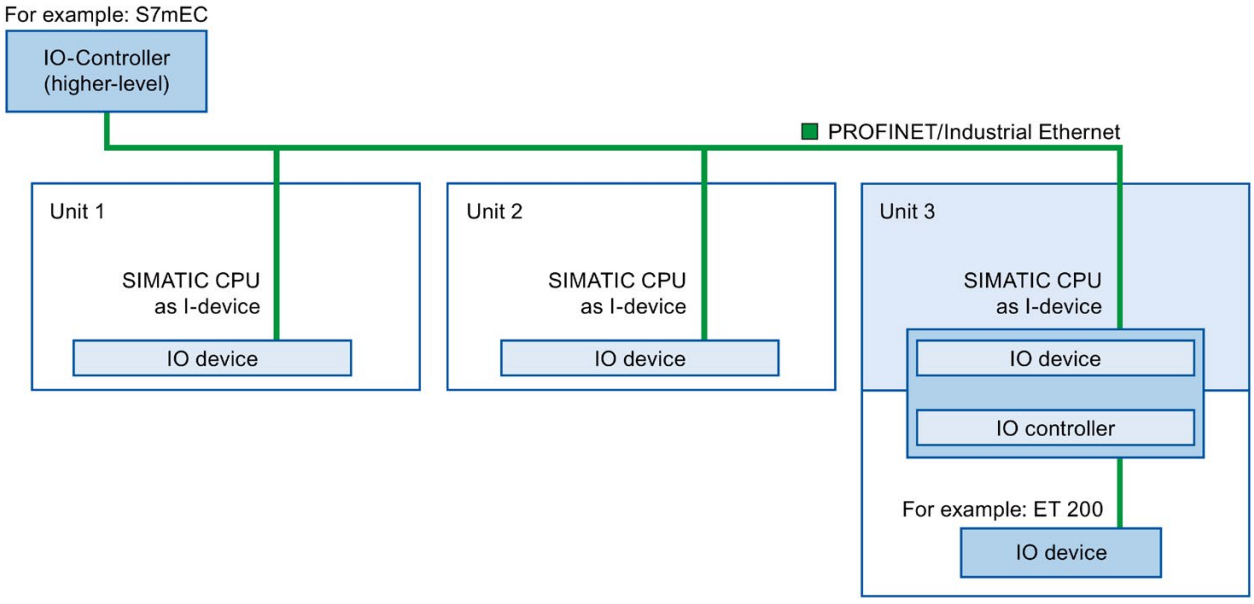

Figure 5-9 Example - the I-device as IO device and IO controller

Unit 1 and unit 2 each consist of an I-device with centralized I/O. The I-device along with the distributed I/O system (for example ET 200) forms unit 3.

The user program on the I-device is responsible for preprocessing the process data. For this task, the user program of the I-device requires default settings (for example control data) from the higher-level IO controller. The I-device provides the higher-level IO controller with the results (for example status of its subtask).

I-device as a shared device

An I-device can also be used simultaneously by multiple IO controllers as a shared device.

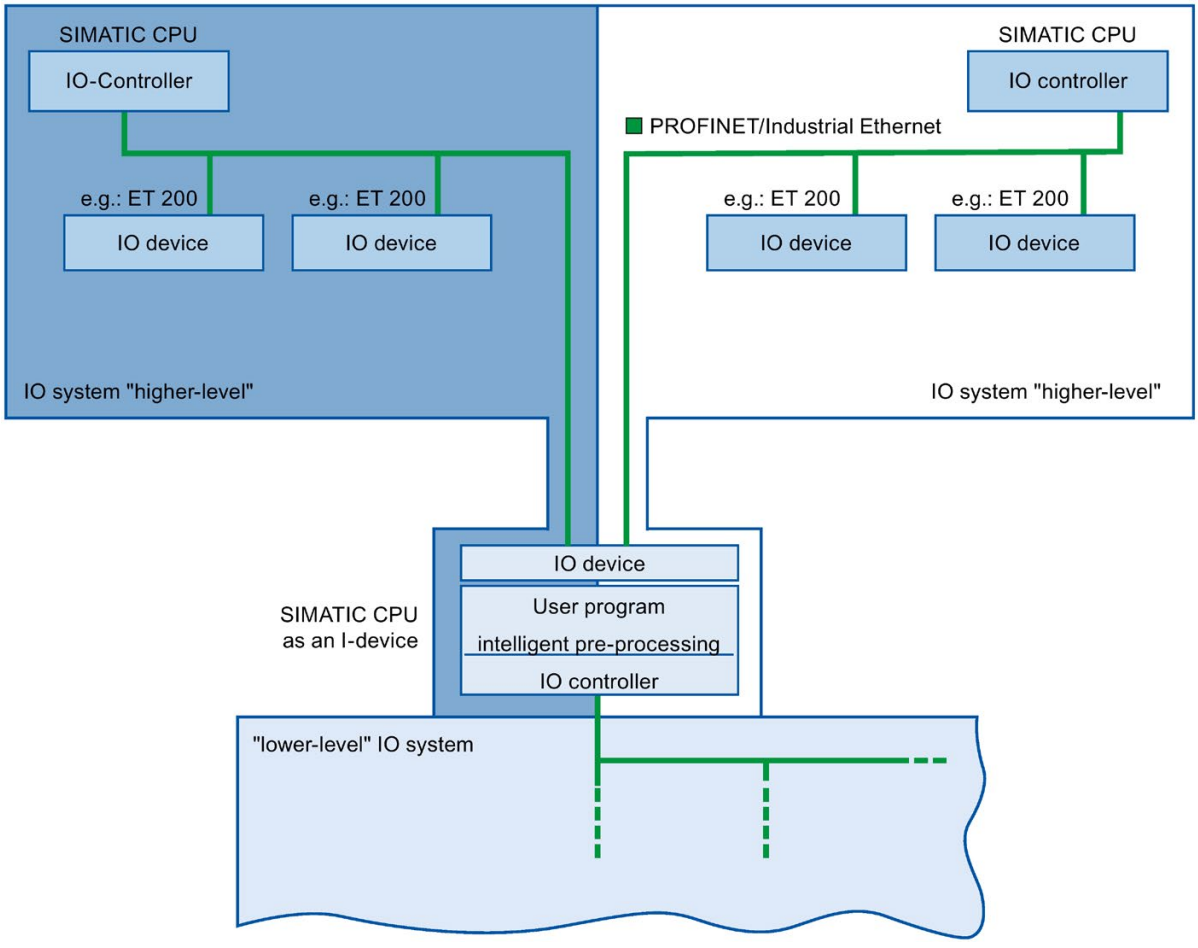

Figure 5-10 I-device as a shared device

Information about configuring an I-device as a shared device is available in the section Configuring an I-device as a shared device (Page 151).

5.2.4 Data Exchange between higher- and lower-level IO system

Introduction

The next chapter shows the data exchange between the higher- and lower-level IO system.

Transfer areas

Transfer areas are an interface to the user program of the I-device CPU. Inputs are processed in the user program and outputs are the result of the processing in the user program.

The data for communication between IO controller and I-device is made available in the transfer areas. A transfer area contains an information unit that is exchanged consistently between IO controller and I-device. You can find more information on configuration and use of transfer areas in the section Configuring the I-device (Page 128).

The next figure shows the data exchange between the higher- and lower-level IO system. The individual communication relations are explained below based on the numbers.

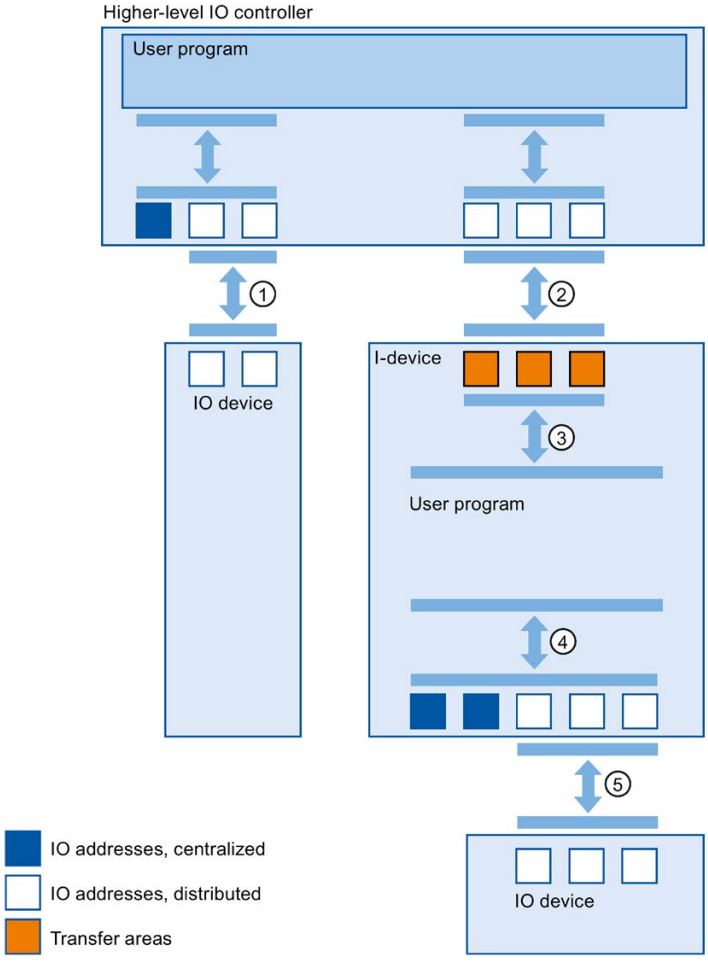

Figure 5-11 Data exchange between higher- and lower-level IO system

① Data exchange between higher-level IO controller and normal IO-device

In this way, the IO controller and IO devices exchange data through PROFINET.

② Data exchange between higher-level IO controller and I-device

In this way, the IO controller and the I-device exchange data through PROFINET.

The data exchange between a higher-level IO controller and an I-device is based on the conventional IO controller / IO device relationship.

For the higher-level IO controller, the transfer areas of the I-devices represent submodules of a preconfigured station.

The output data of the IO controller is the input data of the I-device. Analogously, the input data of the IO controller is the output data of the I-device.

③ Transfer relationship between the user program and the transfer area

In this way, the user program and the transfer area exchange input and output data.

④ Data exchange between the user program and the I/O of the I-device

In this way, the user program and the centralized / distributed I/O exchange input and output data.

⑤ Data exchange between the I-device and a lower-level IO device

In this way, the I-device and its IO devices exchange data. The data transfer is via PROFINET.

5.2.5 Configuring the I-device

Introduction

There are basically two possibilities for configuration:

- Configuration of an I-device within a project
- Configuration of an I-device that is used in another project or in another engineering system.

STEP 7 allows you to configure an I-device for another project or for another engineering system by exporting a configured I-device to a GSD file. You import the GSD file in other projects or engineering systems as with other GSD files. The transfer areas for the data exchange, among other data, are stored in this GSD file.

Configuration of an I-device within a project

1. Drag-and-drop a PROFINET CPU from the hardware catalog into the network view.
2. Drag-and-drop a PROFINET CPU, which can also be configured as an IO device, from the hardware catalog into the network view. This device is configured as I-device (e.g., CPU 1516-3 PN/DP).
3. Select the PROFINET interface for the I-device.
4. In the Inspector window in the area navigation choose "Operating mode" and select the check box "IO device".
5. Now you have the option of choosing the IO controller in the "Assigned IO controller" drop-down list.

   Once you have chosen the IO controller, the networking and the IO system between both devices are displayed in the network view.

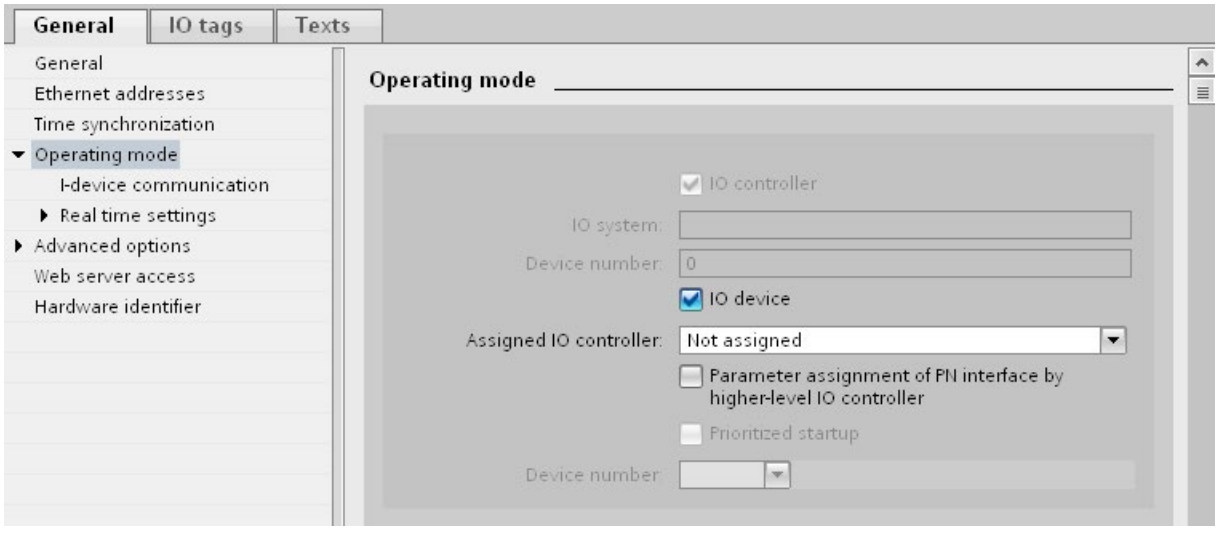

Figure 5-12 Configuring the I-device

6. With the "Parameter assignment of PN interface by higher-level IO controller" check box, you specify whether the interface parameters will be assigned by the I-device itself or by a higher-level IO controller.

   If you operate the I-device with a lower-level IO system, then the parameters of the I-device PROFINET interface (for example, port parameter) cannot be assigned with the higher-level IO controller.

7. Configure the transfer areas. The transfer areas are found in the area navigation section "I-device communication".
   - Click in the first field of the "Transfer area" column. STEP 7 assigns a default name which you can change.
   - Select the type of communication relation: you can currently only select CD or F-CD for "Controller-device communication relation".
   - Addresses are automatically preset; you can correct addresses if necessary, and determine the length of the transfer area which is to be consistently transferred.

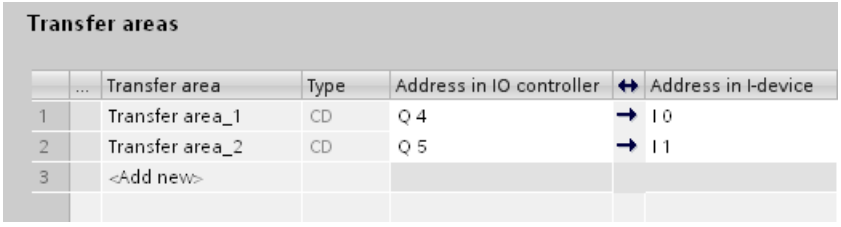

Transfer areas

	...	Transfer area	Type	Address in IO controller	↔	Address in I-device
1		Transfer area_1	CD	Q 4	→	I 0
2		Transfer area_2	CD	Q 5	→	I 1
3		<Add new>				

Figure 5-13 Configuring the transfer areas

8. A separate entry is created in the area navigation for each transfer area. If you select one of these entries, you can adjust the details of the transfer area, or correct them and comment on them.

Configuring an I-device with a GSD file

If you use an I-device in another project, or if the I-device is used in another engineering system, then configure the higher-level IO controller and the I-device as described above.

However, click on the "Export" button after configuring the transfer areas so a new GSD file is created from the I-device. This GSD file represents the configured I-device in other projects.

The "Export" button is found in the "I-device communication" section of the Inspector window.

The hardware configuration is compiled and the export dialog opened.

Assign a name for the I-device proxy as well as a description in the fields provided. Click the "Export" button to complete your process.

Finally, import the GSD file, for example, in another project.

5.2.6 Program examples

Introduction

This simple program example shows how you use the transfer areas of an I-device.

Requirements

You have configured an I-device.

Task

The result of an "AND logic operation" of two inputs (preprocessing) in the I-device is to be provided to the higher-level IO controller. This result is to be assigned to a local output in the IO master (further processing).
Use a transfer area with the following addresses for this purpose:

- Address in the I-device: Q568
- Address in the IO controller: I68

Required steps

The following steps to solve the task:

1. Configuring the transfer area
2. Programming I-device
3. Programming IO controller

Configuring the transfer area

Configure a transfer area with the following properties in the I-device:

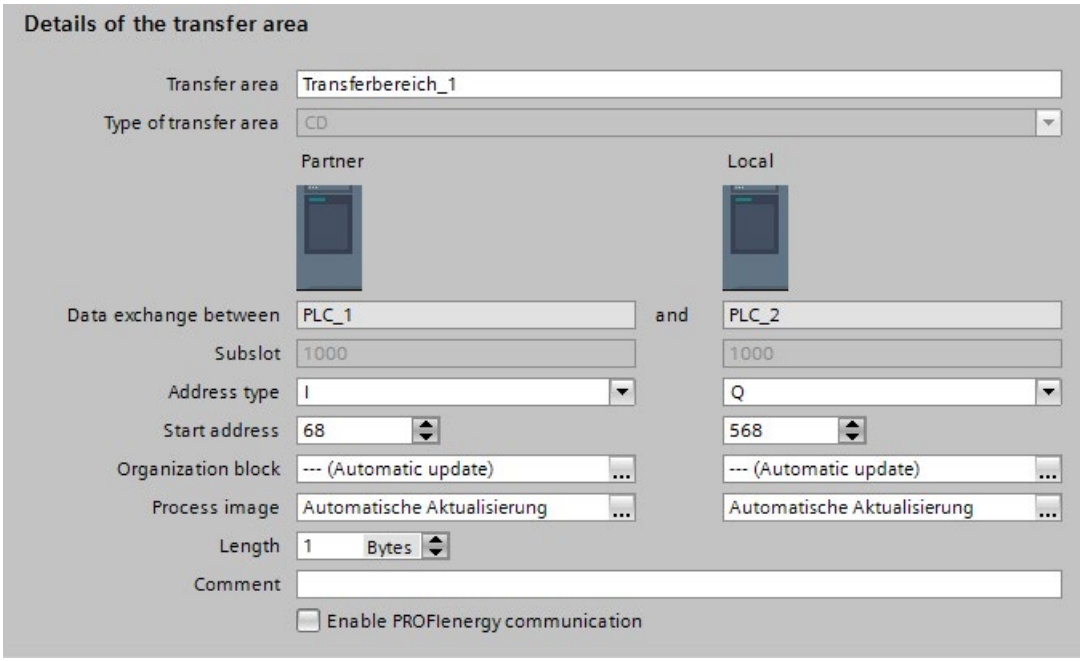

Figure 5-14 I-device transfer area, sample program

Programming I-device

To program the sample program for the I-device, follow these steps:

1. Using the SCL programming language, create a new function with the name "preprocessing" in the project tree in "Program blocks" > "Add new block". Open the function.
2. In the interface of the function "preprocessing", create the following tags:

Name	Data type	Input / output type
input 1	bool	Input
input 2	bool	Input
result	bool	Output

3. In the instruction window of the function "preprocessing", write the following program code:
   #result:=#input 1&#input 2;

4. Call the function "preprocessing" in a program cycle OB, for example, in OB1.
5. Wire the function "preprocessing" in the program cycle OB as follows:

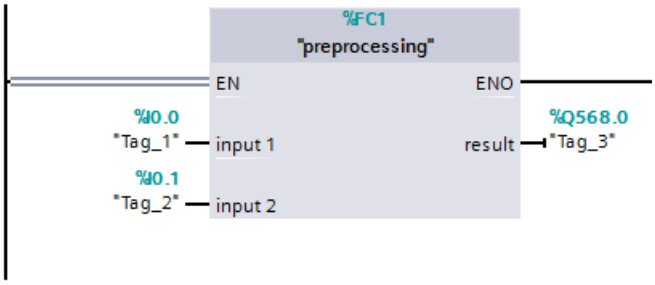

Figure 5-15 I-device sample program

Programming IO controller

To program the sample program for the IO controller, follow these steps:

1. Using the SCL programming language, create a new function with the name "further processing" in the project tree in "Program blocks" > "Add new block". Open the function.
2. In the interface of the function "further processing", create the following tags:

Name	Data type	Input / output type
result	bool	Input
output	bool	Output

3. In the instruction window of the function "further processing", write the following program code:
   #output:=#result;
4. Call the function "further processing" in a program cycle OB, for example, in OB1.
5. Wire the function "further processing" in the program cycle OB as follows:

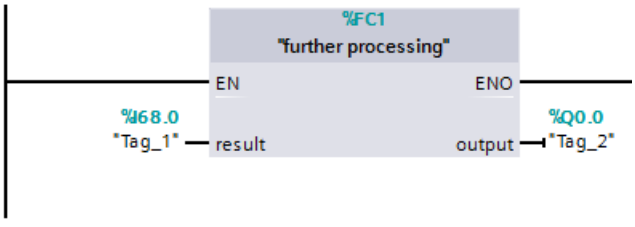

Figure 5-16 IO controller sample program

Result

The IO controller and the I-device can exchange data with each other through the input/output transfer areas.

5.2.7 Diagnostics and interrupt characteristics

Diagnostics and interrupt characteristics

S7 CPUs have numerous diagnostics and interrupt functions that can, for example, report errors or failures of lower-level IO systems. These diagnostics messages reduce down times and simplify localization and elimination of problems.

Diagnostics options in the higher-level IO controller and in the I-device

The following diagnostics functions are available to the higher-level IO controller and the I-device CPU:

- OB 83 (pull/plug)
- OB 86 (rack failure)
- OB 122 (I/O access error)

Note

The diagnostics messages of the I/O can be processed in the user program of the I-device CPU and passed on from there to the higher-level IO controller via transfer areas.

Operating state changes and station failure / station return

In the following table, you can see which consequences an operating state change or the failure of an IO controller / I-device of the SIMATIC family has on the respective other(s):

Table 5- 1 Operating state changes and station failure / station return

Initial status	Event	I-device response	Higher-level IO controller
I-device CPU is in RUN, higher-level IO controller is in RUN	The I-device CPU changes to STOP	-	During the updating of the process image with the instructions "UPDAT_PI" and "UPDAT_PO" an error report is returned at the parameter RET_VAL. With direct IO access to all transfer areas to the I-device: depending on the type of error handling, e.g., call of OB 122 (IO access error).
I-device CPU is in STOP higher-level IO controller is in RUN	The I-device CPU is starting up	Call of OB 100 (startup). Call of OB 83 (pull/plug) for input transfer areas to the higher-level IO controller. Until call of OB 83 in the case of direct access to the input transfer areas to the higher-level IO controller: depending on the type of error handling, e.g., call of OB 122 (IO access error).	Call of OB 83 (pull/plug) for all transfer areas to the I-device. Until call of OB 83 in the case of direct access to the transfer areas to the I-device: depending on the type of error handling, e.g., call of OB 122 (IO access error).
I-device CPU is in RUN, higher-level IO controller is in RUN	The higher-level IO controller changes to STOP	During the updating of the process image with the instructions "UPDAT_PI" and "UPDAT_PO" an error report is returned at the parameter RET_VAL. With direct IO access to the input transfer areas to the higher-level IO controller: depending on the type of error handling, e.g., call of OB 122 (IO access error). Note: Output transfer areas can still be accessed.	-

Initial status	Event	I-device response	Higher-level IO controller
Higher-level IO controller is in STOP, I-device CPU in RUN	The higher-level IO controller starts up	Call of OB 83 (pull/plug) for input transfer areas to the higher-level IO controller. Until call of OB 83 in the case of direct access to the input transfer areas to the higher-level IO controller: depending on the type of error handling, e.g., call of OB 122 (IO access error).	Call of OB 100 (startup).
I-device CPU is in RUN, higher-level IO controller is in RUN	Station failure I-device, for example, through bus interruption	If the I-device continues to run without a bus connection: Call of OB 86 (rack failure). During the updating of the process image with the instructions "UPDAT_PI" and "UPDAT_PO" an error report is returned at the parameter RET_VAL. With direct IO access to all transfer areas to the higher-level IO controller: depending on the type of error handling, e.g., call of OB 122 (IO access error).	Call of OB 86 (rack failure). During the updating of the process image with the instructions "UPDAT_PI" and "UPDAT_PO" an error report is returned at the parameter RET_VAL. With direct IO access to all transfer areas to the I-device: depending on the type of error handling, e.g., call of OB 122 (IO access error).
I-device CPU is in RUN, higher-level IO controller is in RUN, communication connection between IO controller and I-device is interrupted (bus interruption).	The bus connection between the IO controller and I-device has been reestablished and the I-device is again included in the user data traffic.	Call of OB 86 (rack failure). Call of OB 83 (pull/plug) for input transfer areas to the higher-level IO controller. Until call of OB 83 in the case of direct access to the input transfer areas to the higher-level IO controller: depending on the type of error handling, e.g., call of OB 122 (IO access error).	Call of OB 86 (rack failure). Until reporting of station re-integration by OB 86 with direct IO access to all transfer areas to the I-device: depending on the type of error handling, e.g., call of OB 122 (IO access error)

Note

Special characteristic during startup of the higher-level IO controller

In contrast to the station return message from IO devices in the IO controller, which are covered completely by the call of the OB 86, the station return message of a higher-level IO controller in the I-device is separated into 2 parts:

1. Call of the OB 86: The initial values for the outputs of the I-device are set. However, the input values are not yet valid. These values will first be valid with the opening of OB 86 in the higher-level IO controller.
2. Call of OB 83 for each input transfer area; with this call, the validity of an input transfer area is displayed. The starting up of the I device is first complete when the OB 83 has been called for the input transfer areas. This step can be delayed or not occur at all in the following situations:
   – Higher-level IO controller is in STOP: OB 83 is first called at the STOP-RUN transition of the higher-level IO controller.
   – The IRT communication has been disrupted (sync-master failure, topology error, ...). OB 83 is opened only after the IRT communication has taken place.

Reference

For more information on error handling in the case of direct I/O access, refer to "Error handling" in the STEP 7 online help.

5.2.8 Rules for the Topology of a PROFINET IO System with I-Device

Introduction

The following recommendations for the structure and configuration of an IO system when using I-devices will help you to keep the bandwidths required for keeping communication small.

The following communication paths should not overlap:

- Communication paths between the IO controller and the IO device of its IO system.
- Communication paths of the I-device CPU and the IO devices of your IO system.

I-device with one port

Connect an I-device with only one port to a PROFINET switch that is uncoupled from the higher-level IO system. Connect the lower-level IO system to another port of the switch as shown in the following figure.

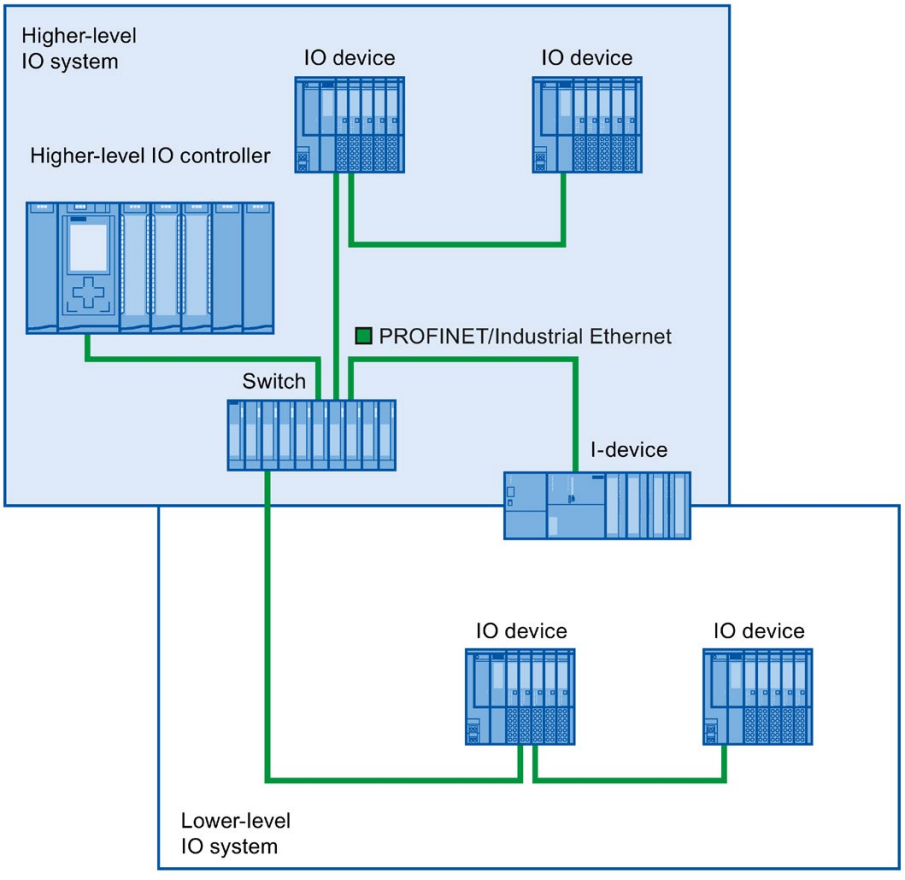

Figure 5-17 I-device with one port

I-device with two ports

With an I-device with two ports, connect one port, uncoupled from the higher-level IO system, to the port of the PROFINET switch. Use the second port for the lower-level IO system as shown in the following figure.

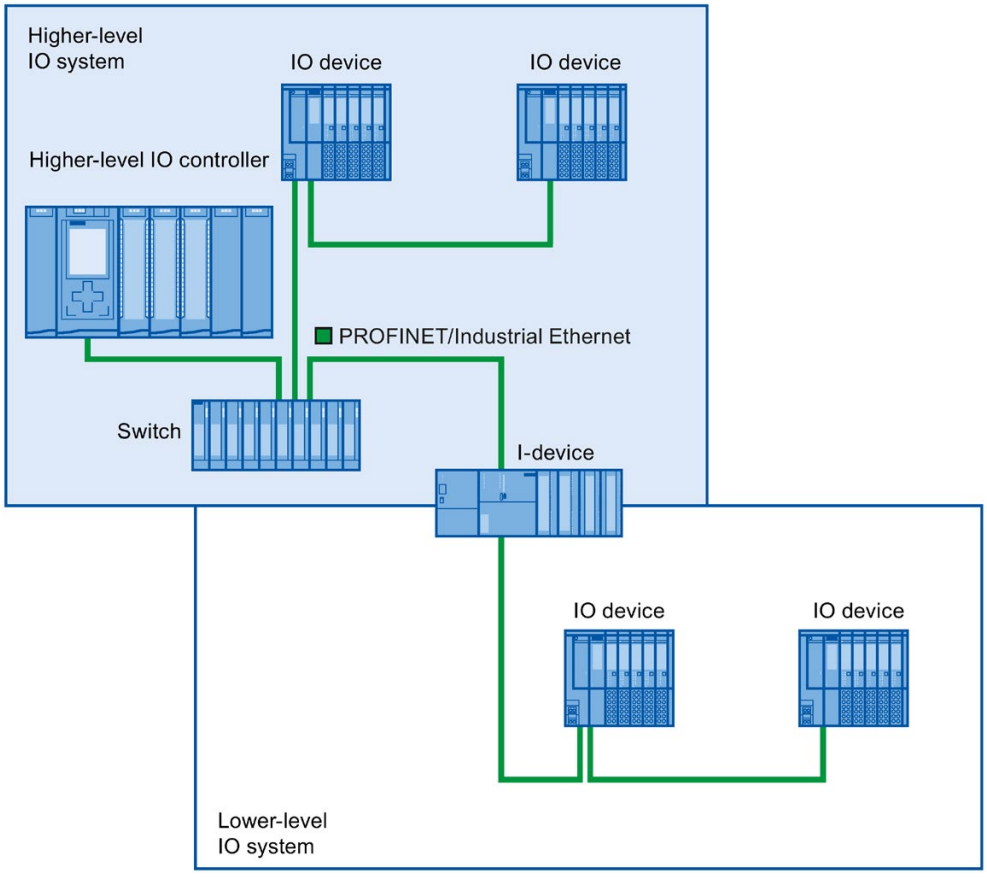

Figure 5-18 I-device with two ports

I-device with three or more ports

If you have an I-device with three or more ports, connect the I-device to one or both ports to the higher-level IO system in a linear bus topology. Connect the third port to the lower-level IO system uncoupled from the linear bus topology as shown in the following figure.

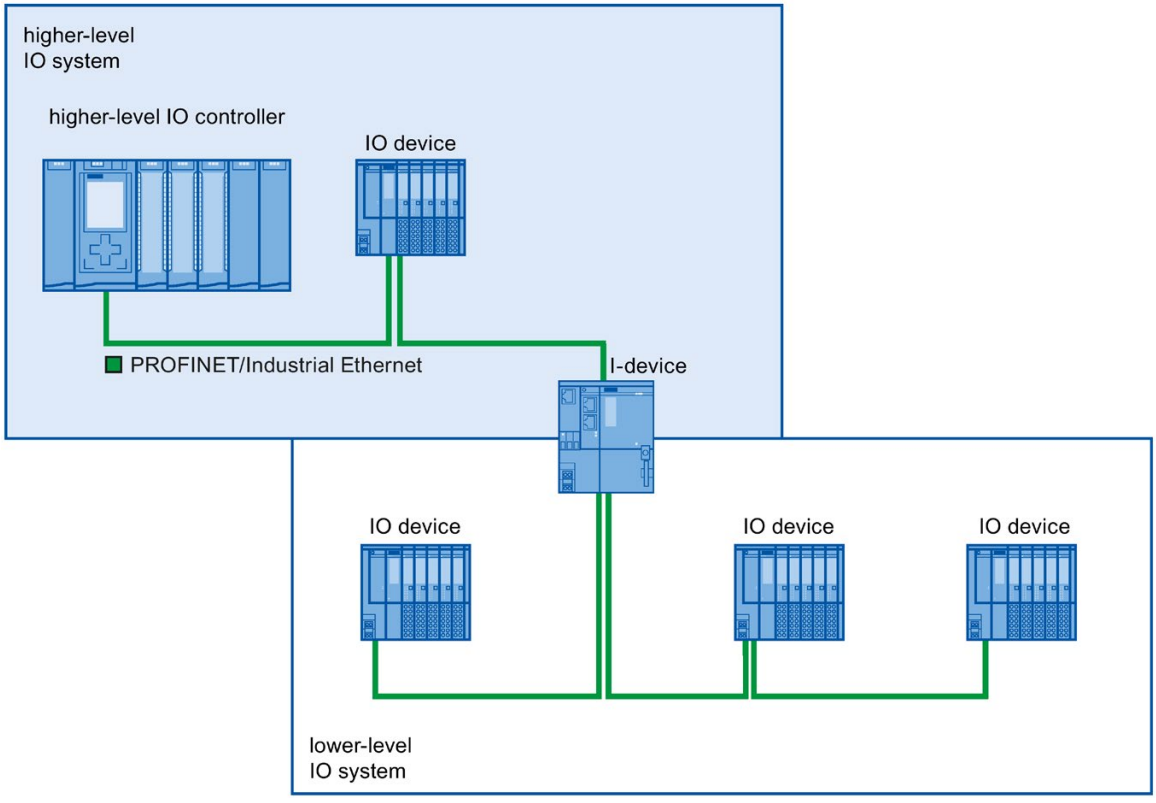

Figure 5-19 I-device with three or more ports

5.2.9 Boundary conditions when using I-devices

Note the following boundary conditions when using I-devices:

Bandwidth

The number of addresses of the configured transfer areas affects the usable bandwidth of the I-device:

- Bandwidth of the transfer areas + bandwidth of the lower-level IO system = total bandwidth used on the I-device

If the address space of the transfer areas is too large, this indicates a larger bandwidth requirement and can thus lead to longer update times.

Tip: Keep the address space of the transfer area as small as possible.

Rules for RT and IRT communication.

IO systems with I-devices are also suitable for setting up real-time applications with RT and IRT communication. The following rules must be followed for this:

- Both the higher-level and the lower-level IO system support RT communication. You can use RT communication for both IO systems at the same time.
- IRT communication can be combined with RT communication. You can use IRT communication in one of the two IO systems. Use IRT either in a higher-level or in a lower-level IO system.

5.2.10 Configuring PROFIenergy with I-devices

The requirement for program-controlled pauses for saving energy with PROFINET devices is that the PROFINET devices support the PROFIenergy protocol.

Only if a PROFINET device (I/O device) supports the PROFIenergy protocol does an I/O controller actually send PE commands to this I/O device, for example to start or stop pauses.

If an I/O device supports the PROFIenergy protocol, this property is saved in its PROFINET GSD file and is available for configuration in an engineering system.

For S7-1500 CPUs as intelligent I/O devices (I-devices), you have the option with STEP 7 V13 service pack 1 or later to set PROFIenergy support for each transfer area.

If you have selected the "Enable PROFIenergy communication" option for a transfer area and import the generated PROFINET GSD file into another project, you can handle an I-device as a PE entity there.

Requirements

- STEP 7 as of V13 service pack 1
- CPU supports PROFIenergy with I-devices, for example CPU 1215C DC/DC/DC as of firmware version 4.2
- You use the PROFINET IO interface as an I-device and have created transfer areas.
- The user program in the I-device handles PROFIenergy commands

  Background: You need to program PROFIenergy functions with I-devices in the user program using the "PE_I_DEV" instruction and corresponding auxiliary blocks; this is different compared with IO devices for which this functionality is made available by the firmware. You may therefore only activate the PROFIenergy support for transfer areas if the user program in the I-device is configured correspondingly as well.

Enabling PROFIenergy for transfer areas of I-devices

Proceed as follows to assign parameters for the support of PROFIenergy:

1. Select the PROFINET interface (X1) of the CPU.
2. Select the required transfer area in the area navigation, for example:

   Operating mode > I-device communication > Transfer_area_1.
3. Select the check box "Enable PROFIenergy communication".

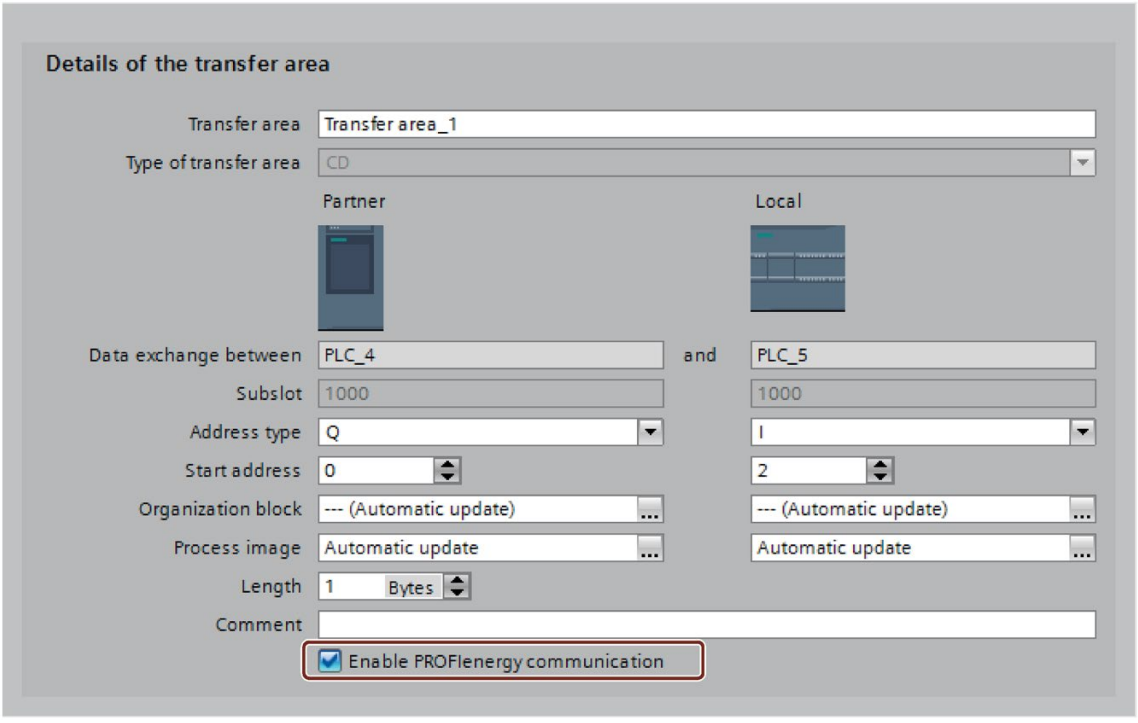

Figure 5-20 Configuring PROFIenergy with I-devices

Once the I-device is fully configured, generate the GSD file for the I-device and import this file in the project for the I/O controller. The GSD file generated contains an entry that specifies that the I-device supports the PROFIenergy profile.

To address the I-device, for example for the PE command "PE_START_END", use the hardware identifier of the "PROFIenergy supporting" transfer area in the I-device.

To address the IO controller for the PE command "PE_I_DEV", use the hardware identifier of the transfer area that is supplied with the data for PROFIenergy on the IO controller.

You can find more information on PROFIenergy in the sectoin Saving energy with PROFIenergy (Page 258).

5.3 Shared device

5.3.1 Useful information on shared devices

Shared device functionality

Numerous IO controllers are often used in larger or widely distributed systems.

Without the "Shared Device" function, each I/O module of an IO device is assigned to the same IO controller. If sensors that are physically close to each other must provide data to different IO controllers, several IO devices are required.

The "Shared Device" function allows the modules or submodules of an IO device to be divided up among different IO controllers. Thus allowing flexible automation concepts. You have, for example, the possibility of combining I/O modules lying near other into an IO device.

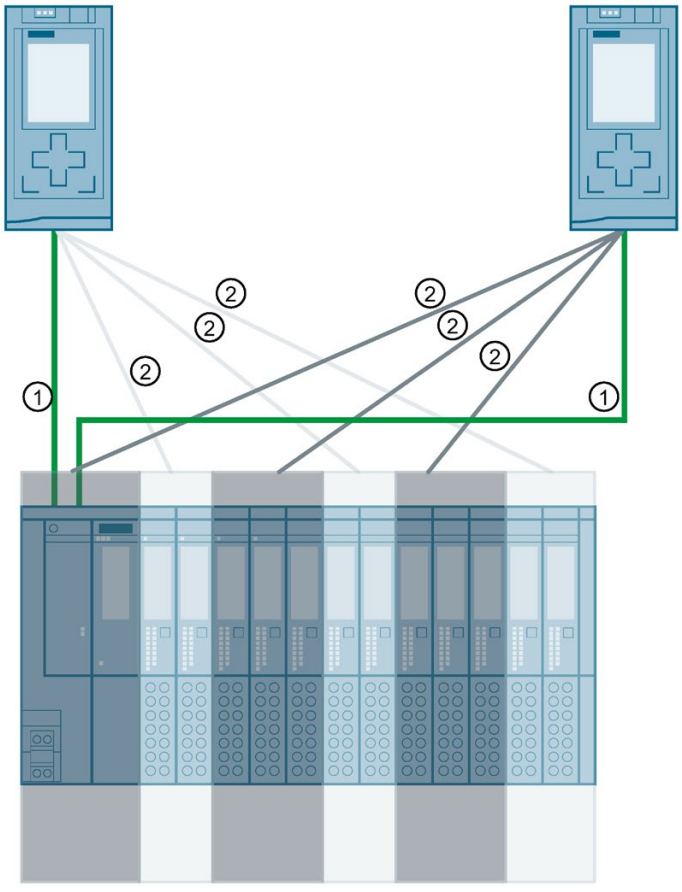

① PROFINET
② Logical assignment

Figure 5-21 Example: Shared device with 2 IO controllers

Principle

Access to the submodules of the shared device is then divided up among the individual IO controllers. Each submodule of the shared device is assigned exclusively to one IO controller.

Requirement

- STEP 7 V12 Service Pack 1 or higher
- IO device supports the shared device function, e.g. interface module IM 155-5 PN ST
- IO controller supports the shared device function, for example CPU 1516-3 PN/DP as of firmware version 1.1 or CPU 1215 DC/DC/DC as of firmware version 4.1

Explanatory notes:

- A CPU that is configured as an I-device can be used as a shared device. For this purpose, you create a GSD file for the I-device in STEP 7 via "GSD export". You then import the GSD file into a different project and assign the I-device to the IO controller there. The CPU has to support the GSD export, for example CPU 1215C DC/DC/DC as of firmware version 4.1.
  The maximum number of IO controllers that you can assign to a CPU configured as a shared I-device is given in the technical specifications in the CPU manuals.

Configuring the access

The IO device must be present in several projects so that the modules or submodules of an IO device can be assigned to different IO controllers. A separate project is required for each IO controller.

You use the "Shared device" parameter of the interface module to determine the modules or submodules to which the IO controller has access:

- If the local IO controller has access to the configured module, select the name of the IO controller from the list.
- If the IO controller from a different project and not the local IO controller is to have access to the configured module, select the entry "---".

The configuration is consistent regarding access if each module or submodule in exactly one project is assigned to an IO controller.

Module or submodule is assigned to another IO controller

The paragraph below describes the consequences of the "---" setting of the "Shared device" parameter from the point of view of the local IO controller.

In this case, the local IO controller does not have access to the module configured in this way. Specifically, this means:

- No data exchange with the module or submodule
- No reception of alarms or diagnostics, which means no display of the diagnostics status in the online view
- No parameter assignment of the module or submodule

Setting of the real-time properties

STEP 7 calculates the communication load and thus the resulting update times. You must enter the number of project-external IO controllers in the project in which the PROFINET interface of the shared device is assigned to the IO controller so that a calculation is possible with shared device configurations.

The maximum possible number of IO controllers for the shared device depends on the device. This number is stored in the GSD file of the shared device.

You can set a very short send clock with a CPU as IO controller. The send clock can be shorter than the shortest send clock supported by the shared device. In this case, the shared device is operated by the IO controller with a send clock that it supports (send clock adaptation).

Example:

A CPU supports send clocks starting from 0.25 ms. A configured IO device also supports send clocks starting at 0.25 ms; another IO device supports send clocks starting at 1 ms. In this case, you have the option of setting the short send clock of 0.25 ms for the CPU. The CPU operates the "slow" IO device with the send clock of 1 ms, for example.

Rules for the configuration

- IO controllers that use the shared device are created in different projects. In each project, care must be taken that the shared device is configured identically in each station. Only one IO controller may ever have full access to a submodule. Inconsistencies in the configuration result in a failure of the shared device.
- If you have selected the "Use router" option for the IO controllers involved, you must have set the same router address in all these IO controllers.
- I/O addresses of a module or submodule can only be edited if a module or submodule is assigned to the IO controller in the same project.
- The shared device must have the same IP parameters and the same device name in each project.
- The send clock must be identical for all IO controllers that have access to the shared device.
- The S7 subnet ID of the subnet to which the shared device is connected must be identical in all projects.
- The following functions are only available if the PROFINET interface of the shared device is assigned to the local IO controller:
  - IRT operation
  - Prioritized startup
  - Parameter assignment of the port properties

Boundary conditions

The following boundary conditions result because a shared device configuration is distributed across several projects:

- The addresses of modules or submodules that are not assigned to this IO controller are missing in the address overview of each IO controller that has access to a shared device.
- The modules or submodules that are not assigned are not taken into consideration in the configuration limit calculation for the shared device during the consistency check. For this reason, you must verify for yourself that the maximum number of submodules or the maximum amount of cyclic IO data for the shared device will not be exceeded.
  For information on the maximum quantities, refer to the documentation for the devices you are using.
- Configuration errors such as the assignment of a module or submodule to several IO controllers are not detected in STEP 7.
- CPUs that are loaded with a shared device configuration do not have any information on whether the IO device is a shared device. Modules or submodules that are assigned to other IO controllers and therefore other CPUs are missing in the loaded configuration. These modules or submodules are therefore displayed neither in the CPU web server nor in the CPU display.

Response in the event of fault

Information about how PROFINET IO controllers behave in the event of a fault when accessing the data of a shared device is available in this FAQ (https://support.industry.siemens.com/cs/ww/en/view/109572804).

5.3.2 Configuring shared device

Below, you will find a description of how to configure a distributed I/O system as a shared device with STEP 7 V12, Service Pack 1 or higher.

A "distributed" configuration with different engineering tools for different IO controller families is always possible. However, the description of the procedure is based solely on STEP 7 as of V12, service pack 1. The description is limited to two IO controllers of the S7-1500 family that share a shared device.

Two projects are created (Shared-Device-1 and Shared-Device-2), each with one IO controller (PLC1 and PLC2). You must create the shared device in both projects, even though it is physically one and the same IO device.

Requirements

- STEP 7 V12 Service Pack 1 or higher
- The IO controller supports the shared device function, for example CPU 1513-1 PN as of firmware version 1.1.
- IO device supports shared device functionality, for example interface module IM 155-5 PN ST as of firmware version 2.0.

Procedure - Creating project 1

To create the first project with a shared device, follow these steps:

1. Start STEP 7.
2. Create a new project with the name "Shared-Device-1".
3. Insert, for example, a CPU 1513-1 PN from the hardware catalog in the network view. Name it "PLC1".
4. Insert an IO device with the "Shared device" function from the hardware catalog.
5. Assign the IO controller "PLC1" to the IO device.
6. Double-click the IO device and insert all required modules and submodules from the hardware catalog in the device overview table.
7. Assign the module parameters.
8. Save the project.

Procedure - Creating project 2

To create the second project with a shared device, follow these steps:

1. Start STEP 7 once again.

   A new instance of STEP 7 opens.

2. In the new instance, create a new project with the name "Shared-Device-2".
3. Insert, for example, a CPU 1513-1 PN in the network view. Name it "PLC2".
4. Copy the IO device from the project "Shared-Device-1" and insert it in the network view of project "Shared-Device-2".
5. Assign the IO controller "PLC2" to the IO device.
6. Save the project.

Both projects now have an identically structured IO device that must be configured in the next step for the different types of IO controller access.

Procedure - Configuring access to the shared device

The modules and submodules you insert in the shared device are automatically assigned to the local CPU. To change the assignment, follow these steps:

1. Select the interface module in the network view or device view of project "Shared-Device-1".
2. Select the "Shared Device" area in the Inspector window.

   A table shows which CPU has access to the respective module or submodule for all configured modules. The default setting is that the local CPU has access to all modules and submodules.

3. Keep the "PLC1" setting for all modules and submodules that are to remain in the address range of the local CPU.

   Select the setting "---" for all modules and submodules that are to be located in the address range of the CPU from the "Shared-Device-2" project (PLC2). This means that an IO controller outside the project is to have access to the module or submodule.

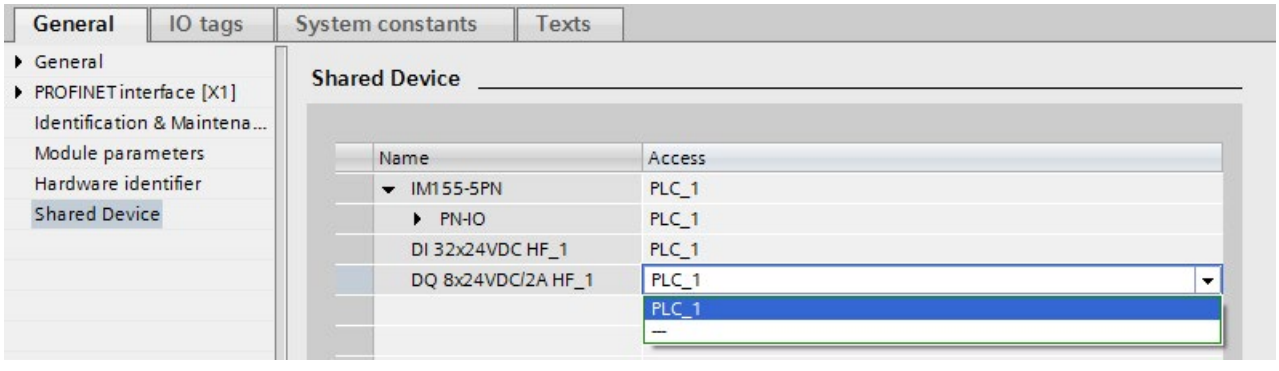

Figure 5-22 Configuring shared device

4. Select the interface module in the network view or device view of project "Shared-Device-2".
5. Select the "Shared Device" area in the Inspector window.

   A table shows which CPU has access to the respective module or submodule for all configured modules.
6. Select the setting "---" for all modules and submodules that are to be located in the address range of the CPU from the "Shared-Device-1" project (PLC1).
7. Finally, check whether the settings for access are "complementary" for each module or submodule in both projects. This means that if the local CPU has access in one project, the option "---" must be set in the other project and vice versa.

   Special consideration: The option "---" for the PROFINET interface and therefore for the ports makes the associated parameters read-only and not changeable. Parameters of the PROFINET interface and port parameters can only be edited in the project in which the PROFINET interface is assigned to the local CPU. The ports can be interconnected in both projects regardless of this.
8. Check whether the same IP address parameters and device name are set for the shared device in all projects.

   Check whether the same S7 subnet ID is set in all projects for the subnet to which the shared device is connected (subnet properties, "General" area in the Inspector window).

Note

If you make changes to the shared device: Make the same changes in each project on the shared device. Make sure that only one IO controller has access to a module or submodule.

Procedure - Adjusting the real-time settings

To ensure that all IO controllers and shared devices are operated with the appropriate send clock and that the update times are calculated correctly based on the communication load, you must adjust and check the following settings:

1. Select the project whose IO controllers have access to the PROFINET interface and the ports of the shared device.
2. Select the interface module of the shared device in the network view.
3. In the Inspector window, navigate to the "PROFINET interface > Advanced options > Real time settings > IO cycle" area.
4. In the "Shared Device" area, set the number of project-external IO controllers. The maximum number depends on the IO device (specification in GSD file).
5. You must set the same send clock for each IO controller that has access to modules and submodules of the shared device:
   - If you configure the IO controller with STEP 7 (TIA Portal):

     Open the corresponding project.

     Select the PROFINET interface of the IO controller.

     Select the "Advanced options > Real time settings > IO communication" area in the Inspector window and set the shared send clock.
   - If you configure the IO controller with a different engineering tool:

     Select the PROFINET interface of the shared device in STEP 7 (TIA Portal) and read out the send clock on the shared device ("Advanced options > Real time settings" area)

     Enter the read send clock in the engineering tool.
   - Special consideration: If you configure **all** IO controllers that have access to the shared device in STEP 7 (TIA Portal or V5.5), you can set shorter send clocks on the IO controller than supported by the shared device (send clock adaptation).

Compiling and loading

You must compile the configurations for the different IO controllers and load them to the CPUs one after the other.

Due to the distributed configuration with separate projects, STEP 7 does not output consistency errors in the case of incorrect access parameter assignment. Example for incorrect access parameter assignment:

- Several IO controllers have access to the same module
- IP address parameters or send clocks are not identical

These errors do not show up until operation and are output as configuration errors, for example.

Note

After a configuration has been loaded in the IO controller, non-assigned modules or submodules retain their current parameterization state to ensure the independence from the parameterizations of other IO controllers.

5.3.3 Configuring an I-device as a shared device

Below, you will find a description of how you configure an S7-1500 as an I-device with STEP 7 Version 13 or higher and then use it in two projects as a shared device.

A "distributed" configuration with different engineering tools for different IO controller families is generally also possible here. The procedure described below is based on STEP 7 V13 and is limited to a configuration with two IO controllers of the S7-1500 family that share the transfer areas of an I-device as a shared device. The I-device itself is also an S7-1500 CPU.

Three projects are created with one IO controller each (PLC-I-Device, PLC_1, and PLC_2).

PLC-I-Device is used to configure the I-device. The PROFINET GSD variant of PLC-I-Device is used in the PLC_1 and PLC_2 projects in order to assign the transfer areas in the respective higher-level IO controller.

Shared I-device concept

For the introduction of the shared I-device concept, two roles are distinguished:

- The role of manufacturer (e.g., machine manufacturer): The manufacturer configures and programs an I-device that performs a particular automation task. Transfer areas are defined as the I/O interface to the operator of the machine. These transfer areas can be assigned to different IO controllers. For the connection to higher-level IO controllers, the manufacturer provides a PROFINET GSD file and discloses the transfer areas via which the I-device can be accessed.
- The role of the operator: The operator uses the I-device as a PROFINET GSD variant during configuration of the PROFINET IO system and, in this process, specifies the I/O addresses under which the IO controllers access the transfer areas.

Manufacturer view

You assign the following parameters for an S7-1500 CPU as an I-device: centralized and distributed I/O, the desired transfer areas, and the number of IO controllers having access to this I-device (always greater than 1 for a shared device!).

Special consideration: The I-device is configured without a higher-level IO controller. As a result, only the local I/O addresses of the transfer area are available (= "Address in the I-device") in order to create the user program for editing the addresses from the transfer area. The I-device that has been completely configured except for the connection to the higher-level IO controller is loaded to the S7-1500 CPU.

You export a PROFINET GSD file from the I-device configuration.

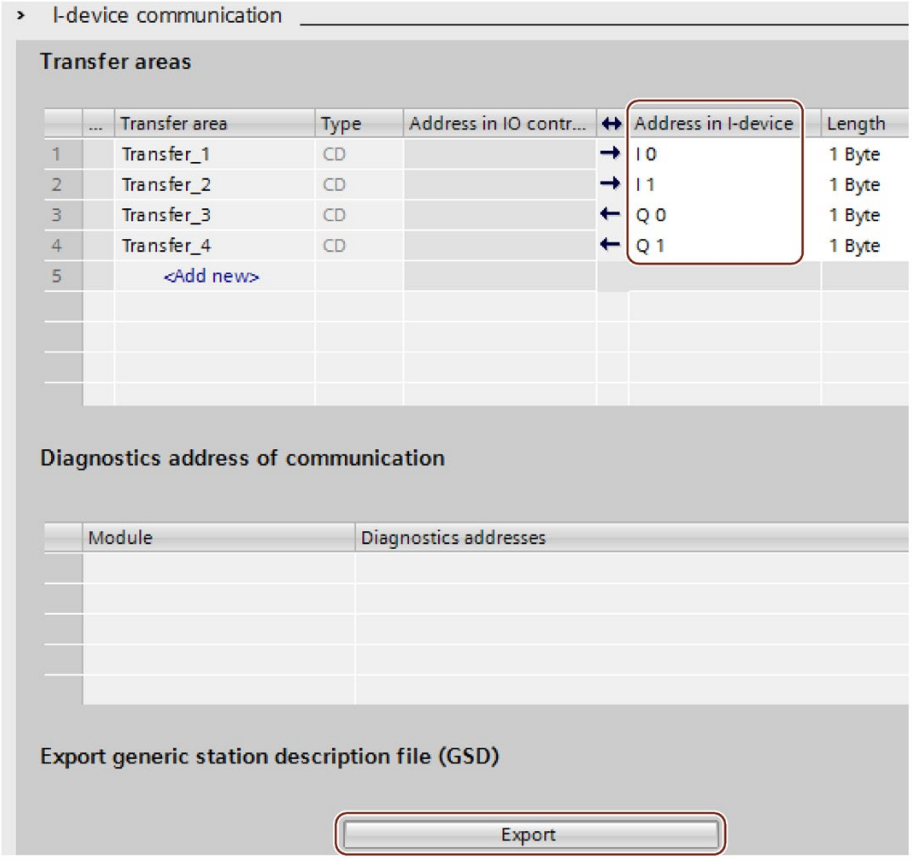

Figure 5-23 Exporting an I-device as a GSD file

Operator view

You must install the PROFINET GSD file created from the I-device configuration in all engineering systems that are involved in configuring a PROFINET IO system with this shared I-device. If all uses of this I-device will be configured with STEP 7 V13, it is sufficient to install the GSD file in STEP 7.

You configure the I-device as a GSD variant on the PROFINET IO system in the projects involved. In STEP 7 V13, this I-device can be found under "Other field devices > PROFINET IO > PLCs & CPs" following installation.

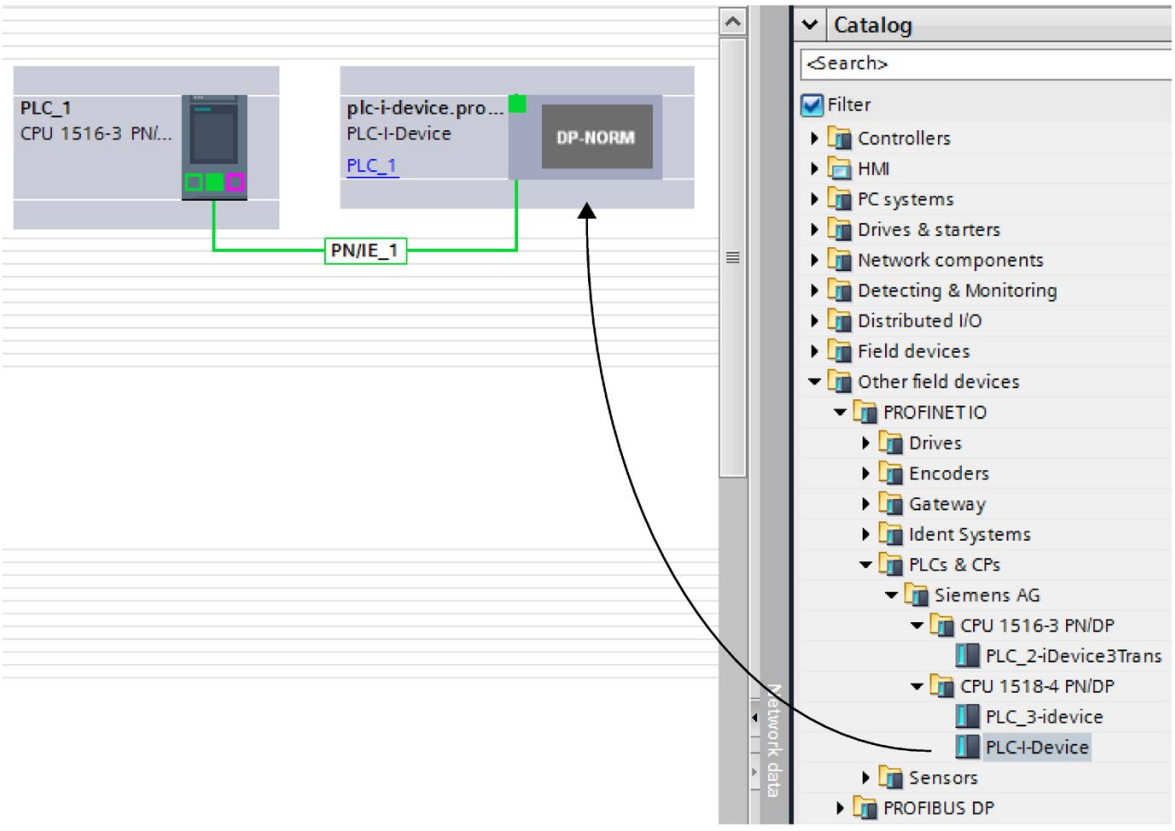

Figure 5-24 Configuring an I-device as a GSD file

In each of the projects involved, you define which transfer areas are assigned exclusively to the higher-level IO controller (default setting: all). You set the other transfer areas to "---" (not assigned). As a result of this setting, the local IO controller has no access to this transfer area and it can therefore be assigned to another IO controller in another project.

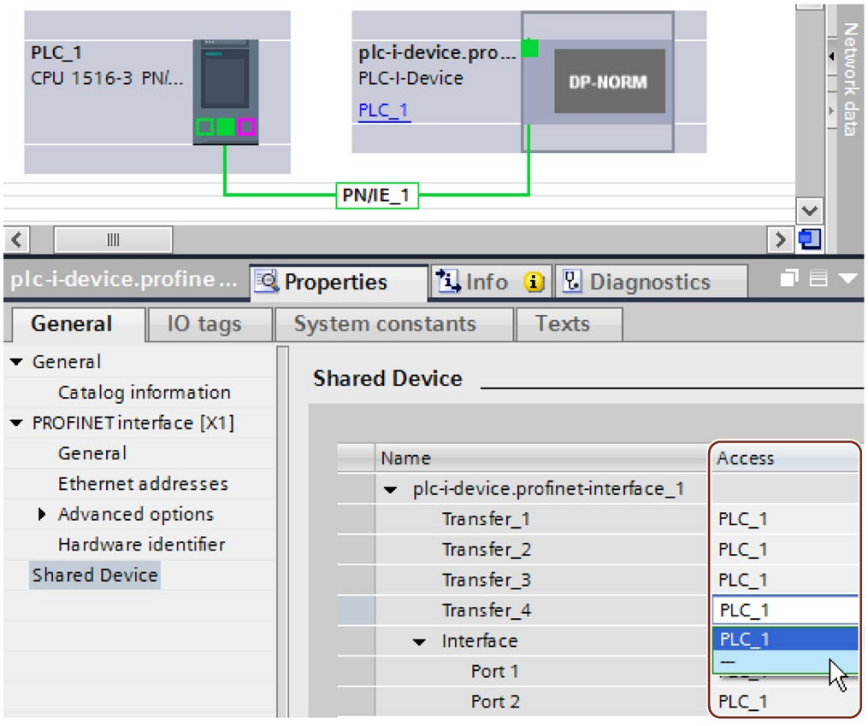

Figure 5-25 Setting the access to the shared I-device.

You adapt the addresses from the view of the IO controller in the device overview. To open the device overview, double-click the I-device.

Device overview

Module	...	Rack	Slot	I address	Q address	Type	O...	Fir...	...	Access
plc-i-device.profinet-interfac...		0	1		256	PLC-I-Device	6...	V1.5		
Transfer_1		0	1 1000		256	Transfer_1				PLC_1
Transfer_2		0	1 1001		100	Transfer_2				PLC_1
Transfer_3		0	1 1002	256		Transfer_3				PLC_1
Transfer_4		0	1 1003			Transfer_4				—
Interface		0	1 X1			plc-i-device.profine...				PLC_1

Figure 5-26 I/O addresses of the transfer areas in the device overview

Requirements

- STEP 7 as of V13

Procedure - Creating the PLC-I-device project

To create the project with a shared I-device, follow these steps:

1. Start STEP 7.
2. Create a new project with the name "PLC-I-device".
3. Insert, for example, a CPU 1518-4 PN/DP from the hardware catalog in the network view. Assign the name "PLC-I-device".
4. Double-click the IO device and configure all required modules and submodules.
5. Assign the module parameters.

   In particular, the following settings for the CPU are necessary in the area of the PROFINET interface [X1]:

   – Enable the "IO device" option in the "Operating mode" area.

   – Configure the transfer areas in the "Operating mode" > "I-device configuration" area. The "Address in IO controller" column remains empty because no IO controller is assigned.

Note: To change an input area to an output area, and vice versa, you must navigate to the area of the corresponding transfer area.

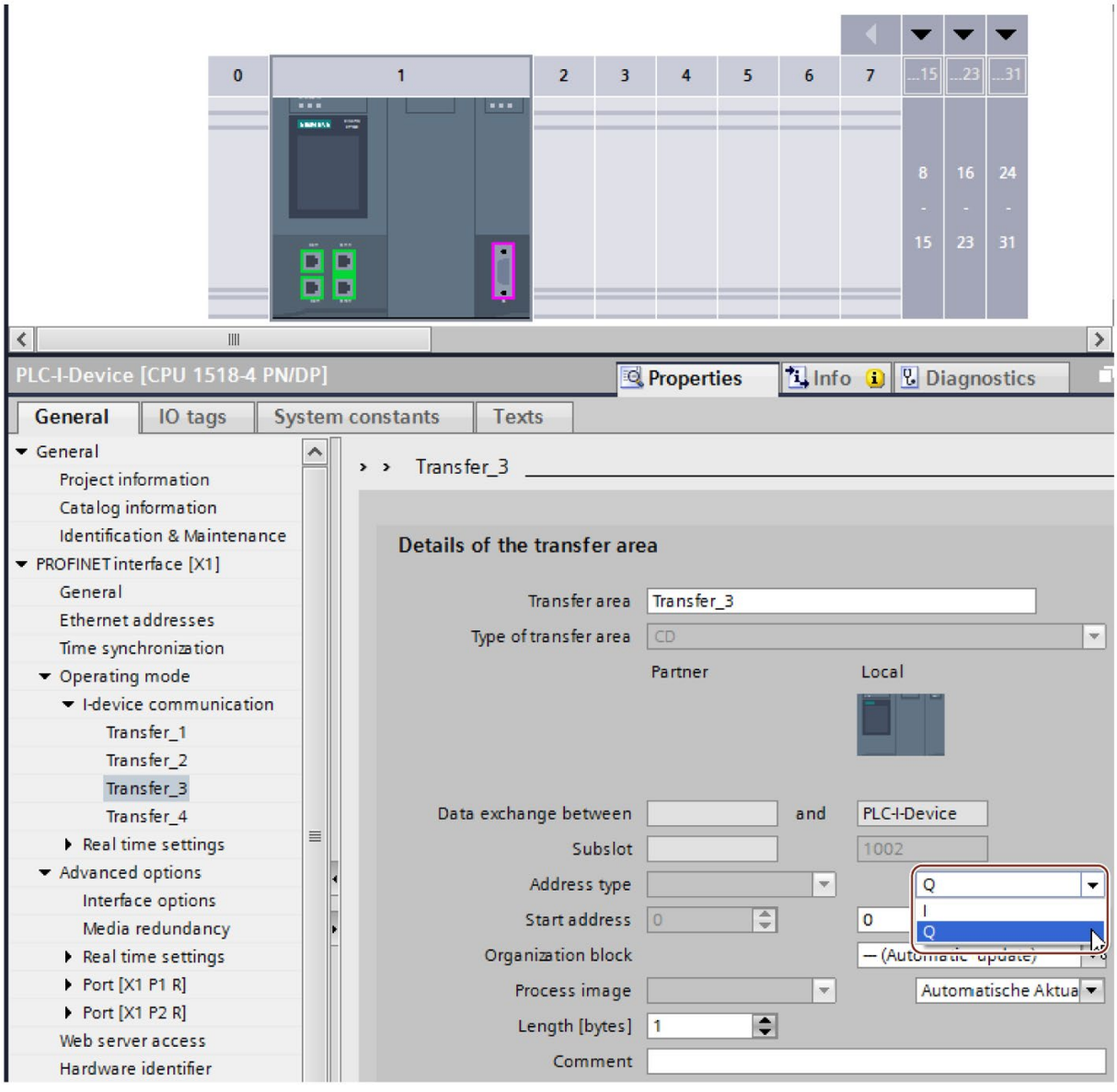

Figure 5-27 Changing the address type for the transfer area

– Select the number of IO controllers (at least two) that will access the shared I-device during operation ("Operating mode" > "Real time settings" area, "Shared Device" area).

6. Save the project.
7. Click the "Export" button ("Mode" > "I-device configuration" area, "Export general station description file (GSD)" section).

   If you do not change the name in the Export dialog, the GSD file has a name in the form "GSDML-V2.31-#Siemens-PreConf_PLC-I-Device-20130925-123456", for example.

Procedure - Creating the PLC_1 project

To create the first project with a shared I-device, follow these steps:

1. Start STEP 7.
2. Install the PROFINET GSD file from the export of the I-device CPU (PLC-I-Device).
3. Create a new project with the name "PLC_1".
4. Insert, for example, a CPU 1516-3 PN/DP in the network view. The name of the CPU should be "PLC_1".
5. Insert the I-device from the hardware catalog (Hardware catalog: Other field devices > PROFINET IO > PLCs & CPs).
6. Assign the IO controller "PLC_1" to the I-device.
7. Select the "Shared Device" area in the properties of the I-device.

   In the table, all transfer areas and the PROFINET interface are assigned to the local IO controller (PLC_1).
8. Define the transfer areas to which the PLC_1 CPU should **not** have access. Select the "--- " entry for these areas. These transfer areas are provided for PLC_2.
9. Save the project.

Procedure - Creating the PLC_2 project

To create the second project with a shared I-device, follow these steps:

1. Start STEP 7 once again.

   A new instance of STEP 7 opens.
2. In the new instance, create a new project with the name "PLC_2".
3. Insert, for example, a CPU 1516-3 PN/DP in the network view. Assign the name "PLC_2".
4. Insert the I-device from the hardware catalog (Hardware catalog: Other field devices > PROFINET IO > PLCs & CPs).
5. Assign the IO controller "PLC_2" to the I-device.
6. Adapt the access to the transfer areas as in the PLC_1 project. Ensure that no duplicate assignments result.
7. Adapt the parameters of the subnet and PROFINET interface. Because the shared I-device involves the same device in different projects, these data must match.
8. Save the project.

Both projects now have an identically configured shared I-device. The IO controller access and the parameters of the PROFINET interface should still be checked in the different projects during the next step.

Summary - Assigning parameters for access to the shared device

The transfer areas are automatically assigned to the local IO controller. To change the assignment, follow these steps:

1. Click the "PLC_I-Device" device in the network view of the "PLC_1" project, and select the "Shared Device" area.
2. A table shows which CPU has access to each of the configured transfer areas. The default setting is that the local CPU has access to all modules and submodules.
3. Keep the setting "PLC_1" for all transfer areas that are to remain in the address range of the local CPU

   Select the setting "---" for all transfer areas that are to be located in the address range of the "PLC_2" CPU from the "PLC_2" project. This means that an IO controller outside the project is to have access to the transfer area.
4. Follow the same procedure for the remaining projects.
5. Finally, check whether the settings for access are "complementary" for each module or submodule in both projects. This means that if the local CPU has access in one project, the option "---" must be set in the other project and vice versa.

   Special consideration: The option "---" for the PROFINET interface and therefore for the ports makes the associated parameters read-only and not changeable. Parameters of the PROFINET interface and port parameters can only be edited in the project in which the PROFINET interface is assigned to the local CPU. The ports can be interconnected in both projects regardless of this.
6. Check whether the same IP address parameters and device name are set for the shared device in all projects.

   Check whether the same S7 subnet ID is set in all projects for the subnet to which the shared device is connected (subnet properties, "General" area in the Inspector window).

Note

If you make changes to the I-device (e.g., change the number or length of the transfer areas):

Export the I-device as a GSD file again. Re-install the GSD file in each project that uses the I-device as a shared device. Make sure that only one IO controller has access to a transfer area.

Procedure - Adjusting the real-time settings

To ensure that all IO controllers and shared devices are operated with the appropriate send clock and that the update times are calculated correctly based on the communication load, you must adjust and check the following settings:

1. You must set the same send clock for each IO controller that has access to modules and submodules of the shared device:
   - If you configure the IO controller with STEP 7 (TIA Portal):

     Open the corresponding project.

     Select the PROFINET interface of the IO controller.

     Select the "Advanced options > Real time settings > IO communication" area in the Inspector window and set the shared send clock.
   - If you configure the IO controller with a different engineering tool:

     Select the PROFINET interface of the shared device in STEP 7 (TIA Portal) and read out the send clock on the shared device ("Advanced options > Real time settings" area)

     Enter the read send clock in the engineering tool.
   - Special consideration: If you configure **all** IO controllers that have access to the shared I-device in STEP 7 (TIA Portal or V5.5), you can set shorter send clocks on the IO controller than supported by the shared device (send clock adaptation).

Compiling and loading

You must compile the configurations for the different IO controllers and load them to the CPUs one after the other.

Due to the distributed configuration with separate projects, STEP 7 does not output consistency errors in the case of incorrect access parameter assignment. Example for incorrect access parameter assignment:

- Several IO controllers have access to the same module
- IP address parameters or send clocks are not identical

These errors do not show up until operation and are output as configuration errors, for example.

Note

After a configuration has been loaded in the IO controller, non-assigned modules or submodules retain their current parameterization state to ensure the independence from the parameterizations of other IO controllers.

5.3.4 Module-internal shared input/shared output (MSI/MSO)

Introduction

This section describes the module-internal shared input/shared output (MSI/MSO) functionality for I/O modules that are operated on PROFINET.

Module-internal shared input/shared output functionality

The module-internal shared input (MSI) function allows an input module to make its input data available to up to four IO controllers. Each controller has read access to the same channels.

The following figure shows the MSI functionality.

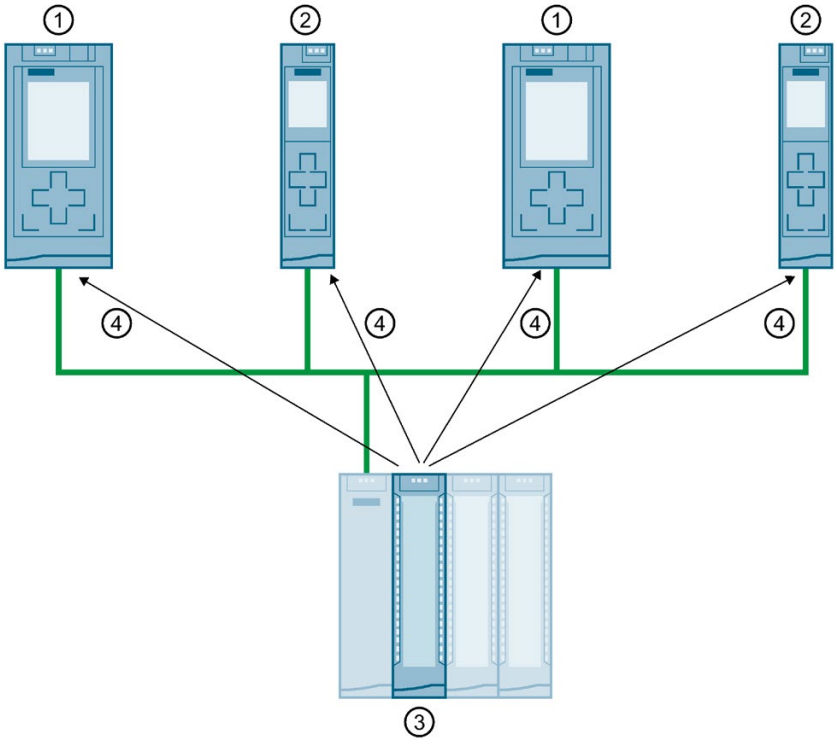

① CPU 1516-3 PN/DP as IO controller
② CPU 1511-1 PN as IO controller
③ Input module with MSI
④ Read access to the input channels of the input module
⑤ Write access to the channels of the I/O module (only with MSO)

Figure 5-28 Example configuration with MSI

The module-internal shared output (MSO) function allows an output module to make its output data available to up to four IO controllers. An IO controller has write access to the channels of the output module. Up to three IO controllers can additionally have read-access to the channels.

The following figure shows the MSO functionality.

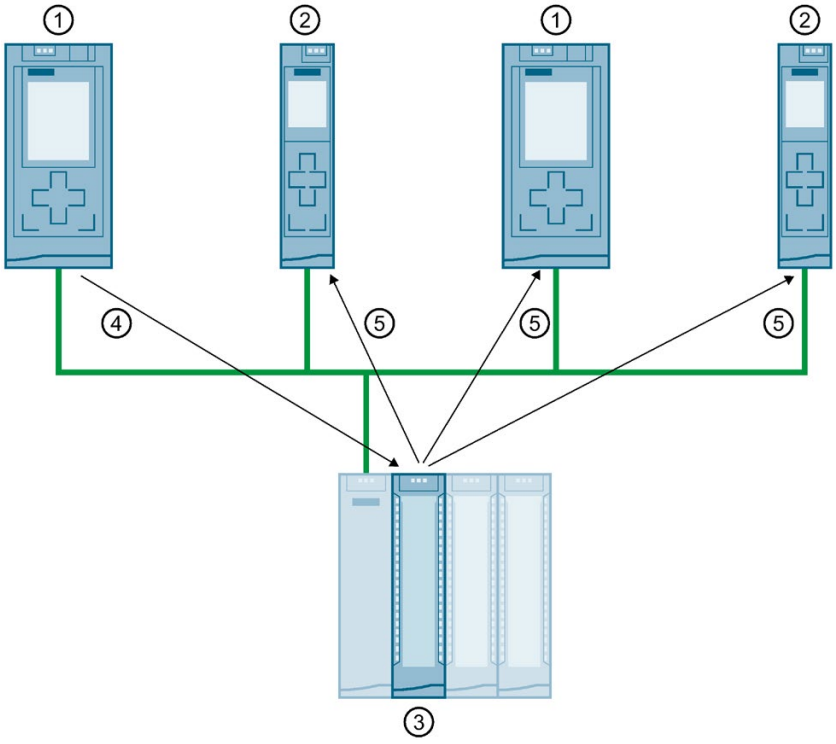

① CPU 1516-3 PN/DP as IO controller
② CPU 1511-1 PN as IO controller
③ Output module with MSO
④ Write access to the output channels of the output module
⑤ Read access to the output channels of the output module

Figure 5-29 Example configuration with MSO

Advantages of MSI/MSO

Module-internal shared input/shared output (MSI/MSO) offers the following advantages:

- Real-time acquisition in multiple CPUs
- Lower costs due to saving on additional IO devices and modules
- Lower space requirements due to saving on additional IO devices and modules
- Reduced communication load because no CPU-CPU communication is needed
- No additional programming effort is needed for CPU-CPU communication

Requirements for the use of MSI/MSO

Observe the following requirements:

- MSI/MSO can only be used with PROFINET IO
- Configuration software: STEP 7 (TIA Portal) as of V12 SP1 with GSD file; the modules are integrated in the hardware catalog as of V13.
- The IM 155-5 PN ST interface module and the modules support MSI/MSO as of firmware version V2.0.0.

Boundary conditions for the use of MSI/MSO

Note the following boundary conditions:

- The use of MSI/MSO is not possible in the case of module grouping.
- Modules with MSI/MSO cannot be operated in isochronous mode.
- The maximum number of IO controllers is dependent on the interface module. To find out how many IO controllers the interface module supports, refer to the manual for the respective interface module.

MSI submodules

The input values of all channels are copied to a basic submodule and up to three other MSI submodules during MSI configuration of an input module. The channels of the module are then available with identical input values in the basic submodule and the MSI submodules. The MSI submodules can be assigned to up to three IO controllers when the module is used in a shared device. Each IO controller has read access to the same channels.

The following figure shows a digital input module with the basic submodule and three MSI submodules. Each submodule is assigned to an IO controller. Diagnostics and parameter assignment of the digital input module can be performed from the IO controller 1 via the basic submodule.

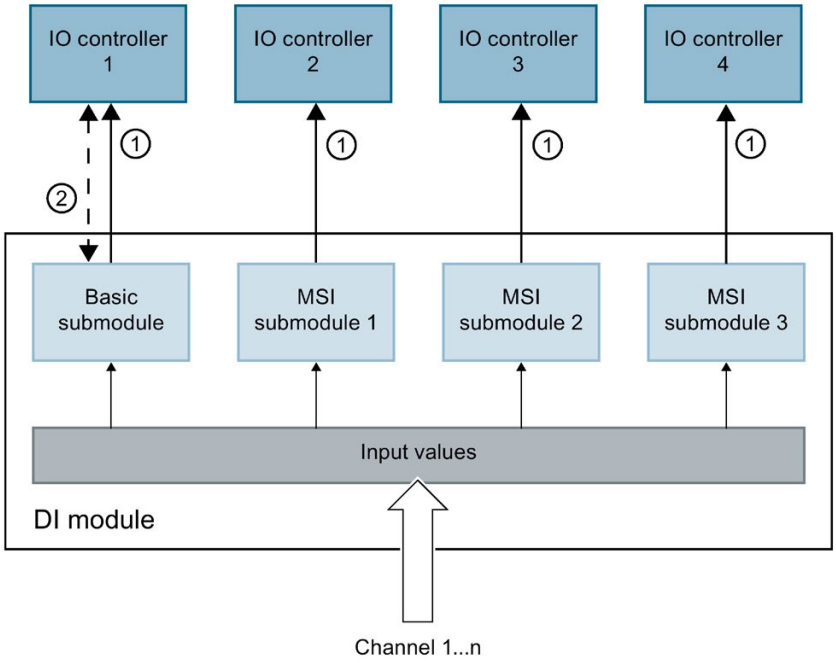

① Read access

② Parameter assignment and system diagnostics

Figure 5-30 DI module with MSI submodules

Value status (Quality Information, QI)

The meaning of the value status depends on the submodule to which it pertains.

With basic submodule (= 1st submodule), the "0" value status indicates that the value is incorrect.

With an MSI submodule (2nd to 4th submodule), the "0" value status indicates that the value is incorrect or the basic submodule has not yet been configured (not ready).

MSO submodules

During MSO configuration of an output module, the output values of all channels of the module are copied from a basic submodule to up to three other MSO submodules. The channels of the module are then available with identical values in the basic submodule and the MSO submodules. The MSO submodules can be assigned to up to three IO controllers when the module is used in a shared device.

- The IO controller to which the basic submodule is assigned has write access to the outputs of the module. The basic submodule therefore occupies output addresses in the process image of the IO controller.
- The IO controllers to which the MSO submodules are assigned have read access to the outputs of the module. MSO submodules therefore occupy input addresses in the process image of the IO controller.

The following figure shows a digital output module with the basic submodule and three MSO submodules. Each submodule is assigned to an IO controller. Diagnostics and parameter assignment of the digital output module can be performed from IO controller 1 via the basic submodule.

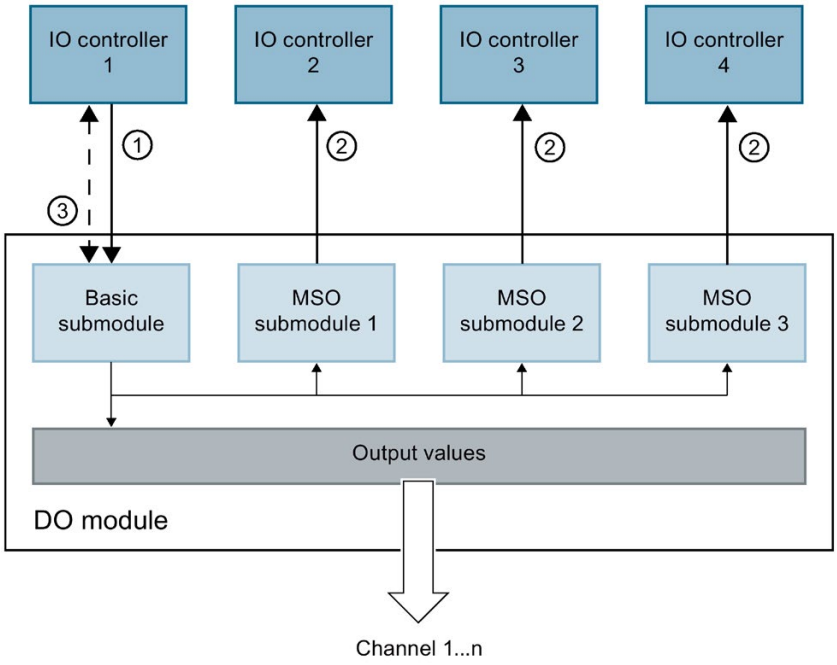

① Write access
② Read access
③ Parameter assignment and system diagnostics

Figure 5-31 DQ module with MSO submodule

Value status (Quality Information, QI)

The meaning of the value status depends on the submodule to which it pertains.

With basic submodule (= 1st submodule), the "0" value status indicates that the value is incorrect.

With MSO submodule (= 2nd to 4th submodule) the "0" value status indicates that the value is incorrect or one of the following errors has occurred:

- The basic submodule parameters have not yet been assigned (not ready for operation).
- The connection between the IO controller and the basic submodule has been interrupted.
- The IO controller of the basic submodule is in STOP or POWER OFF state.

Configuring I/O modules with MSI/MSO submodules

Requirements

- Configuration software STEP 7 as of V13
- IO device supports MSI/MSO (for example IM 155-5 PN ST as of firmware version 2.0.0)

Procedure

1. In the network view of STEP 7, insert an IM 155-5 PN ST interface module as of V2.0.
2. Double-click the IO device.

   You are now in the device view.
3. Place the I/O modules from the hardware catalog in a suitable slot.
4. Add MSI/MSO submodules to the I/O modules:
   – Input modules: Select the number of MSI submodules under "Module parameters " > "DI configuration" or "AI configuration" in the area "Copy of module for Shared Device (MSI)".

– Output modules: Select the number of MSO submodules under "Module parameters " > "DQ configuration" or "AW configuration" in the area "Copy of module for shared device (MSO)".

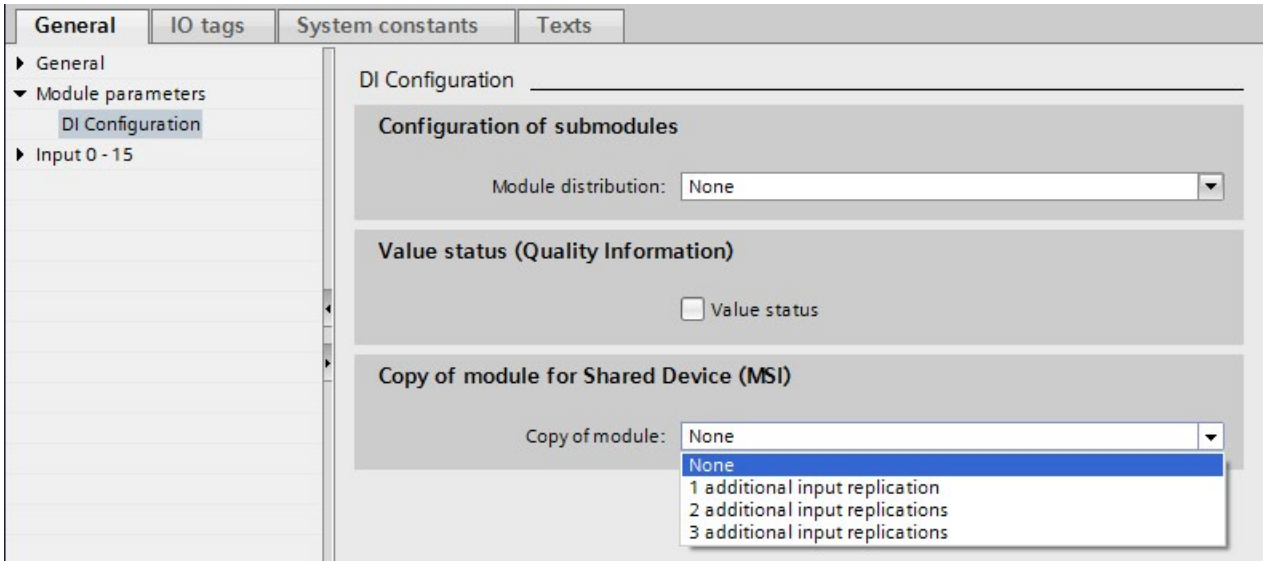

Figure 5-32 Configuring I/O modules with MSI/MSO

Assigning MSI/MSO submodules to an IO controller

You can assign the submodules in a shared device to an IO controller.

For more information, refer to Configuring shared device (Page 147).

Configuring access to a shared device and the module-internal shared input / shared output (MSI /MSO) function

You can learn how to access a shared device and the MSI /MSO function in STEP 7 with this FAQ (https://support.industry.siemens.com/cs/ww/en/view/109736536).

5.4 Media redundancy (ring topologies)

In order to increase the network availability of an Industrial Ethernet network with optical or electrical linear bus topologies, you can convert a linear bus topology to a ring topology by joining the ends together.

Media redundancy in ring topologies

Devices in a ring topology can be IO devices, IO controllers, external switches and/or the integrated switches of communication modules.

To set up a ring topology with media redundancy, you need to bring together the two free ends of a linear bus topology in one device. Closing the linear bus topology to form a ring is achieved with two ports (ring ports) of a device in the ring. One device of the resulting ring then takes over the role of the redundancy manager. All other devices in the ring are redundancy clients.

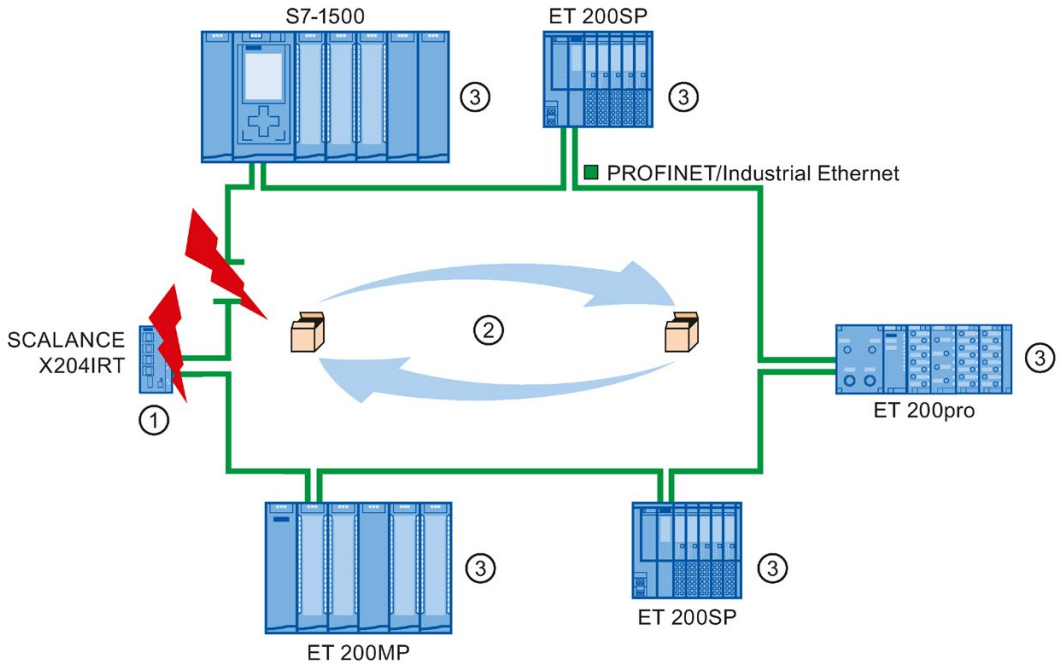

① Redundancy manager
② Test frames
③ Redundancy clients

Figure 5-33 Media redundancy in ring topology

The ring ports of a device are the ports that establish the connection to the two neighboring devices in the ring topology. The ring ports are selected and set in the configuration of the relevant device (is also preset, if applicable).

How media redundancy works in a ring topology

The data paths between the individual devices are automatically reconfigured if the ring is interrupted at any point. The devices are available again after reconfiguration.

In the redundancy manager, one of the two ring ports is blocked in uninterrupted network operation for normal communication so that no data frames are circulated. In terms of data transmission, the ring topology is a linear bus topology. The redundancy manager monitors the ring for interruptions. For this purpose, it sends test frames not only from ring port 1 but also from ring port 2. The test frames pass through the ring in both directions until they arrive at the other ring port of the redundancy manager.

An interruption of the ring can be caused by loss of the connection between two devices or by failure of a device in the ring.

If the test frames of the redundancy manager no longer arrive at the other ring port during an interruption of the ring, the redundancy manager connects its two ring ports. This substitute path once again restores a functioning connection between all remaining devices in the form of a linear bus topology.

The time between the ring interruption and restoration of a functional linear topology is known as the reconfiguration time.

As soon as the interruption has been eliminated, one of the two ring ports is blocked again in the redundancy manager. The redundancy clients are informed about the change and use the original paths to the other devices again.

Media redundancy method

The standard method of media redundancy in SIMATIC is MRP (Media Redundancy Protocol) with a typical reconfiguration time of 200 ms. Up to 50 devices can participate per ring.

In addition, the real-time capable media redundancy process MRPD (Media Redundancy with Planned Duplication of frames) is also available.

5.4.1 Media Redundancy Protocol (MRP)

Media Redundancy Protocol (MRP)

The "MRP" process works in conformity with the Media Redundancy Protocol (MRP) that is specified in the standard IEC 62439-2.

Requirements

- All devices in the ring support MRP.
- You have complied with the rules for topology set out below. STEP 7 monitors compliance with the rules during compilation and outputs corresponding alarms.

Topology

The following schematic shows a possible topology for devices in a ring with MRP. The devices inside the shaded oval are in the redundancy domain.

Example of a ring topology with the MRP media redundancy protocol:

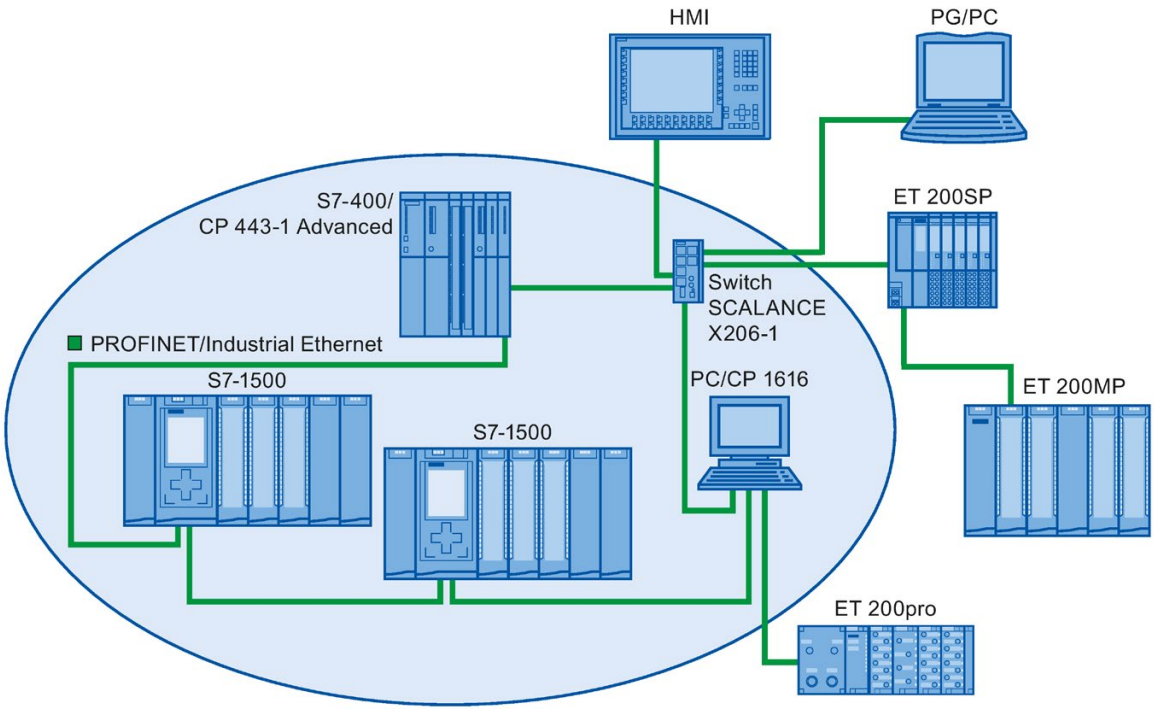

Figure 5-34 Example of a ring topology with the MRP media redundancy protocol:

The following rules apply to a ring topology with media redundancy using MRP:

- All devices must be connected to one other via their ring ports.
- All devices in the ring belong to the same redundancy domain.
- A device in the ring takes on the task of a redundancy manager.
  - One device only has the role of "Manager". No other device may have the role of "Manager". Or
  - Several devices in the ring have the role of "Manager (auto)". The devices with the role of "Manager (auto)" then negotiate between themselves which device is to take on the role of redundancy manager. In this case, no device is permitted to have the role of "Manager".
- All other devices in the ring are redundancy clients.
- You can connect up to 50 devices in a ring.

Non MRP-compliant devices can, for example, be connected to the ring via a SCALANCE X switch or via a PC with a CP 1616.

Rules for loading the devices of an MRP domain

When loading devices of an MRP domain, frame loops can occur and result in network failure if there is an invalid MRP configuration.

Example: You change the MRP roles of several devices and consecutively load the configuration into the devices involved. Configurations can arise that contradict the roles mentioned above, for example, there may be devices that simultaneously have the "Manager" and "Manager (auto)" roles in the ring.

In order to ensure that an invalid MRP configuration does not result in the failure of the network, delete the ring before loading.

Follow these steps:

1. Delete the ring.
2. Load the error-free and consistent MRP configuration from your project onto all the devices involved and ensure that the devices are in data exchange mode (i.e. the application relations (ARs) are set up).
3. Close the ring.

Boundary conditions

MRP and RT

RT operation is possible with the use of MRP.

Note

The RT communication is disrupted (station failure) if the reconfiguration time of the ring is greater than the selected response monitoring time of the IO device. This is why you should select a response monitoring time of the IO devices that is sufficiently large.

MRP and IRT

IRT mode is not possible together with MRP.

If you want to use media redundancy together with IRT in a ring, only use devices that support MRPD.

MRP and TCP/IP (TSEND, HTTP, ...)

The TCP/IP communication with MRP is possible, because lost data packages are resent, if applicable.

MRP and prioritized startup

If you configure MRP in a ring, you cannot use the "prioritized startup" function in PROFINET applications on the devices involved.

If you want to use the "prioritized startup" function, then you must disable MRP in the configuration (the device may also not be part of the ring).

Information on S7-1500R/H

You can find information on the media redundancy method MRP of the redundant S7-1500R/H system in section Configuring PROFINET IO on a redundant S7-1500R/H system (Page 274).

Application example: Reading the MRP status in the user program

The "LPNDR_ReadMRPState" function block from the "LPNDR" block library helps you to determine the status of the MRP ring per program. The block reads the MRP information from the PROFINET device (MRP Manager) and outputs the status.

The "LPNDR" block library and the corresponding documentation can be found in this application example (https://support.industry.siemens.com/cs/ww/de/view/109753067).

5.4.2 Configuring media redundancy

Configuring MRP

Proceed as follows to create a PROFINET IO configuration with MRP in STEP 7:

1. Generate a ring via the port interconnections in the topology view. First interconnect the devices to a line topology. Connect the unassigned port of the last device in the line with the unassigned port of the first device.
   The following example shows one CPU 1516-3 PN/DP and two interface modules IM 155-6 PN HF that are interconnected in a ring in the topology view of STEP 7.

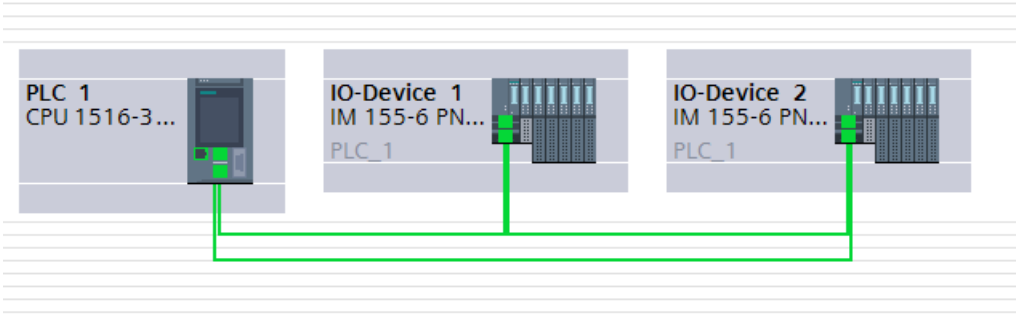

Figure 5-35 Configuring media redundancy

2. Select the PROFINET IO system in the network view.
3. In the Inspector window, navigate to "Properties" > "General" > "PROFINET" > "MRP domains" in the "Ring interconnections" field.
   This field shows you all the topological rings in the IO system with the associated MRP domains.
4. Select the ring generated above in the "Ring interconnections" field.
   The table below it shows all the PROFINET devices in the ring.

5. Set the media redundancy role for the PROFINET devices in the MRP role column.

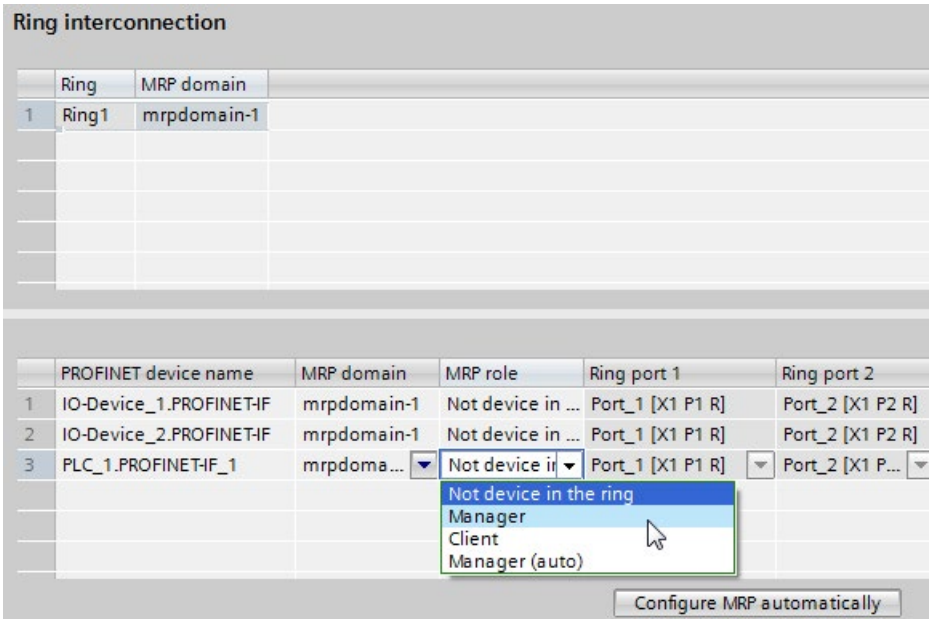

Figure 5-36 MRP domain

Automatic MRP configuration

You can also have the media redundancy roles assigned automatically for your PROFINET devices in the ring.

To have the media redundancy roles assigned automatically, click the "Configure MRP automatically" button. STEP 7 automatically assigns the media redundancy role for each device in the ring. After the automatic MRP configuration, you can make modifications to the media redundancy roles in the "MRP role" column.

"Media redundancy" setting options

Media redundancy role

Depending on the device used, the roles "Manager", "Manager (Auto)", "Client" and "Not device in the ring" are available.

Rules:

- A ring must have precisely one device with the role "Manager". No additional devices with the role "Manager" or "Manager (Auto)" are permissible. All the other devices may only have the "Client" role.
- If a ring has no device with the "Manager" role, the ring must at least have a device with the role "Manager (Auto)". Any number of devices with the "Client" role may exist.
- Managers and clients of an MRP domain can be configured in different projects. In the project without a manager, you need to select the "Redundancy manager outside the project" option so that the configuration can be compiled. For multiple ring configurations, you need to set the option identically for each MRP domain.

Ring port 1 / Ring port 2

Select one at a time those ports you want to configure as ring port 1 or ring port 2. The drop-down list box shows the selection of possible ports for each device type. If the ports are set at the factory, then the fields are unavailable.

If you use single-stage commissioning, use the preset ring ports in STEP 7.

Diagnostic interrupts

If diagnostic interrupts to the MRP state are to be output in the local CPU, select the "Diagnostic interrupts" check box. The following diagnostic interrupts can be configured:

- Wiring or port error

  Diagnostic interrupts will be generated for the following errors in the ring ports:

  – A neighbor of the ring port does not support MRP.

  – A ring port is connected to a non-ring port

  – A ring port is connected to the ring port of another MRP domain.

- Interruption / return (redundancy manager only)

  If the ring is interrupted and the original configuration is returned, diagnostic interrupts will be generated. If both of these interrupts occur within 0.2 seconds, this indicates an interruption of the ring.

You can respond to these events in the user program by programming the appropriate response in the diagnostic error interrupt OB (OB 82).

Reference

You can find the procedure for configuring a common MRP ring and the topology with two projects in this FAQ (https://support.industry.siemens.com/cs/ww/en/view/109741671).

5.4.3 Media redundancy with planned duplication of frames (MRPD; not for S7-1500R/H)

MRP extension "Media Redundancy with Planned Duplication of frames" (MRPD)

The MRP extension "Media Redundancy with Planned Duplication of frames" (MRPD) provides the advantage that, in the case of a failure of a device or a line in the ring, all other devices continue to be supplied with IO data without interruption and with short update times.

MRPD is based on IRT and MRP. To realize media redundancy with short update times, the PROFINET devices participating in the ring send their data in both directions. The devices receive this data at both ring ports so that there is no reconfiguration time.

Requirements for media redundancy with MRPD

- All the devices of the ring must support MRPD, for example interface module IM 155-6 PN HS as of firmware version 4.0.
- You have configured MRP for all the devices of the ring. You have assigned the MRP role "Not device in the ring" to devices that are not located in the ring.
- You have configured IRT for all the involved components.

Configuring MRPD

You do not have to explicitly activate MRPD in STEP 7. The function is available automatically as soon as all the requirements for MRPD are fulfilled.

Redundancy levels of IO devices with MRPD

The redundancy level of an IO device specifies how strongly the real-time communication is influenced in the case of a power interruption between an IO device and its IO controller.

- Full redundancy: No influence, because the IO controller and IO device are located in the same ring.
- Partial redundancy:
  - If the interruption takes place on a non-redundant part (line) between the IO device and IO controller, real-time communication is influenced.
  - If the interruption takes place on a redundant part (ring), real-time communication is not influenced.
- No redundancy: No redundant path between the IO device and its IO controller, communication is always influenced.

The figure below shows the redundancy levels of the IO devices for an example configuration with MRPD. The three devices in the ring and the switch have the redundancy level "Full redundancy". Device 4 has the redundancy level "Partial redundancy", because the connection between the switch and the device is not redundant.

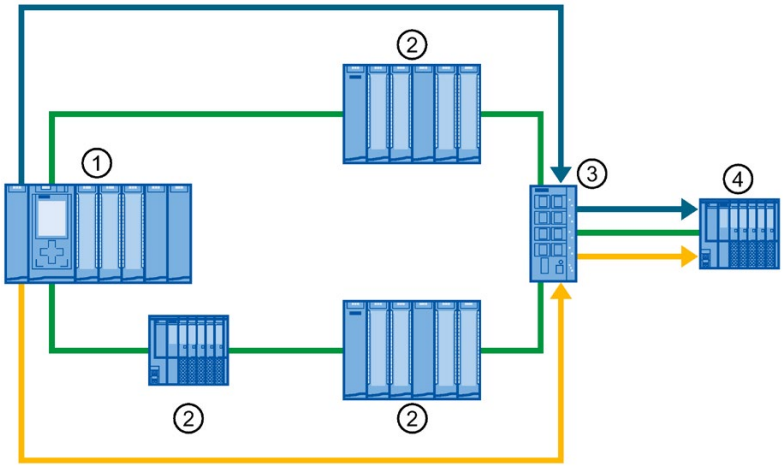

① IO controller in the ring
② IO device in the ring with redundancy level "Full redundancy"
③ Switch in the ring with redundancy level "Full redundancy"
④ IO device in the spur with the redundancy level "Partial redundancy"

Figure 5-37 Example configuration with MRPD

The figure below shows the display of the redundancy levels in STEP 7 for the example configuration.

IO devices

PROFINET device name	RT class	Synchronization role	Redundancy level	DFP group
plc_1.profinet interface_1	RT,IRT	Sync master		
io-device_1	IRT	Sync slave	Full redundancy	
io-device_2	IRT	Sync slave	Full redundancy	
io-device_3	IRT	Sync slave	Full redundancy	
io-device_4	IRT	Sync slave	Partial redundancy	
switch_1	IRT	Sync slave	Full redundancy	

Figure 5-38 Display of the redundancy levels in STEP 7

5.4.4 Multiple rings

Multiple rings

Use multiple rings to achieve higher availability for PROFINET IO networks with star topology.

In a multiple ring configuration, several PROFINET lines lead from a switch (star topology). The individual PROFINET lines lead from IO device to IO device. Redundant PROFINET cables run back to the switch from the last IO device on each individual line.

The switch operates as a manager. The manager must have two ring ports for each ring. Several rings are possible. For example, the SCALANCE X414 as of firmware version 3.10 supports up to 4 rings.

The manager monitors all the rings individually: It checks for each particular ring (an MRP domain) whether the transmission path is intact. To do this, it uses an MRP instance in each case. An MRP instance is required for each connected ring (set up automatically by STEP 7).

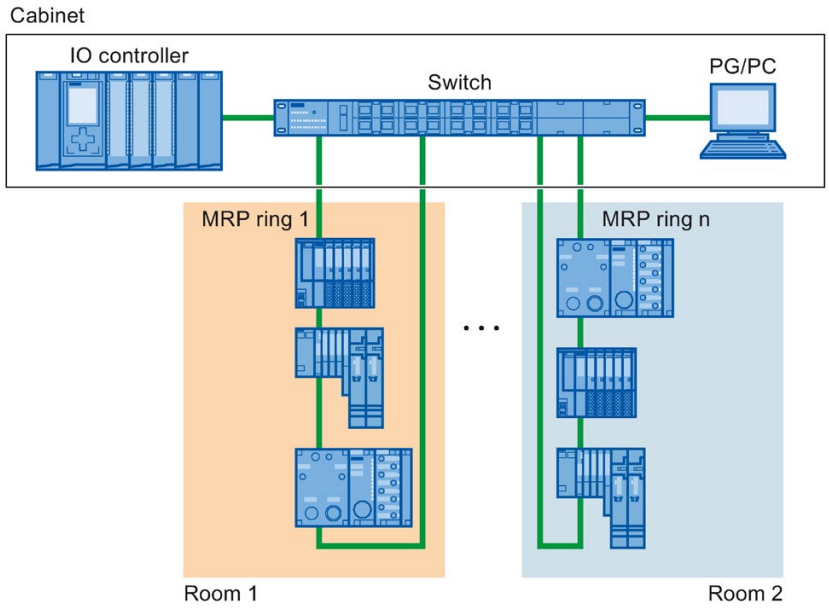

Figure 5-39 Configuration with several rings

Requirements

- SCALANCE X414 as of version 3.10
- SCALANCE X300 as of version 4.0 (configured via GSD file)

Rules for the configuration of multiple rings

- MRP role at multiple rings:
  - The device that belongs to all the rings must have the MRP role in every instance that is entered in the GSD file in the "SupportedMultipleRole" attribute.
  - The switches from the series SCALANCE X300 as of version 4.0 and the switch X414 as of version 4.10 support the MRP role "Manager" for multiple rings.
- If the device that belongs to all rings has the "Manager" role in one ring, no devices with the "Manager (Auto)" role may exist in this ring.

Configuring multiple rings

To configure an MRP configuration with multiple rings, follow these steps:

1. In the topology view, interconnect the ring ports of the devices that are intended to belong to an MRP domain to form a ring.
2. Select the PROFINET IO system in the network view.
3. In the Inspector window, navigate to "Properties" > "General" > "PROFINET" > "MRP domains" in the "Ring interconnections" field.
   This field shows you all the topological rings in the IO system with the associated MRP domains.
4. Select one of the rings generated above in the "Ring interconnections" field.
   The table below it shows all the PROFINET devices in the ring.
5. Set the media redundancy role for the PROFINET devices in the MRP role column.

Example of multiple rings

The following figure shows an example configuration for multiple rings.

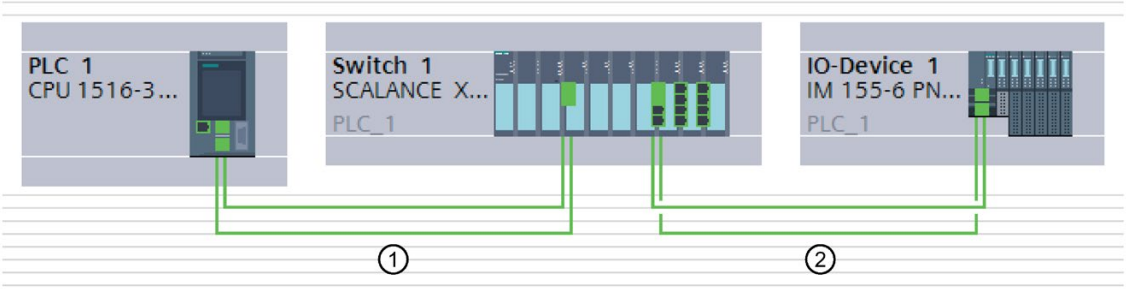

Figure 5-40 Example configuration with two rings ① and ②

In the example, Switch 1 belongs to two MRP rings. Ring 1 is formed by Switch 1 and PLC 1, Ring 2 by Switch 1 and IO device 1.

STEP 7 automatically assigns the "Manager" role to the switch. The other devices receive the "Client" role.

The manager is located at the point of intersection of the two rings 1 and 2. The manager monitors the two rings separately. To do this, it uses two MRP instances.

One MRP instance checks whether all devices in ring 1 are reachable, another instance monitors whether all devices in ring 2 are reachable (only one device in each case in the example).

You can configure each MRP instance separately.

The following figure shows the two MRP instances in the manager (PROFINET interface of the switch). Here in the example, MRP instance 1 checks whether the devices in the MRP domain "mrpdomain-1" can be reached. The MRP instance 2 is responsible for monitoring the devices of the MRP domain "mrpdomain-2".

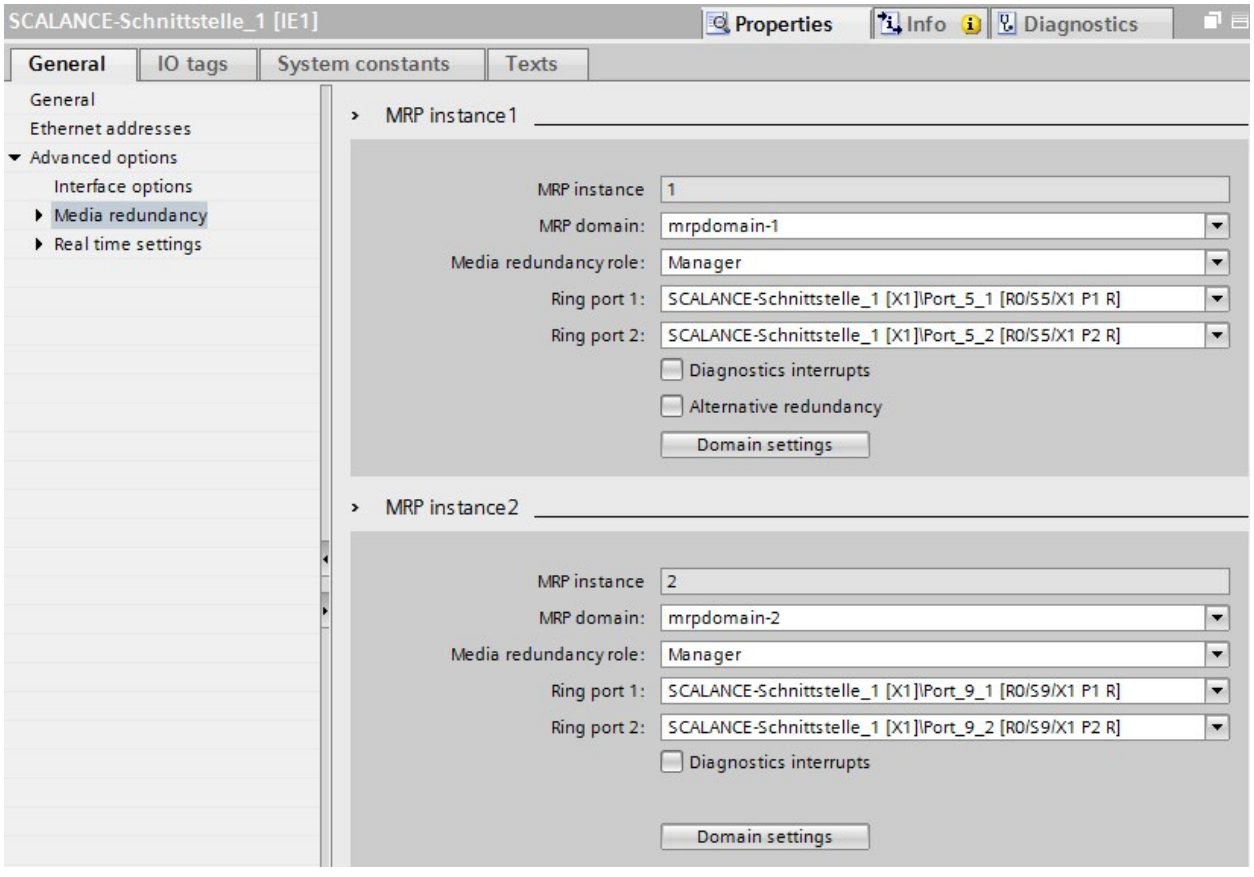

Figure 5-41 Setting media redundancy for multiple rings

The following figure shows Ring 1 (mrpdomain-1). The participants of the mrpdomain-1 are the PROFINET interface of the CPU as the "Client" and the MRP interface 1 of the PROFINET interface of the switch as the "Manager".

Ring interconnection

	Ring	MRP domain
1	Ring1	mrpdomain-1
2	Ring2	mrpdomain-2

	PROFINET device name	MRP instance	MRP domain	MRP role	Ring port 1	Ring port 2
1	PLC_1.PROFINET-IF_1		mrpdomain-1	Client	Port_1 [X1 P1 R]	Port_2 [X1 P2 R]
2	Switch_1.SCALANCE-IF_1	1	mrpdomain-1	Manager	Port_1 [R0/S5/X1 P1 R]	Port_2 [R0/S5/X1 P2 R]

Figure 5-42 Ring 1

The following figure shows Ring 2 (mrpdomain-2). The participants of the mrpdomain-2 are the PROFINET interface of the IO device as the "Client" and the MRP instance 2 of the PROFINET interface of the switch as the "Manager".

Ring interconnection

	Ring	MRP domain
1	Ring1	mrpdomain-1
2	Ring2	mrpdomain-2

	PROFINET device name	MRP instance	MRP domain	MRP role	Ring port 1	Ring port 2
1	IO-Device_1.PROFINET-IF		mrpdomain-2	Client	Port_1 [X1 P1 R]	Port_2 [X1 P2 R]
2	Switch_1.SCALANCE-IF_1	2	mrpdomain-2	Manager	Port_5 [R0/S9/X1 P1 R]	Port_6 [R0/S9/X1 P2 R]

Figure 5-43 Ring 2

5.5 Real-time communication

5.5.1 Introduction

Properties

PROFINET IO is a scalable real-time communication system based on the Layer 2 protocol for Fast Ethernet. With the RT transmission method, two real-time-support performance levels are available for time-critical process data and IRT for high-accuracy and also isochronous processes .

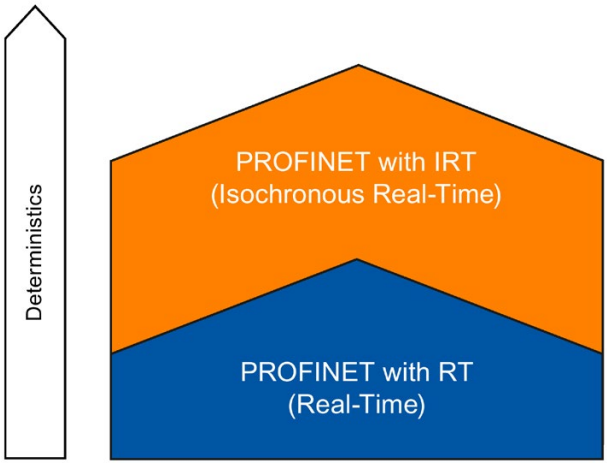

Figure 5-44 Real-time communication performance

Real-time communication and IT communication

Industrial communication, especially in the factory automation and process automation, requires a punctual and deterministic data transmission. This is why, for the cyclic exchange of time-critical IO user data, PROFINET IO does not use TCP/IP, it uses real-time communication (RT) or isochronous real-time communication (IRT) for the synchronized data exchange in reserved time intervals.

Fields of application of PROFINET with RT

PROFINET with RT is suited for:

- Time-critical applications in factory automation
- The implementation of large quantity structures in line process plants

Fields of application of PROFINET with IRT

PROFINET with IRT is particularly suitable for:

- Considerable deterministics with large quantity structures concerning the I/O user data communication (productive data)
- Considerable performance also with many devices concerning the I/O user data communication (productive data)
- Parallel transfer of productive and TCP/IP data via a cable, even with considerable data traffic whilst ensuring the forwarding of productive data by reserving the transmission bandwidth.

International standard IEC 61158

The communication procedures RT and IRT are standardized in the international standard IEC 61158.

5.5.2 RT

PROFINET IO with real-time communication (RT) is the ideal solution for integrating IO systems. This is a solution that also uses standard Ethernet in the devices and commercially available industrial switches as infrastructure components. A special hardware support is not required.

If you want to use PROFINET functions that provide an additional value, such as topology detection, diagnostics, device exchange without exchangeable medium/PG, you have to use switches that support the PROFINET standard according to the IEC 61158 standard. In the integrated switches of PROFINET devices and PROFINET switches (e.g., the SCALANCE product family), PROFINET functions in accordance with the PROFINET standard are implemented and can be used without restriction for integration in the PROFINET IO system (see also section Active network components (Page 31).

Real-time communication (RT)

PROFINET IO frames have priority over standard frames in accordance with IEEE802.1Q. This ensures the required determinism in the automation technology. The data is transferred via prioritized Ethernet frames. With RT, you can achieve update times ≥ 250 µs with RT.

Switching mechanisms

Switches in SIMATIC meet the real-time requirements with two mechanisms on PROFINET: "Store and forward" and "Cut through".

Store and forward

In the Store and forward method, the switch stores the frames completely and places them in a queue. If the switch supports the international standard IEEE 802.1Q, then the data is sorted according to its priority in the queue. The frames are then forwarded selectively to the specific port that can access the addressed node (Store and forward).

Cut through

In the Cut through process the entire data package is not stored temporarily in a buffer, it is passed directly onto the target port as soon as the target address and the target port have been determined.

The times required by the data package to pass through the switch are then minimal and independent of the frame length. The data are only stored temporarily in accordance with the Store and forward process as per priority when the section between the target segment and the port of the next switch is occupied.

5.5.3 IRT

Isochronous real-time communication (IRT)

IRT is a synchronized communication protocol for cyclic exchange of IRT data between PROFINET devices. A reserved bandwidth is available in the send cycle for IRT data. The reserved bandwidth ensures that the IRT data can be transferred at reserved synchronized intervals, without being influenced also by higher other network loads (such as TCP/IP communication, or additional real-time communication).

Advantages

PROFINET with IRT is synchronized communication in reserved time intervals. With IRT you have the option to be able to control time-critical applications such as motion control via PROFINET. With IRT you use further advantages:

- High-precision deterministics allow highest control quality and thus, for example, exact positioning of axes
- Simple and flexible integration of PROFINET devices for real-time applications in existing company networks
- Shortest response times and highest deterministics by means of bandwidth reservation and thus also for applications that have to satisfy highest performance requirements (e.g., printing control/position control for presses, print-mark recognition with packaging machines)
- Secured standard communication parallel to real-time communication via the same transmission medium
- You can continue to use standard components for your PROFINET IO system outside of the sync domain

Properties of isochronous real-time

Topology configuration is a prerequisite for IRT.

In addition to the reserved bandwidth, the frames from defined transmission paths are exchanged for the further optimization of data transfers. For this, the topological information from the configuration is used for planning the communication. Transmission and reception points of every individual data frame at every communication node are thus guaranteed. This allows you to achieve optimal usage of the bandwidth and reach the best possible performance in the PROFINET IO system.

Use of IRT allows you to achieve update times with very high deterministics ≥ 125 µs and a jitter accuracy of the send clock < 1 µs. Isochronous applications are possible with IRT (see section Isochronous mode (Page 207)).

* The minimum update time depends on the CPU used. The update times supported by a CPU are listed in the technical specifications of the CPU manual.

Note

IWLAN and IRT

PROFINET devices that are connected to PROFINET IO via access points, do not support IRT.

Synchronization

The prerequisite for the IRTcommunication is a synchronization cycle for all PROFINET devices in a sync domain for distributing a mutual time basis. A synchronism of the transmission cycle of the PROFINET devices within a sync domain is achieved with this basic synchronization.

A sync master specifies the clock to which sync slaves are synchronized. An IO controller or an IO device can have the role of sync master. If the sync master fails, all IO devices with IRT will fail.

Sync master and sync slaves are always devices in a sync domain. Bandwidth is reserved within the sync domain for IRT communication. Real-time and non-real-time communication (TCP/IP communication) is possible outside of the reserved bandwidth.

Default sync domain

If you have created a PROFINET subnet, a special sync domain is automatically created, the default sync domain. All PROFINET devices configured for the PROFINET subnet automatically belong to this sync domain.

For additional information on creating sync domains, refer to the STEP 7 online help.

Time ranges of the communication cycle

The communication cycle is divided into three time ranges, which are shown in the following chart:

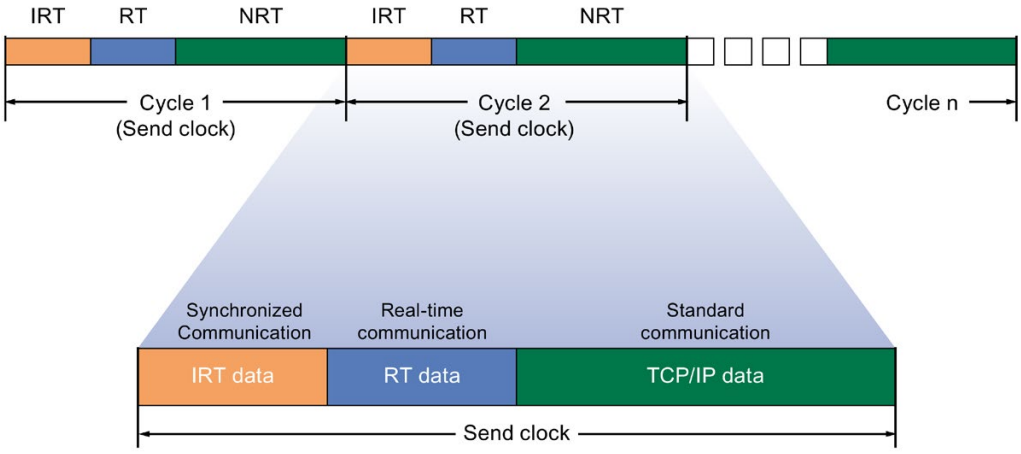

Figure 5-45 Reserving bandwidth

- IRT data (synchronized communication)

  This time range can be reserved in specific steps, depending on the send clock. Only IRT data is transmitted during this time range.

- RT data (real-time communication)

  The cyclic RT data is transferred in this time range. RT data is prioritized over "normal" TCP/IP data. TCP/IP data or Ethernet frames can have a priority of between 1 and 7. RT data have the Priority 6.

- TCP/IP data (standard communication)

  Standard communication (e.g., TCP/IP) is transmitted in the remaining interval of the communication cycle.

In STEP 7, you can set the ratio of the bandwidth usage of cyclic IO data to standard communication. For information on how to set the bandwidth usage, refer to the section Setting the bandwidth usage for the send clock (Page 191)

5.5.4 Comparison of RT and IRT

The most important differences between RT and IRT

Table 5- 2 Comparison between RT and IRT

Property	RT	IRT
Transmission method	Prioritizing the RT frames through Ethernet priority (VLAN tag)	Path-based switching on the basis of a communication path plan; no transmission of TCP/IP frames in the time range with IRT communication.
Determinism	Variance of the duration of transmission by the shared use of the transmission bandwidth with other protocols (e.g., TCP/IP)	Exact, planned transmission, transmission and reception times are guaranteed for all topologies.
Hardware support through special Ethernet controllers is required	Not required	Required
Isochronous application	-	Yes
Starting time of the isochronous application	-	The point in time for the reception of the data is planned exactly. Application can be started synchronized to the cycle.

5.5.5 Configuring PROFINET IO with IRT

Introduction

If you want to configure a PROFINET IO system with IRT, you have to configure the PROFINET IO devices. These PROFINET devices must support IRT. Set which device acts as the sync master and synchronizes the other devices. This is done by configuring a sync domain with a sync master and at least one sync slave.

Requirement

- There is an IO system with an IO controller and at least one IO device.
- You have configured the topology for the IO system.
- The devices support IRT.

Procedure

Proceed as follows to enable an existing IO system for the use of IRT:

1. Select the PROFINET interface of the IO controller.
2. In the Inspector window, navigate to "Advanced options > Real time settings > Synchronization".

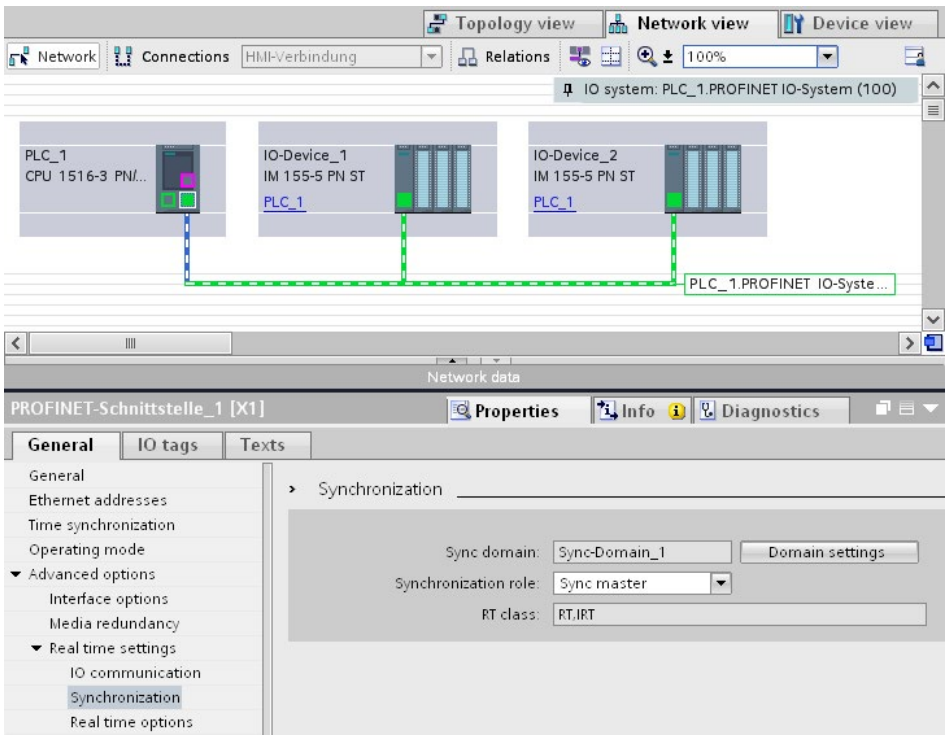

Figure 5-46 IRT configuring sync master

3. Assign the IO controller the role of sync master under "Synchronization role".
4. Select the PROFINET interfaces of an associated IO device.
5. In the Inspector window, navigate to "Advanced options > Real time settings > Synchronization".

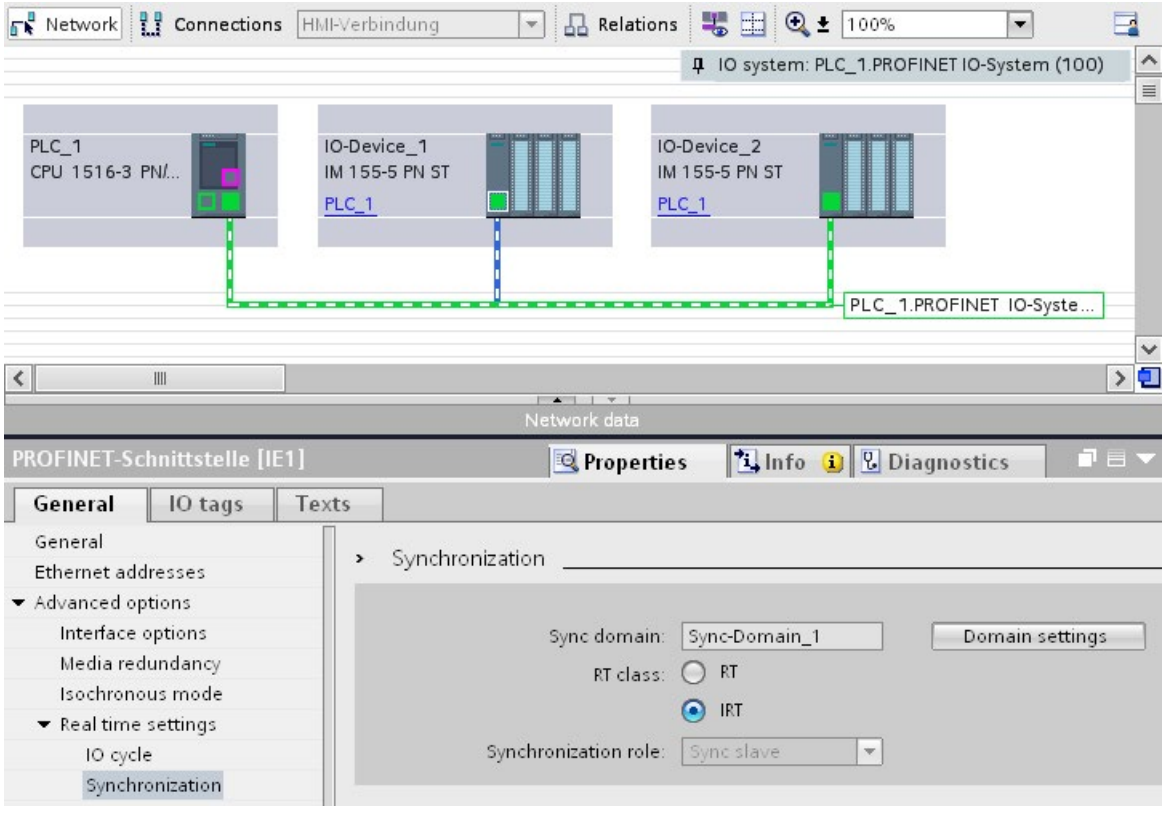

Figure 5-47 IRT configuring sync slave

6. Activate the RT class "IRT". The IO device will then automatically be assigned the synchronization role "sync slave".
7. You can check and correct your settings at any time using the "Domain settings" button.

Or

1. Highlight the PROFINET IO system in the network view.
2. Click on the PROFINET IO system.
3. Navigate to the device of the required sync domain in the Inspector window.

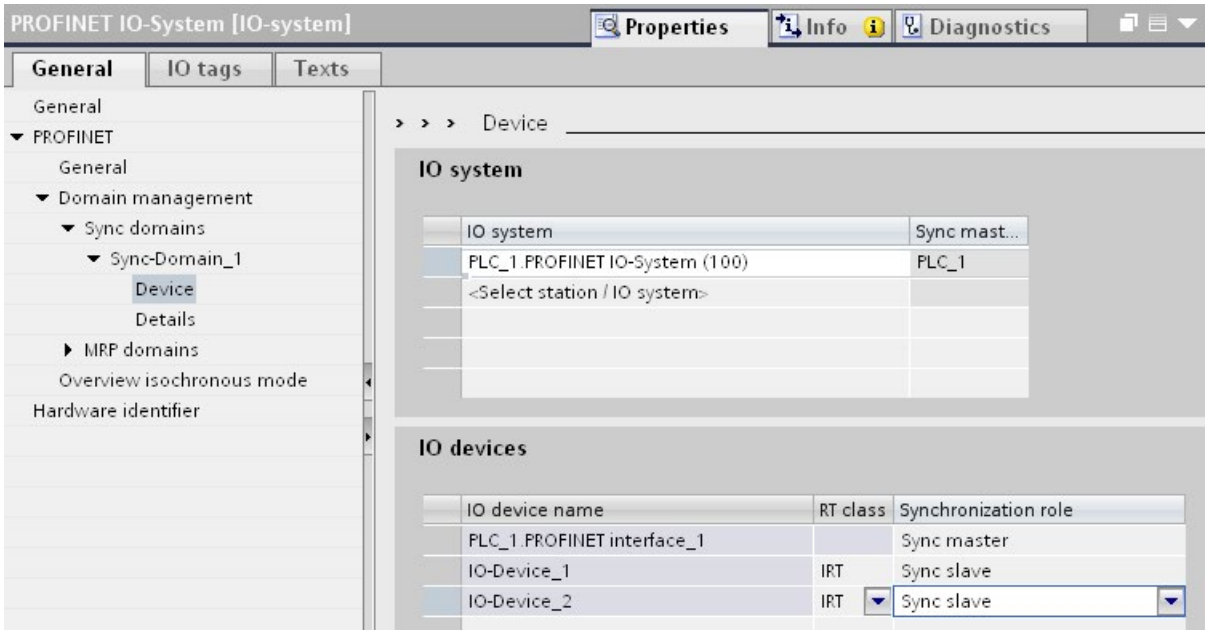

Figure 5-48 IRT configuring sync domain

4. Enter all necessary settings in the tables:
   - Select an IO system.
   - Set the synchronization role "sync master" for the IO controller.
   - Set the RT class for the IO devices to "IRT". The IO devices will then automatically be assigned the synchronization role "sync slave".

You can now load the configuration to the relevant devices with PROFINET IRT.

5.5.6 Setting the bandwidth usage for the send clock

Bandwidth level

For PROFINET IO with IRT, you can specify the maximum portion of the send cycle that you want to use for cyclic IO communication.

You have the following setting options for the bandwidth usage in STEP 7.

- Maximum 25% cyclic IO data. Focus on non-cyclic data.
- Maximum 37.5% cyclic IO data. Focus on non-cyclic data.
- Maximum 50% cyclic IO data. Balanced proportion.
- Maximum 90% cyclic IO data. Focus on cyclic IO data. (Requirement: The "Make 'high performance' possible" option is activated)

Setting the bandwidth usage

To set the bandwidth usage for a PROFINET IO system in STEP 7, follow these steps:

1. Select your IO system in the network view of STEP 7.
2. In the Inspector window, go to "Properties" > "General" > "PROFINET" > "Domain management" > "Sync domains" > "Name of the sync domain" > "Details".
3. Select the desired level of bandwidth usage from the "Bandwidth use" drop-drop down list box.

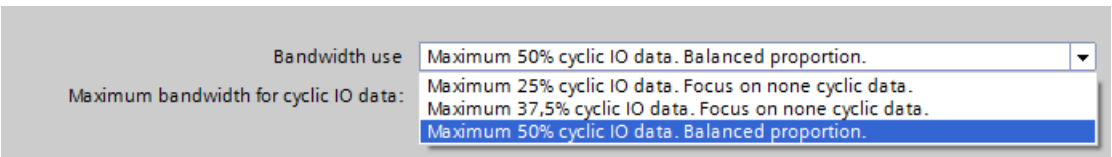

Figure 5-49 Setting the bandwidth usage

For information on how to set the bandwidth usage for IRT with maximum performance, refer to the section Configuration of IRT with high performance (Page 202)

5.5.7 Setup recommendations for optimizing PROFINET

Optimizing PROFINET with RT

PROFINET provides you with high-performance communication on all levels.

The following figures shows an example of an optimized PROFINET topology.

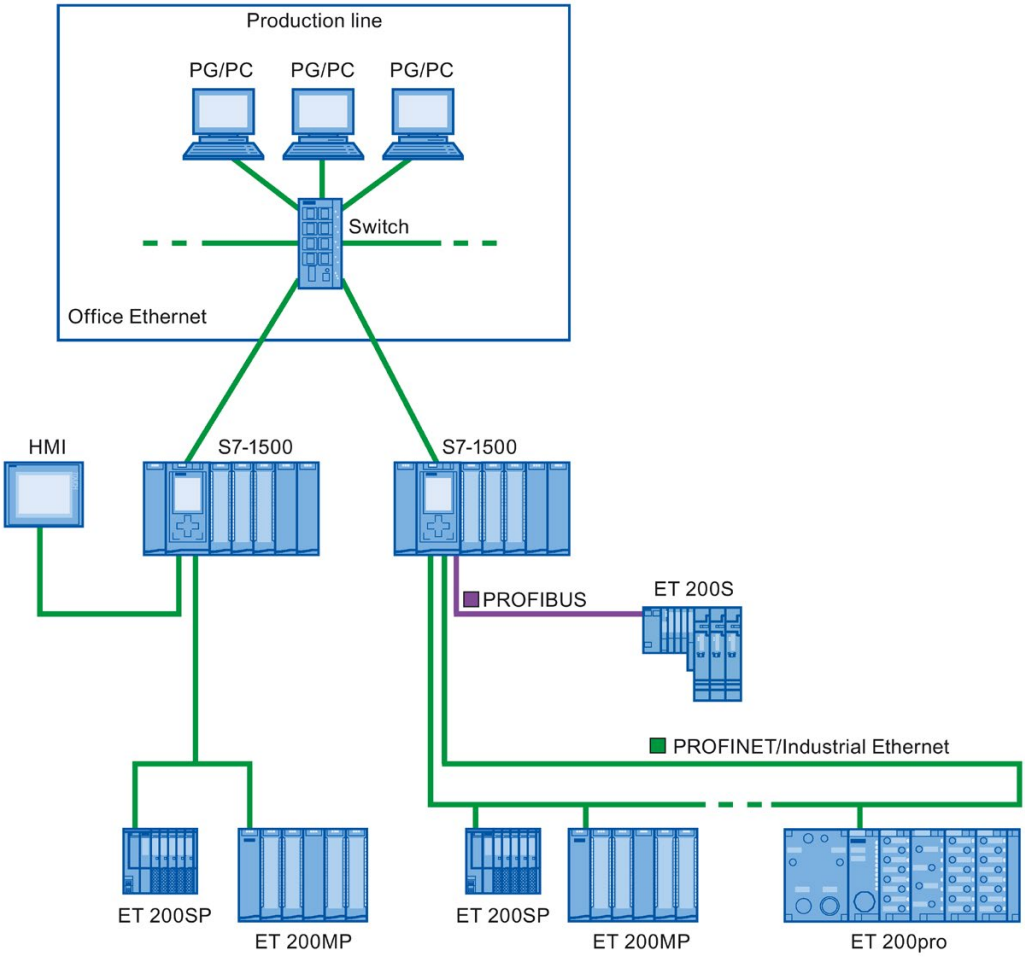

Figure 5-50 Optimized PROFINET topology

When setting up your PN network topology, take care that the various automation applications are distributed among separate network branches so that a sufficient bandwidth reserve will be available for future expansions.

- If you integrate standard Ethernet devices into the network topology or use standard Ethernet communication, take into account the network load caused by standard Ethernet and adapt the network topology as appropriate (max. bandwidth 100 Mbps).
- For communication with higher-level networks with a high data volume, use the most direct paths possible to the higher-level network infrastructure.

Also observe the Installation Guideline (http://www.profibus.com/nc/download/installation-guide/downloads/profinet-installation-guide/display/) of the PROFIBUS User Organization.

Setting up PROFINET with IRT

Keep in mind the following rules for setting up and operating a PROFINET IO system in IRT mode. These rules will ensure best possible operation of your PROFINET IO system.

- When using IRT, you must configure the topology. This will enable exact calculation of the update time, bandwidth, and other parameters.
- If you would like to use multiple sync domains, configure a sync boundary for the port which is currently connected to the PROFINET device of another sync domain.
- In a sync domain, you can only configure one sync master at a time.
- A PROFINET IO system may only be part of a single sync domain.
- If you configure PROFINET devices in a sync domain and want to synchronize with IRT, the PROFINET devices concerned must support IRT communication.
- If possible, use the same PROFINET device as the PROFINET IO controller and sync master.
- If only some of the PROFINET devices in a PROFINET IO system are synchronized, please keep in mind the following: Assign PROFINET devices that are not participating in the IRT communication to the RT class "RT" and the synchronization role "unsynchronized" in the sync domain.

Applications for CPU with multiple PROFINET IO interfaces

- Connecting machines: Your configuration contains machines located on separate IO lines. You can perform real-time communication between the CPUs over PROFINET IO interface X2. Use the I-device or shared I-device function for this purpose.
  The figure below shows an example configuration for two machines connected over the X2 interface with an I-device relationship.

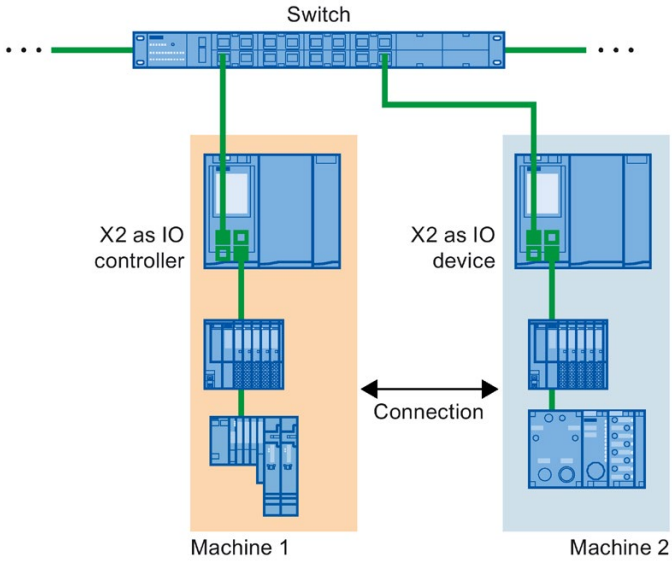

Figure 5-51 I-device connection over 2nd PNIO interface

- Distribution by automation tasks:
  - For automation tasks with high performance and deterministic requirements, use PROFINET with IRT over the X1 interface.
  - For other tasks that you can implement with RT, use the X2 interface.

If you use interface X2 as the PROFINET IO interface for one of the following CPUs, this can affect performance:

- CPU 1515(F)-2 PN
- CPU 1515T(F)-2 PN
- CPU 1516(F)-3 PN/DP
- CPU 1516T(F)-3 PN/DP
- CPU 1516(F)pro-2 PN

You can find additional information in the section PROFINET interface (Page 25) and in the Cycle and Response Times (https://support.industry.siemens.com/cs/ww/en/view/59193558) function manual.

Topological overlap of IO systems in multi-controller applications

In a configuration with multiple IO controllers, shared paths are subject to the combined network loads of all connected PROFINET IO systems.

To avoid high communication loads in multi-controller applications, observe the following recommendations:

- Avoid paths that are shared by multiple IO systems.
  The figure below shows a configuration with two PROFINET IO systems that use the same paths.

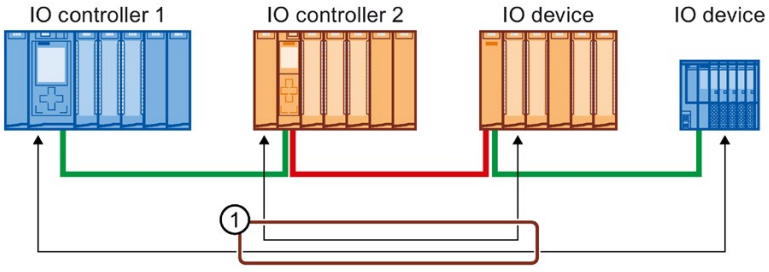

① Shared path

Figure 5-52 Multi-controller application with shared path

In the figure below, the two PROFINET IO systems do not use shared paths.

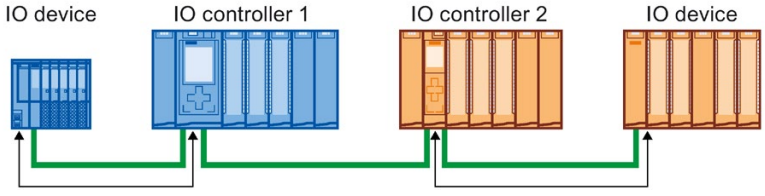

Figure 5-53 Multi-controller application with separate paths

- If separation is not possible: Increase the update time for the affected IO devices.

Installation guidelines of the PROFIBUS user organization

The installation guidelines can be found on the Internet (http://www.profibus.com/nc/download/installation-guide/downloads/profinet-installation-guide/display/).

5.5.8 Limitation of the data infeed into the network

Limiting the data infeed into the network on PROFINET interfaces

The "Limit data infeed into the network" function limits the network load of standard Ethernet communication which is fed into the network by the interface to a maximum value. This does not apply to cyclic real-time communication (RT/IRT).

In a PROFINET IO system, critical network loads can occur quickly with standard Ethernet communication, especially in line topologies. Devices which feed a lot of standard Ethernet communication into the PROFINET IO system, should support the function "Limit data infeed into the network". If necessary, you should optimize your topology by avoiding e.g. standard Ethernet devices in line topologies. You can find additional information on this in section Setup recommendations for optimizing PROFINET (Page 192).

Depending on the interface, you can activate or deactivate the "Limit data infeed into the network" function. If you use the X1 interface of an S7-1500 CPU as the IO controller or I-device, the "Limit data infeed into the network" function is always enabled. Example: If you are not using the X1 interface of an S7-1500 CPU as IO controller or I-device, you can enable or disable the function.

Uses of the limitation of the data infeed to the network

- Division of the bandwidth for standard Ethernet communication between devices:
  In PROFINET networks cyclic real-time communication and standard Ethernet communication share the same network. This means that only a limited bandwidth remains for standard Ethernet communication. The limitation of the data infeed ensures that the remaining bandwidth for standard Ethernet communication is not used just by one device, but is divided between several devices.
- Smoothing peaks in the data infeed:
  The limitation of the data infeed smooths peak loads of standard Ethernet communication (for example, from Open User Communication, access by the Web server).
- Limiting problems in the data infeed:
  If applications in a device generate too much data, this data is not forwarded to the PROFINET network. Negative effects (for example data loss, communication breakdown) remain limited to the device and its communications partner. Other nodes are not disturbed.

Setting limitation of the data infeed into the network for a CPU

To set the limitation of the data infeed into the network, follow these steps:

1. In the network view of STEP 7, select the interface of the CPU.
2. In the Inspector window, go to "Properties" > "General" > "Advanced options" > "Interface options".
3. Select or clear the "Limit data infeed into the network" check box.

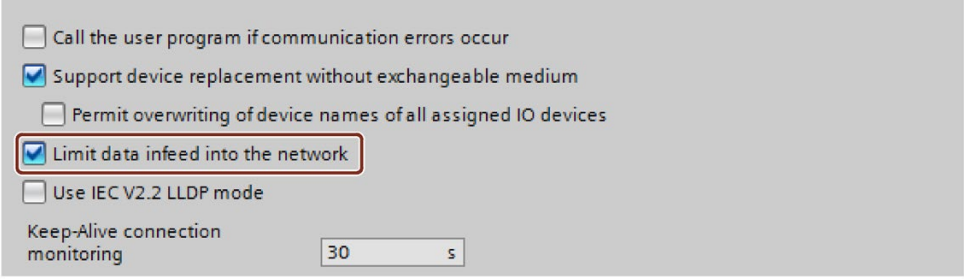

Figure 5-54 Limit data infeed into the network

5.6 PROFINET with performance upgrade

Performance upgrade

The performance upgrade implements the application class "High Performance" of the PROFINET specification V2.3.

The performance upgrade provides a series of measures that lead to the following improvements for PROFINET with IRT:

- Reduction of runtime delays in the IO devices
- Increase in the bandwidth for cyclic IO data
- Reduction of the bandwidth used for PROFINET frames
- Reduction of the send clocks

The improvements achieved with the performance upgrade mean that you can operate your PROFINET IO system with more devices with the same send clock or the same number of devices with a shorter send clock.

With PROFINET, it was previously possible to reach a send clock of 250 µs.

With the performance upgrade, it is now possible to achieve isochronous send clocks of up to 125 µs with the fast forwarding, dynamic frame packing and fragmentation procedures, depending on the performance capability of the CPU (see Technical Specifications in the device manuals). With short send clocks, standard communication remains possible.

The performance upgrade will help you to implement applications with high speed and send clock requirements.

5.6.1 Dynamic frame packing

Dynamic frame packing

Previously, individual PROFINET IO frames were sent for every PROFINET IO device.

The performance upgrade uses the dynamic frame packing procedure that is based on the summation frame method. With the summation frame method, a frame contains the user data for neighboring devices on a line. With Dynamic Frame Packing, every IO device takes its data from the frame and forwards the rest. The frame is shortened from IO device to IO device. Dynamic frame packing improves the use of the bandwidth in a line topology.

The following figure shows how Dynamic Frame Packing works based on the example of a frame containing the user data for 3 IO devices.

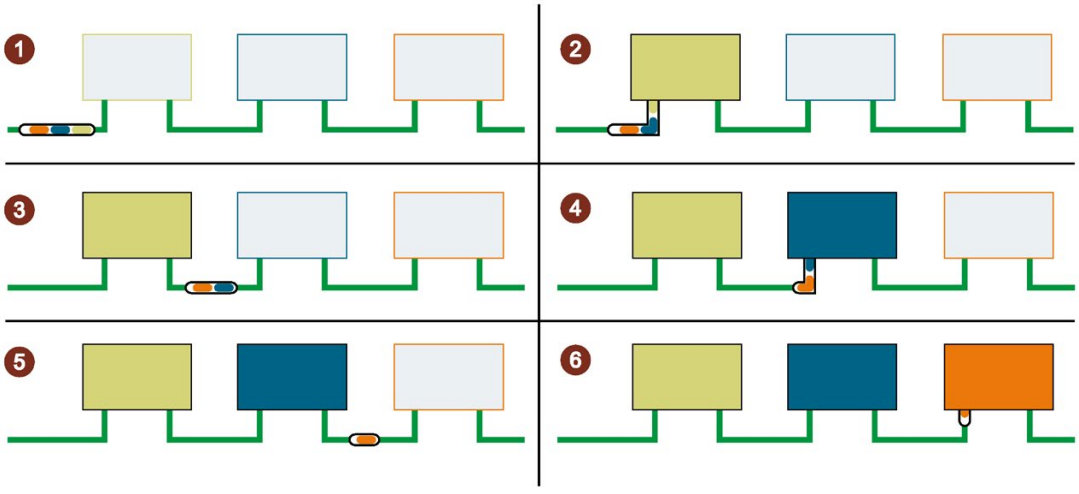

① The PROFINET IO frame contains the user data for all 3 IO devices (green, blue and orange).

② The PROFINET IO frame reaches the first IO device. The IO device takes its user data (green) from the frame and forwards the remaining frame.

③ The PROFINET IO frame contains the user data for two IO devices (blue and orange).

④ The PROFINET IO frame reaches the second IO device. The IO device takes its user data (blue) from the frame and forwards the remaining frame.

⑤ The PROFINET IO frame contains the user data for one IO device (orange).

⑥ The PROFINET IO frame reaches the last IO device. The IO device saves the entire frame including user data (orange).

Figure 5-55 Dynamic Frame Packing (DFP)

DFP groups

Dynamic frame packing automatically groups IO devices that support the performance upgrade into DFP groups. To be grouped together in a DFP group. the IO devices must be located one after the other in a line and must have the same update time and watchdog time. As soon as a maximum frame size for the DFP group is exceeded or a maximum number of members for a DFP group is reached, Dynamic Frame Packing automatically opens a new DFP group.

STEP 7 shows the DFP groups in "Domain management" > "Sync domains" > "Name of the sync domain" > "Device" in the "IO devices" box.

IO devices

PROFINET device name	RT class	Synchronization role	Redundancy level	DFP group
plc_3.profinet interface_1	RT,IRT	Sync master		
io-device_2	IRT	Sync slave	No redundancy	2
io-device_3	IRT	Sync slave	No redundancy	2
io-device_4	IRT	Sync slave	No redundancy	3
io-device_5	IRT	Sync slave	No redundancy	3

Figure 5-56 Display of the DFP groups in STEP 7

Note

Dynamic frame packing with high watchdog times

If you set the "Accepted update cycles without IO data" parameter higher than 31 for an IO device, Dynamic Frame Packing does not place this IO device in a DFP group.

5.6.2 Fragmentation

The transfer of a complete standard Ethernet frame with TCP/IP data takes up to 125 µs. This means that the cycle time for PROFINET IO data cannot be reduced by any desired amount.

The performance upgrade uses the fragmentation procedure, which breaks down TCP/IP frames into sub-frames. These frame segments are transferred to the target device over multiple send clocks; there they are reassembled to the original TCP/IP frame.

Fragmentation is a requirement for cycle times lower than 250 µs. In these short send clocks, you can use more bandwidth for cyclic IO data, since the fragments of the standard Ethernet frames use significantly less bandwidth than a complete standard Ethernet frame.

The following figure shows how fragmentation works.

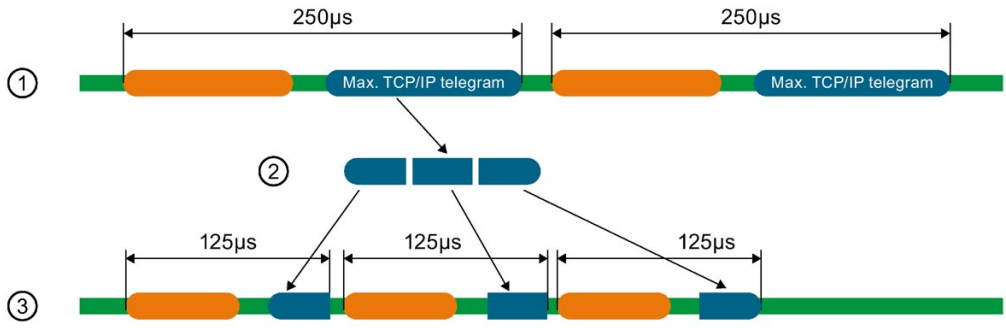

① A standard Ethernet frame with TCP/IP data is up to 125 µs.
② During fragmentation, the standard Ethernet frame is divided into frame segments.
③ The frame segments are divided into multiple short send clocks.

Figure 5-57 Fragmentation

Note

The PROFINET IO interface of the IO controller supports fragmentation if all the ports except one are deactivated.

5.6.3 Fast forwarding

To be able to decide whether a frame should be forwarded or used, a PROFINET IO device requires the frame ID. It previously took 1440 ns until the frame ID was present in the IO device.

The performance upgrade uses the fast forwarding procedure in which the frame ID is located nearer the front of the frame. The throughput time in the device is reduced to 320 ns.

With fast forwarding, the throughput time of the frame is reduced in your PROFINET IO system. This results in decisive performance advantages, particularly in line, ring and tree topologies.

The figure below compares the throughput of a PROFINET IO frame in an IO device with and without fast forwarding.

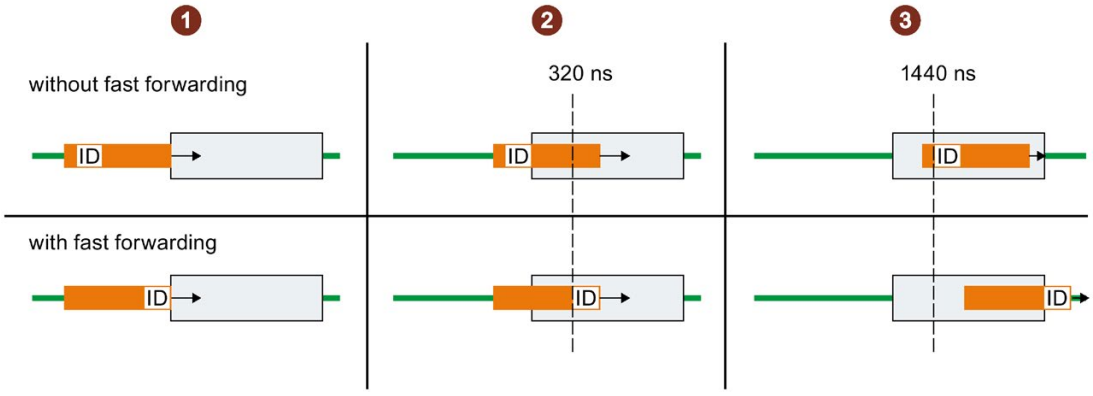

① Start:

- Both PROFINET frames reach the IO device.
  The IO devices start to check the frames for the frame ID

② After 320 ns:

- Without fast forwarding: The IO device is still checking the PROFINET frame for the frame ID.
- With fast forwarding: The IO device receives the frame ID from the PROFINET frame and forwards the frame.

③ After 1440 ns:

- Without fast forwarding: The IO device receives the frame ID from the PROFINET frame and forwards the frame.
- The PROFINET frame with fast forwarding is "ahead" of the PROFINET frame without fast forwarding.

Figure 5-58 Fast forwarding

5.6.4 Configuration of IRT with high performance

High-end applications with IO communication require excellent performance in IO processing, for example in the control of wind turbines (converter control).

To use IRT communication with the highest performance in your PROFINET IO system, enable the option "Make 'high performance' possible".

When you enable the "Make 'high performance' possible" option, this has the following effects:

- You can set send clocks of 187.5 µs and 125 µs (for example CPU 1518-4 PN/DP) or 187.5 µs (for example CPU 1517-3 PN/DP), see Technical specifications in the CPU device manuals.
- You can set more bandwidth use for cyclic IO data.
- You can use the option "Allows the use of 'fast forwarding'".

Requirements

- S7-1500 CPU as of firmware version V2.0

Enable the "Make 'high performance' possible" option.

Follow these steps to activate the "Make 'high performance' possible" option:

1. Select the PROFINET IO system in the network view of STEP 7.
2. In the Inspector window, go to "Properties" > "General" > "PROFINET" > "Domain management" > "Sync domains" > "Name of the sync domain".
3. Enable the "Make 'high performance' possible" option.

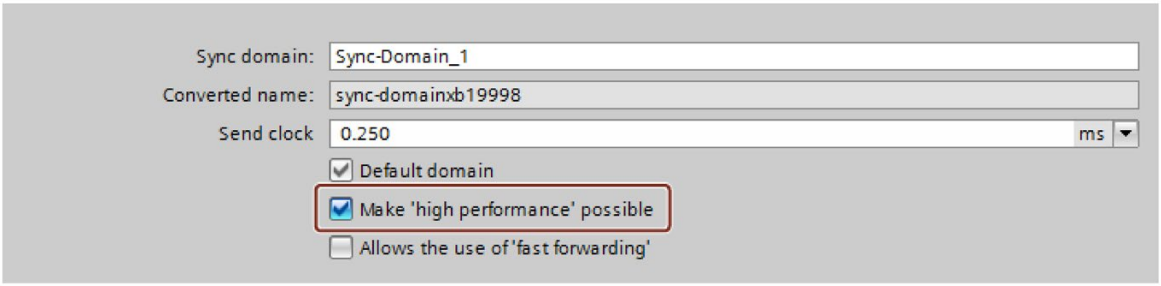

Figure 5-59 Activating high performance

Using more bandwidth for cyclic IO data

Requirement: The "Make 'high performance' possible" option is enabled.

To set more bandwidth for cyclic IO data for your PROFINET IO system, follow these steps:

1. Select your IO system in the network view of STEP 7.
2. In the Inspector window, go to "Properties" > "General" > "PROFINET" > "Domain management" > "Sync domains" > "Name of the sync domain" > "Details".
3. In the drop-down list, select "Maximum 90% cyclic IO data. Focus on cyclic IO data".

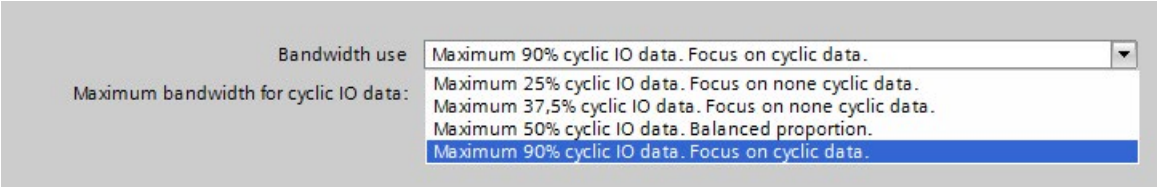

Figure 5-60 Using more bandwidth for cyclic IO data

Note

Bandwidth usage in isochronous mode

If you operate your PROFINET IO system in isochronous mode, avoid using the setting for the bandwidth usage "Maximum 90% cyclic IO data. Focus on cyclic IO data."

Setting low send clocks (example CPU 1518-4 PN/DP)

Requirement: The "Make 'high performance' possible" option is enabled.

1. Select the PROFINET IO system in the network view of STEP 7.
2. In the Inspector window, go to "Properties" > "General" > "PROFINET" > "Domain management" > "Sync domains" > "Name of the sync domain".
3. Select the send clock for "Send clock" in the drop-down list.

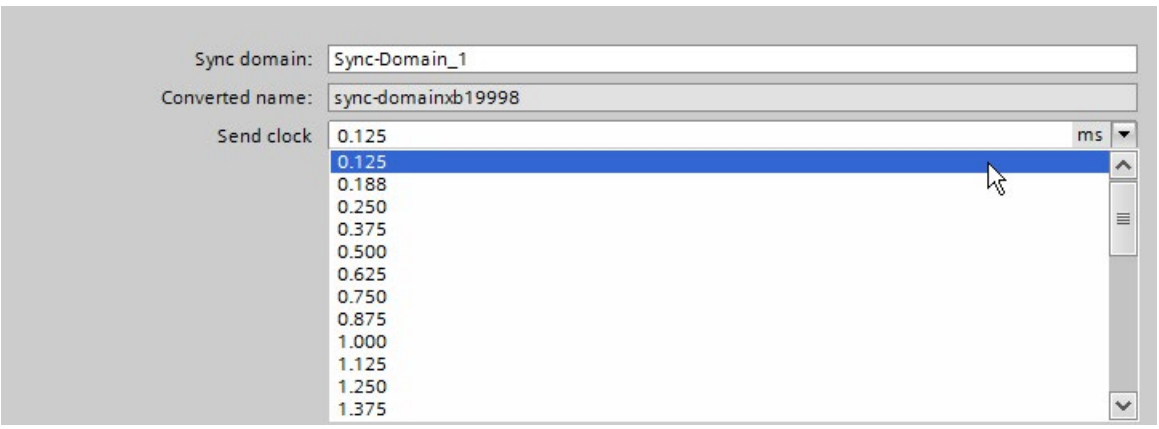

Figure 5-61 Setting low send clocks

Requirements for the fragmentation process (example CPU 1518-4 PN/DP)

If you use the following combinations for send clock and bandwidth settings, the devices in the IO system use the fragmentation process.

- Send clock cycle 125 µs: Always fragmentation irrespective of the bandwidth setting.
- Send clock cycle 187.5 µs: Fragmentation with the bandwidth settings "Maximum 50% cyclic IO data. Balanced proportion." and "Maximum 90% cyclic IO data. Focus on cyclic IO data."

The PROFINET IO interface of the controller supports fragmentation if all the ports except one are deactivated.

Optimizing port settings for low send clocks

You can further optimize the bandwidth use in your PROFINET IO system by using cables with a short cable length (< 20 m) or a short signal delay (max. 0.12 µs) between the devices.

To configure cables with a shorter length or signal delay in STEP 7, follow these steps:

1. Select the port in the topology view of STEP 7.
2. Navigate in the Inspector window to "Port interconnection" in the "Partner port" box.
3. Select the option "Cable length" or "Signal delay:".
4. Select the cable length or enter the signal delay.

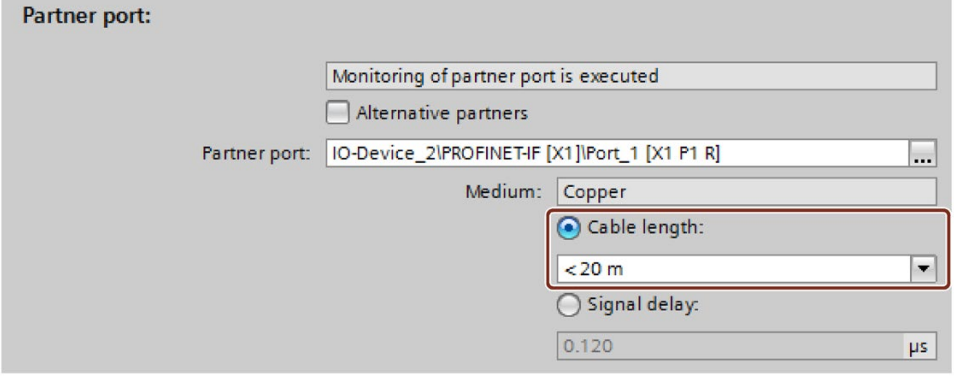

Figure 5-62 Optimizing port settings for low send clocks

Allowing fast forwarding

Requirements:

- The PROFINET IO device has to support the fast forwarding process so that the process can be used by the device.
- The "Make 'high performance' possible" option is enabled.
- The PROFINET IO interface supports fast forwarding if all the ports except one are deactivated.

Follow these steps to allow fast forwarding:

1. Select the PROFINET IO system in the network view of STEP 7.
2. In the Inspector window, go to "Properties" > "General" > "PROFINET" > "Domain management" > "Sync domains" > "Name of the sync domain".
3. Enable the "Allows the use of ‘fast forwarding'" option.

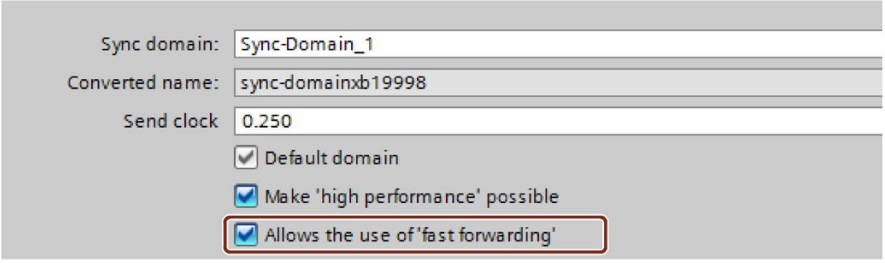

Figure 5-63 Allowing fast forwarding

Note

Fast forwarding and IPv6

The operation of fast forwarding in combination with IPv6 is not supported.

As soon as an IO device in the subnet uses an IPv6 address, you must not activate "fast forwarding".

5.6.5 Sample configuration for IRT with high performance

The figure below shows an example configuration with which you can achieve maximum performance.

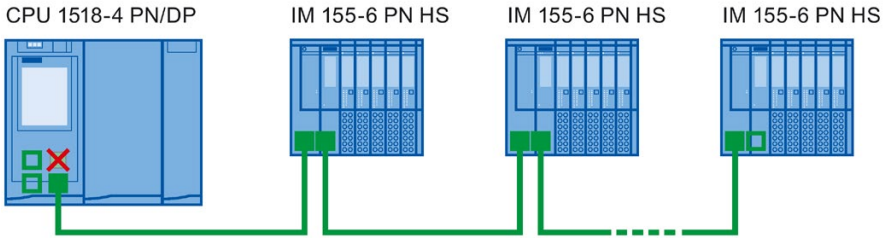

✕ Port 1 of the X1 interface of the CPU is deactivated.

■ Port 2 of the X1 interface and the ports of the interface modules on the bus use the following setting: Medium copper, cable length < 20 m or signal delay max. 0.12µs

□ A programming device connection to the CPU can be established via the interfaces X2 and X3 of the CPU or via the free port at the end of the line.

Figure 5-64 Example configuration for IRT with high performance

Use the following settings for the Sync domain:

- Enable the "Make 'high performance' possible" option.
- Set the send clock to 125 µs.
- Enable the "Allows the use of ‘fast forwarding'" option.

Standard Ethernet communication for IRT with high performance

Standard Ethernet communication is still possible even in a PROFINET IO system with high performance. Keep in mind that you first arrange the IRT nodes, as seen from the IO controller, and arrange the standard Ethernet nodes at the end of the line.

With a large volume of data through standard Ethernet communication, it makes sense to reduce the load on your network by separating standard Ethernet communication and cyclic real-time communication. Example: Use the interface X1 for the PROFINET IO communication and a different interface for the standard Ethernet communication.

5.7 Isochronous mode

5.7.1 What is isochronous mode?

Objectives of isochronous operation

The advantages of the isochronous mode function in automation engineering can be seen in an example from everyday life.

The transmission of data corresponds to the transport of people on public transport. Assuming public transport were to operate at maximum speed while reducing stop times at the passenger terminals to absolute minimum, the last thing many potential passengers would notice of the departing contraption are its red tail lights. The overall travel time is, however, decided by the train, bus or underground-railway clock, because well adjusted timing is essential to a good service. This also applies in automation engineering. Not only fast cycles but also the adaptation and synchronization of the individual cycles result in optimum throughput.

Just-In-Time

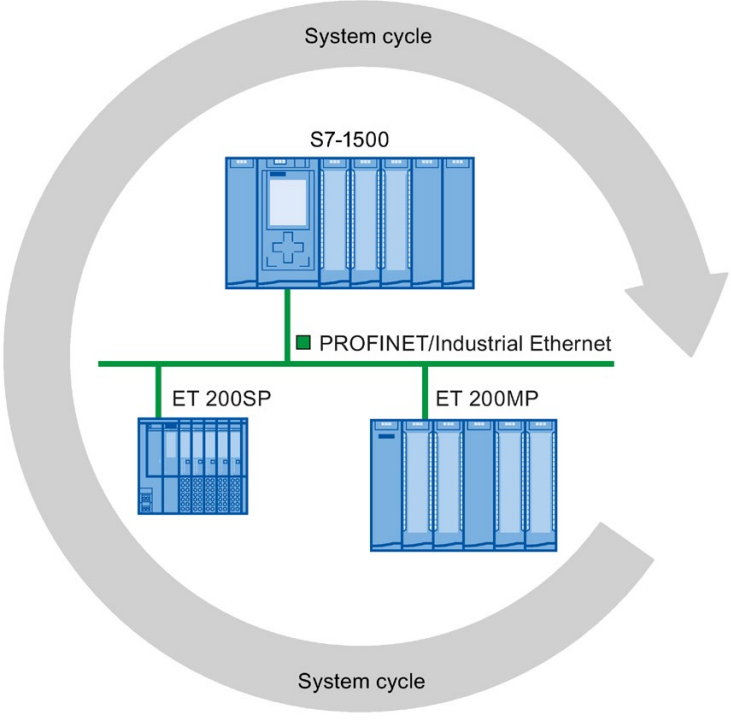

Figure 5-65 System cycle

The fast and reliable response time of a system operating in isochronous mode is due to the fact that all data is provided just-in-time. The basis for this is an equidistant cycle.

The isochronous mode function guarantees synchronization of the following at constant time intervals:

- Signal acquisition and output by the distributed I/O
- Signal transmission via PROFINET IO
- Program execution in the CPU in time with the equidistant PROFINET IO

The result is a system that acquires its input signals, processes them and outputs the output signals at constant time intervals. Isochronous mode guarantees precisely reproducible and defined process response times as well as equidistant and synchronous signal processing for distributed I/O.

Advantages of isochronous mode

The use of isochronous mode allows high-precision control.

- Optimized control loops through constant, calculable dead times
- Determinism, reliable reproducibility of response times
- Consistent (simultaneous) reading in of input data
- Consistent (simultaneous) output of output data

5.7.2 Use of isochronous mode

An isochronous system acquires measured values and process data within a fixed system cycle, processes the signals and outputs them synchronously to the process. Isochronous mode contributes to a high control quality and increased production accuracy. With isochronous mode, the possible fluctuations of process response times are drastically reduced. You make use of the time-assured processing to improve machine cycle times. Even fast processes can be reliably controlled thanks to the precise time reproducibility of all sequences. Shorter cycle times increase the processing speed and help to lower production costs.

In principle, isochronous mode is worthwhile whenever measured values must be acquired synchronously, movements must be coordinated, and process responses must be defined and simultaneously executed, as in the following example. Isochronous mode can thus be used in a wide variety of applications.

Example: Measuring at multiple measurement points with isochronous mode

Automation task

A camshaft production process requires precise measurement of the camshafts for quality assurance purposes.

Feature

For this purpose, a component is needed that can synchronously measure the positions and displacements of the cam during a rotation of the camshaft.

Solution

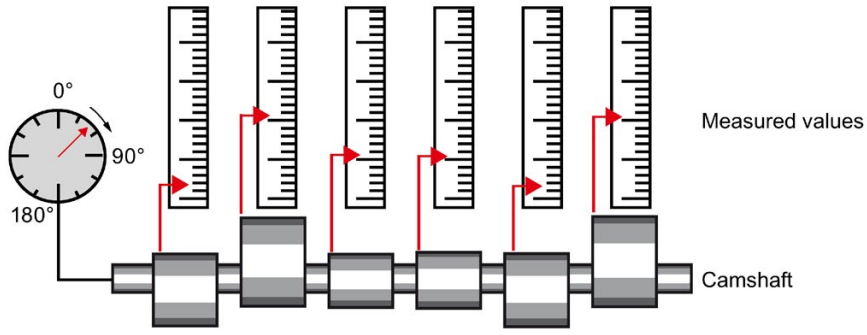

Figure 5-66 Measuring of camshafts

With use of isochronous mode, the measured values are simultaneously acquired at the various measuring points at fixed times. This results in the following workflow:

- Continuously rotate the camshaft
- During continuous rotation, synchronously measure the positions and cam displacements
- Process the next cam shaft

Thus, during a single rotation of the camshaft, all the positions of the camshaft and the associated measured values (red) are measured synchronously. The machine cycle time improves with the same or better measuring accuracy.

Advantage and benefits

The time required for measurement is reduced.

5.7.3 Time sequence of synchronization on PROFINET IO

Introduction

On PROFINET IO, you can isochronously operate I/O modules in distributed I/O systems on a CPU, e.g. in distributed I/O systems ET 200SP, ET 200MP.

Like the I/O modules, the interface modules of the I/O systems must support isochronous mode.

From reading in input data to outputting output data

The basic time sequence of all components involved in synchronization is explained below:

① Measured value acquisition in the process

② Isochronous read-in of input data

③ Transport of input data to the IO controller (CPU) via the subnet

④ Further processing in the isochronous application of the CPU

⑤ Transport of output data to the outputting IO device via the subnet

⑥ Isochronous output of output data

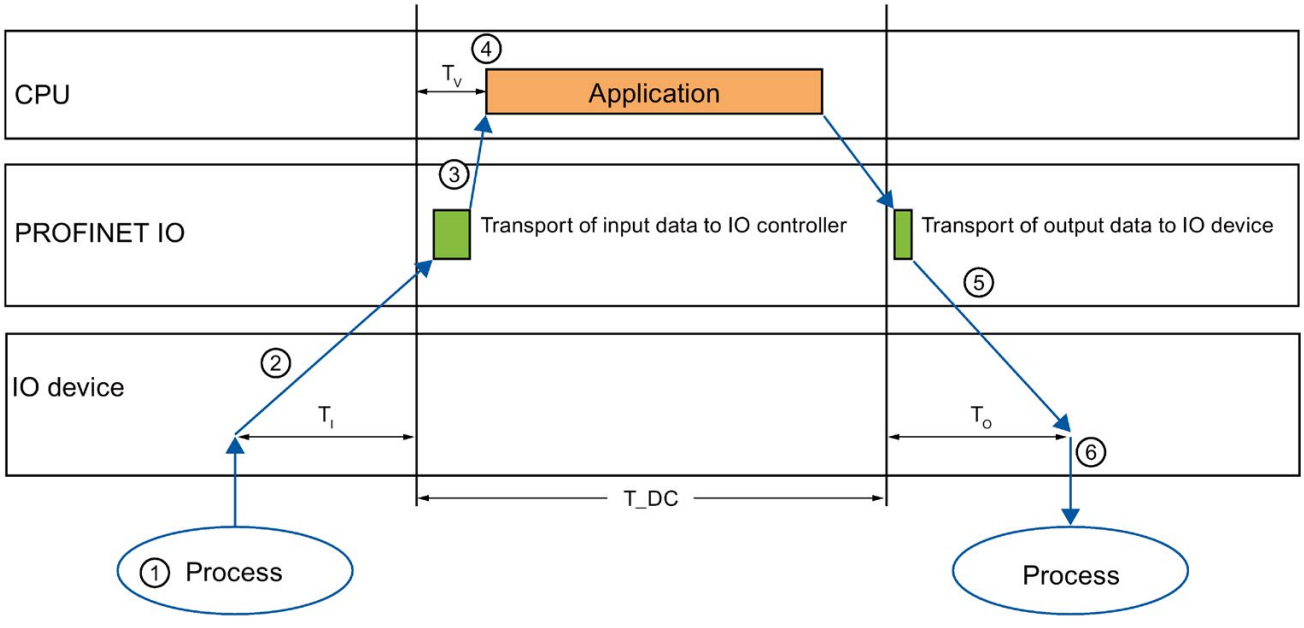

T_DC Data cycle (Time_DataCycle)

T_I Time for reading in the input data

T_O Time for outputting the output data

T_V Configured delay time

Figure 5-67 Time sequence of synchronization on PROFINET IO

To ensure that all input data is ready for transport via the subnet at the next start of the PROFINET IO cycle, the start of the I/O read-in cycle is advanced by the amount of lead time T_I. T_I is the "flashbulb" for the inputs; at this instant, all synchronized inputs are read in. T_I is necessary in order to compensate for analog-to-digital conversion, backplane bus times, and the like. The lead time T_I can be configured by STEP 7 or by you. Let the lead time T_I be assigned automatically by STEP 7. With the default setting, STEP 7 ensures that a common, minimum T_I is set.

The subnet transports the input data to the IO controller/DP master. The application is started synchronized to the cycle. That is, the isochronous mode interrupt OB is called after a configurable delay time T_V. The user program in the isochronous mode interrupt OB defines the process response and provides the output data in time for the start of the next data cycle. The length of the data cycle (send clock/DP cycle time) is always configured by you.

T_O is the time for the compensation arising from the backplane bus and the digital-to-analog conversion within the IO device/DP slave. T_O is the "flashbulb" for the outputs. The synchronized outputs are output at this time. Time T_O can be configured by STEP 7 or by you. Let time T_O be assigned automatically by STEP 7. STEP 7 automatically calculates a common, minimum T_O.

5.7.4 Configuring isochronous mode

5.7.4.1 Introduction

Configuring at a glance

Setting parameters for isochronous operation of the I/O module

You use the properties of the I/O addresses of the corresponding I/O module to:

- Set isochronous mode for the module.
- Assign the inputs and outputs of the module to a process image partition and an isochronous mode interrupt OB.

  The data of the process image partition is updated synchronously to the assigned OB. Isochronous mode interrupts give you the option of starting programs isochronously with the PROFINET send clock. Isochronous mode interrupts are processed with high priority.

Setting the send clock

The send clock is the shortest possible transmission interval for the data exchange. In isochronous mode, the send clock corresponds to data cycle T_DC.

You set the send clock in the properties of the PROFINET interface of the CPU or in the sync domain.

Setting the application cycle

The application cycle is a multiple of data cycle T_DC. If the runtime of the isochronous mode interrupt OB is short, the application cycle can be identical to the data cycle (= send clock).

You can reduce the application cycle of the isochronous mode interrupt OB relative to the send clock of an isochronous PROFINET IO system. Set an integer multiple of the send clock as the reducing factor.

You use the factor to reduce the CPU utilization by executing the isochronous mode interrupt OB less frequently. You set the application cycle in the properties of the isochronous mode interrupt OB.

Setting the delay time

The delay time is the time between the start of the send clock and the start of the isochronous mode interrupt OB. During this time, the IO controller performs cyclic data exchange with the IO devices.

STEP 7 sets the default delay time in such a way that the isochronous update of the process image partition automatically falls within the execution window of the application cycle.

You set the delay time in the properties of the isochronous mode interrupt OB. A shorter delay time enables you to increase the processing time for your user program in the isochronous mode interrupt OB.

Additional configurations for isochronous mode on PROFINET IO:

- Setting IRT as the RT class for the interconnected PROFINET interfaces

  A precondition for isochronous operation on PROFINET IO is IRT communication (Isochronous Real Time Communication). IRT means synchronized data exchange at reserved time intervals.

- Configuring the topology of the configuration

  A precondition for IRT communication is the topology configuration. In addition to the reserved bandwidth, the exchange of frames on defined transmission paths is used for further optimization of data communication. For this, the topological information of the configuration is used for planning the communication.

- Using a sync domain, you assign the IO devices (sync slaves) to an IO controller (sync master) for the isochronous data exchange.

  A precondition for IRT communication is a synchronization cycle for all PROFINET devices in a sync domain, for distribution of a common time base. With this basic synchronization, synchronous operation of the transmission cycle of the PROFINET devices within a sync domain is achieved.

5.7.4.2 Configuring isochronous mode on PROFINET IO

Introduction

The configuring of isochronous mode for a module is described as IO device in the following based on the ET 200MP distributed I/O system. The procedure described also applies to other distributed I/O systems (e.g., ET 200S or ET 200SP).

The IO controller is an S7-1500 CPU.

Requirements

- The STEP 7 network view is open.
- A S7-1500 CPU has been placed (e.g., CPU 1516-3 PN/DP).
- An IM 155-5 PN HF interface module (ET 200MP) has been placed and networked with the CPU via PROFINET IO.
- All requirements for an IRT configuration are met:
  - The ports of the networked PROFINET interfaces of the CPU and interface module are interconnected (topology configuration).
  - The RT class of the PROFINET interface of the interface module is set to "IRT" (area "Advanced options > Real time settings > Synchronization").
  - The "sync master" and "sync slave" roles are assigned for the PROFINET interfaces of the CPU and interface module (in the properties of a PROFINET interface: area "Advanced options" > "Media redundancy" > "Domain settings").

Procedure

To create an isochronous connection between the I/O and user program, follow these steps:

1. Select the IM 155-5 PN HF in the network view of STEP 7. Change to the device view.
2. Insert an I/O module that can be operated isochronously (e.g. DI 16 x 24VDC HF).
3. Go to the "I/O addresses" area in the Inspector window of the selected I/O module.

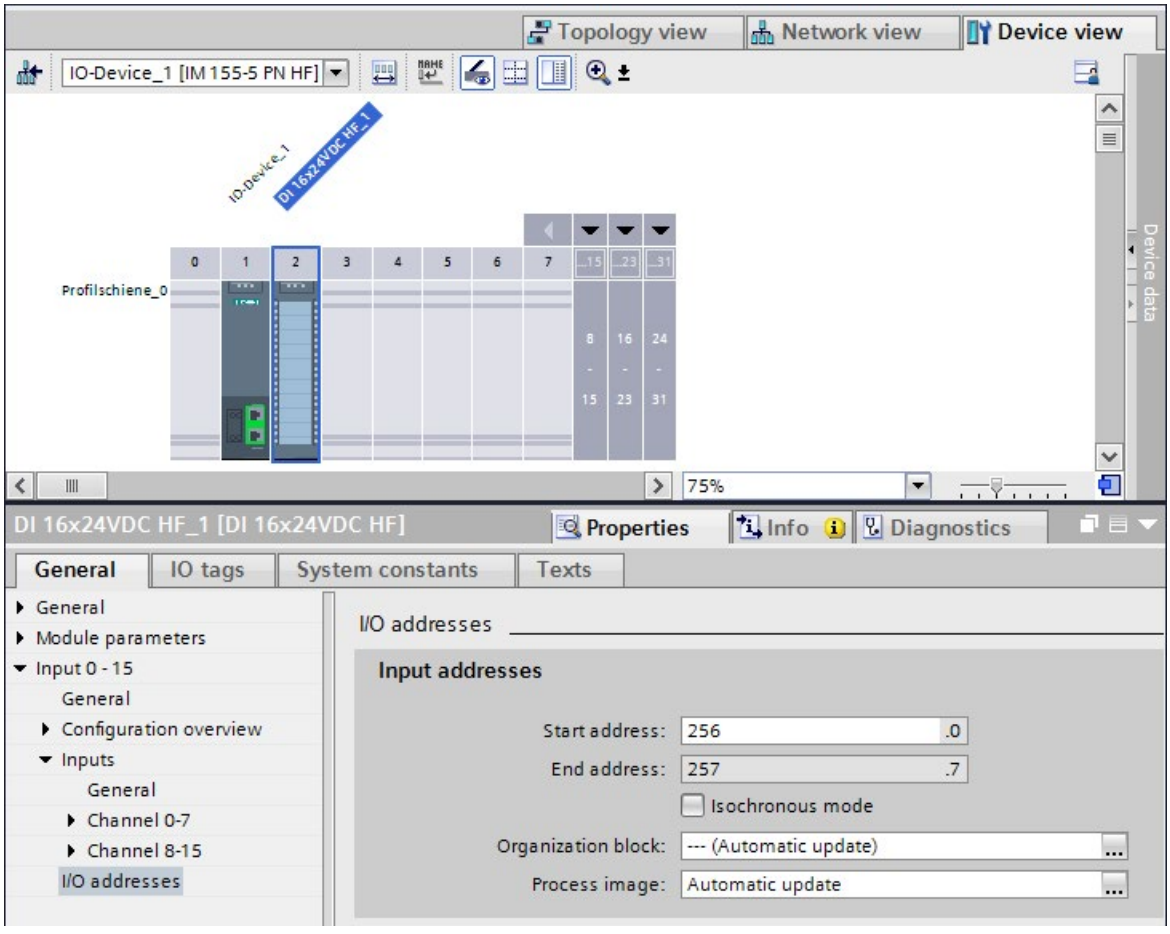

Figure 5-68 Configuring isochronous mode on PROFINET IO

4. Make the following settings in the I/O addresses area:
   - Select the "Isochronous mode" option.
   - Select a process image partition, e.g., process image partition 1.
   - Click the "Organization block" drop-down list. Click the "Add" button or select an existing OB. A dialog box for selecting organization blocks opens.
   - Select the "Synchronous Cycle" OB. Confirm the selection with "OK".

     In the case of automatic number assignment, OB 61 will be generated and opened.

     In the Inspector window, you can continue directly with the setting of the application cycle and delay time (Page 216) in the "Isochronous mode" area and start the programming of the OB in the instruction section.

5. If required, insert additional IO devices in the network view. Adapt the configuration and the settings for the isochronous mode.
6. You want to retrieve information about calculated bandwidths or on adapting the send clock. Select the sync domain in the network view and navigate to the corresponding area of the domain management in the Inspector window.

Reference

You can find examples of parameter assignment and possible settings of isochronous mode for distributed I/O and drives in STEP 7 in this FAQ on the Internet (https://support.industry.siemens.com/cs/ww/en/view/109480489).

5.7.4.3 Setting the application cycle and delay time

Requirements

- You have created an isochronous mode configuration in STEP 7.
- You have created an isochronous mode interrupt OB Synchronous Cycle (OB 6x).
- The isochronous mode interrupt OB is open.

Setting the application cycle

The application cycle is a multiple of data cycle T_DC (send clock). You use the application cycle setting to reduce the CPU utilization caused by execution of the isochronous mode interrupt OB. In the following example, the OB is called only after every 2nd data cycle T_DC in the CPU.

To set the application cycle for your isochronous mode application, follow these steps:

1. Open the "Properties" dialog of the isochronous mode interrupt OB under consideration.
2. In the area navigation, click the "Isochronous mode" group .
3. Set the application cycle in "Application cycle (ms)". Open the drop-down list box and select the application cycle. The drop-down list offers multiples of data cycle T_DC as possible values for the application cycle. Data cycle T_DC is set to 2 ms in the following figure.

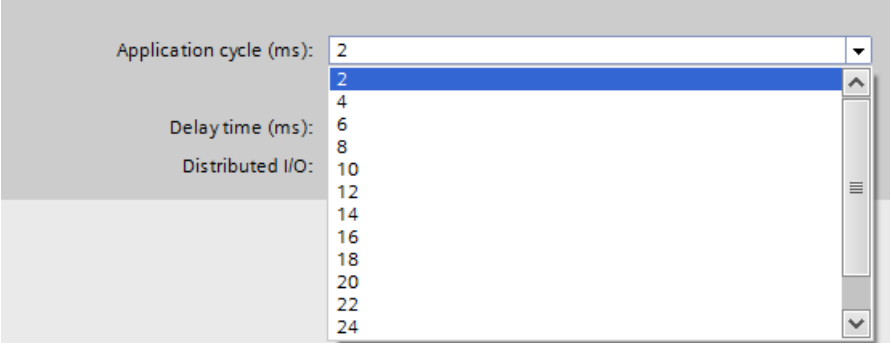

Figure 5-69 Setting the application cycle

Setting the delay time

The delay time is the time between the start of the send clock and the start of the isochronous mode interrupt OB. STEP 7 sets the delay time automatically to the start of the execution window by default. As a result, the isochronous mode update of the process image partition automatically falls within the execution window of the application cycle.

You can also set the delay time manually. A shorter delay time enables you to increase the processing time for your user program in the isochronous mode interrupt OB. If a manual setting is made, note that you must call the "SYNC_PI" and "SYNC_PO" instructions in the execution window of the application cycle.

To set the delay time for your isochronous mode application, follow these steps:

1. Open the "Properties" dialog of the isochronous mode interrupt OB under consideration.
2. In the area navigation, click the "Isochronous mode" group .
3. Clear the "Automatic setting" check box.
4. Enter your desired delay time in "Delay time (ms)".

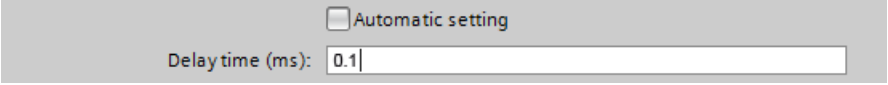

Figure 5-70 Setting the delay time

5.7.5 Programming isochronous mode

5.7.5.1 Basics of Programming

Programming in the isochronous mode interrupt OBs

You program the isochronous section of the program exclusively in the isochronous mode interrupt OBs Synchronous Cycle (OB 6x).

Because the isochronous mode interrupts are processed with high priority, only the time-critical sections of the program should be processed in the isochronous mode interrupt OB. The isochronous mode interrupt OB is called with a configured delay time.

Access to isochronous I/O through call of instructions

You access the isochronous I/O via a process image partition. That is, the addresses of the isochronous modules must be within one process image partition.

You program access to the isochronous IO in isochronous mode interrupt OB Synchronous Cycle (OB 6x) with the SYNC_PI and SYNC_PO instructions.

The isochronous I/O is updated by the call of the "SYNC_PI" and "SYNC_PO" instructions and therefore in the corresponding process image partition.

Note

Recommendation: To prevent inconsistent data from being returned to OB 6x, do not use the "DPRD_DAT" and "DPWR_DAT" instructions (direct data access) in the isochronous mode interrupt OB.

The "SYNC_PI" and "SYNC_PO" instructions update the process image partition only within the permitted execution window. The execution window stretches from the end of the cyclic data exchange to the point in time before the end of T_DC at which the outputs can still be copied in time. The data exchange must be started within this time window. If the execution window is violated by the processing of the "SYNC_PI" and "SYNC_PO" instructions, the instructions indicate a corresponding error message.

Program execution models

Depending on the order of the "SYNC_PI" and "SYNC_PO" instruction calls in OB 6x, there are two basic models for the program execution:

- **IPO** model (read **I**nputs - **P**rocessing - write **O**utputs)
- **OIP** model (write **O**utputs - read **I**nputs - **P**rocessing)

5.7.5.2 Program execution according to the IPO model

If the execution time of the isochronous mode interrupt OB is significantly shorter than one data cycle T_DC, use the IPO model. In the IPO model, you do not reduce the data cycle. That is, the application cycle of the isochronous mode interrupt OB is equal to data cycle T_DC.

The IPO model enables the shortest response times.

Programming according to the IPO model in the isochronous mode interrupt OB

For programming according to the IPO model:

1. Call the SYNC_PI instruction at the start of the isochronous mode interrupt OB.
2. Then call the actual user program.
3. Call the SYNC_PO instruction at the end of the isochronous mode interrupt OB.

Table 5- 3 Programming according to the IPO model

Step	Action	Explanation
1	Read in (I)	The SYNC_PI instruction reads in the inputs of the process image partition and provides them to the isochronous mode interrupt OB.
2	Process (P)	You program the actual user program of the isochronous mode interrupt OB.
3	Output (O)	The SYNC_PO instruction outputs the data changed by the user program via the process image partition.

Signal sequence in the IPO model

The following figure shows the signal sequence in the IPO model from the acquisition and the processing in the CPU to the output of the process values:

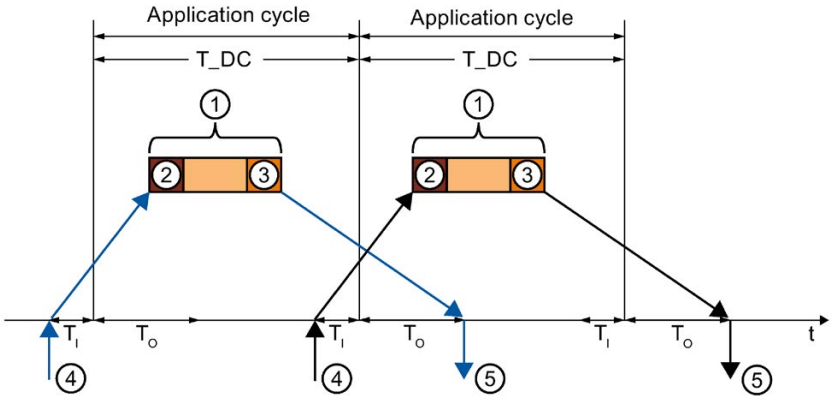

① Execution of isochronous mode interrupt OB
② "SYNC_PI" instruction
③ "SYNC_PO" instruction
④ Isochronous read-in of process values on I/O module at time T_I
⑤ Isochronous output of process values on I/O module at time T_O

Figure 5-71 Signal sequence in the IPO model

At time T_I the process values are read in isochronously on the I/O. The processing of the data in the IPO model is completed within one data cycle T_DC. The output data is always available on the I/O in the next data cycle T_DC at time T_O.

With the IPO model, there is a constant execution time from the "input terminal" to the "output terminal" of T_I + T_DC + T_O.

T_I + 2×T_DC + T_O can be guaranteed for the process response time.

5.7.5.3 Program execution according to the OIP model

Use the OIP model in the case of execution cycles of the isochronous mode interrupt OB of different lengths, if the application cycle is greater than data cycle T_DC.

The data exchange with the process is always deterministic in the OIP model, i.e. takes place at a precisely specified time.

Programming according to the OIP model in the isochronous mode interrupt OB

For programming according to the OIP model:

1. Call the SYNC_PO instruction at the start of the isochronous mode interrupt OB.
2. Then call the SYNC_PI instruction.
3. Then call the actual user program.

Table 5- 4 Programming according to the OIP model

Step	Action	Explanation
1	Output (O)	The SYNC_PO instruction outputs the data that was changed by the user program in the previous cycle via the outputs of the process image partition.
2	Read in (I)	The SYNC_PI instruction reads in the inputs of the process image partition of the current cycle and provides the inputs to the isochronous mode interrupt OB.
3	Process (P)	You program the actual user program of the isochronous mode interrupt OB.

Signal sequence in the OIP model

The following figure shows the signal sequence in the OIP model from the acquisition of process values and the processing in the CPU to the output of the process values. The application cycle is twice as long as data cycle T_DC in this example.

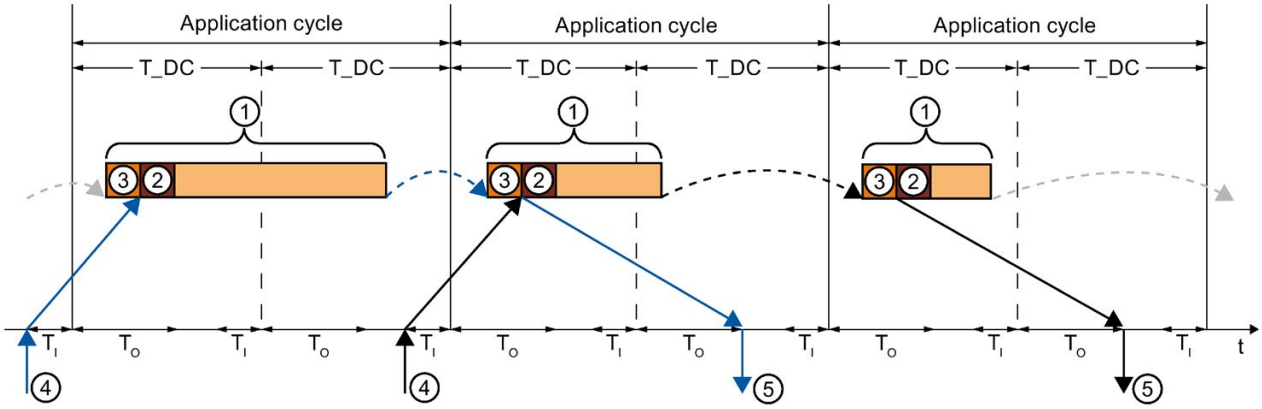

① Execution of isochronous mode interrupt OB
② "SYNC_PI" instruction
③ "SYNC_PO" instruction
④ Isochronous read-in of process values on I/O module at time T_I
⑤ Isochronous output of process values on I/O module at time T_O

Figure 5-72 Signal sequence in the OIP model

At time T_I the process values are read in isochronously on the I/O. The data is processed over 2 application cycles in the OIP model. The output data is always available on the I/O in the following application cycle at time T_DC + T_O.

With the IPO model, there is a constant execution time from the "input terminal" to the "output terminal" of T_I + application cycle + T_DC + T_O.

T_I + 2 x application cycle + T_DC + T_O can be ensured as the process response time.

5.8 Device replacement without exchangeable medium

Definition

IO devices which have no slot for exchangeable medium (e.g. ET 200SP, ET 200MP) or IO devices which support the PROFINET functionality "Device replacement without exchangeable medium/PG" can be replaced without having an exchangeable medium with saved device names inserted and without having to assign the device name with the PG. The new IO device is given a device name by the IO controller and not by the exchangeable medium or the PG.

To assign the device name, the IO controller uses the configured topology and the neighborhood relations established from the IO devices.

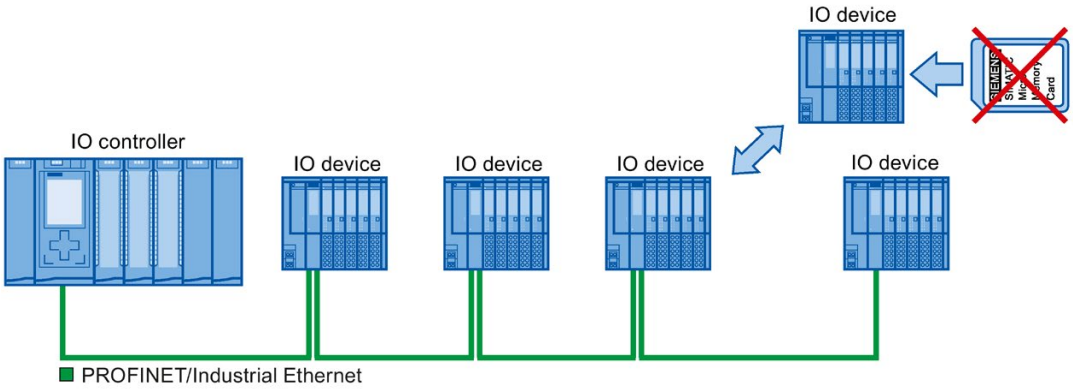

Figure 5-73 Device replacement without exchangeable medium

Note

When you exchange a device, make sure that the PROFINET cable is again inserted into the correct port, as it is configured in STEP 7.

Otherwise, the system will not run.

Advantages

With the Device replacement without exchangeable medium/PG PROFINET functionality, you can profit from the following advantages:

- After the replacement of the IO device, it automatically obtains its device name from the IO controller. You no longer have to assign device names with the PG or exchangeable medium.
- You can save on the storage medium for the IO device that replaces the removed one.
- Simple device name allocation with series machines that have the same configuration and set topology. It is no longer necessary to assign device names via exchangeable medium/PG.

Which devices support device replacement without exchangeable medium?

An overview of the devices that support the "Device replacement without exchangeable medium" function is provided in this FAQ (https://support.industry.siemens.com/cs/ww/en/view/36752540).

5.8.1 Device replacement without exchangeable medium/PG function

Neighborhood

Neighborhood is the physical relationship between two ports of adjacent PROFINET devices. A PROFINET device is connected in this case through one of its ports over a physical Ethernet line to a specific port of the second PROFINET device in close proximity (neighbors).
Both terminal devices, for example, IO controllers and IO devices with a port, and network components, for example, switches, IO controllers and IO devices with multiple ports, are considered PROFINET devices.

Failure and replacement of an IO device

The following example describes device replacement without exchangeable medium in the case of failure of an IO device.

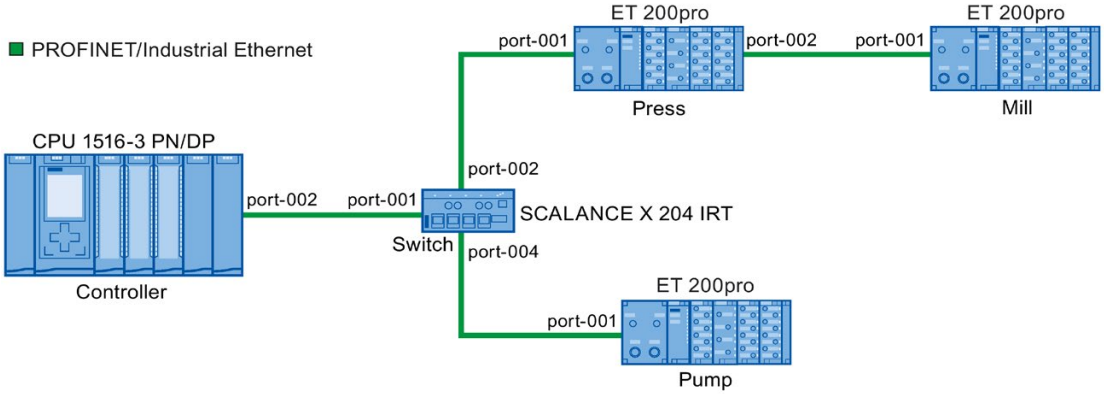

Figure 5-74 Example configuration of device replacement without exchangeable medium

For the device replacement, the following information is available to the IO controller:

PROFINET device	Device alias
Controller	"port-001.Switch"
Switch	"port-002.Controller", "port-001.Press", "port-001.Pump"
Press	"port-002.Switch", "port-001.Mill"
Mill	"port-002.Press"
Pump	"port-004.Switch"

The IO device with the device name "Mill" fails in this example:

Requirement

The PROFINET device replacing the removed one has no device name.

Principles of name assignment

The failure of the "Mill" IO device is considered here.

1. The IO controller queries the device name of the replaced IO device.
2. The IO controller detects that the IO device with the device alias "port-002.Press" does not have a device name.
3. The IO controller assigns the device name "Mill" to the replaced IO device via the device alias "port-002.Press" of the failed IO devices.

Note

If you insert a device with the Device replacement without exchangeable medium/PG PROFINET functionality at a different location than the configuration, a different device name is then assigned to the device.

Reset a wrongly inserted device to delivery state before you use it again.

5.8.2 Replacing an IO device without exchangeable medium

Introduction

Replacement of IO devices is sometimes frequently required in automation systems. The IO devices are generally assigned a device name by either inserting an exchangeable medium or via the programming device. The CPU identifies the IO device by using these device names.

Under certain circumstances, replacing an IO device can be done without inserting an exchangeable medium or without the PG.

Requirements

- The topology of the PROFINET IO system with the respective IO devices must be configured.

  By configuring the topology, the neighbor relationships of all the PROFINET devices located in the PROFINET IO system are announced to the PROFINET IO system or the IO controller. From the neighbor relationships specified by the set topology and the actual neighbor relationships established by the real PROFINET devices, the IO controller can identify the replaced IO device without a name and assign to it the configured name and the IP address and then again list it in the user data traffic.

- The affected IO devices in the automation system must support device replacement without exchangeable medium.

  If the individual IO devices in the automation system do not support device replacement without exchangeable medium, a corresponding alarm is output for the IO device.

  Note

  Use only new IO devices as replacements or restore configured IO devices to their delivery state.

Activating/deactivating device replacement without exchangeable medium

The "Device replacement without exchangeable medium" function is activated in the IO controller by default.

To deactivate device replacement without exchangeable medium, follow these steps:

1. In the device or network view of the STEP 7, select the PROFINET interface in the corresponding IO controller.
2. In the interface properties under "Advanced options > Interface options", clear the "Support device replacement without exchangeable medium" check box.

To reactivate device replacement without exchangeable medium, you must select the "Support device replacement without exchangeable medium" check box again.

5.8.3 Permit overwriting of PROFINET device name

With the option "Permit overwriting of PROFINET device names of all assigned IO devices", you can overwrite PROFINET device names of IO devices during startup of the CPU. This option reduces the effort during automatic commissioning, for example, when replacing a device.

Requirements

- IO controller supports the "Permit overwriting of device names of all assigned IO devices" option, for example CPU 1215C DC/DC/DC as of firmware version 4.0

How the "Permit overwriting of PROFINET device names of all assigned IO devices" option works

The IO controller (CPU) can overwrite the PROFINET device names of IO devices in the IO system when the "Permit overwriting of PROFINET device names of all assigned IO devices" option is enabled.

Multiple use IO systems can only be operated when this option is enabled. The IO controller checks prior to overwriting if the type of the IO device matches the configured type.

If the option is not selected, the IO controller cannot overwrite the device names of the IO devices. In this case, you must manually assign the PROFINET device name on the IO device if the PROFINET device name changes in the configuration or when a device is replaced, or delete the device names of the IO devices prior to an automatic commissioning.

Response during commissioning

Select the option "Permit overwriting of PROFINET device names of all assigned IO devices" only if the following requirements are fulfilled:

- All the configured IO devices are available.
- All IO devices are wired correctly in accordance with the topology configuration.
- No IO device is jumpered.

If configured IO devices are missing or are jumpered (partial commissioning), do not use the option.

CAUTION

Error at partial commissioning

If device names are assigned incorrectly during partial commissioning or incorrect wiring, these have to be deleted manually after a correction of the wiring in order to attain correct assignment of the device names.

Behavior during operation

After commissioning, you may exchange or jumper IO devices as long as the IO devices do not have a PROFINET device name that is used for a different IO device in the project. Otherwise, incorrect assignment of PROFINET device names in the neighborhood or further vicinity of the IO device can occur.

WARNING

Wrong PROFINET device name

When the "Permit overwriting of PROFINET device names of all assigned IO devices" option is enabled, incorrectly connected devices can be assigned an incorrect PROFINET device name from the configuration.

Depending on the connected I/O, there is risk of death, severe injuries or damage caused by malfunctions.

To rule out any danger, check whether the suitable replacement device has been connected in case of a device replacement and whether the port interconnection matches the configured preset topology.

Typical source of danger

When replacing an IO device ("standard case"), it is almost guaranteed that the replaced device will be connected according to the configured port interconnection.

The figure below shows a scenario whereby the connections of two identical PROFINET cables are swapped at two switch ports. Because the IO controller assigns the device names according to the preset topology, the incorrect connection of the devices has serious effects on the naming.

Due to the control of different actuators, the plant could become hazardous in this case.

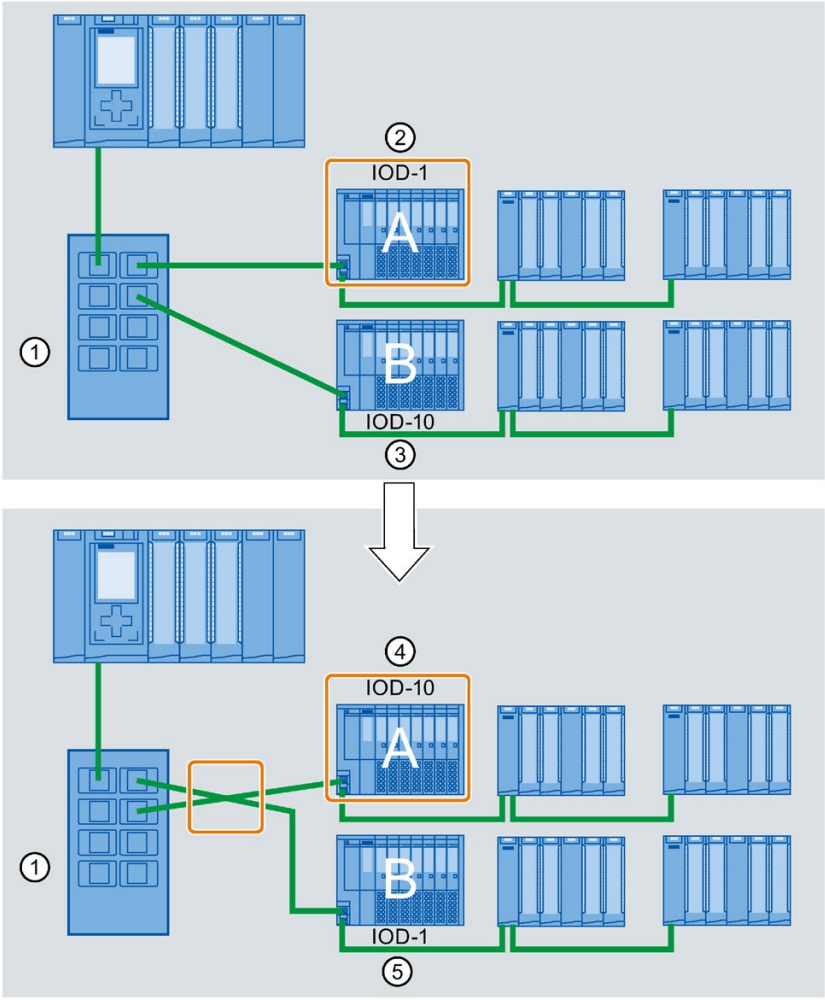

① Switch with connected PROFINET cables
② Device A, device name "IOD-1": controls motor 1
③ Device B, device name "IOD-10": controls motor 10
④ Device A controls motor 10!
⑤ Device B controls motor 1!

Procedure

Proceed as follows to change the "Permit overwriting of PROFINET device names of all assigned IO devices" option:

1. Select the PROFINET interface of the CPU for which you want to change the option in the network view or in the device view.
2. Select the area "Advanced options", section "Interface options".
3. Change the option.

5.9 Standard machine projects

Introduction

Standard machine projects are STEP 7 projects that use a set of innovative functions allowing simple configuration and commissioning of flexible automation solutions for standard machines or for machines with a modular structure.

A hardware configuration consisting of an IO controller and any number of connected IO devices represents a "PROFINET IO system master". This master is configured with a maximum configuration based on a template from which various options can be derived for different standard machines, for example with different configuration variants of the IO system.

Greater flexibility at all levels

Standard machine projects have the following central characteristics:

- Different variants of a standard machine can be loaded from precisely one project with an engineered maximum configuration (IO system options). The standard machine project covers all variants (options) of the IO system.
- An IO system option can be integrated in an existing network locally using simple tools.

Flexibility is provided in more ways than one:

- With suitable configuration, adaptation of the IP address parameters of the IO controller is possible locally using simple tools. This allows a standard machine to be integrated in different plants with little effort or to be included in a network several times.
  IO systems with this property are known as **multiple use IO systems**.
- With suitable configuration and programming, different setups of IO system options can be operated locally that differ in terms of the selection of IO devices used or in terms of the arrangement of the IO devices.
  Since the specific configuration of the IO system is controlled by the user program, this is known as **configuration control for IO systems**.
- Independently of the functions described above, with suitable configuration and programming, you can use different station options of central devices or distributed I/O devices in one project. The devices can be different in terms of the selection and arrangement of the modules.
  Since the concrete configuration of the station is controlled by the user program, this is also known as **configuration control at the device layer**.

Application examples

You can find application examples for configuration control at the device layer, configuration control for IO systems and multiple-use IO systems on the Internet (https://support.industry.siemens.com/cs/ww/en/view/29430270).

Additional information

For more information on multiple use IO systems, refer to section Multiple use IO systems (Page 230).

For more information on the configuration control for IO systems, refer to section Configuration control for IO systems (Page 239).

For more information on configuration control, refer to the system manual S7-1500, ET 200MP (http://support.automation.siemens.com/WW/view/en/59191792).

5.9.1 Multiple use IO systems

5.9.1.1 What you should know about multiple use IO systems

Multiple use automation solutions

For a flexible reusable automation solution as is the case with series machines, the following use cases are typical:

- The machine (and therefore also the PROFINET IO system) is used more than once by the customers.
- The machine is used in different plants by various customers.

For this to be possible, the automation solution must meet the following requirements:

- A project (configuration and program) can be loaded on various machines of the same type without changes.
- Only a few easy adaptations need to be performed locally to integrate the machine into an existing network infrastructure.

The following figure shows how an automation solution with a multiple use IO system is loaded on different automation systems and then one automation system is adapted to the existing network infrastructure locally.

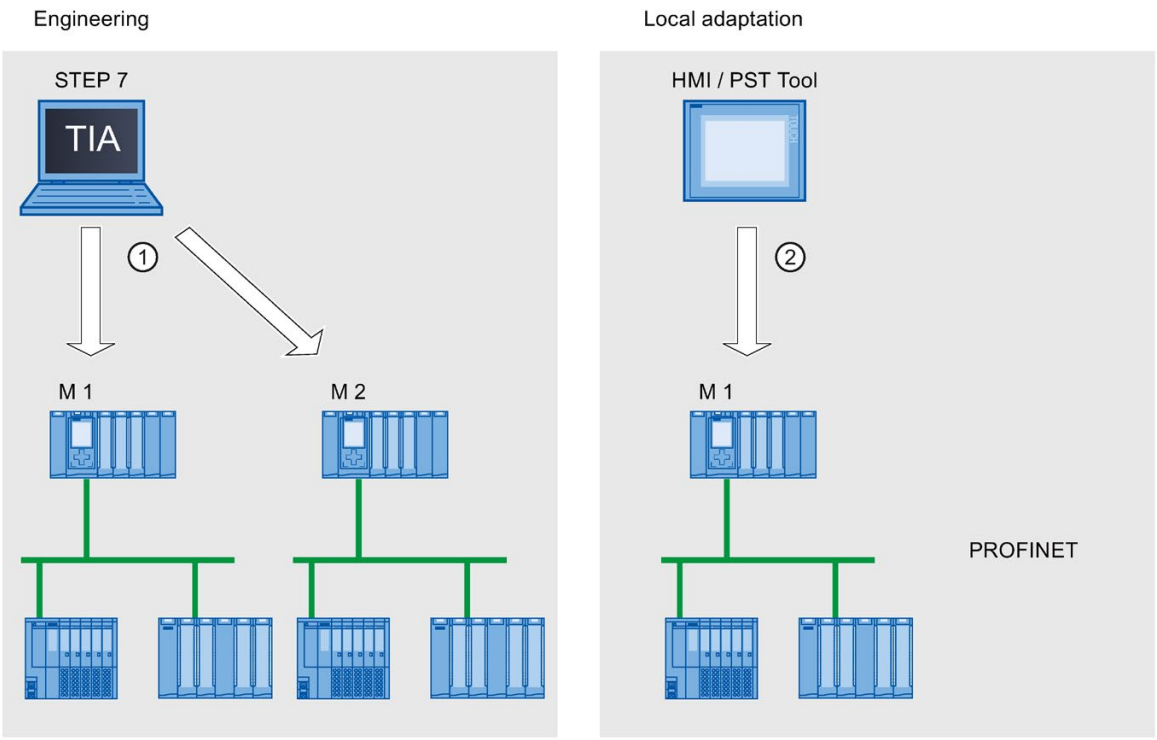

① Load configuration with multiple use IO system

② Set IP address and device name locally on the IO controller

Figure 5-75 "Multiple use IO system" principle

Principle

The automation components for a machine include a PROFINET IO system, consisting of an IO controller (PROFINET interface of a CPU) and the IO devices assigned to it.

With the "Multiple use IO system" setting for the IO system, you turn a STEP 7 project into a "Standard machine project".

The "Multiple use IO system" setting triggers various settings and checks of the configuration by STEP 7. The settings ensure that the IO system is self-contained and there are no dependencies on components outside the IO system.

Requirements

- STEP 7 as of V13
- The IO controller supports the "Multiple use IO system" function, for example a CPU 1512SP-1 PN as of firmware version 1.6.

Rules

The following rules apply to a multiple use IO system:

- No IO device can be configured as shared device.
- The ports of the devices must be interconnected.
  Devices for which no port interconnection is configured, for example, interface module IM 154-6 IWLAN (ET 200pro PN), cannot be operated with STEP 7 V13 as IO devices on a multiple use IO system.
- If an IO device in a multiple use IO system is an I-device (CPU as an "intelligent" IO device):
  - If the I-device has a lower-level IO system, this I-device cannot be connected to the same PROFINET interface as the higher-level IO controller.

    Note: If the I-device is configured using a PROFINET GSD, STEP 7 cannot check for compliance with this rule. In this case, you are responsible for ensuring compliance with the rule.

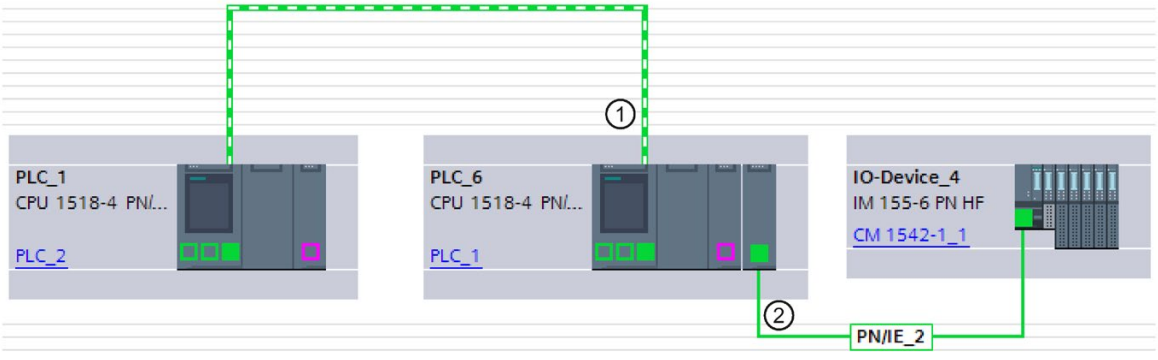

① I-device in multiple use IO system. The PROFINET interface is operated as IO device. No other IO system is connected here.

② A lower-level IO system on the I-device is connected to another PROFINET interface.

Figure 5-76 Example configuration for "Multiple use IO system" with I-device

  - The PROFINET interface of the I-device must be set to "Parameter assignment of PN interface by higher-level controller".
- If MRP (Media Redundancy Protocol) is configured:
  - All IO devices on the multiple use IO system must belong to the same MRP domain.
- If IRT (Isochronous Real Time) is configured:
  - All IO devices in multiple use IO systems must belong to the same sync domain.
  - The sync domain must not include any other IO devices.
- IE/PB Links cannot be operated as an IO device in a multiple use IO system with STEP 7 V13.

Configuration

You specify whether or not a configuration can be used multiple times in the properties of the IO system.

All other parameter settings for the configured devices are then set automatically by STEP 7 and checked during compilation.

Boundary conditions

To prevent a standard machine project from having dependencies on other devices outside of the machine, observe the following:

- A standard machine project consists of an IO controller and the corresponding IO devices. You should therefore configure only one CPU as IO controller and the corresponding IO devices in the standard machine project.
- Do not use connection configured at both ends for the communication. Instead, use only a connection configured at one end or unspecified connections if necessary.

  Background: To configure the communication in a STEP 7 project, it is always possible to set the IP address parameters in the project. For multiple use IO systems, however, this strategy is not possible since the IP address parameters of the IO controller and the assigned IO devices are assigned locally. At the time of the configuration, the IP address parameters are therefore unknown.

  If you nevertheless want to configure communication with devices on PROFINET, for example with a central coordinator, you can only use communications mechanisms that allow dynamic assignment of the IP address parameters in the user program.

  Example: Open User Communication

  If, for example, the device is configured as an active end point (initiator of the connection), the IP address parameters can be stored, for example, in a data block. You then supply the data block with the currently valid IP address parameters during commissioning. For this dynamic type of IP address parameter assignment, there is no system support; in other words, if you change the configuration of the system, the IP address parameters are not automatically adapted.

  You will find a description of handling instructions for Open User Communication under this keyword in the STEP 7 online help.

5.9.1.2 Configuring multiple use IO systems

Requirements

- STEP 7 as of V13
- The IO controller supports the "Multiple use IO system" function, for example a CPU 1512SP-1 PN as of firmware version 1.6.

Procedure

The configuration of a series machine using an S7-1500-CPU as an example is described below.

To create a standard machine project, follow these steps:

1. Create a project.
2. Configure a CPU as the IO controller, for example a CPU 1518-4 PN/DP as of firmware version 1.5.
3. Configure the required IO devices and assign the IO devices to the IO controller.
4. Configure the port interconnection between the devices.
5. Select the IO system so that you can edit the properties in the inspector window.
6. Select the "Multiple use IO system" check box in the "General" area of the inspector window.

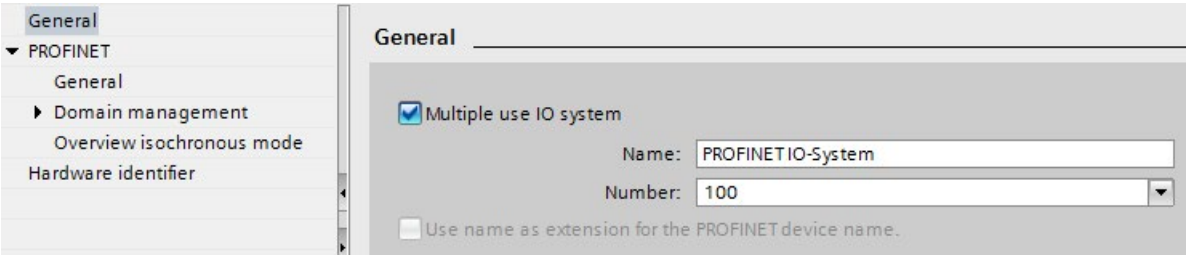

Figure 5-77 Activate "Multiple use IO system"

Result: The following settings are made by STEP 7:

- The device name of the IO controller (CPU) in the standard machine project is set to "PROFINET device name is set directly at the device". The IO controller (CPU) has no PROFINET device name initially.
- The IP protocol of the IO controller (CPU) is set to "IP address is set directly at the device". The CPU has no IP address initially.
- The "Support device replacement without exchangeable medium" option is selected automatically. This option enables automatic commissioning. A commissioning engineer does not have to assign device names to the IO devices locally. The IO controller assigns the device name and IP address to the IO devices based on the preset topology and other settings during startup.
- The device name of the IO devices is set to "Generate PROFINET device name automatically" (from the configured name of the IO device).

- The IP protocol of the IO devices is set to "IP address is set by the IO controller during runtime". The IO devices have no IP address initially. If an IO device is not a typical distributed I/O system (e.g., ET 200 systems), but rather another device such as an HMI device, change the option to "IP address is set directly at the device"; see below.
- The device number for the IO devices is automatically assigned and is used locally for making the IP address unique.

The option "Permit overwriting of PROFINET device name" must be selected (CPU parameters, properties of the PROFINET interface, Ethernet addresses area) so that the IO controller can adapt the device name later at the operator.

This option is disabled by default.

The following figure shows the above-described settings for the IP address and PROFINET device name.

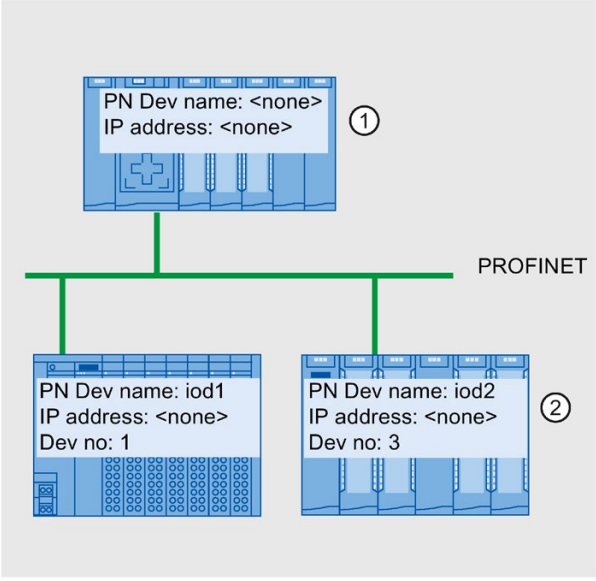

① After the configuration is loaded from the standard machine project, the IO controller has no device name and no IP address.

② Following loading, the IO devices have a device name and a device number but no IP address.

Figure 5-78 Settings for the IP address and the PROFINET device name

How an IO device obtains an IP address locally

Below, you will find an explanation of the "IP address is set by the IO controller during runtime" and "IP address is set directly at the device" options, which can generally be configured for a multiple use IO system.

If you have set the "Multiple use IO system" option for the IO system, STEP 7 automatically sets the "IP address is set by the IO controller during runtime" option for the IO devices.

In this case, the IO controller assigns the IO device an IP address that results from the locally assigned IP address of the IO controller (see next section). This option is appropriate if the IO device is a field device, e.g., ET 200MP, ET 200SP, ET 200AL, or another distributed I/O system.

If the IO device is not a "standard" field device, for example, an HMI device for a Windows operating system, the "IP address is set by the IO controller during runtime" option described above does not work. In this case, choose the "IP address is set directly at the device" option. You must then assign the IP address to the device locally and take steps to ensure that this address is suitable for the IP addresses of the other IO devices and the IP address of the IO controller.

5.9.1.3 Adapt multiple use IO systems locally

A few steps are needed to adapt the machine that was loaded with the standard machine project.

Only the device name and IP address of the IO controller must be adapted locally. The device names and IP addresses of the IO devices result from these adaptations. In this example, the effects of local settings are described for two specific machine modules.

The local settings are possible, for example, with the CPU display and commissioning tools such as Primary Setup Tool (PST) or PRONETA. You do not need a programming device with STEP 7 to make these settings, even though it is possible to do so.

Requirements

- The machine was loaded with a standard machine project (see Configuring multiple use IO systems (Page 234)).
- The display is ready for operation and the desired tool for assigning the IP address and device name is available (e.g., PST Tool, STEP 7).
- The ports of the IO controller and IO devices are interconnected according to the configuration.

Procedure

Observe the boundary conditions and instructions for commissioning an S7-1500. For more information on commissioning an S7-1500 CPU, refer to the system manual S7-1500, ET 200MP (http://support.automation.siemens.com/WW/view/en/59191792).

To adapt a standard machine locally, follow these steps:

1. Integrate the machine into the network.
2. Connect the device for assigning the IP address and device name to the CPU, for example a PG/PC with the appropriate software.
3. Assign the desired device name and IP address to the IO controller.
4. Start up the CPU.

The IO controller then assigns the adapted PROFINET device name and a unique IP address to the IO devices.

The following rules apply to the assignment:

- The device names of the IO devices are formed by chaining together the following name components, separated by a period:

  <configured name of the IO device from the standard machine project>.<name of the associated IO controller set on the device>

- The IP addresses of the IO devices result from the locally configured IP address of the associated IO controller and the device number (sum).

Note

Make sure that duplicate IP addresses cannot be created on the subnet during the assignment. The IO controller does not assign a new IP address in this case.

In the following figure, the device name "m1" and the IP address 192.168.1.10 have been assigned to the IO controller of the first machine.

The device name "m2" and the IP address 192.168.1.20 has been assigned for the second machine.

Refer to the figure for the resulting device names and IP addresses.

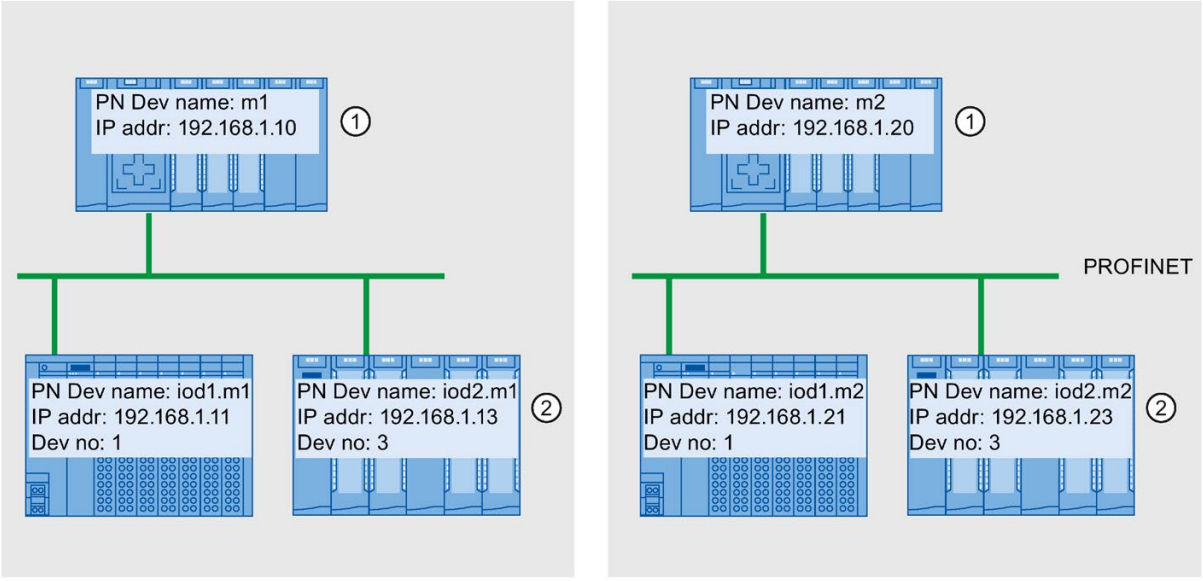

① Set device name and IP address on the IO controller

② After startup, the IO devices have an updated device name (<configured device name>.<device name of IO controller>) and an adapted IP address (= <IP address of IO controller> + <device number>)

Figure 5-79 Example of the assignment of IP addresses and device names at "Multiple use IO system"

See also

Configuring multiple use IO systems (Page 234)

5.9.2 Configuration control for IO systems

5.9.2.1 Information about configuration control of IO systems

Configuration control of IO systems makes it possible to generate several concrete versions of a standard machine from a standard machine project.

You are given the flexibility to vary the configuration of an IO system for a specific application as long as the real configuration can be derived from the set configuration. The configured configuration therefore represents the superset of all real configurations that can be derived from it.

The following figure shows an example of how two IO systems with a different number of IO devices arise from one standard machine project.

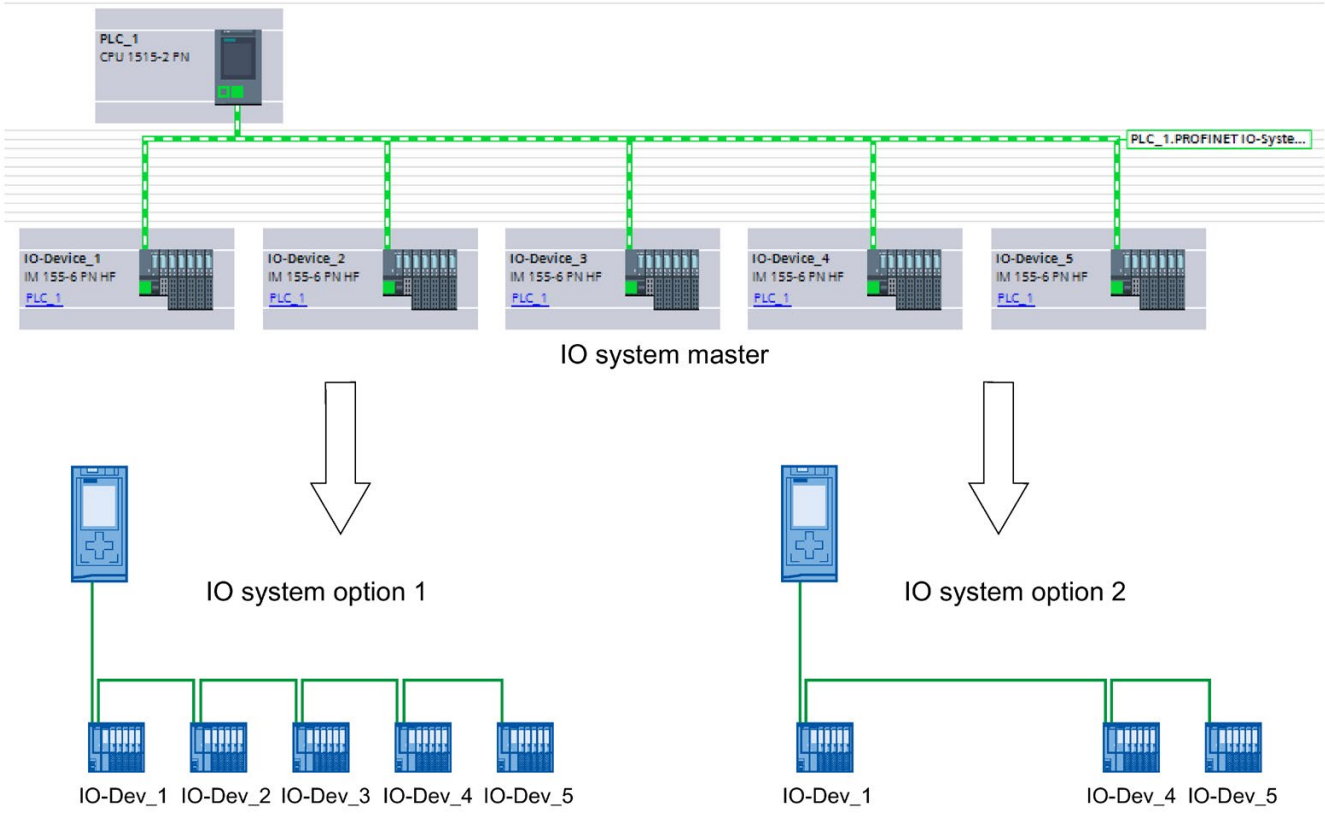

Figure 5-80 Example of configuration control for PROFINET IO systems

In the following sections, you find a description of how to configure and program a PROFINET IO system to commission, for example, a standard machine on-site without using configuration software.

Concept

The principle of configuration control is already known at the device level for the flexible use of submodules/modules ("option handling"). Different configurations can be derived from one engineering project both for central as well as for distributed I/O.

With S7-1500 CPUs as of firmware version V1.7, this principle can also be applied at the IO system level. You have the option of omitting, adding or changing the order of stations (IO devices) of a PROFINET IO system in a specific plant.

Configuration control for devices and configuration control for IO systems can be combined; the functions are independent of each other.

It is possible to operate variants deviating from a maximum configuration of an IO system. In a standard machine project, you can prepare a kit of IO devices which can be flexibly customized for various configurations using configuration control.

The following variations are available:

- Variation of the number of IO devices involved

  You include optional IO devices for the configuration control in the configuration by transferring a suitable data record with the required configuration in the user program.

- Variation of the order of IO devices involved

  You adapt the port interconnection of the IO devices to the topology being used by transferring a suitable data record with the required topology in the user program.

The following figure shows how you serve two different configurations with an IO device marked as optional in the network view of STEP 7.

- Configuration without the optional IO device:

  In this case, you use the instruction "ReconfigIOSystem" to transfer a data record to the PROFINET interface containing the information that no optional IO device is to be included in the configuration.

- Configuration with the optional IO device:

In this case, you use the instruction "ReconfigIOSystem" to transfer a data record to the PROFINET interface adding the optional IO device to the configuration.

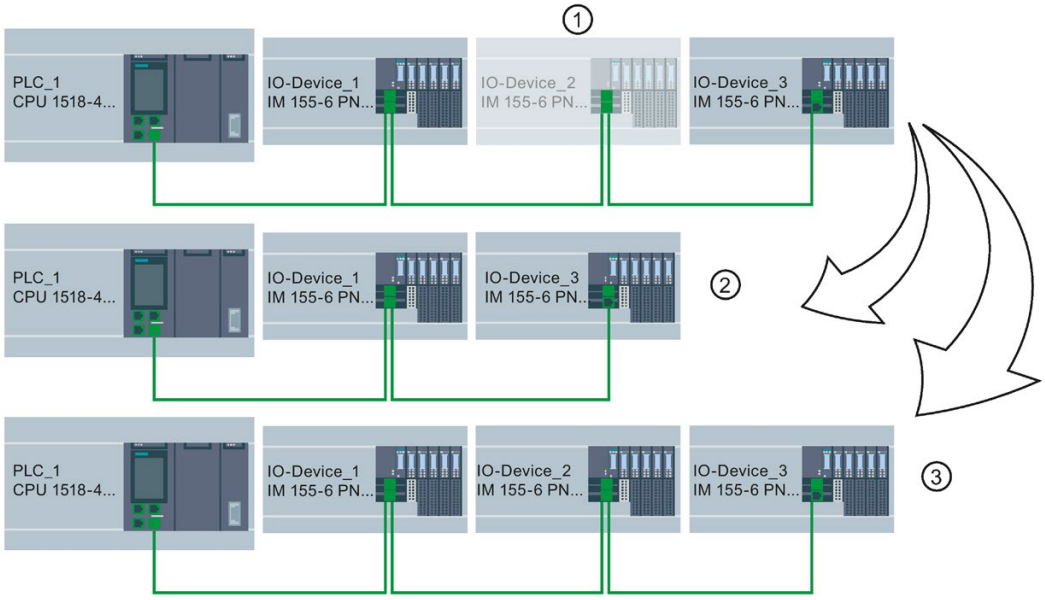

① Determined through parameter assignment: IO Device_2 is optional IO device

② Configuration without the optional IO device

③ Configuration with the optional IO device

Figure 5-81 Example configuration with "Optional IO device" and the associated configuration options

Summary: The procedure in principle

The following phases are distinguished when it comes to the implementation of a standard machine concept:

1. Engineering phase: Creating a standard machine project and loading into specific machine or plant:
   - Completely configuring all IO devices (options) ever required in a specific machine or plant
   - Configuring as optional those IO devices that will be omitted in specific machines or plants
   - Preparing user program (see Configuring flexible order of IO devices (Page 250)) with the possibility of selecting on-site the actually existing configuration via switch or HMI device
2. Commissioning phase: Preparing specific machine or plant for operation:
   - Integrating machine or plant in the on-site network (see Adapt multiple use IO systems locally (Page 236))
   - Selecting the currently existing configuration of the IO system via configured option

5.9.2.2 Configuring IO devices as optional

Requirements

- IO controller supports configuration control for IO systems, for example CPU 1516-3 PN/DP as of firmware version 1.7
- STEP 7 V13 SP1 or higher
- The rules (Page 256) for the establishment and operation of a standard machine project have been considered.

Port interconnection

As of STEP 7 V15.1, port interconnection is not necessary for optional IO devices.

A port interconnection between the devices of the IO system that you want to customize with the user program is mandatory in the following cases.

- You have configured IRT.
- You have configured MRP.
- You are using STEP 7 <= V15.

Procedure

To configure an IO device as optional IO device, proceed as follows:

1. Create a project.
2. Configure an S7-1500 CPU firmware version V1.7 or higher as IO controller.
3. Configure the required IO devices and assign the IO devices to the IO controller.
4. Select the IO device you want to mark as optional.
5. Select the area "PROFINET interface [X1]" > Advanced options".
6. Enable the "Optional IO device" option.

Figure 5-82 Configure the IO device as an optional IO device

7. Repeat steps 4 to 6 for all IO devices to be configured as optional.
8. Load the configuration onto the CPU.

Result: Once this configuration is loaded, the system behavior is as follows:

- The CPU is prepared for the configuration control of the IO system.
- All IO devices are disabled.
- Irrespective of whether you customize the configuration with the user program (adding optional IO devices) or make no changes to the loaded configuration: You must call the instruction "ReconfigIOSystem" in the user program and notify the current configuration to the system!

  The system will not be operational without calling the instruction "ReconfigIOSystem".

  For further information on the proceeding see Enabling optional IO devices in the program (Page 244).

Fast parameter assignment in the "IO communication" table

You can also specify whether or not an IO device is optional in the "IO communication" tab.

In an additional "Optional IO device" column, a selectable check box is available for each IO device that indicates whether or not an IO device is optional. Here, you can adjust the setting centrally.

5.9.2.3 Enabling optional IO devices in the program

Requirements

- IO controller supports configuration control for IO systems, for example CPU 1516-3 PN/DP as of firmware version 1.7
- STEP 7 V13 SP1 or higher
- At least one IO device was configured as optional IO device.
- The rules (Page 256) for the establishment and operation of a standard machine project have been considered.

Procedure

Observe the information on and rules for commissioning in the documentation for SIMATIC S7-1500, for the ET 200SP CPUs and for the CPU 1516pro-2 PN.

The following description of the proceeding only includes steps required to understand the program-controlled activation of an optional IO device.

To activate or deactivate IO devices, follow these steps:

1. Create a data record "CTRLREC" for the instruction "ReconfigIOSystem". You can find information on the structure of the data record in the STEP 7 online help.
2. Call the instruction "ReconfigIOSystem" and select MODE 1 to deactivate all IO devices.

   If you set the CPU to STOP or POWER OFF state in order to modify the plant in this status (for example to add an optional IO device), explicit deactivation using "ReconfigIOSystem" with mode 1 is not necessary. In this case, i.e. following a STOP-RUN transition and following a POWER-OFF > POWER-ON transition, all IO devices are deactivated automatically.
3. When you have brought the plant to a safe status that allows restructuring without any danger:

   Put the plant together according to your intended application. Add the required optional IO devices at the points at which you planned this in the configuration (observe the order!) or remove optional IO devices that you no longer require.
4. Network the IO devices.

5. Startup the S7-1500 system and call again the instruction "ReconfigIOSystem". Select MODE 2 to transfer the data record CTRLREC.
6. Following successful transfer of the data record, call again the instruction "ReconfigIOSystem". Select MODE 3 to activate all IO devices forming part of the current configuration.

   Result: The CPU **activates** the following IO devices:

   – All IO devices that you have not set as optional IO devices.
   – All optional IO devices listed in the control data record (CTRLREC).

   The following IO devices remain **disabled**:

   – Docking units (IO devices changing during operation).
   – Optional IO devices that are not listed in the control data record.

Note

Call the instruction "ReconfigIOSystem" for all values of the parameter MODE with the same control data record (CTRLREC)!

If you use different data records for the values of the MODE parameter, this results in an inconsistent customization of the configuration and thus to rather incomprehensible error messages.

Example: Data record structure for the activation of an IO device

The IO device "IO-Device_2" is to be activated as the only IO device in the user program.

To do this, you only require the hardware identifier of "IO-Device_2".

Recommendation: Use the system constants of the hardware identifiers instead of the absolute values as shown in this example. With this procedure, the content of the DB is not influenced by changes to the hardware identifiers as the result of changes to the configuration.

The data record is to be stored in a data block and to be transmitted to the PROFINET interface of the IO controller in the user program using the instruction "ReconfigIOSystem".

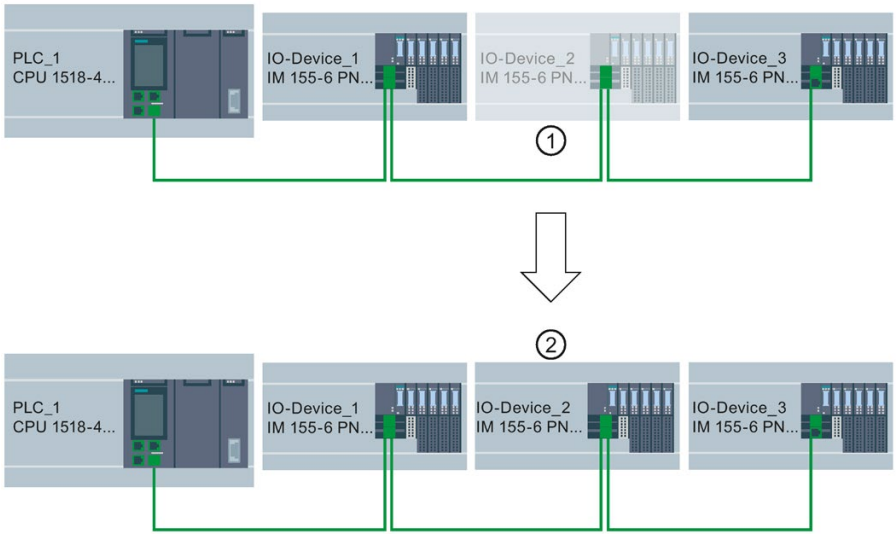

① IO device_2 is configured as optional IO device.

② Once the data record is transmitted and the configuration is activated using the instruction "ReconfigIOSystem" IO device_2 is included in the configuration and participates in the data exchange with the IO controller.

Figure 5-83 Example: Activating an optional IO device

Creating data block

In this example, the control data record is created in a data block. The data block is structured as follows:

Line 2: Array definition: Array of type Word with 4 elements. Array of Word is permitted as the data type.

Line 3: Version of the data record (currently: V1.0).

Line 4: Number of optional IO devices to be activated (here: 1).

Line 5: List of the hardware identifiers of the IO devices, inserted here as system constants.

Line 6: Number of port interconnections that are set in the user program (here: 0).

Line 7: Additional data records (optional)

myCTRLREC

	Name	Data type	Start value	Comment
1	Static			
2	ArrMachineConfig0	Array[0..3] of Word		Array for one optional IO device
3	ArrMachineConfig0[0]	Word	16#0100	
4	ArrMachineConfig0[1]	Word	16#0001	
5	ArrMachineConfig0[2]	Word	"IO-Device_2~IODevice"	
6	ArrMachineConfig0[3]	Word	16#0000	
7	ArrMachineConfig1	Array[0..8] of Word		

Figure 5-84 Data block with control records

Parameter MODE of instruction "ReconfigIOSystem"

You control how the "ReconfigIOSystem" instruction works with the MODE parameter.

The following values are possible for the MODE input parameter:

MODE	Description
1	All IO devices of the IO system can be disabled by calling the instruction with MODE 1. The "ReconfigIOSystem" instruction uses the "D_ACT_DP" instruction internally. "ReconfigIOSystem" returns errors that are detected by D_ACT_DP in the following output parameters: • STATUS (error code) • ERR_INFO (hardware identifier of the IO device causing the error). In STATUS and ERR_INFO, the CPU enters the last determined error/HW identifier and in so doing overwrites an existing error code. For this reason, additional errors can be present besides the entered error.
2	For controlling the actual configuration of the IO system, the instruction transfers the data record to the PROFINET interface, which is addressed with LADDR block parameter (HW identifier of the PROFINET interface).
3	All non-optional IO devices in the IO system and optional IO devices that are listed in the control data record CTRLREC are enabled. The optional IO devices that are **not** listed in the CTRLREC data record remain disabled. If IO devices that are part of docking units (alternating IO devices in operation) are listed in the CTRLREC control data record, the PN IO system reacts as follows: • IO devices of the docking units remain disabled when ReconfigIOSystem is called with MODE 3. This reaction corresponds to the reaction of a configuration without configuration-controlled IO devices. IO devices of docking units are disabled by default and must be enabled in the user program. For more information on docking units, refer to the section Docking systems (Page 260).

Rules for the call sequence of "ReconfigIOSystem"

- Always supply the instruction "ReconfigIOSystem" with the same control data record (CTRLREC input parameter)!
- Call sequence following POWER OFF -> POWER ON transition:
  - ReconfigIOSystem call with MODE 1 (optional).
  - ReconfigIOSystem call with MODE 2 (mandatory, even without previous reconfiguration!).
  - ReconfigIOSystem call with MODE 3 (mandatory).
- Call sequence following STOP > RUN transition:
  - ReconfigIOSystem call with MODE 1 (optional).
  - ReconfigIOSystem call with MODE 2 (mandatory, even when configuration was modified in STOP state). Otherwise not required).
  - ReconfigIOSystem call with MODE 3 (mandatory).
- Call sequence for reconfiguration in RUN state:
  - ReconfigIOSystem call with MODE 1 (mandatory).
  - ReconfigIOSystem call with MODE 2 (mandatory).
  - ReconfigIOSystem call with MODE 3 (mandatory).

Explanations and recommendations concerning the rules

- If you do not list an IO device to be configured as optional IO device in the control data record or data block resp. this IO device does not form part of the configuration and does not take part in data exchange with the CPU.
- If you do not activate any optional IO device at all and work with the loaded configuration without reconfiguration, you still have to follow the proceeding described in the above section and transmit the control data record to the CPU.

  The control data record has the simple structure with the following tags:
  - Version (High Byte =1, Low Byte = 0)
  - Number of optional devices to be activated = 0
  - Number of port interconnections that are set in the user program = 0
- Following a STOP > RUN transition and following a POWER-OFF > POWER-ON transition, all IO devices are deactivated automatically. For this reason, no ReconfigIOSystem call with MODE 1 is required for configuration control to function properly.

If you use your project as a universally valid sample for programming the configuration control, we still recommend to perform the ReconfigIOSystem call with MODE 1 prior to any reconfiguration. This way, the sample can also be used for reconfigurations in RUN mode.

- Commissioning extensive I/O systems (more than 8 optional IO devices) while using IRT at the same time:

  To keep the startup times short when activating the optional IO devices (ReconfigIOSystem, mode 3), note the following tip: Check the device numbers of the IO devices. The device numbers should follow the topological interconnection starting at the IO controller in ascending order. The further an IO device is from the IO controller topologically, in other words the more IO devices there are between the IO controller and the IO device in question, the higher the device number should be.

  You set the device numbers in the "Ethernet addresses - PROFINET" area in the Inspector window with the PROFINET interface selected.

  Example of the assignment of device numbers with a linear topology:

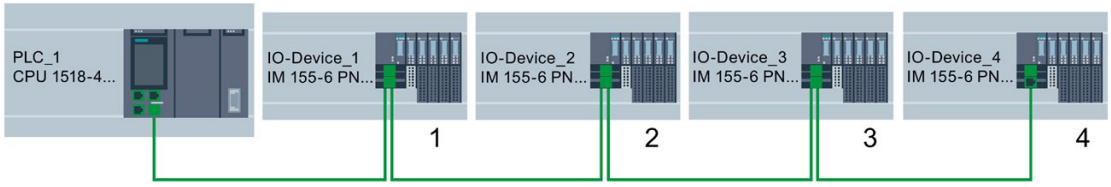

Figure 5-85 Example: Device numbers in a line topology

- The CPU processes the instruction "ReconfigIOSystem" to transfer the control data record asynchronously.

  For this reason, you must call "ReconfigIOSystem" in a loop repeatedly when calling the instruction in the startup program until the output parameter "BUSY" or "DONE" indicate that the data record has been transferred.

  Tip: To program the loop, use the SCL programming language with the instruction REPEAT ... UNTIL.

```
REPEAT
    "ReconfigIOSystem"(REQ := "start_config_ctrl",
                MODE := 1,
                LADDR := 64,
                CTRLREC := "myCTRLREC".ArrMachineConfig0,
                DONE => "conf_DONE",
                BUSY => "conf_BUSY",
                ERROR => "conf_ERROR",
                STATUS => "conf_STATUS");
UNTIL NOT "conf_BUSY"
END_REPEAT;
```

Additional information

For information on the basic structure of the data record and on using the instruction "ReconfigIOSystem" see the STEP 7 online help.

See also

Configuring IO devices as optional (Page 242)

5.9.2.4 Configuring flexible order of IO devices

The following section shows how you can create the conditions required to change the order of IO devices in a PROFINET IO system.

This function is also supported with optional IO devices. For simplicity, a maximum configuration without optional IO devices is shown below.

Concept

A typical application for a standard machine project consists of composing an entire plant from a set of various plant units which only differ with respect to the different arrangement of the units, e.g. in the case of transport systems. Each plant unit consists of a functional unit of mechanics (rails or conveyor belts) and electrics (power supply, IO device with IO modules, sensors, actuators, motors, PROFINET port for data exchange with central control ...).

The following figure shows how, simply by exchanging two rail segments, a new transport system is created that is adapted with an upstream points to the local conditions.

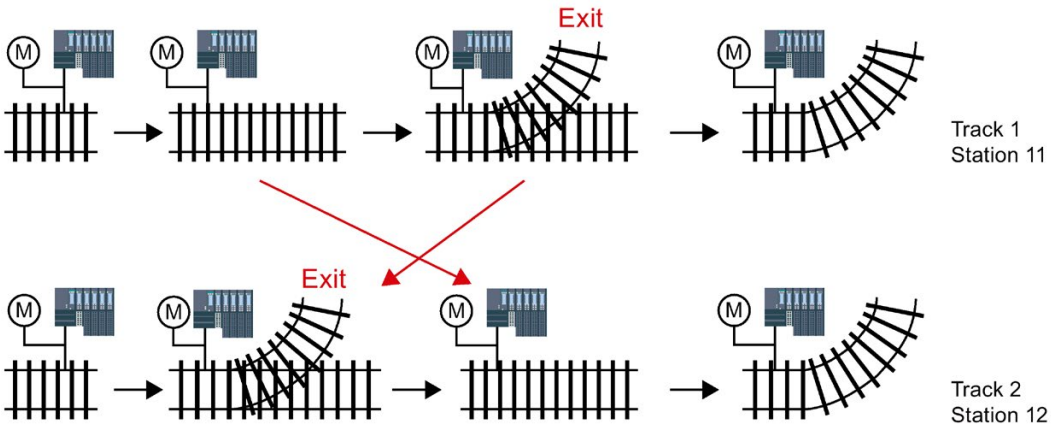

Figure 5-86 Example: Changing the arrangement of IO devices

From the automation viewpoint, no change in the project is required for the flexible adjustment of the PROFINET configuration.

The order of the IO devices is determined by the port interconnection. For each IO device, you define in the port properties the partner port and thus the neighboring device connected at the respective local port. If the partner port is to be defined by the user program, the option "Partner set by user program" is to be selected as partner port.

The figure below shows the initial configuration of the transport system shown above, which is to permit the order of the connected IO devices to be changed via the user program. In the example, the order of IO-Device_2 and IO-Device_3 is to be controlled via the user program.

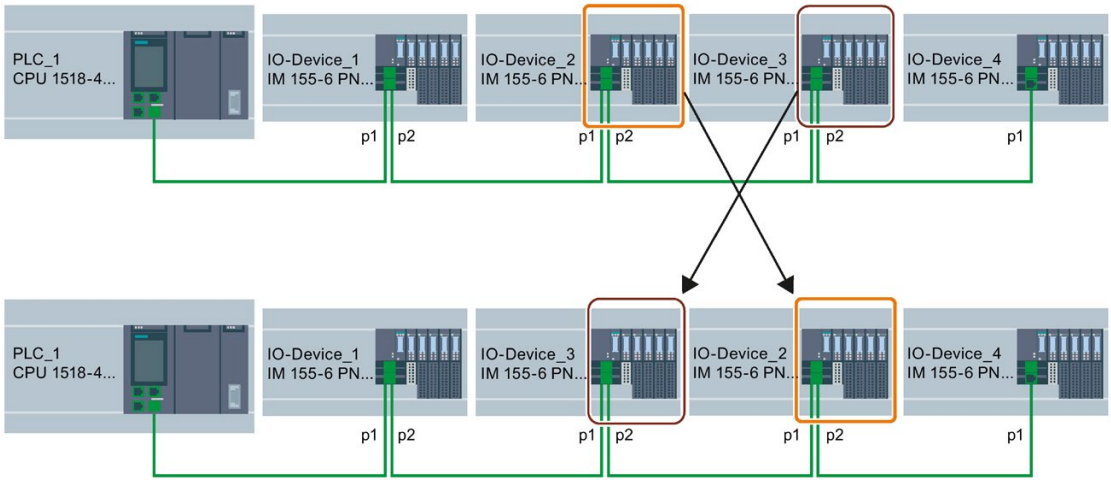

Figure 5-87 Example configuration: Configuring flexible order of IO devices

To determine how the partner port settings are to be selected, you must note for each device and each port of a device which partner can be interconnected.

- If the partner is always the same in the different configurations provided, you select the partner port for this partner.
- If the partners vary in the different configurations, you select "Setting partner by user program".

For the example in the figure above, the following port settings result:

Device	Local port	Partner port setting	Explanation
PLC_1	p1	p1 (IO device_1)	Partner of PLC_1 at port 1 is IO device_1 (always)
IO device_1	p1	p1 (PLC_1)	Partner of IO device_1 at port 1 is PLC_1 (always)
IO device_1	p2	Partner is set by user program	Partner of IO device_1 at port 2 is either IO device_2 or IO device_3 => Setting partner by user program
IO device_2	p1	Partner is set by user program	Partner of IO device_2 at port 1 is either IO device_1 or IO device_3 => Setting partner by user program
IO device_2	p2	Partner is set by user program	Partner of IO device_2 at port 2 is either IO device_3 or IO device_4 => Setting partner by user program

Device	Local port	Partner port setting	Explanation
IO device_3	p1	Partner is set by user program	Partner of IO device_3 at port 1 is either IO device_2 or IO device_1 => Setting partner by user program
IO device_3	p2	Partner is set by user program	Partner of IO device_3 at port 2 is either IO device_4 or IO device_2 => Setting partner by user program
IO device_4	p1	Partner is set by user program	Partner of IO device_4 at port 1 is either IO device_3 or IO device_2 => Setting partner by user program
IO device_4	p2	Any partner	No partner planned at port 2

Requirement

- IO controller supports configuration control for IO systems, for example CPU 1515-2 PN as of firmware version 1.7
- STEP 7 V13 SP1 or higher
- The rules (Page 256) for the establishment and operation of a standard machine project have been considered.

Procedure

To set the partner port for a program controlled interconnection, proceed as follows:

1. Select the PROFINET interface of the device (IO controller or IO device) whose port you want to set.
2. In the properties of the PROFINET interface, select the area "Port interconnection" (Extended options > Port [...] > Port interconnection).
3. From the drop-down list, select "Setting partner by user program" as partner port.
4. Repeat steps 1 to 3 for each port to be interconnected via the user program.

See also

Customizing arrangement of IO devices in the program (Page 253)

5.9.2.5 Customizing arrangement of IO devices in the program

Requirements

- IO controller supports configuration control for IO systems, for example CPU 1516pro-2 PN as of firmware version 1.7 as an IO controller
- STEP 7 V13 SP1
- At least one partner port was configured as "Partner set by user program".
- The rules (Page 256) for the establishment and operation of a standard machine project have been considered.

Procedure

The proceedings corresponds to the proceeding for activating optional IO devices.

Only the structure of the data record must be extended for the program-controlled assignment of the ports. The extension is described in the following sections.

Example: Data record structure for the assignment of partner ports

For the data record structure, you need the HW identifications of the ports.

The data record is to be stored in a data block and to be transmitted to the PROFINET interface of the IO controller in the user program using the instruction "ReconfigIOSystem".

As the input parameter RECORD of the instruction "ReconfigIOSystem" is of the VARIANT data type, you first have to create a data type for the data block.

In the following sections, you find a description of the structure of the PLC data type as well as of the structure of the data block based on this type.

Selecting derived configuration

For the following selected configuration it is shown below what the data record must look like so that the IO devices are interconnected in the planned order by the user program.

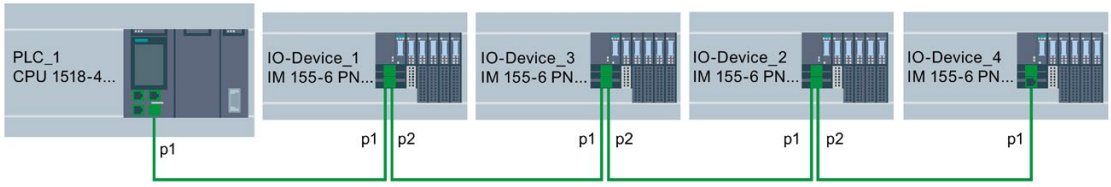

Figure 5-88 Example configuration: Customizing arrangement of IO devices in the user program

This example is based on the flexible configuration from the previous section (Page 250) with the settings for the respective partner ports described there.

The partner ports in the specific derived configuration have been defined so that it is possible to name the HW identifications of the ports involved.

The following table only contains those devices whose ports can be defined by the user program. Only these devices are relevant for the data record structure.

Device	Local port	Partner port setting	Partner port of the selected configuration
IO device_1	p2 = Port 2 HW identifier: 251	Partner is set by user program	Port 1 of IO device_3 HW identifier: 261
IO device_2	p1 = Port 1 HW identifier: 281	Partner is set by user program	Port 2 of IO device_3 HW identifier: 291
IO device_2	p2 = Port 2 HW identifier: 311	Partner is set by user program	Port 1 of IO device_4 HW identifier: 321

Creating data block

For the derived configuration, the structure of the data block "DB-IO-SYSTEM-Port-Interconnections" is explained as an example.

This data block is used when calling the instruction "ReconfigIOSystem" at input parameter "CTRLREC".

Instead of the absolute values for the hardware identifiers of the ports, the system constants of the hardware identifiers are used here.

The data block is structured as follows:

Line 2: Declaration of an Array of Word (only this data type is possible).

Line 3: Version of the control data record: V1.0.

Line 4: Number of optional IO devices: 0.

Line 5: Number of specified port interconnections: 3.

Line 6: Port interconnection 1, local port.

Line 7: Port interconnection 1, partner port.

Line 8: Port interconnection 2, local port.

Line 9: Port interconnection 2, partner port

Line 10: Port interconnection 3, local port.

Line 11: Port interconnection 3, partner port.

IO-SYSTEM-Port-Interconnections

	Name	Datentyp	Startwert	Kommentar
1	Static			
2	ArrMachineConfig	Array[0..8] of Word		data record for port interconn settings
3	ArrMachineConfig[0]	Word	16#0100	
4	ArrMachineConfig[1]	Word	16#0000	
5	ArrMachineConfig[2]	Word	16#0003	
6	ArrMachineConfig[3]	Word	"IO_device_1~PROFINET_interface~Port_2"	
7	ArrMachineConfig[4]	Word	"IO_device_3~PROFINET_interface~Port_1"	
8	ArrMachineConfig[5]	Word	"IO_device_2~PROFINET_interface~Port_1"	
9	ArrMachineConfig[6]	Word	"IO_device_3~PROFINET_interface~Port_2"	
10	ArrMachineConfig[7]	Word	"IO_device_2~PROFINET_interface~Port_2"	
11	ArrMachineConfig[8]	Word	"IO_device_4~PROFINET_interface~Port_1"	

Figure 5-89 Data block with data record for port interconnections

Interconnection not listed in data block

If the partner port was configured as "Setting partner by user program" in the port properties and this port is not listed in the data record or data block resp., then the CPU sets this port to the setting "any partner". If no data record is transmitted at all, the CPU sets this "any partner" setting for all program-controlled assignments.

Additional information

For information on the basic structure of the data record and on using the instruction "ReconfigIOSystem" see the STEP 7 online help.

5.9.2.6 System behavior and rules

Below, you find a description of how an IO system whose configuration is controlled by the user program behaves in operation.

In addition, rules and restrictions are listed here which must be considered when configuring the maximum structure of the configuration in a standard machine project.

System behavior

- System diagnostics:

  If an optional IO device is deactivated, the IO device is displayed as "deactivated" from the system diagnostics viewpoint (online view or Online & Diagnostics).

- Topology view:

  Offline view: As configured. No interconnection is shown for ports with partner ports configured as "Setting partner by user program".

  Online view: Ports and interconnections with deactivated IO devices are shown in a different shade of green as error-free ports and interconnections of activated IO devices.

- Representation in the Web server:

  The names of devices are shown as configured (Properties > General > Project information).

  The assigned PROFINET device name for the CPU is shown on the "Communication" website, at the "Parameter" tab.

  IP address parameters: Currently assigned IP address parameters are shown on the site "Module state".

  Topology: The current topology resulting from any customizations via user program is shown in the Web server. IO devices configured as optional are shown as "deactivated" IO devices in the Web server.

Rules

The rules for standard machine projects as described here (Page 230) apply.

For configuration-controlled IO systems, the following additional rules apply:

- When configuring MRP (Media Redundancy Protocol):

  The ports configured as ring ports must not be interlinked via user program.

  However, devices with ring ports (devices of an MRP domain) can be optional IO devices.

- When configuring docking stations (= IO devices changing during operation):

  Neither the docking station nor the first IO device of a docking unit may be optional IO devices.

  The ports of the docking units must not be interlinked via user program.

- When configuring IRT:

  The order of synchronized IO devices ("IRT devices") must be defined by the configuration and must not be changed in the different variants of a standard machine. For this reason, the ports of the IRT devices must not be interlinked via user program.

  However, you have the possibility to configure IRT devices primarily as optional IO devices.

  You also have the option to interconnect, by user program, RT devices that are, for example, separated from this line by a switchport (see figure).

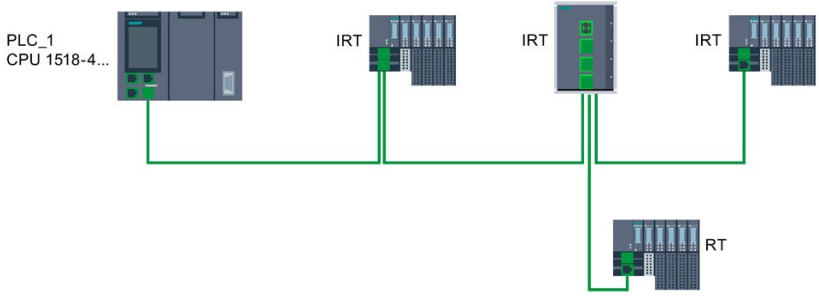

Figure 5-90 Example: Configuration control for IO systems with separated RT device

5.10 Saving energy with PROFIenergy

Saving energy with PROFIenergy

PROFIenergy is a PROFINET-based data interface for switching off consumers centrally and with full coordination during pause times regardless of the manufacturer or device type. Through this, the process should only be provided with the energy that is absolutely required. The majority of the energy is saved by the process; the PROFINET device itself only contributes a few watts of savings potential.

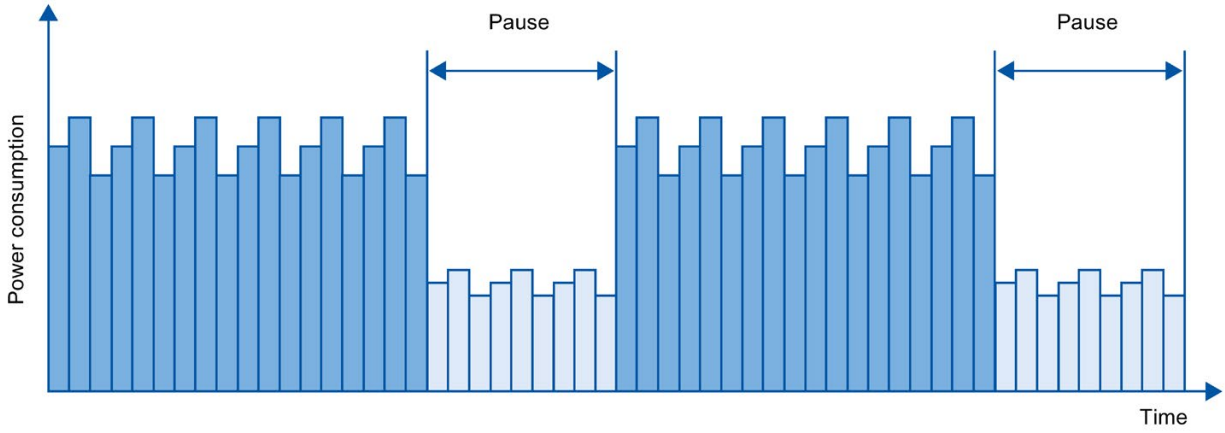

Figure 5-91 Energy savings during pauses with PROFIenergy

Basic information

In order to use the PROFIenergy functionality, the existing IO controller has to be "upgraded" to a so-called "PROFIenergy controller" by means of a function block in the PROFINET IO system and at least one PROFIenergy-capable IO device ("PROFIenergy device") has to exist. The PROFIenergy commands (for example to start or end a pause) are sent by the "PROFIenergy controller" to the individual "PROFIenergy devices". Each "PROFIenergy device" decides individually how it responds to the PROFIenergy command (response is device- and manufacturer-specific).

No additional hardware is needed; the PROFIenergy commands are directly interpreted by the PROFINET devices.

Principle of operation

At the beginning and end of pauses, the system manager enables or disables the pause function of the system; then the IO controller sends the PROFIenergy command "Start_Pause"/"End_Pause" to the PROFINET devices. The device interprets the contents of the PROFIenergy command and switches off or back on.

Through other PROFIenergy functions, device information can be accessed during pauses. The user can use this information in order to optimally time the transfer of the "Start_Pause"/"End_Pause" command.

PROFIenergy instructions for IO controllers

Two instructions are needed for controlling and monitoring the PROFIenergy functions.

The instruction PE_START_END allows you to easily activate and deactivate the idle state of PROFINET devices. This occurs by means of an incoming edge or outgoing edge. The instruction PE_START_END provides a simple interface for implementing the PROFIenergy commands Start_Pause and End_Pause.

The instruction PE_CMD allows you to transmit all PROFIenergy commands, including Start_Pause and End_Pause. The other commands can be used, for example, to query the current status of the PROFINET device or the behavior during the pauses. The instruction PE_CMD is a convenient means for handling all PROFIenergy functions.

PROFIenergy instruction for I-devices

The instruction PE_I_DEV allows you to also implement PROFIenergy on I-devices. The instruction receives PROFIenergy commands on the I-device and forwards these to the user program for execution. After executing the command, the user program calls the PE_I_DEV instruction again in order to send the acknowledgment to the IO controller. For these replies, each command offers you a helper instruction that supplies the reply data to the instruction.

The instructions can be found in the "Instructions" task card of the STEP 7 program editor.

Configuration and programming

The functions can be comfortably integrated into existing systems. No configuration is required for the use of PROFIenergy. However, amendments to the user program are required:

- Before the "Start_Pause" command, you must ensure that your system is brought into a condition that is suitable for a pause.
- A sequential control system for the beginning of the pause of the devices and for the punctual restarting of the device on break must be programmed (depending on the required startup times that the respective PROFINET device demands).
- The error messages of the PE_CMD instruction must be evaluated, and the required reaction must be programmed (for example, cancellation or continuation of further commands on lower-level PROFINET devices).

Note

In the case of the ET 200S distributed I/O system, you have to configure the application of PROFIenergy in STEP 7. You configure PROFIenergy by selecting the "Use energy saving for this potential group" check box in the PM-E DC24V/8A RO power module.

If you want to use PROFIenergy for an I-device, you have to configure this in STEP 7. Information about configuring PROFIenergy for an I-device is available in the section Configuring PROFIenergy with I-devices (Page 141).

Application examples

- SIMATIC S7 library for simple configuration of PROFIenergy.
  The application example is available here
  (https://support.industry.siemens.com/cs/ww/en/view/109478388).
- Application guide for implementation of shutdown concepts with PROFIenergy.
  The application example is available here
  (https://support.industry.siemens.com/cs/ww/en/view/96837137).
- Saving energy with SIMATIC S7 PROFIenergy with I-device
  The application example is available here
  (https://support.industry.siemens.com/cs/ww/en/view/41986454).

5.11 Docking systems

Using alternating IO devices ("alternating partners") during operation in a docking station

The following figure shows an automation cell with a docking station and several docking units.

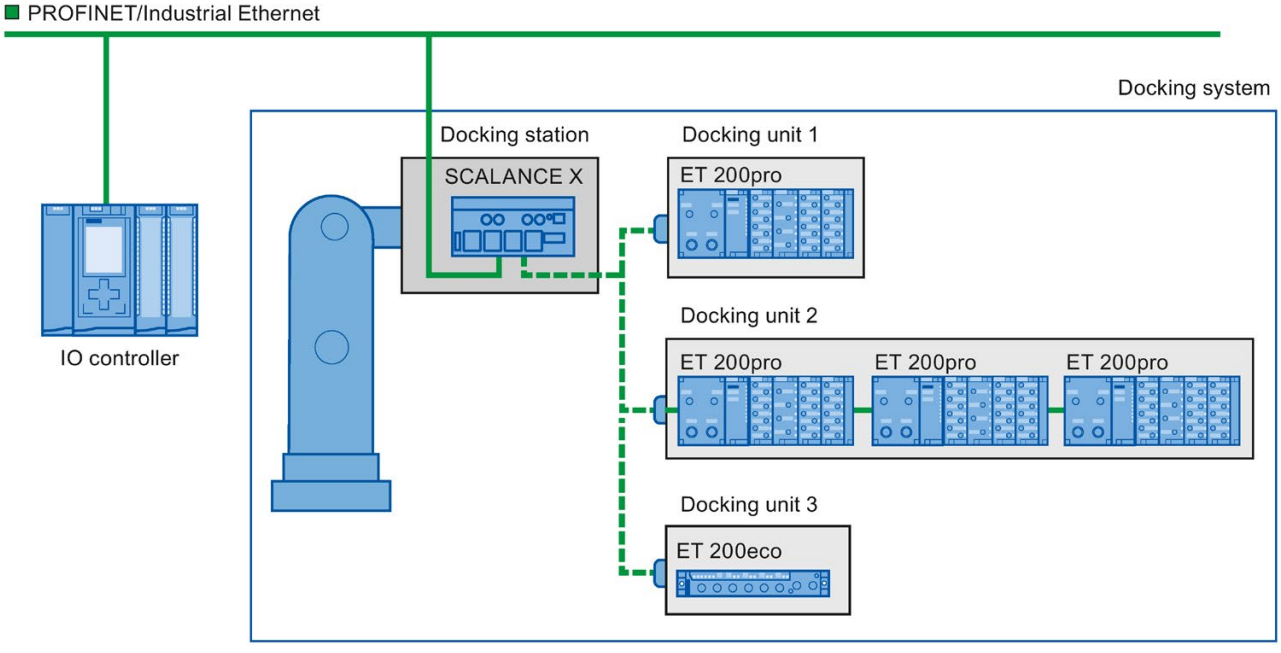

Figure 5-92 Alternating IO devices (partner ports) in a docking system

Area of application for alternating IO devices during operation

You can use the PROFINET function "Alternating IO devices during operation" ("alternating partners"), for the tool changeover for robots, for example. Typical tools include:

- Welding guns
- Positioning tools for manufacturing parts

Requirements for interconnecting alternating partner ports during operation

You can interconnect IO devices with alternating partner ports during operation in the following situations:

- The alternating IO device (docking unit) has no IRT communication configured.
- The PROFINET interface is connected to the Ethernet subnet.
- The PROFINET devices support topology configuration.
- The IO controller, the alternating IO devices (docking unit) and the switch (docking station) on which the alternating IO devices are to be operated support this feature.

Note

Unique IP address

Each docking unit of a docking system must be configured with a unique IP address in a shared project and operated on the same IO controller as all other docking units of the system.

Applicative conditions

The following points should be observed when implementing a docking system with alternating IO devices during operation:

- The IO devices of all docking units must be deactivated by default in the configuration.
- At any time, only one docking unit can be active, i.e., only the IO devices of one docking unit can be activated. All IO devices of other docking units must be deactivated or become deactivated before the IO devices of a docking unit can be activated. You activate an IO device with the "D_ACT_DP" instruction.
- A physical connection to this docking unit and its IO devices must be created in order to activate a docking unit. The IO devices are then switched on (power on). At the same time, all the IO devices of this docking unit must be activated in the user program with the "D_ACT_DP" instruction.

Note

Automatic deactivation in "Startup" mode of the CPU

If the CPU is in "Startup" mode, IO devices of a docking system that alternate during operation are deactivated automatically.

- After the feedback "IO device activated", you can access the IO device by means of direct I/O access.
- Call the "D_ACT_DP" instruction to activate and deactivate the IO device as close as possible to the start of the OB 1 cycle.

Note

Number of alternating IO devices during operation ("alternating partner port") - number of docking units

If you wish to achieve the shortest possible tool changeover times, you must observe the following points that are dependent on the CPU or the CP that is being used:

- Only those IO devices that have been configured with the PROFINET function "Prioritized startup" can start up in an optimized fashion. The number of IO devices with configuration for this PROFINET function is restricted.
- Only a limited number of IO devices can be activated at the same time. This number depends on the available "D_ACT_DP" resources. A docking unit should not contain more than the corresponding number of IO devices. If more IO devices are operated in a docking unit, the IO devices must be activated one after the other, which takes correspondingly longer.

Example: An S7-CPU 1516-3 PN/DP can operate a maximum of 32 IO devices with prioritized startup and can simultaneously activate 8 IO devices by means of "D_ACT_DP".

Therefore, for a scheduled optimum use, a docking unit should include no more than 8 IO devices and no more than 32 IO devices should be used in all the alternating docking units.

5.11.1 Configuring docking systems

Configuring docking systems

The possible connections to the individual IO devices must be configured in STEP 7.

Procedure in STEP 7

1. Configure your system as usual, but do not yet configure the topological interconnections of the individual PROFINET devices.
2. Navigate to the "Topology view" tab.
3. Select the port which you want to operate with alternating partners during operation.
4. Navigate to the "Properties" tab of the inspector window and select "Port interconnection" in the area navigation.
5. Under "Partner port", select the "Alternative partners" option.
6. Select the desired partner ports: To do this, click "<Add alternative partners... and choose a partner port. Repeat this process until all required partner ports are connected.

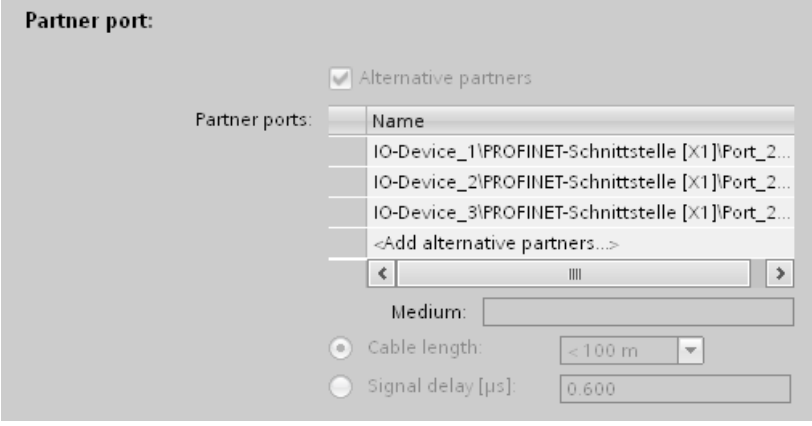

Figure 5-93 Configuring docking systems in STEP 7

Tip: You can also use drag-and-drop operation to connect alternative partner ports in the topology view.

Result

You have interconnected the respective port with one or more alternating IO devices. The connections with the individual alternating partner ports during operation are shown in the topology view by a green, dashed line.

Multiple IO devices as a docking unit ("Alternating partner port")

A docking unit may also consist of several IO devices connected in series. If you use IO devices connected in series as a docking unit, ensure that the topology of the IO devices is configured. A docking unit consisting of two IO devices connected in series (Tool_3_1 and Tool_3_2) is shown at the bottom right in the figure below.

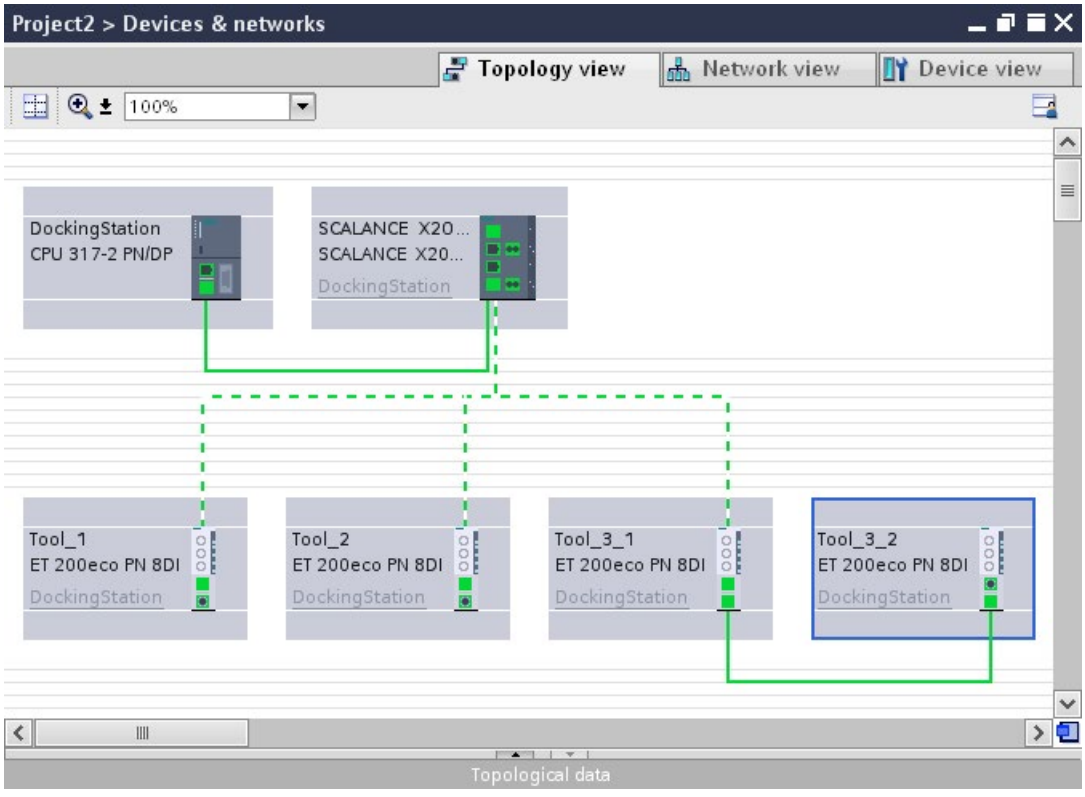

Figure 5-94 Docking system in the topology view of STEP 7

Restriction in the interconnection

The interconnection with a partner port is not possible in the following cases:

- The partner port does not have a suitable type of cable. In this case, a media convertor from the catalog must be inserted.
- The partner port is blocked (deactivated).
- The two ports that are to be interconnected belong to the same interface (it is only possible to interconnect the ports from different interfaces in a station).
- The two ports that are to be interconnected belong to different Ethernet subnets.

Deleting interconnections

Select the port of the alternating partner and remove the interconnection with the "Remove" button.

5.12 Accelerating startup

5.12.1 Options for accelerating the startup of IO devices

Reducing the startup time of IO devices

The time needed for the startup of IO devices depends on various factors and can be reduced in different ways.

You can achieve a significant reduction in the startup time using the "Prioritized startup" PROFINET function.

To further reduce the startup times, use the following measures in addition to the "Prioritized startup":

- Optimize the port settings
- Optimize the cabling of the ports
- Perform measures in the user program (for docking systems only)

These measures will accelerate the startup of IO devices even without "Prioritized startup". However, you can only achieve the fastest startup times of about 500 ms by combining all the measures with "Prioritized startup".

Note

Startup time up to 8 s

In the following situation, despite prioritized startup, a startup time of up to 8 s may occur:

On a docking point, multiple physical IO devices dock as an IO device with identical device names and identical IP configurations (for example, docking point for automatic transport system).

Dependencies

The length of the startup time for an IO device (distributed I/O) with the "Prioritized startup" PROFINET function depends on the following factors:

- IO devices (distributed I/O)
- IO structure of the IO device (distributed I/O)
- Modules of the IO device (distributed I/O)
- IO controller
- Switch
- Port setting
- Cabling
- Configured RT class of the IO device

Note

Startup time and RT class of the IO device

An IO device with IRT communication requires longer than an IO device with RT communication for the accelerated startup.

The longer startup for IRT is due to the necessity of synchronizing the IO device before the communication can be set up.

Note

IWLAN and prioritized startup

PROFINET devices which are connected via access points to PROFINET IO do not support the "Prioritized startup" PROFINET function.

5.12.2 Prioritized startup

Definition

Prioritized startup refers to the PROFINET function for accelerating the startup of IO devices in a PROFINET IO system with RT communication. It shortens the time that the respective configured IO devices require in order to reach the cyclic user data exchange in the following cases:

- After the power supply has returned
- After a station has returned
- After activation of IO devices

WARNING

Data exchange despite multiple use IP addresses/device names in PROFINET IO system

To achieve higher ramp-up times, the IO controller checks the uniqueness of device name of IP address parallel to the device ramp-up. In the case of incorrect or double assignment of device name or IP address, a short-time data exchange is possible until the IO controller reacts to the error. In this time the IO controller can exchange IO data with the false device.

During commissioning, ensure that no IP addresses / device names are assigned multiple times in the PROFINET IO system.

Advantages

The PROFINET functionality "prioritized startup" enables PROFINET IO applications in which machine parts or tools and their IO devices have been permanently replaced. Waiting times of several seconds between the scheduled processes of the restart are reduced to a minimum by this optimization. This accelerates the production process with alternating IO devices (PROFINET functionality "docking systems"), e.g. in tool changer applications, and enables a greater throughput in production.

The PROFINET functionality "prioritized startup" also offers a considerable increase in performance for applications where a quick startup time of the IO devices after "power on" or after station failure / station return is required, or when activating IO devices.

Area of application

You can use prioritized startup, for example, for changing tools for robots in the automotive industry. Typical tools are, for example:

- Welding guns
- Positioning tools for the manufacture of car body parts

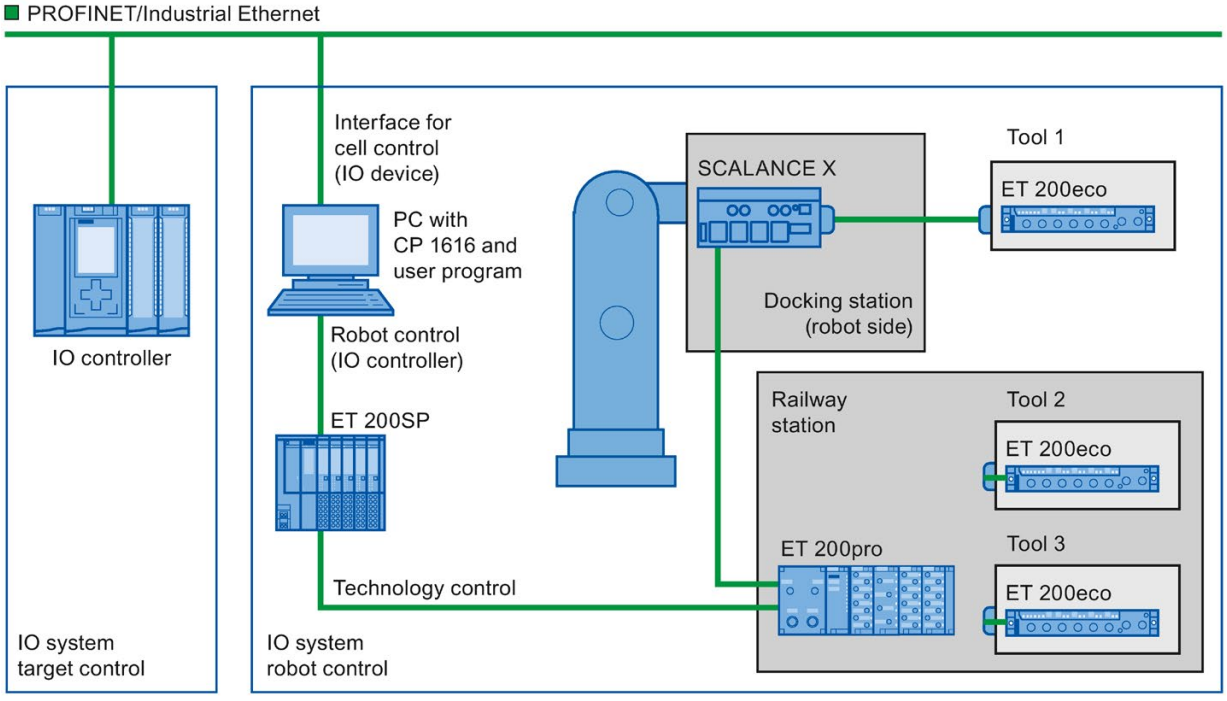

Figure 5-95 Example configuration of a tool changer: Tools 1-3 configured with "Prioritized startup".

5.12.3 Configuring prioritized startup

Requirements

You can enable the "Prioritized startup" PROFINET function for the IO devices (distributed I/O) only in the following cases:

- The IO controller used can prioritize selected IO devices during startup.
- The IO device used supports prioritization.

Procedure

1. Select the IO device in the network view or device view for which you wish to accelerate startup.
2. Open the IO device properties in the Inspector window.
3. Select "PROFINET interface > Advanced options > Interface options".
4. Select the "Prioritized startup" check box.

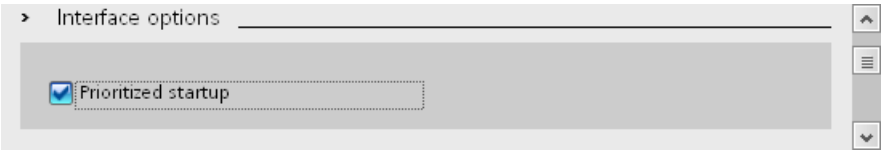

Figure 5-96 Configuring prioritized startup in STEP 7

5. Download the configuration to the IO controller.

Note

Prioritized startup after a startup for the first time

A prioritized startup of the IO device is always available to you after the first configuration of this IO device in the very first startup of the PROFINET IO system. Even in the case of spare parts or a reset to factory settings, the first startup is a standard startup for the respective configured IO devices.

Note

Number of IO devices (distributed I/O) with prioritized startup

You can only start up a maximum number of IO devices with the "Prioritized startup" PROFINET functionality within one PROFINET IO system. This maximum number depends on the IO controller used.

5.12.4 Optimize the port settings

Optimizing port settings on the IO device and IO controller

The transfer medium and the duplex option are checked during startup of the IO device in the case of copper cabling.

These checks require time, but with specific presets of these options you can save the time the check requires. Make certain that the settings made correspond to the actual conditions (using the correct cables).

Optimizing port settings for accelerated startup

To optimize port settings for accelerated startup, follow these steps:

1. Select the ports of the IO controller or the partner port of the corresponding IO device.
2. Navigate to "Port options > Connection" in the Inspector window. Select the setting "TP 100 Mbps full duplex" under "Transmission rate/duplex"
3. Clear the "Enable autonegotiation" check box.

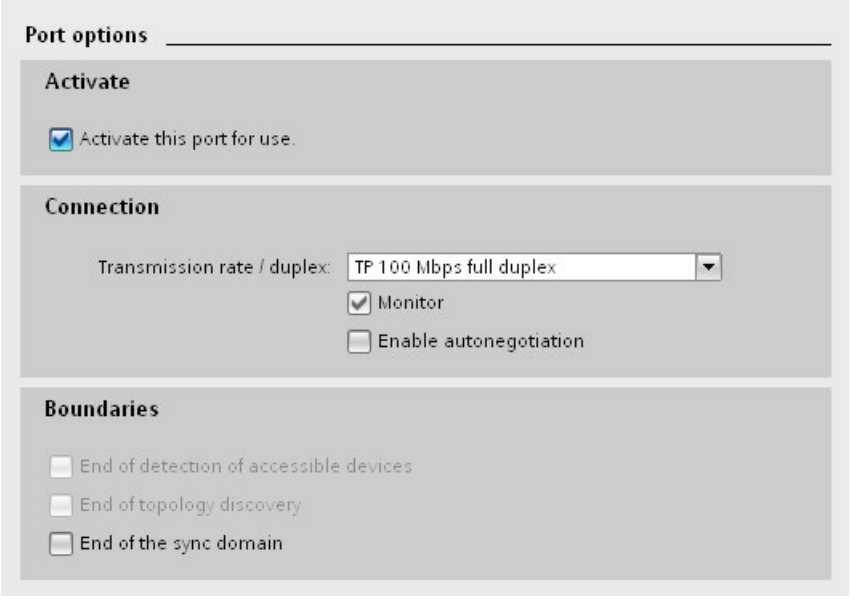

Figure 5-97 Optimizing port settings for accelerated startup in STEP 7

These settings are automatically applied during topology configuration for the partner port.

5.12.5 Optimize the cabling of the ports

Requirements

You have made the following settings for the port in question to reduce the startup time of the IO device:

- Fixed transmission rate
- Autonegotiation deactivated

The time for negotiating the transmission rate during startup is saved.

If you have disabled autonegotiation, you must observe the cabling rules.

Properties of ports

PROFINET devices have the following two types of ports:

Type of port	PROFINET devices
Switch port with crossed pin assignment	For IO devices: Port 2 For S7-CPUs with two ports: Ports 1 and 2
Terminal device port with normal pin assignment	For IO devices: Port 1 For S7-CPUs with one port: Port 1

Crossed pin assignment means that the pin assignment for the ports for sending and receiving between the respective PROFINET devices is inverted internally.

Validity of the cabling rules

The cabling rules described in the following paragraph apply exclusively for the situation in which you have specified a fixed port setting in STEP 7.

Rules for cabling

You can connect several IO devices in series using patch cables. To do this, connect port 2 of the IO device (distributed I/O) with port 1 of the next IO device. The following graphic provides an example with two IO devices.

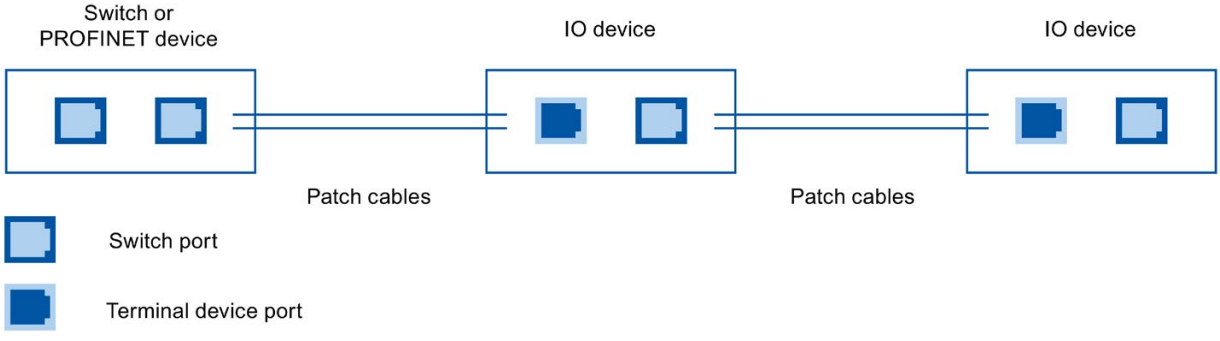

Figure 5-98 Optimized cabling for accelerated startup

5.12.6 Measures in the user program

Introduction

You can make certain changes in the user program to accelerate the startup for IO devices of docking systems that alternate during operation.

Making the required changes to the user program

To accelerate the startup by making changes to the user program, follow these steps:

1. Call the "D_ACT_DP" instruction to activate and deactivate the IO device at the start of the OB 1 cycle.

   If the IO device is replaced, the device that is no longer required must be deactivated and the new device must be activated.

2. If you control the "Power ON" command of the IO devices via the application, then start the activation of the IO devices via the corresponding call of the "D_ACT_DP" instruction as near to the same time as possible. The IO device has to be physically connected for this.

3. You access the IO device using direct access commands after the "D_ACT_DP" instruction has provided the feedback "IO device activated".

PROFINET with the redundant S7-1500R/H system 6

Introduction

The same basic rules apply to PROFINET IO communication with the redundant S7-1500R/H as with the S7-1500 automation system. The redundant S7-1500R/H system exchanges IO data cyclically with the IO devices.

When configuring PROFINET with the redundant S7-1500R/H system, you must observe a few specifics, e.g. special configuration requirements.

The redundant S7-1500R/H system supports a limited scope of PROFINET functions.

Limitations

- Real-time communication:
  - RT with a fixed send clock of 1 ms
  - No IRT
  - No MRPD redundancy method
  - No PROFINET with performance upgrade
- No isochronous mode
- No operation as I-device
- No access to shared devices
- No support of docking systems
- No support of series machine projects
- Port options (only for PROFINET interface X1):
  - No port disabling possible
  - No configuring of boundaries possible
- Functionality as IO controller:
  - No prioritized startup
  - No enabling/disabling of IO devices
  - No support of series machine projects
  - No nested IO systems (e.g. via IE/PB Link)

- PROFINET interface X2 does not support IO functionality.
- No diagnostics using the web server
- No support of the following OBs:
  - OB 55 "Status interrupt OB"
  - OB 56 "Update interrupt OB"
  - OB 57 "OB for vendor or profile-specific interrupt"

6.1 Configuring PROFINET IO on a redundant S7-1500R/H system

Introduction

The redundant S7-1500R/H system uses media redundancy (MRP) in the PROFINET ring. The IO devices must support system redundancy S2 for operation in a redundant S7-1500R/H system.

Media redundancy in the redundant S7-1500R/H system

The two CPUs of the redundant system must be located in a PROFINET ring that uses the media redundancy method MRP. All PROFINET devices in the PROFINET ring are connected to the S7-1500R/H in a media-redundant manner. If the PROFINET ring is interrupted, reconfiguration may occur. After a short reconfiguration time, the PROFINET devices can be accessed again via an alternative path.

H-Sync Forwarding

H-Sync Forwarding enables a PROFINET device with MRP to forward synchronization data (synchronization frames) only within the PROFINET ring.

Through H-Sync Forwarding, the synchronization data is also forwarded during reconfiguration of the PROFINET ring. This reduces the cycle time or makes the CPU switchover time less dependent on the re-configuration time of the PROFINET ring.

H-Sync Forwarding is not relevant for redundant S7-1500H systems.

H-Sync Forwarding is recommended for PROFINET devices that you use in the PROFINET ring of redundant S7-1500R systems.

Note

If you use PROFINET devices that do not support H-Sync Forwarding in S7-1500R, additional cycle time increases may occur in system state RUN-Redundant. If the cyclic program exceeds the cycle monitoring time, the timeout OB (OB 80) may be started.

System redundancy S2

An IO device with system redundancy S2 supports system redundancy ARs. The system redundancy ARs can be present in duplicate (redundantly). Thus, an IO device supports ARs of 2 IO controllers simultaneously (with respect to the same modules).

A system redundancy AR can be either a primary AR or a backup AR. There can be only one primary AR at a time for an IO device. The other AR, if present, must be a backup AR. An IO device activates the data of the primary AR at the outputs. The data of the backup AR is only saved.

- Behavior in system state RUN-Redundant:

  Both CPUs are IO controllers. The PROFINET communication runs simultaneously on both system redundancy ARs, in each case between one of the CPUs (IO controllers) and the IO device. If the primary CPU now fails, the backup CPU becomes the primary CPU and, at the same time, the backup AR changes over to primary AR. The data of this AR becomes active at the outputs.

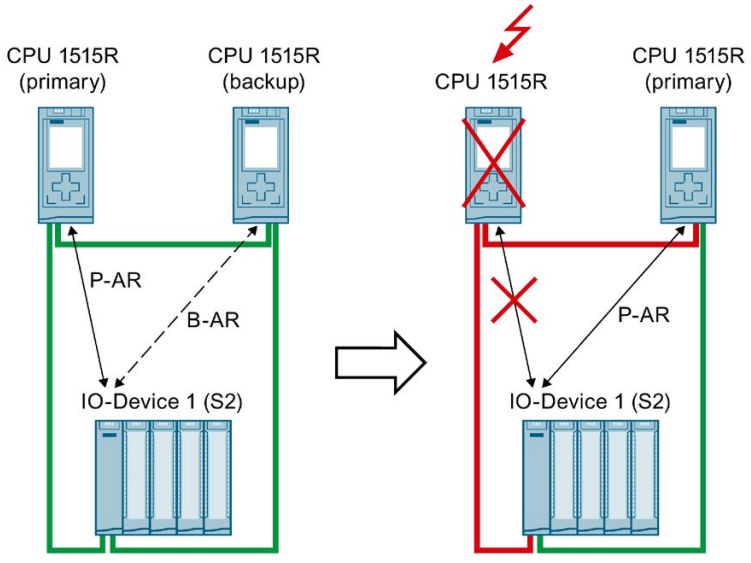

Figure 6-1 Behavior of IO device with system redundancy S2 in system state RUN-Redundant and following failure of the primary CPU

- Behavior in system state RUN-Solo:

  Only the primary CPU is an IO controller. The PROFINET communication runs on the primary AR between the primary CPU (IO controller) and the IO device. There is no AR between the backup CPU and the IO device.

You configure system redundancy S2 for an IO device in STEP 7 by assigning the IO device to both CPUs of the redundant S7-1500R/H system.

Configuration requirements for a ring topology with the redundant S7-1500R system

- The two CPUs have the media redundancy role "Manager (auto)".
- All other devices in the PROFINET ring have the media redundancy role "Client".
- All IO devices that are assigned to the redundant S7-1500R/H system support system redundancy S2.
- No other redundant S7-1500R/H system is present in the PROFINET ring.
- Port interconnection:
  - The two CPUs are directly interconnected via one of the two ports of PROFINET interface X1. No other devices of the ring are located in between.
  - The two CPUs can be indirectly interconnected via the other two ports. The other devices of the ring are located in between. See the examples below.
- Max. number of IO devices: 64
- Number of PROFINET devices (switches, S7-1500R/H CPUs, S7-1500 CPUs (V2.6 or higher) and HMI devices) in the PROFINET ring:
  - max. 50 (recommendation: max. 16)

Note

Recommendation: The number of devices in the PROFINET ring influences the availability of the S7-1500R system. For this reason, operate a maximum of 16 PROFINET devices (including R-CPUs) in the PROFINET ring. If you operate significantly more devices in the PROFINET ring, the availability of the IO devices and R-CPUs is reduced. The technical specifications in the documentation relate to the case in which the maximum recommended number of 16 PROFINET devices are operated in the ring in S7-1500R

Configuration requirements for a ring topology with the redundant S7-1500H system

- The two CPUs have the media redundancy role "Manager (auto)".
- All other devices in the PROFINET ring have the media redundancy role "Client".
- All IO devices that are assigned to the redundant S7-1500R/H system support system redundancy S2.
- No other redundant S7-1500R/H system is present in the PROFINET ring.

PROFINET IO configurations with the redundant S7-1500R/H system

The following figures show you examples of PROFINET IO configurations with the redundant S7-1500R/H system.

All the figures use the following abbreviations for ARs:

- SR-AR: System redundancy AR between an IO device (S2) and one of the CPUs of the redundant S7-1500R/H system
- AR: "normal" AR between an IO device (S1) and the associated IO controller

All configurations use the CPU 1515R as an example. The PROFINET configurations shown also work with the CPU 1513R and CPU 1517H.

IO devices with system redundancy S2 in the PROFINET ring

The redundant S7-1500R system consists of the two CPUs 1515R and two IO devices in the PROFINET ring. The two IO devices are connected in a system-redundant and media-redundant manner.

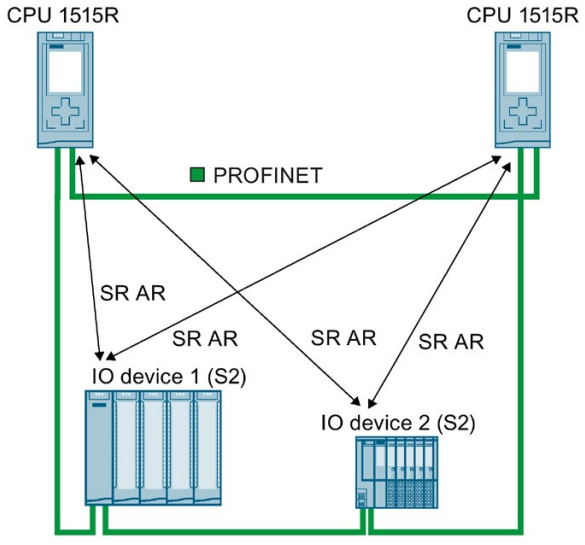

Figure 6-2 Example of a redundant S7-1500R system with two IO devices in the PROFINET ring

PROFINET devices downstream of a switch

To connect additional PROFINET devices to the PROFINET ring, use a switch. For the redundant S7-1500R system, ensure that a switch in the PROFINET ring supports MRP.

You connect the following devices to the PROFINET ring with a switch.

- IO devices with system redundancy S2
- PROFINET devices without system redundancy S2, e.g. HMI devices

The following figure shows a redundant S7-1500R system with connected PROFINET devices downstream of a switch.

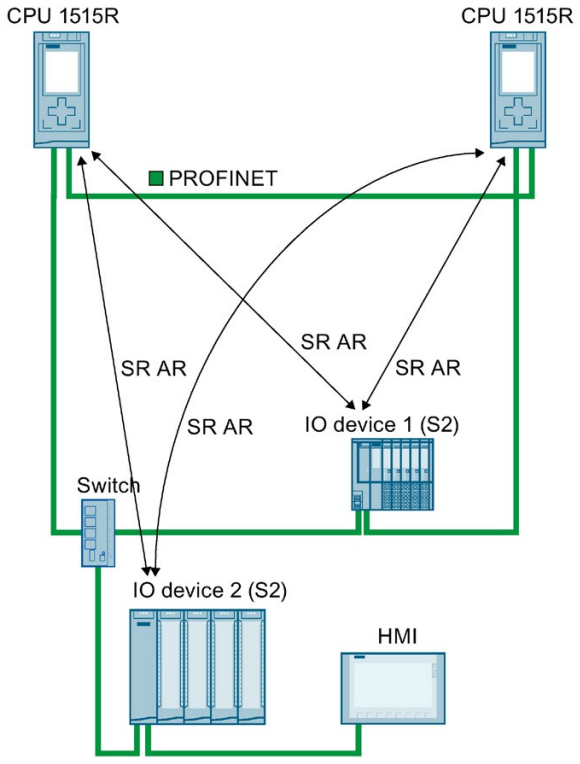

IO device 1 (S2)	IO device 1 is located in the PROFINET ring and is connected to the redundant S7-1500R/H system in a system-redundant and media-redundant manner.
Switch	The switch is located in the PROFINET ring. The switch supports the media redundancy protocol MRP.
IO device 2 (S2)	IO device 2 is connected to the redundant S7-1500R/H system via the switch. IO device 2 is connected to the redundant S7-1500R/H system in a system-redundant manner.
HMI device	The HMI device is connected to the redundant S7-1500R/H system via the switch.

Figure 6-3 PROFINET devices downstream of a switch

Additional PROFINET IO system in the configuration

The configuration can also contain additional IO controllers with their own IO devices. To ensure that enough bandwidth is available in the PROFINET ring for the redundant S7-1500R/H system, place additional IO controllers with their I/O downstream of a switch.

When determining the maximum number of IO devices inside and outside the PROFINET ring, the redundant system does not detect the S7-1500 CPUs and their IO devices. If you use S7-1500 CPUs, you must check the maximum number yourself.

The following figure shows a redundant S7-1515R system. An additional PROFINET IO system with a CPU 1516 as IO controller is located downstream of the switch. The IO controller is assigned its own IO device (S1).

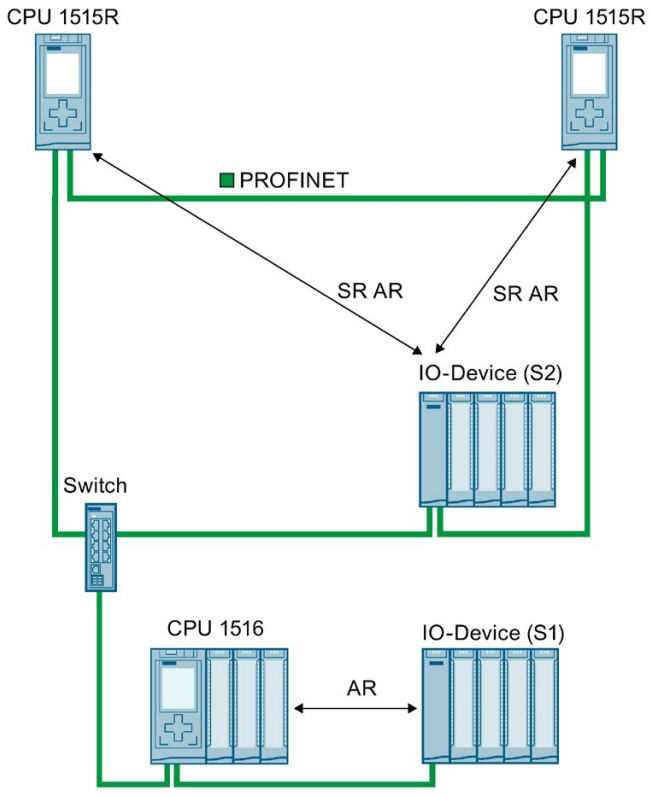

Figure 6-4 Example of a redundant S7-1500R system with an additional PROFINET IO system

Because the redundant S7-1500R/H system does not support I-devices, direct cyclic IO data exchange with the other IO controller is not possible.

Connection to another PROFINET IO system via the PN/PN coupler

The redundant S7-1500R/H system cyclically exchanges IO data with another PROFINET IO system via a PN/PN coupler.

In the following figure, the PN/PN coupler connects a redundant S7-1515R system to another PROFINET IO system. The left side of the PN/PN coupler is assigned to the redundant S7-1515R system. The left side of the PN/PN coupler is system-redundant and media-redundant. The right side of the PN/PN coupler is assigned to the CPU 1516 (IO controller). The PROFINET IO system of the CPU 1516 has no redundancy in this example.

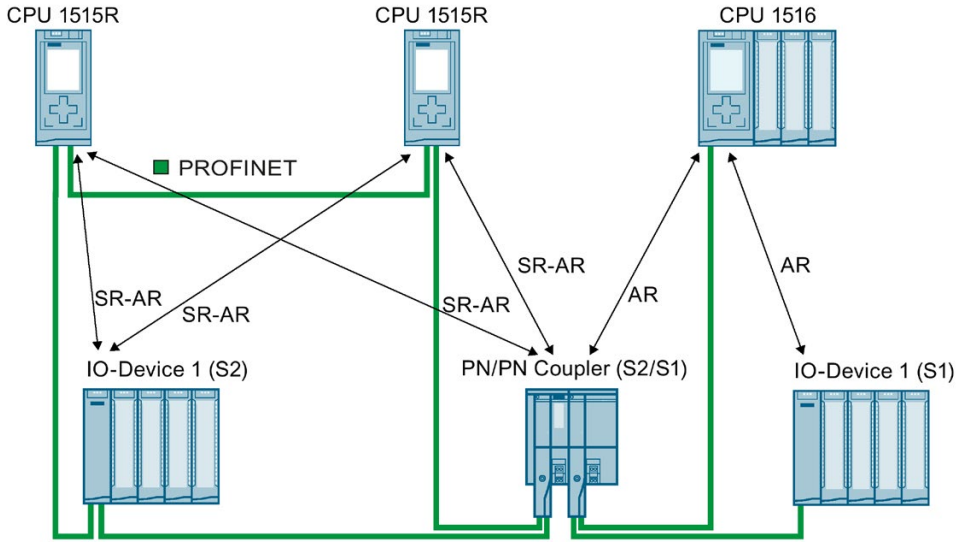

Figure 6-5 Configuration with the PN/PN coupler with one-sided system redundancy (S2/S1)

Connection to an additional redundant S7-1500R/H system via the PN/PN coupler

Two redundant S7-1500R/H systems cyclically exchange IO data via the PN/PN coupler.

In the following figure, the PN/PN coupler connects two redundant S7-1515R systems to each other. Each of the two PN/PN coupler sides are assigned to a redundant S7-1515R system. Each of the two sides of the PN/PN coupler are connected to the respective redundant S7-1515R system in a system-redundant and media-redundant manner.

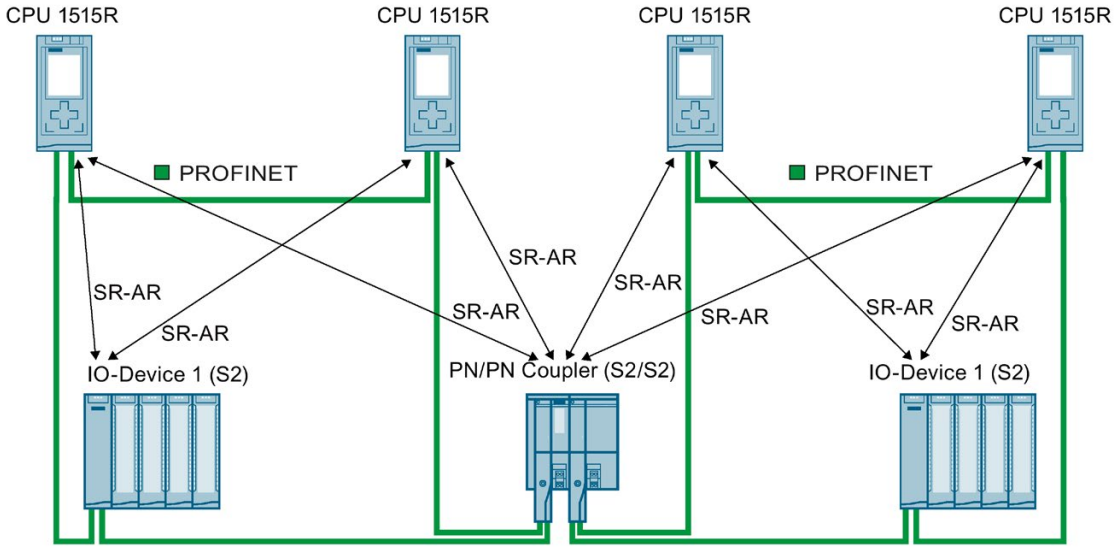

Figure 6-6 Configuration with the PN/PN coupler with two-sided system redundancy (S2/S2)

Reference

You can find more information on the PN/PN coupler in the PN/PN Coupler (https://support.industry.siemens.com/cs/ww/en/view/44319532) manual.

6.2 Configuring an IO device with system redundancy S2 in the redundant S7-1500R/H system

Requirements

- Redundant S7-1500R/H system
- IO device supports system redundancy S2, e.g. IM 155-6 PN HF as of firmware version V4.2

Procedure

To assign an IO device with system redundancy S2 to the redundant S7-1500R/H system, follow these steps:

1. In the network view of STEP 7, select the PROFINET interface of the IO device.
2. Using drag-and-drop, draw a line between the PROFINET interface of the IO device and the PROFINET interface X1 of the left CPU.

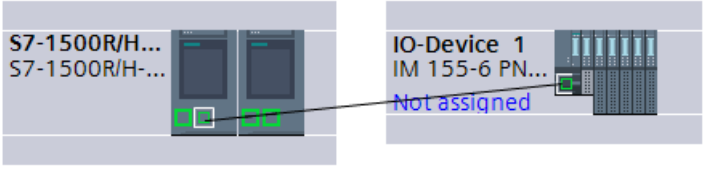

Figure 6-7 Assigning IO device to the left CPU

The IO device is assigned to the left CPU.

3. Using drag-and-drop, draw a line between the PROFINET interface of the IO device and the PROFINET interface X1 of the right CPU.

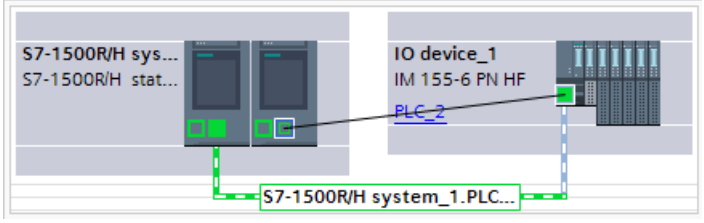

Figure 6-8 Assigning IO device to the right CPU

Result: The IO device is connected to the redundant S7-1500R/H system in a system-redundant manner.

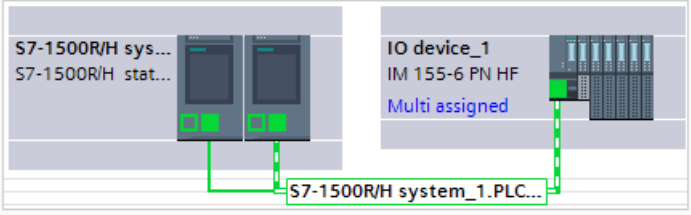

Figure 6-9 IO device assigned in a system-redundant manner

6.3 Configuring media redundancy (MRP) for a configuration with the redundant S7-1500R/H system

Requirements

- Redundant S7-1500R/H system
- All devices in the ring support the media redundancy protocol MRP.
- IO devices are assigned to the redundant S7-1500R/H system.

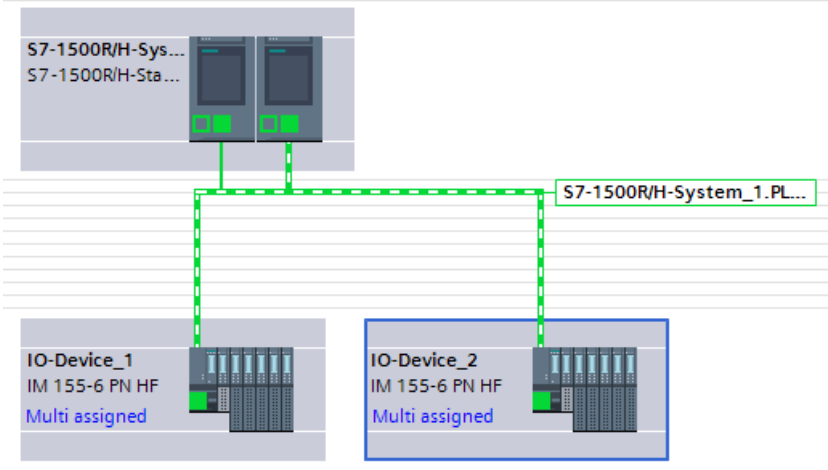

Figure 6-10 Example configuration: Configuring MRP for S7-1500R/H

MRP role of the CPUs of the redundant S7-1500R/H system

As soon as you create a redundant S7-1500R/H system in STEP 7, STEP 7 automatically assigns the MRP role "Manager (auto)" to the PROFINET interfaces X1 of both CPUs.

Defining the MRP role for additional devices of the ring in STEP 7

To specify the media redundancy for additional devices in the ring, follow these steps:

1. In the network view of STEP 7, select the PROFINET interface X1 of one of the two CPUs of the redundant S7-1500R/H system.
2. In the Inspector window navigate to "Properties" > "General" > "Advanced options" > "Media redundancy".
3. Click the "Domain settings" button.

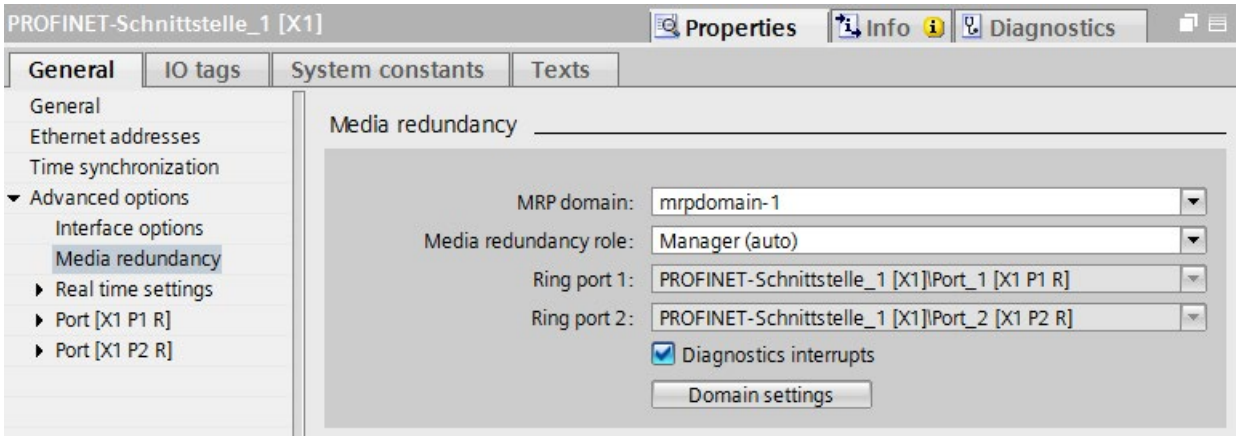

Figure 6-11 S7-1500R/H: MRP role "Manager (auto)"

In the Inspector window, STEP 7 displays the properties of the MRP domain in which the PROFINET interface X1 of the CPU is located.

4. In the "MRP role" column of the "Devices" table, assign the MRP role "Client" to all the other devices of the ring.

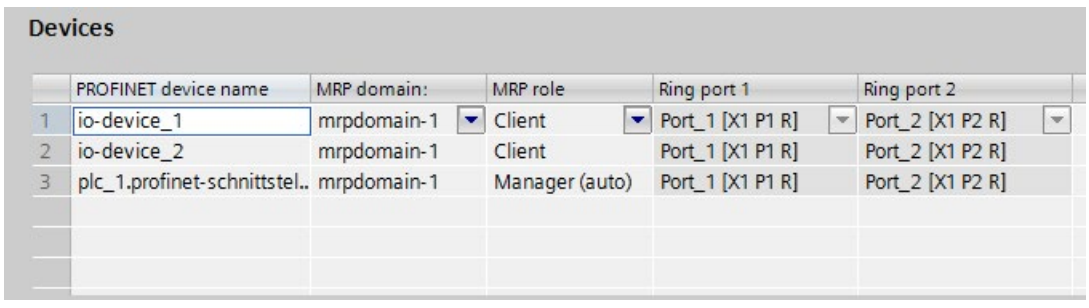

Figure 6-12 S7-1500R/H: Assigning MRP roles for ring devices

Parameter assignment for devices outside the STEP 7 project

Set the MRP role "Client" for the devices of the ring that are not located in STEP 7.
Example: For a switch, set the MRP role "Client" via the web interface of the switch.

Glossary

API

API (**A**pplication **P**rocess **I**dentifier) is a parameter, the value of which specifies the IO data processing process (application).

The PROFINET standard IEC 61158 assigns profiles to specific APIs (PROFIdrive, PROFIsave), which are defined by the PROFINET user organization.

The standard API is 0.

Application

An application is a program that runs directly on the MS-DOS/Windows operating system. An application on the PG is STEP 7, for example.

AR

The AR (**A**pplication **R**elation) comprises all the communication relationships between IO controller and IO device (e.g. IO data, data records, interrupts).

AR is also an addressing level for diagnostic data records.

Asset

An asset is a component of a machine or plant This can be either hardware or software/firmware.

Automation system

Programmable logic controller for the open-loop and closed-loop control of process chains of the process engineering industry and manufacturing technology. The automation system consists of different components and integrated system functions according to the automation task.

Backplane bus

The backplane bus is a serial data bus for module intercommunication and the distribution of the necessary power to the modules. Bus connectors interconnect the modules.

Backup AR

The backup AR is the system redundancy AR between an IO device with system redundancy S2 and the backup CPU of the redundant S7-1500R/H system.

Backup CPU

If the R/H system is in RUN-Redundant system state, the primary CPU controls the process. The backup CPU synchronously executes the user program and can take over the process control on failure of the primary CPU.

Bus

A bus is a transfer medium that interconnects several devices. Data transmission can be performed electrically or via optical fibers, either in series or in parallel.

Communications Cycle and Reservation of Transmission Bandwidth

PROFINET IO is a scalable real-time communication system based on the Layer 2 protocol for Fast Ethernet. With the RT transmission method, two real-time-support performance levels are available for time-critical process data and IRT for high-accuracy and also isochronous processes .

Communications processor

Communication processors are modules used for point-to-point and bus connections.

Configuring

Selecting and putting together individual components of an automation system or installing necessary software and adapting it for a specific application (for example, by configuring the modules).

Consistent data

Data which belongs together in terms of content and must not be separated is known as consistent data.

For example, the values of analog modules must always be handled as a whole, that is, the value of an analog module must not be corrupted as a result of reading out at two different points in time.

CP

→ *Communications processor*

CPU

Central **P**rocessing **U**nit - Central module of the S7 automation system with a control and arithmetic unit, memory, operating system and interface for programming device.

DCP

DCP (**D**iscovery and Basic **C**onfiguration **P**rotocol). Enables the assignment of device parameters (for example, the IP address) using manufacturer-specific configuration/programming tools.

Default router

The default router is used when data has to be forwarded via TCP/IP to a partner located outside the local network.

Determinism

Determinism means that a system responds in a predictable (deterministic) manner.

Device

In the PROFINET environment, "device" is the generic term for:

- Automation systems (for example, PLC, PC)
- Distributed I/O systems
- Field devices (for example, PLC, PC, hydraulic devices, pneumatic devices)
- Active network components (for example, switches, routers)
- Gateways to PROFIBUS, AS interface or other fieldbus systems

Device name (PROFINET device name)

In the PROFINET IO environment, the device name is a unique identifier for the PROFINET IO interface of a device.

Diagnostics

→ *System diagnostics*

Diagnostics buffer

The diagnostics buffer represents a backup memory in the CPU, used to store diagnostics events in their order of occurrence.

Diagnostics error interrupt

Modules capable of diagnostics operations report detected system errors to the CPU by means of diagnostics interrupts.

→ *See also CPU*

DP master

A master which behaves in accordance with EN 50170, Part 3, is known as a DP master.

→ See also Master

DP slave

A slave operated on PROFIBUS with PROFIBUS DP protocol and in accordance with EN 50170, Part 3 is referred to as DP slave.

→ See also Slave

DPV1

The designation DPV1 refers to the functional extension of acyclic services (to include new interrupts, for example) provided by the DP protocol. The DPV1 functionality is integrated in IEC 61158/EN 50170, Volume 2, PROFIBUS.

Duplex

Half duplex: One channel is available for alternating exchange of information.

Full duplex: Two channels are available for simultaneous exchange of information in both directions.

Ethernet

Ethernet is an international standard technology for local area networks (LAN) based on frames. It defines types of cables and signaling for the physical layer and packet formats and protocols for media access control.

GSD file

As a Generic Station Description, this file contains all properties of a PROFINET device that are necessary for its configuration in XML format.

H-Sync Forwarding

H-Sync Forwarding enables a PROFINET device with MRP to forward synchronization data (synchronization frames) only within the PROFINET ring.

Through H-Sync Forwarding, the synchronization data is also forwarded during reconfiguration of the PROFINET ring. This reduces the cycle time utilization.

H-Sync Forwarding is recommended for PROFINET devices that you use in the PROFINET ring of redundant S7-1500R systems.

H-Sync Forwarding is not relevant for redundant S7-1500H systems.

I-device

The "I-device" (intelligent IO device) functionality of a CPU facilitates data exchange with an IO controller, for example, as intelligent preprocessing unit of sub-processes. In its role as an IO device, the I-device is accordingly integrated into a "higher-level" IO controller.

Industrial Ethernet

Industrial Ethernet is a guideline for installing an Ethernet in an industrial environment. The biggest difference from standard Ethernet is the mechanical current carrying capacity and noise immunity of the individual components.

Interrupt

An interrupt is an event that causes the operating system of an S7-CPU to automatically call an assigned organization block (interrupt OB) in which the user can program the desired reaction.

Interrupt, diagnostics

→ *Diagnostics error interrupt*

IP address

To allow a PROFINET device to be addressed as a device on Industrial Ethernet, this device also requires an IP address that is unique within the network. Example: An IPv4 address consists of 4 decimal numbers with the value range 0 to 255. The decimal numbers are separated by periods.

The IP address is made up of the following components:

- Address of the network
- Address of the device (generally called the host or network node).

IRT

IRT is a synchronized communication protocol for cyclic exchange of IRT data between PROFINET devices. A reserved bandwidth is available in the send cycle for IRT data. The reserved bandwidth ensures that the IRT data can be transferred at reserved synchronized intervals, without being influenced also by higher other network loads (such as TCP/IP communication, or additional real-time communication).

LAN

Local **A**rea **N**etwork - a local network to which multiple computers within a company are connected. The LAN therefore has a limited geographical span and is only available to the company or institution.

Line depth

Designates the number of external switches or integrated switches interconnected in series.

MAC address

Worldwide unique device identification for all Ethernet devices. It is assigned by the manufacturer and has a 3-byte vendor ID and 3-byte device ID as a consecutive number.

Every PROFINET device is assigned a worldwide unique device identifier at the factory. This 6-byte long device identifier is the MAC address.

Maintenance Required / Maintenance Demanded

A "Maintenance required" system message can be defined for different wear parameters and an inspection of a component can be recommended, for example, when a certain number of operating hours has elapsed.

The "Maintenance demanded" alarm is sent when the part involved needs to be replaced within a foreseeable period.

(Example printer: The maintenance demanded alarm is sent when the ink/printer cartridges have to be replaced immediately.)

Master

Higher-level, active participant in the communication/on a PROFIBUS subnet. It has rights to access the bus (token), sends data and requests it.

Media redundancy

The so-called **M**edia **R**edundancy **P**rotocol (MRP) enables the configuration of redundant networks. Redundant transmission links (ring topology) ensure that an alternating communication path is made available if a transmission link fails. The PROFINET devices that are a part of this redundant network form an MRP domain.

Micro Memory Card (MMC)

Micro Memory Cards are memory media for CPUs and CPs. Their only difference to the SIMATIC memory card is the smaller size. S7-1500 and ET 200SP-CPUs use SIMATIC memory cards.

MPI

The multipoint interface (**M**ulti **P**oint **I**nterface,MPI) represents the programming device interface of SIMATIC S7. It enables multiple devices (programming devices, text-based displays, OPs) to be operated simultaneously by one or more CPUs. Each device is identified by its unique (MPI) address.

MRPD

MRPD (**M**edia **R**edundancy with **P**lanned **D**uplication of Frames) based on IRT and MRP. To realize media redundancy with short update times, the PROFINET devices participating in the ring send their data in both directions. The devices receive this data at both ring ports so that there is no reconfiguration time.

Network

A network consists of one or more interconnected subnets with any number of devices. Several networks can exist alongside each other.

OB

→ *Organization block*

OPC

OPC (OLE for Process Control) refers to a standard interface for communication in automation technology.

Operating states

Operating states describe the behavior of a single CPU at a specific time.

The CPUs of the SIMATIC standard systems feature the STOP, STARTUP and RUN operating states.

The primary CPU of the S7-1500R/H redundant system has the operating states STOP, STARTUP, RUN, RUN-Syncup and RUN-Redundant. The backup CPU has the operating states STOP, SYNCUP and RUN-Redundant.

Organization block

Organization blocks (OBs) form the interface between the CPU operating system and the user program. The order in which the user program is executed is defined in the organization blocks.

Parameter

1. Tag of a STEP 7 code block:
2. Tag used to set one or several characteristics of a module

In delivery state, every module has practical basic settings, which can be modified by configuration in STEP 7.

There are static and dynamic parameters

PG

→ *Programming device*

PLC

→ *Programmable logic controller*

Primary AR

The primary AR is the system redundancy AR between an IO device with system redundancy S2 and the primary CPU of the redundant S7-1500R/H system.

Primary CPU

If at least one R/H CPU is in RUN state, the primary CPU is the controlling CPU. The primary CPU controls the process (productive data).

The user program is executed identically in the primary CPU and the backup CPU.

Prioritized startup

Prioritized startup denotes the PROFINET functionality for accelerating the startup of IO devices operated on a PROFINET IO system with RT and IRT communication. It reduces the time that the correspondingly configured IO devices require in order to return to cyclic user data exchange in the following cases:

- After the power supply has returned
- After a station has returned
- After activation of IO devices

Process image (I/O)

The CPU transfers the values from the input and output modules to this memory area. At the start of the cyclic program, the CPU transfers the process image output as a signal state to the output modules. The CPU then transfers the signal states of the input modules to the process image of the inputs. Then the CPU executes the user program.

PROFIBUS

Process **F**ield **Bus** - European Fieldbus standard.

PROFIBUS device

A PROFIBUS device has at least one PROFIBUS interface with an electrical (RS485) or optical (polymer optical fiber, POF) interface.

PROFIBUS DP

A PROFIBUS with DP protocol that complies with EN 50170. DP stands for distributed I/O (fast, real-time capable, cyclic data exchange). From the perspective of the user program, the distributed I/Os are addressed in exactly the same way as the centralized I/Os.

PROFIBUS Users Organization

Technical committee dedicated to the definition and development of the PROFIBUS and PROFINETstandard. Additional information can be found on the Internet (Page).

PROFIenergy

Function for energy saving in the process, for example, during pause times by briefly switching off the entire system via standardized PROFIenergy commands.

PROFINET

Open component-based industrial communication system based on Ethernet for distributed automation systems. Communication technology promoted by the PROFIBUS Users Organization.

PROFINET device

A PROFINET device always has a PROFINET interface (electrical, optical, wireless). A lot of devices also have a PROFIBUS DP interface to connect PROFIBUS devices.

PROFINET IO

Communication concept for the realization of modular, distributed applications within the scope of PROFINET.

PROFINET IO is based on switched Ethernet with full-duplex operation and a bandwidth of 100 Mbps.

PROFINET IO Controller

Device used to address the connected IO devices. This means that the IO controller exchanges input and output signals with assigned field devices. The IO controller is often the controller on which the automation program runs.

PROFINET IO Device

A distributed field device that is assigned to one of the IO controllers (e.g. remote IO, valve terminals, frequency converters, switches)

PROFINET IO System

PROFINET IO controller with assigned PROFINET IO devices.

Programmable logic controller

Programmable logic controllers (PLCs) are electronic controllers whose function is stored as a program in the control unit. The structure and wiring of the device does not therefore depend on the controller's function. A programmable logic controller is structured like a computer. It consists of a CPU with memory, input/output modules and an internal bus system. The IOs and the programming language are oriented to the requirements of the control technology.

Programming device

Programming devices are essentially compact and portable PCs which are suitable for industrial applications. They are identified by a special hardware and software configuration for programmable logic controllers.

Proxy

The PROFINET device with proxy functionality is the substitute for a PROFIBUS device on Ethernet. The proxy functionality allows a PROFIBUS device to communicate not only with its master but also with all devices on PROFINET.

With PROFINET, existing PROFIBUS systems can be integrated into the PROFINET communication with the aid of an IE/PB link, for example. The IE/PB Link PN IO then handles communication via PROFINET on behalf of the PROFIBUS components.

In this way, you can link both DPV0 and DPV1 slaves to PROFINET.

Real-time

Real-time means that a system processes external events within a defined time.

Real-time communication

Group error for RT and IRT.

PROFINET uses its own real-time channel (RT) rather than TCP/IP for communication of time-critical IO user data.

Redundant systems

Redundant systems are characterized by the fact that important automation components are present multiple times (redundantly). Process control is maintained if a redundant component fails.

Router

A router interconnects two subnets. A router works in a similar way to a switch. With a router, however, you can also specify which communication devices may communicate via the router and which may not. The communication devices on various sides of a router can only communicate with one another if you have explicitly enabled communication between these devices via the router. Real-time data cannot be exchanged beyond subnet boundaries.

RT

PROFINET IO with **R**eal **T**ime communication (RT) is the optimal transmission method for time-critical applications in factory automation. PROFINET IO frames are prioritized over standard frames in accordance with IEEE802.1Q. This ensures the required determinism in the automation technology.

Security

Generic term for all the measures taken to protect against

- Loss of confidentiality due to unauthorized access to data
- Loss of integrity due to manipulation of data
- Loss of availability due to the destruction of data

Send clock

Period between two consecutive intervals for IRT or RT communication. The send clock is the shortest possible transmit interval for exchanging data.

SIMATIC

The term denotes Siemens AG products and systems for industrial automation.

SIMATIC NET

Siemens Industrial Communication division for Networks and Network Components.

SIMATIC PC Station

A "PC station" is a PC with communication modules and software components within a SIMATIC automation solution.

SIMATIC Memory Card (SMC)

→ *Micro Memory Card (MMC)*

Slave

A slave can only exchange data after being requested to do so by the master.

→ *See also DP slave*

SNMP

The network management protocol SNMP (**S**imple **N**etwork **M**anagement **P**rotocol) uses the wireless UDP transport protocol. It consists of two network components, similar to the client/server model. The SNMP manager monitors the network nodes and the SNMP agents collect the various network-specific information in the individual network nodes and stores it in a structured form in the MIB (**M**anagement **I**nformation **B**ase). This information allows a network management system to run detailed network diagnostics.

STEP 7

STEP 7 is an engineering system and contains programming software for the creation of user programs for SIMATIC S7 controllers.

Subnet

All the devices interconnected by switches are nodes of the same network or subnet. All the devices in a subnet can communicate directly with each other.

All devices in the same subnet have the same subnet mask.

A subnet is physically restricted by a router.

Subnet mask

The bits set in the subnet mask decide the part of the IP address that contains the address of the network.

In general, the following applies:

- The network address is obtained from the AND operation of the IP address and subnet mask.
- The device address is obtained from the AND NOT operation of the IP address and subnet mask.

Switch

Network components used to connect several terminal devices or network segments in a local network (LAN).

Sync domain

All PROFINET devices to be synchronized with IRT via PROFINET IO must belong to a sync domain.

The sync domain consists of exactly one sync master and at least one sync slave. An IO controller or switch generally handles the role of the sync master.

Non-synchronized PROFINET devices are not part of a sync domain.

System diagnostics

System diagnostics refers to the detection, evaluation, and signaling of errors that occur within the automation system, for example, programming errors or module failures. System errors can be indicated by LEDs or in STEP 7.

System redundancy AR

In a redundant system, an IO device with system redundancy S2 has a system redundancy AR with each of the two CPUs (IO controllers).

System states

The system states of the redundant S7-1500R/H system result from the operating states of the primary and backup CPUs. The concept of the system state is used to obtain a simplified expression that characterizes the simultaneously occurring operating states of the two CPUs. The following system states are available for the redundant S7-1500R/H system: STOP, STARTUP, RUN-Solo, SYNCUP and RUN-Redundant.

TCP/IP

The Ethernet itself is only a transport system for data - similar to a highway, which is a transport system for people and goods. The actual data transport is performed by so-called protocols - similar to cars and trucks, which transport people and goods on the highway.

The two basic protocols TCP (**T**ransmission **C**ontrol **P**rotocol) and IP (**I**nternet **P**rotocol) - TCP/IP for short - perform the following tasks:

1. The data is broken down into packets at the sender.
2. The packets are transported over the Ethernet to the correct recipient.
3. At the recipient, the packets are reassembled in the correct order.
4. Corrupt packets continue to be sent until they are received correctly.

Most higher-level protocols use TCP/IP to perform their duties. **H**yper **T**ext **T**ransfer **P**rotocol (HTTP), for example transfers documents written in **H**yper **T**ext **M**arkup **L**anguage (HTML) in the **W**orld **W**ide **W**eb (WWW). This technique is what enables you to view web pages in your Internet browser in the first place.

Topology

Structure of a network. Common structures include:

- Linear bus topology
- Ring topology
- Star topology
- Tree topology

Topology configuration

All the interconnected ports of the PROFINET devices in the STEP 7 project and their relationships to each other.

Twisted-pair

Fast Ethernet via twisted-pair cables is based on the IEEE 802.3u standard (100 Base-TX). The transmission medium is a shielded 2x2 twisted-pair cable with an impedance of 100 Ω (AWG 22). The transmission characteristics of this cable must meet the requirements of category 5.

The maximum length of the connection between the terminal and the network component must not exceed 100 m. The connectors are designed according to the 100Base-TX standard with the RJ45 connector system.

Update time

An IO device / IO controller in the PROFINET IO system is supplied cyclically with new data from the IO controller / IO device within this time interval. The update time can be configured separately for each IO device and determines the interval at which data is sent from the IO controller to the IO device (outputs) as well as from the IO device to the IO controller (inputs).

User program

In SIMATIC, we distinguish between the CPU operating system and user programs. The user program contains all instructions, declarations and data by which a plant or process can be controlled. The user program is assigned to a programmable module (for example, CPU, CM) and can be structured in smaller units.

WAN

A network that extends beyond LAN boundaries and enables, for example, intercontinental network communication. Legal rights do not belong to the user but to the provider of the communication network.

XML

XML (E**x**tensible **M**arkup **L**anguage) is a flexible, easy to understand and easy to learn data description language. Information is exchanged using readable XML documents. These include continuous text supplemented by structure information.

Index

A

Accelerating startup, 267, 267
    Adapting the user program, 272
    Optimize the port settings, 270
    Optimizing cabling, 271
Advanced offline/online comparison
    Automatic device assignment, 77
Alarm texts, 99
Alternating IO devices during operation, 261
Alternating partner ports during operation, 260
Application cycle, 211
    Setting, 216
Asset management, 84
Assigning parameters, 44
Assignment IO device - controller, 45

B

Bandwidth, 140

C

Cables, 33
Calling status from IO device, 79
Channel, 28
Communication, 23
Compare offline/online
    Automatic device assignment, 75
Configuration control, 229
Configuration control for IO systems, 229, 240, 256
Configuring, 44
Configuring docking system, 263
Configuring hardware and assigning parameters for hardware, 44
CPU display
    Diagnostics, 98
    IP address, 52
Cut through, 184

D

D_ACT_DP, 261
Data access, 23
Data cycle, 210
Data exchange between IO systems, 126
Data security
    Basics, 39
    Example, 42
    SCALANCE, 41
    Security, 39
Default router, 50
Delay time, 211
    Setting, 216
Device name, 48, 228
    Automatically assign, 47
    Changing, 54
    Exchanging without removable storage medium, 52
    Permitting changes directly on the device, 60
    Structured, 48
Device number, 49
Device replacement
    Assign device name, 224
    Configuring, 224
    Failure and replacement of an IO device, 223
    Neighborhood detection, 223
    Without exchangeable medium/programming device, 222
Device replacement without exchangeable medium/programming device, 52, 222
Devices & networks, 104
DHCP, 61
Diagnostics, 78
    Diagnostics status, 112
    Evaluation of interrupts, 114
    I-device, 133
    PROFINET ports, 106
    STEP 7, 104
    User program, 112
    via CPU display, 98
    via LEDs, 97
    via Web server, 101
Diagnostics buffer, 99
Diagnostics data record, 110
    Channel-specific, 110
    Vendor-specific, 110
Diagnostics levels, 80
Diagnostics status, 112
Display
    Diagnostics, 98
    IP address, 52
DNS conventions, 48
Docking station, 260

Docking unit, 260
DP cycle time, 211

E

Evaluation of interrupts, 114
Exchangeable medium, 222
Execution window, 217

F

Fast Ethernet, 30
Fiber-optic cable (FOC), 33
Fieldbus integration, 115
Full-duplex mode, 31
Functionality
    I-device, 120
    PROFINET IO, 26

G

Gateway, 61
Go online, 104
GSD file, 129

H

Hardware and network editor
    Assign device name, 47
    Assign IP address, 47
    Topology view, 71

I

I&M data, 82
    downloading to PROFINET IO devices, 82
I/O addresses, 211
I/O communication, 46, 57
Identification data, 82
Identification of the PROFINET device, 56
I-device, 142
    Configuring with GSD file, 129
I-device (intelligent IO device)
    Alarm response, 133
    Configuring, 128
    Diagnostics, 133
    Functionality, 120
    Lower-level PN IO system, 122
    Properties, 121
    Topology rules, 137
IE/PB link, 117
Industrial Ethernet, 17, 30
Industrial Wireless LAN, 35
    Application examples, 35
    Range, 37
Instruction
    T_CONFIG, 61
Interconnecting ports
    In the Inspector window, 74
    In topology view, 73
IO controller, 45
IO device, 214
    Activating and deactivating during change, 261
    Assigning, 45
    Calling status, 79
    Configuring alternating partners, 263
IO system, 230, 234, 236, 240, 243, 244, 252, 253
    Checking the assignment, 46
    Data exchange, 126
IP address, 49
    Assigning for the first time, 52
    assigning using an different way, 56
    Changing, 55
    Permitting changes directly on the device, 60
IPO model, 218, 218
IRT, 211
    Area of application, 183
    Communication, 184
    Communication cycle, 186
    Configuring, 188
    Definition, 184
    Differences of RT, 187
    Properties, 185
    Rules, 140
    Setup recommendations, 193
    Synchronization, 185
Isochronous mode
    Configuring, 214
    Definition, 207
    Example, 209
    Time synchronization, 210
Isochronous mode interrupt OB, 210, 211
    OB 6x, 217
Isochronous real-time, (see IRT)

L

Lead time, 210
LEDs for diagnostics, 97
Linking PROFINET and PROFIBUS, 117
LLDP, 109

M

Machine tailoring, (see Configuration control for IO systems)
Maintenance concept, 107
Maintenance data, 82
Maintenance demanded, 107
Maintenance required, 107
Media redundancy
    Configuring, 173
    Functions in ring topology, 169
Media Redundancy Protocol (MRP), 170
MIB, 109
Module, 28
Module status, 98
Module-internal shared input (MSI), 161
Module-internal shared output (MSO), 161
MRP, 170
MRPD, 176
MSI/MSO, 161
Multiple use IO system, 228, 230, 234, 236
Multiple use IO systems, 229

N

Neighborhood detection, 223
Network limits, 32
Network view
    I/O communication, 57

O

OB 82, 114
OB MC Servo, 217
OIP model, 218, 220
Online & diagnostics network view, 104
Online assignment (PROFINET device names), 57
Option handling in the network
    see Configuration control for IO systems, 240
Optional IO device, 243
Overwriting the PROFINET device name, 228

P

Port
    Alternating partners, 260
    Diagnostics, 106
    Switchport, 271
    Terminal port, 271
Prefabricating PCF cables, 33
Prefabricating POF cables, 33
Primary Setup Tool (PST), 61
Prioritized startup, 261
    Configuring, 268
    Definition, 267
PROFIBUS, 17
PROFIBUS & PROFINET International, 19
PROFIenergy, 142, 258
PROFINET, 17
    Assigning a device name, 57
    Communication, 23
    Device model, 28
    Devices, 19
    Equipment designations, 20
    Implementation, 18
    Interface, 19, 25
    Objectives, 17
    Optimizing with IRT, 193
    Optimizing with RT, 192
    Send clock, 24
    Topology rules with I-device, 137
    Transmission media, 34
    Update time, 24
    Watchdog time, 24
PROFINET device name, 228
PROFINET interface
    Properties, 25
    Topology overview, 26
PROFINET IO, 18
    Diagnostics levels, 80
    Functionality, 26, 115
    System, 45
Proxy functionality, 117
PST, 61

R

Real-time class, 31
Real-time communication, 182, 183
Redundancy, 168
    Redundancy clients, 168
    Redundancy domains, 170
    Redundancy manager, 168
Redundancy manager, 168
Ring port, 168, 175
Ring topology, 168
Router, 32, 50, 65
RT
    Area of application, 182
    Communication cycle, 186
    Definition, 183
    Differences of IRT, 187
    Rules, 140

RT class, 211

S

Saving energy, 258
SCALANCE, 32, 37, 41
Security
  Definition, 39
  Example of data security, 42
  Protective measures, 40
Send clock, 24, 210, 211
Set/actual topology, 101
Shared device, 143, 161
SNMP, 109
  MIB, 109
  Network diagnostics, 109
Standard machine
project, 228, 229, 230, 234, 236, 243, 244, 252, 253
Startup of IO devices, 261, 265
Store and forward, 183
Submodule, 28, 161
Subnet, 46
Subnet mask, 50
  Assigning for the first time, 52
  Example, 50
Switch, 31
  Integrated, 26
  Selection guide, 31
Switched Ethernet, 31
Switchport, 271
Sync domain, 185, 211
SYNC_PI, 217, 218, 220
SYNC_PO, 217, 218, 220
Synchronous Cycle, 217
System diagnostics, 78

T

T_CONFIG, 61
T_DC, 210, 211, 219, 221
TCP/IP in the communication cycle, 186
Terminal port, 271
Ti, 210
To, 210
Tool changer, 260
Topology
  Example, 69
  Line, 68
  Ring, 68, 168, 170
  Rules about the IO-system with I-device, 137
  Set/actual, 101
  Star, 68
  Tree, 68
Topology configuration, 211
Topology overview, 26
Topology view
  Adopt devices identified online, 77
  Adopt port interconnections identified online, 76
  Hardware and network editor, 71
  Interconnecting ports, 73
Transfer area, 142
Transmission bandwidth, 31
Transmission media with PROFINET, 34
Twisted-pair, 33

U

Update time, 24, 38

V

Value status, 161

W

Watchdog time, 24
Wire break, 108
Wireless networks, 37

SIEMENS

SIMATIC

PROFIBUS
PROFIBUS with STEP 7 V13

Function Manual

Preface

Documentation guide 1

Description 2

Parameter assignment/addressing 3

Diagnostics 4

Functions 5

Service & Support A

12/2014

A5E03775446-AC

Legal information

Warning notice system

This manual contains notices you have to observe in order to ensure your personal safety, as well as to prevent damage to property. The notices referring to your personal safety are highlighted in the manual by a safety alert symbol, notices referring only to property damage have no safety alert symbol. These notices shown below are graded according to the degree of danger.

⚠ DANGER

indicates that death or severe personal injury **will** result if proper precautions are not taken.

⚠ WARNING

indicates that death or severe personal injury **may** result if proper precautions are not taken.

⚠ CAUTION

indicates that minor personal injury can result if proper precautions are not taken.

NOTICE

indicates that property damage can result if proper precautions are not taken.

If more than one degree of danger is present, the warning notice representing the highest degree of danger will be used. A notice warning of injury to persons with a safety alert symbol may also include a warning relating to property damage.

Qualified Personnel

The product/system described in this documentation may be operated only by **personnel qualified** for the specific task in accordance with the relevant documentation, in particular its warning notices and safety instructions. Qualified personnel are those who, based on their training and experience, are capable of identifying risks and avoiding potential hazards when working with these products/systems.

Proper use of Siemens products

Note the following:

⚠ WARNING

Siemens products may only be used for the applications described in the catalog and in the relevant technical documentation. If products and components from other manufacturers are used, these must be recommended or approved by Siemens. Proper transport, storage, installation, assembly, commissioning, operation and maintenance are required to ensure that the products operate safely and without any problems. The permissible ambient conditions must be complied with. The information in the relevant documentation must be observed.

Trademarks

All names identified by ® are registered trademarks of Siemens AG. The remaining trademarks in this publication may be trademarks whose use by third parties for their own purposes could violate the rights of the owner.

Disclaimer of Liability

We have reviewed the contents of this publication to ensure consistency with the hardware and software described. Since variance cannot be precluded entirely, we cannot guarantee full consistency. However, the information in this publication is reviewed regularly and any necessary corrections are included in subsequent editions.

Siemens AG
Industry Sector
Postfach 48 48
90026 NÜRNBERG
GERMANY

A5E03775446-AC
℗ 12/2014 Subject to change

Copyright © Siemens AG 2013 - 2014.
All rights reserved

Preface

Purpose of the manual

This function manual provides an overview of the PROFIBUS communication system with SIMATIC STEP 7 V13.

STEP 7 V13 is integrated into the powerful graphic Totally Integrated Automation Portal (TIA Portal), the new integration platform for all automation software tools.

This function manual supports you in planning a PROFIBUS system. The manual is structured into the following subject areas:

- PROFIBUS basics
- PROFIBUS diagnostics
- PROFIBUS functions

Basic knowledge required

The following knowledge is required in order to understand the manual:

- General knowledge of automation technology
- Knowledge of the industrial automation system SIMATIC
- Knowledge about the use of Windows-based computers
- Proficiency with STEP 7

Scope

This function manual is the basic documentation for all SIMATIC products from the PROFIBUS environment. The product documentation is based on this documentation.

The examples are based on the functionality of the S7-1500 automation system.

Changes compared to previous version

As compared to the previous version (version 07/2014), this manual contains the following amendments/changes:

- Extension of the documentation to STEP 7 (TIA Portal) V13 SP1
- Addition of the function Intelligent DP slaves (I-slaves)
- New guide

Conventions

STEP 7: We refer to "STEP 7" in this documentation as a synonym for the configuration and programming software "STEP 7 as of V12 (TIA Portal)" and subsequent versions.

This documentation contains figures of the devices described. The figures may differ slightly from the device supplied.

You should also pay particular attention to notes such as the one shown below:

Note

A note contains important information on the product described in the documentation, on the handling of the product or on the section of the documentation to which particular attention should be paid.

Additional support

You will find information about available technical support in the appendix Service & Support (Page 91).

The technical documentation for the individual SIMATIC products and systems is available on the Internet (http://www.siemens.com/simatic-tech-doku-portal).

The online catalog and the ordering system are available on the Internet (http://mall.industry.siemens.com).

Security information

Siemens provides products and solutions with industrial security functions that support the secure operation of plants, solutions, machines, equipment and/or networks. They are important components in a holistic industrial security concept. With this in mind, Siemens' products and solutions undergo continuous development. Siemens recommends strongly that you regularly check for product updates.

For the secure operation of Siemens products and solutions, it is necessary to take suitable preventive action (e.g. cell protection concept) and integrate each component into a holistic, state-of-the-art industrial security concept. Third-party products that may be in use should also be considered. You can find more information about industrial security on the Internet (http://www.siemens.com/industrialsecurity).

To stay informed about product updates as they occur, sign up for a product-specific newsletter. You can find more information on the Internet (http://support.automation.siemens.com).

Table of contents

Preface 3

1 Documentation guide 7

2 Description 10

2.1 Introduction to PROFIBUS 10
2.1.1 Applications of PROFIBUS DP 11
2.1.2 PROFIBUS terminology 12
2.1.3 PROFIBUS DP interface 16

2.2 Structure of PROFIBUS networks 17
2.2.1 Passive network components for RS 485 networks 19
2.2.1.1 RS 485 cables 19
2.2.1.2 PROFIBUS FastConnect system 20
2.2.1.3 PROFIBUS bus connector 22
2.2.1.4 M12 bus connector 24
2.2.1.5 Bus terminals for RS 485 networks 24
2.2.1.6 M12 bus terminating resistor 24
2.2.2 Passive components for optical networks 25
2.2.2.1 Fiber-optic cables 25
2.2.2.2 Plastic and PCF fiber-optic cables 26
2.2.2.3 Glass fiber-optic cables 27
2.2.3 Active network components 29
2.2.3.1 Network components in electrical networks 29
2.2.3.2 Network components in optical networks 33
2.2.4 Examples for topology 35
2.2.4.1 Topology with RS485 repeater 35
2.2.4.2 Topology with diagnostic repeater 37
2.2.4.3 OLM topology 40
2.2.4.4 WLAN topology 40
2.2.4.5 Connecting PROFIBUS to PROFINET 41

3 Parameter assignment/addressing 42

3.1 Assigning the DP slave to a DP master 43

3.2 PROFIBUS address 45

3.3 Network settings 46

3.4 Cable configuration 49

3.5 Additional network stations 51

3.6 Bus parameters 52

3.7 Constant bus cycle time 55

4 Diagnostics ... 57

4.1 Overview ... 57

4.2 Diagnostics using the display of the S7-1500 ... 58

4.3 Diagnostics with the diagnostic repeater ... 60

4.4 I&M data (Identification and Maintenance) ... 61

5 Functions ... 62

5.1 Isochronous mode ... 62
5.1.1 What is isochronous mode? ... 62
5.1.2 Use of isochronous mode ... 63
5.1.3 Isochronous applications ... 64
5.1.4 Sequence of synchronization ... 65
5.1.5 Requirements for configuration ... 66
5.1.6 Configuring isochronous mode ... 67
5.1.7 Diagnostics and interrupt functions ... 70
5.1.8 Parameter settings for isochronous mode ... 71
5.1.8.1 Viewing isochronous mode parameters ... 71
5.1.8.2 Change parameters ... 72

5.2 Acyclical data exchange ... 74

5.3 SYNC/FREEZE groups ... 75

5.4 Interrupts ... 77

5.5 Intelligent DP slaves (I-slaves) ... 78
5.5.1 I-slave functionality ... 78
5.5.2 Data exchange with higher-level DP master ... 81
5.5.3 Configuring an I-slave ... 82
5.5.4 Configuring transfer areas ... 84
5.5.5 Sample program ... 85
5.5.6 Diagnostics and interrupt behavior ... 89

A Service & Support ... 91

Glossary ... 94

Index ... 99

Documentation guide

1

The documentation for the SIMATIC S7-1500 automation system and the SIMATIC ET 200MP, ET 200SP and ET 200AL distributed I/O systems is divided into three areas. This division allows you easier access to the specific information you require.

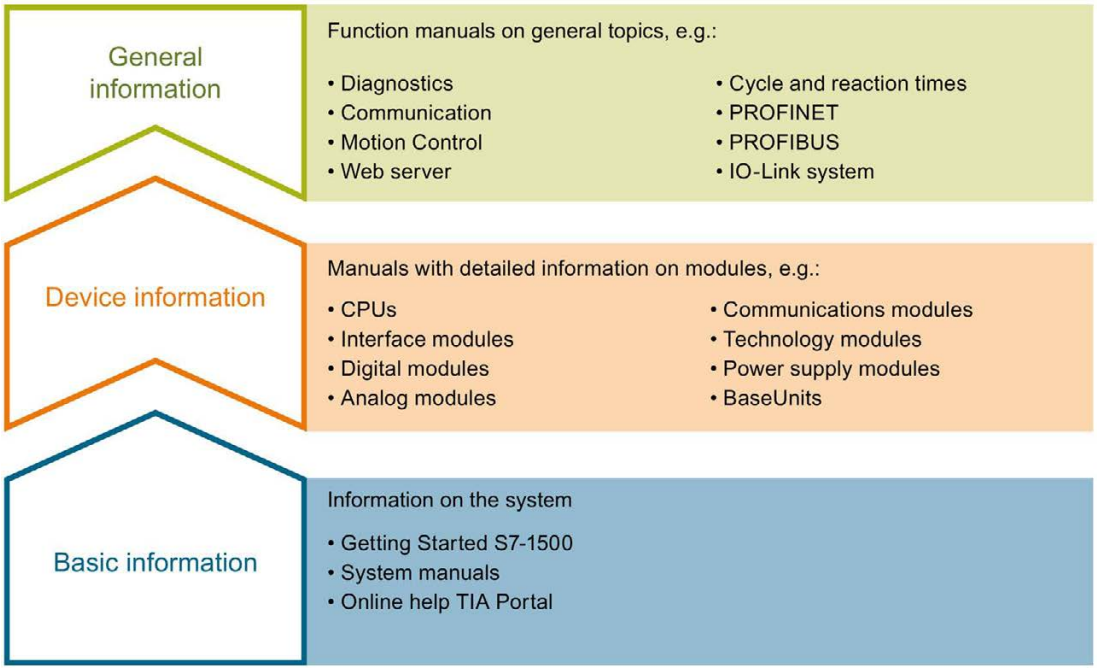

Basic information

System manuals and Getting Started describe in detail the configuration, installation, wiring and commissioning of the SIMATIC S7-1500, ET 200MP, ET 200SP and ET 200AL systems. The STEP 7 online help supports you in the configuration and programming.

Device information

Product manuals contain a compact description of the module-specific information, such as properties, terminal diagrams, characteristics and technical specifications.

General information

The function manuals contain detailed descriptions on general topics such as diagnostics, communication, Motion Control, Web server.

You can download the documentation free of charge from the Internet (http://w3.siemens.com/mcms/industrial-automation-systems-simatic/en/manual-overview/Pages/Default.aspx).

Changes and additions to the manuals are documented in product information sheets.

Manual Collections

The Manual Collections contain the complete documentation of the systems put together in one file.

You will find the Manual Collections on the Internet:

- S7-1500/ET 200MP (http://support.automation.siemens.com/WW/view/en/86140384)
- ET 200SP (http://support.automation.siemens.com/WW/view/en/84133942)
- ET 200AL (http://support.automation.siemens.com/WW/view/en/95242965)

My Documentation Manager

The My Documentation Manager is used to combine entire manuals or only parts of these to your own manual.
You can export the manual as PDF file or in a format that can be edited later.

You can find the My Documentation Manager on the Internet (http://support.automation.siemens.com/WW/view/en/38715968).

Applications & Tools

Applications & Tools supports you with various tools and examples for solving your automation tasks. Solutions are shown in interplay with multiple components in the system - separated from the focus in individual products.

You can find Applications & Tools on the Internet (http://support.automation.siemens.com/WW/view/en/20208582).

CAx Download Manager

The CAx Download Manager is used to access the current product data for your CAx or CAe systems.

You configure your own download package with a few clicks.

In doing so you can select:

- Product images, 2D dimension drawings, 3D models, internal circuit diagrams, EPLAN macro files
- Manuals, characteristics, operating manuals, certificates
- Product master data

You can find the CAx Download Manager on the Internet (http://support.automation.siemens.com/WW/view/en/42455541).

TIA Selection Tool

With the TIA Selection Tool, you can select, configure and order devices for Totally Integrated Automation (TIA).
This tool is the successor of the SIMATIC Selection Tool and combines the known configurators for automation technology into one tool.
With the TIA Selection Tool, you can generate a complete order list from your product selection or product configuration.

You can find the TIA Selection Tool on the Internet (http://w3.siemens.com/mcms/topics/en/simatic/tia-selection-tool).

Description 2

2.1 Introduction to PROFIBUS

What is PROFIBUS?

PROFIBUS is a bus system that networks automation systems and field devices that are compatible with PROFIBUS. As communication medium for the field level, PROFIBUS is an important part of Totally Integrated Automation (TIA).

The different communication networks can be used independent of one another or they can be combined with each other.

PROFIBUS protocols

PROFIBUS DP (distributed I/O) is a communication network for the field level according to IEC 61158-2 / EN 61158-2 with the hybrid access protocols token bus and master-slave. The networking takes place by means of two-wire lines or fiber-optic cables. Data transmission rates of 9.6 kbps to 12 Mbps are possible.

PROFIBUS PA is the PROFIBUS for process automation (PA). It connects the PROFIBUS DP communication protocol with the MBP (Manchester Bus Powered) transmission technology to IEC 61158-2.

PROFIBUS PA networks can be designed based on shielded, twisted two-wire lines intrinsically safe and are therefore suitable for hazardous areas (Ex zones 0 and 1). The data transmission rate is 31.25 kbps.

2.1.1 Applications of PROFIBUS DP

Introduction

The efficiency of control systems is not determined by automation devices alone, but depends to a large extent on the overall configuration of an automation solution. This includes a powerful communication system in addition to plant visualization and operator control and monitoring.

The STEP 7 engineering tool supports you during the engineering and configuration of an automation solution.

Applications of PROFIBUS DP

The PROFIBUS network offers wireless connection of several controllers, components and subnets as electrical network, optical network or by using links. Sensors and actuators are controlled centrally by means of PROFIBUS DP.

The following figure shows connection options to PROFIBUS DP:

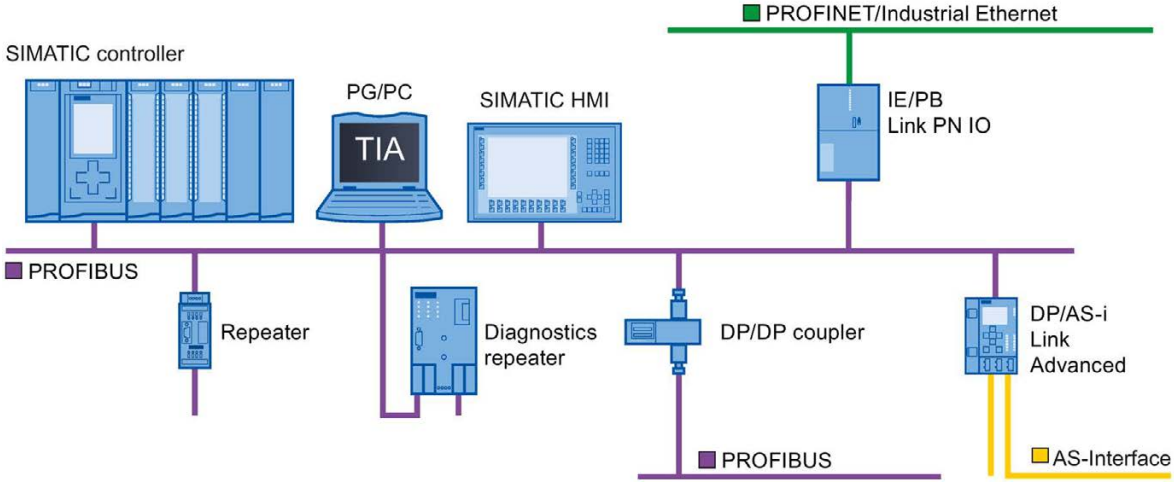

Figure 2-1 Connection options to PROFIBUS DP

Objectives of PROFIBUS DP

Distributed automation systems are increasingly used in production and process automation. This means a complex control task is divided up into smaller, more transparent subtasks with distributed control systems. This creates a high demand for communication between the distributed systems.

Distributed systems offer the following benefits:

- Independent and simultaneous commissioning of individual devices is possible
- Small, manageable programs
- Parallel processing due to distributed automation systems
- Reduced response times
- Higher-level structures can take on additional diagnostics and logging functions.
- Increased plant availability because the rest of the overall system can continue to work when a subordinate station fails.

2.1.2 PROFIBUS terminology

Definition: Devices in the PROFIBUS environment

In the PROFIBUS environment, "device" is the generic term for:

- Automation systems (for example, PLC, PC)
- Distributed I/O systems
- Field devices (for example, hydraulic devices, pneumatic devices)
- Active network components (e.g., diagnostic repeater, optical link module)
- Gateways to AS interface or other fieldbus systems

Devices with PROFIBUS DP

The figure below shows the most important components with PROFIBUS DP. The table below lists the designations of the individual components.

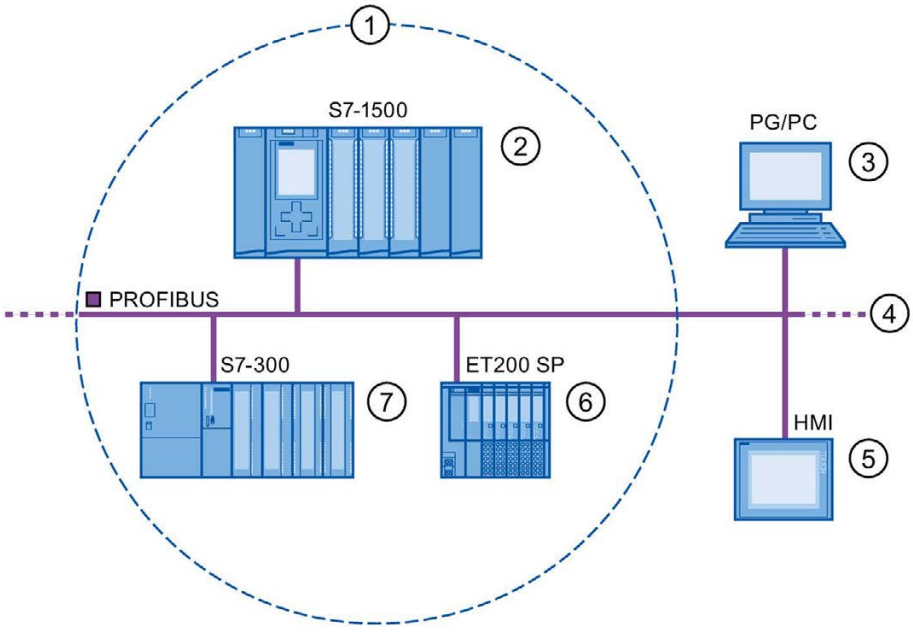

Number	PROFIBUS	Note
①	DP master system	
②	DP master	Device used to address the connected DP slaves. The DP master exchanges input and output signals with field devices. The DP master is often the controller on which the automation program runs.
③	PG/PC	PG/PC/HMI device for commissioning and diagnostics DP master of class 2
④	PROFIBUS	Network infrastructure
⑤	HMI	Device for operating and monitoring functions
⑥	DP slave	Distributed field device assigned to the DP master, e.g., valve terminals, frequency converters.
⑦	I-slave	Intelligent DP slave

Figure 2-2 Devices with PROFIBUS

Overview of I/O communication

I/O communication is the reading or writing of inputs/outputs of the distributed I/O. The figure below gives you an overview of I/O communication using PROFIBUS DP:

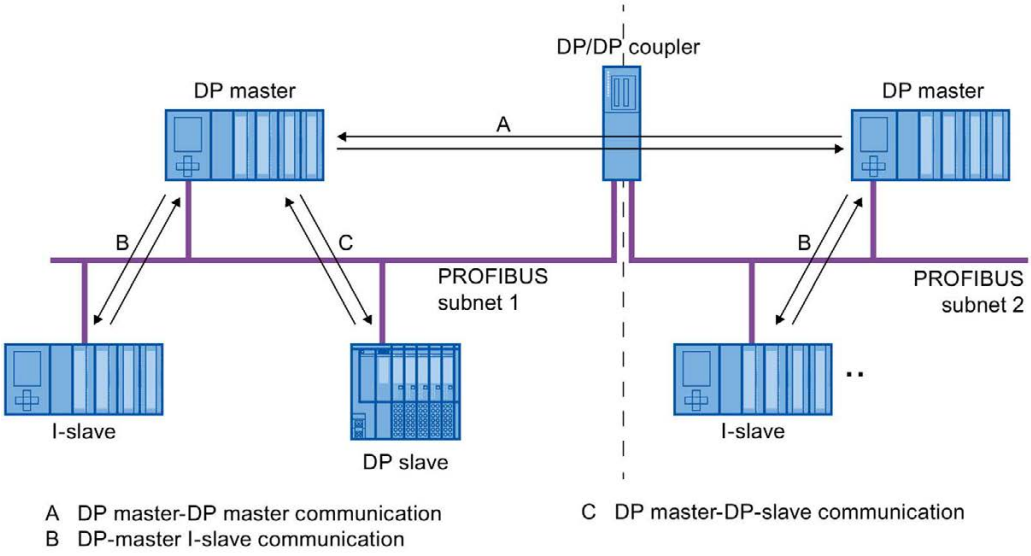

Figure 2-3 I/O communication using PROFIBUS DP

I/O communication is also available with the communication module (CM) or the interface module (IM) with integrated DP interface. These DP interfaces behave like integrated DP interfaces of the CPU.

I/O communication using PROFIBUS DP

Table 2- 1 I/O communication using PROFIBUS DP

Communication between …	Explanation
DP master and DP slave	The data exchange between a DP master and DP slaves with I/O modules takes place as follows: The DP master queries the DP slaves of its master system one after the other, receives input values from the DP slaves, and transmits output data to the DP slaves (master-slave principle).
DP master and I-slave	A fixed amount of data is transmitted cyclically between the user programs in CPUs of DP masters and I-slaves. The DP master does not access the I/O modules of the I-slave, but instead accesses configured address areas, called transfer areas, that can be inside or outside the process image of the I-slave CPU. If parts of the process image are used as transfer areas, these may not be used for actual I/O modules. Data transmission takes place with load and transfer operations using the process image or by direct access.
DP master and DP master	A fixed amount of data is transmitted cyclically between the user programs in CPUs of DP masters. A DP/DP coupler is required as additional hardware. The DP masters mutually access configured address areas, called transfer areas, inside or outside the process image of the CPUs. If parts of the process image are used as transfer areas, these may not be used for actual I/O modules. Data transmission takes place with load and transfer operations using the process image or by direct access.

Additional information

You can find additional information on the hardware configuration in the STEP 7 online help.

2.1.3 PROFIBUS DP interface

Properties

A PROFIBUS device has at least one PROFIBUS interface with an electrical (RS 485) interface or optical (Polymer Optical Fiber, POF) interface.

Table 2- 2 Properties of the PROFIBUS DP interface

Standard	PROFIBUS: IEC 61158/61784
Physical bus/media	PROFIBUS cables (twisted two-wire lines RS 485 or fiber-optic cables)
Transmission rate	9.6 kbps to 12 Mbps

Representation of the PROFIBUS DP interface in STEP 7

In the device view of STEP 7, the PROFIBUS DP interfaces for a DP master and a DP slave are highlighted by a purple rectangle:

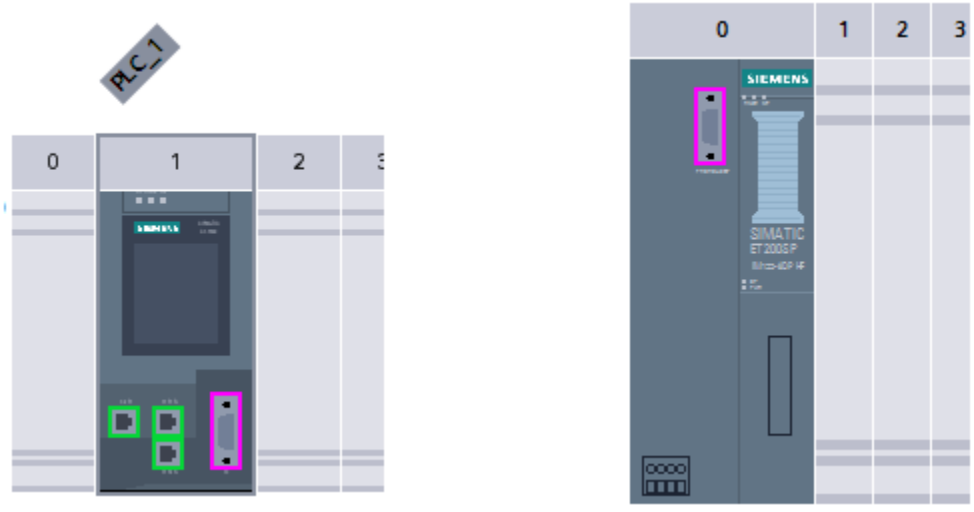

Figure 2-4 PROFIBUS DP interfaces

2.2 Structure of PROFIBUS networks

Contents of this chapter

The following chapter provides background information on building your communication network.

- Overview of the most important passive network components: These are network components that forward a signal without the possibility of actively influencing it, for example, cables, connectors.
- Overview of the most important active network components: These are network components that actively affect a signal, for example, repeaters, diagnostic repeaters.
- Overview of the most common network structures (topologies)

Physical connections of industrial networks

PROFIBUS devices can be networked in industrial plants in two different physical ways:

- By means of electrical signals via copper cables
- By means of optical signals via fiber-optic cables

Selection criteria for networking

The table below includes selection criteria for electrical and optical networking of PROFIBUS devices:

Table 2- 3 Selection criteria for electrical and optical networking

Criteria		Electrical PROFIBUS	Optical network with OLM	Optical network with OBT
Transmission medium	Shielded two-wire line	●	–	–
	POF	–	●	●
	PCF	–	●	●
	Glass	–	●	–
Distances	Max. network span	PROFIBUS DP: 9.6 km PROFIBUS PA: 1.9 km	90 km	9.6 km
	Between two devices	up to 1 km 1)	up to 15 km 2)	up to 300 m 2)
Topology	Bus	●	–	–
	Linear	–	●	●
	Tree	●	●	●
	Ring	–	●	●
Transmission protocols		DP, PA	DP, PA	DP
Connection of devices by means of	OLM	–	●	–
	Integrated interfaces	●	–	●
	Bus terminal	●	–	●
	Bus connector	●	–	–
Electrical network segments can be connected		●	●	–

● Suitable

– Not relevant for this application

1) Depending on data rate and type of service used

2) Depending on cable type used

Installation guideline for PROFIBUS networks

A PROFIBUS segment must be terminated at the start and end; passively with a connector or actively with a bus terminating resistor.

The same principles apply to the installation of a PROFIBUS network as described in the SIMATIC NET PROFIBUS networks (http://support.automation.siemens.com/WW/view/en/35222591) manual.

2.2.1 Passive network components for RS 485 networks

2.2.1.1 RS 485 cables

Introduction

The following applies to all RS 485 cables for PROFIBUS from Siemens:

- Their double shielding makes them especially suited for laying in industrial environments with electromagnetic interference.
- A continuous grounding concept can be implemented by means of the outer shield of the bus cable and the ground terminals of the bus terminals.
- The imprinted meter marking makes it easier to determine the length (accuracy ±5%).

RS 485 cables for PROFIBUS

SIMATIC NET PROFIBUS cables are available in different versions which allow optimum adaptation to different areas of application:

- FC Standard Cable GP (bus cable for fixed laying inside buildings)
- FC Standard Cable IS GP (bus cable for hazardous area)
- FC-FRNC Cable GP (bus cable with halogen-free protective jacket for use inside buildings)
- FC Food Cable (bus cable with PE jacket for use in the food and beverage industry)
- FC Robust Cable (bus cable with PUR jacket for environments subject to chemical and mechanical stress)
- FC Ground Cable (ground cable with PE jacket)
- PROFIBUS FC Trailing Cable (trailing cable for tow chains)
- PROFIBUS Festoon Cable (bus cable for festoon mounting)
- PROFIBUS Torsion Cable (torsion-free bus cable for networking movable plant parts, for example, robots)
- PROFIBUS FC Flexible Cable (bus cable for machine parts that are moved infrequently or cabinet doors)
- SIENOPYR-FR ship cable (for permanent laying on ships and off-shore units in all rooms and on open deck)
- PROFIBUS Hybrid Standard Cable (hybrid cable with 2 power wires (1.5 mm^2) for data and power supply of the ET 200pro)
- PROFIBUS Hybrid Robust Cable (trailable hybrid cable with 2 power wires (1.5 mm^2) for data and power supply of the ET 200pro)

Maximum cable lengths

When using copper cables, the maximum size of a PROFIBUS segment depends on the transmission rate.

If these lengths are not sufficient for your application, you can expand the network by using repeaters. You can achieve a maximum size by cascading up to nine repeaters.

Table 2- 4 Maximum cable lengths

Transmission rate	Maximum cable length of a bus segment	Maximum distance between two stations
9.6 to 187.5 kbps	1000 m	10000 m
500 kbps	400 m	4000 m
1.5 Mbps	200 m	2000 m
3 to 12 Mbps	100 m	1000 m

2.2.1.2 PROFIBUS FastConnect system

PROFIBUS FastConnect (FC)

PROFIBUS FastConnect is a system for fast and easy fabrication of PROFIBUS copper cables.

The system consists of three components:

- FastConnect bus cables for quick mounting
- FastConnect stripping tool
- FastConnect bus connector for PROFIBUS with insulation displacement method

FastConnect bus cables and stripping tool

The special design of the FastConnect bus cables allows for the use of the FastConnect stripping tool to accurately strip away the protective jacket and the braided shield in one step. The connection of the prepared cables takes place in the FastConnect bus connectors using the insulation displacement method.

All PROFIBUS FastConnect bus cables can also be connected to the conventional bus connectors with screw-type terminals.

Area of application

You need FastConnect bus connectors for PROFIBUS for the following applications:

- Connect devices with an electrical 9-pin D-Sub interface to IEC 61158-2 directly with SIMATIC NET PROFIBUS cables.
- Connect electrical segments or individual devices to the Optical Link Module (OLM) and Optical Bus Terminal (OBT).
- Connect devices or programming devices to the repeater.

Versions

The FastConnect bus connector in degree of protection IP20 is available in the following versions:

- with integrated terminating resistor and isolating function
- with or without PG socket
- with a cable outlet of 35°, 90° or 180°
- with device category 3G suitable for zone 2 hazardous area

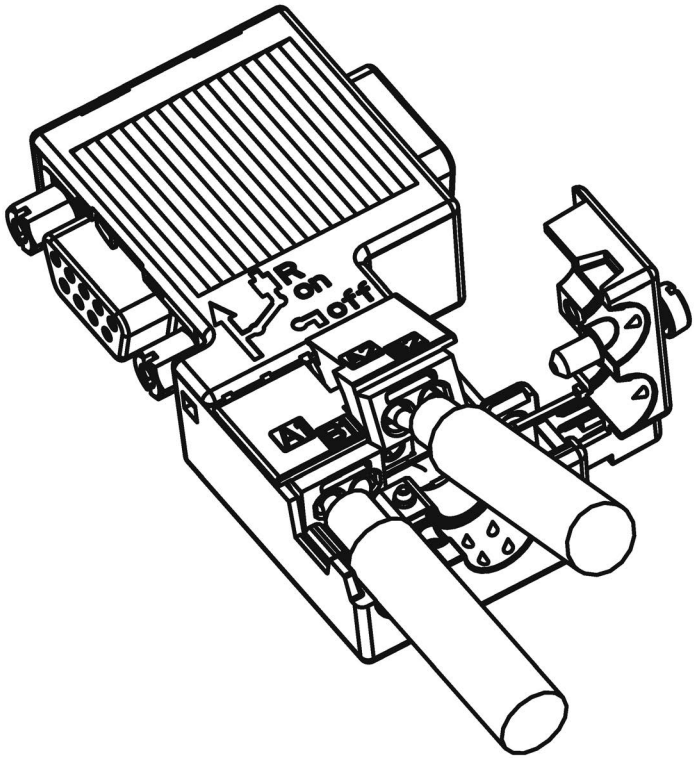

Figure 2-5 Example for PROFIBUS FastConnect bus connector with PG socket, cable outlet 90°

Additional information

For additional information on the available components visit the Siemens Mall (http://mall.industry.siemens.com).

2.2.1.3 PROFIBUS bus connector

Area of application

You need PROFIBUS bus connectors for the following applications:

- Connect devices with a 9-pin D-Sub interface to IEC 61158-2 directly with the SIMATIC NET PROFIBUS cables.
- Connect electrical segments or individual devices to the Optical Link Module (OLM) and Optical Bus Terminal (OBT).
- Connect devices or programming devices to the repeater.

Versions

The PROFIBUS bus connector in degree of protection IP20 is available in the following versions:

- with integrated terminating resistor and isolating function
- with or without PG socket
- with a cable outlet of 35°, 90° or 180°
- with device category 3G suitable for zone 2 hazardous area

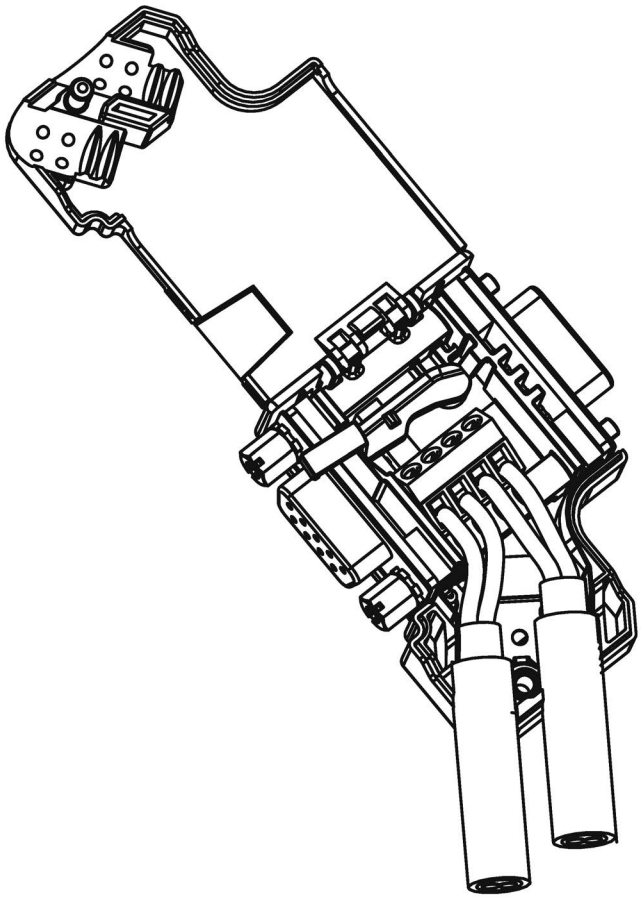

Figure 2-6 Example for PROFIBUS bus connector with PG socket, cable outlet 35°

Additional information

For additional information on the available components visit the Siemens Mall (http://mall.industry.siemens.com).

2.2.1.4 M12 bus connector

Area of application

Devices with an electrical M12 interface can use the M12 bus connector for SIMATIC NET PROFIBUS for direct connection with the SIMATIC NET PROFIBUS cables.

The M12 bus connector in degree of protection IP65 is available in the following versions:

- with screw-type terminals
- with insulation displacement termination
- with a cable outlet of 180°

2.2.1.5 Bus terminals for RS 485 networks

Bus terminal RS 485 and bus terminal M12

A bus terminal is used for the connection of an individual PROFIBUS station with RS485 interface to the PROFIBUS bus cable.

Bus terminals in degree of protection IP20 are available in the following versions:

- Bus terminal RS 485 with or without PG interface, transmission rate 9.6 kbps to 1.5 Mbps, integrated terminating resistor combination (connectible), with 1.5 m and 3 m connecting cable
- Bus terminal M12, transmission rate 9.6 kbps to 12 Mbps, integrated terminating resistor combination with isolating function, with 1.5 m connecting cable

2.2.1.6 M12 bus terminating resistor

Terminating segment with terminating resistor

If there is a station with M12 connection system at the beginning or end of a PROFIBUS segment, you need an M12 bus terminating resistor.

The M12 PROFIBUS connection of a device consists of an M12 socket for the infeed and an M12 male connector to loop-through the bus signal.

This means you need one bus terminating resistor with male contacts (6GK1905-0EC00) and with female contacts (6GK1905-0ED00) for each M12 bus cable.

2.2.2 Passive components for optical networks

2.2.2.1 Fiber-optic cables

Types of fiber-optic cables

Data transmission with fiber-optic cables takes place through modulation of electromagnetic waves in the range of visible and invisible light. These cables are made of high-quality plastic fibers and glass fibers:

- Plastic and PCF fiber-optic cables (Page 26)
- Glass fiber-optic cables (Page 27)

The different types of fiber-optic cables provide solutions matched to the operating and environmental conditions for the connection of components with each other.

Benefits

Fiber-optic cables offer the following benefits when compared with electrical cables:

- Galvanic isolation of the devices and segments
- No potential equalization currents
- No impact on transmission path through external electromagnetic interference
- No lightning protection elements required
- No noise radiation along the transmission route
- Low weight
- Depending on the type of fiber you can implement cable lengths up to few kilometers at even higher transmission rates.
- No dependency of the maximum permitted distances on the transmission rate

Additional information

Additional information of the properties and technical specifications of the passive components and connectors for fiber-optic cables is available in the PROFIBUS network manual (http://support.automation.siemens.com/WW/view/en/35222591).

2.2.2.2 Plastic and PCF fiber-optic cables

Plastic and PCF fiber-optic cables

Plastic (POF) and PCF fiber-optic cables are used for the connection of Optical Link modules with connections for plastic fiber-optic cables (OLM/P), Optical Bus Terminal (OBT) and devices with integrated optical interfaces. Under certain conditions, they are an inexpensive alternative to conventional glass fiber-optic cables.

Plastic Fiber Optic duplex core

The plastic fiber-optic duplex core is a flat dual core with PVC inner jacket without protective jacket. The cable can be easily assembled on-site.

The cable is intended for indoor applications with low mechanical loads or inside cabinets. For OLM connections and with integrated optical interfaces you cover a length of up to 50 m between two devices with this cable.

Plastic Fiber Optic standard cable

The plastic fiber optic standard cable consists of two plastic fibers with robust polyamide inner jacket surrounded by Kevlar tensile elements and a purple PVC protective jacket. The cable can be easily assembled on-site.

The robust round cable is suited for indoor applications. The maximum distance that can be covered is 80 m for OLM/P connections and 50 m with integrated optical interfaces and OBT.

PCF Standard Cable

The pre-assembled PCF Standard Cable consists of two PCF fibers surrounded by Kevlar tensile elements and a purple PVC protective jacket. It is always supplied with a pulling aid installed on one end to pull in the cable channels.

The robust round cable is suited for indoor applications with cable lengths up to 400 m (OLM) or 300 m (integrated optical interfaces, OBT) between two devices.

PCF Standard Cable GP

The PCF Standard Cable GP consists of two PCF fibers surrounded by Aramid tensile elements and a green PVC protective jacket. The cable is pre-assembled and can be ordered by the meter. It is supplied with a pulling aid installed on one end to pull in the cable channels.

The robust round cable is suited for indoor and outdoor applications with cable lengths up to 400 m (OLM) or 300 m (integrated optical interfaces, OBT) between two devices.

PCF Trailing Cable

The PCF Trailing Cable consists of two PCF fibers surrounded by Aramid tensile elements and a green PUR protective jacket. The cable is pre-assembled and can be ordered by the meter. It is supplied with a pulling aid installed on one end to pull in the cable channels.

The robust round cable is suited for moving indoor and outdoor applications with cable lengths up to 400 m (OLM) or 300 m (integrated optical interfaces, OBT) between two devices.

PCF Trailing Cable GP

The PCF Trailing Cable GP consists of two PCF fibers surrounded by Aramid tensile elements and a green PVC protective jacket. The cable is pre-assembled and can be ordered by the meter. It is supplied with a pulling aid installed on one end to pull in the cable channels.

The robust round cable is suited for moving indoor and outdoor applications with cable lengths up to 400 m (OLM) or 300 m (integrated optical interfaces, OBT) between two devices.

2.2.2.3 Glass fiber-optic cables

Glass fiber-optic cables

Glass fiber-optic cables are suitable for connection of optical interfaces that work in the wavelength range around 850 nm and around 1300 nm. They include two graded-index multimode fibers of the type 62.5/125 µm.

The glass fiber-optic cables are available in different versions which makes for an optimum adaptation to different areas of application:

- Fiber Optic standard cable
- INDOOR Fiber Optic indoor cable
- Flexible Fiber Optic trailing cable

Fiber Optic standard cable

The standard cable is the universal cable for indoor and outdoor use.

INDOOR Fiber Optic indoor cable

The indoor cable is intended for weather-proof indoor use. It is halogen-free, non-crush and flame-retardant.

Flexible Fiber Optic trailing cable

The trailing cable was designed for the special application of forced movement, for example, for constantly moved machine parts such as trailing chains. It is mechanically designed for 100,000 bending cycles by ±90° (with the specified minimum radius). Integrated dummy elements ensure a round cross-section of the cable. The trailing cable can be used indoors and outdoors.

Maximum distances between two optical link modules

The following distances may not be exceeded between two OLMs regardless of the optical power budget:

- OLM/P11, OLM/P12: 400 m
- OLM/G11, OLM/G12, OLM/G12-EEC: 3 km
- OLM/G11-1300, OLM/G12-1300: 15 km

Additional information

All operating instructions (http://support.automation.siemens.com/WW/view/en/10805951/133300) of the SIMATIC NET bus components include information on distances that can be covered with the SIMATIC NET glass fiber-optic cables. You can configure your optical network without any calculations using simple limits.

2.2.3 Active network components

2.2.3.1 Network components in electrical networks

Active network components

The following active network components are available for PROFIBUS in electrical networks:

- Repeater RS485
- Diagnostics repeater
- PROFIBUS Terminator
- DP/DP coupler
- IE/PB Link PN IO
- IWLAN/PB Link PN IO
- Active components for the connection of CAN
- Active components for the gateway between PROFIBUS and AS-Interface
  - DP/AS-i LINK Advanced
  - DP/AS-Interface Link 20E
  - DP/AS-i F-Link

RS485 repeater

The RS485 IP20 repeater connects two PROFIBUS bus segments in RS485 technology with up to 32 devices. It provides transmission rates from 9.6 kbps to 12 Mbps.

The RS485 repeater refreshes a signal regarding amplitude, signal width and edge steepness between two segments. It is used when more than 32 stations are connected to the bus or the maximum cable length of a segment is exceeded.

Bus segments can be operated ungrounded (galvanic isolation of segments) with an RS485 repeater.

Diagnostics repeater

The diagnostic repeater connects three PROFIBUS segments in RS485 technology, two of which are diagnostics-capable segments with 31 devices each. It is designed as DP slave to send diagnostics alarms to the DP master.

The diagnostic function provides the location and the cause of cable faults, such as wire break or missing terminating resistors. The fault location is indicated relative to the existing devices.

The diagnostics repeater refreshes a signal regarding amplitude, signal width and edge steepness between the segments. The cascading depth between any two PROFIBUS devices is limited to nine diagnostics repeaters.

PROFIBUS Terminator

The PROFIBUS Terminator forms an active bus termination. Bus devices can be switched off, removed or replaced without affecting data transmission. This is particularly true for bus devices on both ends of the bus cable at which terminating resistors must be connected or supplied. The PROFIBUS Terminator can be mounted on a standard mounting rail.

IE/PB Link PN for the connection of a PROFIBUS segment to an Industrial Ethernet network

The IE/PB Link PN IO as independent component provides the seamless transition between Industrial Ethernet and PROFIBUS. Through the use of IE/PB Link PN IO as substitute on the Ethernet, the existing PROFIBUS devices can continue to be used and can be integrated into a PROFINET application.

A PROFINET IO controller is required for this configuration. The IE/PB Link PN acts as master on the PROFIBUS end.

IWLAN/PB Link PN IO as gateway between LAN and PROFIBUS

PROFIBUS devices can be coupled to PROFINET IO by means of IWLAN/PB Link PN IO. This means you can integrate existing PROFIBUS configurations into PROFINET.

The IWLAN/PB Link PN IO supports the use of IWLAN and WLAN antennas for wireless data transmission, for example, in suspended monorail systems or conveyor systems. Because of the PROFINET support, the numerous PROFIBUS system services, for example, diagnostics by bus, can continue to be used.

A PROFINET IO controller is required for this configuration. The IWLAN/PB Link PN IO acts as master on the PROFIBUS end.

CANopen module for connection to CAN

You can use the CANopen module to easily connect CANopen applications to PROFIBUS.

Typical areas of application:

- Control of hydraulic valves/hydraulic axes in vehicles
- Control of motors in packaging machines and on conveyor belts
- Use in wind turbines for detection of angular encoders
- Detection of HMI devices on machines, e.g., joysticks
- Detection of measured data from displacement transducers, inclination sensors or angle encoders on tower cranes or gantry cranes

DP/DP coupler for connection of two PROFIBUS networks

The PROFIBUS DP/DP coupler is used to connect two PROFIBUS DP networks. Data (0 to 244 bytes) is transmitted from the DP master of the first network to the DP master of another network and vice versa.

The DP/DP coupler comes equipped with two independent DP interfaces that establish the connection to the two DP networks. There is one slave at each DP network. The data exchange between the two DP networks takes place by internal copying in the coupler.

DP/PA bus link for connection of PROFIBUS PA

The DP/PA bus link is the connection between PROFIBUS DP and PROFIBUS PA. This means it connects the process control systems with the field devices of the process automation.

The following components are available for a DP/PA bus link:

- DP/PA coupler Ex [ia]
- DP/PA coupler FDC 157-0
- Interface module IM 153-2 for establishing a DP/PA link.
- Active field distributor AFDiS for hazardous areas

Active components for the gateway between PROFIBUS and AS-Interface

- **DP/AS-i LINK Advanced**:

  The **DP/AS-i LINK Advanced** is PROFIBUS DPV1 slave (according to IEC 61158-2/EN 61158-2) and AS-Interface master (according to AS-Interface specification V3.0 according to EN 50295) and provides transparent data access to AS-Interface from PROFIBUS DP.

  PROFIBUS DP masters can cyclically exchange I/O data with the AS-Interface; DP masters with acyclic services can also make AS-Interface master calls. The **DP/AS-i LINK Advanced** is particularly suited for distributed configurations and for the connection of a subordinate AS-Interface network.

  The DP/AS-i LINK Advanced in the version as AS-Interface single master is completely sufficient for applications with typical configuration limits.

  For applications with high configuration limits, the DP/AS-i LINK Advanced is used as AS-Interface double master. In this case, the duplicate configuration limits can be used on two independently running AS-Interface strands.

- **DP/AS-Interface Link 20E:**

  The DP/AS-Interface Link 20E is PROFIBUS DP slave (in accordance with EN 61158) and AS-Interface master (in accordance with AS-Interface specification V3.0 according to EN 50295) and supports operation of the AS-Interface on PROFIBUS DP.

  Single PROFIBUS masters can cyclically exchange I/O data with the AS-Interface; masters with acyclic services can exchange I/O data and make master calls.

- **DP/AS-i F-Link:**

  The DP/AS-i F-Link is PROFIBUS DP-V1 slave (according to EN 61158) and AS-i master (according to AS-Interface specification V3.0 to EN 50295) and provides transparent data access to AS-Interface from PROFIBUS DP. The DP/AS-i F-Link is also the only AS-i master that can forward safety-oriented input data of ASIsafe slaves to a fail-safe CPU with PROFIBUS DP master by means of the PROFIsafe protocol. Additional safety cabling or monitoring is not required (in particular, no AS-Interface safety monitor). Depending on the slave type, you can transmit binary values or analog values. All slaves according to AS-Interface specification V2.0, V2.1 or V3.0 can be operated as AS-i slaves.

  As fully-featured AS-i master according to specification V3.0, you can use higher configuration limits on the AS-i network (496 inputs and outputs each, up to 62 digital or analog slaves).

Additional information

Information on the components is available in the Siemens Mall (http://mall.industry.siemens.com).

Additional information is available in these manuals:

- PROFIBUS Network Manual (http://support.automation.siemens.com/WW/view/en/35222591)
- Diagnostic repeater (http://support.automation.siemens.com/WW/view/en/7915183)
- DP/DP Coupler (http://support.automation.siemens.com/WW/view/en/1179382)
- SIMATIC NET Twisted-Pair and Fiber-Optic Networks (http://support.automation.siemens.com/WW/view/en/8763736)
- Basics on Setting up an Industrial Wireless LAN (http://support.automation.siemens.com/WW/view/en/9975764)
- SIMATIC bus links, DP/PA coupler, active field distributors, DP/PA Link and Y Link (http://support.automation.siemens.com/WW/view/en/1142696)
- Information on the CANopen module is available on the Internet (http://www.hms-networks.com/can-for-et200s).
- DP/AS-interface LINK Advanced (http://support.automation.siemens.com/WW/view/en/22502958/133300) manual
- DP/AS-i F-Link (http://support.automation.siemens.com/WW/view/en/24196041) manual

See also

Topology with RS485 repeater (Page 35)

OLM topology (Page 40)

WLAN topology (Page 40)

Connecting PROFIBUS to PROFINET (Page 41)

2.2.3.2 Network components in optical networks

Active network components

The following active network components are available for PROFIBUS in optical networks:

- Optical Link Module OLM
- Optical Bus Terminal OBT

Optical Link Module OLM

You can use the PROFIBUS Optical Link Modul OLM to install PROFIBUS networks in line, star structure and redundant ring structure.

The transmission rate of a fiber-optic cable line does not depend on the distance and can be 9.6 kbps to 12 Mbps.

Applications for OLM include, for example, plant buses on PROFIBUS base, networking across buildings using glass fiber-optic cables, mixed networks with electrical and optical segments, large networks (road tunnels, traffic guidance systems) and networks with high demands on availability (redundant ring networks).

Optical Link modules can be combined by means of an RS485 interface and individual devices or entire electrical segments can be integrated into the optical PROFIBUS network.

The following distances may not be exceeded between two OLMs regardless of the optical power budget:

- OLM/P11, OLM/P12: 400 m
- OLM/G11, OLM/G12, OLM/G12-EEC: 3 km
- OLM/G11-1300, OLM/G12-1300: 15 km

Optical Bus Terminal OBT (optical bus terminal)

The Optical Bus Terminal connects an individual PROFIBUS device without integrated optical interface or a PROFIBUS RS 485 segment with up to 31 devices to an optical PROFIBUS.

An individual PROFIBUS DP device is connected with its RS 485 interface by means of a PROFIBUS cable with integrated terminating resistor, for example, connecting cable 830-1T, to the RS 485 interface of the OBT. The OBT is integrated into the optical line by means of two optical interfaces.

The following optical transmission media can be connected to the OBT:

- Plastic fiber-optic cable up to 50 m single distance length. They can be assembled on-site with two 2x2 Simplex connectors.
- PCF fiber-optic cable up to 300 m single distance length. The cables are delivered pre-assembled.

Additional information

Information on the components is available in the Siemens Mall (http://mall.industry.siemens.com).

Additional information is available in these manuals:

- PROFIBUS network manual (http://support.automation.siemens.com/WW/view/en/35222591)
- SIMATIC NET PROFIBUS, Optical Link Module (http://support.automation.siemens.com/WW/view/de/56606534/0/en)
- SIMATC NET Twisted-Pair and Fiber-Optic Networks (http://support.automation.siemens.com/WW/view/en/8763736)

2.2.4 Examples for topology

2.2.4.1 Topology with RS485 repeater

Configuration options with the RS485 repeater

You can operate the RS485 repeater in the following configurations:

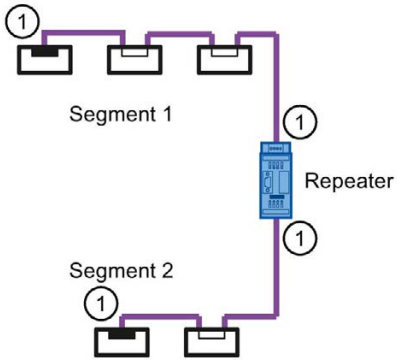

Figure 2-7 Segment 1 and segment 2 connected to RS485 repeater

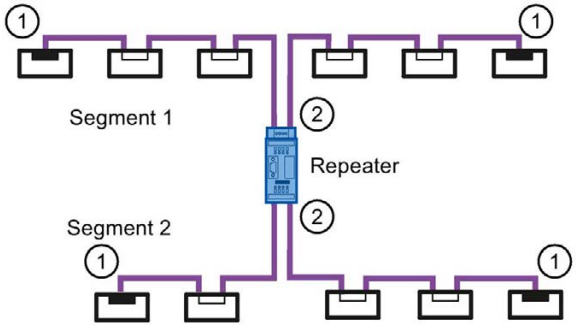

Figure 2-8 Segment 1 and segment 2 looped-through to RS485 repeater

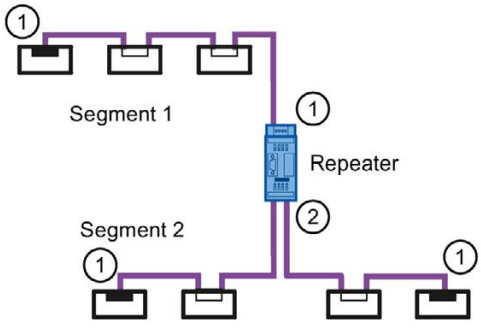

Figure 2-9 Segment 1 connected to RS485 repeater and segment 2 looped-through to RS485 repeater

① Connect terminating resistor

② Do not connect terminating resistor

Configuration example

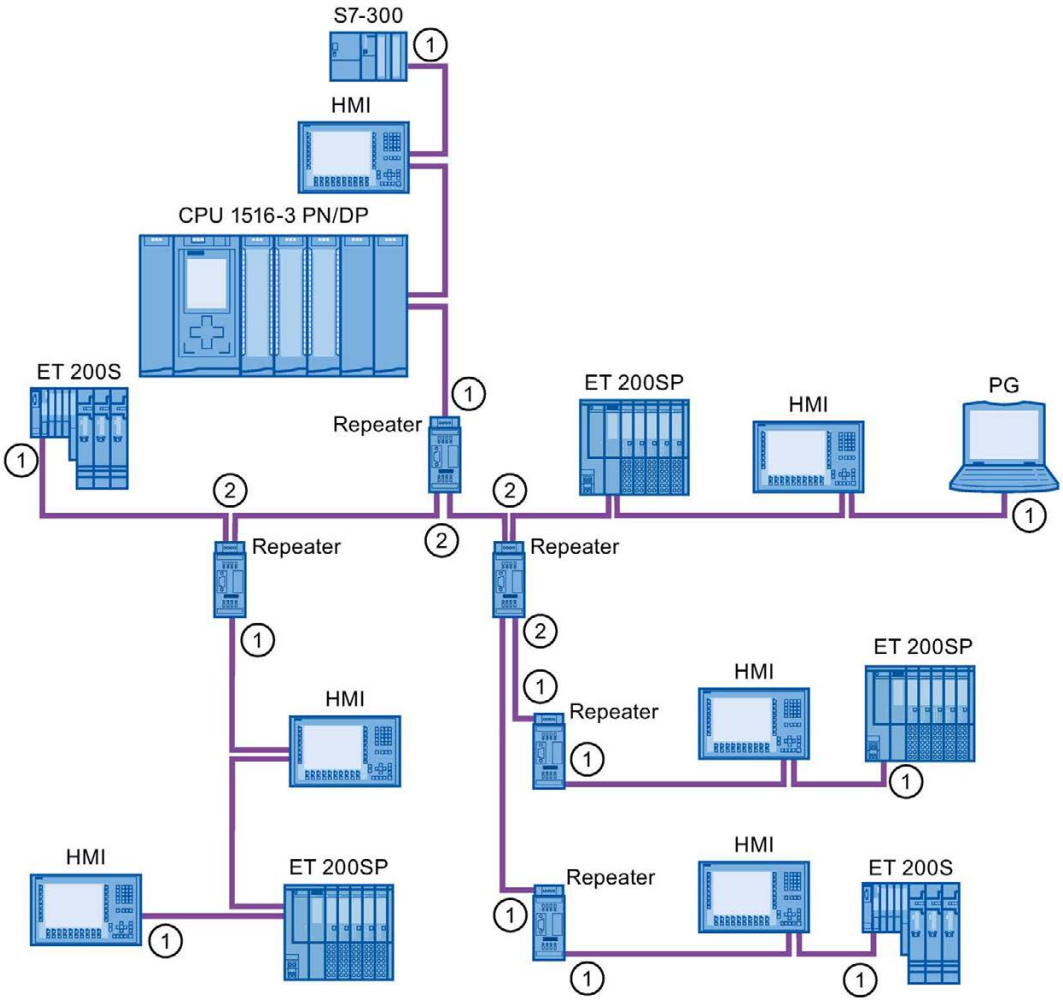

Figure 2-10 Configuration example with five RS485 repeaters

① Connect terminating resistor

② Do not connect terminating resistor

Maximum configuration

If you install a PROFIBUS network with RS485 repeaters, you may not connect more than nine RS485 repeaters in series.

2.2.4.2 Topology with diagnostic repeater

Diagnostic repeater with three segments

You may not exceed the maximum permitted cable length of 100 m per segment that can be monitored for the diagnostic repeater. The segments connected to DP2 and DP3 are diagnostics-capable. The cable length that can be monitored is limited for some cable types.

Maximum cascade depth

You can connect up to nine diagnostic repeaters in series between any two PROFIBUS stations.

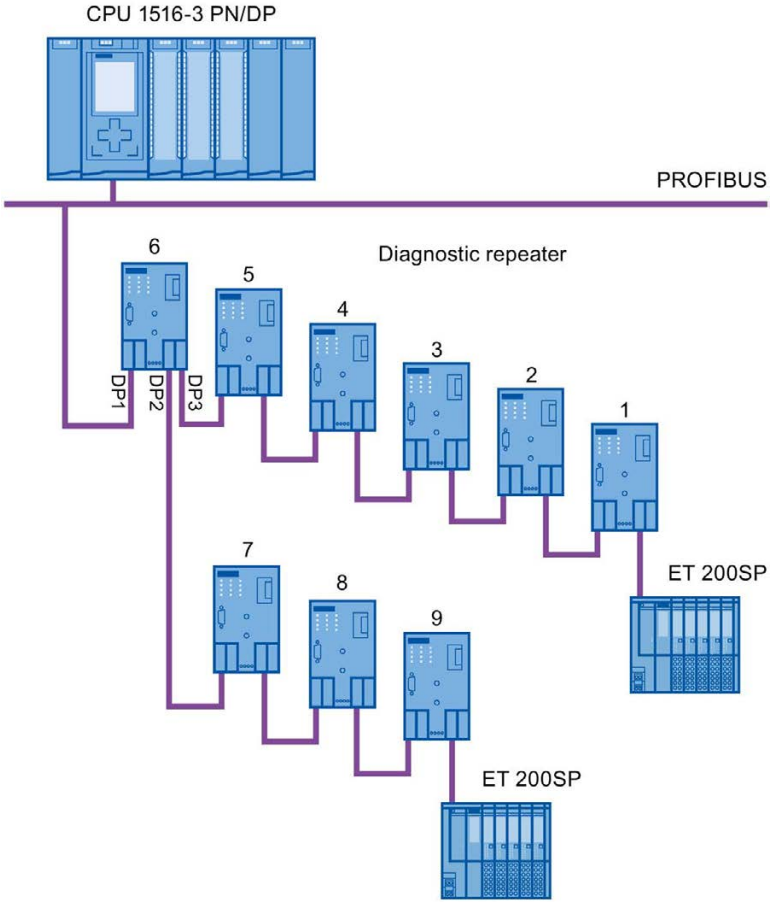

Figure 2-11 Schematic layout of a PROFIBUS network with maximum possible cascade depth at diagnostic repeaters

Example: Maximum cascade depth exceeded

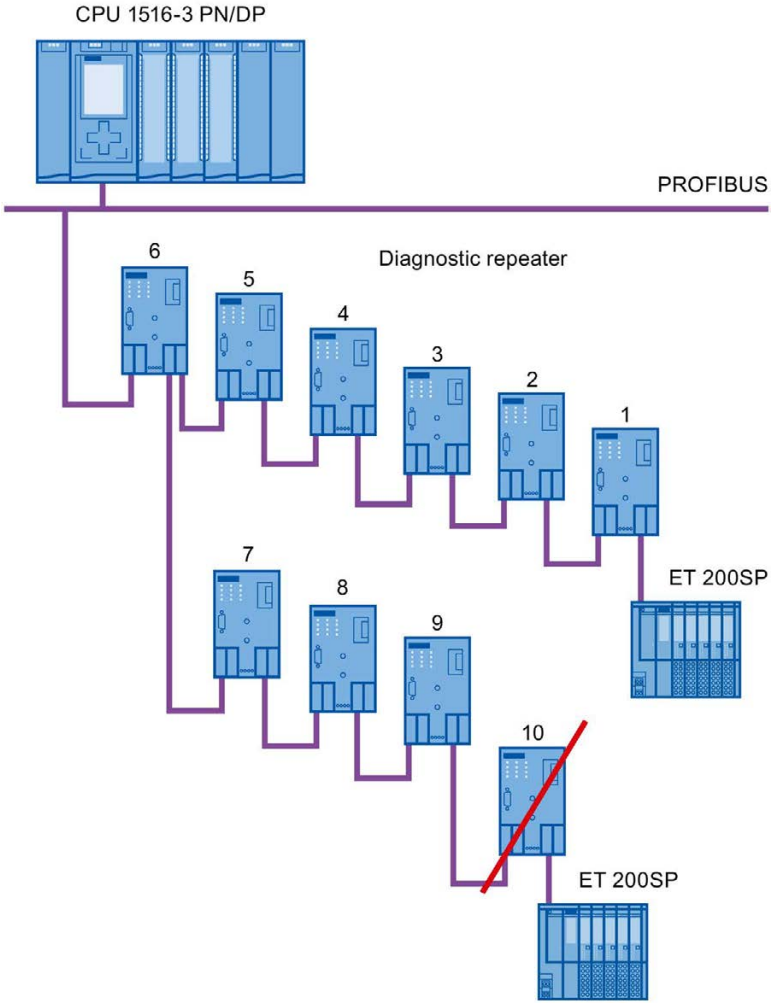

Figure 2-12 Maximum cascade depth exceeded

Layout with several segments

You can increase the number of used diagnostic repeaters by using several segments. The example shows a layout in which the maximum cascade depth is exceeded at two segments.

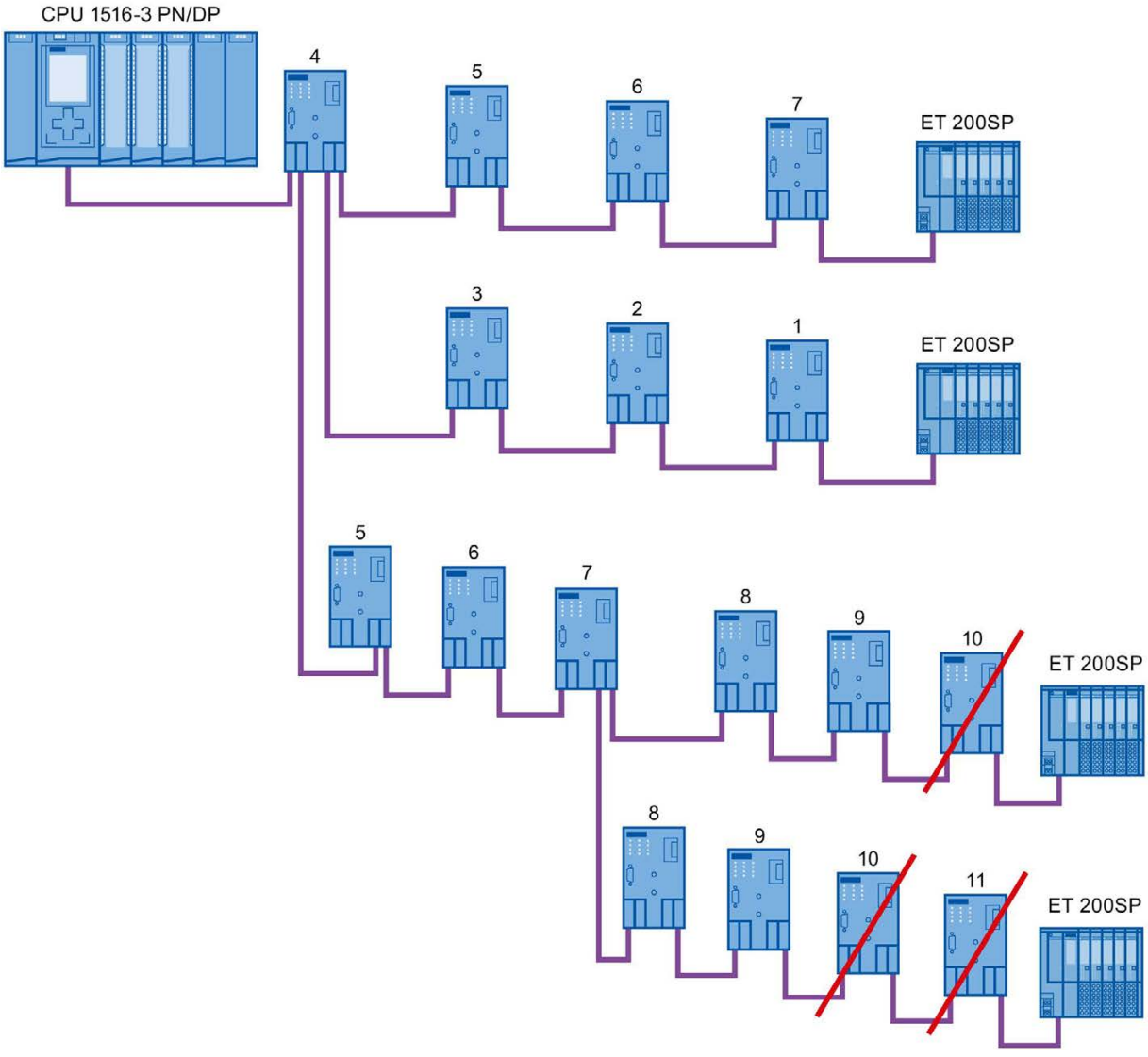

Figure 2-13 Layout with several segments, maximum cascade depth exceeded

Additional information

Additional information is available in the Diagnostic Repeater (http://support.automation.siemens.com/WW/view/en/7915183) manual.

2.2.4.3 OLM topology

Combination of electrical and optical networks with OLM

Additional distances can be covered by means of the Optical Link Module.

Because bus cables across several buildings are particularly vulnerable to damage caused by overvoltage (effect of lightning), the devices in the connected bus segment must be protected against overvoltage.

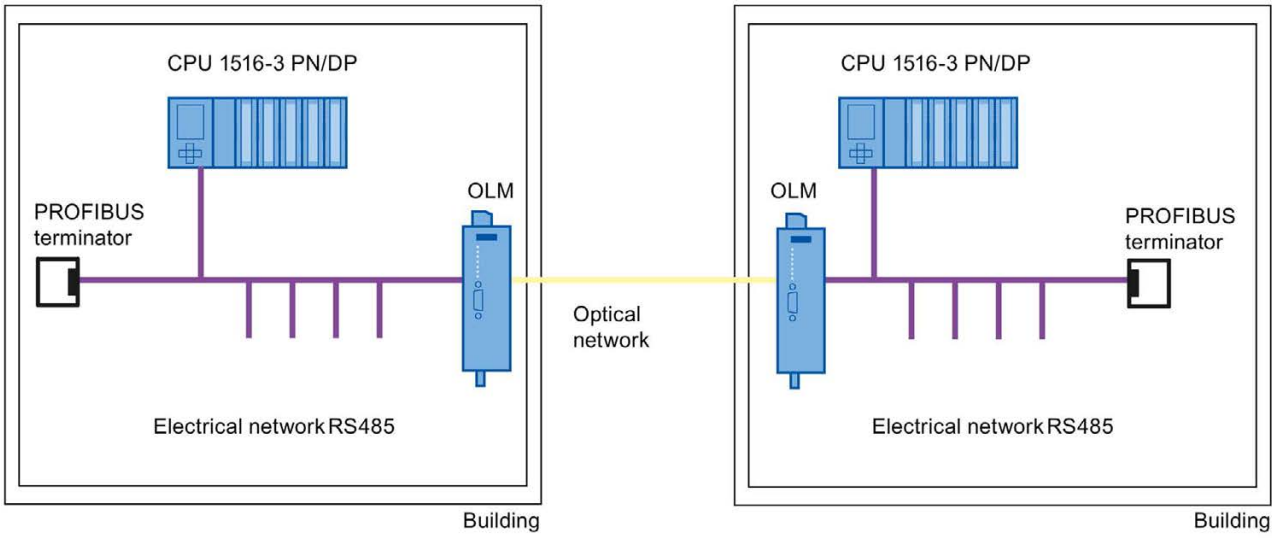

Figure 2-14 Combination of electrical and optical networks

2.2.4.4 WLAN topology

IWLAN/PB Link PN IO as gateway between Industrial Wireless LAN and PROFIBUS

The IWLAN/PB Link PN IO supports the use of IWLAN and WLAN antennas for wireless data transmission. This means the numerous PROFIBUS system services, for example, diagnostic by bus, can be used throughout.

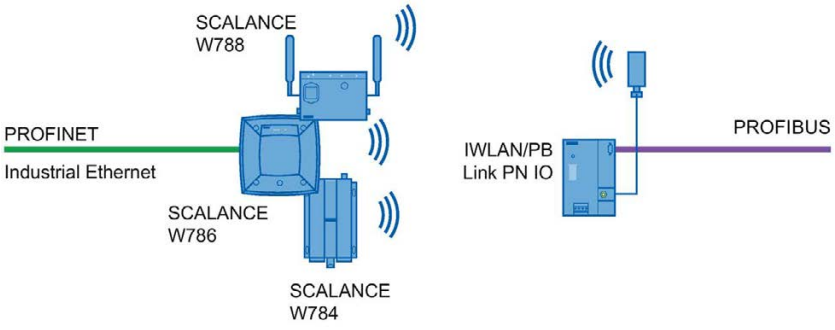

Figure 2-15 PROFIBUS and WLAN

2.2.4.5 Connecting PROFIBUS to PROFINET

PROFIBUS can be integrated in PROFINET. In this way, you can set up any hybrid systems consisting of fieldbus and Ethernet-based subsystems. This provides a continuous data exchange.

Coupling of PROFIBUS and PROFINET

With a proxy-capable PROFINET device that is equipped with a PROFIBUS interface in addition to a PROFINET interface, you can integrate existing PROFIBUS configurations into the PROFINET configuration.

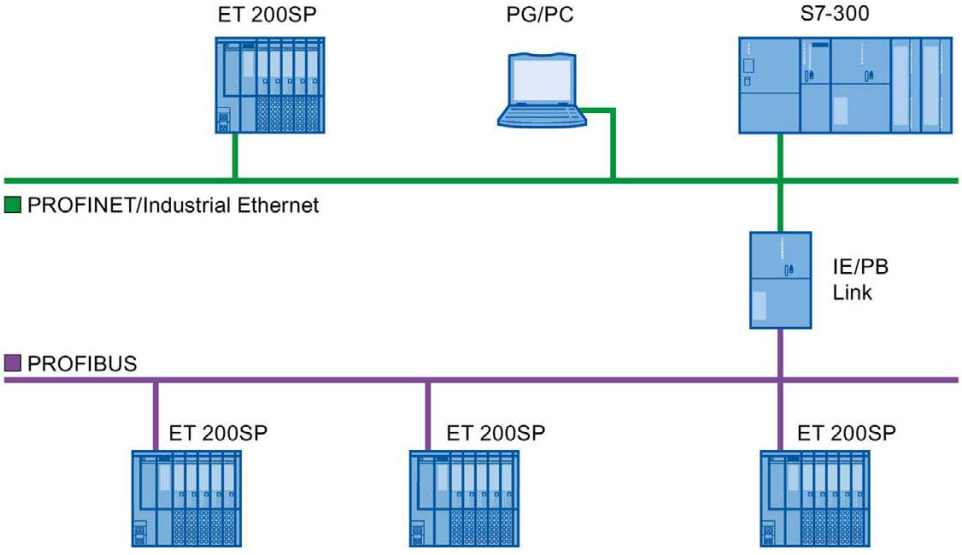

Figure 2-16 Connection of PROFIBUS and PROFINET with IE/PB link

PROFINET device with proxy functionality

The PROFINET device with proxy functionality is the substitute for a PROFIBUS device on Ethernet. The proxy functionality allows a PROFIBUS device to communicate not only with its master but also with all devices on PROFINET.

With PROFINET, existing PROFIBUS systems can be integrated into the PROFINET communication with the aid of an IE/PB link. The IE/PB link PN IO then handles communication via PROFINET on behalf of the PROFIBUS components.

Parameter assignment/addressing 3

To set up an automation system, you will need to configure, assign parameters and link the individual hardware components. The work needed for this is undertaken in the STEP 7 device, topology and network view.

Configuration

"Configuring" is understood to mean arranging, setting and networking devices and modules within the device or network view.

A PROFIBUS address is automatically assigned to each module. The addresses can be subsequently modified.

The CPU compares the preset configuration created in STEP 7 with the actual configuration of the plant. Errors can be detected and signaled immediately this way.

The exact procedure for configuring devices is described in detail in the STEP 7 online help.

Parameter assignment

"Parameter assignment" is understood to mean setting the properties of the components used. The settings for the hardware components and for data exchange are assigned, for example, activating diagnostics, input delay with DI.

The parameters are downloaded into the CPU and transferred to the corresponding modules when the CPU starts up. Modules can be replaced with ease because with SIMATIC CPUs the set parameters are automatically downloaded into the new module during each startup.

Adjusting the hardware to the project requirements

You need to adapt the hardware if you want to set up, expand or change an automation project. To do this, add hardware components to your layout, link them with existing components, and adapt the hardware properties to the tasks.

The properties of the automation systems and modules are preset so that in many cases you do not have to assign parameters again.

But parameter assignment is required in the following cases:

- You want to change the preset parameters of a module.
- You want to use special functions.
- You want to configure communication connections.

Basic procedure for creating a PROFIBUS DP system

- Configuration
  - Creating PROFIBUS devices and modules in STEP 7
  - Assigning the DP slave to a DP master (Page 43)
- Optional: Parameter assignment
  - Assigning the PROFIBUS address (Page 45)
  - Making network settings (Page 46)
  - Considering cable configuration (Page 49)
  - Considering additional network devices (Page 51)
  - Bus parameters – creating a user-defined profile (Page 52)
  - Configuring constant bus cycle time (Page 55)

3.1 Assigning the DP slave to a DP master

PROFIBUS DP system

A PROFIBUS DP system consists of a PROFIBUS DP master and its assigned PROFIBUS DP slaves. Once the devices have been placed in the network view or device view, STEP 7 assigns default parameter values to them. Initially, you only have to assign the DP slaves to one DP master.

Requirement

- The network view of STEP 7 is open.
- A CPU has been placed (e.g., CPU 1516-3 PN/DP).
- A DP slave has been placed (e.g., IM151-1 HF).

Procedure

To assign DP slaves to a DP master, follow these steps:

1. On the DP slave, use the left mouse button to click on the "Not assigned" link. The "Select DP master" menu opens.
2. Select the DP master in the menu to which you want to assign the DP slave.

   Result: A subnet with a DP system is created on the CPU. The CPU is now the PROFIBUS DP master. The DP slave is assigned to the DP master.
3. Repeat steps 1 and 2 for all other DP slaves that you want to assign to the DP master.

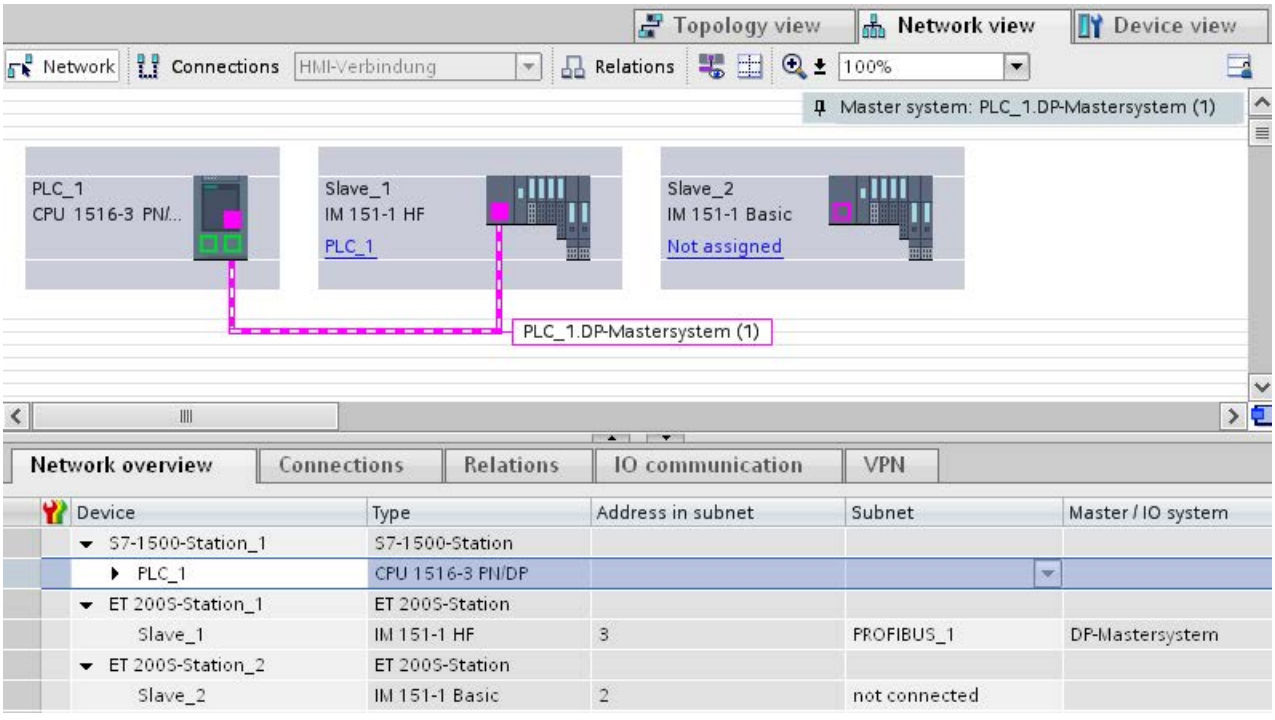

Figure 3-1 Assigning the DP slave to a DP master

Network overview

You can check the communication relationships of the activated interface in the network overview. The network overview is context-sensitive for selection in the network view:

- The selection of the CPU shows the DP communication of the CPU.
- The selection of the station shows the communication of the entire station.
- The selection of the interface shows the DP communication of the interface.

3.2 PROFIBUS address

Devices can be connected to the PROFIBUS subnet that communicate by means of configured connections or that are part of a PROFIBUS DP master system.

If the DP slave has already been assigned to a DP master, the PROFIBUS subnet to which the device is connected is automatically displayed under "Interface linked with".

In the Inspector window under "PROFIBUS", select the subnet to which the interface is linked or add a new subnet.

All devices of a subnet must have different PROFIBUS addresses.

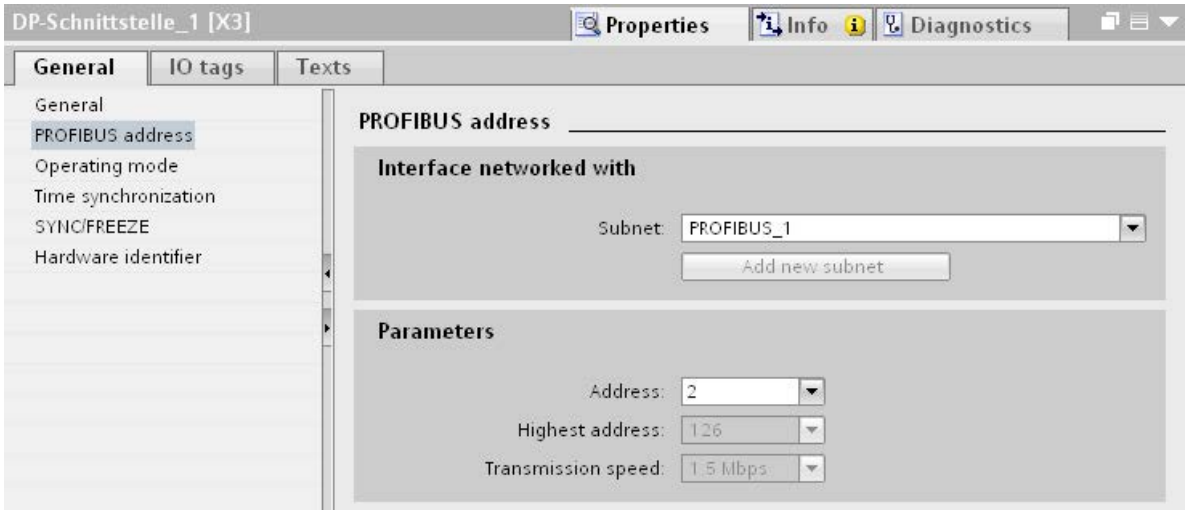

Figure 3-2 PROFIBUS address

Rules for address assignment

STEP 7 automatically assigns device addresses.

You can change the addresses if you observe the following points:

- Assign a unique PROFIBUS address to each device in the PROFIBUS network, each DP master and each DP slave in the PROFIBUS network.
- Depending on the DP slave, not all permitted PROFIBUS addresses are supported. For devices with BCD switches, it is often the case that only the PROFIBUS addresses 1 to 99 are supported.

Changing the PROFIBUS address

You change the PROFIBUS address under "Parameter".

3.3 Network settings

Highest PROFIBUS address (HSA)

Outputs the highest PROFIBUS address of an active device. PROFIBUS addresses greater than HSA are permitted for passive devices, but only up to 126.

Profile

Depending on the connected device types and the protocols used, different profiles are available on the PROFIBUS. The profiles differ with respect to their setting options and calculation of the bus parameters.

The PROFIBUS subnet will only work properly if the bus parameters of all devices have the same values.

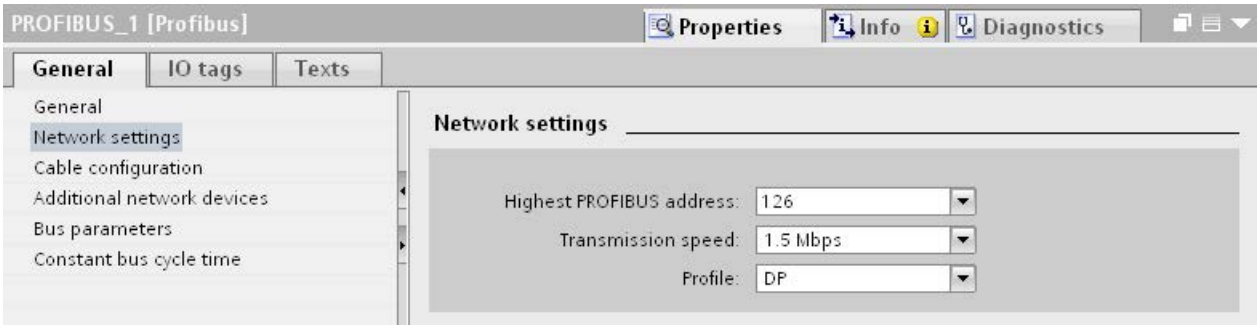

Figure 3-3 Network settings

Profiles and transmission rates

Table 3- 1 Profiles and transmission rates

Profiles	Supported transmission rates
DP	9.6 kbps to 12 Mbps
Standard	9.6 kbps to 12 Mbps
Universal (DP/FMS) (FMS is not supported)	9.6 kbps to 1.5 Mbps
User-defined	9.6 kbps to 12 Mbps

DP (recommended profile)

Select the "DP" profile if only devices meeting the requirements of the standard EN 61158-6-3 are connected to the PROFIBUS subnet. The setting of the bus parameters has been optimized for these devices. These include devices with DP master and DP slave interfaces of SIMATIC S7 as well as distributed I/O devices from third parties.

Note

Profile for constant bus cycle time and isochronous mode

DP is the recommended profile for the configuration of constant bus cycle time and isochronous mode.

Standard

Compared with the "DP" profile, the "Standard" profile gives you the option to take into consideration devices of another project or devices that have not been configured here for calculation of the bus parameters. The bus parameters are then calculated with a simple algorithm that was not optimized.

Universal (DP/FMS) (FMS is not supported)

Select the "Universal (DP/FMS)" profile if individual devices in the PROFIBUS subnet use the FMS service (e.g., CP 343-5, PROFIBUS FMS devices).

As with the "Standard" profile, here, too, you have the option to take additional devices into consideration for calculation of the bus parameters.

User-defined

The PROFIBUS subnet will only work properly if the parameters for the profile have been synchronized. Select the "User-defined" profile if none of the other profiles "match" for operation of a PROFIBUS device and if you have to adapt the bus parameters for your special layout.

You cannot configure all theoretically possible combinations with the user-defined profile either. The PROFIBUS standard prescribes some parameter limits depending on other parameters. It is, for example, not permitted that a responder responds (Min Tsdr) before the initiator is able to receive the frame (Trdy). These standard specifications are also checked in the "User-defined" profile.

Note

User-defined settings

Use user-defined settings only if you are familiar with the PROFIBUS parameters. It is usually better to work with the "DP" profile.

Contact Customer Support (Page 91) if you have any questions.

The bus parameters that were last valid on the PROFIBUS subnet are automatically set as user-defined. If the "DP" bus profile was valid for the subnet, for example, the bus parameters for "DP" are set in the "User-defined" bus profile. You can modify the parameters based on these settings.

The monitoring times are not automatically recalculated in the "User-defined settings" setting so that the uniformity of the set values is not changed without your knowledge, for example, to configure other configuration tools.

You can calculate the monitoring times Ttr and watchdog based on the parameters you have set. To do so, click on the "Recalculate" button.

See also

Additional network stations (Page 51)

3.4 Cable configuration

Considering cable configuration

Information on the cable configuration can be taken into consideration for calculation of the bus parameters. To do so, select the check box "Take into account the following cable configuration" in the properties of the PROFIBUS subnet.

The other information depends on the type of cable used.

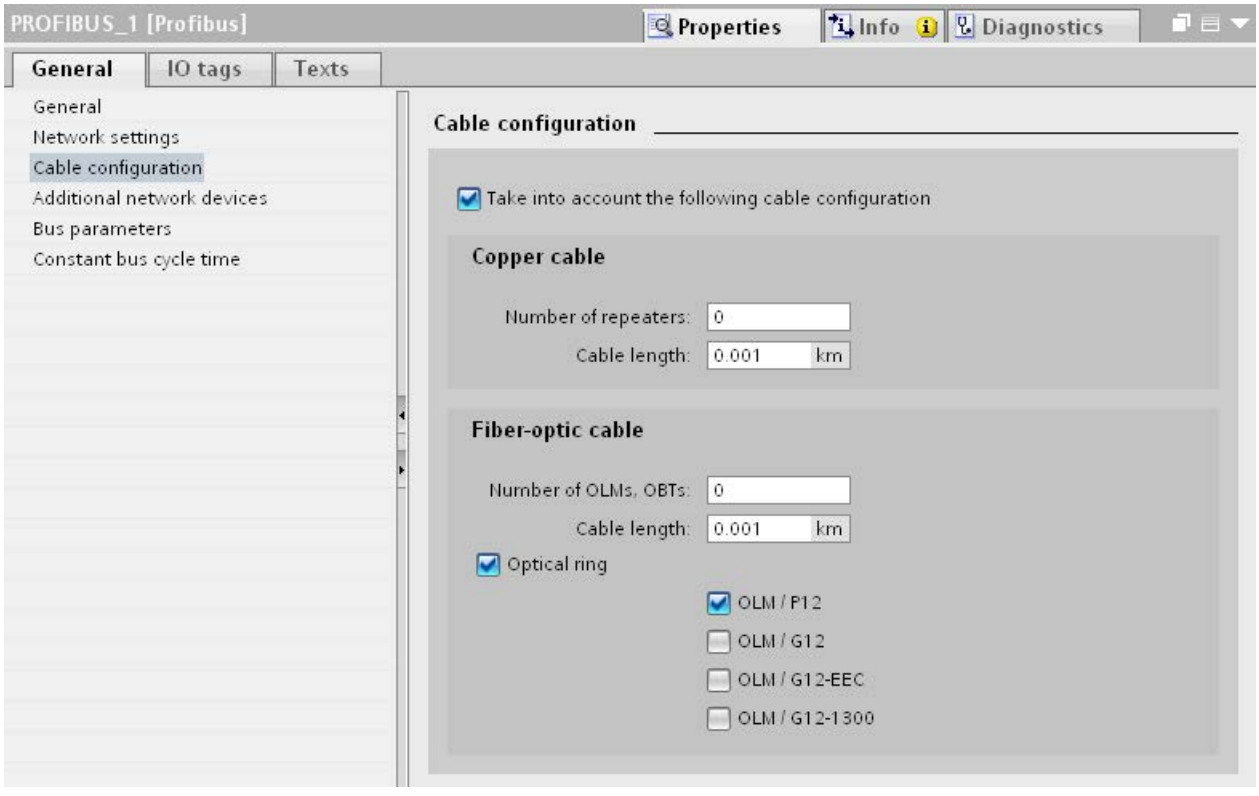

Figure 3-4 Cable configuration

Cable configuration: Fiber-optic cables/optical ring

The calculation depends on the used OLM types. Select the corresponding check box. Multiple selections are possible.

Adapting bus parameters in the optical ring

With the layout as ring, there is a kind of redundancy because you have the option to address all devices using the ring structure even if the connection between two devices is interrupted.

The following configuration conditions must be met in the optical ring:

- A free address below HSA (Highest Station Address)
- Increase of the retry value to at least 3

  (Network settings: user-defined profile)
- Checking and adapting of the slot time

  (Network settings: user-defined profile; bus parameters: Tslot parameter:

  You need short slot time values for OLM / P12, medium slot time values for OLM / G12 and OLM / G12-EEC and high slot time values for OLM / G12-1300. This results in a high performance for small networks and a medium to low performance with medium to large networks.

Additional information

Additional information on adaptation of the retry value and the slot time is available in the PROFIBUS Network Manual (http://support.automation.siemens.com/WW/view/en/35222591).

3.5 Additional network stations

Communication load - considering additional network stations

The bus parameters depend on the communication volume of the active network stations. There are differences between cyclical communication (DP) and connection-oriented, acyclical communication (S7 communication, Send/Receive (FDL)). Contrary to DP, the number and size of the communication jobs (communication load) depends on the user program. This means the communication load cannot always be determined automatically.

If you select the check box "Consider the following network stations", you can consider network stations in the calculation of the bus times that were not configured in the project.

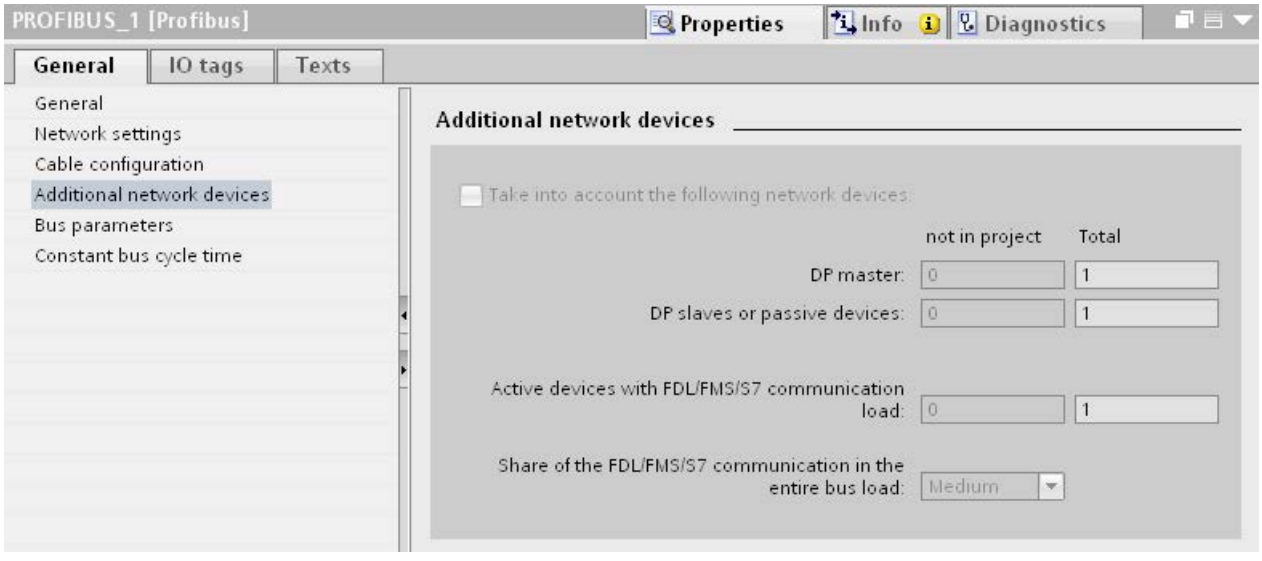

Figure 3-5 Additional network stations

Calculating the bus times

You can specify a network configuration in the parameter group "Additional network stations" for calculation of the bus times that deviates from the configured network configuration.

The network configuration is available for the following profiles:

- Standard
- Universal (DP/FMS)
- User-defined

Quantification of the communication load

The following settings are possible to take the communication load into consideration:

- Number of network stations that are not configured
- Information on the communication load from the user programs for FDL or S7 communication. You can choose from the following levels:
  - Low: Typical for DP, no larger data communication except DP.
  - Medium: Typical for mixed operation of DP and other communication services (e.g., S7 communication), if DP has high time requirements and with medium, acyclical communication volume.
  - High: For mixed operation of DP and other communication services (e.g., S7 communication), if DP has low time requirements and with high, acyclical communication volume.

3.6 Bus parameters

Introduction

Bus parameters control the transmission behavior on the bus. Each device on the bus must correspond with the bus parameters of other devices.

Note

The PROFIBUS subnet will only work properly if the parameters for the bus profile have been synchronized. Change the preset values only if you are familiar with the parameter assignment of the bus profile for PROFIBUS.

Cyclical distribution of the bus parameters

If the check box "Activate cyclical distribution of bus parameters" is selected under "Bus parameters" with the selected PROFIBUS subnet in the Inspector window, the bus parameters are sent cyclically during operation by the modules that support this function. This way you can, for example, connect a programming device to the PROFIBUS during operation.

Disable this function in the following cases:

- In constant bus cycle time mode to minimize the bus cycle.
- If third-party devices are connected in the PROFIBUS subnet whose protocol uses the DSAP 63 (Destination Service Access Point) for multicast.

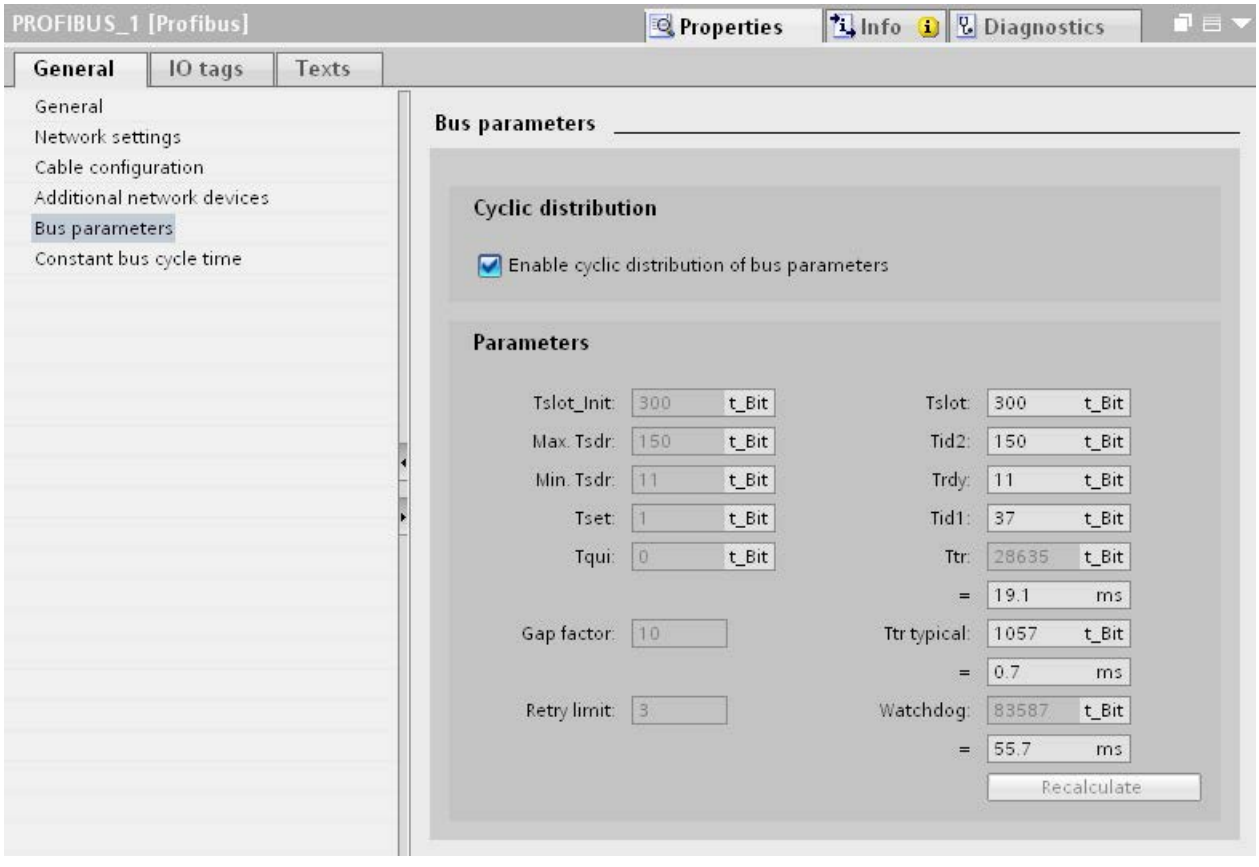

Figure 3-6 Bus parameters

Bus parameters for the bus profile of PROFIBUS subnets

Note

Display of offline values

The offline values of the bus parameters are always displayed even if they are connected online with the target system.

Table 3- 2 Bus parameters - value ranges

Bus parameters	Adjustable [1]	Limit values
Tslot_Init	Yes	Max. Tsdr + 15 <= Tslot_Init <= 16.383 t_Bit
Max. Tsdr	Yes	35 + 2*Tset + Tqui <= Max. Tsdr <= 1,023 t_Bit
Min. Tsdr	Yes	11 t_Bit <= Min. Tsdr <= MIN(255 t_Bit, ... Max. Tsdr - 1, 34 + 2*Tset + Tqui)
Tset	Yes	1 t_bit <= Tset <= 494 t_bit
Tqui	Yes	0 t_bit <= Tqui <= MIN(31 t_bit, Min. Tsdr - 1)
GAP factor	Yes	1 <= GAP factor <= 100
Retry limit	Yes	1 <= Retry limit <= 15
Tslot (slot time)	No	-
Tid2	No	Tid2 = Max. Tsdr
Trdy	No	Trdy = Min. Tsdr
Tid1	No	Tid1 = 35 + 2*Tset + Tqui
Ttr (Target Rotation Time)	Yes	256 t_Bit <= Ttr <= 16,777,960 t_bit
Ttr typical	No	This time is for information only and is not transmitted to the devices.
Watchdog		10 ms <= Watchdog <= 650 s

[1] depending on bus profile

User-defined bus profile

Use the following settings to create a user-defined bus profile:

- minimum Target Rotation Time (Ttr) = 5000x HSA (highest PROFIBUS address of an active device)
- minimum watchdog (Watchdog) = 6250x HSA

Recalculate

Use the button "Recalculate" to recalculate the parameters.

3.7 Constant bus cycle time

Constant bus cycle time

The DP master addresses its assigned DP slaves cyclically. S7 communication may cause the intervals to vary. You can enable a "bus cycle with constant bus cycle time" to achieve identical intervals. This ensures data transmission at the same (constant bus cycle time) intervals.

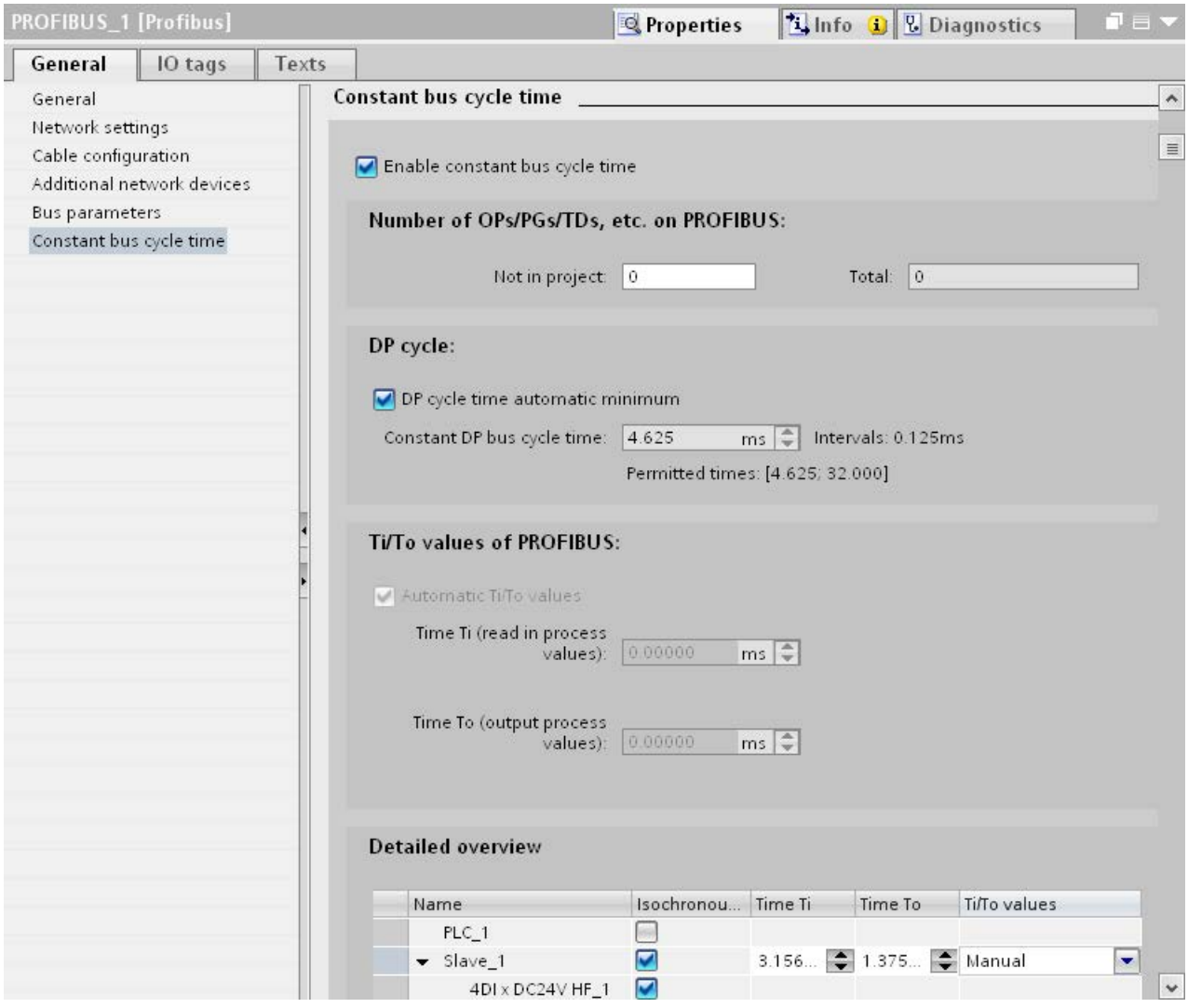

Figure 3-7 Enabling a bus cycle with constant bus cycle time

Number of OPs/PGs/TDs at the PROFIBUS

Here you enter the number of devices that are not configured.

Increasing DP cycle time manually

The following situation can occur especially with very short DP cycle times:
The runtime of the user program is greater than the shortest cycle (see Technical specifications of the CPU, section "Isochronous mode"). You have to manually increase the automatically calculated DP cycle time in this case.

See also

Configuring isochronous mode (Page 67)

Diagnostics 4

4.1 Overview

Diagnostics options

In case of an error you can determine the current status of your automation system and react specifically by using the event-related diagnostics and the evaluation of interrupts.

You can use the following options for diagnostics of the PROFIBUS components:

- Determine the status of the system using the Lifelist in STEP 7.
- Evaluate the module status, error and message texts by using the display of the S7-1500 CPU.
- Run cable diagnostics during operation by means of the diagnostics repeater.
- Evaluate the diagnostics and interrupt behavior in isochronous mode. (Page 70)
- Determine status information for fault localization and fault rectification by using the DP/PA coupler FDC 157-0 configured as PROFIBUS diagnostics slave.

Additional information

Additional information on diagnostics is available in these manuals:

- In the Diagnostics repeater for PROFIBUS-DP (http://support.automation.siemens.com/WW/view/en/7915183) manual for diagnostics with STEP 7, diagnostics in the user program, monitoring function isochronous PROFIBUS, topology display in STEP 7.
- In the Diagnostics (http://support.automation.siemens.com/WW/view/en/59192926) function manual for diagnostics options that are available for the SIMATIC systems S7-1500, ET 200MP, ET 200SP and ET 200AL.
- In the PROFIBUS Network Manual (http://support.automation.siemens.com/WW/view/en/35222591) system manual for diagnostics of fiber-optic cables.
- In the DP/PA Coupler, Active Field Distributors, DP/PA Link and Y Link (http://support.automation.siemens.com/WW/view/en/1142696) operating instructions.
- In the Web Server (http://support.automation.siemens.com/WW/view/en/59193560) function manual for diagnostics options (based on the functionality of the CPU).

4.2 Diagnostics using the display of the S7-1500

Displays

Each CPU in the S7-1500 automation system has a front cover with a display and operating buttons. Control and status information is displayed in different menus on the display. You use the operating buttons to navigate through the menus.

The following states can be evaluated on the display:

- Module status for central and distributed modules
- Error and alarm texts (system diagnostics, user-defined alarms)

Module status

From the station overview you go to the module status for a distributed module via the module overview.

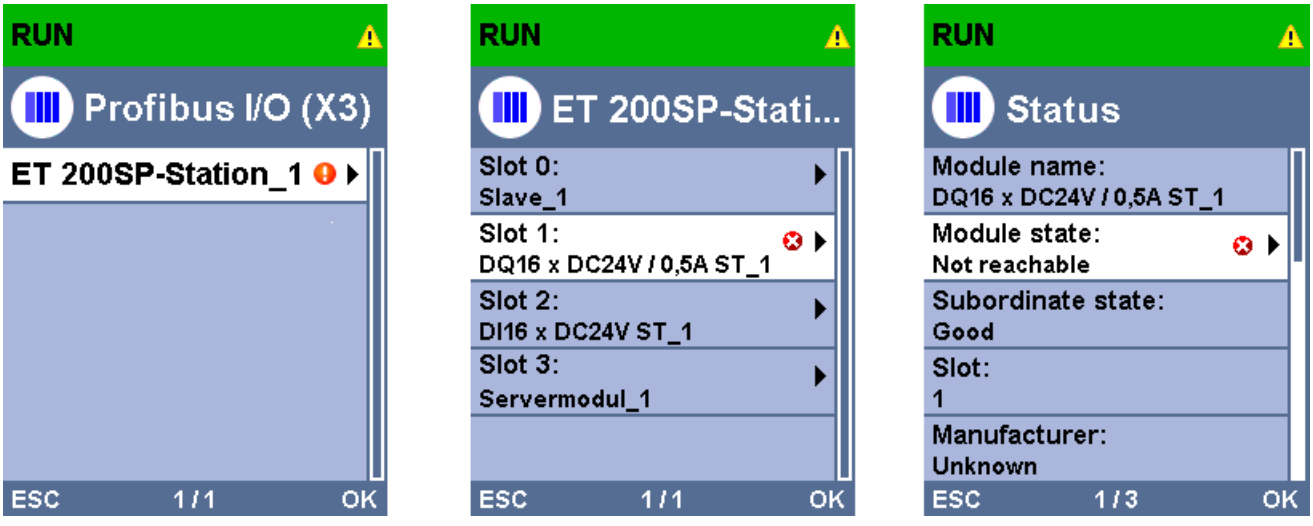

Figure 4-1 Example: Station overview, module overview, module status

Error and alarm texts

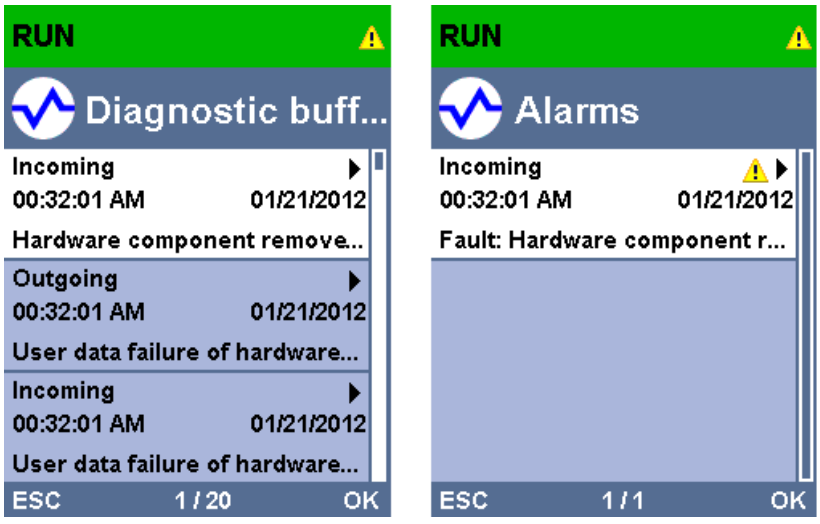

Figure 4-2 Example: Diagnostic buffer, alarms

Additional information

Additional information on the topic "Functions and operation of the display" is available in the documentation for the S7-1500 automation system on the Internet (http://support.automation.siemens.com/WW/view/en/59191792).

4.3 Diagnostics with the diagnostic repeater

Introduction

The diagnostic repeater is a repeater that can monitor two segments of a RS485-PROFIBUS subnet (copper cable) during operation and signal cable faults to the DP master by sending a diagnostic frame. Fault location and the cause of the fault can be displayed in plain text by means of STEP 7 as well as operator control and monitoring devices (SIMATIC HMI).

With its cable diagnostics during operation, the diagnostic repeater allows you to detect and localize cable faults early on. This means plant faults are detected early and plant downtimes can be prevented.

Diagnostic functions

- The diagnostic function provides the location and the cause of cable faults, such as wire break or missing terminating resistors. The fault location is specified relative to the devices present, for example "Break on signal line A and/or B".
- Reading out the saved diagnostic and statistical information.
- Monitoring of the isochronous PROFIBUS, e.g., violation of cycle time.
- Providing identification data.

Additional information

Additional information on diagnostics with STEP 7 and for reading out the diagnostics with the user program is available in the Diagnostic repeater for PROFIBUS DP (http://support.automation.siemens.com/WW/view/en/7915183) manual.

4.4 I&M data (Identification and Maintenance)

Definition and properties

Identification and maintenance data (I&M) is information saved in a module to provide support when:

- Checking the plant configuration
- Locating hardware changes in a plant

Identification data (I data) is module information (some of which may be printed on the module housing) such as the order and serial number. I data is read-only, vendor-specific module information.

Maintenance data (M data) is system-specific information such as the installation location and date. M data is generated in the course of configuration and is written to the module memory.

The modules can be uniquely identified in online mode by means of the I&M data.

Additional information

Information if and to what extent a DP device supports I&M data is available in the respective device manual of the device.

Functions 5

5.1 Isochronous mode

5.1.1 What is isochronous mode?

Why isochronous mode?

Assuming public transport were to operate at maximum speed while reducing stop times at the passenger terminals to absolute minimum, the last thing many potential passengers would notice of the departing contraption are its red tail lights. The overall travel time is, however, decided by the train, bus or underground clock, because well adjusted timing is essential to a good service. This also applies to distributed automation engineering. Not only fast cycles but also the adaptation and synchronization of the individual cycles result in optimum throughput.

Just-In-Time

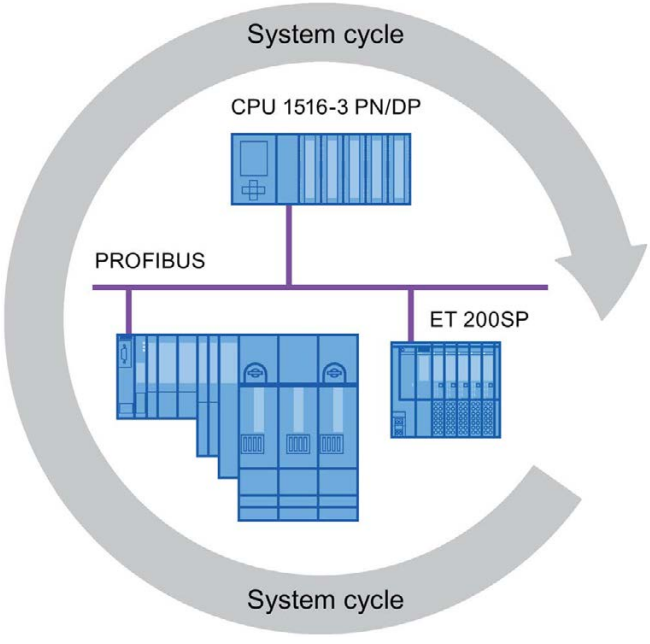

Figure 5-1 System cycle

The high speed and reliable reaction time of a system operating in isochronous mode is based on the fact that all data is provided just-in-time. The constant bus cycle time PROFIBUS DP cycle beats the time here.

Advantages of isochronous mode

The use of isochronous mode provides:

- Optimized controls
- Determinism
- Consistent (simultaneous) reading of input data
- Consistent (simultaneous) output of output data

5.1.2 Use of isochronous mode

The system property "isochronous mode" enables recording of measured values and process data in a defined system cycle. Signal processing takes place in the same system cycle all the way to switching to the "output terminal". This means isochronous mode improves the control quality and provides greater manufacturing precision. Isochronous mode drastically reduces the possible fluctuations of process response times. The time-assured processing can be used for a higher machine cycle.

Isochronous mode is basically always the choice when acquisition of measured values needs to be synchronized, movements need to be coordinated and process reactions need to be defined and take place simultaneously. This means the areas of applications for isochronous mode are manifold.

5.1.3 Isochronous applications

Example: Isochronous measurement at several measuring points

QC requires precise measurement of dimensions within a camshaft production process.

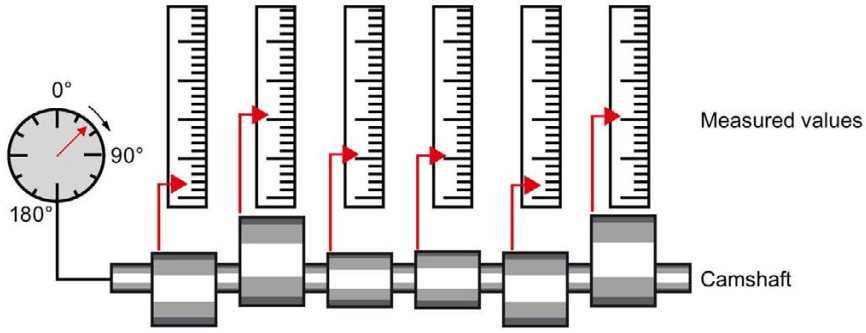

Figure 5-2 Measuring of camshafts

Isochronous workflow

By using the system property "isochronous mode" and the associated simultaneous measured value acquisition, measurement can be performed continuously and the time required for measurement is reduced. Resultant workflow:

- Continuous turning of the camshaft.
- During the continuous turning, measure the positions and cam excursion synchronously.
- Process the next camshaft.

All camshaft positions and the corresponding measured values (red) are measured synchronously within a single rotation of the camshaft. This increases machine output and maintains or enhances precision of the measurement.

5.1.4 Sequence of synchronization

From reading of input data to output of output data

The sequence of all components involved in the synchronization is explained in the paragraphs below:

- Isochronous reading of input data
- Transport of input data by means of the PROFIBUS subnet to the DP master (CPU)
- Further processing in the isochronous application of the CPU
- Transport of output data by means of the PROFIBUS subnet to the output DP slave
- Isochronous output of output data

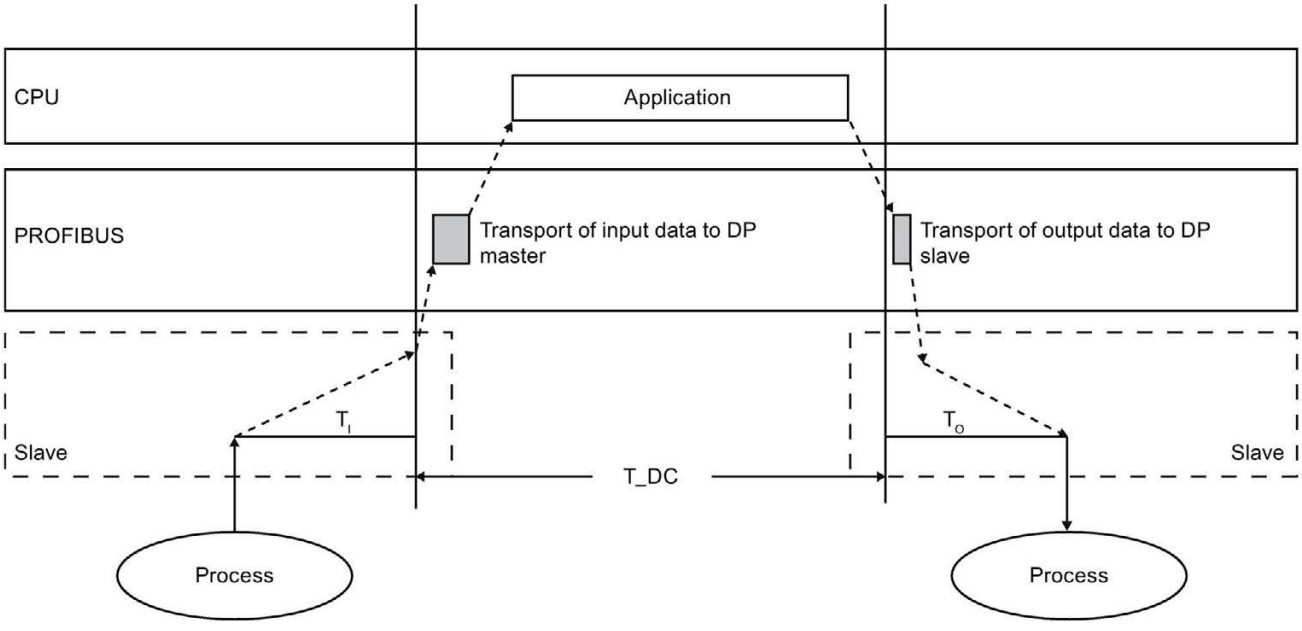

T_DC Date cycle

T_I Time for reading the input data

T_O Time for output of output data

Figure 5-3 Time sequence of synchronization

To ensure that all input data is ready for transportation via the PROFIBUS DP line when the next PROFIBUS DP cycle begins, the I/O read cycle has a lead time T_I so that it starts earlier. The T_I is the "flash gun" for all inputs. This T_I is necessary to compensate for analog to digital conversion, backplane bus times, etc. The lead time T_I can be configured by STEP 7 or by the user. We recommend that you have T_I assigned automatically by STEP 7 .

The PROFIBUS DP line transports the input data to the DP master. The synchronous cycle interrupt OB SynchronousCycle is called. The user program in the synchronous cycle interrupt OB decides the process reaction and provides the output data in time for the start of the next data cycle. The length of the data cycle is always configured by the user.

T_o is the compensation from the backplane bus and the digital to analog conversion within the slave. The T_o is the "flash gun" for all outputs. The time T_o can be configured by STEP 7 or by the user. We recommend that you have T_o assigned automatically by STEP 7.

Without isochronous mode, application, data transmission and field devices have their own, unsynchronized processing cycles; these result in a higher total cycle time with high jitter. With isochronous mode, application, data transmission and field device are synchronized resulting in a minimum total cycle with minimum jitter.

Isochronous mode and non isochronous mode distributed I/O

It is possible to combine isochronous mode distributed I/O with non isochronous mode distributed I/O on one DP master.

5.1.5 Requirements for configuration

Note the following requirements for configuration of isochronous mode:

- Isochronous mode cannot be used in optical PROFIBUS networks.
- Constant bus cycle time and isochronous mode are only possible with the bus profiles "DP" and "User-defined".
- Isochronous mode is only possible with the DP interfaces integrated in the CPU. Isochronous mode with CPs for PROFIBUS is not possible.
- Only the constant bus cycle time master is permitted as active station on the isochronous PROFIBUS DP. OPs and PGs (for example, PCs with PG functionality) influence the time behavior of the isochronous DP cycle and are therefore not permitted.
- Isochronous mode is not permitted across lines.
- Isochronous I/O can only be processed in process image partitions. Isochronous consistent data transmission is not possible without the use of process image partitions. The adherence to quantity structures is monitored because the number of slaves and bytes on the DP master system is limited for each process image partition.
- The addresses of isochronous modules must be located in a process image partition.
- Full isochronous mode from "terminal" to "terminal" is only possible if all components involved in the chain support the system property "isochronous mode".

  Make sure you look for the entry "Isochronous mode" or "Isochronous processing" in the information box of the module when you select it in the catalog.
- When you configure isochronous mode, you may not assign a SYNC/FREEZE group to the slave.

5.1.6 Configuring isochronous mode

Introduction

A SIMATIC automation solution can be connected to the isochronous PROFIBUS with the isochronous mode function. Isochronous mode guarantees the synchronous reading of input data, the processing and output of output data at the same (isochronous) intervals.

Basic procedure for configuration of isochronous mode

1. Setting the properties for isochronous mode on the DP slave:
   - Isochronous DP cycle
   - Isochronous mode of the modules
2. Setting the properties for isochronous mode on the modules:
   - Synchronous cycle interrupt (SynchronousCycle)
   - Process image partition
   - Input delay
3. Create user program with access to isochronous I/O

Requirement

- The network view in STEP 7 is open.
- A CPU has been placed (e.g., CPU 1516-3 PN/DP).
- An interface module has been placed and networked with the CPU (e.g., IM 151-1 HF).
- I/O modules have been placed (e.g., 2DI x DC24V HF and 2DO x DC24V/0,5A HF).

Configuring isochronous mode on the DP slave

1. Select the DP slave in the network view and navigate to the "isochronous mode" area in the Inspector window.
2. Enable the option for synchronization to the DP cycle for the DP slave.

   Default: The DP slaves get the Ti/To values from the subnet which means the values are automatically the same for all DP slaves of the DP master system.
3. Enable the "Isochronous mode" option the the "Detail view" for all I/O modules you want to operate in isochronous mode.
4. Repeat steps 1 and 3 for all DP slaves that you want to operate in isochronous mode.

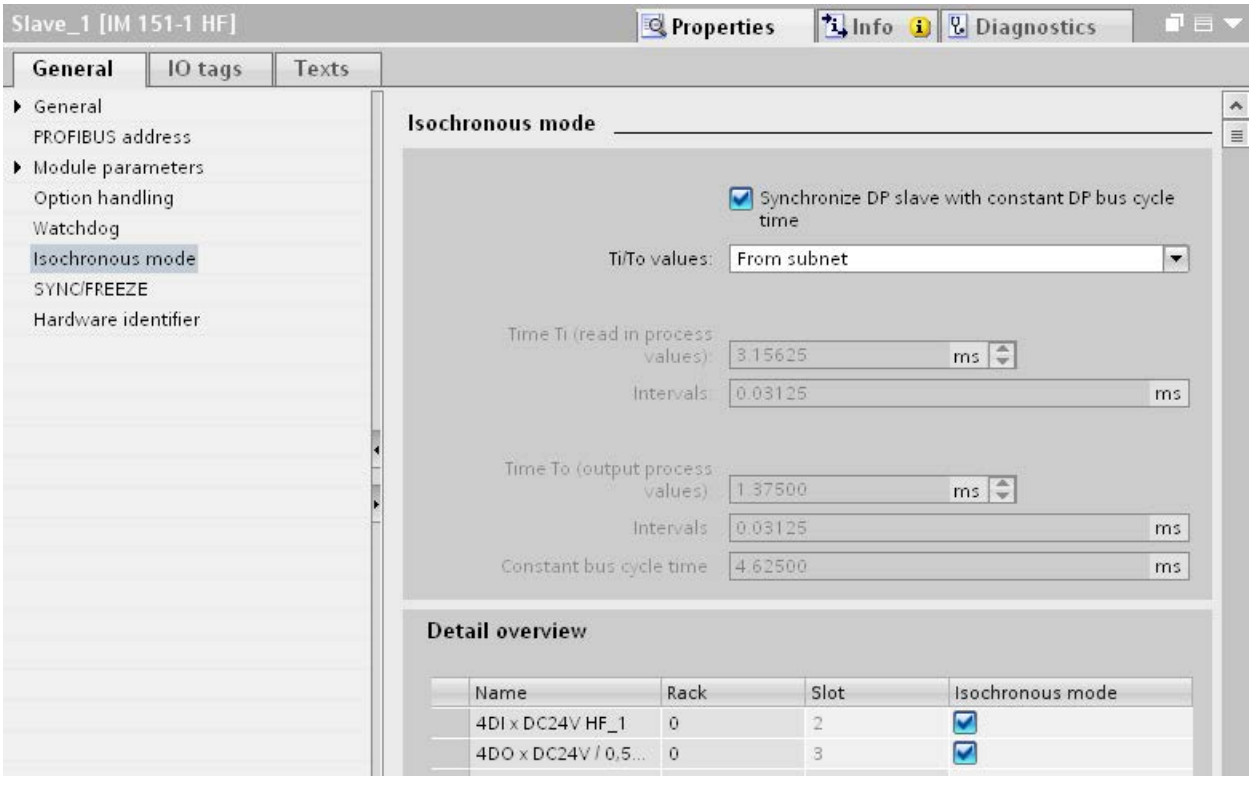

Figure 5-4 Configuring isochronous mode on the DP slave

Configuring synchronous cycle interrupt on the I/O module

1. Select an I/O module in the device view and navigate to the "I/O addresses" area in the Inspector window.
   – The option for isochronous mode is selected.
2. Select the synchronous cycle interrupt in the drop-down list.

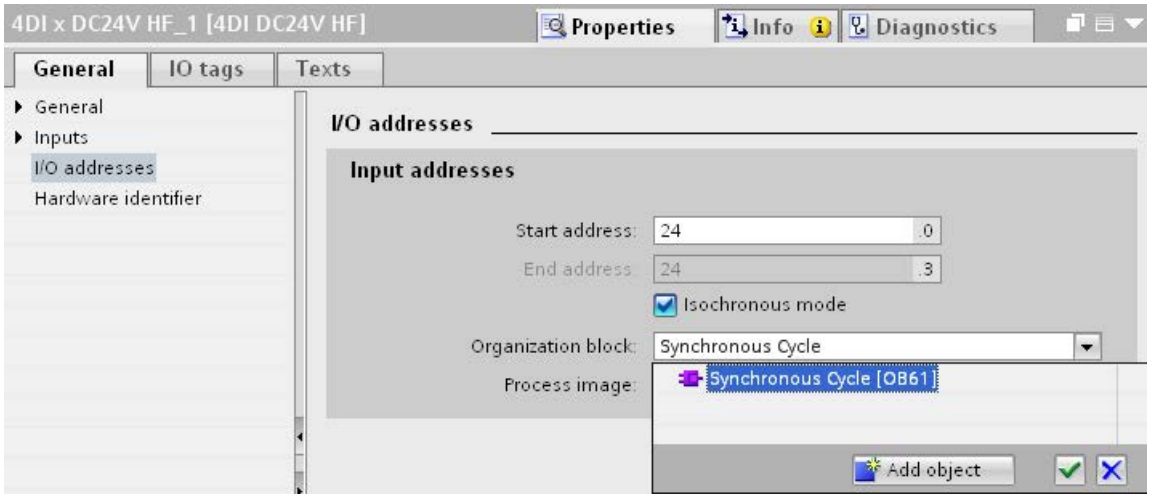

Figure 5-5 I/O addresses - creating the synchronous cycle interrupt OB

3. Assign the process image partition configured in the CPU.

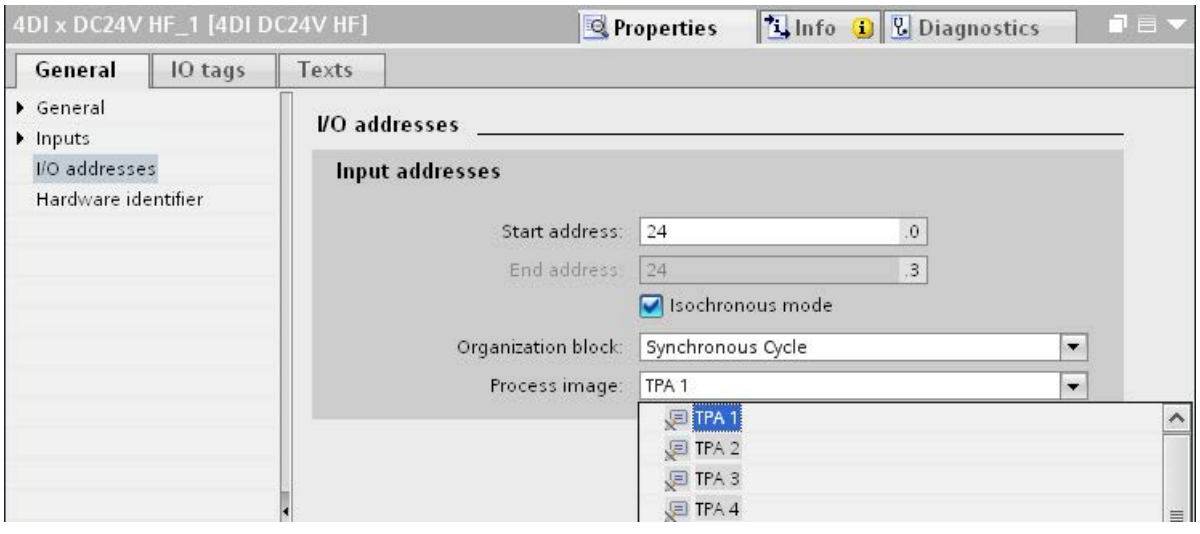

Figure 5-6 I/O addresses - assigning process image partitions

4. Repeat steps 1 and 3 for all I/O modules that you want to operate in isochronous mode.

Programming isochronous mode

To operate your plant in isochronous mode, the user program must be structured accordingly. This means you have to add a synchronous cycle interrupt in the STEP 7 project tree.

You access the isochronous I/O by means of a process image partition, which means the addresses of the isochronous modules must be located in a process image partition. You program access to isochronous I/O with the "SYNC_PI" instructions (updating the process image partitions of the inputs) and "SYNC_PO" (updating the process image partition of the outputs) in the synchronous cycle interrupt OB.

You call the "SYNC_PI" instruction at the start of the synchronous cycle interrupt OB, provided you have selected the automatic setting for the delay time. You call the "SYNC_PO" instruction at the end of the synchronous cycle interrupt OB.

5.1.7 Diagnostics and interrupt functions

The diagnostic and interrupt functions of STEP 7 are available for isochronous mode. These reduce downtimes and simplify localization and elimination of faults.

Events, causes of errors and remedies

Below, you will find the events for diagnostic and interrupt functions and remedies for the problem.

Table 5- 1 Events, causes of errors and remedies

Event	Cause of the error	Remedy
• Synchronous cycle interrupt OB is started with the input parameter EventCount > 0 (number of lost OB calls since last OB call) If configured: • Call of the time error OB • Diagnostic buffer entry "Buffer overflow for OB6x events"	The synchronous cycle interrupt OB takes too long.	• Shorten the synchronous cycle interrupt OB. • Increase the DP cycle. • Reduce the delay time setting (setting with isochronous mode at synchronous cycle interrupt OB).
Error (negative RetVals) when updating the isochronous process image partition with SYNC_PI / SYNC_PO: • Consistency warning • Update time is after / before the permitted access window.	SYNC_PI / SYNC_PO are not called in the permitted access window in the synchronous cycle interrupt OB, which means they are called or processed during the I/O data transfer on PROFIBUS.	• Increase the delay time. • Increase the DP cycle. • Adapt the program.
Error when updating the isochronous process image partition with SYNC_PI / SYNC_PO: • Access error	DP slave / module does not respond / is not available.	

5.1.8 Parameter settings for isochronous mode

Parameter changes as task of the field service technician

The task of a field service technician is to maintain the production process.

In this context the technician has to detect, localize and eliminate errors and performance losses of isochronous mode.

All parameters which influence isochronous mode can be checked and configured using the "Isochronous mode" dialog box.

Parameters should only be changed by experienced users or service technicians.

5.1.8.1 Viewing isochronous mode parameters

"Isochronous mode" dialog box

1. Select "Properties > Isochronous mode" in the Inspector window.

   The "isochronous mode" dialog box opens with an overview of parameters which influence isochronous mode.
   Information on the individual parameters is available under "Detail overview".

2. Compare the values shown with the values in the documentation, or with the value specified by a technician.

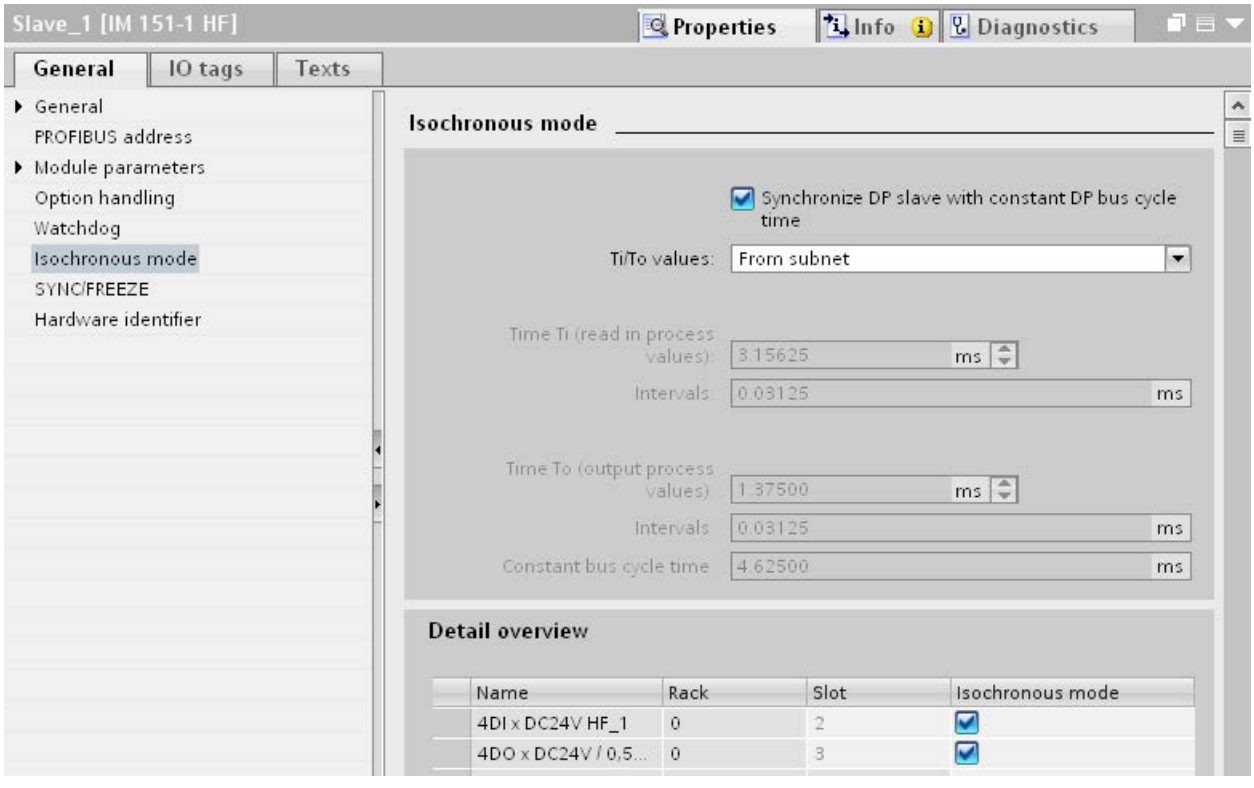

Figure 5-7 Viewing parameters for isochronous mode

5.1.8.2 Change parameters

Changing parameters for the DP master system

You can change the parameters for isochronous mode in the "Constant bus cycle time" dialog box.

1. Select the DP master system in the network view.
2. Select the section "Constant bus cycle time" in the Inspector window.
3. Change the parameters according to the received instructions.

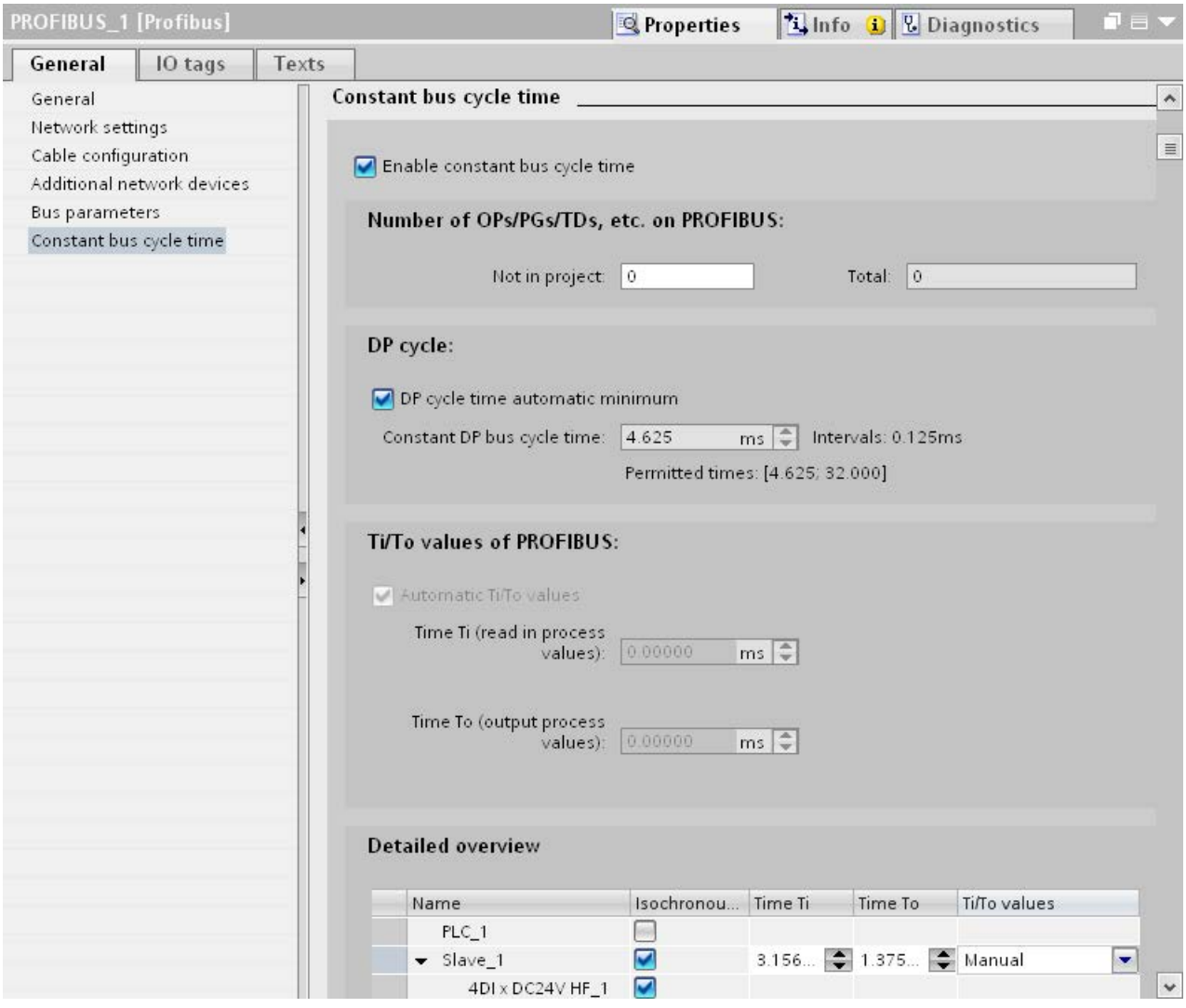

Figure 5-8 Changing parameters for the DP master system

Adapting the input delay

1. Select the input module in the device view.
2. Select the section "Inputs" in the Inspector window.
3. Adapt the input delay.

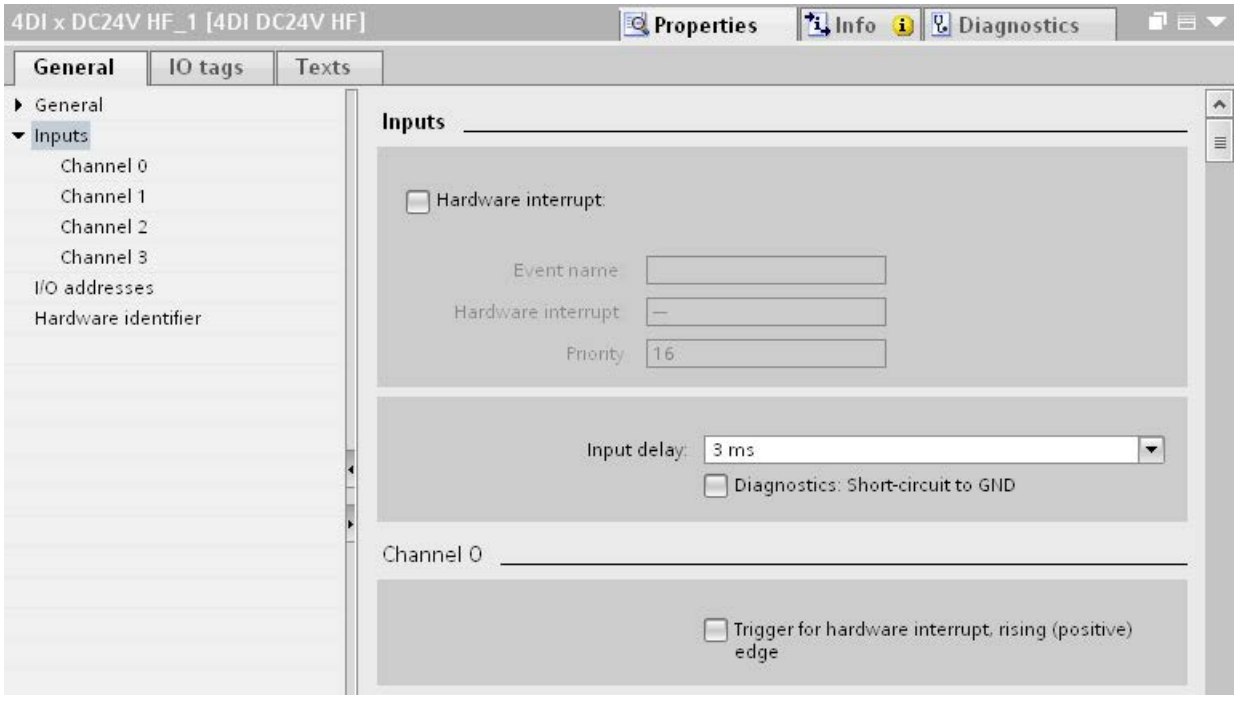

Figure 5-9 Adapting the input delay

Compile, load and save the changed configuration

1. Put the plant out of operation.
2. Select the CPU in the project navigator.
3. Select "Compile > Hardware" in the shortcut menu.
4. Select "Download to device" in the shortcut menu.
5. Save the project.

5.2 Acyclical data exchange

Additional functionality with DPV1 devices (DP master/DP slaves)

DP masters and DP slaves that support DPV1 have the following additional functions compared to the devices that support only DPV0:

- The acyclic data exchange between master and slave is supported.
- Interrupts can be set by a DPV1 slave which ensure handling of the interrupt-triggering event in the master CPU.

Acyclic data exchange

Read/write data record, for example, to change the parameters of a slave during operation. The data records of a module and the structure of these data records is available in the documentation for the respective module.

The table below contains the instructions with their functions for access to DPV1 slaves. Detailed information is available in the STEP 7 online help.

Table 5- 2 Instructions for access to DPV1 slaves

Instructions	Function (DPV1)
RDREC	Read data record
WRREC	Write data record
RALRM	Receive interrupt from a DP slave. (The instruction must be called in the OB that triggers the interrupt.)

5.3 SYNC/FREEZE groups

Assigning the SYNC/FREEZE group to the DP slave

A DP master with the corresponding functionality can send the control commands SYNC and/or FREEZE for synchronization of the DP slaves simultaneously to a group of DP slaves. You must assign SYNC/FREEZE groups to the DP slaves for this purpose.

Requirement: A DP master system has been created in the project.

Procedure

To assign a DP slave to a SYNC/FREEZE group, follow these steps:

1. Select the DP interface of the DP slave you want to assign to a group in the device view or network view.
2. Select the check boxes for the required SYNC/FREEZE groups under the group "SYNC/FREEZE" in the Inspector window.

   You can assign each DP slave to only one SYNC/FREEZE group.

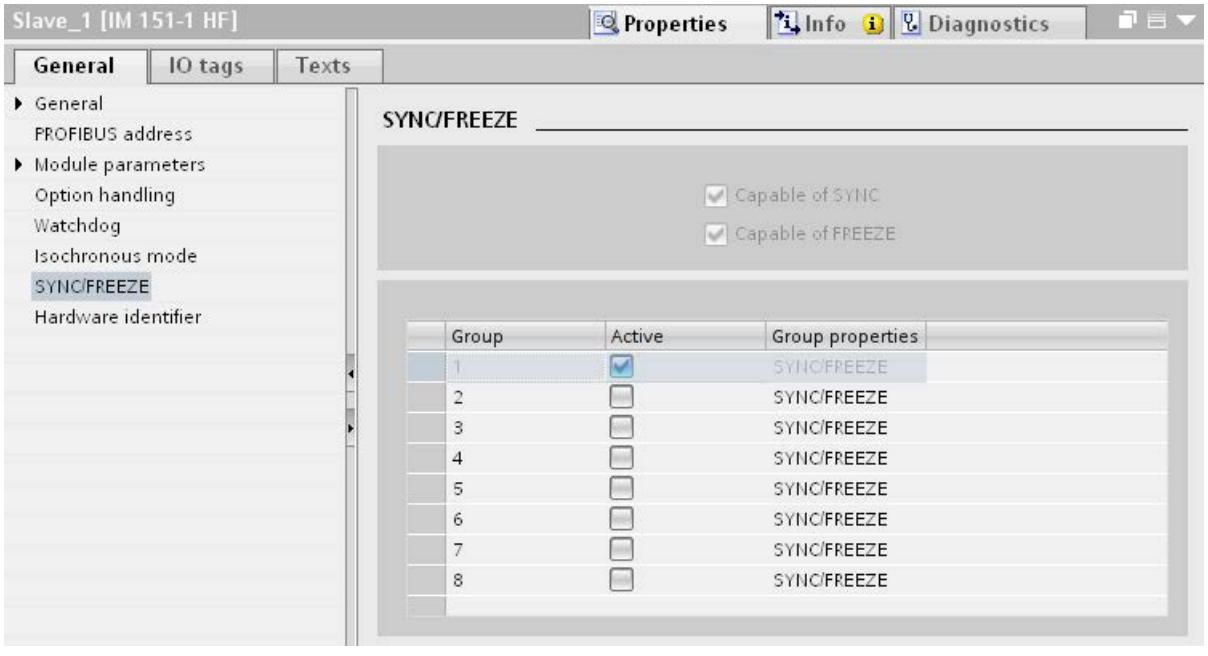

Figure 5-10 Assigning the DP slave to a SYNC/FREEZE group

Important information on the control commands SYNC and FREEZE

You can use the control commands SYNC and FREEZE in the DP master to synchronize the DP slaves event-controlled. The DP master sends the control commands simultaneously to a group of DP slaves in its master system. It does not take into consideration DP slaves that have failed or are currently sending diagnostic information.

Requirement for synchronization using control commands is that you have assigned the DP slaves to SYNC/FREEZE groups.

For a S7 CPU use the instruction DPSYC_FR (SFC 11) to synchronize the DP slaves.

When you select the DP master, you see a list of the eight SYNC/FREEZE groups under "Properties > DP interface > SYNC/FREEZE" in the Inspector window.

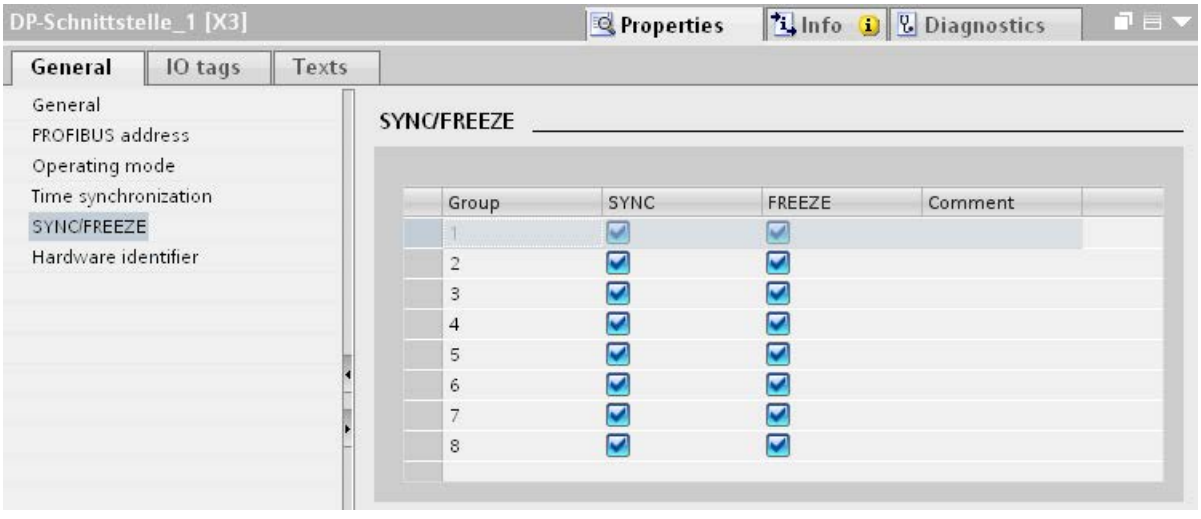

Figure 5-11 SYNC/FREEZE groups on DP master

SYNC control command

The DP master uses the SYNC control command to cause a group of DP slaves to freeze the states of their outputs to the current value.

The DP slaves save the output data of the DP master for the following frames. But the states of the DP slave outputs remain unchanged.

Only after each new SYNC control command does the DP slave set its outputs to the values that it has saved as the output data of the DP master.

The outputs are not updated cyclically again until the DP master has sent a UNSYNC control command.

FREEZE control command

After receiving the FREEZE control command from the DP master, the DP slaves of a group freeze the current status of their inputs. The DP slaves send these frozen input data to the DP master with the following cyclical frames.

The DP slaves freeze the current state of their inputs again after each new FREEZE control command.

The state of the DP slave inputs is only send to the DP master cyclically again when the DP master sends the UNFREEZE control command.

5.4 Interrupts

Interrupts and interrupt OBs for DPV1

Interrupts can be set by a DPV1 slave which ensure handling of the interrupt-triggering event in the master CPU. The interrupt data is evaluated in the CPU and the diagnostics buffer and the module state are updated even in the "STOP" operating mode. The OB is not processed in STOP.

The following DPV1 interrupts are supported:

- Status interrupt
- Update interrupt
- Vendor-specific interrupt

Detailed information is available in the descriptions on the OBs. You can use the corresponding OBs that are provided by the operating system of the S7 CPUs for diagnostic interrupts, hardware interrupts, and pull/plug interrupts.

OB 55 interrupt - Status interrupt

The status interrupt can be triggered when the operating mode of a device or module changes, for example, from RUN to STOP.

OB 56 interrupt - Update interrupt

An update interrupt can be triggered if the parameters of a slot were changed. This may be caused by local access or partner access to the parameters.

OB 57 interrupt - Vendor-specific interrupt

The event that triggers the vendor-specific interrupt can be specified by the manufacturer of a DPV1 slave.

Additional information

A detailed description of the events at which interrupts are triggered is available in the documentation of the respective manufacturer of the DPV1 slave.

5.5 Intelligent DP slaves (I-slaves)

5.5.1 I-slave functionality

I-slave functionality

The "I-slave" (intelligent DP slave) functionality of a CPU supports the exchange of data with a DP master and thus allows the CPU to be used, for example, as intelligent preprocessing unit of subprocesses. The I-slave is connected in its role as DP slave to a "higher-level" DP master.

The preprocessing is handled by the user program in the I-slave. The process values acquired by the I/O modules are preprocessed by the user program and made available to the DP master.

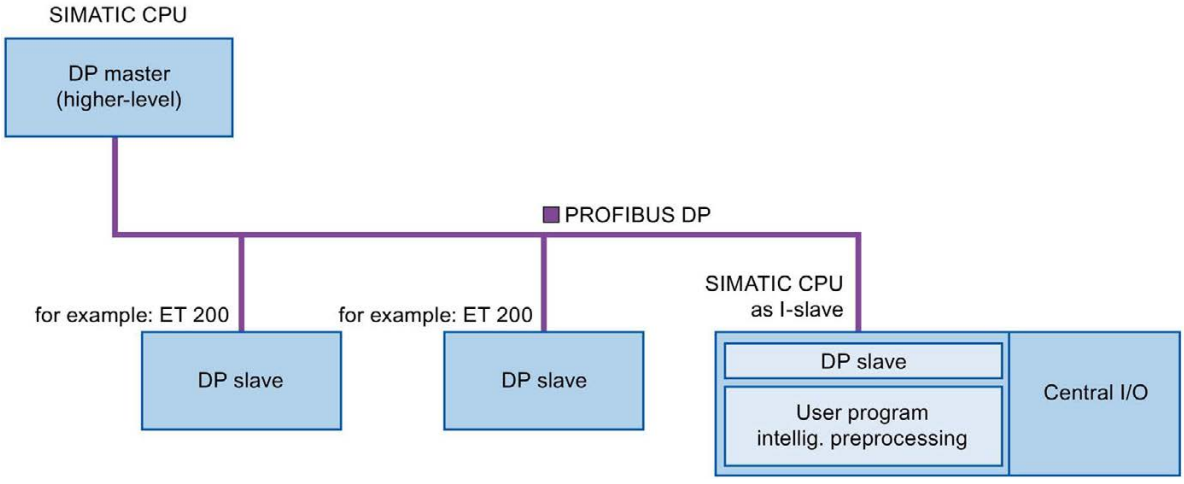

Figure 5-12 I-slave functionality

"I-slave" naming convention

In the remainder of this description, a CPU or a CP with I-slave functionality is simply called an "I-slave".

Advantages of configurations with I-slaves

The I-slave offers the following advantages:

- Simple coupling of CPUs with PROFIBUS interface
- Real-time communication between CPUs and PROFIBUS interface
- Distributed processing

  A complex automation task can be divided into smaller units/subprocesses. This results in manageable processes which lead to simplified subtasks.
- Relieving the DP master by distributing the computing capacity to I-devices
- Lower communication load by processing process data locally
- Separating subprocesses

  Complicated, widely distributed and extensive processes can be subdivided into several subprocesses with manageable interfaces by using I-slaves. These subprocesses can be stored in individual STEP 7 projects if necessary, which can later be merged to form one master project.
- Separating STEP 7 projects

  Creators and users of an I-device can have completely separated STEP 7 projects. The GSD file together with the configuration of the transfer areas of the I-slave form the interface between the STEP 7 projects. This allows coupling to standard DP masters via a standardized interface.
- Know-how protection

  Plant units can now only be delivered with a GSD file and the configuration of the transfer areas instead of with a STEP 7 project for the I-slave interface description. This means that you no longer have to disclose the user program know-how.

Difference: DP slave - I-slave

In the case of a DP slave, the DP master accesses the distributed inputs/outputs directly.

In the case of an I-slave, the DP master accesses a transfer area in the I/O address space of the preprocessing CPU instead of accessing the connected inputs/outputs of the I-slave. The user program running on the preprocessing CPU is responsible for ensuring data exchange between the operand area and inputs/outputs.

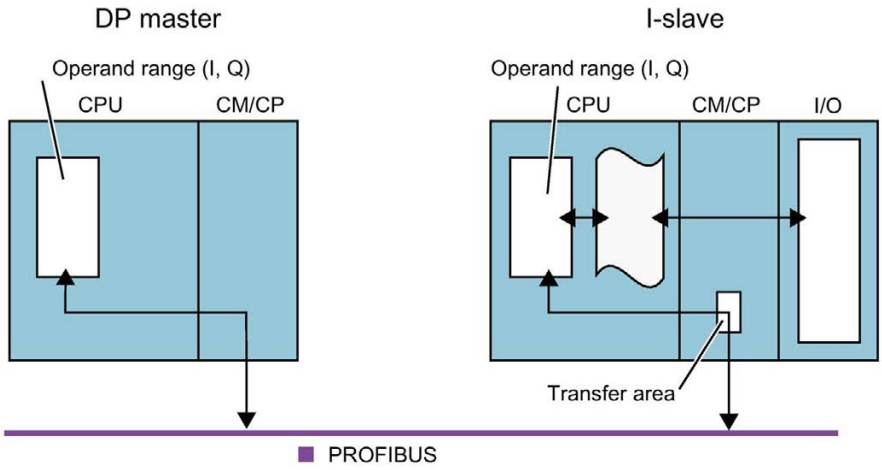

Figure 5-13 Data access to an I-slave

Note

DP master or DP slave

Note: The communication modules of the S7-1500 CPUs/ET 200SP CPUs, for example the CP 1542-5, support the operation as DP master or DP slave only as alternative.

Note

The I/O areas configured for data exchange between the DP master and DP slaves must not be used by I/O modules.

5.5.2 Data exchange with higher-level DP master

Introduction

The following section describes the data exchange between the I-slave and the higher-level DP master.

Transfer areas

Transfer areas are an interface to the user program of the I-slave CPU. Inputs are processed in the user program and outputs are the result of the processing in the user program.

The data for communication between DP master and I-slave is made available in the transfer areas. A transfer area contains an information unit that is exchanged consistently, in terms of bytes, words or overall, between DP master and I-slave. You can find more information on configuration and use of transfer areas in the section Configuring transfer areas (Page 84).

The following figure shows the data exchange between the I-slave and the higher-level DP master. The individual communication relations are explained below based on the numbers.

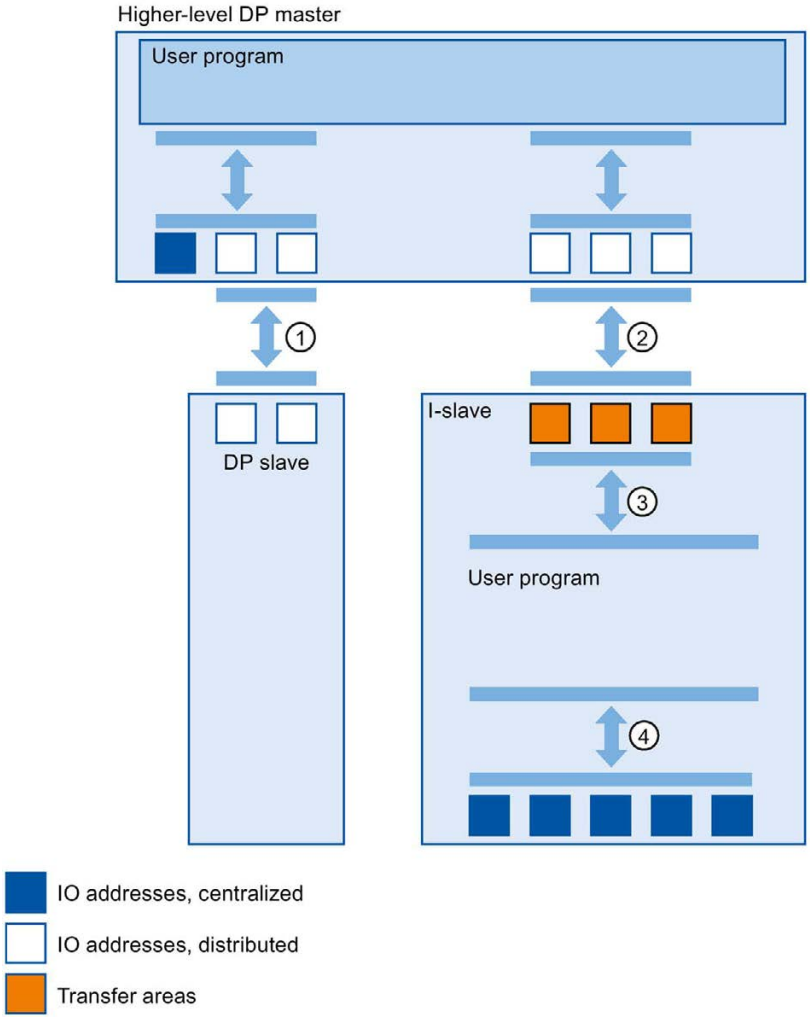

Figure 5-14 Data exchange with the DP master

① Data exchange between higher-level DP master and normal DP slave

In this way, the DP master and the DP slave exchange data through PROFIBUS.

② Data exchange between higher-level DP master and I-slave

In this way, the DP master and the slave exchange data through PROFIBUS.

The data exchange between a higher-level DP master and an I-slave is based on the conventional DP master/DP slave relationship.

For the higher-level DP master, the transfer areas of the I-slave represent submodules of a DP slave.

The output data of the DP master is the input data of the I-slave. Analogously, the input data of the DP master is the output data of the I-slave.

③ Transfer relationship between the user program and the transfer area

In this way, the user program and the transfer area exchange input and output data.

④ Data exchange between the user program and the I/O of the I-slave

In this way, the user program and the centralized I/O of the I-slave exchange input and output data.

5.5.3 Configuring an I-slave

Requirements for configuring an I-slave

The I-slave consists of:

- A CPU from S7-1500 and a communications module CM 1542-5/CP 1542-5 (STEP 7 as of V12)
- A CPU from ET 200SP and a communications module CM DP (STEP 7 as of V13 SP1)

Procedure for configuring an I-slave

This section shows how to configure an I-slave in STEP 7 based on the example of a CPU 1512SP-1 PN. The procedure for the CPUs from S7-1500 with CM 1542-5/CP 1542-5 and for the CPU 1510SP-1 PN with CM DP is the same.

To configure an I-slave, follow these steps:

1. Drag a CPU 1512SP-1 PN from the hardware catalog to the network view.
2. Open the device view of the CPU.
3. Double-click on the CM DP communications module in the hardware catalog.
   STEP 7 creates the CM DP in the device view.
4. Select the PROFIBUS interface of the CM DP communications module.
5. In the Inspector window in the area navigation, select the "Operating mode" entry and enable the "DP slave" check box.
6. Now you can select the DP master in the "Assigned DP Master" drop-down list.

   Once you have selected the DP master, the networking and the DP master system between both devices are displayed in the network view.

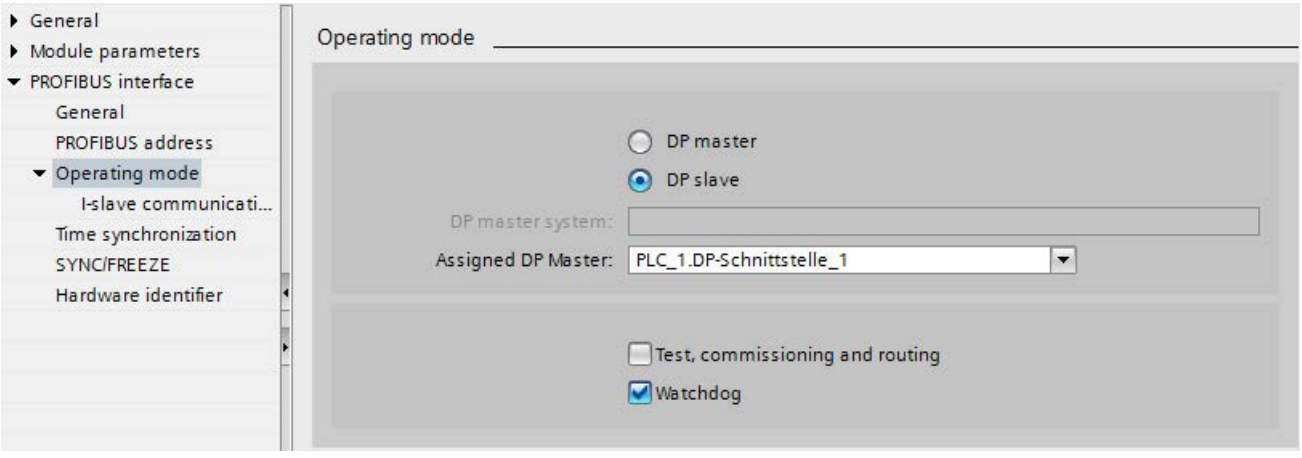

Figure 5-15 Configuring an I-slave

Note

Operation using a GSD file

If you operate an I-slave using a GSD file, you should not select the "Test, commissioning and routing" check box.

Create a DP subnet on the PROFIBUS interface of the I-slave.

Result

You have configured an I-slave.

5.5.4 Configuring transfer areas

Requirements for configuring transfer areas

- You have configured an I-slave in STEP 7.
- You are in the device view of the I-device and have selected the PROFIBUS interface of the communications module.

Procedure for configuring transfer areas

To configure transfer areas for an I-slave in STEP 7, follow these steps:

1. In the area navigation, go to the section "Operating mode" > "I-slave communication" > "Transfer areas".
2. Create transfer areas. Set the properties of the created transfer areas.

① Click in the first cell of the "Transfer area" column. STEP 7 assigns a default name that you can change.

② Select the type of communication relation: Currently, you can only select MS for "master-slave communication relation".

③ STEP 7 assigns the addresses for the transfer area automatically. Correct the addresses if necessary.

④ Set the length of the transfer area. Specify the length of the transfer area in the cell in the following format: [1...64] Byte/Word.
Examples: "32 Byte", "64 Word"

⑤ Specify whether the transfer area is exchanged in units of bytes or words or consistently over the entire length between the DP master and I-slave.

Figure 5-16 Configuring transfer areas

A separate entry is created in the area navigation for each transfer area. If you select one of these entries, you can adjust the details of the transfer area, or correct them and comment on them.

5.5.5 Sample program

Introduction

This simple sample program shows how you use the transfer areas of an I-slave.

Requirement

You have configured an I-slave.

Task

The result of an "AND logic operation" of two inputs (preprocessing) in the I-slave is to be provided to the higher-level DP master. This result is to be assigned to a local output in the DP master (further processing).
Use a transfer area with the following addresses for this purpose:

- Address in the I-slave: Q568
- Address in the DP master: I68

Required steps

The following steps are necessary to solve the task:

1. Configuring the transfer area
2. Programming the I-slave
3. Programming the DP master

Configuring the transfer area

Configure a transfer area with the following properties in the I-slave:

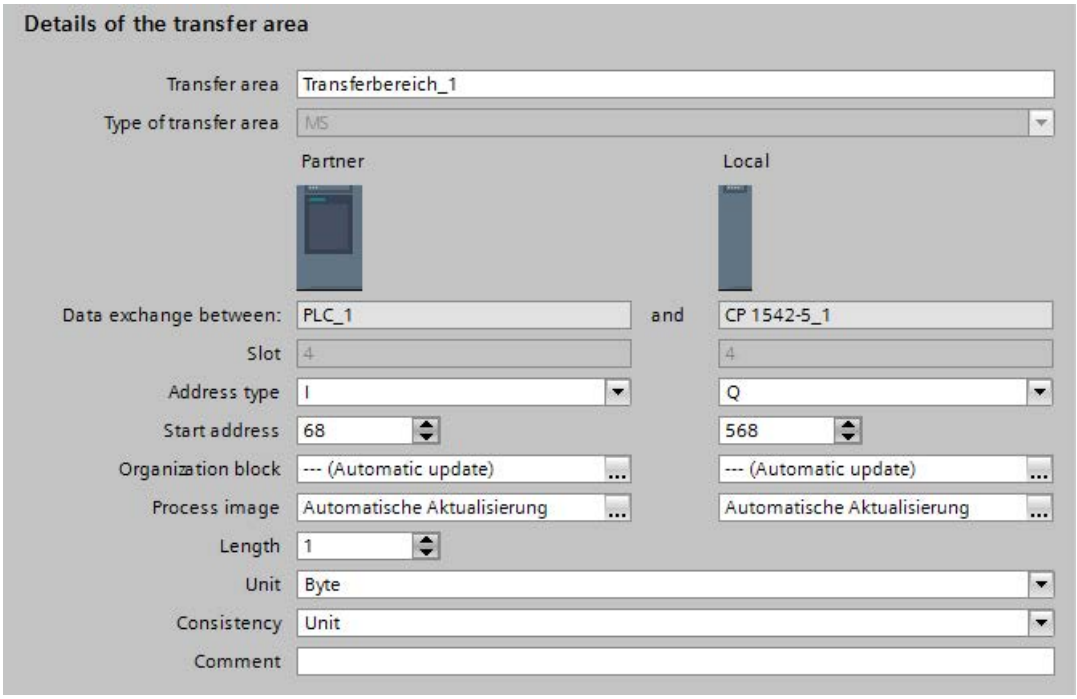

Figure 5-17 Transfer area, I-slave sample program

Programming the I-slave

To program the sample program for the I-slave, follow these steps:

1. Using the SCL programming language, create a new function with the name "preprocessing" in the project tree under "Program blocks" > "Add new block". Open the function.
2. In the interface of the function "preprocessing", create the following tags:

Name	Data type	Input/output type
input 1	bool	Input
input 2	bool	Input
result	bool	Output

3. In the instruction window of the function "preprocessing", write the following program code:
   #result:=#input 1&#input 2;
4. Call the function "preprocessing" in a cycle OB, for example, in OB1.
5. Wire the function "preprocessing" in the cycle OB as follows:

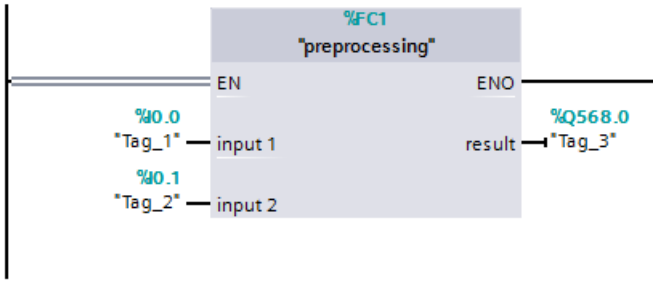

Figure 5-18 I-slave sample program

Programming the DP master

To program the sample program for the DP master, follow these steps:

1. Using the SCL programming language, create a new function with the name "further processing" in the project tree under "Program blocks" > "Add new block". Open the function.
2. In the interface of the function "further processing", create the following tags:

Name	Data type	Input/output type
result	bool	Input
output	bool	Output

3. In the instruction window of the function "further processing", write the following program code:
   #output:=#result;
4. Call the function "further processing" in a cycle OB, for example, in OB1.
5. Wire the function "further processing" in the cycle OB as follows:

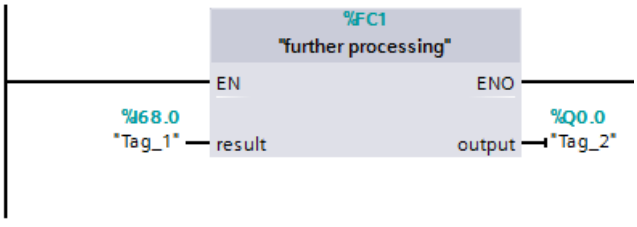

Figure 5-19 DP master sample program

Result

You mastered the task successfully.

5.5.6 Diagnostics and interrupt behavior

Diagnostics and interrupt behavior

S7 CPUs have numerous diagnostics and interrupt functions that can, for example, report errors/faults or failures of underlying DP systems. These diagnostics alarms reduce downtimes and simplify localization and elimination of problems.

Diagnostics options in the higher-level DP master and in the I-slave

The following diagnostics mechanisms are available to the higher-level DP master and the I-slave:

- OB 82 (diagnostic interrupt)

  When the I-slave changes mode, the DP master calls OB 82 (diagnostic interrupt).

  When the DP master changes mode, the I-slave calls OB 82 (diagnostic interrupt).

- OB 86 (rack failure)

  If the bus connection to the I-slave is interrupted, the DP master calls OB 86 (rack failure).

  If the bus connection to the DP master is interrupted, the I-slave calls OB 86 (rack failure).

- OB 122 (I/O access error)

  If you have not set the attribute "Handle errors within block" for OB 122, the following applies:

  – If the bus connection to the I-slave is interrupted, the DP master calls OB 122 (I/O access error) if there is direct access to the relevant transfer areas.

  – If the bus connection to the DP master is interrupted, the I-slave calls OB 122 (I/O access error) if there is direct access to the relevant transfer areas.

Reaction of the transfer areas to mode changes

Table 5- 3 Reaction of the transfer areas to mode changes

DP master	I-slave	Reaction of DP master input transfer areas	Reaction of I-slave input transfer areas
RUN→STOP	RUN	No updating of the process image	The input transfer areas retain their current values. (no access error)
STOP→RUN	RUN	The input transfer areas are updated by the cyclic user program via the process image.	The input transfer areas are updated via the process image.
RUN	RUN→STOP	The I-slave sets the input transfer areas on the DP master to "0".	No updating of the process image
RUN	STOP→RUN	The I-slave sets the input transfer areas on the DP master to "0". After the startup program of the I-slave, the input transfer areas of the DP master are updated via the process image.	Prior to processing of the startup program, the input transfer areas are updated via the process image.

Service & Support

A

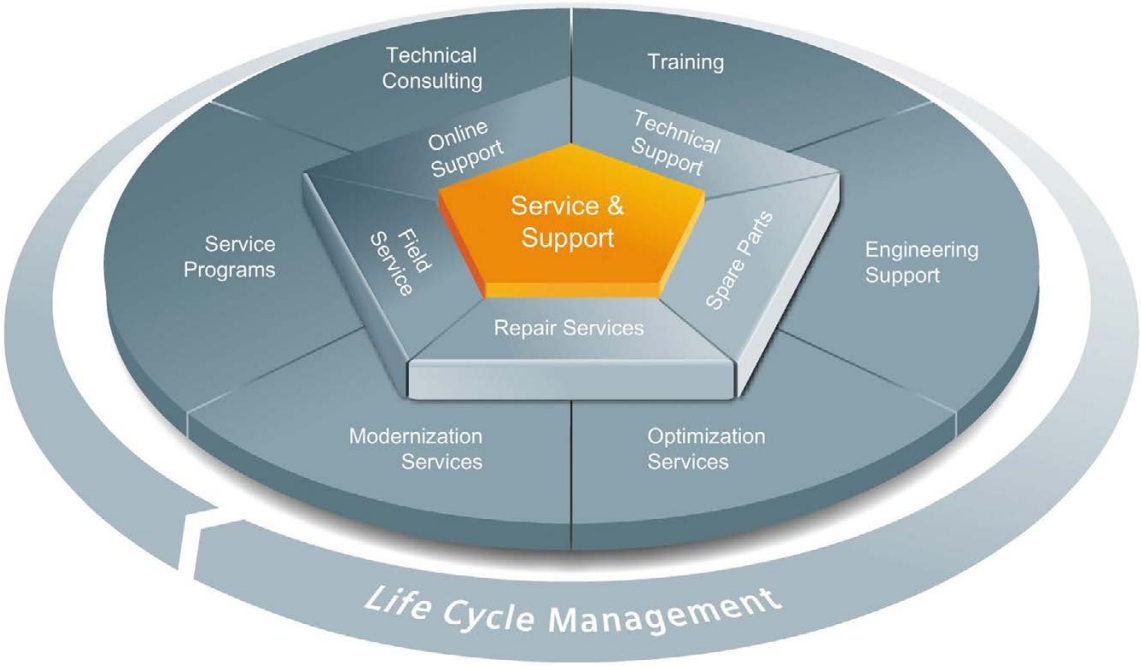

The unmatched complete service for the entire life cycle

For machine constructors, solution providers and plant operators: The service offering from Siemens Industry Automation and Drive Technologies includes comprehensive services for a wide range of different users in all sectors of the manufacturing and process industry.

To accompany our products and systems, we offer integrated and structured services that provide valuable support in every phase of the life cycle of your machine or plant – from planning and implementation through commissioning as far as maintenance and modernization.

Our Service & Support accompanies you worldwide in all matters concerning automation and drive technology from Siemens. We provide direct on-site support in more than 100 countries through all phases of the life cycle of your machines and plants.

You have an experienced team of specialists at your side to provide active support and bundled know-how. Regular training courses and intensive contact among our employees – even across continents – ensure reliable service in the most diverse areas.

Online Support

The comprehensive online information platform supports you in all aspects of our Service & Support at any time and from any location in the world.

You can find Online Support on the Internet at the following address: Internet (http://www.siemens.com/automation/service&support).

Technical Consulting

Support in planning and designing your project: From detailed actual-state analysis, definition of the goal and consultation on product and system questions right through to the creation of the automation solution.

Technical Support

Expert advice on technical questions with a wide range of demand-optimized services for all our products and systems.

You can find Technical Support on the Internet at the following address: Internet (http://www.siemens.com/automation/support-request).

Training

Extend your competitive edge – through practical know-how directly from the manufacturer.

You can find the training courses we offer on the Internet at the following address: Internet (http://www.siemens.com/sitrain).

Engineering Support

Support during project engineering and development with services fine-tuned to your requirements, from configuration through to implementation of an automation project.

Field Service

Our Field Service offers you services for commissioning and maintenance – to ensure that your machines and plants are always available.

Spare parts

In every sector worldwide, plants and systems are required to operate with constantly increasing reliability. We will provide you with the support you need to prevent a standstill from occurring in the first place: with a worldwide network and optimum logistics chains.

Repairs

Downtimes cause problems in the plant as well as unnecessary costs. We can help you to reduce both to a minimum – with our worldwide repair facilities.

Optimization

During the service life of machines and plants, there is often a great potential for increasing productivity or reducing costs.

To help you achieve this potential, we are offering a complete range of optimization services.

Modernization

You can also rely on our support when it comes to modernization – with comprehensive services from the planning phase all the way to commissioning.

Service programs

Our service programs are selected service packages for an automation and drives system or product group. The individual services are coordinated with each other to ensure smooth coverage of the entire life cycle and support optimum use of your products and systems.

The services of a Service Program can be flexibly adapted at any time and used separately.

Examples of service programs:

- Service contracts
- Plant IT Security Services
- Life Cycle Services for Drive Engineering
- SIMATIC PCS 7 Life Cycle Services
- SINUMERIK Manufacturing Excellence
- SIMATIC Remote Support Services

Advantages at a glance:

- Reduced downtimes for increased productivity
- Optimized maintenance costs due to a tailored scope of services
- Costs that can be calculated and therefore planned
- Service reliability due to guaranteed response times and spare part delivery times
- Customer service personnel will be supported and relieved of additional tasks
- Complete service from one source: fewer interfaces and more know-how

Contact

At your service locally, around the globe: your partner for consultation, sales, training, service, support, spare parts... for the entire range of products supplied by Industry Automation and Drive Technologies.

You can find your personal contact in our contacts database at: Internet (http://www.siemens.com/automation/partner).

Glossary

Automation system

Programmable logic controller for the open-loop and closed-loop control of process chains of the process engineering industry and manufacturing technology. The automation system consists of different components and integrated system functions according to the automation task.

Bus

A common transfer route to which all nodes are connected; it has two defined ends.

In the case of PROFIBUS, the bus is a two-wire line or a fiber-optic cable.

Bus connector

Physical connection between the node and bus cable.

Bus system

All stations physically connected to a bus cable form a bus system.

Device

In the PROFIBUS environment, "device" is the generic term for:

- Automation systems (for example, PLC, PC)
- Distributed I/O systems
- Field devices (for example, hydraulic devices, pneumatic devices)
- Active network components
- Gateways to AS interface or other fieldbus systems

Device that can send, receive or amplify data via the bus, for example, a DP slave by means of PROFIBUS DP.

Device

In the PROFIBUS environment, "device" is the generic term for:

- Automation systems (for example, PLC, PC)
- Distributed I/O systems
- Field devices (for example, hydraulic devices, pneumatic devices)
- Active network components
- Gateways to AS interface or other fieldbus systems

Device that can send, receive or amplify data via the bus, for example, a DP slave by means of PROFIBUS DP.

Diagnostics

Monitoring functions for the recognition, localization, classification, display and further evaluation of errors, faults and alarms. They run automatically during plant operation. This increases the availability of systems/plants by reducing commissioning times and downtimes.

DP master

CPU or device that conducts the communication with the DP slaves according to a defined algorithm. To do this, the DP master uses the functions for communication with the DP slaves which are defined by PROFIBUS DP. It acts according to standard EN 50170, Part 3.

→ *Master*

DP slave

Slave in the distributed I/O that is operated on the PROFIBUS with PROFIBUS DP protocol and acts according to standard EN 50170, Part 3. The DP slave is addressed by the DP master and provides it with specified functions (I/O data, diagnostics, etc.).

→ *Slave*

DPV1

The designation DPV1 refers to the functional extension of acyclic services (to include new interrupts, for example) provided by the DP protocol. The DPV1 functionality is integrated in IEC 61158/EN 50170, Volume 2, PROFIBUS.

FDL

Fieldbus Data Link (bus access protocol). Step 2 with PROFIBUS.

HMI device

Human Machine Interface, device for visualization and control of automation processes.

HSA

Highest Station Address. A bus parameter for PROFIBUS. Outputs the highest PROFIBUS address of an active device. PROFIBUS addresses greater than HSA are permitted for passive devices, up to 126.

Industrial Ethernet

Guideline for setting up Ethernet in an industrial environment. The main difference to the standard Ethernet is the mechanical current carrying capacity and interference immunity of the individual components.

I-slave

The "I-slave" functionality of a CPU supports the exchange of data with a DP master and can thus be used, for example, as intelligent preprocessing unit of partial processes. The I-slave is connected in its role as DP slave to a "higher-level" DP master.

Master

A master device that is in possession of the token can send data to other devices and request data from them (= active device).

PCF

Polymer Cladded Fiber (plastic-covered glass fiber)

POF

Polymer Optical Fiber (plastic fiber-optic cable made of light-conducting plastics)

Process image

Address area in the system memory of the DP master. At the start of the cyclic program the signal states of the input modules are transmitted to the process image of the inputs. And the end of cyclic program execution, the process image of the outputs is transmitted to the DP slave as signal state.

PROFIBUS

PROcess FIeld BUS, in IEC 61158-2 as "Type 3" standardized, bit-serial fieldbus system. The standard specifies functional, electrical and mechanical properties.

PROFIBUS is a bus system that networks automation systems and field devices compatible with PROFIBUS at the cell and field level. PROFIBUS is available with the protocols DP (= distributed I/O), FMS (= fieldbus message specification) or PA (process automation).

PROFIBUS address

Unique identification of a device connected to PROFIBUS. The PROFIBUS address is transmitted in the frame for addressing a device. A PC or programming device has the PROFIBUS address "0". DP masters and DP slaves have a PROFIBUS address in the range from 1 to 125.

PROFIBUS device

A PROFIBUS device has at least one PROFIBUS interface with an electrical (RS 485) or optical (Polymer Optical Fiber, POF) interface.

PROFIBUS DP

A PROFIBUS with DP protocol that complies with EN 50170. DP stands for distributed I/O (fast, real-time capable, cyclic data exchange). From the perspective of the user program, the distributed I/Os are addressed in exactly the same way as the centralized I/Os.

PROFINET

Open component-based industrial communication system based on Ethernet for distributed automation systems. Communication technology promoted by the PROFIBUS Users Organization.

RS 485

Asynchronous data transmission process for PROFIBUS DP to ANSI TIA/EIA-RS485-A.

RS 485 repeater

Equipment for amplifying bus signals and for coupling segments over long distances.

Segment

The bus line between two terminating resistors forms a bus segment.

A bus segment can contain up to 32 bus nodes. Segments can be coupled, for example, by means of RS 485 repeaters or diagnostics repeaters.

Slave

Distributed device in a fieldbus system that may exchange data with a master after being requested to do so by the master. Slaves are all DP slaves, for example, such asET 200SP, ET 200MP, ET 200AL.

Standard mounting rail

Standardized metal profile to EN 50022.

The standard mounting rail is used for quick snap-on installation of network components, such as OLM, repeaters, etc.

Subnet

Part of a network whose parameters must be synchronized with the devices (e.g., with PROFIBUS). A subnet includes the bus components and all connected stations.

SynchronousCycle

Name for synchronous cycle interrupt OB in STEP 7.

Target-Rotation-Time (Ttr)

Bus parameter for PROFIBUS. The token is the send permission for a device on PROFIBUS. A device compares a token rotation time it has measured with the Target-Rotation-Time and controls the sending of frames with high priority or low priority based on this comparison.

Terminating resistor

Component that terminates the ends of a data transmission line to prevent reflections in the transmission medium.

Terminator

Terminating resistor of bus segments with transmission rates of 9.6 kbps to 12 Mbps. The power supply is separate from the bus nodes.

TIA Portal

Totally Integrated Automation Portal

Topology

Structure of a network. Common structures are line topology, ring topology, star topology and tree topology.

Transmission rate

Specifies the number of bits transmitted per second.

Watchdog

Mechanism for monitoring the readiness for operation.

Index

A

Acyclic data exchange, 74
Address assignment, 45
Addressing, 42

B

Bus connector
    IP20, 22
    M12 with IP65, 24
Bus parameters
    Adapting, 50
    Description, 52
    Value ranges, 54
Bus profile, user-defined, 54
Bus terminal
    M12, 24
    RS 485, 24

C

Cable configuration, 49
Cables, 19
Calculate bus times, 51
CANopen module, 30
Communication
    I/O communication, 14
Communication load, 51
Components, (See network components)
Configuration, 42
Configuring isochronous mode, 68
    Basic procedure, 67
    DP slave, 68
    Requirements, 66
    Updating the process image partition, 69
Connecting PROFIBUS DP with PROFINET IO, 41
Constant bus cycle time, 55

D

Data exchange between IO systems, 81
Diagnostic repeater
    Cascade depth, 37
    Diagnostics, 60
    Topology, 37
Diagnostics, 57
    Display alarms, 58
    I-slave, 89
    Isochronous mode, errors and remedies, 70
Diagnostics repeater
    Description, 29
Display, diagnostic messages, 58
DP master
    Operated as, 80
DP slave, 43
    Operated as, 80
DP/AS-i F-Link, 31
DP/AS-i LINK Advanced, 31
DP/AS-Interface Link 20E, 31
DP/DP coupler, 30
DP/PA bus link, 31

E

Example of isochronous mode, 64

F

FastConnect system, 20
Fiber-optic, 27
Fiber-optic cables, 25
    Glass, 27
    Optical ring, 49
    PCF, 26
    Plastic, 26

G

GAP factor, 54

H

Hardware
    Configuring, 42
    Parameter assignment, 42

I

I/O addresses, 69
I/O communication, 14
Identification and maintenance data (I&M data), 61
IE/PB Link PN, 30
Increasing DP cycle time, 56
Installation, 17
    Active network components, 29
    Bus connection, 22
    Cables, 19
    FastConnect, 20
    Topology, 35
Interrupt OBs, 77
Interrupts
    DPV1, 77
    Isochronous mode, 70
IO system
    Data exchange, 81
I-slave (intelligent DP slave)
    Diagnostics, 89
    Interrupt behavior, 89
Isochronous mode
    Change parameters, 71
    Description, 62
    Diagnostics, 70
    Dialog box for isochronous mode, 71
    Example, 64
    Interrupts, 70
    Sequence, in principle, 65
IWLAN/PB Link PN IO, 30, 40

M

M12
    Bus connector, 24
    Bus terminating resistor, 24
M12 bus terminating resistor, 24
Maximum cable lengths
    Maximum cable lengths, 20

N

Network, 18
    electrical, conducted, 29
    Optical, 33
    optical, electrical, 18
    Selection criteria, 18
    Topology, 35
Network components
    Bus connections, 20
    CANopen module, 30
    Diagnostics repeater, 29
    DP/AS-i F-Link, 31
    DP/AS-i LINK Advanced, 31
    DP/AS-Interface Link 20E, 31
    DP/DP coupler, 30
    Fiber-optic cables, 25
    IE/PB Link PN, 30
    IWLAN/PB Link PN IO, 30
    OBT, Optical Bus Terminal, 33
    OLM, Optical Link Module, 33
    PROFIBUS terminator, 30
    RS 485 cables, 19
    RS485, 29
Network settings, 46

O

Optical Bus Terminal, OBT, 33
Optical Link Module, OLM
    Description, 33
    Topology, 40
Optical ring, 49, 50

P

Parameter assignment, 42
Process image partition, 69
PROFIBUS
    Address, 45
    Devices, 12
    Installation, 17
    PROFIBUS DP, 11
    Protocols, 10
    RS 485 cables, 19
PROFIBUS address, 45
    Change, 45
    HSA, 46
PROFIBUS DP
    Applications, 11
    Assigning the DP slave, 43
    Connecting with PROFINET, 41
    Definition, 10
    Devices and designations, 13
    Interface, 16
PROFIBUS DP interface
    Properties, 16
    Representation in STEP 7, 16
PROFIBUS terminator, 30
Profiles for network settings
    DP, Standard, 46
    User-defined, 48

PROFINET Proxy functionality, 41
Programming isochronous mode, 70

R

Retry limit, 50, 54
RS 485 cables, 20
RS485 repeater
    Description, 29
    Topology, 35

S

Slot time, 50, 54
SYNC/FREEZE, 75
Synchronization, sequence, 65
Synchronous cycle interrupt, 69
Synchronous cycle interrupt OB,
SynchronousCycle, 70
SynchronousCycle, synchronous cycle interrupt OB, 70

T

Target Rotation Time, 54
Topology
    Connecting PROFIBUS DP with PROFINET, 41
    OLM, 40
    RS485 repeater, 35
    WLAN, 40

SIEMENS

SIMATIC

S7-1500, ET 200MP, ET 200SP

CM PtP - Configurations for point-to-point connections

Function manual

Edition 12/2017

siemens.com

SIEMENS

SIMATIC

S7-1500 / ET 200MP / ET 200SP CM PtP - Configurations for point-to-point connections

Function Manual

Preface

Guide to documentation 1

Introduction 2

Basics of serial communication 3

Configuring / parameter assignment 4

Programming - communication using instructions 5

Startup and Diagnostics 6

Service & Support A

12/2017

A5E37509394-AB

Legal information

Warning notice system

This manual contains notices you have to observe in order to ensure your personal safety, as well as to prevent damage to property. The notices referring to your personal safety are highlighted in the manual by a safety alert symbol, notices referring only to property damage have no safety alert symbol. These notices shown below are graded according to the degree of danger.

⚠ DANGER

indicates that death or severe personal injury **will** result if proper precautions are not taken.

⚠ WARNING

indicates that death or severe personal injury **may** result if proper precautions are not taken.

⚠ CAUTION

indicates that minor personal injury can result if proper precautions are not taken.

NOTICE

indicates that property damage can result if proper precautions are not taken.

If more than one degree of danger is present, the warning notice representing the highest degree of danger will be used. A notice warning of injury to persons with a safety alert symbol may also include a warning relating to property damage.

Qualified Personnel

The product/system described in this documentation may be operated only by **personnel qualified** for the specific task in accordance with the relevant documentation, in particular its warning notices and safety instructions. Qualified personnel are those who, based on their training and experience, are capable of identifying risks and avoiding potential hazards when working with these products/systems.

Proper use of Siemens products

Note the following:

⚠ WARNING

Siemens products may only be used for the applications described in the catalog and in the relevant technical documentation. If products and components from other manufacturers are used, these must be recommended or approved by Siemens. Proper transport, storage, installation, assembly, commissioning, operation and maintenance are required to ensure that the products operate safely and without any problems. The permissible ambient conditions must be complied with. The information in the relevant documentation must be observed.

Trademarks

All names identified by ® are registered trademarks of Siemens AG. The remaining trademarks in this publication may be trademarks whose use by third parties for their own purposes could violate the rights of the owner.

Disclaimer of Liability

We have reviewed the contents of this publication to ensure consistency with the hardware and software described. Since variance cannot be precluded entirely, we cannot guarantee full consistency. However, the information in this publication is reviewed regularly and any necessary corrections are included in subsequent editions.

Siemens AG
Division Digital Factory
Postfach 48 48
90026 NÜRNBERG
GERMANY

A5E37509394-AB
℗ 01/2018 Subject to change

Copyright © Siemens AG 2017.
All rights reserved

Preface

Purpose of the documentation

This documentation provides important information on configuring and commissioning the point-to-point communication modules for the S7-1500 (ET 200MP) and ET 200SP.

Basic knowledge required

The following knowledge is required in order to understand the documentation:

- General knowledge of automation technology
- Knowledge of the industrial automation system SIMATIC
- Knowledge about the use of Windows-based computers
- Proficiency with STEP 7

Validity of the documentation

This documentation is valid for all point-to-point communication modules of the S7-1500 (ET 200MP) and the ET 200SP when used with STEP 7 (TIA Portal) V12 and higher.

Conventions

The term "CPU" is used in this manual both for the CPUs of the S7-1500 as well as for interface modules of distributed I/O systems, such as the IM 155-5.

Please also observe notes labeled as follows:

Note

The notes contain important information on the product described in the documentation, on the handling of the product or on part of the documentation to which particular attention should be paid.

Recycling and disposal

The products can be recycled due to their low pollutant content. For environmentally compliant recycling and disposal of your old device, please contact a company certified for the disposal of electronic waste.

Additional assistance

- Information on the offers of our Technical Support are available in the appendix Service & Support (Page 206).
- The range of technical documentation for the individual SIMATIC products and systems can be found on the Internet (http://www.siemens.com/simatic-tech-doku-portal).
- The online catalog and the ordering system are available on the Internet (http://mall.automation.siemens.com).

Table of contents

Preface 3

1 Guide to documentation 8

2 Introduction 13

2.1 Overview of the communication modules 13

2.2 Overview of the processing steps 16

2.3 Overview of instructions 17

3 Basics of serial communication 19

3.1 Serial data transmission 19

3.2 Transmission security 20

3.3 RS232 mode 23

3.4 RS422 mode 26

3.5 RS485 mode 29

3.6 Handshake procedure 32

4 Configuring / parameter assignment 37

4.1 Configuring / parameter assignment of a communication module 37

4.2 Communication using Freeport 38
4.2.1 Procedure for establishing a serial connection with Freeport 38
4.2.2 Data transmission with Freeport 39
4.2.3 Sending data with Freeport 40
4.2.4 Receiving data with Freeport 41
4.2.5 Code transparency 45
4.2.6 Receive buffer 46

4.3 Communication using 3964(R) 47
4.3.1 Procedure for establishing a serial connection with 3964(R) 47
4.3.2 Data transmission with 3964(R) procedure 48
4.3.3 Control characters 48
4.3.4 Block check character 49
4.3.5 Sending data with 3964(R) 49
4.3.6 Receiving data with 3964(R) 51

4.4 Communication through Modbus RTU 52
4.4.1 Procedure for establishing a serial connection with Modbus RTU 52
4.4.2 Overview of modbus communication 53
4.4.3 Function Codes 57

4.5 Communication using USS 59
4.5.1 Procedure for establishing a serial connection with Modbus USS 59
4.5.2 Overview of USS communication 60
4.5.3 Overview of functions 62

5 Programming - communication using instructions 63

5.1 Overview of point-to-point programming 63

5.2 Overview of Modbus programming 66

5.3 Overview of USS programming 68

5.4 Instructions 70
5.4.1 Point-to-point 70
5.4.1.1 Overview of Freeport communication 70
5.4.1.2 Using the instructions 72
5.4.1.3 General parameters for Freeport operations 73
5.4.1.4 Port_Config: Configure PtP communication port 75
5.4.1.5 Send_Config: Configure PtP sender 78
5.4.1.6 Receive_Config: Configure PtP recipient 80
5.4.1.7 P3964_Config: Configuring the 3964(R) protocol 85
5.4.1.8 Send_P2P: Sending data 87
5.4.1.9 Using the BUFFER and LENGTH parameters for communication operations 90
5.4.1.10 Receive_P2P: Receiving data 91
5.4.1.11 Receive_Reset: Clear receive buffer 93
5.4.1.12 Signal_Get: Read status 94
5.4.1.13 Signal_Set: Set accompanying signals 96
5.4.1.14 Get_Features: Get extended functions 98
5.4.1.15 Set_Features: Set extended functions 100
5.4.1.16 Error messages 102
5.4.2 MODBUS (RTU) 118
5.4.2.1 Overview of the Modbus RTU communication 118
5.4.2.2 Modbus_Comm_Load: Configure communication module for Modbus 120
5.4.2.3 Modbus_Master: Communicate as Modbus master 125
5.4.2.4 Modbus_Slave 133
5.4.2.5 Frame structure 142
5.4.2.6 Error messages 151
5.4.3 USS 167
5.4.3.1 Overview of USS communication 167
5.4.3.2 Requirements for using the USS protocol 169
5.4.3.3 USS_Port_Scan / USS_Port_Scan_31: Communication by means of a USS network 172
5.4.3.4 USS_Drive_Control / USS_Drive_Control_31: Preparing and displaying data for the drive 176
5.4.3.5 USS_Read_Param / USS_Read_Param_31: Read data from drive 180
5.4.3.6 USS_Write_Param / USS_Write_Param_31: Change data in drive 182
5.4.3.7 General information on drive setup 184
5.4.3.8 Error messages 188

6 Startup and Diagnostics 204

6.1 Startup characteristics 204

6.2 Diagnostic functions 204

6.3 Diagnostic interrupts 205

A Service & Support 206
A.1 Service & Support 206
Glossary 209
Index 213

Guide to documentation 1

The documentation for the SIMATIC S7-1500 automation system, for CPU 1516pro-2 PN based on SIMATIC S7-1500, and for the distributed I/O systems SIMATIC ET 200MP, ET 200SP and ET 200AL is divided into three areas.
This division allows you easier access to the specific information you require.

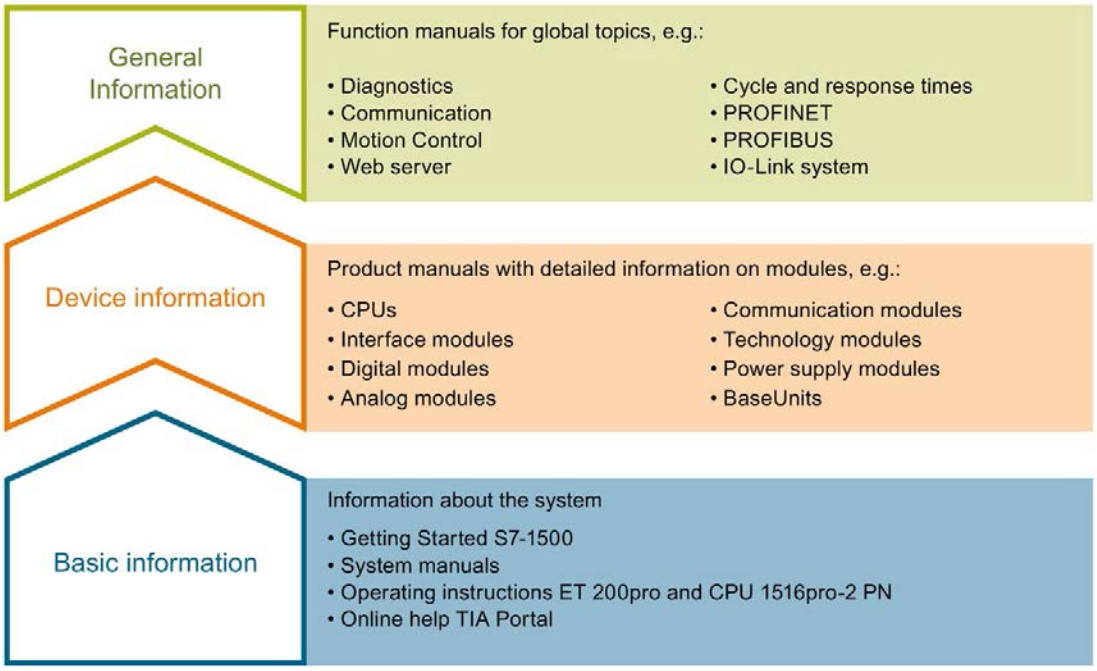

Basic information

System manuals and Getting Started manuals describe in detail the configuration, installation, wiring and commissioning of the SIMATIC S7-1500, ET 200MP, ET 200SP and ET 200AL systems; use the corresponding operating instructions for CPU 1516pro-2 PN. The STEP 7 online help supports you in configuration and programming.

Device information

Product manuals contain a compact description of the module-specific information, such as properties, terminal diagrams, characteristics and technical specifications.

General information

The function manuals contain detailed descriptions on general topics such as diagnostics, communication, Motion Control, Web server, OPC UA.

You can download the documentation free of charge from the Internet (http://w3.siemens.com/mcms/industrial-automation-systems-simatic/en/manual-overview/Pages/Default.aspx).

Changes and additions to the manuals are documented in product information sheets.

You will find the product information on the Internet:

- S7-1500/ET 200MP (https://support.industry.siemens.com/cs/us/en/view/68052815)
- ET 200SP (https://support.industry.siemens.com/cs/us/en/view/73021864)
- ET 200AL (https://support.industry.siemens.com/cs/us/en/view/99494757)

Manual Collections

The Manual Collections contain the complete documentation of the systems put together in one file.

You will find the Manual Collections on the Internet:

- S7-1500/ET 200MP (https://support.industry.siemens.com/cs/ww/en/view/86140384)
- ET 200SP (https://support.industry.siemens.com/cs/ww/en/view/84133942)
- ET 200AL (https://support.industry.siemens.com/cs/ww/en/view/95242965)

"mySupport"

With "mySupport", your personal workspace, you make the best out of your Industry Online Support.

In "mySupport", you can save filters, favorites and tags, request CAx data and compile your personal library in the Documentation area. In addition, your data is already filled out in support requests and you can get an overview of your current requests at any time.

You must register once to use the full functionality of "mySupport".

You can find "mySupport" on the Internet (https://support.industry.siemens.com/My/ww/en).

"mySupport" - Documentation

In the Documentation area in "mySupport" you can combine entire manuals or only parts of these to your own manual.
You can export the manual as PDF file or in a format that can be edited later.

You can find "mySupport" - Documentation on the Internet (http://support.industry.siemens.com/My/ww/en/documentation).

"mySupport" - CAx data

In the CAx data area in "mySupport", you can access the current product data for your CAx or CAe system.

You configure your own download package with a few clicks.

In doing so you can select:

- Product images, 2D dimension drawings, 3D models, internal circuit diagrams, EPLAN macro files
- Manuals, characteristics, operating manuals, certificates
- Product master data

You can find "mySupport" - CAx data on the Internet (http://support.industry.siemens.com/my/ww/en/CAxOnline).

Application examples

The application examples support you with various tools and examples for solving your automation tasks. Solutions are shown in interplay with multiple components in the system - separated from the focus on individual products.

You will find the application examples on the Internet (https://support.industry.siemens.com/sc/ww/en/sc/2054).

TIA Selection Tool

With the TIA Selection Tool, you can select, configure and order devices for Totally Integrated Automation (TIA).
This tool is the successor of the SIMATIC Selection Tool and combines the known configurators for automation technology into one tool.
With the TIA Selection Tool, you can generate a complete order list from your product selection or product configuration.

You can find the TIA Selection Tool on the Internet (http://w3.siemens.com/mcms/topics/en/simatic/tia-selection-tool).

SIMATIC Automation Tool

You can use the SIMATIC Automation Tool to run commissioning and maintenance activities simultaneously on different SIMATIC S7 stations as a bulk operation, independently of the TIA Portal.

The SIMATIC automation tool provides a variety of functions:

- Scanning of a PROFINET/Ethernet plant network and identification of all connected CPUs
- Address assignment (IP, subnet, gateway) and station name (PROFINET device) to a CPU
- Transfer of the date and programming device/PC time converted to UTC time to the module
- Program download to CPU
- Operating mode switchover RUN/STOP
- CPU localization by means of LED flashing
- Reading out CPU error information
- Reading of CPU diagnostic buffer
- Reset to factory settings
- Updating the firmware of the CPU and connected modules

You can find the SIMATIC Automation Tool on the Internet (https://support.industry.siemens.com/cs/ww/en/view/98161300).

PRONETA

With SIEMENS PRONETA (PROFINET network analysis), you analyze the plant network during commissioning. PRONETA features two core functions:

- The topology overview independently scans PROFINET and all connected components.
- The IO check is a fast test of the wiring and the module configuration of a plant.

You can find SIEMENS PRONETA on the Internet (https://support.industry.siemens.com/cs/ww/en/view/67460624).

SINETPLAN

SINETPLAN, the Siemens Network Planner, supports you in planning automation systems and networks based on PROFINET. The tool facilitates professional and predictive dimensioning of your PROFINET installation as early as in the planning stage. In addition, SINETPLAN supports you during network optimization and helps you to exploit network resources optimally and to plan reserves. This helps to prevent problems in commissioning or failures during productive operation even in advance of a planned operation. This increases the availability of the production plant and helps improve operational safety.

The advantages at a glance

- Network optimization thanks to port-specific calculation of the network load
- Increased production availability thanks to online scan and verification of existing systems
- Transparency before commissioning through importing and simulation of existing STEP 7 projects
- Efficiency through securing existing investments in the long term and optimal exploitation of resources

You can find SINETPLAN on the Internet (https://www.siemens.com/sinetplan).

Introduction 2

2.1 Overview of the communication modules

Automation systems encompass a wide range of components. These also include communication modules. A simple possibility of data exchange is provided by serial communication via point-to-point connections.

Customizing to a wide range of communication partners is possible by setting the communication parameters at a lower layer of the OSI layer model (see section Transmission security (Page 20)).

Communication through point-to-point connection with S7-1500, ET 200MP and ET 200SP takes place exclusively by means of communication modules (CM) with serial interfaces.

SIMATIC S7 offers a number of modules that provide the physical interface and fundamental protocol mechanisms for this purpose.

- RS232: An interface that can coordinate the communication between the partners through additional accompanying signals.
- RS422/RS485: An interface that allows longer lines through the use of differential voltages as transmission technology and also enables structures with more than 2 devices through a bus structure (RS485).

Instructions that carry out the coordination between the CPU and CM (Communication Module) are available to transfer data from the CPU to the respective modules. They inform the user program about a successful transfer or the receipt of new data (in systems without a SIMATIC CPU users have to program the function of these instructions themselves).

The function and use of the PtP communication modules is described in this function manual.

Overview of components and order numbers

Tabular overview of communication modules and their application suitability

Communication module	S7-1500	ET 200MP	ET 200SP	Article number
CM PtP RS232 BA [1]	X	X	-	6ES7540-1AD00-0AA0
CM PtP RS422/485 BA	X	X	-	6ES7540-1AB00-0AA0
CM PtP RS232 HF [2]	X	X	-	6ES7541-1AD00-0AB0
CM PtP RS422/485 HF	X	X	-	6ES7541-1AB00-0AB0
CM PtP (ET 200SP)	-	-	X	6ES7137-6AA00-0BA0

[1] BA = Basic

[2] HF = High Feature

Overview of components and interfaces

Tabular overview of communication modules and their functions.

Communication module	Interface	Protocols					Connection technology	
		Freeport	3964(R)	Modbus Master	Modbus Slave	USS-Master	D-Sub 9-pin	D-Sub 15-pin
CM PtP RS232 BA	RS232	X	X	-	-	X	X	-
CM PtP RS422/485 BA	RS422	X	X	-	-	X	-	X
	RS485	X	-	-	-	X	-	X
CM PtP RS232 HF	RS232	X	X	X	X	X	X	-
CM PtP RS422/485 HF	RS422	X	X	X	X	X	-	X
	RS485	X	-	X	X	X	-	X
CM PtP (ET 200SP)	RS232	X	X	X	X	X	ET 200SP BaseUnit 1)	
	RS422 2)	X	X	X	X	X		
	RS485	X	-	X	X	X		

1) BaseUnit with terminals instead of D-Sub; assignment depending on physical transmission properties

2) The CM PtP communication module can also be used for multipoint connection in RS422 mode

Overview of components and data transmission rates

The communication modules can send and receive data with different data transmission rates. The table below shows the assignment to the individual communication modules.

Communication module	Data transmission rate in bps										
	300	600	1200	2400	4800	9600	19200	38400	57600	76800	115200
CM PtP RS232 BA	X	X	X	X	X	X	X	-	-	-	-
CM PtP RS422/485 BA	X	X	X	X	X	X	X	-	-	-	-
CM PtP RS232 HF	X	X	X	X	X	X	X	X	X	X	X
CM PtP RS422/485 HF	X	X	X	X	X	X	X	X	X	X	X
CM PtP (ET 200SP)	X	X	X	X	X	X	X	X	X	X	X

Overview of components and receive buffer size

Each communication module has a buffer to temporarily store received frames. The table below shows the assignment of the maximum size of an individual frame as well as the size of the memory for the individual communication modules.

Module	Receive buffer size KB	Max. frame length KB	Bufferable frames
CM PtP RS232 BA	2	1	255
CM PtP RS422/485 BA	2	1	255
CM PtP RS232 HF	8	4	255
CM PtP RS422/485 HF	8	4	255
CM PtP (ET 200SP)	4	2	255

Accompanying signals and data flow control

- Software data flow control with XON/XOFF

  The Freeport protocol supports data flow control with XON/XOFF via the RS232 and RS422 interfaces.

- Hardware data flow control with RTS/CTS

  The Freeport protocol supports data flow control with RTS/CTS via the RS232 interface.

- Automatic operation of accompanying signals

  The RS232 accompanying signals can be controlled with the Freeport, Modbus master and Modbus slave protocols by means of the RS232 interface. (Only available if hardware data flow control is not activated.)

Protocols of the communication modules

You may set up a communication connection with different protocols, depending on the communication modules used:

- Freeport: Transmission of ASCII character strings without specified protocol format
- 3964(R): Communication between programmable logic controllers (master/master communication)
- Modbus RTU: Communication between programmable logic controllers (master/slave communication) The communication module can be the master as well as the slave.
- USS: Communication between a programmable logic controller and a drive (master/slave communication) Communication is tailored to the drive technology requirements. The communication module can only be master.

2.2 Overview of the processing steps

Point-to-point connection

The system provides various networking options for the exchange of data between two or more communication partners. The simplest form of data interchange is via a point-to-point connection between two communication partners.

The communication module (CM) forms the interface between a programmable logic controller and a communication partner. Data is sent in serial mode via point-to-point connection with the communication module.

Configuring / parameter assignment

Configuring the communication module includes the arrangement of the communication module in the device configuration of STEP 7 (TIA Portal) as well as the settings of the specific protocol parameters in the properties dialog of the communication module (static configuration).

Programming

Programming includes the program-specific connection of the communication module to the corresponding CPU by means of the user program. You program the communication module with STEP 7 (TIA Portal).

Communication between CPU, communication module and a communication partner takes place through instructions (Page 70). A number of instructions are available for the S7-1500 and S7-1200 automation systems. You can use these instructions to initiate and control communication in the user program as well as influence the configuration for runtime (dynamic configuration).

For more information, please refer to Overview of instructions (Page 17) and the STEP 7 (TIA Portal) online help.

2.3 Overview of instructions

Note

CPU quantity structures

The point-to-point instructions communicate with the communication modules by reading or writing data records.
When using the instructions, you should therefore check the configuration limits of the CPU for reading and writing data records.
If multiple instructions need to read or write data records simultaneously on a CPU, there may need to be a gap between the calls of each instruction by the user program.

Overview of the instructions

The communication protocols are implemented on the communication module. The protocol is used to adapt the interface of the communication module to the interface of the communication partner.

Communication between the CPU, the communication module and a communication partner takes place by means of special instructions and protocols that support the corresponding communication modules.

The instructions form the software interface between the CPU and the communication module. They must be called cyclically from the user program. Data transmission takes place across several cycles.

The instructions are part of STEP 7 (TIA Portal). The instructions are available in the "Instructions" task card under Communication > Communication processor. They apply to all listed communication modules if they support the required function.

Table 2- 1 Instructions for PtP

Instruction	Meaning
Send_P2P (Page 87)	The instruction Send_P2P allows you to send data to a communication partner.
Receive_P2P (Page 91)	The instruction Receive_P2P allows you to receive data from a communication partner.
Receive_Reset (Page 93)	The instruction Receive_Reset allows you to clear the receive buffer of the communication module.
Port_Config (Page 75)	The instruction Port_Config allows you to dynamically assign basic interface parameters.
Send_Config (Page 78)	The instruction Send_Config (send configuration) allows you to dynamically assign serial send parameters of a port.
Receive_Config (Page 80)	The instruction Receive_Config (receive configuration) allows you to dynamically assign serial receive parameters of a port.
P3964_Config (Page 85)	The instruction P3964_Config (protocol configuration) allows you to dynamically configure the parameters of the 3964(R) procedure.
Signal_Get (Page 94)	The instruction Signal_Get allows you to read the RS232 accompanying signals.

Instruction	Meaning
Signal_Set (Page 96)	The instruction Signal_Set allows you to set the RS232 accompanying signals.
Get_Features (Page 98)	The instruction Get_Features allows you to read the extended functions supported by the communication module.
Set_Features (Page 100)	The instruction Set_Features allows you to activate the extended functions supported by the communication module.

Table 2- 2 Instructions for Modbus

Instruction	Meaning
Modbus_Master (Page 125)	The Modbus_Master instruction allows you to communicate as Modbus master by means of the PtP port.
Modbus_Slave (Page 133)	The Modbus_Slave instruction allows you to communicate as Modbus slave by means of the PtP port.
Modbus_Comm_Load (Page 120)	The Modbus_Comm_Load instruction allows you to configure the port of the communication module for Modbus RTU.

Table 2- 3 Instructions for USS

Instruction	Meaning
USS_Port_Scan (Page 172)	The instruction USS_Port_Scan allows you to communicate by means of the USS network.
USS_Drive_Control (Page 176)	The instruction USS_Drive_Control allows you to swap data with the drive.
USS_Read_Param (Page 180)	The instruction USS_Read_Param allows you to read parameters from the drive.
USS_Write_Param (Page 182)	The instruction USS_Write_Param allows you to change parameters in the drive.

Basics of serial communication 3

3.1 Serial data transmission

During serial data transmission, the individual bits of a character of information to be transmitted are sent successively in a defined sequence.

Bidirectional data traffic - operating mode

In the context of bidirectional data traffic, we distinguish between two operating modes for the communication module:

- Half-duplex operation

  The data is exchanged between the communication partners in both directions alternately. In half-duplex operation one communication partner is sending and the other communication partner is receiving at the same time. In the process one line is alternately used for sending or receiving.

- Full-duplex operation

  The data is exchanged between one or more communication partners in both directions simultaneously, which means you can send and receive data at the same time. This process requires one line for sending and one line for receiving.

Asynchronous data transmission

Serial data transmission is performed asynchronously with communication modules. The so-called time base synchronism (a fixed timing code used in the transmission of a fixed character string) is only upheld during transmission of a character. Each character to be sent is preceded by a synchronization impulse, also called start bit. The length of the start-bit transmission determines the clock pulse. The end of character transmission is formed by one or two stop bits.

Declarations

In addition to start and stop bits, additional declarations must be made between the sending and receiving partners before serial transmission can take place. These include:

- Data transmission rate
- Frame start and end criteria (e.g., character delay time)
- Parity
- Number of data bits (7 or 8 bits/characters)
- Number of stop bits (1 or 2)

3.2 Transmission security

Transmission security plays an important role in the transmission of data and in the selection of the transmission procedure. Generally speaking, the more layers of the reference model are applied, the higher the transmission security.

Classification of existing protocols

The figure below illustrates how the protocols of the communication module fit into the reference model.

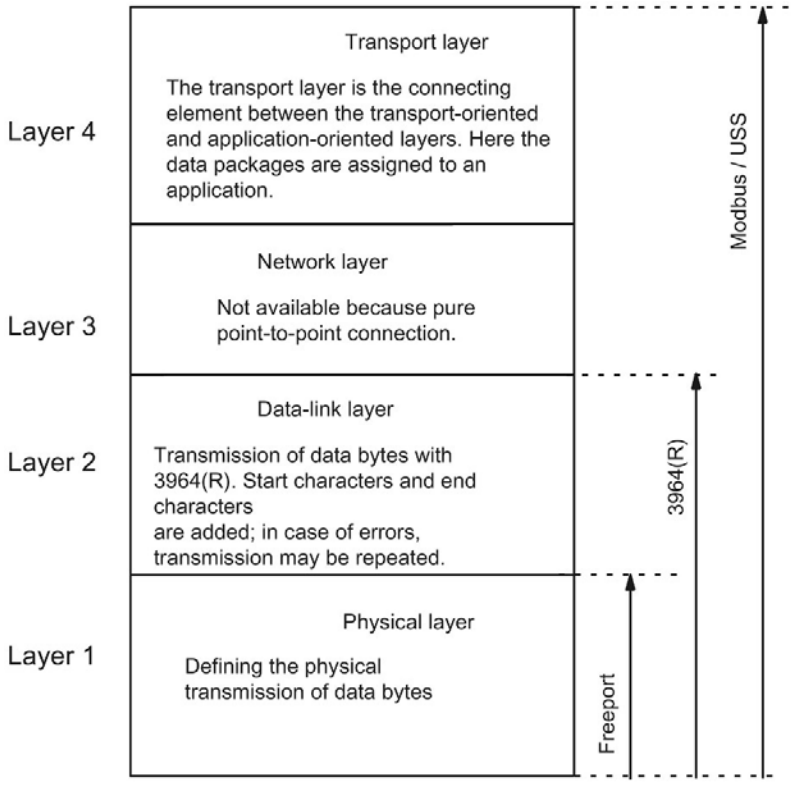

Figure 3-1 Classification of the existing protocols of the communication module in the reference model

Transmission security with Freeport

Transmission security when using Freeport:

- When data is sent with Freeport, there are no data security measures other than the use of a parity bit. This means data transmission with Freeport is very efficient, but data security is not guaranteed. A certain degree of data security can be achieved through parameter assignment of the frame start and frame end conditions.
- Using the parity bit ensures that the inversion of a bit in a character to be sent can be recognized. If two or more bits of a character are inverted, however, there is no guarantee that these errors are still detected.
- To increase transmission security, you can, for example, implement a checksum, a frame length specification, or configurable end conditions. These measures must be implemented by the user.
- A further increase in data security can be achieved by means of acknowledgment frames in response to send or receive frames. This is the case with high-grade protocols for data communication (ISO 7-layer reference model).

Transmission security with 3964(R)

The parity bit is used to increase data security; depending on the configuration, it completes the number of data bits to be transmitted to form an even or odd number.

Using the parity bit ensures that the inversion of a bit in a character to be sent can be recognized. If two or more bits of a character are inverted, however, these errors can no longer be reliably detected.

If parity is set to "none", no parity bit is transmitted. This setup reduces transmission security.

Two different procedures for data transmission can be used, either with or without a block check character:

- Data transmission without block check character: 3964

  Transmission security is achieved by means of a specified frame structure, frame breakdown, and frame repetitions.
- Data transmission with block check character: 3964R

  The high degree of transmission security is achieved by means of a specified frame structure and breakdown, frame repetitions, as well as inclusion of a block check character (BCC).

In this manual, the term 3964(R) is used when descriptions and notes refer to both data transmission modes.

Transmission integrity for Modbus and USS

The parity bit is used to increase transmission security; depending on the configuration, it completes the number of data bits to be transmitted to form an even or odd number.

Using the parity bit ensures that the inversion of a bit in a character to be sent can be recognized. If two or more bits of a character are inverted, however, this error can no longer be clearly detected.

If parity is set to "none", no parity bit is transmitted. This setup reduces transmission security.

The CRC (cyclic redundancy check) is additionally used with Modbus. With this method additional redundancy in the form of a so-called CRC value is added for each data block of the user data before data transmission. This is a check value calculated by using a specific procedure that can be used to detect any errors that may occur during transmission.

A BCC (block check character) is additionally used with USS. The block check character is formed during the receipt and is compared with the received BCC after the entire frame has been read in. If these two characters do not match, the frame is not evaluated. (If a character is incorrectly transmitted, an error is reliably detected. If an even number of characters are incorrectly transmitted, an error can no longer be reliably detected.)

3.3 RS232 mode

The following communication modules support RS232 mode:

- CM PtP RS232 BA
- CM PtP RS232 HF
- CM PtP (ET 200SP)

In RS232 mode, data is sent via two lines. A separate line is available for the send direction and the receive direction. Simultaneous sending and receiving is possible (full duplex).

RS232 signals

In addition to the TXD, RXD and GND signals, the communication module provides additional RS232 signals when using RS232 hardware:

TXD	Output	Transmitted data; Interface is transmitting
RXD	Input	Received data; Interface is receiving
GND		Functional ground; isolated
DCD	Input	Data carrier detect; Carrier signal when connecting a modem. The communication partner signals that it recognizes incoming data.
DTR	Output	Data terminal ready; DTR set to "ON": Communication module switched on, ready for operation DTR set to "OFF": Communication module not switched on, not ready for operation
DSR	Input	Data set ready; DSR set to "ON": Communication partner signals readiness for operation DSR set to "OFF": Communication partner not switched on, not ready for operation
RTS	Output	Request to send; RTS set to "ON": Communication module ready to send; signals to the communication partner that there is data ready to send RTS set to "OFF": Communication module not ready to send
CTS	Input	Clear to send; Communication partner can receive data from the communication module (response to RTS = ON of the communication module) CTS set to "ON": Signals readiness to receive to the communication partner CTS set to "OFF": Signals "Not ready to receive" to the communication partner
RI	Input	Incoming call for connecting a modem (ring indicator)

After power on of the communication module, the output signals are in the OFF state (inactive).

You configure the operation of the DTR/DSR and RTS/CTS control signals in the user interface of the communication module.

The RS232 signals cannot be influenced in case of:

- configured data flow control "Hardware RTS always switched"

  (corresponds to automatic operation of the accompanying signals)
- configured data flow control "Hardware RTS always ON"

  (corresponds to hardware flow control with RTS/CTS)
- configured data flow control "Hardware RTS always ON, ignore DTR/DSR"

For more information, refer to chapter Handshake procedure (Page 32).

Connecting cables

The following standard connecting cables of various lengths are available for connecting to a communication partner which also has a 9-pin D-sub male connector:

Article number	6ES7902-1AB00-0AA0	6ES7902-1AC00-0AA0	6ES7902-1AD00-0AA0
Product type designation	S7 connecting cable RS232		
Cable length	5 m	10 m	15 m

The table below shows the pin assignment for the 9-pin D-sub male connector of the respective communication module.

Male connector*	Pin	Designation	Input/ output	Required/optional for self-fabrication
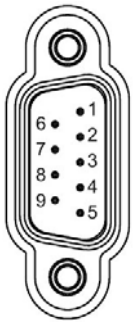	1	DCD	Input	Optional
	2	RXD	Input	Required
	3	TXD	Output	Required
	4	DTR	Output	Optional
	5	GND	—	Required
	6	DSR	Input	Optional
	7	RTS	Output	Optional
	8	CTS	Input	Optional
	9	RI	Input	Optional

* View from the front

The cable or the connector of the listed connecting cables are not available for order as separate items. If you fabricate your own connecting cables you must remember that unconnected inputs at the communication partner may have to be connected to open-circuit potential.

Note that you may only use shielded connector enclosures. A large surface area of the cable shield must be in contact with the connector enclosure on both ends.

CAUTION

Never connect cable shield with GND

Never connect the cable shield with the GND as this could destroy the interfaces. GND must always be connected on both sides (pin 5), otherwise the interface modules could be destroyed.

The figure below illustrates the cable for a point-to-point connection between a communication module and a communication partner.

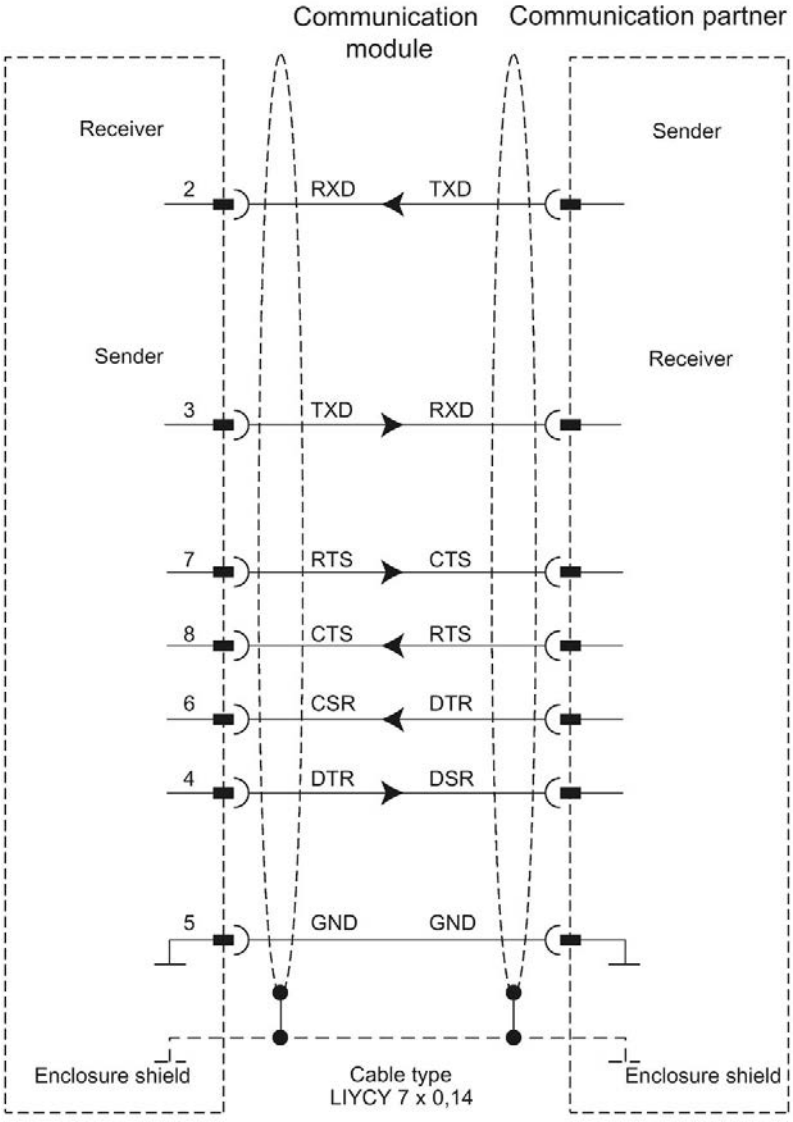

3.4 RS422 mode

The following communication modules support RS422 mode:

- CM PtP RS422/485 BA
- CM PtP RS422/485 HF
- CM PtP (ET 200SP)

In RS422 mode, data is transmitted via two line pairs (four-wire operation). A separate line pair is available for the send direction and the receive direction. Simultaneous sending and receiving is possible (full duplex).

All communication partners must be capable of simultaneous operation of a sender and receiver unit.

The data can be exchanged simultaneously between two or more communication partners. In RS422 multipoint mode, only one slave may send data at any given time.

Interface operating modes

The following table is a summary of the interface operating modes for the various communication modules and protocols.

The communication module can be used in the following topologies in RS422 mode:

- Link between two nodes: Point-to-point connection
- Link between several nodes: Multipoint connection
  (only available with CM PtP (ET 200SP))

Operating mode	Description
Full duplex (RS422) four-wire operation (point-to-point connection)	Both devices have the same priority in this operating mode.
Full duplex (RS422) four-wire operation (multipoint master)	The communication module can be used as multipoint master.
Full duplex (RS422) four-wire operation (multipoint slave)	The communication module can be used as multipoint slave.

The following applies for a multipoint master/slave topology in RS422 mode:

- The sender of the master is interconnected with the receivers of all slaves.
- The senders of the slaves are interconnected with the master's receiver.
- Only the receiver of the master and the receiver of one slave have a default setting. All other slaves operate without default settings.

RS422 signals

The following signals are present on the communication module when using the RS422 hardware:

T (A) -	Output	Transmitted data
T (B) +	Output	Transmitted data
R (A) -	Input	Received data
R (B) +	Input	Received data
GND		Functional ground; isolated

Connecting cables

The following standard connecting cables of various lengths are available for connecting to a communication partner which also has a 15-pin D-sub female connector:

Article number	6ES7902-3AB00-0AA0	6ES7902-3AC00-0AA0	6ES7902-3AG00-0AA0
Product type designation	S7 connecting cable RS422		
Cable length	5 m	10 m	50 m

The table below shows the pin assignment of the 15-pin D-sub female connector of the respective communication module.

Socket*	Pin	Designation	Input/output
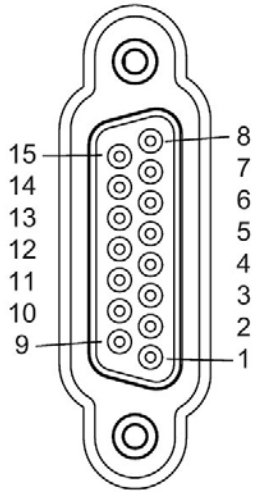	1	-	-
	2	T (A) -	Output
	3	-	-
	4	R (A) -	Input
	5	-	-
	6	-	-
	7	-	-
	8	GND	-
	9	T (B) +	Output
	10	-	-
	11	R (B) +	Input
	12	-	-
	13	-	-
	14	-	-
	15	-	-

* View from the front

The cable or the connector of the listed connecting cables are not available for order as separate items. If you fabricate your own connecting cables you must remember that unconnected inputs at the communication partner may have to be connected to open-circuit potential.

Note that you may only use shielded connector enclosures. A large surface area of the cable shield must be in contact with the connector enclosure on both ends.

CAUTION

Never connect cable shield with GND

Never connect the cable shield with the GND as this could destroy the interfaces. GND must always be connected on both ends (pin 8), otherwise the interface modules could be destroyed.

The figure below illustrates the cable for a point-to-point connection between a communication module and a communication partner.

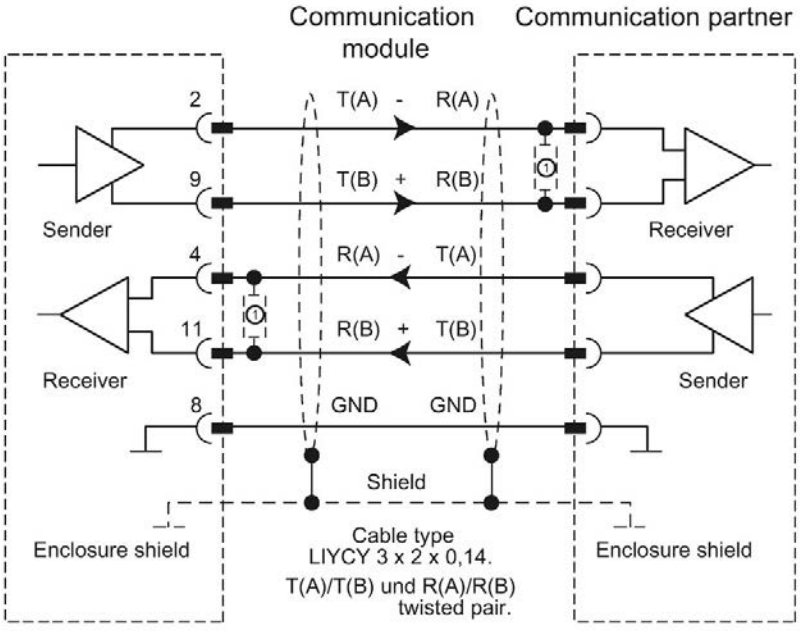

① For cable lengths longer than 50 m, you need to solder a terminating resistor of approx. 330 Ω at the receiver end to ensure interference-free data traffic.

Note

This cable type can be used in the following lengths for a communication module as communication partner: max. 1200 m at 19200 baud, max. 500 m at 38400 baud max. 250 m at 115200 Baud.

3.5 RS485 mode

The following communication modules support RS485 mode:

- CM PtP RS422/485 BA
- CM PtP RS422/485 HF
- CM PtP (ET 200SP)

In RS485 mode, data is transmitted via one line pair (two-wire operation). The line pair is available alternately for the send and receive directions. It is possible to either send or receive (half duplex). On completion of a send operation, operation is immediately switched to receive mode (ready to receive). Send mode is reset again as soon as a new send job is received.

Interface operating modes

The following table is a summary of the interface operating modes for the various communication modules and protocols.

Operating mode	Description
Half duplex (RS485) two-wire operation	Operating mode for point-to-point connection or multipoint connection (multipoint) in two-wire operation. The communication module can be the master as well as the slave.

If you operate the Freeport in RS485 mode (half duplex, two-wire operation), you must make provisions in the user program to ensure that only one device sends data at any given time. If more than one device sends data at the same time, the frames are corrupted.

Modbus automatically ensures that only one device is sending.

Changeover times for RS485 communication module in half duplex mode

A maximum time of 0.1 ms is set for the changeover between sending and receiving.

RS485 signals

The following signals are present on the communication module when using the RS485 hardware:

R (A)/T (A) -	Input/output	Received/transmitted data
R (B)/T (B) +	Input/output	Received/transmitted data
GND		Functional ground; isolated

Connecting cables

The table below shows the pin assignment of the 15-pin D-sub female connector of the respective communication module.

Socket*	Pin	Designation	Input/output
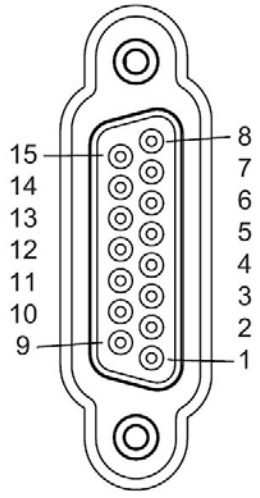	1	-	-
	2	-	-
	3	-	-
	4	R (A)/T (A) -	Input/output
	5	-	-
	6	-	-
	7	-	-
	8	GND	-
	9	-	-
	10	-	-
	11	R (B)/T (B) +	Input/output
	12	-	-
	13	-	-
	14	-	-
	15	-	-

* View from the front

When fabricating the connecting cables, you need to remember that unconnected inputs at the communication partner may have to be connected to open-circuit potential.

Note that you may only use shielded connector enclosures. A large surface area of the cable shield must be in contact with the connector enclosure on both ends.

CAUTION

Never connect cable shield with GND

Never connect the cable shield with the GND as this could destroy the interfaces. GND must always be connected on both ends (pin 8), otherwise the interface modules could be destroyed.

The figure below illustrates the cable for a point-to-point connection between a communication module and a communication partner.

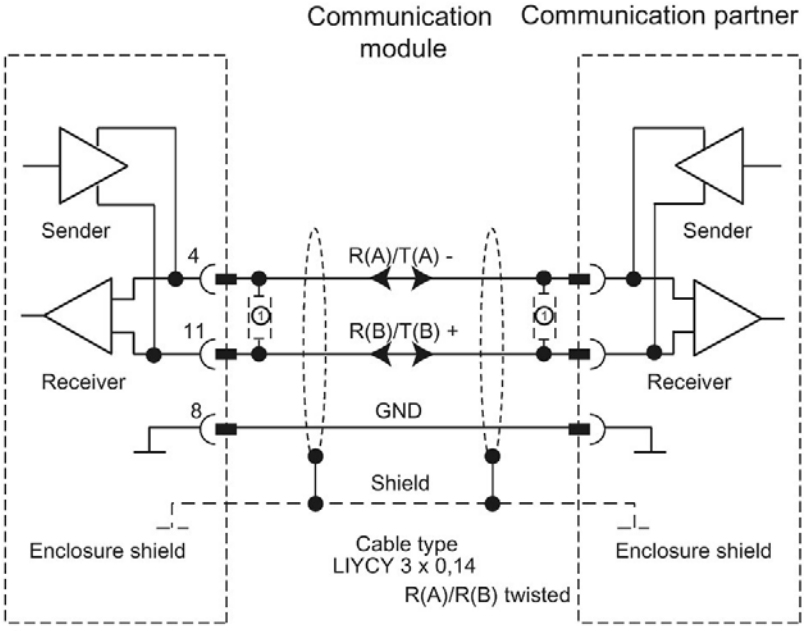

① For cable lengths longer than 50 m, you need to solder a terminating resistor of approx. 330 Ω at the receiver end to ensure interference-free data traffic.

3.6 Handshake procedure

Introduction

Handshaking controls the data flow between two communication partners. The use of the handshaking method prevents data loss during transmission if the devices are operating at different speeds.

We can basically distinguish between the following methods:

Table 3- 1 Overview of methods and interfaces

Method	RS232	RS422	RS485
Software data flow control XON/XOFF	X	X	-
Hardware data flow control (RTS/CTS)	X	-	-
Automatic operation of accompanying signals	X	-	-

Software data flow control

Software data flow control is implemented as follows on the communication module:

- XON/XOFF
  - As soon as the communication module has been set to the "XON/XOFF" operating mode by means of parameter assignment, it sends the XON character, thereby allowing the communication partner to send data.
  - On reaching the configured maximum number of frames, or 16 characters ahead of receive buffer overflow, the communication module sends the XOFF character, thereby requesting that the communication partners stop sending. If the communication partner nonetheless continues to send data, an error message is generated if the receive buffer overflows. Data received in the last frame is discarded.
  - As soon as a frame has been fetched by the CPU and the receive buffer is ready to receive data again, the communication module sends the XON character.
  - If the communication module receives the XOFF character during sending, it cancels the current send operation until it receives a XON again from its communication partner. If no XON is received within a specific configurable time, send operation is canceled and a corresponding error message is output.

Note

You can configure the characters for XON and XOFF (any ASCII character).

During parameter assignment of the XON/XOFF software data flow control, user data may not contain any of the configured XON or XOFF characters.

Hardware data flow control

Note

The DTR/DSR signals do not have to be wired for "Hardware RTS always ON, ignore DTR/DSR" parameter assignment.

If "Hardware RTS always ON" is configured, it is imperative that you fully wire the interface signals used. Make sure that the local RTS (out) is connected with the CTS (in) of the communication partner and the local CTS is connected with the RTS of the communication partner. Accordingly, the local DTR must be connected with the DSR of the communication partner and the local DSR with the DTR of the communication partner.

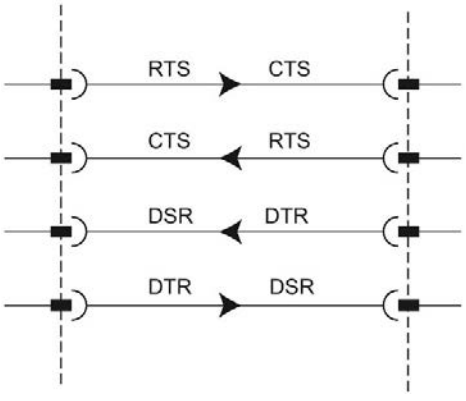

Figure 3-2 Wiring of the interface signals

- Hardware RTS always ON, ignore DTR/DSR
  - As soon as the communication module has been set to an operating mode with "Hardware RTS always ON" through parameter assignment, it outputs the RTS = ON signal to the communication partner to indicate its ready state.
  - RTS is set to OFF as soon as the configured maximum number of frames or 16 characters before buffer overflow is reached.
    If the communication partner nonetheless continues to send data, an error message is generated on overflow of the receive buffer. Data received in the last frame is discarded.
  - RTS is reset to ON as soon as the frame has been fetched by the CPU and the receive buffer is ready to receive data again.
  - If CTS switches to OFF during the send operation, the communication module interrupts the send operation until CTS is reset to ON. If CTS is not reset to ON within a specific configurable time, the send operation is canceled and a corresponding error message is output.
- Hardware RTS always ON

  The "Hardware RTS always ON" mode corresponds to the "Hardware RTS always ON, ignore DTR/DSR" mode. However, you also need to wire DTR and DSR.
  - As soon as the communication module has been set set to an operating mode with "Hardware RTS always ON" through parameter assignment, it sets DTR = ON and RTS = ON to signal its general ready state to the communication partner.
  - RTS is set to OFF as soon as the configured maximum number of frames or 16 characters before buffer overflow is reached.
    If the communication partner nonetheless continues to send data, an error message is generated on overflow of the receive buffer. Data received in the last frame is discarded.
  - RTS is reset to ON as soon as the frame has been fetched by the CPU and the receive buffer is ready to receive data again.
  - If CTS switches to OFF during the send operation, the communication module interrupts the send operation until CTS is reset to ON. If CTS is not reset to ON within a specific configurable time, the send operation is canceled and a corresponding error message is output.
  - A switch from DSR = ON to DSR = OFF cancels an active send job and triggers an error message.

Automatic operation of accompanying signals

- **Hardware RTS always switched**

  "Hardware RTS always switched" is implemented as follows on the communication module:

  – As soon as the communication module is set to the operating mode with "Hardware RTS always switched" through parameter assignment, it sets the line RTS to OFF and DTR to ON (communication module ready for operation).

    It is not possible to send frames until the DSR line is set to ON. No data is sent via the RS232C interface as long as DSR is set to OFF. A send job is canceled and a corresponding error message is generated.

  – When a send job is pending, RTS is set to ON and the configured RTS ON delay starts. On expiration of the data output time, the system checks whether the communication partner has set CTS to ON. If so, the data is sent via the RS232 interface.

  – If the CTS line is not set to ON within the RTS ON delay, or if CTS changes to OFF during transmission, the send job is aborted and an error message is generated.

  – Once the data has been sent and the configured clear RTS OFF delay has elapsed, the RTS line is set to OFF. The system does not wait for CTS to change to OFF.

  – It is always possible to receive data via the RS232 interface. There will be no reaction if there is a danger of the receive buffer of the communication module overflowing.

  – A switch from DSR = ON to DSR = OFF cancels an active send job and triggers an error message.

  Note

  Set the "RTS ON delay" in such a way that the communication partner is able to enter the ready to receive state before the time elapses.

  Set the "RTS OFF delay" in such a way that the communication partner is able to receive the last characters of the frame completely before RTS is set to OFF and the send request is canceled.

  Note

  When automatic operation of the RS232 signals is configured, RTS and DTR cannot be controlled by means of the corresponding instruction!

Time diagram

The figure below shows the chronological sequence of a send job with configured data flow control "Hardware RTS always switched":

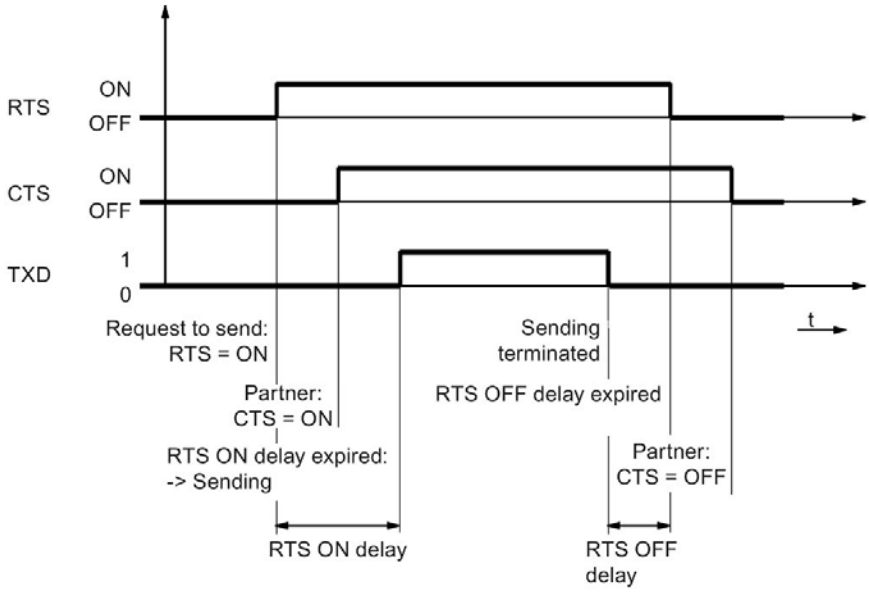

Figure 3-3 Time diagram for Hardware RTS always switched

Additional information

Note

Operation of DTR/DSR or RTS/CTS is accepted by the communication module with the following settings:

- Hardware RTS always ON, ignore DTR/DSR
- Hardware RTS always ON
- Hardware RTS always switched

Configuring / parameter assignment 4

4.1 Configuring / parameter assignment of a communication module

The following sections contain explanations on the following protocols and their parameters:

- Communication using Freeport (Page 38)
- Communication using 3964(R) (Page 47)
- Communication through Modbus RTU (Page 52)
- Communication using USS (Page 59)

This information is required to carry out the parameter assignment and subsequently programming of the communication in accordance with the used protocol.

Configuration and parameter assignment are carried out in the device view of STEP 7 (TIA Portal) and in the properties dialog of the communication module. Some configurations can also be changed during runtime by means of the corresponding "Config" instructions (Port_Config, Send_Config, Receive_Config, P3964_Config).

Procedure for setting up point-to-point communication

The procedure does not depend on the communication module used.

1. Configure an S7-1500 design with CPU and communication module in the device view of the STEP 7 (TIA Portal) hardware editor.
2. You assign the parameters of the communication module interface (protocol, protocol parameters, addresses) in the "General" area of the "Properties" tab.

4.2 Communication using Freeport

4.2.1 Procedure for establishing a serial connection with Freeport

Requirements

- The hardware is set up and there is an electrical connection to the link partner.
- The project has been created in STEP 7 (TIA Portal) and the CPU has been inserted into the hardware configuration.

Procedure - Hardware configuration

1. Insert the CM PtP communication module into the hardware configuration.
2. Set the communication parameters according to the link partner:

   For example, transmission speed, character frame, frame start and frame end

   These parameters are transferred to the CM PtP communication module every time the CPU is started.

Procedure - Programming

1. Create the data structure that is to include the data to be transferred.

Sending data

1. Insert the instructions from the PtP Communication library: Send_P2P for sending data
2. Interconnect the input and output parameters of the instruction, e.g.:
   - HWID from the system tags at the PORT input
   - Data structure with the data to be sent at the BUFFER input

   Note: During operation, each positive edge at the REQ input will send the specified data area once. The block must be called until DONE indicates that the data was transferred to the module.

   In case of an error, setting ERROR once and displaying the corresponding information in STATUS indicates that the data was not transferred.

Receiving data:

1. Insert the instructions from the PtP Communication library: Receive_P2P for sending data
2. Interconnect the input and output parameters of the instruction, e.g.:
   - HWID from the system tags at the PORT input
   - Data structure for storage of received data at the BUFFER input

   Note: A high level at the NDR output during operation indicates that new data was received and stored in the specified data area. The block must be called until NDR=TRUE. The received data can then be analyzed and the RECEIVE_P2P can be called again.

Optional additions

- Instructions that end in _Config can be used optionally to change the parameters of the hardware configuration during operation of the user program. The changes are not saved in the hardware configuration. They are overwritten at the next restart.
- The instructions Signal_Set and Signal_Get can be used to control the RS232 accompanying signals individually if automatic operation is not a suitable option.

4.2.2 Data transmission with Freeport

Introduction

Freeport is a freely programmable frame-based protocol that is also known as ASCII protocol.

The Freeport protocol controls data transmission by means of a point-to-point connection between the communication module and a communication partner. The Freeport protocol contains the physical layer (Layer 1).

The Freeport protocol supports sending and receiving of messages with any structure (all characters from 00H through FFH (for character frames with 8 data bits) or from 00H through 7FH (for character frames with 7 data bits)).

The frame start and end criteria must be configured both for the send and the receive direction. The start and end criteria can be configured differently.

Instructions are available for communication with a communication partner (see Overview of point-to-point programming (Page 63)).

4.2.3 Sending data with Freeport

Specifying settings for sending

To send a message, the partner must be informed of the start and end of the message. These settings can be set fixed in the hardware configuration or be adjusted during runtime by using the instruction Send_CFG. You can select one of the following options or also combine them:

- Send break before frame start

  You can specify that an additional Break is sent at the beginning of each message transmission on expiration of the RTS ON delay time.
  The duration of the "Break" is specified in bit times.

  Compliance with the send break can be deactivated if other mechanisms are used for synchronization.

- Send idle line

  You can specify that an additional "Idle Line" signal is output at the start of each message transmission.
  The duration of the "Idle Line" is specified in bit times.

  Compliance with the send break can be deactivated if other mechanisms are used for synchronization.

- RTS ON delay

  You can configure the time that has to expire after the RTS (Request to send) before the actual data transmission starts (RS232 only).

- RTS OFF delay

  You can configure the time that has to expire after transmission has been completed before the RTS signal is deactivated (RS232 only).

- Send up to and including the end delimiter

  You can configure the number of end delimiters (1 or 2) and their value.

  All data up to the end delimiter(s) is sent, independent of the selected frame length. The end delimiter must be included in the data to be sent. Data is sent only up to and including the delimiter, even if the specified data length is longer.

- Number of appended characters

  Input of the number of appended characters. Sending takes place up to the configured length. The end delimiter(s) is/are appended automatically. Depending on the number of end delimiters, one to five characters more than the number specified at the instruction are sent to the partner.

Note

If you combine "Send break before frame start", "Send idle line" and "RTS ON delay", these are processed in the order "RTS ON delay", "Send break before frame start" and "Send idle line".

4.2.4 Receiving data with Freeport

Specifying the message start

For data transmission with Freeport, you can choose between several different start criteria. The start criterion defines when a frame starts. Once a criterion that indicates the start of the message is met, the data stream is scanned for message end criteria. Here you select the settings that correspond to the properties of the sending communication partner.

Two different methods are available for detecting the message start:

- Start on any character

  Any character can be used to define the start of the message (default).

  This means that the first character sent at the start of communication, or after the frame end has been detected, will be identified as the first character of a message.
- Start on special condition

  The start of the message is detected based on the following specified conditions.
  - After detection of a line break

    The frame start is not accepted unless a break has been received beforehand, in other words, it is compulsory for the partner to send a break before sending a frame.
  - After detection of an idle line

    The frame start is not accepted until the configured idle line duration has expired. This procedure requires a minimum interval between two frames.
  - After receipt of a start character

    The frame start is detected when the configured start character is identified.
  - After detection of one or several start sequences

    The frame start is detected when the configured string with a length of up to five characters is identified. You can configure up to 4 start sequences. The start sequences that are up to 5 characters long can also contain "don't care characters".

Example:

Table 4- 1 Configured start conditions

Start condition	1. character	2. character	3. character	4. character	5. character
1	0x68	xx	xx	0x68	xx
2	0x10	0xaa	xx	xx	xx
3	0xdc	0xaa	xx	xx	xx
4	0xe5	xx	xx	xx	xx
:					

The following message has been received: 68 10 aa 68 bb 10 aa 16

The evaluation of the start criteria begins with the receipt of the first character 0x68.
The 2nd and 3rd characters are free.
When the 4th character (second 0x68) is received, the first start condition is met and further evaluation of the message begins.

Specifying the message end

You can choose from several different end criteria for data transmission using the Freeport protocol. The end criterion defines the point at which a frame has been received completely.

Configurable end criteria are:

- Recognize message end by message timeout
- Recognize message end by response timeout
- After character delay time elapses (default)
- After receipt of a fixed frame length
- After receipt of a maximum number of characters
- Read message length from message
- After receipt of an end sequence

Message timeout

When data is received, the end of frame is detected on expiration of the configured time for transferring a frame. Time measurement starts after the start criterion has been met.

Response timeout

The response time is used to monitor the response behavior of the communication partner. If a valid frame start is not recognized after the completion of a send job, the send job is acknowledged with a corresponding message.

The actual end criterion has to be configured additionally.

Expiration of character delay time

When data is received, the frame end is detected when the configured maximum time between successive characters is exceeded (character delay time). The value is specified in bit times.

In this case, the character delay time must be set in such a way as to ensure that it expires between two consecutive frames. However, it should be of sufficient length to exclude incorrect identification of the end of the frame whenever the communication partner performs a transmission pause within a frame.

Fixed frame length

When data is received, the end of the frame is identified after the configured frame length has been reached.

An error message is output and the frame is discarded if the character delay time expires (if activated) before the fixed frame length has been reached.

Please note the following if the frame length of the received characters does not match the fixed configured frame length:

- All characters received after the fixed configured frame length has been reached will be discarded until a new start criterion is detected.
- An error message is output and the frame is discarded if another (activated) end criterion is met before the fixed frame length has been reached.

Maximum number of characters

When receiving data, the end of the frame is recognized after the declared number of characters have arrived.

This setting can be combined with the "Character delay time" settings. The frame received is also assessed as free of error if another end condition occurs, regardless of whether the maximum number of characters has been reached.

Please note the following if the frame length of the received characters does not match the configured maximum frame length:

- All characters received after the configured maximum number of characters has been reached will be discarded until a new start criterion (e.g. "Idle Line") is detected.
- If a different (activated) end criterion is met before the configured maximum number of characters has been reached, this "frame part" is assessed as a valid frame and the partner waits for a new start criterion. All characters received prior to fulfillment of a new start criterion are discarded.

Note

If no further end criterion is activated, the fixed frame length and maximum number of characters will respond in the same way.

Message length in the message

When data is received, the frame end is detected when the frame length sent with the received frame has been reached.

The following parameters define the characters to be used for evaluation of the message length:

- **Offset of length field in message**

  In the message, the value defines the position of the character that is to be used to determine the message length.

  You can set values from 0 to 4095 characters, depending on the buffer size.

- **Size of length field**

  This value specifies the number of characters as of the first evaluation position to be used to determine the message length.

  You can set values of 1, 2 and 4 characters.

- **Number of characters not counted in length specification**

  Number of characters appended to the frame without counting towards the frame length. This value defines the number of bytes at the end of the frame which should not be included in the evaluation of the message length.

  You can set values from 0 to 255 characters.

Example:

Parameter assignments for "Message length in the message"

Offset of length field in message:	3. byte ("2" has to be configured as offset)
Size of length field:	1 byte
Number of characters not counted in length specification:	3 bytes

Message					Number of characters not counted in length specification		
Start character	Address	Length field			Checksum	End delimiter	
Byte 1	Byte 2	Byte 3	Byte ...	Byte X	Byte X+1	Byte X+2	Byte X+3

End sequence

When data is received, the end of the frame is identified when the configured end sequence (max. 5 characters) is received. The end sequence which is up to 5 characters long can also contain "don't care characters". The received data is applied by the CPU, including the end sequence.

If you are working with the end sequence, transmission is not code-transparent and you must exclude the presence of end code in the user data.

Note

Frame end sequence

If there is only one end delimiter, the entry **must** take place in the 5th line.

If there are two end delimiters, the entries **must** take place in the 4th and 5th line (no gaps).

The same applies to the use of additional characters.

4.2.5 Code transparency

Code transparency

Code-transparent means that any character combinations can occur in the user data without the end criterion being recognized.

The code transparency of the procedure depends on the selection of the configured end criterion and flow control:

- With specified end sequence or using XON/XOFF flow control
  - Not code-transparent
- End criterion character delay time, fixed frame length, maximum frame length, message timeout, or response timeout and message length in the message
  - Code-transparent

4.2.6 Receive buffer

Receive buffer of the module

The communication modules have a receive buffer that stores the received frames temporarily until they are transmitted to the CPU. The receive buffer is implemented as a ring buffer, which means the frames are transmitted to the CPU in the order in which they were received until the receive buffer is full. If additional frames are received once the buffer is full, the oldest frame is overwritten. If "Prevent overwriting" was configured, a corresponding message is generated when the receive buffer is full. All further frames are rejected until the receive buffer is ready to receive new ones.

During the parameter assignment, you can specify whether the receive buffer should be deleted during startup. You can also specify the range of values (1 to 255) for the number of buffered receive frames.

The receive buffer of the module may have a size of up to 8 KB, depending on the communication module used (see chapter Introduction (Page 13)). The frame has a maximum length of 4 KB. This means that each communication module is capable of buffering at least two frames.

If you always want to transfer the last frame received to the CPU, you must set the value "1" for the number of buffered frames and deactivate overwrite protection.

Note

If continuous reading of the received data in the user program is interrupted for a certain time, you may find when the receive data is requested again, that the communication module first sends older frames before the CPU receives the most recent one. At the time of interruption, the old frame had already been transmitted from the receive buffer of the communication module and prepared for transmission to the CPU.

4.3 Communication using 3964(R)

4.3.1 Procedure for establishing a serial connection with 3964(R)

Requirements

- The hardware is set up and there is an electrical connection to the link partner.
- The project has been created in STEP 7 (TIA Portal) and the CPU has been inserted into the hardware configuration.

Procedure - Hardware configuration

1. Insert the CM PtP communication module into the hardware configuration.
2. Set the communication parameters according to the link partner:

   For example, transmission speed, character frame, frame start and frame end

   These parameters are transferred to the CM PtP communication module every time the CPU is started.

Procedure - Programming

1. Create the data structure that is to include the data to be transferred.

Sending data:

1. Insert the instructions from the PtP Communication library: Send_P2P for sending data
2. Interconnect the input and output parameters of the instruction, e.g.:
   - HWID from the system tags at the PORT input
   - Data structure with the data to be sent at the BUFFER input

   Note: During operation, each positive edge at the REQ input will send the specified data area once. The block must be called until DONE indicates that the data was transferred to the module.

   In case of an error, setting ERROR once and displaying the corresponding information in STATUS indicates that the data was not transferred.

Receiving data:

1. Insert the instructions from the PtP Communication library: Receive_P2P for sending data
2. Interconnect the input and output parameters of the instruction, e.g.:
   - HWID from the system tags at the PORT input
   - Data structure for storage of received data at the BUFFER input

   Note: A high level at the NDR output during operation indicates that new data was received and stored in the specified data area. The block must be called until NDR=TRUE. The received data can then be analyzed and the RECEIVE_P2P can be called again.

Optional additions

- Instructions that end in _Config can be used optionally to change the parameters of the hardware configuration during operation of the user program. The changes are not saved in the hardware configuration. They are overwritten at the next restart.
- The instructions Signal_Set and Signal_Get can be used to control the RS232 accompanying signals individually if automatic operation is not a suitable option.

4.3.2 Data transmission with 3964(R) procedure

Introduction

The 3964(R) procedure controls point-to-point data exchange between the communication module and a communication partner. and contains both the physical layer (layer 1) and the link layer (layer 2).

Instructions are available for communication with a communication partner (see Overview of point-to-point programming (Page 63)).

4.3.3 Control characters

Introduction

During data transmission, the 3964(R) procedure adds control characters to the information data (link layer). The communication partner can use these control characters to check whether it has received all data completely and without errors.

Control characters of the 3964(R) procedure

The 3964(R) procedure evaluates the following control characters:

STX	Start of Text	Beginning of the character string to be transmitted	02H
DLE	Data Link Escape	Data transmission changeover	10H
ETX	End of Text	End of the character string to be transmitted	03H
NAK	Negative Acknowledge	Negative acknowledgment	15H
BCC	Block Check Character (only with 3964R)	Block check character	

BCC is formed and monitored automatically in the communication module. The block check character is not transmitted as frame content to the CPU.

Note

If the DLE character is transmitted as an information character within a frame, it is sent twice (DLE duplication) to distinguish it from the DLE control character during connection establishment and termination. The receiver reverses the DLE duplication.

Priority

With the 3964(R) procedure, one communication partner must be assigned a higher and the other a lower priority. If both partners start to establish a connection at the same time, the partner having lower priority will cancel its send job.

4.3.4 Block check character

Block check character

With the 3964R transfer protocol, data security is enhanced by sending an additional block check character (BCC = Block Check Character).

The block check character is the even longitudinal parity (EXOR logic operation of all data bytes) of a sent or received block. Its calculation begins with the first byte of user data (first byte of the frame) after the connection establishment, and ends after the DLE ETX character at connection termination.

Note

With DLE duplication, the DLE character is included twice in the BCC calculation.

4.3.5 Sending data with 3964(R)

Connection establishment for sending

The 3964(R) procedure sends the STX control character to set up the connection. If the communication partner responds with the DLE character before the acknowledgment delay time expires, the procedure switches to send mode.

If the communication partner answers with NAK or any other character (except for DLE or STX), or the acknowledgment delay time expires without a response, the procedure tries to set up the connection again. After the configured number of unsuccessful setup attempts, the procedure cancels the connection setup and sends the NAK character to the communication partner. The communication module outputs a corresponding error message.

Sending data

If the connection is successfully established, the user data contained in the output buffer of the communication module is sent to the communication partner with the selected transmission parameters (a DLE recognized in the user data is doubled during the send job). The communication partner monitors the time intervals between the incoming characters. The interval between two characters must not exceed the character delay time. Monitoring of the character delay time starts immediately after the connection has been established.

If the communication partner sends the NAK character during an active send operation, the procedure cancels the block and repeats it as described above, beginning with connection establishment. If a different character is sent, the procedure first waits for the character delay time to expire and then sends the NAK character to set the communication partner to idle state. Then, the procedure restarts sending with the connection setup STX.

Connection termination during sending

Once the contents of the buffer have been sent, the procedure appends the DLE and ETX characters and (only with 3964R) the block checksum BCC as the end identifier, and then waits for an acknowledgment character. If the communication partner sends the DLE characters within the acknowledgment delay time, the data block has been received without errors. If the communication partner responds with NAK, any other character (except DLE), or with a corrupted character, or if the acknowledgment delay time expires without a response, the procedure restarts sending with the connection setup STX.

After the configured number of attempts to send, the procedure stops the process and sends an NAK to the communication partner. The communication module outputs a corresponding error message.

4.3.6 Receiving data with 3964(R)

Connection setup for receiving

In idle state, when there is no send job to be processed, the procedure waits for the communication partner to set up the connection.

A wait time is started (wait time = acknowledgment delay time - 10 ms, however, maximum of 400 ms) if no free receive buffer is available during the connection setup with STX. An error message is generated if no free receive buffer is available on expiration of this time. The procedure sends the NAK character and returns to the idle state. Otherwise, the procedure sends a DLE and receives the data as described above.

The acknowledgment delay time should be set to the same value at both communication partners.

If the procedure receives any character (except for STX or NAK) while in idle state, it waits for the character delay time (CDT) to expire and then sends the NAK character. The communication module outputs a corresponding error message.

Receiving data

After a successful connection establishment, the incoming receive characters are saved to the receive buffer. If two consecutive DLE characters are received, only one of these is saved to the receive buffer.

After connection has been established and after each receive character, the procedure waits for the next character during the character delay time. If this period expires before another character is received, an NAK is sent to the communication partner. The communication module outputs a corresponding error message. A retry is then expected.

If transmission errors occur during receiving (frame errors, parity errors, etc.), the procedure continues to receive data until the connection is terminated and then sends an NAK to the communication partner. A retry is then expected. If the block still cannot be received without errors after the specified number of transfer attempts, or if the communication partner does not start the retry within a block wait time of 4 seconds, the procedure cancels the receive operation. The communication module reports the first corrupted transfer and the final cancelation.

Connection setup for receiving

If the 3964 procedure detects a DLE ETX string, it terminates the receive operation and confirms a successfully received block by sending a DLE to the communication partner. In the case of a receive error, an NAK is sent to the communication partner. A retry is then expected.

The 3964R procedure terminates the receive operation after having detected the DLE ETX BCC string. It compares the received block check character BCC with the internally calculated longitudinal parity. If the BCC is correct and no other receive errors have occurred, the 3964R procedure sends a DLE and returns to the idle state. The communication module informs the control system that new receive data is available.

If the BCC is faulty or a different receive error occurs, an NAK is sent to the communication partner. A retry is then expected.

4.4 Communication through Modbus RTU

4.4.1 Procedure for establishing a serial connection with Modbus RTU

Requirements

- The hardware is set up and there is an electrical connection to the link partner.
- The project has been created in STEP 7 (TIA Portal) and the CPU has been inserted into the hardware configuration.

Procedure - Hardware configuration

1. Insert the CM PtP communication module into the hardware configuration.
2. Select the Modbus RTU protocol.

   Note: With Modbus RTU, most communication parameters are set using the Modbus_Comm_Load instruction during CPU start.

Procedure - Programming

1. Create the data structure that is to include the data to be transferred.
2. Integrate the Modbus_Comm_Load instruction into the cyclic sequence for parameter assignment of the communication module.
3. Interconnect the HWID from the system tags at the PORT input.
4. Call the instruction until successful execution is displayed at the DONE output. Do not call the instruction again thereafter unless you want to change the communication parameters.

Operation as Modbus master:

1. Insert the Modbus_Master instruction from the MODBUS (RTU) library:
2. Interconnect the data structure with the data to be sent at the BUFFER input.
3. Interconnect the instance DB of the Modbus_Master instruction at the MB_DB input of the Modbus_Comm_Load.

   Note: During operation, each positive edge at the REQ input will process the specified job once. The block must be called until DONE indicates that the data was transferred to the module.

   In case of an error, setting ERROR once and displaying the corresponding information in STATUS indicates that the data was not transferred.

Operation as Modbus slave:

1. Insert the Modbus_Slave instruction from the MODBUS (RTU) library.
2. Interconnect the data structure with the Modbus hold registers.
3. Enter the Modbus slave address at the MB_ADDR input.
4. Interconnect the instance DB of the Modbus_Master instruction at the MB_DB input of the Modbus_Comm_Load.

   Note: A high level at the NDR output during operation indicates that new data was received and stored in the specified data area.

4.4.2 Overview of modbus communication

Modbus RTU communication

Modbus RTU (Remote Terminal Unit) is a standard protocol for communication in the network and uses the electrical RS232 or RS422/485 connection for serial data transmission between Modbus devices in the network.

Modbus RTU uses a master/slave network in which the entire communication is triggered by only one master device while the slaves can only respond to the request of the master. The master sends a request to a slave address and only this slave address responds to the command (exception: broadcast frames to slave address 0 which are not acknowledged by the slaves).

The procedure used is a code-transparent, asynchronous half-duplex procedure. Data transmission is carried out without handshake.

Position in the system environment

The following Modbus description refers to the use of the corresponding communication modules.

- CM PtP RS232 HF
- CM PtP RS422/485 HF
- CM PtP (ET 200SP)

Function of the coupling

With the corresponding communication modules and the related instructions, you can establish a communication connection between a remote Modbus control system and a SIMATIC S7.

The GOULD-MODBUS protocol in RTU format is used for transmission.

Function codes 01, 02, 03, 04, 05, 06, 08, 15 and 16 are used for communication between a communication module operated as a Modbus slave and a master system (see Function Codes (Page 57)).

If a SIMATIC S7 communication module is operated as a Modbus master, function codes 11 and 12 are also available.

SIMATIC S7 as a Modbus slave

The master has the initiative for transmission, the communication module works as a slave.

frame traffic from slave to slave is not possible.

The instruction Modbus_Slave makes the data available on a SIMATIC data area in accordance with the mapping specification or stores them.

SIMATIC S7 as a Modbus master

As master, the communication module initiates transmission and, after outputting a request frame, it waits for the configured response monitoring time for a response frame from the slave. If the slave does not respond, the master repeats the request in accordance with the configuration before it outputs an error message.

frame structure

The data exchange "Master-Slave" and/or "Slave-Master" begins with the **slave address**, followed by the **function code**. Then the data are transferred. The structure of the data field depends on the function code used. The CRC check is transmitted at the end of the frame.

ADDRESS	FUNCTION	DATA	CRC-CHECK
Byte/Word	Byte	n byte	2 byte

ADDRESS	Modbus slave address • Standard address: 1 to 247 (bytes) • Extended station address: 1 to 65535 (word)
FUNCTION	Modbus Function Codes (Page 57)
DATA	frame data: Management and net data depending on the function code
CRC-CHECK	frame checksum

Slave address

The slave address can be range from 1 to 247 (byte) or 1 to 65535 (word). The address is used to address a defined slave on the bus.

Broadcast Message

The master uses slave address 0 to address all slaves on the bus.

Broadcast messages are only permitted in conjunction with writing Function codes 05, 06, 15 and 16.

A broadcast message is not followed by a response frame from the slave.

Data Field DATA

The data field DATA is used to transfer the function code-specific data such as:

- Bytecount, Coil_Startaddress, Register_Startaddress; Number_of_Coils, Number_of_Registers, ...

  For details, see "Function Codes (Page 57)".

CRC-Check

The end of the frame is identified by means of the CRC 16 checksum consisting of 2 bytes. It is calculated by the following polynominal: $x^{16} + x^{15} + x^2 + 1$.

The low byte is transmitted first, followed by the high byte.

End of frame

The end of frame is recognized when no transmission takes place during the time period required for the transmission of three and a half characters (3.5 times character delay time) (see Modbus Protocol Reference Guide).

This end of frame TIME_OUT therefore depends on the data transmission rate and is indicated in bit times (35 bit times are fix coded internally; further bit times can be configured in addition at the instruction).

The Modbus frame received from the connection partner is evaluated and formally checked after the end of frame TIME_OUT is received.

Exception responses

On recognition of an error in the request frame from the master, for example, register address illegal, the slave sets the highest value bit in the function code of the response frame.

This step is followed by transmission of a byte exception code that describes the cause of the error.

A detailed description of the meaning of the above-mentioned parameters is available in the "GOULD MODICON Modbus Protocol" (not part of this documentation).

Exception code frame

The exception code frame from the slave has the following structure:

- for example, slave address 5, function code 5, exception code 2

Response frame from the slave EXCEPTION_CODE_xx:

05H	Slave address
85H	Function code
02H	Exception code (1...7)
xxH	CRC checksum "Low"
xxH	CRC checksum "High"

On receipt of an exception code frame by the driver, the current job is completed with error.

The following error codes are defined in accordance with the Modbus specification:

Error code	Meaning in accordance with Modbus specification	Cause - Short Description *
1	Illegal function	Illegal function code
2	Illegal data address	Slave has illegal data address
3	Illegal data value	Slave has illegal data value
4	Failure in Associated Device	Slave has internal error
5	Acknowledge	Function is carried out
6	Busy, Rejected message	Slave is not ready to receive
7	Negative acknowledgement	The function cannot be carried out.
* Check slave for further details.		

RS232 mode

The following communication modules support RS232 mode:

- CM PtP RS232 HF
- CM PtP (ET 200SP)

For more information on RS232 mode, see the chapter RS232 mode (Page 23).

For information on hardware data flow control and on automatic operation of the accompanying signals, refer to the Handshake procedure (Page 32) chapter.

RS422/485 mode

The following communication modules support RS422/485 mode:

- CM PtP RS422/485 HF
- CM PtP (ET 200SP)

For more information on RS422/485 mode, see the chapters RS422 mode (Page 26) and RS485 mode (Page 29).

FAQ

For more information, see the following FAQs in the Siemens Industry Online Support:

- Entry ID 68202723 (https://support.industry.siemens.com/cs/ww/en/view/68202723)
- Entry ID 58386780 (https://support.industry.siemens.com/cs/ww/en/view/58386780)

4.4.3 Function Codes

Used function codes

The function code defines the meaning of the frame. It also defines the structure of a frame.

The following function codes are supported by the communication module:

Function code	Function in accordance with MODBUS specification	Range
01	Read Coil Status	1 to 2000 bit/request
02	Read Input Status	1 to 2000 bit/request
03	Read Holding Registers	1 to 124/125 bit/request (124 at extended station address)
04	Read Input Registers	1 to 124/125 bit/request (124 at extended station address)
05	Force Single Coil	1 bit/request
06	Preset Single Register	1 word/request
08 *	Loop Back Test	Read slave status or reset event counter in the slave
11 *	Fetch Communications Event Counter (only master)	-
15	Force Multiple Coils	1 to 1968 bits/request
16	Preset Multiple Registers	1 to 123 bit/request

* Diagnostic information for slave communication

Modbus function code 00 sends a broadcast message to all slaves (without slave response).

Assignment of the Modbus addresses to the SIMATIC addresses

The table below shows the assignment of the Modbus addresses to the SIMATIC addresses.

Modbus				S7-1500	
FC [1]	Function	Declaration	Address area	Declaration	CPU address
01	Read bits	Output	1 - 9999	Process image of outputs	Q0.0 - Q1249.6
02	Read bits	Input	10001 - 19999	Process image of inputs	I0.0 - I1249.6
03 [2]	Read words	Holding Register	40001 - 49999 or 400001 - 465535	DW0 - DW19998 or DW0 - DW131068	The M address area depends on the CPU
04	Read words	Input	30001 - 39999	Process image of inputs	IW0 to IW19996
05 [2]	Write bits	Output	1 - 9999	Process image of outputs	Q0.0 to Q1248.7
06	Write words	Holding Register	40001 - 49999 or 400001 - 465535	DW0 - DW19998 or DW0 - DW131068	The M address area depends on the CPU
15	Write bits	Output	1 - 9999	Process image of outputs	Q0.0 - Q1249.6
16 [2]	Write words	Holding Register	40001 - 49999 or 400001 - 465535	DW0 - DW19998 or DW0 - DW131068	The M address area depends on the CPU

1) FC = function code

2) The value of the HR_Start_Offset determines whether data areas or bit memory address areas can be addressed with the FCs 03, 05 and 16 in the SIMATIC CPU.

4.5 Communication using USS

4.5.1 Procedure for establishing a serial connection with Modbus USS

Requirements

- The hardware is set up and there is an electrical connection to the link partner.
- The project has been created in STEP 7 (TIA Portal) and the CPU has been inserted into the hardware configuration.

Procedure - Hardware configuration

1. Insert the CM PtP communication module into the hardware configuration.
2. Select the Freeport protocol and set the communication parameters.

   Note: The USS functionality is implemented by the instructions.

Procedure - Programming

1. Insert the USS_Port_Scan instruction from the USS Communication library.
2. Interconnect the HWID from the system tags at the PORT input.
3. Insert the USS_Drive_Control instruction from the USS Communication library.
4. Interconnect the USS_DB data structure in the instance DB of the USS_Drive_Control instruction to the USS_DB input of the USS_Port_Scan instruction. The data structure contains the data to be transferred for all drives.
5. Insert an additional call of the USS_Drive_Control instruction for each additional axis that is to be connected via the USS interface.

   Use the same instance DB each time. The distinction takes place with the help of the USS address that you specify at the DRIVE input of the USS_Drive_Control instruction. This means you have access to the control and feedback data at the parameters of the respective call for each drive.

4.5.2 Overview of USS communication

Position in the system environment

The following USS description refers to the use of the corresponding communication modules.

- CM PtP RS232 BA
- CM PtP RS422/485 BA
- CM PtP RS232 HF
- CM PtP RS422/485 HF
- CM PtP (ET 200SP)

Introduction

The USS® protocol (Universal Serial Interface Protocol) is a basic serial data transmission protocol designed to meet the requirements of drive technology.

The USS protocol defines an access method based on the master-slave principle for communication via a serial bus. One master and up to 16 drives (slaves) can be connected to the bus. The individual drives are selected by the master using an address character in the frame. A drive can never send anything without first being initiated by the master. Therefore, direct data transmission between individual drives is not possible. Communication functions in half-duplex mode. The master function cannot be transferred.

Drive technology requires specific response times for the control tasks and therefore strict cyclical frame traffic:

The master continuously sends frames (job frames) to the drives and expects a response frame from each addressed drive.

A drive must send a response frame if

- it has a received a frame without errors and
- it was addressed in this frame.

A drive may not send if these conditions are not met or the drive was addressed in the broadcast.

The connection with the respective drives exists for the master once it receives a response frame from the drive after a specified processing time (response delay time).

frame structure

Each frame begins with a start character (STX), followed by the length specification (LGE) and the address byte (ADR). The data field comes after that. The frame ends with the block check character (BCC). The frame length includes the user data (quantity n), the address byte (ADR) and the data verification character (BCC).

STX	LGE	ADR	1	2	...	N	BCC

For single-word (16-bit) data, the high byte is sent first followed by the low byte. Correspondingly, with double-word data the high word is sent first, followed by the low word. The length of a frame is specified in bytes.

Data encryption

The data is encrypted as follows:

- STX: 1 byte, start of text, 02H
- LGE: 1 byte, contains the frame length as a binary number
- ADR: 1 byte, contains the slave address and frame type in binary code
- Data fields: One byte each, content depending on job
- BCC: 1 byte, block check character

Data transmission procedure

The master ensures cyclic data transmission in frames. The master addresses all slave devices one after another with a job frame. The nodes addressed respond with a response frame. In accordance with the master-slave procedure, the slave must send the response frame to the master after it has received the job frame. Only then can the master address the next slave.

Data field in the frame

The data field is divided into two areas: the parameter area (PKW) and the process data area (PZD).

STX	LGE	ADR	Parameter (PKW)	Process data (PZD)	BCC

- **Parameter area** (PKW)

  The PKW area handles parameter transmission between two communication partners (e.g., controller and drive). This involves, for example, reading and writing parameter values and reading parameter descriptions and the associated text. The PKW interface generally contains jobs for operation and display, maintenance and diagnostics.

- **Process data area** (PZD)

  The PZD area consists of signals that are required for automation:

  – Control words and setpoints from the master to the slave

  – Status words and actual values from the slave to the master

  The contents of the parameter area and process data area are defined by the slave drives.

  For additional information on this, refer to the drive documentation.

4.5.3 Overview of functions

Transmission sequence

The instructions process the data transmission cyclically with up to 16 drive slaves. Only one job is active for each drive at any one time.

Performance features:

- Creation of data storage areas for communication, depending on the bus configuration
- Execution and monitoring of PKW jobs
- Monitoring of the complete system and troubleshooting
- Communication with the CPU
- Access to the drive functions
- Reading the drive parameters
- Writing the drive parameters

Programming - communication using instructions 5

5.1 Overview of point-to-point programming

Data exchange using Freeport or 3964(R) communication

You must make the send data available in data blocks or in the bit memory address area in the user program of the corresponding CPU. A receive buffer is available in the communication module for the receive data. A corresponding data block is set up in the data block.

In the user program of the CPU, the following instructions carry out the data transfer between the CPU and the communication module.

- Send_P2P
- Receive_P2P

The receive buffer can be deleted with the instruction Receive_Reset.

Dynamic configuration by means of the user program

As an alternative to or in addition to the parameter assignment of the communication module interface described in section Configuring / parameter assignment of a communication module (Page 37), it may be advisable in certain application areas to set up the communication dynamically, i.e., program-controlled by a specific application.

All parameters assigned in the properties dialog of the communication module can also be changed during runtime by means of one of the following "Config" instructions:

Port_Config, Send_Config, Receive_Config, P3964_Config

Program calls for point-to-point communication - sequence

The figure below shows the function of the point-to-point instructions for communication between the user program and communication partner.

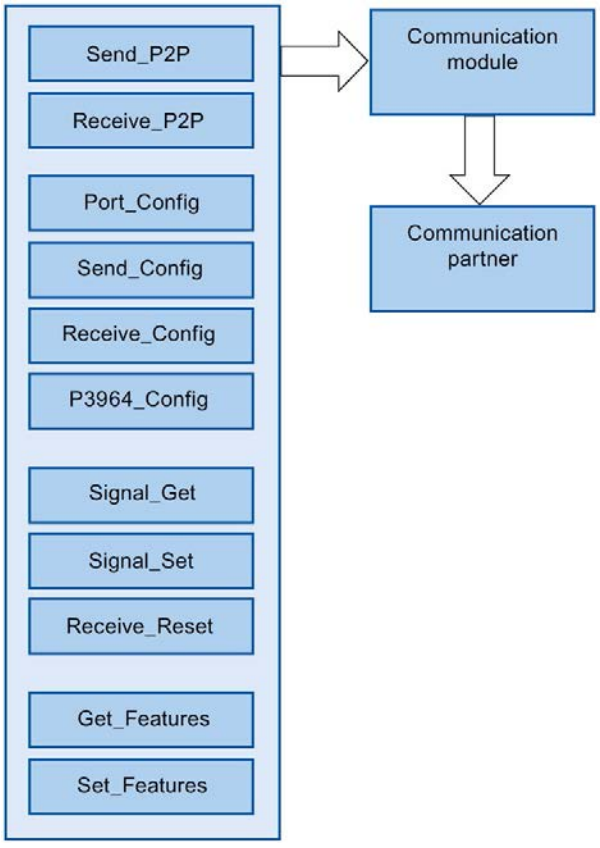

PtP instructions

Application	Instruction	Description
Data exchange between CPU, communication module and communication partner (communication)	Send_P2P (Page 87)	The instruction Send_P2P (send point-to-point data) can be used to send data to the communication partner. Call up the instruction Send_P2P to send data using the Freeport protocol. You have to call the instruction cyclically until you receive a corresponding acknowledgement at the output parameters of the instruction. Note: During parameter assignment of the XON/XOFF data flow control, user data may not contain any of the configured XON or XOFF characters. Default settings are DC1 = 11H for XON and DC3 = 13H for XOFF.
	Receive_P2P (Page 91)	The instruction Receive_P2P (receive point-to-point data) can be used to pick up the messages received in the communication module from a communication partner. Call the Receive_P2P instruction cyclically to receive data using the Freeport protocol. The instruction indicates at the NDR parameter if new received data is available. To signal the start and end of a message transmission, you need to define criteria in the Freeport protocol which identify the start and end of the message.

Application	Instruction	Description
Deletion of the receive buffer	Receive_Reset (Page 93)	The instruction Receive_Reset (delete receive buffer) allows you to clear the receive buffer of the communication module.
Dynamic parameter assignment of the interface or the protocol (optional)	Port_Config (Page 75)	You can use the Port_Config instruction (port configuration) to configure basic interface parameters, such as the data transmission rate, parity and data flow control dynamically through your user program.
	Send_Config (Page 78)	With the instruction Send_Config(send configuration) you can configure serial send parameters, such as RTS ON delay / RTS OFF delay, dynamically for a point-to-point communication interface.
	Receive_Config (Page 80)	The instruction Receive_Config (receive parameter assignment) allows you to dynamically assign serial receive parameters to a communication module. This instruction configures the conditions that specify the start and the end of a received message.
	P3964_Config (Page 85)	The instruction P3964_Config(configure protocol) can be used to dynamically configure protocol parameters of the procedure 3964(R), such as character delay time, priority and block check using your program.
Operation of RS232 accompanying signals	Signal_Get (Page 94)	With the Signal_Get instruction (get RS232 signals) you can read the current states of the RS232 signals.
	Signal_Set (Page 96)	With the Signal_Set instruction (get RS232 signals), you can set the states of the RS232 signals DTR and RTS.
Enable Modbus CRC support and diagnostic interrupt	Get_Features (Page 98)	You can use the instruction Get_Features(get extended functions) to get information on the Modbus support and on generating diagnostic alarms.
	Set_Features (Page 100)	If supported by the module, you can use the instruction Set_Features(set extended functions) to activate the generation of diagnostic alarms.

Procedure for setting up Freeport or 3964(R) communication

Requirement: The configuration and parameter assignment of a CPU and a communication module in the device view and in the properties dialog of the communication module are complete.

1. In the project navigation for the CPU select the folder "Program blocks" and open the Main (OB1) in the folder by double-clicking it. The program editor opens.
2. From the "Instructions" task card, "Communication" area select the instructions Send_P2P and Receive_P2P and drag-and-drop them into a network of the Main (OB1).
3. Configure the instructions in accordance with your specifications.
4. Download the hardware configuration and the user program to the CPU.

5.2 Overview of Modbus programming

Program calls for Modbus communication - sequence

The figure below shows the function of the Modbus instructions for communication between user program and Modbus device. (The instructions Send_P2P, Receive_P2P and the Config instruction are required downstream).

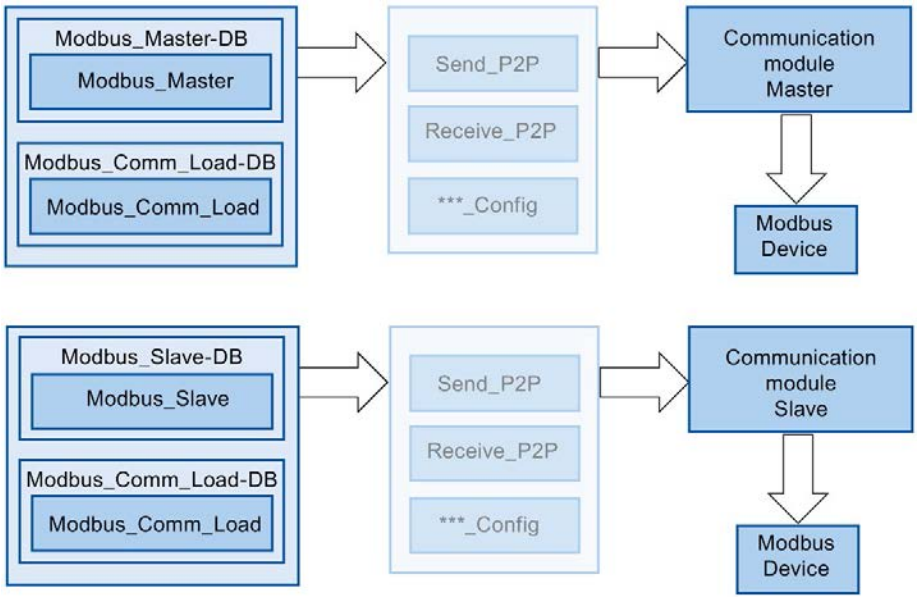

Modbus instructions

Application	Instruction	Description
Data exchange between user program and Modbus device (communication)	Modbus_Master (Page 125)	The Modbus_Master instruction allows you to communicate as Modbus master by means of the PtP port. The CPU can be used as Modbus RTU master device with the Modbus_Master instruction for communication with one or several Modbus slave devices.
	Modbus_Slave (Page 133)	The Modbus_Slave instruction allows you to communicate as Modbus slave by means of the PtP port. The CPU can be used as Modbus RTU slave device with the Modbus_Slave instruction for communication with one Modbus master device.
Parameter assignment of the interface and the protocol (mandatory)	Modbus _Comm_Load (Page 120)	The instruction Modbus_Comm_Load allows you to configure the port of the communication module for Modbus RTU. You have to run Modbus_Comm_Load to set up PtP port parameters, such as data transmission rate, parity and flow control. Once you have configured the interface for the Modbus RTU protocol, it can only be used by the instruction Modbus_Master or the instruction Modbus_Slave .

Note

Alternative use of Modbus_Slave and Modbus_Master

A communication module can be operated either as master or as slave.

Procedure for setting up Modbus communication

Requirement: The configuration and parameter assignment of a CPU and a communication module in the device view and in the properties dialog of the communication module are complete.

1. In the project navigation for the CPU select the folder "Program blocks" and open the Main (OB1) in the folder by double-clicking it. The program editor opens.
2. From the "Instructions" task card, "Communication" area select the instructions for Modbus communication in accordance with your task and drag-and-drop them into a network of the Main (OB1):
   - The instruction Modbus_Comm_Load configures the port of the communication module for Modbus communication.

     The Modbus_Comm_Load must be called in Main (OB1) until DONE (or ERROR) is reported.
   - The instruction Modbus_Master is used for the Modbus master functionality.
   - The instruction Modbus_Slave is used for the Modbus slave functionality.
3. Configure the instructions in accordance with your specifications.
4. Download the hardware configuration and the user program to the CPU.

5.3 Overview of USS programming

Program calls for USS communication - sequence

The figure below shows the function of the USS instructions for communication between user program and USS drive. (The instructions Send_P2P, Receive_P2P and the Config instruction are required downstream).

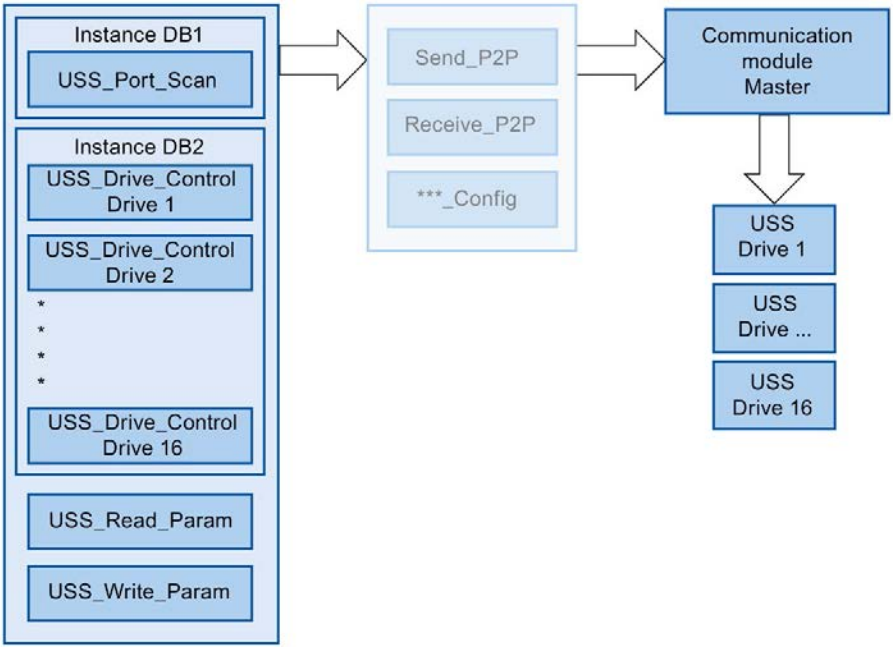

USS instructions

Application	Instruction	Description
Data communication between CPU, communication module and USS drive	USS_Port_Scan (Page 172)	The USS_Port_Scan instruction allows you to communicate via a communication module with up to 16 drives using a USS network (must be called cyclically). The instruction USS_Port_Scan controls the communication between CPU and the drives by means of the PtP communication port. A communication with the drive is processed every time you call this function. The instruction USS_Port_Scan is required once: Since most drives features a configurable internal function that monitors the integrity of the communication based on a timeout, the instruction USS_Port_Scan should be called from a time-controlled OB.

Application	Instruction	Description
Exchange data with USS drive	USS_Drive_Control (Page 176)	The USS_Drive_Control instruction allows you to prepare the send data for a drive and to display the received data. The inputs and outputs of the instruction correspond to the states and operating functions of the drive. The USS_Drive_Control instruction must be called once for each drive. Only one common instance DB is required for all calls of the instruction USS_Drive_Control for a USS network. Interconnect all calls of the instructions USS_Drive_Control for a USS network with the same instance DB. The USS_Drive_Control instruction should be called from the cyclic Main (OB1) of the main program.
Read or modify parameters in USS drive	USS_Read_Param (Page 180)	The USS_Read_Param instruction allows you to read parameters from the drive. You use the USS_Read_Param instruction to read the operating parameters of the drive that controls the internal drive functions. The USS_Read_Param instruction should be called from the cyclic Main (OB1) of the main program.
	USS_Write_Param (Page 182)	The USS_Write_Param instruction allows you to change parameters in the drive. The USS_Write_Param instruction should be called from the cyclic Main (OB1) of the main program.

Procedure for setting up USS communication

Requirement: The configuration and parameter assignment of a CPU and a communication module in the device view and in the properties dialog of the communication module are complete.

1. In the project tree for the CPU, select the "Program blocks" folder and open the desired time-controlled OB by double-clicking it. The program editor opens.
2. From the "Instructions" task card, "Communication" area select the instruction USS_Port_Scan and drag-and-drop it into a network of a time-controlled OB.

   The instruction USS_Port_Scan allows you to communicate by means of the USS network.
3. In the project navigation for the CPU select the folder "Program blocks" and open the Main (OB1) in the folder by double-clicking it. The program editor opens.
4. From the "Instructions" task card, "Communication" area select the instructions for USS communication in accordance with your task and drag-and-drop them into a network of the Main (OB1):
   - The instruction USS_Drive_Control is used for data exchange with the drive.
   - The instruction USS_Read_Param is used for reading parameters from the drive.
   - The instruction USS_Write_Param is used for changing parameters in the drive.
5. Configure the instructions in accordance with your specifications.
6. Download the hardware configuration and the user program to the CPU.

5.4 Instructions

5.4.1 Point-to-point

5.4.1.1 Overview of Freeport communication

STEP 7 offers extended instructions that can be used for Freeport communication with a protocol specified in the user program. These instructions can be divided into two categories:

- Configuration instructions
- Communication instructions

Note

CPU capacity

The Freeport instructions communicate with the communication modules by reading or writing data records.
When using the instructions, you should therefore check the capacity of the CPU for reading and writing data records.
If several instructions need to read or write data records simultaneously on a CPU, the user program may need to create a time offset between the calls of each instruction.

Configuration instructions

Before the user program can start the Freeport communication, the communication interface and the parameters for sending and receiving of data must be configured.

The interface configuration and the data configuration can be set for each CM in the device configuration or with the following instructions of your user program:

- Port_Config (Page 75)
- Send_Config (Page 78)
- Receive_Config (Page 80)
- P3964_Config (Page 85)

NOTICE
Device configuration <-> Configuration instructions The device configuration parameters are transferred to the CM upon each Power On of the CPU (return of voltage). The parameters of the configuration instructions are transferred to the CM as defined in your user program. The parameters of the device configuration are not synchronized with the parameters of the configuration instructions, which means the parameters of the configuration instructions are not applied to the CPU device configuration. With your user program, you determine the parameters that apply in the CM and when they apply.

Communication instructions

The user program uses the instructions for Freeport communication to send data to and receive data from the communication interfaces. The CMs send data to and receive data from the communication stations.

- Send_P2P (Page 87)
- Receive_P2P (Page 91)

Note

Data consistency

- If the data to be sent is transmitted consistently, it cannot be changed after the positive edge at the REQ parameter until DONE has been set by the Send_P2P instruction.
- If the receive data is to be read consistently, it may only be evaluated in the cycle in which NDR = TRUE.

The receive buffer can be reset with additional instructions and special RS232 signals can be queried and set.

- Receive_Reset (Page 93)
- Signal_Get (Page 94)
- Signal_Set (Page 96)

The following instructions let you read or write extended functions, as long as these are supported by the module.

- Get_Features (Page 98)
- Set_Features (Page 100)

All Freeport instructions work asynchronously. The instructions must therefore be called until the DONE output parameter indicates that execution is complete.

The user program can determine the send and receive status with the help of the query architecture. Send_P2P and Receive_P2P can be run at the same time. The communication modules buffer the send and receive data as required until a module-specific maximum buffer size has been reached.

Note

Resolution of bit times

The number of bit times is specified with the configured data transmission rate for different parameters. Specifying the parameter in bit times makes it independent of the data transmission rate. All parameters with unit of bit times can be specified with a maximum number of 65535.

5.4.1.2 Using the instructions

The Freeport instructions must be called cyclically to query received data or the end of transmission for a send process.

Depending on the data volume, data transmission may take place over several calls (program cycles).
If a command is completed with DONE = TRUE or NDR = TRUE, it has been executed without errors.

Note

Backing up STATUS

The DONE, NDR, ERROR and STATUS parameters are only available for one block cycle. To display the STATUS, you should therefore copy it to a free data area.

Master

Typical sequence for a master:

1. The Send_P2P instruction triggers transmission to the CM.
   Data transmission is initiated by a positive edge at the REQ input.
2. The Send_P2P instruction is executed in subsequent cycles to query the status of the transmission process.
3. When the Send_P2P instruction signals that transmission is complete at the DONE output, the user code can prepare the receipt of the answer.
4. The Receive_P2P instruction is run repeatedly to query an answer. If the CM has acquired response data, the Receive_P2P instruction copies the response to the CPU and signals that new data has been received at the NDR output.
5. The user program can process the response.
6. Back to step 1 and repetition of the sequence.

Slave

Typical sequence for a slave:

1. The user program runs the Receive_P2P instruction in each cycle.
2. If the CM has received a request, the Receive_P2P signals that new data is available at the NDR output and the request is copied to the CPU.
3. The user program processes the request and creates a response.
4. The response is returned to the master with the Send_P2P instruction.
5. The Send_P2P instruction must be run repeatedly to ensure that the send process is actually taking place.
6. Back to step 1 and repetition of the sequence.

The slave must ensure that Receive_P2P is called up often enough so that a transmission can be received by the master before it cancels the process due to a timeout while waiting for the response. To do so, the user program Receive_P2P can be called from within a cycle OB whose cycle time is sufficiently short so that the master can receive a transmission before the timeout setting expires. If the OB cycle time is set so that two runs can take place during the timeout setting of the master, the user program can receive all transmissions without any losses.

5.4.1.3 General parameters for Freeport operations

Table 5- 1 General input parameters of the Freeport instructions

Parameter	Description
REQ	Data transmission is initiated by a positive edge at the REQ input. Another edge at REQ may only be generated after the command has been completed (DONE or ERROR). Data transmission can take several calls (program cycles), depending on the data volume. When you add a Freeport instruction to your program, STEP 7 prompts you to specify the instance DB (or to have STEP 7 create a corresponding instance DB). Use a unique DB for each PtP instruction call.
PORT	A port address is assigned during configuration of the communication module. The PORT parameter communicates assignment to a specific communication module to the instruction. You can select a symbolic name for the standard port after the configuration. The assigned CM port value is the "Hardware ID" property of the device configuration with S7-1200/1500 and the "Input address" with S7-300/400. The symbolic port name is assigned in the symbol table.

The output parameters DONE, NDR, ERROR and STATUS of the Freeport instructions indicate the execution status of the Freeport functions.

Table 5- 2 Output parameters DONE, NDR, ERROR and STATUS

Parameter	Data type	Standard	Description
DONE	Bool	FALSE	Set to TRUE for one cycle to indicate that the last request was completed with errors; otherwise FALSE.
NDR	Bool	FALSE	Set to TRUE for one cycle to indicate that new data has been received; otherwise FALSE.
ERROR	Bool	FALSE	Set to TRUE for one cycle to indicate that the last request was completed with errors; the corresponding error code can be found in STATUS; otherwise FALSE.
STATUS	Word	16#0000 or 16#7000	Result status: • If the DONE or NDR bit is set, STATUS is set to 0/16#7000 or to a specific error code. • If the ERROR bit is set, STATUS displays an error code. • If none of the bits listed above is set, the instruction can return status results that describe the current status of the function. The value in STATUS is valid until you call this instruction again (with one and the same port address).

Table 5- 3 In/out parameter COM_RST

Parameter	Data type	Standard	Description
COM_RST	Bool	FALSE	Initialization of the instruction The instruction is initialized with TRUE. COM_RST is then set back to FALSE. Note: You must set COM_RST to TRUE during startup and should not subsequently change the parameter (that is, do not assign a value when you call the instruction). COM_RST is reset by the instruction following initialization of the instance DB.

Note

Please note that the parameters DONE, NDR, ERROR and STATUS are only set for one cycle.

Table 5- 4 Shared error codes

Error code	Description
16#0000	No error
16#7000	Function not active
16#7001	Initial call after request started.
16#7002	Subsequent call after request started.
16#8x3A	Invalid pointer in parameter x

Table 5- 5 Shared error classes of the STATUS parameter

Description of the class	Error classes	Description
Port configuration	16#81Ax	For the description of frequent errors in the interface configuration
Send configuration	16#81Bx	For the description of errors in the send configuration
Receive configuration	16#81Cx	For the description of errors in the receive configuration
Sending	16#81Dx	For the description of runtime errors during sending
Receiving	16#81Ex	For the description of runtime errors during receiving
RS232 accompanying signals	16#81Fx	For the description of errors in connection with signal processing

5.4.1.4 Port_Config: Configure PtP communication port

Note

Use with CM1241

The use of this instruction with a CM1241 is only possible from firmware version V2.1 of the module.

Description

The Port_Config instruction (port configuration) allows you to change parameters such as the data transmission rate in runtime using your program. The data pending in the CM is deleted with the execution of Port_Config.

Configuration changes of Port_Config are saved on the CM and not in the CPU. When the voltage returns, the CM is configured with the data saved in the device configuration.

Parameters

Parameter	Declaration	Data type		Default	Description
		S7-1200/1500	S7-300/400/WinAC		
REQ	IN	Bool		FALSE	Starts the transmission of data to the CM upon a positive edge at this input.
PORT	IN	PORT (UInt)	Word	0	Specifies the communication module which is used for the communication: • For S7-1500/S7-1200: "HW identifier" from the device configuration. The symbolic port name is assigned in the "System constants" tab of the PLC tag table and can be applied from there. • For S7-300/S7-400: "Input address" from the device configuration. In the S7-300/400/WinAC systems the PORT parameter is assigned the input address assigned in HWCN.
PROTOCOL	IN	UInt	Word	0	Protocol • 0 = Freeport protocol • 1 = Protocol 3964(R)

Parameter	Declaration	Data type		Default	Description
		S7-1200/1500	S7-300/400/WinAC		
BAUD	IN	UInt	Word	6	Data transmission rate of the port: • 1 = 300 bps • 2 = 600 bps • 3 = 1200 bps • 4 = 2400 bps • 5 = 4800 bps • 6 = 9600 bps • 7 = 19200 bps • 8 = 38400 bps • 9 = 57600 bps • 10 = 76800 bps • 11 = 115200 bps
PARITY	IN	UInt	Word	1	Parity of the port: • 1 = no parity • 2 = even parity • 3 = odd parity • 4 = mark parity • 5 = space parity • 6 = any
DATABITS	IN	UInt	Word	1	Bits per character: • 1 = 8 data bits • 2 = 7 data bits
STOPBITS	IN	UInt	Word	1	Stop bits: • 1 = 1 stop bit • 2 = 2 stop bits
FLOWCTRL	IN	UInt	Word	1	Flow control: • 1 = no flow control • 2 = XON/XOFF • 3 = Hardware RTS always ON • 4 = Hardware RTS switched • 5 = Hardware RTS always ON, ignore DTR/DSR
XONCHAR	IN	Char		16#0011	Specifies the character that serves as XON character. It is typically a DC1 character (11H). This parameter is only evaluated when software flow control is active.
XOFFCHAR	IN	Char		16#0013	Specifies the character that serves as XOFF character. It is typically a DC3 character (13H). This parameter is only evaluated when software flow control is active.
WAITIME	IN	UInt	Word	2000	Specifies how long to wait for an XOFF character after receipt of an XON character or how long to wait for a CTS = ON signal after CTS = OFF (0 to 65535 ms). This parameter is only evaluated when flow control is active.

Parameter	Declaration	Data type		Default	Description
		S7-1200/1500	S7-300/400/WinAC		
MODE	IN	USInt	Byte	0	Operating mode Valid operating modes are: • 0 = Full duplex (RS232) • 1 = Full duplex (RS422) four-wire mode (point-to-point) • 2 = Full duplex (RS 422) four-wire mode (multipoint master; CM PtP (ET 200SP)) • 3 = Full duplex (RS 422) four-wire mode (multipoint slave; CM PtP (ET 200SP)) • 4 = Half duplex (RS485) two-wire mode [1]
LINE_PRE	IN	USInt	Byte	0	Receive line initial state Valid initial states are: • 0 = "No" initial state [1] • 1 = signal R(A)=5 V, signal R(B)=0 V (break detection): Break detection is possible with this initial state. Can only be selected with: "Full duplex (RS422) four-wire mode (point-to-point connection)" and "Full duplex (RS422) four-wire mode (multipoint slave)". • 2 = signal R(A)=0 V, signal R(B)=5 V: This default setting corresponds to the idle state (no active send operation). No break detection is possible with this initial state.
BRK_DET	IN	USInt	Byte	0	Break detection The following settings are permitted: • 0 = break detection deactivated • 1 = break detection activated
COM_RST	IN/OUT	---	Bool	FALSE	Initialization of the instruction The instruction is initialized with TRUE. The instruction then resets COM_RST to FALSE.
DONE	OUT	Bool		FALSE	TRUE for one cycle after the last request has been completed without errors
ERROR	OUT	Bool		FALSE	TRUE for one cycle after the last request has been completed with errors
STATUS	OUT	Word		16#7000	Error code (see Error messages (Page 102))

[1] Required setting for the use of PROFIBUS cables with CM 1241 for RS485

Additional information about the general parameters is available at "General parameters for Freeport operations (Page 73)".

5.4.1.5 Send_Config: Configure PtP sender

Note

Use with CM1241

The use of this instruction with a CM1241 is only possible from firmware version V2.1 of the module.

Description

The Send_Config instruction (send configuration) allows you to change send parameters in runtime using your program (conditions that identify the start and the end of the data to be sent). Any data pending in a CM is deleted when Send_Config is executed.

Configuration changes of Send_Config are saved on the CM and not in the CPU. The parameters saved in the device configuration are restored once the voltage returns to the CPU or the communication module.

Parameters

Parameter	Declaration	Data type		Default	Description%%
		S7-1200/1500	S7-300/400/WinAC		
REQ	IN	Bool		FALSE	Activates the configuration change upon a positive edge at this input.
PORT	IN	PORT (UInt)	Word	0	Specifies the communication module which is used for the communication: • For S7-1500/S7-1200: "HW identifier" from the device configuration. The symbolic port name is assigned in the "System constants" tab of the PLC tag table and can be applied from there. • For S7-300/S7-400: "Input address" from the device configuration. In the S7-300/400/WinAC systems the PORT parameter is assigned the input address assigned in HWCN.
RTSONDLY	IN	UInt	Word	0	Number of milliseconds to wait after activation of RTS before a transmission of send data is started. This parameter is only valid if the hardware flow control is active. The valid range is 0 to 65535 ms. The value 0 deactivates the function.
RTSOFFDLY	IN	UInt	Word	0	Number of milliseconds to wait after transmission of send data before RTS is deactivated: This parameter is only valid if the hardware flow control is active. The valid range is 0 to 65535 ms. The value 0 deactivates the function.

Parameter	Declaration	Data type		Default	Description%%
		S7-1200/1500	S7-300/400/WinAC		
BREAK	IN	UInt	Word	0	This parameter specifies that a BREAK is to be sent at the start of each frame for the specified number of bit times. The maximum is 65535 bit times. The value 0 deactivates the function.
IDLELINE	IN	UInt	Word	0	This parameter specifies that the line is to remain in idle for the specified number of bit times prior to the start of each frame. The maximum is 65535 bit times. The value 0 deactivates the function.
USR_END	IN	STRING[2]		0	Input of end delimiters. No more than 2 end delimiters can be configured. All data including the end delimiter(s) is sent, independent of the configured frame length.
APP_END	IN	STRING[5]		0	Input of characters to be appended. You can append up to 5 characters.
COM_RST	IN/OUT	---	Bool	FALSE	Initialization of the instruction The instruction is initialized with TRUE. The instruction then resets COM_RST to FALSE.
DONE	OUT	Bool		FALSE	TRUE for one cycle after the last request has been completed without errors
ERROR	OUT	Bool		FALSE	TRUE for one cycle after the last request has been completed with errors
STATUS	OUT	Word		16#7000	Error code (see Error messages (Page 102))

Additional information about the general parameters is available at "General parameters for Freeport operations (Page 73)".

5.4.1.6 Receive_Config: Configure PtP recipient

Note

Use with CM1241

The use of this instruction with a CM1241 is only possible from firmware version V2.1 of the module.

Description

The Receive_Config instruction (receive configuration) allows you to change receive parameters in runtime using your program. This instruction configures the conditions that mark the start and the end of received data. Any data pending in a CM is deleted when Receive_Config is executed.

Configuration changes of Receive_Config are saved **non-retentive** on the CM. The parameters saved in the device configuration are restored once the voltage returns to the CPU or the communication module. The Receive_Config instruction therefore must be called again from the user program when the voltage returns to the CPU or to the communication module in order to overwrite the parameters stored in the device configuration.

Parameters

Parameter	Declaration	Data type		Default	Description
		S7-1200/1500	S7-300/400/WinAC		
REQ	IN	Bool		FALSE	Activates the configuration change upon a positive edge at this input.
PORT	IN	PORT (UInt)	Word	0	Specifies the communication module which is used for the communication: • For S7-1500/S7-1200: "HW identifier" from the device configuration. The symbolic port name is assigned in the "System constants" tab of the PLC tag table and can be applied from there. • For S7-300/S7-400: "Input address" from the device configuration. In the S7-300/400/WinAC systems the PORT parameter is assigned the input address assigned in HWCN.
RECEIVE_CONDITIONS	IN	Variant	Any	-	The data structure of Receive_Conditions specifies the start and end conditions used to identify the start and end of a frame.
COM_RST	IN/OUT	---	Bool	FALSE	Initialization of the instruction The instruction is initialized with TRUE. The instruction then resets COM_RST to FALSE.

Parameter	Declaration	Data type		Default	Description
		S7-1200/1500	S7-300/400/WinAC		
DONE	OUT	Bool		FALSE	TRUE for one cycle after the last request has been completed without errors
ERROR	OUT	Bool		FALSE	TRUE for one cycle after the last request has been completed with errors
STATUS	OUT	Word		16#7000	Error code (see Error messages (Page 102))

Additional information about the general parameters is available at "General parameters for Freeport operations (Page 73)".

Start conditions for the Receive_P2P instruction

The Receive_P2P instruction uses the configuration specified in the device configuration or by the Receive_Config instruction to determine the start and end of Freeport communication frames. The start of the frame is defined by the start conditions. The start of the frame can be determined with one or several start conditions.
If Break as well as Idle Line is activated, Break must be met first and then Idle Line as well. After that, one of the other conditions (start character or start sequence) is sufficient to start data transmission.
The start condition "Any character" cannot be combined with other start conditions.

Data type structure of the Receive_Conditions parameter, part 1 (start conditions)

Table 5- 6 Structure of Receive_Conditions for start conditions

Parameter	Declaration	Data type	Default	Description
START .STARTCOND	IN	Word	16#0002	Specifying the start condition • 01H - detection of the start character • 02H - Any character • 04H - detection of a line break • 08H - detection of an idle line • 10H - detection of start sequence 1 • 20H - detection of start sequence 2 • 40H - detection of start sequence 3 • 80H - detection of start sequence 4 The start conditions can be combined by adding the values together.
START .IDLETIME	IN	Word	16#0028	The number of bit times required in the idle state for a new frame start to be detected (default value: W#16#28). Only in connection with the condition "Detection of an idle line". 0 to FFFF
START .STARTCHAR	IN	Byte	16#0002	The start character for the condition "Start character". (default value: B#16#2)

Parameter	Declaration	Data type	Default	Description
START SEQ[1].CTL	IN	Byte	0	Start sequence 1, deactivate/activate comparison for each character: (default value: B#16#0) These are the activation bits for each character of the start character string. • 01H - character 1 • 02H - character 2 • 04H - character 3 • 08H - character 4 • 10H - character 5 When a bit is deactivated for a specific character, this means that each character in this position in the character string represents a valid start character string (e.g. 1FH = all 5 characters interpreted).
START.SEQ[1] .STR[1] .. START.SEQ[1] .STR.[5]	IN	Char[5]	0	Start sequence 1, start character (5 characters).
START.SEQ[2] .CTL	IN	Byte	0	Start sequence 2, deactivate/activate comparison for each character. Default value: B#16#0)
START.SEQ[2] .STR[1] .. START.SEQ[2] .STR.[5]	IN	Char[5]	0	Start sequence 2, start character (5 characters).
START.SEQ[3] .CTL	IN	Byte	0	Start sequence 3, deactivate/activate comparison for each character. Default value: B#16#0
START.SEQ[3] .STR[1] .. START.SEQ[3] .STR.[5]	IN	Char[5]	0	Start sequence 3, start character (5 characters).
START.SEQ[4] .CTL	IN	Byte	0	Start sequence 4, deactivate/activate comparison for each character. Default value: B#16#0
START.SEQ[4] .STR[1] .. START.SEQ[4] .STR.[5]	IN	Char[5]	0	Start sequence 4, start character (5 characters),

Example

Have a look at the following received data in hexadecimal coding: "**68** 10 aa **68** bb 10 aa 16". The configured start character strings are available in the following table. Start character strings are evaluated once the first character 68H has been successfully received. After the fourth character has been successfully received (the second 68H), start condition 1 has been met. Once the start conditions have been met, the evaluation of the end conditions starts.

Processing of the start character string can be canceled due to different errors in parity, framing or time intervals between characters. These errors prevent receipt of the data because the start condition has not been met (an error message is output).

Table 5- 7 Start conditions

Start condition	First character	First character +1	First character +2	First character +3	First character +4
1	**68**H	xx	xx	**68**H	xx
2	10H	aaH	xx	xx	xx
3	dcH	aaH	xx	xx	xx
4	e5H	xx	xx	xx	xx

End conditions for the Receive_P2P instruction

The end of a frame is defined by the first occurrence of one or more configured end conditions.

You can configure the end conditions either in the properties of the communication interface in the device configuration, or with the Receive_Config instruction. The receive parameters (start and end conditions) are reset to the settings in the device configuration each time the voltage returns to the CPU or the communication module. When the STEP 7 user program executes Receive_Config, the settings are set to the parameters of Receive_Config .

Data type structure of the Receive_Conditions parameter, part 2 (end conditions)

Table 5- 8 Structure of Receive_Conditions for end conditions

Parameter	Declaration	Data type	Default	Description
END.ENDCOND	IN	Word	0	This parameter specifies the condition for the frame end: • 01H - response timeout • 02H - message timeout • 04H - character delay time • 08H - maximum frame length • 10H - read message length from message (N+LEN+M) • 20H - end sequence • 40H - fixed frame length
END.FIXLEN	IN	Word	1	Fixed frame length: Only used if the end condition "Fixed frame length" has been selected. 1 to 4000 bytes (up to 4 KB depending on the module)
END.MAXLEN	IN	Word	1	Maximum frame length: Only used if the end condition "Maximum frame length" has been selected. 1 to 4000 bytes (up to 4 KB depending on the module)
END.N	IN	Word	0	Byte position of the length field in the frame. Only used with end condition N+LEN+M. 1 to 4000 bytes (up to 4 KB depending on the module)
END.LENGTHSIZE	IN	Word	0	Size of the length field (1, 2, or 4 bytes). Only used with end condition N+LEN+M.
END.LENGTHM	IN	Word	0	Number of characters after the length field that are not included in the value of the length field. This entry is only used with end condition N+LEN+M. 0 to 255 bytes
END.RCVTIME	IN	Word	200	Specify the wait time for the first received character after a frame has been sent. The receive instruction is terminated with an error message if a character is not received within the specified time. This information is used only with the condition "Response timeout". (0 to 65535 ms). Note: This parameter cannot be used as sole end criterion but only in connection with at least one other end condition.
END.MSGTIME	IN	Word	200	Specify how long to wait for receipt of the complete frame after receipt of the first character. This parameter is used only if the condition "Message timeout" is selected. (0 to 65535 ms)
END.CHARGAP	IN	Word	12	Enter the maximum number of bit times between characters. If the number of bit times between characters exceeds the specified value, the end condition has been met. This information is used only with the condition "Character delay time". (0 to 65535 bit times)

Parameter	Declaration	Data type	Default	Description
END.SEQ.CTL	IN	Byte	0	Character sequence 1, deactivate/activate comparison for each character: These are the activation bits for each character of the end character string. Character 1 is bit 0, character 2 is bit 1, ..., character 5 is bit 4. If a bit is deactivated for a specific character, this means that each character represents a congruence at this position of the character string.
END.SEQ.STR[1] .. END.SEQ.STR[5]	IN	Char[5]	0	Character string 1, start character (5 characters)

Table 5- 9 General parameters of the Receive_P2P instruction

Parameter	Declaration	Data type	Default	Description
GENERAL .MBUF_SIZE	IN	Byte	255	Input number of frames that are to be buffered in the receive buffer of the CM. If no other conditions are active that influence the reaction of the receive buffer (prevent timeout, data flow control), additional frames are discarded once the limit has been reached. (1 to 255 frames)
GENERAL .OW_PROT	IN	Byte	0	Activates the no overwriting function of the buffered frame if the CM receives a new frame and the receive buffer of the CM was not yet read. This step prevents already buffered received frames from being lost. • 0 - not activated • 1 - activated
GENERAL .CLR_MBUF	IN	Byte	0	Activates deletion of the receive buffer during CPU startup. The receive buffer is automatically deleted when the CPU switches from STOP to RUN. The receive buffer only contains frames received after CPU startup. • 0 - not activated • 1 - activated

5.4.1.7 P3964_Config: Configuring the 3964(R) protocol

Note

Use with CM1241

The use of this instruction with a CM1241 is only possible from firmware version V2.1 of the module.

Description

The P3964_Config instruction (protocol configuration) allows you to change protocol parameters for 3964(R), such as character delay time, priority and block check, in runtime using your program.

Configuration changes of P3964_Config are saved on the CM and not in the CPU. The parameters saved in the device configuration are restored once the voltage returns to the CPU or the communication module.

Parameters

Parameter	Declaration	Data type		Default	Description
		S7-1200/1500	S7-300/400/WinAC		
REQ	IN	Bool		FALSE	Starts the instruction upon a positive edge at this input.
PORT	IN	PORT (UInt)	Word	0	Specifies the communication module which is used for the communication: • For S7-1500/S7-1200: "HW identifier" from the device configuration. The symbolic port name is assigned in the "System constants" tab of the PLC tag table and can be applied from there. • For S7-300/S7-400: "Input address" from the device configuration. In the S7-300/400/WinAC systems the PORT parameter is assigned the input address assigned in HWCN.
BCC	IN	USInt	Byte	1	Activates/deactivates the use of the block check • 0 = without block check • 1 = with block check
Priority	IN	USInt	Byte	1	Selection of the priority • 0 = low priority • 1 = high priority

Parameter	Declaration	Data type		Default	Description
		S7-1200/1500	S7-300/400/WinAC		
CharacterDelayTime	IN	UInt	Word	16#00DC	Setting the character delay time (depending on the set data transmission rate) (default value: 220 ms) 1 ms to 65535 ms
AcknDelayTime	IN	UInt	Word	16#07D0	Setting the acknowledgment delay time (depending on the set data transmission rate) (default value: 2000 ms) 1 ms to 65535 ms
BuildupAttempts	IN	USInt	Byte	16#0006	Setting the number of connection attempts (default value: 6 connection attempts) 1 to 255
RepetitionAttempts	IN	USInt	Byte	16#0006	Setting the number of transmission attempts (default value: 6 connection attempts) 1 to 255
COM_RST	IN/OUT	---	Bool	FALSE	Initialization of the instruction The instruction is initialized with TRUE. The instruction then resets COM_RST to FALSE.
DONE	OUT	Bool		FALSE	TRUE for one cycle after the last request has been completed without errors
ERROR	OUT	Bool		FALSE	TRUE for one cycle after the last request has been completed with errors
STATUS	OUT	Word		16#7000	Error code (see Error messages (Page 102))

Additional information about the general parameters is available at "General parameters for Freeport operations (Page 73)".

5.4.1.8 Send_P2P: Sending data

Note

Use with CM1241

The use of this instruction with a CM1241 is only possible from firmware version V2.1 of the module.

Description

The Send_P2P instruction (send point-to-point data) starts the transmission of data and transmits the contents of the assigned buffer to the communication module. The CPU program is still being executed while the CM sends the data with the data transmission rate. Only one send instruction per communication module may be pending at any time. The CM signals an error if a second Send_P2P instruction is executed while the CM is already sending a frame.

Parameters

Parameter	Declaration	Data type		Default	Description
		S7-1200/1500	S7-300/400/WinAC		
REQ	IN	Bool		FALSE	Starts the transmission of data to the CM upon a positive edge at this input.
PORT	IN	PORT (UInt)	Word	0	Specifies the communication module which is used for the communication: • For S7-1500/S7-1200: "HW identifier" from the device configuration. The symbolic port name is assigned in the "System constants" tab of the PLC tag table and can be applied from there. • For S7-300/S7-400: "Input address" from the device configuration. In the S7-300/400/WinAC systems the PORT parameter is assigned the input address assigned in HWCN.

Parameter	Declaration	Data type		Default	Description
		S7-1200/1500	S7-300/400/WinAC		
BUFFER	IN	Variant	Any	0	This parameter points to the memory area of the send buffer. **Notes:** • Boolean data and Boolean fields are not supported. • If the send buffer is in the optimized memory area, the maximum permitted length of the sent data is 1024 bytes. Exception: Arrays of Byte, Word or DWord are supported up to a length of 4096 bytes. • If the send buffer is a String or WString, the content of the string is transferred without the current and maximum length. Additional information under "Using the BUFFER and LENGTH parameters for communication operations (Page 90)"
LENGTH	IN	UInt	Word	0	Length in bytes of the data to be transferred. The memory area addressed in the BUFFER parameter is completely transmitted with LENGTH = 0. Additional information under "Using the BUFFER and LENGTH parameters for communication operations (Page 90)"
COM_RST	IN/OUT	---	Bool	FALSE	Initialization of the Send_P2P instruction The instruction is initialized with 1. The instruction then resets COM_RST to 0. Note: The parameter is only available for S7-300/400 instructions.
DONE	OUT	Bool		FALSE	TRUE for one cycle after the last request has been completed without errors
ERROR	OUT	Bool		FALSE	TRUE for one cycle after the last request has been completed with errors
STATUS	OUT	Word		16#7000	Error code (see Error messages (Page 102))

Additional information about the general parameters is available at "General parameters for Freeport operations (Page 73)".

Parameters

The DONE and ERROR outputs are in FALSE status when a send instruction is being processed. At the end of the send instruction, one of the DONE or ERROR outputs is set to TRUE for one cycle to signal the status of the send instruction. The error code at the STATUS output can be evaluated when the status of ERROR is TRUE.

The instruction outputs the status 16#7001 when the communication interface accepts the send data. Subsequent executions of Send_P2P output the value 16#7002 if the CM is still sending. At the end of the send instruction, the CM outputs the status 16#0000 for the send instruction (if no error has occurred). Subsequent executions of Send_P2P with REQ = 0 output the status 16#7000 (free).

The diagram below shows the relationship between the output values and REQ. It is based on the assumption that the instruction is called cyclically to check the status of the send process (indicated by the STATUS values).

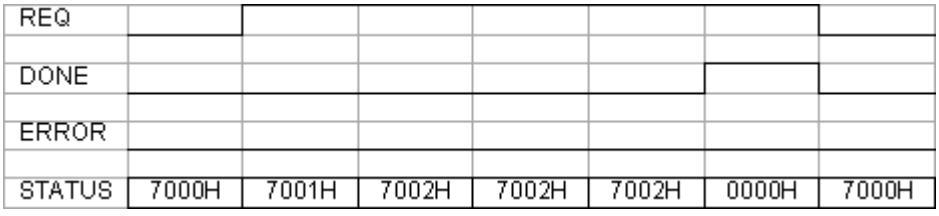

The figure below shows how the DONE and STATUS parameters are only valid for one cycle if a pulse is pending at the REQ line (for one cycle) to trigger the send instruction.

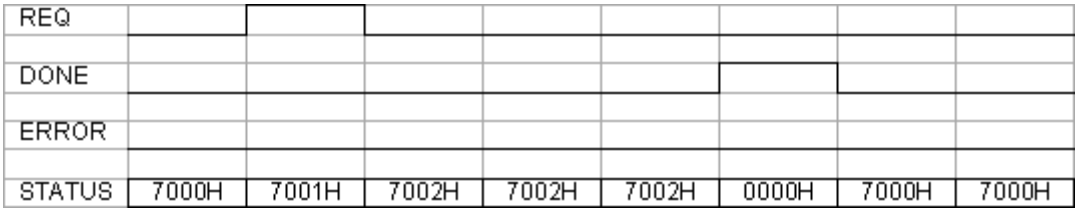

The figure below shows the relationship of the DONE, ERROR and STATUS parameters in case of an error.

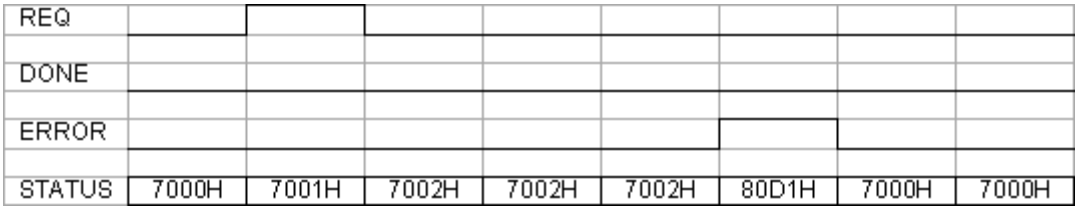

The DONE, ERROR and STATUS values are only valid until Send_P2P is executed again with the same instance DB.

5.4.1.9 Using the BUFFER and LENGTH parameters for communication operations

Interaction of BUFFER and LENGTH parameters for Send_P2P

The minimum data size sent by the Send_P2P instruction is one byte.

The BUFFER parameter specifies the size of the data to be sent if a "0" is passed at the LENGTH parameter during call. The specification of a tag is sufficient for this.

You cannot use the data type Bool or arrays of the Bool type for the BUFFER parameter. If large amounts of data are being transferred we recommend the mapping to the array or structure data types.

Table 5- 10 BUFFER parameter

BUFFER	Description
Elementary data type	When sending: The LENGTH value must include the byte size of this data type. Example: For a Word value, the LENGTH must be two. For a DWord value or Real value, the LENGTH must be four.
Structure	For optimized memory: The maximum permitted length of the BUFFER is 1024 Byte; otherwise 4 KB are permitted depending on the module. For sending: The LENGTH value can include a byte size smaller than the complete byte length of the structure; in this case, only the first LENGTH bytes of the structure from BUFFER are sent.
Array	For optimized memory: If the array data type is not equal to Byte, Word or DWord, the maximum permitted buffer length is 1024 Byte. Depending on the module, up to 4 KB can be transmitted if the memory is not optimized, independent of the data structure. For sending: The LENGTH value can include a byte size smaller than the complete byte length of the array, whereby, this byte size is a multiple of the byte size of the data element. Example: The LENGTH parameter of an array of the Word type must be a multiple of two and a multiple of four for an array of the Real type. If LENGTH is specified, the number of array elements is transmitted. If BUFFER includes an array with 15 DWord elements (a total of 60 Bytes), for example, and you specify LENGTH = 20, the first five DWord elements from the array are transmitted.
String	The LENGTH parameter includes the number or characters to be sent. Only the characters of the String are transmitted. The bytes with the maximum and actual length of the String are not sent.

Table 5- 11 LENGTH parameter

LENGTH	Description
= 0	The complete content of the memory area specified by BUFFER is transferred. If BUFFER points to a string, the entire content of the string is transferred, without the bytes with the maximum and actual length.
> 0	The content up to the configured length of the memory area specified by BUFFER is transferred.

5.4.1.10 Receive_P2P: Receiving data

Note

Use with CM1241

The use of this instruction with a CM1241 is only possible from firmware version V2.1 of the module.

Description

The Receive_P2P instruction (receive data using point-to-point communication) checks the frames received in the CM. If a frame is available, it is transmitted from the CM to the CPU. A receive error is indicated at the STATUS parameter.

Parameters

Parameter	Declaration	Data type		Default	Description
		S7-1200/1500	S7-300/400/WinAC		
PORT	IN	PORT (UInt)	Word	0	Specifies the communication module which is used for the communication: • For S7-1500/S7-1200: "HW identifier" from the device configuration. The symbolic port name is assigned in the "System constants" tab of the PLC tag table and can be applied from there. • For S7-300/S7-400: "Input address" from the device configuration. In the S7-300/400/WinAC systems the PORT parameter is assigned the input address assigned in HWCN.
BUFFER	IN	Variant	Any	0	This parameter points to the start address of the receive buffer. This buffer must be large enough to receive the maximum frame length. **Note:** • Boolean data or Boolean fields are not supported. • If the receive buffer is in the optimized memory area, the maximum permitted length of the received data is 1024 bytes. Exception: Arrays of Byte, Word or DWord are supported up to a length of 4096 bytes. • If the receive buffer is a String or WString, the received data is written to the content of the string and the current length of the string is set accordingly. Additional information under "Using the BUFFER and LENGTH parameters for communication operations (Page 90)"

Parameter	Declaration	Data type		Default	Description
		S7-1200/1500	S7-300/400/WinAC		
LENGTH	OUT	UInt	Word	0	Length of the frame received in bytes Additional information under "Using the BUFFER and LENGTH parameters for communication operations (Page 90)"
NDR	OUT	Bool		FALSE	TRUE for one cycle if new data is available and the instruction has been completed without errors.
COM_RST	IN/OUT	---	Bool	FALSE	Initialization of the instruction The instruction is initialized with TRUE. The instruction then resets COM_RST to FALSE.
ERROR	OUT	Bool		FALSE	TRUE for one cycle once the instruction has been completed with an error.
STATUS	OUT	Word		16#7000	Error code (see Error messages (Page 102))

Additional information about the general parameters is available at "General parameters for Freeport operations (Page 73)".

The error code at the STATUS output can be evaluated if the status of ERROR is TRUE. The STATUS value provides the reason for terminating the receive operation in the CM. This is usually a positive value which indicates that the receive operation has been successful and the frame criterion that has been detected.
If the STATUS value is negative (the most significant bit of the hexadecimal value is set), the receive operation was terminated due to an error condition, such as a parity, framing or overflow error.

Each communication module can buffer a module-specific number for frames. If several frames are available in the CM, the Receive_P2P instruction outputs the oldest available frame (FIFO).

5.4.1.11 Receive_Reset: Clear receive buffer

Note

Use with CM1241

The use of this instruction with a CM1241 is only possible from firmware version V2.1 of the module.

Description

The Receive_Reset instruction (reset receiver) clears the receive buffer in the CM.

Parameters

Parameter	Declaration	Data type		Default	Description
		S7-1200/1500	S7-300/400/WinAC		
REQ	IN	Bool		FALSE	Starts the transmission of data to the CM upon a positive edge at this input.
PORT	IN	PORT (UInt)	Word	0	Specifies the communication module which is used for the communication: • For S7-1500/S7-1200: "HW identifier" from the device configuration. The symbolic port name is assigned in the "System constants" tab of the PLC tag table and can be applied from there. • For S7-300/S7-400: "Input address" from the device configuration. In the S7-300/400/WinAC systems the PORT parameter is assigned the input address assigned in HWCN.
COM_RST	IN/OUT	---	Bool	FALSE	Initialization of the instruction The instruction is initialized with TRUE. The instruction then resets COM_RST to FALSE.
DONE	OUT	Bool		FALSE	TRUE for one cycle means that the last request was completed without errors.
ERROR	OUT	Bool		FALSE	TRUE means that the last request was completed with errors. If this output is TRUE, the STATUS output contains the corresponding error codes.
STATUS	OUT	Word		16#7000	Error code (see Error messages (Page 102))

Additional information about the general parameters is available at "General parameters for Freeport operations (Page 73)".

5.4.1.12 Signal_Get: Read status

Note

Use with CM1241

The use of this instruction with a CM1241 is only possible from firmware version V2.1 of the module.

Description

The Signal_Get instruction (get RS232 signals) reads the current states of the RS232 accompanying signals and displays them at the corresponding instruction outputs.

Note

Restriction

- This instruction can only be used with CMs RS232 BA and RS232 HF.
- If RS232C is set for the operating mode, this instruction can also be used with CM PtP (ET200SP).

Parameters

Parameter	Declaration	Data type		Default	Description
		S7-1200/1500	S7-300/400/WinAC		
REQ	IN	Bool		FALSE	Starts the transmission of data to the CM upon a positive edge at this input.
PORT	IN	PORT (UInt)	Word	0	Specifies the communication module which is used for the communication: • For S7-1500/S7-1200: "HW identifier" from the device configuration. The symbolic port name is assigned in the "System constants" tab of the PLC tag table and can be applied from there. • For S7-300/S7-400: "Input address" from the device configuration. In the S7-300/400/WinAC systems the PORT parameter is assigned the input address assigned in HWCN.
NDR	OUT	Bool		FALSE	TRUE for one cycle if the RS232 accompanying signals have been read and the instruction has been completed without errors.
ERROR	OUT	Bool		FALSE	TRUE for one cycle once the instruction has been completed with an error
STATUS	OUT	Word		16#7000	Error code (see Error messages (Page 102))

Parameter	Declaration	Data type		Default	Description
		S7-1200/1500	S7-300/400/WinAC		
DTR	OUT	Bool		FALSE	Data device ready, module ready (output)
DSR	OUT	Bool		FALSE	Data device ready, communication station ready (input)
RTS	OUT	Bool		FALSE	Send request, module ready to send (output)
CTS	OUT	Bool		FALSE	Ready to send, communication station can receive data (input)
DCD	OUT	Bool		FALSE	Data carrier signal detected, signal level received
RING	OUT	Bool		FALSE	Call display, signaling incoming call

Additional information about the general parameters is available at "General parameters for Freeport operations (Page 73)".

5.4.1.13 Signal_Set: Set accompanying signals

Note

Use with CM1241

The use of this instruction with a CM1241 is only possible from firmware version V2.1 of the module.

Description

The Signal_Set instruction (set RS232 signals) allows you to set the RS232 communication signals.

Note

Restrictions

- This instruction can only be used with CMs RS232 BA and RS232 HF.
- If RS232C is set for the operating mode, this instruction can also be used with CM PtP (ET200SP).

Parameters

Parameter	Declaration	Data type		Default	Description
		S7-1200/1500	S7-300/400/WinAC		
REQ	IN	Bool		FALSE	Starts the instruction upon a positive edge of this input.
PORT	IN	PORT (UInt)	Word	0	Specifies the communication module which is used for the communication: • For S7-1500/S7-1200: "HW identifier" from the device configuration. The symbolic port name is assigned in the "System constants" tab of the PLC tag table and can be applied from there. • For S7-300/S7-400: "Input address" from the device configuration. In the S7-300/400/WinAC systems the PORT parameter is assigned the input address assigned in HWCN.
SIGNAL	IN	Byte		0	Selection of the signal to be set (more than one possible): • 01H = RTS • 02H = DTR • 04H = DSR (for interface type DCE only)

Parameter	Declaration	Data type		Default	Description
		S7-1200/1500	S7-300/400/WinAC		
RTS	IN	Bool		FALSE	Send request, module ready to send Set this value at the output (TRUE or FALSE), default value: FALSE
DTR	IN	Bool		FALSE	Data terminal ready, module ready Set this value at the output (TRUE or FALSE), default value: FALSE
DSR	IN	Bool		FALSE	Data terminal ready (for DCE interface type only), not used.
COM_RST	IN/OUT	---	Bool	FALSE	Initialization of the instruction The instruction is initialized with TRUE. The instruction then resets COM_RST to FALSE.
DONE	OUT	Bool		FALSE	TRUE for one cycle after the last request has been completed without errors
ERROR	OUT	Bool		FALSE	TRUE for one cycle after the last request has been completed with errors
STATUS	OUT	Word		16#7000	Error code (see Error messages (Page 102))

Additional information about the general parameters is available at "General parameters for Freeport operations (Page 73)".

5.4.1.14 Get_Features: Get extended functions

Note

Use with CM1241

The use of this instruction with a CM1241 is only possible from firmware version V2.1 of the module.

Description

If supported by the module, you can use the Get_Features instruction (get extended functions) to get information on the ability of the module to support CRC and to generate diagnostic messages.

Parameters

Parameter	Declaration	Data type		Default	Description
		S7-1200/1500	S7-300/400/WinAC		
REQ	IN	Bool		FALSE	Starts the instruction upon a positive edge of this input.
PORT	IN	PORT	Word	0	Specifies the communication module which is used for the communication: • For S7-1500/S7-1200: "HW identifier" from the device configuration. The symbolic port name is assigned in the "System constants" tab of the PLC tag table and can be applied from there. • For S7-300/S7-400: "Input address" from the device configuration. In the S7-300/400/WinAC systems the PORT parameter is assigned the input address assigned in HWCN.
NDR	OUT	Bool		FALSE	TRUE for one cycle if new data is available and the instruction has been completed without errors
MODBUS_CRC	OUT	Bool		FALSE	Modbus CRC support
DIAG_ALARM	OUT	Bool		FALSE	Generation of diagnostic messages
SUPPLY_VOLT	OUT	Bool		FALSE	Diagnostics for missing supply voltage L+ is available
COM_RST	IN/OUT	---	Bool	FALSE	Initialization of the instruction The instruction is initialized with TRUE. The instruction then resets COM_RST to FALSE.

Parameter	Declaration	Data type		Default	Description
		S7-1200/1500	S7-300/400/WinAC		
ERROR	OUT	Bool		FALSE	TRUE for one cycle once the instruction has been completed with an error
STATUS	OUT	Word		16#7000	Error code (see Error messages (Page 102))

Additional information about the general parameters is available at "General parameters for Freeport operations (Page 73)".

5.4.1.15 Set_Features: Set extended functions

Note

Use with CM1241

The use of this instruction with a CM1241 is only possible from firmware version V2.1 of the module.

Description

If supported by the module, you can use the Set_Features instruction (select extended functions) to activate CRC support and the generation of diagnostic messages.

Parameters

Parameter	Declaration	Data type		Default	Description
		S7-1200/1500	S7-300/400/WinAC		
REQ	IN	Bool		FALSE	The instruction to set extended functions is started upon a positive edge at this input.
PORT	IN	PORT (UInt)	Word	0	Specifies the communication module which is used for the communication: • For S7-1500/S7-1200: "HW identifier" from the device configuration. The symbolic port name is assigned in the "System constants" tab of the PLC tag table and can be applied from there. • For S7-300/S7-400: "Input address" from the device configuration. In the S7-300/400/WinAC systems the PORT parameter is assigned the input address assigned in HWCN.
EN_MODBUS_CRC	IN	Bool		FALSE	Activate Modbus CRC support
EN_DIAG_ALARM	IN	Bool		FALSE	Activate generation of diagnostic messages
EN_SUPPLY_VOLT	IN	Bool		FALSE	Enable diagnostics for missing supply voltage L+
COM_RST	IN/OUT	---	Bool	FALSE	Initialization of the instruction The instruction is initialized with TRUE. The instruction then resets COM_RST to FALSE.
DONE	OUT	Bool		FALSE	TRUE for one execution once the last request is completed without errors

Parameter	Declaration	Data type		Default	Description
		S7-1200/1500	S7-300/400/WinAC		
ERROR	OUT	Bool		FALSE	TRUE for one cycle once the instruction has been completed with an error
STATUS	OUT	Word		16#7000	Error code (see Error messages (Page 102))

Additional information about the general parameters is available at "General parameters for Freeport operations (Page 73)".

5.4.1.16 Error messages

Overview of error messages - PtP

The error messages are provided at the STATUS output of an instruction and can be evaluated there or processed in the user program.

Error code	Description	Remedy
16#0000	No error	-
RECEIVE status and error codes		
16#0094	frame end identified based on the "Receipt of fixed/maximum frame length"	-
16#0095	frame end identified based on "Message timeout"	-
16#0096	frame end identified based on expiration of the "Character delay time"	-
16#0097	The frame was aborted because the maximum response time was reached.	-
16#0098	frame end identified based on the fulfillment of the "Read message length from message" conditions	-
16#0099	frame end identified based on the receipt of the "End sequence"	-
SEND status and error codes		
16#7000	Block idle	-
16#7001	Initial call for a new frame: Data transmission initiated	-
16#7002	Interim call: Data transmission running	-
16#8085	Invalid length	Select a suitable frame length. The following are valid (depending on the module): 1-1024/2048/4096 (Byte)
16#8088	The specified length exceeds the range set in the receive buffer. Note: If the data type STRING has been specified at the BUFFER parameter, this error code also appears if the current string is shorter than the length specified at the LENGTH parameter.	Change the range in the receive buffer or select a frame length which corresponds to the range set in the receive buffer. The following are valid (depending on the module): 1-1024/2048/4096 (bytes)
16#8090	Configuration error: Odd number of bytes for WString	Select an even number of bytes.
RECEIVE status and error codes		
16#7002	Interim call: Data transmission running	-
16#8088	The number of characters received exceeds the number specified at the BUFFER parameter.	Select a suitable frame length. The following are valid (depending on the module): 1-1024/2048/4096 (bytes)
16#8090	Configuration error: Odd number of bytes for WString	Select an even number of bytes.

Error code	Description	Remedy
Error message codes of the special functions		
16#818F	Incorrect parameter number setting (with USS only)	Select a suitable parameter number (PARAM). The following numbers are valid: 0-2047
16#8190	Incorrect setting of the CRC calculation	Select a suitable value for the CRC calculation. The following are valid: deactivated or activated. Check whether the module addressed supports CRC calculation.
16#8191	Incorrect setting of the diagnostic error interrupt	Select a suitable value for "Diagnostic error interrupt". The following are valid: Diagnostic error interrupt deactivated or diagnostic error interrupt activated. Check whether the module addressed supports the generation of diagnostic interrupts.
16#8193	The module does not support supply voltage diagnostics L+.	Select a suitable value for "Diagnostic interrupt". The following are permitted: Diagnostic interrupt deactivated or diagnostic interrupt activated. Check whether the module addressed supports the generation of diagnostic interrupts.
Error message codes of the "Port configuration"		
16#81A0	The module does not support this protocol.	Select a valid protocol for the module (PROTOCOL).
16#81A1	The module does not support this data transmission rate.	Select a valid data transmission rate for the module (BAUD).
16#81A2	The module does not support this parity setting.	Select a suitable value for "Parity" (PARITY). The following are valid: • None (1) • Even (2) • Odd (3) • Mark (4) • Space (5) • Any (6)
16#81A3	The module does not support this number of data bits.	Select a suitable value for "Number of data bits" (DATABITS). The following are valid: • 7 (2) • 8 (1)
16#81A4	The module does not support this number of stop bits.	Select a suitable value for "Number of stop bits" (STOPBITS). The following are valid: • 1 (1) • 2 (2)
16#81A5	The module does not support this type of data flow control.	Select a valid data flow control for the module (FLOWCTRL).

Error code	Description	Remedy
16#81A7	Invalid value for XON or XOFF	Select suitable values for XON (XONCHAR) and XOFF (XOFFCHAR). Valid range of values: 0...255
16#81AA	Invalid operating mode	Valid operating modes are: • Full duplex (RS232) (0) • Full duplex (RS422) four-wire mode (point-to-point) (1) / (CM PtP (ET 200SP)) • Full duplex (RS422) four-wire mode (multipoint master) (2)/ (CM PtP (ET 200SP)) • Full duplex (RS 422) four-wire mode (multipoint slave) (3) • Half duplex (RS485) two-wire mode. (4)
16#81AB	Invalid receive line initial state	Valid initial states are: • "No" default setting (0) • Signal R(A)=5 V, signal R(B)=0 V (break detection) (1): Can only be selected with: "Full duplex (RS422) four-wire mode (point-to-point connection)" and "Full duplex (RS422) four-wire mode (multipoint slave)". • Signal R(A)=0 V, signal R(B)=5 V (2): This default setting corresponds to the idle state (no active send operation).
16#81AC	Invalid value for "Break detection"	Select a suitable value for "Break detection". The following are valid: • Break detection deactivated (0) • Break detection activated (1).
16#81AF	The module does not support this protocol.	Select a valid protocol for the module.
Error codes of the "Send configuration"		
16#81B5	More than two end delimiters or end sequence > 5 characters	Select suitable values for "End delimiter" and "End sequence". The following are valid: • deactivated (0), • 1 (1) or 2 (2) end delimiters or • deactivated (0), • 1 (1) up to 5 (5) characters for the end sequence.
16#81B6	Send configuration rejected because the 3964(R) protocol was selected	Make sure that no send configuration is transmitted if the 3964(R) protocol is set.

Error code	Description	Remedy
Error codes of the "Receive configuration"		
16#81C0	Invalid start condition	Select a suitable start condition. The following are valid: • Send break before frame start • Send Idle Line.
16#81C1	Invalid end condition or no end condition selected	Select a suitable end condition (see Sending data with Freeport (Page 40)).
16#81C3	Invalid value for "Maximum message length"	Select a suitable value for "Maximum message length" (MAXLEN). Valid range of values (depending on the module): 1-1024/2048/4096 (Byte)
16#81C4	Invalid value for "Offset of the length specification in the message"	Select a suitable value for "Offset of the length specification in the message". Valid range of values (depending on the module): 1-1024/2048/4096 (Byte)
16#81C5	Invalid value for "Size of length field"	Select a suitable value for "Size of length field" (LENGTHSIZE). Valid range of values in bytes: • 1 (1) • 2 (2) • 4 (4)
16#81C6	Invalid value for "Number of characters not counted in length specification"	Select a suitable value for "Number of characters not counted in length specification" (LENGTHM). Valid range of values: 0 to 255 (bytes)
16#81C7	The total of "Offset in the message + size of length field + number of characters not counted" is greater than the maximum frame length	Select a suitable value for "Offset in message", "Size of length field" and "Number of characters not counted". Valid range of values: • Offset in the message (depending on the module): 0-1024/2048/4096 (bytes) • Size of length field: 1, 2, or 4 (bytes) • Number of characters not counted: 0 to 255 (bytes)
16#81C8	Invalid value for "Response timeout"	Select a suitable value for "Response timeout". Valid range of values: 1-65535 (ms)
16#81C9	Invalid value for "Character delay time"	Select a suitable value for "Character delay time". Valid range of values: 1 to 65535 (bit times)
16#81CB	frame end sequence is activated, but no character is activated for the check	Activate one or several characters for the check.
16#81CC	frame start sequence is activated, but no character is activated for the check	Activate one or several characters for the check.

Error code	Description	Remedy
16#81CD	Invalid value for "Prevent overwriting"	Select a suitable value for "Prevent overwriting". The following are valid: • Prevent overwriting is deactivated (0) or • Prevent overwriting is activated (1)
16#81CE	Invalid value for "Clear receive buffer on startup"	Select a suitable value for "Clear receive buffer on startup". The following are valid: • Clear receive buffer at startup is deactivated (0) • Clear receive buffer at startup is activated (1)
SEND status and error codes		
16#81D0	Receiving send request during runtime of a send command	Make sure that you do not receive an additional send request during runtime of a send command.
16#81D1	The waiting time for XON or CTS = ON has expired.	The communication partner has a fault, is too slow or is offline. Check the communication partner or change the parameters, if necessary.
16#81D2	"Hardware RTS always ON": Send job canceled due to change from DSR = ON to OFF	Check the communication partner. Make sure that DSR is ON for the entire duration of transmission.
16#81D3	Send buffer overflow / send frame too long	Select a shorter frame length. The following are valid (depending on the module): 1 to 1024/2048/4096 (bytes)
16#81D5	Transmission canceled due to parameter changes, detected wire break, or CPU in STOP	Check the parameter assignment, wire break, and CPU status.
16#81D6	Transmission canceled because end identifier was not received	Check the parameter assignment of the end characters and the frame of the communication partner.
16#81D7	Communication error between the user program and module	Check the communication (e.g., matching the sequence number).
16#81D8	Transmission attempt rejected because module is not configured	Configure the module.
16#81DF	The module has reset the interface to the FB for one of the following reasons: • Module was restarted • Module parameters were reassigned • CPU STOP	—

Error code	Description	Remedy
Error codes of the receive configuration		
16#81E0	Frame aborted: Send buffer overflow / send frame too long	Increase the call rate for the receive function in the user program or configure communication with data flow control.
16#81E1	Frame aborted: Parity error	Check the connection line of the communication partners, or verify that the same data transmission rate, parity and stop bit number are configured for both devices.
16#81E2	Frame aborted: Character frame error	Check the settings for start bit, data bits, parity bit, data transmission rate, and stop bit(s).
16#81E3	Frame aborted: Character overflow error	Firmware error: Please contact Customer Support.
16#81E4	Frame aborted: The total length of "Offset in the message + size of the length field + number of characters not counted" is greater than the receive buffer	Select a suitable value for offset in message, size of the length field, and number of characters not counted.
16#81E5	Frame aborted: Break	Receive line to partner is interrupted. Reconnect or switch on partner.
16#81E6	Maximum number of "Buffered received frames" exceeded	In the user program call the instruction more often or configure a communication with data flow control or increase the number of buffered frames.
16#81E7	Synchronization error module and Receive_P2P	Make sure that different instances of the Receive_P2P do not access the same module.
16#81E8	Frame aborted: The character delay time has expired before the message end criterion was detected	Partner device faulty or too slow. Check this, if required, using an interface tester that is interconnected in the transmission line.
16#81E9	Modbus CRC error (only communication modules which support Modbus)	Checksum error of the Modbus frame. Check the communication partner.
16#81EA	Modbus frame too short (only communication modules which support Modbus)	Minimum length of Modbus frame not met. Check the communication partner.
16#81EB	Frame aborted: Maximum frame length reached	Select a shorter frame length at the communication partner. The following are valid (depending on the module): 1-1024/2048/4096 (bytes) Check the parameters for end of frame detection.

Error code	Description	Remedy
Error codes V24 accompanying signals		
16#81F0	The module does not support V24 accompanying signals	You have tried to set accompanying signals for a module that does not support V24 accompanying signals. Make sure that this is an RS232 module or that RS232 mode (ET 200SP) is set.
16#81F1	No operation of the V24 accompanying signals	The V24 accompanying signals cannot be operated manually if hardware data flow control is active.
16#81F2	The DSR signal cannot be set because the module has the type DTE.	Check the configured type of the module. The module type must be DCE (data communication equipment).
16#81F3	The DTR signal cannot be set because the module has the type DCE.	Check the configured type of the module. The module type must be DTE (data terminal equipment).
16#81F4	Block header error (e.g. incorrect block type or incorrect block length)	Check the instance DB and the block header.
Error codes of the receive configuration		
16#8201 [1)]	Receive_Conditions is a pointer to an invalid data type	Enter a pointer to one of the following data types: DB, BOOL, BYTE, CHAR, WORD, INT, DWORD, DINT, REAL, DATE, TIME_OF_DAY, TIME, S5TIME, DATE_AND_TIME, STRING
16#8225	Receive_Conditionspoints to an optimized memory area greater than 1 kB or Receive_Conditions points to an optimized memory area and the receive length is greater than the area addressed by Receive_Conditions.	Enter a pointer to an area with a maximum length of: • Optimized memory area: 1 KB • Non-optimized memory area: 4 KB Note: If the pointer points to an optimized memory area, do not send more than 1 KB.
16#8229 [1)]	Receive_Conditions is a pointer to BOOL with a number of bits not equal to n * 8	If you are using a pointer to BOOL, the number of bits must be a multiple of 8.
Error codes, general		
16#8280	Negative acknowledgment when reading module	You can find more detailed information on error causes in theRDREC.STATUS static parameters and in the description of the SFB RDREC. • Check the input at the PORT parameter • Set the COM_RST parameter before the 1st call.
16#8281	Negative acknowledgment when writing module	Check the input at the PORT parameter You can find more detailed information on error causes in the WRREC.STATUS static parameters and in the description of the SFB WRREC.
16#8282	Module not available	Check the input at the PORT parameter and ensure that the module can be reached.

Error code	Description	Remedy
Error codes of the receive configuration		
16#82C1	Invalid value for "Buffered received frames".	Select a suitable value for "Buffered received frames". Valid range of values: 1-255
16#82C2	Receive configuration rejected because the 3964(R) protocol was selected	Make sure that no receive configuration is sent if the 3964(R) protocol is set.
16#8301 1)	Receive_Conditions is a pointer to an invalid data type	Select a valid data type. The following are valid: DB, BOOL, BYTE, CHAR, WORD, INT, DWORD, DINT, REAL, DATE, TIME_OF_DAY, TIME, S5TIME, DATE_AND_TIME, STRING
16#8322	Range length error when reading a parameter	Check the input at the Receive_Conditions parameter
16#8324	Range error when reading a parameter	Check the input at the Receive_Conditions parameter
16#8328	Setting error when reading a parameter	Check the input at the Receive_Conditions parameter
SEND status and error codes		
16#8328 1)	BUFFER is a pointer to BOOL with a number of bits not equal to n * 8	If you are using a pointer to BOOL, the number of bits must be a multiple of 8.
Error codes of the receive configuration		
16#8332	Invalid data block at the Receive_Conditions parameter	Check the input at the Receive_Conditions parameter
16#833A	The designation of the data block at the Receive_Conditions parameter refers to a data block which is not loaded.	Check the input at the Receive_Conditions parameter
16#8351	Invalid data type	Check the input at the Receive_Conditions parameter
16#8352 1)	Receive_Conditions does not point to a data block	Check the pointer to Receive_Conditions
16#8353 1)	Receive_Conditions does not point to a structure of the typeReceive_Conditions	Check the pointer to Receive_Conditions
Error codes 3964(R) protocol		
16#8380	Parameter assignment error: Invalid value for "Character delay time".	Select a suitable value for "Character delay time" (CharacterDelayTime). Valid range of values: 1 to 65535 (ms)
16#8381	Parameter assignment error: Invalid value for "Response timeout".	Select a suitable value for "Response timeout" (AcknDelayTime). Valid range of values: 1 to 65535 (ms)
16#8382	Parameter assignment error: Invalid value for "Priority".	Select a suitable value for "Priority" (Priority). The following are valid: • High (1) • Low (0)
16#8383	Parameter assignment error: Invalid value for "Block check"	Select a suitable value for "Block check" (BCC). The following are valid: • With block check (1) • Without block check (0)

Error code	Description	Remedy
16#8384	Parameter assignment error: Invalid value for "Connection attempts".	Select a suitable value for "Connection attempts" (BuildupAttempts). Valid range of values: 1-255
16#8385	Parameter assignment error: Invalid value for "Transmission attempts".	Select a suitable value for "Transmission attempts" (RepetitionAttempts). Valid range of values: 1-255
16#8386	Runtime error: Number of connection attempts exceeded	Check the interface cable and the transmission parameters. Also check whether the receive function is configured correctly at the partner device.
16#8387	Runtime error: Number of transmission attempts exceeded	Check the interface cable, the transmission parameters and the configuration of the communication partner.
16#8388	Runtime error: Error at the "Block check character" The internally calculated value of the block check character does not correspond to the block check character received by the partner at the connection end.	Check whether the connection is seriously disrupted; in this case you may also occasionally see error codes. Check for proper function at the partner device, possibly by using an interface test device that is switched into the transmission line.
16#8389	Runtime error: Invalid character received while waiting for free receive buffer	The send request of the communication partner (STX, 02H) is only answered with DLE when the receive buffer is empty. No additional character may be received before (except STX again). Check for proper function at the partner device, possibly by using an interface test device that is switched into the transmission line.
16#838A	Runtime error: Logical error during receiving. After DLE was received, a further random character (other than DLE or ETX) was received.	Check if partner DLE in frame header and in data string is always in duplicate or the connection is released with DLE ETX. Check for proper function at the partner device, possibly by using an interface test device that is switched into the transmission line.
16#838B	Runtime error: Character delay time exceeded	Partner device too slow or faulty. Verify by using an interface test device that is switched into the transmission line, if necessary.
16#838C	Runtime error: Wait time for free receive buffer has started	In the user program call the instruction more often or configure a communication with data flow control.
16#838D	Runtime error: frame repetition does not start within 4 s after NAK	Check the communication partner. A received frame that is possibly corrupted must be repeated by the partner within 4 seconds.
16#838E	Runtime error: In idle mode, one or several characters (other than NAK or STX) were received.	Check for proper function of the partner device, possibly using an interface test device that is switched into the transmission line.
16#838F	Runtime error: Initialization conflict - Both partners have set high priority	Set the "Low" priority at one of the partners
16#8391	Parameter assignment error: 3964 configuration data rejected because Freeport is set	If the Freeport protocol is set, make sure that no 3964 parameter assignment data is sent.

[1] Only with instructions for S7-300/400 CPUs

Overview of error messages - Modbus

Error code	Description	Remedy
16#0000	No error	-
Configuration error of the interface - Modbus_Comm_Load		
16#8181	The module does not support this data transmission rate.	Select a valid data transmission rate for the module at the BAUD parameter.
16#8182	The module does not support this parity setting.	Select a suitable value for "Parity" at the PARITY parameter. The following are valid: • None (1) • Even (2) • Odd (3) • Mark (4) • Space (5) • Any (6)
16#8183	The module does not support this type of data flow control.	Select a valid data flow control for the module at the FLOW_CTRL parameter.
16#8184	Invalid value for "Response timeout".	Select a suitable value for "Response timeout" at the RESP_TO parameter. Valid range of values: 1 to 65535 (ms)
16#8280	Negative acknowledgment when reading module	Check the input at the PORT parameter. You can find more detailed information on error causes in the Send_Config.RDREC.STATUS or Receive_Config.RDREC.STATUS static parameters or RDREC.STATUS and in the description of the SFB RDREC.
16#8281	Negative acknowledgment when writing module	Check the input at the PORT parameter. You can find more detailed information on error causes in the Send_Config.WRREC.STATUS or Receive_Config.WRREC.STATUS static parameters or WRREC.STATUS and in the description of the SFB WRREC.
16#8282	Module not available	Check the input at the PORT parameter and ensure that the module can be reached.

Error code	Description	Remedy
Configuration error - Modbus_Slave		
16#8186	Invalid slave address	Select a suitable slave address at the MB_ADDR parameter. The following are valid: 1-247 at standard address area; 1-65535 at extended address area (0 is reserved for Broadcast)
16#8187	Invalid value at MB_HOLD_REG parameter	Select a suitable value for the hold register at the MB_HOLD_REG parameter.
16#8188	Invalid operating mode or broadcast (MB_ADDR = 0) and MODE parameter ≠ 1	Select the value 1 for MODE in Broadcast mode or select a different operating mode.
16#818C	The pointer to a MB_HOLD_REG area must be a data block or a bit memory address area.	Select a suitable value for the pointer to the MB_HOLD_REG area.
16#8280	Negative acknowledgment when reading module	Check the input at the PORT parameter. You can find more detailed information on error causes in the static parameters Send_P2P.RDREC.STATUS or Receive_P2P.RDREC.STATUS, and in the description of the SFB RDREC.
16#8281	Negative acknowledgment when writing module	Check the input at the PORT parameter. You can find more detailed information on error causes in the static parameters Send_P2P.WRREC.STATUS or Receive_P2P.WRREC.STATUS, and in the description of the SFB WRREC.
16#8452 [1)]	MB_HOLD_REG is not a pointer to a DB or a bit memory area	Check the MB_HOLD_REG pointer
16#8453 [1)]	MB_HOLD_REG is not a pointer of type BOOL or WORD	Check the MB_HOLD_REG pointer
16#8454 [1)]	The area addressed by MB_HOLD_REG is longer than the DB, or the area addressed is too small for the number of data bytes to be read or written.	Check the MB_HOLD_REG pointer
16#8455 [1)]	MB_HOLD_REG points to a write-protected DB	Check the MB_HOLD_REG pointer
16#8456 [1)]	Error during instruction execution. The cause of the error is shown in the STATUS parameter.	Determine the value of the SFCSTATUS parameter. Check what this means in the description for SFC51, STATUS parameter.

Error code	Description	Remedy
Configuration error - Modbus_Master		
16#8180	Invalid value for MB_DB parameter	The value configured for MB_DB (instance data DB) at the Modbus_Comm_Load instruction is not valid. Check the interconnection of the Modbus_Comm_Load instruction and its error messages.
16#8186	Invalid station address	Select a suitable station address at the MB_ADDR parameter. The following are valid: 1-247 at standard address area; 1-65535 at extended address area (0 is reserved for Broadcast)
16#8188	Invalid operating mode or broadcast (MB_ADDR = 0) and MODE parameter ≠ 1	Select the value 1 for MODE in Broadcast mode or select a different operating mode.
16#8189	Invalid data address	Select a suitable value for the data address at the DATA_ADDR parameter. See description Modbus_Master (Page 125) in the Info system
16#818A	Invalid length	Select a suitable data length at the DATA_LEN parameter. See description Modbus_Master (Page 125) in the Info system
16#818B	Invalid value for DATA_PTR	Select a suitable value for the data pointer at the DATA_PTR parameter (M or DB address). See description Modbus_Master (Page 125) in the Info system
16#818C	Interconnection error of the DATA_PTR parameter	Check the interconnection of the instruction.
16#818D	The area addressed by DATA_PTR is longer than the DB, or the area addressed is too small for the number of data bytes to be read or written.	Check the DATA_PTR pointer
16#8280	Negative acknowledgment when reading module	Check the input at the PORT parameter. You can find more detailed information on error causes in the static parameters Send_P2P.RDREC.STATUS or Receive_P2P.RDREC.STATUS, and in the description of the SFB RDREC.
16#8281	Negative acknowledgment when writing module	Check the input at the PORT parameter. You can find more detailed information on error causes in the static parameters Send_P2P.WRREC.STATUS or Receive_P2P.WRREC.STATUS or Receive_Reset and in the description of the SFB WRREC.

Error code	Description	Remedy
Communication errors - Modbus_Master and Modbus_Slave		
16#80D1	The waiting time for XON or CTS = ON has expired.	The communication partner has a fault, is too slow or is offline. Check the communication partner or change the parameters, if necessary.
16#80D2	"Hardware RTS always ON": Send job canceled due to change from DSR = ON to OFF	Check the communication partner. Make sure that DSR is ON for the entire duration of transmission.
16#80E0	Frame aborted: Send buffer overflow / send frame too long	In the user program call the instruction more often or configure a communication with data flow control.
16#80E1	Frame aborted: Parity error	Check the connection line of the communication partners, or verify that the same data transmission rate, parity and stop bit number are configured for both devices.
16#80E2	Frame aborted: Character frame error	Check the settings for start bit, data bits, parity bit, data transmission rate, and stop bit(s).
16#80E3	Frame aborted: Character overflow error	Check the number of data in the frame of the communication partner.
16#80E4	Frame aborted: Maximum frame length reached	Select a shorter frame length at the communication partner. The following are valid (depending on the module): 1 to 1024/2048/4096 (bytes)
Communication error - Modbus_Master		
16#80C8	The slave does not respond within the set time	Check the data transmission rate, parity and wiring of the slave.
16#80C9	The slave does not respond within the time set by Blocked_Proc_Timeout.	Check the setting for Blocked_Proc_Timeout. Check if the module has been configured with the Modbus_Comm_Load instruction. The module may possibly need to be reconfigured using Modbus_Comm_Load after a pull/plug or after voltage recovery.
16#8200	The interface is busy with an ongoing request.	Repeat the command later. Make sure that there are no commands still running before you start a new one.
Protocol error - Modbus_Slave (only communication modules that support Modbus)		
16#8380	CRC error	Checksum error of the Modbus frame. Check the communication partner.
16#8381	The function code is not supported or is not supported for broadcast.	Check the communication partner and make sure that a valid function code is sent.
16#8382	Invalid length information in the request frame	Select a suitable data length at the DATA_LEN parameter.
16#8383	Invalid data address in the request frame	Select a suitable value for the data address at the DATA_ADDR parameter.
16#8384	Invalid data value error in the request frame	Check the data value in the request frame of the Modbus master
16#8385	The diagnostic value is not supported by the Modbus slave (function code 08)	The Modbus slave only supports the diagnostic values 16#0000 and 16#000A.

Error code	Description	Remedy
Protocol error - Modbus_Master (only communication modules that support Modbus)		
16#8380	CRC error	Checksum error of the Modbus frame. Check the communication partner.
16#8381	Response frame from Modbus Slave with the following error message: The function code is not supported.	Check the communication partner and make sure that a valid function code is sent.
16#8382	Response frame from Modbus Slave with the following error message: Invalid length	Select a suitable data length.
16#8383	Response frame from Modbus Slave with the following error message: Invalid data address in the request frame	Select a suitable value for the data address at the DATA_ADDR parameter.
16#8384	Response frame from Modbus Slave with the following error message: Data value error	Check the request frame to the Modbus slave.
16#8385	Response frame from Modbus Slave with the following error message: The diagnostic value is not supported by the Modbus slave	The Modbus slave only supports the diagnostic values 16#0000 and 16#000A.
16#8386	The returned function code does not match the requested function code.	Check the response frame and the addressing of the slave.
16#8387	A slave that was not requested answers	Check the response frame of the slave. Check the address settings of the slave.
16#8388	Error in the response of the slave to a write request.	Check the response frame of the slave.
16#8828 [1]	DATA_PTR points to a bit address that is not equal to n * 8	Check the DATA_PTR pointer
16#8852 [1]	DATA_PTR is not a pointer to a DB or a bit memory area	Check the DATA_PTR pointer
16#8853 [1]	DATA_PTR is not a pointer of type BOOL or WORD	Check the DATA_PTR pointer
16#8855 [1]	DATA_PTR points to a write-protected DB	Check the DATA_PTR pointer
16#8856 [1]	Error during call of SFC51	Call the Modbus_Master instruction again
Error - Modbus_Slave (only communication modules that support Modbus)		
16#8428 [1]	MB_HOLD_REG points to a bit address that is not equal to n * 8	Check the MB_HOLD_REG pointer
16#8452 [1]	MB_HOLD_REG is not a pointer to a DB or a bit memory area	Check the MB_HOLD_REG pointer
16#8453 [1]	MB_HOLD_REG is not a pointer of type BOOL or WORD	Check the MB_HOLD_REG pointer
16#8454 [1]	The area addressed by MB_HOLD_REG is longer than the DB, or the area addressed is too small for the number of data bytes to be read or written.	Check the MB_HOLD_REG pointer
16#8455 [1]	MB_HOLD_REG points to a write-protected DB	Check the MB_HOLD_REG pointer
16#8456 [1]	Error during call of SFC51	Call the Modbus_Slave instruction again

[1] Only with instructions for S7-300/400 CPUs

Overview of error messages - USS

Error code	Description	Remedy
16#0000	No error	-
16#8180	Length error in response of drive	Check the response frame of the drive.
16#8181	Data type error	Select a suitable data type. The following are valid: • Real • Word • Double word
16#8182	Data type error: "Double word" or "Real" may not be returned for the "Word" request.	Check the response frame of the drive.
16#8183	Data type error: "Word" may not be returned for the "Double word" or "Real" request.	Check the response frame of the drive.
16#8184	Checksum error in response of drive	Check the drive and the communication connection.
16#8185	Addressing error	Valid drive address range: 1 to 16
16#8186	Setpoint error	Valid setpoint range: -200% to +200%
16#8187	Incorrect drive number returned	Check the response frame of the drive.
16#8188	Invalid PZD length	Permitted PZD lengths: 2, 4, 6, 8 words
16#8189	The module does not support this data transmission rate.	Select a valid data transmission rate for the module.
16#818A	A different request for this drive is currently active.	Repeat the parameter read or write command later.
16#818B	The drive does not respond.	Check the drive.
16#818C	The drive responds with an error message to a parameter request.	Check the response frame of the drive. Check the parameter request. Check if the instructions USS_Read_Param, USS_Write_Param or USS_Port_Scan have reported an error. If they have, check the value of the static tag USS_DB. w_USSExtendedError of the USS_Drive_Control instruction.
16#818D	The drive responds with an access error message to a parameter request.	Check the response frame of the drive. Check the parameter request.
16#818E	The drive was not initialized.	Check the user program and make sure that the USS_Drive_Control instruction is called for this drive.

Error code	Description	Remedy
16#8280	Negative acknowledgment when reading module	Check the input at the PORT parameter. You can find more detailed information on error causes in the static parameters Port_Config.RDREC.STATUS, Send_Config.RDREC.STATUS , Receive_Config.RDREC.STATUS , Send_P2P.RDREC.STATUS or Receive_P2P.RDREC.STATUS, and in the description of the SFB RDREC.
16#8281	Negative acknowledgment when writing module	Check the input at the PORT parameter. You can find more detailed information on error causes in the static parameters Port_Config.WRREC.STATUS, Send_Config.WRREC.STATUS , Receive_Config.WRREC.STATUS , Send_P2P.RDREC.STATUS or Receive_P2P.RDREC.STATUS, and in the description of the SFB WRREC.

1) Only with instructions for S7-300/400 CPUs

5.4.2 MODBUS (RTU)

5.4.2.1 Overview of the Modbus RTU communication

Modbus RTU communication

Modbus RTU (Remote Terminal Unit) is a standard protocol for communication in the network and uses the RS232 or RS422/485 connection for serial data transmission between Modbus devices in the network.

Modbus RTU uses a master/slave network in which all communication is triggered by a single master device while the slaves can only respond to the request of the master. The master sends a request to a slave address and only the slave with this slave address responds to the command.

Exception: Modbus slave address 0 sends a broadcast frame to all slaves (without slave response).

Modbus function codes

- A CPU that is operated as a Modbus RTU master can read and write data and I/O states in a Modbus RTU slave connected by means of a communication connection.
- A CPU operated as a Modbus RTU slave allows a Modbus RTU master connected over a communication connection to read and write data and I/O states in its own CPU.

Table 5- 12 Functions for reading data: Reading distributed I/O and program data

Modbus function code	Functions for reading data from the slave (server) - standard addressing
01	Read output bits: 1 to 2000/1992[1)] bits per request
02	Read input bits: 1 to 2000/1992[1)] bits per request
03	Read hold register: 1 to 125/124[1)] words per request
04	Read input words: 1 to 125/124[1)] words per request

1) for extended addressing

Table 5- 13 Functions for writing data: Changing distributed I/O and program data

Modbus function code	Functions for writing of data in the slave (server) - standard addressing
05	Write one output bit: 1 bit per request
06	Write one hold register: 1 word per request
15	Write one or several output bits: 1 to 1960 bits per request
16	Write one or several hold registers: 1 to 122 words per request

- The Modbus function codes 08 and 11 offer diagnostic options for communication with the slave device.
- Modbus slave address 0 sends a broadcast frame to all slaves (without slave response; for function codes 5, 6, 15, 16).

Table 5- 14 Station addresses in the Modbus network

Station		Address
RTU station	Standard station address	1 to 247 and 0 for broadcast
	Extended station address	1 to 65535 and 0 for broadcast

Modbus memory addresses

The number of Modbus memory addresses (input/output addresses) that is actually available depends on the CPU version and the available work memory.

Modbus RTU instructions in your program

- Modbus_Comm_Load: You need to run Modbus_Comm_Load to set up PtP parameters such as data transmission rate, parity and data flow control. Once you have configured the communication module for the Modbus RTU protocol, it can only be used by the Modbus_Master instruction or the Modbus_Slave instruction.
- Modbus_Master: The CPU can be used as Modbus RTU master device with the Modbus master instruction for communication with one or more Modbus slave devices.
- Modbus_Slave: The CPU can be used as Modbus RTU slave device with the Modbus slave instruction for communication with one Modbus master device.

5.4.2.2 Modbus_Comm_Load: Configure communication module for Modbus

Note

Use with CM1241

The use of this instruction with a CM1241 is only possible from firmware version V2.1 of the module.

Description

The Modbus_Comm_Load instruction configures a communication module for communication by means of the Modbus RTU protocol. An instance data block is automatically assigned when you add the Modbus_Comm_Load instruction in your program.

Configuration changes of Modbus_Comm_Load are saved on the CM and not in the CPU. With voltage recovery and pulling/plugging, the CM is configured with the data saved in the device configuration. The Modbus_Comm_Load instruction must be called in these scenarios.

Parameters

Parameter	Declaration	Data type		Standard	Description
		S7-1200/1500	S7-300/400/WinAC		
REQ	IN	Bool		FALSE	Starts the instruction upon a positive edge of this input.
PORT	IN	Port	Laddr	0	Specifies the communication module which is used for the communication: • For S7-1500/S7-1200: "HW identifier" from the device configuration. The symbolic port name is assigned in the "System constants" tab of the PLC tag table and can be applied from there. • For S7-300/S7-400: "Input address" from the device configuration. In the S7-300/400/WinAC systems the PORT parameter is assigned the input address assigned in HWCN.
BAUD	IN	UDInt	DWord	9600	Selection of the data transmission rate Valid values are: 300, 600, 1200, 2400, 4800, 9600, 19200, 38400, 57600, 76800, 115200 bit/s.
PARITY	IN	UInt	Word	0	Selection of parity: • 0 – None • 1 – Odd • 2 – Even

Parameter	Declaration	Data type		Standard	Description
		S7-1200/1500	S7-300/400/WinAC		
FLOW_CTRL	IN	UInt	Word	0	Selection of flow control: • 0 – (default) no flow control • 1 – Hardware flow control with RTS always ON (not with RS422/485 CMs) • 2 – Hardware flow control with RTS switched (not with RS422/485 CMs)
RTS_ON_DLY	IN	UInt	Word	0	Selection RTS ON delay: • 0 – No delay from "RTS active" until the first character of the frame is sent. • 1 to 65535 – Delay in milliseconds from "RTS active" until the first character of the frame is sent (not with RS422/485 CMs). RTS delays must be used independent of the selection FLOW_CTRL.
RTS_OFF_DLY	IN	UInt	Word	0	Selection RTS OFF delay: • 0 – No delay after transmission of last character until "RTS inactive" • 1 to 65535 – Delay in milliseconds after transmission of last character until "RTS inactive" (not with RS422/485 ports). RTS delays must be used independent of the selection FLOW_CTRL.
RESP_TO	IN	UInt	Word	1000	Response timeout: 5 ms to 65535 ms - Time in milliseconds that Modbus_Master waits for a response from the slave. If the slave does not respond within this period, Modbus_Master repeats the request or terminates the request with an error if the specified number of repetitions (see below, RETRIES parameter) has been sent.
MB_DB	IN/OUT	MB_BASE		-	A reference to the instance data block of the Modbus_Master or Modbus_Slave instructions. The MB_DB parameter must be connected with the (static and therefore not visible in the instruction) MB_DB parameter of the Modbus_Master or Modbus_Slave instruction.
COM_RST	IN/OUT	---	Bool	FALSE	Initialization of the Modbus_Comm_Load instruction The instruction is initialized with TRUE. The instruction then resets COM_RST to FALSE. Note: The parameter is only available for S7-300/400 instructions.
DONE	OUT	Bool		FALSE	The DONE bit is TRUE for one cycle after the last request has been completed without errors.

Parameter	Declaration	Data type		Standard	Description
		S7-1200/1500	S7-300/400/WinAC		
ERROR	OUT	Bool		FALSE	The ERROR bit is TRUE for one cycle after the last request has been completed with errors. The error code in the STATUS parameter is only valid in the cycle in which ERROR = TRUE.
STATUS	OUT	Word		16#7000	Error code (see Error messages (Page 151))

Modbus_Comm_Load is executed to configure a port for the Modbus RTU protocol. Once you have configured the port for the Modbus RTU protocol, it can only be used by the Modbus_Master or Modbus_Slave instructions.

You have to run Modbus_Comm_Load for the configuration of each communication port that is to be used for Modbus communication. You must assign a unique Modbus_Comm_Load instance DB to each port that you use. Only run Modbus_Comm_Load again if you need to change communication parameters, such as data transmission rate or parity, or in case the network has returned.

For example, an instance data block is assigned to the instruction if you add Modbus_Master or Modbus_Slave to your program. You need to connect the MB_DB parameter of the Modbus_Comm_Load instruction to the MB_DB parameter of the Modbus_Master or Modbus_Slave instruction.

Modbus_Comm_Load data block tags

The table below shows the public static tags in the instance DB of Modbus_Comm_Load that you can use in your program.

Table 5- 15 Static tags in the instance DB

Tag	Data type		Standard	Description
	S7-1200/1500	S7-300/400/WinAC		
ICHAR_GAP	Word		0	Maximum character delay time between characters. This parameter is specified in milliseconds and increases the anticipated period between the received characters. The corresponding number of bit times for this parameter is added to the Modbus default value of 35 bit times (3.5 character times).
RETRIES	Word		2	Number of retries that the master executes before the error code 0x80C8 for "No response" is returned.
EN_SUPPLY_VOLT	Bool		0	Enable diagnostics for missing supply voltage L+
MODE	USInt	Byte	0	Operating mode Valid operating modes are: • 0 = Full duplex (RS232) • 1 = Full duplex (RS422) four-wire mode (point-to-point) • 2 = Full duplex (RS 422) four-wire mode (multipoint master, CM PtP (ET 200SP)) • 3 = Full duplex (RS 422) four-wire mode (multipoint slave, CM PtP (ET 200SP)) • 4 = Half duplex (RS485) two-wire mode [1)]
LINE_PRE	USInt	Byte	0	Receive line initial state Valid initial states are: • 0 = "No" initial state [1)] • 1 = signal R(A)=5 V, signal R(B)=0 V (break detection): Break detection is possible with this initial state. Can only be selected with: "Full duplex (RS422) four-wire mode (point-to-point connection)" and "Full duplex (RS422) four-wire mode (multipoint slave)". • 2 = signal R(A)=0 V, signal R(B)=5 V: This default setting corresponds to the idle state (no active send operation). No break detection is possible with this initial state.
BRK_DET	USInt	Byte	0	Break detection The following are valid: • 0 = break detection deactivated • 1 = break detection activated

Tag	Data type		Standard	Description
	S7-1200/1500	S7-300/400/WinAC		
EN_DIAG_ALARM	Bool		0	Activate diagnostics interrupt: • 0 - not activated • 1 - activated
STOP_BITS	USINT	Byte	1	Number of stop bits; • 1 = 1 stop bit, • 2 = 2 stop bits, • 0, 3 to 255 = reserved

1) Required setting for the use of PROFIBUS cables with CM 1241 for RS485

Instruction versions

Version 3.1 is functionally identical to version 3.0 and its version number was only incremented due to internal measures.

5.4.2.3 Modbus_Master: Communicate as Modbus master

Note

Use with CM1241

The use of this instruction with a CM1241 is only possible from firmware version V2.1 of the module.

Description

The Modbus_Master instruction communicates as Modbus master via a port configured by the Modbus_Comm_Load instruction. An instance data block is automatically assigned when you add the Modbus_Master instruction in your program. The MB_DB parameter of the Modbus_Comm_Load instruction must be connected to the (static) MB_DB parameter of the Modbus_Master instruction.

Parameters

Parame-ters	Declaration	Data type		Standard	Description
		S7-1200/1500	S7-300/400/WinAC		
REQ	IN	Bool		FALSE	FALSE = no request TRUE = request to send data to the Modbus slave
MB_ADDR	IN	UInt	Word	-	Modbus RTU station address: Standard addressing range (1 to 247 as well as 0 for Broadcast) Extended addressing range (1 to 65535 as well as 0 for Broadcast) The value 0 is reserved for the broadcast of a frame to all Modbus slaves. Only the Modbus function codes 05, 06, 15 and 16 are supported for the broadcast.
MODE	IN	USInt	Byte	0	Mode selection: Specifies the type of request (read, write or diagnostics). Additional information is available in the table of Modbus functions below.
DATA_ADDR	IN	UDInt	DWord	0	Start address in the slave: Specifies the start address of the data that is accessed in the Modbus slave. The valid addresses are listed in the table of Modbus functions below.
DATA_LEN	IN	UInt	Word	0	Data length: Specifies the number of bits or words this instruction is to access. The valid lengths are listed in the table of Modbus functions below.
COM_RST	IN/OUT	---	Bool	FALSE	Initialization of the Modbus_Master instruction The instruction is initialized with TRUE. The instruction then resets COM_RST to FALSE. Note: The parameter is only available for S7-300/400 instructions.

Parameters	Declaration	Data type		Standard	Description
		S7-1200/1500	S7-300/400/WinAC		
DATA_PTR	IN/OUT	Variant	Any	-	Data pointer: Points to the flag or DB address for the data to be written or read. As of instruction version V3.0: The parameter may point to an optimized memory area. In the optimized memory area, a single element or an array is permitted with the following data types: Bool, Byte, Char, Word, Int, DWord, DInt, Real, USInt, UInt, UDInt, SInt, WChar. Every other data type results in error message 16#818C.
DONE	OUT	Bool		FALSE	The DONE bit is TRUE for one cycle after the last request has been completed without errors.
BUSY	OUT	Bool		-	• FALSE – no command active for Modbus_Master • TRUE – command for Modbus_Master in progress
ERROR	OUT	Bool		FALSE	The ERROR bit is TRUE for one cycle after the last request has been completed with errors. The error code in the STATUS parameter is only valid in the cycle in which ERROR = TRUE.
STATUS	OUT	Word		0	Error code (see Error messages (Page 151))

Tags in the data block of the Modbus master

The table below shows the public static tags in the instance DB of Modbus_Master that you can use in your program.

Table 5- 16 Static tags in the instance DB

Tag	Data type	Standard	Description
Blocked_Proc_Timeout	Real	3.0	Duration (in seconds) for which to wait for a blocked Modbus master instance before this instance is removed as ACTIVE. This may happen, for example, if a master request was output and the program then stops to call the master function before it has completely finished the request. The time value must be greater than 0 and less than 55 seconds to avoid an error to occur. See also "Rules for communication by the Modbus-Master" and "Calling theModbus_Master instruction with different parameter settings".
Extended_Addressing	Bool	FALSE	Configures the slave station address as single or double byte. • FALSE = One-byte address; 0 to 247 • TRUE = Two-byte address (corresponds to extended addressing); 0 to 65535
Compatibility_Mode [1)]	Bool	FALSE	Compatibility mode with CP 341 and CP 441-2 and ET 200SP 1SI with driver for Modbus RTU and with ET 200SP 1SI for Modbus. The default value is 0. • FALSE = as per Modbus specification, not compatible • TRUE = compatible – For FC1 and FC2: The data read from the received frame is written word for word to the addressed CPU memory and exchanged byte by byte. If the number of bits to be transmitted is not a multiple of 16, the bits which are not relevant are set to null in the last word. – For FC15: The words to be transmitted are read word by word from the addressed memory and written byte by byte to the send frame. If the number of bits to be transmitted is not a multiple of 8, the bits in the last byte which are not relevant are read unchanged from the addressed memory and entered in the send frame.
MB_DB	MB _BASE	-	The MB_DB parameter of the Modbus_Comm_Load instruction must be connected to this MB_DB parameter of the Modbus_Master instruction.

[1)] The PtP communication modules respond as defined in the Modbus specification. To retain a response as with CP 341, CP 441-2 and ET 200SP 1SI for Modbus, use the "Compatibility_Mode" parameter.

You program can write values to the Blocked_Proc_Timeout and Extended_Addressing tags to control the Modbus master operations.

Rules for communication by the Modbus-Master

- Modbus_Comm_Load must be run to configure a port so that the Modbus_Master instruction can communicate with this port.
- A port which is to be used as Modbus master must not be used by Modbus_Slave . You can use one or several instances of Modbus_Master [1)] with this port. But all versions of the Modbus_Master must use the same instance DB for the port.
- The Modbus instructions do not use communication alarm events to control the communication process. Your program must query the Modbus_Master instruction for completed commands (DONE, ERROR).
- We recommend to call all executions of Modbus_Master for a specific port from a program cycle OB. Modbus master instructions can only be executed in one program cycle or in one cyclical/time-controlled processing level. They may not be processed in different processing levels. The priority interruption of a Modbus master instruction by another Modbus master instruction in a processing level with higher priority results in improper operation. Modbus master instructions may mot be processed in startup, diagnostic or time error levels.

[1)] "Instance of Modbus master" here means a call of the Modbus_Master instruction with the same interconnection to a Modbus_Comm_Load instruction and the same setting for the MB_ADDR, MODE, DATA_ADDR and DATA_LEN parameters.

Example

Modbus_Master is called with MODE=0 and DATA_ADDR=10

This job is now active until it is completed with DONE=1 or ERROR=1 or until the time monitoring configured at the Blocked_Proc_Timeout parameter has expired. If a new command is started after the watchdog time expires and before the previous command has been completed, the previous command is aborted without an error message.

If, while this command is running, the instruction is now called a second time with the same instance data but different MODE and DATA_ADDR parameter settings, this second call is terminated with ERROR=1 and STATUS=8200.

Calling the Modbus_Master instruction with different parameter settings

If multiple calls of the Modbus_Master instruction with different settings for MB_ADDR, MODE, DATA_ADDR or DATA_LEN are placed in your program, you must ensure that only one of these calls is active at any given time. Otherwise, the error message 16#8200 is output (interface is busy with an ongoing request).

If a call cannot be processed in full, the watchdog is activated by the Blocked_Proc_Timeout parameter and terminates the ongoing command.

REQ parameter

FALSE = no request; TRUE = request to send data to the Modbus slave

Enable the requested transmission. This transmits the contents of the buffer to the point-to-point communication interface.

You use the DATA_ADDR and MODE parameters to select the Modbus function code.

DATA_ADDR (Modbus start address in the slave): Specifies the start address of the data that is accessed in the Modbus slave.

The Modbus_Master instruction uses the MODE input instead of a function code input. The combination of MODE and DATA_ADDR specifies the function code that is used in the actual Modbus frame. The table below shows how the MODE parameter, the Modbus function code and the Modbus address range in DATA_ADDR are related.

Table 5- 17 Modbus functions

MODE	DATA_ADDR (Modbus address)			DATA_LEN (data length)			Modbus function code	Operation and data		
0				Bits per request			01	Read output bits:		
	1	to	9999	1	to	2000/1992 [1]		0	to	9998
0				Bits per request			02	Read input bits:		
	10001	to	19999	1	to	2000/1992 [1]		0	to	9998
0				Words per request			03	Read hold register:		
	40001	to	49999	1	to	125/124 [1]		0	to	9998
	400001	to	465535	1	to	125/124 [1]		0	to	65534
0				Words per request			04	Read input words:		
	30001	to	39999	1	to	125/124 [1]		0	to	9998
1				Bits per request			05	Write one output bit:		
	1	to	9999	1				0	to	9998
1				1 word per request			06	Write one hold register:		
	40001	to	49999	1				0	to	9998
	400001	to	465535	1				0	to	65524
1				Bits per request			15	Write multiple output bits:		
	1	to	9999	2	to	1968/1960 [1]		0	to	9998
1				Words per request			16	Write multiple hold registers:		
	40001	to	49999	2	to	123/122		0	to	9998
	400001	to	465534	2	to	123/122 [1]		0	to	65534
2 [2]				Bits per request			15	Write one or several output bits:		
	1	to	9999	1	to	1968/1960 [1]		0	to	9998
2 [2]				Words per request			16	Write one or several hold registers:		
	40001	to	49999	1	to	123		0	to	9998
	400001	to	465535	1	to	122 [1]		0	to	65534
11	Both DATA_ADDR and DATA_LEN operands of the Modbus_Master are ignored with this function.						11	Read status word and event counter of the slave communication. The status word indicates busy (0 – not busy, 0xFFFF - busy). The event counter is incremented for each successful processing of a frame.		

MODE	DATA_ADDR (Modbus address)			DATA_LEN (data length)			Modbus function code	Operation and data		
80				1 word per request			08	Check slave status with data diagnostic code 0x0000 (loopback test – slave returns an echo of the request)		
	-			1				-		
81				1 word per request			08	Reset slave event counter using data diagnostic code 0x000A		
	-			1				-		
104				Words per request			04	Read input words		
	0	to	65535	1	to	125/124 [1]		0	to	65535
3 to 10, 12 to 79, 82 to 103, 105 to 255	-			-				Reserved		

[1] In extended addressing, see the Extended_Adressing parameter, the maximum data length is shorter by 1 byte or 1 word depending on the data type of the function.

[2] MODE 2 allows you to write one or more output bits and one or more holding registers using the Modbus functions 15 and 16.
MODE 1 uses the Modbus functions 5 and 6 to write 1 output bit and 1 holding register, and Modbus functions 15 and 16 to write multiple output bits and multiple holding registers.

DATA_PTR parameter

The DATA_PTR parameter points to the DB or bit memory address in which reading or writing is performed. If you use a data block, you must create a global data block that provides the data memory for read and write processes on Modbus slaves.

Note

S7-1200/1500 - The data block addressed using DATA_PTR must support direct addressing

The data block must permit direct (absolute) and symbolic addressing.

Note

Using function code 5

Function code 5 is used to set or delete individual bits.

When a bit is set, the value "16#FF00" must be specified in the first word of the addressed DB or bit memory area via DATA_PTR.

- With S7-1200, the value "16#0100" can also be specified to set a bit.
- To reset a bit, the value "16#0000" must be specified in the first word of the DB or bit memory area addressed via DATA_PTR.

All other values are rejected with ERROR = TRUE and STATUS = 16#8384.

Data block structures for the DATA_PTR parameter

- These data types are valid for reading words of the Modbus address range (DATA_PTR) 30001 to 39999, 40001 to 49999 and 400001 to 465535 as well as for writing words to the Modbus address range (DATA_PTR parameter) 40001 to 49999 and 400001 to 465535.
  - Standard array of data types WORD, UINT or INT
  - Named structure of the WORD, UINT or INT type in which each element has a unique name and a 16-bit data type.
  - Named complex structure in which each element has a unique name and a 16-bit or 32-bit data type.
- For reading and writing bits for the Modbus address range (DATA_PTR parameter) 00001 to 09999 and for reading bits from 10001 to 19999.
  - Standard field from Boolean data types.
  - Named Boolean structure from clearly named Boolean tags.
- It is not essential, but nevertheless advisable, to allocate each Modbus_Master instruction its own separate memory area. The reason for this is that data destruction is far more likely if multiple Modbus_Master instructions are reading and writing in the same memory area.
- It is not necessary for the data areas for DATA_PTR to be located in the same global data block. You can create a data block with several areas for Modbus read processes, a data block for Modbus write processes or a data block for each slave station.

Instruction versions

Version 3.0 is functionally identical to version 2.4 and its version number was only incremented due to internal measures.

See also

Modbus_Slave: Communicate as Modbus slave (Page 133)

5.4.2.4 Modbus_Slave

Modbus_Slave: Communicate as Modbus slave

Note

Use with CM1241

The use of this instruction with a CM1241 is only possible from firmware version V2.1 of the module.

Description

Your program can use the Modbus_Slave instruction to communicate as a Modbus slave by using a CM (RS422/485 or RS232). STEP 7 automatically creates an instance DB when you add the instruction. The MB_DB parameter of the Modbus_Comm_Load instruction must be connected to the (static) MB_DB parameter of the Modbus_Slave instruction.

Parameters

Parameters	Declaration	Data type		Standard	Description
		S7-1200/1500	S7-300/400/WinAC		
MB_ADDR	IN	UInt	Word	-	Standard address of the Modbus slave: Standard addressing range (1 to 247) Extended addressing range (0 to 65535) Note: 0 is the broadcast address
COM_RST	IN/OUT	---	Bool	FALSE	Initialization of the Modbus_Slave instruction The instruction is initialized with TRUE. The instruction then resets COM_RST to FALSE. Note: The parameter is only available for S7-300/400 instructions.

Parameters	Declaration	Data type		Standard	Description
		S7-1200/1500	S7-300/400/WinAC		
MB_HOLD_REG	IN/OUT	Variant	Any	-	Pointer to the Modbus hold register DB: The Modbus hold register may be the memory area of the flags or a data block. As of instruction version V4.0: The parameter must point to a memory area that has a length of at least 16 bits. A shorter length results in error message 16#8187. This applies to single elements, arrays, STRUCTs and UDTs. For example, a Single Bool or an array consisting of less than 16 Boolean elements results in the error message. If the length is not a multiple of 16 bits, the remaining bits at the end of the memory area cannot be read or written by the Modbus_Slave instruction. The parameter may point to an optimized memory area. In the optimized memory area, a single element or an array is permitted with the following data types: Bool, Byte, Char, Word, Int, DWord, DInt, Real, USInt, UInt, UDInt, SInt, WChar. Every other data type results in error message 16#818C.
NDR	OUT	Bool		FALSE	New data available: • FALSE – No new data • TRUE – Indicates that new data was written by the Modbus master The NDR bit is TRUE for one cycle after the last request has been completed without errors.
DR	OUT	Bool		FALSE	Read data: • FALSE – No data read • TRUE – Indicates that the instruction has stored the data received by the Modbus master in the target area. The DR bit is TRUE for one cycle after the last request has been completed without errors.
ERROR	OUT	Bool		FALSE	The ERROR bit is TRUE for one cycle after the last request has been completed with errors. If the execution was terminated with an error, the error code in the STATUS parameter is only valid in the cycle in which ERROR = TRUE.
STATUS	OUT	Word		0	Error code (see Error messages (Page 151))

The function codes of the Modbus communication (1, 2, 4, 5 and 15) can read and write bits and words directly in the process image input and in the process image output of the CPU. The MB_HOLD_REG parameter must be defined as data type greater than one byte for these function codes. The table below shows the sample assignment of Modbus addresses to the process image in the CPU.

Table 5- 18 Assignment of Modbus addresses to the process image

Modbus functions						S7-1200			
Code	Function	Data area	Address area			Data area	CPU address		
01	Read bits	Output	0	to	8191	Process image output	O0.0	to	O1023.7
02	Read bits	Input	0	to	8191	Process image input	I0.0	to	I1023.7
04	Read words	Input	0	to	511	Process image input	IW0	to	IW1022
05	Write bit	Output	0	to	8191	Process image output	O0.0	to	O1023.7
15	Write bits	Output	0	to	8191	Process image output	O0.0	to	O1023.7

Table 5- 19 Assignment of Modbus addresses to the process image

Modbus functions						S7-1500 / S7-300 / S7-400			
Function code	Function	Data area	Address area			Data area	CPU address		
01	Read bits	Output	0	to	9998	Process image output	O0.0	to	A1249.6
02	Read bits	Input	0	to	9998	Process image input	I0.0	to	I1249.6
04	Read words	Input	0	to	9998	Process image input	IW0	to	IW19996
05	Write bit	Output	0	to	9998	Process image output	O0.0	to	A1249.6
15	Write bits	Output	0	to	9998	Process image output	O0.0	to	A1249.6

Note

The available address area may be smaller, depending on the memory configuration of the CPU.

The function codes of the Modbus communication (3, 6, 16) use a Modbus hold register which is an address area in the memory area of the flags or a data block. The type of holding register is specified by the MB_HOLD_REG parameter of the Modbus_Slave instruction.

Note

S7-1200/1500 - type of the MB_HOLD_REG data block

The data block with Modbus hold register must permit direct (absolute) and symbolic addressing.

Table 5- 20 Diagnostics functions

Modbus diagnostic functions of the S7-1200 Modbus_Slave		
Function codes	**Subfunction**	**Description**
08	0000H	Output request data of echo test: The Modbus_Slave instruction returns the echo of a received data word to the Modbus master.
08	000AH	Clear communication event counter: The Modbus_Slave instruction clears the communication event counter used for Modbus function 11.
11		Call communication event counter: The Modbus_Slave instruction uses an internal communication event counter to detect the number of successful Modbus read and Modbus write requests that are sent to the Modbus slave. The counter is not incremented for function 8, function 11 and broadcast requests. It is also not incremented for requests that result in communication errors (for example, parity or CRC errors).

The Modbus_Slave instruction supports broadcast write requests from Modbus masters as long as the requests include access to valid addresses. Modbus_Slave generates error code 16#8188 for function codes that are not supported by the broadcast function.

Variables of the Modbus slave in instruction version V3.0

This table below shows the public static tags in the instance data block of Modbus_Slave that you can use in your program.

Table 5- 21 Variables of the Modbus slave

Tag	Data type	Standard	Description
HR_Start_Offset	Word	0	Specifies the start address of the Modbus hold register (default = 0)
QB_Start	Word	0	Start address of the valid writable addressing range of the outputs (byte 0 to 65535) Note: The variable is not available for S7-300, S7-400 and WinAC.
QB_Count	Word	0xFFFF	Number of output bytes that can be written by the Modbus master. Note: The variable is not available for S7-300, S7-400 and WinAC.
Extended_Addressing	Bool	FALSE	Extended addressing, configures slave addressing as single or double byte (FALSE = single byte address, TRUE = double byte address)
Request_Count	Word	0	The number of all requests received by this slave
Slave_Message_Count	Word	0	The number of requests received for this specific slave
Bad_CRC_Count	Word	0	The number of received requests that have a CRC error
Broadcast_Count	Word	0	The number of received broadcast requests
Exception_Count	Word	0	Modbus-specific errors that are acknowledged with an exception to the master
Success_Count	Word	0	The number of received requests without protocol errors for this specific slave
MB_DB	MB _BASE	-	The MB_DB parameter of the Modbus_Comm_Load instruction must be connected to this MB_DB parameter of the Modbus_Master instruction.

You program can write values to the HR_Start_Offset and Extended_Addressing tags and control the Modbus slave operations. The other tags can be read to monitor the Modbus status.

Rules for Modbus slave communication

- Modbus_Comm_Load must be run to configure a port so that the Modbus_Slave instruction can communicate by means of this port.
- If a port is to respond as slave to a Modbus master, this port may not be programmed with the Modbus_Master instruction.
- Only one instance of Modbus_Slave can be used with a specific port; otherwise you may encounter unexpected behavior.
- The Modbus instructions do not use communication alarm events to control the communication process. Your program must control the communication process by querying the Modbus_Slave instruction for completed send and receive processes.
- The Modbus_Slave instruction must be executed regularly with a frequency that allows a timely response to incoming requests of a Modbus master. We recommend executing Modbus_Slave in each cycle from a program cycle OB. Modbus_Slave can be executed from a cyclic interrupt OB but we do not recommend it, because excessive time delays in the interrupt program can temporarily block the execution of other interrupt programs.

Time control of the Modbus signal

Modbus_Slave must be executed regularly to receive each request of the Modbus master and respond accordingly. The frequency with which Modbus_Slave is executed depends on the timeout value specified for the response by the Modbus master. This can be seen in the figure below.

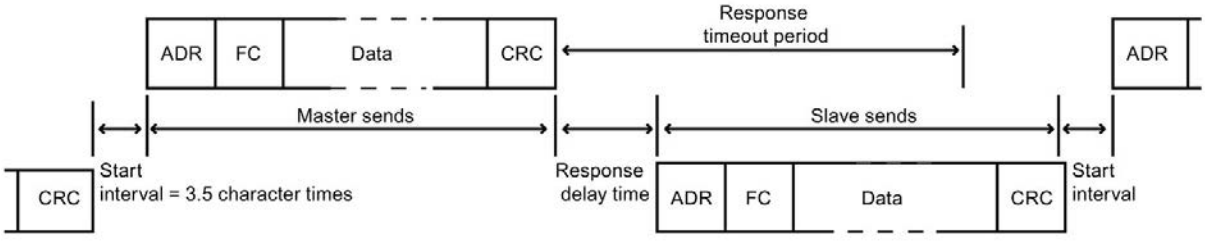

The timeout period of the (RESP_TO) response is the duration that a Modbus master waits for the beginning of an answer from a Modbus slave. This period is not defined by the Modbus protocol, but by a parameter of the Modbus_Comm_Load instruction. As both receiving and sending a frame requires multiple calls of the Modbus_Slave instruction (at least three), you should execute Modbus_Slave at least twelve times during the timeout period for the response of the Modbus master so that the Modbus slave receives and sends data twice as many times as specified by the timeout period.

HR_Start_Offset

The Modbus holding register addresses start at 40001 or 400001. These addresses correspond to the start address of the holding register in the target system memory. But you can configure the HR_Start_Offset tag to configure a start address different than 40001 or 400001 for the Modbus hold register.

The address 0 in the received frame correspond to the start address of the hold register in the target system memory. Use the tag HR_Start_Offset to configure a start address other than 0 for the Modbus hold register.

You can, for example, configure a hold register with start at MW100 and a length of 100 words. With HR_Start_Offset = 20, the address 20 in the received frame corresponds to the start address of the holding register in the target memory (MW100). Each address in the received frame below 20 and above 119 results in an addressing error.

Table 5- 22 Example for addressing the Modbus hold register when DATA_PTR is a pointer to MW100 with a length of 100 words

HR_Start_Offset	Address	Minimum	Maximum
0	Modbus address (word)	0	99
	S7-1500 address	MW100	MW298
20	Modbus address (word)	20	119
	S7-1500 address	MW100	MW298

HR_Start_Offset is a word value which specifies the start address of the Modbus hold register and is saved in the Modbus_Slave instance data block. You select this public static tag by means of the parameter drop-down list once you have added Modbus_Slave in your program.

If you have added Modbus_Slave to an LAD network, for example, you can go to a previous network and assign the value HR_Start_Offset using the move command. The value must be assigned prior to execution of Modbus_Slave.

Enter Modbus slave tag using the standard DB name:

1. Position the cursor in the OUT1 parameter field and enter the character m.
2. Select the required instance DB of the Modbus_Slave instruction from the drop-down list.
3. Position the cursor to the right of the DB name (after the quotation mark) and enter a point.
4. Select "Modbus_Slave_DB.HR_Start_Offset" in the drop-down list.

Instruction versions

Version 4.0 is functionally identical to version 3.0 and its version number was only incremented due to internal measures.

Access to data areas in DBs instead of direct access to MODBUS addresses as of version V5.0

Access to data areas in DBs instead of direct access to MODBUS addresses as of version V4.0

As of instruction version V4.0 of Modbus_Slave and as of firmware versions V2.5 (S7-1500 CPUs) or V4.2 (S7-1200 CPUs), you can access data areas in DBs instead of directly accessing process images and holding registers. In doing so, the attribute "Optimized block access" must be disabled for the DB and it must not be located solely in the load memory.

If a MODBUS request arrives and you have not defined a data area for the MODBUS data type of the corresponding function code, the request is treated as in the previous instruction versions, i.e. process images and holding registers are accessed directly.

If you have defined a data area for the MODBUS data type of the function code, however, the Modbus_Slave instruction reads from this data area or writes to it. Whether it reads or writes depends on the job type.

One individual MODBUS request can only ever be read from or written to one data area. If, for example, you want to read holding registers that extend over multiple data areas, you therefore require multiple MODBUS requests.

Rules for defining data areas

You can define up to eight data areas in different DBs; each DB must only contain one data area. An individual MODBUS request can only ever read from precisely one data area or write to precisely one data area. Each data area corresponds to one MODBUS address area. The data areas are defined in the static tag Data_Area_Array of the instance DB; Data_Area_Array is a field consisting of eight elements.

If you want to use less than eight data areas, the required data areas must be located one behind the other without any gaps. The first blank entry in the data areas ends the data area search during processing. If, for example, you have defined the field elements 1, 2, 4 and 5, only field elements 1 and 2 will be recognized as field element 3 is empty.

The Data_Area_Array field consists of 8 elements: Data_Area_Array[1] to Data_Area_Array[8]

Each field element Data_Area_Array[x], 1 <= x <= 8, is a UDT of the type MB_DataArea and is structured as follows:

Parameter	Data type	Meaning
Data_type	UInt	Identifier for the MODBUS data type that is mapped to this data area: • 0: Identifier for an empty field element or an unused data area. In this case, the values of db, start and length are irrelevant. • 1: Process image output (used with function codes 1, 5 and 15) • 2: Process image input (used with function code 2) • 3: Holding register (used with function codes 3, 6 and 16) • 4: Input register (used with function code 4) Note: If you have defined a data area for a MODBUS data type, the instruction MB_SERVER can no longer access this MODBUS data type directly. If the address of a MODBUS request for such a data type does not correspond to a defined data area, a value of W#16#8383 is returned in STATUS.

Parame-ter	Data type	Meaning
db	UInt	Number of the data block to which the MODBUS register or bits subsequently defined are mapped. The DB number must be unique in the data areas. The same DB number must not be defined in multiple data areas. The DB must have standard access and must not be located solely in the load memory. Data areas also start with the byte address 0 of the DB. Permitted values: 1 to 60999
start	UInt	First MODBUS address that is mapped to the data block starting from address 0.0. Permitted values: 0 to 65535
length	UInt	Number of bits (for the values 1 and 2 of data_type) or number of registers (for the values 3 and 4 of data_type). The MODBUS address areas of one and the same MODBUS data type must not overlap. Permitted values: 1 to 65535

Examples of the definition of data areas

- First example: data_type = 3, db = 1, start = 10, length = 6

  The holding registers (data_type = 3) are mapped in data block 1 (db = 1). The Modbus address 10 (start = 10) is located at data word 0. The last valid Modbus address 15 (length = 6) is located at data word 5.

- Second example: data_type = 2, db = 15, start = 1700, length = 112

  The inputs (data_type = 2) are mapped in data block 15 (db = 15). The Modbus address 1700 (start = 1700) is located at data word 0. The last valid Modbus address 1811 (length = 112) is located at data word 111.

Restriction of read access to process images as of version V5.0

Restriction of read access to process images

As of instruction version V4.0 of Modbus_Slave, you can define one area each in the process image of the inputs and in the process image of the outputs to which remote MODBUS devices have read access. Read access by remote MODBUS devices to addresses outside these process image areas is then no longer possible.

Note

Restriction of write access to process images

The option for restricting write access to the process image of the outputs to a specific area is available as of instruction version V3.0.

Definition of read areas in the process images

Read areas in the process images are defined in the following static tags of the instance DB:

- QB_Read_Start: Address of the first byte in the process image output that can be read by a remote MODBUS device (applies to function code 1)
- QB_Read_Count: Number of bytes in the process image output that can be read by a remote MODBUS device (applies to function code 1)
- IB_Read_Start: Address of the first byte in the process image input that can be read by a remote MODBUS device (applies to function codes 2 and 4)
- IB_Read_Count: Number of bytes in the process image input that can be read by a remote MODBUS device (applies to function codes 2 and 4)

Static tags in the instance DB for defining write and read areas in the process images

The following table describes the static variables listed above in the instance DB of the Modbus_Slave instruction that you use to define the read areas in the process images.

For the sake of completeness, the static variables with which you define the write areas in the process images (QB_Start and QB_Count) as of version V3.0 are also specified.

Tag	Data type	Start value
QB_Start	UInt	0
QB_Count	UInt	65535
QB_Read_Start	UInt	0
QB_Read_Count	UInt	65535
IB_Read_Start	UInt	0
IB_Read_Count	UInt	65535

5.4.2.5 Frame structure

Extended_Addressing

You access the Extended_Addressing tag as described for the HR_Start_Offset reference, except that the Extended_Addressing tag is a Boolean value.

You can configure a single byte (Modbus standard) or two bytes (Extended_Adressing = TRUE) with Extended_Adressing = FALSE for addressing the Modbus slave. Extended addressing is used to address more than 247 devices in a single network. With Extended_Adressing = TRUE you can address up to 65535 addresses. The following example shows a Modbus frame.

Table 5- 23 Slave address with one byte (Byte 0)

	Byte 0	Byte 1	Byte 2	Byte 3	Byte 4	Byte 5	
Request	Slave address	Function code	Start address		Data		
Valid response	Slave address	Function code	Length	Data...			
Error message	Slave address	0xxx	Exception code				

Table 5- 24 Slave address with two bytes (Byte 0 and Byte 1)

	Byte 0	Byte 1	Byte 2	Byte 3	Byte 4	Byte 5	Byte 6
Request	Slave address		Function code	Start address		Data	
Valid response	Slave address		Function code	Length	Data...		
Error message	Slave address		0xxx	Exception code			

Frame description

Data traffic between master and slave / slave and master starts with the slave address, following by the function code. The data is then transferred. The structure of the data field depends on the function code used. The checksum (CRC) is transmitted at the end of the frame.

Function code 1 - This function allows individual output bits to be read

Table 5- 25 FC 1 - Read output bits

	Byte 0	Byte 1	Byte 2	Byte 3	Byte 4	Byte 5
Query	Slave address	Function code 1	Start address		Number of outputs	
Valid response	Slave address	Function code 1	Length [1]	Output data [3)]		
Error message	Slave address	0x81	Exception code [2]	---		

[1] Length: If there is a remainder when the number of outputs is divided by 8, the number of bytes must be increased by 1.

[2] E code: 01 or 02 or 03 or 04

[3] The output data can comprise multiple bytes

	Byte 0	Byte 1	Byte 2	Byte 3	Byte 4	Byte 5	Byte 6
Query	Slave address		Function code 1	Start address		Number of outputs	
Valid response	Slave address		Function code 1	Length [1]	Output data		
Error message	Slave address		0x81	Exception code [2]	---		

[1] Length: If there is a remainder when the number of outputs is divided by 8, the number of bytes must be increased by 1.

[2] E code: 01 or 02 or 03 or 04

[3] The output data can comprise multiple bytes

Function code 2 - This function allows individual input bits to be read

Table 5- 26 FC 2 - Read input bits

	Byte 0	Byte 1	Byte 2	Byte 3	Byte 4	Byte 5
Query	Slave address	Function code 2	Start address		Number of inputs	
Valid response	Slave address	Function code 2	Length [1]	Input data		
Error message	Slave address	0x82	Exception code [2]	---		

[1] Length: If there is a remainder when the number of inputs is divided by 8, the number of bytes must be increased by 1.

[2] E code: 01 or 02 or 03 or 04

	Byte 0	Byte 1	Byte 2	Byte 3	Byte 4	Byte 5	Byte 6
Query	Slave address		Function code 2	Start address		Number of inputs	
Valid response	Slave address		Function code 2	Length [1]	Input data		
Error message	Slave address		0x82	Exception code [2]	---		

[1] Length: If there is a remainder when the number of inputs is divided by 8, the number of bytes must be increased by 1.

[2] E code: 01 or 02 or 03 or 04

Function code 3 - This function allows individual registers to be read

Table 5- 27 FC 3 - Read hold register

	Byte 0	Byte 1	Byte 2	Byte 3	Byte 4	Byte 5
Query	Slave address	Function code 3	Start address		Number of registers	
Valid response	Slave address	Function code 3	Length [1]	Register data		
Error message	Slave address	0x83	Exception code [2]	---		

[1] Length: Number of bytes

[2] E code: 01 or 02 or 03 or 04

	Byte 0	Byte 1	Byte 2	Byte 3	Byte 4	Byte 5	Byte 6
Query	Slave address		Function code 3	Start address		Number of registers	
Valid response	Slave address		Function code 3	Length [1]	Register data		
Error message	Slave address		0x83	Exception code [2]	---		

[1] Length: Number of bytes

[2] E code: 01 or 02 or 03 or 04

Function code 4 - This function allows individual registers to be read

Table 5- 28 FC 4 - Read input words

	Byte 0	Byte 1	Byte 2	Byte 3	Byte 4	Byte 5
Query	Slave address	Function code 4	Start address		Number of input words	
Valid response	Slave address	Function code 4	Length [1]	Input data		
Error message	Slave address	0x84	Exception code [2]	---		

[1] Length: 2 * number of input words

[2] E code: 01 or 02 or 03 or 04

	Byte 0	Byte 1	Byte 2	Byte 3	Byte 4	Byte 5	Byte 6
Query	Slave address		Function code 4	Start address		Number of input words	
Valid response	Slave address		Function code 4	Length [1]	Input data		
Error message	Slave address		0x84	Exception code [2]	---		

[1] Length: 2 * number of input words

[2] E code: 01 or 02 or 03 or 04

Function code 5 - This function can set or delete individual bits

Table 5- 29 FC 5 - Write an output bit

	Byte 0	Byte 1	Byte 2	Byte 3	Byte 4	Byte 5
Query	Slave address	Function code 5	Start address		Value	
Valid response	Slave address	Function code 5	Length	Value		
Error message	Slave address	0x85	Exception code [1]	---		

[1] E code: 01 or 02 or 03 or 04

	Byte 0	Byte 1	Byte 2	Byte 3	Byte 4	Byte 5	Byte 6
Query	Slave address		Function code 5	Start address		Value	
Valid response	Slave address		Function code 5	Length	Value		
Error message	Slave address		0x85	Exception code [1]	---		

[1] E code: 01 or 02 or 03 or 04

Function code 6 - This function allows individual registers to be written

Table 5- 30 FC 6 - Write hold register

	Byte 0	Byte 1	Byte 2	Byte 3	Byte 4	Byte 5
Query	Slave address	Function code 6	Address		Register	
Valid response	Slave address	Function code 6	Address		Register	
Error message	Slave address	0x86	Exception code [1]	---		

[1] E code: 01 or 02 or 03 or 04

	Byte 0	Byte 1	Byte 2	Byte 3	Byte 4	Byte 5	Byte 6
Query	Slave address		Function code 6	Address		Register	
Valid response	Slave address		Function code 6	Address		Register	
Error message	Slave address		0x86	Exception code [1]	---		

[1] E code: 01 or 02 or 03 or 04

Function code 8 - This function is used to check the communication connection

Table 5- 31 FC 8 - Slave status

	Byte 0	Byte 1	Byte 2	Byte 3	Byte 4	Byte 5
Query	Slave address	Function code 8	Diagnostic code		Test value	
Valid response	Slave address	Function code 8	Diagnostic code		Test value	
Error message	Slave address	0x88	Exception code [1]	---		

[1] E code: 01 or 03 or 04

	Byte 0	Byte 1	Byte 2	Byte 3	Byte 4	Byte 5	Byte 6
Query	Slave address		Function code 8	Diagnostic code		Test value	
Valid response	Slave address		Function code 8	Diagnostic code		Test value	
Error message	Slave address		0x88	Exception code [1]	---		

[1] E code: 01 or 03 or 04

Function code 11 - This function can read 2 bytes of "Status word" and 2 bytes of "Event counter"

Table 5- 32 FC 11 - Event counter for slave communication

	Byte 0	Byte 1	Byte 2	Byte 3	Byte 4	Byte 5
Query	Slave address	Function code 11	---			
Valid response	Slave address	Function code 11	Status		Event counter	
Error message	Slave address	0x8B	Exception code [1]	---		

[1] E code: 01 or 04

	Byte 0	Byte 1	Byte 2	Byte 3	Byte 4	Byte 5	Byte 6
Query	Slave address		Function code 11	---			
Valid response	Slave address		Function code 11	Status		Event counter	
Error message	Slave address		0x8B	Exception code [1]	---		

[1] E code: 01 or 04

Function code 15 - This function allows multiple bits to be written

Table 5- 33 FC 15 - Write one/multiple output bits

	Byte 0	Byte 1	Byte 2	Byte 3	Byte 4	Byte 5	Byte 6	Byte 7	Byte n
Query	Slave address	Function code 15	Start address		Number of output words		Byte counter [1]	Value	
Valid response	Slave address	Function code 15	Start address		Number of output words		---		
Error message	Slave address	0x8F	Exception code [2]	---					

[1] Byte counter: If there is a remainder when the number of bytes is divided by 8, the number of bytes must be increased by 1.

[2] E code: 01 or 02 or 03 or 04

	Byte 0	Byte 1	Byte 2	Byte 3	Byte 4	Byte 5	Byte 6	Byte 7	Byte 8	Byte n
Query	Slave address		Function code 15	Start address		Number of output words		Byte counter [1]	Value	
Valid response	Slave address		Function code 15	Start address		Number of output words		---		
Error message	Slave address		0x8F	Exception code [2]		---				

[1] Byte counter: If there is a remainder when the number of bytes is divided by 8, the number of bytes must be increased by 1.

[2] E code: 01 or 02 or 03 or 04

Function code 16 - This function allows individual or multiple registers to be written

Table 5- 34 FC 16 - Write one/multiple hold registers

	Byte 0	Byte 1	Byte 2	Byte 3	Byte 4	Byte 5	Byte 6	Byte 7	Byte n
Query	Slave address	Function code 16	Start address		Number of registers		Byte counter [1]	Value	
Valid response	Slave address	Function code 16	Start address		Number of registers		---		
Error message	Slave address	0x90	Exception code [2]	---					

[1] Byte counter: Number of registers * 2

[2] E code: 01 or 02 or 03 or 04

	Byte 0	Byte 1	Byte 2	Byte 3	Byte 4	Byte 5	Byte 6	Byte 7	Byte 8	Byte n
Query	Slave address		Function code 16	Start address		Number of registers		Byte counter [1]	Value	
Valid response	Slave address		Function code 16	Start address		Number of registers		---		
Error message	Slave address		0x90	Exception code [2]		---				

[1] Byte counter: Number of registers * 2

[2] E code: 01 or 02 or 03 or 04

5.4.2.6 Error messages

Overview of error messages - PtP

The error messages are provided at the STATUS output of an instruction and can be evaluated there or processed in the user program.

Error code	Description	Remedy
16#0000	No error	-
RECEIVE status and error codes		
16#0094	frame end identified based on the "Receipt of fixed/maximum frame length"	-
16#0095	frame end identified based on "Message timeout"	-
16#0096	frame end identified based on expiration of the "Character delay time"	-
16#0097	The frame was aborted because the maximum response time was reached.	-
16#0098	frame end identified based on the fulfillment of the "Read message length from message" conditions	-
16#0099	frame end identified based on the receipt of the "End sequence"	-
SEND status and error codes		
16#7000	Block idle	-
16#7001	Initial call for a new frame: Data transmission initiated	-
16#7002	Interim call: Data transmission running	-
16#8085	Invalid length	Select a suitable frame length. The following are valid (depending on the module): 1-1024/2048/4096 (Byte)
16#8088	The specified length exceeds the range set in the receive buffer. Note: If the data type STRING has been specified at the BUFFER parameter, this error code also appears if the current string is shorter than the length specified at the LENGTH parameter.	Change the range in the receive buffer or select a frame length which corresponds to the range set in the receive buffer. The following are valid (depending on the module): 1-1024/2048/4096 (bytes)
16#8090	Configuration error: Odd number of bytes for WString	Select an even number of bytes.
RECEIVE status and error codes		
16#7002	Interim call: Data transmission running	-
16#8088	The number of characters received exceeds the number specified at the BUFFER parameter.	Select a suitable frame length. The following are valid (depending on the module): 1-1024/2048/4096 (bytes)
16#8090	Configuration error: Odd number of bytes for WString	Select an even number of bytes.

Error code	Description	Remedy
Error message codes of the special functions		
16#818F	Incorrect parameter number setting (with USS only)	Select a suitable parameter number (PARAM). The following numbers are valid: 0-2047
16#8190	Incorrect setting of the CRC calculation	Select a suitable value for the CRC calculation. The following are valid: deactivated or activated. Check whether the module addressed supports CRC calculation.
16#8191	Incorrect setting of the diagnostic error interrupt	Select a suitable value for "Diagnostic error interrupt". The following are valid: Diagnostic error interrupt deactivated or diagnostic error interrupt activated. Check whether the module addressed supports the generation of diagnostic interrupts.
16#8193	The module does not support supply voltage diagnostics L+.	Select a suitable value for "Diagnostic interrupt". The following are permitted: Diagnostic interrupt deactivated or diagnostic interrupt activated. Check whether the module addressed supports the generation of diagnostic interrupts.
Error message codes of the "Port configuration"		
16#81A0	The module does not support this protocol.	Select a valid protocol for the module (PROTOCOL).
16#81A1	The module does not support this data transmission rate.	Select a valid data transmission rate for the module (BAUD).
16#81A2	The module does not support this parity setting.	Select a suitable value for "Parity" (PARITY). The following are valid: • None (1) • Even (2) • Odd (3) • Mark (4) • Space (5) • Any (6)
16#81A3	The module does not support this number of data bits.	Select a suitable value for "Number of data bits" (DATABITS). The following are valid: • 7 (2) • 8 (1)
16#81A4	The module does not support this number of stop bits.	Select a suitable value for "Number of stop bits" (STOPBITS). The following are valid: • 1 (1) • 2 (2)
16#81A5	The module does not support this type of data flow control.	Select a valid data flow control for the module (FLOWCTRL).

Error code	Description	Remedy
16#81A7	Invalid value for XON or XOFF	Select suitable values for XON (XONCHAR) and XOFF (XOFFCHAR). Valid range of values: 0...255
16#81AA	Invalid operating mode	Valid operating modes are: • Full duplex (RS232) (0) • Full duplex (RS422) four-wire mode (point-to-point) (1) / (CM PtP (ET 200SP)) • Full duplex (RS422) four-wire mode (multipoint master) (2)/ (CM PtP (ET 200SP)) • Full duplex (RS 422) four-wire mode (multipoint slave) (3) • Half duplex (RS485) two-wire mode. (4)
16#81AB	Invalid receive line initial state	Valid initial states are: • "No" default setting (0) • Signal R(A)=5 V, signal R(B)=0 V (break detection) (1): Can only be selected with: "Full duplex (RS422) four-wire mode (point-to-point connection)" and "Full duplex (RS422) four-wire mode (multipoint slave)". • Signal R(A)=0 V, signal R(B)=5 V (2): This default setting corresponds to the idle state (no active send operation).
16#81AC	Invalid value for "Break detection"	Select a suitable value for "Break detection". The following are valid: • Break detection deactivated (0) • Break detection activated (1).
16#81AF	The module does not support this protocol.	Select a valid protocol for the module.
Error codes of the "Send configuration"		
16#81B5	More than two end delimiters or end sequence > 5 characters	Select suitable values for "End delimiter" and "End sequence". The following are valid: • deactivated (0), • 1 (1) or 2 (2) end delimiters or • deactivated (0), • 1 (1) up to 5 (5) characters for the end sequence.
16#81B6	Send configuration rejected because the 3964(R) protocol was selected	Make sure that no send configuration is transmitted if the 3964(R) protocol is set.

Error code	Description	Remedy
Error codes of the "Receive configuration"		
16#81C0	Invalid start condition	Select a suitable start condition. The following are valid: • Send break before frame start • Send Idle Line.
16#81C1	Invalid end condition or no end condition selected	Select a suitable end condition (see Receiving data with Freeport (Page 41)).
16#81C3	Invalid value for "Maximum message length"	Select a suitable value for "Maximum message length" (MAXLEN). Valid range of values (depending on the module): 1-1024/2048/4096 (Byte)
16#81C4	Invalid value for "Offset of the length specification in the message"	Select a suitable value for "Offset of the length specification in the message". Valid range of values (depending on the module): 1-1024/2048/4096 (Byte)
16#81C5	Invalid value for "Size of length field"	Select a suitable value for "Size of length field" (LENGTHSIZE). Valid range of values in bytes: • 1 (1) • 2 (2) • 4 (4)
16#81C6	Invalid value for "Number of characters not counted in length specification"	Select a suitable value for "Number of characters not counted in length specification" (LENGTHM). Valid range of values: 0 to 255 (bytes)
16#81C7	The total of "Offset in the message + size of length field + number of characters not counted" is greater than the maximum frame length	Select a suitable value for "Offset in message", "Size of length field" and "Number of characters not counted". Valid range of values: • Offset in the message (depending on the module): 0-1024/2048/4096 (bytes) • Size of length field: 1, 2, or 4 (bytes) • Number of characters not counted: 0 to 255 (bytes)
16#81C8	Invalid value for "Response timeout"	Select a suitable value for "Response timeout". Valid range of values: 1-65535 (ms)
16#81C9	Invalid value for "Character delay time"	Select a suitable value for "Character delay time". Valid range of values: 1 to 65535 (bit times)
16#81CB	frame end sequence is activated, but no character is activated for the check	Activate one or several characters for the check.
16#81CC	frame start sequence is activated, but no character is activated for the check	Activate one or several characters for the check.

Error code	Description	Remedy
16#81CD	Invalid value for "Prevent overwriting"	Select a suitable value for "Prevent overwriting". The following are valid: • Prevent overwriting is deactivated (0) or • Prevent overwriting is activated (1)
16#81CE	Invalid value for "Clear receive buffer on startup"	Select a suitable value for "Clear receive buffer on startup". The following are valid: • Clear receive buffer at startup is deactivated (0) • Clear receive buffer at startup is activated (1)
SEND status and error codes		
16#81D0	Receiving send request during runtime of a send command	Make sure that you do not receive an additional send request during runtime of a send command.
16#81D1	The waiting time for XON or CTS = ON has expired.	The communication partner has a fault, is too slow or is offline. Check the communication partner or change the parameters, if necessary.
16#81D2	"Hardware RTS always ON": Send job canceled due to change from DSR = ON to OFF	Check the communication partner. Make sure that DSR is ON for the entire duration of transmission.
16#81D3	Send buffer overflow / send frame too long	Select a shorter frame length. The following are valid (depending on the module): 1 to 1024/2048/4096 (bytes)
16#81D5	Transmission canceled due to parameter changes, detected wire break, or CPU in STOP	Check the parameter assignment, wire break, and CPU status.
16#81D6	Transmission canceled because end identifier was not received	Check the parameter assignment of the end characters and the frame of the communication partner.
16#81D7	Communication error between the user program and module	Check the communication (e.g., matching the sequence number).
16#81D8	Transmission attempt rejected because module is not configured	Configure the module.
16#81DF	The module has reset the interface to the FB for one of the following reasons: • Module was restarted • Module parameters were reassigned • CPU STOP	—
Error codes of the receive configuration		
16#81E0	Frame aborted: Send buffer overflow / send frame too long	Increase the call rate for the receive function in the user program or configure communication with data flow control.
16#81E1	Frame aborted: Parity error	Check the connection line of the communication partners, or verify that the same data transmission rate, parity and stop bit number are configured for both devices.
16#81E2	Frame aborted: Character frame error	Check the settings for start bit, data bits, parity bit, data transmission rate, and stop bit(s).
16#81E3	Frame aborted: Character overflow error	Firmware error: Please contact Customer Support.

Error code	Description	Remedy
16#81E4	Frame aborted: The total length of "Offset in the message + size of the length field + number of characters not counted" is greater than the receive buffer	Select a suitable value for offset in message, size of the length field, and number of characters not counted.
16#81E5	Frame aborted: Break	Receive line to partner is interrupted. Reconnect or switch on partner.
16#81E6	Maximum number of "Buffered received frames" exceeded	In the user program call the instruction more often or configure a communication with data flow control or increase the number of buffered frames.
16#81E7	Synchronization error module and Receive_P2P	Make sure that different instances of the Receive_P2P do not access the same module.
16#81E8	Frame aborted: The character delay time has expired before the message end criterion was detected	Partner device faulty or too slow. Check this, if required, using an interface tester that is interconnected in the transmission line.
16#81E9	Modbus CRC error (only communication modules which support Modbus)	Checksum error of the Modbus frame. Check the communication partner.
16#81EA	Modbus frame too short (only communication modules which support Modbus)	Minimum length of Modbus frame not met. Check the communication partner.
16#81EB	Frame aborted: Maximum frame length reached	Select a shorter frame length at the communication partner. The following are valid (depending on the module): 1-1024/2048/4096 (bytes) Check the parameters for end of frame detection.
Error codes V24 accompanying signals		
16#81F0	The module does not support V24 accompanying signals	You have tried to set accompanying signals for a module that does not support V24 accompanying signals. Make sure that this is an RS232 module or that RS232 mode (ET 200SP) is set.
16#81F1	No operation of the V24 accompanying signals	The V24 accompanying signals cannot be operated manually if hardware data flow control is active.
16#81F2	The DSR signal cannot be set because the module has the type DTE.	Check the configured type of the module. The module type must be DCE (data communication equipment).
16#81F3	The DTR signal cannot be set because the module has the type DCE.	Check the configured type of the module. The module type must be DTE (data terminal equipment).
16#81F4	Block header error (e.g. incorrect block type or incorrect block length)	Check the instance DB and the block header.

Error code	Description	Remedy
Error codes of the receive configuration		
16#8201 [1)]	Receive_Conditions is a pointer to an invalid data type	Enter a pointer to one of the following data types: DB, BOOL, BYTE, CHAR, WORD, INT, DWORD, DINT, REAL, DATE, TIME_OF_DAY, TIME, S5TIME, DATE_AND_TIME, STRING
16#8225	Receive_Conditionspoints to an optimized memory area greater than 1 kB or Receive_Conditions points to an optimized memory area and the receive length is greater than the area addressed by Receive_Conditions.	Enter a pointer to an area with a maximum length of: • Optimized memory area: 1 KB • Non-optimized memory area: 4 KB Note: If the pointer points to an optimized memory area, do not send more than 1 KB.
16#8229 [1)]	Receive_Conditions is a pointer to BOOL with a number of bits not equal to n * 8	If you are using a pointer to BOOL, the number of bits must be a multiple of 8.
Error codes, general		
16#8280	Negative acknowledgment when reading module	You can find more detailed information on error causes in theRDREC.STATUS static parameters and in the description of the SFB RDREC. • Check the input at the PORT parameter • Set the COM_RST parameter before the 1st call.
16#8281	Negative acknowledgment when writing module	Check the input at the PORT parameter You can find more detailed information on error causes in the WRREC.STATUS static parameters and in the description of the SFB WRREC.
16#8282	Module not available	Check the input at the PORT parameter and ensure that the module can be reached.
Error codes of the receive configuration		
16#82C1	Invalid value for "Buffered received frames".	Select a suitable value for "Buffered received frames". Valid range of values: 1-255
16#82C2	Receive configuration rejected because the 3964(R) protocol was selected	Make sure that no receive configuration is sent if the 3964(R) protocol is set.
16#8301 [1)]	Receive_Conditions is a pointer to an invalid data type	Select a valid data type. The following are valid: DB, BOOL, BYTE, CHAR, WORD, INT, DWORD, DINT, REAL, DATE, TIME_OF_DAY, TIME, S5TIME, DATE_AND_TIME, STRING
16#8322	Range length error when reading a parameter	Check the input at the Receive_Conditions parameter
16#8324	Range error when reading a parameter	Check the input at the Receive_Conditions parameter
16#8328	Setting error when reading a parameter	Check the input at the Receive_Conditions parameter

Error code	Description	Remedy
SEND status and error codes		
16#8328 1)	BUFFER is a pointer to BOOL with a number of bits not equal to n * 8	If you are using a pointer to BOOL, the number of bits must be a multiple of 8.
Error codes of the receive configuration		
16#8332	Invalid data block at the Receive_Conditions parameter	Check the input at the Receive_Conditions parameter
16#833A	The designation of the data block at the Receive_Conditions parameter refers to a data block which is not loaded.	Check the input at the Receive_Conditions parameter
16#8351	Invalid data type	Check the input at the Receive_Conditions parameter
16#8352 1)	Receive_Conditions does not point to a data block	Check the pointer to Receive_Conditions
16#8353 1)	Receive_Conditions does not point to a structure of the typeReceive_Conditions	Check the pointer to Receive_Conditions
Error codes 3964(R) protocol		
16#8380	Parameter assignment error: Invalid value for "Character delay time".	Select a suitable value for "Character delay time" (CharacterDelayTime). Valid range of values: 1 to 65535 (ms)
16#8381	Parameter assignment error: Invalid value for "Response timeout".	Select a suitable value for "Response timeout" (AcknDelayTime). Valid range of values: 1 to 65535 (ms)
16#8382	Parameter assignment error: Invalid value for "Priority".	Select a suitable value for "Priority" (Priority). The following are valid: • High (1) • Low (0)
16#8383	Parameter assignment error: Invalid value for "Block check"	Select a suitable value for "Block check" (BCC). The following are valid: • With block check (1) • Without block check (0)
16#8384	Parameter assignment error: Invalid value for "Connection attempts".	Select a suitable value for "Connection attempts" (BuildupAttempts). Valid range of values: 1-255
16#8385	Parameter assignment error: Invalid value for "Transmission attempts".	Select a suitable value for "Transmission attempts" (RepetitionAttempts). Valid range of values: 1-255
16#8386	Runtime error: Number of connection attempts exceeded	Check the interface cable and the transmission parameters. Also check whether the receive function is configured correctly at the partner device.
16#8387	Runtime error: Number of transmission attempts exceeded	Check the interface cable, the transmission parameters and the configuration of the communication partner.

Error code	Description	Remedy
16#8388	Runtime error: Error at the "Block check character" The internally calculated value of the block check character does not correspond to the block check character received by the partner at the connection end.	Check whether the connection is seriously disrupted; in this case you may also occasionally see error codes. Check for proper function at the partner device, possibly by using an interface test device that is switched into the transmission line.
16#8389	Runtime error: Invalid character received while waiting for free receive buffer	The send request of the communication partner (STX, 02H) is only answered with DLE when the receive buffer is empty. No additional character may be received before (except STX again). Check for proper function at the partner device, possibly by using an interface test device that is switched into the transmission line.
16#838A	Runtime error: Logical error during receiving. After DLE was received, a further random character (other than DLE or ETX) was received.	Check if partner DLE in frame header and in data string is always in duplicate or the connection is released with DLE ETX. Check for proper function at the partner device, possibly by using an interface test device that is switched into the transmission line.
16#838B	Runtime error: Character delay time exceeded	Partner device too slow or faulty. Verify by using an interface test device that is switched into the transmission line, if necessary.
16#838C	Runtime error: Wait time for free receive buffer has started	In the user program call the instruction more often or configure a communication with data flow control.
16#838D	Runtime error: frame repetition does not start within 4 s after NAK	Check the communication partner. A received frame that is possibly corrupted must be repeated by the partner within 4 seconds.
16#838E	Runtime error: In idle mode, one or several characters (other than NAK or STX) were received.	Check for proper function of the partner device, possibly using an interface test device that is switched into the transmission line.
16#838F	Runtime error: Initialization conflict - Both partners have set high priority	Set the "Low" priority at one of the partners
16#8391	Parameter assignment error: 3964 configuration data rejected because Freeport is set	If the Freeport protocol is set, make sure that no 3964 parameter assignment data is sent.

1) Only with instructions for S7-300/400 CPUs

Overview of error messages - Modbus

Error code	Description	Remedy
16#0000	No error	-
Configuration error of the interface - Modbus_Comm_Load		
16#8181	The module does not support this data transmission rate.	Select a valid data transmission rate for the module at the BAUD parameter.
16#8182	The module does not support this parity setting.	Select a suitable value for "Parity" at the PARITY parameter. The following are valid: • None (1) • Even (2) • Odd (3) • Mark (4) • Space (5) • Any (6)
16#8183	The module does not support this type of data flow control.	Select a valid data flow control for the module at the FLOW_CTRL parameter.
16#8184	Invalid value for "Response timeout".	Select a suitable value for "Response timeout" at the RESP_TO parameter. Valid range of values: 1 to 65535 (ms)
16#8280	Negative acknowledgment when reading module	Check the input at the PORT parameter. You can find more detailed information on error causes in the Send_Config.RDREC.STATUS or Receive_Config.RDREC.STATUS static parameters or RDREC.STATUS and in the description of the SFB RDREC.
16#8281	Negative acknowledgment when writing module	Check the input at the PORT parameter. You can find more detailed information on error causes in the Send_Config.WRREC.STATUS or Receive_Config.WRREC.STATUS static parameters or WRREC.STATUS and in the description of the SFB WRREC.
16#8282	Module not available	Check the input at the PORT parameter and ensure that the module can be reached.

Error code	Description	Remedy
Configuration error - Modbus_Slave		
16#8186	Invalid slave address	Select a suitable slave address at the MB_ADDR parameter. The following are valid: 1-247 at standard address area; 1-65535 at extended address area (0 is reserved for Broadcast)
16#8187	Invalid value at MB_HOLD_REG parameter	Select a suitable value for the hold register at the MB_HOLD_REG parameter.
16#8188	Invalid operating mode or broadcast (MB_ADDR = 0) and MODE parameter ≠ 1	Select the value 1 for MODE in Broadcast mode or select a different operating mode.
16#818C	The pointer to a MB_HOLD_REG area must be a data block or a bit memory address area.	Select a suitable value for the pointer to the MB_HOLD_REG area.
16#8280	Negative acknowledgment when reading module	Check the input at the PORT parameter. You can find more detailed information on error causes in the static parameters Send_P2P.RDREC.STATUS or Receive_P2P.RDREC.STATUS, and in the description of the SFB RDREC.
16#8281	Negative acknowledgment when writing module	Check the input at the PORT parameter. You can find more detailed information on error causes in the static parameters Send_P2P.WRREC.STATUS or Receive_P2P.WRREC.STATUS, and in the description of the SFB WRREC.
16#8452 [1)]	MB_HOLD_REG is not a pointer to a DB or a bit memory area	Check the MB_HOLD_REG pointer
16#8453 [1)]	MB_HOLD_REG is not a pointer of type BOOL or WORD	Check the MB_HOLD_REG pointer
16#8454 [1)]	The area addressed by MB_HOLD_REG is longer than the DB, or the area addressed is too small for the number of data bytes to be read or written.	Check the MB_HOLD_REG pointer
16#8455 [1)]	MB_HOLD_REG points to a write-protected DB	Check the MB_HOLD_REG pointer
16#8456 [1)]	Error during instruction execution. The cause of the error is shown in the STATUS parameter.	Determine the value of the SFCSTATUS parameter. Check what this means in the description for SFC51, STATUS parameter.

Error code	Description	Remedy
Configuration error - Modbus_Master		
16#8180	Invalid value for MB_DB parameter	The value configured for MB_DB (instance data DB) at the Modbus_Comm_Load instruction is not valid. Check the interconnection of the Modbus_Comm_Load instruction and its error messages.
16#8186	Invalid station address	Select a suitable station address at the MB_ADDR parameter. The following are valid: 1-247 at standard address area; 1-65535 at extended address area (0 is reserved for Broadcast)
16#8188	Invalid operating mode or broadcast (MB_ADDR = 0) and MODE parameter ≠ 1	Select the value 1 for MODE in Broadcast mode or select a different operating mode.
16#8189	Invalid data address	Select a suitable value for the data address at the DATA_ADDR parameter. See description Modbus_Master (Page 125) in the Info system
16#818A	Invalid length	Select a suitable data length at the DATA_LEN parameter. See description Modbus_Master (Page 125) in the Info system
16#818B	Invalid value for DATA_PTR	Select a suitable value for the data pointer at the DATA_PTR parameter (M or DB address). See description Modbus_Master (Page 125) in the Info system
16#818C	Interconnection error of the DATA_PTR parameter	Check the interconnection of the instruction.
16#818D	The area addressed by DATA_PTR is longer than the DB, or the area addressed is too small for the number of data bytes to be read or written.	Check the DATA_PTR pointer
16#8280	Negative acknowledgment when reading module	Check the input at the PORT parameter. You can find more detailed information on error causes in the static parameters Send_P2P.RDREC.STATUS or Receive_P2P.RDREC.STATUS, and in the description of the SFB RDREC.
16#8281	Negative acknowledgment when writing module	Check the input at the PORT parameter. You can find more detailed information on error causes in the static parameters Send_P2P.WRREC.STATUS or Receive_P2P.WRREC.STATUS or Receive_Reset and in the description of the SFB WRREC.

Error code	Description	Remedy
Communication errors - Modbus_Master and Modbus_Slave		
16#80D1	The waiting time for XON or CTS = ON has expired.	The communication partner has a fault, is too slow or is offline. Check the communication partner or change the parameters, if necessary.
16#80D2	"Hardware RTS always ON": Send job canceled due to change from DSR = ON to OFF	Check the communication partner. Make sure that DSR is ON for the entire duration of transmission.
16#80E0	Frame aborted: Send buffer overflow / send frame too long	In the user program call the instruction more often or configure a communication with data flow control.
16#80E1	Frame aborted: Parity error	Check the connection line of the communication partners, or verify that the same data transmission rate, parity and stop bit number are configured for both devices.
16#80E2	Frame aborted: Character frame error	Check the settings for start bit, data bits, parity bit, data transmission rate, and stop bit(s).
16#80E3	Frame aborted: Character overflow error	Check the number of data in the frame of the communication partner.
16#80E4	Frame aborted: Maximum frame length reached	Select a shorter frame length at the communication partner. The following are valid (depending on the module): 1 to 1024/2048/4096 (bytes)
Communication error - Modbus_Master		
16#80C8	The slave does not respond within the set time	Check the data transmission rate, parity and wiring of the slave.
16#80C9	The slave does not respond within the time set by Blocked_Proc_Timeout.	Check the setting for Blocked_Proc_Timeout. Check if the module has been configured with the Modbus_Comm_Load instruction. The module may possibly need to be reconfigured using Modbus_Comm_Load after a pull/plug or after voltage recovery.
16#8200	The interface is busy with an ongoing request.	Repeat the command later. Make sure that there are no commands still running before you start a new one.
Protocol error - Modbus_Slave (only communication modules that support Modbus)		
16#8380	CRC error	Checksum error of the Modbus frame. Check the communication partner.
16#8381	The function code is not supported or is not supported for broadcast.	Check the communication partner and make sure that a valid function code is sent.
16#8382	Invalid length information in the request frame	Select a suitable data length at the DATA_LEN parameter.
16#8383	Invalid data address in the request frame	Select a suitable value for the data address at the DATA_ADDR parameter.
16#8384	Invalid data value error in the request frame	Check the data value in the request frame of the Modbus master
16#8385	The diagnostic value is not supported by the Modbus slave (function code 08)	The Modbus slave only supports the diagnostic values 16#0000 and 16#000A.

Error code	Description	Remedy
Protocol error - Modbus_Master (only communication modules that support Modbus)		
16#8380	CRC error	Checksum error of the Modbus frame. Check the communication partner.
16#8381	Response frame from Modbus Slave with the following error message: The function code is not supported.	Check the communication partner and make sure that a valid function code is sent.
16#8382	Response frame from Modbus Slave with the following error message: Invalid length	Select a suitable data length.
16#8383	Response frame from Modbus Slave with the following error message: Invalid data address in the request frame	Select a suitable value for the data address at the DATA_ADDR parameter.
16#8384	Response frame from Modbus Slave with the following error message: Data value error	Check the request frame to the Modbus slave.
16#8385	Response frame from Modbus Slave with the following error message: The diagnostic value is not supported by the Modbus slave	The Modbus slave only supports the diagnostic values 16#0000 and 16#000A.
16#8386	The returned function code does not match the requested function code.	Check the response frame and the addressing of the slave.
16#8387	A slave that was not requested answers	Check the response frame of the slave. Check the address settings of the slave.
16#8388	Error in the response of the slave to a write request.	Check the response frame of the slave.
16#8828 [1]	DATA_PTR points to a bit address that is not equal to n * 8	Check the DATA_PTR pointer
16#8852 [1]	DATA_PTR is not a pointer to a DB or a bit memory area	Check the DATA_PTR pointer
16#8853 [1]	DATA_PTR is not a pointer of type BOOL or WORD	Check the DATA_PTR pointer
16#8855 [1]	DATA_PTR points to a write-protected DB	Check the DATA_PTR pointer
16#8856 [1]	Error during call of SFC51	Call the Modbus_Master instruction again
Error - Modbus_Slave (only communication modules that support Modbus)		
16#8428 [1]	MB_HOLD_REG points to a bit address that is not equal to n * 8	Check the MB_HOLD_REG pointer
16#8452 [1]	MB_HOLD_REG is not a pointer to a DB or a bit memory area	Check the MB_HOLD_REG pointer
16#8453 [1]	MB_HOLD_REG is not a pointer of type BOOL or WORD	Check the MB_HOLD_REG pointer
16#8454 [1]	The area addressed by MB_HOLD_REG is longer than the DB, or the area addressed is too small for the number of data bytes to be read or written.	Check the MB_HOLD_REG pointer
16#8455 [1]	MB_HOLD_REG points to a write-protected DB	Check the MB_HOLD_REG pointer
16#8456 [1]	Error during call of SFC51	Call the Modbus_Slave instruction again

[1] Only with instructions for S7-300/400 CPUs

Overview of error messages - USS

Error code	Description	Remedy
16#0000	No error	-
16#8180	Length error in response of drive	Check the response frame of the drive.
16#8181	Data type error	Select a suitable data type. The following are valid: • Real • Word • Double word
16#8182	Data type error: "Double word" or "Real" may not be returned for the "Word" request.	Check the response frame of the drive.
16#8183	Data type error: "Word" may not be returned for the "Double word" or "Real" request.	Check the response frame of the drive.
16#8184	Checksum error in response of drive	Check the drive and the communication connection.
16#8185	Addressing error	Valid drive address range: 1 to 16
16#8186	Setpoint error	Valid setpoint range: -200% to +200%
16#8187	Incorrect drive number returned	Check the response frame of the drive.
16#8188	Invalid PZD length	Permitted PZD lengths: 2, 4, 6, 8 words
16#8189	The module does not support this data transmission rate.	Select a valid data transmission rate for the module.
16#818A	A different request for this drive is currently active.	Repeat the parameter read or write command later.
16#818B	The drive does not respond.	Check the drive.
16#818C	The drive responds with an error message to a parameter request.	Check the response frame of the drive. Check the parameter request. Check if the instructions USS_Read_Param, USS_Write_Param or USS_Port_Scan have reported an error. If they have, check the value of the static tag USS_DB. w_USSExtendedError of the USS_Drive_Control instruction.
16#818D	The drive responds with an access error message to a parameter request.	Check the response frame of the drive. Check the parameter request.
16#818E	The drive was not initialized.	Check the user program and make sure that the USS_Drive_Control instruction is called for this drive.

Error code	Description	Remedy
16#8280	Negative acknowledgment when reading module	Check the input at the PORT parameter. You can find more detailed information on error causes in the static parameters Port_Config.RDREC.STATUS, Send_Config.RDREC.STATUS , Receive_Config.RDREC.STATUS , Send_P2P.RDREC.STATUS or Receive_P2P.RDREC.STATUS, and in the description of the SFB RDREC.
16#8281	Negative acknowledgment when writing module	Check the input at the PORT parameter. You can find more detailed information on error causes in the static parameters Port_Config.WRREC.STATUS, Send_Config.WRREC.STATUS , Receive_Config.WRREC.STATUS , Send_P2P.RDREC.STATUS or Receive_P2P.RDREC.STATUS, and in the description of the SFB WRREC.

1) Only with instructions for S7-300/400 CPUs

5.4.3 USS

5.4.3.1 Overview of USS communication

USS communication

The USS instructions control the operation of drives which support the protocol of the universal serial interface (USS). You can communicate with several drives by means of RS485 connections and the USS instructions with the PtP communication modules. Each RS485 port can operate up to 16 drives.

The USS protocol uses a master-slave network for communication via a serial bus. The master uses an address parameter to send data to a selected slave. A slave cannot send without having first received a send request. Communication between individual slaves is not possible. USS communication takes place in half-duplex mode. The figure below shows a network diagram for a sample application with 16 drives.

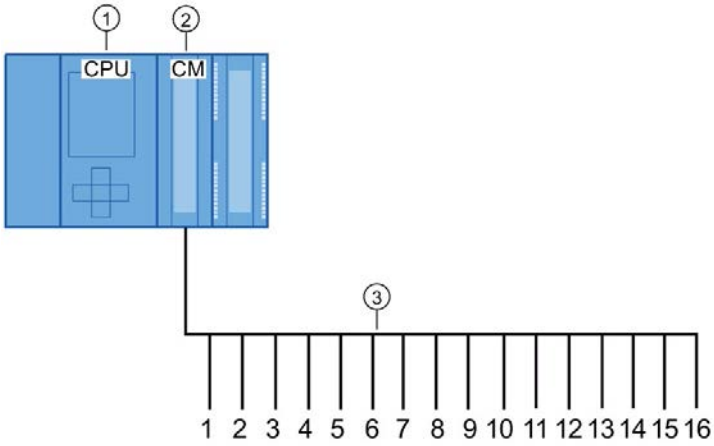

① CPU
② CM
③ USS drives in a USS network

Figure 5-1 Wiring example with S7-1500 communication module

Note

Communicating with a drive via RS232

You can basically also use CM PtP RS232 BA and CM PtP RS232 HF for communication with a drive. However, only **one** drive can be connected to an RS232 port.

Communicating with a drive via RS422

You can basically also use the RS422 interface of the CM PtP RS422/485 BA and CM PtP RS422/485 HF for communication with a drive. However, only **one** drive can be connected to an RS422 port.

USS instructions in your program

- USS_Port_Scan: The instruction USS_Port_Scan allows you to communicate via a communication module with up to 16 drives using a USS network (must be called cyclically).

  There is only one USS_Port_Scan instruction per PtP communication port in the program, and it controls transmission to all drives.
- USS_Drive_Control: The instruction USS_Drive_Control allows you to prepare the send data from USS_Port_Scan for a drive and display its receive data.

  USS_Drive_Control configures the data to be sent and evaluates the data received in a previous request from USS_Port_Scan.
- USS_Read_Param: The instruction USS_Read_Param allows you to read parameters from a drive.
- USS_Write_Param: The instruction USS_Write_Param allows you to change parameters in a drive.

5.4.3.2 Requirements for using the USS protocol

The four USS instructions use 2 FBs and 2 FCs to support the USS protocol. For each USS network, one instance data block (DB) is used for USS_Port_Scan and one instance data block for all calls of USS_Drive_Conrol.

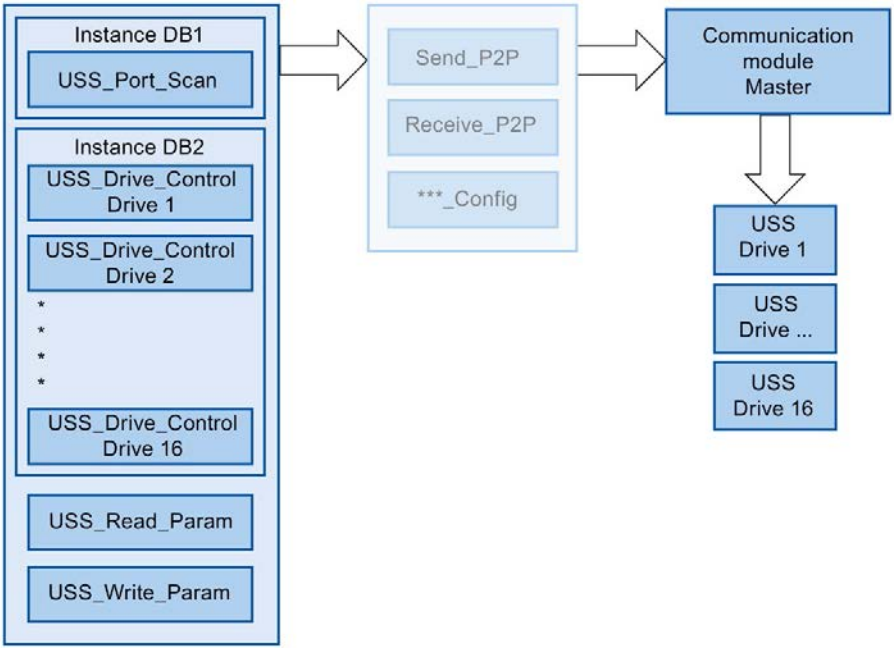

Figure 5-2 USS program sequence

All drives (max. 16) that are connected to one RS485 port are part of the same USS network. All drives that are connected to another RS485 port are part of a different USS network. Each USS network is managed using a unique instance data block for all USS_Drive_Control instructions and one further instance data block for the USS_Port_Scan instruction. All instructions that are part of a USS network must share this instance data block for USS_Drive_Conrol. The USS_Port_Scan, USS_Read_Param and USS_Write_Param instructions have the USS_DB parameter for this function. This parameter must be connected to the (static) USS_DB parameter of the instance DB of the USS_Drive_Control instruction.

- The instructions USS_Drive_Control and USS_Port_Scan are function blocks (FB). If you add the USS_Drive_Control or USS_Port_Scan instruction to the programming editor, you are prompted to assign a DB for this FB in the "Call options" dialog. If it is the first USS_Drive_Control instruction in this program for this USS network, you can apply the DB standard assignment (or change the name, if necessary) and the new DB is created for you. If, however, it is not the first USS_Drive_Control instruction for this drive, you need to select the DB which has already been assigned to this USS network from the drop-down list in the "Call options" dialog.
- The USS_Write_Param and USS_Read_Param instructions are functions (FCs). No DB is assigned when you add these FCs in the editor. If you add these FCs or the USS_Port_Scan instruction in the editor, you need to assign the USS_DB parameter of the corresponding USS_Drive_Control instance DB to the USS_DB input of these instructions. Double-click the parameter field and click the symbol to display the available DBs. Enter a period "." and select the USS_DB parameter from the drop-down list.

- The USS_Port_Scan function controls communication between the CPU and the drives via the point-to-point RS485 communication port. A communication with the drive is processed every time you call this function. Your program must call this function fast enough so that the drives do not signal a timeout. To ensure a constant time response for frame communication, you should call this instruction in a cyclic interrupt OB.
- The USS_Drive_Control instruction gives your program access to a specified drive in the USS network. Its inputs and outputs correspond to the states and operating functions of the drive. If there are 16 drives in your network, you must call USS_Drive_Control at least 16 times in your program, i.e. once for each drive.

  You should only call the USS_Drive_Control instruction from a cyclic OB.
- The operating parameters of the drive are read and written with the USS_Read_Param and USS_Write_Param functions. These parameters control the internal operation of the drive. See the drive manual for a definition of these parameters. Your program may include any number of these functions, but only one read or write request may be active for a drive at any particular time. You may only call the USS_Read_Param and USS_Write_Param functions from the cycle OB of a main program.

NOTICE
USS instruction calls Only ever call USS_Drive_Control, USS_Read_Param or USS_Write_Param from a cycle OB of the main program. The USS_Port_Scan instruction function can be called from any OB, but it is usually called from a cyclic interrupt OB. Do not use the USS_Drive_Control, USS_Read_Param or USS_Write_Param instruction in an OB with a higher priority than the corresponding USS_Port_Scan instruction. For example, do not add USS_Port_Scan to the main program or USS_Read_Param to a cyclic interrupt OB. You may encounter unexpected errors if the execution of USS_Port_Scan is interrupted by another instruction.

Calculating time for communication with the drive

Communication with the drive takes place asynchronously to the cycle of the CPU. The CPU usually runs through several cycles before communication with a drive is complete.

To ensure that the watchdog set for the drive is not triggered, the send frames must be sent to the drive within the watchdog time. You must allow for the number of any retries which may be needed to complete the transaction if communication errors occur. By default, up to 2 retries are made for each transaction with the USS protocol.
The maximum time interval between two send frames is calculated as follows:

N * (5 * cycle time + frame runtime + timeout of the receive frame max.) * (number of transmission attempts)

N	Number of drives in this network
Factor 5	5 cycles are typically needed for sending and receiving frames.
Cycle time	Max. cycle time of the cyclic interrupt OB in which the USS_Port_Scan instruction is called.
Frame runtime	Frame time = (number of characters per frame) * (11 Bit per character) / (data transmission rate in Bit/s)
Number of transmission attempts	Number of retries + 1
Timeout of the receive frame	RCVTIME (if no response is received from the drive)
Timeout of the receive frame max.	RCVTIME + MSGTIME (if an incomplete answer is received shortly before the expiration of RCVTIME and monitoring of MSGTIME has expired **or** if a response is still being processed at the expiration of RCVTIME, the timeout is extended by the MSGTIME)

The following times apply for "Received frame timeout" (ms):

Bit/s	115200	57600	38400	19200	9600	4800	2400	1200
Receive _Conditions.END.RCVTIME	25	29	33	56	72	100	100	100
Receive _Conditions.END.MSGTIME	25	29	33	56	72	124	240	460

Timeout of the receive frame max. = (Receive_Conditions.END.RCVTIME (0.072 s) + Receive_Conditions.END.MSGTIME (0.072 s))

Example:

5 drives
Data transmission rate = 9600 bps
28 characters per frame
Cycle time = 0.020 s
Number of retries = 2

Time interval = 5 * (5 * 0.02 s + 1 * 28 * 11 / 9600 s + 0.072 s + 0.072 s) * 3 = 3 s

The time monitoring of the drive must be set to about 3 seconds in this case.

5.4.3.3 USS_Port_Scan / USS_Port_Scan_31: Communication by means of a USS network

Note

Use with CM1241

The use of this instruction with a CM1241 is only possible from firmware version V2.1 of the module.

Note

Using the USS_Port_Scan_31 instruction

It is only possible to use the USS_Port_Scan_31 instruction on an S7-1500 CPU.

Description

The USS_Port_Scan instruction processes the communication by means of a USS network for max. 16 drives.

The USS_Port_Scan_31 instruction processes the communication by means of a USS network for max. 31 drives.

STEP 7 automatically creates the instance DB when you add the instruction.

Parameters

Parameter	Declaration	Data type		Standard	Description
		S7-1200/1500	S7-300/400/WinAC		
PORT	IN	Port	Word	0	Specifies the communication module which is used for the communication: • For S7-1500/S7-1200: "HW identifier" from the device configuration. The symbolic port name is assigned in the "System constants" tab of the PLC tag table and can be applied from there. • For S7-300/S7-400: "Input address" from the device configuration. In the S7-300/400/WinAC systems the PORT parameter is assigned the input address assigned in HWCN.

Parameter	Declaration	Data type		Standard	Description
		S7-1200/1500	S7-300/400/WinAC		
BAUD	IN	DInt		9600	Data transmission rate for USS communication The following are valid: • 1200 bps • 2400 bps • 4800 bps • 9600 bps • 19200 bps • 38400 bps • 57600 bps • 115200 bps
USS_DB	INOUT	USS_BASE		–	The USS_DB parameter must be connected to the (static) USS_DB parameter of the instance DB which is generated and initialized when you add a USS_Drive_Control / USS_Drive_Control_31 instruction to your program.
COM_RST	INOUT	---	Bool	FALSE	Initialization of the USS_Port_Scan / USS_Port_Scan_31 instruction The instruction is initialized with TRUE. The instruction then resets COM_RST to FALSE. Note: The parameter is only available for S7-300/400 instructions.
ERROR	OUT	Bool		FALSE	If TRUE, this output indicates that an error has occurred and that the STATUS output is valid. You may need to check the value of the static tag USS_DB. w_USSExtendedError in the instance DB of the USS_Drive_Control / USS_Drive_Control_31 instruction.
STATUS	OUT	Word		0	Error code (see Error messages (Page 188)).

There is only one USS_Port_Scan / USS_Port_Scan_31 instruction per PtP communication port in the program and each call of this instruction controls a transmission to or from all drives in this network. All USS functions assigned to one USS network and one PtP communication port must use the same instance DB.

Your program must execute the USS_Port_Scan / USS_Port_Scan_31 instruction often enough to prevent a timeout in the drive (see Requirements for using the USS protocol (Page 169) "Calculating time for communication with the drive").

The USS_Port_Scan / USS_Port_Scan_31 instruction is usually called from a cyclic interrupt OB to prevent drive timeouts and to make the last USS data updates available for calls of USS_Drive_Control / USS_Drive_Control_31 .

USS_Port_Scan / USS_Port_Scan_31 data block tags

The table below shows the public static tags in the instance DB of USS_Port_Scan / USS_Port_Scan_31 that you can use in your program.

Table 5- 35 Static tags in the instance DB

Tag	Data type	Standard	Description
MODE	USInt	4	Operating mode Valid operating modes are: • 0 = Full duplex (RS232) • 1 = Full duplex (RS422) four-wire mode (point-to-point) • 2 = Full duplex (RS 422) four-wire mode (multipoint master; CM PtP (ET 200SP)) • 3 = Full duplex (RS 422) four-wire mode (multipoint slave; CM PtP (ET 200SP)) • 4 = Half duplex (RS485) two-wire mode [1]
LINE_PRE	USInt	2	Receive line initial state Valid initial states are: • 0 = "No" initial state [1] • 1 = signal R(A)=5 V, signal R(B)=0 V (break detection): Break detection is possible with this initial state. Can only be selected with: "Full duplex (RS422) four-wire mode (point-to-point connection)" and "Full duplex (RS422) four-wire mode (multipoint slave)". • 2 = signal R(A)=0 V, signal R(B)=5 V: This default setting corresponds to the idle state (no active send operation). No break detection is possible with this initial state.
BRK_DET	USInt	0	Activate diagnostics interrupt: • 0 - not activated • 1 - activated
RETRIES_MAX	SInt/Byte	2	Number of retries when communication errors occur. You can use this parameter to set the number of send retries for a request frame if the response frame is not received within the set time.
EN_DIAG _ALARM	Bool	0	Activate diagnostics interrupt: • 0 - not activated • 1 - activated
EN_SUPPLY _VOLT	Bool	0	Enable diagnostics for missing supply voltage L+ • 0 - not activated • 1 - activated

[1] Required setting for the use of PROFIBUS cables with CM 1241 for RS485

Version 2.5 is functionally identical to version 2.4 and its version number was only incremented due to internal measures.

Instruction versions

USS_Port_Scan:

Version 2.5 is functionally identical to version 2.4 and its version number was only incremented due to internal measures.

USS_Port_Scan_31:

Version 1.2 is functionally identical to version 1.1 and its version number was only incremented due to internal measures.

5.4.3.4 USS_Drive_Control / USS_Drive_Control_31: Preparing and displaying data for the drive

Note

Use with CM1241

The use of this instruction with a CM1241 is only possible from firmware version V2.1 of the module.

Note

Using the USS_Drive_Control_31 instruction

It is only possible to use the USS_Drive_Control_31 instruction on an S7-1500 CPU.

Description

The USS_Drive_Control instruction prepares send data for max. 16 drives and evaluates the response data of the drives.

The USS_Drive_Control_31 instruction prepares send data for max. 31 drives and evaluates the response data of the drives.

You need to use a separate instance of the instruction for each drive, and all USS functions assigned to one USS network and one PtP communication port must use the same instance DB. You must enter the DB name when you add the first USS_Drive_Control / USS_Drive_Control_31 instruction. You then refer to this DB that was created when the first instruction was added.

STEP 7 automatically creates the DB when you add the instruction.

Parameters

Parame-ters	Declaration	Data type		Standard	Description
		S7-1200/1500	S7-300/400/WinAC		
RUN	IN	Bool		FALSE	Start bit of the drive: If this parameter is TRUE, this input allows you to operate the drive with the preset speed. If RUN changes to FALSE during operation of the drive, the motor coasts to a standstill. This behavior differs from disconnection of the power supply (OFF2) and braking of the motor (OFF3).
OFF2	IN	Bool		FALSE	"Coast to standstill" bit: If this parameter is FALSE, this bit causes the drive to coast to a standstill without braking.
OFF3	IN	Bool		FALSE	Fast stop bit: If this parameter is FALSE, this bit causes a fast stop by braking the drive.
F_ACK	IN	Bool		FALSE	Error acknowledgment bit: This bit resets the error bit of a drive. The bit is set after clearing the error and the drive detects this way that the previous error no longer has to be reported.

Parame-ters	Declaration	Data type		Standard	Description
		S7-1200/1500	S7-300/400/WinAC		
DIR	IN	Bool		FALSE	Direction control of the drive: This bit is set if the drive is to run forward (if SPEED_SP is positive; see table "Interaction of SPEED_SP and DIR parameters").
DRIVE	IN	USInt	Byte	1	Address of the drive: This input is the address of the USS drive. The valid range is between drive 1 and drive 16.
PZD_LEN	IN	USInt	Byte	2	Word length: This is the number of PZD data words. Valid values are 2, 4, 6 or 8 words.
SPEED_SP	IN	Real		0.0	Speed setpoint: This is the speed of the drive as a percentage of the configured frequency. A positive value means that the drive runs forward (if DIR is true). The valid range is 200.00 to -200.00.
CTRL3	IN	Word		0	Control word 3: Value that is written to a user-defined parameter of the drive. You have to configure it in the drive (optional parameter).
CTRL4	IN	Word		0	Control word 4: Value that is written to a user-defined parameter of the drive. You have to configure it in the drive (optional parameter).
CTRL5	IN	Word		0	Control word 5: Value that is written to a user-defined parameter of the drive. You have to configure it in the drive (optional parameter).
CTRL6	IN	Word		0	Control word 6: Value that is written to a user-defined parameter of the drive. You have to configure it in the drive (optional parameter).
CTRL7	IN	Word		0	Control word 7: Value that is written to a user-defined parameter of the drive. You have to configure it in the drive (optional parameter).
CTRL8	IN	Word		0	Control word 8: Value that is written to a user-defined parameter of the drive. You have to configure it in the drive (optional parameter).
COM_RST	IN/OUT	---	Bool	FALSE	Initialization of the USS_Drive_Control / USS_Drive_Control_31 instruction The instruction is initialized with TRUE. The instruction then resets COM_RST to FALSE. Note: The parameter is only available for S7-300/400 instructions.
NDR	OUT	Bool		FALSE	New data available: If this parameter is TRUE, the bit signals that data of a new communication request is available at the output.
ERROR	OUT	Bool		FALSE	Error occurred: If TRUE, this indicates that an error has occurred and that the STATUS output is valid. All other outputs are set to zero in the event of an error. Communication errors are only signaled at the ERROR and STATUS outputs of the USS_Port_Scan / USS_Port_Scan_31 instruction.
STATUS	OUT	Word		0	Error code (see Error messages (Page 188)).
RUN_EN	OUT	Bool		FALSE	Operation enabled: This bit signals if the drive is running.
D_DIR	OUT	Bool		FALSE	Drive direction: This bit signals if the drive is running forward. • FALSE – forward • TRUE – backward

Parame-ters	Declaration	Data type		Standard	Description
		S7-1200/1500	S7-300/400/WinAC		
INHIBIT	OUT	Bool		FALSE	Drive blocked: This bit signals the status of the block bit for the drive. • FALSE – not blocked • TRUE – blocked
FAULT	OUT	Bool		FALSE	Drive error: This bit signals that an error occurred in the drive. You must remedy the fault and set the F_ACK bit to clear this bit.
SPEED	OUT	Real		0.0	Actual value drive speed (scaled value of STATUS 2 of the drive): This is the speed of the drive as a percentage of the configured speed.
STATUS1	OUT	Word		0	STATUS 1 of the drive This value includes fixed status bits of a drive.
STATUS3	OUT	Word		0	STATUS 3 of the drive This value includes a user-definable status word of the drive.
STATUS4	OUT	Word		0	STATUS 4 of the drive This value includes a user-definable status word of the drive.
STATUS5	OUT	Word		0	STATUS 5 of the drive This value includes a user-definable status word of the drive.
STATUS6	OUT	Word		0	STATUS 6 of the drive This value includes a user-definable status word of the drive.
STATUS7	OUT	Word		0	STATUS 7 of the drive This value includes a user-definable status word of the drive.
STATUS8	OUT	Word		0	STATUS 8 of the drive This value includes a user-definable status word of the drive.

When the initial execution of USS_Drive_Control / USS_Drive_Control_31 takes place, the drive specified by the USS address (DRIVE parameter) is initialized in the instance DB. After initialization, subsequent USS_Port_Scan / USS_Port_Scan_31 instructions can start communication with the drive from this drive number.

If you change the drive number, you must first place the CPU in STOP and then back in RUN to initialize the instance DB. The input parameters are configured in the USS send buffer and any outputs are read from a "previous" valid response buffer. USS_Drive_Control / USS_Drive_Control_31 only configures the data to be sent and evaluates data received in a previous request.

You can control the drive's direction of rotation by using the D_IR input (Bool) or the sign (positive or negative) at the SPEED_SP input (Real). The table below explains how these inputs work together to determine the direction of rotation of the drive, provided the motor rotates forward.

Table 5- 36 Interaction of SPEED_SP and DIR parameters

SPEED_SP	DIR	Direction of rotation of the drive
Value > 0	0	Backward
Value > 0	1	Forward
Value < 0	0	Forward
Value < 0	1	Backward

USS_Drive_Control / USS_Drive_Control_31 data block tags

The table below shows the public static tags in the instance DB of USS_Drive_Control / USS_Drive_Control_31 that you can use in your program.

Table 5- 37 Static tags in the instance DB

Tag	Data type	Standard	Description
USS_DB. W _USSExtendedError	Word	16#0	USS Drive Extended Error Code - drive-specific value The meaning of the error message depends on which instruction reported an error **first** (ERROR = TRUE). The following cases are distinguished: • USS_Write_Param / USS_Write_Param_31: You can find the meaning of the error code in the description of the drive. • USS_Read_Param / USS_Read_Param_31: You can find the meaning of the error code in the description of the drive. • USS_Port_Scan / USS_Port_Scan_31: Number of the drive affected by the error message.

Instruction versions

USS_Drive_Control:

Version 2.0 is functionally identical to version 1.2 and its version number was only incremented due to internal measures.

USS_Drive_Control_31:

Version 2.0 is functionally identical to version 1.0 and its version number was only incremented due to internal measures.

5.4.3.5 USS_Read_Param / USS_Read_Param_31: Read data from drive

Note

Use with CM1241

The use of this instruction with a CM1241 is only possible from firmware version V2.1 of the module.

Note

Using the USS_Read_Param_31 instruction

It is only possible to use the USS_Read_Param_31 instruction on an S7-1500 CPU.

Description

The USS_Read_Param instruction reads a parameter from one of max. 16 drives.

The USS_Read_Param_31 instruction reads a parameter from one of max. 31 drives.

All USS functions assigned to one USS network and one PtP communication port must use the instance data block of the USS_Drive_Control / USS_Drive_Control_31 instruction. USS_Read_Param / USS_Read_Param_31 must be called from a cycle OB of the main program.

Parameters

Parameters	Declaration	Data type		Standard	Description
		S7-1200/1500	S7-300/400/WinAC		
REQ	IN	Bool		–	A positive edge at REQ creates a new read request.
DRIVE	IN	USInt	Byte	–	Address of the drive: DRIVE is the address of the USS drive. The valid range is between drive 1 and drive 16.
PARAM	IN	UInt		–	Parameter number: PARAM specifies the drive parameter to write. The range for this parameter is between 0 and 2047. With some drives, the most significant byte of the INDEX parameter can be used to access parameter values greater than 2047. Additional information on access to an extended range is available in your drive manual.
INDEX	IN	UInt		–	Parameter index: INDEX specifies the drive parameter index to which to write. It is a 16-bit value in which the least significant bit is the actual index value with a range of (0 to 255). The drive can also use the most significant byte, which is drive-specific. Additional information is available in your drive manual.
USS_DB	INOUT	USS_BASE		–	The USS_DB parameter must be connected to the (static) USS_DB parameter of the instance DB which is generated and initialized when you add a USS_Drive_Control / USS_Drive_Control_31 instruction to your program.

Parame-ters	Declaration	Data type		Standard	Description
		S7-1200/1500	S7-300/400/WinAC		
DONE[1]	OUT	Bool		FALSE	If this parameter is TRUE, the previously requested value of the read parameter is available at the VALUE output. This bit is set when the USS_Drive_Control / USS_Drive_Control_31 instruction recognizes the read response of the drive. This bit is reset the next time USS_Read_Param / USS_Read_Param_31 is called.
ERROR	OUT	Bool		FALSE	ERROR = TRUE: An error has occurred and the STATUS output is valid. All other outputs are set to zero in the event of an error. Communication errors are only signaled at the ERROR and STATUS outputs of the USS_Port_Scan / USS_Port_Scan_31 instruction. You may need to check the value of the static tag USS_DB. w_USSExtendedError in the instance DB of the USS_Drive_Control / USS_Drive_Control_31 instruction.
STATUS	OUT	Word		0	Error code (see Error messages (Page 188)).
VALUE	OUT	Variant (Word, Int, UInt, DWord, DInt, UDInt, Real)	Any (Word, Int, UInt, DWord, DInt, UDInt, Real)	–	This is the value of the parameter that was read and is only valid if the DONE bit is true.

[1] The DONE bit indicates that valid data was read out of the referenced motor drive and transmitted to the CPU. It does not indicate that the instruction is cabable of immediately read an additional parameter. An empty read request must be sent to the motor drive and acknowledged by the instruction before the parameter channel is freed up for use by the respective drive. The immediate call of USS_Read_Param / USS_Read_Param_31 or USS_Write_Param / USS_Write_Param_31 for the specific motor drive results in error 16#818A.

Instruction versions

USS_Read_Param:

Version 1.5 is functionally identical to version 1.4 and its version number was only incremented due to internal measures.

USS_Read_Param_31:

Version 1.1 is functionally identical to version 1.0 and its version number was only incremented due to internal measures.

5.4.3.6 USS_Write_Param / USS_Write_Param_31: Change data in drive

Note
Use with CM1241
The use of this instruction with a CM1241 is only possible from firmware version V2.1 of the module.

Note
Using the USS_Write_Param_31 instruction
It is only possible to use the USS_Write_Param_31 instruction on an S7-1500 CPU.

Note
For EEPROM write instructions (EEPROM in a USS drive):
Keep the number of EEPROM write operations to a minimum in order to maximize the EEPROM service life.

Description

The USS_Write_Param instruction changes a parameter in one of max. 16 drives.

The USS_Write_Param_31 instruction changes a parameter in one of max. 31 drives.

All USS functions assigned to one USS network and one PtP communication port must use the instance data block of the USS_Drive_Control / USS_Drive_Control_31.

USS_Write_Param / USS_Write_Param_31 must be called from the cycle OB of a main program.

Parameters

Table 5- 38 Data types for the parameters

Parameters	Declaration	Data type		Standard	Description
		S7-1200/1500	S7-300/400/WinAC		
REQ	IN	Bool		–	A positive edge at REQ creates a new write request.
DRIVE	IN	USInt	Byte	–	Address of the drive: DRIVE is the address of the USS drive. The valid range is between drive 1 and drive 16.
PARAM	IN	UInt		–	Parameter number: PARAM specifies the drive parameter to write. The range for this parameter is between 0 and 2047. With some drives, the most significant byte of the INDEX parameter can be used to access parameter values greater than 2047. Additional information on access to an extended range is available in your drive manual.
INDEX	IN	UInt		–	Parameter index: INDEX specifies the drive parameter index to which to write. It is a 16-bit value in which the least significant bit is the actual index value with a range of (0 to 255). The drive can also use the most significant byte, which is drive-specific. Additional information is available in your drive manual.

Parame-ters	Declaration	Data type		Standard	Description
		S7-1200/1500	S7-300/400/WinAC		
EEPROM	IN	Bool		–	Save in EEPROM of the drive: If TRUE, the transaction of a parameter for writing to the drive is saved in the EEPROM of the drive. If FALSE, the written value is saved only temporarily and is lost the next time you switch on the drive.
VALUE	IN	Variant (Word, Int, UInt, DWord, DInt, UDInt, Real)	Any (Word, Int, UInt, DWord, DInt, UDInt, Real)	–	Value of the parameter in which you want to write. It must be valid with a positive edge of REQ.
USS_DB	INOUT	USS_BASE		–	The USS_DB parameter must be connected to the (static) USS_DB parameter of the instance DB which is generat-ed and initialized when you add a USS_Drive_Control / USS_Drive_Control_31 instruction to your program.
DONE[1]	OUT	Bool		FALSE	If TRUE, the VALUE input is written to the drive. This bit is set when the USS_Drive_Control / USS_Drive_Control_31 instruction recognizes the write response of the drive. This bit is reset the next time USS_Write_Param / USS_Write_Param_31 is called.
ERROR	OUT	Bool		FALSE	If TRUE, an error has occurred and the STATUS output is valid. All other outputs are set to zero in the event of an error. Communication errors are only signaled at the ERROR and STATUS outputs of the USS_Port_Scan / USS_Port_Scan_31 instruction. You may need to check the value of the static tag USS_DB. w_USSExtendedError in the instance DB of the USS_Drive_Control / USS_Drive_Control_31 instruction.
STATUS	OUT	Word		0	Error code (see Error messages (Page 188)).

[1] The DONE bit indicates that valid data was read out of the referenced motor drive and transmitted to the CPU. It does not indicate that the USS library is able to read out an additional parameter immediately. An empty write request must be sent to the motor drive and acknowledged by the instruction before the parameter channel is freed up for use by the respective drive. The immediate call of USS_Read_Param / USS_Read_Param_31 or USS_Write_Param / USS_Write_Param_31 FC for the specific motor drive results in error 0x818A.

Instruction versions

USS_Write_Param:

Version 1.6 is functionally identical to version 1.5 and its version number was only incremented due to internal measures.

USS_Write_Param_31:

Version 1.1 is functionally identical to version 1.0 and its version number was only incremented due to internal measures.

5.4.3.7 General information on drive setup

Requirements for the drive setup

- You need to configure the use of 4 PIV words (**P**arameter**I**D**V**alue) for the drives.
- The drives can be configured for 2, 4, 6 or 8 PZD words (**P**ro**c**ess **d**ata area).
- The number of PZD words in the drive must correspond to the PZD_LEN input of the USS_Drive_Control instruction of the drive.
- Make sure that the data transmission rate of all drives corresponds to the BAUD input of the USS_Port_Scan instruction.
- Make sure that the drive is set up for USS communication.
- Make sure that it is specified in the drive that the frequency setpoint is provided by the USS interface.
- Make sure that the drive address is specified (areas: 1-16).
  This address must correspond to the DRIVE input at the USS_Drive_Control block of the drive.
- Make sure that the RS485 network is terminated correctly.

Connection and setup of SINAMICS V20 drive

An application example for operation of a SINAMICS V20 at an S7-1200 is available on the Internet. (http://support.automation.siemens.com/WW/view/en/63696870)

Connecting the SINAMICS V20 drive

Connection example of a SIEMENS G120(C) drive to a USS network. Connection examples for other drives are available in the manual of the respective drive.

The connection of a SINAMICS G120(C) drive to the USS network takes place via plug-in connection. The connection is short-circuit proof and isolated.

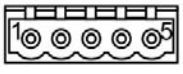

1 0 V reference potential
2 RS485N, receiving and sending (-)
3 RS485N, receiving and sending (+)
4 Cable shield
5 Not used

Figure 5-3 USS connection

NOTICE
Different reference voltages If you connect devices that do not have the same reference voltage, you may create unwanted currents in the connection cable. These unwanted currents may cause communication errors or damages in the devices. Make sure that all devices you connect with a communication cable either have the same reference conductor in the circuit or are electrically disconnected to prevent the occurrence of unwanted currents. Make sure that the shield is connected to the ground or pin 1 of the bus connector on the drive. Make sure that wiring terminal 2 (GND) of the G120(C) is connected to the ground.

If the RS485 master (e.g., S7-1200 CPU with CM1241 communication module) is connected by means of a PROFIBUS connector, wire the bus cables as follows:

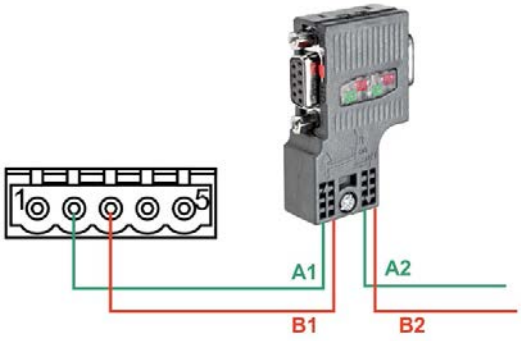

Figure 5-4 Connection of communication module

If the RS485 master is a terminating station in the network or a point-to-point connection, you must use terminals A1 and B1 (not A2 and B2) of the PROFIBUS connector, as these terminals provide termination settings (for example, with the DP plug connector 6ES7972-0BB52-0XA0).

If the G120(C) is configured as terminating station in the network, you must set the switch for the bus terminating resistor to "ON".

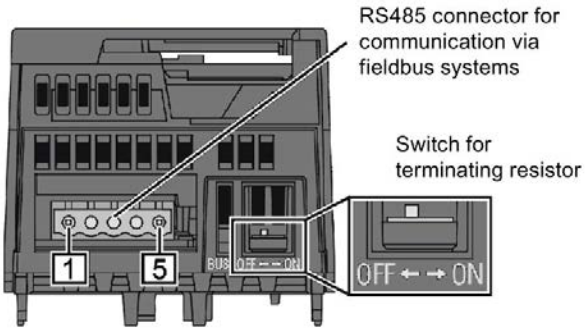

Figure 5-5 Connection of terminating stations

Setup of a G120(C) drive

Before you connect a drive to the S7-1500 or ET 200SP, make sure that the drive has the following system parameters.

Step	Instruction	Operating Instructions	
		G120 [1]	G120C [2]
1	Perform a basic commissioning of the drive with the Operator Panel BOP-2. The converter offers different defaults (macros) for its inputs and outputs and the fieldbus interface. In the ninth step of the basic commissioning (MAC PAR p15), select macro 21 for USS communication. This determines the default for the following parameters: • Data transmission rate (p2020): 38400 bps • Number of PZD (p2022): 2 • Number of PIV (p2023): variable Note: You can also conduct basic commissioning with the STARTER commissioning software or with SINAMICS Startdrive.	Chapter 4.4.3	Chapter 6.4.1
2	Specify the USS address of the converter with the address switch on the control unit of the G120 or on the G120(C). • Valid address range: 1 … 30 Note: Yon can also set the USS address with the parameter p2021 or with STARTER or SINAMICS Startdrive.	Chapter 6.2.2.1	Chapter 8.4.2.1
	With the following steps you are accessing the parameters directly with the BOP-2 by entering their numbers and modifying their values.	Chapter 4.4.2	Chapter 6.4.2

Step	Instruction	Operating Instructions	
		G120 [1]	G120C [2]
3	Adapt the following communication-related converter parameters of your application: • Data transmission rate (p2020), of ≠ 38400 bps (Make sure that setting is identical with the BAUD parameter of the USS_Port_Scan communication instruction.) • Number of PZD (p2022), if ≠ 2 (Make sure that the setting is identical with the PZD_LEN parameter of the USS_Drive_Control communication instruction.) • Number of PIV (p2023) = 4 (Change the value set to "variable" (127) with macro 21 by default to "4" (required by instructions USS_Read_Param and USS_Write_Param.) • Fieldbus SS monitoring time [ms] (p2040)	Chapter 6.2.2.2	Chapter 8.4.2.1
4	Specify the source for the speed setpoint. • n_set Eval (p1000[0]) = 6 (The speed setpoint is provided by the USS bus.)		
5	Set the reference value for speed and frequency. • n_reference f_reference (p2000) = (6,00 min^{-1} to 210000,00 min^{-1}) (all relative speeds or frequencies refer to this reference value. The reference value corresponds to 100% or 4000_{hex} (word) or 4000 0000_{hex} (double word). The following applies: $f_{reference_value}$ (in Hz) = $n_{reference_value}$ (in ((min^{-1}) / 60) x number of pole pairs))		
6	Transfer the parameters to the non-volatile memory. • Save par (p0971) = 1		

1) G120 (http://support.automation.siemens.com/WW/view/en/62089662)

2) G120(C) (http://support.automation.siemens.com/WW/view/en/61462568)

5.4.3.8 Error messages

Overview of error messages - PtP

The error messages are provided at the STATUS output of an instruction and can be evaluated there or processed in the user program.

Error code	Description	Remedy
16#0000	No error	-
RECEIVE status and error codes		
16#0094	frame end identified based on the "Receipt of fixed/maximum frame length"	-
16#0095	frame end identified based on "Message timeout"	-
16#0096	frame end identified based on expiration of the "Character delay time"	-
16#0097	The frame was aborted because the maximum response time was reached.	-
16#0098	frame end identified based on the fulfillment of the "Read message length from message" conditions	-
16#0099	frame end identified based on the receipt of the "End sequence"	-
SEND status and error codes		
16#7000	Block idle	-
16#7001	Initial call for a new frame: Data transmission initiated	-
16#7002	Interim call: Data transmission running	-
16#8085	Invalid length	Select a suitable frame length. The following are valid (depending on the module): 1-1024/2048/4096 (Byte)
16#8088	The specified length exceeds the range set in the receive buffer. Note: If the data type STRING has been specified at the BUFFER parameter, this error code also appears if the current string is shorter than the length specified at the LENGTH parameter.	Change the range in the receive buffer or select a frame length which corresponds to the range set in the receive buffer. The following are valid (depending on the module): 1-1024/2048/4096 (bytes)
16#8090	Configuration error: Odd number of bytes for WString	Select an even number of bytes.
RECEIVE status and error codes		
16#7002	Interim call: Data transmission running	-
16#8088	The number of characters received exceeds the number specified at the BUFFER parameter.	Select a suitable frame length. The following are valid (depending on the module): 1-1024/2048/4096 (bytes)
16#8090	Configuration error: Odd number of bytes for WString	Select an even number of bytes.

Error code	Description	Remedy
Error message codes of the special functions		
16#818F	Incorrect parameter number setting (with USS only)	Select a suitable parameter number (PARAM). The following numbers are valid: 0-2047
16#8190	Incorrect setting of the CRC calculation	Select a suitable value for the CRC calculation. The following are valid: deactivated or activated. Check whether the module addressed supports CRC calculation.
16#8191	Incorrect setting of the diagnostic error interrupt	Select a suitable value for "Diagnostic error interrupt". The following are valid: Diagnostic error interrupt deactivated or diagnostic error interrupt activated. Check whether the module addressed supports the generation of diagnostic interrupts.
16#8193	The module does not support supply voltage diagnostics L+.	Select a suitable value for "Diagnostic interrupt". The following are permitted: Diagnostic interrupt deactivated or diagnostic interrupt activated. Check whether the module addressed supports the generation of diagnostic interrupts.
Error message codes of the "Port configuration"		
16#81A0	The module does not support this protocol.	Select a valid protocol for the module (PROTOCOL).
16#81A1	The module does not support this data transmission rate.	Select a valid data transmission rate for the module (BAUD).
16#81A2	The module does not support this parity setting.	Select a suitable value for "Parity" (PARITY). The following are valid: • None (1) • Even (2) • Odd (3) • Mark (4) • Space (5) • Any (6)
16#81A3	The module does not support this number of data bits.	Select a suitable value for "Number of data bits" (DATABITS). The following are valid: • 7 (2) • 8 (1)
16#81A4	The module does not support this number of stop bits.	Select a suitable value for "Number of stop bits" (STOPBITS). The following are valid: • 1 (1) • 2 (2)
16#81A5	The module does not support this type of data flow control.	Select a valid data flow control for the module (FLOWCTRL).

Error code	Description	Remedy
16#81A7	Invalid value for XON or XOFF	Select suitable values for XON (XONCHAR) and XOFF (XOFFCHAR). Valid range of values: 0...255
16#81AA	Invalid operating mode	Valid operating modes are: • Full duplex (RS232) (0) • Full duplex (RS422) four-wire mode (point-to-point) (1) / (CM PtP (ET 200SP)) • Full duplex (RS422) four-wire mode (multipoint master) (2)/ (CM PtP (ET 200SP)) • Full duplex (RS 422) four-wire mode (multipoint slave) (3) • Half duplex (RS485) two-wire mode. (4)
16#81AB	Invalid receive line initial state	Valid initial states are: • "No" default setting (0) • Signal R(A)=5 V, signal R(B)=0 V (break detection) (1): Can only be selected with: "Full duplex (RS422) four-wire mode (point-to-point connection)" and "Full duplex (RS422) four-wire mode (multipoint slave)". • Signal R(A)=0 V, signal R(B)=5 V (2): This default setting corresponds to the idle state (no active send operation).
16#81AC	Invalid value for "Break detection"	Select a suitable value for "Break detection". The following are valid: • Break detection deactivated (0) • Break detection activated (1).
16#81AF	The module does not support this protocol.	Select a valid protocol for the module.
Error codes of the "Send configuration"		
16#81B5	More than two end delimiters or end sequence > 5 characters	Select suitable values for "End delimiter" and "End sequence". The following are valid: • deactivated (0), • 1 (1) or 2 (2) end delimiters or • deactivated (0), • 1 (1) up to 5 (5) characters for the end sequence.
16#81B6	Send configuration rejected because the 3964(R) protocol was selected	Make sure that no send configuration is transmitted if the 3964(R) protocol is set.

Error code	Description	Remedy
Error codes of the "Receive configuration"		
16#81C0	Invalid start condition	Select a suitable start condition. The following are valid: • Send break before frame start • Send Idle Line.
16#81C1	Invalid end condition or no end condition selected	Select a suitable end condition (see Receiving data with Freeport (Page 41)).
16#81C3	Invalid value for "Maximum message length"	Select a suitable value for "Maximum message length" (MAXLEN). Valid range of values (depending on the module): 1-1024/2048/4096 (Byte)
16#81C4	Invalid value for "Offset of the length specification in the message"	Select a suitable value for "Offset of the length specification in the message". Valid range of values (depending on the module): 1-1024/2048/4096 (Byte)
16#81C5	Invalid value for "Size of length field"	Select a suitable value for "Size of length field" (LENGTHSIZE). Valid range of values in bytes: • 1 (1) • 2 (2) • 4 (4)
16#81C6	Invalid value for "Number of characters not counted in length specification"	Select a suitable value for "Number of characters not counted in length specification" (LENGTHM). Valid range of values: 0 to 255 (bytes)
16#81C7	The total of "Offset in the message + size of length field + number of characters not counted" is greater than the maximum frame length	Select a suitable value for "Offset in message", "Size of length field" and "Number of characters not counted". Valid range of values: • Offset in the message (depending on the module): 0-1024/2048/4096 (bytes) • Size of length field: 1, 2, or 4 (bytes) • Number of characters not counted: 0 to 255 (bytes)
16#81C8	Invalid value for "Response timeout"	Select a suitable value for "Response timeout". Valid range of values: 1-65535 (ms)
16#81C9	Invalid value for "Character delay time"	Select a suitable value for "Character delay time". Valid range of values: 1 to 65535 (bit times)
16#81CB	frame end sequence is activated, but no character is activated for the check	Activate one or several characters for the check.
16#81CC	frame start sequence is activated, but no character is activated for the check	Activate one or several characters for the check.

Error code	Description	Remedy
16#81CD	Invalid value for "Prevent overwriting"	Select a suitable value for "Prevent overwriting". The following are valid: • Prevent overwriting is deactivated (0) or • Prevent overwriting is activated (1)
16#81CE	Invalid value for "Clear receive buffer on startup"	Select a suitable value for "Clear receive buffer on startup". The following are valid: • Clear receive buffer at startup is deactivated (0) • Clear receive buffer at startup is activated (1)
SEND status and error codes		
16#81D0	Receiving send request during runtime of a send command	Make sure that you do not receive an additional send request during runtime of a send command.
16#81D1	The waiting time for XON or CTS = ON has expired.	The communication partner has a fault, is too slow or is offline. Check the communication partner or change the parameters, if necessary.
16#81D2	"Hardware RTS always ON": Send job canceled due to change from DSR = ON to OFF	Check the communication partner. Make sure that DSR is ON for the entire duration of transmission.
16#81D3	Send buffer overflow / send frame too long	Select a shorter frame length. The following are valid (depending on the module): 1 to 1024/2048/4096 (bytes)
16#81D5	Transmission canceled due to parameter changes, detected wire break, or CPU in STOP	Check the parameter assignment, wire break, and CPU status.
16#81D6	Transmission canceled because end identifier was not received	Check the parameter assignment of the end characters and the frame of the communication partner.
16#81D7	Communication error between the user program and module	Check the communication (e.g., matching the sequence number).
16#81D8	Transmission attempt rejected because module is not configured	Configure the module.
16#81DF	The module has reset the interface to the FB for one of the following reasons: • Module was restarted • Module parameters were reassigned • CPU STOP	—
Error codes of the receive configuration		
16#81E0	Frame aborted: Send buffer overflow / send frame too long	Increase the call rate for the receive function in the user program or configure communication with data flow control.
16#81E1	Frame aborted: Parity error	Check the connection line of the communication partners, or verify that the same data transmission rate, parity and stop bit number are configured for both devices.
16#81E2	Frame aborted: Character frame error	Check the settings for start bit, data bits, parity bit, data transmission rate, and stop bit(s).
16#81E3	Frame aborted: Character overflow error	Firmware error: Please contact Customer Support.

Error code	Description	Remedy
16#81E4	Frame aborted: The total length of "Offset in the message + size of the length field + number of characters not counted" is greater than the receive buffer	Select a suitable value for offset in message, size of the length field, and number of characters not counted.
16#81E5	Frame aborted: Break	Receive line to partner is interrupted. Reconnect or switch on partner.
16#81E6	Maximum number of "Buffered received frames" exceeded	In the user program call the instruction more often or configure a communication with data flow control or increase the number of buffered frames.
16#81E7	Synchronization error module and Receive_P2P	Make sure that different instances of the Receive_P2P do not access the same module.
16#81E8	Frame aborted: The character delay time has expired before the message end criterion was detected	Partner device faulty or too slow. Check this, if required, using an interface tester that is interconnected in the transmission line.
16#81E9	Modbus CRC error (only communication modules which support Modbus)	Checksum error of the Modbus frame. Check the communication partner.
16#81EA	Modbus frame too short (only communication modules which support Modbus)	Minimum length of Modbus frame not met. Check the communication partner.
16#81EB	Frame aborted: Maximum frame length reached	Select a shorter frame length at the communication partner. The following are valid (depending on the module): 1-1024/2048/4096 (bytes) Check the parameters for end of frame detection.
Error codes V24 accompanying signals		
16#81F0	The module does not support V24 accompanying signals	You have tried to set accompanying signals for a module that does not support V24 accompanying signals. Make sure that this is an RS232 module or that RS232 mode (ET 200SP) is set.
16#81F1	No operation of the V24 accompanying signals	The V24 accompanying signals cannot be operated manually if hardware data flow control is active.
16#81F2	The DSR signal cannot be set because the module has the type DTE.	Check the configured type of the module. The module type must be DCE (data communication equipment).
16#81F3	The DTR signal cannot be set because the module has the type DCE.	Check the configured type of the module. The module type must be DTE (data terminal equipment).
16#81F4	Block header error (e.g. incorrect block type or incorrect block length)	Check the instance DB and the block header.

Error code	Description	Remedy
Error codes of the receive configuration		
16#8201 [1)]	Receive_Conditions is a pointer to an invalid data type	Enter a pointer to one of the following data types: DB, BOOL, BYTE, CHAR, WORD, INT, DWORD, DINT, REAL, DATE, TIME_OF_DAY, TIME, S5TIME, DATE_AND_TIME, STRING
16#8225	Receive_Conditionspoints to an optimized memory area greater than 1 kB or Receive_Conditions points to an optimized memory area and the receive length is greater than the area addressed by Receive_Conditions.	Enter a pointer to an area with a maximum length of: • Optimized memory area: 1 KB • Non-optimized memory area: 4 KB Note: If the pointer points to an optimized memory area, do not send more than 1 KB.
16#8229 [1)]	Receive_Conditions is a pointer to BOOL with a number of bits not equal to n * 8	If you are using a pointer to BOOL, the number of bits must be a multiple of 8.
Error codes, general		
16#8280	Negative acknowledgment when reading module	You can find more detailed information on error causes in theRDREC.STATUS static parameters and in the description of the SFB RDREC. • Check the input at the PORT parameter • Set the COM_RST parameter before the 1st call.
16#8281	Negative acknowledgment when writing module	Check the input at the PORT parameter You can find more detailed information on error causes in the WRREC.STATUS static parameters and in the description of the SFB WRREC.
16#8282	Module not available	Check the input at the PORT parameter and ensure that the module can be reached.
Error codes of the receive configuration		
16#82C1	Invalid value for "Buffered received frames".	Select a suitable value for "Buffered received frames". Valid range of values: 1-255
16#82C2	Receive configuration rejected because the 3964(R) protocol was selected	Make sure that no receive configuration is sent if the 3964(R) protocol is set.
16#8301 [1)]	Receive_Conditions is a pointer to an invalid data type	Select a valid data type. The following are valid: DB, BOOL, BYTE, CHAR, WORD, INT, DWORD, DINT, REAL, DATE, TIME_OF_DAY, TIME, S5TIME, DATE_AND_TIME, STRING
16#8322	Range length error when reading a parameter	Check the input at the Receive_Conditions parameter
16#8324	Range error when reading a parameter	Check the input at the Receive_Conditions parameter
16#8328	Setting error when reading a parameter	Check the input at the Receive_Conditions parameter
SEND status and error codes		
16#8328 [1)]	BUFFER is a pointer to BOOL with a number of bits not equal to n * 8	If you are using a pointer to BOOL, the number of bits must be a multiple of 8.

Error code	Description	Remedy
Error codes of the receive configuration		
16#8332	Invalid data block at the Receive_Conditions parameter	Check the input at the Receive_Conditions parameter
16#833A	The designation of the data block at the Receive_Conditions parameter refers to a data block which is not loaded.	Check the input at the Receive_Conditions parameter
16#8351	Invalid data type	Check the input at the Receive_Conditions parameter
16#8352 1)	Receive_Conditions does not point to a data block	Check the pointer to Receive_Conditions
16#8353 1)	Receive_Conditions does not point to a structure of the typeReceive_Conditions	Check the pointer to Receive_Conditions
Error codes 3964(R) protocol		
16#8380	Parameter assignment error: Invalid value for "Character delay time".	Select a suitable value for "Character delay time" (CharacterDelayTime). Valid range of values: 1 to 65535 (ms)
16#8381	Parameter assignment error: Invalid value for "Response timeout".	Select a suitable value for "Response timeout" (AcknDelayTime). Valid range of values: 1 to 65535 (ms)
16#8382	Parameter assignment error: Invalid value for "Priority".	Select a suitable value for "Priority" (Priority). The following are valid: • High (1) • Low (0)
16#8383	Parameter assignment error: Invalid value for "Block check"	Select a suitable value for "Block check" (BCC). The following are valid: • With block check (1) • Without block check (0)
16#8384	Parameter assignment error: Invalid value for "Connection attempts".	Select a suitable value for "Connection attempts" (BuildupAttempts). Valid range of values: 1-255
16#8385	Parameter assignment error: Invalid value for "Transmission attempts".	Select a suitable value for "Transmission attempts" (RepetitionAttempts). Valid range of values: 1-255
16#8386	Runtime error: Number of connection attempts exceeded	Check the interface cable and the transmission parameters. Also check whether the receive function is configured correctly at the partner device.
16#8387	Runtime error: Number of transmission attempts exceeded	Check the interface cable, the transmission parameters and the configuration of the communication partner.
16#8388	Runtime error: Error at the "Block check character" The internally calculated value of the block check character does not correspond to the block check character received by the partner at the connection end.	Check whether the connection is seriously disrupted; in this case you may also occasionally see error codes. Check for proper function at the partner device, possibly by using an interface test device that is switched into the transmission line.

Error code	Description	Remedy
16#8389	Runtime error: Invalid character received while waiting for free receive buffer	The send request of the communication partner (STX, 02H) is only answered with DLE when the receive buffer is empty. No additional character may be received before (except STX again). Check for proper function at the partner device, possibly by using an interface test device that is switched into the transmission line.
16#838A	Runtime error: Logical error during receiving. After DLE was received, a further random character (other than DLE or ETX) was received.	Check if partner DLE in frame header and in data string is always in duplicate or the connection is released with DLE ETX. Check for proper function at the partner device, possibly by using an interface test device that is switched into the transmission line.
16#838B	Runtime error: Character delay time exceeded	Partner device too slow or faulty. Verify by using an interface test device that is switched into the transmission line, if necessary.
16#838C	Runtime error: Wait time for free receive buffer has started	In the user program call the instruction more often or configure a communication with data flow control.
16#838D	Runtime error: frame repetition does not start within 4 s after NAK	Check the communication partner. A received frame that is possibly corrupted must be repeated by the partner within 4 seconds.
16#838E	Runtime error: In idle mode, one or several characters (other than NAK or STX) were received.	Check for proper function of the partner device, possibly using an interface test device that is switched into the transmission line.
16#838F	Runtime error: Initialization conflict - Both partners have set high priority	Set the "Low" priority at one of the partners
16#8391	Parameter assignment error: 3964 configuration data rejected because Freeport is set	If the Freeport protocol is set, make sure that no 3964 parameter assignment data is sent.

[1] Only with instructions for S7-300/400 CPUs

Overview of error messages - Modbus

Error code	Description	Remedy
16#0000	No error	-
Configuration error of the interface - Modbus_Comm_Load		
16#8181	The module does not support this data transmission rate.	Select a valid data transmission rate for the module at the BAUD parameter.
16#8182	The module does not support this parity setting.	Select a suitable value for "Parity" at the PARITY parameter. The following are valid: • None (1) • Even (2) • Odd (3) • Mark (4) • Space (5) • Any (6)
16#8183	The module does not support this type of data flow control.	Select a valid data flow control for the module at the FLOW_CTRL parameter.
16#8184	Invalid value for "Response timeout".	Select a suitable value for "Response timeout" at the RESP_TO parameter. Valid range of values: 1 to 65535 (ms)
16#8280	Negative acknowledgment when reading module	Check the input at the PORT parameter. You can find more detailed information on error causes in the Send_Config.RDREC.STATUS or Receive_Config.RDREC.STATUS static parameters or RDREC.STATUS and in the description of the SFB RDREC.
16#8281	Negative acknowledgment when writing module	Check the input at the PORT parameter. You can find more detailed information on error causes in the Send_Config.WRREC.STATUS or Receive_Config.WRREC.STATUS static parameters or WRREC.STATUS and in the description of the SFB WRREC.
16#8282	Module not available	Check the input at the PORT parameter and ensure that the module can be reached.

Error code	Description	Remedy
Configuration error - Modbus_Slave		
16#8186	Invalid slave address	Select a suitable slave address at the MB_ADDR parameter. The following are valid: 1-247 at standard address area; 1-65535 at extended address area (0 is reserved for Broadcast)
16#8187	Invalid value at MB_HOLD_REG parameter	Select a suitable value for the hold register at the MB_HOLD_REG parameter.
16#8188	Invalid operating mode or broadcast (MB_ADDR = 0) and MODE parameter ≠ 1	Select the value 1 for MODE in Broadcast mode or select a different operating mode.
16#818C	The pointer to a MB_HOLD_REG area must be a data block or a bit memory address area.	Select a suitable value for the pointer to the MB_HOLD_REG area.
16#8280	Negative acknowledgment when reading module	Check the input at the PORT parameter. You can find more detailed information on error causes in the static parameters Send_P2P.RDREC.STATUS or Receive_P2P.RDREC.STATUS, and in the description of the SFB RDREC.
16#8281	Negative acknowledgment when writing module	Check the input at the PORT parameter. You can find more detailed information on error causes in the static parameters Send_P2P.WRREC.STATUS or Receive_P2P.WRREC.STATUS, and in the description of the SFB WRREC.
16#8452 [1)]	MB_HOLD_REG is not a pointer to a DB or a bit memory area	Check the MB_HOLD_REG pointer
16#8453 [1)]	MB_HOLD_REG is not a pointer of type BOOL or WORD	Check the MB_HOLD_REG pointer
16#8454 [1)]	The area addressed by MB_HOLD_REG is longer than the DB, or the area addressed is too small for the number of data bytes to be read or written.	Check the MB_HOLD_REG pointer
16#8455 [1)]	MB_HOLD_REG points to a write-protected DB	Check the MB_HOLD_REG pointer
16#8456 [1)]	Error during instruction execution. The cause of the error is shown in the STATUS parameter.	Determine the value of the SFCSTATUS parameter. Check what this means in the description for SFC51, STATUS parameter.

Error code	Description	Remedy
Configuration error - Modbus_Master		
16#8180	Invalid value for MB_DB parameter	The value configured for MB_DB (instance data DB) at the Modbus_Comm_Load instruction is not valid. Check the interconnection of the Modbus_Comm_Load instruction and its error messages.
16#8186	Invalid station address	Select a suitable station address at the MB_ADDR parameter. The following are valid: 1-247 at standard address area; 1-65535 at extended address area (0 is reserved for Broadcast)
16#8188	Invalid operating mode or broadcast (MB_ADDR = 0) and MODE parameter ≠ 1	Select the value 1 for MODE in Broadcast mode or select a different operating mode.
16#8189	Invalid data address	Select a suitable value for the data address at the DATA_ADDR parameter. See description Modbus_Master (Page 125) in the Info system
16#818A	Invalid length	Select a suitable data length at the DATA_LEN parameter. See description Modbus_Master (Page 125) in the Info system
16#818B	Invalid value for DATA_PTR	Select a suitable value for the data pointer at the DATA_PTR parameter (M or DB address). See description Modbus_Master (Page 125) in the Info system
16#818C	Interconnection error of the DATA_PTR parameter	Check the interconnection of the instruction.
16#818D	The area addressed by DATA_PTR is longer than the DB, or the area addressed is too small for the number of data bytes to be read or written.	Check the DATA_PTR pointer
16#8280	Negative acknowledgment when reading module	Check the input at the PORT parameter. You can find more detailed information on error causes in the static parameters Send_P2P.RDREC.STATUS or Receive_P2P.RDREC.STATUS, and in the description of the SFB RDREC.
16#8281	Negative acknowledgment when writing module	Check the input at the PORT parameter. You can find more detailed information on error causes in the static parameters Send_P2P.WRREC.STATUS or Receive_P2P.WRREC.STATUS or Receive_Reset and in the description of the SFB WRREC.

Error code	Description	Remedy
Communication errors - Modbus_Master and Modbus_Slave		
16#80D1	The waiting time for XON or CTS = ON has expired.	The communication partner has a fault, is too slow or is offline. Check the communication partner or change the parameters, if necessary.
16#80D2	"Hardware RTS always ON": Send job canceled due to change from DSR = ON to OFF	Check the communication partner. Make sure that DSR is ON for the entire duration of transmission.
16#80E0	Frame aborted: Send buffer overflow / send frame too long	In the user program call the instruction more often or configure a communication with data flow control.
16#80E1	Frame aborted: Parity error	Check the connection line of the communication partners, or verify that the same data transmission rate, parity and stop bit number are configured for both devices.
16#80E2	Frame aborted: Character frame error	Check the settings for start bit, data bits, parity bit, data transmission rate, and stop bit(s).
16#80E3	Frame aborted: Character overflow error	Check the number of data in the frame of the communication partner.
16#80E4	Frame aborted: Maximum frame length reached	Select a shorter frame length at the communication partner. The following are valid (depending on the module): 1 to 1024/2048/4096 (bytes)
Communication error - Modbus_Master		
16#80C8	The slave does not respond within the set time	Check the data transmission rate, parity and wiring of the slave.
16#80C9	The slave does not respond within the time set by Blocked_Proc_Timeout.	Check the setting for Blocked_Proc_Timeout. Check if the module has been configured with the Modbus_Comm_Load instruction. The module may possibly need to be reconfigured using Modbus_Comm_Load after a pull/plug or after voltage recovery.
16#8200	The interface is busy with an ongoing request.	Repeat the command later. Make sure that there are no commands still running before you start a new one.
Protocol error - Modbus_Slave (only communication modules that support Modbus)		
16#8380	CRC error	Checksum error of the Modbus frame. Check the communication partner.
16#8381	The function code is not supported or is not supported for broadcast.	Check the communication partner and make sure that a valid function code is sent.
16#8382	Invalid length information in the request frame	Select a suitable data length at the DATA_LEN parameter.
16#8383	Invalid data address in the request frame	Select a suitable value for the data address at the DATA_ADDR parameter.
16#8384	Invalid data value error in the request frame	Check the data value in the request frame of the Modbus master
16#8385	The diagnostic value is not supported by the Modbus slave (function code 08)	The Modbus slave only supports the diagnostic values 16#0000 and 16#000A.

Error code	Description	Remedy
Protocol error - Modbus_Master (only communication modules that support Modbus)		
16#8380	CRC error	Checksum error of the Modbus frame. Check the communication partner.
16#8381	Response frame from Modbus Slave with the following error message: The function code is not supported.	Check the communication partner and make sure that a valid function code is sent.
16#8382	Response frame from Modbus Slave with the following error message: Invalid length	Select a suitable data length.
16#8383	Response frame from Modbus Slave with the following error message: Invalid data address in the request frame	Select a suitable value for the data address at the DATA_ADDR parameter.
16#8384	Response frame from Modbus Slave with the following error message: Data value error	Check the request frame to the Modbus slave.
16#8385	Response frame from Modbus Slave with the following error message: The diagnostic value is not supported by the Modbus slave	The Modbus slave only supports the diagnostic values 16#0000 and 16#000A.
16#8386	The returned function code does not match the requested function code.	Check the response frame and the addressing of the slave.
16#8387	A slave that was not requested answers	Check the response frame of the slave. Check the address settings of the slave.
16#8388	Error in the response of the slave to a write request.	Check the response frame of the slave.
16#8828 [1]	DATA_PTR points to a bit address that is not equal to n * 8	Check the DATA_PTR pointer
16#8852 [1]	DATA_PTR is not a pointer to a DB or a bit memory area	Check the DATA_PTR pointer
16#8853 [1]	DATA_PTR is not a pointer of type BOOL or WORD	Check the DATA_PTR pointer
16#8855 [1]	DATA_PTR points to a write-protected DB	Check the DATA_PTR pointer
16#8856 [1]	Error during call of SFC51	Call the Modbus_Master instruction again
Error - Modbus_Slave (only communication modules that support Modbus)		
16#8428 [1]	MB_HOLD_REG points to a bit address that is not equal to n * 8	Check the MB_HOLD_REG pointer
16#8452 [1]	MB_HOLD_REG is not a pointer to a DB or a bit memory area	Check the MB_HOLD_REG pointer
16#8453 [1]	MB_HOLD_REG is not a pointer of type BOOL or WORD	Check the MB_HOLD_REG pointer
16#8454 [1]	The area addressed by MB_HOLD_REG is longer than the DB, or the area addressed is too small for the number of data bytes to be read or written.	Check the MB_HOLD_REG pointer
16#8455 [1]	MB_HOLD_REG points to a write-protected DB	Check the MB_HOLD_REG pointer
16#8456 [1]	Error during call of SFC51	Call the Modbus_Slave instruction again

[1] Only with instructions for S7-300/400 CPUs

Overview of error messages - USS

Error code	Description	Remedy
16#0000	No error	-
16#8180	Length error in response of drive	Check the response frame of the drive.
16#8181	Data type error	Select a suitable data type. The following are valid: • Real • Word • Double word
16#8182	Data type error: "Double word" or "Real" may not be returned for the "Word" request.	Check the response frame of the drive.
16#8183	Data type error: "Word" may not be returned for the "Double word" or "Real" request.	Check the response frame of the drive.
16#8184	Checksum error in response of drive	Check the drive and the communication connection.
16#8185	Addressing error	Valid drive address range: 1 to 16
16#8186	Setpoint error	Valid setpoint range: -200% to +200%
16#8187	Incorrect drive number returned	Check the response frame of the drive.
16#8188	Invalid PZD length	Permitted PZD lengths: 2, 4, 6, 8 words
16#8189	The module does not support this data transmission rate.	Select a valid data transmission rate for the module.
16#818A	A different request for this drive is currently active.	Repeat the parameter read or write command later.
16#818B	The drive does not respond.	Check the drive.
16#818C	The drive responds with an error message to a parameter request.	Check the response frame of the drive. Check the parameter request. Check if the instructions USS_Read_Param, USS_Write_Param or USS_Port_Scan have reported an error. If they have, check the value of the static tag USS_DB. w_USSExtendedError of the USS_Drive_Control instruction.
16#818D	The drive responds with an access error message to a parameter request.	Check the response frame of the drive. Check the parameter request.
16#818E	The drive was not initialized.	Check the user program and make sure that the USS_Drive_Control instruction is called for this drive.

Error code	Description	Remedy
16#8280	Negative acknowledgment when reading module	Check the input at the PORT parameter. You can find more detailed information on error causes in the static parameters Port_Config.RDREC.STATUS, Send_Config.RDREC.STATUS , Receive_Config.RDREC.STATUS , Send_P2P.RDREC.STATUS or Receive_P2P.RDREC.STATUS, and in the description of the SFB RDREC.
16#8281	Negative acknowledgment when writing module	Check the input at the PORT parameter. You can find more detailed information on error causes in the static parameters Port_Config.WRREC.STATUS, Send_Config.WRREC.STATUS , Receive_Config.WRREC.STATUS , Send_P2P.RDREC.STATUS or Receive_P2P.RDREC.STATUS, and in the description of the SFB WRREC.

1) Only with instructions for S7-300/400 CPUs

Startup and Diagnostics 6

6.1 Startup characteristics

Operating mode transitions

After the communication module starts up, all data between the CPU and the communication module is exchanged by means of instructions.

CPU STOP	During a running data transmission communication module - CPU, both a send and a receive job is aborted.
CPU RUN	Send and receive operation is ensured in the RUN state of the CPU. With a corresponding configuration in the properties dialog of the communication module, you can automatically clear the receive buffer on the communication module during CPU startup.

From the view of the communication module, there are no further operating states/operating state transitions.

6.2 Diagnostic functions

Introduction

The diagnostic functions of the communication module allow errors that have occurred to be located quickly. The following diagnostic options are available to you:

Diagnostics by means of the display elements of the communication module	The indicators provide information on the operating mode or the possible error states of the communication module. The indicators provide an initial overview of any internal or external errors and interface-specific errors. For more information refer to the device manual of the corresponding communication module.
Diagnostics via the STATUS output of the instructions	Instructions have a STATUS output for error diagnostics; it provides information about communication errors between the communication module and the CPU. You can evaluate the STATUS parameter in the user program (it is active for exactly one cycle).
Diagnostic error interrupt	The communication module can trigger a diagnostic error interrupt on the CPU assigned to it. The communication module makes diagnostic information available. The analysis of this information is made via the user program or by reading the CPU diagnostics buffer.

6.3 Diagnostic interrupts

The diagnostics are displayed as plain text in STEP 7 (TIA Portal) in the online and diagnostics view. You can evaluate the error codes with the user program.

The following diagnostics can be signaled:

- Parameter assignment error (10_H)
- Wire break (109_H)

Service & Support

A

A.1 Service & Support

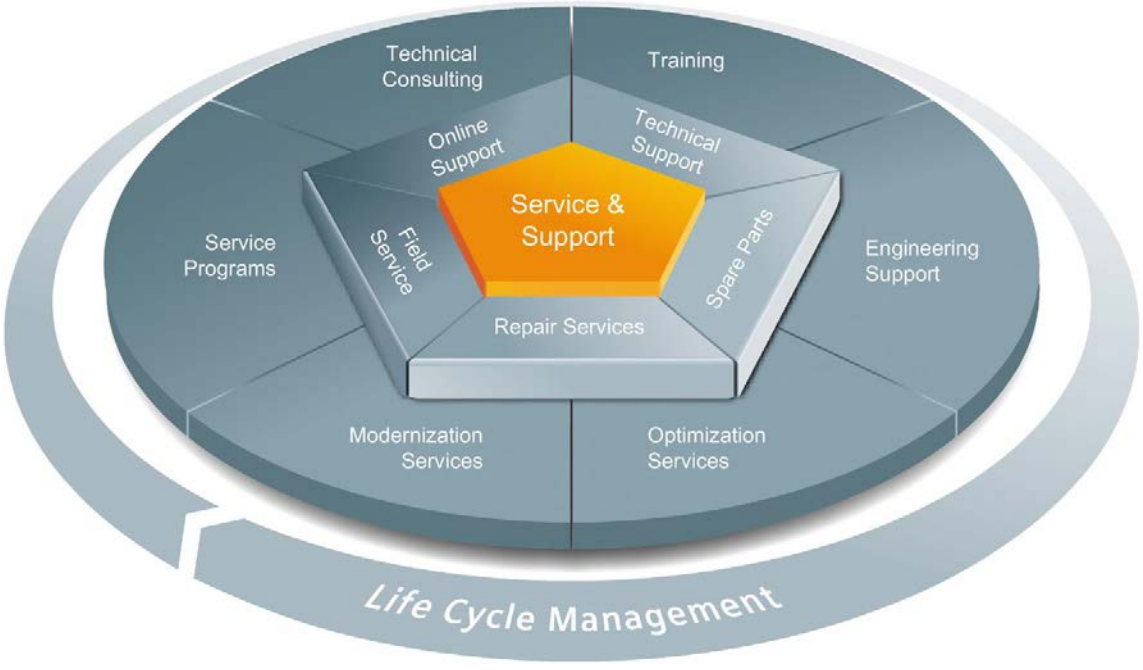

Unmatched complete service for the entire life cycle

For machine manufacturers, solution providers and plant operators: The service offering from Siemens Industry Automation and Drive Technologies includes comprehensive services for a wide range of different users in all sectors of the manufacturing and process industry.

To accompany our products and systems, we offer integrated and structured services that provide valuable support in every phase of the life cycle of your machine or plant – from planning and implementation through commissioning as far as maintenance and modernization.

Our Service & Support accompanies you worldwide in all matters concerning automation and drive technology from Siemens. We provide direct on-site support in more than 100 countries through all phases of the life cycle of your machines and plants.

You have an experienced team of specialists at your side to provide active support and bundled know-how. Regular training courses and intensive contact among our employees – even across continents – ensure reliable service in the most diverse areas.

Online Support

The comprehensive online information platform supports you in all aspects of our Service & Support at any time and from any location in the world.

You can find Online Support at the following address on the Internet (http://www.siemens.com/automation/service&support).

Technical Consulting

Support in planning and designing your project: From detailed actual-state analysis, definition of the goal and consultation on product and system questions right through to the creation of the automation solution.

Technical Support

Expert advice on technical questions with a wide range of demand-optimized services for all our products and systems.

You can find Technical Support at the following address on the Internet (http://www.siemens.com/automation/support-request).

Training

Extend your competitive edge – through practical know-how directly from the manufacturer.

You can find the training courses at the following address on the Internet (http://www.siemens.com/sitrain).

Engineering Support

Support during project engineering and development with services fine-tuned to your requirements, from configuration through to implementation of an automation project.

Field Service

Our Field Service offers you services for commissioning and maintenance – to ensure that your machines and plants are always available.

Spare parts

In every sector worldwide, plants and systems are required to operate with constantly increasing reliability. We will provide you with the support you need to prevent a standstill from occurring in the first place: with a worldwide network and optimum logistics chains.

Repairs

Downtimes cause problems in the plant as well as unnecessary costs. We can help you to reduce both to a minimum – with our worldwide repair facilities.

Optimization

During the service life of machines and plants, there is often a great potential for increasing productivity or reducing costs.

To help you achieve this potential, we are offering a complete range of optimization services.

Modernization

You can also rely on our support when it comes to modernization – with comprehensive services from the planning phase all the way to commissioning.

Service programs

Our service programs are select service packages for an automation and drives system or product group. The individual services are coordinated with each other to ensure smooth coverage of the entire life cycle and support optimum use of your products and systems.

The services of a service program can be flexibly adapted at any time and used separately.

Examples of service programs:

- Service contracts
- Plant IT Security Services
- Life Cycle Services for Drive Engineering
- SIMATIC PCS 7 Life Cycle Services
- SINUMERIK Manufacturing Excellence
- SIMATIC Remote Support Services

Benefits at a glance:

- Reduced downtimes for increased productivity
- Optimized maintenance costs due to a tailored scope of services
- Costs that can be calculated and therefore planned
- Service reliability due to guaranteed response times and spare part delivery times
- Customer service personnel will be supported and relieved of additional tasks
- Comprehensive service from a single source, fewer interfaces and greater expertise

Contact

At your service locally, around the globe: your partner for consultation, sales, training, service, support, spare parts... for the entire range of products from Industry Automation and Drive Technologies.

You can find your personal contact in our contacts database on the Internet (http://www.siemens.com/automation/partner).

Glossary

Automation system

An automation system is a programmable logic controller consisting of at least one CPU, various input and output modules, and operating and monitoring devices.

Bit times

"Bit times" are always specified as a number of bits.

The "time" set with bits depends on the selected data transmission rate that is taken into consideration automatically.

Example:

The telegram end is to be detected after a gap of two characters.

The set data transmission rate is 9600 bit/s.

The set character frame is 10 bits.

10 x 2 = 20 bit times

This corresponds to a time of:

20 x 1/9600 ≈ 0.0021 s

Communication module

Communication modules are used for point-to-point connections and bus links.

Configuring

Configuring refers to the configuration of separate modules of an automation system in the configuration table.

CPU

Central Processing Unit = Central module of the automation system that consists of the control and computing units, memory, system program, and interfaces to the I/O modules.

CTS

Clear to send. The communication partner is ready to receive data.

Cycle time

The cycle time is the time that the CPU requires to process the user program once.

Cyclic program processing

In cyclic program processing the user program runs in program loop, or cycle, that is constantly repeated.

DCD

Data carrier detect. The communication partner signals that it recognizes incoming data.

Default setting

The default setting is a reasonable basic setting that can be used whenever no other value is specified.

Diagnostic events

Diagnostics events are, for example, module errors or system errors in the CPU that may be caused by a program error.

Diagnostic functions

The diagnostic functions cover the entire system diagnostics and include the recognition, interpretation and reporting of errors within the automation system.

Diagnostics buffer

Memory area in which detailed information on all diagnostics events is entered based on the order of their occurrence.

DSR

Data set ready. The communication partner is ready.

DTR

Data terminal ready. The communication module is ready.

Hardware

Hardware is the entire physical and technical equipment of a automation system.

Module parameters

Module parameters are values with which the behavior of the module can be set.

Online/Offline

When you are online there is a data connection between the automation system and programming device, when you are offline there is no data connection between them.

Parameter assignment

Parameter assignment refers to the setting of a module's behavior.

Parameters

Parameters are values that can be allocated. There are two different types of parameters: block parameters and module parameters.

Point-to-point communication

In point-to-point communication the communication processor forms the interface between a programmable logic controller and a communication partner.

Procedure

Procedure refers to the process of a data transmission according to a specific protocol.

Protocol

All communication partners involved in data transmission must follow fixed rules for handling and implementing the data traffic. Such rules are called protocols.

Receive line initial state

The initial state of the receive line for RS422 and RS485 mode:

- enables break detection (wire break)
- ensures a defined level on the receive line while it is not sending.

RI

Ring indicator. Incoming call for connecting a modem.

RTS

Request to send. The communication module is ready to send.

Software

Software refers to the entirety of all programs that are used on a computing system. The operating system and user programs belong to this.

User program

The user program contains all instructions and declarations for processing the signals used for controlling a system or a process. In SIMATIC S7 the user program is structured and divided into small units, the blocks.

USS

The USS® protocol (universal serial interface protocol) defines an access method based on the master-slave principle for communication by means of a serial bus. The point-to-point connection is included as a subset in this protocol.

XON/XOFF

Software data flow control with XON/XOFF. You can configure the characters for XON and XOFF (any ASCII character). The user data may not contain these characters.

Index

3

3964(R)
    Receiving data, 51
    Sending data, 49
3964(R) procedure, 48
    Control characters, 48
    Priority, 48
3964R procedure
    Block check character, 49

A

Accompanying signals, 15
ASCII protocol, 39
Asynchronous data transmission, 19
Automatic operation of accompanying signals, 35

B

BCC, 48
Bidirectional data traffic, 19
Block check character, 49
Broadcast, 54
BUFFER parameter, Send_P2P, 90

C

Character delay time, 42
Character delay time CDT, 55
Code transparency, 45
Communication
    Query architecture, 72
Communication interfaces
    Programming, 70
Communication module (CM)
    Data reception, 91
    Programming, 70
Connecting cables, 24, 27, 30
CPU RUN, 204
CPU STOP, 204
CRC, 55
CTS, 24

D

Data flow control, 15, 24, 32
    Hardware, 33
    Software, 32
Data transmission rates, 14
Data transmission, trigger, 87
DCD, 24
Diagnostic functions, 204
Diagnostics, 204
DLE, 48
DSR, 24
DTR, 24

E

End sequence, 42
ETX, 48

F

Fixed frame length, 42
Frame configuration
    Instructions, 70
frame structure, 54
Freeport, 64, 64
    Code transparency, 45
    End criteria, 42
    Message end, 40
    Message start, 40
    Receive buffer, 46
    Start criteria, 41
Freeport protocol, 39
Full-duplex operation, 19

G

Get_Features, 18, 65
Global library
    Overview of the USS protocol, 167

H

Half-duplex operation, 19
Handshaking, 32

Hardware data flow control, 33
Hardware RTS always ON, 34
Hardware RTS always ON, ignore DTR/DSR, 34
Hardware RTS always switched, 35

I

Idle line, 41
Instructions
    P3964_Config (protocol configuration), 85
    Port_Config (port configuration), 75
    Receive_Config (receive configuration), 80
    Receive_P2P (receive point-to-point data), 91
    Receive_Reset (reset receiver), 93
    Send_Config (send configuration), 78
    Send_P2P (send point-to-point data), 87
    Signal_Get (get RS232 signals), 94
    Signal_Get (set RS232 signals), 96
    USS_Drive_Control / USS_Drive_Control_31, 176
    USS_Port_Scan, 172
    USS_Port_Scan_31, 172
    USS_Read_Param / USS_Read_Param_31, 180
    USS_Write_Param / USS_Write_Param_31, 182
Interface
    X27 (RS 485), 30
    X27 (RS422), 27
Interface configuration
    Instructions, 70
Interfaces, 14

L

LENGTH parameter, Send_P2P, 90
Library for the USS protocol
    General information on drive setup, 184
    Overview, 167
    Requirements for use, 169
    USS_Drive_Control / USS_Drive_Control_31, 176
    USS_Port_Scan, 172
    USS_Port_Scan_31, 172
    USS_Read_Param / USS_Read_Param_31, 180
    USS_Write_Param / USS_Write_Param_31, 182
Line break, 41

M

Main entry, 65
Maximum number of characters, 42
Message length from message, 42
Message timeout, 42
Modbus
    End of frame, 55
    Exception code, 55
    Modbus_Comm_Load, 120
    Modbus_Slave, 125, 133
    RS232 signals, 35
Modbus communication, 53
Modbus instructions, 66
Modbus_Comm_Load, 18, 66, 120
Modbus_Master, 18, 66
Modbus_Slave, 18, 66, 125, 133

N

NAK, 48

O

Operating mode transitions, 204
Order numbers, 13

P

P3964_Config, 17
P3964_Config (protocol configuration), 85
Parameter configuration
    LENGH and BUFFER for Send_P2P, 90
Point-to-point connection, 16
Point-to-point programming, 70
Port_Config, 17, 65
Port_Config (port configuration), 75
Programming
    Modbus, 66
    PtP, 63
    PtP instructions, 70
    USS, 68
Protocols of the communication modules, 15
PtP communication
    Programming, 70
PtP error classes, 74
PtP instructions, 64
PtP instructions return values, 73

Q

Query architecture, 72
Query architecture master, 72
Query architecture slave, 72

R

Receive buffer, 46
Receive buffer size, 14
Receive line initial state, 26
Receive_Config, 17, 65
Receive_Config (receive configuration), 80
Receive_P2P, 17, 64
Receive_P2P (receive point-to-point data), 91
Receive_Reset, 17, 65
Receive_Reset, 17, 65
Receive_Reset (reset receiver), 93
Receiving data, 64
Response timeout, 42
Return values
    PtP instructions, 73
Return values receive runtime, 91
RI, 24
RS232 accompanying signals
    Automatic use, 35
RS232 mode, 23
RS232 signals, 23
RS422 mode, 26
RS422 signals, 27, 29
RS485 mode, 29
RTS, 24

S

Send_Config, 17, 65
Send_Config (send configuration), 78
Send_P2P, 17, 64
Send_P2P (send point-to-point data)
    LENGH and BUFFER parameters, 90
Send_P2P (send point-to-point data), 87
Sending data, 64
Serial data transmission, 19
Set_Features, 18, 65
Shared PtP parameter errors, 74
Signal_Get, 17, 65
Signal_Get (get RS232 signals), 94
Signal_Get (set RS232 signals), 96
Signal_Set, 18, 65
Software data flow control, 32
Start character, 41
Start sequences, 41
STX, 48

T

Transmission security, 20
    for Modbus and USS, 22
    with 3964(R), 21
    with Freeport, 21

U

Unidirectional/bidirectional data traffic, 24
USS communication, 60
USS instructions, 68
USS master
    Overview of functions, 62
    USS protocol, 60
    USS protocol: Data field,
    USS protocol:Data encryption, 61
    USS protocol:Data transmission procedure, 61
    USS protocol:frame structure, 61
USS protocol
    General structure of the data block:Parameter area (PKW), 62
    General structure of the data block:Process data area (PZD), 62
USS_Drive_Control, 18, 69, 168
USS_Drive_Control / USS_Drive_Control_31, 176
USS_Port_Scan, 18, 68, 168, 172
USS_Port_Scan_31, 172
USS_Read_Param, 18, 69, 168
USS_Read_Param / USS_Read_Param_31, 180
USS_Write_Param, 18, 69, 168
USS_Write_Param / USS_Write_Param_31, 182

X

X27 (RS 485) interface, 30
X27 (RS422) interface, 27
XON/XOFF, 32

SIEMENS

SIMATIC

S7-1500 / ET 200MP / ET 200SP CM PtP operation with PROFINET controller

Programming and Operating Manual

Preface

Documentation guide 1

Overview 2

Basic information 3

Basic communication mechanisms 4

Data transmission with Freeport 5

Data transmission with 3964(R) 6

Configuration data records 7

Error status 8

Sending data 9

Receiving data 10

Clear receive buffer 11

RS232 signals 12

Error messages 13

01/2013

A5E03908199-01

Legal information

Warning notice system

This manual contains notices you have to observe in order to ensure your personal safety, as well as to prevent damage to property. The notices referring to your personal safety are highlighted in the manual by a safety alert symbol, notices referring only to property damage have no safety alert symbol. These notices shown below are graded according to the degree of danger.

⚠ DANGER
indicates that death or severe personal injury **will** result if proper precautions are not taken.

⚠ WARNING
indicates that death or severe personal injury **may** result if proper precautions are not taken.

⚠ CAUTION
indicates that minor personal injury can result if proper precautions are not taken.

NOTICE
indicates that property damage can result if proper precautions are not taken.

If more than one degree of danger is present, the warning notice representing the highest degree of danger will be used. A notice warning of injury to persons with a safety alert symbol may also include a warning relating to property damage.

Qualified Personnel

The product/system described in this documentation may be operated only by **personnel qualified** for the specific task in accordance with the relevant documentation, in particular its warning notices and safety instructions. Qualified personnel are those who, based on their training and experience, are capable of identifying risks and avoiding potential hazards when working with these products/systems.

Proper use of Siemens products

Note the following:

⚠ WARNING
Siemens products may only be used for the applications described in the catalog and in the relevant technical documentation. If products and components from other manufacturers are used, these must be recommended or approved by Siemens. Proper transport, storage, installation, assembly, commissioning, operation and maintenance are required to ensure that the products operate safely and without any problems. The permissible ambient conditions must be complied with. The information in the relevant documentation must be observed.

Trademarks

All names identified by ® are registered trademarks of Siemens AG. The remaining trademarks in this publication may be trademarks whose use by third parties for their own purposes could violate the rights of the owner.

Disclaimer of Liability

We have reviewed the contents of this publication to ensure consistency with the hardware and software described. Since variance cannot be precluded entirely, we cannot guarantee full consistency. However, the information in this publication is reviewed regularly and any necessary corrections are included in subsequent editions.

Siemens AG
Industry Sector
Postfach 48 48
90026 NÜRNBERG
GERMANY

A5E03908199-01
Ⓟ 01/2013 Technical data subject to change

Copyright © Siemens AG 2013.
All rights reserved

Preface

Purpose of the documentation

This documentation addresses users who want to use the point-to-point communication modules independently of the SIMATIC S7. It offers you important information with regard to the configuration and commissioning of the point-to-point communication modules for S7-1500 (ET 200MP) and ET 200SP.

Requirements

To use PtP communication modules in a system independently of the SIMATIC S7, the CPU must support communication by means of data records and come equipped with a PROFINET IO controller. For more information on this topic, refer to the *Distributed I/O System ET 200SP* and *Distributed I/O System ET 200MP* system manuals.

Basic knowledge required

The following knowledge is required in order to understand the documentation:

- General knowledge of automation technology
- Knowledge of the industrial automation system SIMATIC
- Knowledge about the use of Windows-based computers
- Proficiency with STEP 7

GSDML file

Engineering must be provided with information regarding functionality and parameters of the communication modules for the higher-level application.

The properties of the PtP communication modules are defined in a GSDML (Generic Station Description Markup Language) file, an XML-based language that is defined based on the GSDML scheme (ISO 15745: GSD for PROFIBUS and GSDML for PROFINET IEC 61804: EDDL IEC 62453: FDT/DTM).

The Engineering System must provide a suitable interpreter that makes the GSDML data available to the system.

The name of a GSDML file for the communication modules can have the following syntax, for example: GSDML-V2.3-Siemens-ET200SP-20110824.xml

The GSDML file contains:

- Device and identification data
- Parameter assignment data
- Diagnostics data

In order to enable parameter assignment of the communication modules, the GSDML file must be installed/imported in the Engineering System.

Validity of the documentation

This documentation is valid for the following point-to-point communication modules

- CM PtP RS232 BA (6ES7540-1AD00-0AA0) communication module
- CM PtP RS422/485 BA (6ES7540-1AB00-0AA0) communication module
- CM PtP RS232 HF (6ES7541-1AD00-0AB0) communication module
- CM PtP RS422/485 HF (6ES7541-1AB00-0AB0) communication module
- CM PtP (6ES7137-6AA00-0BA0) communication module

Conventions

Please also observe notes labeled as follows:

Note

The notes contain important information on the product described in the documentation, on the handling of the product or on part of the documentation to which particular attention should be paid.

Recycling and disposal

The products can be recycled due to their low pollutant content. For environmentally compliant recycling and disposal of your old device, please contact a company certified for the disposal of electronic waste.

Additional assistance

- Information about the Technical support (http://www.siemens.com/automation/support-request) available can be found in the appendix to this documentation.
- The portfolio of technical documentation for SIMATIC products and systems is available on the SIMATIC Portal (http://www.siemens.com/simatic-tech-doku-portal).
- The online catalog and the ordering system are available in the Catalog (http://mall.automation.siemens.com).

Note on IT security

Siemens offers IT security mechanisms for its automation and drive product portfolio in order to support the safe operation of the plant/machine. We recommend that you inform yourself regularly on the IT security developments regarding your products. You can find information on this on the Internet (http://support.automation.siemens.com).

You can register for a product-specific newsletter here.

For the safe operation of a plant/machine, however, it is also necessary to integrate the automation components into an overall IT security concept for the entire plant/machine, which corresponds to the state-of-the-art IT technology. You can find information on this on the Internet (http://www.siemens.com/industrialsecurity).

Products used from other manufacturers should also be taken into account here.

Table of contents

Preface 3

1 Documentation guide 9

2 Overview 11

3 Basic information 13

3.1 Serial transmission of a character 13

3.2 Transmission security 15

4 Basic communication mechanisms 17

4.1 Data records and user data interface 20

5 Data transmission with Freeport 21

5.1 Sending data with Freeport 22

5.2 Receiving data with Freeport 24

5.3 Code transparency 29

5.4 Receive buffer 29

5.5 RS232 mode 30

5.6 RS422 mode 31

5.7 RS485 mode 32

5.8 Handshaking 33

6 Data transmission with 3964(R) 37

6.1 Data transmission with 3964(R) protocol 37

6.2 Control characters 37

6.3 Block checksum 38

6.4 Sending data with 3964(R) 39

6.5 Receiving data with 3964(R) 40

7 Configuration data records 41

7.1 Freeport communication 41

7.1.1 Port configuration record - data record 57 41

7.1.2 Send configuration record - data record 59 44

7.1.3 Receive configuration record - data record 60 46

7.2 3964 communication 49

7.2.1 Port configuration record - data record 57 49

7.2.2 3964 protocol configuration - data record 61 49

7.3 Activate special function 51

8 Error status 53
8.1 Read error status - data record 55 53
9 Sending data 55
9.1 Send data - data record 48 55
9.2 Querying send acknowledgment - input user data 57
9.3 Example 58
10 Receiving data 59
10.1 Data received - data record 49/50 59
10.2 Query: New receive frame - input user data 61
10.3 Example 62
11 Clear receive buffer 63
11.1 Clear receive buffer - data record 54 63
12 RS232 signals 65
12.1 Set RS232 secondary signals - data record 53 65
12.2 Read RS232 secondary signals - input user data 66
13 Error messages 67
Glossary 75
Index 79

Documentation guide 1

Introduction

This modular documentation of the SIMATIC products covers diverse topics concerning your automation system.

The complete documentation for the S7-300/400, ET 200MP/SP systems consists of the relevant operating instructions, manuals and product information.

Overview of documentation on the topic of point-to-point communication

The table below includes additional documentation which amends this description.

Subject	Documentation	Important contents
System	System manual ET 200MP distributed I/O system (http://support.automation.siemens.com/WW/view/en/59193214) System manual ET 200SP distributed I/O system (http://support.automation.siemens.com/WW/view/en/58649293)	• Application planning • Installing • Connecting • Addressing • Commissioning • Maintenance
Communication	Function manual Communication (http://support.automation.siemens.com/WW/view/en/59192925)	• Basics of serial communication • Data transmission functions • Diagnostic functions
	Device manual CM PtP RS232 BA communication module (http://support.automation.siemens.com/WW/view/en/59057152) Device manual CM PtP RS232 HF communication module (http://support.automation.siemens.com/WW/view/en/59057160) Device manual CM PtP RS422/485 BA communication module (http://support.automation.siemens.com/WW/view/en59057390) Device manual CM PtP RS422/485 HF communication module (http://support.automation.siemens.com/WW/view/59061372) Device manual CM PtP communication module (http://support.automation.siemens.com/WW/view/en/59061378)	• Product overview • Connecting • Assigning parameters • Programming • Diagnostics

Subject	Documentation	Important contents
System diagnostics	Function manual System diagnostics (http://support.automation.siemens.com/WW/view/en/59192926)	For S7-1500, ET 200MP, ET 200SP: • Diagnostic evaluation Hardware/software
Setup	Function manual EMC/EMI compatible installation of control systems (http://support.automation.siemens.com/WW/view/en/59193566)	• Basics • Electromagnetic compatibility • Lightning protection

SIMATIC Manuals

The latest manuals of SIMATIC products are available on the Internet (http://www.siemens.com/automation/service&support) and can be downloaded free of charge.

Overview 2

Overview of components and order numbers

Tabular overview of communication modules

Communication module	Order number
CM PtP RS232 BA	6ES7 540-1AD00-0AA0
CM PtP RS422/485 BA	6ES7 540-1AB00-0AA0
CM PtP RS232 HF	6ES7 541-1AD00-0AB0
CM PtP RS422/485 HF	6ES7 541-1AB00-0AB0
CM PtP (ET 200SP)	6ES7 137-6AA00-0BA0

Overview of components and interfaces

Tabular overview of communication modules and their functions.

Communication module	Interface	Protocols		D-sub	
		Freeport	3964(R)	9-pin	15-pin
CM PtP RS232 BA	RS232	●	●	●	-
CM PtP RS422/485 BA	RS422	●	●	-	●
	RS485	●	-	-	●
CM PtP RS232 HF	RS232	●	●	●	-
CM PtP RS422/485 HF	RS422	●	●	-	●
	RS485	●	-	-	●
CM PtP (ET 200SP)	RS232	●	●	ET 200SP Base Unit with 18 terminals *)	
	RS422	●	●		
	RS485	●	-		

*) ET 200SP Base Unit instead of sub D; same for all; pin assignment depending on physical transmission properties

Overview of components and data transmission rates

Communication module	Data transmission rate in bps										
	300	600	1200	2400	4800	9600	19200	38400	57600	76800	115200
CM PtP RS232 BA	●	●	●	●	●	●	●	-	-	-	-
CM PtP RS422/485 BA	●	●	●	●	●	●	●	-	-	-	-
CM PtP RS232 HF	●	●	●	●	●	●	●	●	●	●	●
CM PtP RS422/485 HF	●	●	●	●	●	●	●	●	●	●	●
CM PtP (ET 200SP)	●	●	●	●	●	●	●	●	●	●	●

Overview of components and receive buffer size

Module	Receive buffer size KB	Max. frame length KB	Bufferable frames
CM PtP RS232 BA	2	1	255
CM PtP RS422/485 BA	2	1	255
CM PtP RS232 HF	8	4	255
CM PtP RS422/485 HF	8	4	255
CM PtP (ET 200SP)	4	2	255

Secondary signals and data flow control

- Software data flow control with XON/XOFF

  The Freeport protocol supports data flow control with XON/XOFF via the RS232 and RS422 interfaces.

- Hardware data flow control with RTS/CTS

  The Freeport protocol supports data flow control with RTS/CTS via the RS232 interface.

- Automatic operation of secondary signals

  The Freeport protocol supports operation of the RS232 secondary signals by means of the RS232 interface. (Only available if hardware data flow control is not activated.)

Application options for the communication modules

You may set up a communication connection with different partners, depending on the communication modules used:

- Freeport: Transmission of ASCII character strings without specified protocol format
- 3964(R): Communication between programmable logic controllers (master/master communication)

Basic information 3

3.1 Serial transmission of a character

Introduction

Different networking options are available for the exchange of data between two or more communication partners. The PtP connection between two communication partners is the simplest means of information exchange.

Point-to-point connection

In point-to-point connection, the communication processor forms the interface between a programmable logic controller and a communication partner. Data is sent in serial mode via PtP connection with the communication module.

Serial data transmission

During serial data transmission, the individual bits of a character of information to be transferred are sent successively in a defined sequence.

Bidirectional data traffic - operating mode

In the context of bidirectional data traffic, we distinguish between two operating modes for the communication module:

- Half duplex mode

  The data is transferred between one or several communication partners in both directions alternately. Half duplex mode means that data is either sent or received at a given point in time.

- Full duplex mode

  The data is exchanged simultaneously between one or several communication partners, i.e. it is possible to send and receive data simultaneously at a given point in time.

Asynchronous data transmission

Serial data transmission occurs asynchronously at the communication module. The so-called time base synchronism (fixed time base for transmission of a fixed character string) is only upheld during transmission of a character. Each character to be sent is preceded by a synchronization pulse, which is also known as start bit. The length of the start bit transmission determines the clock cycle. The end of character transmission is formed by one or two stop bits.

Handshakes

In addition to the start and stop bits, both communication partners need further handshake procedures for serial data transmission. These include:

- Data transmission rate
- Character and acknowledgment delay time
- Parity
- Number of data bits (7 or 8 bits/characters)
- Number of stop bits (1 or 2)

3.2 Transmission security

Transmission security plays an important role in the transmission of data and in the selection of the transmission procedure. Generally speaking, the more layers of the reference model are applied, the higher the transmission security.

Classification of existing protocols

The figure below illustrates how the protocols of the communication module fit into the reference model.

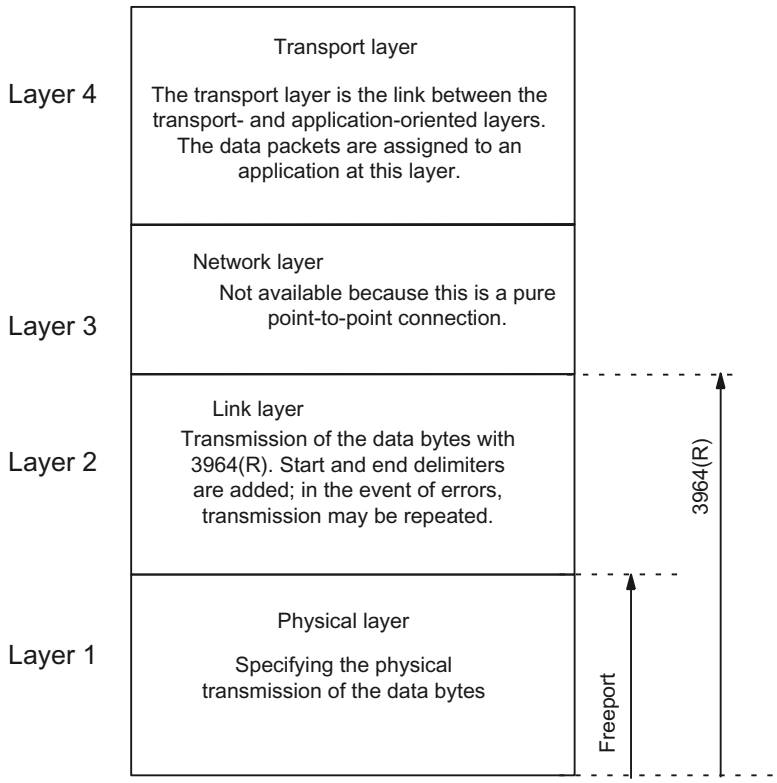

Figure 3-1 Classification of the existing protocols of the communication module in the reference model

Transmission security with Freeport

Data security when using Freeport:

- Despite the efficiency of data transmission with the Freeport protocol, it is not possible to ensure secure data transmission with Freeport because no data security measures other than the use of a parity bit (can also be disabled, depending on the character frame setting) are applied. A certain degree of data security can be achieved through parameter assignment of the frame start and frame end conditions.
- The parity bit ensures that the inversion of a bit in a character to be sent can be recognized. If two or more bits of a character are inverted, this error can no longer be detected.
- To increase transmission security, you can, for example, implement a checksum, a frame length specification, or configurable end conditions. These measures must be implemented by the user.
- A further increase in data security can be achieved by means of acknowledgment message frames in response to send or receive message frames. This is the case with high-grade protocols for data communication (ISO 7-layer reference model).

Transmission security with 3964(R)

Two different procedures for data transmission can be used, either with or without a block check character:

- Data transmission without block check character: 3964

  Transmission security is achieved by means of a specified frame structure, frame breakdown, and frame repetitions.
- Data transmission with block check character: 3964R

  The high degree of transmission security is achieved by means of a specified frame structure and breakdown, frame repetitions, as well as inclusion of a block check character (BCC). The hamming distance in 3964R mode is 3.

The hamming distance represents a measure for data transmission security.

In this manual, the term 3964(R) is used when descriptions and notes refer to both data transmission modes.

Basic communication mechanisms 4

Reading/writing data records

Note

Reading/writing data records

For information about the functions for reading/writing data records, refer to the documentation of your controller.

The "Write data record" function can be used to configure the devices by means of configuration data records. The "Write data record" function also transmits the send data to the devices. Accordingly, "Read data record" can be used to read diagnostics data and receive data from the devices.

- For operation, you need to configure the communication modules for the relevant application.
  The following configuration data records can be used for this purpose:
  - Freeport communication (Page 41)
  - 3964 communication (Page 49)
- Use the following data records to send and receive data:
  - Sending data (Page 55)
  - Receiving data (Page 59)
- The cyclic user data shows you whether the module has sent or received new data.
  - Querying send acknowledgment - input user data (Page 57)
  - Query: New receive frame - input user data (Page 61)
- In RS232 mode, you can derive the current state of the secondary signals from the cyclic user data of the module, or control the RS232 secondary signals by means of the user program (provided hardware data flow control is not activated).
  - RS232 signals (Page 65)
- Data records can also be used to send additional control and verification commands.
  - Activate special function (Page 51)

Additional information

Chapter Data records and user data interface (Page 20) provides an overview of all configuration data records.

Send - flow chart

Users can transmit data based on the sequence outlined below (refer to Sending data (Page 55) for details). Management data and send data is transmitted to the communication module by means of a special data record. The communication module provides the acknowledgment in the input user data.

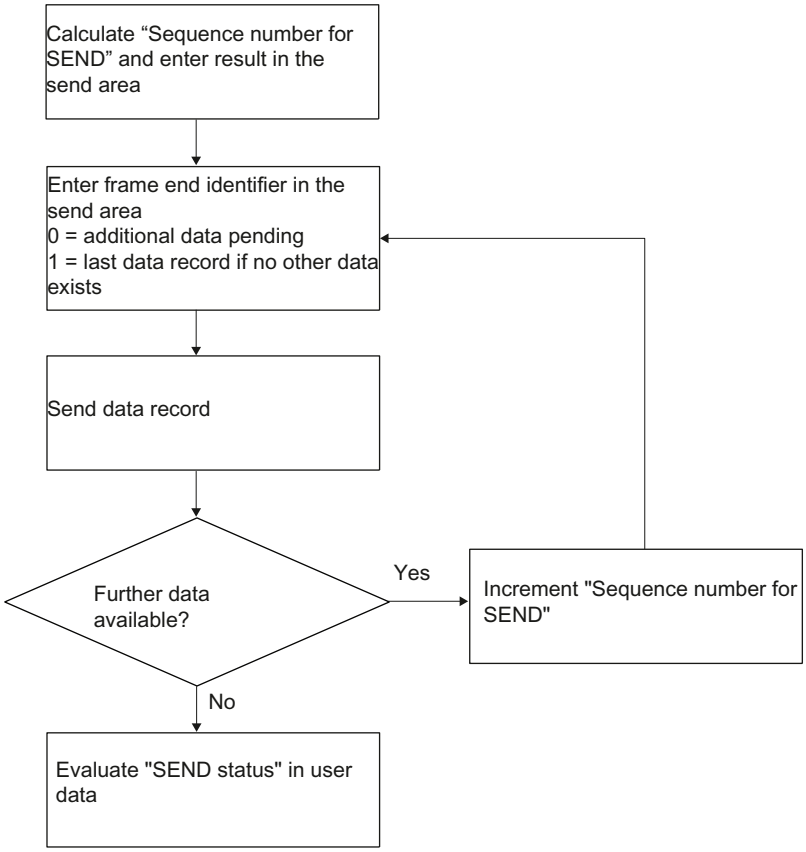

Receive - flow chart

The communication module signals the availability of new received data in the input user data (refer to Receiving data (Page 59) for details). The communication module provides management and receive data in a special data record.

Users can receive data based on the sequence outlined below.

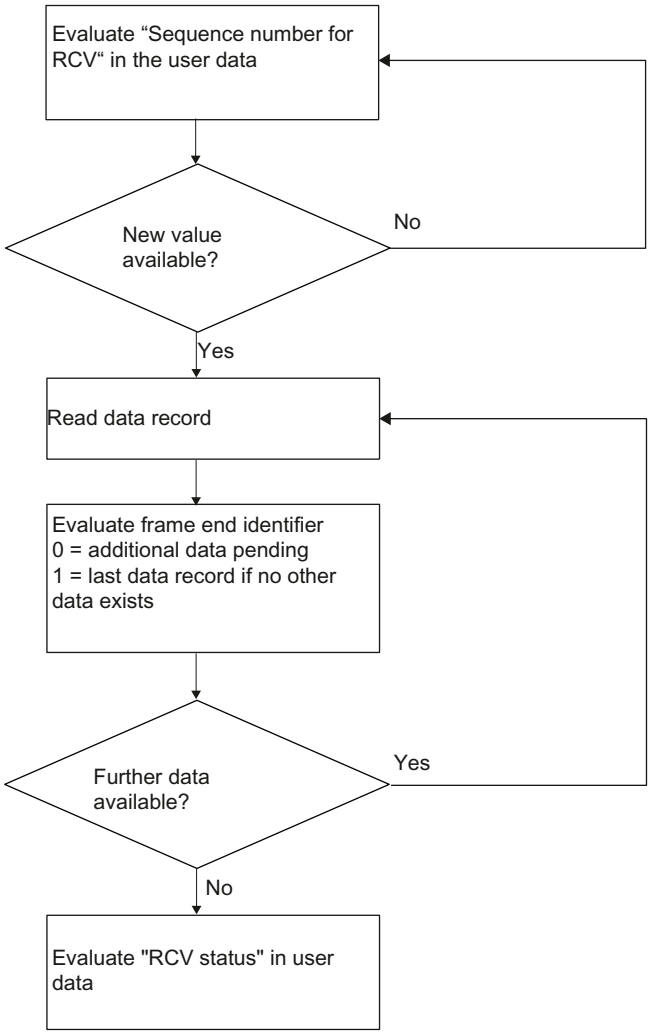

4.1 Data records and user data interface

Overview of data records

Configuration data records are available for the following tasks:

- Freeport communication
  Configuration of the communication module for data transmission using the open Freeport frame
  - Activate special function (Page 51)
  - Send configuration record - data record 59 (Page 44)
  - Receive configuration record - data record 60 (Page 46)
- 3964 communication
  Configuration of the communication module for data transmission with 3964(R) protocol
  - Port configuration record - data record 57 (Page 41)
  - 3964 protocol configuration - data record 61 (Page 49)
- Special functions - Activation
  Activating or verifying the active state of diagnostic interrupts.
  - Activate special function (Page 51)

The following data records are available for operating the communication modules:

- Query error status
  Acknowledgment of the communication module in response to the writing of a configuration data record
  - Read error status - data record 55 (Page 53)
- Send data
  Transmitting send data to the communication module and querying transmission acknowledgment in the user data
  - Send data - data record 48 (Page 55)
  - Querying send acknowledgment - input user data (Page 57)
- Receive data
  Display of a receive frame in the user data
  - Data received - data record 49/50 (Page 59)
  - Query: New receive frame - input user data (Page 61)
- Clear receive buffer
  Clearing the receive buffer of the communication module
  - Clear receive buffer - data record 54 (Page 63)
- RS232 secondary signals
  Manipulation of the RS232 secondary signals of the communication module and reading the RS232 secondary signals in the user data
  - Set RS232 secondary signals - data record 53 (Page 65)
  - Read RS232 secondary signals - input user data (Page 66)

Data transmission with Freeport 5

Introduction

Freeport is a freely programmable, frame-based protocol.

The Freeport driver controls data transmission via point-to-point connection between the communication module and a communication partner. The Freeport driver contains the physical layer (layer 1).

The Freeport driver supports sending and receiving of messages with any structure - all characters from 00 to FFH (for character frames with 8 data bits), or from 00 to 7FH (for character frames with 7 data bits).

The frame start and end criteria must be configured both for the send and the receive direction. The structure of the send frames may differ from that of the receive frames.

5.1 Sending data with Freeport

Sending data

Note

During parameter assignment of the XON/XOFF data flow control, user data may not contain any of the configured XON or XOFF characters. Default settings are DC1 = 11H for XON and DC3 = 13H for XOFF.

Specifying settings for sending

To send a message, the partner must be informed of the start and end of the message (see Send configuration record - data record 59 (Page 44)). You can select one of the following options:

- Send the Break signal at the start of the message

  You can specify that an additional Break is sent at the beginning of each message transmission on expiration of the RTS ON delay time.
  The duration of the "Break" is specified in bit times (refer to Send configuration record - data record 59 (Page 44) bytes 12 and 13).

  Compliance with the send break can be deactivated if other mechanisms are used for synchronization.

- Send Idle Line

  You can specify that an additional "Idle Line" signal is output at the start of each message transmission.
  The duration of the "Idle Line" is specified in bit times (see Send configuration record - data record 59 (Page 44) bytes 14 and 15).

  Compliance with the send break can be deactivated if other mechanisms are used for synchronization.

- RTS ON delay

  You can configure the time that has to expire after the RTS (Request to send) before the actual data transmission starts (see Send configuration record - data record 59 (Page 44) bytes 8 and 9).

- RTS OFF delay

  You can configure the time that has to expire after transmission has been completed before the RTS signal is deactivated (see Send configuration record - data record 59 (Page 44) bytes 10 and 11).

- Sending including the end delimiter

  You can configure the number of end delimiters (1 or 2) and their value.

  All data up to the end delimiter(s) is sent, independent of the selected frame length. The end delimiter must be included in the data to be sent. Data is sent only up to and including the end delimiter, even if the data length specified is longer (refer to Send configuration record - data record 59 (Page 44) bytes 18 and 21).

- Number of appended characters

  Input of the number of appended characters. All data transferred to the communication module will be sent. The end delimiter(s) is/are appended automatically. 1 to 5 characters more than the specified number are sent to the partner, depending on the number of end delimiters (see Send configuration record - data record 59 (Page 44) bytes 22 and 28).

Note

If you do not configure either the "End delimiter" (0) or the "Number of appended characters" (0), all data transferred to the communication module is sent to the partner in a transparent operation.

5.2 Receiving data with Freeport

Introduction

You need to specify message start and end criteria in the Freeport driver to enable detection of a message in the incoming data flow.

Note

The start and end criteria described below can be combined as required. Such combinations may lead to unwanted results if the start and end criteria influence or even exclude each other.

Specifying the message start

For data transmission with Freeport, you can choose between several different start criteria. The start criterion defines when a frame starts. Once a criterion that indicates the start of the message is met, the data stream is scanned for message end criteria. (See Receive configuration record - data record 60 (Page 46) byte 9)

Two different methods are available for detecting the message start:

- Start on any character
- Start on special condition

Start on any character

- Start on any character

  Any character can be used to define the start of the message (default).

  This means that the first character sent at the start of communication, or after the frame end has been detected, will be identified as the first character of a message. (See Receive configuration record - data record 60 (Page 46) byte 12)

Start on special condition

The start of the message is detected based on the following specified conditions:

- **After detection of a line break**

  The frame start is not accepted unless a break has been received beforehand, in other words, it is compulsory for the partner to send a break before sending a frame.

- **After detection of an idle line**

  The frame start is not accepted until the configured idle line duration has expired. This procedure requires a minimum interval between two frames. (See Receive configuration record - data record 60 (Page 46) bytes 10 and 11)

- **After receipt of a start character**

  The frame start is detected when the configured start character is identified. (See Receive configuration record - data record 60 (Page 46) byte 12)

- **After detection of one or several start sequences**

  The frame start is detected when the configured string with a length of up to five characters is identified. You can configure up to 4 start sequences. (See Receive configuration record - data record 60 (Page 46) bytes 13 to 37)

Specifying the message end

You can choose from several different end criteria for data transmission using the Freeport driver. The end criterion defines the point at which a message frame has been received completely. (See Receive configuration record - data record 60 (Page 46) byte 39)

Configurable end criteria are:

- **Recognize message end by message timeout**
- **Recognize message end by response timeout**
- **After character delay time elapses (default)**
- **After receipt of a fixed frame length**
- **After receipt of a maximum number of characters**
- **Read message length from message**
- **After receipt of an end sequence**

Message timeout

When data is received, the end of frame is detected on expiration of the configured time for transferring a frame. Time measurement starts after the start criterion has been met. (See Receive configuration record - data record 60 (Page 46) bytes 52 and 53)

An error message is output and the frame is discarded if a message end condition is met before the fixed frame length has been reached.

Response timeout

When data is received, the end of frame is detected on expiration of the configured time between the end of the send operation and the receipt of a frame start. (See Receive configuration record - data record 60 (Page 46) bytes 50 and 51)

An error message is output and the frame is discarded if a message end condition is met before the fixed frame length has been reached.

Expiration of character delay time

When data is received, the frame end is detected when the configured maximum time (bit times) between successive characters is exceeded (character delay time). (See Receive configuration record - data record 60 (Page 46) bytes 54 and 55)

In this case, the character delay time must be set in such a way as to ensure that it expires between two consecutive frames. However, it should be of sufficient length to exclude incorrect identification of the end of the frame whenever the communication partner performs a transmission pause within a frame.

Fixed frame length

When data is received, the end of the frame is identified after the configured frame length has been reached. (See Receive configuration record - data record 60 (Page 46) bytes 40 and 41)

An error message is output and the frame is discarded if the character delay time expires (if activated) before the fixed frame length has been reached.

Please note the following if the frame length of the received characters does not match the fixed configured frame length:

- All characters received after the fixed configured frame length has been reached will be discarded until a new start criterion (e.g. "any character") is detected.
- Receiving is terminated if the character delay time (if activated) expires before the fixed configured frame length has been reached. An error message is generated and the message frame fragment is discarded.
- If a different (activated) end criterion is met before the fixed configured frame length has been reached, this "frame part" is assessed as a valid frame and the partner waits for a new start criterion. All characters received prior to fulfillment of a new start criterion are discarded.

Maximum number of characters

When receiving data, the end of the message frame is recognized after the declared number of characters have arrived. (See Receive configuration record - data record 60 (Page 46) bytes 42 and 43)

This setting can be combined with the "Character delay time" settings. The frame received is also assessed as free of error if another end condition occurs, regardless of whether the maximum number of characters has been reached.

Please note the following if the frame length of the received characters does not match the configured maximum frame length:

- All characters received after the configured maximum number of characters has been reached will be discarded until a new start criterion (e.g. "Idle Line") is detected.
- If a different (activated) end criterion is met before the configured maximum number of characters has been reached, this "frame part" is assessed as a valid frame and the partner waits for a new start criterion. All characters received prior to fulfillment of a new start criterion are discarded.

Note

If no further end criterion is activated, the fixed frame length and maximum number of characters will respond in the same way.

Message length in the message

The length of the receive frame is also sent. When data is received, the frame end is identified after the frame length also sent has been reached. If "After character delay time elapses" is activated as an additional end criterion, receiving will be terminated prematurely. An error message is generated and the message frame fragment is discarded.

The following parameters define the characters to be used for evaluation of the message length:

- **Offset of the length field in the message**

  In the message, the value defines the position of the character that is to be used to determine the message length.

  You can set values from 1 to 4096 characters, depending on the buffer size.

  (See Receive configuration record - data record 60 (Page 46) bytes 44 to 45)

- **Size of the length field**

  This value specifies the number of characters as of the first evaluation position to be used to determine the message length.

  You can set values of 0, 1, 2 and 4 characters.

  (See Receive configuration record - data record 60 (Page 46) bytes 46 to 47)

- **Number of characters not counted in length specification**

  Number of characters appended to the frame without counting towards the frame length. This value defines the number of bytes at the end of the frame which should not be included in the evaluation of the message length.

  You can set values from 0 to 255 characters.

  (See Receive configuration record - data record 60 (Page 46) bytes 48 to 49)

End sequence

When data is received, the end of the frame is identified when the configured end sequence (max. 5 characters) is received. The received data is applied by the CPU, including the end sequence. (See Receive configuration record - data record 60 (Page 46) bytes 56 to 61)

If you are working with the end sequence, transmission is not code-transparent and you must exclude the presence of end code in the user data.

5.3 Code transparency

Code transparency

Code-transparent means that any character combinations can occur in the user data without the end criterion being recognized.

The code transparency of the protocol depends on the selection of the parameterized end criterion and flow control:

- With up to five end delimiters or using XON/XOFF flow control
  - Not code-transparent
- End criterion character delay time, fixed frame length, maximum frame length, message timeout, or response timeout and message length in the message
  - Code-transparent

5.4 Receive buffer

Receive buffer of the module

The receive buffer of the module may have a size of up to 8 KB, depending on the communication module used (see chapter Overview (Page 11)). The maximum frame length always equals half the length of the receive buffer. This means that each communication module is capable of buffering at least two frames.

During parameter assignment, you can specify whether to clear the receive buffer at startup and whether to prevent overwriting of data in the receive buffer. You can also specify the range of values (1 to 255) for the number of buffered receive frames. (See Receive configuration record - data record 60 (Page 46) bytes 62 to 64)

The receive buffer on the communication module is organized as FIFO:

- If several frames are entered in the receive buffer of the communication module, the communication module always sends the oldest frame to the CPU.
- If you always want to transfer the last frame received to the CPU, you must set the value "1" for the number of buffered frames and deactivate overwrite protection.

Note

If continuous reading of the receive data in the user program is interrupted for a certain time and the receive data is then requested again, the communication module will possibly transmit an older frame before the CPU receives the most recent one. At the time of interruption, the old frame had already been transferred from the receive buffer of the communication module and prepared for transmission to the CPU.

5.5 RS232 mode

The following communication modules support RS232 mode:

- CM PtP RS232 BA
- CM PtP RS232 HF
- CM PtP (ET 200SP)

In RS232 mode, data is sent via two lines. A separate line is available for the send direction and the receive direction. Simultaneous sending and receiving is possible (full duplex).

RS232 secondary signals

In addition to the TXD, RXD and GND signals, the communication module provides the following RS232 secondary signals when RS232 hardware is used:

DCD	(input)	Data Carrier detect; Data carrier signal detected
DTR	(output)	Data terminal ready; Module ready for operation
DSR	(input)	Data set ready; Communication partner ready for operation
RTS	(output)	Request to send; Module is ready to send
CTS	(input)	Clear to send; Communication partner can receive data from the module (response to RTS = ON of the communication module)
RI	(input)	Ring Indicator; Ring indicator

After power on of the communication module, the output signals are in the OFF state (inactive).

You can parameterize the operation of the DTR/DSR and RTS/CTS control signals in the configuration data record of the module (Port configuration record - data record 57 (Page 41)).

The RS232 secondary signals cannot be manipulated by data record communication (Set RS232 secondary signals - data record 53 (Page 65)) in case of:

- parameterized data flow control "Hardware RTS always ON"

  (corresponds to automatic operation of the secondary signals)
- parameterized data flow control "Hardware RTS always ON"

  (corresponds to hardware flow control with RTS/CTS)
- parameterized data flow control "Hardware RTS always ON, ignore DTR/DSR "

An error message is generated if an attempt is made to manipulate RS232 secondary signals by means of data record communication.

For more information, refer to chapter Handshaking (Page 33).

5.6 RS422 mode

The following communication modules support RS422 mode:

- CM PtP RS422/485 BA
- CM PtP RS422/485 HF
- CM PtP (ET 200SP)

In RS422 mode, data is transmitted via two line pairs (four-wire mode). A separate line pair is available for the send direction and the receive direction. Simultaneous sending and receiving is possible (full duplex).

All communication partners must be capable of simultaneous operation of a sender and receiver unit.

The data can be exchanged simultaneously between one or several communication partners. In RS422 multipoint mode, only one multipoint slave may send data at any given time.

Interface operating modes

The following table is a summary of the interface operating modes for the various communication modules and protocols.

The communication module can be used in the following topologies in RS422 mode:

- Link between two nodes: Point-to-point connection
- Link between several nodes: Multipoint coupling
  (only available with CM PtP (ET 200SP))

Operating mode	Description
Full duplex (RS 422) four-wire mode (point-to-point connection)	Both devices have the same priority in this operating mode.
Full duplex (RS422) four-wire mode (multipoint master)	The communication module can be used as multipoint master.
Full duplex (RS 422) four-wire mode (multipoint slave)	The communication module can be used as multipoint slave.

The following applies for a multipoint master/slave topology in RS422 mode:

- The master's sender is interconnected with the receivers of all slaves.
- The slaves' senders are interconnected with the master's receiver.
- The receiver of the master and the receiver of one slave are assigned default settings (refer to chapter Port configuration record - data record 57 (Page 41) byte 25). All other slaves operate without default settings.

5.7 RS485 mode

The following communication modules support RS485 mode:

- CM PtP RS422/485 BA
- CM PtP RS422/485 HF
- CM PtP (ET 200SP)

In RS485 mode, data is transferred via one line pair (two-wire mode). The line pair is available alternately for the send and receive directions. It is possible to either send or receive (half duplex). On completion of a send operation, operation is immediately switched to receive mode (ready to receive). Send mode is reset again as soon as a new send job is received.

RS485 mode

The following table is a summary of the interface operating modes for the various communication modules and protocols.

Operating mode	Description
Half duplex (RS485) two-wire mode	Operating mode for point-to-point connection or multipoint connection (multipoint) in two-wire mode. The communication module can be the master as well as the slave.

When you operate the Freeport driver in RS485 mode (half duplex, two-wire mode), you must make provisions in the user program to ensure that only one device sends data at any given time. If more than one device sends data at the same time, the frame is corrupted.

Changeover times for RS485 communication module in half duplex mode

A maximum time of 0.1 ms is set for the changeover between sending and receiving.

5.8 Handshaking

Introduction

Handshaking controls the data flow between two communication partners. The use of the handshaking method prevents data loss during transmission if the devices are operating at different speeds.

We can basically distinguish between the following methods:

Table 5- 1 Overview of methods and interfaces

Method	RS232	RS422	RS485
Software data flow control XON/XOFF	X	X	
Hardware data flow control (RTS/CTS)	X		
Automatic operation of secondary signals	X		

Software data flow control

Software data flow control is implemented as follows on the communication module:

- XON/XOFF
  - As soon as the communication module has been set to the "XON/XOFF" operating mode by means of parameter assignment, it sends the XON character, thereby allowing the communication partner to send data.
  - On reaching the configured maximum number of frames, or 16 characters ahead of receive buffer overflow, the communication module sends the XOFF character, thereby requesting that the communication partner stop sending. If the communication partner nonetheless continues to send data, an error message is generated if the receive buffer overflows. Data received in the last frame is discarded.
  - As soon as a frame has been fetched by the CPU and the receive buffer is ready to receive data again, the communication module sends the XON character.
  - If the communication module receives the XOFF character during sending, it cancels the current send operation until it receives a XON again from its communication partner. If no XON is received within a specific configurable time, send operation is canceled and a corresponding error message is output.

Note

You can configure the characters for XON and XOFF (any ASCII character).

During parameter assignment of the XON/XOFF software data flow control, user data may not contain any of the configured XON or XOFF characters.

Hardware data flow control

Note

The DTR/DSR signals do not have to be wired for "Hardware RTS always ON, ignore DTR/DSR" parameter assignment.

If "Hardware RTS always ON" is configured, it is imperative that you fully wire the interface signals used. Make sure that the local RTS (out) is connected with the CTS (in) of the communication partner and the local CTS is connected with the RTS of the communication partner. Accordingly, the local DTR must be connected with the DSR of the communication partner and the local DSR with the DTR of the communication partner.

- **Hardware RTS always ON, ignore DTR/DSR**
  - As soon as the communication module has been set to an operating mode with "Hardware RTS always ON" through parameter assignment, it outputs the RTS = ON signal to the communication partner to indicate its ready state.
  - RTS is set to OFF as soon as the configured maximum number of frames or 16 characters before buffer overflow is reached.
    If the communication partner nonetheless continues to send data, an error message is generated on overflow of the receive buffer. Data received in the last frame is discarded.
  - RTS is reset to ON as soon as the frame has been fetched by the CPU and the receive buffer is ready to receive data again.
  - If CTS switches to OFF during the send operation, the communication module interrupts the send operation until CTS is reset to ON. If CTS is not reset to ON within a specific configurable time, the send operation is canceled and a corresponding error message is output.
- **Hardware RTS always ON**

  The "Hardware RTS always ON" mode corresponds to the "Hardware RTS always ON, ignore DTR/DSR" mode. However, you also need to wire DTR and DSR.
  - As soon as the communication module has been set set to an operating mode with "Hardware RTS always ON" through parameter assignment, it sets DTR = ON and RTS = ON to signal its general ready state to the communication partner.
  - RTS is set to OFF as soon as the configured maximum number of frames or 16 characters before buffer overflow is reached.
    If the communication partner nonetheless continues to send data, an error message is generated on overflow of the receive buffer. Data received in the last frame is discarded.
  - RTS is reset to ON as soon as the frame has been fetched by the CPU and the receive buffer is ready to receive data again.
  - If CTS switches to OFF during the send operation, the communication module interrupts the send operation until CTS is reset to ON. If CTS is not reset to ON within a specific configurable time, the send operation is canceled and a corresponding error message is output.
  - A switch from DSR = ON to DSR = OFF cancels an active send job and triggers an error message.

Automatic operation of secondary signals

- **Hardware RTS always switched**

  "Hardware RTS always switched" is implemented as follows on the communication module:

  – As soon as the communication module is set to the operating mode with "Hardware RTS always switched" through parameter assignment, it sets the line RTS to OFF and DTR to ON (communication module ready for operation).

    It is not possible to send frames until the DSR line is set to ON. No data is sent via the RS232C interface as long as DSR is set to OFF. A send job is canceled and a corresponding error message is generated.

  – If a send job is pending, RTS is set to ON and the configured data output wait time starts. On expiration of the data output time, the system checks whether the communication partner has set CTS to ON. If so, the data is sent via the RS232 interface.

  – If the CTS line is not set to ON within the data output time, or changes to OFF during the send operation, the send job is aborted and an error message generated.

  – Once the data has been sent and the configured clear RTS time has elapsed, the RTS line is set to OFF. The system does not wait for CTS to change to OFF.

  – It is always possible to receive data via the RS232 interface. There will be no reaction if there is a danger of the receive buffer of the communication module overflowing.

  – A switch from DSR = ON to DSR = OFF cancels an active send job and triggers an error message.

  Note

  Set the "data output wait time" in such a way that the communication partner is able to enter the ready to receive state before the time elapses.

  Set the "Clear RTS time" in such a way that the communication partner is able to receive the last characters of the frame completely before RTS is set to OFF and the send request is canceled.

Additional information

For information on the settings, refer to chapter Port configuration record - data record 57 (Page 49).

Note

Operation of DTR/DSR or RTS/CTS is accepted by the communication module with the following settings. Operation by means of Set RS232 secondary signals - data record 53 (Page 65) is impossible (any attempt made will trigger an error message):

- Hardware RTS always ON, ignore DTR/DSR
- Hardware RTS always ON
- Hardware RTS always switched

Data transmission with 3964(R) 6

6.1 Data transmission with 3964(R) protocol

Introduction

The 3964(R) protocol controls PtP data exchange between the communication module and a communication partner. The 3964(R) protocol contains both the physical layer (layer 1) and the link layer (layer 2).

6.2 Control characters

Introduction

During data transmission, the 3964(R) protocol adds control characters to the information data (link layer). The communication partner can use these control characters to check whether it has received all data completely and without errors.

Control characters of the 3964(R) protocol

The 3964(R) protocol evaluates the following control characters:

- STX Start of Text; start of the string to be sent
- DLE Data Link Escape
- ETX End of Text; end of the string to be sent
- BCC Block Check Character (only with 3964R)
- NAK Negative Acknowledge; negative response

Note

If the DLE character is transferred as an information character, it is sent twice during connection setup and shutdown (DLE duplication) in order to distinguish it from the DLE control character. The receiver reverses the DLE duplication.

Priority

For operation with 3964(R) protocol, one communication partner must be assigned a higher priority and one communication partner a lower priority. If both partners simultaneously start the connection setup, the partner having lower priority will postpone its send job.

6.3 Block checksum

Block checksum

With the 3964R transfer protocol, data security is enhanced by sending an additional block check character (BCC = Block Check Character).

The block checksum represents the even longitudinal parity (EXOR logic operation of all data bytes) of a sent or received block. Its calculation begins with the first byte of user data (first byte of the frame) after the connection establishment, and ends after the DLE ETX character at connection termination.

Note

With DLE duplication, the DLE character is included twice in the BCC calculation.

6.4 Sending data with 3964(R)

Connection setup for sending

The 3964(R) protocol sends the STX control character to set up the connection. The transition to send mode is initiated when the communication partner responds with the DLE character before the ACK delay time has expired.

The protocol retries to connect if the communication partner responds with NAK or any other character (except DLE or STX), or if inactivity triggers an acknowledgment timeout. After the parameterized number of unsuccessful retries to connect, the connection setup is canceled and the NAK character is transmitted to the communication partner. The communication module outputs a corresponding error message.

Sending data

On successful connection setup, the user data from the output buffer of the communication module and the selected transmission parameters are sent to the communication partner. The partner monitors the time intervals between incoming characters. The interval between two characters must not exceed the character delay time. Monitoring of the character delay time starts immediately after the connection was set up.

If the communication partner transmits an NAK while a transmission is busy, the block transmission is aborted and repeated as shown above starting with the connection setup. If any other character is received, a wait time for expiration of the character delay time is triggered and an NAK is then transmitted to set the communication partner to idle state. Transmission is then restarted with STX connection setup.

Connection shutdown during transmission

After the buffer content has been transmitted, the routine inserts the DLE, ETX characters, appends the BCC block checksum (only for 3964R) and waits for an ACK character. If the communication partner sends the DLE characters within the acknowledgment delay time, the data block has been received without errors. If the communication partner responds with NAK, or any other character (except DLE), or with a corrupt character, or if the acknowledgment delay time expires without response, the routine restarts transmission with STX connection setup.

After the parameterized number of retries to connect, the routine is aborted and NAK is transmitted to the communication partner. The communication module outputs a corresponding error message.

6.5 Receiving data with 3964(R)

Connection setup for receiving

While in idle state and not processing a send job, the module waits for the communication partner to set up the connection.

A wait time is started (wait time = acknowledgment delay time - 10 ms, however, maximum of 400 ms) if no free receive buffer is available during the connection setup with STX. An error message is generated if no free receive buffer is available on expiration of this time. An NAK is transmitted and initiates the transition to idle state. Otherwise, the DLE character is transmitted and the data is received as described above.

The acknowledgment delay time should be set to the same value at both communication partners.

If any character (except for STX or NAK) is received in idle state, the routine waits for expiration of the character delay time (CDT) and then transmits the NAK character. The communication module outputs a corresponding error message.

Receiving data

After successful connection setup, the incoming receive characters are saved to the receive buffer. If two consecutive DLE characters are received, only one of these is saved to the receive buffer.

After connection setup and after each receive character, the routine waits for the next character within the character delay time. If this period expires before another character is received, an NAK is sent to the communication partner. The communication module outputs a corresponding error message. A retry is then expected.

If transfer errors occur during receiving (lost character, frame error, parity error, etc.), the procedure continues to receive data until the connection is terminated and then sends an NAK to the communication partner. A retry is then expected. Receiving is aborted if the block cannot be received without errors after the specified number of transmission retries, or if the communication partner fails to retry transmission within a block delay time of 4 seconds. The communication module reports the first corrupted transfer and the final cancelation.

Connection setup for receiving

Once the DLE ETX string is detected, receiving is terminated and DLE is transmitted to the communication partner for a block that was received without error. In the case of a receive error, an NAK is sent to the communication partner. A retry is then expected.

Receiving is stopped once the DLE ETX BCC string is detected. The BCC is compared with the internally generated longitudinal parity. DLE is transmitted (return to idle state) if the BCC is correct and no other receive error is pending. If the BCC is faulty or a different receive error occurs, an NAK is sent to the communication partner. A retry is then expected.

Configuration data records 7

7.1 Freeport communication

The following three configuration data records must be sent to the communication module for Freeport communication.

7.1.1 Port configuration record - data record 57

Note

Parameter assignment error

If the communication module detects a parameter assignment error when writing the "Port Configuration Record - data record 57", the data record is rejected with error status 0x80E1.

The corresponding cause of error can be read by means of data record "Read Error Status - data record 55" (error codes of the port configuration).

Port configuration *Italic* = not supported								
Bit->	7	6	5	4	3	2	1	0
Byte								
0	Block type: 0039H – PORT_CFG							
1								
2	Block length: 0018H							
3								
4	Block version high byte: 01H							
5	Block version low byte: 00H							
6	Reserved: 0000H							
7								
°	Protocol:							
8	0000H – Freeport protocol							
9	0001H – 3964 protocol *0002H to FFFFH – Reserved*							

Port configuration *Italic* = not supported			
°	Data transmission rate:		
10	*0000H - Reserved*	0007H - 19.2 kbps	
11	0001H - 300 bps 0002H - 600 bps 0003H - 1.2 kbps 0004H - 2.4 kbps 0005H - 4.8 kbps 0006H - 9.6 kbps	0008H - 38.4 kbps 0009H - 57.6 kbps 000AH - 76.8 kbps 000BH - 115.2 kbps *000CH to FFFFH - Reserved*	
°	Parity:		
12	*0000H - Reserved*		
13	0001H - None 0002H - Even 0003H - Odd 0004H - Mark (set parity bit to 1) 0005H - Space (set parity bit to 0) 0006H - Any (the parity is not checked during receiving. The parity is always set to "0" during sending.) *0007H to FFFFH - Reserved*		
°	Data bits:		
14	*0000H - Reserved*		
15	0001H - 8 data bits per character 0002H - 7 data bits per character *0003H to FFFFH - Reserved*		
°	Stop bits:		
16	*0000H - Reserved*		
17	0001H - 1 stop bit 0002H - 2 stop bits *0003H to FFFFH - Reserved*		
°	Data flow control:		
18	RS232 settings:	RS485 settings:	RS422 settings:
19	*0000H - Reserved* 0001H - None 0002H - XON/XOFF 0003H - Hardware RTS always ON, DSR required 0004H - Hardware RTS always switched, DSR required 0005H - Hardware RTS always ON, ignore DTR/DSR *0006H to FFFFH - Reserved*	*0000H - Reserved* 0001H - None *0002H to FFFFH - Reserved*	*0000H - Reserved* 0001H - None 0002H - XON/XOFF *0003H to FFFFH - Reserved*

Port configuration *Italic* = not supported	
20	XON: 00H to FFH - XON character
21	XOFF: 00H to FFH - XOFF character
22	Wait for XON after XOFF in ms: (0000H to FFFFH)
23	
24	Operating mode:
	00H - RS232 01H - RS422 full duplex four-wire mode (point-to-point) 02H - RS422 full duplex (RS422) four-wire mode (multipoint master) (CM PtP (ET 200SP)) 03H - Full duplex (RS422) four-wire mode (multipoint slave) (CM PtP (ET 200SP)) 04H - Half duplex (RS485) two-wire mode *05H to FFH - Reserved*
25	Receive line default:
	00H - "No" default 01H - Signal R(A)=5 V, signal R(B)=0 V (break detection): Break detection is possible with this default setting. Can only be selected with: "Full duplex (RS 422) four-wire mode (point-to-point connection)" and "Full duplex (RS 422) four-wire mode (multipoint slave)". 02H - Signal R(A)=0 V, signal R(B)=5 V: This default corresponds to the idle state (no active send operation). No break detection is possible with this default setting. *03H to FFH - Reserved*
26	Break detection:
	00H - Break detection deactivated 01H - Break detection activated *02H to FFH - Reserved*
27	*Reserved: 00H*

7.1.2 Send configuration record - data record 59

Note

Parameter assignment error

If the communication module detects a parameter assignment error when writing the "Send Configuration Record - data record 59", the data record is rejected with error status 0x80E1.

The corresponding cause of error can be read by means of data record "Read Error Status - data record 55" (error codes of the send configuration).

Send configuration *Italic* = not supported								
Bit->	7	6	5	4	3	2	1	0
Byte								
0	Block type 003BH - SEND_CFG							
1								
2	Block length: 001CH							
3								
4	Block version high byte: 01H							
5	Block version low byte: 00H							
6	Reserved: 0000H							
7								
8	RTS ON delay in 1 ms: (0000H - FFFFH)							
9	(not available for RS422/485 modules)							
10	RTS OFF delay in 1 ms: (0000H - FFFFH)							
11	(not available for RS422/485 modules)							
12	Break duration in bit times: (0000H to FFFFH)							
13								
14	Idle Line duration in bit times: (0000H to FFFFH)							
15								
°	Settings:							
16	Reserved: 0000H							
17								
°	USR_END							
18	STRING[2,0,xx,yy] - No end delimiter							
19	STRING[2,1,xx,yy] - One end delimiter							
20	STRING[2,2,xx,yy] - Two end delimiters							
21	Note: The first character (2; byte 18) contains the maximum string length, the second character (0, 1, 2, byte 19) the actual string length, and xx (byte 20) and yy (byte 21) contain the characters.							

Send configuration *Italic* = not supported	
°	APP_END
22	STRING[5,0,aa,bb,cc,dd,ee] - No appended characters (default)
23	STRING[5,1,aa,bb,cc,dd,ee] - One appended character
24	STRING[5,2,aa,bb,cc,dd,ee] - Two appended characters
25	STRING[5,3,aa,bb,cc,dd,ee] - Three appended characters
26	STRING[5,4,aa,bb,cc,dd,ee] - Four appended characters
27	STRING[5,5,aa,bb,cc,dd,ee] - Five appended characters
28	Note: The first character (5; byte 22) contains the maximum string length, the second character (0, 1, 2, 3, 4, 5; byte 23) the actual string length, and aa to ee (bytes 24-28) contain the characters.
29	*Reserved: 00H*
30	*Reserved: 00H*
31	*Reserved: 00H*

7.1.3 Receive configuration record - data record 60

Note

Parameter assignment error

If the communication module detects a parameter assignment error when writing the "Receive Configuration Record - data record 60", the data record is rejected with error status 0x80E1.

The corresponding cause of error can be read by means of data record "Read Error Status - data record 55" (error codes of the receive configuration).

Receive configuration *Italic* = not supported								
Bit->	7	6	5	4	3	2	1	0
Byte								
0	Block type: 003CH - RCV_CFG							
1								
2	Block length: 0040H							
3								
4	Block version high byte: 01H							
5	Block version low byte: 00H							
6	Reserved: 0000H							
7								
°	Start conditions:							
8	0 Reserved	0 Reserved	0 Reserved	0 Reserved	0 Reserved	0 Reserved	0 Reserved	0 Reserved
9	Seq. #4 Rcv. Active. 0 - inactive. 1 - activated	Seq. #3 Rcv. Active. 0 - inactive. 1 - activated	Seq. #2 Rcv. Active. 0 - inactive. 1 - activated	Seq. #1 Rcv. Active. 0 - inactive. 1 - activated	Idle Line Rcv. Active. 0 - inactive. 1 - activated	Break Rcv. Active. 0 - inactive. 1 - activated	Used char. Rcv. Active. 0 - inactive. 1 - activated	Start char. Rcv. Active. 0 - inactive. 1 - activated
10	Idle Line duration in bit times: 0000H to FFFFH							
11								
12	Start characters: 00H to FFH							
°	Frame start sequence #1 character check							
13	0 Reserved	0 Reserved	0 Reserved	Char #5 Ac 0 - inactive. 1 - activated	Char #4 Ac 0 - inactive. 1 - activated	Char #3 Ac 0 - inactive. 1 - activated	Char #2 Ac 0 - inactive. 1 - activated	Char #1 Ac 0 - inactive. 1 - activated
14	Character #1: 00H to FFH							
15	Character #2: 00H to FFH							
16	Character #3: 00H to FFH							
17	Character #4: 00H to FFH							
18	Character #5: 00H to FFH							

Receive configuration *Italic* = not supported								
°	Frame start sequence #2 character check							
19	0 Reserved	0 Reserved	0 Reserved	Char #5 Ac 0 – inactive. 1 – activated	Char #4 Ac 0 – inactive. 1 – activated	Char #3 Ac 0 – inactive. 1 – activated	Char #2 Ac 0 – inactive. 1 – activated	Char #1 Ac 0 – inactive. 1 – activated
20	Character #1: 00H to FFH							
21	Character #2: 00H to FFH							
22	Character #3: 00H to FFH							
23	Character #4: 00H to FFH							
24	Character #5: 00H to FFH							
°	Frame start sequence #3 character check							
25	0 Reserved	0 Reserved	0 Reserved	Char #5 Ac 0 – inactive. 1 – activated	Char #4 Ac 0 – inactive. 1 – activated	Char #3 Ac 0 – inactive. 1 – activated	Char #2 Ac 0 – inactive. 1 – activated	Char #1 Ac 0 – inactive. 1 – activated
26	Character #1: 00H to FFH							
27	Character #2: 00H to FFH							
28	Character #3: 00H to FFH							
29	Character #4: 00H to FFH							
30	Character #5: 00H to FFH							
°	Frame start sequence #4 character check							
31	0 Reserved	0 Reserved	0 Reserved	Char #5 Ac 0 – inactive. 1 – activated	Char #4 Ac 0 – inactive. 1 – activated	Char #3 Ac 0 – inactive. 1 – activated	Char #2 Ac 0 – inactive. 1 – activated	Char #1 Ac 0 – inactive. 1 – activated
32	Character #1: 00H to FFH							
33	Character #2: 00H to FFH							
34	Character #3: 00H to FFH							
35	Character #4: 00H to FFH							
36	Character #5: 00H to FFH							
37	must always be 00H							
°	End conditions:							
38	0 Reserved	0 Reserved	0 Reserved	0 Reserved	0 Reserved	0 Reserved	0 Reserved	0 Reserved
39	0 Reserved	Fixed length Rcv. Active. 0 – inactive. 1 – activated	Seq. #1 Rcv. Active. 0 – inactive. 1 – activated	Read length Rcv. Active. 0 – inactive. 1 – activated	Max length Rcv. Active. 0 – inactive. 1 – activated	CDT Rcv. Active. 0 – inactive. 1 – activated	Mess. TO Rcv. Active. 0 – inactive. 1 – activated	Resp. TO Rcv. Active. 0 – inactive. 1 – activated

Receive configuration *Italic* = not supported								
40	Fixed frame length: 0001H to 0xxxH*							
41								
42	Maximum frame length: 0001H to 0xxxH*							
43								
44	Offset of the length field in the message: 0000H to 0xxx*							
45								
46	Size of the length field: 01H, 02H, 04H - all other values are invalid							
47								
48	Number of characters not counted in length specification: 00H to FFH							
49								
50	Response timeout in 1ms: 0000H to FFFFH							
51								
52	Message timeout in 1 ms: 0000H to FFFFH							
53								
54	Character delay time in bit times: 0000H to FFFFH							
55								
°	End sequence #1 character check							
56	0 Reserved	0 Reserved	0 Reserved	Char #5 Ac 0 - inactive. 1 - activated	Char #4 Ac 0 - inactive. 1 - activated	Char #3 Ac 0 - inactive. 1 - activated	Char #2 Ac 0 - inactive. 1 - activated	Char #1 Ac 0 - inactive. 1 - activated
57	Character #1: 00H to FFH							
58	Character #2: 00H to FFH							
59	Character #3: 00H to FFH							
60	Character #4: 00H to FFH							
61	Character #5: 00H to FFH							
°	Buffered receive frames:							
62	00H - Reserved 01H to FEH - 1 to 254 FFH - 255							
°	Prevent overwriting:							
63	00H - Deactivated (on receive buffer overflow, a new message overwrites the oldest message) 01H - Activated (if the receive buffer is full, the new message is discarded) *02H to FFH - Reserved*							
°	Clear receive buffer at startup:							
64	00H - Deactivated 01H - Activated *02H to FFH - Reserved*							
65	*Reserved: 00H*							
66	*Reserved: 00H*							
67	*Reserved: 00H*							

* the buffer size depends on the communication module used

7.2 3964 communication

The following two configuration data records must be transferred to the communication module for 3964 communication:

7.2.1 Port configuration record - data record 57

Note

The "Port configuration record" is described in chapter Port configuration record - data record 57 (Page 41).

7.2.2 3964 protocol configuration - data record 61

Note

Parameter assignment error

If the communication module detects a parameter assignment error when writing the "3964 Protocol Configuration - data record 61", the data record is rejected with error status 0x80E1.

The corresponding cause of error can be read by means of data record "Read Error Status - data record 55" (error codes of the 3964 protocol).

3964 protocol configuration *Italic* = not supported								
Bit->	7	6	5	4	3	2	1	0
Byte								
0	Block type: 003DH - P3964							
1								
2	Block length: 000CH							
3								
4	Block version high byte: 01H							
5	Block version low byte: 00H							
6	Reserved: 0000H							
7								
8	3964(R) - With block check:							
	00H - Deactivated 01H - Activated *02H to FFH - Reserved*							

3964 protocol configuration *Italic* = not supported	
9	3964(R) priority:
	00H - low priority 01H - high priority *02H to FFH - Reserved*
°	3964(R) character delay time:
10	*0000H to 0013H - Reserved*
11	0014H to FFFFH - 20 to 65535 ms Default: 00DCH - 220 ms
°	3964(R) acknowledgment delay time:
12	*0000H to 0013H - Reserved*
13	0014H to FFFFH - 20 to 65535 ms Default: 07D0H - 2000 ms
14	3964(R) connection attempts:
	00H - Reserved 01H to FFH - 1 to 255 connection attempts Default: 06H - 6 connection attempts
15	3964(R) transmission attempts:
	00H - Reserved 01H to FFH - 1 to 255 connection attempts Default: 06H - 6 transmission attempts

7.3 Activate special function

The following data record can be used to activate diagnostic interrupts (write) and check whether diagnostic interrupts are activated (read).

Note

Parameter assignment error

If the communication module detects a parameter assignment error when writing the "Activate special function - data record 58", the data record is rejected with error status 0x80E1.

The corresponding cause of error can be read by means of data record "Read Error Status - data record 55" (error codes of the special functions).

PtP SET_FTRS (write record 003AH) *Italic* = not supported								
Bit->	7	6	5	4	3	2	1	0
Byte								
0	Block type: 003AH - SET_FTRS							
1								
2	Block length: 0008H							
3								
4	Block version high byte: 01H							
5	Block version low byte: 00H							
6	Reserved: 0000H							
7								
8	Reserved: 0000H							
9	Diagnostic interrupt							
	00H - Deactivated 01H - Activated *02H to FFH* - Reserved							
10	*Reserved: 00H*							
11	*Reserved: 00H*							

Error status 8

The following data record contains the acknowledgment of the communication module to the writing a configuration data record.

8.1 Read error status - data record 55

PtP RD_ESTAT (read record 0037H)								
Bit->	7	6	5	4	3	2	1	0
Byte								
0	Block type: 0037H - RD_ESTAT							
1								
2	Block length: 0010H							
3								
4	Block version high byte: 01H							
5	Block version low byte: 00H							
6	Reserved: 0000H							
7								
8	Error codes of the special functions *							
9								
10	Error codes of the port configuration *							
11								
12	Error codes of the send configuration *							
13								
14	Error codes of the receive configuration *							
15								
16	Error codes of the RS32 secondary signals *							
17								
18	Error codes of the 3964 protocol *							
19								

* A list of all error codes is available in chapter Error messages (Page 67).

Sending data

9

9.1 Send data - data record 48

The following data record is used to write send data to the communication module:

SEND_PTP record (write record 0030H)								
Bit->	7	6	5	4	3	2	1	0
Byte								
0	Sequence number for SEND (0 to 255)							
1	Frame end identifier (0 or 1)							
2	Data to transmit byte 0							
: :	: :							

Sequence number for SEND

The "Sequence number for SEND" parameter identifies a new send frame, or a new data record of a frame. The "SEND acknowledgment from module" (refer to chapter "Querying send acknowledgment - input user data (Page 57)") must be read as first "Sequence number for SEND" and incremented by the count of one. For the first data record, the "Sequence number for SEND" therefore starts with 1 after a STOP/RUN transition of the CPU and is then incremented by one for each data record with new content.

The value "0" may not be used as "Sequence number for SEND". as it serves to detect the start of the module. The value is reset to 1 again after 255 has been reached.

Frame end identifier

The "Frame end identifier" parameter serves to identify the last data record belonging to a frame.

- The value 0 means that at least one more data record follows for the current frame.
- The value 1 means that this data record is the last one for the current frame.

Data to transmit byte 0

The data must be stored in the data record as of "Data to transmit byte 0". The size and therefore the number of data records for transmitting a frame is defined by the transmission medium, for example, 240 bytes with PROFIBUS.

If the length of the data to transmit is not a multiple of the data record length, the length of the last data record corresponds to the length of the remaining data to transmit.

Send acknowledgment from module

The module writes the "Sequence number" received in the data record as send acknowledgment to the user data. See "SEND acknowledgment from module", chapter "Querying send acknowledgment - input user data (Page 57)".

For the last data record belonging to a frame,the acknowledgment is not written until the module has sent the frame.

This means that the "SEND acknowledgment from module" must be evaluated along with the "SEND status" after the last data record was written.

Startup characteristics

At startup, the module writes a zero value to "SEND acknowledgment from module" (see chapter "Querying send acknowledgment - input user data (Page 57)"

A busy job must be aborted if "SEND acknowledgment from module" equals zero.

9.2 Querying send acknowledgment - input user data

The communication module enters the send acknowledgment in the user data that has the following structure:

Input process image structure *Italic* = not supported								
Bit->	7	6	5	4	3	2	1	0
Byte								
0	SGN_STAT 0 - no status 1 - Status valid	Reserved = 0	Ring_Status	DCD_Status	CTS_Status	RTS_Status	DSR_Status	DTR_Status
1	SEND acknowledgment from module							
2	SEND status *							
3								
4	Sequence number for RCV							
5	*Reserved: 00H*							
6	*Reserved: 00H*							
7	*Reserved: 00H*							

* A list of all status and error codes is available in chapter Error messages (Page 67)

You can read status information as well as error numbers (value unequal to 0) from "SEND Status".

If "SEND acknowledgment from module" equals the number transferred in the last data record ("Sequence number for SEND") and the "SEND Status" equals 0, the frame or data record was transmitted without errors.

It is necessary to wait for this communication module feedback, which means "SEND Status" is equal to an error code, or "SEND acknowledgment from module" equals "Sequence number for SEND" and "SEND Status" equals zero, before a new frame is transmitted.

Reaction of the module to an unexpected sequence number for SEND

The module rejects a data record with an unexpected sequence number for SEND when writing the data record and returns error message 0x80B8. The code 0x81D7 is then stored in "SEND status or error code" in the user data. In this case, active communication must be canceled and transmission must be repeated with the first data record. Set the sequence number for SEND as described in chapter Send data - data record 48 (Page 55).

9.3 Example

A frame with a length of 500 bytes is to be transmitted. The data record has a length of 240 bytes.

- First data record, length of 240 bytes:

  "Sequence number for SEND" = 1

  "Frame end identifier" = 0

  238 bytes user data
- Second data record, length of 240 bytes:

  "Sequence number for SEND" = 2

  "Frame end identifier" = 0

  238 bytes user data
- Third data record, length of 26 bytes

  "Sequence number for SEND" = 3

  "Frame end identifier" = 1

  24 bytes user data
- Wait for feedback from the communication module; see Querying send acknowledgment - input user data (Page 57).

Afterwards, a frame with a length of 100 bytes is to be transmitted.

- First = last data record, length of 102 bytes:

  "Sequence number for SEND" = 4

  "Frame end identifier" = 1

  100 bytes user data
- Wait for feedback from the communication module; see Querying send acknowledgment - input user data (Page 57).

Receiving data 10

10.1 Data received - data record 49/50

A new value at "Sequence number for RCV" (Query: New receive frame - input user data (Page 61)) indicates a new frame is ready for reading in the communication module.

The following data records are used to read receive data from the communication module:

RCV_PTP record (read record 0031H/0032H)								
Bit->	7	6	5	4	3	2	1	0
Byte								
0	Sequence number for this data record (1 to 255)							
1	Frame end identifier (0 or 1)							
2	RCV status *							
3								
4	Receive data byte 0							
: :	: :							

* A list of all status and error codes is available in chapter Error messages (Page 67)

Change of the data record number when receiving data

After startup of the communication module, reading of the frame content must start at data record number 16#0031, while the data record numbers change between 16#0032 and 16#0031 in all subsequent read operations.

Sequence number of this data record

For the first data record of a frame, the "Sequence number of this data record" is equal to the "Sequence number for RCV" in the user data that indicated the new frame. This value is incremented by the count of one for each data record read subsequently. An overflow to 2 is triggered at 255. The values 0 and 1 have a special significance (see below).

Frame end identifier

The "Frame end identifier" is equal to 1 for the last data record that has to be read for this frame, while it is 0 for all other data records.

The size of the last data record that belongs to a frame is determined by the frame length and limited accordingly by the communication module.

RCV status

"RCV Status" displays the result of the last data reception.

0x009x: Frame received without error

0x8xxx: Frame received with error

See chapter Error messages (Page 67).

Resetting communication after power on of the communication module

- "Sequence number for RCV" is equal to 0

  A "Sequence number for RCV" with value 0 in the input user data indicates that the communication module has performed a restart after power on and that no frame has been received yet.

- "Sequence number for RCV" is equal to 1

  A "Sequence number for RCV" with value 1 in the input user data indicates that this is the first frame after power on of the communication module.

A busy job must be aborted in both cases.

In the second case, reading of the frame content must start at data record number 16#0031.

10.2 Query: New receive frame - input user data

Sequence number for RCV

A new received frame is indicated by a "Sequence number for RCV" in byte 4 of the user data that has the following structure.

Input process image structure *Italic* = not supported								
Bit->	**7**	**6**	**5**	**4**	**3**	**2**	**1**	**0**
Byte								
0	SGN_STAT 0 - no status 1 - Status valid	Reserved = 0	Ring_Status	DCD_Status	CTS_Status	RTS_Status	DSR_Status	DTR_Status
1	Sequence number from module							
2	SEND status *							
3								
4	Sequence number for RCV							
5	*Reserved: 00H*							
6	*Reserved: 00H*							
7	*Reserved: 00H*							

* A list of all status and error codes is available in chapter Error messages (Page 67)

10.3 Example

A frame with a length of 500 bytes was received. The data record has a length of 240 bytes

- In the user data, the frame is indicated by "Sequence number for RCV" = 1.
- Read data record 16#0031 that contains:

  "Sequence number of this record" = 1

  "Frame end identifier" = 0

  "RCV status or error code return value" = 0x009x [1)]

  It contains 236 bytes of user data.
- Read the second data record 16#0032 that contains:

  "Sequence number of this data record" = 2

  "Frame end identifier" = 0

  "RCV status or error code" = 0x009x [1)]

  It contains 236 bytes of user data.
- Read the third data record 16#0031 that contains:

  "Sequence number of this data record" = 3

  "Frame end identifier" = 1

  "RCV status or error code" = 0x009x [1)]

  It contains 28 bytes of user data. The communication module has limited the data record length to 32 bytes.

  This completes reading of the first frame from the CM.

A frame with a length of 100 bytes was received subsequently.

The sequence number for RCV changes from 1 to 4 in the user data.

- Read the data record 16#0032 that contains:

  "Sequence number of this data record" = 4

  "Frame end identifier" = 1

  "RCV status or error code" = 0x009x [1)]

  The data record contains 100 bytes of user data and the communication module has limited the data record length to 104 bytes.

1) 0x009x Frame received without error
   0x8xxx Frame received with error
   (see error codes in chapter Query: New receive frame - input user data (Page 61))

Clear receive buffer

11

11.1 Clear receive buffer - data record 54

The receive buffer of the communication module is cleared by writing the following data record with "RST_RCV_BUF" = TRUE.

PtP RCV_RST(write record 0036H) *Italic* = not supported								
Bit->	**7**	**6**	**5**	**4**	**3**	**2**	**1**	**0**
Byte								
0	Block type: 0036H - RCV_RST							
1								
2	Block length: 0008H							
3								
4	Block version high byte: 01H							
5	Block version low byte: 00H							
6	Reserved: 0000H							
7								
8	0	0	0	0	0	0	0	RST_RCV_BUF
9	*Reserved: 00H*							
10	*Reserved: 00H*							
11	*Reserved: 00H*							

Note: RST_RCV_BUF = 0; no changes are made to the receive buffer.
RST_RCV_BUF = 1; the receive buffer is cleared.

The communication module does not acknowledge the reset of its receive buffer.

RS232 signals

12

12.1 Set RS232 secondary signals - data record 53

The RS232 secondary signals of the communication module are manipulated by writing to the following data record, provided the communication module supports this action in the current mode.

Note

Parameter assignment error

If the communication module detects a parameter assignment error when writing the "Set RS232 secondary signals - data record 53", the data record is rejected with error status 0x80E1.

The corresponding cause of error can be read by means of data record "Read Error Status - data record 55" (error codes of the RS232 secondary signals).

PtP SGN_SET(write record 0035H) *Italic* = not supported								
Bit->	**7**	**6**	**5**	**4**	**3**	**2**	**1**	**0**
Byte								
0	Block type: 0035H - SGN_SET							
1								
2	Block length: 0008H							
3								
4	Block version high byte: 01H							
5	Block version low byte: 00H							
6	Reserved: 0000H							
7								
8	0	0	0	0	0	0	Set_DTR_State	Set_RTS_State
9	0	0	0	0	0	0	DTR_State	RTS_State
10	*Reserved: 00H*							
11	*Reserved: 00H*							

Note: Set_xxx_State = 0, the status of the specified control bit is not changed. Set_xxx_State = 1, the status of the specified control bit must be set to the value that was specified by xxx_State.

For information on reading the acknowledgment to the writing of this data record, refer to chapter "Error status (Page 53) ".

12.2 Read RS232 secondary signals - input user data

The RS232 secondary signals of the communication module can be read from the user data.

Input process image structure *Italic* = not supported								
Bit->	**7**	**6**	**5**	**4**	**3**	**2**	**1**	**0**
Byte								
0	SGN_STAT 0 - no status 1 - Status valid	Reserved = 0	Ring_Status	DCD_Status	CTS_Status	RTS_Status	DSR_Status	DTR_Status
1	Sequence number for SEND (acknowledgment from module)							
2	SEND status or error code *							
3								
4	Sequence number for RCV							
5	*Reserved: 00H*							
6	*Reserved: 00H*							
7	*Reserved: 00H*							

* A list of all error codes is available in chapter Error messages (Page 67)

SGN_STAT = 0 indicates that no RS232 secondary signals are available in the current operating mode of the communication module.

Error messages

13

Overview of error messages

Error code	Description	Remedy
0x0000	No error	-
RECEIVE status and error codes		
0x0094	Frame end identified based on the "Receipt of fixed/maximum frame length"	-
0x0095	Frame end identified based on "Message timeout"	-
0x0096	Frame end identified based on expiration of the "Character delay time"	-
0x0097	No response frame was received within the parameterized maximum response time.	-
0x0098	Frame end identified based on the fulfillment of the "Read message length from message" conditions	-
0x0099	Frame end identified based on the receipt of the "End sequence"	-
SEND status and error codes		
0x7000	Block idle	-
0x7001	Initial call for a new frame: Data record transmission initiated	-
0x7002	Interim call: Data record transmission in process	-
0x8085	Invalid length specification	Select a suitable frame length. The following are valid (depending on the module): 1-1024/2048/4096 (Byte)
0x8088	The specified length exceeds the range set in the receive buffer	Change the range in the receive buffer or select a frame length which corresponds to the range set in the receive buffer. The following are valid (depending on the module): 1-1024/2048/4096 (Byte)
Error codes of the special functions		
0x8190	Incorrect setting of the CRC calculation	Select a suitable value for CRC calculation. The following are valid: deactivated or activated. Check whether the module addressed supports CRC calculation.
0x8191	Incorrect setting of the diagnostic interrupt	Select a suitable value for "Diagnostic interrupt". The following are valid: Diagnostic interrupt deactivated (0) or diagnostic interrupt activated (1). Check whether the module addressed supports the generation of diagnostic interrupts.

Error code	Description	Remedy
Error codes of the "Port configuration"		
0x81A0	The module does not support this protocol.	Select a valid protocol for the module.
0x81A1	The module does not support this data transmission rate.	Select a valid data transmission rate for the module.
0x81A2	The module does not support this parity setting.	Select a suitable value for "Parity". The following are valid: • None (1) • Even (2) • Odd (3) • Mark (4) • Space (5) • Any (6)
0x81A3	The module does not support this number of data bits.	Select a suitable value for "Number of data bits". The following are valid: • 7 (2) • 8 (1)
0x81A4	The module does not support this number of stop bits.	Select a suitable value for "Number of stop bits". The following are valid: • 1 (1) • 2 (2)
0x81A5	The module does not support this type of data flow control.	Select a valid data flow control for the module.
0x81A7	Invalid value for XON or XOFF	Select suitable values for XON and XOFF. Valid range of values: 0 - FF.
0x81A8	Error in frame header	Check the data/values in the frame header.
0x81AA	Invalid operating mode	Valid operating modes are: • Full duplex (RS232) (0) • Full duplex (RS422) four-wire mode (point-to-point) (1) • Full duplex (RS422) four-wire mode (multipoint master) (2) / (CM PtP (ET 200SP)) • Full duplex (RS422) four-wire mode (multipoint slave) (3) / (CM PtP (ET 200SP)) • Half duplex (RS485) two-wire mode (4)

Error code	Description	Remedy
0x81AB	Invalid default setting of the receive line	Valid default settings are: • "No" default setting (0) • Signal R(A)=5 V, signal R(B)=0 V (break detection) (1): Can only be selected with: "Full duplex (RS422) four-wire mode (point-to-point connection)" and "Full duplex (RS422) four-wire mode (multipoint slave)". • Signal R(A)=0 V, signal R(B)=5 V (2): This default corresponds to the idle state (no active send operation). No break detection is possible with this default setting.
0x81AC	Invalid value for "Break detection"	Select a suitable value for "Break detection". The following are valid: • "0" (break detection deactivated) • "1" (break detection activated)
0x81AF	The module does not support this protocol.	Select a valid protocol for the module.
Error codes of the "Send configuration"		
0x81B5	More than two end delimiters or end sequence > 5 characters	Select suitable values for "End delimiter" and "End sequence". The following are valid: • deactivated (0), • 1 (1) or 2 (2) end delimiters or • deactivated (0), • 1 (1) up to 5 (5) characters for the end sequence.
0x81B6	Send configuration rejected because the 3964(R) protocol was selected	Verify that no send configuration is transmitted if the 3964R) protocol is set.
Error codes of the "Receive configuration"		
0x81C0	Invalid start condition	Select a suitable start condition. The following are valid: • Send break before frame start • Send Idle Line.
0x81C1	Invalid end condition or no end condition selected	Select a suitable end condition.
0x81C3	Invalid value for "Maximum message length"	Select a suitable value for "Maximum message length". Valid range of values (module-dependent): 1-1024/2048/4096 (Byte)
0x81C4	Invalid value for "Offset of the length specification in the message"	Select a suitable value for "Offset of the length specification in the message". Valid range of values (module-dependent): 1-1024/2048/4096 (Byte)

Error code	Description	Remedy
0x81C5	Invalid value for "Size of length field"	Select a suitable value for "Size of length field". Valid range of values in bytes: • 1 (1) • 2 (2) • 4 (4)
0x81C6	Invalid value for "Number of characters not counted in length specification"	Select a suitable value for "Number of characters not counted in length specification". Valid range of values: 0 to 255 (bytes)
0x81C7	The total of "Offset in the message + size of the length field + number of character not counted" is greater than the maximum frame length	Select a suitable value for "Offset in message", "Size of the length field" and "Number of characters not counted". Valid range of values: • Offset in the message (module-dependent): 0-1022/2046/4094 (Byte) • Size of the length field: 1, 2, or 4 (bytes) • Number of characters not counted: 0-255 (bytes)
0x81C8	Invalid value for "Response timeout"	Select a suitable value for "Response timeout". Valid range of values: 1-65535 (ms)
0x81C9	Invalid value for "Character delay time"	Select a suitable value for "Character delay time". Valid range of values: 1-65535 (bit times)
0x81CB	Frame end sequence is activated, but no character is activated for the check	Activate one or several characters for the check.
0x81CC	Frame start sequence is activated, but no character is activated for the check	Activate one or several characters for the check.
0x81CD	Invalid value for "Prevent overwriting"	Select a suitable value for "Prevent overwriting". The following are valid: • Prevent overwriting is deactivated (0) or • Prevent overwriting is activated (1)
0x81CE	Invalid value for "Clear receive buffer at startup"	Select a suitable value for "Clear receive buffer at startup". The following are valid: • Clear receive buffer at startup is deactivated (0) • Clear receive buffer at startup is activated (1)

Error code	Description	Remedy
SEND status and error codes		
0x81D0	Receiving send requests during runtime of a send job	Make sure that you do not receive send requests during runtime of a send job.
0x81D1	The waiting time for XON or CTS = ON has expired.	The communication partner has a fault, is too slow or is offline. Check the communication partner or, if necessary, change the parameter assignment.
0x81D2	"Hardware RTS always ON": Send command aborted due to change from DSR = ON to OFF	Check the communication partner. Make sure that DSR is ONfor the entire duration of transmission.
0x81D3	Send buffer overflow / send frame too long	Select a shorter frame length. The following are valid (depending on the module): 1-1024/2048/4096 (Byte)
0x81D5	Transmission aborted due to parameter changes, detected wire break, or because CPU in STOP	Check the parameter assignment, for wire break, and the CPU status.
0x81D6	Transmission canceled because end identifier was not received	Check the parameter assignment of the end delimiters and the frame of the communication partner.
0x81D7	Communication error between the user program and module	Check communication (e.g. consistency of the sequence number).
0x81D8	Transmission attempt rejected because module is not configured	Configure the module.
Error codes of the receive configuration		
0x81E0	Frame canceled: Send buffer overflow / send frame too long	Increase the call rate for the receive function in the user program, or parameterize communication with data flow control.
0x81E1	Frame canceled: Parity error	Check the connection line of the communication partners, or verify that both devices are configured for the same data transmission rate, parity and stop bit number.
0x81E2	Frame canceled: Character frame error	Check the settings for the start bit, data bits, parity bit, data transmission rate, and stop bit(s).
0x81E3	Frame canceled: Character overflow error	Firmware error: Contact Customer Support.
0x81E4	Frame canceled: The total length of "Offset in the message + size of the length field + number of character not counted" is greater than the receive buffer	Select a suitable value for Offset in message, Size of the length field, and Number of characters not counted.
0x81E5	Frame canceled: Break	Receive line to partner is interrupted. Reconnect or switch on partner.
0x81E6	Maximum number of "Buffered receive frames" exceeded	In the user program, increase the call rate of the instruction, or parameterize communication with data flow control, or increase the number of buffered frames.
0x81E8	Frame canceled: The character delay time has expired before the message and criterion was detected	Partner device faulty or too slow. Check this, if required, using an interface tester that is interconnected in the transmission line.

Error code	Description	Remedy
0x81EB	Frame canceled: Maximum frame length reached	Select a shorter frame length at the communication partner. The following are valid (depending on the module): 1-1024/2048/4096 (Byte) Check the parameters of the frame end detection.
Error codes of RS232 secondary signals		
0x81F0	The module does not support RS232 secondary signals	You have made an attempt to set up secondary signals on a module that does not support RS232 secondary signals. Verify that this is an RS232 module or that RS232 mode (ET 200SP) is set.
0x81F1	No operation of RS232 secondary signals	RS232 secondary signals cannot be manipulated manually as long as hardware data flow is active.
Error codes of the receive configuration		
0x82C1	Invalid value for "Buffered receive frames".	Select a suitable value for "Buffered receive frames". Valid range of values: 1-255
0x82C2	Receive configuration rejected because the 3964(R) protocol was selected	Verify that no receive configuration is transmitted if the 3964(R) protocol is set.
3964(R) protocol error codes		
0x8380	Parameter assignment error: Invalid value for "Character delay time".	Select a suitable value for "Character delay time". Valid range of values: 1-65535 (ms)
0x8381	Parameter assignment error: Invalid value for "Response timeout".	Select a suitable value for "Response timeout". Valid range of values: 1-65535 (ms)
0x8382	Parameter assignment error: Invalid value for "Priority".	Select a suitable value for "Priority". The following are valid: • High (1) • Low (0)
0x8383	Parameter assignment error: Invalid value for "Block check"	Select a suitable value for "Block check". The following are valid: • with block check (1) • without block check (0)
0x8384	Parameter assignment error: Invalid value for "Connection attempts".	Select a suitable value for "Connection attempts". Valid range of values: 1-255
0x8385	Parameter assignment error: Invalid value for "Transmission attempts".	Select a suitable value for "Transmission attempts". Valid range of values: 1-255
0x8386	Runtime error: Number of connection attempts exceeded	Check the interface cable and the transmission parameters. Also check whether the receive function is configured correctly at the partner device.
0x8387	Runtime error: Number of transmission attempts exceeded	Check the interface cable, the transmission parameters and the configuration of the communication partner.

Error code	Description	Remedy
0x8388	Runtime error: Error at the "Block check character" The internally calculated value of the block check character does not correspond to the block check character received by the partner at the connection end.	Check whether the connection is seriously disrupted; in this case you may also occasionally see error codes. Check for proper function at the partner device, possibly by using an interface test device that is switched into the transmission line.
0x8389	Runtime error: Invalid character received while waiting for free receive buffer	The send request of the communication partner (STX, 02H) is not answered with DLE until the receive buffer has been cleared. No additional character may be received before it has been cleared (except STX again). Check for proper function at the partner device, possibly by using an interface test device that is switched into the transmission line.
0x838A	Runtime error: Logical error during receiving. Another character (other than DLE, ETX) was received after receipt of DLE.	Check whether the partner DLE in the frame header and in the data string is always in duplicate or the connection is released with DLE ETX. Check for proper function of the partner device, possibly using an interface test device that is switched into the transmission line.
0x838B	Runtime error: Character delay time exceeded	Partner device too slow or faulty. Check for proper function of the partner device, possibly using an interface test device that is switched into the transmission line.
0x838C	Runtime error: Wait time for free receive buffer has started	Increase the call rate of the instruction in the user program, or parameterize communication with data flow control.
0x838D	Runtime error: Frame repetition does not start within 4 s after NAK	Check the communication partner. A received frame that is possibly corrupted must be repeated by the partner within 4 seconds.
0x838E	Runtime error: One or several characters (except NAK and STX) were received in idle mode.	Verify the proper function of the partner device, for example, by means an interface tester that is interconnected in the transmission line.
0x838F	Runtime error: Initialization conflict - Both partners have set high priority	Set the "Low" priority at one of the partners
0x8390	Parameter assignment error: Error in frame header	Check the data/values in the frame header.
0x8391	Parameter assignment error: 3964 Parameter data record rejected because Freeport is set	Verify that no 3964 parameter data is transmitted if the Freeport protocol is set.

Glossary

Address

The address indicates the physical storage space and enables direct access to the operand that is stored under this address.

Automation system

An automation system is a programmable logic controller consisting of at least one CPU, various I/O modules, and operator control and monitoring devices.

Communication module

Communication modules are used for point-to-point connections and bus links.

Configuration

The term configuration refers to the summary of individual modules of an automation system in the configuration table.

CPU

Central Processing Unit = Central module of the automation system that consists of the control and computing units, memory, system program, and interfaces to the I/O modules.

CPU operating system

The CPU operating system organizes all the functions and sequences of the CPU that are not linked to a special control task.

Cycle time

The cycle time denotes the time a CPU requires to execute one user program cycle.

Cyclic program processing

In cyclic program processing, the term cycle denotes execution of the user program in a continuous repetitive program loop.

Default setting

The default is a useful basic setting that is used whenever no other value is specified.

Diagnostic functions

The diagnostic functions cover the entire system diagnostics and the detection, evaluation and reporting of errors in the automation system.

Diagnostics buffer

Memory area in which detailed information on all diagnostics events is entered based on the order of their occurrence.

Diagnostics events

Diagnostics events are, for example, module errors or system errors in the CPU that may be caused by a program error.

Hardware

The term hardware denotes the entire physical and technical equipment of an automation system.

Interrupt

The term interrupt designates the interruption of program execution in the processor of an automation system which is triggered by an external alarm.

Module parameters

Module parameters are values that are used to determine the behavior of the module. We distinguish between static and dynamic module parameters.

Online/Offline

In online mode, there is a data connection between the automation system and programming device, while there is no data connection in offline mode.

Parameter assignment

The term parameter assignment denotes actions that define the response of a module or block.

Parameters

Parameters represent values that can be used to define the behavior of a module or software. We distinguish between module parameters and block parameters.

Point-to-point connection

In a point-to-point connection the communication module interfaces a programmable logic controller and a communication partner.

Protocol

The communication partners participating in data transmission must conform to fixed rules for the handling and execution of data traffic. These rules are called protocols.

Rack

The rack is a mounting rail with slots that can be used to mount modules.

Software

The term software refers to all programs that are used on a computing system. These include the operating system and user programs.

User program

The user program contains all instructions and declarations for processing the signals used for controlling a system or a process. In SIMATIC S7, the user program is structured and divided into small units, namely the blocks.

Work memory

Work memory is CPU RAM (Random Access Memory) that is accessed by the processor when processing the user program.

Index

3

3964 protocol configuration - data record 61, 49
3964(R)
    Receiving data, 40
    Sending data, 39
3964(R) protocol, 37
    Control characters, 37
    Priority, 37
3964R procedure
    Block check character, 38

A

Application options for the communication modules, 12
Asynchronous data transmission, 13
Automatic operation of secondary signals, 35

B

BCC, 37
Bidirectional data traffic, 13
Block check character, 38

C

Clear receive buffer - data record 54, 63
Code transparency, 29
Configuration data records, 20
CTS, 30

D

Data flow control, 12, 33
Data record 48, 55
Data record 49/50, 59
Data record 53, 65
Data record 54, 63
Data record 55, 53
Data record 57, 41
Data record 58, 51
Data record 59, 44
Data record 60, 46
Data record 61, 49
Data transmission rates, 12
DCD, 30
DLE, 37
DSR, 30
DTR, 30

E

ETX, 37

F

Freeport
    Code transparency, 29
    End criteria, 25
    Message end, 22
    Message start, 22
    Receive buffer, 29
    Receiving data, 24
    RS232 secondary signals, 30
    Sending data, 22
    Start criteria, 24
Full duplex mode, 13

H

Half duplex mode, 13
Handshaking, 33
Hardware data flow control, 34
Hardware RTS always ON, 34
Hardware RTS always ON, ignore DTR/DSR, 34
Hardware RTS always switched, 35

I

Interfaces, 11

N

NAK, 37

O

Order numbers, 11

P

Point-to-point connection, 13
Port Configuration Record, 41

Q

Query:New receive frame - input user data, 61
Querying send acknowledgment - input user data, 57

R

Read error status - data record 55, 53
Read RS232 secondary signals - input user data, 66
Receive buffer, 29
Receive buffer size, 12
Receive configuration record - data record 60, 46
Receiving
    Flow chart, 19
RI, 30
RS232 mode, 30
RS232 secondary signals, 30
    Automatic use, 35
RS422 mode, 31
RS485 mode, 32
RTS, 30

S

Secondary signals, 12
Send configuration record - data record 59, 44
Send point-to-point - data record 48, 55
Sending
    Flow chart, 18
Serial data transmission, 13
Set RS232 secondary signals - data record 53, 65
Software data flow control, 33
STX, 37

T

Transmission security, 15
    with 3964(R), 16
    with Freeport, 16

U

Unidirectional/bidirectional data traffic, 30

X

XON/XOFF, 33

SIEMENS

Preface

Guide 1

System overview 2

Integration into the automation system 3

SIMATIC

IO-Link system

Function Manual

12/2017

A5E31637677-AB

Legal information

Warning notice system

This manual contains notices you have to observe in order to ensure your personal safety, as well as to prevent damage to property. The notices referring to your personal safety are highlighted in the manual by a safety alert symbol, notices referring only to property damage have no safety alert symbol. These notices shown below are graded according to the degree of danger.

⚠ DANGER

indicates that death or severe personal injury **will** result if proper precautions are not taken.

⚠ WARNING

indicates that death or severe personal injury **may** result if proper precautions are not taken.

⚠ CAUTION

indicates that minor personal injury can result if proper precautions are not taken.

NOTICE

indicates that property damage can result if proper precautions are not taken.

If more than one degree of danger is present, the warning notice representing the highest degree of danger will be used. A notice warning of injury to persons with a safety alert symbol may also include a warning relating to property damage.

Qualified Personnel

The product/system described in this documentation may be operated only by **personnel qualified** for the specific task in accordance with the relevant documentation, in particular its warning notices and safety instructions. Qualified personnel are those who, based on their training and experience, are capable of identifying risks and avoiding potential hazards when working with these products/systems.

Proper use of Siemens products

Note the following:

⚠ WARNING

Siemens products may only be used for the applications described in the catalog and in the relevant technical documentation. If products and components from other manufacturers are used, these must be recommended or approved by Siemens. Proper transport, storage, installation, assembly, commissioning, operation and maintenance are required to ensure that the products operate safely and without any problems. The permissible ambient conditions must be complied with. The information in the relevant documentation must be observed.

Trademarks

All names identified by ® are registered trademarks of Siemens AG. The remaining trademarks in this publication may be trademarks whose use by third parties for their own purposes could violate the rights of the owner.

Disclaimer of Liability

We have reviewed the contents of this publication to ensure consistency with the hardware and software described. Since variance cannot be precluded entirely, we cannot guarantee full consistency. However, the information in this publication is reviewed regularly and any necessary corrections are included in subsequent editions.

Siemens AG
Division Digital Factory
Postfach 48 48
90026 NÜRNBERG
GERMANY

A5E31637677-AB
℗ 01/2018 Subject to change

Copyright © Siemens AG 2013 - 2017.
All rights reserved

Preface

Purpose of the documentation

This function manual provides a general overview of the IO-Link communication system.

It shows the interaction of the various components of an IO-Link system and will help you improve your general understanding of IO-Link.

Basic knowledge required

The following knowledge is required in order to understand the documentation:

- General knowledge of automation technology
- Knowledge of the industrial automation system SIMATIC
- Proficiency with STEP 7

Scope of the documentation

This documentation is the basic documentation for IO-Link systems at Siemens. The product documentation is based on this documentation.

Conventions

In this documentation, "STEP 7" is used as a synonym for all versions of the configuration and programming software "STEP 7 (TIA Portal)".

Please also observe notes marked as follows:

Note

A note contains important information on the product described in the documentation, on the handling of the product or on the section of the documentation to which particular attention should be paid.

Additional support

- Information about Technical Support is available in section Siemens Industry Online Support (Page 4).
- The range of technical documentation for the individual SIMATIC products and systems can be found on the Internet.
- Information about the online catalog and online order system is available in section Industry Mall (Page 5).

Security information

Siemens provides products and solutions with industrial security functions that support the secure operation of plants, systems, machines and networks.

In order to protect plants, systems, machines and networks against cyber threats, it is necessary to implement – and continuously maintain – a holistic, state-of-the-art industrial security concept. Siemens' products and solutions constitute one element of such a concept.

Customers are responsible for preventing unauthorized access to their plants, systems, machines and networks. Such systems, machines and components should only be connected to an enterprise network or the internet if and to the extent such a connection is necessary and only when appropriate security measures (e.g. firewalls and/or network segmentation) are in place.

For additional information on industrial security measures that may be implemented, please visit (https://www.siemens.com/industrialsecurity).

Siemens' products and solutions undergo continuous development to make them more secure. Siemens strongly recommends that product updates are applied as soon as they are available and that the latest product versions are used. Use of product versions that are no longer supported, and failure to apply the latest updates may increase customers' exposure to cyber threats.

To stay informed about product updates, subscribe to the Siemens Industrial Security RSS Feed under (https://www.siemens.com/industrialsecurity).

Siemens Industry Online Support

You can find current information on the following topics quickly and easily here:

- **Product support**

  All the information and extensive know-how on your product, technical specifications, FAQs, certificates, downloads, and manuals.

- **Application examples**

  Tools and examples to solve your automation tasks – as well as function blocks, performance information and videos.

- **Services**

  Information about Industry Services, Field Services, Technical Support, spare parts and training offers.

- **Forums**

  For answers and solutions concerning automation technology.

- **mySupport**

  Your personal working area in Industry Online Support for messages, support queries, and configurable documents.

This information is provided by the Siemens Industry Online Support in the Internet (http://www.siemens.com/automation/service&support).

Industry Mall

The Industry Mall is the catalog and order system of Siemens AG for automation and drive solutions on the basis of Totally Integrated Automation (TIA) and Totally Integrated Power (TIP).

You can find catalogs for all automation and drive products on the Internet (https://mall.industry.siemens.com).

Table of contents

Preface 3

1 Guide 7

2 System overview 8

2.1 Advantages of IO-Link 9

2.2 Overview of IO-Link system 10

2.3 IO-Link interface 12

2.4 IO-Link protocol 14

2.5 Device profiles 16

2.6 IODD and Port Configuration Tool - S7-PCT 17

2.7 Differences between IO-Link specifications V1.0 and V1.1 19

3 Integration into the automation system 20

3.1 Configuration of the IO-Link system 20

3.1.1 Configuration with S7-PCT 22

3.1.2 Configuration without S7-PCT 25

3.1.3 Overview of configuration options 27

3.2 Data access of the automation system and the HMI device 29

3.3 Changing and saving device parameters during plant operation 30

3.4 Replacing a master or device during operation 32

Index 33

Guide 1

Documentation

Various IO-Link products are available from Siemens. Each of these products has a separate documentation. The IO-Link products are embedded in systems, e.g. ET 200SP. The documentation for the system consists of the respective system manual, function manuals and manuals. In addition, the STEP 7 online help and the Port Configuration Tool - S7-PCT online help assist you in configuring and programming your automation system with IO-Link.

IO-Link components from Siemens

Siemens offers a wide range of products and support for IO-Link:

- Master
- Device, I/O modules
- Device, industrial switchgear
- Device, RFID systems (RFID = radio-frequency identification)
- Port Configuration Tool - S7-PCT (https://support.industry.siemens.com/cs/ww/en/view/32469496)
- IO-Link library (https://support.industry.siemens.com/cs/ww/en/view/82981502) with the blocks "IO_LINK_MASTER" and "IO_LINK_DEVICE"
- Overview of the topic IO-Link (https://support.industry.siemens.com/cs/ww/en/view/109737170)

Additional information on the products can be found on the Internet (http://www.siemens.com/io-link).

Additional documentation for IO-Link

You can find a free download of the latest documentation on the IO-Link products on the Internet (https://support.industry.siemens.com/cs/ww/en/ps/15818/man).

System overview

2

Introduction

A continuous communication down to the lowest field level ensures enhanced use of the functions and performance capability of sensors and actuators. Enhanced use of sensors and actuators allows you to operate your machines and plants more productively.

No data other than the actual process value can be exchanged via the standard interfaces (digital, analog) used at the sensor/actuator level. Sensors and actuators with integrated intelligence are now used for increasingly complex functions and require a communication interface tailored to these requirements.

Definition

IO-Link is an innovative, point-to-point communication interface for the sensor/actuator area that is specified in IEC 61131-9.

IO-Link consists of the following system components:

- IO-Link master
- IO-Link device
- Unshielded 3-wire or 5-wire standard cable
- Engineering tool for configuring and assigning parameters of IO-Link

2.1 Advantages of IO-Link

The IO-Link system offers significant advantages as digital interface when connecting sensors/actuators:

- Open standard in accordance with IEC 61131-9
  - Devices can be integrated in the same way in all conventional fieldbus systems and automation systems
- Tool supported parameter setting and central data management
  - Fast configuration and commissioning
  - Simple creation of current plant documentation even for sensors/actuators
- Single, uniform wiring and far fewer different interfaces at the sensors/actors
  - Standardized, uniform interface for sensors and actuators independent of their complexity (switching, measuring, multi-channel, binary, mixed signals, etc.)
  - Reduction in the variety of types and inventory
  - Fast commissioning
  - Any combination of IO-Link devices and sensors/actuators without IO-Link at IO-Link master
- Continuous communication between sensors/actuators and the CPU
  - Access to all process data, diagnostic data and device information
  - Access to device-specific data, such as energy data
  - Remote diagnostics can be performed
- Continuous diagnostic information down to sensor/actuator level
  - Reduction in troubleshooting effort
  - Minimizing risk of failure
  - Preventive maintenance and optimization of service and maintenance planning
- Dynamic change of sensor/actuators parameters by the controller or the operator at the HMI
  - Reduction in downtimes during product change
  - Increased variability of the machine
- Automatic reassignment of parameters when devices are replaced during operation
  - Minimization of downtimes
  - Device replacement by untrained personnel without additional aids
  - Avoidance of incorrect settings
- Integrated device identification
  - Identification of the installed devices
  - Ensure quality of result in production and manufacturing when replacing the device

2.2 Overview of IO-Link system

Components

An IO-Link system consists of the following components:

- IO-Link master
- IO-Link device, for example:
  - Sensors/actuators
  - RFID readers
  - I/O modules
  - Valves
- Unshielded 3-wire or 5-wire standard cables
- Engineering tool for configuring and assigning parameters of IO-Link

Example plant with IO-Link

The figure below shows an example of plant architecture with IO-Link.

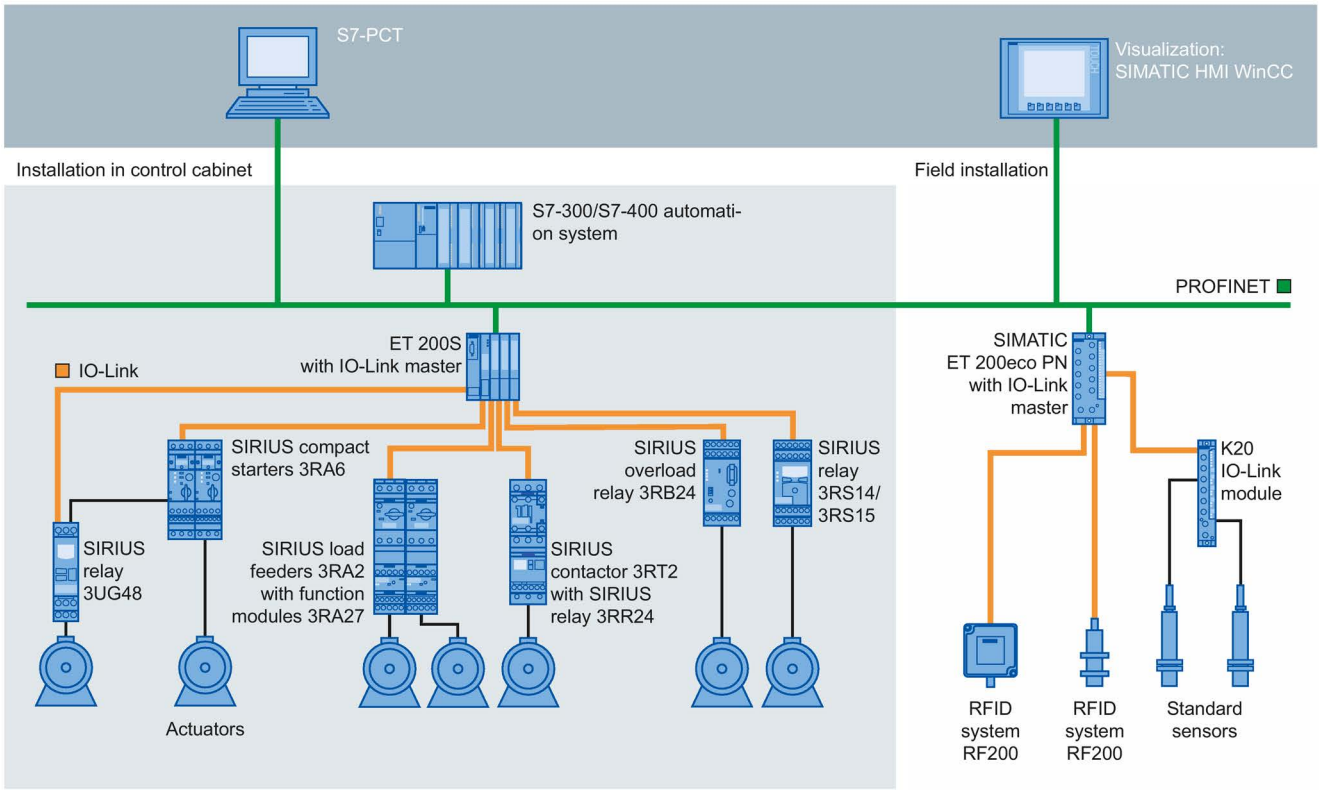

Figure 2-1 Plant architecture with IO-Link

The IO-Link master establishes the connection between the IO-Link devices and the automation system. If the IO-Link master is a component of the I/O system, it is installed either in the control cabinet or directly in the field as remote I/O in degree of protection IP65/67. The IO-Link master communicates by means of various fieldbuses or product-specific backplane buses. An IO-Link master can have multiple IO-Link ports (channels). An IO-Link device can be connected (point-to-point communication) to each port.

Engineering

The IO-Link system is engineered parallel to the overall automation system and can be embedded in it and intermeshed with it.

2.3 IO-Link interface

Introduction

The IO-Link is a serial, bidirectional point-to-point connection for signal transmission and power distribution under any network, fieldbus or backplane bus.

Connection system in IP65/67

M12 connectors and other connectors are defined for the connection system in IP65/67; sensors have a 4-pin connector, actuators a 5-pin connector. IO-Link masters are always equipped with a 5-pin M12 socket.

The pin assignment according to IEC 60974-5-2 is specified as follows:

- Pin 1: 24 V
- Pin 3: 0 V
- Pin 4: Switching and communication cable (C/Q)

In addition to IO Link communication, these three pins also implement the power supply of the device.
Detailed information about the power supply can be found in the documentation of the utilized IO-Link master.

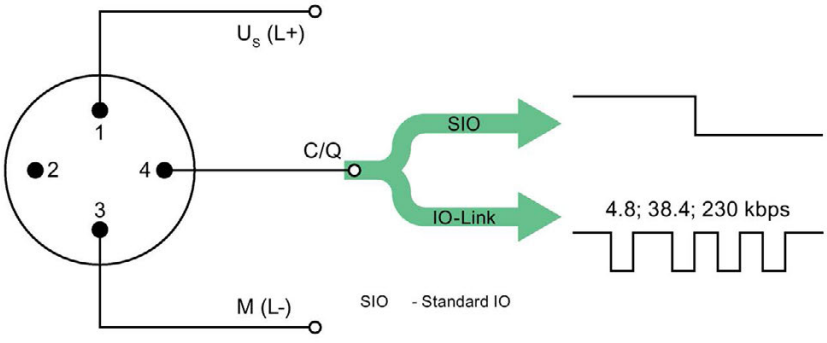

Pin	Signal	Definition	Standard
1	U_S (L+)	24 V	IEC 61131-2
2	-	not defined	-
3	M (L-)	0 V	IEC 61131-2
4	Q	Switching signal DI, DQ (SIO)	IEC 61131-2
4	C	"coded switching signal" (IO-Link)	IEC 61131-9

Figure 2-2 Pin assignment IO-Link device

Port types in IP65/67

Two types of ports are distinguished in the specifications for IO-Link masters:

- Port Class A (Type A)
  With this type, the functions of pins 2 and 5 are not assigned. The manufacturer defines this function. Generally, an additional digital channel is assigned to pin 2.

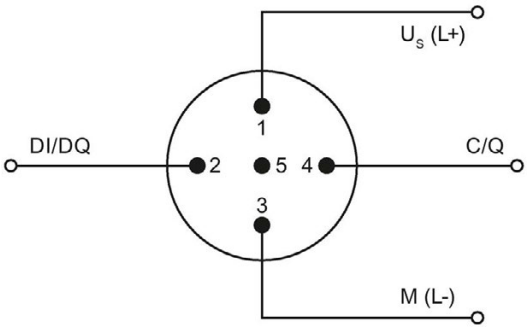

Figure 2-3 Pin assignment Port Class A

- Port Class B (Type B)
  This type offers an additional supply voltage and is suitable for the connection of devices that have an increased power requirement. In this case an additional (galvanically isolated) supply voltage is made available by pins 2 and 5. A 5-wire standard cable is required to use this additional supply voltage.

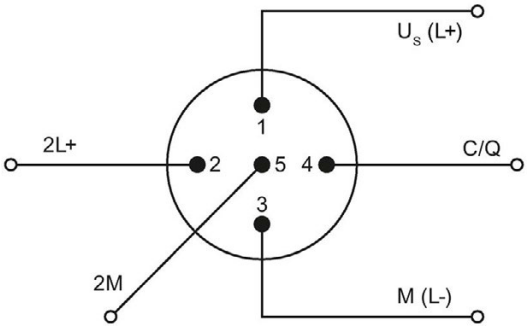

Figure 2-4 Pin assignment Port Class B

Connecting cables

The devices are connected to the master with unshielded 3-wire or 5-wire standard cables with a maximum length of 20 m. Standard cables can be used to wire the sensors. No shielding or compliance with specific regulations is necessary for the installation of the cables.

2.4 IO-Link protocol

Operating modes

The IO-Link port of the master can be operated in the following modes:

- IO-Link:
  The port is located in the IO-Link communication.
- DI:
  The port behaves like a digital input.
- DQ:
  The port behaves like a digital output.
- Disabled:
  The port is disabled.

Transmission rate

In the IO-Link specification V1.1, three data transmission rates (baud rates) are specified for the IO-Link operating mode:

- COM 1 = 4.8 kBaud
- COM 2 = 38.4 kBaud
- COM 3 = 230.4 kBaud (optional according to Specification V1.0)

The IO-Link device only supports one of the defined data transmission rates. The IO-Link master to Specification V1.1 supports all data transmission rates and adjusts automatically to the data transmission rated supported by the device.

Response time of the IO-Link system

The response time of the IO-Link system provides information about the frequency and speed of the data transmission between device and master. The response time depends on various factors.

A value for the minimum cycle time of the device is stored in the device description file IODD of the device (Page 17). This value indicates in which time intervals the master may address the device. The value has a big influence on the response time. The master also has an internal processing time that is factored into the calculation of the response time.

Devices with different minimum cycle time can be configured on a master. The response time for these devices differs accordingly. In other words, the response time for various devices connected to a master can vary greatly.

When you configure the master you can specify a fixed cycle time in addition to the device-specific minimum cycle time stored in the IODD. The master then addresses the device according to this specification.

The typical response time for a device thus results from the effective cycle time of the device and the typical internal processing time of the master.

Transmission performance

IO-Link is a very robust communication system. This communication system operates with a 24V level. If transmissions fail, the frame is repeated two more times. The IO-Link master only detects a break in communication after the failure of the second repeat attempt and reports this to the higher-level CPU.

Data types

Four data types are available:

- Process data → Cyclic data
- PQI → Cyclic data
- Device data → Acyclic data
- Events → Acyclic data

Process data

The process data of the devices is transferred cyclically in a data frame with the process data size being determined by the device. Process data from 0 to 32 bytes is possible per device (input and output, respectively).

Port Qualifier Information (PQI)

Each port has a Port Qualifier Information (PQI). This PQI provides information on the device status of the port and IO-Link (value status). The PQI is transmitted cyclically with the process data. The PQI is disabled by default.

Device data

Device data can be parameters, identification data or diagnostic information. The data is exchanged cyclically and at the request of the IO-Link master. Device data can be written to the device and also read from the device.

Events

When an event occurs, the device signals to the master that an event is present. The master then reads the event. Events can be error messages (for example, short-circuit) and warning/maintenance data (for example, dirt, overheating).

Error messages are transferred from the device to the CPU or the HMI by the IO-Link master.

The IO-Link master can also transfer events and states. Such events are, for example, wire break, break in communication or overload.

Device parameters or events are transmitted independently of the cyclic transmission of process data. The transmissions do not influence or impair each other.

Startup of the IO system

If the port of the master is set to IO-Link mode, the IO-Link master attempts to communicate with the connected IO-Link device. For this purpose the IO-Link master sends a defined signal and waits for the reply of the IO-Link device.

The IO-Link master first attempts a communication with the highest defined data transmission rate. If this transmission attempt fails the IO-Link master attempts a communication with the lowest data transmission rate. The device always supports only one defined data transmission rate.

If the master receives a reply, communication starts. First they exchange communication parameters. If necessary the parameters stored in the system are transferred to the device.

Then the cyclic data exchange of process data and value status starts.

2.5 Device profiles

Introduction

Device profiles are defined for IO-Link to standardize access of the CPU user program to the devices.

Data structure, data contents and basic functionality are defined in the device profiles. A standard user view and an identical program access is thus achieved for a number of different devices that have the same device profile.

IO-Link profiles

The device profile "Smart Sensor Profile" is currently defined for IO-Link. This profile is especially suited for measurement sensors. In other words, measured values are transmitted in addition to switching points.

In addition, the switchgear (for example, contactors) support the LVSG (Low Voltage Switchgear) profile defined in IEC 61915-2.

2.6 IODD and Port Configuration Tool - S7-PCT

Device description IODD

An electronic device description, the IODD file (IO Device Description) is available for each device. The IODD provides a wealth of information for system integration:

- Communication properties
- Device parameters with value range and default value
- Identification, process and diagnostic data
- Device data
- Text description
- Image of the device
- Manufacturer logo

The structure of the IODD is identical for all devices from all manufacturers. The structure of the IODD is always represented in the identical manner by the IO-Link Configuration Tool of the master manufacturer (for Siemens, S7-PCT). This ensures that the handling is the same for all IO-Link devices regardless of the manufacturer.

Two different IODD versions are available for devices that support both V1.0 and V1.1 functionality.

IODDfinder

The IODDfinder is a cross-vendor, central IO-Link database.
This database provides you with the latest IODDs of the device manufacturers and offers an information and download platform.
The IODDfinder is available on the Internet (https://ioddfinder.io-link.com).

IO-Link configuration tool

Configuration tools are required to configure the entire IO-Link system. The IO-Link configuration tools of the master manufacturers are able to read IODDs.

The main tasks of the IO-Link configuration tool include:

- Assigning the devices to the ports of the master
- Address assignment of ports within the address area of the master
- Assigning parameters for the IO-Link device

Diagnostics can also be carried out on the connected devices.

This means the IO-Link configuration tool supports the transparent representation of the IO-Link system down to field level.

Siemens provides S7-PCT for engineering of the IO-Link system.

S7-PCT with IODD of a device

The following figure shows a section from S7-PCT with IODD of a device and the device information contained therein.

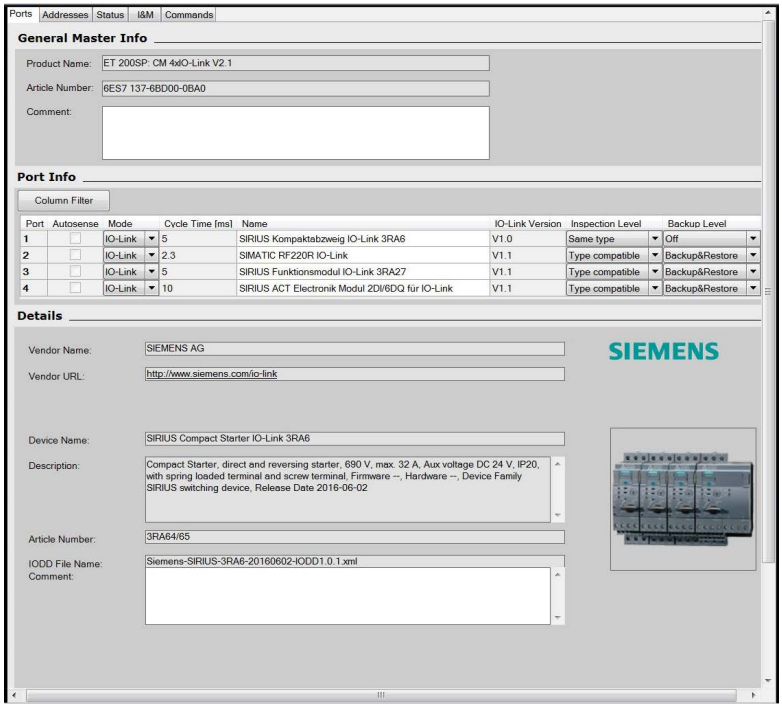

Figure 2-5 S7-PCT with IODD of a device and the device information contained therein

2.7 Differences between IO-Link specifications V1.0 and V1.1

Specification

The technical definition of the IO-Link system is described in a specification of the IO-Link consortium. The first step was the creation of specification version 1.0. The further development and added functions of the IO-Link system led to version 1.1.

The main enhancements of version 1.1 are:

- Data backup for device replacement during operation (Backup&Restore)
- Data transmission rate 230.4 kBaud is mandatory for the IO-Link master

Combination of IO-Link devices

Note the following when combining IO-Link devices:

- Only IO-Link devices that comply with V1.0 can be operated on the IO-Link master to V1.0.
- IO-Link devices that comply with V1.0 and V1.1 can be operated on the IO-Link master to V1.1.
- Data backup and a data transmission rate of 230.4 kBaud of the IO-Link master after V1.1 can only be used when these functions are also supported by the IO-Link device.

Integration into the automation system 3

3.1 Configuration of the IO-Link system

Introduction

An IO-Link system is configured in several steps. In the first step, the master is integrated in the automation system and configured. In the second step, the IO-Link devices are configured.

Integration in the automation system

When using a SIMATIC S7 CPU, use the engineering tool STEP 7, V5.x or STEP 7 (TIA Portal) for configuration.
The IO-Link system is represented by the IO-Link master in the configuration of the automation system or the fieldbus and integrated with STEP 7 or a GSD file.
The IO-Link master itself can be a field bus node (e.g. ET 200eco PN IO-Link master) or a part of the modular IO system that is connected to the field bus (e.g. ET 200SP IO-Link master). In both cases, the number of ports, the address range and the module properties are described in STEP 7 or in the GSD file.

Example configuration in STEP 7 (TIA Portal)

The figure below shows a PROFINET configuration with integrated PROFINET devices ET 200SP and ET 200ecoPN with IO-Link masters.

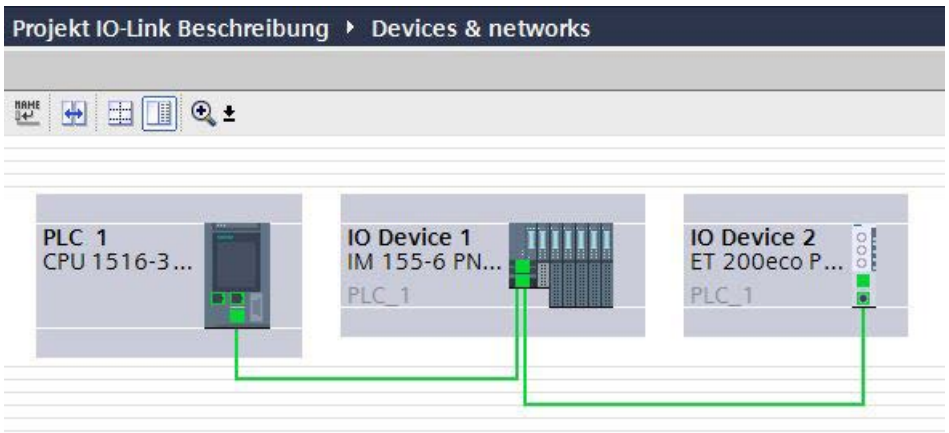

Figure 3-1 Configuration of a PROFINET network with lower-level IO-Link masters

In the device view of the PROFINET device, you can:

- Parameterize the ports
- Specify the input and output address ranges of IO-Link for exchange of cyclic data (process values).

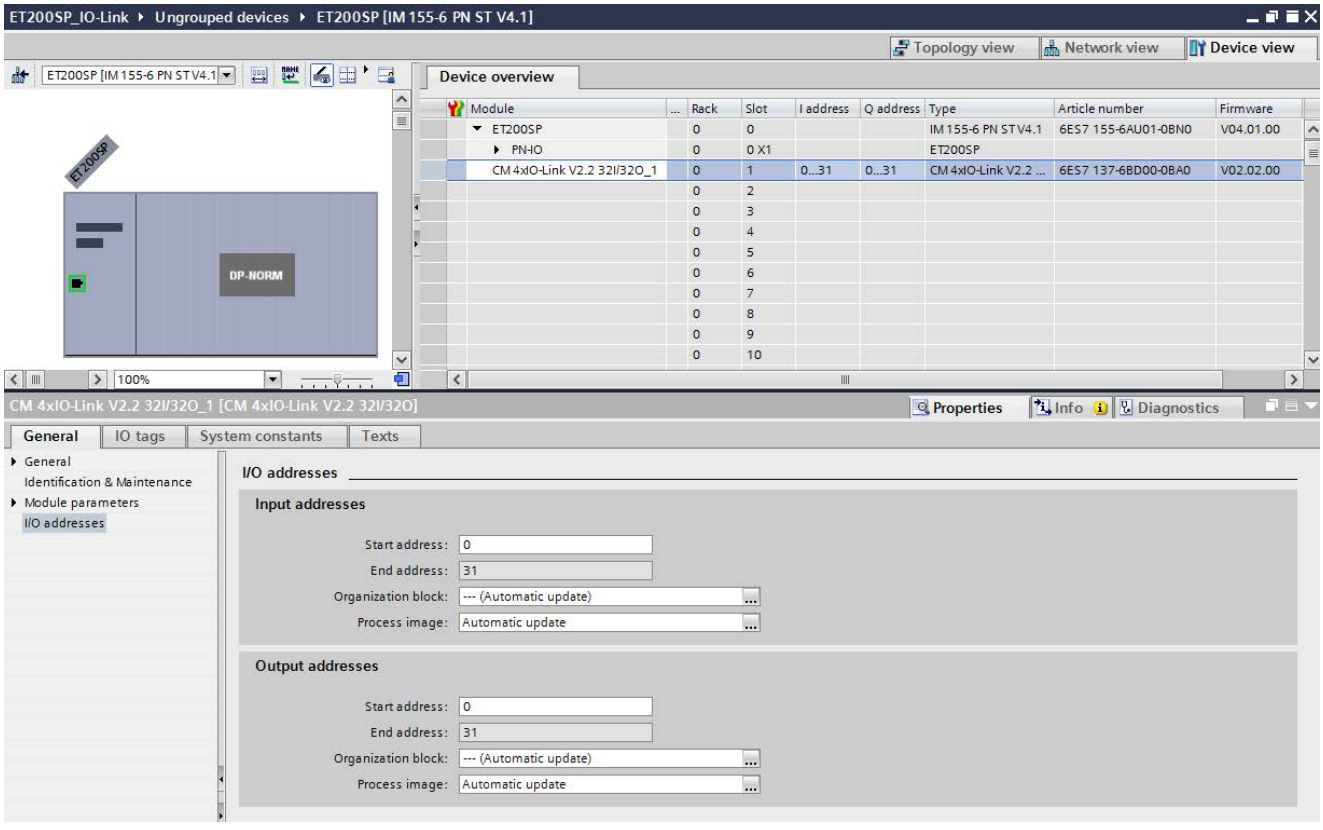

Figure 3-2 Device view with setting of the IO-Link address range

In addition, you can set in the module properties of the IO-Link master how the IO-Link system is to be configured and parameterized.
In doing so, you can select whether or not you also want to work with the S7-PCT configuration tool.

Note

IO data length

To ensure smooth operation, select an IO data length during configuration of the IO-Link master that corresponds at least to the IO data length of all connected IO-Link devices.

3.1.1 Configuration with S7-PCT

Introduction

The following sections describe how you configure your IO-Link master with the S7-Port Configuration Tool (S7-PCT).

You need S7-PCT to display the system architecture completely and transparently all the way to the IO-Link device and to configure and parameterize the IO-Link system in detail.

With S7-PCT you can easily configure the IO-Link devices with the help of the IODD (IO-Link Device Description) supplied by the device manufacturer.
In the S7-PCT online view you can display the diagnostics states and process values of the IO-Link devices in detail.

Configuration with S7-PCT

When you have selected the option "Configuration with S7-PCT", you are also making the settings of the IO-Link master ports with S7-PCT.
These settings include:

- Specification of the address range for each port
- Behavior when replacing an IO-Link device
- Setting the identification data for checking the connected IO-Link device type

Start S7-PCT from HW Config in STEP 7.
S7-PCT shows you all Siemens IO-Link masters you have configured in your automation system.
After selecting an IO-Link master, you can assign its IO-Link ports to the desired IO-Link devices.
To do so, select the corresponding IO-Link devices (or their IODDs) from the device catalog and drag them to the port of the IO-Link master.

Example configuration in S7-PCT

The following figure shows the configuration of an IO-Link master in S7-PCT.

This S7-PCT view shows you a wide variety of information:

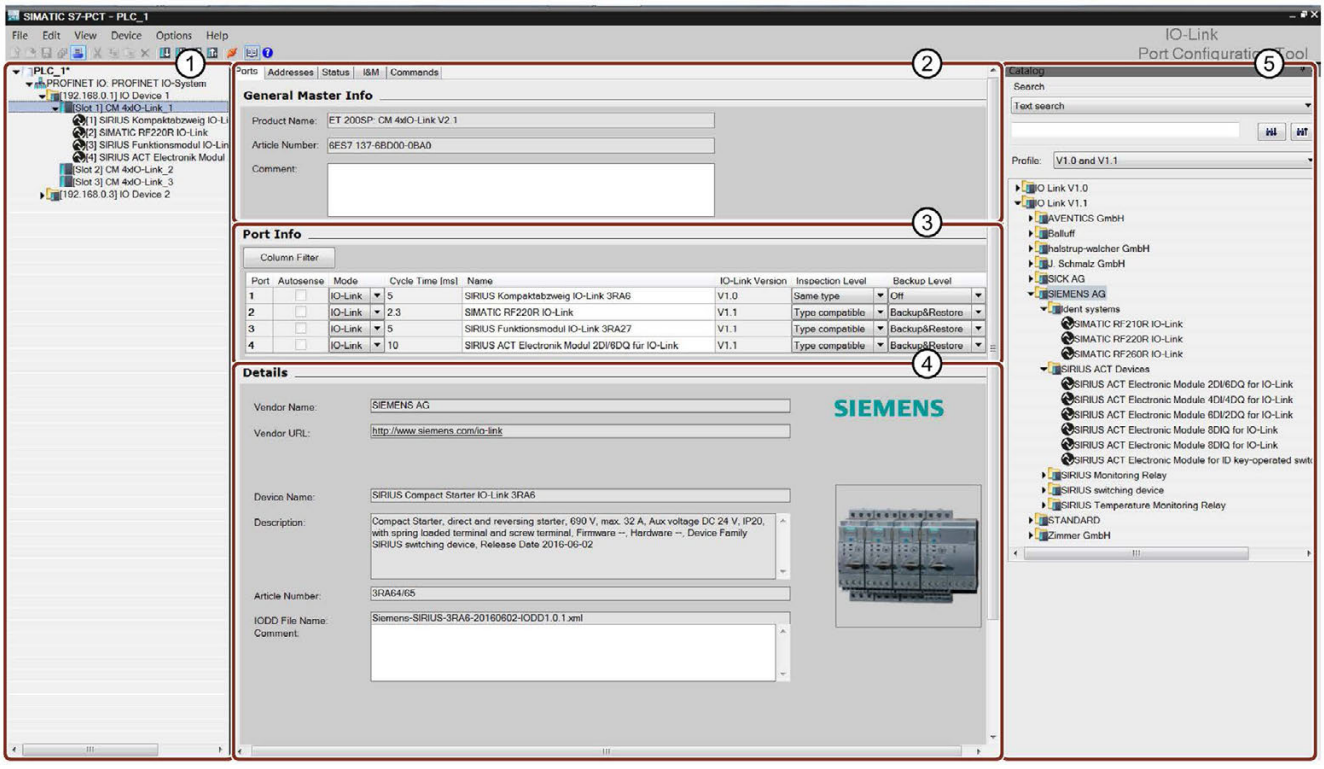

① Higher-level field bus and overview or structure of the lower-level IO-Link master
② Detailed information on the selected IO-Link master
③ Current configuration of the IO-Link ports of the selected IO-Link master
④ Detailed information on the selected IO-Link device
⑤ Device catalog with the IODDS of the IO-Link devices from different manufacturers

Figure 3-3 Configuration of an IO-Link master in S7-PCT

Address range of the ports

In addition to the assignment of the IO-Link devices to the IO-Link master ports, the default address ranges of the ports can be changed. The IO-Link master transfers the process values that it receives from the IO-Link device in these address ranges and makes the process values available to the higher-level automation system.

To set the address range, select the "Addresses" tab.

Setting device parameters

Specific parameter settings are required to adjust the device to the respective application task. The possible parameters and set values are contained in the IODD of each device. You set the device parameters directly in S7-PCT.

After selecting the corresponding device in the project tree (left tree), set the device parameters in the "Parameters" tab.

The figure below shows you an example of the parameter assignment of an IO-Link device:

Identification | Parameters | Monitoring | Diagnostics | Connection

Column Filter

Parameter	Value	Icon	Unit	Status	Help
Parameters					
Parameter Data					
System command					
Device Reset	Device Reset				
Restore Factory Setting	Restore Factory Setting				
Device access locks					
Parameter (write) Access	Locked			changed	
Data Storage	Unlocked				
Operating system functions					
index131 - Group diagnostics	enabled				enable/disable automatic signaling to PLC
index131 - Group error diagnostics	enabled				enable/disable automatic signaling of error messages to PLC
index131 - Local threshold change	enabled				enable/disable local threshold changing via buttons
index131 - Local parameter change	enabled				enable/disable local parameter changing via buttons
index131 - Local reset	enabled				enable/disable local reset via buttons
index131 - Retentive error memory	disabled				enable/disable remanent saving of error messages in the event of a power fa...
index131 - Analog value coding	Tmax [°C] (5)				choose the analog value trasmitted cyclically in the process image
Temperature monitoring					
index131 - Temperature monitoring mode	Range monitoring			changed	set the value of temperature monitoring mode
index131 - Temperature unit	°C				choose the temperature unit for display and monitoring (°C or °F)
index131 - ON-delay time (at Power ON)	enabled				enable/disable starting of delay time at Power-ON
index131 - ON-delay time (at manual reset)	enabled				enable/disable starting of delay time at manual reset of the device
index131 - ON-delay time	0.0		s		set the value of ON-delay time
index131 - Tripping delay time (if the temperat...	0.0		s		set the value of tripping delay time (temperature overshoot or undershoot)
index131 - Temperature sensor type	PT100				choose the type of the connected temperature sensor(s)
index131 - Hysteresis	3			changed	set the value of hysteresis for automatic reset after overshoot or undershoot
index131 - Relay switching response	Closed-circuit principle (NC)				choose the circuit principle of relay switching
Thresholds					
index131 - Threshold ϑ1	30			changed	set temperature threshold 1 for tripping (overshoot or undershoot depends o...
index131 - Threshold ϑ2	20			changed	set temperature threshold 2 for tripping (overshoot or undershoot depends o...
index131 - Warning threshold for ϑ1	28			changed	set temperature warning threshold 1 (overshoot or undershoot depends on ...
index131 - Warning threshold for ϑ2	22			changed	set temperature warning threshold 2 (overshoot or undershoot depends on ...

Figure 3-4 Setting the parameter values of the IO-Link device

Starting from the displayed defaults, you can edit and save the values in the defined value range.

The configuration of the IO-Link system and the parameters of the devices are available to the IO-Link system and the entire automation project. You have the option of saving and printing the configuration and the parameters.

3.1.2 Configuration without S7-PCT

Introduction

The following sections describe how you configure your IO-Link master without the S7-Port Configuration Tool (S7-PCT).

Your options for configuration of the IO-Link system without S7-PCT are limited.
You can configure the port of the IO-Link master using STEP 7 or the GSD file, but you cannot set any parameters of the lower-level IO-Link devices.

Configuration without S7-PCT

You can activate the following parameters in STEP 7 or the GSD file during port configuration:

- Port Qualifier Information (PQI):
  provides information on the status, such as process data of the IO-Link port; is transmitted with the input data of the IO-Link device.
- Operating mode
  - IO-Link Autostart:
    The IO-Link master accepts each connected IO-Link device and starts it automatically.
  - IO-Link Manual:
    The IO-Link master only accepts IO-Link devices that match the Vendor ID and Device ID set below.
    The connected IO-Link device is **not** started automatically.
  - DI:
    The port is operating as a standard digital input.
  - DQ:
    The port is operating as a standard digital output.
  - Disabled:
    The port is disabled.
- Input Data Length:
  Process data length of the input data
- Output Data Length:
  Process data length of the output data
- Vendor ID
  ID number of the device manufacturer. You can find the Vendor ID on the Internet (https://support.industry.siemens.com/cs/ww/en/view/109748852).

- Device ID
  ID number of the device. You can find the Device ID on the Internet (https://support.industry.siemens.com/cs/ww/en/view/109748852).
- Inspection level for data backup:
  - Identical type (V1.0) without Backup&Restore
  - Type-compatible (V1.1) without Backup&Restore
  - Type-compatible (V1.1) with Backup&Restore
  - Type-compatible (V1.1) with Restore

The figure below shows you an example of the settings of a port configuration in STEP 7 or with GSD file:

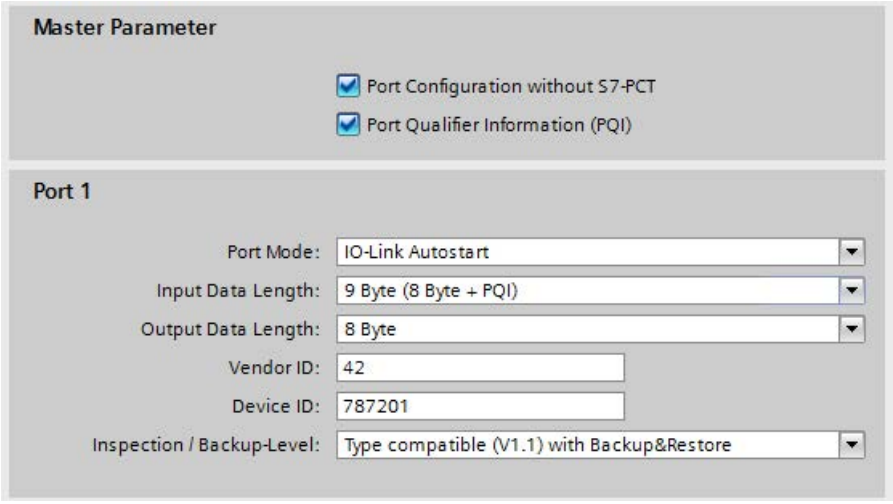

Figure 3-5 Settings of the port configuration in STEP 7 or with GSD file

3.1.3 Overview of configuration options

Introduction

The tables below show the configuration options offered by the SIMATIC IO-Link master with or without S7-PCT and which FW versions of the IO-Link master support the individual configurations.

Comparison of the configuration options

The following table provides an overview of the available options for configuration with and without S7-PCT:

Requirement	Configuration with S7-PCT	Configuration without S7-PCT	
		IO-Link Autostart	IO-Link Manual
Use of the IO-Link device description IODD	Yes	No	No
Setting the length of input and output data (per port)	Automatic	Manual	Manual
Assignment of the Vendor ID and Device ID	Automatic	-	Manual (see FAQ (https://support.industry.siemens.com/cs/ww/en/view/109748852))
Behavior during IO-Link device replacement	Programmable	-	Programmable
Adjustable IO-Link cycle time	Yes	No	No
Adjustable IO-Link device parameters	Yes	No	No
Display of the IO-Link process data structure	Yes	No	No
Monitoring of IO-Link process data	Yes	No	No
Display of IO-Link device diagnostics messages	Yes	No	No

Configuration options of the SIMATIC IO-Link masters

The following table provides an overview of the configuration options supported by the individual IO-Link masters:

Device designation	Article number	As of FW version	Configuration...	
			...with S7-PCT	...without S7-PCT
ET 200SP				
Communications module IO-Link Master CM 4xIO-Link	6ES7137-6BD00-0BA0	V1.0.0	x	-
		V2.2.0	x	x
ET 200AL				
Communications module CM 4xIO-Link 4xM12	6ES7147-5JD00-0BA0	V1.0.0	x	-
		V1.1.0	x	x
ET 200ecoPN				
IO-Link master 4 IO-L + 8 DI + 4 DO DC 24V/1,3A 8×M12	6ES7148-6JA00-0AB0	V6.1.0	x	-
IO-Link master 4 IO-L 4×M12	6ES7148-6JD00-0AB0	V1.0.0	x	x (Autostart only)
ET 200pro				
Electronic module EM 4 IO-LINK HF	6ES7147-4JD00-0AB0	V1.0.0	x	-
ET 200S				
Electronic module 4SI IO-Link	6ES7138-4GA50-0AB0	V1.0.0	x	-
S7-1200				
SM1278 4xIO-LINK MASTER	6ES7278-4BD32-0XB0	V1.0.0	x	-

3.2 Data access of the automation system and the HMI device

Cyclic data exchange

To exchange cyclic process data between an IO-Link device and a CPU, the IO-Link data is assigned by the IO-Link master to the previously set address ranges. The user program of the CPU accesses and processes the process values by using these addresses. The cyclic data from the CPU to the IO-Link device (for example, IO-Link actuator) takes place in reverse order.

Acyclic data exchange

Acyclic data, such as device parameters or events, is exchanged by means of a fixed index and subindex area. The CPU accesses the data using system mechanisms (for example, for online functions such as reading the status). You can use the index and subindex area to access specific device information (for example, to re-assign parameters of the device or master during operation).

Function blocks "IO_LINK_MASTER" and "IO_LINK_DEVICE"

The programming of the CPU user program is another task in addition to the configuration and parameterization of the IO-Link system and its integration into the overall automation system.

For acyclic data exchange, you can use the function blocks "IO_LINK_MASTER" and "IO_LINK_DEVICE" for controllers of the S7-300, S7-400, S7-1200 and S7-1500 product lines.

The function block "IO_LINK_MASTER" reads all relevant functions and accesses to the IO-Link master, the function block "IO_LINK_DEVICE" reads all accesses to the IO-Link devices.
You can use the function block "IO_LINK_MASTER" to restore all parameters saved in the IO-Link master. A typical application is the replacement of the IO-Link master.

Note

Function blocks "IO_LINK_MASTER" and "IO_LINK_DEVICE"

The function blocks "IO_LINK_MASTER" and "IO_LINK_DEVICE" replace the functions of the previously available block "IOL_CALL".

Reference

The IO-Link block library with a description of the integration is available on the Internet (https://support.industry.siemens.com/cs/ww/en/view/82981502).

You can find an application example of using the block library with HMI devices on the Internet (https://support.industry.siemens.com/cs/ww/en/view/90529409).

3.3 Changing and saving device parameters during plant operation

Changing device parameters

You can adjust the device parameters during operation.
The changed parameters will become effective on the device in the process and are retentively saved in the device.

The parameters can be adapted during operation with:

- the engineering tool used (e.g. during plant commissioning)
- the CPU user program (program-controlled)
- HMI (through plant operator during batch change, process optimization)
- Locally through operation on the device (local operating unit on the device)

Saving device parameters (backup)

You can also save the parameters set in the device during commissioning or changed during operation of the plant in the IO-Link master.
This data backup takes place depending on the set behavior of the IO-Link master ports.
You can set the following data backup levels:

- None
  No data backup in the IO-Link master.
- Backup&Restore
  Every time the device parameters are changed, the changed data is automatically saved in the IO-Link master (see section "Triggering a backup").
- Restore
  No automatic data backup in the IO-Link master.

IO-Link Version	Inspection Level	Backup Level
V1.0	No check	Off
V1.1	Type compatible	Backup&Restore
V1.1	Type compatible	Backup&Restore
V1.1	Type compatible	Backup&Restore

Figure 3-6 Overview of data backup level in S7-PCT

Note

IO-Link Specification V1.0

IO-Link master and devices to IO-Link specification V1.0 do not offer this function; a data backup cannot be set (Data backup: None).

Note that the behavior of the IO-Link master and the IO-Link devices during device replacement depends directly on the set data backup level.
You can find additional information on this dependency in the section Replacing a master or device during operation (Page 32).

Triggering a backup

Requirements

- You have set the correct data backup level.
- The IO-Link master and the IO-Link devices you are using support this function (IO-Link Specification V1.1).

Procedure

There are several ways to trigger a backup:

- In the engineering tool:
  After you have downloaded the engineering settings to the device, the IO-Link device immediately triggers a backup.
- In the CPU user program:
  IO-Link device parameters can be changed successively by the user program.
  A backup is only triggered by a system command. The system command must be triggered by the user program after the parameter changes.
  You can implement the parameter changes and the system command for triggering the backup with function blocks of the CPU.
- Using the HMI:
  You proceed as with triggering by the user program.
  The plant operator then triggers the necessary system command on the HMI device.
- Locally by operating the IO-Link device:
  After confirming the input on the IO-Link device, the IO-Link device initiates the backup.

3.4 Replacing a master or device during operation

Replacing a device

Replacing a device during operation is a scenario that occurs again and again and has to be completed without longer plant downtimes. Replace a device quickly and avoid incorrect settings. Devices can also be replaced by operators without special knowledge and aids.

When you use the backup function of the master, the master automatically supplies the saved parameters to the new device during device replacement.
You have the following setting options for device replacement:

- Backup&Restore
  You have set the master port to Backup&Restore. The new device behaves as the replaced device because the master has saved the last parameter change with the backup function.
- Restore
  You have set the master port to Restore. The new device applies the parameter settings that were saved in the master at the time of the last backup.
  If you have made parameter changes since the last backup, these are not saved in the master and are not available to the new device.
  The behavior of the new device can deviate from the behavior of the replaced device.
  This may be useful if you want to make short-term plant optimizations but do not want to save them in the plant backup.

Note

Field calibration of sensors

When you are using sensors that must be adapted to specific rated conditions on site (field calibration), you must repeat this calibration after replacing the device.
The backup does not include the data of the field calibration. After repeating the field calibration, the new device works just like the replaced device.

Replacing a master

Replacing a master during operation is a rather rare scenario. Here, too, longer plant downtimes are to be avoided. Replace a device quickly and avoid incorrect settings. Devices can also be replaced by operators without special knowledge and aids.

You can save the configuration and parameter data of the master and the devices connected to the master in the CPU and download this information to the new master after the replacement.
When using an S7-CPU, you can use function blocks for this purpose.
You can find additional information on function blocks in the section Data access of the automation system and the HMI device (Page 29).

Index

B

Backup, 30
Backup&Restore, 30

C

Configuration, 22
    without S7-PCT, 25
Connecting cables, 13
Connection system in IP65/67, 12

D

Data exchange
    Acyclic, 29
    Cyclic, 29
Data types, 15
Device data, 15
Device parameters, 24
    Changing, 30
    Save, 30
Device profiles, 16

E

Events, 15

F

Function block
    IO_LINK_DEVICE, 29
    IO_LINK_MASTER, 29

I

IODD
    Device description, 17
IO-Link
    Advantages, 9
    Combination, 19
    Components, 7
    Configuration tool, 17
    Definition, 8
    Interface, 12
    Protocol, 14
    Response time, 14
    Specification, 19

O

Operating modes, 14

P

Port
    Address range, 23
Port types in IP65/67, 13
Process data, 15

R

Restore, 30

S

S7-PCT
    Example configuration, 23
Startup of the IO system, 16

T

Transmission performance, 15
Transmission rate, 14

W

with S7-PCT, 22

SIEMENS

SIMATIC

S7-1500, ET 200MP, ET 200SP, ET 200AL, ET 200pro, ET 200eco PN Analog value processing

Function Manual

Preface

Documentation guide 1

What you should know about analog technology 2

Representation of analog values 3

Connecting transducers 4

Thermocouples 5

Wiring loads/actuators 6

Supported functions 7

High-speed analog modules 8

06/2014

A5E03461439-AC

Legal information

Warning notice system

This manual contains notices you have to observe in order to ensure your personal safety, as well as to prevent damage to property. The notices referring to your personal safety are highlighted in the manual by a safety alert symbol, notices referring only to property damage have no safety alert symbol. These notices shown below are graded according to the degree of danger.

⚠ DANGER
indicates that death or severe personal injury **will** result if proper precautions are not taken.

⚠ WARNING
indicates that death or severe personal injury **may** result if proper precautions are not taken.

⚠ CAUTION
indicates that minor personal injury can result if proper precautions are not taken.

NOTICE
indicates that property damage can result if proper precautions are not taken.

If more than one degree of danger is present, the warning notice representing the highest degree of danger will be used. A notice warning of injury to persons with a safety alert symbol may also include a warning relating to property damage.

Qualified Personnel

The product/system described in this documentation may be operated only by **personnel qualified** for the specific task in accordance with the relevant documentation, in particular its warning notices and safety instructions. Qualified personnel are those who, based on their training and experience, are capable of identifying risks and avoiding potential hazards when working with these products/systems.

Proper use of Siemens products

Note the following:

⚠ WARNING
Siemens products may only be used for the applications described in the catalog and in the relevant technical documentation. If products and components from other manufacturers are used, these must be recommended or approved by Siemens. Proper transport, storage, installation, assembly, commissioning, operation and maintenance are required to ensure that the products operate safely and without any problems. The permissible ambient conditions must be complied with. The information in the relevant documentation must be observed.

Trademarks

All names identified by ® are registered trademarks of Siemens AG. The remaining trademarks in this publication may be trademarks whose use by third parties for their own purposes could violate the rights of the owner.

Disclaimer of Liability

We have reviewed the contents of this publication to ensure consistency with the hardware and software described. Since variance cannot be precluded entirely, we cannot guarantee full consistency. However, the information in this publication is reviewed regularly and any necessary corrections are included in subsequent editions.

Siemens AG
Industry Sector
Postfach 48 48
90026 NÜRNBERG
GERMANY

A5E03461439-AC
Ⓟ 07/2014 Subject to change

Copyright © Siemens AG 2012 - 2014.
All rights reserved

Preface

Purpose of the documentation

This documentation covers general topics applicable to all products.

In addition to introductory information about analog value processing, this manual covers the following topics:

- Wiring transducers to analog inputs
- Wiring actuators/loads to analog outputs
- Compensating for reference junction temperatures
- Calibrating analog modules
- Diagnostics options of an analog module
- High-speed analog modules

Basic knowledge required

The following knowledge is required in order to understand the documentation:

- General knowledge of automation technology
- Knowledge of analog value processing (analog technology)
- Knowledge of the industrial automation system SIMATIC
- Knowledge about how to use STEP 7 (TIA Portal)

Scope of the documentation

This manual is considered the basic documentation for all analog input and analog output modules of the S7-1500, ET 200MP, ET 200SP, ET 200AL, ET 200pro and ET 200eco PN product series.

Changes compared to previous version

Changes / enhancements described in this manual, compared to the previous version (version 12/2013):

- Extension of the scope of validity to the distributed I/O system ET 200AL

Conventions

STEP 7: In this documentation, "STEP 7" is used as a synonym for "STEP 7 as of V12 (TIA Portal)" and subsequent versions of the configuration and programming software.
This documentation includes images of the products it describes. The products supplied may differ slightly from these images.

Please observe notes labeled as follows:

Note

Notes contain important information on a point in the documentation of particular importance.

Additional support

Additional information on SIMATIC products is available on the Internet. The associated documentation is also available on the Internet.

- The portfolio of technical documentation for SIMATIC products and systems can be accessed on the Internet (http://www.siemens.com/simatic-tech-doku-portal).
- The online catalog and the ordering system are available on the Internet (http://mall.automation.siemens.com).

Security information

Siemens provides products and solutions with industrial security functions that support the secure operation of plants, solutions, machines, equipment and/or networks. They are important components in a holistic industrial security concept. With this in mind, Siemens' products and solutions undergo continuous development. Siemens recommends strongly that you regularly check for product updates.

For the secure operation of Siemens products and solutions, it is necessary to take suitable preventive action (e.g. cell protection concept) and integrate each component into a holistic, state-of-the-art industrial security concept. Third-party products that may be in use should also be considered. You can find more information about industrial security on the Internet (http://www.siemens.com/industrialsecurity).

To stay informed about product updates as they occur, sign up for a product-specific newsletter. You can find more information on the Internet (http://support.automation.siemens.com).

Table of contents

Preface 3
1 Documentation guide 7
2 What you should know about analog technology 9
2.1 Overview 9
2.2 Precision/resolution 13
2.3 Scaling analog values 17
2.4 Unscaling analog values 19
2.5 Linearity errors 21
2.6 Repeat accuracy 22
2.7 Operational and basic error limits 23
2.8 Temperature error 26
2.9 Interference frequency suppression 27
2.10 Common mode interference (UCM) 29
2.11 Series mode interference (USM) 31
2.12 Interference voltage suppression 32
2.13 Crosstalk between channels 34
2.14 Diagnostics 36
2.15 Value status 46
2.16 Conversion time of an analog module 49
2.17 Cycle time of an analog module 51
2.18 Settling and response times of analog output modules 52
2.19 Smoothing 54
2.20 Burden with 2-wire transducers 57
3 Representation of analog values 60
3.1 Overview 60
3.2 Representation of input ranges 62
3.3 Representation of output ranges 63

4 Connecting transducers 65
4.1 Overview 65
4.2 Wiring analog inputs with MANA connection 67
4.3 Wiring analog inputs without MANA connection 69
4.4 Wiring voltage transducers 71
4.5 Wiring current transducers 72
4.6 Wiring thermal resistors and resistors 74
4.7 Wiring thermocouples 76
5 Thermocouples 77
5.1 Selecting thermocouples 77
5.2 Structure and operating principle of thermocouples 79
5.3 Compensation for the reference junction temperature 81
5.3.1 Overview 81
5.3.2 Compensation with internal reference junction 84
5.3.3 Compensation with reference channel of the module 86
5.3.4 Compensation, reference channel of Group 0 88
5.3.5 Compensation with fixed reference temperature 91
5.3.6 Compensation by means of dynamic reference temperature 94
5.3.7 "None" or external compensation 98
5.3.8 Compensation type RTD (0) 100
6 Wiring loads/actuators 103
6.1 Overview 103
6.2 Wiring loads/actuators 104
7 Supported functions 106
7.1 Calibrating analog modules 106
7.1.1 Overview 106
7.1.2 Calibrating analog modules 107
7.1.3 Canceling a calibration 111
7.1.4 Resetting analog modules to factory settings 112
8 High-speed analog modules 113
8.1 Basics 113
8.2 ST modules vs HS modules 119
Index 125

Documentation guide

1

Introduction

The documentation of the SIMATIC products has a modular structure and covers diverse topics concerning your automation system.

The complete documentation for the S7-1500, ET 200MP, ET 200SP, ET 200AL, ET 200pro and ET 200eco PN systems consists of the respective system manuals, function manuals and product manuals.

Overview of additional documents related to analog value processing

The following table lists further references that supplement this description of analog value processing.

Table 1- 1 References for analog value processing

Topic	Documentation	Most important contents
System description	System manual S7-1500 Automation System (http://support.automation.siemens.com/WW/view/en/59191792)	• Application planning • Installation • Connecting • Commissioning
	System manual ET 200SP distributed I/O system (http://support.automation.siemens.com/WW/view/en/58649293)	
	System Manual ET 200MP Distributed I/O System (http://support.automation.siemens.com/WW/view/en/59193214)	
	System manual Distributed I/O System ET 200AL (http://support.automation.siemens.com/WW/view/en/89254965)	
	Operating instructions ET 200pro Distributed I/O System (http://support.automation.siemens.com/WW/view/en/21210852)	
	Operating instructions ET 200eco PN Distributed I/O System (http://support.automation.siemens.com/WW/view/en/29999018)	

Topic	Documentation	Most important contents
Configuring interference-free controllers	Function manual Configuring Interference-Free Controllers (http://support.automation.siemens.com/WW/view/en/59193566)	• Basics • Electromagnetic compatibility • Lightning protection
Analog module	Product manual of the respective analog module	• Connecting • Parameters • Technical specifications • Parameter data record • Tables of analog values

SIMATIC manuals

All current manuals for SIMATIC products are available for download free of charge from the Internet (http://www.siemens.com/automation/service&support).

What you should know about analog technology 2

2.1 Overview

Introduction

This chapter is intended to familiarize you with the essential parameters of analog input modules and analog output modules based on the fundamentals of analog technology. The descriptions and examples provided on the following pages serve as a reference to the manuals for the respective analog module and are intended to facilitate the handling of these manuals.

Analog and binary signals

Binary signals can assume only 2 signal states: signal state 1 (voltage present) and signal state 0 (no voltage present). In control engineering, it is frequently necessary to read, process and output analog signals in addition to binary signals. In contrast to binary signals, analog signals take on any number of values within a specific range. Possible analog variables include:

- Temperature
- Pressure
- Speed
- Fill level
- pH value

Transducers

Controllers are only capable of processing analog values in the form of bit patterns. For this purpose, transducers which can be connected to the analog module measure physical variables such as pressure or temperature. The analog input module reads this analog value in the form of current, voltage or resistance. To enable the CPU to process the current or voltage measured, an integrated analog-to-digital converter in the analog input module converts the value into a 16-bit integer value. Depending on the type of measurement, you can use the following transducers:

- Voltage transducers
- Current transducers
  - 2-wire transducers
  - 4-wire transducers
- Resistance transducers
  - 4-wire connection
  - 3-wire connection
  - 2-wire connection
- Thermocouples

Additional information on wiring various types of transducers to analog inputs can be found in Wiring transducers (Page 65).

Example

Speed is acquired using a transducer which converts the speed range of 0 to 1500 rpm to a voltage range of 1 to 5 V. At a measured speed of 865 rpm, the transducer outputs a value of 3.3 V.

The resulting voltage value is calculated as follows:

$$U = \frac{5\ V - 1\ V}{1500\ \frac{U}{min}} * 865\ \frac{U}{min} + 1\ V = 3.3\ V$$

The graph below illustrates voltage acquisition:

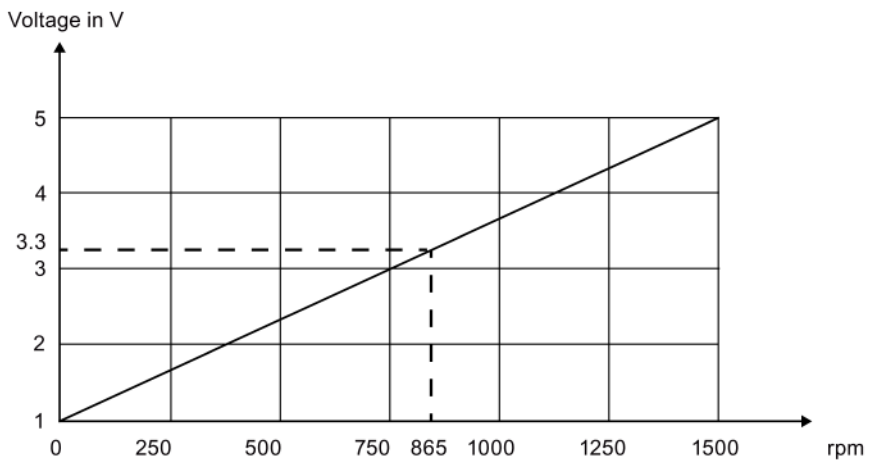

Figure 2-1 Speed measurement

Analog-to-digital conversion

A CPU processes information exclusively in digital format. The analog value is therefore converted into a bit pattern. Conversion is done using an integrated ADC (analog-to-digital converter) in the analog input module. For the CPU, this conversion always returns a 16-bit word for SIMATIC products. The ADC used digitalizes the analog signal and approximates its value with a stepped curve. Resolution and conversion speed are the most important ADC parameters.

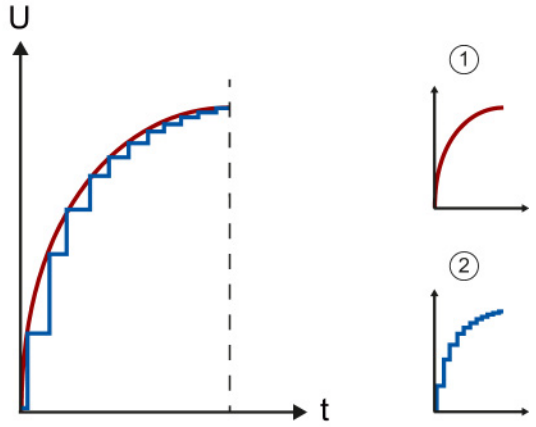

① Analog value
② Digital value

Figure 2-2 Approximation of an analog graph with low- and high-resolution stepped curves

Digital-to-analog conversion

Once the CPU has processed the digital signal, an integrated DAC (digital-to-analog converter) in the analog output module converts the output signal to an analog current or voltage value. The resulting value of the output signal corresponds to the output value used to control the analog actuators. Such actuators include, for example, small servo drives or proportional valves. You will find more information on wiring actuators in Wiring loads/actuators (Page 103).

Important parameters of analog modules

Alongside the type and range of measurement, the precision, resolution and conversion time are the main points to consider when selecting an analog module. For some applications such as systems which cover a large area, common mode or channel isolation are also important. The parameters listed here are examined in more detail in the following pages.

Processing analog signals

The following figure demonstrates analog signal processing in a PLC.

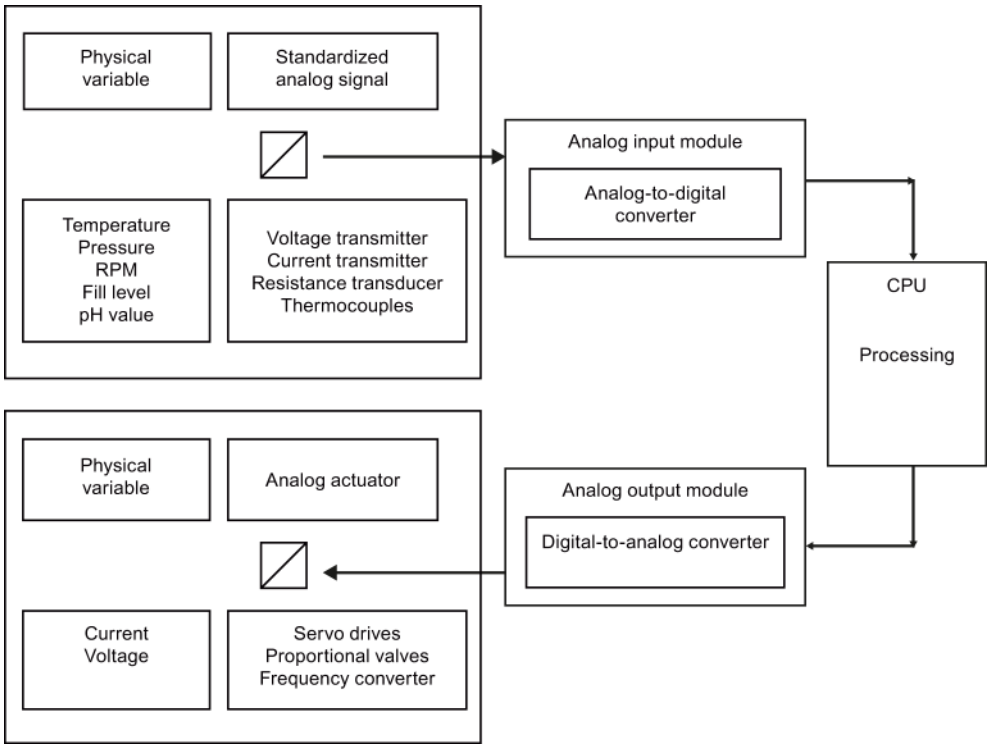

Figure 2-3 Analog value processing

2.2 Precision/resolution

The resolution of an analog module depends on the converter and its external circuitry. An approximation of the analog signal to be acquired/output is returned by a stepped curve. The resolution determines the number of increments of the analog value along this stepped curve. A higher module resolution reduces the length of increments and adds precision to the digitization of the analog signal.

Approximation of an analog value

The figures below show the approximation of an analog value by means of a stepped curve. A low resolution only returns a rough approximation of the actual curve (left figure), while the approximation is more precise at higher resolutions (right figure).

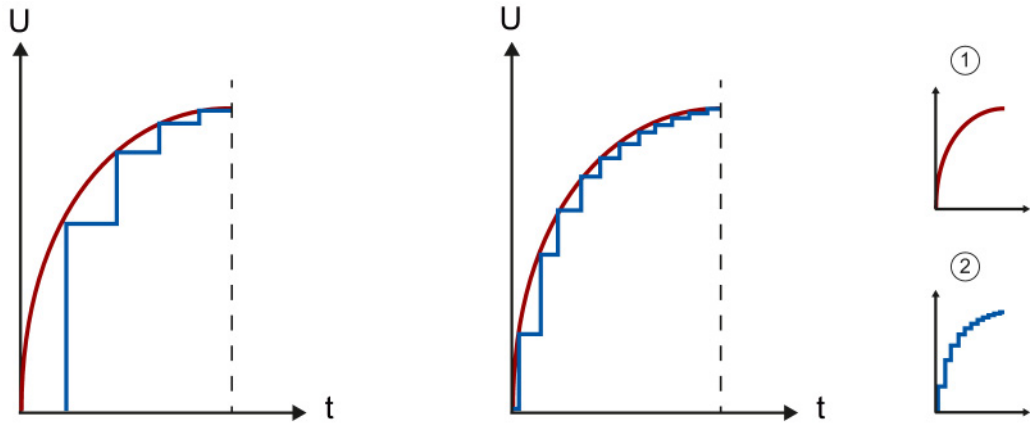

① Analog value
② Digital value

Figure 2-4 Approximation of an analog curve with a stepped curve

Visualization of the measuring range at a resolution of 13 bits and 16 bits

The unipolar measured value from a module having a resolution of 13 bits (= 12 bits + S) is segmented into a total of 2^{12} = 4096 increments. The smallest increment in a measuring range of 0 to10 V is 10 V/4096, equal to 2.4 mV.

A module with16-bit (= 15 bits + S) resolution thus provides an increment of 0.3 mV. If the resolution increases by one bit, the number of increments doubles and the width of an increment halves.

If the resolution increases from 13 bits to 16 bits, the number of increments increases eightfold from 4096 to 32768. With a resolution of 13 bits, the smallest value that can be displayed is therefore 2.4 mV. By contrast, this value is approximately 0.3 mV at a resolution of 16 bits.

Measuring ranges

For the display of the measuring range, SIMATIC S7 distinguishes between the rated range, the overrange and underrange, and the overflow or underflow. This distinction allows you to recognize whether the measured value is actually in the measuring range determined in the technical specifications. The overflow and underflow ranges are reserved for error detection.

At a resolution of 16 bits the theoretically possible 32768 increments are distributed across a voltage range of 11.852 V, which means that only 27648 increments are actually available for the resolution of a measuring range of 10 V. The minimum value which can be represented is therefore 0.3617 mV (see table).

Table 2- 1 Example of resolution for the 0 to 10 V measuring range of a SIMATIC S7 module

Value (increments)	Voltage measuring range	
Decimal	0 to 10 V	Range
32767	11.852 V	Overflow
32512		
32511	11.759 V	Overrange
27649		
27648	10.0 V	Rated range
20736	7.5 V	
1	361.7 µV	
0	0 V	
not relevant for this example		Underrange
as negative values are not possible		Underflow

The digitized visualization of the input ranges, separated into bipolar and unipolar input ranges, is shown in the section Visualization of the input ranges (Page 62). The digitized visualization of the output ranges, separated into bipolar and unipolar output ranges, is shown in the section Visualization of the output ranges (Page 63). You will find a summary of all measuring ranges which you can use with your analog module in the corresponding device manual.

Over and underrange

It may happen for control processes with high signal jumps that the settling curve of the signal briefly leaves the rated range until it reaches the setpoint. The over and underrange ensures that no error is reported while the signal is not in the rated range. If the signal exceeds the over or underrange, however, and reaches the overflow or underflow range, the error state "Overflow" or "Underflow" is diagnosed. This means the over or underrange correspond to a tolerance range between the rated range and the overflow or underflow. Additional information on the settling time is available in the section Settling and response times of analog output modules (Page 52).

The figure below shows the rated range, the overrange and overflow of a unipolar measuring range. The signal leaves the rated range briefly during the settling phase.

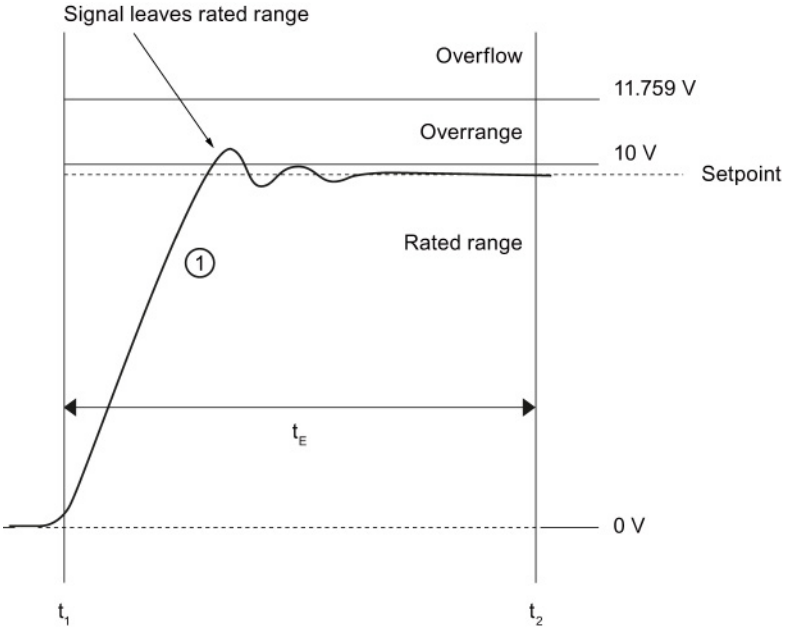

① Analog output signal

t_E Settling time of the signal to the setpoint

t_1 Module ends conversion at the terminal of the analog output channel and outputs the signal

t_2 Signal has settled and the specified analog output value has been reached

Analog module precision

The precision of an analog module is specified as a percentage value or absolute value, for example, in K or °C. This characterizes the total error of measured value acquisition. The basic error limit at 25 °C, as well as the operational limit, are specified in accordance with international standard IEC 61131, which also forms the basis for European Standard EN 61131. For more information on the operational/basic error limits, refer to the Operational and basic error limits (Page 23) section.

Relation between resolution and precision

A certain resolution must be given to reach a specific precision (operational error).

Example

Measuring error as a result of digitization at a resolution of 8 bits and 14 bits

An analog module has a measuring range of 0 V to 10 V. A resolution of 8 bits represents a total of 256 values. This is equivalent to a minimum possible voltage step of 39 mV or 0.4% of the measuring range end value. A resolution of 14 bits represents a total of 16384 values. This is equivalent to a minimum possible voltage step of 0.61 mV or 0.006% of the measuring range end value.

The percentages derived in this way also represent the theoretical best-case values for the operational limit. With a resolution of 8 bits and a measuring range of 0 to 10 V, it is therefore impossible to achieve a precision of more than 0.4 %. In practical life, this value would be clearly worse, depending on the implemented circuitry.

Calculating the maximum measuring error

The maximum measuring error of a 0 to 10 V analog module with an operational limit of ±0.5 % across the entire temperature range is calculated as follows:

10 V x 0.5/100 = 50 mV

This means the maximum measuring error is approximately ±50 mV. This also means that each analog voltage input is subject to a distortion of ±50 mV across the entire input range. A voltage of 3.5 V that is to be measured can therefore be visualized by any value between 3.45 V and 3.55 V.

For more information on the operational/basic error limits, refer to the Operational and basic error limits (Page 23) section.

2.3 Scaling analog values

Scaling

It is often necessary to calculate the actual process value rather than increments (e.g., 10 V = 27648 increments) for further processing of digitalized analog values. The conversion of a value range (e.g., -27648 to +27648 increments) to the original physical quantity (e.g., 0 to 500 liters) is referred to as scaling.

Scaling blocks

STEP 7 offers the suitable program block for scaling of analog values. The SCALE block is included in the STEP 7 scope of delivery and permits input of a high and low limit (e.g., 0 to 500 liters).

Example

In the example below the fill level of a tank with a capacity of 500 liters is to be measured. The transducer used measures a voltage of -10 V with an empty tank and a voltage of +10 V with a full tank. The analog module converts the voltage range from -10 V to +10 V into the value range -27648 to +27648 and converts this range into the original quantity of 0 to 500 liters with the SCALE program block.

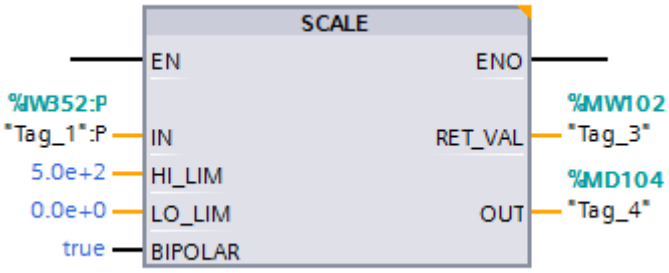

Figure 2-5 Scaling in the SCALE program block

The analog value at input **IN** is read directly by the module or is transferred by a data interface in INT format. The input **LO_LIM** is used to determine the low limit (0 liters) and **HI_LIM** to determine the high limit (500 liters) of the physical quantity. The output **OUT** outputs the scaled value (physical quantity) as floating-point number (LO_LIM <= OUT <= HI_LIM). You can assign parameters via the input **BIPOLAR** to specify if only positive or only negative values are to be converted. If the parameter receives an operand with the state '0', there is a unipolar scaling. An operand with the state '1' results in a bipolar scaling. The output **RET_VAL** outputs an error code in case of an error (e.g., overflow) and the value '0' in case of an error-free execution.

Additional information on the SCALE block can be found in the STEP 7 online help.

Unipolar and bipolar measuring ranges

The measurement of the fill level in our example took place within a bipolar measuring range. In addition to the positive voltage the transducer also provides negative voltage. Because the tank volume is mapped to the range from -27648 to +27648 increments, the measurement of the fill level takes place with twice the resolution (Δ) as in the unipolar measuring range.

Note

Transducers

The prerequisite for a measurement within a bipolar measuring range is that the used transducer supports bipolar measuring ranges.

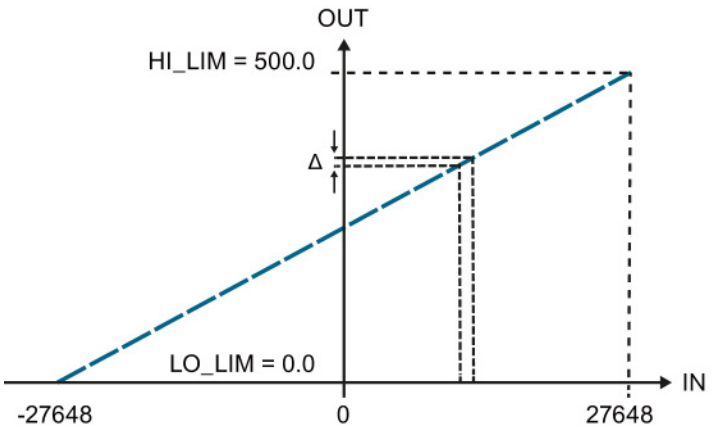

Figure 2-6 Bipolar measuring range

The measurement of the fill level in the bipolar measuring range takes place with twice the resolution (Δ) as in the unipolar measuring range.

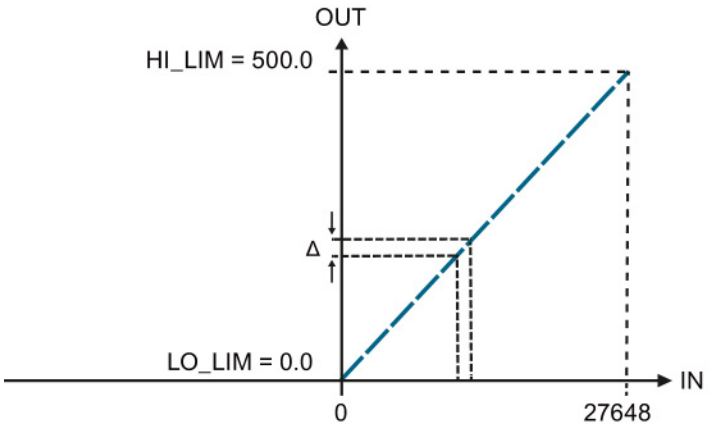

Figure 2-7 Unipolar measuring range

2.4 Unscaling analog values

Unscaling

The output of scaled analog values often requires conversion of the analog value calculated by the user program into the value range of the analog output module. This conversion is referred to as unscaling.

Unscaling blocks

STEP 7 offers the suitable program block for unscaling of analog values. The UNSCALE block is included in the STEP 7 scope of delivery and permits the input of a high and low limit that defines the range of the program value.

Example

An analog value from 0.0 to 100.0% calculated by the user program is to be converted with the UNSCALE block to the value range -27648 to +27648. When the unscaled value is output to an analog output module, this module addresses an analog actuator (e.g., modulating valve). The actuator is to be addressed at a program value of 0% with the minimum value (-10 V or -20 mA) and at 100% with the maximum value (+10 V or +20 mA).

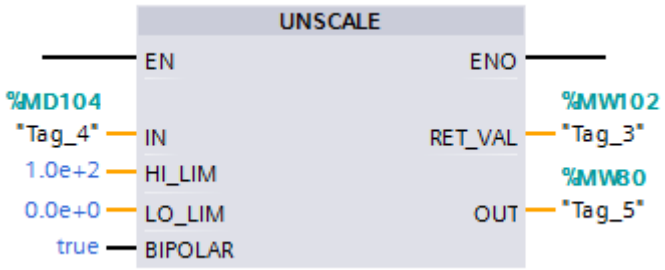

Figure 2-8 Unscaling in the UNSCALE program block

The value calculated by the program must be transferred in the REAL format (**IN**). You use the input **LO_LIM** to determine the low limit (0.0%), and **HI_LIM** to determine the high limit (100.0%) within which the program value moves. The unscaled value is output in INT format at the **OUT** output. You can assign parameters via the input **BIPOLAR** to specify if only positive or only negative values are to be converted. If the parameter receives an operand with the state '0', there is a unipolar scaling. An operand with the state '1' results in a bipolar scaling. The output **RET_VAL** outputs an error code in case of an error and the value '0' in case of an error-free execution.

Additional information on the UNSCALE block can be found in the STEP 7 online help.

Unipolar and bipolar measuring ranges

The figure below shows the scaling for an actuator that is to be addressed at a program value of 0% with the minimum value 0 (0 V or 0 mA) and at 100% (+27648) with the maximum value (10 V or 20 mA).

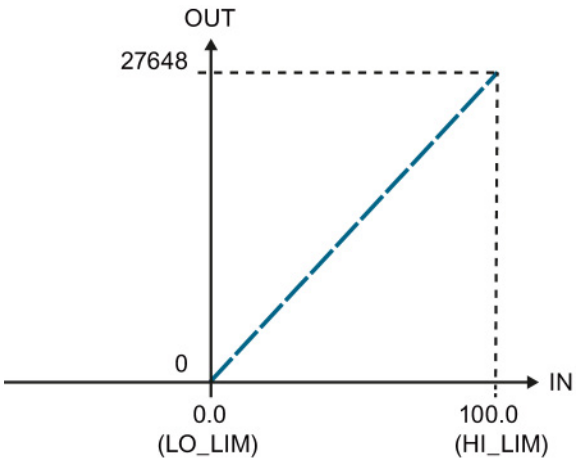

Figure 2-9 Unipolar measuring range

The figure below shows the scaling for an actuator that is to be addressed at a program value of 0% (-27648) with the minimum value 0 (-10 V or -20 mA) and at 100% (+27648) with the maximum value (+10 V or +20 mA).

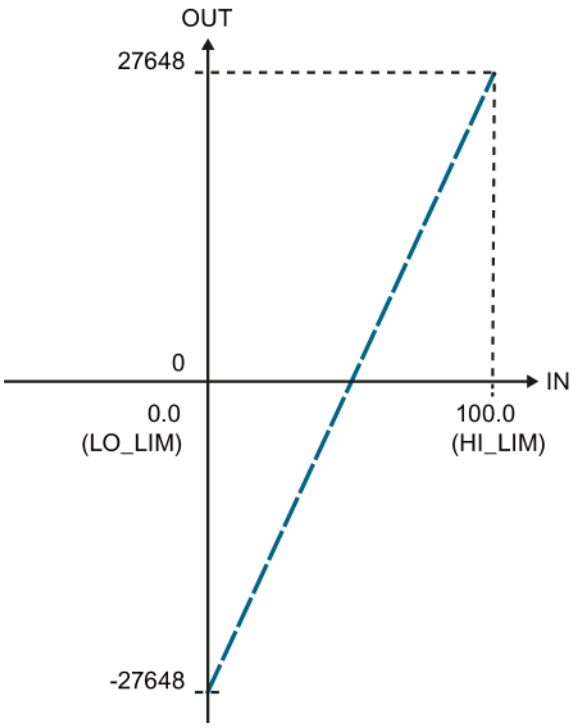

Figure 2-10 Bipolar measuring range

2.5 Linearity errors

Definition

Linearity denotes the deviation of the actual A/D or D/A conversion from the ideal lines within a specified measuring range. The linearity error therefore represents the deviation of the real transmission function from the ideal straight line. The error is given in the technical data as a percentage of the rated range of the analog module.

The figure below shows the linearity error of an ADC, magnified for better visibility.

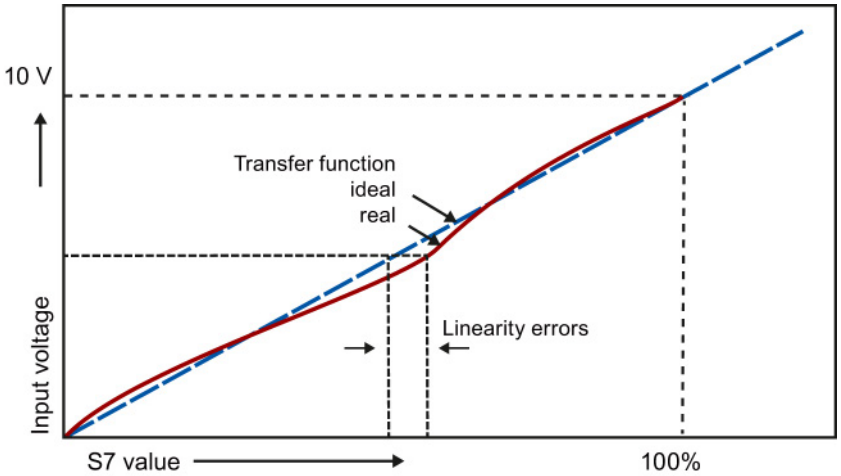

Figure 2-11 Linearity errors

Example

An error of ±1 mV is returned at an input range of ±10 V and a linearity error of ±0.01%. The error is calculated as follows: 10 V · 0.01 % = 1 mV

The linearity error information given in the technical specifications is taken into account in the operational limit. You will find a detailed description of the operational limit in Operational and basic error limits (Page 23).

2.6 Repeat accuracy

Definition

The repeat accuracy is the maximum deviation in measured/output value for the same input signal or output value after another value has been created or output. Other parameters, e.g. the Temperature parameter, remain unchanged. The repeat accuracy refers to the rated range of the module and applies in a steady temperature state.

Measured value variance

The repeat accuracy provides information on the variance of individual measurements. The smaller the variance, the greater the repeat accuracy. The repeat accuracy is therefore one of the most important properties of measuring devices. In the technical data, the repeat accuracy is given as a percentage of the input or output range at 25°C in the steady state.

Example

The specified repeat accuracy for an analog input module as a percentage of the measuring range end value is ±0.02 %. This corresponds to a repeat accuracy of 2 mV for any value within the measuring range of ±10 V. If you change the measured value from 10 V to -10 V, for example, and then measure with 10 V again, the measured value deviation may not exceed ±2 mV.

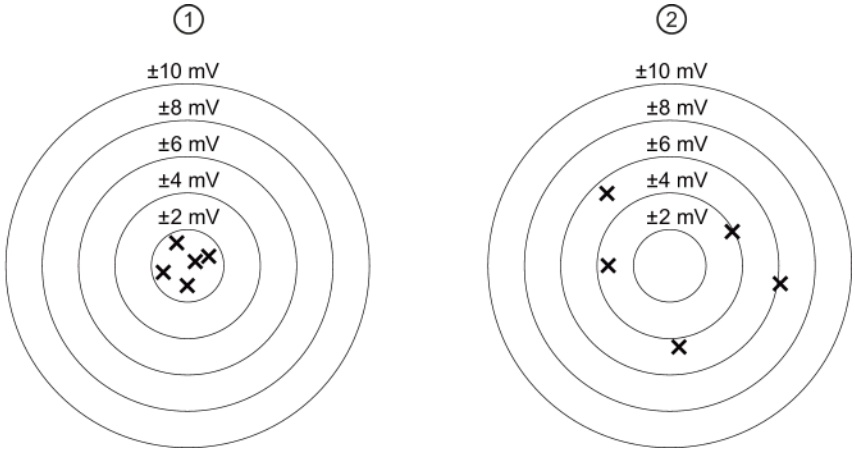

① Good repeat accuracy
② Poor repeat accuracy

Figure 2-12 Repeat accuracy of measured values output

2.7 Operational and basic error limits

Introduction

The following section shows you how to determine the operational or basic error limits and thus the measurement error or output error with the help of the technical specification. The worst-case configuration ensures that the module will not exceed the specified value within the valid operational range.

The precision of analog input or output modules is only part of the precision of the entire measurement section. A measurement section usually consists of transducer, transmitter, transmission line as well as input / output module.

Operational limit

The operational limit is the entire measurement or output error rate of the analog module in the rated range in temperature-settled state within the approved temperature range.

Basic error limit

The basic error limit is the entire measurement or output error rate in the rated range at an ambient temperature of 25 °C and temperature-settled state.

The basic error limit of the module is more or less a theoretical value, because a constant ambient temperature of 25 °C is rarely maintained in plants. For this reason, the operational limit always takes priority in terms of the practical selection and assessment of a module.

Note

The operational limit and basic error limit percentages listed in the technical specifications always relate to the **maximum possible** I/O value (the measuring range end value) in the rated range of the module.

The following image shows an example of operational and basic error limits in comparison with the ideal curve.

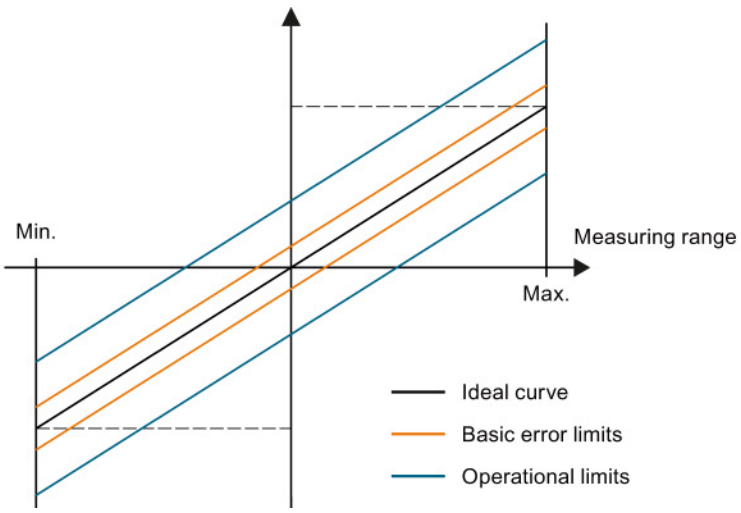

Figure 2-13 Operational and basic error limits

Example of output error calculation

An analog output module is used for voltage output in a range of 0 to 10 V. The module is operating at an ambient temperature of 30 °C, which means that the operational limit applies. Technical specifications of the module:

- Operational limit for the voltage output: ±0.1 %

The result is an output error of approximately ±10 mV (±0.1 % of 10 V) across the rated range of the module.

For example, the output value may range from 2.49 V to 2.51 V at an actual voltage of 2.50 V.

Note

Bipolar measuring ranges

The calculation also applies to bipolar measuring ranges.

An error of ±10 mV is also returned at an input range of ±10 V and a linearity error of ±0.1%.

2.8 Temperature error

Introduction

Analog modules are exposed to operational conditions that have an impact on their precision and on the measurement results they return. Temperature errors develop, for example, if the operating temperature of the module deviates from the ambient temperature of 25 °C. These temperature errors within the approved temperature range are taken into account in the operational limit.

Definition

The temperature error identifies the maximum drift of measuring/output values caused by fluctuation of the ambient temperature at the analog module. The maximum drift can occur at any ambient temperature. The temperature error is specified depending on the module used in percent per degree Celsius and/or percent per Kelvin, e.g. ±0.005%/K, and relates to the measuring range end value of the analog module.

Operational limits of compensation

The temperature error of the reference junction temperature compensation function only occurs with thermocouple measurements. The temperature error of compensation is added to the actual temperature error if "Internal reference junction" operating mode is selected. The temperature error of compensation is defined in the technical specifications as a percentage of the physical rated range of the analog module or as an absolute value in °C.

Note

Calculating the error in thermocouple measurements

Add the error of a thermocouple measurement to the error of the compensation measurement to determine the total error of a thermocouple measurement. These errors are defined in the respective manual.

Example

In this example, the total error of the temperature measurement is determined with the help of a type K thermocouple. The type K thermocouple takes measurements at a temperature range from -270 °C to +1372 °C.

The technical specifications state an operational limit of >-200 °C ±2.4 K for the type K thermocouple. The temperature error of compensation amounts to ±6 °C. The total temperature error is measured as follows at a temperature of >-200 °C:

Operational error (±2.4 K) + temperature error of compensation (±6 °C) = ±8.4 °C.

2.9 Interference frequency suppression

Definition

The interference frequency suppression function is applied to analog input modules to suppress the noise caused by the frequency of the AC voltage supply used.

The frequency of the AC voltage supply is likely to have a negative effect particularly on the values returned by measurements in the low voltage range and on thermocouples.

Parameter assignment

The line frequency at which the system is operated can be set by means of module parameters, for example, in STEP 7.

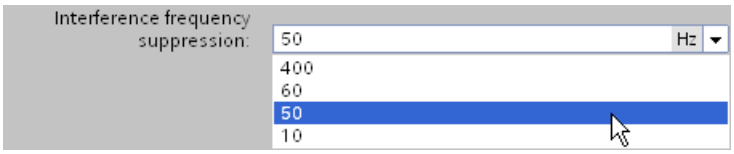

Figure 2-14 Interference frequency suppression

The conversion time changes depending on the set interference frequency suppression. The data sheets of the respective module define this dependency.

Please note the following when selecting interference frequency suppression:

The higher the frequency setting, the shorter the conversion time.

Note

Line frequency

Always select the interference frequency based on the line frequency used. Mismatch errors must be expected if a frequency that deviates from this line frequency is set, for example, to reduce the conversion time. In this case, the specified technical data and, in particular, precision are possibly outside the specified range.

Smoothing

By smoothing analog values, you achieve an additional improvement for the suppression of interference frequencies. For more information on the smoothing of analog values, refer to the section Smoothing (Page 54).

Line frequencies used

The line frequency is the frequency used in an electricity network for AC supply. It is measured in hertz and indicates the number of oscillations per second in a periodic signal. A line frequency of 50 Hz, for example, means 50 oscillations per second.

Europe, Australia and most countries in Asia and Africa use a line frequency of 50 Hz. North and Central America and most countries in South America have electricity networks with a line frequency of 60 Hz.

Frequencies of 400 Hz are most commonly used in on-board networks for airplanes, in the aerospace sector and for military applications. One reason for this is that engines with a line frequency of 400 Hz can usually be made smaller and lighter. As, however, it is not economic to transport such high frequencies over large distances, 400 Hz applications are usually subject to significant spatial limits.

A frequency of 16 2/3 Hz is used for the traction power supply in Germany, Austria and Switzerland. Some modules of the SIMATIC S7 product range also support the interference frequency suppression of this line frequency. The configurable interference frequency suppression in these cases is 16.6 Hz.

2.10 Common mode interference (UCM)

Definition

Common mode interference denotes interference voltages and currents in the lines connecting electrical devices and system components. They affect both the positive and negative line with the same phase angle and amplitude. The interference signal needs an additional current path to affect the utility signal. This current path is usually provided by common reference potential, e.g. earth or ground connection, of the utility signal and interference source.

Common mode interference in analog modules

Common mode interference occurs in analog input and output modules if their reference potential is different from the reference potential of the connected sensor or actuator.

Common mode interference is most likely to occur when analog modules are operated with grounded sensors. The size of the overall system means that voltage differences may develop between machine components with grounded sensors and the analog module reference. These voltage differences affect both the positive and negative signal path equally, which is why they are termed common mode interference.

In operation with non-grounded sensors, the occurrence of common mode interference is not as obvious as in grounded operation. Nevertheless, capacitive or inductive coupling can also create voltage differences in such cases which have the effect of common mode interference. Depending on the conditions in grounded and non-grounded operation, common mode voltage can occur as direct or as alternating voltage.

Example

The following figure of an analog module with two inputs (Ch_1/Ch_2) shows the coupled interference voltages at the inputs (U_{CM1}/U_{CM2}) as well as an interference voltage coupled between these inputs (U_{CM3}). Common mode rejection indicates the extent to which these interference signals can be suppressed. It is calculated using the following equation:
CMR [dB] = 20 · log (U_{CM} / U_a)

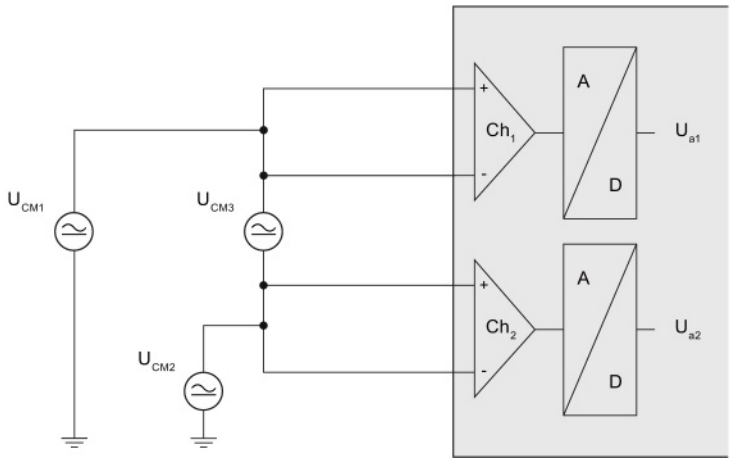

Figure 2-15 Common mode voltage coupled between two inputs

If there is common-mode voltage (U_{CM}), the equation is solved for U_a to calculate the measuring error (U_a):

$$U_a = U_{CM} * 10^{-\frac{CMR}{20}}$$

Note

The common mode rejection (CMR) is detailed in "Common mode interference" in the technical data of the device manual for your analog module.

2.11 Series mode interference (USM)

Definition

Series mode interference is interference voltages and currents affecting the connection lines in opposite directions. They have opposite polarity in the positive and negative directions. Series mode interference currents cause a voltage drop at the input impedance that has the effect of an interference voltage.

Causes

Series mode interference is caused by capacitive or inductive coupling. Inductive coupling generates a magnetic flow that is radiated between adjacent current-carrying conductors. This induces an interference voltage in the conductor. Galvanic coupling is given where different circuits influence each other due to common conductor sections, e.g. common ground connection.

The diagram below shows series mode interference as a voltage source (U_{SM}) connected in series to the actual measuring signal (U_M). The index "SM" stands for "Series Mode". Series Mode rejection indicates the extent to which these interference signals are suppressed. It is calculated using the following equation: SMR [dB] = 20 · log (U_{SM} / U_a)

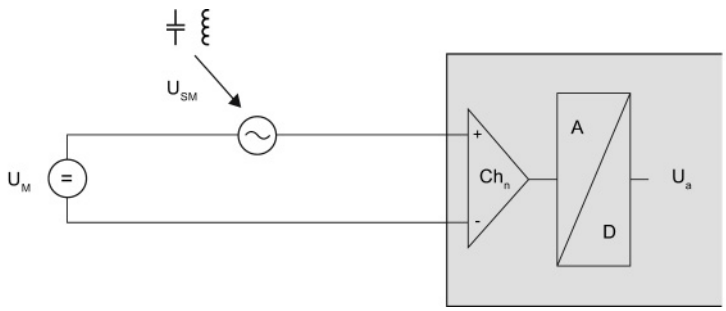

Figure 2-16 Capacitive or inductive interference coupling to the signal cable

The voltage (U_a) measurement error is calculated by solving the equation for U_a.

$$U_a = U_{SM} * 10^{-\frac{SMR}{20}}$$

The following equation shows the calculation of current (I_a) measuring errors using a current input.

$$I_a = \frac{U_{SM}}{R_{ein}} * 10^{-\frac{SMR}{20}}$$

Note

The series mode rejection (SMR) is detailed in "Series mode interference" in the technical data of the device manual for your analog module. The level of input resistance (R_{ein}) is also specified in the technical data.

2.12 Interference voltage suppression

Definition

Interference voltage suppression gives the factor by which the interference signal is suppressed in measurement value acquisition. Higher values reduce the effect of interference on the measurement signal. The technical data differentiates between "Common mode interference" and "Series mode interference". Interference voltage suppression is specified in decibels.

Example

The diagram below shows the measuring error for interference voltages in volts and interference voltage suppression of 0 to 120 dB.

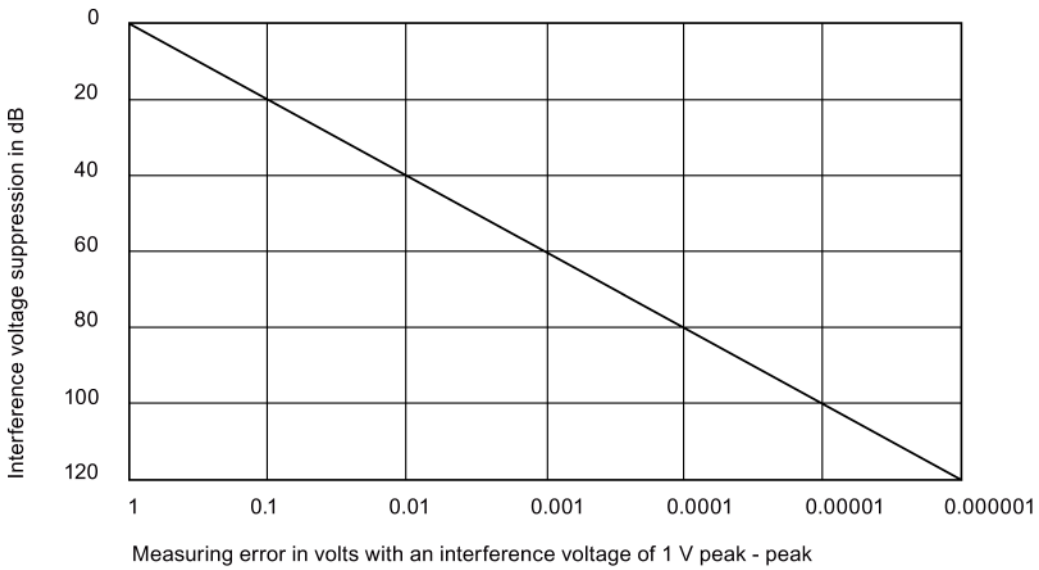

Figure 2-17 Interference voltage suppression

With an interference voltage suppression of 40 dB and an interference voltage of 1 V, the measured value is only distorted by 0.01 V.

Note

Interference-free design

Disturbance variables can be substantially reduced by means of appropriate grounding and shielding to increase interference immunity of the configuration. You will find a detailed description of how to avoid interference in the Configuring interference-free controllers (http://support.automation.siemens.com/WW/view/en/59193566) function manual.

Common mode rejection

The table below sets out the possible common mode rejection specifications in the technical data of an analog input module:

Interference voltage suppression for f = n x (f1 ± 1 %), (f1 = interference frequency), n = 1, 2, ...	
Common mode interference	> 100 dB
Common mode voltage, max.	10 V

If the interference frequency is configured as 50 Hz, the specified interference voltage suppression for common mode interference will only apply for the frequencies 50 Hz ±1 %, 100 Hz ±1 %, 150 Hz ±1 %, etc. Immunity is lower for all other frequencies. Interferences caused by the line voltage distort the measured utility signal in the ratio of 100,000 : 1.
An interference voltage amplitude of 1 V, for example, will affect the utility signal by 10 µV.

The Common Mode voltage (U_{CM}) defines the maximum permitted deviation of the potential between two channels and between one channel and analog ground. The interference voltage suppression defined in the technical specifications must not be exceeded. If the maximum common mode voltage specified, for example, 10 V, is exceeded, the analog signal is processed incorrectly. Depending on the module used, this error may be diagnosed and an error message output. The maximum common mode voltage may be exceeded as a result of varying input or overly long lines.

Series mode rejection

The table below sets out the possible series mode rejection specifications in the technical data of an analog module:

Interference voltage suppression for f = n x (f1 ± 1 %), (f1 = interference frequency), n = 1, 2, ...	
Series mode interference	> 60 dB

If the interference frequency is configured as 50 Hz, the specified interference voltage suppression for series mode interference will only apply for the frequencies 50 Hz ±1 %, 100 Hz ±1 %, 150 Hz ±1 %, etc. Immunity is lower for all other frequencies. Overall, interference caused by the line voltage distorts the utility signal measured by 1000 : 1.
For example, an interference voltage amplitude of 1 V will affect the utility signal by 1 mV.

2.13 Crosstalk between channels

Origin of the term

The term crosstalk/XT was originally used in the field of telecommunication to denote unwanted coupling of voice signals between two cable conductors of different subscribers.

Definition

Crosstalk between signal channels denotes the interactive influence between two independent channels as a result of leakage currents and capacitive or inductive coupling. Crosstalk between the channels changes the signal by the value of the amplitude of the crosstalk signal.

Causes

Technically, it is not feasible to totally isolate the module channels from environmental conditions. This means that it is always possible for leakage currents or disturbance coupling having an interactive effect.

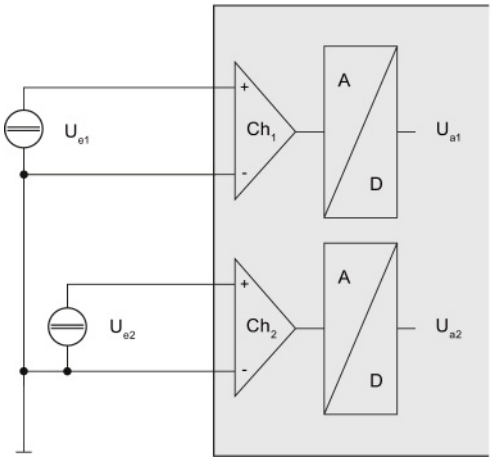

Figure 2-18 Crosstalk between two channels

The diagram shows the effects of crosstalk for the user with two channels (Ch_1/Ch_2) of an analog module. The crosstalk value is the factor by which the utility signal at a second channel U_{a2} is affected by the signal at the first channel U_{e1}. The measuring error (U_{a1}) can be calculated using the following equation:

$$U_{a1} = U_{e2} * 10^{\frac{XT\,[dB]}{20}}$$

Example of crosstalk attenuation

The "crosstalk between inputs" value in the technical specifications is defined as a value of >-100 dB at a measuring range of -10 V to +10 V on channel 1 of an eight-channel analog input module. The voltage at the input has an amplitude of 10 V. What is the error caused by crosstalk at channel 0 (measuring range ±10 V) and channel 2 (measuring range ±80 mV)?

100 dB are equal to a factor of 100,000. The measured values at channels 0 and 2 to 7 are therefore affected by 10 V / 100,000 = 100 µV. This distortion is added to or subtracted from the pending measuring signal and its effect depends on the selected measuring range.

- Channel 0: 100 µV / 10 V = 0.001 %
- Channel 2: 100 µV / 80 mV = 0.125 %

A voltage of 10 V set at channel 1 distorts the measured value at channel 0 by 0.001% and the measured value at channel 2 by 0.125%. The measuring error resulting from crosstalk in this example is therefore 0.001 % or 0.125 %. The basic error limit already includes the error generated as a result of crosstalk between the channels.

Calculating measuring error

You calculate the measurement error at channel 1 in this example based on a change in the measurement voltage of 10 V at channel 2. The crosstalk (XT [dB]) value is defined in the technical specifications in the manual of the analog module that you are using.

$$\text{Measured value error channel 1 [in V]} = \text{measured value change at channel 2 [in V]} * 10^{\frac{\text{XT [dB]}}{20}}$$

$$\text{Measured value error channel 1 [in V]} = 10\ \text{V} * 10^{\frac{-80\ \text{dB}}{20}} = 0.001\ \text{V}$$

A change in the measurement voltage of 10 V at channel 2 causes a measurement deviation of 0.001 V at channel 1.

2.14 Diagnostics

Diagnostics for analog modules

SIMATIC analog modules can diagnose errors. A number of different types of diagnostics are available for analog modules in STEP 7. Please note that the parameter assignment options vary depending on the analog module and product family used. More detailed information on the types of diagnostics can be found in the device manual for your analog input or analog output module.

Proceed as follows to select the diagnostics types of the analog module used:

1. Open STEP 7.
2. Select the analog module in the Device view.
3. Select the "Properties" tab.
4. Select the inputs or the required channel of the analog module in the Inspector window.

Table 2- 2 Overview of diagnosable errors

Type of diagnostics	Analog input module	Analog output module
Wire break	✓	✓
No supply voltage L+	✓	✓
Overflow	✓	✓
Underflow	✓	✓
Common mode error	✓	-
Short-circuit	✓	✓
Overload	-	✓
Reference junction	✓	-

Diagnostics of the analog module are carried out while the system is in operation, on the basis of the current output variables such as current or voltage. If the output current or output voltage is no longer sufficient, the module will not be able to run reliable diagnostics. The limits within which diagnostics are possible are specified in the technical data for each module.

The module reports the diagnosed state to the CPU using a diagnostics error interrupt. If several diagnostics are pending at the same time, the diagnostics with the highest priority is reported to the CPU first. Diagnostics are output on LED displays on the affected module, on the CPU display, on the Web server or on an HMI device.

The configurable diagnostics types depend on the respective selected measuring type or output type. The following tables shows the relationship between the diagnostics types, measuring types or output types of an analog input module or analog output module.

Diagnostics Analog input modules

Table 2- 3 **Diagnostics types of an analog input module to be configured depending on the measurement type "Voltage"**

	No supply voltage L+	Wire break (1 to 5 V)	Overflow	Underflow	Common mode error	Reference junction	Short-circuit
S7-1500	✓	✓	✓	✓	✓	-	-
ET 200MP	✓	✓	✓	✓	✓	-	-
ET 200SP	✓	-	✓	✓	-	-	✓
ET 200AL	-	✓	✓	✓	-	-	✓
ET 200eco PN	✓	✓	✓	✓	-	-	-
ET 200pro	-	✓	✓*	✓*	-	-	✓

* For ET 200pro, the parameters "Overflow" and "Underflow" are combined to the parameter "Overflow/Underflow"

Table 2- 4 **Diagnostics types of an analog input module to be configured depending on the measurement type "Current (4-wire transducer)"**

	No supply voltage L+	Wire break (4 to 20 mA)	Overflow	Underflow	Common mode error	Reference junction	Short-circuit
S7-1500	✓	✓	✓	✓	✓	-	-
ET 200MP	✓	✓	✓	✓	✓	-	-
ET 200SP	✓	✓	✓	✓	-	-	✓**
ET 200AL	-	✓	✓	✓	-	-	✓**
ET 200eco PN	✓	✓	✓	✓	-	-	-
ET 200pro	-	✓	✓*	✓*	-	-	✓

* For ET 200pro, the parameters "Overflow" and "Underflow" are combined to the parameter "Overflow/Underflow"

** Diagnostics for encoder supply only

Table 2- 5 **Diagnostics types of an analog input module to be configured depending on the measurement type "Current (2-wire transducer)"**

	No supply voltage L+	Wire break (4 to 20 mA)	Overflow	Underflow	Common mode error	Reference junction	Short-circuit
S7-1500	✓	✓	✓	✓	✓	-	-
ET 200MP	✓	✓	✓	✓	✓	-	-
ET 200SP	✓	✓	✓	-	-	-	✓**
ET 200AL	-	✓	✓	✓	-	-	✓**
ET 200eco PN	✓	✓	✓	✓	-	-	-
ET 200pro	-	✓	✓*	✓*	-	-	✓

* For ET 200pro, the parameters "Overflow" and "Underflow" are combined to the parameter "Overflow/Underflow"

** Diagnostics for encoder supply only

Table 2- 6 **Configurable diagnostics types of an analog input module depending on the measurement type "Resistor (4-wire connection)"**

	No supply voltage L+	Wire break	Overflow	Underflow	Common mode error	Reference junction	Short-circuit
S7-1500	✓	✓	✓	✓	-	-	-
ET 200MP	✓	✓	✓	✓	-	-	-
ET 200SP	✓	✓	✓	✓	-	-	-
ET 200eco PN	✓	✓	✓	-	-	-	-
ET 200pro	-	✓	✓*	✓*	-	-	-

* For ET 200pro, the parameters "Overflow" and "Underflow" are combined to the parameter "Overflow/Underflow"

Table 2- 7 **Configurable diagnostics types of an analog input module depending on the measurement type "Resistor (3-wire connection)"**

	No supply voltage L+	Wire break	Overflow	Underflow	Common mode error	Reference junction	Short-circuit
S7-1500	✓	✓	✓	✓	-	-	-
ET 200MP	✓	✓	✓	✓	-	-	-
ET 200SP	✓	✓	✓	✓	-	-	-
ET 200AL	-	✓	✓	-	-	-	-
ET 200eco PN	✓	✓	✓	-	-	-	-
ET 200pro	-	✓	✓*	✓*	-	-	-

* For ET 200pro, the parameters "Overflow" and "Underflow" are combined to the parameter "Overflow/Underflow"

Table 2- 8 **Configurable diagnostics types of an analog input module depending on the measurement type "Resistor (2-wire connection)"**

	No supply voltage L+	Wire break	Overflow	Underflow	Common mode error	Reference junction	Short-circuit
S7-1500	✓	-	-	✓	-	-	-
ET 200MP	✓	-	-	✓	-	-	-
ET 200SP	✓	✓	✓	✓	-	-	-
ET 200AL	-	✓	✓	-	-	-	-
ET 200eco PN	✓	✓	✓	-	-	-	-
ET 200pro	-	✓	✓*	✓*	-	-	-

* For ET 200pro, the parameters "Overflow" and "Underflow" are combined to the parameter "Overflow/Underflow"

Table 2- 9 **Configurable diagnostics types of an analog input module depending on the measurement type "Thermal resistor (4-wire connection)"**

	No supply voltage L+	Wire break	Overflow	Underflow	Common mode error	Reference junction	Short-circuit
S7-1500	✓	✓	✓	✓	-	-	-
ET 200MP	✓	✓	✓	✓	-	-	-
ET 200SP	✓	✓	✓	✓	-	-	-
ET 200eco PN	✓	✓	✓	✓	-	-	-
ET 200pro	-	✓	✓*	✓*	-	-	-

* For ET 200pro, the parameters "Overflow" and "Underflow" are combined to the parameter "Overflow/Underflow"

Table 2- 10 **Configurable diagnostics types of an analog input module depending on the measurement type "Thermal resistor (3-wire connection)"**

	No supply voltage L+	Wire break	Overflow	Underflow	Common mode error	Reference junction	Short-circuit
S7-1500	✓	✓	✓	✓	-	-	-
ET 200MP	✓	✓	✓	✓	-	-	-
ET 200SP	✓	✓	✓	✓	-	-	-
ET 200AL	-	✓	✓	✓	-	-	-
ET 200eco PN	✓	✓	✓	✓	-	-	-
ET 200pro	-	✓	✓*	✓*	-	-	-

* For ET 200pro, the parameters "Overflow" and "Underflow" are combined to the parameter "Overflow/Underflow"

Table 2- 11 **Configurable diagnostics types of an analog input module depending on the measurement type "Thermal resistor (2-wire connection)"**

	No supply voltage L+	Wire break	Overflow	Underflow	Common mode error	Reference junction	Short-circuit
S7-1500	-	-	-	✓	-	-	-
ET 200MP	-	-	-	✓	-	-	-
ET 200SP	✓	✓	✓	✓	-	-	-
ET 200AL	-	✓	✓	✓	-	-	-
ET 200eco PN	✓	✓	✓	✓	-	-	-
ET 200pro	-	✓	✓*	✓*	-	-	-

* For ET 200pro, the parameters "Overflow" and "Underflow" are combined to the parameter "Overflow/Underflow"

Table 2- 12 **Diagnostics types of an analog input module to be configured depending on the measurement type "Thermocouple"**

	No supply voltage L+	Wire break	Overflow	Underflow	Common mode error	Reference junction	Short-circuit
S7-1500	✓	✓	✓	✓	✓	✓	-
ET 200MP	✓	✓	✓	✓	✓	✓	-
ET 200SP	✓	✓	✓	✓	-	✓	-
ET 200eco PN	✓	-	✓	✓	-	✓	-
ET 200pro	-	-	✓*	✓*	-	✓	-

* For ET 200pro, the parameters "Overflow" and "Underflow" are combined to the parameter "Overflow/Underflow"

Diagnostics for analog output modules

Table 2- 13 **Diagnostics types of an analog output module to be configured depending on the measurement type "Voltage"**

	No supply voltage L+	Wire break	Overflow	Underflow	Short-circuit	Overload
S7-1500	✓	-	✓	✓	✓	-
ET 200MP	✓	-	✓	✓	✓	-
ET 200SP	✓	-	✓	✓	✓	-
ET 200eco PN	✓	-	-	-	✓	✓
ET 200pro	-	-	-	-	✓	-

Table 2- 14 **Diagnostics types of an analog output module to be configured depending on the measurement type "Current"**

	No supply voltage L+	Wire break	Overflow	Underflow	Short-circuit	Overload
S7-1500	✓	✓	✓	✓	-	-
ET 200MP	✓	✓	✓	✓	-	-
ET 200SP	✓	✓	✓	✓	-	-
ET 200eco PN	✓	✓	-	-	-	✓
ET 200pro	-	✓	-	-	-	-

Note

Measuring ranges

Note that the diagnostics types that can be parameterized depend on the selected measurement/output type as well as on the respective measuring range.

Note

Minimum output values

Certain errors such as wire break and short circuit cannot be diagnosed below a given current or voltage value. Diagnostics are only possible again once the output returns to above this minimum value.

No supply voltage L+

You can diagnose a missing or low supply voltage L+ at the analog module by activating the "No supply voltage L+" checkbox. If the supply voltage is missing or too low, the status and error display on the analog module will provide the relevant information. The entry in the diagnostics buffer also makes this information available to the CPU.

If there is no supply voltage, no other types of diagnostics available are possible either.

Wire break

The term wire break denotes a failure state that is triggered by the interruption of a usually closed electrical circuit.

Wire break in analog input modules

The "Wire break" diagnostics function facilitates the detection of errors during system operation. In STEP 7 you define the module properties by setting various parameters. Depending on the module used, you may, for example, be able to set a current limit parameter at which a wire break is to be reported.

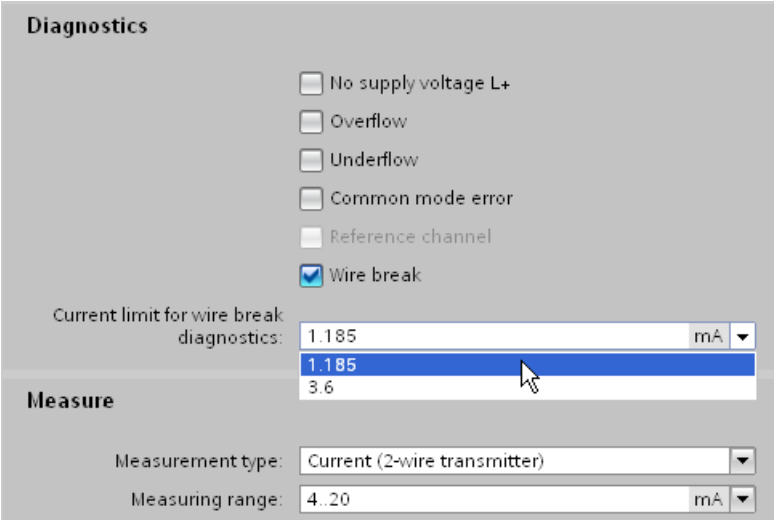

Figure 2-19 Configuring the wire break current limit for an analog input module in STEP 7

Usually, the live zero technique is deployed to detect wire breaks. The start of the measuring range for the standard live zero signal of 4 to 20 mA is assigned the 4 mA signal value. A wire break between the input and sensor can therefore be detected based on the missing current flow. Instead of a current signal, you may also use a voltage signal from 1 to 5 V to detect a wire break. The "Wire break" diagnostics function can therefore only be configured for a range of 4 to 20 mA or 1 to 5 V.

For "Resistor", "Thermal resistor" and "Thermocouple" measurements, a current is impressed into the line. If a wire break occurs, the flow of current is interrupted and the analog module therefore detects the wire break.

Wire break in analog output modules

The analog signal output is used for wire break detection. Reliable wire break diagnostics is not possible if the voltage is too low. In this case, the diagnostics function is deactivated without triggering a change of the diagnostics status.

The current limit up to which the module will diagnose wire break can be found in the technical data for the module.

Overflow/underflow

The resolution of the measuring range of an analog input module distinguishes between the rated range, the overrange or underrange, and the overflow or underflow. The following table assign the number of increments into which the measured signal is divided to the various voltage measuring ranges.

Table 2- 15 Voltage measuring range ±10 V of an analog input module

Value (increments)	Voltage measuring range	Range
Decimal	±10 V	
32767	> 11.759 V	Overflow
32511	11.759 V	Overrange
27649		
27648	10.0 V	Rated range
0	0 V	
-27648	-10 V	
-27649		Underrange
-32512	-11.759 V	
-32768	< -11.759 V	Underflow

As of a decimal value of 32512, the value acquired is beyond the overrange and is no longer valid. If this is the case, the error status "Overflow" is diagnosed. The overrange is a tolerance range before overflow is reached.

As of a decimal value of -32513, the value acquired is below the configured measuring range and is no longer valid. If this is the case, the error status "Underflow" is diagnosed. The underrange is the equivalent of the overrange, but for negative values.

An "Overflow" or "Underflow" diagnostics may be caused, for example, by a wire break, an incorrect measuring range or incorrect wiring.

Note

Accuracy

The accuracy specified in the technical data of the relevant module is only guaranteed within the rated range.

Common mode error

Activating the "Common mode" checkbox diagnoses a violation of the maximum potential difference U_{CM}. A violation of the permitted potential difference U_{CM} has occurred, for example, between the reference point of the measuring inputs and the analog ground M_{ANA} .

Possible causes:

- Wiring error
- Environments with EMC disturbance
- Incorrectly grounded transducers
- Long line lengths
- Sensor not connected
- 2-wire transducer connected to M_{ANA}

Note

With 4-wire transducers, a current meter connected in series will result in too great a drop in voltage.

Potential differences U_{CM} beyond the valid limits may lead to measurement errors and malfunctions. If you want to ensure that the maximum value is not exceeded, interconnect the measuring inputs and analog ground M_{ANA} with an equipotential bonding cable. More detailed information can be found in Wiring transducers.

Short-circuit

Activating the "Short circuit" checkbox activates short-circuit diagnostics for an analog channel. The diagnostics function is triggered by channel overload.

Possible causes:

- Wiring error (e.g. short circuit between conductors at the connections or in the cable)
- Use of faulty or incorrect actuators (e.g. internal short circuit or low input resistance as a result of actuator failure)

The analog signal output is used for short circuit detection. If the voltage is too low, reliable short-circuit diagnostics are not possible. In this case, the diagnostics function is deactivated without triggering a change of the diagnostics status. The voltage limit up to which the module will diagnose a short circuit can be found in the technical data for the module.

SIMATIC modules have a special protective circuit to prevent short circuit. The short circuit current is limited internally in the module. The level of short circuit current is specified in the technical data of your analog module.

Note

Overload

Please note that overload exposes the modules are exposed to a greater thermal load. This can affect the output channels. You should therefore avoid continuously running analog output modules in overload.

Reference junction

This type of diagnostics can only be selected for analog input modules for "Thermocouple" measuring. Selecting the "Reference junction" check box diagnoses an error on the reference channel for compensating the reference junction temperature.

The temperature at the reference junction of a thermocouple is measured at the reference channel of the module using an external thermal resistor (RTD). If an error occurs, for example as a result of a wire break, the temperature measured at the reference junction of the thermocouple will no longer be compensated. The reference temperature may then be outside the valid range.

Additional information on connecting thermocouples and thermal resistors and on how they operate can be found in Thermocouples and Wiring transducers.

Overload

Activating the "Overload" checkbox activates the diagnostics of the thermal monitoring of the output level. The "Overload" diagnostics is triggered when the maximum temperature is exceeded at the output and is detected channel by channel.

The maximum temperature may be exceeded for the following reasons:

- Ambient temperature is too high
- Output is being operated outside the specification

Note

Overload

Please note that overload exposes the modules to a high thermal load. This can affect the output channels. You should therefore avoid continuously running analog output modules in overload.

2.15 Value status

Value status

In case of a faulty analog value, the analog module outputs the error values 0x7FFF (error value for overflow and all other error states) or 0x8000 (error value for underflow) for the affected channel. The user program is now able to detect and evaluate a channel error. The user also has the option to evaluate the system diagnostics event-driven by means of diagnostics alarms.

In addition to the error values 0x7FFF or 0x8000 and the configured diagnostic types, analog input and output modules provide diagnostics information by means of the Process image input (PII). It is referred to as Value status and transferred synchronously with the user data. The value status (Quality Information = QI) provides a statement regarding the validity of the input signal. A distinction is made between the quality level "Good" (signal valid = 1) and "Bad" (signal invalid = 0).

Note

For analog input modules, the use of the value status is an alternative to the evaluation of the channels by the error values 0x7FFF or 0x8000. Compared to the error values, the binary evaluation of the value status (0 or 1) in the user program is simpler and more clearly arranged.

For analog output modules, the value status informs you as to whether the written value can be output by the respective channel. Using the value status you can respond to this information without having to evaluate the diagnostics of the module in the first place.

Example

Enabling the value status of an analog input module

To enable the value status of an analog input module, follow these steps:

- Select the required analog module in STEP 7.
- Select "AI configuration" in the "Properties" tab of the analog module.
- Click the "Value status" button.

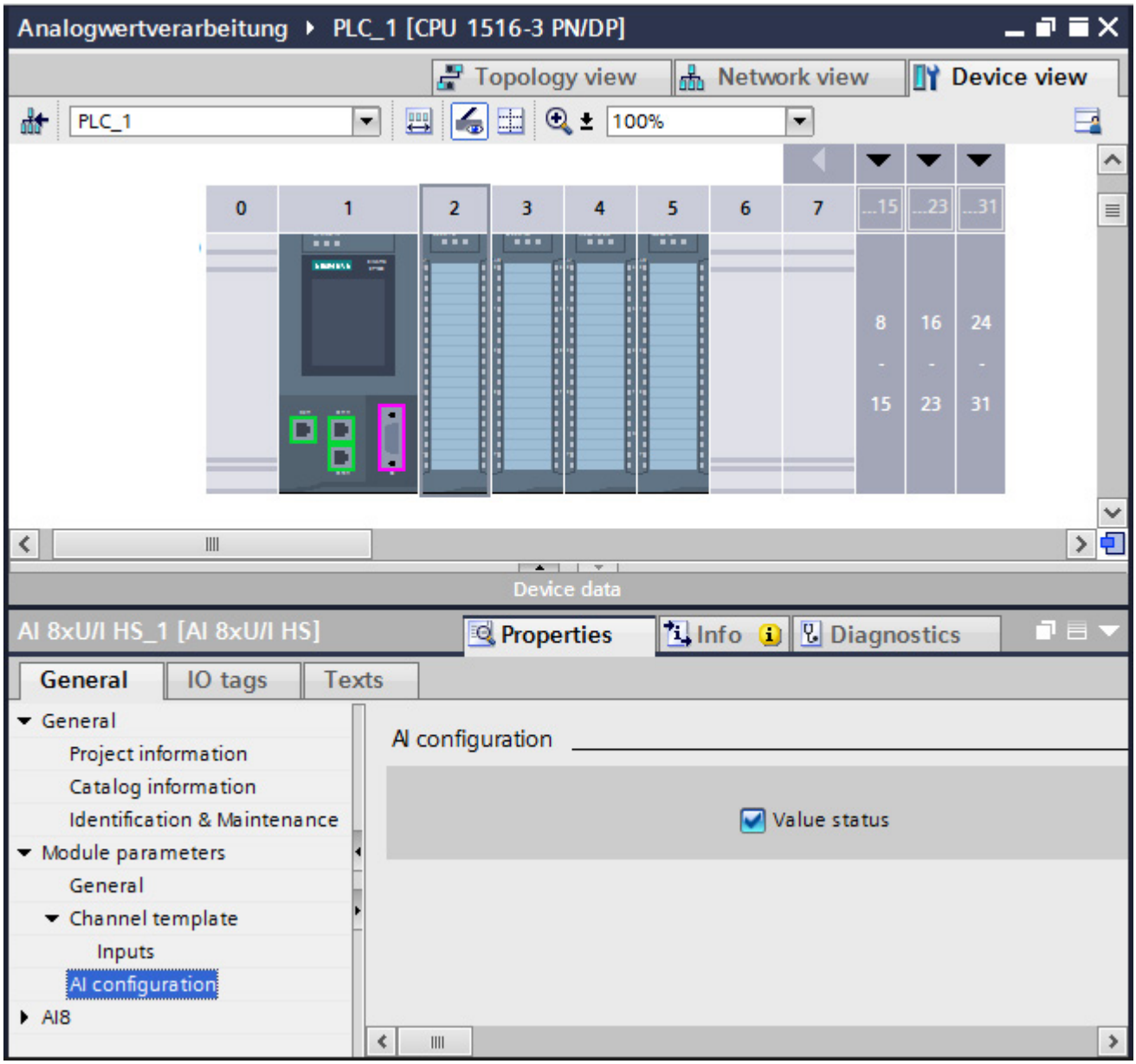

Figure 2-20 Enabling the value status in STEP 7

An additional byte is occupied in the input address space of the respective module when you enable the value status. Each bit in this byte is assigned to a channel and provides information on, for example, whether the output value specified by the user program is actually queued at the module terminal (0= value is invalid; 1= value is valid).

Error occurrence

If a wire break occurs at an analog input module, for example, the current signal state is entered in the process image and the value status of the signal is set to "invalid". To trigger an indicator light in case of an error, for example, evaluate the value status in the user program.

Diagnostics alarms and value status

If you configure analog modules in a third-party product with the help of a GSD file and the diagnostics alarms are not evaluated event-driven, it is best to use the value status.

Note

The Value status represents a group diagnostics which only gives the user a Good or Bad information. The Value status is not suitable for a more specific identification of the cause of the error (e.g., wire break, short circuit in the encoder cable or load voltage failure).

2.16 Conversion time of an analog module

Basic conversion time and conversion time of an analog input channel

The basic conversion time is the minimum time required by one single channel to convert analog values. The actual conversion time comprises both the basic conversion time and, depending on the analog input module used:

- Processing time for measuring resistance
- Processing time for wire break monitoring
- Processing time for overflow/underflow monitoring
- Processing time for checking common mode errors

Example

This example shows channel 6 of an analog input module for resistance measurement in the range of 6000 Ω, a configured integration time of 20 ms, and activated wire break monitoring.

The conversion time of the channel is derived from the total of the following measurement variables:

Measurement variable	Time in ms
Basic conversion time	27
Processing time for RTD/resistance (6000 Ω)	4
Processing time for wire break monitoring in the RTD/resistance and thermocouple areas	9
Conversion time of the channel	**40**

Conversion time of the analog output channels

The conversion time of an output channel starts with the transfer of the digital value from the internal memory of the module and ends with the digital-to-analog conversion.

The conversion time does not include the settling time for the analog signal at the module terminal. Detailed information on the settling time can be found in Settling and response times of analog output modules (Page 52).

Note

Relationship between diagnostics and conversion time

While some diagnostics run parallel to the conversion and do not extend the conversion time, other diagnostics types can lead to an extension of the conversion time, as demonstrated in the example above.

Conversion time for high-speed analog modules

High-Speed analog modules (HS modules) are designed for faster processing of signals. HS modules offer fewer diagnostics and measurement types than standard modules (ST modules). You can find more information on HS modules in the section High-Speed analog modules (Page 113).

2.17 Cycle time of an analog module

Definition

The cycle time of an analog module represents the time that the module needs to process all channels used. The cycle time depends on the form of measured value acquisition used, e.g. multiplex or parallel measured value acquisition.

Sequential measured value processing

This procedure processes the analog channels in the module one after another (sequentially). For analog inputs, the values are connected to a converter, for example using a multiplexer, and sequentially converted.

The cycle time of the analog module is derived from the total conversion time of all activated analog channels of the module. STEP 7 provides the option of deactivating unused analog channels. to reduce the cycle time.

The figure below gives an overview of the factors that determine the cycle time of an n-channel analog module.

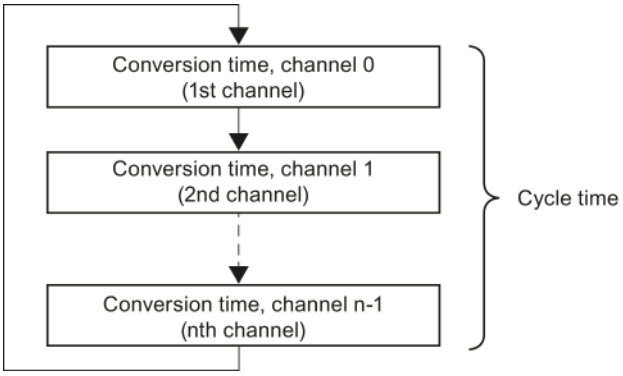

Figure 2-21 Cycle time of an analog module with multiplex conversion

Parallel measured value acquisition

This procedure processes the analog channels of a module at the same time (in parallel) rather than one after another. In parallel measured value processing, the cycle time of the module is usually constant and does not depend on the number of channels used. The goal of parallel measured value acquisition as it is applied by high-speed analog modules, for example, is a shorter cycle time. You can find more information on HS modules in the section High-Speed analog modules (Page 113).

2.18 Settling and response times of analog output modules

Settling and response times provide information on the delay of the output of a specified analog output variable and its availability to the process.

Response time

The response time for a new output value is defined as the time between the input of a digital output value to the internal memory of the module and the value to be output at the analog output being reached (with a residual error of 1 %).

The response time (t_A) is the sum of application time (t_X), conversion time (t_W) and settling time (t_E):

$t_A = t_X + t_W + t_E$

Settling and response times of analog output modules

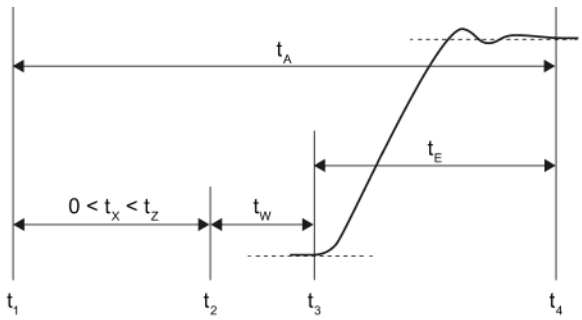

t_A	Response time
t_X	Application time
t_Z	Module cycle time
t_W	Conversion time
t_E	Settling time
t_1	New digital output value is available in the internal memory of the module
t_2	Module activates the digital output value and starts conversion
t_3	Module ends conversion at the terminal of the analog output channel and outputs the analog signal
t_4	Signal has settled and the specified analog output value has been reached (residual error 1 %)

Figure 2-22 Settling and response time of an output channel

Application time

The CPU/IM (interface module) writes new output values to the internal memory of the analog output module. The time required for this is not determined by the CPU/IM. These output values are converted asynchronously to their entry in buffer memory. The worst-case application time (t_X) may be equal to the cycle time (t_Z). This situation develops if the CPU writes a new value to the internal memory of the module immediately after the transfer of the value for conversion. This new value will not be processed until the next conversion.

The figure below shows acyclic access of the analog output module to output values from the internal memory in non-isochronous mode. You can find more information on isochronous mode in the paragraph on isochronous mode of the section High-Speed analog modules (Page 113).

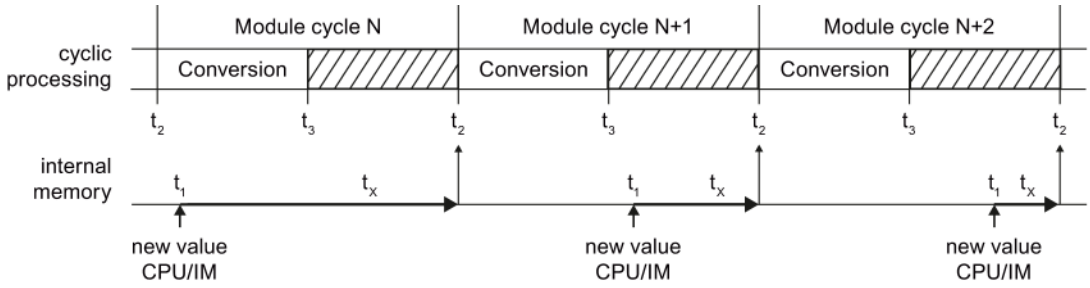

t_X Application time

t_1 New digital output value is available in the internal memory of the module

t_2 Module activates the digital output value and starts conversion

t_3 Module ends conversion at the terminal of the analog output channel and outputs the analog signal

Figure 2-23 Application of the output values

Conversion time

The conversion time of an output channel starts with the transfer of the digital value from the internal memory of the module (t_2) and ends with the digital-to-analog conversion (t_3).

Settling time

The settling time starts when the analog signal is output to the module (t_3) terminals and ends when the output value (t_4) is reached. The output value is reached as soon as the output signal has settled at its final value, taking into account a residual error of 1%.

The settling time depends on the type of output for the module, and on the connected load. The load for the analog output consists of connecting line and connected actuator. When the output is "Current", the settling time increases with high ohmic resistance. Inductive loads cause subsequent fluctuation in the output value. When the output is "Voltage", the capacitive load causes subsequent fluctuation.

2.19 Smoothing

Using the smoothing functions

Most analog input modules allow you to configure smoothing for the measuring signal in STEP 7. Smoothing analog values reduces the effect of interference signals. Smoothing is useful with slow changes in measured values, for example in temperature measurements.

Smoothing principle

The measured values are smoothed by means of filtering. The module forms mean values from a specified number of converted (digitalized) analog values. Smoothing should not be confused with the integration of measured values over a defined period of time. It is therefore not possible to smooth measured signals to filter out a specific interference frequency. However, this smoothing returns more "stable" data values because it suppresses peaks which overlay the measured signal.

4 (none, weak, medium, strong) or more levels of smoothing can be configured by the user depending on the module used. The level determines the number of analog values from which the mean value is generated. The greater the smoothing factor, the better the filtering.

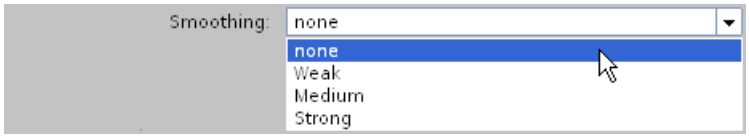

Figure 2-24 Selecting the smoothing level in STEP 7

Smoothing method

A smoothing algorithm is applied to a configurable number of measured values (e.g. 4, 8, 32) in line with the moving average. Each new measured value is factored in, and the oldest measured value then ignored. This mechanism suppresses interference peaks which overlay the measured signal. Utility signal jumps only become evident in the data after some time (see examples below).

The modules of the various product ranges use different smoothing algorithms. Smoothing is either linear or exponential. The differences are apparent particularly with strong smoothing and lead to a faster or slower rate of rise depending on the product used.

For information on whether or not a specific module supports customization of the smoothing function, please refer to the manual of the analog input module.

Example 1: Linear smoothing

The diagram below shows the number of module cycles (k) it takes for each smoothing level setting for the smoothed analog value to reach approximately 100 % after a step response. This specification is valid for all signal changes at the analog input.

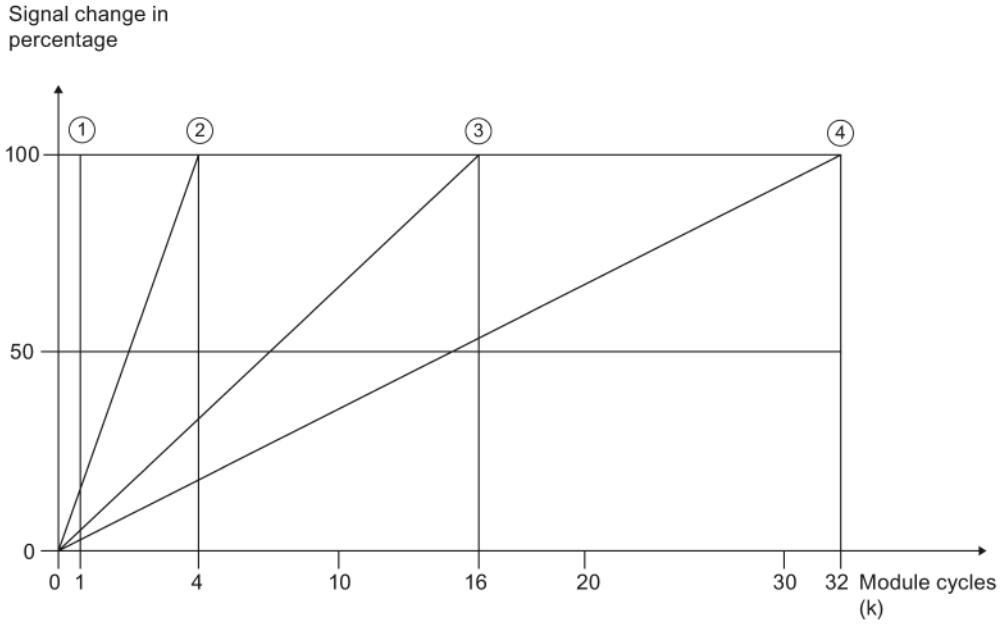

① No smoothing (k = 1)
② Weak smoothing (k = 4)
③ Medium smoothing (k = 16)
④ Strong smoothing (k = 32)

Figure 2-25 Linear smoothing with four smoothing levels

Example 2: Exponential smoothing

The diagram below shows the step response of the smoothing factor for different numbers of module cycles.

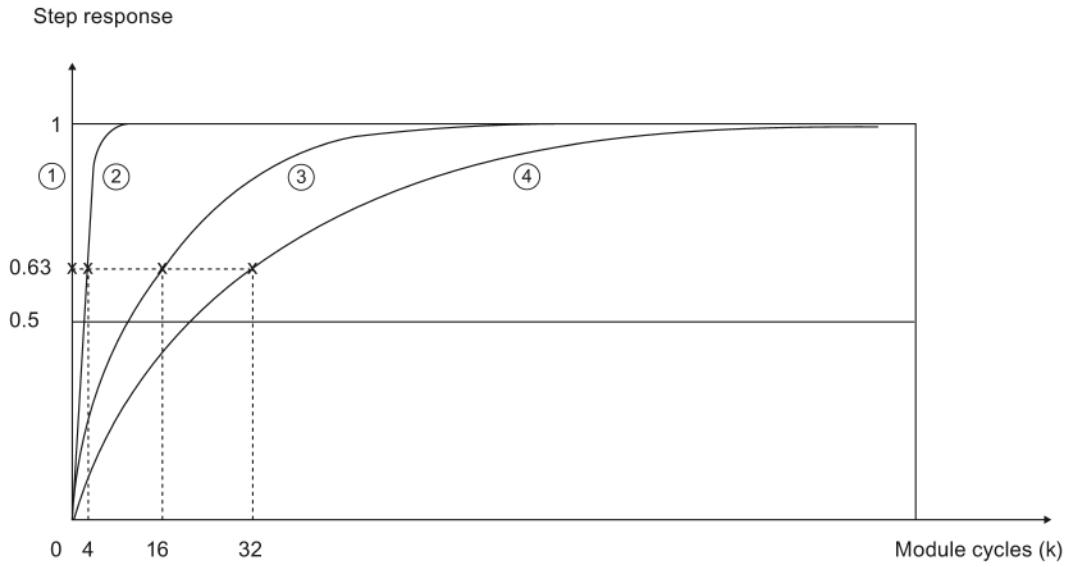

① No smoothing (k = 1)
② Weak smoothing (k = 4)
③ Medium smoothing (k = 16)
④ Strong smoothing (k = 32)

Figure 2-26 Exponential smoothing with four smoothing levels

2.20 Burden with 2-wire transducers

2-wire transducers

2-wire transducers are current transducers which convert the process variable into a current signal of between 4 and 20 mA. Two connection lines supply the transducer with an output current of at least 4 mA. Additional information on connecting 2-wire transducers to analog input modules can be found in the section Wiring current transducers (Page 72).

Burden

The burden indicates how great the external resistance in a current loop may be. If the external resistance is greater than the specified burden, the 2-wire transducer supply voltage is too low. The burden consists of the resistance of the transducer and all other resistances connected to the current loop.

The maximum admissible burden of the transducer, e.g. 820 Ω, is specified in the technical data of the analog module.

Example 1: Connecting a transducer to the electrical circuit

In accordance with the technical data of the 2-wire transducer used, it requires a supply voltage (U_{min}) of at least 8.5 V. Using Ohm's Law, you can calculate the resistance of the transducer used (R_{2DMU}) for a current of 20 mA.

$$R_{2DMU} = \frac{U_{min}}{I} = \frac{8.5\ V}{0.020\ A} = 425\ \Omega$$

With a supply voltage of at least 8.5 V, the transducer has a resistance of 425 Ω. The resistance is less than 820 Ω. You can therefore connect the transducer to the analog input module (AI) without exceeding the maximum burden.

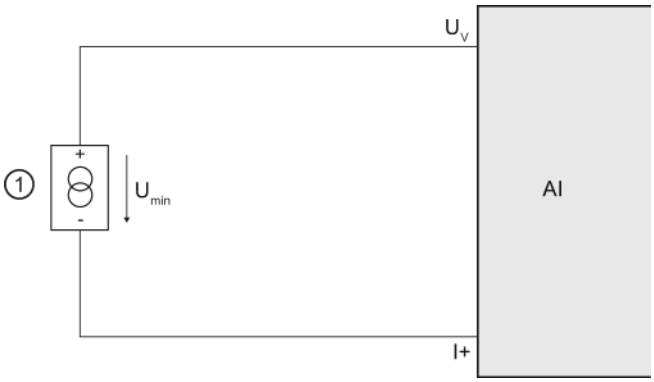

① 2-wire transducers

U_V Terminal for feed voltage at the channel

I+ Terminal for current input

U_{min} Voltage drop at 2-wire transducer

Figure 2-27 Connecting a transducer to the electrical circuit

Example 2: Connecting a transducer and other devices

If multiple measuring devices are connected in series, the sum of all connected resistances may not exceed the value of the maximum burden.

If you have connected a 2-wire transducer to a supply voltage of 8.5 V, you will need to allow for the resistance of the measuring device connected ②.

Maximum transducer burden:	820 Ω
Transducer resistance upon a voltage drop of 8.5 V:	425 Ω
Maximum resistance of additional devices connected:	395 Ω

The resistance of the measuring instrument may therefore not exceed 395 Ω.

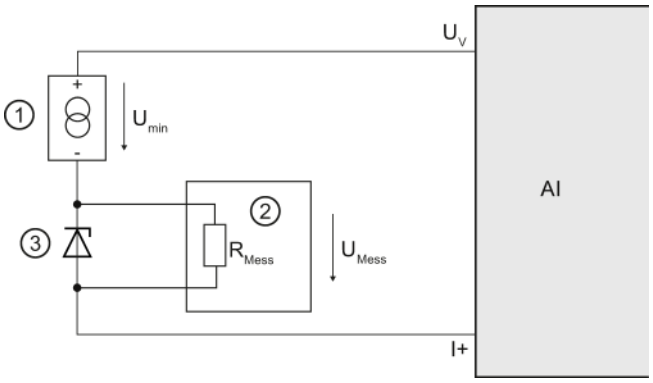

① 2-wire transducers
② Digital multimeter
③ Zener diode
U_V Terminal for feed voltage at the channel
I+ Terminal for current input
U_{min} Voltage drop at 2-wire transducer
R_{Mess} Resistance at measuring instrument
U_{Mess} Voltage drop at the measuring instrument

Figure 2-28 Connecting a transducer and other devices to the circuit

Calculating admissible voltage drop

The maximum additional resistance in the current loop may not exceed 395 Ω at a maximum current of 20 mA. You can calculate the voltage drop at the connected measuring instrument (U_{Mess}) as follows using Ohm's Law:

$U_{Mess} = R_{Mess} * I = 395\ \Omega * 0.020\ A = 7.9\ V$

The voltage drop at the measuring instrument should therefore not exceed 7.9 V.

Representation of analog values 3

3.1 Overview

Conversion of analog values

The CPU only processes analog values in digitalized format.

Analog input modules convert the analog signal into a digital value for further processing by the CPU.

Analog output modules convert the digital output value from the CPU into an analog signal.

Analog value representation at 16-bit resolution

The digitized analog value is the same for all I/O values at the same rated range. The analog values are represented as fixed point numbers in twos complement. This leads to the following conditions:

Table 3- 1 Representation of analog values

Resolution	Analog value															
Bit number	15	14	13	12	11	10	9	8	7	6	5	4	3	2	1	0
Significance of the bits	S	2^{14}	2^{13}	2^{12}	2^{11}	2^{10}	2^{9}	2^{8}	2^{7}	2^{6}	2^{5}	2^{4}	2^{3}	2^{2}	2^{1}	2^{0}

Sign

The sign (S) of the analog value is always set in bit 15:

- "0" → +
- "1" → -

Resolution less than 16 bits

The analog value is left-aligned in the memory of analog modules with a resolution of less than 16 bits. The unused least significant digits are padded with "0" values.

This reduces the number of measured values that can be represented. Modules occupy a range of values of between+32767 and -32768 regardless of the resolution. The scaling between two successive values depends on the resolution of the module.

Example

The following example shows how the least significant digits are padded with "0" values:

- The module with 16-bit resolution is capable of incrementing the values in steps of one unit ($2^0 = 1$).
- The module with 13-bit resolution is capable of incrementing the values in steps of 8 units ($2^3 = 8$).

Table 3- 2 Example: Bit pattern of a 16-bit and 13-bit analog value

Resolution	Analog value															
Bit	15	14	13	12	11	10	9	8	7	6	5	4	3	2	1	0
16-bit	S	2^{14}	2^{13}	2^{12}	2^{11}	2^{10}	2^9	2^8	2^7	2^6	2^5	2^4	2^3	2^2	2^1	2^0
13-bit	S	2^{14}	2^{13}	2^{12}	2^{11}	2^{10}	2^9	2^8	2^7	2^6	2^5	2^4	2^3	0	0	0

S = sign

Note

For information on the resolution supported by each analog module, please refer to the technical data for the relevant module.

3.2 Representation of input ranges

The tables below set out the digitalized representation of the input ranges by bipolar and unipolar input ranges. The resolution is 16 bits.

Please see the device manuals for each analog input module for assignment of the values to the specific measured values in each measuring range.

Table 3- 3 Bipolar input ranges

Dec. value	Measured value in %	Data word																Range
		2^{15}	2^{14}	2^{13}	2^{12}	2^{11}	2^{10}	2^{9}	2^{8}	2^{7}	2^{6}	2^{5}	2^{4}	2^{3}	2^{2}	2^{1}	2^{0}	
32767	>117.589	0	1	1	1	1	1	1	1	1	1	1	1	1	1	1	1	Overflow
32511	117.589	0	1	1	1	1	1	1	0	1	1	1	1	1	1	1	1	Over range
27649	100.004	0	1	1	0	1	1	0	0	0	0	0	0	0	0	0	1	
27648	100.000	0	1	1	0	1	1	0	0	0	0	0	0	0	0	0	0	Rated range
1	0.003617	0	0	0	0	0	0	0	0	0	0	0	0	0	0	0	1	
0	0.000	0	0	0	0	0	0	0	0	0	0	0	0	0	0	0	0	
-1	-0.003617	1	1	1	1	1	1	1	1	1	1	1	1	1	1	1	1	
-27648	-100.000	1	0	0	1	0	1	0	0	0	0	0	0	0	0	0	0	
-27649	-100.004	1	0	0	1	0	0	1	1	1	1	1	1	1	1	1	1	Under range
-32512	-117.593	1	0	0	0	0	0	0	1	0	0	0	0	0	0	0	0	
-32768	<-117.593	1	0	0	0	0	0	0	0	0	0	0	0	0	0	0	0	Underflow

Table 3- 4 Unipolar input ranges

Dec. value	Measured value in %	Data word																Range
		2^{15}	2^{14}	2^{13}	2^{12}	2^{11}	2^{10}	2^{9}	2^{8}	2^{7}	2^{6}	2^{5}	2^{4}	2^{3}	2^{2}	2^{1}	2^{0}	
32767	>117.589	0	1	1	1	1	1	1	1	1	1	1	1	1	1	1	1	Overflow
32511	117.589	0	1	1	1	1	1	1	0	1	1	1	1	1	1	1	1	Over range
27649	100.004	0	1	1	0	1	1	0	0	0	0	0	0	0	0	0	1	
27648	100.000	0	1	1	0	1	1	0	0	0	0	0	0	0	0	0	0	Rated range
1	0.003617	0	0	0	0	0	0	0	0	0	0	0	0	0	0	0	1	
0	0.000	0	0	0	0	0	0	0	0	0	0	0	0	0	0	0	0	
-1	-0.003617	1	1	1	1	1	1	1	1	1	1	1	1	1	1	1	1	Under range
-4864	-17.593	1	1	1	0	1	1	0	1	0	0	0	0	0	0	0	0	
-32768	<-17.593	1	0	0	0	0	0	0	0	0	0	0	0	0	0	0	0	Underflow

3.3 Representation of output ranges

The tables below set out the digitalized representation of the output ranges by bipolar and unipolar range. The resolution is 16 bits.

Please see the device manuals for each analog output module for assignment of the values to the specific output values in each measuring range.

Table 3- 5 Bipolar output ranges

Dec. value	Output value in %	Data word																Range
		2^{15}	2^{14}	2^{13}	2^{12}	2^{11}	2^{10}	2^{9}	2^{8}	2^{7}	2^{6}	2^{5}	2^{4}	2^{3}	2^{2}	2^{1}	2^{0}	
32511	117.589	0	1	1	1	1	1	1	0	1	1	1	1	1	1	1	1	Maximum output value*
32511	117.589	0	1	1	1	1	1	1	0	1	1	1	1	1	1	1	1	Over range
27649	100.004	0	1	1	0	1	1	0	0	0	0	0	0	0	0	0	1	
27648	100.000	0	1	1	0	1	1	0	0	0	0	0	0	0	0	0	0	Rated range
1	0.003617	0	0	0	0	0	0	0	0	0	0	0	0	0	0	0	1	
0	0.000	0	0	0	0	0	0	0	0	0	0	0	0	0	0	0	0	
-1	-0.003617	1	1	1	1	1	1	1	1	1	1	1	1	1	1	1	1	
-27648	-100.000	1	0	0	1	0	1	0	0	0	0	0	0	0	0	0	0	
-27649	100.004	1	0	0	1	0	0	1	1	1	1	1	1	1	1	1	1	Under range
-32512	-117.593	1	0	0	0	0	0	0	1	0	0	0	0	0	0	0	0	
-32512	-117.593	1	0	0	0	0	0	0	1	0	0	0	0	0	0	0	0	Minimum output value**

* When values > 32511 are specified, the output value is limited to 117.589 % or 0 % (0.0 V / 0.0 mA), depending on the module used.

** When values < -32512 are specified, the output value is limited to -117.593 % or 0 % (0.0 V / 0.0 mA), depending on the module used.

Table 3- 6 Unipolar output ranges

Dec. value	Output value in %	Data word																Range
		2^{15}	2^{14}	2^{13}	2^{12}	2^{11}	2^{10}	2^{9}	2^{8}	2^{7}	2^{6}	2^{5}	2^{4}	2^{3}	2^{2}	2^{1}	2^{0}	
32511	117.589	0	1	1	1	1	1	1	1	x	x	x	x	x	x	x	x	Maximum output value*
32511	117.589	0	1	1	1	1	1	1	0	1	1	1	1	1	1	1	1	Over range
27649	100.004	0	1	1	0	1	1	0	0	0	0	0	0	0	0	0	1	
27648	100.000	0	1	1	0	1	1	0	0	0	0	0	0	0	0	0	0	Rated range
1	0.003617	0	0	0	0	0	0	0	0	0	0	0	0	0	0	0	1	
0	0.000	0	0	0	0	0	0	0	0	0	0	0	0	0	0	0	0	
0	0.000	0	0	0	0	0	0	0	0	0	0	0	0	0	0	0	0	Minimum output value**

* When values > 32511 are specified, the output value is limited to 117.589 % or 0 % (0.0 V / 0.0 mA), depending on the module used.

** When values < 0 are specified, the output value is limited to 0% (0.0 V / 0.0 mA).

Connecting transducers 4

4.1 Overview

Introduction

This chapter describes the basic procedure for wiring transducers to analog inputs. Information on specific wiring options is available in the manual of each module.

For more information, e.g. on cable routing and shielding or potential equalization, etc., refer to the function manual for Configuring interference-free controllers (http://support.automation.siemens.com/WW/view/en/59193566).

Transducers that can be wired to analog inputs

You can wire the following transducers to the analog input modules, depending on the type of measurement:

- Voltage transducers
- Current transducers
  - 2-wire transducers
  - 4-wire transducers
- Resistance transducers
  - 4-wire connection
  - 3-wire connection
  - 2-wire connection
- Thermocouples

Isolated transducers and non-isolated transducers

Transducers are available in various models:

- Isolated transducers are **not connected** locally to the ground potential. Floating operation is possible.
- Non-isolated transducers are **connected** locally to the ground potential.

  Non-isolated transducer connections are connected to the conductive enclosure.

  Note: All non-isolated transducers must have a galvanic connection to each other and be locally connected to the ground potential.

Abbreviations used in the figures

Key to the abbreviations in the figures below:

AI	Analog input module
M	Ground connection
L+	Supply voltage connection
M_n+/M_n-	Measuring input, channel n
I_{Cn}+/I_{Cn}-	Current output to thermal resistor (RTD) channel n
U_n+/U_n-	Voltage input channel n
I_n+/I_n-	Current input channel n
COMP+/COMP-	Compensation input
I_{Comp}+/I_{Comp}-	Current output for compensation
U_V	Feed voltage at channel (the connection can be used for 2-wire transducer (2DMU) or with ET 200eco PN and ET 200pro for 2/4-wire transducer).
U_{CM}	Potential difference between the reference points of the measuring inputs / the analog ground M_{ANA}
U_{ISO}	Potential difference between the reference points of the measuring inputs and the central ground
M_{ANA}	Reference point of the analog ground

Lines for analog signals

Always use shielded twisted-pair cables to wire the analog signals. This improves immunity.

4.2 Wiring analog inputs with MANA connection

The reference potentials of the measuring inputs and the central ground are electrically isolated in analog input modules with M_{ANA} connection.

Limited potential difference U_{ISO} (insulation voltage)

Always verify that the admissible potential difference U_{ISO} between the reference point of the analog ground M_{ANA} and the central ground is not exceeded.

Potential difference U_{ISO} may be caused by: Maximum line lengths exceeded.

If you want to ensure that the permitted value U_{ISO} is not exceeded, install an equipotential bonding cable between the terminal M_{ANA} and the central grounding point.

Limited potential difference U_{CM} (common mode)

Always verify that the admissible potential difference U_{CM} between the reference point of the measuring inputs and the analog groundM_{ANA} is not exceeded.

Potential differences U_{CM} may be caused by:

- Environments with EMC disturbance
- Use of grounded transducers
- Use of long cable lengths

Measuring errors / malfunctions can occur if the admissible potential difference U_{CM} is exceeded.

Some modules can detect an invalid potential difference U_{CM} and report this error with an entry in the diagnostics buffer of the CPU.

If you want to ensure that the maximum value U_{CM} is not exceeded, interconnect the reference points of the measuring inputs and the analog ground M_{ANA} with an equipotential bonding cable.

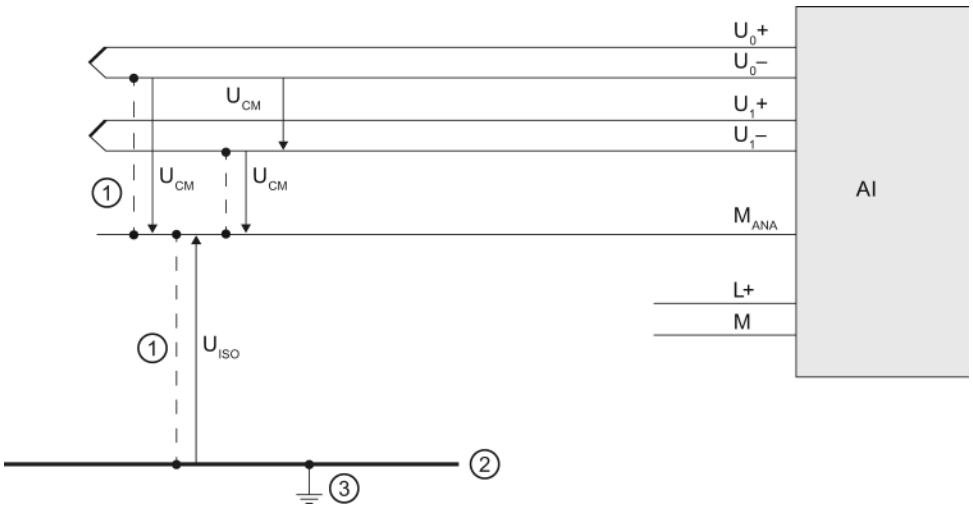

① Equipotential bonding cable
② Grounding bus cable
③ Central ground

Figure 4-1 Example: Reference potential for analog input modules with M_{ANA} connection

4.3 Wiring analog inputs without MANA connection

The reference potentials of the measuring inputs and the central ground are electrically isolated from each other in analog input modules without an M_{ANA} connection.

Limited potential difference U_{ISO} (insulation voltage)

Always verify that the maximum potential difference U_{ISO} between the reference points of the measuring inputs and central ground is not exceeded.

Potential difference U_{ISO} may be caused by: Maximum line lengths exceeded.

If you want to ensure that the permitted value U_{ISO} is not exceeded, install an equipotential bonding cable between the reference points of the measuring inputs and the central grounding point.

Limited potential difference U_{CM} (common mode)

Always ensure that the permitted potential difference U_{CM} between the reference points of the measuring inputs is not exceeded.

Potential differences U_{CM} may be caused by:

- Environments with EMC disturbance
- Use of grounded transducers
- Use of long cable lengths

Measuring errors / malfunctions can occur if the admissible potential difference U_{CM} is exceeded.

Some modules can detect an invalid potential difference U_{CM} and report this error with an entry in the diagnostics buffer of the CPU.

If you want to ensure that the permitted value U_{CM} is not exceeded, install equipotential bonding cables between the reference points of the measuring inputs or, with the ET 200eco PN and ET 200pro, between the reference points of the measuring inputs and ground.

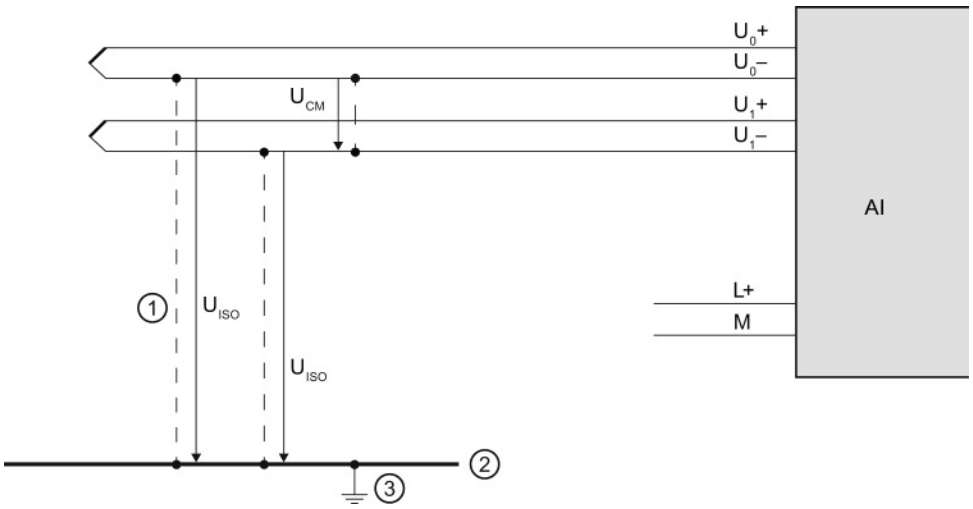

① Equipotential bonding cable (not for 2-wire and resistance transducers)
② Grounding bus cable
③ Central ground

Figure 4-2 Example: Reference potential for analog input modules without M_{ANA} connection

4.4 Wiring voltage transducers

The figure below shows how to connect voltage transducers. If you want to ensure that the permitted value U_{CM} is not exceeded, install equipotential bonding cables to connect the reference points of the measuring inputs to the analog ground M_{ANA}, or with ET 200eco PN and ET 200pro the reference points of the measuring inputs to the ground.

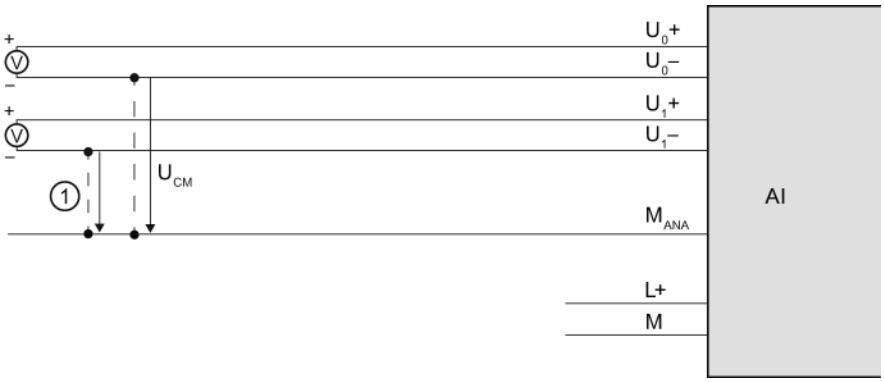

① Equipotential bonding cable (only relevant to modules with M_{ANA} connection)

Figure 4-3 Example: Wiring voltage transducers to an analog input module

4.5 Wiring current transducers

Current transducers are available as 2-wire transducers and 4-wire transducers. Below are a number of ways to supply current transducers with voltage.

Wiring 2-wire transducers with power supply from the module

The 2-wire transducer converts the process variable into a current. The 2-wire transducer is wired to the short circuit-proof supply voltage at the terminals of the analog input module. The transducer is therefore frequently also called a "passive transducer". Its simple wiring means that the 2-wire transducer is frequently used in industrial environments. If you use this type of connection, you will need to set the "Current (**2-wire transducer**)" measurement type in STEP 7.

Note

2-wire transducers must be electrically isolated.

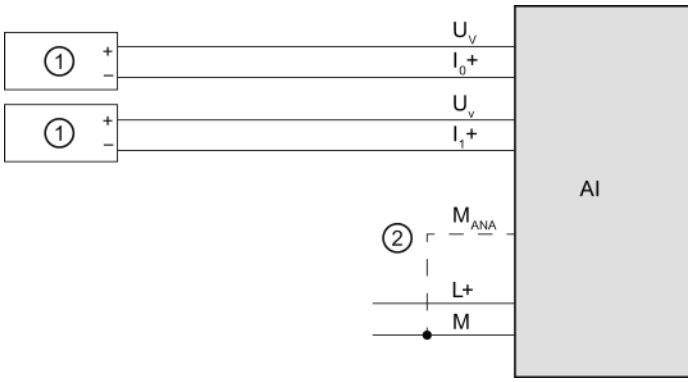

① 2-wire transducers (2WT)

② Equipotential bonding cable (only relevant to modules with M_{ANA} connection)

Figure 4-4 Example: Wiring 2-wire transducers to an analog input module

Wiring 2-wire transducers to an analog input for 4-wire transducers

The figure below shows an alternative to the above connection: supplying the 2-wire transducer from supply line L+ of the module. If you use this type of connection, you will need to set the "Current (**4-wire transducer**)" measurement type in STEP 7.

In this type of connection, galvanic isolation between the supply voltage L+ and the analog circuit will be removed.

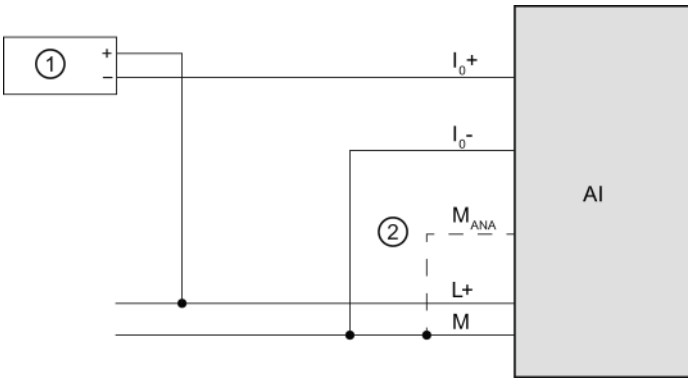

① 2-wire transducers (2WT)

② Equipotential bonding cable (only relevant to modules with M_{ANA} connection)

Figure 4-5 Example: Wiring 2-wire transducers to an analog input for 4-wire transducers

Wiring and connecting 4-wire transducers

4-wire transducers provide terminals for connecting a separate supply voltage. They are powered with an external supply and are frequently called "active transducers". If you use this type of connection, you will need to set the "Current (**4-wire transducer**)" measurement type in STEP 7.

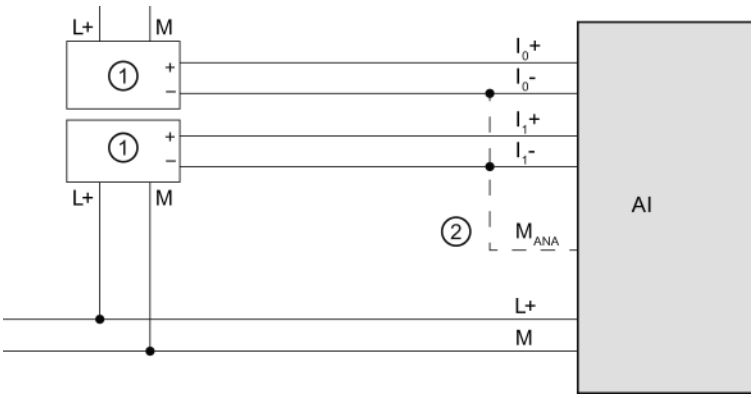

① 4-wire transducers (4WT)

② Equipotential bonding cable (only relevant to modules with M_{ANA} connection)

Figure 4-6 Example: Wiring 4-wire transducers to an analog input module

4.6 Wiring thermal resistors and resistors

The module provides a constant current at terminals I_C+ and I_C- for resistance measurements. The constant current is fed to the resistance to be measured where it is measured as voltage drop. It is important to wire the connected constant current cables directly to the thermal resistor/resistor.

Measurements with 4-wire or 3-wire connection compensate for line resistance and therefore achieve greater accuracy compared to measurements with 2-wire connection.

Measurements with two-wire connection always acquire line resistance in addition to the actual resistance; you must therefore allow for a significant loss of precision in the measuring results.

The figures below give some connection examples.

4-wire connection of a thermal resistor

The voltage at the thermal resistor is acquired using high-impedance measurement via the M_0+ and M_0- terminals. Make sure the wiring is correctly poled (I_{C0}+ and M_0+, and I_{C0}- and M_0- at the thermal resistor).

Always wire the **I_{C0}+ and M_0+** lines, and the **I_{C0}- and M_0-** lines directly to the thermal resistor.

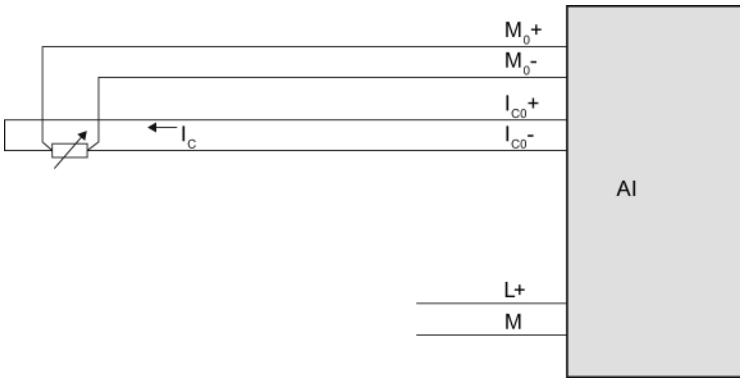

Figure 4-7 Example: 4-wire connection of thermal resistor to an analog input module

3-wire connection of a thermal resistor

Depending on the module, for a 3-wire connection to modules with 4 terminals (per channel), you may need to insert a bridge between **M_0- and I_{C0}-** (see figure below) or between **M_0+ and I_{C0}+**. Always wire the I_{C0}+ and M_0+ lines directly to the thermal resistor. Use cable with wires with identical cross-section.

For ET 200AL, ET 200eco PN and ET 200pro, no bridge is required as all necessary connections are implemented internally.

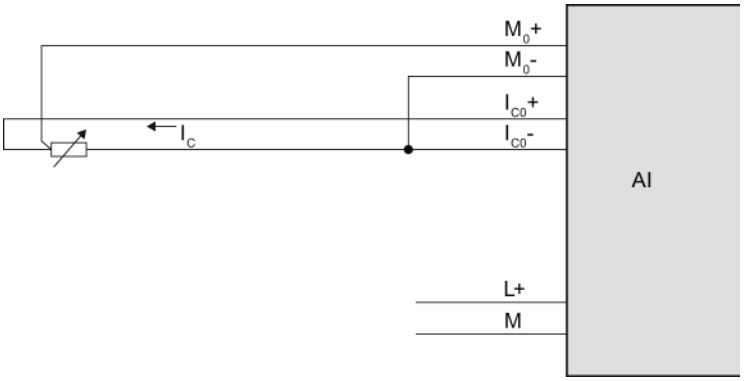

Figure 4-8 Example: 3-wire connection of thermal resistor to an analog input module

2-wire connection of a thermal resistor

When installing a 2-wire device on modules with 4 terminals (per channel), you will need to insert bridges at the module between **M_0+ and I_{C0}+** and between **M_0- and I_{C0}-** as shown in the figure below. The line resistance is measured, but not compensated. As a result of physical limitations, this measurement type is less accurate than measurement with 3-wire or 4-wire connections. The wiring for this type of measurement is, however, simple as the bridges required can be wired in the plug, saving line.

For ET 200AL, ET 200eco PN and ET 200pro, no bridge is required as all necessary connections are implemented internally.

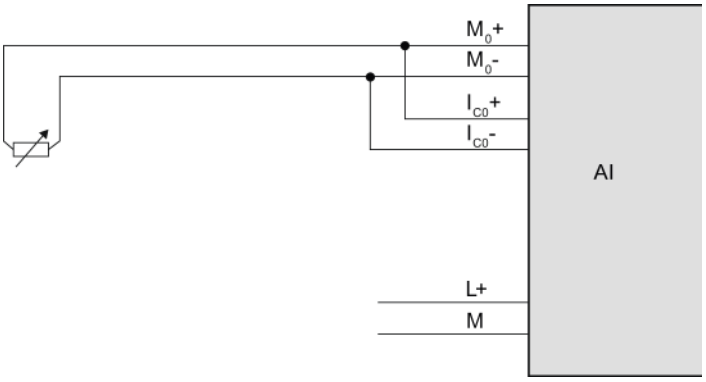

Figure 4-9 Example: 2-wire connection of thermal resistor to an analog input module

4.7 Wiring thermocouples

Introduction

Thermocouples are generally supplied ready-to-use. Protective casing prevents the thermocouples from being destroyed by mechanical force, for example.

Compensating lines

The compensating lines belonging to the respective thermocouples are identified by a special color code, because only the compensating line that is made of the material matching the thermocouple may be used. The standardized compensating lines are specified in DIN EN 60584. Observe the maximum temperatures in the manufacturer's specifications.

Thermocouple connection options

There are various different ways to wire thermocouples to an analog input module:

- Directly ①.
- Using compensating lines ②.
- With a compensating line to the reference junction, connected with a supply line, e.g. copper ③.

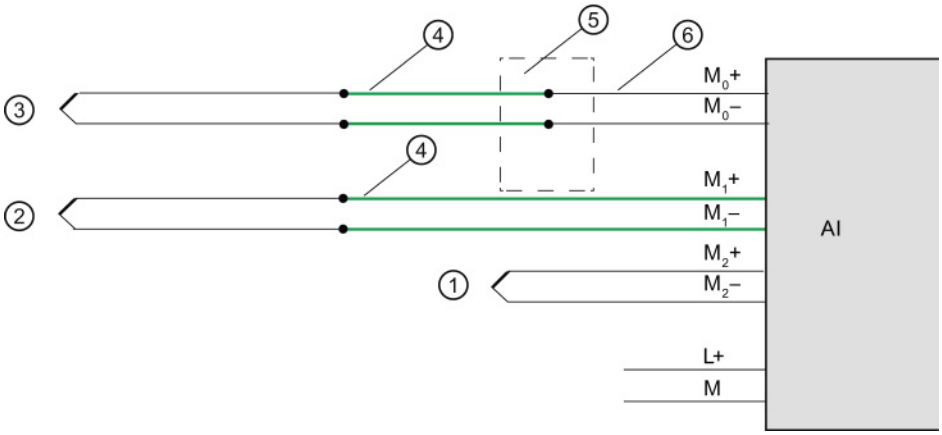

① Thermocouple without compensating line
② Thermocouple with compensating line
③ Thermocouple with compensating line and supply line
④ Compensating line (same material as thermocouple)
⑤ External reference junction
⑥ Copper supply cable, for example

Figure 4-10 Example: Wiring thermocouples to an analog input module

Further information

Further information, such as the selection of thermocouples and how they operate, can be found in the section Thermocouples (Page 77).

Thermocouples 5

5.1 Selecting thermocouples

Introduction

Thermocouples are electrical devices for precise temperature measurement. They consist of two different metals connected at one point. Temperature affecting this point generates a voltage difference from which the temperature can be calculated.

Thermocouples can measure a wide range of temperatures and come in extremely robust models. They are therefore frequently used in industrial applications. Below are some of the criteria to consider when selecting the right thermocouple:

- Temperature range
- Atmospheric conditions
- Price

Grounded thermocouples

In grounded thermocouples, a conductive thermocouple wire is attached to the inside of the sensor housing. This results in good heat transfer from the sensor housing to the thermocouple measuring tip.

Non-grounded thermocouples

In non-grounded thermocouples, the thermocouple is not connected to the sensor housing. The response time following temperature changes is longer than with grounded thermocouples. The measuring point is galvanically isolated.

Type and temperature range

The different thermocouple types are derived from different material compositions.

Note

Due to physical conditions, thermocouples are extremely inaccurate outside the specified temperature range. Only use thermocouple in the temperature range specified by the manufacturer.

The following table lists the types and material compositions, as well as the temperature measuring range of different thermocouples:

Type	Material composition	Temperature range
B	PtRh-PtRh	250 to 1820 °C
C	W-Re	0 to 2315 °C
E	NiCr-CuNi	-270 to 1000 °C
J	Fe-CuNi	-210 to 1200 °C
K	NiCr-Ni	-270 to 1372 °C
L	Fe-CuNi	-200 to 900 °C
N	NiCrSi-NiSi	-270 to 1300 °C
R	PtRh-Pt (Pt 13%)	- 50 to 1769 °C
S	PtRh-Pt (Pt 10%)	-50 to 1769 °C
T	Cu-CuNi	-270 to 400 °C
U	Cu-CuNi	-200 to 600 °C
TXK/XKL	NiCr-CuCr	-200 to 800 °C

5.2 Structure and operating principle of thermocouples

Thermocouple structure

A thermocouple consists of a pair of thermal sensors and the respective installation and wiring elements. Two wires made of different metals/alloys are welded together at their ends (hot end). The welding point forms the so-called measuring point, while the free ends of the thermocouple form the reference junction.

The free ends are interconnected with the evaluation device (e.g. analog input module) via insulated wires or cables.

The different thermocouple types, e.g. K/J/N, are derived from different material composition; the same measuring principle is applied to all thermocouples, independent on their type.

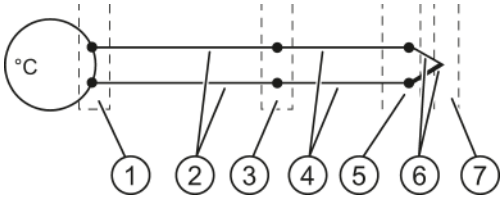

① Thermal voltage acquisition point
② Copper supply cable, for example
③ Reference junction
④ Compensating line (same material as thermocouple)
⑤ Connection point
⑥ Thermocouple with positive and negative thermal elements
⑦ Measurement point

Figure 5-1 Thermocouple

Operating principle of thermocouples

Temperature differences between the measuring point and the free ends of the pair of thermal sensors (connection point) generate a thermal voltage at the reference junction. The value of the thermal voltage is determined by the temperature difference between the measuring point and the free ends, as well as by the material composition of the pair of thermal sensors.

Thermocouples always acquire a differential temperature, which means that the temperature at their free ends (reference junction) must be known to determine the temperature at the measuring point.

The thermocouple can be extended with compensating lines from the connection point. This allows the reference junction to be located at a specific point, for example, where the temperature can be kept constant or the temperature sensor is easy to install. The compensating lines and thermocouple wires are made of the same material. Copper cables are used to connect the reference junction to the module.

Note

Always observe the polarity, as incorrect wiring will result in unacceptable measuring errors.

5.3 Compensation for the reference junction temperature

5.3.1 Overview

Introduction

You have several options for measuring the reference junction temperature in order to obtain a correct temperature value as a function of the temperature difference between the reference junction and the measuring point.

You have various compensation options to suit requirements at the location of the reference junction.

The compensation options supported by the analog module used are specified in the manual of the respective module.

Options of compensating for the reference junction temperature

Table 5- 1 Compensation options: Explanation and use case

Compensation options	Explanation	Use case / special feature
Internal reference junction	**Function principle** With this type of compensation, the temperature of the reference junction is measured using an integrated sensor in the analog module. **Procedure** Connect the thermocouple to the I/O module directly, or with compensating lines; see chapter Compensation with internal reference junction (Page 84).	• For the connection, use compensating lines that match the thermocouple material. • If the reference junction temperature and the module temperature are identical in your system, you may also use lines made from a different material. • Advantages: – Inexpensive – No external reference junction required – No additional wiring required

Compensation options	Explanation	Use case / special feature
Reference channel of the module	**Properties** With this type of compensation, the reference junction temperature is determined using an external thermal resistor (RTD). **Procedure** Connect the thermocouple to the supply lines directly at the reference junction, or indirectly using compensating lines. Wire the supply lines to the corresponding terminals of the module. Wire the thermal resistor (RTD) to the reference channel of the module. The thermal resistor (RTD) must be positioned in the area of the reference junction; see chapter Compensation with reference channel of the module (Page 86).	• They acquire the temperature directly at the reference junction. • The measured temperatures of all channels that you have configured for this compensation type will be corrected automatically by the temperature value of the reference junction. • Advantages: – More precise compared to compensation with internal reference junction; however, you need to install and wire an additional thermal resistor.
Reference channel of group 0	**Properties** With the "TC" (thermocouple...) setting, the channel acts as receiver for the reference junction temperature of group 0. The associated transmitter of group 0 is set up to for the RTD channel. **Procedure** Connect the thermocouple to the supply lines directly at the reference junction, or indirectly using compensating lines. Wire the supply lines to the corresponding terminals of the module. Wire the thermal resistor (RTD) to the configured reference channel for group 0 of the module. The thermal resistor (RTD) must be positioned in the area of the reference junction; see chapter Compensation, reference channel of Group 0 (Page 88).	• They acquire the temperature directly at the reference junction. • The measured temperatures of all channels that you have configured for this compensation type will be corrected automatically by the temperature value of the reference junction (transmitter).
Fixed reference temperature	**Properties** With this type of compensation, the reference junction temperature is stored in the module as fixed value. **Procedure** Connect the thermocouple to the supply lines directly at the reference junction, or indirectly using compensating lines. Wire the supply lines to the corresponding terminals of the module. Depending on the module, you can enter a fixed reference junction temperature in the configuration data (e.g. 20 °C), or use the fixed reference junction temperature of the module (0 °C); see chapter Compensation with fixed reference temperature (Page 91).	• You keep the reference junction temperature constant and know the temperature value. • To ensure high precision, you must ensure that the temperature remains constant (this can be complicated, depending on the application).

Compensation options	Explanation	Use case / special feature
Dynamic reference temperature	**Properties** With this type of compensation, the reference junction temperature is determined using a module. Transfer this temperature value to other modules in the user program by means of a data record. **Procedure** Wire the thermal resistor (RTD) for the reference junction to any channel. The reference junction temperature is transferred with a function block by means of data records from the CPU or IM to the module, see section Compensation by means of dynamic reference temperature (Page 94).	• You are using multiple modules at the reference junction and can therefore compensate for all channels using a common temperature value. • You only need a thermal resistor (RTD) or a thermocouple to measure the temperature value.
No/external compensation	**Properties** With this type of compensation, the reference junction temperature is measured outside the analog input module. You can, for example, connect a compensating box to the thermocouple for this purpose. **Procedure** Connect the compensating box with the connection module of the analog input module with copper cables, see section "None" or external compensation (Page 98).	• The temperature of the reference junction for this type of compensation is specified as 0 °C. This can be achieved by using a compensating box. A separate compensating box is required for each thermocouple. • Thermocouples of type B do not require a compensating box.
RTD (0)	**Properties** This compensation is based on a measurement of the resistance value of a Pt1000 at the clamping unit of a compensation connector or of an external resistance value Pt1000. **Procedure** Additional information about the connection options with and without compensation connector is available in the section Type of compensation RTD (0) (Page 100).	• The reference junction temperature is determined with resistance value of the Pt1000. • All channels of the analog input module that you select for this type of compensation receive the same reference junction temperature.

5.3.2 Compensation with internal reference junction

Function principle

The reference junction for compensation via internal reference junction is at the terminals of the analog input module. Wire the thermocouples or compensating lines directly to the module inputs. The internal temperature sensor acquires the module temperature and returns a compensating voltage.

Note that compensation via internal reference junction will not always reach the precision of external compensation!

Procedure

Configuration steps:

1. Open the project in STEP 7.
2. In the device view, select the required analog module and the corresponding channel.
3. Select the "General" tab in the Inspector window of the selected module.
4. Select the "Inputs/Measuring" area.
5. Select the "Thermocouple" value as "Measurement type".
6. As "Reference junction", select the value "Internal reference junction".

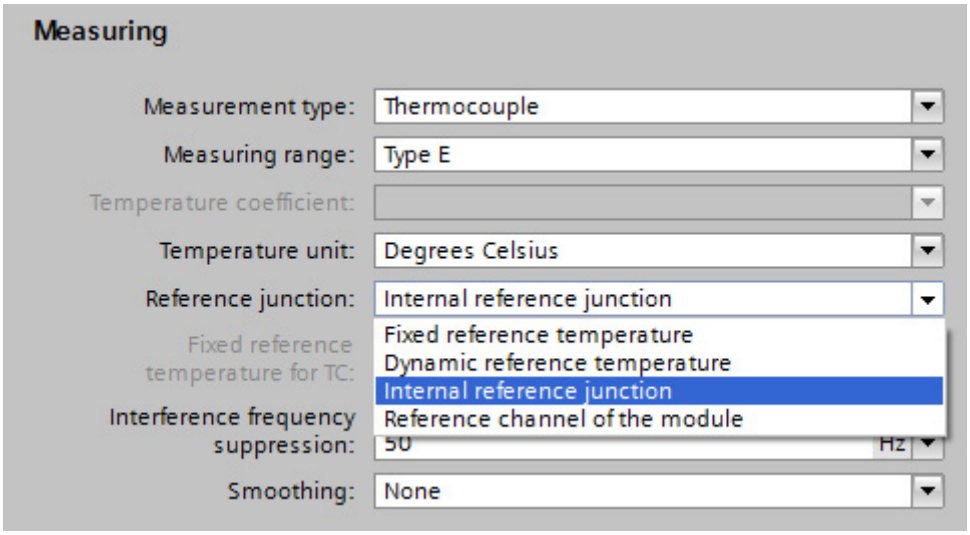

Figure 5-2 Internal reference junction

Wiring thermocouples

Wire the thermocouples directly or indirectly via compensating lines to the module inputs.

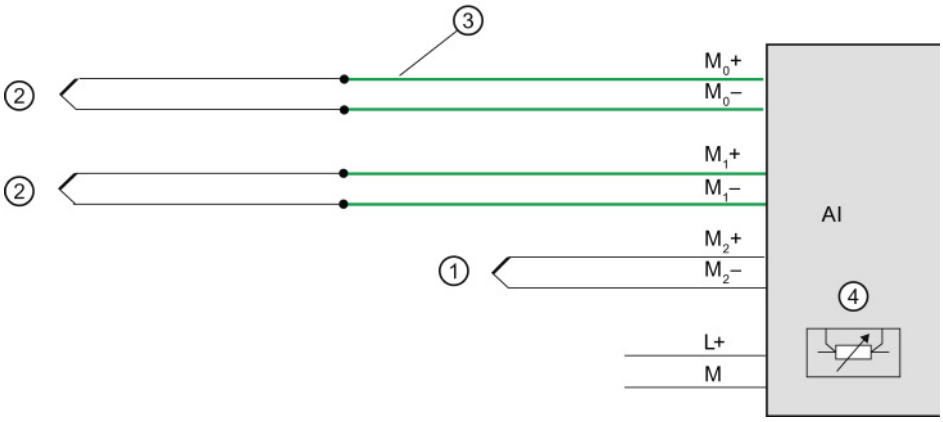

① Thermocouple without compensating line
② Thermocouple with compensating line
③ Compensating line (same material as thermocouple)
④ Internal reference junction

Figure 5-3 Example: Wiring thermocouples for compensation via internal reference junction

5.3.3 Compensation with reference channel of the module

Function principle

With this type of compensation, the reference junction temperature is determined using an external thermal resistor (RTD). Certain modules provide an internal reference channel.

Procedure

Configuration steps:

1. Open the project in STEP 7.
2. In the device view, select the required analog module and the corresponding channel.
3. Select the "General" tab in the Inspector window of the selected module.
4. Select the "Inputs/Measuring" area.
5. Select the "Thermocouple" value as "Measurement type".
6. As "Reference junction", select the value "Reference channel of the module"".

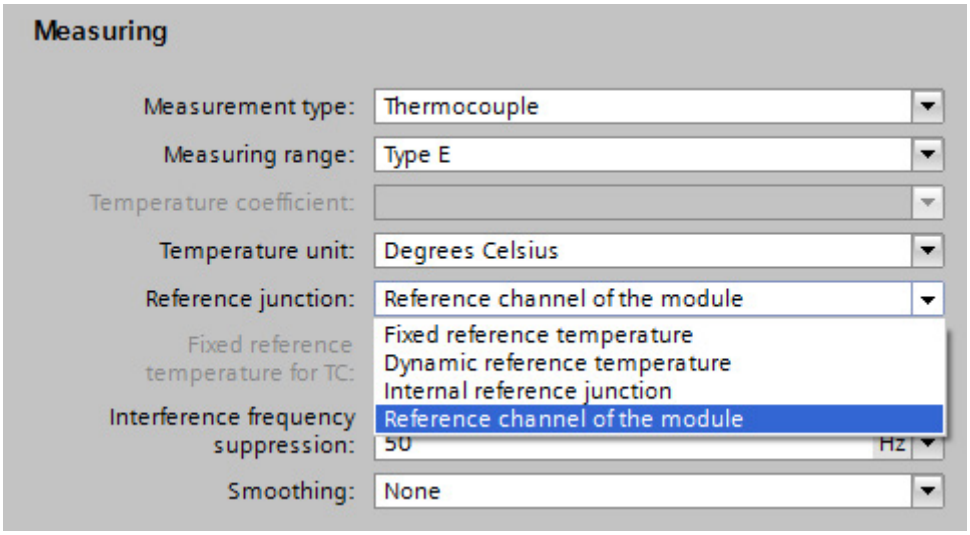

Figure 5-4 Reference channel of the module

Wiring thermocouples and thermal resistors

Connect the thermocouple to the supply lines directly at the reference junction, or indirectly using compensating lines. Wire the supply lines to the corresponding terminals of the module.

You may use cables made of any material to wire the thermal resistor to the module terminals.

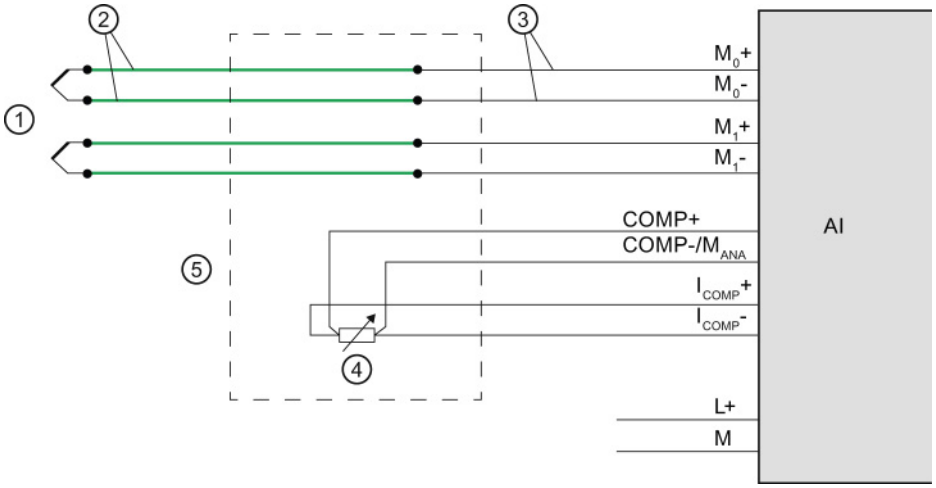

① Thermocouple
② Compensating line (same material as thermocouple)
③ Copper supply cable, for example
④ Thermal resistor (RTD)
⑤ Reference junction

Figure 5-5 Example: Wiring thermocouples/thermal resistors for compensation by means of reference channel of the module

5.3.4 Compensation, reference channel of Group 0

Function principle

For this compensation, a module channel with a connected thermal resistor (RTD) acts as "Reference temperature transmitter". Other channels (reference temperature receivers) with connected thermocouples can be compensated using this reference temperature. The measured temperatures of all channels (receivers) that you have configured for this compensation type will be compensated automatically by the temperature value of the reference junction (transmitter).

The reference junction temperature is determined by means of an external thermal resistor (RTD).

Procedure

Configuration steps:

1. Open the project in STEP 7.
2. In the device view, select the required analog module and the corresponding channel.
3. Select the "General" tab in the Inspector window of the selected module.
4. Select the area "Inputs/measurement".
5. For the channel of the relevant module, specify as transmitter:

   As "Measurement type" select, for example, "Thermal resistor (4-wire connection)".

   As "Reference junction", select the value "Reference channel of group 0".

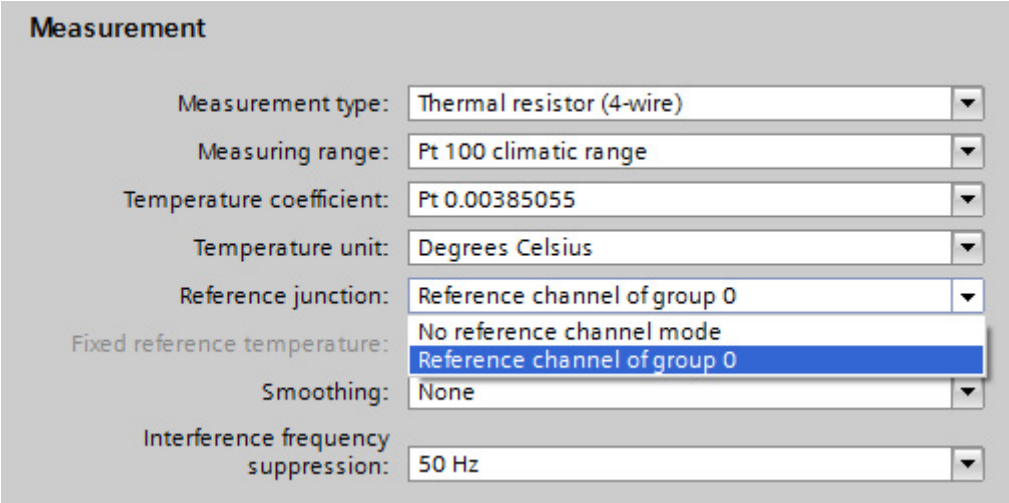

Figure 5-6 Transmitter: Reference channel of group 0

6. For the channels you specify as receivers:

   Select the "Thermocouple" value as "Measurement type".

   As "Reference junction", select the value "Reference channel of group 0".

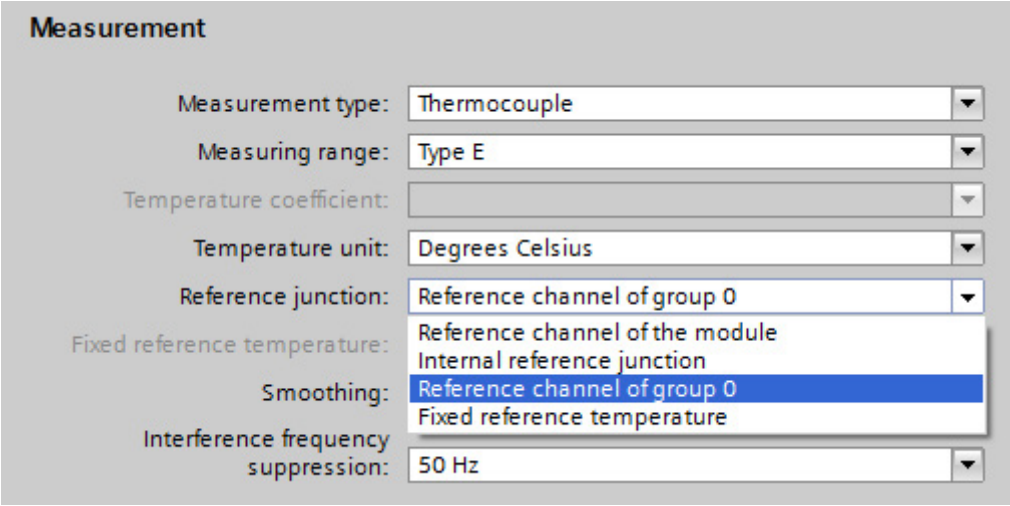

Figure 5-7 Receivers: Reference channel of group 0

Connecting thermocouples and thermal resistors

The example below shows:

- An analog module with thermal resistor as reference temperature transmitter and
- Two analog modules with thermocouple as reference temperature receivers.

Connect the thermocouples to the supply lines at the reference junction, either directly or with compensating lines. Wire the supply lines to the corresponding terminals of the module.

You may use cables made of any material to wire the thermal resistor to the module terminals.

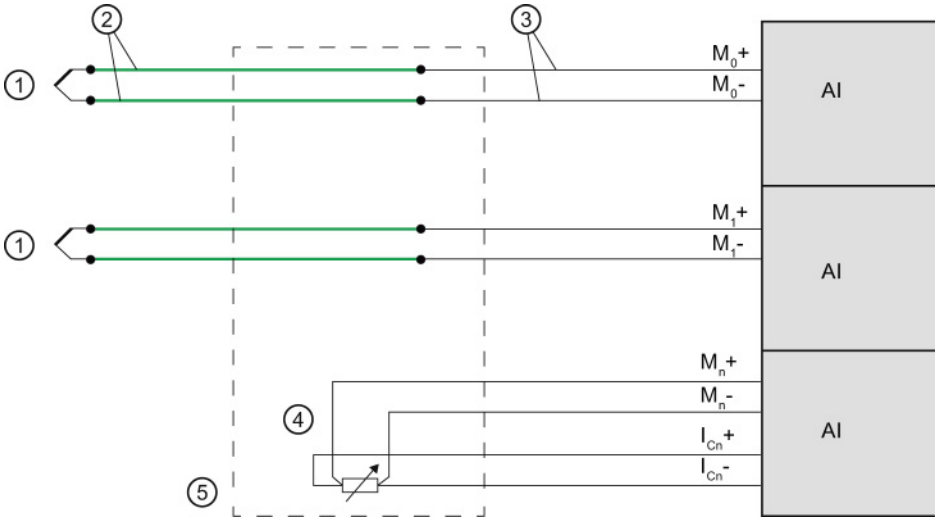

① Thermocouple
② Compensating line (same material as thermocouple)
③ Copper supply cable, for example
④ Thermal resistor (RTD)
⑤ Reference junction

Figure 5-8 Example: Connecting thermocouples/thermal resistors for group 0 compensation

5.3.5 Compensation with fixed reference temperature

Function principle

With this type of compensation, the reference junction temperature is stored in the module as fixed value.

Procedure

Configuration steps:

1. Open the project in STEP 7.
2. Select the required analog module in the Device view.
3. Select the "General" tab in the Inspector window of the selected module.
4. Select the "Inputs/Measuring" area.
5. Select the "Thermocouple" value as "Measurement type".
6. As "Reference junction", select the value "Fixed reference temperature".
7. Specify the temperature of the reference junction in the "Fixed reference temperature" area, for example, 20 °C.

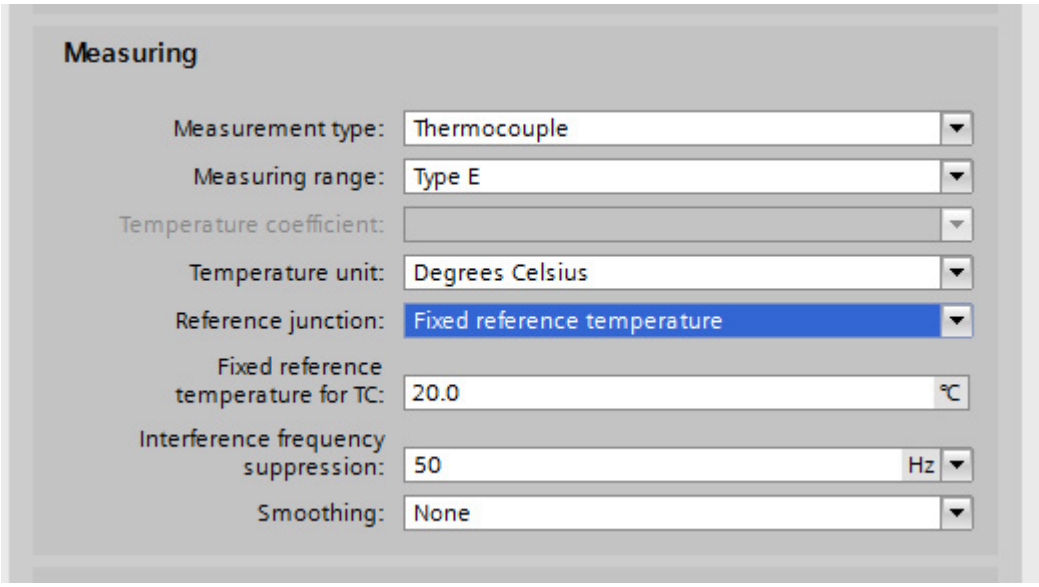

Figure 5-9 Fixed reference temperature

Temperature condition with "Fixed reference temperature" setting

The figure below shows the connection options for thermocouples provided the temperature of the module is kept at a fixed reference temperature (20 °C), for example by installing it in an air-conditioned switch cabinet. The reference junction is in the module.

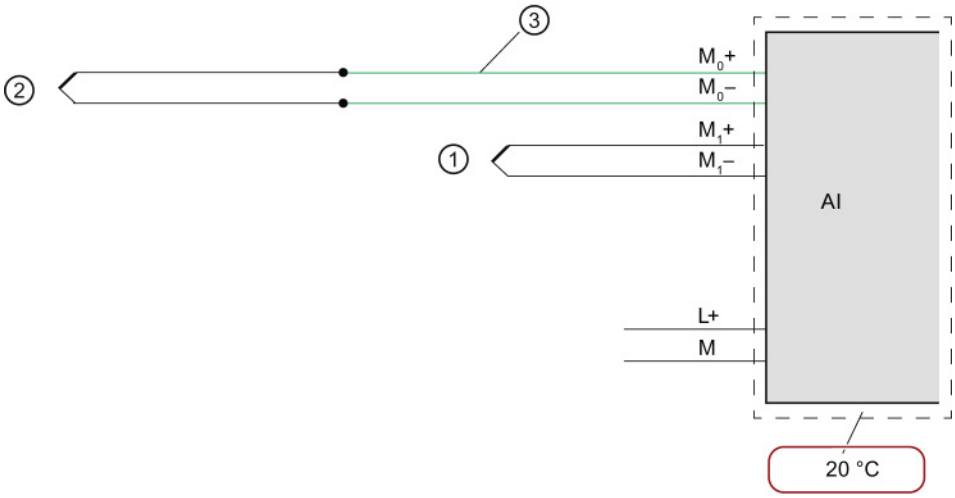

① Thermocouple without compensating line
② Thermocouple via compensating line
③ Compensating line (same material as thermocouple)

Figure 5-10 Example 1: Connecting a thermocouple to an analog module for compensation with "fixed reference temperature"

The figure below shows the connection options for thermocouples provided the temperature of the reference junction (outside the module) is kept at a fixed reference temperature (20 °C).

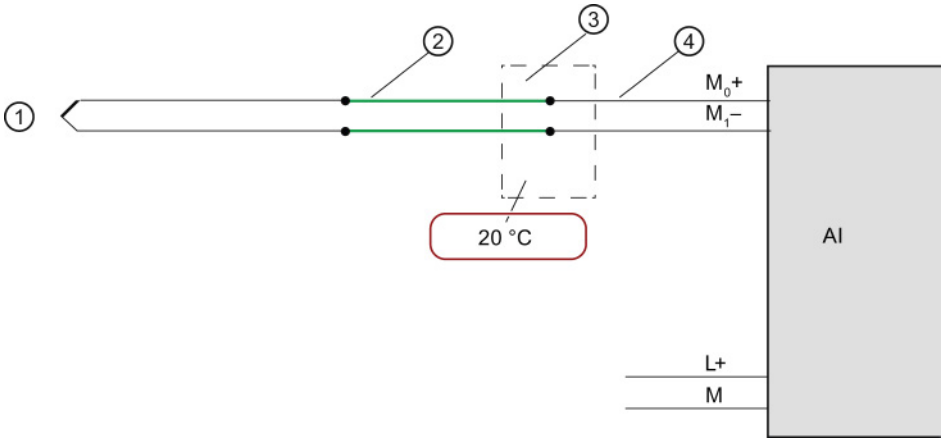

① Thermocouple with compensating line and supply line
② Compensating line (same material as thermocouple)
③ Reference junction
④ Copper supply cable, for example

Figure 5-11 Example 2: Connecting a thermocouple to an analog module for compensation with "fixed reference temperature"

5.3.6 Compensation by means of dynamic reference temperature

Function principle

This compensation type allows you to handle the reference junction temperature for temperature compensation in the user program. You can derive the temperature value from any other module of the station. The reference junction temperature is transferred via data records using the instruction **WRREC** (SFB 53).

The structure of the data records is detailed in the device manual for each module.

Requirement

STEP 7 project with the following contents:

- User program with WRREC (SFB 53) instruction for transferring the data records with reference temperature
- Analog module for acquisition of the process temperature using thermocouple (TC)
- Analog module for measuring the process temperature using thermal resistor (RTD)

Analog module for acquisition of the process temperature using thermocouple (TC)

Configuration steps:

1. Open the project in STEP 7.
2. In the device view, select the required analog module and the corresponding channel.
3. Select the "General" tab in the Inspector window of the selected module.
4. Select the "Inputs/Measuring" area.
5. Select the "Thermocouple" value as "Measurement type".
6. As "Reference junction", select the value "Dynamic reference temperature".

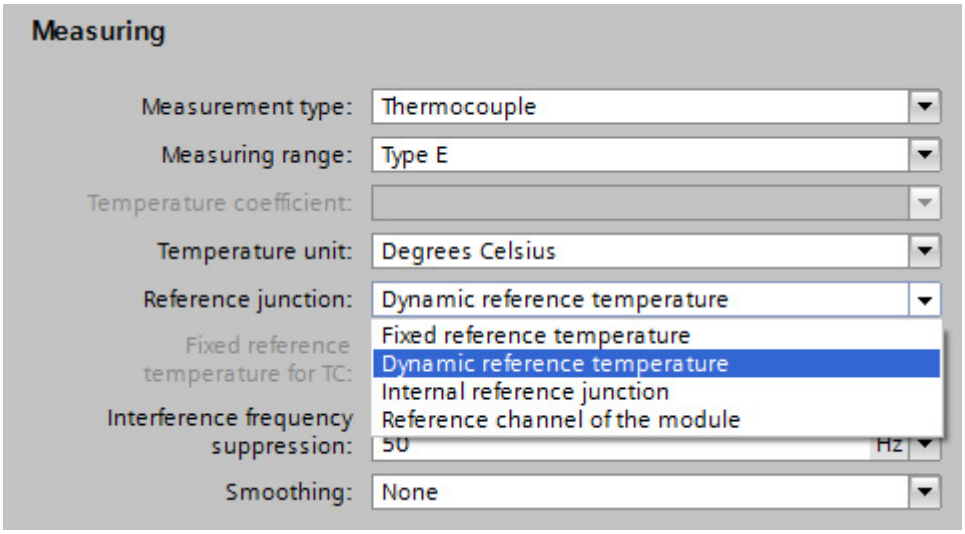

Figure 5-12 Dynamic reference temperature

Analog module for measuring the process temperature using thermal resistor (RTD)

Configuration steps:

1. Open the project in STEP 7.
2. In the device view, select the required analog module and the corresponding channel.
3. Select the "General" tab in the Inspector window of the selected module.
4. Select the "Inputs/Measuring" area.
5. Select the "Thermal resistor (4-wire connection)" value as "Measurement type".

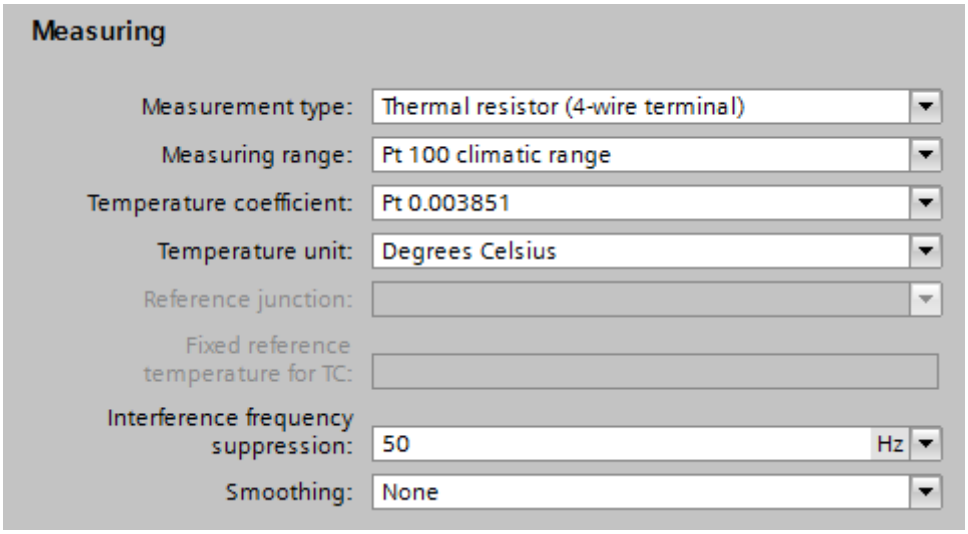

Figure 5-13 Settings for thermal resistor (RTD) type of measurement

Connecting thermocouples and thermal resistors

Connect the thermocouples, for example, to the module inputs using supply lines for temperature compensation with dynamic reference temperature. In this case, the temperature is acquired at the reference junction by means of a thermal resistor (RTD). This reference junction temperature determined in this way is transferred to the analog module with thermocouple via data records with the WRREC instruction.

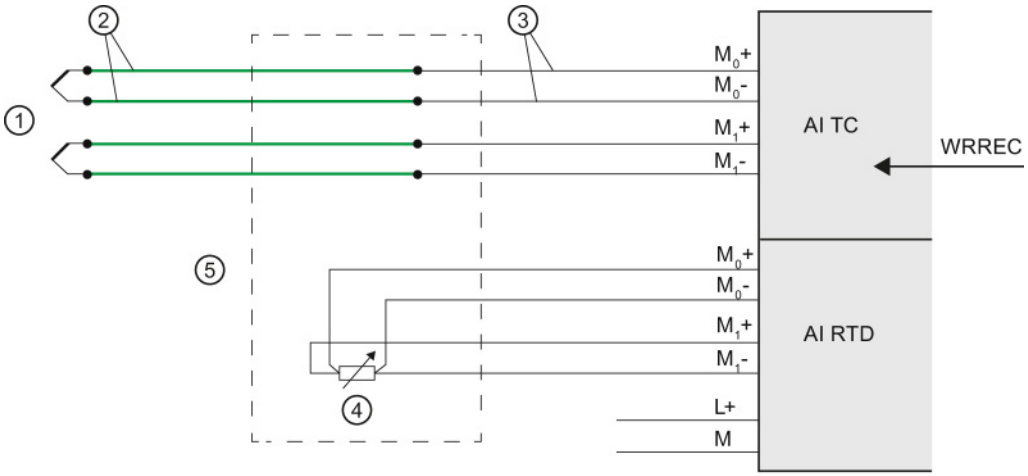

① Thermocouple
② Compensating line (same material as thermocouple)
③ Copper supply cable, for example
④ Thermal resistor (RTD)
⑤ Reference junction

Figure 5-14 Example: Connecting thermocouples/thermal resistors for compensation by means of dynamic reference temperature

5.3.7 "None" or external compensation

Function principle

The reference junction temperature of the thermocouples is measured outside the analog input module, e.g., by means of a compensating box on the thermocouple. The temperature of the reference junction for this type of compensation is specified as 0° C.

The compensating box includes a bridge circuit that is calibrated for a specific reference junction temperature (compensation temperature). The connectors for the ends of the compensating line of the thermocouple form the reference junction. If the actual comparison temperature deviates from the compensation temperature, the temperature-dependent bridge resistor changes. A positive or negative compensation voltage is generated and added to the thermal voltage.

Note

Thermocouples of type B do not require a compensating box.

Procedure

Configuration steps:

1. Open the project in STEP 7.
2. Select the required analog module in the Device view.
3. Select the "Inputs" tab in the Inspector window of the selected module and the respective channel.
4. Select the "Thermocouple" value as "Measurement type" in the "Measuring" area.
5. As "Reference junction", select the value "None" or "External compensation" depending on the used module.

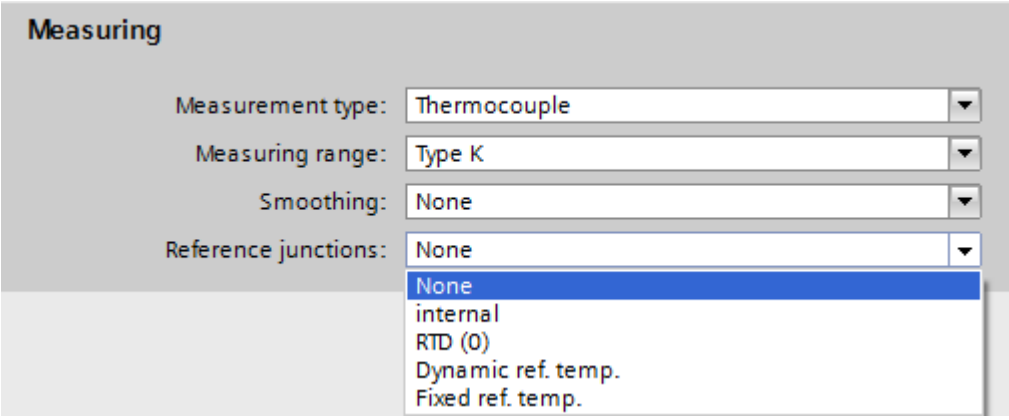

Figure 5-15 No reference junction

Connection of the compensating box

The compensating box is looped into the supply lines of an individual thermocouple. The compensating box must be supplied isolated. The power supply unit must have a sufficient noise filter, e.g., by means of a grounded shielding winding.

Each channel can use its own thermocouple type supported by the analog module regardless of the other channels. A separate compensating box is required for each channel.

Connection example "None" or external compensation

Connect the compensating box with the connection module of the analog input module using copper cables.

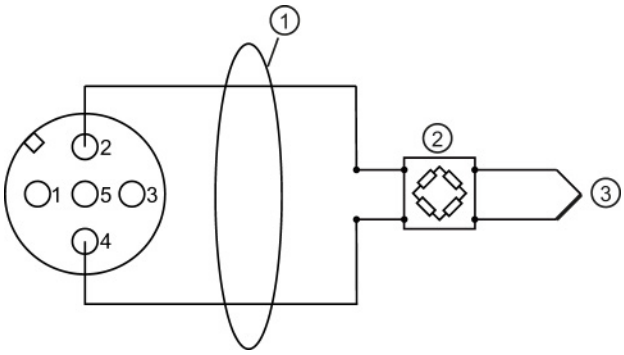

① Copper cables

② Compensating box (per channel), for example; thermocouple type B does not require a compensating box

③ Thermocouple

Figure 5-16 Connection example "No" compensation as reference junction

5.3.8 Compensation type RTD (0)

Function principle

The reference junction temperature is determined by means of the resistance value of a Pt 1000 at the clamping unit of the M12 compensation connector. The resistance measurement is only permitted at the X1 circular socket (channel 0). All of the module's channels with this type of compensation receive the same reference junction temperature.

Procedure

Configuration steps:

1. Open the project in STEP 7.
2. Select the required analog module in the Device view.
3. Select the "Inputs" tab in the Inspector window of the selected module.
4. Select the "Thermocouple" value as "Measurement type" in the "Measuring" area.
5. As "Reference junction", select the value "RTD (0)".

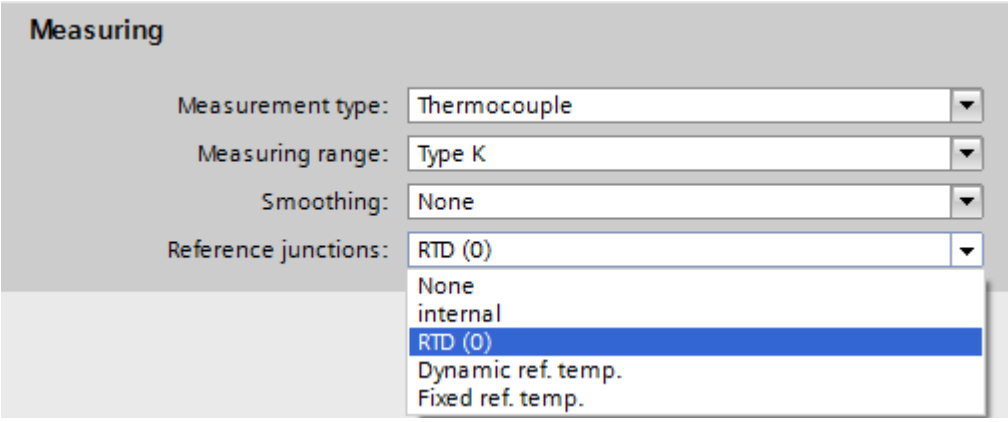

Figure 5-17 Compensation type RTD (0)

Connection example

Connection with M12 compensation connector

Connect the thermocouple to the M12 compensation connector directly or with compensating lines. Install the M12 compensation connector to the X1 circular socket (channel 0) of the CM IO 4 x M12 at the 4 AI TC High Feature.

Connection without M12 compensation connector

To measure the referent junction temperature, connect an external Pt1000 (with α = 003851) to terminals 1 and 3 using copper cables. The thermal resistor Pt1000 must be positioned in the area of the reference junction. Connect the thermocouples to terminals 2 and 4 from the reference junction with copper cables.

Connecting additional thermocouples

You can connect additional thermocouples to the circular sockets X2 to X4 on the CM IO 4 x M12 of the 4 AI TC High Feature. The temperature of reference junction collected by measuring the resistance value at the X1 circular socket applies to all channels of the module that you have selected for this type of compensation.

The figure below shows a connection example "RTD (0)" as reference junction with M12 compensation connector and integrated thermal resistor Pt1000:

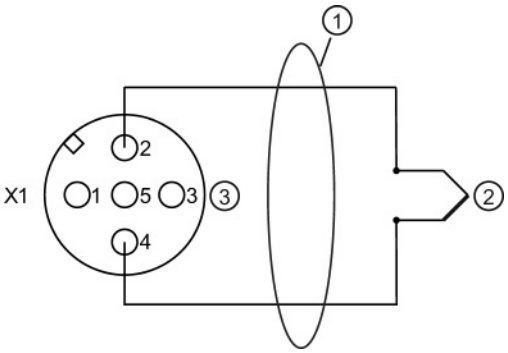

① Direct connection of the thermocouple or with compensating lines

② Thermocouple

③ M12 compensation connector (terminals 1 and 3 with internal Pt1000) only at X1 circular socket. The comparison value of the M12 compensation connector at circular socket X1 also applies to thermocouples at X2, X3 and X4.

Figure 5-18 Connection example "RTD (0)" as reference junction in the M12 compensation connector

The figure below shows a connection example "RTD (0)" as reference junction with external thermal resistor Pt1000:

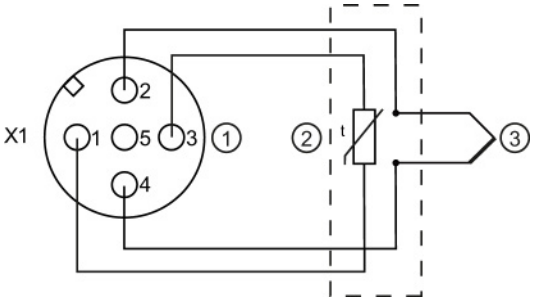

① M12 connector only at X1 circular socket

② External Pt1000 (α = 0.003851) in the area of the reference junction with copper cables at terminals 1 and 3. The comparison value of the external Pt1000 at circular socket X1 also applies to thermocouples at X2, X3 and X4.

③ Thermocouple

Figure 5-19 Connection example "RTD (0)" as reference junction with external Pt1000

Wiring loads/actuators 6

6.1 Overview

Introduction

This chapter describes the basic procedure for wiring loads/actuators to analog outputs. Information on specific wiring options is available in the manual of each module.

For detailed information on cable routing and shielding, potential equalization, etc. please refer to the function manual Configuring interference-free controllers (http://support.automation.siemens.com/WW/view/en/59193566).

Abbreviations used in the figures

Key to the abbreviations in the figures below:

AQ	Analog output module
M	Ground connection
L+	Supply voltage connection
S_n+/S_n-	Sense line channel n
QV_n+/QV_n-	Voltage output channel n
QI_n+/QI_n-	Current output channel n
M_{ANA}	Reference point of the analog ground
U_{ISO}	Insulation voltage

Lines for analog signals

Always use shielded twisted-pair cables to wire the analog signals. This improves immunity.

6.2 Wiring loads/actuators

Reference potential for analog output modules with M_{ANA} connection

Analog output modules have no galvanic connection between the reference point of the analog ground M_{ANA} and the central ground.

Always verify that the admissible potential difference U_{ISO} between the reference point of the analog ground M_{ANA} and the central ground is not exceeded.

Potential difference U_{ISO} may be caused by: Maximum line lengths exceeded.

If you want to ensure the maximum value U_{ISO} is not exceeded, wire terminal M_{ANA} and the central ground with an equipotential bonding cable.

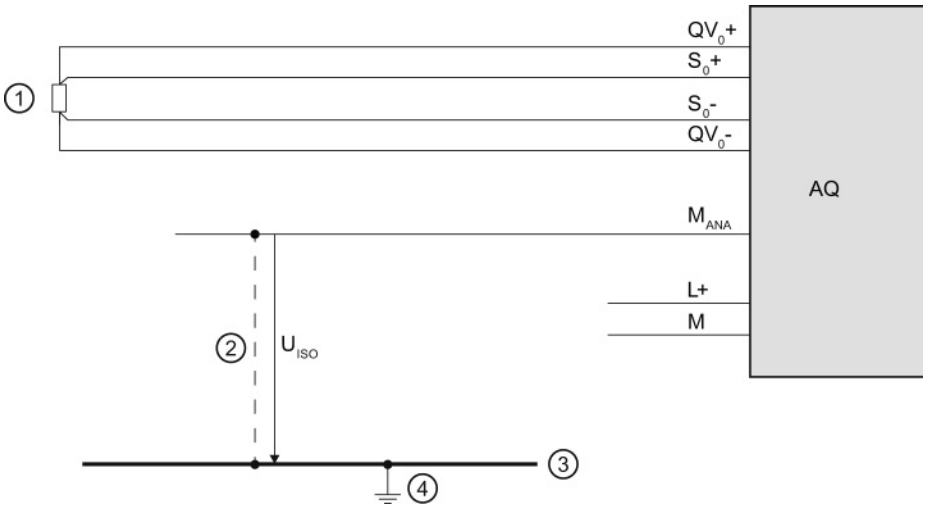

① Load on the voltage output
② Equipotential bonding cable
③ Grounding bus cable
④ Central ground

Figure 6-1 Example: Reference potential for an analog output module with M_{ANA} connection

Reference potential for analog output modules without M_{ANA} connection

Analog output modules have no galvanic connection between the reference potential of the analog output circuits and central ground.

Always verify that the maximum potential difference U_{ISO} between the reference points of the analog output circuits and the central ground is not exceeded.

Potential difference U_{ISO} may be caused by: Maximum line lengths exceeded.

If you want to ensure the maximum value U_{ISO} is not exceeded, interconnect each analog output circuit with the central ground using an equipotential bonding cable.

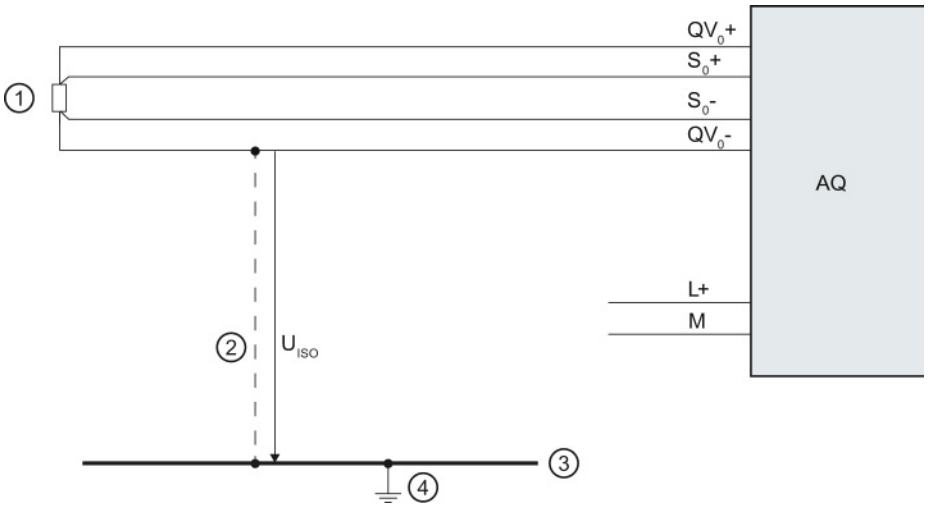

① Load on the voltage output
② Equipotential bonding cable
③ Grounding bus cable
④ Central ground

Figure 6-2 Example: Reference potential for an analog output module without M_{ANA} connection

Supported functions 7

7.1 Calibrating analog modules

7.1.1 Overview

Calibration

A calibration checks the process values measured by the analog input module and the process values output by the analog output module, determines the deviation from the actual values and compensates for any measurement and output errors.

Calibrating analog modules

The SIMATIC analog modules were calibrated before being shipped and have excellent long-term stability; calibration is therefore not required during runtime.

But certain regulations and directives, for example from the Food and Drug Administration (FDA), require regular calibration for all components in a measuring circuit. These components include analog input and output modules.

A calibration makes sense especially for plants in which sensors detect and process relatively small voltages or currents. The calibration compensates for influences on the measuring result by cables and/or temperature.

The calibration collects the new values and saves them retentively on the module. But the calibration values determined prior to delivery at the plant are not lost. You can return to these original calibration values at any time.

Note

The calibration saves the calibration values of each channel for the specific measuring range retentively on the module, which means the values apply to the same measuring range in which the user calibration took place.

If you reconfigure a channel with effective user calibration values to another type of measuring mode, the calibration values saved at the plant for this channel and for this measuring range will become effective.

But the user calibration values are not deleted. They are not overwritten until there is a new user calibration of the channel. If you set the original measuring range for this channel once again without new user calibration, the previously determined user calibration values will become effective.

The respective manual will include information whether or not your analog module supports the "Calibration" functionality.

Scope of functions

The "Calibration" group offers the following functions:

- Specifying the current calibration of all channels
- Calibrating a channel
- Canceling a running calibration
- Resetting the calibration of a channel to the factory settings

7.1.2 Calibrating analog modules

Manual calibration

The following requirements must be met to start manual calibration:

- An online connection exists between STEP 7, the respective CPU and the analog module to be calibrated.
- You have opened the "Online & Diagnostics" view for the selected analog module from the shortcut menu of the project and you are now in the "Functions > Calibration" area.
- The configuration reflects the actual structure of the station.
- No calibration process is busy on the module (if you want to launch calibration).
- A 24 V load voltage must be present at each module for the calibration.
- The last step was successfully completed (if you want to continue or conclude calibration).

Procedure

The basic mask for calibration opens once you start the "Calibration" function. The module reads the following general information data and calibration values after each new selection of a channel:

- **Calibration:** Indicates whether or not the currently effective calibration values are factory calibration values or user calibration values.
- **Measurement type:** Information about the selected measurement type
- **Measuring range:** Currently configured measuring range of the selected channel
- **Gain:** Currently effective gain correction of the analog-digital converter
- **Offset:** Currently effective offset correction of the analog-digital converter

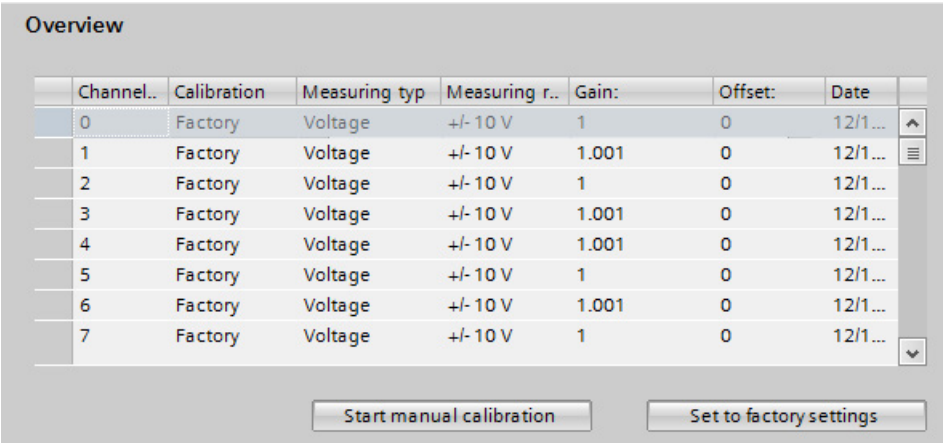

Channel..	Calibration	Measuring typ	Measuring r..	Gain:	Offset:	Date
0	Factory	Voltage	+/- 10 V	1	0	12/1...
1	Factory	Voltage	+/- 10 V	1.001	0	12/1...
2	Factory	Voltage	+/- 10 V	1	0	12/1...
3	Factory	Voltage	+/- 10 V	1.001	0	12/1...
4	Factory	Voltage	+/- 10 V	1.001	0	12/1...
5	Factory	Voltage	+/- 10 V	1	0	12/1...
6	Factory	Voltage	+/- 10 V	1.001	0	12/1...
7	Factory	Voltage	+/- 10 V	1	0	12/1...

Figure 7-1 Calibration table

To start the calibration, follow these steps:

1. Select the line associated with the channel to be calibrated in the overview table.
2. Click the "Start manual calibration" button.
3. Now go through the steps in the "Manual calibration" section.
4. Follow the instructions in the "Command" field.
5. Click ""Next".

The required calibration values of the selected channel according to the measuring range configured for this channel are specified once again during the user calibration.

Note

The calibration can take place in RUN mode as well as STOP mode of the CPU. If the CPU is in RUN, the calibration value that was last collected prior to the start of the calibration is supplied for the duration of the calibration.

The module channel to be calibrated cannot process any new process values during the user calibration. All analog input values of the module are set to 0x7FFF ("Invalid analog value") until the end of the calibration. When the value status is enabled, the value status of the signal is set to "invalid" for the duration of the calibration.

You must provide a voltage and/or temperature during a user calibration. To do so, use the corresponding external wiring and an external voltage/temperature transducer. The field "Command" includes numbers of pins to which you can connect the calibration stimulus. The first pin number identifies the positive connector, the second pin number the negative connector. The accuracy of the calibration depends on the accuracy of the provided voltage/temperature.

Note

To ensure that the module retains the specified measuring accuracy after the user calibration, the provided voltage/temperature must be twice as accurate as specified for the module. Inaccurate voltages or temperature result in a faulty calibration.

The figure below shows an example of channel calibration with "Voltage" measurement, measuring range "+/- 10 V".

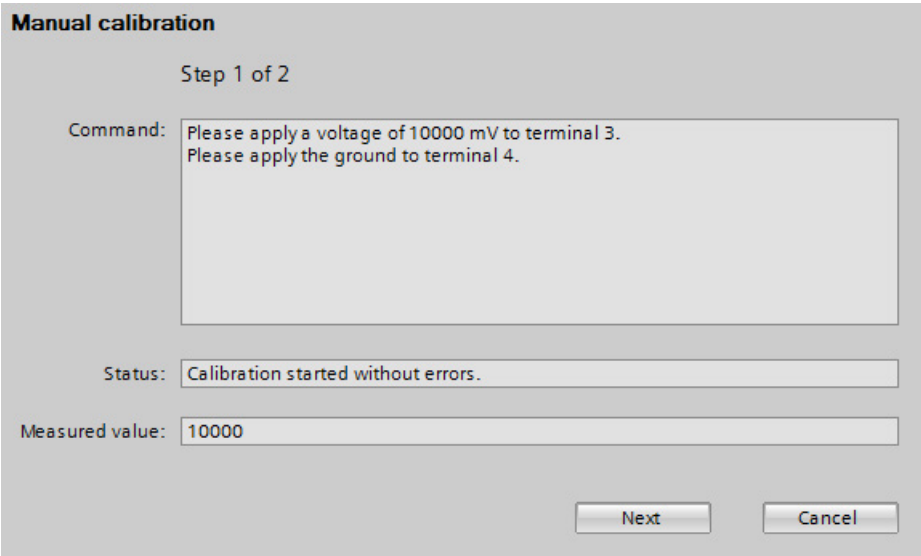

Figure 7-2 Manual calibration

- **Command:** The field "Command" indicates which actions the user has to execute during the current calibration step. Here you execute the specified actions and confirm them with the "Next" button. The module now executes all actions required for the current calibration step. If the calibration step was error-free, the next calibration step takes place.
  The instructions in the "Command" field are to be performed additively. For example, after you have applied the voltage/ground to the terminals 3/4, these connections must remain in place during the execution of the next calibration step.
- **Status:** Depending on the set type of measurement, several calibration steps are required for calibration of a channel. The field "Status" indicates whether or not the last calibration step included errors. If an error occurs during processing of a calibration step, the error is displayed here and calibration of the channel is aborted. All calibration values recorded up to this point are deleted. The calibration values that were in effect prior to the start of the user calibration are effective once again.

Note

Calibrators

If the "Wire break" diagnostics is activated for analog input modules, a test current is applied to the line for the measuring types "Resistance", "Thermistor" and "Thermocouple". This applied test current can result in inaccurate measured values in some calibrators. The wire break monitoring is therefore automatically disabled in some analog modules during the calibration.

To avoid the risk of inaccurate measured values, we recommend you disable the "Wire break" diagnostics during the calibration of analog input modules.

Result

Calibration sets new settings for the channel.

Error occurrence

If an error occurs during the calibration, the module cancels the calibration. All calibration values recorded up to this point are lost. The channel to be calibrated will then have the same settings as before the start of calibration.

7.1.3 Canceling a calibration

Requirement

- You have opened the "Online & Diagnostics" view for the selected analog module from the shortcut menu of the project and you are now in the "Functions > Calibration" area.
- The associated CPU is online.
- A calibration is currently running on the analog module.

Procedure

Click the "Cancel" button to cancel an ongoing calibration.

Result

The active calibration is canceled. The channel to be calibrated will then have the same settings as before the start of calibration.

7.1.4 Resetting analog modules to factory settings

Requirement

- You have opened the "Online & Diagnostics" view for the selected analog module from the shortcut menu of the project and you are now in the "Functions > Calibration" area.
- The associated CPU is online.

Procedure

Proceed as follows to reset the channel of an analog module to factory settings:

1. In the overview table, select the line of the channel to be calibrated.
2. Click the "Set to factory settings" button.

Result

The factory settings of the channel are restored.

Note

When you reset the current channel to the factory settings, the original calibration values that were saved in the delivery state of the module become effective once again. Any existing user calibration values of this channel are lost. You cannot restore these user calibration values.

High-speed analog modules 8

8.1 Basics

High-Speed analog modules (HS) are available for users with high demands regarding performance and speed. The main characteristics of these HS analog modules compared to Standard analog modules (ST) is their shorter cycle times. To achieve this goal, the input and output modules are equipped with components with extremely short throughput and conversion times. In addition, the entire architecture of the modules is designed for faster signal processing.

HS analog modules convert the output of measured values and output values at the same time. Each channel within the module has its own A/D or D/A converter. This means the cycle time is basically the conversion time and independent of the number of activated channels. This is true for analog input modules as well as analog output modules. This means HS modules can be used in fast isochronous mode.

Apart from isochronous mode, the HS analog modules also provide benefits in non-isochronous (free-running) mode. Due to the fast processing of the process signals, HS analog modules are able to detect changes in the process values more quickly and to respond to these events with the appropriate program blocks (for example, hardware interrupt or cyclic interrupt organization blocks). Additional information on the various organizational blocks can be found in the STEP 7 online help.

Isochronous mode

Isochronous mode refers to synchronous coupling:

- Of signal acquisition and output via the distributed I/O
- Of signal transmission via PROFIBUS or PROFINET
- Of program processing with the constant bus cycle time of PROFIBUS or PROFINET.

The result is a system that acquires its input signals in constant time intervals, processes them and outputs the output signals. Isochronous mode guarantees reproducible and defined process reaction times as well as equidistant and synchronous signal processing with distributed I/O.

The bus system and the I/O modules work synchronously with configured isochronous mode. The transmitted input and output data are linked to an "isochronous task" in the CPU. As a result, the data of a cycle are always consistent. All data of a process image belong together logically and in time. Jitter in the user program caused by the acquisition of outdated values is therefore almost impossible.

Even fast processes can be perfectly controlled by the exact timing reproducibility of all processes. Isochronous mode thus contributes to high control quality and hence to greater manufacturing precision. While possible fluctuations of the process reaction times are drastically reduced. The time-assured processing can be utilized to improve machine cycle times. Shorter cycle times increase the processing speed and help to lower production costs.

Send clocks

When you configure isochronous mode, the input and output data is synchronized within a send clock (cycle). The data of the input modules is acquired in cycle n and simultaneously transferred to the IM. The data is available in cycle n+1 in the CPU and can be processed. The CPU copies the data to the IM in the next cycle n+2. The output modules then output the data simultaneously in the same send clock. The acquisition – processing – output therefore takes place in three cycles. You can find more information on the configuration of isochronous mode in the STEP 7 online help.

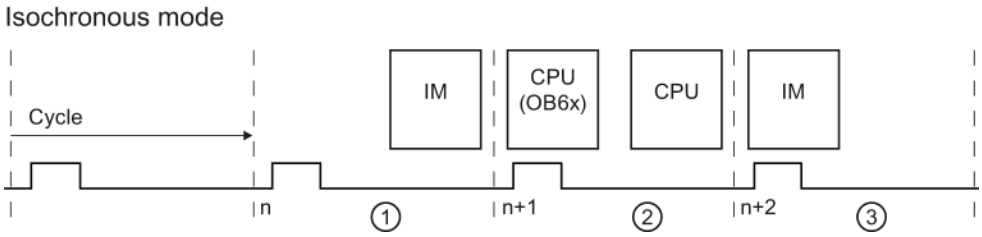

① Measured values of the input modules are acquired and copied to the IM

② Measured values are processed and output values determined

③ Output values are copied to the IM and output by output modules

Figure 8-1 3-cycle model

Oversampling

The use of the oversampling function in analog input or analog output modules requires an isochronous configuration.

With analog input modules, the set send clock is divided into time-equidistant sub-cycles. The send clocks can be subdivided into 2 to 16 sub-cycles. Each sub-cycle reads in a measured value. The read-in measured values of a data cycle are copied to the IM in the next send clock and are then available to the processing CPU one send clock later.

With analog output modules, the set send clock is also divided into time-equidistant sub-cycles. The send clocks can be subdivided into 2 to 16 sub-cycles. Each sub-cycle returns an output value. The output values are copied to the IM by the CPU within the same send clock and are written to the process one send clock later.

The read-in and output values are transmitted in the user data of the analog module. This way, the address space of the module is extended from 2 bytes of user data per channel to 16 x 2 bytes of user data per channel. If you subdivide the send clock into less than 16 sub-cycles, the unused addresses are assigned the error value 0x7FFF during input. For output, the values of the unused addresses are ignored.

Because the sub-cycles have to be within a send clock, oversampling needs an additional send clock to copy the data to the IM, unlike the 3-cycle model of isochronous mode. The result is a 5-cycle model.

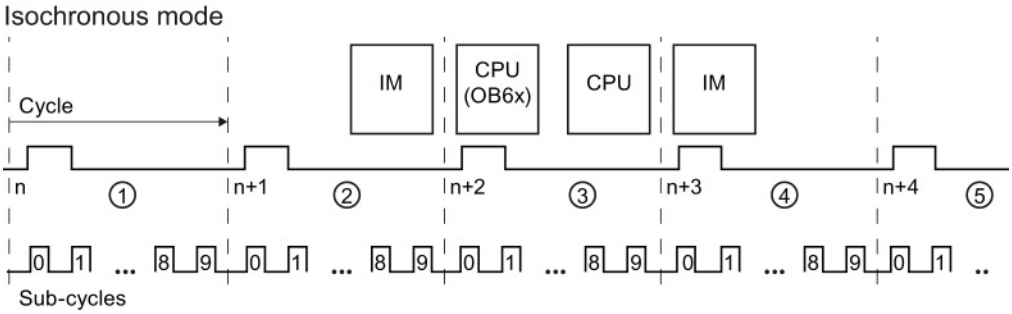

① Send clock is divided into sub-cycles which record the measured value
② Measured values are copied to the IM
③ Measured values are processed and output values determined
④ Output values are copied by the CPU to the IM
⑤ Output values are written to the process

Figure 8-2 5-cycle model

Due to the configured modules, the send clock of an IO device has a minimum possible update time, which means the time interval within which an IO device/IO controller of the PROFINET IO system is supplied with new data. Modules with oversampling functionality, however, offer the option of further reducing the update time for their channels without having to shorten the send clock for the entire S7 station at the same time. The subdivision of the send clock into time-equidistant sub-cycles therefore enables an even faster signal processing speed.

Example

In practice, the use of oversampling makes sense when the isochronous system works with only one specific specific send clock (for example, 1 ms) due to the modules used and when faster sampling of the process values is required. By using oversampling and a subdivision of the send clock into 4 sub-cycles, for example, you can sample the process values in intervals of 250 µs.

Configuring oversampling

Enable the option "Isochronous mode" in the IO device used and set the corresponding parameters ("Send clock", etc.). You define the number of sub-cycles in the relevant distributed analog module with the "Sampling rate" parameter for analog input modules and the "Output rate" parameter for analog output modules. If, for example, you configure a "Sampling rate" of 4 "Values/cycle" for a "Send clock" of 1 ms, the send clock is subdivided into 4 sub-cycles and the process values are sampled in intervals of 250 µs.

Cycle time of an analog input module

If you have configured the system property "Isochronous mode" for HS modules, all analog input modules are synchronized to a shared time within the send clock (cycle) ①. The cycle time is made up of the following time intervals: $t_Z = t_1 + t_2 + t_3 + t_4$

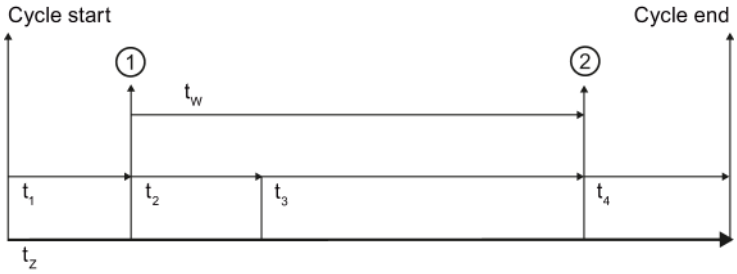

① Synchronization time for all analog input modules in isochronous mode and simultaneously time of the converted input signal at the terminal in this cycle

② Digitalized input signal is transferred to the backplane bus

t_Z Cycle time

t_1 Time between cycle start and synchronization

t_2 Hardware-related runtime up to the analog-digital converter

t_3 Processing time of digitalized input data in the module

t_4 Transfer time of the backplane bus

t_W Conversion time of the module

Figure 8-3 Cycle time of the analog input module

Cycle time of an analog output module

The synchronization time for analog output modules refers to the output of the digital-analog converter ②. Because the impedance of the connected actuator including connection cable is unknown in output modules but has a significant impact on the signal run time, the settling time cannot be added as a fixed value. The respective manuals of the output modules specify the typical load settling times as reference point. But in practice, a measurement with an oscilloscope is required for a precise measurement of the settling time. The settling time may exceed the actual end of the cycle due to very short cycle times and very high capacitive loads. The cycle time is made up of the following time intervals: $t_Z = t_1 + t_2 + t_3$

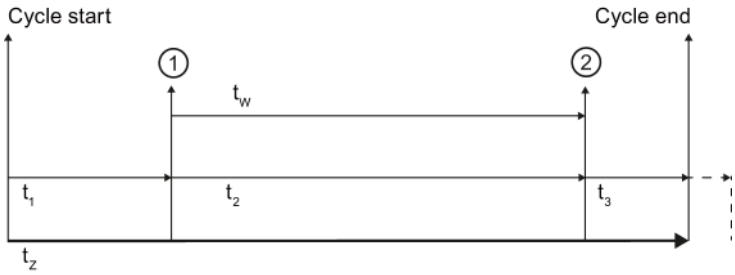

① Output data is available in digital form in the module

② Synchronization time for all analog output modules in isochronous mode and simultaneously output time of data in the digital-analog converter

t_Z Cycle time

t_1 Transfer time of the backplane bus

t_2 Processing time of data in the module until output at digital-analog converter

t_3 Settling time of hardware until setpoint of output value

t_W Conversion time of the module

Figure 8-4 Cycle time of the analog output module

Typical applications

In principle, isochronous mode is worthwhile whenever measured values must be acquired synchronously, movements must be coordinated, and process reactions must be defined and executed at the same time. There are thus numerous areas in which isochronous mode can be used.

Typical applications include, for example, the acquisition of binary signals for quality assurance at specific times and positions. But hydraulic applications with position and pressure control can benefit as well from the equidistant and isochronous data transmission.

The following example shows the use of isochronous mode within the production process of camshafts. Precise measurements must be made at several measuring points for quality assurance.

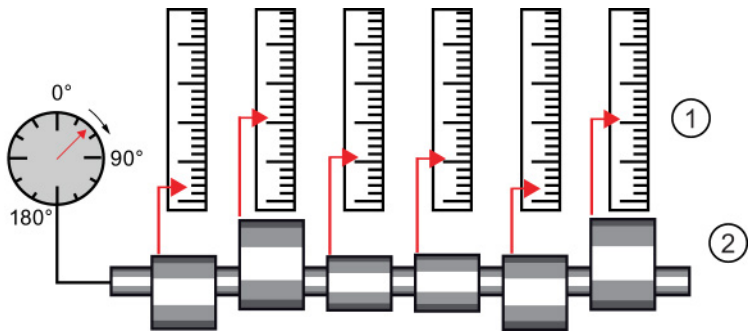

① Measured values
② Camshaft

Figure 8-5 Measuring of camshafts

By using the system property "isochronous mode" and the associated simultaneous measured value acquisition, measurement can be performed continuously. The time required for measurement is reduced. Resultant workflow:

- Continuous machining of the camshaft
- During the continuous turning, measure the positions and cam excursion synchronously
- Process the next cam shaft

All camshaft positions and the corresponding measured values are measured synchronously within a single rotation of the camshaft. This increases machine output and maintains or enhances precision of the measurement.

8.2 ST modules vs HS modules

This section gives you an overview of other important distinctions between standard and high-speed analog modules. The specified numerical values are examples of selected modules. Keep in mind that the information can vary from module to module. The exact information of specific used analog module is available in the corresponding manual.

Conversion method

Instantaneous value conversion

Instantaneous value conversion if often used to convert analog signal into digital information in HS modules. In this type of conversion a very short sample is taken from the measured signal and converted into digital data. This digital information therefore represents an instantaneous value of the measured signal. Instantaneous value conversion is used to acquire fast changes of process values, such as in the area of motion control. The quickly changing physical quantities in this case must be acquired and processed quickly in cooperation with suitable transducers. Input areas are primarily voltage, current and resistance, the latter especially for position potentiometers.

Because the measured signal is converted within a short time, there is a risk of incorrect measurements in case of faulty signals. The analog inputs working with the instantaneous value conversion method cannot detect if the sampled signal value is the target signal or an overlaying disturbing pulse. They always convert the "instantaneously" detected value. This means the pending measurement task should be carefully examined with regard to time constraints.

Integrating conversion

ST modules usually work according to the integrating conversion principle. The integrating conversion involves the sampling of a measured signal across a specified time period (integration time). Although this method is slower than instantaneous value conversion, it returns a conversion with higher immunity to interference. When you select the time interval for the conversion so that it corresponds to one or several periods of the surrounding network frequency, the omnipresent interference that is possibly also overlaying the signal is basically suppressed. SIMATIC modules give you the option to set the network frequency at which the plant is operated by means of parameter assignment. The resolution and conversion times may change depending on the interference frequency suppression that is set. The technical specifications of the respective module define these dependencies.

Analog inputs with integrating methods can be used universally. Even though the cabling must also be carefully designed with these analog inputs, the requirements are much less than those for analog inputs with instantaneous value conversion due to their slower signal acquisition that is basically immune to interference.

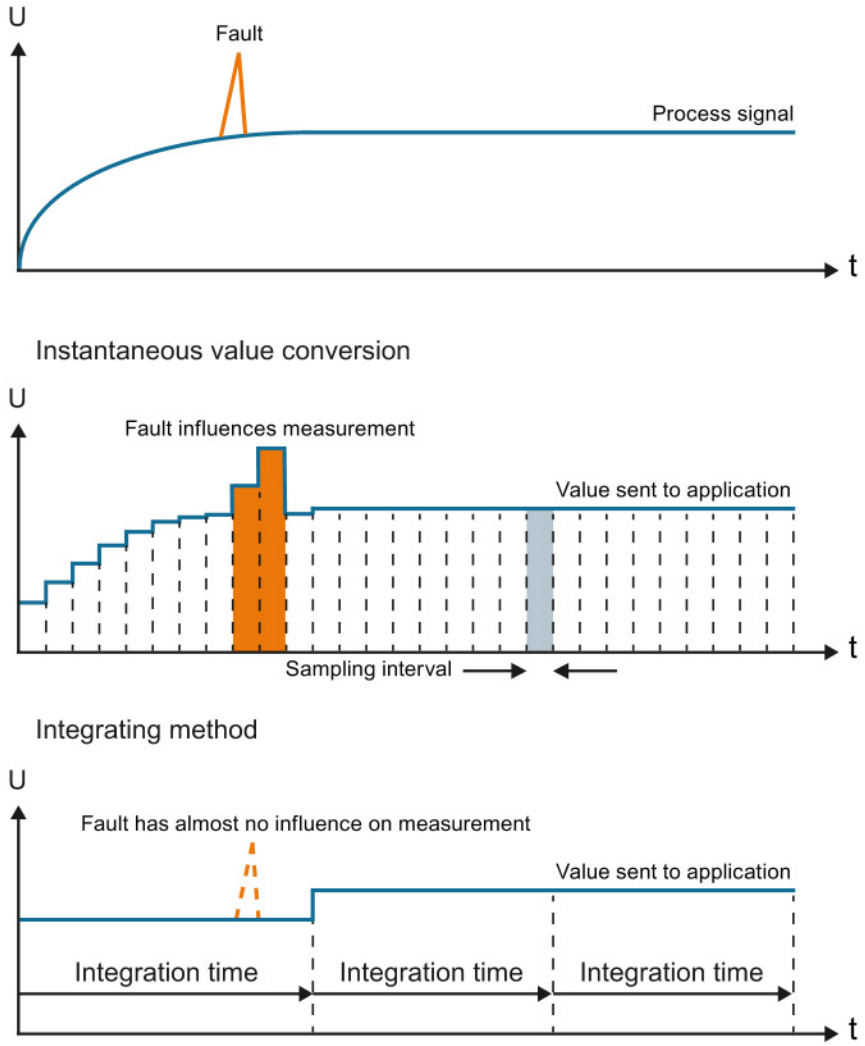

Figure 8-6 While an interference directly influences the value that is supplied to the application with instantaneous value encryption, its influence is negligible for the integrating method.

Electromagnetic compatibility

The entire architecture of HS modules is designed for fast processing of the signals. An interference-free design is therefore critical when using HS modules.

The following rules apply to the wiring of HS modules with sensors and actuators:

- Keep the cables as short as possible
- Use shielded and twisted pair cables
- Low-impedance connection of the cable shield at the respective shield supports
- Short cable loop between shield support and terminal connection

---

Note

Interference-free design

Make sure that you pay close attention to the notes listed in the function manual Configuring interference-free controllers (http://support.automation.siemens.com/WW/view/en/59193566) when using HS modules.

Effect of load on the settling time

The settling times to the setpoint achieved with analog output modules depend on the applied load, among other things. To take advantage of the faster conversion times, only small loads (e.g., max. 47 nF) are permitted in HS modules as specified in the technical specifications.

The type of load has an effect on the form of settling to the setpoint when using output modules. Capacitive loads reduce the rise time due to the charging process and can cause the output signal to overshoot. Inductive loads result in a delayed current increase due to remagnetization and therefore also a shorter rise time. The figure below shows the output signal with no/small ①, medium ② and high ③ capacitive load.

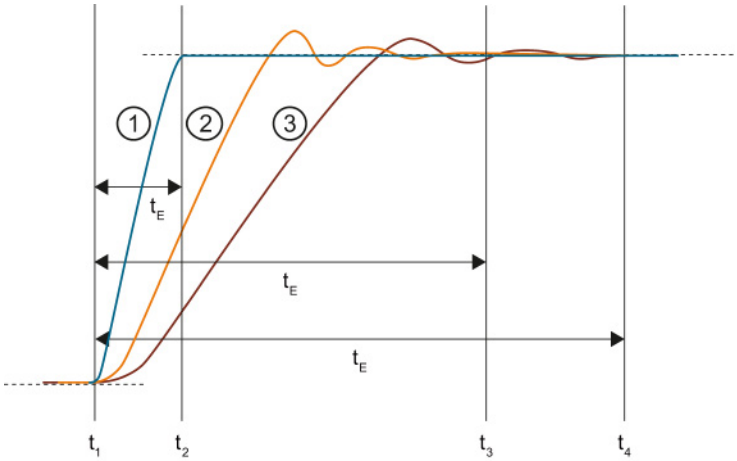

① Reference curve of a signal with no/small load capacity

② Signal with a load capacity of 47 nF

③ Signal with a load capacity of 100 nF

t_E Settling time

t_1 Module ends conversion at the terminal of the analog output channel and outputs the analog signal

t_2 Signal ① has settled and the specified analog output value has been reached (residual error 1 %)

t_3 Signal ② has settled and the specified analog output value has been reached (residual error 1 %)

t_4 Signal ③ has settled and the specified analog output value has been reached (residual error 1 %)

Figure 8-7 Effect of different loads on the settling time

Effect of the cable length on the settling time

Long cables between signal source and module are a target for interferences. You should therefore keep the cables as short as possible especially for HS modules. Cables have a capacitive and inductive component and therefore have an effect on the settling behavior of the signal.

The example below shows the jump of the output voltage of an HS output module with small, medium and long cable length. The overshoot of the input signal increases with the length of the cable and therefore the time until it reaches the setpoint.

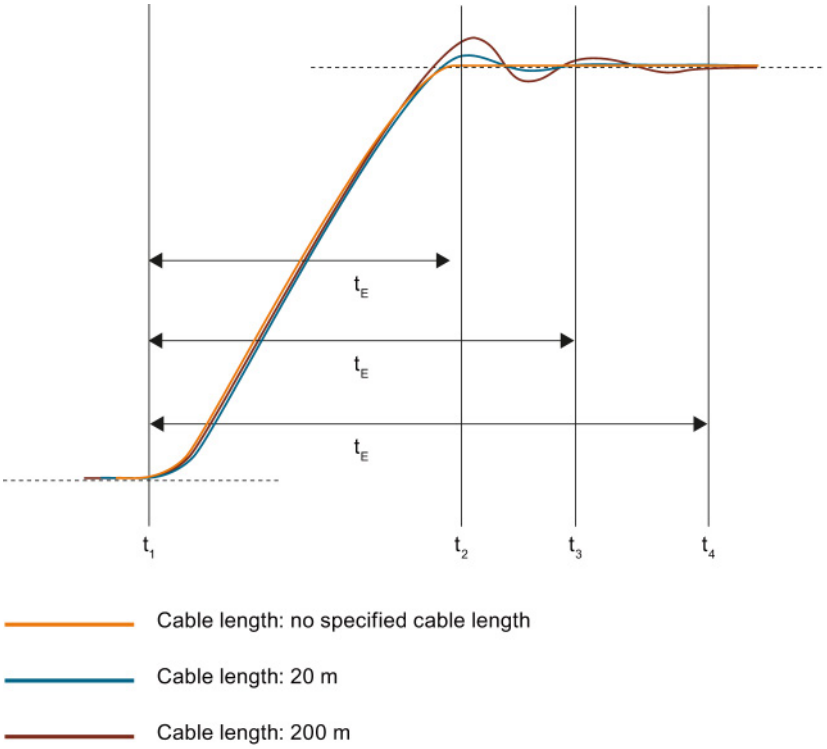

t_E Settling time

t_1 Module ends conversion at the terminal of the analog output channel and outputs the analog signal

t_2 The signal running through a cable with short length has settled and the specified analog output value has been reached (residual error 1 %)

t_3 The signal running through a 20 m cable has settled and the specified analog output value has been reached (residual error 1 %)

t_4 The signal running through a 200 m cable has settled and the specified analog output value has been reached (residual error 1 %)

Figure 8-8 Effect of different cable lengths on the settling time

Effect of the value jump on the settling time

The figure below shows the effect of the height of the value jump between different output values on the settling time for analog output modules. The dotted line indicates the time when the signal has reached the setpoint. The higher the value jump, the later the signal reaches the setpoint.

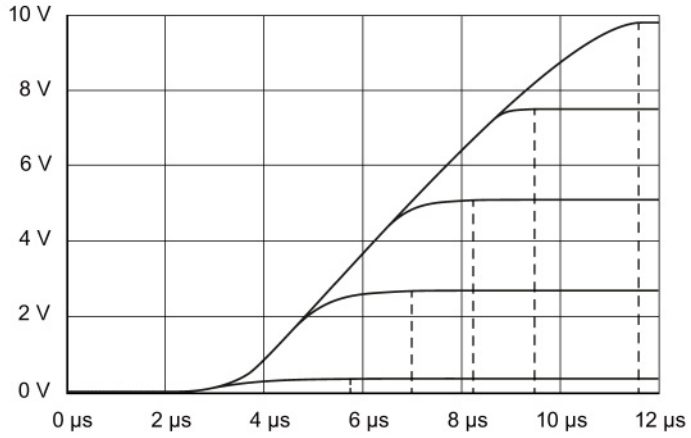

Figure 8-9 Settling time of five different analog signals with different value jumps

Index

A

Abbreviations, 66, 103
Accuracy, 15
Actuators, 11, 103, 104
Additional support, 4
Analog input modules, 60, 65
Analog output modules, 60, 104
Analog value conversion, 60
Application time, 53

B

Basic conversion time, 49
Basic error limit, 15, 24
Basic knowledge
    Required, 3
Bipolar measuring range, 25
Blocks
    SCALE, 17
    UNSCALE, 19
Burden, 57

C

Calibration, 106
    Canceling, 111
Channels
    Calibrating, 108
    Resetting to factory settings, 112
Common mode, 67, 69
Common mode rejection, 30, 33
Common mode voltage, 67
compensation
    Reference channel of group 0, 88
Compensation
    none/external, 98
Compensation with
    Dynamic reference temperature, 94
    fixed reference temperature, 91
    internal reference junction, 84
    RDT (0), 100
    Reference channel of the module, 86
conversion
    analog-to-digital, 21, 51
    digital-to-analog, 21
Conversion
    analog-to-digital, 11
    Digital-to-analog, 11
Conversion time, 27, 49, 53
coupling
    capacitive, 34
    galvanic, 31
    inductive, 31, 34
CPU, 11, 60, 67, 69
Crosstalk, 34
Crosstalk attenuation, 35
Current, 10

D

Digital multimeter, 59
Direct voltage, 69
Documentation
    additional, 7
Drift, 26
Dynamic reference temperature
    Overview, 83

E

EMC, 32
Error
    Linearity errors, 21
    Output error, 25
    Temperature error, 26
ET 200AL, 7
ET 200eco PN, 7
ET 200MP, 7
ET 200pro, 7
ET 200SP, 7
External compensation
    Overview, 83

F

Factory settings
    Resetting channels to, 112
Fixed reference temperature
    Overview, 82

G

Ground connection, 31
GSD file, 48

H

High-speed analog modules
    Isochronous mode, 113

I

Input impedance, 31
Insulation voltage, 67, 69
Interference frequency suppression, 27
Interference voltage, 31
Internal reference junction, 84
    Overview, 81
Isochronous mode
    Oversampling, 114

L

Line frequency
    16 2/3 Hz, 28
    400 Hz, 28
    50 Hz, 28
    60 Hz, 28
Linearity, 21
lines
    for analog signals, 66
Lines
    for analog signals, 103
Load, 53
Loads, 103, 104

M

Material composition
    of thermocouples, 78
Measurement point, 79
Measuring ranges
    Overflow, 42
    Overrange, 42
    Rated range, 42
    Underflow, 42
    Underrange, 42

O

Online catalog, 4
Operating principle
    of thermocouples, 80
Operational limit, 15, 23

P

Pressure, 9
PROFIBUS, 113
PROFINET, 113

Q

Quality Information (QI), 46

R

Reference channel of group 0
    Overview, 82
Reference channel of the module
    Overview, 82
Reference junction, 79
Reference junction temperature, 81
Reference potential, 69, 104
Repeat accuracy, 22
Representation of analog values, 60
    Binary representation, input ranges, 62, 63
    Binary representation, output ranges, 63
Resistance, 10
Resistance thermometers
    see Thermal resistor, 74
Resistance transducers
    4-wire connection, 74
Resolution, 13, 60
Response time, 52
RTD (0)
    Overview, 83

S

S7-1500, 7
Scaling, 17
Scope
    of the documentation, 3
Sensors,
Series mode rejection, 31, 33
Settling time, 53
Setup
    of thermocouples, 79

Sign (S), 60
Signals
    Analog, 9
    Binary, 9
    Processing, 12
Smoothing
    exponential, 56
    Linear, 55
Speed, 9
Standards
    EN 61131, 15
    FDA, 106
Step 7, 4
Step response, 55

T

Temperature, 9
Temperature measuring range
    of thermocouples, 78
Thermal resistor
    2-wire connection, 75
    3-wire connection, 75
    Connecting, 74
Thermocouples
    Wiring, 76
TIA Portal, 4
Transducers, 72
    2-wire, 57, 72
    4-wire, 73
    Connecting, 65
    Current transducers, 10, 57, 72
    Resistance transducers, 10
    Thermal resistor, 74
    Thermocouples, 10, 27, 76, 79
    Voltage transducers, 10, 71
    Wiring, 72
Types of diagnostics, 36
    Common mode error, 43
    No supply voltage, 41
    Overflow/underflow, 42
    Overload, 45
    Reference channel error, 43
    Reference junction, 44
    Short-circuit, 44
    Wire break, 41

U

Unscaling, 19

V

Value status, 46
Variables
    Analog, 9
    physical, 10
variance
    measured value, 22
Voltage, 10
Voltage drop, 59
Voltage measuring ranges
    Overflow, 14
    Overrange, 14
    Rated range, 14
    Underflow, 14
    Underrange, 14
Voltage range, 27

W

Wire break, 41

Z

Zener diode, 59

SIEMENS

SIMATIC

S7-1500, ET 200MP, ET 200SP, ET 200AL
Designing interference-free controllers

Function Manual

Preface

Documentation guide 1

Basic information on electromagnetic compatibility 2

Interference-free cable routing 3

Cable shielding 4

Equipotential bonding 5

Special measures for interference-free operation 6

Lightning protection and overvoltage protection 7

06/2014

A5E03461486-AB

Legal information

Warning notice system

This manual contains notices you have to observe in order to ensure your personal safety, as well as to prevent damage to property. The notices referring to your personal safety are highlighted in the manual by a safety alert symbol, notices referring only to property damage have no safety alert symbol. These notices shown below are graded according to the degree of danger.

⚠ DANGER
indicates that death or severe personal injury **will** result if proper precautions are not taken.

⚠ WARNING
indicates that death or severe personal injury **may** result if proper precautions are not taken.

⚠ CAUTION
indicates that minor personal injury can result if proper precautions are not taken.

NOTICE
indicates that property damage can result if proper precautions are not taken.

If more than one degree of danger is present, the warning notice representing the highest degree of danger will be used. A notice warning of injury to persons with a safety alert symbol may also include a warning relating to property damage.

Qualified Personnel

The product/system described in this documentation may be operated only by **personnel qualified** for the specific task in accordance with the relevant documentation, in particular its warning notices and safety instructions. Qualified personnel are those who, based on their training and experience, are capable of identifying risks and avoiding potential hazards when working with these products/systems.

Proper use of Siemens products

Note the following:

⚠ WARNING
Siemens products may only be used for the applications described in the catalog and in the relevant technical documentation. If products and components from other manufacturers are used, these must be recommended or approved by Siemens. Proper transport, storage, installation, assembly, commissioning, operation and maintenance are required to ensure that the products operate safely and without any problems. The permissible ambient conditions must be complied with. The information in the relevant documentation must be observed.

Trademarks

All names identified by ® are registered trademarks of Siemens AG. The remaining trademarks in this publication may be trademarks whose use by third parties for their own purposes could violate the rights of the owner.

Disclaimer of Liability

We have reviewed the contents of this publication to ensure consistency with the hardware and software described. Since variance cannot be precluded entirely, we cannot guarantee full consistency. However, the information in this publication is reviewed regularly and any necessary corrections are included in subsequent editions.

Siemens AG
Industry Sector
Postfach 48 48
90026 NÜRNBERG
GERMANY

A5E03461486-AB
Ⓟ 07/2014 Subject to change

Copyright © Siemens AG 2013 - 2014.
All rights reserved

Preface

Purpose of the documentation

This documentation will support you in installing and commissioning programmable controllers.

Correct configuration is essential for fault-free operation of programmable controllers.

Basic knowledge required

The following knowledge is required in order to understand the documentation:

- General knowledge of automation technology
- Knowledge of the industrial automation system SIMATIC
- Knowledge of VDE (German Association for Electrical, Electronic and Information Technologies) and EC regulations
- Knowledge of the rules for installing controllers and switchgear

Conventions

You should also pay particular attention to notes such as the one shown below:

Note

A note contains important information on the product described in the documentation, on the handling of the product or on the section of the documentation to which particular attention should be paid.

Scope of the documentation

This documentation is valid for all products of the product series SIMATIC S7-1500, ET 200MP, ET 200SP and ET 200AL.

The product series SIMATIC S7-1500, ET 200MP and ET 200SP are approved for IP20 degree of protection, i.e. the modules of these product series must be installed in a control cabinet.

The SIMATIC ET 200AL product series is approved for IP65/IP67 degree of protection, i.e. the modules need **not** be installed in a control cabinet.

Changes compared to previous version

Changes / enhancements described in this manual, compared to the previous version (version 01/2013):

- Extension of the scope of validity to the distributed I/O system ET 200AL
- Supplement to the section Connection of the cable shielding for ET 200AL
- Components for lightning protection potential equalization amended

Additional support

Additional information on SIMATIC products is available on the Internet. The associated documentation is also available on the Internet.

- The range of technical documentation for the individual SIMATIC products and automation systems can be found on the Internet (http://www.siemens.com/simatic-tech-doku-portal).
- The online catalog and the ordering system are available on the Internet (http://mall.automation.siemens.com).

Security information

Siemens provides products and solutions with industrial security functions that support the secure operation of plants, solutions, machines, equipment and/or networks. They are important components in a holistic industrial security concept. With this in mind, Siemens' products and solutions undergo continuous development. Siemens recommends strongly that you regularly check for product updates.

For the secure operation of Siemens products and solutions, it is necessary to take suitable preventive action (e.g. cell protection concept) and integrate each component into a holistic, state-of-the-art industrial security concept. Third-party products that may be in use should also be considered. You can find more information about industrial security on the Internet (http://www.siemens.com/industrialsecurity).

To stay informed about product updates as they occur, sign up for a product-specific newsletter. You can find more information on the Internet (http://support.automation.siemens.com).

Table of contents

Preface 3
1 Documentation guide 6
2 Basic information on electromagnetic compatibility 7
2.1 Overview of possible interference 7
2.2 Coupling mechanisms 8
3 Interference-free cable routing 9
3.1 Classifying cables into cable categories 9
3.2 Cable routing inside cabinets in buildings 11
3.3 Cable routing outside cabinets and inside buildings 11
3.4 Cable routing outside buildings 12
3.5 Underground cable routing 13
3.6 Bending radii and tensile strength of cables 14
4 Cable shielding 15
4.1 Connecting the cable shielding for S7-1500 and ET 200MP 17
4.2 Connecting the cable shielding for ET 200SP 19
4.3 Connecting the cable shielding for ET 200AL 20
4.4 Connecting the cable shield for bus cables 21
4.5 Connecting the cable shield for other components 22
5 Equipotential bonding 23
6 Special measures for interference-free operation 25
7 Lightning protection and overvoltage protection 26
7.1 What is lightning and overvoltage protection? 26
7.2 Lightning protection zone concept 27
7.3 Rules and components for the transitions between lightning protection zones 29
Index 37

Documentation guide 1

Introduction

The documentation of the SIMATIC products has a modular structure and covers diverse topics concerning your automation system.

The complete documentation for the S7-1500, ET 200SP, ET 200MP and ET 200AL systems consists of the respective system manuals, function manuals and product manuals.

The STEP 7 information system (online help) also supports you when configuring and programming your automation system.

Overview of documentation on the subject of designing interference-free controllers

The following table lists additional documentation which supplements this description of designing interference-free controllers.

Table 1- 1 Documentation on the subject of designing interference-free controllers

Topic	Documentation	Most important contents
System description	System manual S7-1500 Automation System (http://support.automation.siemens.com/WW/view/en/59191792)	• Application planning • Installation • Wiring • Commissioning
	System manual ET 200SP Distributed I/O System (http://support.automation.siemens.com/WW/view/en/58649293)	
	System Manual ET 200MP Distributed I/O System (http://support.automation.siemens.com/WW/view/en/59193214)	
	System manual Distributed I/O System ET 200AL (http://support.automation.siemens.com/WW/view/en/89254965)	

SIMATIC manuals

All current manuals for SIMATIC products are available for download free of charge from the Internet (http://www.siemens.com/automation/service&support).

Basic information on electromagnetic compatibility 2

2.1 Overview of possible interference

Introduction

SIMATIC products and their components have been developed for use in industrial environment and meet the legal EMC requirements (EMC - Electromagnetic Compatibility). However, you still need to conduct an EMC assessment before installing your controller in order to identify possible sources of interference and to include these in your considerations.

Electromagnetic compatibility

Electromagnetic compatibility describes the ability of an electrical device to function properly in its particular electromagnetic environment. Neither the environment itself nor the electrical device are influenced in an unacceptable manner.

Possible interference

Electromagnetic interference can influence an automation system in various ways. The most significant interferences and their causes are as follows:

- Electromagnetic fields having a direct influence on the system
- Interference coupling caused by bus signals (for example, PROFINET)
- Interference influencing the system via the process wiring
- Interference which reaches the system via the power supply and/or protective ground

The figure below shows the likely paths of electromagnetic interference.

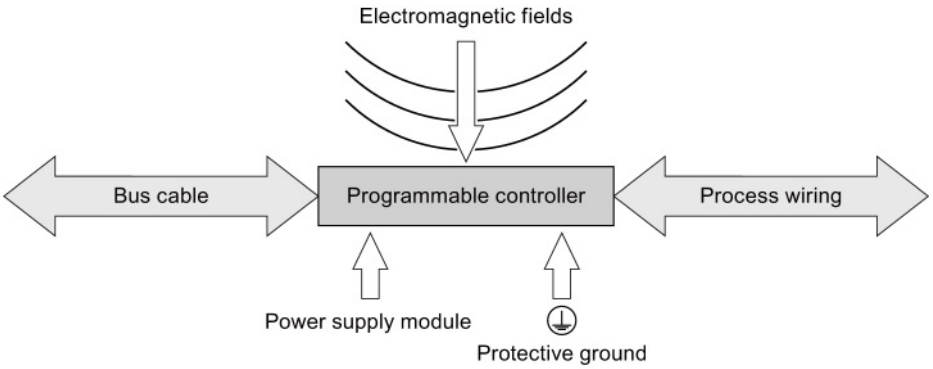

Figure 2-1 Electromagnetic interference

2.2 Coupling mechanisms

Depending on the emitting medium and the distance between the source of interference and the device, interference can reach the automation system via four different coupling mechanisms.

The following table shows possible causes and typical sources of interference for the various coupling mechanisms:

Table 2- 1 Coupling mechanisms

Coupling mechanism	Cause	Typical sources of interference
Galvanic coupling	Two electric circuits share the same cable	• Clocked devices (influence on the network due to converters and third-party power supply units) • Starting motors • Potential differences on component enclosures with shared power supply
Capacitive coupling	Potential difference between conductors	• Interference coupling due to parallel routing of signal cables • Static discharge of the operator
Inductive coupling	Mutual influencing of current-carrying conductor loops. The magnetic fields caused by the current flow induce interference voltages.	• Transformers, motors, electrical welding equipment • Power supply cables routed in parallel • Cables whose currents are switched • High-frequency signal cables • Unwired coils
Radiation coupling	Effect of an electromagnetic wave on a cable configuration. This wave induces currents and voltages.	• Neighboring transmitters (for example, walkie-talkies) • Spark gaps (spark plugs, collectors of electrical motors, welding devices)

Interference-free cable routing 3

This chapter describes the EMC-compatible classification of cables and cable routing for bus, data, signal and supply lines.

3.1 Classifying cables into cable categories

Classify the cables into cable categories according to their sensitivity to interference coupling and interference emission. The further away from one another cables of different cable categories are installed, the lower the mutual influence by capacitive and inductive coupling.

The following table shows the cable categories into which you can classify your cables accordingly.

Table 3- 1 Cable categories

Category A	• Signal lines to I/O modules • Bus and data lines (for example, PROFIBUS, PROFINET) • Lines to HMI devices • Supply lines for extra-low voltages (< 24V DC or < 60V AC)
Category B	• Supply lines with safe electrical isolation (SELV) • Supply voltages < 400 V
Category C	• Supply voltages > 400 V

The following table shows the minimum clearance you must maintain when installing cables.

Table 3- 2 Combination of cable categories

	Category A	Category B	Category C
Category A	• In common bundles or cable channels	• In separate bundles or cable channels (no minimum clearance necessary)	• Inside cabinets in separate bundles or cable channels • Outside cabinets, but inside buildings, on separate cable racks with at least 10 cm clearance
Category B	• In separate bundles or cable channels (no minimum clearance necessary)	• In common bundles or cable channels	
Category C	• Inside cabinets in separate bundles or cable channels • Outside cabinets, but inside buildings, on separate cable racks with at least 10 cm clearance		• In common bundles or cable channels

If you install different cable categories in the same cable channel, use metallic cable channels with metallic partition.

The following figure show a schematic view of a cable channel with partition.

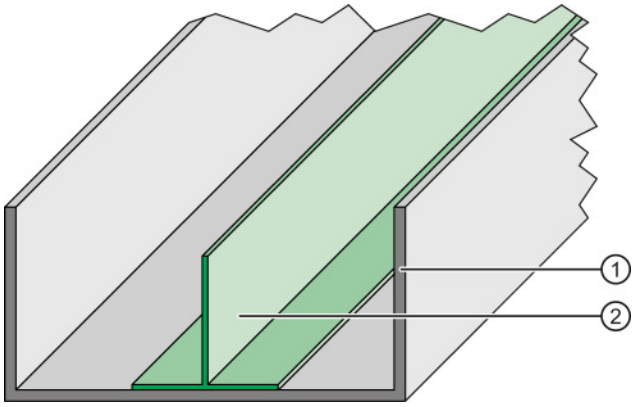

① Metallic cable channel
② Metallic partition

Figure 3-1 Cable channel with partition

3.2 Cable routing inside cabinets in buildings

Rule

Observe the following rules for proper cable routing inside of control cabinets:

- If a crossing of cables is unavoidable, then cross the cables at an angle of 90°, if possible, in order to keep interference from electrical fields as low as possible.
- Do not route cables coming into the cabinet from outside parallel to the shield supports.

3.3 Cable routing outside cabinets and inside buildings

Rule

Observe the following rules for proper cable routing outside control cabinets and inside buildings:

- Read the information in section Assigning cables to cable categories (Page 9).
- If you route the cables in metallic cable channels, you can rearrange the cable channels next to each other.
- Connect metallically conductive cable racks to the potential equalization of the building.
- If a crossing of cables is unavoidable, then cross the cables at an angle of 90°, if possible, in order to keep interference from electrical fields as low as possible.

3.4 Cable routing outside buildings

If possible, lay the cables outside buildings on metallic cable holders. Connect the cable holder joints galvanically to each other and ground the cable holders.

Rule

Observe the following rules when laying cables outside of buildings:

- Use metallic auxiliary terminal boxes to connect cables coming from outside at the junction to cables inside the building. Ground these boxes.
- If a crossing of cables is unavoidable, then cross the cables at an angle of 90°, if possible, in order to keep interference from electrical fields as low as possible.
- Integrate bus cables installed outside of buildings into your lightning and overvoltage concept.

Lightning protection

When you lay cables for SIMATIC devices outside of buildings, you have to take internal and external lightning protection measures.

Reference

For additional information about lightning protection, refer to chapter Lightning protection and overvoltage protection (Page 26).

3.5 Underground cable routing

Rule

Observe the following rules for underground cable routing:

- Lay the cable at least 60 cm below the ground surface.
- Install equipotential bonding approximately 20 cm above the cable. You can use a zinc-plated ground strip, for example. The ground strips also serve as protection against lightning strikes.
- Protect the cable against mechanical damage by, for example, using a plastic pipe and/or a cable warning tape in the ground, approximately 40 cm above the cable.
- Separate the various cable categories in the ground using cable channels, for example.

The following figure shows the arrangement of cable warning tape, equipotential bonding and a cable.

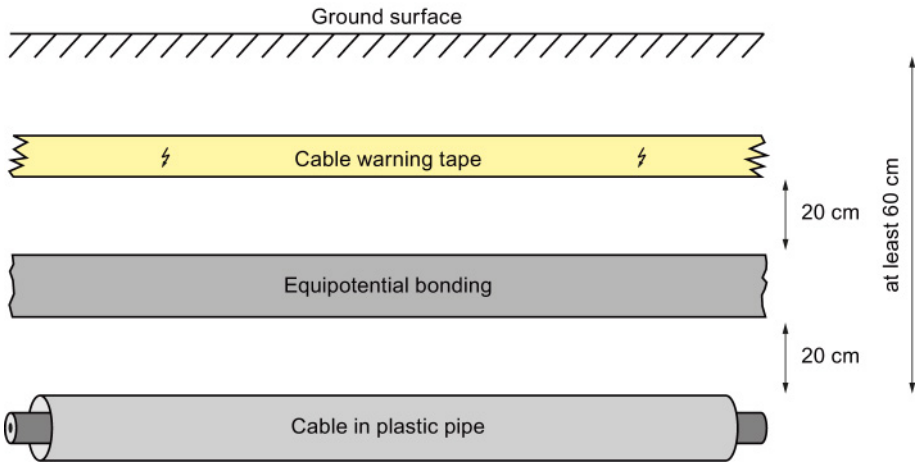

Figure 3-2 Arrangement underground

Lightning protection

When you lay cables for SIMATIC devices outside of buildings, you have to take internal and external lightning protection measures.

Reference

For additional information about lightning protection, refer to chapter Lightning protection and overvoltage protection (Page 26).

3.6 Bending radii and tensile strength of cables

Tensile strain

A high strain on the cables due to tensile forces leads to conductor material flow. The tensile forces thus cause a change in the structure of the material and lower the conductor cross-section. This decrease of the conductor cross-section leads, in turn, to a heating of the conductor and premature wear of the conductor insulation.

Use the supplied cable ties to relieve the terminal points on the plugs for the I/O modules of the product series SIMATIC S7-1500 and SIMATIC ET 200MP.

Bending radius

If you select too small bending radii when laying cables, this will cause the materials to stretch and compress and changes the mechanical structure of the cables. The electrical properties are impaired as a result.

Pay particular attention to the bending radii of fiber-optic cables. If the bending radii are too small, the optical properties of the fiber-optic cable are adversely affected. Reliable transmission is no longer guaranteed.

Cable shielding

4

Shielding is a measure to attenuate (dampen) magnetic, electrical or electromagnetic interference fields.

Interference currents on cable shields are diverted from the shield connection to ground. To avoid interference as a result of these currents, it is imperative to provide a low-impedance connection to the protective conductor.

Rules

Ideally, you should use cables equipped with a protective braided shield. The shield's contacting must be more than 80% at the contact point. Avoid tensile and compression strain on cables with a foil shield. This type of strain can damage the foil shield very slightly at the fastening point. The result is a reduced shielding effect.

Shield connection with grounding at both ends

Always connect the cable shields to the ground at both ends. Low and high frequency interference can be reduced only by connecting both ends of the shield to the ground.

Note

Laying an additional equipotential bonding cable

Whenever potential differences develop between the grounding points, an equalizing current flows on a shielding that is connected at both ends. In this case, lay an additional equipotential bonding cable. You can find more information on this topic in the chapter Equipotential bonding (Page 23).

Shield connection with capacitive grounding at one end

If you do not have the option of installing equipotential bonding (in plants covering a large area, for example), connect capacitive grounding to one end of your shield. In this case, only high-frequency interference will be reduced.

The following figure shows the capacitive grounding of a cable shield. The values indicated in the figure are indicative and will differ from system to system. The capacity diverts the high-frequency interference. This capacity provides high-impedance protection for the power frequency (50 or 60 Hz), thus preventing equalizing currents via the shield. A parallel switched high-impedance resistance prevents the capacity from loading a direct current.

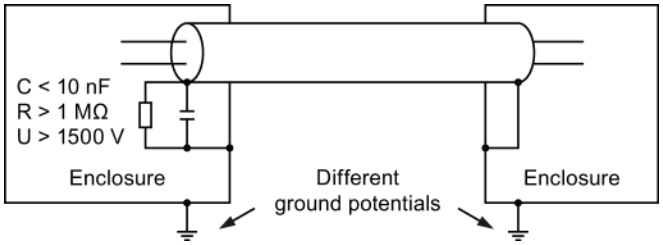

Figure 4-1 Capacitive grounding of the shield

4.1 Connecting the cable shielding for S7-1500 and ET 200MP

A special shield design has been developed for the automation system S7-1500 and the distributed I/O system ET 200MP for the shield connection of the signal lines. The connection element for the cable shield consists of a shield clamp and a shield terminal.

If the front connector is located in the module, the interference currents which occur are diverted by the connection element to the ground via the module and mounting rail.

The shield clamp is a pluggable mount for the analog and technology modules. The shield clamp allows the low-impedance application of cable shields with minimum installation times.

The following figure shows a front connector with mounted shield clamp and associated shield terminal.

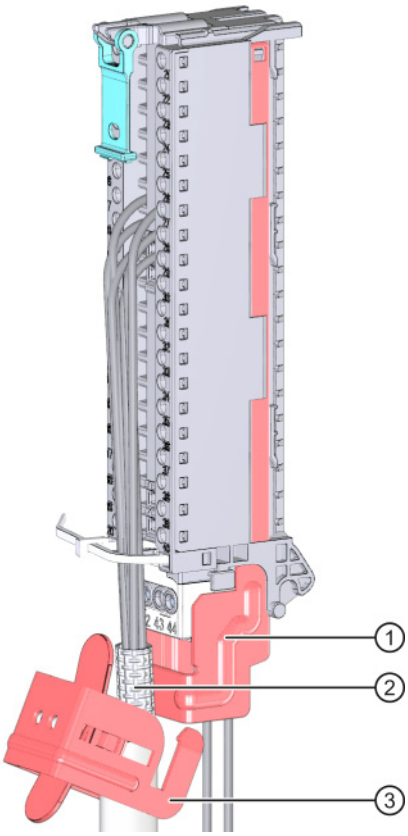

① Shield clamp
② Stripped cable shield
③ Shield terminal

Figure 4-2 Shield clamp and shield terminal on front connector

The shield clamp is inserted from below onto the front connector until the shield clamp latches audibly. The shield terminal is fastened to the shield clamp.

Additional information

For additional information on installing the shield clamp and shield terminal, refer to the "Connecting front connectors" chapter in the S7-1500 automation system (http://support.automation.siemens.com/WW/view/en/59191792) or ET 200MP Distributed I/O System (http://support.automation.siemens.com/WW/view/en/59193214) system manuals.

4.2 Connecting the cable shielding for ET 200SP

A special shield design has been developed for the shield connection of the signal lines of the ET 200SP distributed I/O system. The connection element for the cable shield consists of a shield terminal.

If the front connector is located in the module, the interference currents that occur are diverted by the connection element via BaseUnit and mounting rail to the ground.

The shield terminal is plugged into a mount of the BaseUnit. The shield terminal allows the low-impedance application of cable shields with minimum installation times. There is no need for the otherwise standard connection of the cable shield at the cabinet entry.

The following figure shows a BaseUnit with shield terminal and shield support.

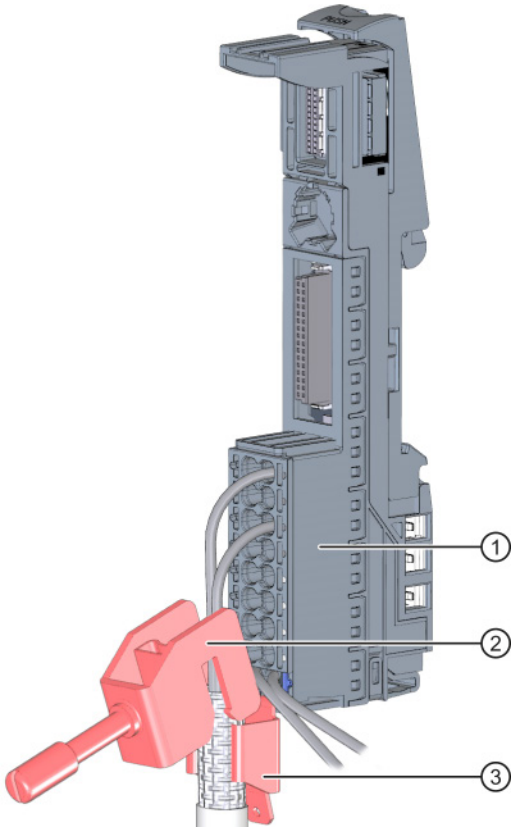

① BaseUnit of ET 200SP
② Shield terminal
③ Shield support with flat plug for terminal sockets

Figure 4-3 BaseUnit with shield terminal

Additional information

For more information on mounting the shield terminal, refer to the "Connecting cable shields" chapter of the system manual ET 200SP Distributed I/O System (http://support.automation.siemens.com/WW/view/en/58649293).

4.3 Connecting the cable shielding for ET 200AL

Each module of the ET 200AL distributed I/O system features a functional ground connection.

Use only shielded cables for connection of analog signals, PROFINET and PROFIBUS signals and for the ET-Connection. If you have screwed the plug in correctly, the interference currents that occur are diverted to the metal parts and functional ground.

If you attach an ET 200AL module to a **conductive**, grounded base, the lower mounting bolt establishes a conductive connection to the earth potential.

If you attach an ET 200AL module to a **non-conductive** base, connect the lower mounting bolt to the ground wire at the same time.

The following figure shows how to connect the functional ground via a ground wire, using the IM 157-1 PN interface module as an example.

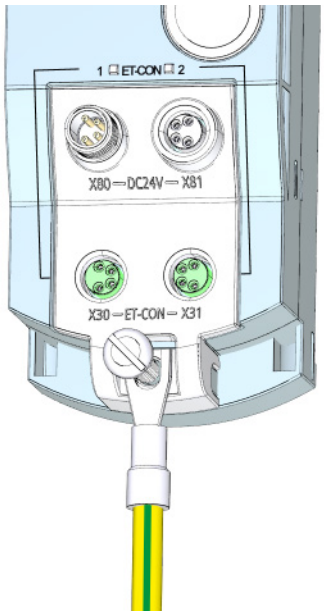

Figure 4-4 Connect functional ground via a ground wire

Additional information

You can find more information on installing ET 200AL modules in the Installing Modules section of the system manual Distributed I/O System ET 200AL (http://support.automation.siemens.com/WW/view/en/89254965).

4.4 Connecting the cable shield for bus cables

In the S7-1500, ET 200MP and ET 200SP systems, the cable shields of PROFIBUS and PROFINET cables are connected to the existing bus connection elements. Cable shield and shield support are thus galvanically connected to each other. If the connector is plugged into the module, the coupled interferences are diverted via the module carrier to the ground. There is no need for the otherwise standard connection of the shield at the cabinet entry.

The following figure shows examples of the shield connection for various bus connection elements.

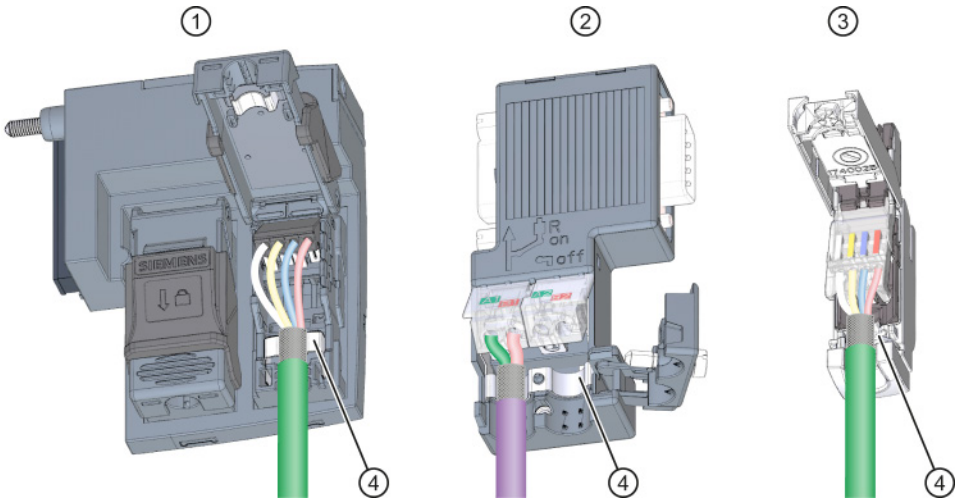

① BusAdapter BA 2xRJ45 for ET 200SP
② PROFIBUSconnector, 9-pin D-Sub
③ PROFINETconnector RJ45
④ Shield support of respective connector

Figure 4-5 Shield connection for bus connection elements

Reference

For more information on installing the connectors, refer to the "Connecting PROFINET IO BusAdapter BA 2xRJ45 to the interface module" chapter of the system manual ET 200SP Distributed I/O System (http://support.automation.siemens.com/WW/view/en/58649293) and to the supplied product information.

4.5 Connecting the cable shield for other components

The following procedures for connecting the shield to devices that do not have any special shield terminals have proven themselves in practice.

Rule

Note the following points when handling the shield:

- Always use metal clamps to mount the protective braided shields of the cables. The clamps must cover a large area of the shield and provide appropriate contact force.
- Attach the shield to a shielding bus directly after the point where the cable enters the cabinet. If you route the shield further to the module, do not connect the shield again in front of the module, as this would create ground loops.

The following figure shows standard types of shield fastening.

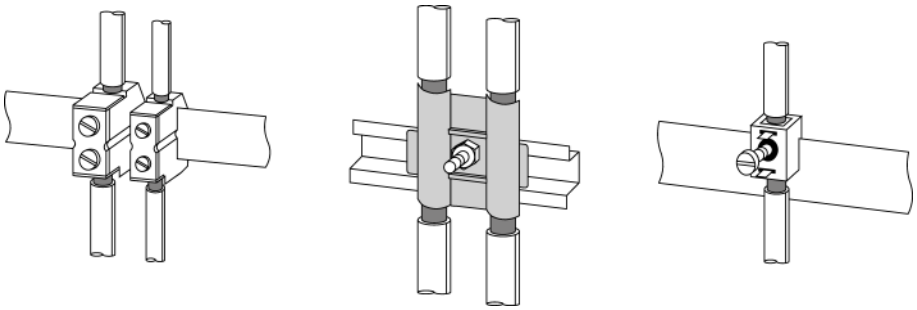

Figure 4-6 Cable shielding

Equipotential bonding

5

Definition according to DIN VDE 0100

Equipotential bonding is an electrical connection which brings the bodies of electrical equipment and external conductive parts to the same, or nearly the same, potential.

Equipotential bonding is divided into:

- Main equipotential bonding
- Additional local equipotential bonding

Both versions of equipotential bonding are of great importance not only for protection against electric shock, but also for EMC.

Main equipotential bonding

Main equipotential bonding is required by DIN VDE 0100 Part 410 as a protective measure and is mandatory, regardless of other measures for protection against direct and indirect contact.

Additional local equipotential bonding

Additional local equipotential bonding is required if:

- Unfavorable grounding conditions exist between plant parts due to different conductivity of the soil (for example, sandy or stony ground)
- Cables bridge a large distance
- Electrical energy is fed in from various power supplies (for example, in the case of multiple substations)
- Considerable electrical power is used (for example, welding robots, large drives)

Measures

In such cases, an additional equipotential bonding cable between the individual potentials can solve the problem. The equipotential bonding cable must also be able to divert large currents and carry lightning stroke current. The following equipotential bonding systems have proven themselves in practice:

- 16 mm^2 for copper equipotential bonding cables up to 200 m long
- 25 mm^2 for copper equipotential bonding cables over 200 m long

To prevent ground loops, equipotential bonding cables are installed in parallel and, whenever possible, near to the signal/bus cable. This allows the area between the two cables to be kept as small as possible.

The following figure shows a schematic view of the installation of an equipotential bonding cable.

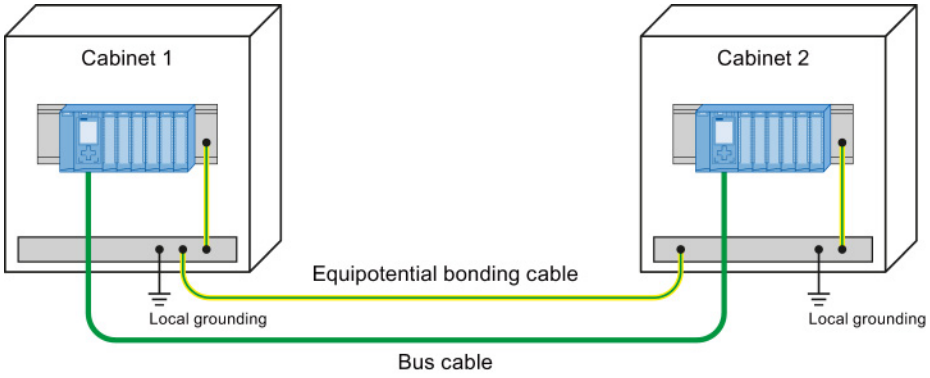

Figure 5-1 Installation of equipotential bonding cables

Rule

Note the following issues regarding equipotential bonding:

- The lower the impedance of an equipotential bonding cable, the more effective is equipotential bonding. The impedance of the additionally installed equipotential bonding cable should not exceed 10% of the shield impedance.
- Connect the equipotential bonding cables to a large area of the grounding system.
- Protect the connection points against corrosion.
- Avoid ground loops.
- Install the equipotential bonding cables in such a way as to minimize the areas enclosed between the equipotential bonding cables and signal lines.

Special measures for interference-free operation 6

Connecting inductances to quenching elements

Ideally, the inductances (for example, contactor or relay coils) controlled by SIMATIC do not require any wiring to external quenching elements. The required quenching elements are already integrated into the modules.

If the SIMATIC output circuit can also be switched off by built-in contacts (such as relay contacts for EMERGENCY OFF), the module's integrated quenching elements are no longer effective. In this case, the inductances must be wired to quenching elements.

Wire inductances to freewheeling diodes, varistors or RC elements, for example.

Table 6- 1 Wiring inductances

Wiring DC-operated inductances		Wiring AC-operated inductances	
with diode	with Z diode	with varistor	with RC element
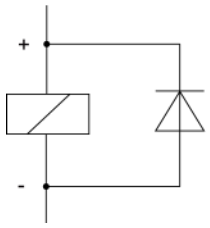	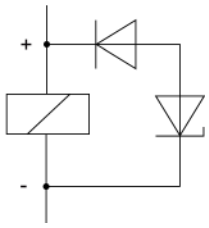	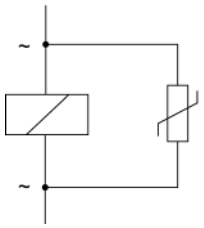	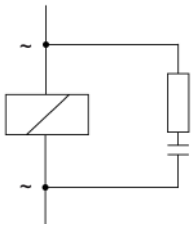

Programming devices

Provide a socket in each cabinet for the supply of the programming devices. The sockets are supplied from the distribution board to which the protective conductor for the cabinet is also connected.

Observe the following points during the installation of the socket in the control cabinet:

- Include the grounding of the socket in your consideration of the equipotential bonding.
- The common star point of the two ground potentials (cabinet and socket) must be close to the two end points.
- An equipotential bonding cable is not permitted as communication cable between programming device and controller.

Lightning protection and overvoltage protection 7

7.1 What is lightning and overvoltage protection?

Introduction

The term "Lightning and overvoltage protection" covers both the concept and system for the protection of structural systems (such as buildings or electrical equipment). This concept also includes the protection of people and animals.

Overvoltages are most frequently caused by lightning strikes.

Lightning protection system

The lightning protection system is the complete system used to reduce physical damage to a structural system as a result of direct lightning strikes and overvoltages. The lightning protection system is divided into external and internal lightning protection.

External lightning protection

External lightning protection is part of the lightning protection system and comprises an interception device, an arrester and a grounding system. In the event of a lightning strike, the external lightning protection serves to divert the lightning current safely to the ground. This measure most frequently prevents fire damage.

Internal lightning protection

Internal lightning protection is part of the lightning protection system and comprises lightning protection equipotential bonding and/or electrical isolation with respect to the external lightning protection. In the event of a lightning strike, the internal lightning protection reduces the damage caused by overvoltages resulting from the lightning.

Even at larger distances of up to 1.5 km, lightning strikes can sometimes still cause damage. You obtain effective lightning protection by expanding the external lightning protection into an overall protection system. This system includes equipotential bonding and surge protection devices.

7.2 Lightning protection zone concept

Introduction

Each building requires a coordinated protection zone concept. The grading of the protection is of key importance for this. Sufficient protection can only be guaranteed if this grading requirement is satisfied.

The lightning protection zone concept described in the standards IEC 62305-4 and DIN EN 62305-4 is used for this purpose. The lightning protection zone concept groups devices and areas that have the same risk potential and can be wired to arresters of the same type.

Use overvoltage protection devices at the transitions of the lightning protection zones based on the requirements. Install the overvoltage protection devices at an appropriate location such as the main or sub-distribution board.

Principle of the lightning protection zone concept

The principle behind the lightning protection zone concept is the division of the areas to be protected from overvoltages, for example buildings, into lightning protection zones based on EMC considerations.

Schematic diagram of the lightning protection zone concept

The following is a schematic diagram of the lightning protection zone concept in a physical structure.

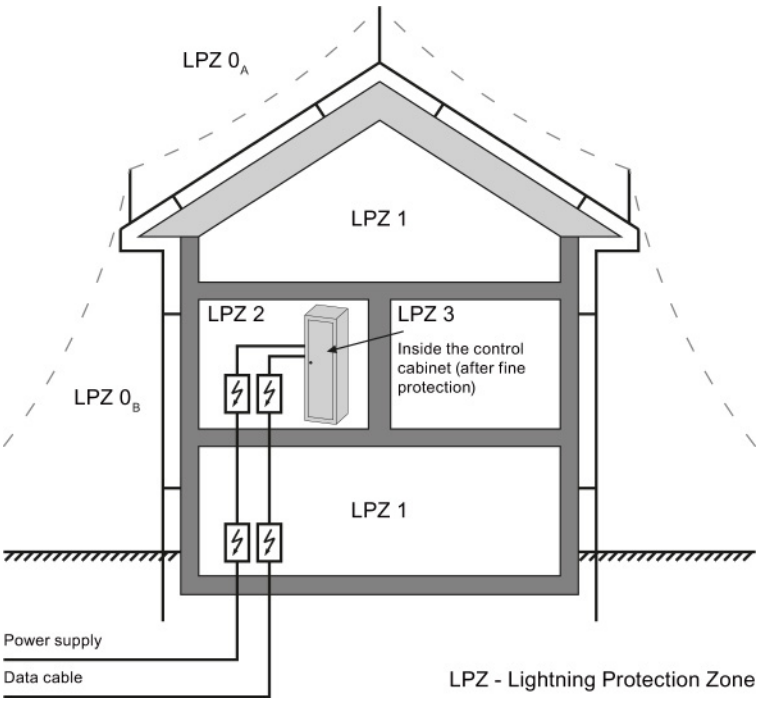

Figure 7-1 Division of a structural system into lightning protection zones

Division of lightning protection zones

The various lightning protection zones (LPZ - Lightning Protection Zone) are limited spatially as follows and not necessarily by physical boundaries, such as walls or floors.

The following table explains the division into various lightning protection zones.

Table 7- 1 External and internal lightning protection zones

Lightning protection zones	
External lightning protection zones:	
LPZ 0_A	• Risk from direct lightning strikes • Risk from the full electromagnetic field of the lightning
LPZ 0_B	• Protected against direct lightning strike • Risk from the full electromagnetic field of the lightning
Internal lightning protection zones:	
LPZ 1	• Protected against direct lightning strike • Attenuated electromagnetic field of the lightning
LPZ 2	• Protected against direct lightning strike • Reduced leakage currents and electromagnetic fields compared to LPZ 1 • Protected terminal devices
LPZ 3	• Protected against direct lightning strike • Protected area inside the terminal device • Local equipotential bonding

Effects of the lightning strike

Direct lightning strikes occur in the lightning protection zone LPZ 0_A. Effects of the lightning strike are high-energy lightning currents and strong electromagnetic fields. These effects are reduced from one lightning protection zone to the next through suitable lightning current or overvoltage arrester/shielding measures.

Frequent damage caused by lightning strikes includes:

- Injury to people and animals, which may in worst cases lead to death
- Damage to buildings
- Fire caused by strong heat development of a lightning strike

Overvoltages

Electromagnetic fields of the lightning channel can be reduced with appropriate shielding measures. Overvoltages due to inductions can be reduced to a safe level starting in lightning protection zone LPZ 0_B with overvoltage arresters.

7.3 Rules and components for the transitions between lightning protection zones

Introduction

This chapter provides you with information on the rules for transitions between lightning protection zones. Measures must be taken to reduce the surge current load and the magnetic fields at the transitions between the lightning protection zones.

Each zone-penetrating metallic/electrical system is incorporated into the equipotential bonding at the zone transition.

The metallic systems include channels, structural parts, and pipes (for water, gas, and heat, for example).

Electrical systems include power and IT cables and wires (for example, power cables and bus cables).

Transitions between lightning protection zones

Overvoltage protection must be provided at the transitions between lightning protection zones (LPZ - Lightning Protection Zone) in accordance with DIN EN 62305. The protection levels are defined at the transitions and implemented by means of overvoltage protection devices (SPD - Surge Protective Device).

- SPD Type 1 - Coarse protection for the transition from LPZ 0 to LPZ 1
- SPD Type 2 - Medium protection for the transition from LPZ 1 to LPZ 2
- SPD Type 3 - Fine protection for the transition from LPZ 2 to LPZ 3

The following figure illustrates the lightning protection zones and the type classes from the supply line to the consumer.

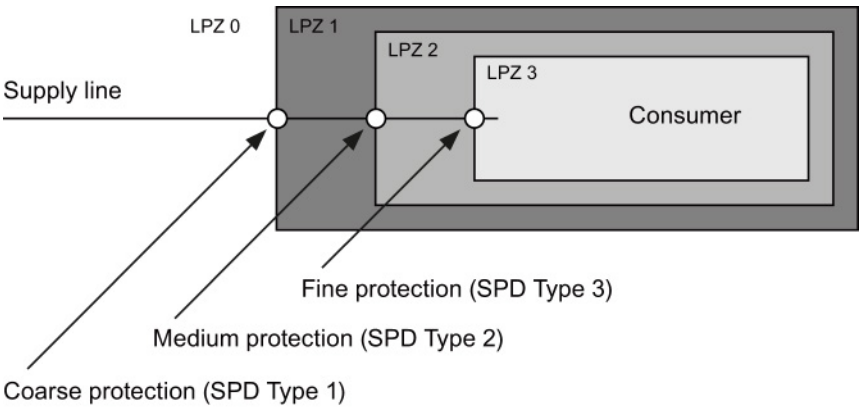

Figure 7-2 Lightning protection zone transitions

Rule for transition from lightning protection zone 0_A to 1

Lightning protection equipotential bonding is required at the transition from lightning protection zone 0_A to 1. The following applies to the transition at the interface of lightning protection zone 0_A to 1:

- Use of lightning arresters prevents introduction of partial lightning currents into structural systems
- Creation of local equipotential bonding at the transition of lightning protection zones, with incorporation of metallic supply systems (for example, pipes, air ducts, cable channels or cable ducts)

Components for lightning protection equipotential bonding from lightning protection zone 0_A to 1

The following table shows components for lightning protection equipotential bonding from lightning protection zone 0_A to 1.

Table 7- 2 Components for transition from lightning protection zone 0_A to 1

Seq. no.	Cables for ...	Connection at the 0_A interface to 1 with:	
		S7-1500/ET 200MP/ET 200SP/ET 200AL	Article number
1	Three-phase TN-C system	DEHNventil® DV M TNC 255	951 300
		DEHNventil® DV M TNC 255 FM *	951 305 *
2	Three-phase TN-S system	DEHNventil® DV M TNS 255	951 400
		DEHNventil® DV M TNS 255 FM *	951 405 *
3	Three-phase TT system	DEHNventil® DV M TT 255	951 310
		DEHNventil® DV M TT 255 FM *	951 315 *
4	AC TN-S system	DEHNventil® DV M TN 255	951 200
		DEHNventil® DV M TN 255 FM *	951 205 *
5	AC TT system	DEHNventil® DV M TT 2P 255	951 110
		DEHNventil® DV M TT 2P 255 FM *	951 115 *
6	Supply U_N = 24 V DC	BLITZDUCTOR® XT, base section BXT BAS	920 300
		BLITZDUCTOR® XT, module BXT ML2 B 180 (I_L = 1.2 A) (2-wire)	920 211
7	Supply U_N = 24 V DC	DEHNbloc® M, DB M 1 150	961 110
		DEHNbloc® M, DB M 1 150 FM * (2 pieces required)	961 115 *
8	Bus cable MPI RS 485, RS 232 (V.24)	BLITZDUCTOR® XT, base section BXT BAS	920 300
		BLITZDUCTOR® XT, module BXT ML2 B 180 (2-wire)	920 211
9	Inputs/outputs of digital modules U_N = 24 V DC	BLITZDUCTOR® XT, base section BXT BAS	920 300
		BLITZDUCTOR® XT, module BXT ML4 B 180 (I_L = 1.2 A) (4-wire)	920 310
10	Inputs/outputs of digital modules U_N = 230 V AC	DEHNbloc® M, DB M 1 255	961 120
		DEHNbloc® M, DB M 1 255 * (2 pieces required)	961 125 *

Seq. no.	Cables for ...	Connection at the 0_A interface to 1 with:	
		S7-1500/ET 200MP/ET 200SP/ET 200AL	Article number
11	Inputs/outputs of analog modules (e.g., 4-20 mA, 1-10 V)	BLITZDUCTOR® XT, base section BXT BAS	920 300
		BLITZDUCTOR® XT, module (I_L = 1.2 A) (4-wire)	920 310
* Version with remote indication contact Components of the series BLITZDUCTOR® XT can be remotely monitored with the appropriate accessories. Additional information is available on the Internet (http://www.dehn.de) **Components can be ordered directly from:** DEHN+SÖHNE GMBH+CO.KG. Hans-Dehn-Straße 1 D-92318 Neumarkt			

Rule for the transition from lightning protection zone 0_B to 1, 1 to 2, or 2 to 3

The transition from lightning protection zone 0_B to 1, 1 to 2, or 2 to 3 prevents strong electromagnetic coupling and serves as overvoltage protection. The following applies to the transition at the interface from lightning protection zone 0_B to 1, 1 to 2, or 2 to 3:

- Use of power cables with surge current-carrying cable shields or twisted-pair IT cables
- Laying cables and lines
  - In continuous, surge current-carrying metal pipes that are grounded at both ends
  - In reinforced concrete channels capable of carrying surge current with grounding at both ends
  - On closed metal cable racks that are grounded at the beginning and end
- Use of fiber-optic cables without a metal shield if such a transmission is intended
- Creation of local equipotential bonding at the transition of lightning protection zones, with incorporation of metallic supply systems (for example, pipes, air ducts, cable channels or cable ducts)

Additional measures

If the actions listed above cannot be implemented, protection by means of overvoltage arresters must be provided. The following sections contain tables with overvoltage arresters that are very suitable for protecting the plant.

Components for lightning protection equipotential bonding from lightning protection zone 0_B to 1 and 1 to 2

The following table shows components for lightning protection equipotential bonding from lightning protection zone 0_B to 1 and 1 to 2.

Table 7- 3 Components for transition from lightning protection zone 0_B to 1 and 1 to 2

Seq. no.	Cables for ...	Connection at the 0_B interface to 1 with:	
		S7-1500/ET 200MP/ET 200SP/ET 200AL	Article number
1	Three-phase TN-C system	DEHNguard® DG M TNC 275	952 300
		DEHNguard® DG M TNC 275 FM *	952 305 *
2	Three-phase TN-S system	DEHNguard® DG M TNS 275	952 400
		DEHNguard® DG M TNS 275 FM *	952 405 *
3	Three-phase TT system	DEHNguard® DG M TT 275	952 310
		DEHNguard® DG M TT 275 FM *	952 315 *
4	AC TN-S system	DEHNguard® DG M TN 275	952 200
		DEHNguard® DG M TN 275 FM *	952 205 *
5	AC TT system	DEHNguard® DG M TT 2P 275	952 110
		DEHNguard® DG M TT 2P 275 FM *	952 115 *
6	Supply U_N = 24 V DC	BLITZDUCTOR® VT, BVT AVD 24	918422
7	Bus cable MPI/DP RS 485	BLITZDUCTOR® XT, base section BXT BAS	920 300
		BLITZDUCTOR® XT, module BXT ML2 BD HFS 5	920 271
8	Bus cable RS 232 (V.24)	BLITZDUCTOR® XT, base section BXT BAS	920 300
		BLITZDUCTOR® XT, module BXT ML2 BE S 12	920 222
9	Industrial Ethernet	DEHNpatch® DPA M CLE RJ45B 48	929 121
10	Inputs of digital modules U_N = 24 V DC	DEHNconnect® RK, DCO RK E 60 (I_L = 0.5 A)	919 990
11	Outputs of digital modules U_N = 24 V DC	DEHNconnect® RK, DCO RK D 5 24 (I_L = 10.0 A)	919 986
12	Inputs/outputs of digital modules U_N = 230 V AC	DEHNguard® DG S 275	952 070
		DEHNguard® DG S 275 FM *	952 090 *
		N-PE arrester in the TT system	
		DEHNgap® C S, DGP C S	952 030
		DEHNgap® C S, DGP C S FM *	952 035 *
13	Inputs/outputs of analog modules (e.g., 4-20 mA, 1-10 V)	DEHNconnect® RK, DCO RK E 60 (I_L = 0.5 A)	919 990

Seq. no.	Cables for ...	Connection at the 0_B interface to 1 with:	
		S7-1500/ET 200MP/ET 200SP/ET 200AL	Article number
14	Inputs/outputs of the fail-safe modules (24 V DC)	DEHNconnect® RK, DCO RK D 5 24	919 986
* Version with remote indication contact Components of the series BLITZDUCTOR® XT can be remotely monitored with the appropriate accessories. Additional information is available on the Internet (http://www.dehn.de) **Components can be ordered directly from:** DEHN+SÖHNE GMBH+CO.KG. Hans-Dehn-Straße 1 D-92318 Neumarkt			

Components for lightning protection equipotential bonding from lightning protection zone 2 to 3

The following table shows components for lightning protection equipotential bonding from lightning protection zone 2 to 3 that you can use for S7-1500/ET 200MP and ET 200SP.

Table 7- 4 Components for transition from lightning protection zone 2 to 3 (for S7-1500/ET 200MP and ET 200SP)

Seq. no.	Cables for ...	Connection at the interface 2 to 3 with:			
		S7-1500/ET 200MP	Article number	ET 200SP	Article number
1	Three-phase TN-S, TT system	DEHNrail® DR M 4P 255	953 400	DEHNguard® DG M TNS 275	952 400
				DEHNguard® DG MOD 275	952 010
		DEHNrail® DR M 4P 255 FM * (I_L = 25.0 A)	953 405 *	DEHNguard® DG M TT 275	952 310
				DEHNguard® DG MOD 275	952 010
				DEHNguard® DG MOD NPE	952 050
2	AC TN-S, TT system	DEHNrail® DR M 2P 255	953 200	DEHNguard® DG M TN 275	952 200
				DEHNguard® DG MOD 275	952 010
		DEHNrail® DR M 2P 255 FM * (I_L = 25.0 A)	953 205 *	DEHNguard® DG M TT 2P 275	952 110
				DEHNguard® DG MOD 275	952 010
				DEHNguard® DG MOD NPE	952 050
3	Supply U_N = 24 V DC	BLITZDUCTOR® VT, BVT AVD 24	918 422	BLITZDUCTOR® VT, BVT AVD 24 ® VT	918 422
4	Bus cable MPI/DP RS 485	BLITZDUCTOR® XT, base section BXT BAS	920 300	---	---
		BLITZDUCTOR® XT, module BXT ML2 BD HFS 5	920 271	---	---
5	Bus cable RS 232 (V.24)	BLITZDUCTOR® XT, base section BXT BAS	920 300	---	---
		BLITZDUCTOR® XT, module BXT ML2 BE S 12	920 222	---	---
6	Industrial Ethernet	DEHNpatch® DPA M CLE RJ45B 48	929 121	---	---
7	Inputs of digital modules U_N = 24 V DC	DEHNconnect® RK, DCO RK E60 (I_L = 0.5 A)	919 990	BLITZDUCTOR® XT, BXT ML4 BD 24 (I_L < 1 A)	920 344

Seq. no.	Cables for ...	Connection at the interface 2 to 3 with:			
		S7-1500/ET 200MP	Article number	ET 200SP	Article number
				BLITZDUCTOR® XT, base section BXT BAS (I_L < 1 A)	920 300
8	Outputs of digital modules U_N = 24 V DC	DEHNconnect® RK, DCO RK D 5 24 (I_L = 10.0 A)	919 986	BLITZDUCTOR® XT, BXT ML4 BD 24 (I_L < 1 A)	920 344
				BLITZDUCTOR® XT, base section BXT BAS (I_L < 1 A)	920 300
				DEHNconnect® SD2, DCO SD2 E 48 (I_L < 10 A)	917 989
9	Inputs/outputs of digital modules U_N = 230 V AC	DEHNguard® DG S 275	952 070	DEHNguard® DG S 275	952 070
				DEHNguard® DG MOD 275	952 010
		DEHNguard® DG S 275 FM *	952 090 *	---	---
		N-PE arrester in the TT system			
		DEHNgap® C S, DGP C S	952 030	---	---
		DEHNgap® C S, DGP C S FM *	952 035 *	---	---
10	Inputs/outputs of analog modules (e.g., 4-20 mA, 1-10 V)	DEHNconnect® RK, DCO RK E 60 (I_L = 0.5 A)	919 990	BLITZDUCTOR® XT, BXT ML4 BD 24 (I_L < 1 A)	920 344
				BLITZDUCTOR® XT, base section BXT BAS (I_L < 1 A)	920 300
11	Inputs/outputs of the fail-safe modules (24 V DC)	---	---	DEHNconnect® RK, DCO RK D 5 24	919 986
				DEHNconnect® RK, DCO RK E 60	919 990

* Version with remote indication contact

Components of the series BLITZDUCTOR® XT can be remotely monitored with the appropriate accessories. Additional information is available on the Internet (http://www.dehn.de)

Components can be ordered directly from:
DEHN+SÖHNE GMBH+CO.KG.
Hans-Dehn-Straße 1
D-92318 Neumarkt

The following table shows components for lightning protection equipotential bonding from lightning protection zone 2 to 3 that you can use for ET 200AL.

Table 7- 5 Components for transition from lightning protection zone 2 to 3 (for ET 200AL)

Seq. no.	Cables for ...	Connection at the interface 2 to 3 with:	
		ET 200AL	Article number
1	Supply U_N = 24 V DC	BLITZDUCTOR® VT, BVT AVD 24 ® VT	918 422
Components of the series BLITZDUCTOR® XT can be remotely monitored with the appropriate accessories. Additional information is available on the Internet (http://www.dehn.de) **Components can be ordered directly from:** DEHN+SÖHNE GMBH+CO.KG. Hans-Dehn-Straße 1 D-92318 Neumarkt			

Index

B

Bending radius, 14

C

Cable shielding, 15

E

Electromagnetic compatibility, 7
Electromagnetic interference, 7
EMC, 7

I

Interference-free operation, 25

L

Lightning protection
    Equipotential bonding, 30
    External, 26
    Internal, 26
    Overvoltage protection, 30, 31
Lightning protection zone concept, 27
Lightning protection zones, 29
    Definition, 28

O

Overvoltage, 28
Overvoltage protection
    Components, 30, 32, 34

T

Tensile strain, 14

SIEMENS

Function manual

SIMATIC

S7-1500

S7-1500 Motion Control V4.0 in the TIA Portal V15

Edition 12/2017

support.industry.siemens.com

SIEMENS

SIMATIC

S7-1500
S7-1500 Motion Control V4.0 in TIA Portal V15

Function Manual

Preface

Documentation guide 1

Introduction 2

Technology objects 3

Using versions 4

Configuring 5

Programming 6

Downloading to CPU 7

Commissioning 8

Diagnostics 9

Instructions 10

Appendix A

TIA Portal V15

12/2017

A5E03879256-AE

Legal information

Warning notice system

This manual contains notices you have to observe in order to ensure your personal safety, as well as to prevent damage to property. The notices referring to your personal safety are highlighted in the manual by a safety alert symbol, notices referring only to property damage have no safety alert symbol. These notices shown below are graded according to the degree of danger.

⚠ DANGER

indicates that death or severe personal injury **will** result if proper precautions are not taken.

⚠ WARNING

indicates that death or severe personal injury **may** result if proper precautions are not taken.

⚠ CAUTION

indicates that minor personal injury can result if proper precautions are not taken.

NOTICE

indicates that property damage can result if proper precautions are not taken.

If more than one degree of danger is present, the warning notice representing the highest degree of danger will be used. A notice warning of injury to persons with a safety alert symbol may also include a warning relating to property damage.

Qualified Personnel

The product/system described in this documentation may be operated only by **personnel qualified** for the specific task in accordance with the relevant documentation, in particular its warning notices and safety instructions. Qualified personnel are those who, based on their training and experience, are capable of identifying risks and avoiding potential hazards when working with these products/systems.

Proper use of Siemens products

Note the following:

⚠ WARNING

Siemens products may only be used for the applications described in the catalog and in the relevant technical documentation. If products and components from other manufacturers are used, these must be recommended or approved by Siemens. Proper transport, storage, installation, assembly, commissioning, operation and maintenance are required to ensure that the products operate safely and without any problems. The permissible ambient conditions must be complied with. The information in the relevant documentation must be observed.

Trademarks

All names identified by ® are registered trademarks of Siemens AG. The remaining trademarks in this publication may be trademarks whose use by third parties for their own purposes could violate the rights of the owner.

Disclaimer of Liability

We have reviewed the contents of this publication to ensure consistency with the hardware and software described. Since variance cannot be precluded entirely, we cannot guarantee full consistency. However, the information in this publication is reviewed regularly and any necessary corrections are included in subsequent editions.

Siemens AG
Division Digital Factory
Postfach 48 48
90026 NÜRNBERG
GERMANY

A5E03879256-AE
℗ 11/2017 Subject to change

Copyright © Siemens AG 2012 - 2017.
All rights reserved

Preface

Purpose of the documentation

This documentation provides important information that you need to configure and commission the integrated Motion Control functionality of the S7-1500 Automation systems.

Required basic knowledge

In order to understand this documentation, the following knowledge is required:

- General knowledge in the field of automation
- General knowledge in the field of drive engineering and motion control

Validity of the documentation

This documentation is valid for the S7-1500 product range.

Conventions

- For the path settings in the project navigation it is presumed that the "Technology objects" object is opened in the CPU subtree. The "Technology object" placeholder represents the name of the technology object.

  Example: "Technology object > Configuration > Basic parameters".
- The <TO> placeholder represents the name set in tags for the respective technology object.

  Example: <TO>.Actor.Type
- This documentation contains pictures of the devices described. The pictures may differ in minor details from the devices supplied.

You should also observe the notes that are marked as follows:

Note

A note contains important information about the product described in the documentation, about the handling of the product, and about sections in this documentation demanding your particular attention.

Further support

- The range of technical documentation for the individual SIMATIC products and systems is available on the Internet (http://www.siemens.com/simatic-tech-doku-portal).
- The online catalog and the online ordering system is available on the Internet (http://mall.industry.siemens.com).

Security information

Siemens provides products and solutions with industrial security functions that support the secure operation of plants, systems, machines and networks.

In order to protect plants, systems, machines and networks against cyber threats, it is necessary to implement – and continuously maintain – a holistic, state-of-the-art industrial security concept. Siemens' products and solutions constitute one element of such a concept.

Customers are responsible for preventing unauthorized access to their plants, systems, machines and networks. Such systems, machines and components should only be connected to an enterprise network or the internet if and to the extent such a connection is necessary and only when appropriate security measures (e.g. firewalls and/or network segmentation) are in place.

For additional information on industrial security measures that may be implemented, please visit (https://www.siemens.com/industrialsecurity).

Siemens' products and solutions undergo continuous development to make them more secure. Siemens strongly recommends that product updates are applied as soon as they are available and that the latest product versions are used. Use of product versions that are no longer supported, and failure to apply the latest updates may increase customers' exposure to cyber threats.

To stay informed about product updates, subscribe to the Siemens Industrial Security RSS Feed under (https://www.siemens.com/industrialsecurity).

Table of contents

Preface 4

1 Documentation guide 16

2 Introduction 20

2.1 Interplay of the various documents 20

2.2 Integrated Motion Control functionality 21

2.3 Principle of operation of S7-1500 Motion Control 22

2.4 Functions 27
2.4.1 Functions - Axes 27
2.4.2 Functions - Other technology objects 28

2.5 Guidelines on use of motion control 29

3 Technology objects 30

3.1 Configuration limits 30

3.2 Basics - Axes 31
3.2.1 Axis types 31
3.2.2 Units of measure 32
3.2.3 Modulo setting 33
3.2.4 Long-term accuracy 33
3.2.5 Drive and encoder connection 34
3.2.5.1 Brief description 34
3.2.5.2 PROFIdrive telegrams 36
3.2.5.3 Actual values 39
3.2.5.4 Automatic transfer of drive and encoder parameters in the device 42
3.2.5.5 Safety functions in the drive 44
3.2.5.6 Axis in simulation 49
3.2.5.7 Virtual axis 50
3.2.5.8 Data connection drive/encoder via data block 50
3.2.5.9 Tags 52
3.2.6 Mechanics 53
3.2.6.1 Brief description 53
3.2.6.2 Tags 54
3.2.7 Traversing range limitation 55
3.2.7.1 Brief description 55
3.2.7.2 Hardware limit switches 55
3.2.7.3 Software limit switch 57
3.2.7.4 Tags 58
3.2.8 Motion control and limits for dynamics 59
3.2.8.1 Brief description 59
3.2.8.2 Velocity profile 60
3.2.8.3 Emergency stop deceleration 62
3.2.8.4 Dynamic limits in synchronous operation 62
3.2.8.5 Torque limits 63

3.2.8.6 Tags 68
3.2.9 Homing 69
3.2.9.1 Brief description 69
3.2.9.2 Terms 71
3.2.9.3 Homing mode 72
3.2.9.4 Active homing with homing cam and zero mark 73
3.2.9.5 Active homing with zero mark 76
3.2.9.6 Active homing with digital input 78
3.2.9.7 Passive homing with homing cam and zero mark 80
3.2.9.8 Passive homing with zero mark 81
3.2.9.9 Passive homing with digital input 83
3.2.9.10 Direction reversal at the hardware limit switch (reversing cam) 84
3.2.9.11 Direct homing 85
3.2.9.12 Absolute value adjustment 85
3.2.9.13 Resetting the "Homed" status 86
3.2.9.14 Tags 87
3.2.10 Position monitoring functions 88
3.2.10.1 Brief description 88
3.2.10.2 Positioning monitoring 88
3.2.10.3 Following error monitoring 90
3.2.10.4 Standstill signal 90
3.2.10.5 Tags 91
3.2.11 Closed-loop control 92
3.2.11.1 Brief description 92
3.2.11.2 Control structure 93
3.2.11.3 Tags 94
3.2.12 Process response 95
3.2.12.1 Organization Blocks for Motion Control 95
3.2.12.2 Process image partition "OB Servo PIP" 97
3.2.12.3 Operational Sequence and Timeouts 98
3.2.12.4 Operating modes 100

3.3 Speed-controlled axis technology object 103

3.4 Positioning axis technology object 104

3.5 Synchronous axis technology object 105
3.5.1 Short description for synchronous axis 105
3.5.2 Synchronous operation phases 106
3.5.3 Leading value coupling 107
3.5.3.1 Short description for leading value coupling 107
3.5.3.2 Setpoint coupling 107
3.5.4 Gearing with MC_GearIn 107
3.5.5 Tags for synchronous operation 109

3.6 Technology object external encoder 110

3.7 Technology object measuring input 111
3.7.1 Brief description 112
3.7.2 Measuring 116
3.7.2.1 One-time measurement 116
3.7.2.2 Cyclic measuring 117
3.7.3 Measuring with measuring range 121
3.7.4 Time-related boundary conditions 122
3.7.5 Tags 124

3.8 Technology object output cam ... 126
3.8.1 Brief description ... 126
3.8.2 Distance output cam ... 130
3.8.3 Time-based output cam ... 132
3.8.4 Activation direction of cam ... 133
3.8.5 Hysteresis ... 136
3.8.6 Compensation of actuator switching times ... 138
3.8.7 Tags ... 139

3.9 Cam track technology object ... 141
3.9.1 Brief description ... 141
3.9.2 Effective direction ... 147
3.9.3 Changing the cam track data during operation ... 149
3.9.4 Activation behavior ... 150
3.9.5 Hysteresis ... 153
3.9.6 Time offset of cam switching points ... 153
3.9.7 Tags ... 153

4 Using versions ... 155

4.1 Overview of versions ... 155

4.2 Version V4.0 ... 159

4.3 Version V3.0 ... 161

4.4 Version V2.0 ... 163

4.5 Version V1.0 ... 164

4.6 Changing a technology version ... 164

4.7 Replacing devices ... 165

5 Configuring ... 166

5.1 Adding and configuring drives in the device configuration ... 166
5.1.1 Introduction ... 166
5.1.2 Add and configure PROFINET IO drives ... 167
5.1.3 Add and configure PROFIBUS DP drives ... 170
5.1.4 Adding and configuring drives with analog connections ... 172

5.2 Configuration basics ... 175
5.2.1 Add technology object ... 175
5.2.2 Copy technology object ... 176
5.2.3 Delete technology object ... 177
5.2.4 Working with the configuration editor ... 178
5.2.5 Compare values ... 179

5.3 Configuring the Speed-Control Axis technology object ... 180
5.3.1 Configuration - Basic Parameters ... 180
5.3.2 Hardware interface ... 181
5.3.2.1 Configuration - Drive ... 181
5.3.2.2 Configuration - Data exchange with the drive ... 183
5.3.3 Extended Parameters ... 185
5.3.3.1 Configuration - Mechanics ... 185
5.3.3.2 Configuration - Dynamic Defaults ... 185
5.3.3.3 Configuration - Emergency stop ... 187
5.3.3.4 Limits ... 188

5.4 Configuring the positioning axis/synchronous axis technology object....191
5.4.1 Configuration - Basic Parameters....191
5.4.2 Hardware interface....192
5.4.2.1 Configuration - Drive....192
5.4.2.2 Configuration - Encoder....194
5.4.2.3 Configuration - Data exchange with the drive....196
5.4.2.4 Configuration - Data exchange with encoder....198
5.4.3 Configuration - leading value interconnections (synchronous axis only)....201
5.4.4 Extended Parameters....202
5.4.4.1 Configuration - Mechanics....202
5.4.4.2 Configuration - Dynamic Defaults....207
5.4.4.3 Configuration - Emergency stop....209
5.4.4.4 Limits....210
5.4.4.5 Homing....216
5.4.4.6 Position monitoring functions....226
5.4.4.7 Configuration - Control loop....228

5.5 Configuring the technology object external encoder....230
5.5.1 Configuration - Basic Parameters....230
5.5.2 Hardware interface....231
5.5.2.1 Configuration - Encoder....231
5.5.2.2 Configuration - Data exchange....232
5.5.3 Extended Parameters....238
5.5.3.1 Configuration - Mechanics....238
5.5.3.2 Homing....240

5.6 Configuring the technology object measuring input....244
5.6.1 Configuration - Basic Parameters....244
5.6.2 Configuration - Hardware interface....245
5.6.3 Configuration - Extended parameters....246

5.7 Configuring the cam technology object....247
5.7.1 Configuration - Basic Parameters....247
5.7.2 Configuration - Hardware interface....248
5.7.3 Extended parameters....249
5.7.3.1 Configuration - Activation time....249
5.7.3.2 Configuration - Hysteresis....249

5.8 Configuring the cam track technology object....250
5.8.1 Configuration - Basic Parameters....250
5.8.2 Configuration - Hardware interface....251
5.8.3 Extended parameters....252
5.8.3.1 Track data....252
5.8.3.2 Configuration - Output cam data....254

5.9 Configuring technology modules for Motion Control....255
5.9.1 Overview....255
5.9.2 TM Count 1x24V / TM Count 2x24V....256
5.9.3 TM PosInput 1 / TM PosInput 2....258
5.9.4 TM Timer DIDQ 10x24V / TM Timer DIDQ 16x24V....260
5.9.5 TM Pulse 2x24V....261
5.9.6 TM PTO 4....262
5.9.7 CPU 1511C-1 PN / CPU 1512C-1 PN....264

5.10 Connect drive/encoder via data block....269

5.11 Parameter view ... 271
5.11.1 Introduction to the parameter view ... 271
5.11.2 Structure of the parameter view ... 272
5.11.2.1 Toolbar ... 272
5.11.2.2 Navigation ... 273
5.11.2.3 Parameter table ... 273
5.11.3 Opening the parameter view ... 275
5.11.4 Working with the parameter view ... 275
5.11.4.1 Overview ... 275
5.11.4.2 Filtering the parameter table ... 276
5.11.4.3 Sorting the parameter table ... 277
5.11.4.4 Transferring parameter data to other editors ... 277
5.11.4.5 Indicating errors ... 278
5.11.4.6 Editing start values in the project ... 278
5.11.4.7 Monitoring values online in the parameter view ... 280
5.11.4.8 Modifying values ... 281
5.11.4.9 Comparing values ... 282

6 Programming ... 284

6.1 Introduction ... 284

6.2 Technology data block ... 284
6.2.1 Introduction ... 284
6.2.2 Evaluating the technology data block ... 285
6.2.3 Evaluate StatusWord, ErrorWord and WarningWord ... 288
6.2.4 Change restart-relevant data ... 289

6.3 Motion Control instructions ... 290
6.3.1 Motion Control instruction parameters ... 290
6.3.2 Add Motion Control instructions ... 294
6.3.3 Parameter transfer for function blocks ... 296
6.3.4 Non position-controlled operation ... 298

6.4 Starting Motion Control jobs ... 300

6.5 Tracking active jobs ... 302
6.5.1 Introduction ... 302
6.5.2 Motion Control instructions with "Done" parameter ... 302
6.5.3 Motion Control instructions without "Done" parameter ... 306
6.5.4 Motion Control instruction "MC_MoveJog" ... 310

6.6 Ending Motion Control jobs ... 313

6.7 Restart of technology objects ... 314

7 Downloading to CPU ... 315

8 Commissioning ... 316

8.1 Introduction ... 316

8.2 Commissioning guidelines ... 316

8.3 Axis control panel ... 319
8.3.1 Function and structure of the axis control panel ... 319
8.3.2 Using the axis control panel ... 324

8.4 Optimization 325
8.4.1 Function and structure of the optimization 325
8.4.2 Optimize position controller 329

9 Diagnostics 332

9.1 Introduction 332

9.2 Diagnostic concept 332

9.3 Technology alarms 333

9.4 Errors in Motion Control instructions 337

9.5 Speed-controlled axis technology object 338
9.5.1 Status and error bits 338
9.5.2 Motion status 341
9.5.3 PROFIdrive telegram 342

9.6 Positioning axis/synchronous axis technology object 343
9.6.1 Status and error bits 343
9.6.2 Motion status 347
9.6.3 PROFIdrive telegram 349
9.6.4 Additional displays for the technology CPU 350

9.7 Technology object external encoder 351
9.7.1 Status and error bits 351
9.7.2 Motion status 353
9.7.3 PROFIdrive frame 353

9.8 Technology object measuring input 354
9.8.1 Status and error bits 354

9.9 Technology object output cam 356
9.9.1 Status and error bits 356

9.10 Cam track technology object 358
9.10.1 Status and error bits 358
9.10.2 Cam track status 360

10 Instructions 361

10.1 MC_Power V4 361
10.1.1 MC_Power: Enable, disable technology object V4 361
10.1.2 MC_Power: Function chart V4 366

10.2 MC_Reset V4 367
10.2.1 MC_Reset: Acknowledge alarms, restart technology object V4 367

10.3 MC_Home V4 369
10.3.1 MC_Home: Home technology object, set home position V4 369

10.4 MC_Halt V4 374
10.4.1 MC_Halt: Pause axis V4 374
10.4.2 MC_Halt: Function chart V4 377

10.5 MC_MoveAbsolute V4 378
10.5.1 MC_MoveAbsolute: Position axis absolutely V4 378
10.5.2 MC_MoveAbsolute: Function chart V4 381

10.6 MC_MoveRelative V4 ... 382
10.6.1 MC_MoveRelative: Position axis relatively V4 ... 382
10.6.2 MC_MoveRelative: Function chart V4 ... 385

10.7 MC_MoveVelocity V4 ... 386
10.7.1 MC_MoveVelocity: Move axis at velocity/speed setpoint V4 ... 386
10.7.2 MC_MoveVelocity: Function chart V4 ... 390

10.8 MC_MoveJog V4 ... 391
10.8.1 MC_MoveJog: Move axis in jog mode V4 ... 391
10.8.2 MC_MoveJog: Function chart V4 ... 394

10.9 MC_MoveSuperimposed V4 ... 395
10.9.1 MC_MoveSuperimposed: Position axes overlapping V4 ... 395
10.9.2 MC_MoveSuperimposed: Function chart V4 ... 398

10.10 Measuring input, output cam, cam track ... 399
10.10.1 MC_MeasuringInput V4 ... 399
10.10.1.1 MC_MeasuringInput: Start measuring once V4 ... 399
10.10.1.2 MC_MeasuringInput: Function chart V4 ... 401
10.10.2 MC_MeasuringInputCyclic V4 ... 402
10.10.2.1 MC_MeasuringInputCyclic: Start cyclic measuring V4 ... 402
10.10.2.2 MC_MeasuringInputCyclic: Function chart V4 ... 404
10.10.3 MC_AbortMeasuringInput V4 ... 406
10.10.3.1 MC_AbortMeasuringInput: Abort active measuring V4 ... 406
10.10.4 MC_OutputCam V4 ... 407
10.10.4.1 MC_OutputCam: Activate/deactivate cam V4 ... 407
10.10.4.2 MC_OutputCam: Function chart V4 ... 409
10.10.5 MC_CamTrack V4 ... 410
10.10.5.1 MC_CamTrack: Activate/deactivate cam track V4 ... 410
10.10.5.2 MC_CamTrack: Function chart V4 ... 412

10.11 Synchronous motion ... 413
10.11.1 MC_GearIn V4 ... 413
10.11.1.1 MC_GearIn: Start gear synchronization V4 ... 413
10.11.1.2 MC_GearIn: Function chart V4 ... 416

10.12 Torque data ... 417
10.12.1 MC_TorqueLimiting V4 ... 417
10.12.1.1 MC_TorqueLimiting: Activate and deactivate force/torque limit / fixed stop detection V4 ... 417
10.12.1.2 MC_TorqueLimiting: Function chart V4 ... 420
10.12.2 MC_TorqueAdditive V4 ... 422
10.12.2.1 MC_TorqueAdditive: Specify additive torque V4 ... 422
10.12.2.2 MC_TorqueAdditive: Function chart V4 ... 424
10.12.3 MC_TorqueRange V4 ... 425
10.12.3.1 MC_TorqueRange: Set high and low torque limits V4 ... 425
10.12.3.2 MC_TorqueRange: Function chart V4 ... 427

10.13 Override response of Motion Control jobs V4 ... 428
10.13.1 Override response V4: Homing and motion jobs ... 428
10.13.2 Override response V4: Synchronous operation jobs ... 429
10.13.3 Override response V4: Measuring input jobs ... 430

A Appendix 431

A.1 Tags of the speed axis technology object 431
A.1.1 Legend 431
A.1.2 Actual values and setpoints (speed axis) 431
A.1.3 Variable simulation (speed axis) 432
A.1.4 VirtualAxis tag (speed axis) 432
A.1.5 Actor tags (speed axis) 433
A.1.6 Torque Limiting tag (speed axis) 434
A.1.7 LoadGear tags (speed axis) 435
A.1.8 Units tags (speed axis) 435
A.1.9 DynamicLimits tags (speed axis) 436
A.1.10 DynamicDefaults tags (speed axis) 436
A.1.11 Override tags (speed axis) 437
A.1.12 StatusDrive tags (speed axis) 437
A.1.13 StatusTorqueData tags (speed axis) 438
A.1.14 StatusMotionIn tags (speed axis) 438
A.1.15 StatusWord tag (speed axis) 439
A.1.16 ErrorWord tag (speed axis) 441
A.1.17 ErrorDetail tags (speed axis) 442
A.1.18 WarningWord tag (speed axis) 443
A.1.19 ControlPanel tags (speed axis) 444
A.1.20 InternalToTrace tags (speed axis) 445

A.2 Tags of the positioning axis/synchronous axis technology object 445
A.2.1 Legend 445
A.2.2 Actual values and setpoints (positioning axis/synchronous axis) 446
A.2.3 Simulation tag (positioning axis / synchronous axis) 446
A.2.4 VirtualAxis tag (positioning axis/synchronous axis) 447
A.2.5 Actor tags (positioning axis/synchronous axis) 447
A.2.6 TorqueLimiting tag (positioning axis/synchronous axis) 449
A.2.7 Clamping tag (positioning axis/synchronous axis) 449
A.2.8 Sensor[n] tags (positioning axis/synchronous axis) 450
A.2.9 Extrapolation tag (positioning axis/synchronous axis) 452
A.2.10 LoadGear tags (positioning axis/synchronous axis) 453
A.2.11 Properties tags (positioning axis/synchronous axis) 453
A.2.12 Units tag (positioning axis/synchronous axis) 454
A.2.13 Mechanics tags (positioning axis/synchronous axis) 455
A.2.14 Modulo tags (positioning axis/synchronous axis) 456
A.2.15 DynamicLimits tags (positioning axis/synchronous axis) 456
A.2.16 DynamicDefaults tags (positioning axis/synchronous axis) 457
A.2.17 PositionLimits_SW tags (positioning axis/synchronous axis) 457
A.2.18 PositionLimits_HW tags (positioning axis/synchronous axis) 458
A.2.19 Homing tags (positioning axis/synchronous axis) 459
A.2.20 Override tags (positioning axis/synchronous axis) 460
A.2.21 PositionControl tags (positioning axis/synchronous axis) 461
A.2.22 DynamicAxisModel tags (positioning axis/synchronous axis) 462
A.2.23 FollowingError tags (positioning axis/synchronous axis) 463
A.2.24 PositionMonitoring tags (positioning axis/synchronous axis) 464
A.2.25 StandstillSignal tags (positioning axis/synchronous axis) 465
A.2.26 StatusPositioning tags (positioning axis/synchronous axis) 465
A.2.27 StatusDrive tags (positioning axis/synchronous axis) 466
A.2.28 StatusServo tags (positioning axis/synchronous axis) 466

A.2.29 StatusSensor[n] tags (positioning axis/synchronous axis) ... 467
A.2.30 StatusExtrapolation tag (positioning axis/synchronous axis) ... 468
A.2.31 StatusSynchronizedMotion tags (synchronous axis) ... 469
A.2.32 StatusKinematicsMotion tag (positioning axis/synchronous axis) ... 470
A.2.33 StatusTorqueData tags (positioning axis/synchronous axis) ... 471
A.2.34 StatusMotionIn tags (positioning axis/synchronous axis) ... 471
A.2.35 StatusWord tag (positioning axis/synchronous axis) ... 472
A.2.36 ErrorWord tag (positioning axis/synchronous axis) ... 475
A.2.37 ErrorDetail tags (positioning axis/synchronous axis) ... 476
A.2.38 WarningWord tag (positioning axis/synchronous axis) ... 477
A.2.39 ControlPanel tags (positioning axis/synchronous axis) ... 478
A.2.40 InternalToTrace tags (positioning axis/synchronous axis) ... 478

A.3 Tags of the technology object external encoder ... 479
A.3.1 Legend ... 479
A.3.2 Actual values and setpoints (external encoder) ... 479
A.3.3 Sensor tags (external encoder) ... 480
A.3.4 Extrapolation tag (external encoder) ... 482
A.3.5 LoadGear tags (external encoder) ... 483
A.3.6 Properties tags (external encoder) ... 483
A.3.7 Units tag (external encoder) ... 484
A.3.8 Mechanics tags (external encoder) ... 485
A.3.9 Modulo tags (external encoder) ... 485
A.3.10 Homing tags (external encoder) ... 485
A.3.11 StatusSensor tags (external encoder) ... 486
A.3.12 StatusExtrapolation tag (external encoder) ... 487
A.3.13 StatusWord tag (external encoder) ... 488
A.3.14 ErrorWord tag (external encoder) ... 489
A.3.15 ErrorDetail tags (external encoder) ... 490
A.3.16 WarningWord tag (external encoder) ... 491
A.3.17 InternalToTrace tags (external encoder) ... 492

A.4 Tags of the measuring input technology object ... 492
A.4.1 Legend ... 492
A.4.2 Display data (measuring input) ... 493
A.4.3 Parameter tags (measuring input) ... 493
A.4.4 Interface tags (measuring input) ... 494
A.4.5 Units tags (measuring input) ... 494
A.4.6 MeasuredValues tags (measuring input) ... 495
A.4.7 StatusWord tag (measuring input) ... 496
A.4.8 ErrorWord tag (measuring input) ... 497
A.4.9 ErrorDetail tags (measuring input) ... 498
A.4.10 WarningWord tag (measuring input) ... 499

A.5 Tags of the cam technology object ... 500
A.5.1 Legend ... 500
A.5.2 Display data (cam) ... 500
A.5.3 Parameter tags (cam) ... 501
A.5.4 Interface tags (cam) ... 501
A.5.5 Units tags (cam) ... 502
A.5.6 StatusWord tag (output cam) ... 503
A.5.7 ErrorWord tag (output cam) ... 504
A.5.8 ErrorDetail tags (cam) ... 505
A.5.9 WarningWord tag (output cam) ... 505

A.6 Tags of the cam track technology object 506
A.6.1 Legend 506
A.6.2 Display data (cam track) 507
A.6.3 Parameter tags (cam track) 508
A.6.4 Interface tags (cam track) 509
A.6.5 Units tags (cam track) 509
A.6.6 StatusWord tag (cam track) 510
A.6.7 ErrorWord tag (cam track) 511
A.6.8 ErrorDetail tags (cam track) 512
A.6.9 WarningWord tag (cam track) 512

A.7 Technology alarms 513
A.7.1 Overview 513
A.7.2 Technology alarms 101-113 517
A.7.3 Technology alarms 201-204 524
A.7.4 Technology alarms 304-343 525
A.7.5 Technology alarms 401-431 528
A.7.6 Technology alarms 501-552 531
A.7.7 Technology alarms 601-618 537
A.7.8 Technology alarms 700-758 538

A.8 Error ID for Motion Control instructions 542

A.9 MC_Power function chart 547
A.9.1 Drive connection via PROFIdrive 547
A.9.1.1 StopMode 0, 2 547
A.9.1.2 StopMode 1 548
A.9.1.3 Alarm reactions with braking ramp via the technology object 549
A.9.1.4 Alarm response "Remove enable" 550
A.9.2 Analog drive connection 551
A.9.2.1 StopMode 0, 2 551
A.9.2.2 StopMode 1 552
A.9.2.3 Alarm reactions with braking ramp via the technology object 553
A.9.2.4 Alarm response "Remove enable" 554

A.10 SINAMICS drives 555
A.10.1 Compatibility list 555
A.10.2 Homing SINAMICS drives with external zero marks 555

A.11 Data types 555

Glossary 556

Index 560

Documentation guide

1

The documentation for the SIMATIC S7-1500 automation system and the SIMATIC ET 200MP distributed I/O system is arranged into three areas.
This arrangement enables you to access the specific content you require.

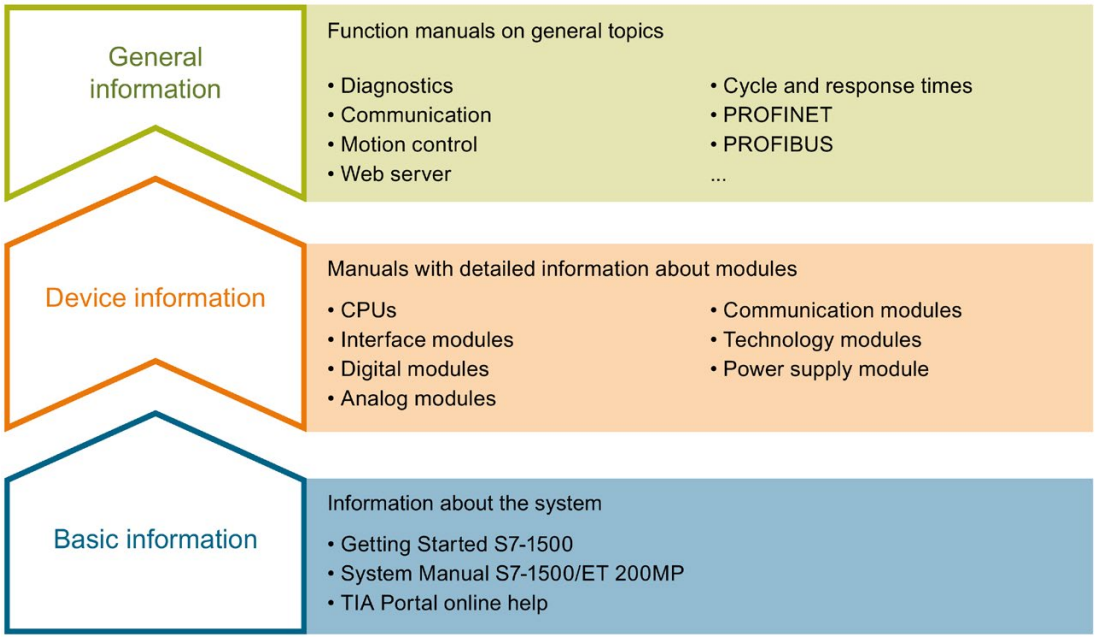

Basic information

The System Manual and Getting Started describe in detail the configuration, installation, wiring and commissioning of the SIMATIC S7-1500 and ET 200MP systems. The STEP 7 online help supports you in the configuration and programming.

Device information

Product manuals contain a compact description of the module-specific information, such as properties, wiring diagrams, characteristics and technical specifications.

General information

The function manuals contain detailed descriptions on general topics regarding the SIMATIC S7-1500 and ET 200MP systems, e.g. diagnostics, communication, motion control, Web server, OPC UA.

You can download the documentation free of charge from the Internet (https://support.industry.siemens.com/cs/ww/en/view/109742691).

Changes and supplements to the manuals are documented in a Product Information.

You can download the product information free of charge from the Internet (https://support.industry.siemens.com/cs/us/en/view/68052815).

Manual Collection S7-1500/ET 200MP

The Manual Collection contains the complete documentation on the SIMATIC S7-1500 automation system and the ET 200MP distributed I/O system gathered together in one file.

You can find the Manual Collection on the Internet (https://support.industry.siemens.com/cs/ww/en/view/86140384).

SIMATIC S7-1500 comparison list for programming languages

The comparison list contains an overview of which instructions and functions you can use for which controller families.

You can find the comparison list on the Internet (https://support.industry.siemens.com/cs/ww/en/view/86630375).

"mySupport"

With "mySupport", your personal workspace, you make the best out of your Industry Online Support.

In "mySupport", you can save filters, favorites and tags, request CAx data and compile your personal library in the Documentation area. In addition, your data is already filled out in support requests and you can get an overview of your current requests at any time.

You must register once to use the full functionality of "mySupport".

You can find "mySupport" on the Internet (https://support.industry.siemens.com/My/ww/en).

"mySupport" - Documentation

In the Documentation area in "mySupport" you can combine entire manuals or only parts of these to your own manual.
You can export the manual as PDF file or in a format that can be edited later.

You can find "mySupport" - Documentation on the Internet (http://support.industry.siemens.com/My/ww/en/documentation).

"mySupport" - CAx data

In the CAx data area in "mySupport", you can access the current product data for your CAx or CAe system.

You configure your own download package with a few clicks.

In doing so you can select:

- Product images, 2D dimension drawings, 3D models, internal circuit diagrams, EPLAN macro files
- Manuals, characteristics, operating manuals, certificates
- Product master data

You can find "mySupport" - CAx data on the Internet (http://support.industry.siemens.com/my/ww/en/CAxOnline).

Application examples

The application examples support you with various tools and examples for solving your automation tasks. Solutions are shown in interplay with multiple components in the system - separated from the focus on individual products.

You will find the application examples on the Internet (https://support.industry.siemens.com/sc/ww/en/sc/2054).

TIA Selection Tool

With the TIA Selection Tool, you can select, configure and order devices for Totally Integrated Automation (TIA).
This tool is the successor of the SIMATIC Selection Tool and combines the known configurators for automation technology into one tool.
With the TIA Selection Tool, you can generate a complete order list from your product selection or product configuration.

You can find the TIA Selection Tool on the Internet (http://w3.siemens.com/mcms/topics/en/simatic/tia-selection-tool).

SIMATIC Automation Tool

You can use the SIMATIC Automation Tool to perform commissioning and maintenance activities simultaneously on various SIMATIC S7 stations as a bulk operation independent of the TIA Portal.

General function overview:

- Network browsing and creation of a table showing the accessible devices in the network.
- Flashing of device LEDs or HMI display to locate a device
- Downloading of addresses (IP, subnet, gateway) to a device
- Downloading the PROFINET name (station name) to a device
- Placing a CPU in RUN or STOP mode
- Setting the time in a CPU to the current time of your PG/PC
- Downloading a new program to a CPU or an HMI device
- Downloading from CPU, downloading to CPU or deleting recipe data from a CPU
- Downloading from CPU or deleting data log data from a CPU
- Backup/restore of data from/to a backup file for CPUs and HMI devices
- Downloading service data from a CPU
- Reading the diagnostics buffer of a CPU
- Performing a CPU memory reset
- Resetting devices to factory settings
- Downloading a firmware update to a device

You can find the SIMATIC Automation Tool on the Internet (https://support.industry.siemens.com/cs/ww/en/view/98161300).

PRONETA

With SIEMENS PRONETA (PROFINET network analysis), you analyze the PROFINET network during commissioning. PRONETA features two core functions:

- The topology overview independently scans PROFINET network and all connected components.
- The IO check is a fast test of the wiring and the module configuration of a system.

You can find SIEMENS PRONETA on the Internet (https://support.industry.siemens.com/cs/ww/en/view/67460624).

SINETPLAN

SINETPLAN, the Siemens Network Planner, supports you in planning automation systems and networks based on PROFINET. The tool facilitates professional and predictive dimensioning of your PROFINET installation as early as in the planning stage. In addition, SINETPLAN supports you during network optimization and helps you to exploit network resources optimally and to plan reserves. This helps to prevent problems in commissioning or failures during productive operation even in advance of a planned operation. This increases the availability of the production plant and helps improve operational safety.

The advantages at a glance

- Network optimization thanks to port-specific calculation of the network load
- Increased production availability thanks to online scan and verification of existing systems
- Transparency before commissioning through importing and simulation of existing STEP 7 projects
- Efficiency through securing existing investments in the long term and optimal exploitation of resources

You can find SINETPLAN on the Internet (https://www.siemens.com/sinetplan).

Introduction 2

2.1 Interplay of the various documents

For a better overview, the documentation of the Motion Control functions is divided into the following documents:

- Using S7-1500T Motion Control (https://support.industry.siemens.com/cs/ww/en/view/109749263)
- Using S7-1500T Kinematics Functions (https://support.industry.siemens.com/cs/ww/en/view/109749264)

"Using S7-1500 Motion Control" describes the Motion Control functions for the following technology objects:

- Speed axis
- Positioning axis
- Synchronous axis
- External encoder
- Measuring input
- Output cam
- Cam track
- Cam (S7-1500T)

"Using S7-1500T Kinematics Functions" describes the Motion Control functions for the kinematics technology object. This document assumes that the Motion Control functions described in "Using S7-1500 Motion Control functions" are known.

2.2 Integrated Motion Control functionality

S7-1500 Motion Control supports controlled positioning and moving of axes and is an integral part of every CPU S7-1500 as well as every CPU S7-1500SP. The S7-1500T Technology CPUs provide enhanced functions.

The Motion Control functionality supports the following technology objects:

- Speed axis
- Positioning axis
- Synchronous axis
- External encoder
- Measuring input
- Output cam
- Cam track
- Cam (S7-1500T)
- Kinematics (S7-1500T)

Drives with PROFIdrive capability and drives with analog setpoint interface and stepper motors are controlled by means of standardized Motion Control instructions according to PLCopen.

The axis control panel and comprehensive online and diagnostic functions support easy commissioning and optimization of drives.

S7-1500 Motion Control is fully integrated into the system diagnostics of the S7-1500 CPU.

2.3 Principle of operation of S7-1500 Motion Control

Overview

You create a project, configure technology objects, and download the configuration to the CPU with the TIA Portal. The Motion Control functionality is processed in the CPU.
You control the technology objects with the Motion Control instructions in your user program.
The TIA Portal provides additional functions for commissioning, optimization (Page 316) and diagnostics (Page 332).

The following figure provides a schematic representation of the user interfaces and the integration of Motion Control into the S7-1500 CPU. The concepts are then briefly explained:

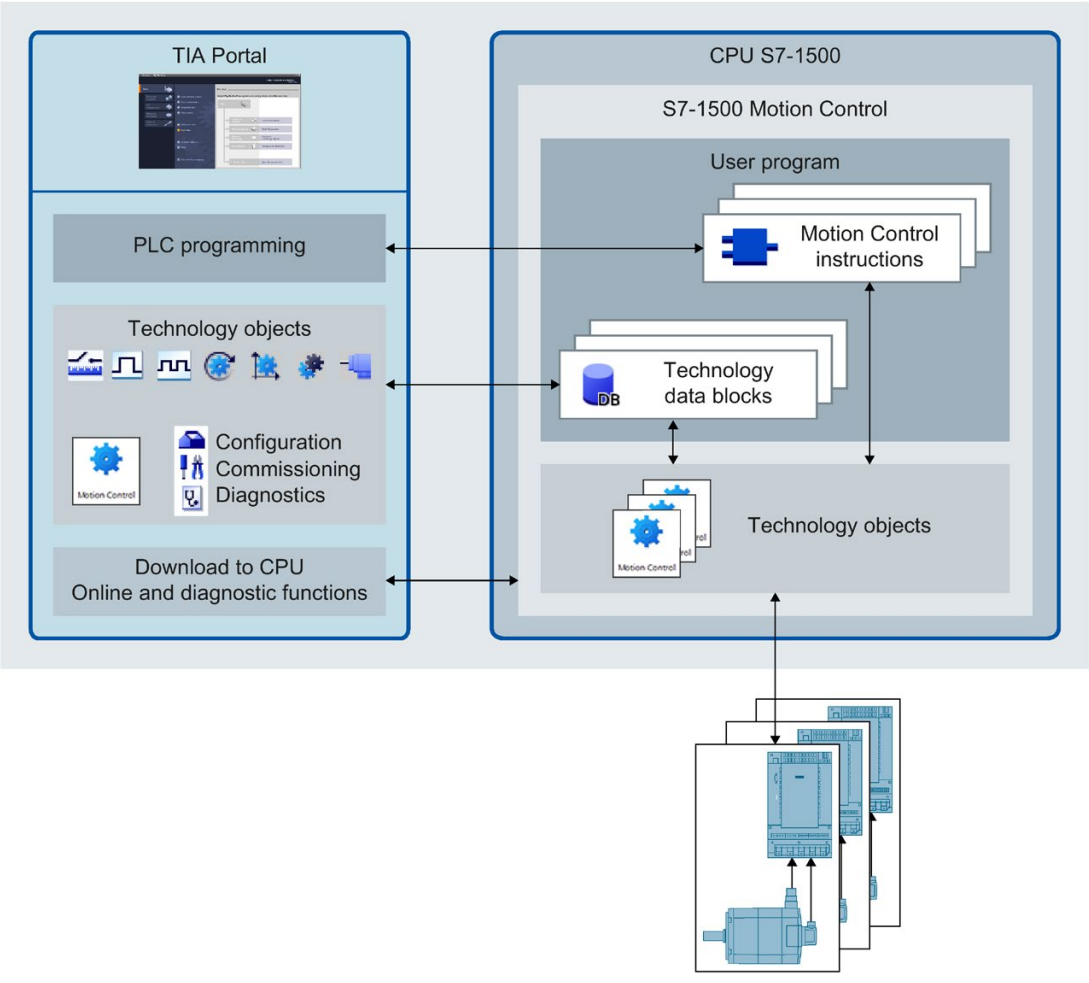

TIA Portal

The TIA Portal supports you in the planning and commissioning of Motion Control functionality:

- Integrating and configuring hardware
- Creating and configuring technology objects
- Creating the user program
- Downloading to CPU
- Commissioning of axes
- Optimization of drives
- Diagnostics

You use the TIA Portal to configure the hardware, the technology objects as well as your user program. You download the program you created to the CPU. You test your user program and diagnose the hardware with the online and diagnostic functions of the TIA Portal.

Technology objects

Technology objects represent real objects (e.g. a drive) in the controller. You call the functions of the technology objects by means of Motion Control instructions in your user program. The technology objects provide open- and closed-loop control of the movement of the real objects, and report status information (e.g. the current position).

The configuration of the technology objects represents the properties of the real object. The configuration data is stored in a technology data block.

The following technology objects are available for Motion Control:

- **Speed axis technology object**

  The speed axis technology object ("TO_SpeedAxis") is used to specify the speed for a drive. You program the motion of the axis with motion control instructions.

- **Positioning axis technology object**

  The positioning axis technology object ("TO_PositioningAxis") is used to position a drive with closed-loop position control. You issue positioning jobs to the axis with Motion Control instructions in your user program.

- **Synchronous axis technology object**

  The synchronous axis technology object ("TO_SynchronousAxis") includes all functions of the positioning axis technology object. The axis can also be interconnected with a leading value so that the axis follows the position change of a leading axis in synchronous operation.

- **External encoder technology object**

  The external encoder technology object ("TO_ExternalEncoder") detects a position and makes it available to the controller. The detected position can be evaluated in the user program.

- **Measuring input technology object**

  The measuring input technology object ("TO_MeasuringInput") detects actual positions quickly, accurately and event triggered.

- **Output cam technology object**

  The output cam technology object ("TO_OutputCam") generates switching signals depending on the position of an axis or external encoder. You can evaluate the switching signals in the user program or feed them to digital outputs.

- **Cam track technology object**

  The cam track technology object ("TO_CamTrack") generates a switching signal sequence depending on the position of an axis or external encoder. In this process, up to 32 individual cams are superimposed and the switching signals are output as a track. You can evaluate the switching signals in the user program or feed them to digital outputs.

- **Cam technology object (S7-1500T)**

  The cam technology object ("TO_Cam") defines a function f(x) by means of interpolation points and/or segments. Missing function ranges are interpolated.

- **Kinematic technology object (S7-1500T)**

  The Kinematic technology object ("TO_Kinematics") is used to interconnect positioning axes to a kinematic. When you configure the kinematics technology object, you interconnect the axes in accordance with the configured kinematics type.

Technology data block

The properties of real objects are configured by means of the technology objects and saved in a technology data block (Page 284). The technology data block contains all configuration data, setpoint and actual values, and status information of the technology object. The TIA Portal automatically creates the technology data block when the technology object is created. You access the data of the technology data block (read/write access) with your user program.

Motion Control instructions

With the Motion Control instructions you perform the desired functionality in the technology objects. The Motion Control instructions are available in the TIA Portal under "Instructions > Technology > Motion Control".

The Motion Control instructions conform to PLCopen (version 2.0).

User program

The Motion Control instructions and the technology data block represent the programming interfaces for the technology objects. You use Motion Control instructions to transfer Motion Control jobs for the technology objects in your user program. You track the status of running jobs via the output parameters of the Motion Control instructions. You access status information of the technology object and change specific configuration parameters during runtime using the technology data block.

Drives and encoders

Drives ensure the motion of the axis. They are integrated in the hardware configuration.

When you execute a Motion Control job in your user program, the technology object takes over the control of the drive and the reading in of values of encoders.

Drives and encoders with PROFIdrive capability are connected by means of PROFIdrive telegrams. The following connections are possible:

- PROFINET IO
- PROFIBUS DP
- Technology module (TM)

Drives with analog setpoint interfaces are connected using an analog output (AQ) and an optional enable signal. Analog inputs and outputs are made available by means of corresponding I/O modules.

A drive is also called an actuator, and an encoder is also called a sensor.

The figure below shows an example configuration in which all components are connected to the CPU by means of PROFINET IO:

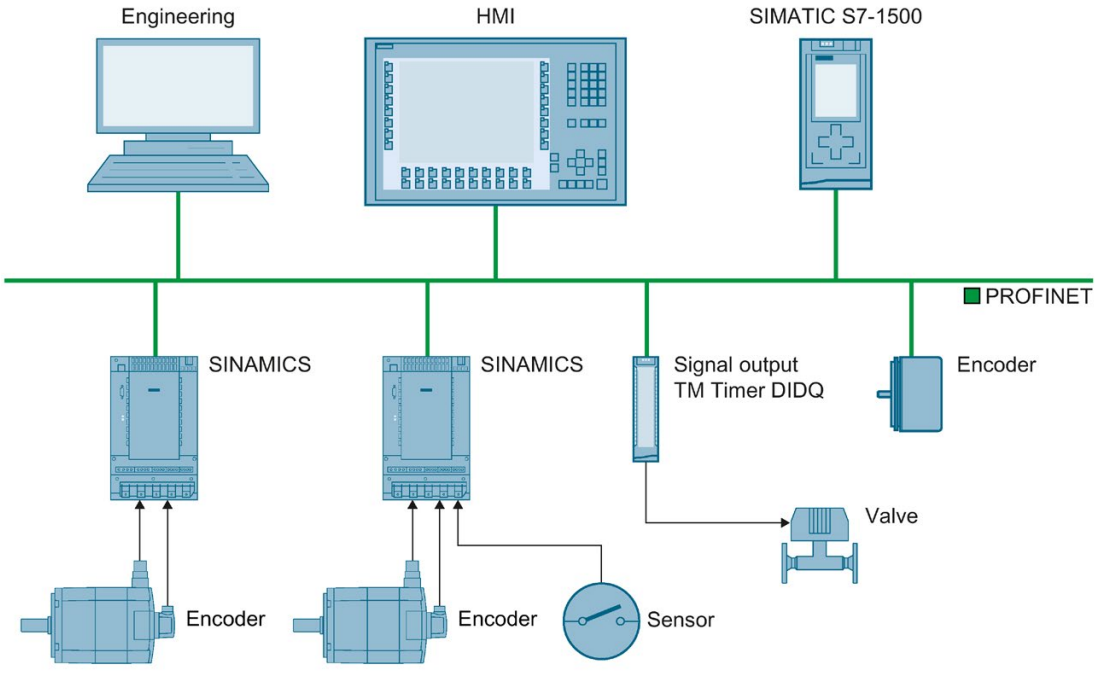

2.4 Functions

2.4.1 Functions - Axes

You execute the functions of the speed axis, positioning axis and synchronous axis technology objects using Motion Control instructions in your user program or using the TIA Portal (under "Technology object > Commissioning").

The following table shows the functions that are supported by technology objects:

Function	Technology object		
	Speed axis (Page 103)	Positioning axis (Page 104)	Synchronous axis (Page 105)
Motion Control instructions (user program)			
"MC_Power (Page 361)" Enable, disable technology objects	X	X	X
"MC_Home (Page 369)" Home technology objects, set home position	-	X	X
"MC_MoveJog (Page 391)" Move axes in Jog mode	X	X	X
"MC_MoveVelocity (Page 386)" Move axes at predefined velocity	X	X	X
"MC_MoveRelative (Page 382)" Relative positioning of axes	-	X	X
"MC_MoveAbsolute (Page 378)" Absolute positioning of axes	-	X	X
"MC_MoveSuperimposed (Page 395)" Positioning axes overlapping	-	X	X
"MC_GearIn (Page 413)" Start gearing	-	-	X
"MC_Halt (Page 374)" Halt axes	X	X	X
"MC_TorqueLimiting (Page 417)" Limit torque using torque reduction	X	X	X
"MC_Reset (Page 367)" Acknowledge alarms, restart technology objects	X	X	X
"MC_TorqueAdditive (Page 422)" Specify additive torque and activate/deactivate	X	X	X
"MC_TorqueRange (Page 425)" Specify high and low torque limits	X	X	X

Function	Technology object		
	Speed axis (Page 103)	Positioning axis (Page 104)	Synchronous axis (Page 105)
TIA Portal			
"Axis control panel (Page 319)" Move and home axes using the TIA Portal	X	X	X
"Optimization (Page 325)" Optimization of closed loop position control	-	X	X

2.4.2 Functions - Other technology objects

You execute the functions of the other technology objects by means of Motion Control instructions in your user program.

The following table shows the Motion Control instructions that are supported by the technology objects:

Motion Control instruction	Technology object			
	External encoder (Page 110)	Measuring input (Page 111)	Output cam (Page 126)	Cam track (Page 141)
Motion Control instructions (user program)				
"MC_Power (Page 361)" Enable, disable technology objects	X	-	-	-
"MC_Home (Page 369)" Home technology objects, set home position	X	-	-	-
"MC_MeasuringInput (Page 399)" Start measuring job once	-	X	-	-
"MC_MeasuringInputCyclic (Page 402)" Start cyclic measuring job	-	X	-	-
"MC_AbortMeasuringInput (Page 406)" End measuring job	-	X	-	-
"MC_OutputCam (Page 407)" Activate/deactivate output cam	-	-	X	-
"MC_CamTrack (Page 410)" Activate/deactivate cam track	-	-	-	X
"MC_Reset (Page 367)" Acknowledge alarms, restart technology objects	X	X	X	X

2.5 Guidelines on use of motion control

The guidelines described here present the basic procedure for using Motion Control with the CPU S7-1500. These guidelines serve as recommendations.

Requirements

- A project with a CPU S7-1500 has been created.

Procedure

Proceed as follows to use Motion Control with the CPU S7-1500:

1. Add technology object (Page 175)
2. Working with the configuration editor (Page 178)
3. Programming (Page 284)
4. Downloading to CPU (Page 315)
5. Functional test in the Commissioning window (Page 316)
6. Diagnostics (Page 332)

Technology objects 3

3.1 Configuration limits

Motion Control resources

Each CPU offers a defined set of Motion Control resources. For information on the available Motion Control resources, refer to the technical specifications of the utilized CPU.

Each technology object uses Motion Control resources:

Technology object	Motion Control resources used
Speed axis	40
Positioning axis	80
Synchronous axis	160
External encoder	80
Measuring input	40
Output cam	20
Cam track	160

You can find an overview of the Motion Control resources of a CPU in the TIA Portal under "Tools > Resources".

Extended Motion Control Resources (S7-1500T)

The cam and kinematics technology objects use "Extended Motion Control resources". For information on the maximum number of cams and kinematics that can be used in addition to the Motion Control resources, refer to the technical specifications of the relevant CPU.

Technology object	Extended Motion Control resources used
Cam	2
Kinematics	30

Application cycle

As the number of technology objects used increases, the computing time needed by CPU to process the technology objects increases. The Motion Control application cycle (Page 95) can be adapted according to the number of technology objects used.

3.2 Basics - Axes

3.2.1 Axis types

Axes can be configured with different axis types:

- Positioning and synchronous axes can be configured as rotary or linear axis.
- Speed axes are always rotary axes.

Depending on the execution of the mechanics, an axis is implemented as a linear axis or rotary axis:

- Linear axis

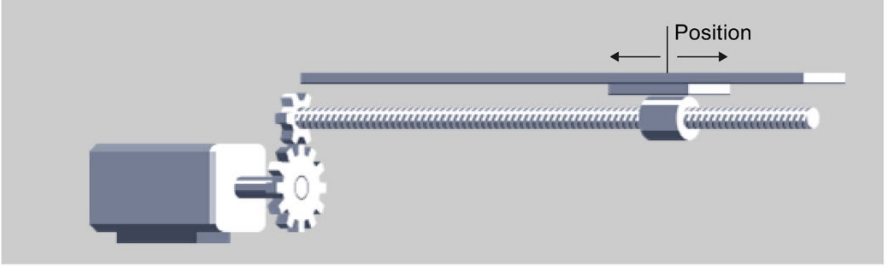

For linear axes, the position of the axis is specified as a linear measure, e.g. millimeters (mm).

- Rotary axis

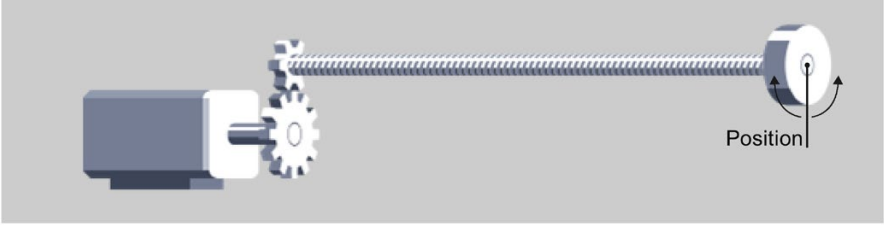

For rotary axes, the position of the axis is specified as an angular measure, e.g. degrees (°).

3.2.2 Units of measure

The supported units of measure for speed (revolutions per time unit) are 1/s, 1/min and 1/h.

The table below shows the supported units of measure for position and velocity:

Position	Velocity
nm, µm, mm, m, km	mm/s, mm/min, mm/h, m/s, m/min, m/h, km/min, km/h
in, ft, mi	in/s, in/min, ft/s, ft/min, mi/h
°, rad	°/s, °/min, rad/s, rad/min

The acceleration is set accordingly as the position/s² unit of measure.

The jerk is set accordingly as the position/s² unit of measure.

The table below shows the supported units of measure for force and torque:

Force	Torque
N, kN	Nm, kNm
lbf, ozf, pdl	lbf in, lbf ft, ozf in, ozf ft, pdl in, pdl ft

The unit of measure for time is permanently specified for the following technology objects:

Technology object	Time
Speed axis, positioning/synchronous axis, external encoder	s
Output cam, cam track, measuring input	ms

Note

When setting or changing the units of measure, take into consideration the effect on the display of parameter values and the user program:

- Display of parameter values in the technology data block
- Assignment of parameters in the user program
- Input and display of the position and velocity in the TIA Portal
- Setpoint settings by leading axes in synchronous operation

All information and displays correspond to the selected unit of measure.

The set units are displayed in the tag structure of the technology object <TO>.Units. The tag structure is described in the Appendix (Page 431) under the tags of the respective technology object.

3.2.3 Modulo setting

For the positioning axis, synchronous axis and external encoder technology objects, the "Modulo" setting can be activated.

When an axis moves in only one direction, the position value continually increases. To limit the position value to a recurring reference system, you can activate the "Modulo" setting.

When the "Modulo" setting is activated, the position value of the technology object is mapped onto a recurring modulo range. The modulo range is defined by the start value and the length.

For example, to limit the position value of a rotary axis to a full rotation, the modulo range can be defined with start value = 0° and length = 360°. As a result, the position value is mapped onto the modulo range 0° to 359.999°.

3.2.4 Long-term accuracy

Long-term accuracy means that the technological position from the accumulated encoder increments can be exactly determined (without a rounding error) and are thus always accurate.

The long-term accuracy ensures the following:

- The axis position indicated by the control always corresponds to the real position. This means that the axis position can be exactly represented from the accumulated encoder increments.
- The calculated position in the controller does not deviate from the real position. Deviations occur without long-term accuracy, for example, due to rounding errors or conversions with finite accuracy.

Non-modulo axes are stable over the long term until the numerical traversing range limit is reached. Modulo axes are accordingly stable at least as long as they do not exceed the numerical traversing range of 9.0E12 mm at 1000 increments per unit.

You can use the following equation to estimate the time after which the traversing range is exceeded.

$$\text{Travel time} = \frac{\text{Maximum position}}{\text{Velocity}}$$

Example of the maximum traversing time

Maximum position = 9.0E12 mm with a resolution of 1000 Ink / mm

Velocity = 20.0 m/min = 2.0E4 mm/min

$$\text{Travel time} = \frac{9.0\text{E}12\ \text{mm}}{2.0\text{E}4\ \text{mm/min}} = 4.5\text{E}8\ \text{min} \quad \triangleq 856\ \text{years}$$

The traversing time restarts when one of the following conditions is fulfilled:

- You have homed the axis with "MC_Home".
- You have changed the velocity of the axis

  A change in the velocity has the consequence that the traversing time changes accordingly.

Avoiding exceeding the traversing range

To prevent exceeding the traversing range, do the following before the maximum traversing time expires:

- Incremental encoder: Home the incremental encoder again.
- Absolute encoder: Perform an absolute encoder calibration with the default of the currently known position.

3.2.5 Drive and encoder connection

3.2.5.1 Brief description

A drive is assigned to the "Speed axis" technology object. A drive and one to four encoders (only with S7-1500T) are assigned to the "Positioning axis" and "Synchronous axis" technology objects. An encoder is assigned to the "External encoder" technology object.

The setpoint for the drive is specified either with PROFIdrive telegrams or using an analog output.

The following connection options are available for an encoder:

- Encoder connected to drive
- Encoder to technology module
- PROFIdrive encoder connected directly to PROFIBUS DP/PROFINET IO

The actual encoder value is transmitted exclusively via PROFIdrive telegrams.

PROFIdrive

PROFIdrive is the standardized drive technology profile for connecting drives and encoders via PROFIBUS DP and PROFINET IO. Drives that support the PROFIdrive profile are connected according to the PROFIdrive standard.

The current PROFIdrive specification is available at:

http://www.profibus.com (http://www.profibus.com)

Communication between the controller and drive/encoder is performed using various PROFIdrive telegrams. Each of the telegrams has a standardized structure. You can select the appropriate telegram according to the application. Control words and status words as well as setpoints and actual values are transmitted in the PROFIdrive telegrams.

The PROFIdrive profile likewise supports the "Dynamic Servo Control" (DSC) control concept. DSC uses rapid closed loop position control in the drive. This can be used to solve highly dynamic Motion Control tasks.

Analog drive connection

Drives with analog setpoint interfaces are connected using an analog output and an optional enable signal. The speed setpoint is specified via an analog output signal (e.g. from -10 V to +10 V) from the PLC.

Stepper motors

Drives with a stepper motor interface are connected using telegram 3 and with the help of PTO (Pulse Train Output) pulse generators.

For functional support of stepper motor operation, quantization of the control deviation can be set.

Through the specification of a quantization, a range around the target position is defined in which no correction of the actual position is to be made. This prevents a possible oscillation of the stepper motor around the target position. Two types of quantization can be set:

- Quantization of the control deviation corresponding to the encoder resolution

  (<TO>.PositionControl.ControlDifferenceQuantization.Mode = 1)

  This prevents oscillation of the stopped motor between two increment values, for example. This mode is especially helpful when using multiple encoders. With this setting, the quantization is adapted appropriately at an encoder switchover. This mode is helpful for stepper motors with encoders in which the resolution of the encoder is lower than the step size of the stepper motor.

- Direct specification of a value for quantization of the control deviation.

  (<TO>.PositionControl.ControlDifferenceQuantization.Mode = 2, value setting in <TO>.PositionControl.ControlDifferenceQuantization.Value)

  This mode is helpful for stepper motors with encoders in which the resolution of the encoder is greater than the step size of the stepper motor.

3.2.5.2 PROFIdrive telegrams

PROFIdrive telegrams are used to transfer setpoints and actual values, control and status words and other parameters between the controller and drive/encoder.

When a PROFIdrive telegram is used for connection, the drives and encoders are handled and switched on in accordance with the PROFIdrive profile.

The following table shows the possible PROFIdrive telegrams for various technology objects.

Technology object	Possible PROFIdrive telegrams
Speed axis	• 1, 2 • 3, 4, 5, 6, 102, 103, 105, 106 (actual encoder value is not evaluated)
Positioning axis/synchronous axis	
Setpoint and actual encoder value in one drive telegram	3, 4, 5, 6, 102, 103, 105, 106
Setpoint and actual encoder value separately	
Setpoint in drive telegram	1, 2, 3, 4, 5, 6, 102, 103, 105, 106
Actual value from telegram	81, 83
External encoder	81, 83
Measuring input [1]	391, 392, 393

1) When using SINAMICS drives (measuring using SINAMICS measuring input)

Telegram types

The following table shows the supported PROFIdrive telegram types for the assignment of drives and encoders:

Telegram	Brief description
Standard telegrams	
1[1]	• Control word STW1, status word ZSW1 • Speed setpoint 16 bit (NSET), actual speed value 16 bit (NACT)
2	• Control words STW1 and STW2, status words ZSW1 and ZSW2 • Speed setpoint 32 bit (NSET), actual speed value 32 bit (NACT)
3	• Control words STW1 and STW2, status words ZSW1 and ZSW2 • Speed setpoint 32 bit (NSET), actual speed value 32 bit (NACT) • Actual encoder value 1 (G1_XIST1, G1_XIST2)
4	• Control words STW1 and STW2, status words ZSW1 and ZSW2 • Speed setpoint 32 bit (NSET), actual speed value 32 bit (NACT) • Actual encoder value 1 (G1_XIST1, G1_XIST2) • Actual encoder value 2 (G2_XIST1, G2_XIST2)

Telegram	Brief description
5	• Control words STW1 and STW2, status words ZSW1 and ZSW2 • Speed setpoint 32 bit (NSET), actual speed value 32 bit (NACT) • Actual encoder value 1 (G1_XIST1, G1_XIST2) (motor encoder) • Dynamic Servo Control (DSC)[2)] – Speed precontrol value – Position difference (XERR) – Kpc - Velocity precontrol of the closed loop position control
6	• Control words STW1 and STW2, status words ZSW1 and ZSW2 • Speed setpoint 32 bit (NSET), actual speed value 32 bit (NACT) • Actual encoder value 1 (G1_XIST1, G1_XIST2) (motor encoder) • Actual encoder value 2 (G2_XIST1, G2_XIST2) • Dynamic Servo Control (DSC)[2)] – Speed precontrol value – Position difference (XERR) – Kpc - Velocity precontrol of the closed loop position control
Siemens telegrams (with torque limiting)	
102	• Control words STW1 and STW2, status words ZSW1 and ZSW2 • Speed setpoint 32 bit (NSET), actual speed value 32 bit (NACT) • Actual encoder value 1 (G1_XIST1, G1_XIST2) • Torque limiting
103	• Control words STW1 and STW2, status words ZSW1 and ZSW2 • Speed setpoint 32 bit (NSET), actual speed value 32 bit (NACT) • Actual encoder value 1 (G1_XIST1, G1_XIST2) • Actual encoder value 2 (G2_XIST1, G2_XIST2) • Torque limiting
105	• Control words STW1 and STW2, status words ZSW1 and ZSW2 • Speed setpoint 32 bit (NSET), actual speed value 32 bit (NACT) • Actual encoder value 1 (G1_XIST1, G1_XIST2) (motor encoder) • Dynamic Servo Control (DSC)[2)] – Speed precontrol value – Position difference (XERR) – Kpc - Velocity precontrol of the closed loop position control • Torque limiting

Telegram	Brief description
106	• Control words STW1 and STW2, status words ZSW1 and ZSW2 • Speed setpoint 32 bit (NSET), actual speed value 32 bit (NACT) • Actual encoder value 1 (G1_XIST1, G1_XIST2) (motor encoder) • Actual encoder value 2 (G2_XIST1, G2_XIST2) • Dynamic Servo Control (DSC)[2)] – Speed precontrol value – Position difference (XERR) – Kpc - Velocity precontrol of the closed loop position control • Torque limiting
SIEMENS additional telegrams (torque data)	
750[3)]	• Additive setpoint torque • High and low torque limits • Torque actual values
SIEMENS telegrams (measuring input) [4)]	
391	• Control word CU_STW1, status word CU_ZSW1 • Measuring input control word (MT_STW), measuring input status word (MT_ZSW) • Measuring input time stamp of negative (MT1…2_ZS_F) or positive edges (MT1…2_ZS_S) • Digital output 16 bit, digital input 16 bit
392	• Control word CU_STW1, status word CU_ZSW1 • Measuring input control word (MT_STW), measuring input status word (MT_ZSW) • Measuring input time stamp of negative (MT1…6_ZS_F) or positive edges (MT1…6_ZS_S) • Digital output 16 bit, digital input 16 bit
393	• Control word CU_STW1, status word CU_ZSW1 • Measuring input control word (MT_STW), measuring input status word (MT_ZSW) • Measuring input time stamp of negative (MT1…8_ZS_F) or positive edges (MT1…8_ZS_S) • Digital output 16 bit, digital input 16 bit • Analog input 16 bit

Telegram	Brief description
Standard telegrams - encoder	
81	• Control word STW2_ENC, status word ZSW2_ENC • Actual encoder value 1 (G1_XIST1, G1_XIST2)
83	• Control word STW2_ENC, status word ZSW2_ENC • Actual speed value 32 bit (NACT) • Actual encoder value 1 (G1_XIST1, G1_XIST2)

1) Isochronous mode is not possible.

2) For use of Dynamic Servo Control (DSC), the motor encoder (first encoder in the telegram) of the drive must be used as the first encoder for the technology object.

3) Can also be used for the telegrams 1, 2, 3, 4, 5, 6, 102, 103, 105, 106

4) When using SINAMICS drives (measuring using SINAMICS measuring input)

See also

Data connection drive/encoder via data block (Page 50)

3.2.5.3 Actual values

Brief description

For position-controlled motion and positioning, the controller must know the actual position value.

The actual position value is provided by a PROFIdrive telegram.

The actual values are represented as incremental or absolute values in the PROFIdrive telegram. The actual values are normalized in the controller to the technological unit taking into account the configuration of the mechanics. The reference to a physical position of the axis or external encoder is established by homing.

The controller supports the following types of actual values (encoder types):

- Incremental actual value
- Absolute actual value with the setting absolute (measuring range > traversing range of the axis)
- Absolute actual value with the setting absolute (measuring range < traversing range of the axis)

Actual value calculation for virtual axis or axis in simulation

The actual value of a virtual axis or an axis in simulation is formed from the setpoint taking time delays into account.

You calculate the time delay from actual value to the setpoint (T_t) as follows:

- With precontrol: $T_t = T_{ipo} + T_{servo} + T_{vtc} + T_{addPtc}$
- Without precontrol, without DSC: $T_t = T_{ipo} + 1/Kv + T_{addPtc}$
- Without precontrol, with DSC[1]: $T_t = T_{ipo} + T_{servo} + 1/Kv + T_{addPtc}$

  [1] Only applies to axis in simulation.

T_t	Time delay from the actual value to the setpoint
T_{ipo}	CPU time of MC-Interpolator [OB92]
T_{servo}	CPU time of MC-Servo [OB91]
T_{vtc}	Speed control loop substitute time (T_{vtc} off <TO>.DynamicAxisModel.VelocityTimeConstant)
T_{addPtc}	Additive position control loop equivalent time (T_{addPtc} from <TO>.DynamicAxisModel.AdditionalPositionTimeConstant)
kV	Gain factor (Kv off <TO>.PositionControl.Kv)

See also

Virtual axis (Page 50)

Axis in simulation (Page 49)

Incremental actual value

The actual value in the PROFIdrive telegram is based on an incremental value.

After POWER ON, position zero is displayed. A transition of the CPU to RUN mode starts the actual value update. The actual value is then also updated in CPU STOP mode. The relationship between the technology object and the mechanical position must be re-established by means of homing.

Absolute actual value

The actual value in the PROFIdrive telegram is based on an absolute value.

After POWER ON, position zero is displayed. The first transition of the CPU to RUN mode starts the actual value update. The actual value is then also updated in CPU STOP mode. The supplied absolute value is assigned to the associated mechanical axis position by means of the absolute encoder adjustment. The absolute encoder adjustment must be performed once. The absolute value offset is retentively saved beyond the switching on/off of the controller.

Differentiation of absolute values:

- The measuring range of the encoder is larger than the traversing range of the axis:

  Absolute value with setting absolute
- The measuring range of the encoder is smaller than the traversing range of the axis:

  Absolute value with setting cyclic absolute

Absolute actual value with setting absolute (measuring range > traversing range)

The axis position results directly from the current actual encoder value. The traversing range must be within an encoder measuring range. This means that the zero passage of the encoder must not be located in the traversing range.

When the controller is switched on, the axis position is determined from the absolute actual encoder value.

Absolute actual value with setting cyclic absolute (measuring range < traversing range)

The encoder supplies an absolute value within its measuring range. The controller includes the traversed measuring ranges and thus determines the correct axis position beyond the measuring range.

When the controller is switched off, the traversed measuring ranges are saved in the retentive memory area of the controller.
At the next power-on, the saved traversed measuring ranges are taken into account in the calculation of the actual position value.

NOTICE
Movements of the axis while the controller is switched off can skew the actual value If the axis or the encoder is moved by more than half of the encoder measuring range while the controller is switched off, then the actual value in the controller is no longer in accord with the mechanical axis position.

See also

Absolute value adjustment (Page 85)

Tags

The tags named in the Homing (Page 87) section are relevant for adapting actual values.

3.2.5.4 Automatic transfer of drive and encoder parameters in the device

Identical reference values for the drive and encoder connections must be set in the controller and in the drive and encoder for the operation.

The speed setpoint NSET and the actual speed value NACT are transferred in the PROFIdrive telegram as a percentage of the reference speed. The reference value for the speed must be set identically in the controller and in the drive.

The resolution of the actual value in the PROFIdrive telegram must likewise be set identically in the controller and in the drive and encoder modules

Automatic transfer of parameters

The drive and encoder parameters can be automatically applied in the CPU for the following drives and encoders.

- SINAMICS drives (see compatibility list (Page 555))
- PROFIdrive encoder as of product version A16

The corresponding parameters are transferred after the (re-)initialization of the technology object or (re)start of the drive and the CPU. Changes in the drive configuration are transferred after restart of the drive or technology object.

Successful transfer of the parameters can be checked in the controller in the value of the tags of the technology objects <TO>.StatusDrive.AdaptionState = 2 and <TO>.StatusSensor[n].AdaptionState = 2.

Parameters

The controller settings are made in the TIA Portal under "Technology object > Configuration > Hardware interface > Data exchange with the drive/encoder".

The drive and encoder settings are made in the configuration or the respective hardware.

The following table compares the settings in the TIA Portal, in the controller and the corresponding drive/encoder parameters:

Setting in the TIA Portal	Controller tag in the technology data block	Drive parameter	Automatic transfer
Drive			
Telegram number	Telegram input address <TO>.Actor.Interface.AddressIn	Telegram number P922	-
	Telegram output address <TO>.Actor.Interface.AddressOut		
Reference speed in [1/min]	<TO>.Actor.DriveParameter.ReferenceSpeed	(SINAMICS drives: P2000)	X
Maximum speed of motor in [1/min]	<TO>.Actor.DriveParameter.MaxSpeed	(SINAMICS drives: P1082)	X
Reference torque in [NM]	<TO>.Actor.DriveParameter.ReferenceTorque	(SINAMICS drives: P2003)	X
Encoder			
Telegram	<TO>.Sensor[n].Interface.AddressIn	P922	-
	<TO>.Sensor[n].Interface.Addressout		
Encoder type	<TO>.Sensor[n].Type 0: incremental 1: absolute 2: cyclic absolute	P979[5] Encoder 1 P979[15] Encoder 2	-
Measuring system	<TO>.Sensor[n].System 0: linear 1: rotary	P979[1] Bit0 Encoder 1 P979[11] Bit0 Encoder 2	X
Resolution (linear encoder) The grid spacing is specified on the nameplate of the encoder as a separation distance of the marks on the linear measuring system.	<TO>.Sensor[n].Parameter.Resolution	P979[2] Encoder 1 P979[12] Encoder 2	X
Increments per revolution (rotary encoder)	<TO>.Sensor[n].Parameter.StepsPerRevolution	P979[2] Encoder 1 P979[12] Encoder 2	X
Number of bits for fine resolution XIST1 (cyclic actual encoder value, linear or rotary encoder)	<TO>.Sensor[n].Parameter.FineResolutionXist1	P979[3] Encoder 1 P979[13] Encoder 2	X
Number of bits for fine resolution XIST2 (absolute encoder value, linear or rotary encoder)	<TO>.Sensor[n].Parameter.FineResolutionXist2	P979[4] Encoder 1 P979[14] Encoder 2	X
Differentiable encoder revolutions (rotary absolute encoder)	<TO>.Sensor[n].Parameter.Determinable Revolutions	P979[5] Encoder 1 P979[15] Encoder 2	X

3.2.5.5 Safety functions in the drive

Safety functions ("Safety Integrated Basic Functions") in the SINAMICS drive are safety-oriented, internal drive functions with the goal of shutting down the respective drive safely. In addition, additional safety functions are available to monitor definable limits ("Safety Integrated Extended Functions"). The goal of these safety functions is to monitor that the respective limit is maintained, to signal the violation or to subsequently shut down the drive safely. To prevent the monitoring function from being triggered, it is necessary to switch the axis to the monitored operating mode with the user program or to keep it in this mode.

The cooperation of the safety functions in the drive and the SIMATIC S7-1500 and S7-1500T are necessary to ensure fault-free plant operation.

The technology objects speed axis, positioning axis and synchronous axis support the "Safety Integrated Basic Functions" of the drive. The technology object detects that the Basic Safety function is triggered and displays a corresponding warning (technology alarm 550 - alarm response: Track setpoints) or alarm (technology alarm 421 - alarm response: Remove enable).

No additional response must take place in the user program, especially for technology alarm 550, at the "Enable" input of the Motion Control instruction "MC_Power" in the sense of a "shutdown". Shutdown of the Motion Control instruction "MC_Power" by the user after technology alarm 421 is possible but not necessary.

After acknowledgment and release of the drive by the actual safety function, the technology alarm can also be acknowledged at the respective technology object with the Motion Control instruction "MC_Reset". The technology object is then enabled automatically, if "MC_Power.Enable" is still "TRUE".

The "Safety Integrated Extended Functions" are **not** supported by the technology object independently.

To prevent the extended safety functions from being triggered and thus preventing a disruption in plant operation, we recommend that you evaluate the status of the safety functions. This evaluation can take place in the user program by using or evaluating the status information of the "Safety Info Channels" (SIC). With the help of the corresponding Motion Control instruction, the axis can now stay within the monitored limit or reach it before a deviation is detected.

If a safety function is applied to a following axis in active synchronous operation, one of the following two responses is required:

- End synchronous operation
- Adjust velocity of the leading axis accordingly

Four status words are available in the SIC:

- S_ZSW1B
- S_ZSW2B
- S_ZSW3B
- S_V_LIMIT_B

Two predefined PROFIdrive telegrams are available for transmission:

- Tel. 700 (contains the status words S_ZSW1B & S_V_LIMIT_B)
- Tel. 701 (contains all four status words and two additional control words)

Additional information

Additional information on the safety functions in SINAMICS drives and on the SIC is available in the SINAMICS S120 Safety Integrated Function Manual.

https://support.industry.siemens.com/cs/document/99668646 (https://support.industry.siemens.com/cs/ww/en/view/99668646)

The tables below provide an overview of the four SIC status words and the required response for each to prevent faults in plant operation.

S_ZSW1B

S_ZSW1B		Meaning		Recommended response of the respective axis in the user program
Bit	Assignment			
0	STO (active)	1	Safe Torque Off active	MC_Power can remain enabled (waiting).
		0	Not active	None
1	SS1 (active)	1	Safe Stop 1 active	Drive brakes autonomously and goes into STO. MC_Power remains enabled until STO.
		0	Not active	None
2	SS2 (active)	1	Safe Stop 2 active	Drive brakes autonomously and goes into SOS. MC_Power remains enabled.
		0	Not active	None
3	SOS (active)	1	Safe Operating Stop active	MC_Power remains enabled. The drive must not move (monitoring takes place in the drive)
		0	Not active	None
4	SLS (active)	1	Safety-Limited Speed active	MC_Power remains enabled. Velocity must be less than active velocity limit (see "Active SLS stage" or S_V_LIMIT_B).
		0	Not active	None
5	SOS (selected)	1	Safe Operating Stop selected	MC_Power remains enabled. Braking with MC_Halt within the time permitted by SOS.
		0	Deselected	None
6	SLS (selected)	1	Safety-Limited Speed selected	Drop below velocity limit within the time specified by SLS. For example, by specifying an override or a new dynamic limit (restriction with synchronous motion).
		0	Deselected	None
7	Internal event	1	Group alarm that a safety function was selected or became active	Additional evaluation of the status words required to determine the triggering safety function. The bit indicates that a safety function is active. (See also "Safety alarm")
		0	No event	None
8	Reserved	-		-

S_ZSW1B		Meaning		Recommended response of the respective axis in the user program
Bit	Assignment			
9	Active SLS level	SLS velocity limit Display bit 0		Additional information on SLS (bit 6) – shows active velocity limit for SLS in levels (1… 4). This limit can be evaluated in the program to limit the current velocity of the axis as needed.
10		SLS velocity limit Display bit 1		
11	Reserved	-		-
12	SDI positive	1	Safe Direction positive selected	Reaching standstill or the positive velocity of the actual value of the axis (when SDI negative = 0) within the time specified by SDI.
		0	Deselected	None monitoring for positive direction.
13	SDI negative	1	Safe Direction negative selected	Reaching standstill or the negative velocity of the actual value of the axis (when SDI positive = 0) within the time specified by SDI.
		0	Deselected	None monitoring for negative direction.
14	ESR retraction	1	Extended stop and retraction required (not a Safety function)	To be considered individually. You can find additional information in the SINAMICS S120 Safety Integrated Function Manual. https://support.industry.siemens.com/cs/document/99668646 (https://support.industry.siemens.com/cs/ww/en/view/99668646)
		0	Not requested	None
15	Safety alarm	1	Effective	If necessary, evaluate bit as group alarm to see whether a Safety alarm is pending in the alarm buffer.
		0	Not effective	None

S_V_LIMIT_B

S_V_LIMIT_B		Meaning	Explanation
Bit	Assignment		
0 … 31	Velocity setpoint limit	SLS Speed limit (32-bit resolution with sign)	Additional information on SLS (S_ZSW1B bit 6) Shows the selected / active velocity limit for SLS. If necessary, the velocity limit can be evaluated in the program to limit the current velocity of the axis as needed.

S_ZSW2B

S_ZSW2B		Meaning		Recommended response of the respective axis
Bit	Assignment			
0 … 3	Reserved	-		-
4	SLP selected position area	1	SLP area 2 selected	Safe position in the area 2. Do not change the position using the user program any longer.
		0	SLP area 1 selected	Safe position in the area 1. Do not change the position using the user program any longer.
5, 6	Reserved	-		-
7	SLP selected and user approval set	1	Safety-Limited Position selected and user approval is set	Status message (if required in the user program) Application-dependent evaluation (means that the SLP is selected and the safe position was confirmed by the user – see "Safe homing")
		0	SLP not selected or user approval missing	Application-dependent evaluation
8	SDI positive	1	Safe Direction positive selected	Reaching standstill or the positive velocity of the actual value of the axis within the time specified by SDI. (when SDI negative = 0)
		0	Deselected	None monitoring for positive direction
9	SDI negative	1	Safe Direction negative selected	Reaching standstill or the negative velocity of the actual value of the axis within the time specified by SDI. (when SDI positive = 0)
		0	Deselected	None monitoring for negative direction
10, 11	Reserved	-		-
12	Test stop active	1	Test stop active	Status message (if required in the user program) Application-dependent evaluation
		0	Not active	None
13	Test stop required	1	Test stop required	Perform test stop
		0	Not required	None
14, 15	Reserved	-		-

S_ZSW3B

S_ZSW3B		Meaning		Recommended response of the respective axis
Bit	Assignment			
0	Brake test	1	Brake test selected	MC_Power remains enabled. Do not start travel motion with user program.
		0	Deselected	None – brake test is inactive (normal plant operation)
1	Setpoint value specification drive / external	1	Specification for drive	The speed setpoint is specified by the SBT function. Application-dependent evaluation
		0	External specification (control)	The "normal" speed setpoint is in effect. Application-dependent evaluation – setpoint value specification through user program required
2	Active brake	1	Test brake 2 active	Status message (if required in the user program) Application-dependent evaluation
		0	Test brake 1 active	Status message (if required in the user program) Application-dependent evaluation
3	Brake test active	1	Test active	Status message (if required in the user program) Application-dependent evaluation
		0	Inactive	None
4	Brake test result	1	Test required	Status message (if required in the user program) Application-dependent evaluation
		0	With error(s)	Status message (if required in the user program) Application-dependent evaluation, test must usually be successful to guarantee safety of the brake.
5	Brake test complete	1	Run test	Status message (if required in the user program) Application-dependent evaluation
		0	Incomplete	Status message (if required in the user program) Application-dependent evaluation, usually test is repeated
6	External brake request	1	Closing the brake	Closing external brake (when controlled by user program) Application-dependent evaluation
		0	Opening the brake	Opening external brake (when controlled by user program) Application-dependent evaluation
7	Current load sign	1	Negative sign	Status of the load sign if required in the user program Application-dependent evaluation
		0	Positive sign	
8 … 13	Reserved	-		-
14	Acceptance test SLP(SE) selected	1	Acceptance test SLP(SE) selected	Status message (if required in the user program) Application-dependent evaluation
		0	Deselected	None
15	Acceptance test mode selected	1	Acceptance test mode selected	Status message (if required in the user program) Application-dependent evaluation
		0	Deselected	None

3.2.5.6 Axis in simulation

S7-1500 Motion Control offers the option to move real axes in simulation mode. Speed, positioning and synchronous axes can thus be simulated without a connected drive and encoder in the CPU.

When the simulation mode is activated, the drive and encoder connection does not need to be configured in the axis configuration, for example, if the drive configuration is not yet available at this time. The "Simulation" configuration can be changed during runtime of the user program (<TO>.Simulation.Mode). A valid drive and encoder connection is required when exiting the simulation.

To use a technology object in simulation mode or with SIMATIC S7 PLCSIM, you need to use encoder 1 for closed loop position control of the axis.

Applications

- For example, an axis is simulated for programming the machine application and assigned to the configured hardware later for commissioning.
- During commissioning, for example, not all hardware components are available.
- No axis motions should take place during commissioning.

Characteristics in simulation mode

An axis in simulation does not output setpoints to the drive and does not read any actual values of the encoder. The actual values (Page 39) are formed with a time delay from the setpoints.

Hardware limit switches and home position switches have no effect.

The technology objects measuring input (with signal detection via TM_Timer_DIDQ or SINAMICS measurement sensing input), output cam and cam track can also be used for axes in simulation.

The following table shows the Motion Control instructions with adapted behavior in simulation mode:

Motion Control instruction	Characteristics in simulation mode
MC_Power	The axis is enabled immediately without waiting for feedback from the drive.
MC_Home	Homing jobs are executed immediately without simulated axis motion.
MC_TorqueLimit	The specified torque is not output to the drive.

3.2.5.7 Virtual axis

S7-1500 Motion Control offers the possibility to configure an axis as a virtual axis. A virtual axis has motion control, but, in contrast to real axes, no drive and encoder connection. The setpoints are only processed within the controller and no real drive is controlled.

Application:

A virtual axis, for example, is often used as a virtual leading axis in order to generate the setpoints for several real following axes in synchronous operation.

The "Virtual axis" configuration can only be changed by a new download to the CPU (in STOP mode) (<TO>.VirtualAxis.Mode).

The behavior of a virtual axis is identical to the behavior of an axis in simulation (Page 49).

3.2.5.8 Data connection drive/encoder via data block

The data connection of PROFIdrive drives and encoders occurs either directly via the PROFIdrive telegram or via a data block.

Use the system-generated tags of the PROFIdrive telegrams if you want to evaluate the telegram contents.

Use the connection via data block if you want to influence or evaluate telegram contents in the user program for process-specific reasons.

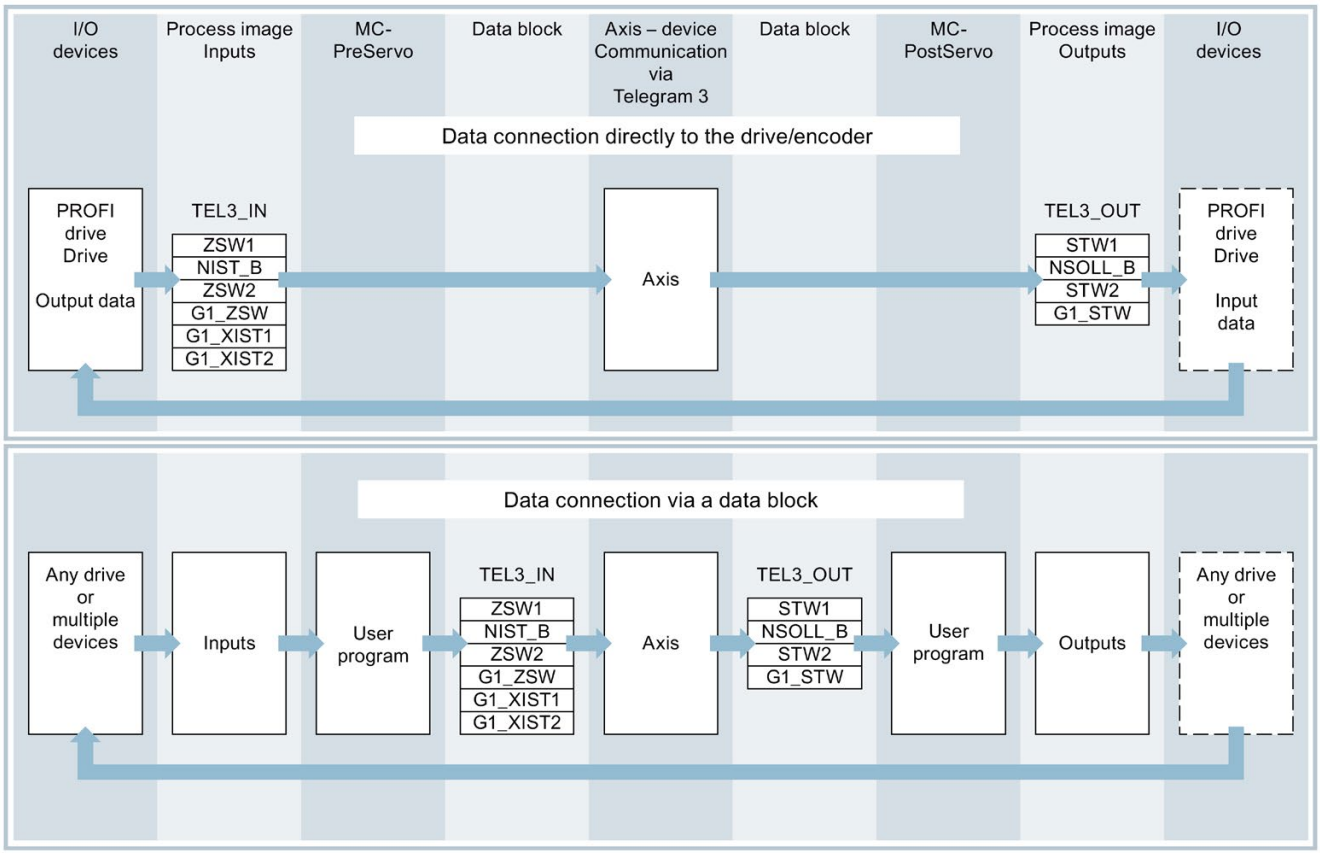

Principle of data connection via data block

Generally, at the start of closed loop position control of the axis (by MC-Servo [OB91]), the input area of the drive or encoder telegram is read.

At the end of closed loop position control, the output area of the drive or encoder telegram is written.

To influence or evaluate telegram contents for process-specific reasons, a data interface via a data block must be connected in between before and after the closed loop position control.

- The input area of the telegram can be edited using the MC-PreServo [OB67] organization block. The MC-PreServo is called before the MC-Servo.
- The input area of the telegram can be edited using the MC-PostServo [OB95] organization block. The MC-PostServo is called after the MC-Servo.

The data block must be created by the user and contain a data structure of data type "PD_TELx" for the data connection. Here, "x" stands for the telegram number of the drive or encoder configured in the device configuration.

The organization blocks MC-PreServo and MC-PostServo can be programmed by the user and must be added with the command "Add new block". The connection to the I/O via telegram must be programmed in this organization block. When you use DSC you have to edit the signs of life in the telegrams in MC-PreServo and MC-PostServo yourself according to the PROFIdrive standard.

See also

PROFIdrive telegrams (Page 36)

Organization Blocks for Motion Control (Page 95)

Connect drive/encoder via data block (Page 269)

3.2.5.9 Tags

The following technology object tags are relevant for the drives and encoder connections:

Drive telegram	
<TO>.Actor.Interface.AddressIn	Input address for the PROFIdrive telegram
<TO>.Actor.Interface.AddressOut	Output address for the PROFIdrive telegram or the analog setpoint
<TO>.Actor.DriveParameter.Reference Speed	Reference value (100%) for the speed setpoint (NSET) of the drive
<TO>.Actor.DriveParameter.MaxSpeed	Maximum value for the speed setpoint of the drive (NSET)
<TO>.Actor.DriveParameter.Reference Torque	Reference torque for the torque transferred as a percentage
Encoder telegram	
<TO>.Sensor[n].Interface.AddressIn	Input address for the PROFIdrive telegram
<TO>.Sensor[n].Interface.AddressOut	Output address for the PROFIdrive telegram
<TO>.Sensor[n].System	Encoder system linear or rotary
<TO>.Sensor[n].Type	Encoder type, incremental, absolute or cyclic absolute
<TO>.Sensor[n].Parameter.Resolution	Resolution for linear encoder The grid spacing corresponds to the distance between two marks.
<TO>.Sensor[n].Parameter.StepsPer Revolution	Steps per revolution for rotary encoder
<TO>.Sensor[n].Parameter.Determinable Revolutions	Number of differentiable encoder revolutions for a multi-turn absolute encoder
Fine resolution	
<TO>.Sensor[n].Parameter.Fine ResolutionXist1	Number of bits for fine resolution XIST1 (cyclic actual encoder value)
<TO>.Sensor[n].Parameter.Fine ResolutionXist2	Number of bits for fine resolution XIST2 (absolute value of encoder)
Simulation mode	
<TO>.Simulation.Mode	Simulation mode 0: No simulation, normal operation 1: Simulation mode

3.2.6 Mechanics

3.2.6.1 Brief description

For the display and processing of the technology object's position, the decisive factor is whether the position is represented as a unit of length (linear axis) or a unit of angle (rotary axis).

Examples of units of length: mm, m, km

Examples of units of angle: °, rad

For the determination of the physical position from an actual encoder value, the system must know the various properties and configurations of the mechanics.

Positioning axis/synchronous axis

The following configuration options for mechanics are supported:

- Load gear
- Leadscrew pitch (linear axes only)
- Encoder mounting type:
  - Motor side (before the load gear)
  - Load side (after the load gear and as applicable the leadscrew)
  - External (e.g. odometer)
- Inversion of drive direction
- Inversion of encoder direction

External encoder

The following configuration options for mechanics are supported:

- Measuring gear (for rotary encoders)
- Leadscrew pitch (only with linear system of units and rotary encoders)
- Inversion of encoder direction

Speed axis

The following configuration options for mechanics are supported:

- Load gear
- Inversion of drive direction

3.2.6.2 Tags

The following technology object tags are relevant for the setting of the mechanics:

Type of motion	
<TO>.Properties.MotionType	Indication of linear or rotary motion 0: Linear motion 1: Rotary motion
Load gear	
<TO>.LoadGear.Numerator	Load gear numerator
<TO>.LoadGear.Denominator	Load gear denominator
Leadscrew pitch	
<TO>.Mechanics.LeadScrew	Leadscrew pitch
Encoder mounting type	
<TO>.Sensor[n].MountingMode	Encoder mounting type
<TO>.Sensor[n].Parameter.Distance PerRevolution	Load distance per encoder revolution with an externally mounted encoder
Inversion	
<TO>.Actor.InverseDirection	Setpoint inversion
<TO>.Actor.Efficiency	Efficiency of leadscrew pitch
<TO>.Sensor[n].InverseDirection	Actual value inversion
Modulo	
<TO>.Modulo.Enable	Enable modulo
<TO>.Modulo.Length	Modulo length
<TO>.Modulo.StartValue	Modulo start value

3.2.7 Traversing range limitation

3.2.7.1 Brief description

Hardware and software limit switches limit the permissible traversing range and operating range of the positioning axis/synchronous axis. Before use, they must be enabled in the configuration or in the user program.

The following figure shows the relationship between the operating range, maximum traversing range and limit switches:

① Mechanical endstop
② Hardware limit switches
③ Software limit switches
④ Maximum traversing range
⑤ Operating range

3.2.7.2 Hardware limit switches

Hardware limit switches are limit position switches that limit the maximum permissible traversing range of the axis.

Select the positions of the hardware limit switches so that there is adequate braking distance for the axis when needed. The axis should come to a standstill before a mechanical endstop.

Approaching the hardware limit switches

In the monitoring of range limitation, no distinction is made as to whether the switches are reached or crossed.

If a hardware limit switch is reached, technology alarm 531 is output, and the technology object is disabled (alarm response: remove enable).

Exception

If the hardware limit switches are used as reversing cams or reference cams during homing, then the monitoring of the hardware limit switches has no effect.

When hardware limit switches are used as reversing cams, the axis is braked with the deceleration configured in the dynamic defaults.

This must be taken into account when planning the distance of the hardware limit switch to the mechanical endstop.

Retracting

The position of the axis when the hardware limit switch is detected is stored internally on the CPU. The status of the reached hardware limit switch is reset only after the hardware limit switch is left and the axis is once again in the maximum traversing range.

To retract the axis after it reaches the hardware limit switch and to reset the status of the hardware limit switch, follow the steps below:

1. To enable motion in the retraction direction, acknowledge the technology alarm.
2. Traverse the axis in the retraction direction until the hardware limit switch is left.
   The axis must then be within the maximum traversing range.
   If you move the axis opposite the retraction direction before the hardware limit switch is left, the monitoring will be triggered again.

The following chart shows the behavior of the status word when the hardware limit switch is reached and when the axis is retracted:

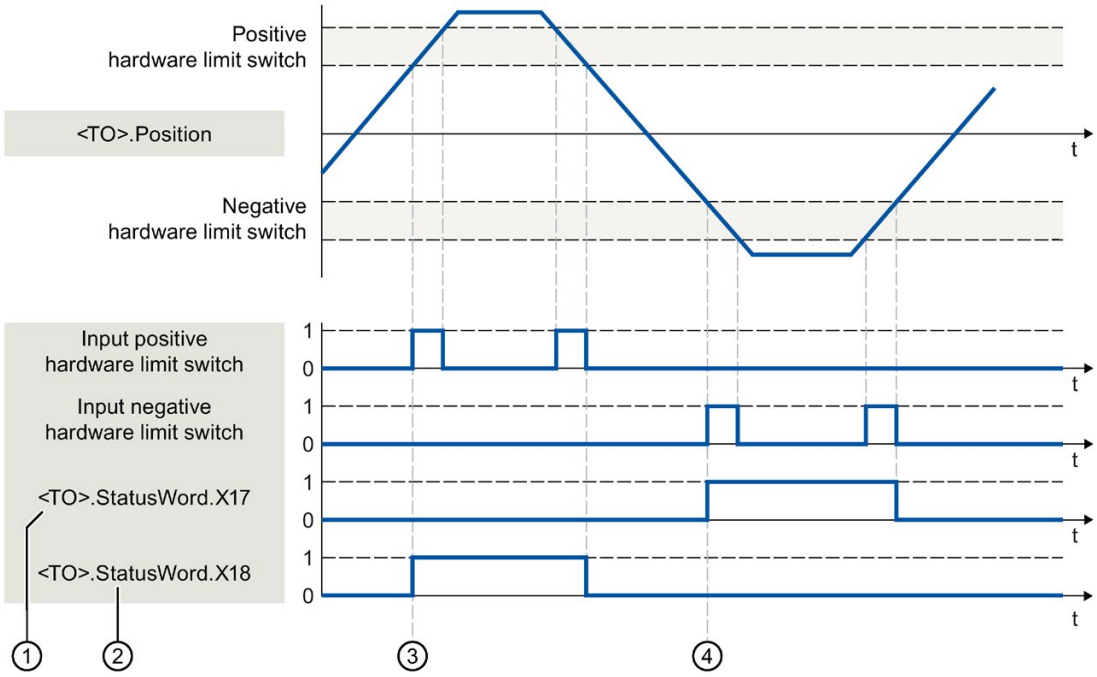

① <TO>.StatusWord.X17 (HWLimitMinActive)
0: Negative hardware limit switch not reached
1: Negative hardware limit switch reached or overtraveled

② <TO>.StatusWord.X18 (HWLimitMaxActive)
0: Positive hardware limit switch not reached
1: Positive hardware limit switch reached or overtraveled

③ The position of the axis when the **positive** hardware limit switch is detected is saved internally in the CPU. To reset the status of the hardware limit switch, the axis position must fall short of this position.

④ The position of the axis when the **negative** hardware limit switch is detected is saved internally in the CPU. To reset the status of the hardware limit switch, the axis position must go past this position.

3.2.7.3 Software limit switch

The operating range of the axis is limited with software limit switches. Relative to the traversing range, always position the software limit switches within the hardware limit switches. Since the positions of the software limit switches can be flexibly configured, the operating range of the axis can be individually adapted in accordance with the current velocity profile.

Software limit switches are only in effect when there is a valid actual value after homing the technology object. The monitoring of the software limit switches is relative to the setpoint.

Modulo enabled

With modulo enabled, the modulo position is monitored.

The software limit switches are configured and activated in the axis configuration. The software limit switches can be activated or deactivated in the user program using the <TO>.PositionLimits_SW.Active tag, If the positions of both software limit switches are outside the modulo range, the monitoring has no effect. No check is made to determine whether the positions of the software limit switches are within the modulo range.

Approaching the software limit switches

The axis continually checks the position of the software limit switch during motion and brakes to exactly this position, if necessary.

If the software limit switches are reached, then technology alarm 533 is output, and the axis is stopped with the maximum dynamic values (alarm response: Stop with maximum dynamic values). The technology object remains enabled.

Overrun of the software limit switches

If a software limit switch is crossed, technology alarm 534 is output, and the technology object is disabled (alarm response: remove enable).

Retracting

To retract the axis after violation of the software limit switch, follow the steps below:

1. Acknowledge the technology alarm.
2. Move the axis in the retraction direction until the software limit switch is left.

   If you move the axis opposite the retraction direction before the software limit switch is left, the monitoring with be triggered again.

3.2.7.4 Tags

The following technology object tags are relevant for software limit switches:

Status indicators	
<TO>.StatusWord.X15 (SWLimitMinActive)	Negative software limit switch is active
<TO>.StatusWord.X16 (SWLimitMaxActive)	Positive software limit switch is active
<TO>.ErrorWord.X8 (SWLimit)	An alarm is pending, that a software limit switch was violated
Control bits	
<TO>.PositionLimits_SW.Active	Enables / disables the monitoring of the software limit switches
Position values	
<TO>.PositionLimits_SW.MinPosition	Position of the negative software limit switch
<TO>.PositionLimits_SW.MaxPosition	Position of the positive software limit switch

The following technology object tags are relevant for hardware limit switches:

Status indicators	
<TO>.StatusWord.X17 (HWLimitMinActive)	Negative hardware limit switch is active
<TO>.StatusWord.X18 (HWLimitMaxActive)	Positive hardware limit switch is active
<TO>.ErrorWord.X9 (HWLimit)	An alarm is pending; a hardware limit switch was violated
Control bits	
<TO>.PositionLimits_HW.Active	Enables / disables the monitoring of the hardware limit switches
Parameters	
<TO>.PositionLimits_HW.MinSwitchLevel	Level selection for activation of the low hardware limit switch: FALSE: At low level, the signal is active TRUE: At high level, the signal is active
<TO>.PositionLimits_HW.MinSwitchAddress	Byte number of the I/O address of the hardware limit switch for the low or minimum position
<TO>.PositionLimits_HW.MaxSwitchLevel	Level selection for activation of the high hardware limit switch: FALSE: At low level, the signal is active TRUE: At high level, the signal is active
<TO>.PositionLimits_HW.MaxSwitchAddress	Byte number of the I/O address of the hardware limit switch for the high or maximum position

3.2.8 Motion control and limits for dynamics

3.2.8.1 Brief description

Motion control of the axis occurs by means of velocity profiles (Page 60). The velocity profiles are calculated in accordance with the specifications for dynamics. A velocity profile defines the behavior of the axis during approach, braking and changes in velocity. During positioning a velocity profile is calculated, that moves the axis to the target point.

Maximum values for velocity, acceleration and jerk result from the properties of the drive and the mechanics. These maximum values can be configured in the limits for dynamics. The limits for dynamics are in effect as limits for every motion generated by means of the technology object. The dynamic limits have no effect on a following axis in synchronous operation.

The configurable emergency stop deceleration (Page 62) is triggered by the Motion Control instruction MC_Power or by a technology alarm.

The jerk limit reduces the mechanical load during an acceleration ramp or deceleration ramp. A "smoothed" velocity profile results.

See also

Dynamic limits in synchronous operation (Page 62)

3.2.8.2 Velocity profile

Velocity profiles with or without jerk limitation are supported for motion control of the axis.

The dynamic values for the motion are specified in the Motion Control job. Alternatively, the values of the dynamic defaults (Page 207) can be used. The defaults and the limits for velocity, acceleration, deceleration and jerk are set in the configuration.

To influence velocity, a velocity override can override the current traversing velocity.

Velocity profile without jerk limitation

The following figure shows velocity, acceleration and jerk:

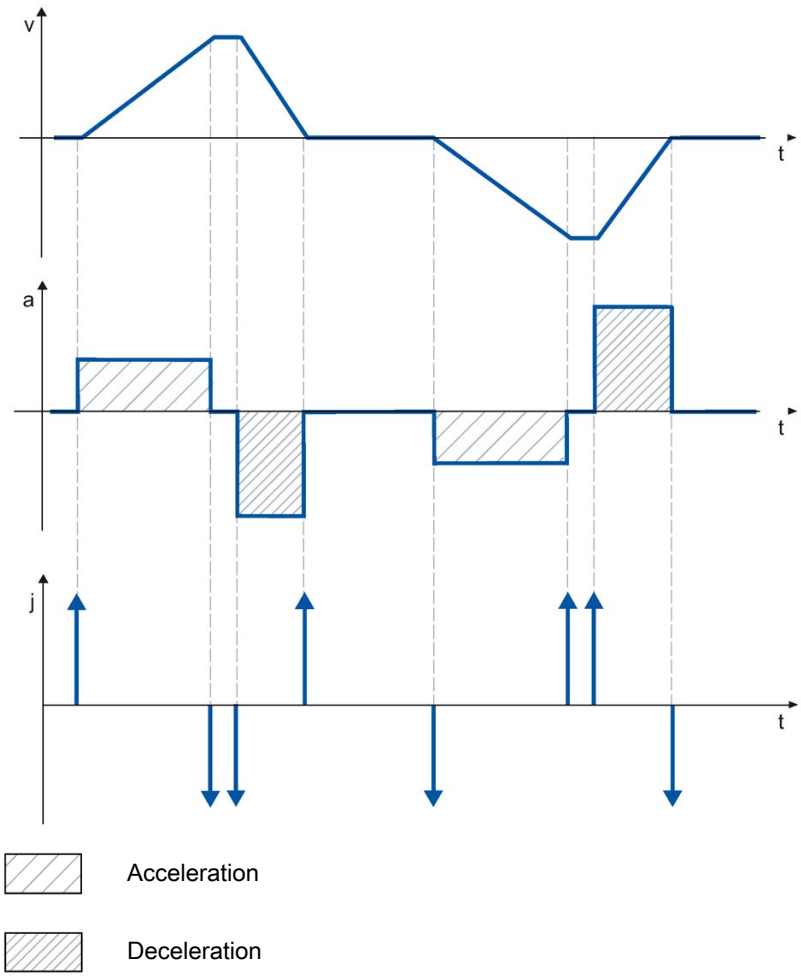

Velocity profile with jerk limitation

The following figure shows velocity, acceleration and jerk:

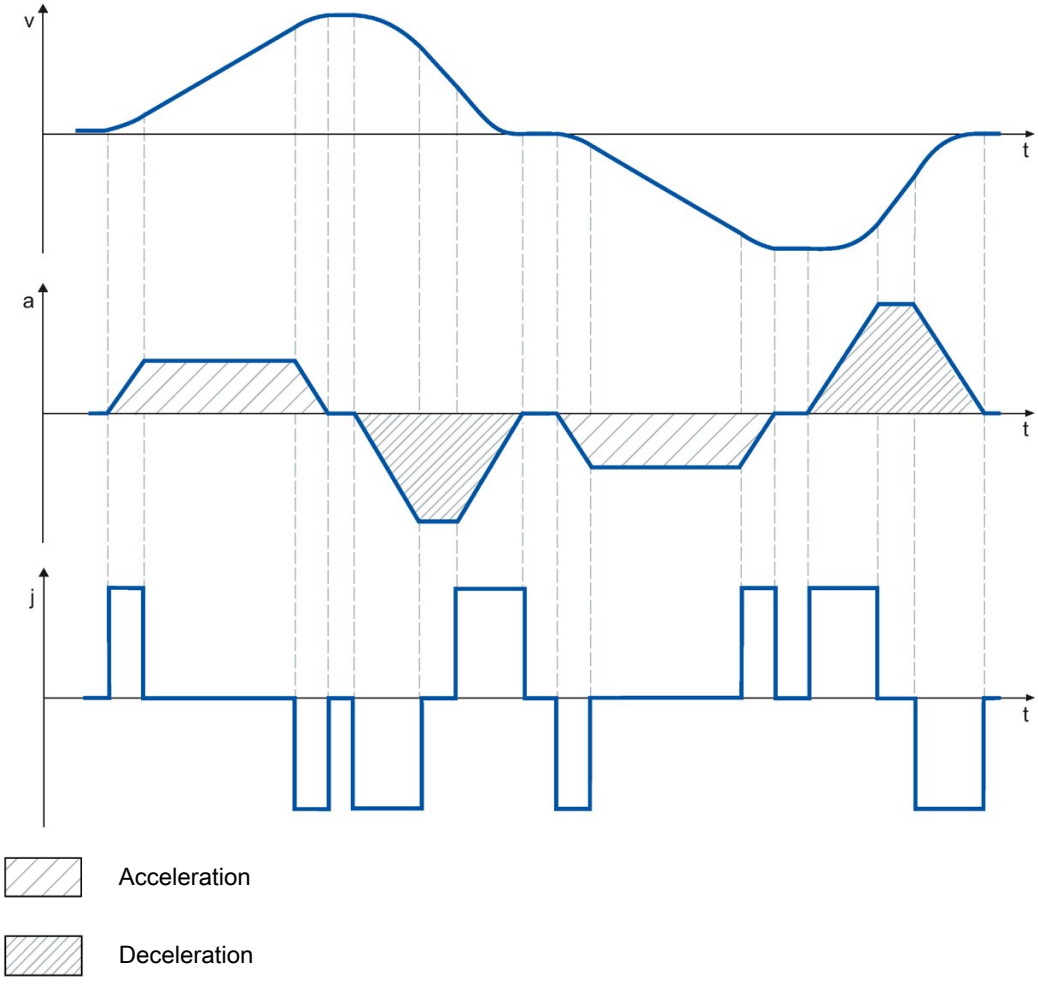

A velocity profile with jerk limitation is employed for a continuous acceleration and deceleration sequence. The jerk can be specified.

3.2.8.3 Emergency stop deceleration

When stopping with the emergency stop ramp, the axis is braked to a standstill without a jerk limit, using the configured emergency stop deceleration.

In the following cases the configured emergency stop deceleration is in effect:

- For an emergency stop ramp that has been enabled via the Motion Control instruction "MC_Power" with parameter "StopMode" = 0.
- For a technology alarm with the local alarm response "Stop with emergency stop ramp".

This emergency stop deceleration can be set greater than the maximum deceleration. If the emergency stop deceleration is set lower than this, it may occur that the axis does not stop until after the limit switch in the case of "Stop at software limit switch" and the occurrence of a technology alarm with the local alarm response "Stop with emergency stop ramp".

3.2.8.4 Dynamic limits in synchronous operation

Dynamic limits in synchronous operation with MC_GearIn

Leading axis

The dynamic limits configured for the technology object are always in effect for the leading axis.

Following axis

If a synchronous axis is operated as a following axis in synchronous operation with MC_GearIn, the following dynamic limits apply depending on the phase of the synchronous operation.

- Synchronization

  During the synchronizing phase, dynamic limits configured for the technology object apply to the following axis.

- Synchronous motion

  When the synchronous axis is moving synchronously to the leading axis as a following axis, the dynamics of the following axis is limited only to the maximum speed of the drive (<TO>.Actor.DriveParameter.MaxSpeed). The dynamics of the following axis results from the synchronous operation function.

  If the dynamic limits configured for the following axis are exceeded, this will be indicated in the technology object tag <TO.>StatusSynchronizedMotion.StatusWord.

  If the following axis cannot follow the leading value, this results in a following error, which is monitored by the following error monitoring.

- Synchronous operation override

  As soon as synchronous operation has been overridden, the dynamic limits configured for the technology object apply to the following axis again. With the start of the overriding job, the active dynamics is transitioned (smoothed) to the configured dynamic limits and the specifications for the Motion Control instruction.

See also

StatusSynchronizedMotion tags (synchronous axis) (Page 469)

Override response V4: Synchronous operation jobs (Page 429)

3.2.8.5 Torque limits

Force/torque limiting

Adjustable force/torque limiting is available for the speed axis, positioning axis and synchronous axis technology objects. The force/torque limiting can be activated and deactivated before and during a motion job. To use force/torque limiting, the drive and the PROFIdrive telegram must support torque reduction. A telegram 10x can be used.

The limit value can be configured as a default value during configuration of the axis or it can be defined in the user program using Motion Control instruction "MC_TorqueLimiting".

The user specifies the limiting values in the configured unit of measure for force or torque. The units of measure are defined in the "Basic parameters" configuration window.

The following configuration options are available for force/torque limiting.

- "Linear" axis type
  - Torque limiting is active on motor side
  - Force limiting is active on the load side
- "Rotary" axis type
  - Torque limiting is active on load side or motor side

The force/torque limit defined by the user in accordance with the specification in the PROFIdrive telegrams 10x are transferred internally to the drive as a percentage torque reduction. The reference torque set in the "Data exchange with the drive" configuration dialog must match the reference torque set for the drive.

Linear axis type

Load-side force limitation you have defined is converted by the technology into torque reduction. If the limiting relates to the load side, the gear and leadscrew parameters defined in the "Mechanics" configuration dialog are taken into consideration. If the gear and leadscrew efficiency is crucial, you can set them in the <TO>.Actor.Efficiency tag.

Rotary axis type:

The torque is reduced on the load side with the rotary axis type. The gear parameters defined in the "Mechanics" configuration window are taken into consideration. If the efficiency of the gear is crucial, you can set them in the <TO>.Actor.Efficiency tag.

The defined limiting values act as an absolute value and thus in the same way for positive and negative forces/torques.

Positioning and following error monitoring with active force/torque limiting

As a result of force/torque limiting, a larger setpoint-actual value difference can build up for position-controlled axes, which may cause unwanted activation of the positioning and following error monitoring.

Therefore, in the "Torque limiting" configuration window, the positioning and following error monitoring of the axis can be set as deactivated by default when force/torque limiting is active. If necessary, the positioning and following error monitoring can also be kept active even when force/torque limiting is active.

Typical behavior of a positioning or synchronous axis with active force/torque limiting

With active force/torque limiting, a larger setpoint-actual value difference can build up than during motion without force/torque limiting.

Given a constant setpoint, the axis makes repeated attempts to reduce the following error.

When the limiting values are increased or limiting is deactivated during active closed loop position control, the axis can accelerate briefly to reduce the following error. If the axis is switched to non-position-controlled operation, e.g. using "MC_MoveVelocity" with "PositionControlled" = FALSE, the following error is no longer in effect.

Stopping an axis with active force/torque limiting

When stopping an axis in position-controlled mode with "MC_Halt", the position setpoint and the velocity setpoint are used as basis. Torque limiting still remains active and any accumulated following error is reduced. The axis is at a standstill when the actual velocity "0.0" is reached and the minimum dwell time in the standstill window has expired. The axis remains enabled.

When stopping an axis with "MC_Power" and an emergency stop ramp, the actual position value and the actual velocity are used as a basis. The axis is braked with the configured emergency stop deceleration without any jerk limit and brought to a standstill. The axis is then disabled when at a standstill.

When the limitation is deactivated the drive attempts to compensate for the resulting following error with maximum dynamic values. To avoid this reaction, use "MC_MoveVelocity" with deactivated closed loop position control.

See also

MC_TorqueLimiting: Activate and deactivate force/torque limit / fixed stop detection V4 (Page 417)

Fixed stop detection (Page 65)

Configuration - Torque limits (Page 190)

Configuration - Torque limits (Page 214)

Fixed stop detection

With the Motion Control instruction "MC_TorqueLimiting", you activate and monitor a fixed stop detection.

Together with a position-controlled motion job, a "Travel to fixed stop" can be realized. The operation is also referred to as clamping.

"Travel to fixed stop" can be used, for example, to move quills against the workpiece with a specified torque.

The fixed stop detection is configured in the configuration window "Extended parameters" > "Limits" > "Fixed stop detection".

The fixed stop detection is only possible in position-controlled operation of the axis.

If the drive and telegram support force/torque limiting, this is active during travel to fixed stop and for clamping.

Detection of the fixed stop using following error

If the drive is stopped by a mechanical fixed stop during a motion job, the following error is increased. When the following error configured in the configuration window "Extended parameters" > "Limits" > "Fixed stop detection" is exceeded, this is regarded as the fixed stop having been reached.

When following error monitoring is activated, the configured following error must be greater than the following error for fixed stop detection.

Clamping at the mechanical endstop

When the fixed stop is reached, the active position-controlled motion job is aborted with CommandAborted. The setpoint is no longer changed and the following error remains constant. The closed loop position control remains active and the monitoring of the configured "Positioning tolerance" is activated The drive is in "Clamping" state.

If the drive and frame support force/torque limiting, this continues to be active with active fixed stop detection. During clamping, the clamping force or clamping torque can be changed. The value in input parameter "Limit" of the Motion Control instruction "MC_TorqueLimiting" can be changed for this.

Monitoring of the clamping

If the actual position changes by a value greater than the configured "Positioning tolerance" during active clamping, this is regarded as the breaking away or turning back of the fixed stop. An alarm is triggered; the axis is disabled and the drive is stopped according to its configuration.

If the position setpoint is within the configured "Positioning tolerance", the breaking away or turning back of the fixed stop cannot be detected.

The configured position tolerance must be less than the configured following error for detection of clamping.

Retracting

Retracting from the fixed stop is only possible with a position-controlled motion job in the opposite direction to the fixed stop.

The "Travel to fixed stop" or "Clamping" function is ended when the "Positioning tolerance" is left in the retraction direction.

See also

Force/torque limiting (Page 63)

Configuration - Fixed stop detection (Page 215)

MC_TorqueLimiting: Activate and deactivate force/torque limit / fixed stop detection V4 (Page 417)

Additive setpoint torque

The Motion Control instruction "MC_TorqueAdditive" allows you to apply additional torque in the drive.

The additive setpoint torque is used for example in torque feedforward control or the specification of the tensile torque for winding applications.

The following requirements must be fulfilled to set the additive torque setpoint:

- SINAMICS drive (see compatibility list (Page 555))
- SIEMENS supplementary telegram 750 for transmitting the torque data to the drive

The additional torque can be either positive or negative. The value specified in the instruction is a technological value, not a percentage. Set the unit of measure for the torque at the axis (default value: Nm).

See also

MC_TorqueAdditive: Specify additive torque V4 (Page 422)

Permissible torque range

The Motion Control instruction "MC_TorqueRange" allows you to set torque limits for the drive.

The motion control instruction is used, for example, for winding applications in order to prevent the tearing of the material.

The following requirements must be fulfilled to set the torque data:

- SINAMICS drive (see compatibility list (Page 555))
- SIEMENS supplementary telegram 750 for transmitting the torque data to the drive

The value specified in the instruction is a technological value, not a percentage. Set the unit of measure for the torque at the axis (default value: Nm). If you invert the setpoints at the technology object of the axis, the values for the high and low torque limit are output inverted and reversed.

If the torque limitation is activated by specifying the high and low torque limit, the following monitorings and limits are deactivated:

- Following error monitoring
- Time limits for positioning monitoring
- Time limits for standstill monitoring

Monitoring remains in effect if you have selected the option "Leave position-related monitoring enabled" under "Technology object > Configuration > Extended parameters > Limits > Torque limiting".

See also

MC_TorqueRange: Set high and low torque limits V4 (Page 425)

3.2.8.6 Tags

The following technology object tags are relevant for motion control:

Status	
<TO>.StatusWord	Status indicator for an active motion
<TO>.Position	Position setpoint
<TO>.Velocity	Velocity setpoint / speed setpoint
<TO>.ActualPosition	Actual position
<TO>.ActualVelocity	Actual velocity
<TO>.ActualSpeed	Actual speed of the motor (only with PROFIdrive drive type)
<TO>.Acceleration	Setpoint acceleration
<TO>.ActualAcceleration	Actual acceleration
<TO>.StatusSynchronizedMotion.StatusWord.X0 (MaxVelocityExceeded)	Set to value TRUE when the maximum velocity configured for the following axis is exceeded during synchronous operation.
<TO>.StatusSynchronizedMotion.StatusWord.X1 (MaxAccelerationExceeded)	Set to value TRUE when the maximum acceleration configured for the following axis is exceeded during synchronous operation.
<TO>.StatusSynchronizedMotion.StatusWord.X2 (MaxDecelerationExceeded)	Set to value TRUE when the maximum deceleration configured for the following axis is exceeded during synchronous operation.
<TO>.StatusMotionIn.FunctionState	Status of the MotionIn function 0: No function activated 1: MotionInVelocity activated 2: MotionInPosition activated

Override	
<TO>.Override.Velocity	Velocity or speed override

Dynamic limit values	
<TO>.DynamicLimits.MaxVelocity	Dynamic limitation for maximum speed (mechanical)
<TO>.DynamicLimits.Velocity	Dynamic limitation for maximum speed (programmable)
<TO>.DynamicLimits.MaxAcceleration	Dynamic limitation for maximum acceleration
<TO>.DynamicLimits.MaxDeceleration	Dynamic limitation for maximum deceleration
<TO>.DynamicLimits.MaxJerk	Dynamic limitation for maximum jerk

Defaults for the dynamics	
<TO>.DynamicDefaults.Velocity	Default velocity
<TO>.DynamicDefaults.Acceleration	Default acceleration
<TO>.DynamicDefaults.Deceleration	Default deceleration
<TO>.DynamicDefaults.Jerk	Default jerk
<TO>.DynamicDefaults.EmergencyDeceleration	Emergency stop deceleration

Torque limiting	
<TO>.TorqueLimiting.LimitDefaults.Torque	Limiting torque
<TO>.TorqueLimiting.LimitDefaults.Force	Limiting force
<TO>.TorqueLimiting.LimitBase	Torque limiting motor or drive side 0: Motor side 1: Load side
<TO>.TorqueLimiting.PositionBasedMonitorings	Disable/enable positioning and following error monitoring 0: Deactivate 1: Keep active
<TO>.StatusTorqueData.CommandAdditiveTorqueActive	Additive torque setpoint function 0: Deactivated 1: Activated
<TO>.StatusTorqueData.CommandTorqueRangeActive	Torque limits function 0: Deactivated 1: Activated
<TO>.StatusTorqueData.ActualTorque	Actual torque of the axis

Fixed stop detection	
<TO>.Clamping.FollowingErrorDeviation	Value of the following error starting from which the fixed stop is detected
<TO>.Clamping.PositionTolerance	Position tolerance for the clamping monitoring

3.2.9 Homing

3.2.9.1 Brief description

With homing, you create the relationship between the position in the technology object and the mechanical position. The actual position value in the technology object is assigned to a homing mark at the same time. This homing mark represents a known mechanical position.

With incremental actual values this process is called homing; with absolute actual values it is called absolute encoder adjustment.

Homing is a requirement for display of the correct position for the technology object and for absolute positioning.

Homing is activated with the Motion Control instruction "MC_Home".

Homing status

The technology object tag <TO>.StatusWord.X5 (HomingDone) indicates whether the axis or external encoder technology object is homed.

Type of homing

Homing can occur by means of an independent homing motion (active homing), the detection of a homing mark during a motion initiated on the user side (passive homing) or a direct position assignment.

A distinction is made between the following types of homing:

- Active homing

  Active homing initiates a homing movement and performs the necessary homing mark approach. When the homing mark is detected, the actual position is set to the value specified in MC_Home. It is possible to specify a home position offset. Retraction to the home position offset occurs automatically during the home position approach.

  When active homing starts, current traversing movements are aborted.

- Passive homing

  The homing job does not perform its own homing motion. When the homing mark is detected during a motion initiated on the user side, the actual position is set to the value specified in "MC_Home".

  Passive homing is also called homing on the fly.

- Direct homing

  With the homing job, the actual position is set directly to the value specified in "MC_Home" or is offset by this value.

- Absolute encoder adjustment

  The absolute encoder adjustment compares the existing absolute actual value with the value specified in "MC_Home".

Homing mode

Depending on the type of homing mark and homing mark search, a distinction is made among the following homing modes (Page 72):

- Homing with homing cam and zero mark via PROFIdrive telegram
- Homing with zero mark via PROFIdrive telegram
- Homing with digital input

3.2.9.2 Terms

Homing mark

A homing mark is an input signal, on whose occurrence a known mechanical position can be assigned to the actual values.

A homing mark can be:

- A zero mark

  The zero mark of an incremental encoder or an external zero mark is used as a homing mark.

  The zero mark is detected at the drive module or encoder module and transmitted in the PROFIdrive frame. Perform the setting and evaluation as an encoder zero mark or external zero mark at the drive module and encoder module.

- An edge at the digital input

  The negative or positive edge at a digital input is used as a homing mark.

Reference cam

If there are several zero marks in the traversing range, the reference cam is used to select a specific zero mark before or after the reference cam.

Homing mark position

This is the position assigned to the homing mark.

The homing mark position corresponds to the home position minus the home position offset.

Home position

At the end of the active homing motion, the axis arrives at the home position.

Home position offset

The difference between the home position and the homing mark position is the home position offset.

A home position offset only has an effect with active homing. The offset is traversed after the synchronization of the axis using the Motion Control instruction "MC_Home". For axes with modulo setting, the home position offset is always traversed with the direction setting for the shortest path.

Direction reversal at the hardware limit switch (reversing cam)

Hardware limit switches can be used as reversing cams in active homing. If the homing mark was not detected or was approached from the wrong side, the motion continues in the opposite direction after the reversing cam.

3.2.9.3 Homing mode

Various homing modes are available for the positioning axis/synchronous axis and external encoder technology objects with incremental encoders. The homing mode is set in the configuration.

Homing with homing cam and zero mark via PROFIdrive telegram

The system checks for when the reference cam is reached. After the reference cam has been reached and left again in the assigned homing direction, zero mark detection is enabled via the PROFIdrive telegram.

When the zero mark is reached in the pre-selected direction, then the actual position of the technology object is set to the homing mark position.

Homing with zero mark via PROFIdrive telegram

The system enables zero mark detection, as soon as the actual value of the technology object moves in the assigned homing direction.

When the zero mark is reached in the specified homing direction, the actual position of the technology object is set to the homing mark position.

Homing with digital input

The system checks the state of the digital input, as soon as the actual value of the axis or encoder moves in the assigned homing direction.

When the homing mark is reached (setting of the digital input) in the specified homing direction, the actual position of the technology object is set to the homing mark position.

Note

The digital inputs must be placed into the process image partition "PIP OB Servo".

The filter time of the digital inputs must be set smaller than the duration of the input signal at the reference point switch.

See also

Homing SINAMICS drives with external zero marks (Page 555)

3.2.9.4 Active homing with homing cam and zero mark

The following examples show homing motions in the positive and negative directions.

Example of homing in the positive direction

The approach to the homing mark and the home position occurs in the positive direction.

The following figure shows the homing motion with the following settings:

- Active homing with homing cam and zero mark
- Approach in the positive direction
- Homing in the positive direction
- Positive home position offset

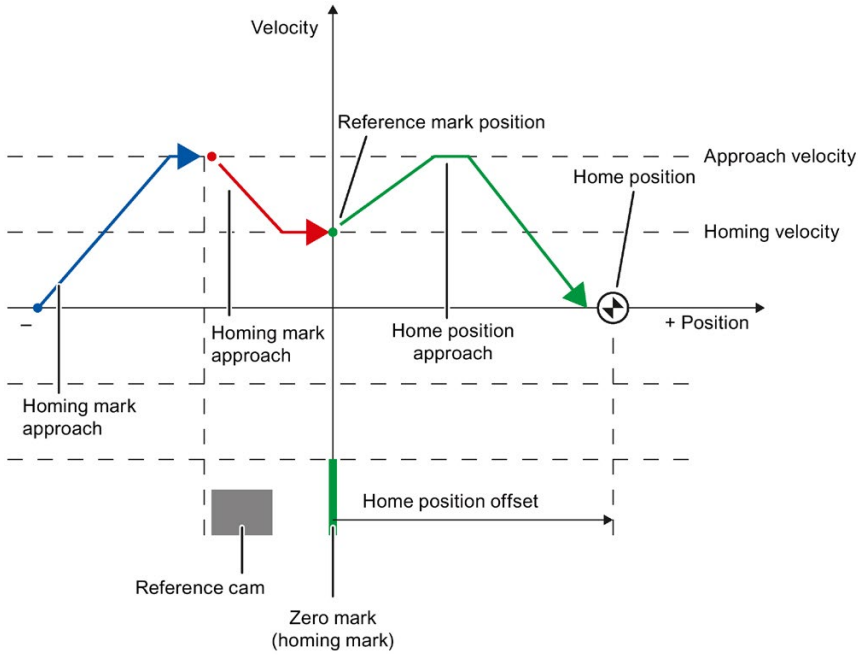

Example of homing in the negative direction

The approach to the homing mark occurs in the negative direction by means of a direction reversal during the homing process. The approach to home position causes another direction reversal and occurs in the positive direction.

The following figure shows the homing motion with the following settings:

- Active homing with homing cam and zero mark
- Approach in the positive direction
- Homing in the negative direction
- Positive home position offset

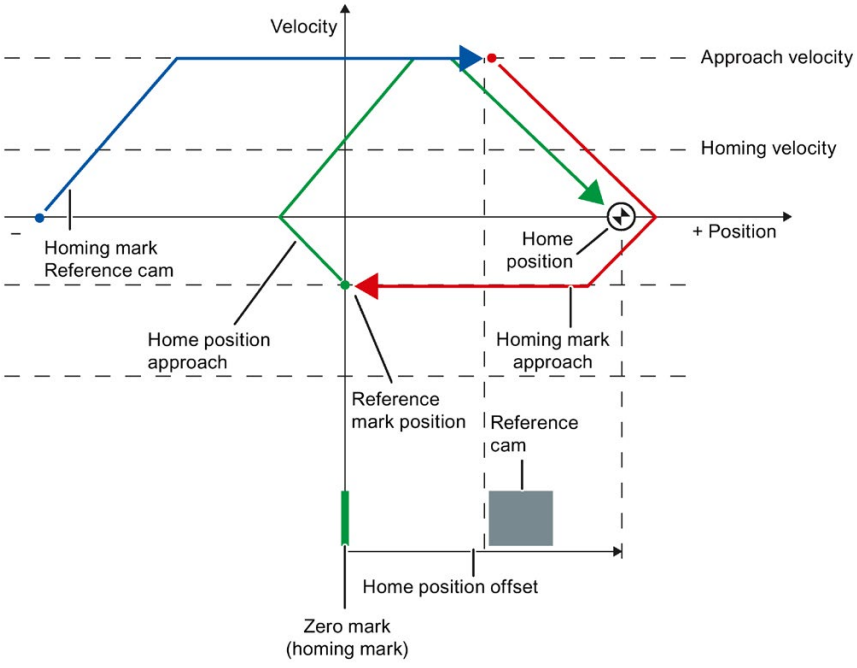

Motion sequence

The motion occurs in the following sequence:

1. Start of active homing via the "MC_Home" Motion Control instruction
2. Approach to reference cam
3. Detection of the reference cam in the homing direction and travel with homing velocity
4. Departure from the reference cam and travel to the homing mark

   With the departure from the reference cam, the detection of the homing mark is enabled.
5. Detection of the homing mark

   When the homing mark is detected, the position of the technology object is set depending on the configured mode:

   – Parameter "Mode" in "MC_Home" = 3

     Position = value in parameter "Position" minus <TO>.Sensor[n].ActiveHoming.HomePositionOffset

   – Parameter "Mode" in "MC_Home" = 5

     Position = value in the tag <TO>.Homing.HomePosition minus <TO>.Sensor[n].ActiveHoming.HomePositionOffset

   Note

   Parameter "MC_Home.Mode"

   The "MC_Home.Mode" parameter for S7-1200 Motion Control and S7-1500 Motion Control has been standardized within the framework of technology version V2.0. This results in a new assignment of the parameter values for the "MC_Home.Mode" parameter. A comparison of the "MC_Home.Mode" parameter for technology versions V1.0 and V2.0 is available in the section Version overview (Page 155).

6. Approach to the home position

   – Parameter "Mode" in "MC_Home" = 3

     The axis moves to the position that is specified in the "Position" parameter.

   – Parameter "Mode" in "MC_Home" = 5

     The axis moves to the position that is specified in the <TO>.Homing.HomePosition tag.

   Note

   If the velocity cannot be reduced to the reference velocity between detection of the reference cam and the zero mark, homing is performed at the velocity present when the zero mark is crossed.

See also

Homing SINAMICS drives with external zero marks (Page 555)

3.2.9.5 Active homing with zero mark

The following figure shows an example of the homing motion with the following settings:

- Active homing with zero mark
- Homing in the positive direction
- Positive home position offset

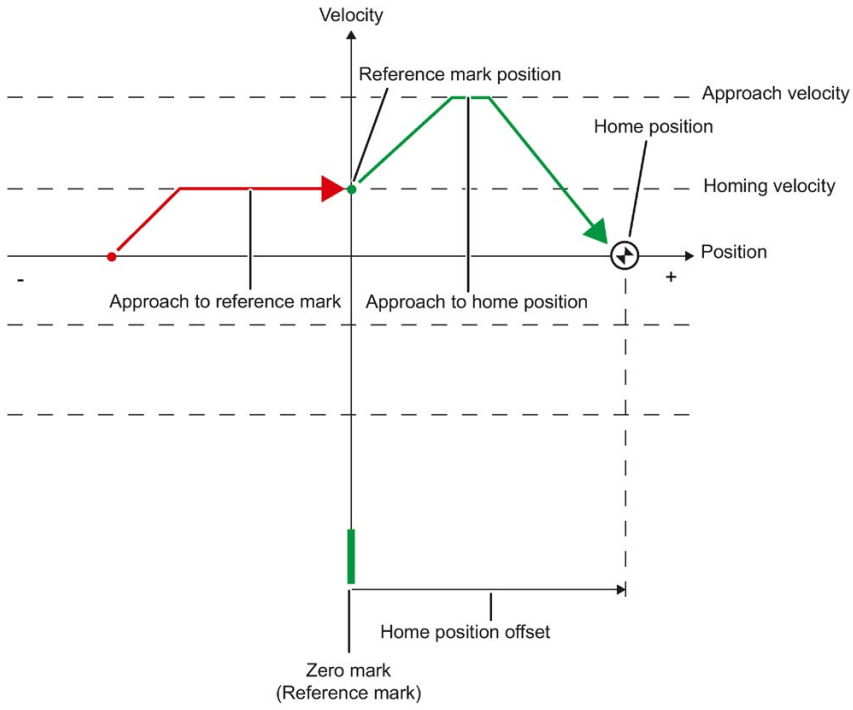

Motion sequence

The motion occurs in the following sequence:

1. **Start of active homing via the Motion Control instruction "MC_Home"**
2. **Move to the homing mark in the homing direction with the homing velocity**
3. **Detection of the homing mark**

   When the homing mark is detected, the position of the axis or encoder is set depending on the configured mode:

   – Parameter "Mode" in "MC_Home" = 3

     Position = value in parameter "Position" minus <TO>.Sensor[n].ActiveHoming.HomePositionOffset

   – Parameter "Mode" to "MC_Home" = 5

     Position = value in the tag <TO>.Homing.HomePosition minus <TO>.Sensor[n].ActiveHoming.HomePositionOffset

Note

Parameter "MC_Home.Mode"

The "MC_Home.Mode" parameter for S7-1200 Motion Control and S7-1500 Motion Control has been standardized within the framework of technology version V2.0. This results in a new assignment of the parameter values for the "MC_Home.Mode" parameter. A comparison of the "MC_Home.Mode" parameter for technology versions V1.0 and V2.0 is available in the section Version overview (Page 155).

4. **Move to homing point**
   - Parameter "Mode" in "MC_Home" = 3

     The axis moves to the position that is specified in the "Position" parameter.
   - Parameter "Mode" to "MC_Home" = 5

     The axis moves to the position that is specified in the <TO>.Homing.HomePosition tag.

See also

Homing SINAMICS drives with external zero marks (Page 555)

3.2.9.6 Active homing with digital input

The following figure shows an example of the homing motion with the following settings:

- Active homing with digital input
- Approach in the positive direction
- Homing mark on the positive side of the digital input
- Positive home position offset

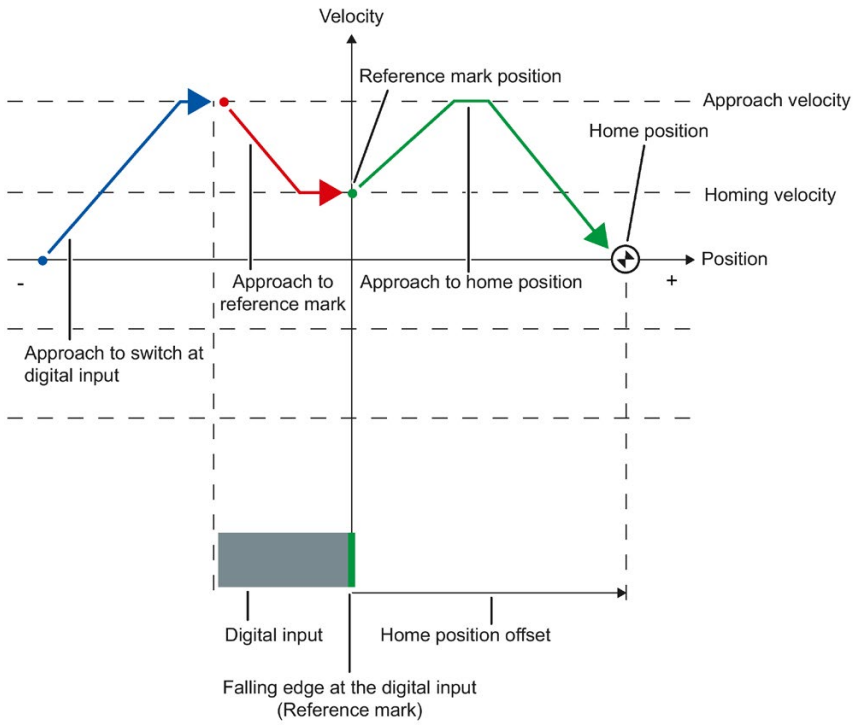

Motion sequence

The motion occurs in the following sequence:

1. **Start of active homing via the Motion Control instruction "MC_Home"**
2. **Detection of the positive edge at the digital input, while moving with homing velocity**
3. **Approach to the homing mark**

4. **Detection of the homing mark**

   In the example, the negative edge of the switch at the digital input represents the homing mark.

   When the homing mark is detected, the position of the axis or encoder is set depending on the configured mode:

   – Parameter "Mode" in "MC_Home" = 3

     Position = value in parameter "Position" minus <TO>.Sensor[n].ActiveHoming.HomePositionOffset

   – Parameter "Mode" in "MC_Home" = 5

     Position = value in the tag <TO>.Homing.HomePosition minus <TO>.Sensor[n].ActiveHoming.HomePositionOffset

Note

Parameter "MC_Home.Mode"

The "MC_Home.Mode" parameter for S7-1200 Motion Control and S7-1500 Motion Control has been standardized within the framework of technology version V2.0. This results in a new assignment of the parameter values for the "MC_Home.Mode" parameter. A comparison of the "MC_Home.Mode" parameter for technology versions V1.0 and V2.0 is available in the section Version overview (Page 155).

5. **Move to homing point**

   – Parameter "Mode" in "MC_Home" = 3

     The axis moves to the position that is specified in the "Position" parameter.

   – Parameter "Mode" in "MC_Home" = 5

     The axis moves to the position that is specified in the <TO>.Homing.HomePosition tag.

Note

If the velocity on the span from the detection of the positive edge to the negative edge cannot be reduced to the homing velocity, then homing occurs at the velocity that exists when the homing mark is traversed.

3.2.9.7 Passive homing with homing cam and zero mark

The following figure shows an example of the homing motion with the following settings:

- Passive homing with homing cam and zero mark
- Homing in the positive direction

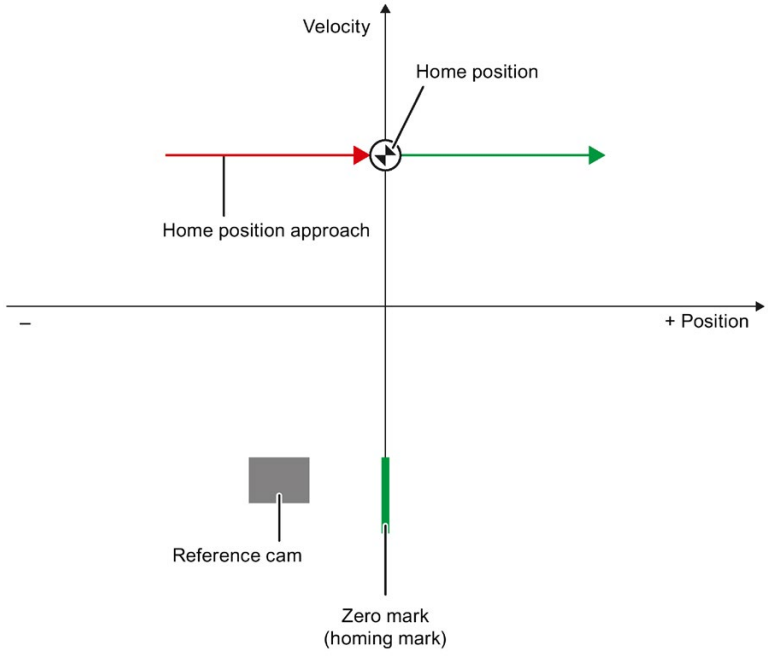

Motion sequence

The motion occurs in the following sequence:

1. Activation of passive homing using the Motion Control instruction "MC_Home".
2. Motion due to a Motion Control job from the application

   The detection of the reference cam and homing mark is enabled when the actual position value of the axis or encoder moves in the assigned homing direction.
3. Detection of the reference cam
4. Departure from the reference cam

   The departure from the reference cam enables the detection of the homing mark.
5. Detection of the homing mark

   When the homing mark is detected, the position of the axis or encoder is set depending on the configured mode:

   – Parameter "Mode" in "MC_Home" = 2, 8

     Position = value in parameter "Position"

   – Parameter "Mode" in "MC_Home" = 10

     Position = value in tag <TO>.Homing.HomePosition

Note

Parameter "MC_Home.Mode"

The "MC_Home.Mode" parameter for S7-1200 Motion Control and S7-1500 Motion Control has been standardized within the framework of technology version V2.0. This results in a new assignment of the parameter values for the "MC_Home.Mode" parameter. A comparison of the "MC_Home.Mode" parameter for technology versions V1.0 and V2.0 is available in the section Version overview (Page 155).

Note

If the motion direction changes after departure from the reference cam and before detection of the homing mark, the reference cam must be detected again. The Motion Control instruction "MC_Home" remains enabled.

3.2.9.8 Passive homing with zero mark

The following figure shows an example of the homing motion with the following settings:

- Passive homing with zero mark
- Homing in the positive direction

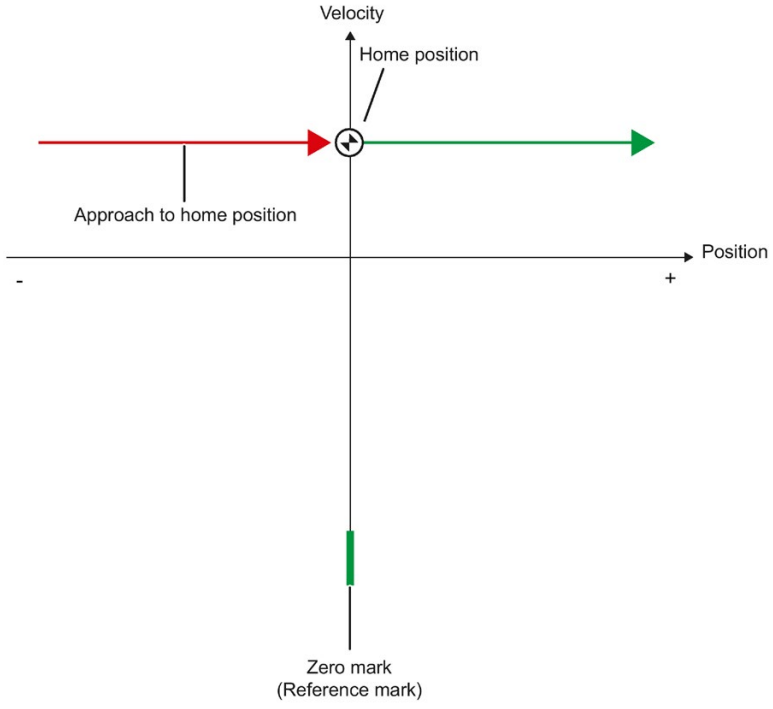

Motion sequence

The motion occurs in the following sequence:

1. **Enablement of passive homing via the Motion Control instruction "MC_Home".**
2. **Motion due to a Motion Control job from the application**

   The detection of the homing mark is enabled when the actual position value of the axis or encoder moves in the assigned homing direction.
3. **Detection of the homing mark**

   When the homing mark is detected, the position of the axis or encoder is set depending on the configured mode:

   – Parameter "Mode" to "MC_Home" = 2, 8

     Position = value in parameter "Position"

   – Parameter "Mode" to "MC_Home" = 10

     Position = value in tag <TO>.Homing.HomePosition

Note

Parameter "MC_Home.Mode"

The "MC_Home.Mode" parameter for S7-1200 Motion Control and S7-1500 Motion Control has been standardized within the framework of technology version V2.0. This results in a new assignment of the parameter values for the "MC_Home.Mode" parameter. A comparison of the "MC_Home.Mode" parameter for technology versions V1.0 and V2.0 is available in the section Version overview (Page 155).

3.2.9.9 Passive homing with digital input

The following figure shows an example of the homing motion with the following settings:

- Passive homing with digital input
- Homing in the positive direction
- Homing mark on the positive side of the digital input

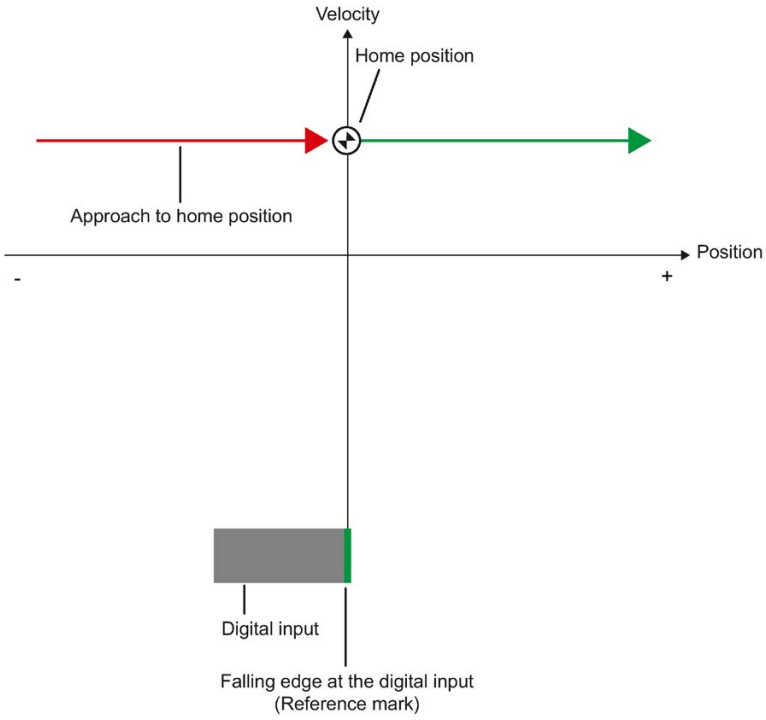

Motion sequence

The motion occurs in the following sequence:

1. **Enablement of passive homing via the Motion Control instruction "MC_Home".**
2. **Motion due to a Motion Control job from the application**

   The detection of the homing mark at the digital input is enabled when the actual position value of the axis or encoder moves in the assigned homing direction.
3. **Detection of the homing mark**

   In the example, the falling edge of the switch at the digital input represents the homing mark.

   When the homing mark is detected, the position of the axis or encoder is set depending on the configured mode:

   – Parameter "Mode" to "MC_Home" = 2, 8

     Position = value in parameter "Position"

   – Parameter "Mode" to "MC_Home" = 10

     Position = value in tag <TO>.Homing.HomePosition

Note

Parameter "MC_Home.Mode"

The "MC_Home.Mode" parameter for S7-1200 Motion Control and S7-1500 Motion Control has been standardized within the framework of technology version V2.0. This results in a new assignment of the parameter values for the "MC_Home.Mode" parameter. A comparison of the "MC_Home.Mode" parameter for technology versions V1.0 and V2.0 is available in the section Version overview (Page 155).

3.2.9.10 Direction reversal at the hardware limit switch (reversing cam)

During active homing, the hardware limit switch can optionally be used as a reversing cam. If the homing mark is not detected or the motion was not in the homing direction, the motion continues in the opposite direction with the approach velocity after the reversing cam.

When the hardware limit switch is reached, the default settings for dynamics take effect. Deceleration with the emergency stop deceleration does not occur.

NOTICE

Avoid moving to a mechanical endstop

Ensure by one of the following measures, that in a direction reversal the machine does not move to a mechanical endstop.

- Keep the approach velocity low.
- Increase the configured acceleration / deceleration.
- Increase the distance between the hardware limit switch and the mechanical endstop.

3.2.9.11 Direct homing

Depending on the configured mode, the position of the positioning axis/synchronous axis or external encoder technology objects can be absolutely or relatively set with "MC_Home".

Set actual position absolutely

Proceed as follows to set the position absolutely:

1. In the "MC_Home" Motion Control instruction, enter the absolute position in the "Position" parameter.
2. Call the "MC_Home" Motion Control instruction with the "Mode" = 0 parameter.

The position is set to the value specified in the "Position" parameter.

Set actual position relatively

Proceed as follows to set the position relatively:

1. In the "MC_Home" Motion Control instruction, enter the relative position in the "Position" parameter.
2. Call the "MC_Home" Motion Control instruction with the "Mode" = 1 parameter.

The position is set to the current position plus the value specified in the "Position" parameter.

3.2.9.12 Absolute value adjustment

In absolute value adjustment, Motion Control determines an absolute value offset, that is retentively stored on the CPU.

Depending on the configured mode, the position of the axis or the encoder is absolutely or relatively set in the "MC_Home" Motion Control instruction.

- Parameter "Mode" = 7 (absolute specification of position)

  Position = value in parameter "Position"
- Parameter "Mode" = 6 (relative specification of position)

  Position = current position + value in parameter "Position"

3.2.9.13 Resetting the "Homed" status

Incremental encoder

In the following cases, the "Homed" status is reset, and the technology object must be rehomed.

- Error in sensor system/encoder failure
- Initiation of active homing with the Motion Control instruction "MC_Home" with "Mode" = 3, 5 (after successful completion of the homing process, the status "Homed" is set again.)

  Note

  Parameter "MC_Home.Mode"

  The "MC_Home.Mode" parameter for S7-1200 Motion Control and S7-1500 Motion Control has been standardized within the framework of technology version V2.0. This results in a new assignment of the parameter values for the "MC_Home.Mode" parameter. A comparison of the "MC_Home.Mode" parameter for technology versions V1.0 and V2.0 is available in the section Version overview (Page 155).

- Initiation of passive homing with the Motion Control instruction "MC_Home" with "Mode" = 2, 8, 10 (after successful completion of the homing process, the status "Homed" is set again.)
- Replacement of the CPU
- Replacement of the SIMATIC Memory Card
- POWER OFF
- Memory reset
- Modification of the encoder configuration
- Restart of the technology object
- Restoration of the CPU factory settings
- Transfer of a different project into the controller

Absolute encoder

In the following cases, the "Homed" status is reset, and the technology object must be rehomed.

- Replacement of the CPU
- Modification of the encoder configuration
- Restoration of the CPU factory settings
- Transfer of a different project into the controller

When you use a new absolute value encoder you need to home the absolute encoder once again.

Resetting the memory of the CPU or upgrading a project does not require another absolute value adjustment.

3.2.9.14 Tags

The following technology object tags are relevant for homing:

Status indicators	
<TO>StatusWord.X11 (HomingCommand)	Homing job running
<TO>StatusWord.X5 (HomingDone)	Technology object is homed
<TO>ErrorWord.X10 (HomingFault)	Error occurred during homing
Approach to reference cam	
<TO>.Homing.ApproachDirection	Start direction or approach direction for the approach to the reference cam
<TO>.Homing.ApproachVelocity	Velocity for the approach to the reference cam
Approach to the homing mark	
<TO>.Sensor[n].ActiveHoming.Direction	Homing direction
<TO>.Homing.ReferencingVelocity	Velocity for the approach to the homing mark
Move to homing point	
<TO>.Homing.ApproachVelocity	Velocity for the move to homing point
Positions	
<TO>.Homing.AutoReversal	Reversal at the hardware limit switches
<TO>.Homing.HomePosition	Home position
<TO>.StatusSensor[n].AbsEncoderOffset	Calculated offset after the absolute encoder adjustment
Parameters for active homing	
<TO>.Sensor[n].ActiveHoming.Mode	Homing mode
<TO>.Sensor[n].ActiveHoming.SideInput	Side of the digital input
<TO>.Sensor[n].ActiveHoming.Direction	Homing direction or approach direction
<TO>.Sensor[n].ActiveHoming.DigitalInputAddress	Address of digital input
<TO>.Sensor[n].ActiveHoming.HomePositionOffset	Offset of the homing mark from the home position
Parameters for passive homing	
<TO>.Sensor[n].PassiveHoming.Mode	Homing mode
<TO>.Sensor[n].PassiveHoming.SideInput	Side of the digital input
<TO>.Sensor[n].PassiveHoming.Direction	Homing direction or approach direction
<TO>.Sensor[n].PassiveHoming.DigitalInputAddress	Address of digital input

Note

Evaluation of the bits in StatusWord, ErrorWord and WarningWord

Read the information provided in section Evaluate StatusWord, ErrorWord and WarningWord (Page 288).

3.2.10 Position monitoring functions

3.2.10.1 Brief description

The following functions are available in the positioning axis/synchronous axis technology object for monitoring positioning and motion:

- Positioning monitoring (Page 88)

  The actual position value must reach a positioning window within a specified time, and remain in this positioning window for a minimum dwell time.

- Following error monitoring (Page 90)

  The following error is monitored based on a velocity-dependent following error limit. The permissible maximum following error depends on the velocity setpoint.

If monitored conditions are violated, then technology alarms are output. The technology object responds in accordance with the alarm response.

3.2.10.2 Positioning monitoring

Positioning monitoring monitors the behavior of the actual position at the end of the setpoint calculation.

As soon as the velocity setpoint reaches the value zero, the actual position value must be located in the positioning window within a tolerance time. The actual value must not exit the positioning window during the minimum dwell time.

If the actual position is reached at the end of a positioning motion within the tolerance time and remains in the positioning window for the minimum dwell time, then <TO>.StatusWord.X6 (Done) is set in the technology data block. After expiration of the minimum dwell time, the "Done" parameter of the corresponding Motion Control instruction is also set. This completes a motion job.

The following figure shows the chronological sequence and the positioning window:

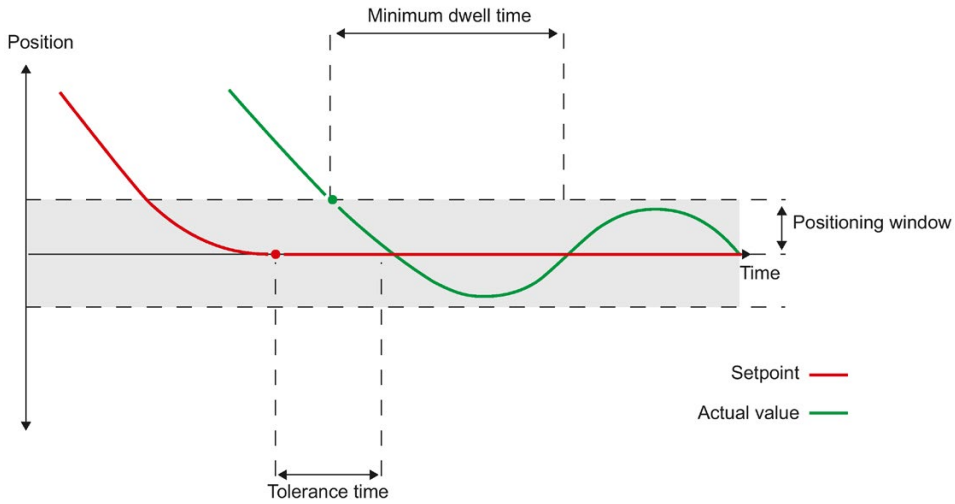

Positioning monitoring does not make any distinction between how the setpoint interpolation was completed. The end of setpoint interpolation can for example be reached as follows:

- by reaching of the target position on the part of the setpoint
- by position controlled stopping during the motion by the Motion Control instruction "MC_Halt"

Violation of positioning monitoring

In the following cases, technology alarm 541 is output by the positioning monitoring, and the technology object is disabled (alarm reaction: remove enable).

- The actual value does not reach the positioning window during the tolerance time.
- The actual value exits the positioning window during the minimum dwell time.

3.2.10.3 Following error monitoring

The following error in the positioning axis/synchronous axis technology object is monitored based on a velocity-dependent following error limit. The permissible following error depends on the velocity setpoint.

A constant permissible following error can be specified for velocities lower than an adjustable velocity low limit.

Above this low velocity limit, the permissible following error increases in proportion to the velocity setpoint. The configurable maximum permissible following error is the maximum velocity limit.

Calculation of the following error

The following error is the difference between the position setpoint and the actual position value. The transmission times of the setpoint to the drive, and of the actual position value to the controller, are taken into account in the calculation of the following error, i.e. subtracted out.

Warning limit

A warning limit can be specified for the following error. The warning limit is input as a percentage value and operates relative to the current permissible following error. If the warning limit of the following error is reached, then technology alarm 522 is output. This is a warning and contains no alarm response.

Violation of the permissible following error

If the permissible following error is exceeded, then technology alarm 521 is output, and the technology object is disabled (alarm response: remove enable).

When force/torque limiting is activated, the monitoring of the permissible following error can be deactivated.

3.2.10.4 Standstill signal

When the actual velocity reaches the standstill window and remains there for the minimum dwell time, the standstill of the axis is indicated.

3.2.10.5 Tags

The following technology object tags are relevant for position monitoring and for the standstill:

Status indicators	
<TO>.StatusWord.X7 (Standstill)	Set to the value TRUE when the actual velocity reaches the standstill window and does not exit it within the minimum dwell time. The standstill signal is only present for the positioning axis/synchronous axis.
<TO>.StatusWord.X6 (Done)	**Positioning axis/synchronous axis** Set to the TRUE, when the actual velocity value reaches the positioning window within the tolerance time and remains in the window for the minimum dwell time. **Speed axis** Set to TRUE, when the motion is complete and the speed setpoint is therefore equal to zero.
<TO>.ErrorWord.X12 (PositioningFault)	A positioning error has occurred.
Positions and times	
<TO>.PositioningMonitoring.ToleranceTime	Maximum permissible time until positioning window is reached The time is started with the end of the setpoint interpolation.
<TO>.PositioningMonitoring.MinDwellTime	Minimum dwell time in the positioning window
<TO>.PositioningMonitoring.Window	Positioning window
Standstill signal	
<TO>.StandstillSignal.VelocityThreshold	Velocity threshold for the standstill signal
<TO>.StandstillSignal.MinDwellTime	Minimum dwell time below the velocity threshold

The following technology object tags are relevant for following error monitoring:

Status indicators	
<TO>.StatusPositioning.FollowingError	Current following error
<TO>.ErrorWord.X11 (FollowingErrorFault)	Status indication, that the following error is too large
<TO>.WarningWord.X11 (FollowingError-Warning)	Status indication, that the following error warning limit has been reached
Control bits	
<TO>.FollowingError.EnableMonitoring	Enabling / disabling following error monitoring
Limit values	
<TO>.FollowingError.MinVelocity	Lower velocity setpoint for the characteristic curve of the maximum following error
<TO>.FollowingError.MinValue	Permissible following error below the <TO>.FollowingError.MinVelocity
<TO>.FollowingError.MaxValue	Maximum permissible following error at maximum axis velocity
<TO>.FollowingError.WarningLevel	Warning limit as a percentage value relative to the maximum permissible following error (velocity-dependent in accordance with the characteristic curve)

3.2.11 Closed-loop control

3.2.11.1 Brief description

The position controller of the positioning axis / synchronizing axis is a proportional controller with velocity precontrol.

Velocity precontrol

The velocity precontrol can be used to minimize the velocity-based following error during position control. As a result, faster positioning is achieved, if needed, because the position controller only has to compensate disturbances.

When using the velocity precontrol, the velocity setpoint is additionally added to the output of the position controller. You can weight this additional setpoint by a factor.

Dynamic Servo Control (DSC)

In drives that support Dynamic Servo Control (DSC), you can optionally use the closed-loop position controller in the drive. If you use telegrams that support DSC, DSC is automatically activated. The position controller in the drive is usually implemented with a rapid speed-control cycle. This improves the control performance for digitally coupled drives.

The following requirements must be met to use DSC:

- The motor encoder (first encoder in the telegram) of the drive is used as the first encoder for the technology object.
- One of the following PROFIdrive telegrams is used for the drive:
  - Standard telegram 5 or 6
  - SIEMENS telegram 105 or 106

See also

PROFIdrive telegrams (Page 36)

3.2.11.2 Control structure

The following figure shows the effective closed loop control structure **without** DSC:

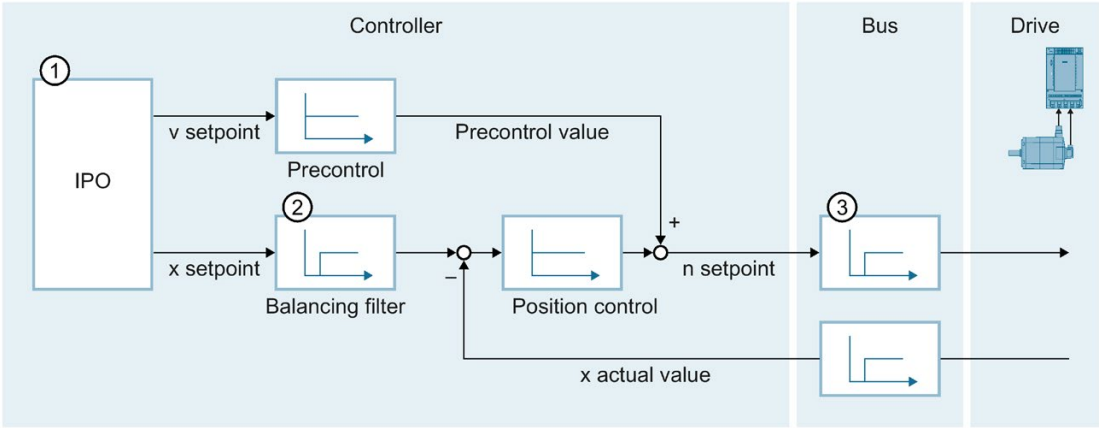

① Interpolator with motion control
② Internal consideration of the signal propagation times and the speed-control loop substitute time
③ Communication between controller and drive

The following figure shows the effective closed loop control structure **with** DSC:

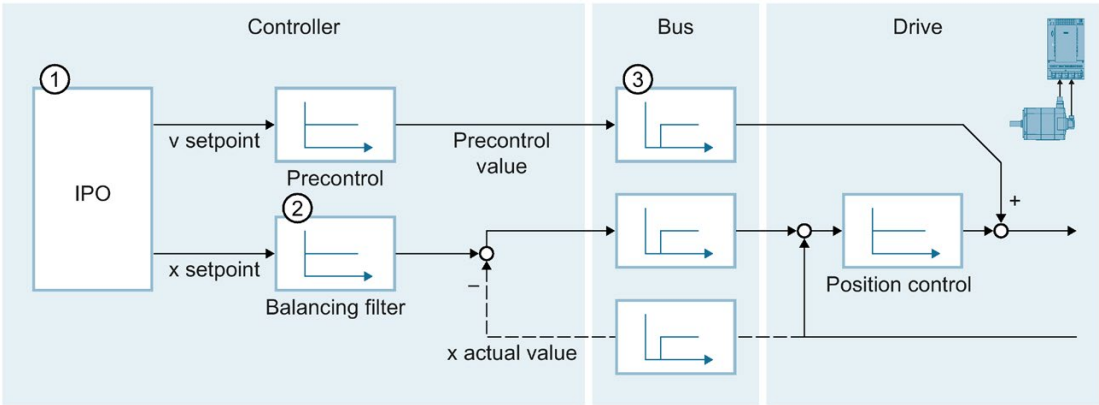

① Interpolator with motion control
② Internal consideration of speed control loop substitute time
③ Communication between controller and drive

See also

Configuration - Control loop (Page 228)

3.2.11.3 Tags

The following technology object tags are relevant for the closed-loop control:

Parameters	
<TO>.PositionControl.Kv	Proportional gain of the closed loop position control
<TO>.PositionControl.Kpc	Velocity precontrol of the positioning system (in %)
<TO>.PositionControl.EnableDSC	Enable DSC
<TO>.DynamicAxisModel.VelocityTime Constant	Speed control loop substitute time [s]
<TO>.PositionControl.ControlDifference-Quantization.Mode	Type of quantification Configuration of a quantization when a drive with stepper motor interface is connected 0: No quantification 1: Quantization corresponding to encoder resolution 2: Quantization to a direct value (value input in <TO>.PositionControl.ControlDifferenceQuantization.-Value) (configuration is performed using the parameter view (data structure))
<TO>.PositionControl.ControlDifference-Quantization.Value	Value of quantification Configuration of a value for quantization to a direct value (<TO>.PositionControl.ControlDifferenceQuantization.-Mode = 2) The quantization value is specified in the position unit of the axis. (configuration is performed using the parameter view (data structure))

3.2.12 Process response

3.2.12.1 Organization Blocks for Motion Control

Description

When you create a technology object, organization blocks are automatically created for processing the technology objects. The Motion Control functionality of the technology objects creates its own execution level, and is called according to the Motion Control application cycle.

The following blocks are created:

- MC-Servo [OB91]

  Calculation of the position controller

- MC-Interpolator [OB92]

  Evaluation of the Motion Control instructions, generation of setpoints and monitoring functionality

The organization blocks are protected (know-how protection). The program code cannot be viewed or changed.

The frequency relationship of the two organization blocks to one another is always 1:1. MC-Servo [OB91] is always executed before MC-Interpolator [OB92].

You can set the application cycle and the priority of the organization blocks according to your requirements for control quality and system load.

MC-PreServo [OB67] and MC-PostServo [OB95]

In addition, you can create the organization blocks MC-PreServo [OB67] and MC-PostServo [OB95].

The organization blocks MC-PreServo [OB67] and MC-PostServo [OB95] can be programmed. They are called in the configured application cycle. This means you can use the organization blocks MC-PreServo [OB67] and MC-PostServo [OB95] for consistent data processing or time-critical events, such as starting of motions or homing functions for the process that may have to run synchronously with the application cycle.

Application cycle

You can set the application cycle in which the MC-Servo [OB91] is called in the properties of the organization block in "General > Cycle Time":

- **Synchronous to the bus**

  MC-Servo [OB91] is called synchronously with or at a reduced ratio to a bus system. You set the send clock in the properties of the selected bus system. In the "Distributed I/O" drop-down list, you can select the following bus systems:

  – Isochronous PROFIBUS DP

  – Isochronous PROFINET IO

  You cannot call the MC-Servo [OB91] synchronously with a bus system that is connected to the CPU via a communications processor/communications module (CP/CM).

- **Cyclic**

  The MC-Servo [OB91] is called cyclically with the specified application cycle.

The selected application cycle must be long enough to be able to process the technology objects in one cycle. If the processing time of the technology objects is longer than the application cycle, overflows (Page 98) will occur. In order to achieve optimal control quality, the calculations of the organization blocks MC-PreServo [OB67], MC-Servo [OB91] and MC-PostServo [OB95] must be performed within a send cycle.

You can check the runtime of MC-Servo [OB91] and MC-Interpolator [OB92] with the expanded instruction "RT_INFO".

The current application cycle (information in µs) of the organization blocks MC-PreServo [OB67] and MC-PostServo [OB95] can be read using the start information.

Reduction ratio (CPU V1.5 and higher)

You can reduce the application cycle of the MC-Servo [OB91] relative to the send clock of an isochronous PROFINET IO system. You can set an integer multiple of the send clock as the factor. Values up to 14 times the send clock (maximum 32 ms) are possible for the application cycle.

If you call an isochronous mode interrupt OB and the MC-Servo [OB91] synchronously with the same PROFINET IO system, you must set the same application cycle for both organization blocks.

Priority

You can configure the priority of the organization blocks as needed in their properties under "General > Properties > Priority":

- **MC-Servo [OB91]**

  Priority 17 to 26 (default value 26)

- **MC-Interpolator [OB92]**

  Priority 16 to 25 (default value 24)

The priority of MC-Servo [OB91] must be at least one higher than the priority of MC-Interpolator [OB92].

The priority of the organization blocks MC-PreServo [OB67] and MC-PostServo [OB95] correspond to the priority of the MC-Servo [OB91]. MC-PreServo [OB67] is called immediately before MC-Servo [OB91]. MC-PostServo [OB95] is called immediately after MC-Servo [OB91].

See also

Data connection drive/encoder via data block (Page 50)

3.2.12.2 Process image partition "OB Servo PIP"

The process image partition "OB Servo PIP" is made available in isochronous mode for Motion Control when MC-Servo [OB91] is called. All drives and encoders used by Motion Control are assigned to this process image partition.

Because the organization blocks MC-PreServo [OB67] and MC-PostServo [OB95] are called automatically by the MC-Servo [OB91], the process image partition is also available automatically. If you use a MC-PreServo [OB67], the data are read in when the MC-PreServo [OB67] starts. If you use a MC-PostServo [OB95], the data are output after the MC-PostServo [OB95].

Additionally, you should assign all I/O modules used by Motion Control to this process image partition (e.g. hardware limit switches). The assignment results in chronologically synchronous processing with the technology object.

The input process image partition is also updated in STOP mode.

Process image partition in the user program

As of CPU version V1.5, you can access the process image partition "OB Servo PIP" in your user program. This makes it possible to evaluate the process image partition using the trace function.

3.2.12.3 Operational Sequence and Timeouts

When processing the Motion Control functionality, the organization blocks MC-Servo [OB91] and MC-Interpolator [OB92] are called and processed in each application cycle. The remaining cycle time is available for the processing of your user program.

For error-free program execution, keep to the following rules:

- In each application cycle, MC-Servo [OB91] must be started and executed completely.
- In each application cycle, the relevant MC-Interpolator [OB92] must at least be started.

The following figure shows an example of the error-free operational sequence for the processing of organization block OB1:

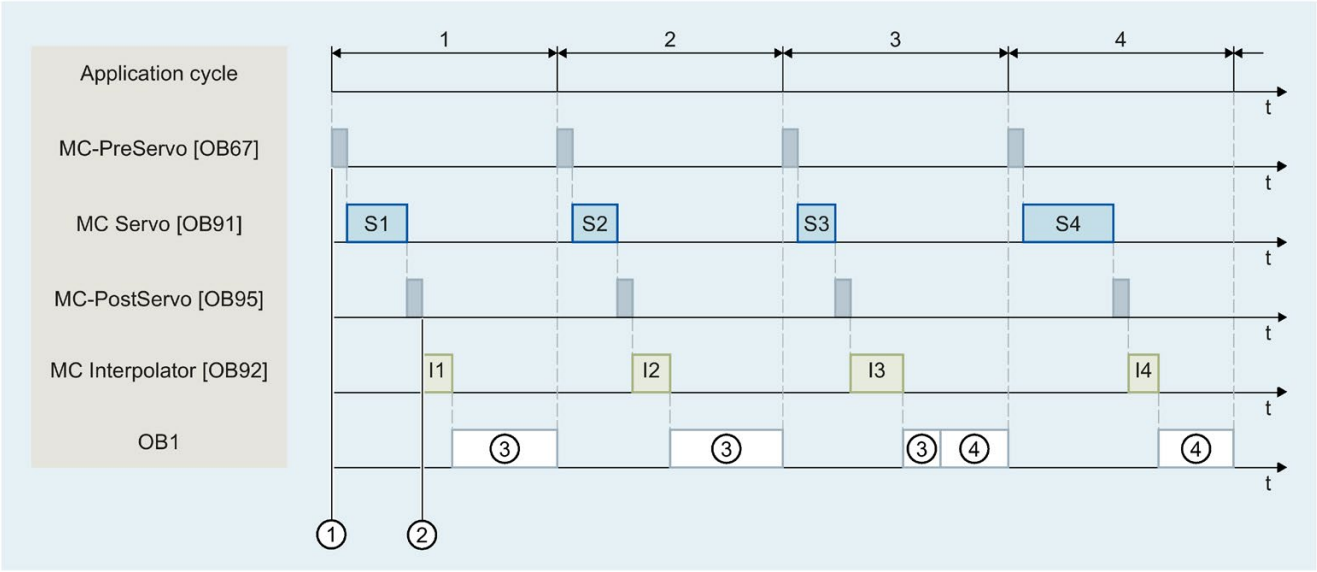

① "TPA OB Servo" input
② "TPA OB Servo" output
③ First OB1 cycle
④ Second OB1 cycle

Overflows

Overflows can occur if the configured application cycle is not adhered to, for example because additional technology objects or programs are added in the MC-PreServo [OB67] or MC-PostServo [OB95]. The application cycle must be adapted in this case to prevent overflows.

A message is generated in the diagnostic buffer of the CPU in the case of an overflow of MC-Servo [OB91] in the send clock. The controller no longer runs isochronously.

The CPU switches to STOP mode in the case of an overflow of MC-Servo [OB91] in the application cycle.

The following figure shows the behavior in the case of overflow of MC-Servo [OB91] in the application cycle and in the send clock with a reduction ratio of 2:

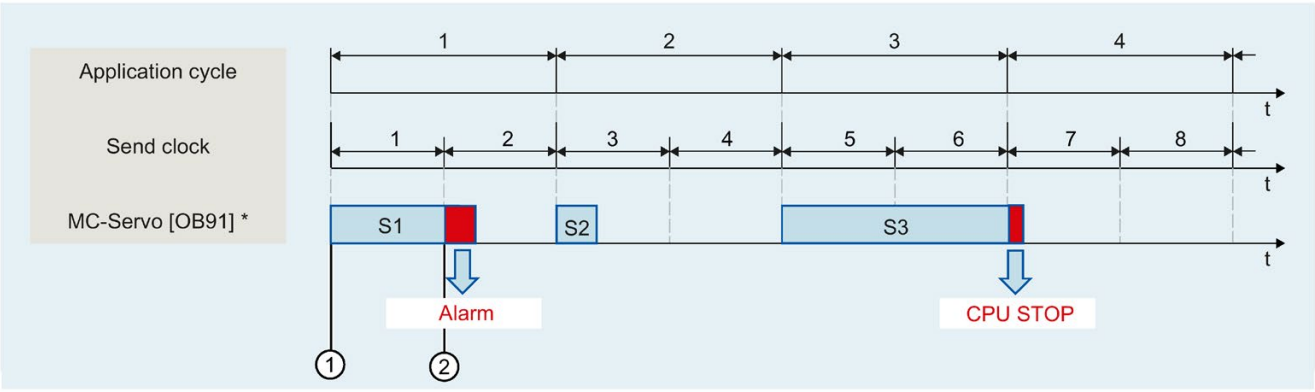

① "TPA OB Servo" input

② "TPA OB Servo" output

* Including MC-PreServo [OB67] and/or MC-PostServo [OB95], when in use

The execution of an MC-Interpolator [OB92] may only be interrupted by an MC-Servo [OB91] call. If more interruptions occur, the CPU switches to STOP mode.

The following figure shows the operational sequence when an MC-Interpolator [OB92] is interrupted over two time slices:

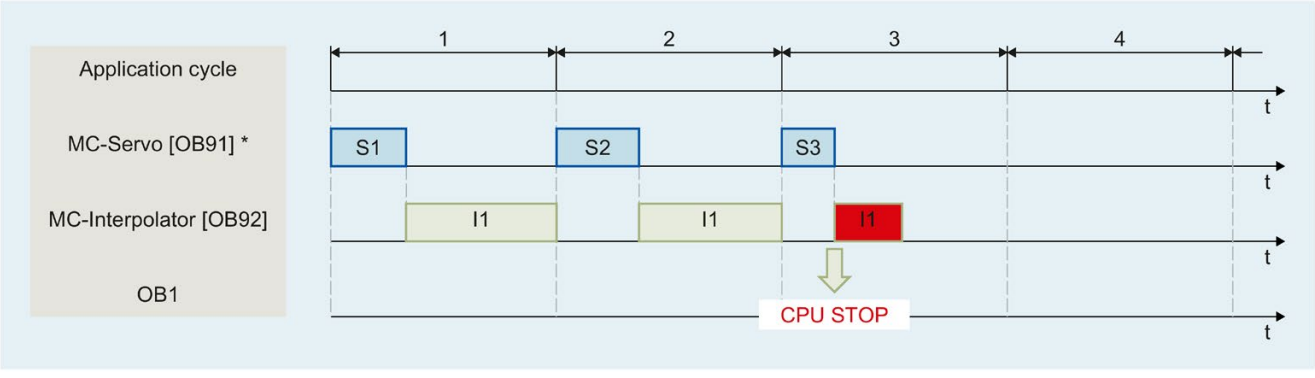

* Including MC-PreServo [OB67] and/or MC-PostServo [OB95], when in use

The CPU tolerates a maximum of three consecutive overflows of MC-Interpolator [OB92]. If more overflows occur, the CPU switches to STOP mode.

The following figure shows the operational sequence if there are four consecutive individual overflows of MC-Interpolator [OB92]:

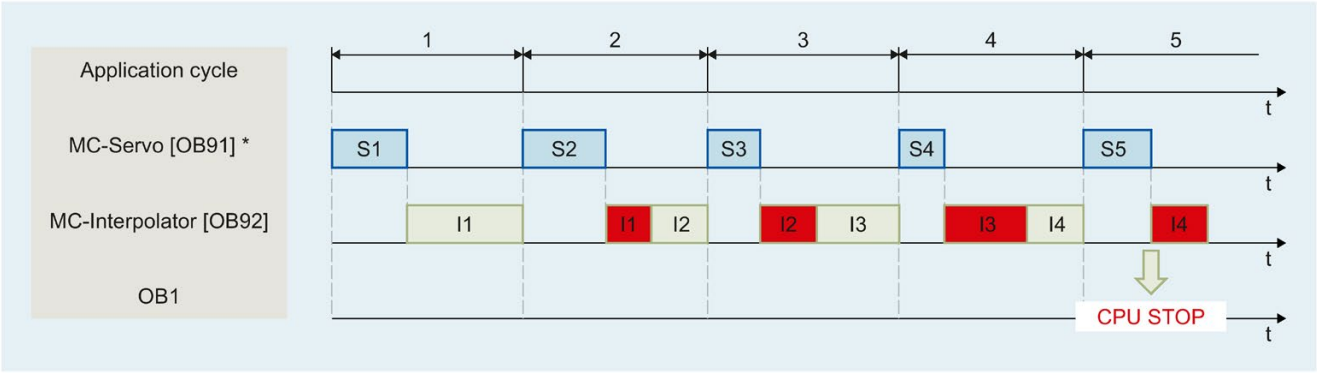

* Including MC-PreServo [OB67] and/or MC-PostServo [OB95], when in use

3.2.12.4 Operating modes

This section examines the behavior of the Motion Control in the respective operating modes and in the transitions between operating modes. A general description of the operating modes can be found in the S7-1500 System Manual

Operating modes and transitions

The CPU has the following operating modes:

- STOP
- STARTUP
- RUN
- HOLD

The following figure shows the operating modes and the operating mode transitions:

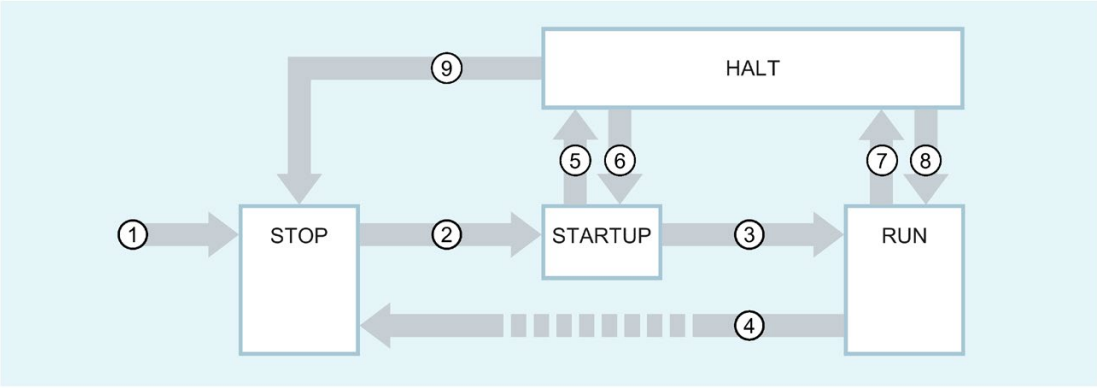

Operating mode transitions

The following table shows the behavior of the Motion Control in the transitions between the operating modes:

No.	Operating mode transition	Behavior
①	POWER ON → STOP	The CPU performs a restart of the technology objects. The technology objects are reinitialized with the values from the load memory.
②	STOP → STARTUP	Not relevant for Motion Control.
③	STARTUP → RUN	The process outputs are enabled.
④	RUN → STOP	When the CPU changes from RUN mode to STOP mode, all technology objects are disabled in accordance with the alarm response "remove enable". Active Motion Control jobs are aborted. If restart-relevant data has been changed for technology objects in RUN, the CPU performs a restart of the corresponding technology objects.
⑤	STARTUP → HOLD	Breakpoint in the start-up routine reached.
⑥	HOLD → STARTUP	Not possible when using technology objects
⑦	RUN → HOLD	Breakpoint reached
⑧	HOLD → RUN	Not possible when using technology objects
⑨	HOLD → STOP	By operation of switch/display or by setting to STOP from programming device.

STOP mode

In STOP mode the user program is not processed and all process outputs are disabled. Thus no Motion Control jobs are executed.

The technology data blocks are updated.

STARTUP mode

Before the CPU starts processing of the cyclical user program, the startup OBs are processed one time.

In STARTUP mode, the process outputs are disabled. Motion Control jobs are rejected.

The technology data blocks are updated.

RUN mode

The user program is processed in RUN mode.

In RUN mode, the programmed Motion Control jobs are cyclically called and processed.

The technology data blocks are updated.

HOLD operating state

Working with breakpoints is not supported when technology objects are used. An overflow of the MC-Servo occurs in each case. This leads to an immediate switch to STOP mode.

In HOLD operating state, events are not initiated and the user program is not executed.

All outputs are disabled or react according to the parameter settings. Outputs supply a configured substitute value or keep the last value output and bring the controlled process to a safe operating state.

When you reach a breakpoint, the CPU executes an implicit restart of the technology object. Homing the technology once again.

3.3 Speed-controlled axis technology object

The speed axis technology object calculates speed setpoints, taking into account the dynamic settings, and outputs them to the drive. All motions of the speed axis take place as speed-controlled motions. An existing load gear is taken into account on the system side.

You can find an overview of the functions of the speed axis technology object in the Functions (Page 27) section.

A drive is assigned to each speed axis by means of a PROFIdrive telegram or an analog setpoint interface.

The speed is specified in revolutions per unit of time.

The following figure shows the basic principle of operation of the speed axis technology object:

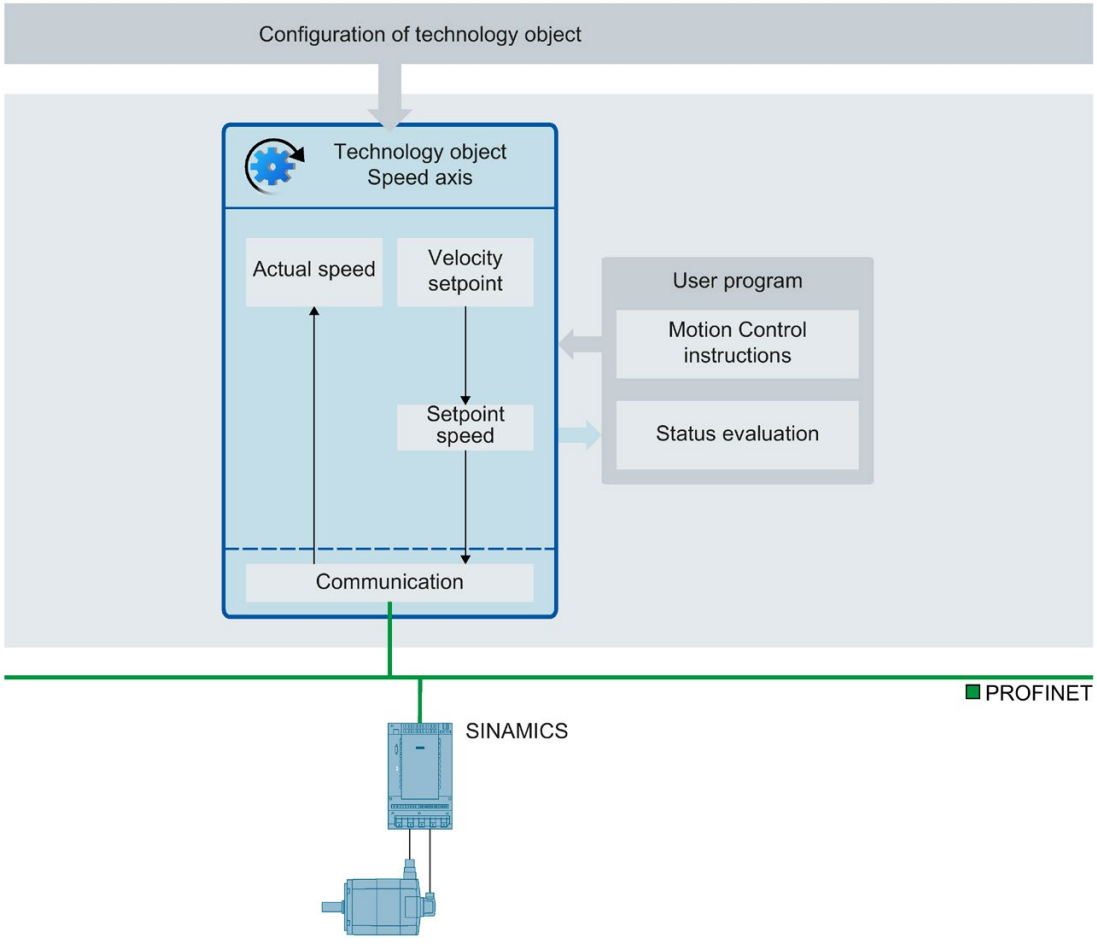

3.4 Positioning axis technology object

The positioning axis technology object calculates position setpoints, taking into account the encoderc settings, and outputs corresponding speed setpoints to the drive. In position-controlled mode, all movements of the positioning axis take place as position-controlled movements. For absolute positioning, the physical position must be known to the positioning axis technology object.

You can find an overview of the functions of the positioning axis technology object in the Functions (Page 27) section.

Each positioning axis is assigned a drive by means of a PROFIdrive telegram or an analog setpoint interface as well as an encoder by means of a PROFIdrive telegram.

The relationship between the encoder values and a defined position is established by the parameter assignment of the mechanical properties and encoder settings and by a homing operation. The technology object can also perform movements without a position relationship, and relative position movements, even without being in a homed status.

A positioning axis can be configured as a linear axis or rotary axis (Page 31), depending on the design of the mechanics.

The figure below shows the basic principle of operation of the positioning axis technology object:

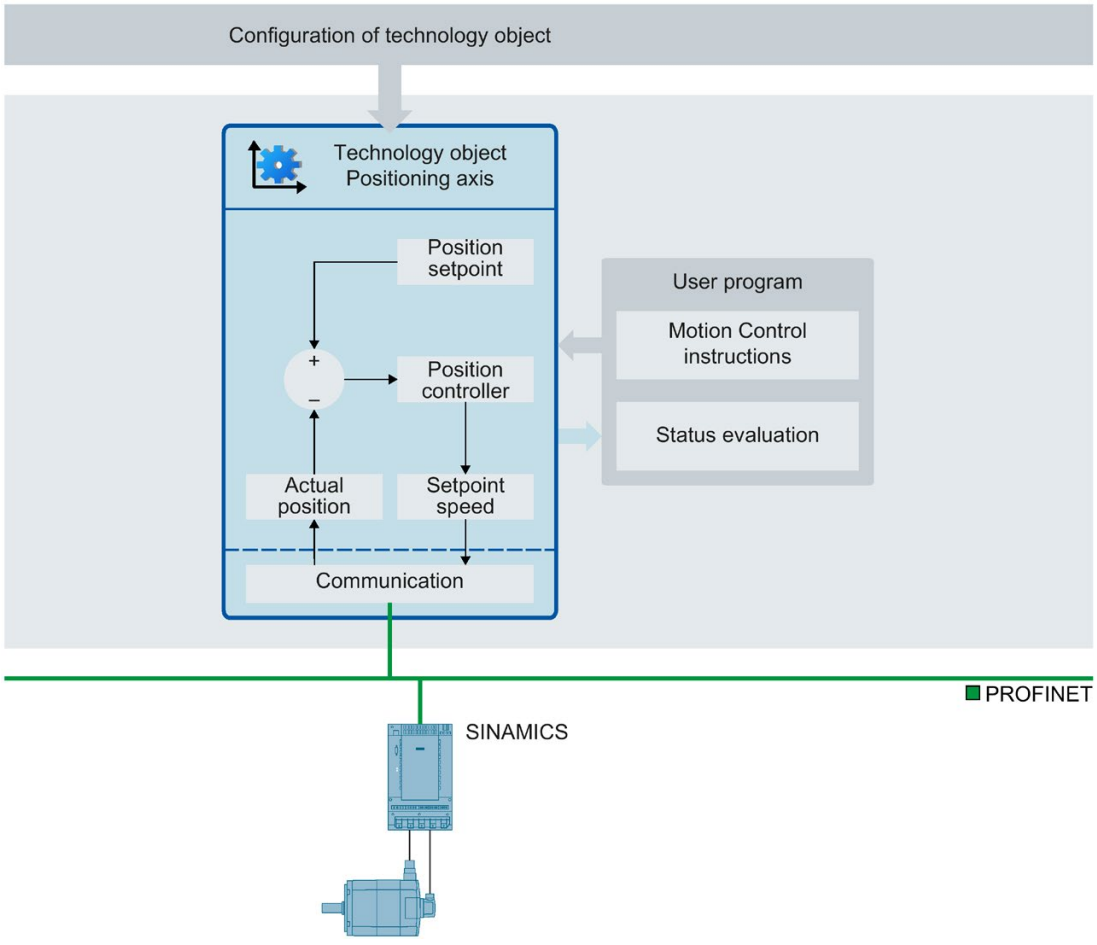

3.5 Synchronous axis technology object

3.5.1 Short description for synchronous axis

The synchronous axis technology object includes all functions of the positioning axis technology object.

A synchronous axis can also follow the motions of a leading axis. The synchronous operation relationship between the leading and following axes is specified by a synchronous operation function.

You can find an overview of the functions of the synchronous axis technology object in the Functions (Page 27) section.

The figure below shows the basic principle of operation of the synchronous axis technology object:

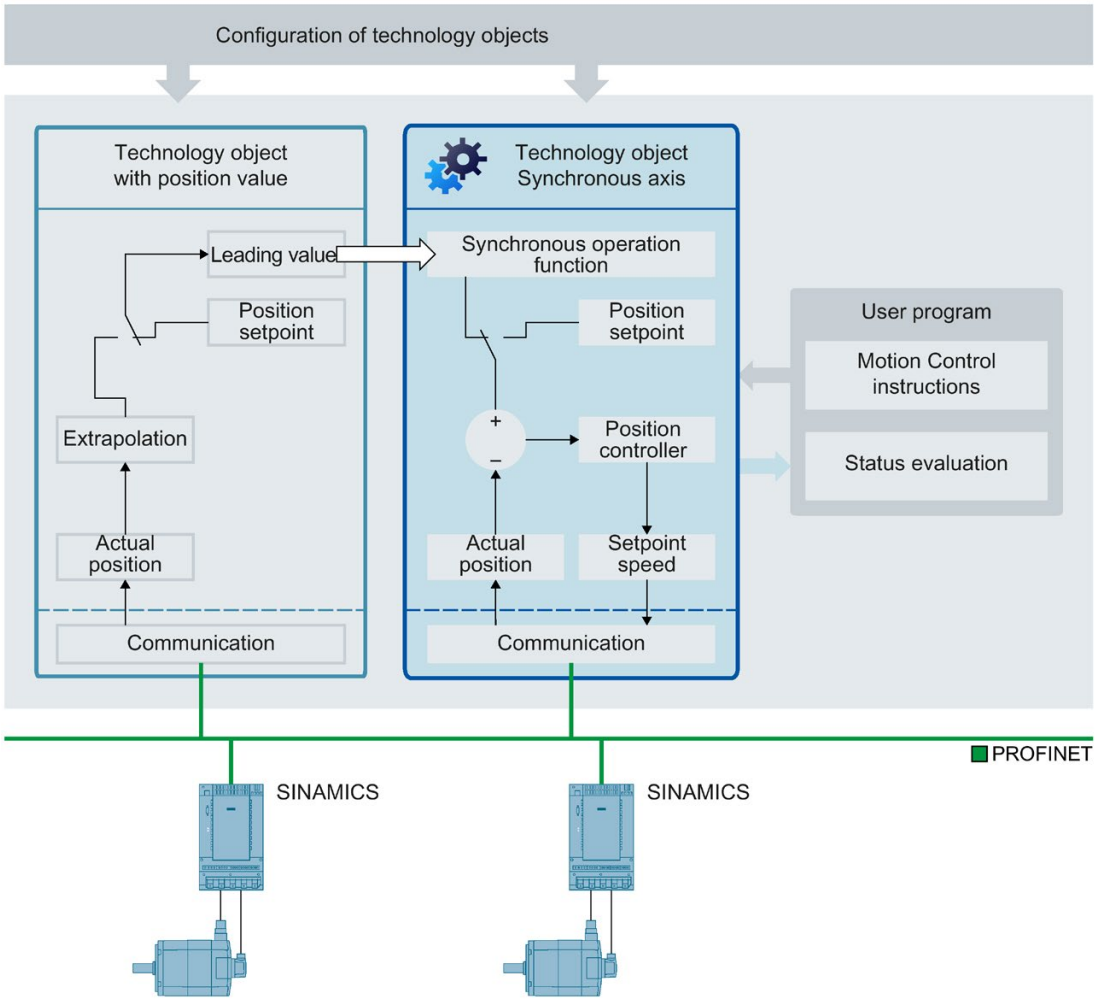

See also

Axis types (Page 31)

3.5.2 Synchronous operation phases

By means of synchronous operation, a following axis can be linked to a leading axis and move synchronously with it.

The synchronous operation proceeds in the following phases:

- Pending synchronous operation (S7-1500T)

  The following axis waits for the start conditions of the synchronizing motion.

- Synchronization

  The following axis is synchronized to the leading value.

- Synchronous motion

  The following axis follows the position of the leading axis according to the synchronous operation function.

- Synchronous operation override

  An active synchronous operation is overridden by motion jobs (e.g. MC_Halt) issued to the following axis.

During these phases the dynamic limits apply as described in section Dynamic limits in synchronous operation (Page 62).

Avoid homing the leading axis during an active synchronous operation. Homing the leading axis during synchronous operation corresponds to a setpoint step change on the following axis. The following axis compensates for the step change according to the synchronous operation function and limited only to the maximum speed of the drive.

Note

The leading values and following values are coupled without conversion into the relevant configured user unit. If, for example, a linear leading axis moves by 10 mm, a rotary following axis moves by 10° with at a gear ratio of 1:1.

3.5.3 Leading value coupling

3.5.3.1 Short description for leading value coupling

The leading value for synchronous operation is provided by a leading axis. The leading value is specified and coupled in the user program with the call of the corresponding Motion Control instruction for synchronous operation. The leading value is switched when you call the Motion Control instruction again specifying a different leading axis.

The following rules apply to the leading value coupling:

- A leading axis can output the leading value to several following axes.
- The synchronous axis can be interconnected with different leading values. All interconnections required during operation must be set up during configuration of the technology object.
- Only one leading value at a time is coupled and evaluated.

3.5.3.2 Setpoint coupling

With setpoint coupling, the position setpoint of the leading axis is used as the leading value for synchronous operation.

The position setpoint of the following technology objects can be interconnected as the leading value for synchronous operation:

- Positioning axis
- Synchronous axis

3.5.4 Gearing with MC_GearIn

During gearing the position of the following axis results from the position of the leading axis multiplied by the gear ratio. You specify the gear ratio as a ratio of two integers. The result is a linear synchronous operation function.

Synchronous operation with MC_GearIn begins after synchronization when the following axis has reached the velocity and acceleration of the leading axis, taking into account the gear ratio.

Synchronization

Synchronization begins with the start of an "MC_GearIn (Page 413)" job. When a synchronous axis is synchronizing to a leading value, this is indicated in the technology object tag <TO>.StatusWord.X21 (Synchronizing). Active motion jobs are overridden. The dynamic values (acceleration, delay, jerk) of the following axis for the synchronization are specified at "MC_GearIn".

The synchronization duration and distance are dependent on the following parameters:

- Start time of the "MC_GearIn" job
- Dynamics of the following axis at the start time
- Dynamic value settings for "MC_GearIn"
- Dynamics of the leading axis

If the following axis has reached the velocity and the acceleration of the leading axis, taking into account the gear ratio, the following axis is synchronized. The following axis travels synchronously with the leading axis.

Synchronous motion

When a synchronous axis is synchronized to a leading value, the "Synchronous" status is indicated by parameter "MC_GearIn.InGear" = TRUE as well as in the technology object tag <TO>.StatusWord.X22 (Synchronous). The following axis follows the dynamics of the leading axis according to the gear ratio.

The response characteristic during gearing is expressed by a linear relationship between the leading value and following value.

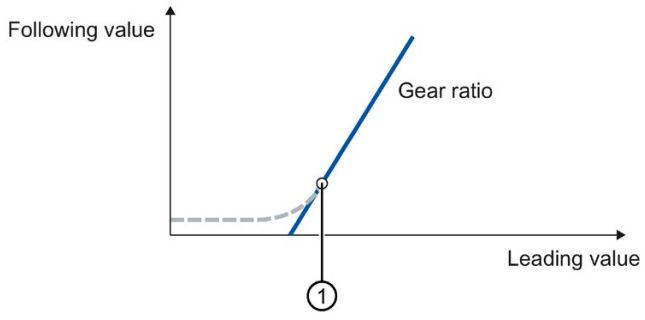

Gear ratio	Slope of line/transmission ratio Gear ratio = MC_GearIn.RatioNumerator/MC_GearIn.RatioDenominator
- - - - -	Synchronization
①	Position starting from which the leading and following axes move synchronously Position ① is dependent on the above-named parameters (see Synchronization).

The following value is calculated according to the following function:

Position of following axis (following value) = Position ① of following axis + gear ratio × (Position of leading axis - Position ① of leading axis)

Direction

The numerator of the gear ratio is specified as positive or negative. This yields the following behavior:

- **Positive gear ratio:**
  The leading and following axes move in the same direction.
- **Negative gear ratio**:
  The following axis moves in the opposite direction of the leading axis.

See also

MC_GearIn: Start gear synchronization V4 (Page 413)

Tags for synchronous operation (Page 109)

MC_MoveSuperimposed: Position axes overlapping V4 (Page 395)

Dynamic limits in synchronous operation (Page 62)

3.5.5 Tags for synchronous operation

The following technology object tags are relevant for synchronous operation:

Status indicators	
<TO>.StatusSynchronizedMotion.ActualMaster	When a synchronous operation job is started, the number of the technology data block of the currently used leading axis is displayed. "ActualMaster" = 0 when synchronous operation is inactive
<TO>.StatusSynchronizedMotion.PhaseShift	Current absolute leading value shift
<TO>.StatusWord.X21 (Synchronizing)	Set to value TRUE when the synchronous axis synchronizes to a leading value.
<TO>.StatusWord.X22 (Synchronous)	Set to value TRUE when the synchronous axis is synchronized and moves synchronously to the leading axis,
<TO>.ErrorWord.X14 (SynchronousError)	Error during synchronous operation The leading axis specified in the Motion Control instruction was not configured as a possible leading axis.
<TO>.StatusSynchronizedMotion.StatusWord.X0 (MaxVelocityExceeded)	Set to value TRUE when the maximum velocity configured for the following axis is exceeded during synchronous operation.
<TO>.StatusSynchronizedMotion.StatusWord.X1 (MaxAccelerationExceeded)	Set to value TRUE when the maximum acceleration configured for the following axis is exceeded during synchronous operation.
<TO>.StatusSynchronizedMotion.StatusWord.X2 (MaxDecelerationExceeded)	Set to value TRUE when the maximum deceleration configured for the following axis is exceeded during synchronous operation.

3.6 Technology object external encoder

The external encoder technology object detects a position, and makes it available to the controller.

The actual position detected by the external encoder can be used for the following functions, for example:

- Measured value acquisition by a measuring input
- Position-dependent generation of switching signals and switching signal sequences by output cam and cam track with actual value reference.
- As a leading value of a synchronous axis (S7-1500T)

You can find an overview of the functions of the external encoder technology object in the Functions (Page 27) section.

The relationship between the encoder values and a defined position is established by the parameter assignment of the mechanical properties and encoder settings and by a homing operation.

The following figure shows the basic principle of operation of the external encoder technology object:

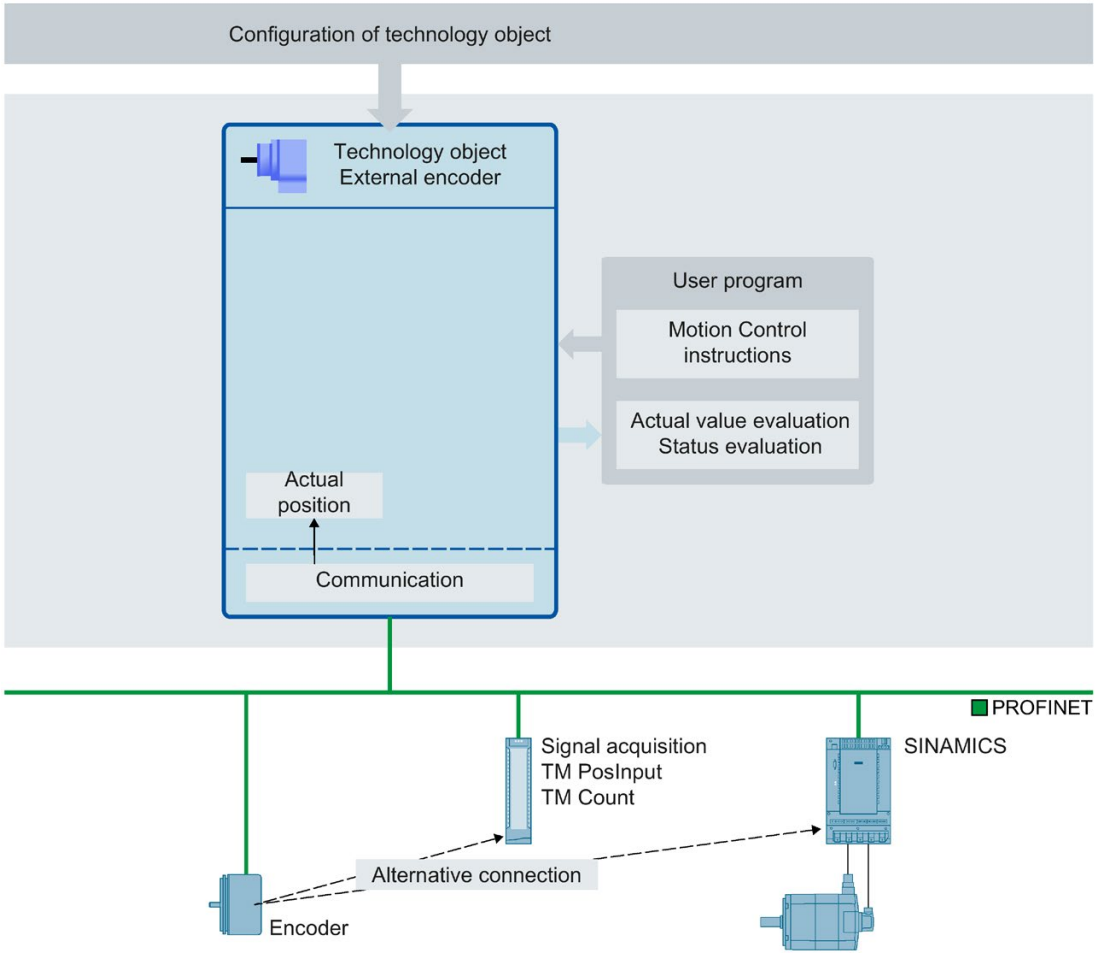

Specification of the position occurs according to the selected system of units:

- Linear system of units

  The position is specified as a linear measure, e.g. millimeters.

- Rotary system of units

  The position is specified as an angular measure, e.g. degrees.

3.7 Technology object measuring input

3.7.1 Brief description

The measuring input technology object acquires the actual position of an axis or external encoder at a signal change at the measuring input.

You can find an overview of the functions of the measuring input technology object in the Functions (Page 27) section.

The figure below shows the basic principle of operation of the measuring input technology object:

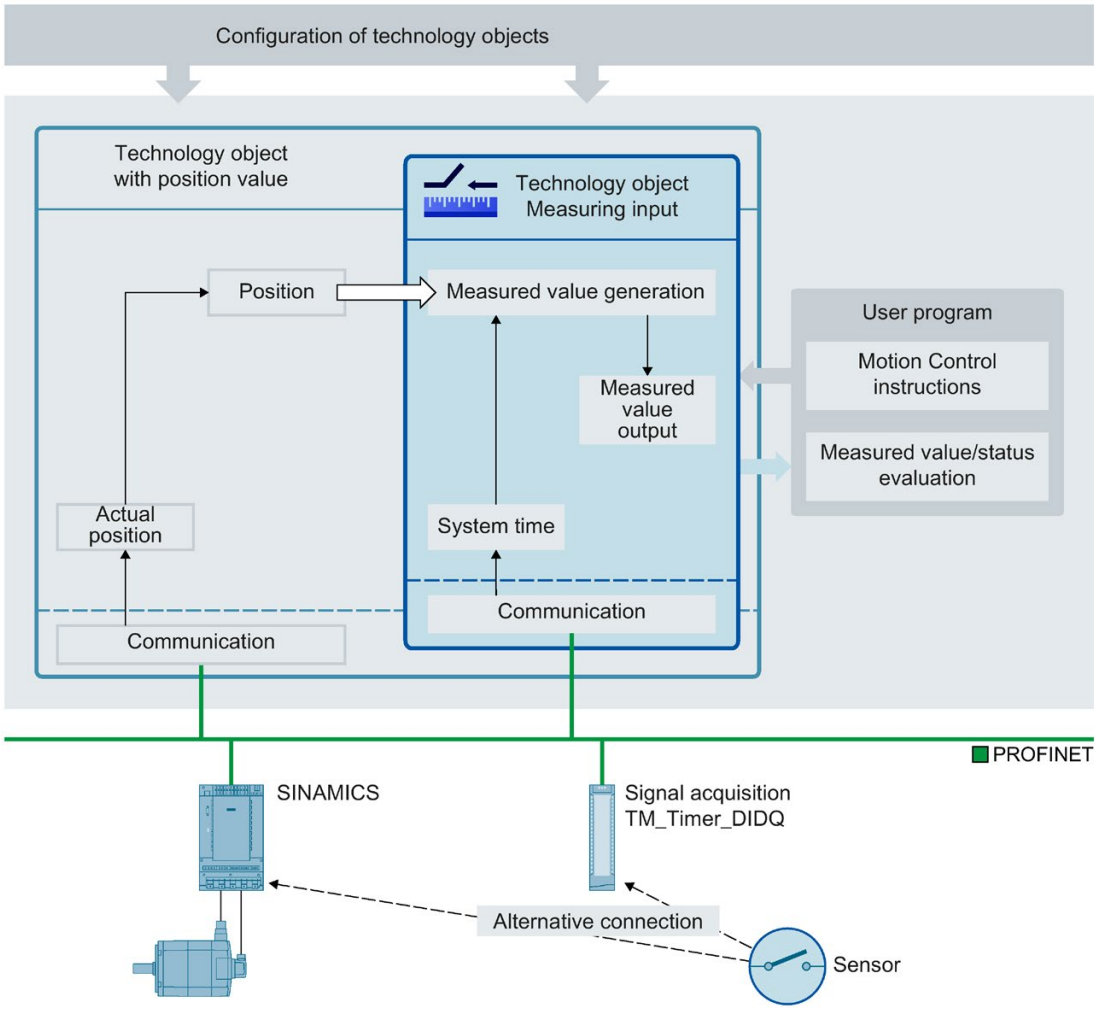

Measurement types

Two types of measurement can be performed:

- One-time measurement (Page 116)

  Up to two measured values are acquired with edge accuracy with one measuring job. A one-time measuring job is started with "MC_MeasuringInput".

- Cyclic measuring (Page 117)

  With cyclic measuring, up to two measured values are acquired with edge accuracy in each position control cycle.

  A cyclic measuring job is started with "MC_MeasuringInputCyclic". The measurements are continued cyclically until they are ended per command.

The edges to be detected are selected when starting the measurement using Motion Control instruction "MC_MeasuringInput" or "MC_MeasuringInputCyclic".

Assignment

The measuring input technology object must always be assigned to another technology object whose position will be evaluated by the measuring input.

The measuring input technology object can be assigned to the following technology objects:

- Synchronous axis
- Positioning axis
- External encoder

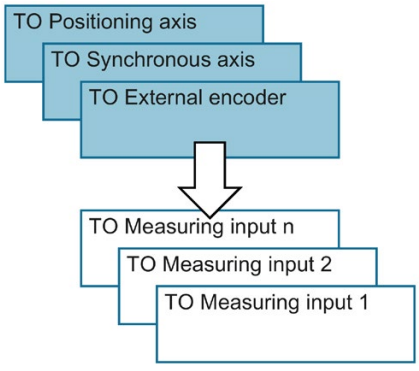

Exactly one axis or one external encoder can be assigned to a measuring input technology object.

An axis or external encoder can be assigned multiple measuring input technology objects.

Measured value determination

The position can be detected using support from the hardware in one of the following ways:

- Measuring using TM Timer DIDQ (time-based)
- Measuring with SINAMICS measuring input (time-based)

  Measurements via a measuring input are only possible for SINAMICS drives as of (see compatibility list (Page 555)).
- Measuring using PROFIdrive telegram (drive or external encoder)

A measuring job is activated using Motion Control instruction "MC_MeasuringInput" or "MC_MeasuringInputCyclic".

With time-based measuring ("TIME_BASED"), a signal change of the external trigger signal for the measurement is detected via a corresponding module such as TM Timer DIDQ or SINAMICS Drive. The time stamp is transferred to the controller and the associated actual position is determined in the technology object.

With direct position detection ("PROFIDRIVE"), the measurement input is connected to the drive device and the measurement is implemented in the drive. The drive or encoder module directly supplies the acquired position value to the technology object via the PROFIdrive telegram.

The resulting measured value is indicated at the respective output of the Motion Control instruction "MC_MeasuringInput" or "MC_MeasuringInputCyclic".

Cyclic measuring is only possible when measuring using TM Timer DIDQ. One-time measuring is always possible.

Measuring using TM Timer DIDQ requires isochronous mode.

For measuring using a PROFIdrive telegram, only one measuring input at a time can be active on an actual value or encoder in the PROFIdrive telegram. A maximum of two measuring inputs via PROFIdrive can be configured on an actual value or encoder in the PROFIdrive telegram Refer to Automatic transfer of drive and encoder parameters in the device (Page 42).

The measuring input technology object cannot be used with SIMATIC S7-PLCSIM. The measuring input technology object and the measuring input jobs used in the user program can be loaded into SIMATIC S7-PLCSIM, but have no function. Measured values are not shown.

Correction time

The time of the measurement can be corrected by setting a correction time (<TO>.Parameter.CorrectionTime) for the measuring input technology object.

Corrections may be required for the following examples:

- Times for mechanical displacement of the measuring input
- Times for the generation of the measured signal before the input at the measurement module
- Filter times at the input or filter times for the measurement inputs on the SINAMICS drive unit

The correction time is calculated by the measuring input technology object for time-based measured value acquisition ("TIME_BASED") and for direct position detection ("PROFIDRIVE").

Also note the time delay when measuring on a virtual axis. See section Brief description (Page 39).

3.7.2 Measuring

3.7.2.1 One-time measurement

With one-time measurement, up to two edges can be detected with one measuring job. The associated actual positions are signaled back in the function block and in the technology DB and can be further processed in the user program.

Measuring job

A measuring job is started using the Motion Control instruction "MC_MeasuringInput". The <TO>.Status tag in the technology data block changes to "WAITING_FOR_TRIGGER". The technology object activates the measurement when the selected edge is detected.

The measurement occurs at the measurement input in the form of up to two system times. Based on the times, the associated position is determined and output, taking into consideration a correction time, if present.

With direct position detection, the detected position value is supplied directly from the drive or encoder module to the technology object via the PROFIdrive telegram.

The measurement is then finished. An additional measurement must be restarted using Motion Control instruction "MC_MeasuringInput".

Table 3- 1 Mode and display of the results of measurement results when using one-time measurement

Configured "Mode" parameter in Motion Control instruction "MC_MeasuringInput"	Output of Motion Control instruction "MC_MeasuringInput"	
	MeasuredValue1	MeasuredValue2
Measure positive edge only	Actual position at the time of the edge	–
Measure negative edge only		
Measure the next two edges	Actual position at the time of the first edge	Actual position at the time of the second edge
Measure the next two edges starting with the positive edge	Actual position at the time of the positive edge	Actual position at the time of the negative edge
Measure the next two edges starting with the negative edge	Actual position at the time of the negative edge	Actual position at the time of the positive edge

The last detected values are set in the technology data block. If a new job is initiated with the function block, the outputs of the function block are initialized. The technology data block is not initialized. After detecting the first valid measuring cycle, the values in the technology data block and function block are consistent with one another.

The finished measuring command is indicated in the function block in "MC_MeasuringInput.DONE" = TRUE or in the technology data block in <TO>.Status = "TRIGGER_OCCURRED".

Time requirements for measurement jobs via "MC_MeasuringInput"

The hardware-related restrictions to measurement via the PROFIdrive telegram or measuring via the SINAMICS measurement sensing input, there are time requirements for the period until the measuring event can be recorded.

When measuring once via "MC_MeasuringInput" with mode 3 (measurement at both edges, beginning with the rising edge) or mode 4 (measurement at both edges, beginning with the falling edge), a minimum interval of several servo cycles is therefore required between the first edge to be measured and the previous edge, in order for the first edge to be measured can be recorded.

You can find information on the temporal boundary conditions in the section Time-related boundary conditions (Page 122).

See also

Time-related boundary conditions (Page 122)

MC_MeasuringInput: Start measuring once V4 (Page 399)

3.7.2.2 Cyclic measuring

With cyclic measuring, up to two measuring events can be acquired by the system in each position control cycle of the technology object and the associated measuring positions can be displayed. The measurements are continued cyclically until they are ended per command.

The determined measured values are displayed and can be read by the user program.

Cyclic measuring requires the measured value to be determined using the following type of hardware support: "Measuring using Timer DIDQ".

Measuring edges at which a measured value could not be determined are indicated in a lost edge counter in the technology DB as well as in function block "MC_MeasuringInputCyclic".

Measuring job

A cyclic measuring job is started with Motion Control instruction "MC_MeasuringInputCyclic", and the measuring job is issued to the corresponding technology module. Depending on the functionality of the technology module, up to two measuring events and thus measuring times can be captured with edge reference in each position control cycle and then forwarded to the technology object. The technology object determines the measuring positions for the measuring times taking into consideration any specified correction times.

The technology data block tag "<TO>.Status" changes from "INACTIVE" to "WAITING_FOR_TRIGGER" and remains in this status as long as additional events are awaited.

The mode set in the Motion Control instruction specifies the edges for which the measured values are to be acquired. At most, the following edges can be detected in each position control cycle:

- Two positive edges when detecting positive edges
- Two negative edges when detecting negative edges
- One positive edge and one negative edge when detecting positive and negative edges

Measured values and counters

With a positive edge at the input MC_MeasuringInputCyclic.Execute, outputs MeasuredValue1Counter and MeasuredValue2Counter are reset to "0". As a result, new events can be tracked immediately and new measured value entries can be detected.

All measuring event occurrences of the measuring job are incremented by "1" in the corresponding event counters <TO>.MeasuredValues.MeasuredValue1Counter and <TO>.MeasuredValues.MeasuredValue2Counter of the technology data block.

The acquired measured values are continuously captured in the technology data block irrespective of individual jobs and the values are only reset to "0" at power-up or restart of the technology object.

After a completed measurement, the measured values are output in the function block. The counters of the function block are set to "0" at a new measuring job. The measured value output in the technology data block always indicates the last acquired measured value.

Lost edge counter (LEC)

If more than two edges to be detected occur within one position control cycle, a measured value cannot be evaluated for the other edges to be detected. The number of lost edges is recorded in the LEC.

The lost edges that are recorded in the LEC depend on the mode set in the Motion Control instruction. For example, if only positive edges are to be measured, the LEC records only the non-measured positive edges.

A maximum of seven lost edges can be counted and displayed in the LEC.

The number of lost edges is indicated in the function block and in the technology data block in:

- LostEdgeCounter1

  Lost cleared edges from the position control cycle in which MeasuredValue1 was acquired.

  ⇒ The displayed value in LostEdgeCounter1 is updated when counter MeasuredValueCounter1 is incremented.

- LostEdgeCounter2

  Lost cleared edges from the position control cycle in which MeasuredValue2 was acquired.

  ⇒ The displayed value in LostEdgeCounter2 is updated when counter MeasuredValueCounter2 is incremented.

Display of measurement results when using cyclic measuring

Edges selected in the command	Display per position control cycle			
	MeasuredValue1	MeasuredValue2	LostEdgeCounter1	LostEdgeCounter2
Detect positive edges only "MC_MeasuringInputCyclic.-Mode" = 0	Actual position at the time of the first positive edge	Actual position at the time of the second positive edge	Number of positive or negative edges in excess of two in the position control cycle of acquisition of MeasuredValue1 and MeasuredValue2. The following applies here: • If a MeasuredValue1 **and** a MeasuredValue2 are acquired, the number of acquired and lost edges indicated in LostEdgeCounter1 and LostEdgeCounter2 are the same. • If **only** one MeasuredValue1 is acquired, the LostEdgeCounter1 is reset to "0". The value in LostEdgeCounter2 remains changed.	
Detect negative edges only "MC_MeasuringInputCyclic.-Mode" = 1	Actual position at the time of the first negative edge	Actual position at the time of the second negative edge		
Detect positive and negative edges "MC_MeasuringInputCyclic.-Mode" = 2	Actual position at the time of the first positive edge in the position control cycle	Actual position at the time of the first negative edge in the position control cycle	Number of edges in excess of two in the position control cycle of acquisition of MeasuredValue1 and MeasuredValue2. The following applies here: • If a MeasuredValue1 **and** a MeasuredValue2 are acquired, the number of acquired and lost edges indicated in LostEdgeCounter1 and LostEdgeCounter2 are the same. • If **only** one MeasuredValue1 is acquired, the LostEdgeCounter1 is reset to "0". The value in LostEdgeCounter2 remains changed. • If **only** one MeasuredValue2 is acquired, the LostEdgeCounter2 is reset to "0". The value in LostEdgeCounter1 remains changed.	

The following figures show examples of divergence of MeasuredValue1Counter and MeasuredValue2Counter as a result of lost edges.

Example of measurement at positive edges (Mode = 0)

Processing cycle clock TO Measuring input	N	N+1	N+2	N+3	N+4	N+5	N+6	N+7	N+8	N+9	N+10
Measuring input											
MeasuredValue1Counter	...	6	7	7	8	9	9	10	11	12	13
LostEdgeCounter1	...	0	0	0	0	0	0	1	0	1	0
MeasuredValue2Counter	...	6	7	7	7	7	7	8	8	9	9
LostEdgeCounter2	...	0	0	0	0	0	0	1	1	1	1

Example of measurement at negative edges (Mode = 1)

Processing cycle clock TO Measuring input	N	N+1	N+2	N+3	N+4	N+5	N+6	N+7	N+8	N+9	N+10
Measuring input											
MeasuredValue1Counter	...	6	7	8	9	10	10	11	11	12	13
LostEdgeCounter1	...	0	0	0	1	0	0	1	1	1	0
MeasuredValue2Counter	...	6	7	7	8	8	8	9	9	10	10
LostEdgeCounter2	...	0	0	0	1	1	1	1	1	1	1

Example of measurement at positive and negative edges (Mode = 2)

Processing cycle clock TO Measuring input	N	N+1	N+2	N+3	N+4	N+5	N+6	N+7	N+8	N+9	N+10
Measuring input											
MeasuredValue1Counter	...	6	7	7	8	9	9	10	11	12	13
LostEdgeCounter1	...	0	2	2	0	0	0	3	0	4	0
MeasuredValue2Counter	...	6	7	8	8	9	10	11	12	13	14
LostEdgeCounter2	...	0	2	0	0	0	0	3	0	4	0

See also

MC_MeasuringInputCyclic: Start cyclic measuring V4 (Page 402)

3.7.3 Measuring with measuring range

A measuring job can be activated directly or restricted to a defined measuring range.

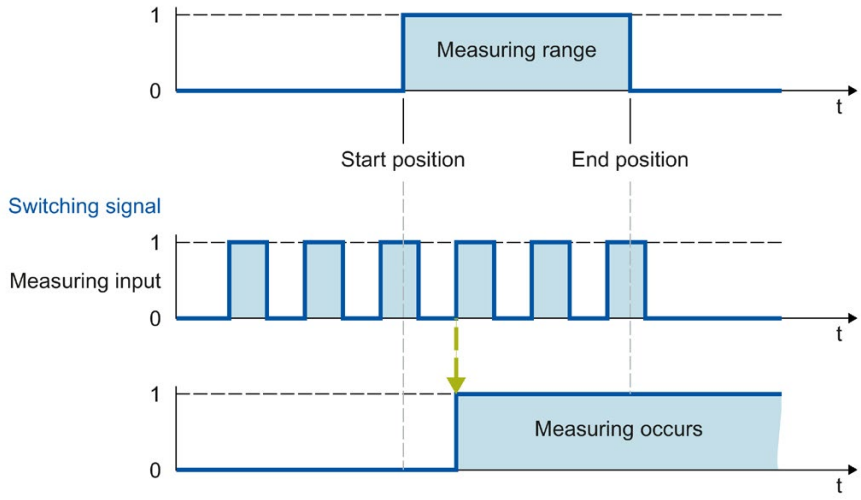

Figure 3-1 Example of measuring with measuring range in Mode = 0 (measurement of next positive edge)

Only measured values within the measuring range are displayed for the technology object.

- If no measuring edge within the measuring range is detected during a one-time measurement, the measuring job is canceled and an alarm is triggered.
- Cyclic measuring remains active even if no measuring edge within the measuring range was detected.

For axes without modulo function, it is immaterial in which order the start and end positions are specified. If the start position is greater than the end position, the two values are interchanged in the application. If the start position for an axis with modulo function is greater than the end position, the measuring range is extended from the start position past the modulo transition of the axis to the end position.

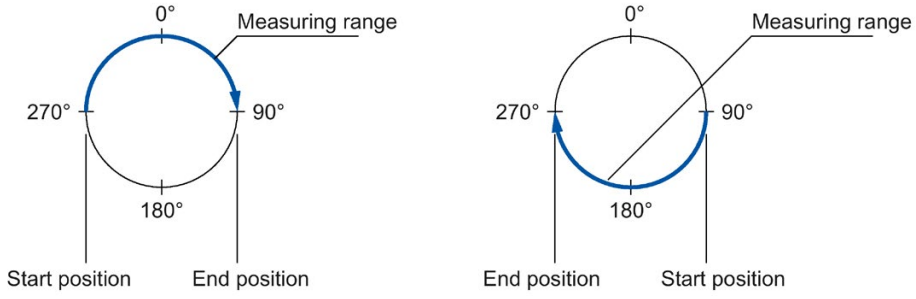

The measuring range positions are specified in Motion Control instruction MC_MeasuringInput or MC_MeasuringInputCyclic.

Activation time for the measuring range

The measuring function must be active at the measurement input when the start of the measuring range is reached. To compensate for the communication time for activation in the TM Timer DIDQ or drive, for example, the activation of the measurement in the technology object begins earlier then the measuring range start by the amount of the activation time.

The activation time for measuring with measuring range is divided up as follows:

- The activation time allocation defined and active on the system side is indicated in the <TO>.Parameter.MeasuringRangeActivationTime tag.
- An additional activation time can also be set by the user with the <TO>.Parameter.MeasuringRangeAdditionalActivationTime tag.

3.7.4 Time-related boundary conditions

Depending on the hardware configuration and selection of edges to be detected, different system-inherent requirements apply to the time allowed after calling the Motion Control instruction "MC_MeasuringInput" or "MC_MeasuringInputCyclic" until a measurement occurs and the results are displayed.

The following times must be distinguished here:

- Time until the measuring event can be captured
- Time until the measurement result is displayed or the measurement is finished.

The times calculated taking into account the current settings are indicated in configuration window "Extended parameters" of a measuring input.

Measuring using TM Timer DIDQ / Measuring using SINAMICS measuring input

Measurement using PROFIdrive telegram (drive or external encoder)

Definition of tags:

Measurement using TM Timer DIDQ/Measurement using SINAMICS measuring input

- Time from output of an MC_MeasuringInput job until measuring event detection becomes effective:
  - MeasuringRangeActivationTime: 2 x T_{servo}
- Time after measuring event until measured value is available in the controller:
  - One-time measurement: 2 x T_{servo} + T_{Send}
  - Cyclic measuring: T_{servo} + T_{Send}
- Activation time for a measurement with measuring range:
  - MeasuringRangeActivationTime + MeasuringRangeAdditionalActivationTime

Measurement using PROFIdrive telegram (drive or external encoder)

- MeasuringRangeActivationTime: 4 x T_{servo}
- Time from output of an MC_MeasuringInput job until measuring event detection becomes effective:
  - Measuring a positive/negative edge or two edges:

    MeasuringRangeActivationTime + 2 x T_{servo}
  - Measuring two dedicated edges:

    MeasuringRangeActivationTime + 3 x T_{servo}
- Time after measuring event until measured value is available in the controller:
  - Measuring an edge: 7 x T_{servo}
  - Measuring two edges: 13 x T_{servo}
- Activation time for a measurement with measuring range:
  - Measuring a positive/negative edge or two edges:

    MeasuringRangeActivationTime + MeasuringRangeAdditionalActivationTime + 2 x T_{servo}
  - Measuring two dedicated edges:

    MeasuringRangeActivationTime + MeasuringRangeAdditionalActivationTime + 3 x T_{servo}

Definition of tags

- T_{servo} = Call interval of the technology object in the servo cycle clock [ms]
- T_{Send} = Send clock [ms]
- MeasuringRangeActivationTime = See section Measuring with measuring range (Page 121)

To prevent asynchronous processing from overwriting a measured value that was just determined, a new one-time measuring job cannot be started until the active measurement has concluded. The sum of the activation time and the time until display or conclusion must be taken into account for this.

With cyclic measuring, evaluation or temporary storage of the measurement results in the synchronous MC-PostServo [OB95] is recommended from the user perspective.

3.7.5 Tags

Status display	
<TO>.Status	Measuring input function status 0: Measurement is not active ("INACTIVE") 1: The measuring input is waiting for a measuring event ("WAITING_FOR_TRIGGER") 2: The measuring input has acquired one or more measured values ("TRIGGER_OCCURRED"). 3: Error during the measurement ("MEASURING_ERROR")
<TO>.InputState	Measuring input input status
Parameters	
<TO>.Parameter.MeasuringInputType	Measuring input type
<TO>.Parameter.PROFIdriveProbeNumber	Number of the measuring input to be used for a measurement using PROFIdrive telegram
<TO>.Parameter.MeasuringRangeActivation-Time	System-defined activation time allocation [ms]
<TO>.Parameter.MeasuringRangeAdditional-ActivationTime	Additional user-defined activation time allocation [ms]
<TO>.Parameter.CorrectionTime	User-defined correction time for the measurement result [ms]
Interface	
<TO>.Interface.Address	I/O address for the digital measuring input
Units	
<TO>.Units.LengthUnit	Unit of the length data
<TO>.Units.TimeUnit	Unit of the time data
MeasuredValues	
<TO>.MeasuredValues.MeasuredValue1	First measured value
<TO>.MeasuredValues.MeasuredValue2	Second measured value (when measuring two or more edges in one position control cycle)
<TO>.MeasuredValues.MeasuredValue1-Counter	Count value for the first measured value
<TO>.MeasuredValues.MeasuredValue2-Counter	Count value for the second measured value
<TO>.MeasuredValues.LostEdgeCounter1	Lost edges in the cycle clock of the first measured value acquisition (zero in the case of one-time measurement)
<TO>.MeasuredValues.LostEdgeCounter2	Lost edges in the cycle clock of the second measured value acquisition (zero in the case of one-time measurement)
StatusWord	
<TO>.StatusWord.X0 (Control)	The technology object is in operation.
<TO>.StatusWord.X1 (Error)	An error occurred at the technology object.
<TO>.StatusWord.X2 (RestartActive)	The technology object is being reinitialized. The tags of the technology data block are not updated with active restart.
<TO>.StatusWord.X3 (OnlineStart-ValuesChanged)	Data relevant for the restart has been changed. The changes are applied only after a restart of the technology object.
<TO>.StatusWord.X5 (CommunicationOk)	The measuring input is synchronized with the measuring module and can be used.

ErrorWord	
<TO>.ErrorWord.X0 (SystemFault)	A system-internal error has occurred.
<TO>.ErrorWord.X1 (ConfigFault)	Configuration error One or more configuration parameters are inconsistent or invalid. The technology object was incorrectly configured, or editable configuration data were incorrectly modified during runtime of the user program.
<TO>.ErrorWord.X2 (UserFault)	Error in user program at a Motion Control instruction or its use.
<TO>.ErrorWord.X3 (CommandNotAccepted)	Command cannot be executed. A Motion Control instruction cannot be executed because necessary requirements have not been met.
<TO>.ErrorWord.X13 (PeripheralError)	Error accessing a logical address.
ErrorDetail	
<TO>.ErrorDetail.Number	Alarm number
<TO>.ErrorDetail.Reaction	Effective alarm reaction 0: No reaction 6: End measuring input processing

3.8 Technology object output cam

3.8.1 Brief description

The output cam technology object generates switching signals depending on the position of an axis or external encoder. The switching states can be evaluated in the user program and fed to digital outputs.

You can find an overview of the functions of the output cam technology object in the Functions (Page 27) section.

The figure below shows the basic operating principle of the output cam technology object:

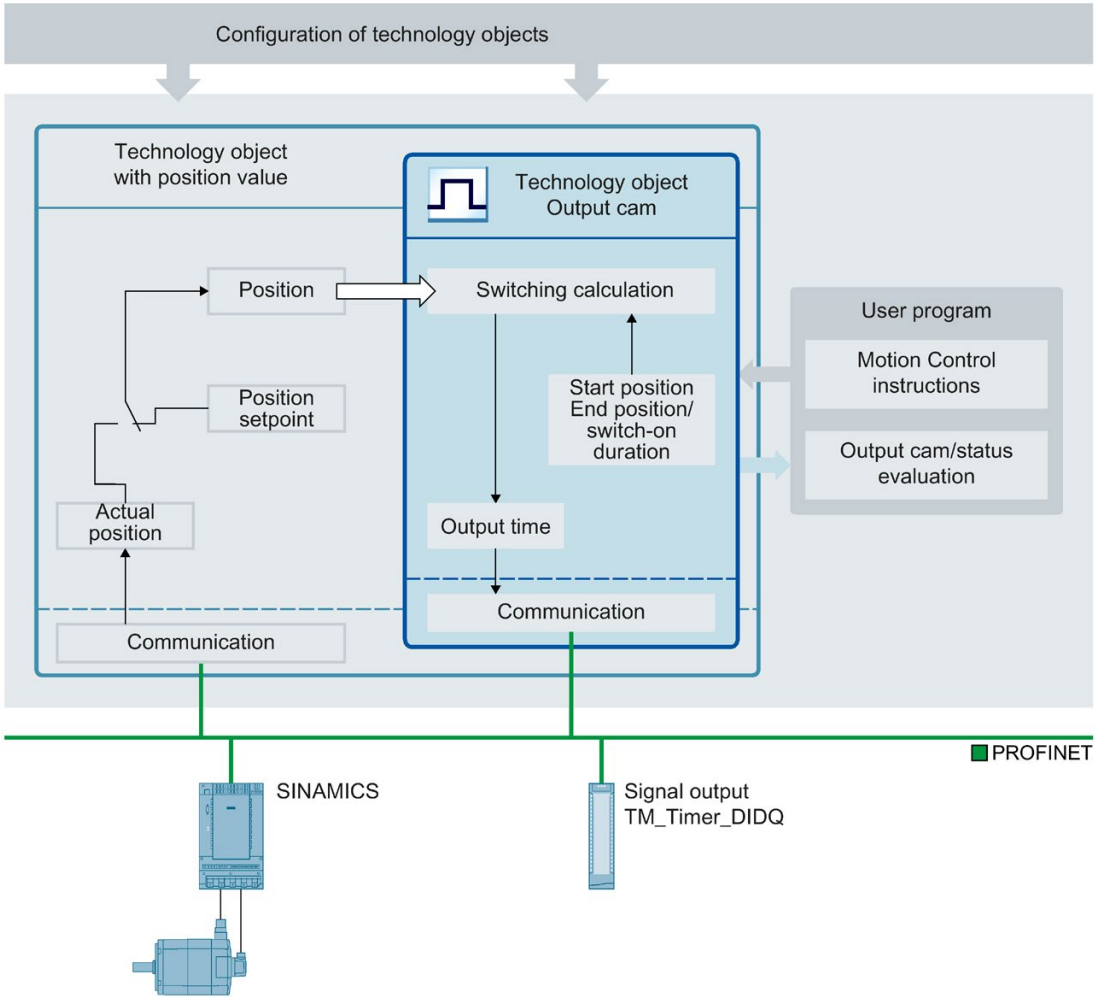

Output cam types

The following output cam types can be used:

- Distance output cam (Page 130)

  Distance output cams switch on between the start position and end position. Outside this range, the distance output cam is switched off.

- Time-based output cam (Page 132)

  Time-based output cams switch on for a defined time period when the start position is reached.

Assignment

The output cam technology object must always be assigned to another technology object whose position will be evaluated.

The output cam technology object can be assigned to the following technology objects:

- Synchronous axis
- Positioning axis
- External encoder

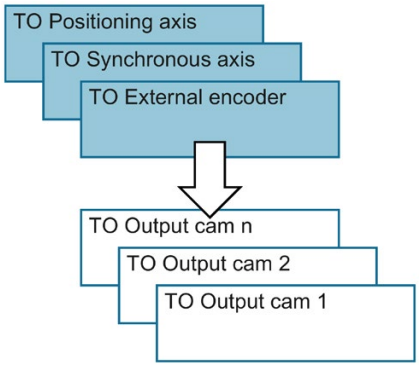

Exactly one axis or one external encoder can be assigned to an output cam.

Multiple output cams can be assigned to one axis or external encoder.

Output cam calculation and output cam output

The output cam technology object calculates the exact switching time, thereby ensuring exact adherence to the switching positions. The switching time is calculated two position control cycles before the output.

The following output options are available for the digital cam output:

- TM Timer DIDQ

  Digital output with high degree of accuracy and reproducibility in the microsecond range on ET 200MP TM Timer DIDQ 16x24V and ET 200SP TM Timer DIDQ 10x24V time-based IO modules

  Output by TM Timer DIDQ requires isochronous mode. Isochronous mode is only possible with PROFINET interface modules.

- Digital output module

  Digital output with switching accuracy depending on the output cycle of the I/O used

When output is deactivated, the output cam status is not output at the hardware output. The output cam status can be used internally in the user program by evaluating the relevant "<TO>.CamOutput" tag.

Inverted output

In the case of the inverted output, the range in which the cam output is switched on and the range in which it is switched off are swapped.

The inverted output is set in Motion Control instruction "MC_OutputCam" and is active when the instruction is enabled.

The inverted output can be used for both distance output cams and time-based output cams.

Output of multiple output cams to one output

The output of multiple output cams to one output is performed with either an AND or OR logic operation of the output cam signals to the output.

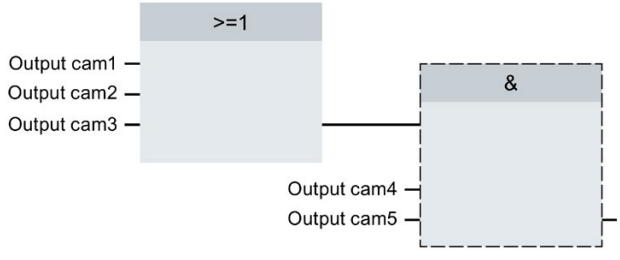

Display of the switching state

The switching state of the output cam is displayed in the associated technology DB in "<TO>.CamOutput".

Position reference

The switching points of the output cams can be referenced to the following positions, depending on the interconnected technology object.

- Actual position of a synchronous axis/positioning axis
- Position setpoint of a synchronous axis/positioning axis
- Position of an external encoder

Homing the interconnected technology object

A change to the position of an axis or external encoder using Motion Control instruction "MC_Home" is regarded as a sudden position change.

- Distance output cams are either skipped or correspondingly output.
- Time-based output cams are skipped. A time-based output cam is switched on only when the start position is crossed and remains switched on for the on-load factor.
- Switched time-based output cams are not canceled by a homing operation.

3.8.2 Distance output cam

Switch-on range

The switch-on range of distance output cams is basically defined by the start position and end position.

Start position smaller than end position

When the start position is less than the end position, the switch-on range begins with the start position and ends with the end position.

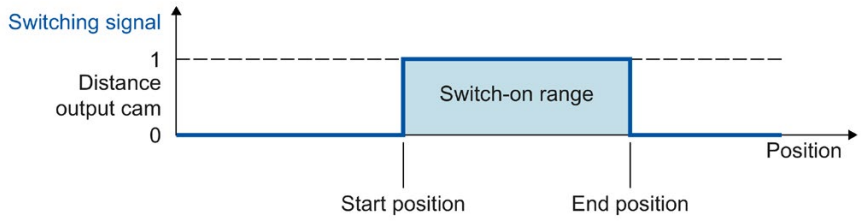

Start position greater than end position

When the start position is greater than the end position, there are two switch-on ranges as follows:

- Switch-on range beginning with the start position and ending with the positive range end (e.g. positive software limit switch, end of modulo range)
- Switch-on range beginning with the negative range end (e.g. negative software limit switch, start of modulo range) and ending with the end position

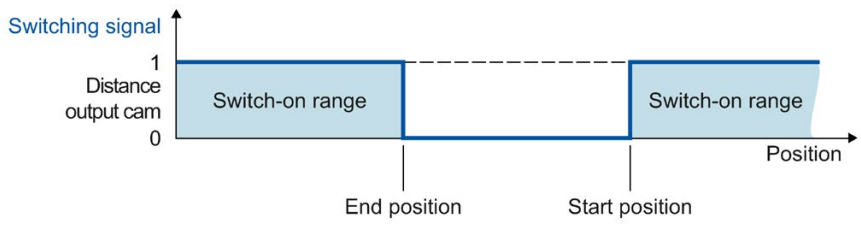

Mapping to an axis with modulo function

With active modulo function of the interconnected technology object, the start and end positions of the output cam are automatically mapped to values within the modulo range.

Example

- Modulo range = 0° to 50°
- Output cam start position = 80°
- Output cam end position = 220°

⇒ The distance output cam switches on at 30° and switches off again at 20°.

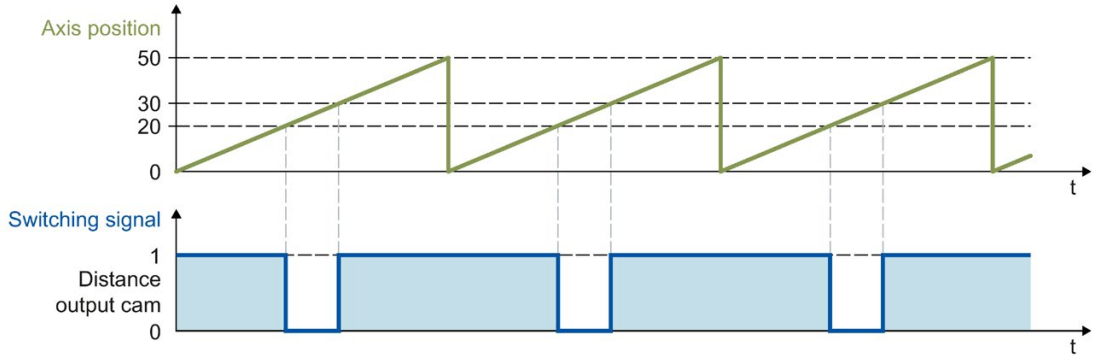

Switching characteristics

After activation, a distance output cam switches on in the following cases:

- The position of the interconnected technology object reaches the start or end position in the activation direction configured in Motion Control instruction "MC_OutputCam".
- The position of the interconnected technology object is moved into the switch-on range of the output cam (e.g. during homing) in the activation direction configured in Motion Control instruction "MC_OutputCam". If both activation directions are enabled in Motion Control instruction "MC_OutputCam", the output cam switches on even when the interconnected technology object is at a standstill.
- The output cam is switched on permanently using Motion Control instruction "MC_OutputCam" with "Mode" = 3.

An active distance output cam switches off in the following cases:

- The position is outside the switch-on range of the output cam.
- The position value is moved outside the switch-on range of the output cam.
- Motion Control instruction "MC_OutputCam" is set to "Enable" = FALSE.
- The motion direction of the interconnected technology object is reversed and no longer agrees with the enabled activation direction.

3.8.3 Time-based output cam

A time-based output cam switches on at the start position and remains set for the on-load factor.

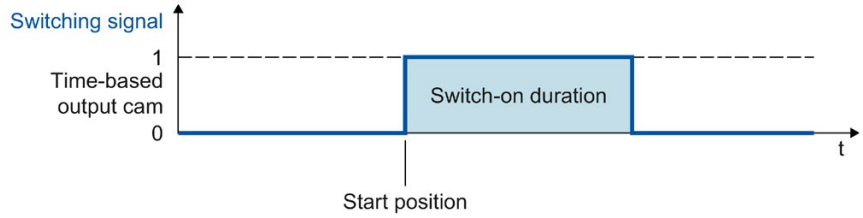

Mapping to an axis with modulo function

In the case of active modulo function of the interconnected technology object, the start position of the output cam is automatically mapped to the value within the modulo range.

Example

- Modulo range = 0° to 50°
- Output cam start positions:
  - Output cam 1 = 20°
  - Output cam 2 = 30°
  - Output cam 3 = 80°

⇒ The time-based output cam 1 switches on at 20°, the time-based output cams 2 and 3 switch on at 30°. All three output cams remain active the set on-load factor in each case.

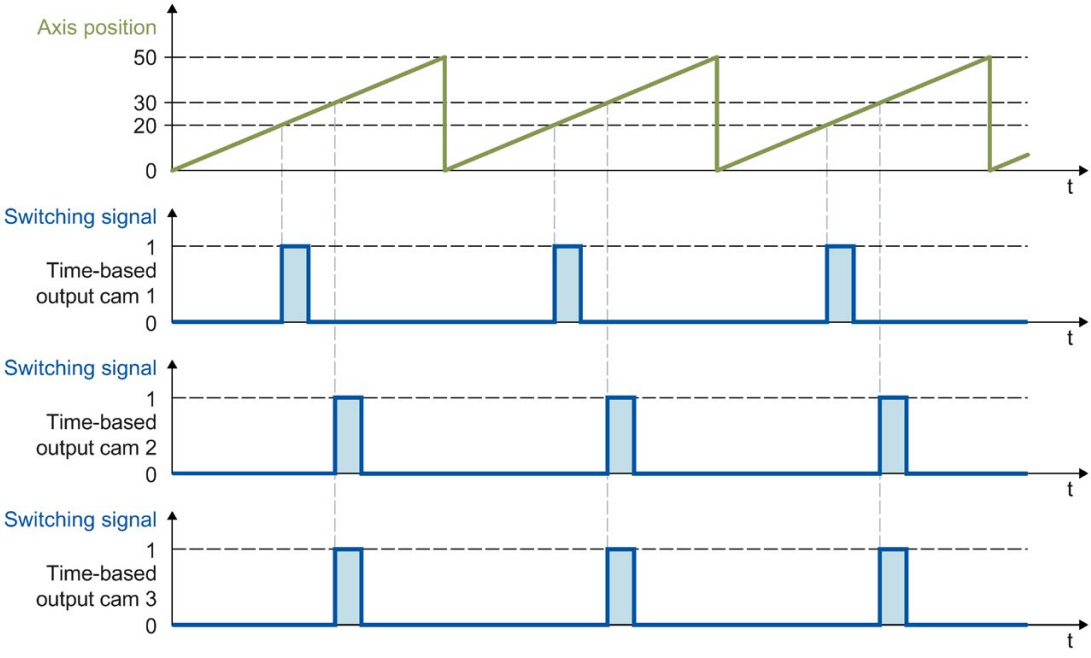

Switching characteristics

A time-based output cam switches on in the following cases:

- The start position has been reached and the motion direction of the interconnected technology object corresponds to the effective direction enabled by the instruction.

Note

- If the start position is reached again while an output cam is switched on, the on-load factor is not re-triggered.
- If due to the Motion Control instruction "MC_Home", the position value of the interconnected technology object is placed directly on or behind the start position of the output cam during the motion, the output cam does not switch on.

A time-based output cam switches off in the following cases:

- The configured on-load factor has expired.
- Motion Control instruction "MC_OutputCam" is set to "Enable" = FALSE.

3.8.4 Activation direction of cam

An output cam can be switched depending on the motion direction of the interconnected technology object. It is possible to output an output cam with positive or negative motion direction only or even independent of direction.

The effective direction is set in "MC_OutputCam.Direction".

The following examples show the behavior of the output cam as a function of the effective direction setting.

Example of "positive" effective direction ("Direction" = 1)

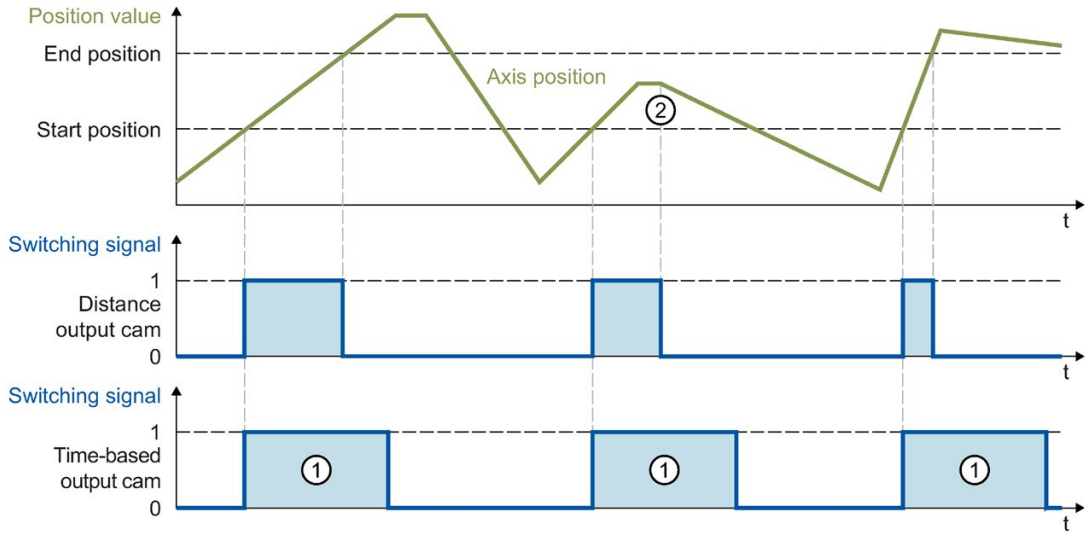

Distance output cam

The output cam switches on when the switch-on range is reached in the **positive** direction. At a direction reversal ②, the output cam switches off.

If the position value is moved into the switch-on range of the output cam, the cam switches on when there is positive motion direction of the interconnected technology object. The output cam remains switched off when the interconnected technology object is at a standstill.

Time-based output cam

The output cam switches on when the start position is reached in the **positive** direction. At a direction reversal, the output cam remains switched on for the specified on-load factor ①.

If during the homing motion, the position value of the interconnected technology object is directly on or behind the start position of the output cam, the output cam does not switch on.

Example of "negative" effective direction ("Direction" = 2)

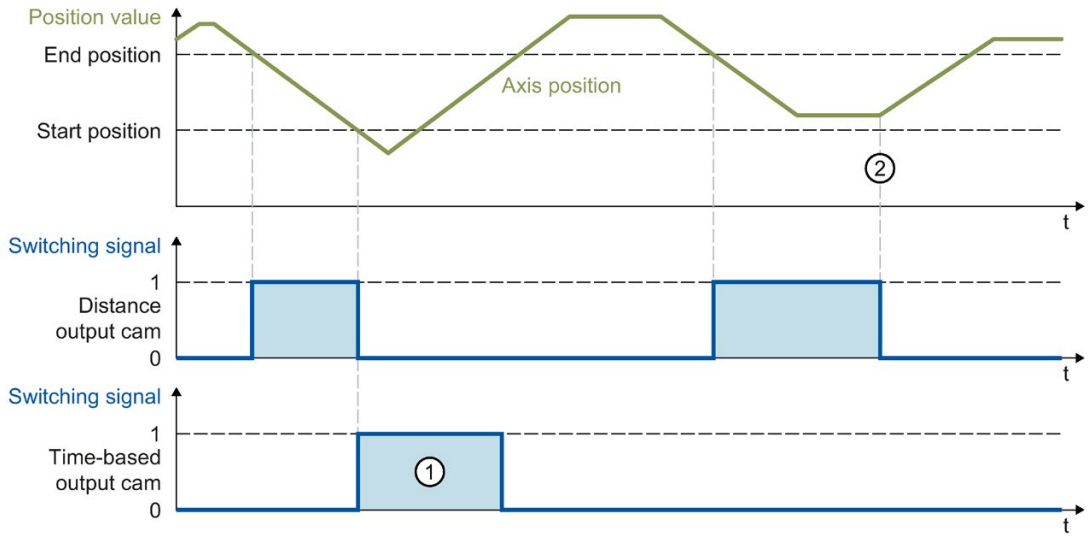

Distance output cam

The output cam switches on when the switch-on range is reached in the **negative** direction. At a direction reversal ②, the output cam switches off.

If the position value is moved into the switch-on range of the output cam, the output cam switches on when there is negative motion direction of the interconnected technology object. The output cam remains switched off when the interconnected technology object is at a standstill.

Time-based output cam

The output cam switches on when the start position is reached in the **negative** direction. At a direction reversal, the output cam remains switched on for the specified on-load factor ①.

If during the homing motion, the position value of the interconnected technology object is directly on or behind the start position of the output cam, the output cam does not switch on.

Example of "both directions" effective direction ("Direction" = 3)

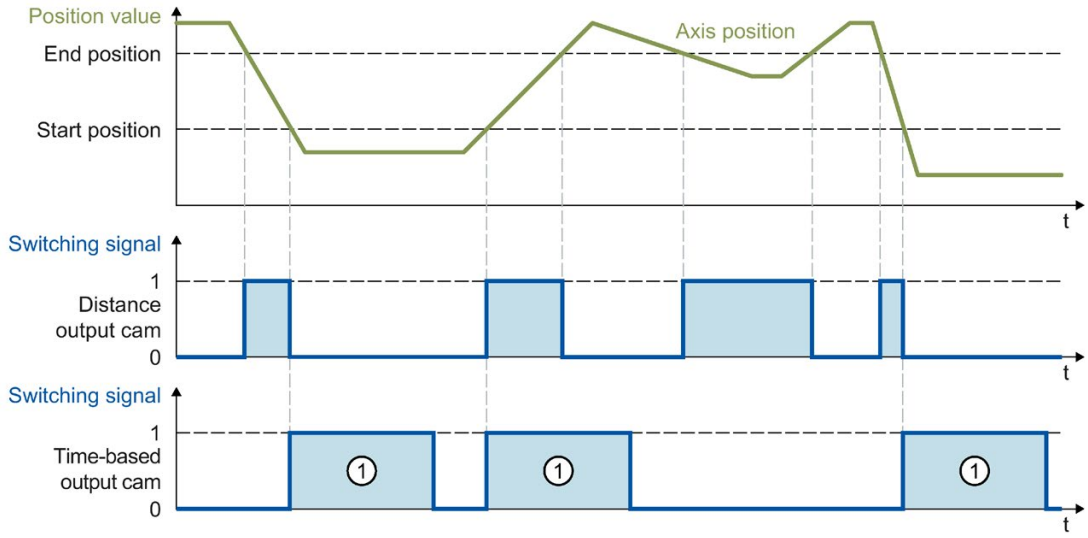

Distance output cam

The output cam switches on when the position of the interconnected technology object is within the switch-on range.

If the position value of the interconnected technology object is moved into the switch-on range of the output cam, the cam switches on even when the interconnected technology object is at a standstill.

Time-based output cam

The output cam switches on when the start position is reached. At a direction reversal, the output cam remains switched on for the specified on-load factor ①.

If during the homing motion, the position value of the interconnected technology object is directly on or behind the start position of the output cam, the output cam does not switch on.

3.8.5 Hysteresis

Possible variations in the actual position/position setpoint can result in unwanted switch-on and switch-off of cams.

Minimal changes of the actual value of an axis at standstill can result in switch-on or switch-off of an actual value output cam with specified positive or negative effective direction. Even minimal changes of the setpoints of a switched-off axis in follow-up mode can result in switch-on or switch-off of an actual value output cam with specified positive or negative effective direction. Such unwanted switching states can be prevented by configuring a hysteresis (> 0.0). The configuration of a hysteresis value (> 0.0) is recommended in particular with reference to the actual position.

The hysteresis is a position tolerance within which the position values may vary without changing the switching state of the output cam. Changes of direction detected within the hysteresis are ignored.

The hysteresis is set for the technology object in <TO>.Parameter.Hysteresis.

Behavior

- The hysteresis is activated at a direction reversal.
- The following applies within the hysteresis:
  - The switching state of distance output cams is not changed.
  - The motion direction is not determined again.
  - If the start position of a time-based output cam is within the hysteresis, the time-based output cam is switched on when leaving the hysteresis with the corresponding effective direction.
  - The on-load factor of time-based output cams remains unchanged.
- After the hysteresis range is exited, distance output cams are set according to the output cam settings.

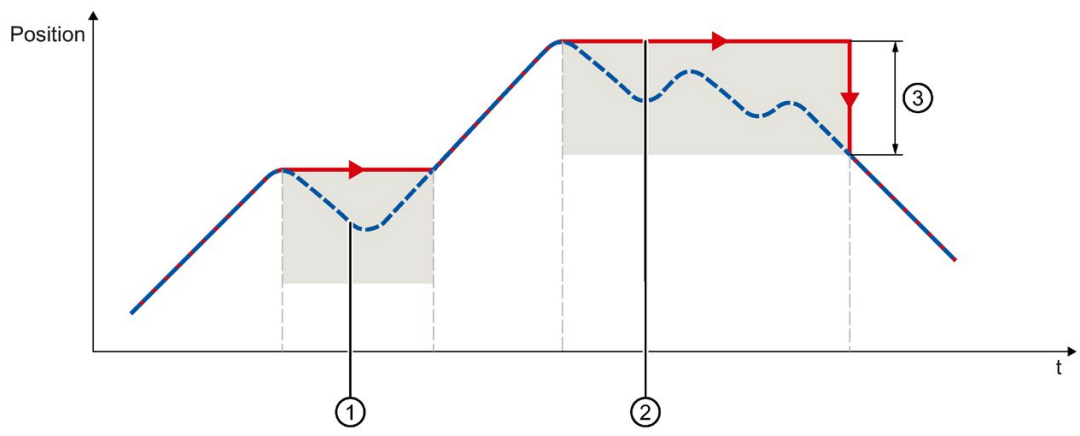

① Actual position
② Effective position
③ Hysteresis range

The following examples show the effects of the hysteresis on the switching behavior of output cams with positive activation direction.

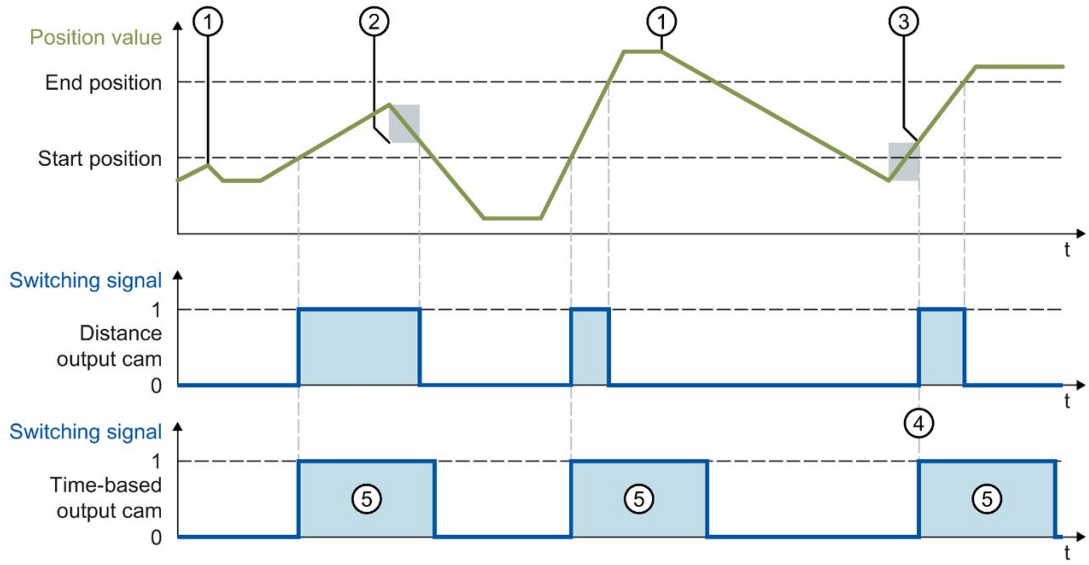

① Direction reversal without hysteresis effect
② Hysteresis in effect
③ The switch-on position of the distance output cam is influenced according to the direction reversal and hysteresis.
④ The start position of the time-based output cam is located within the hysteresis. The time-based output cam is switched on when leaving the hysteresis with the corresponding effective direction.
⑤ Switch-on duration

Hysteresis range

The maximum size of the hysteresis range in the system is as follows: for an axis with modulo function, one quarter of the modulo range; for an axis without modulo function, one quarter of the operating range.

3.8.6 Compensation of actuator switching times

Switching times of the output and the connected actuator (e.g. valve) can be compensated for using the activation time or deactivation time of the output cam technology object.

The activation time is specified as the lead time for the switch-on edge, and the deactivation time as the lead time for the switch-off edge.

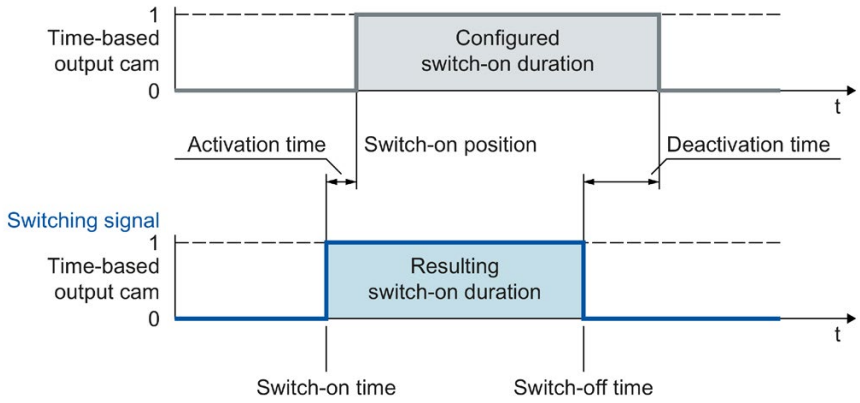

The activation time is set in the technology object <TO>.OnCompensation.

The deactivation time is set in the technology object <TO>.OffCompensation.

Note

- The following must be met for the times:

  On-load factor > deactivation time - activation time

  (The on-load factor for distance output cams is determined by the switching positions and the current velocity)
- If the output cam has been switched taking the lead times into consideration, this action has taken place from the system perspective and will not be restarted in response to any subsequent variation in the actual speed.
- System-dependent runtimes are automatically taken into consideration when output by TM Timer DIDQ is used.

  When the output with a digital output module is used, system-dependent runtimes are not taken into consideration and must be set as correction times in the activation time or deactivation time.

3.8.7 Tags

Status display	
<TO>.CamOutput	The output cam is switched.
Parameters	
<TO>.Parameter.OutputCamType	Output cam type 0: Distance output cam 1: Time-based output cam
<TO>.Parameter.PositionType	Position reference 0: Position setpoint 1: Actual position
<TO>.ParameterOnCompensation	Activation time (lead time for the switch-on edge)
<TO>.Parameter.OffCompensation	Deactivation time (lead time for the switch-off edge)
<TO>.Parameter.Hysteresis	Hysteresis value
Interface	
<TO>.Interface.EnableOutput	Activation of the output cam output FALSE: No output TRUE: Output
<TO>.Interface.Address	I/O address of the output cam
<TO>.Interface.LogicOperation	Logical operation of the output cam signals at the output 0: OR operation 1: AND operation
Units	
<TO>.Units.LengthUnit	Unit of the length data
<TO>.Units.TimeUnit	Unit of the time data
StatusWord	
<TO>.StatusWord.X0 (Control)	The technology object is in operation.
<TO>.StatusWord.X1 (Error)	An error occurred at the technology object.
<TO>.StatusWord.X2 (RestartActive)	The technology object is being reinitialized. The tags of the technology data block are not updated with active restart.
<TO>.StatusWord.X3 (OnlineStart-ValuesChanged)	Data relevant for the restart has been changed. The changes are applied only after a restart of the technology object.
<TO>.StatusWord.X4 (OutputInverted)	The output cam output is inverted.
<TO>.StatusWord.X5 (CommunicationOk)	The cam is synchronized with the output module and available for use.
ErrorWord	
<TO>.ErrorWord.X0 (SystemFault)	A system-internal error has occurred.
<TO>.ErrorWord.X1 (ConfigFault)	Configuration error One or more configuration parameters are inconsistent or invalid. The technology object was incorrectly configured, or editable configuration data were incorrectly modified during runtime of the user program.
<TO>.ErrorWord.X2 (UserFault)	Error in user program at a Motion Control instruction or its use.
<TO>.ErrorWord.X3 (CommandNotAccepted)	Command cannot be executed. A Motion Control instruction cannot be executed because necessary requirements have not been met.
<TO>.ErrorWord.X13 (PeripheralError)	Error accessing a logical address.

ErrorDetail	
<TO>.ErrorDetail.Number	Alarm number You can find a list of the technology alarms and alarm reactions in the Technology Alarms (Page 513) appendix.
<TO>.ErrorDetail.Reaction	Effective alarm reaction 0: No reaction 6: Output cam processing is complete. You can find a list of the technology alarms and alarm reactions in the Technology Alarms (Page 513) appendix.

3.9 Cam track technology object

3.9.1 Brief description

The cam track technology object generates a switching signal sequence dependent on the position of an axis or external encoder. A cam track can consist of up to 32 individual output cams and be output to one output. The switching states can be evaluated in the user program or fed to digital outputs.

You can find an overview of the functions of the cam track technology object in the Functions (Page 27) section.

The figure below shows the basic principle of operation of the cam track technology object:

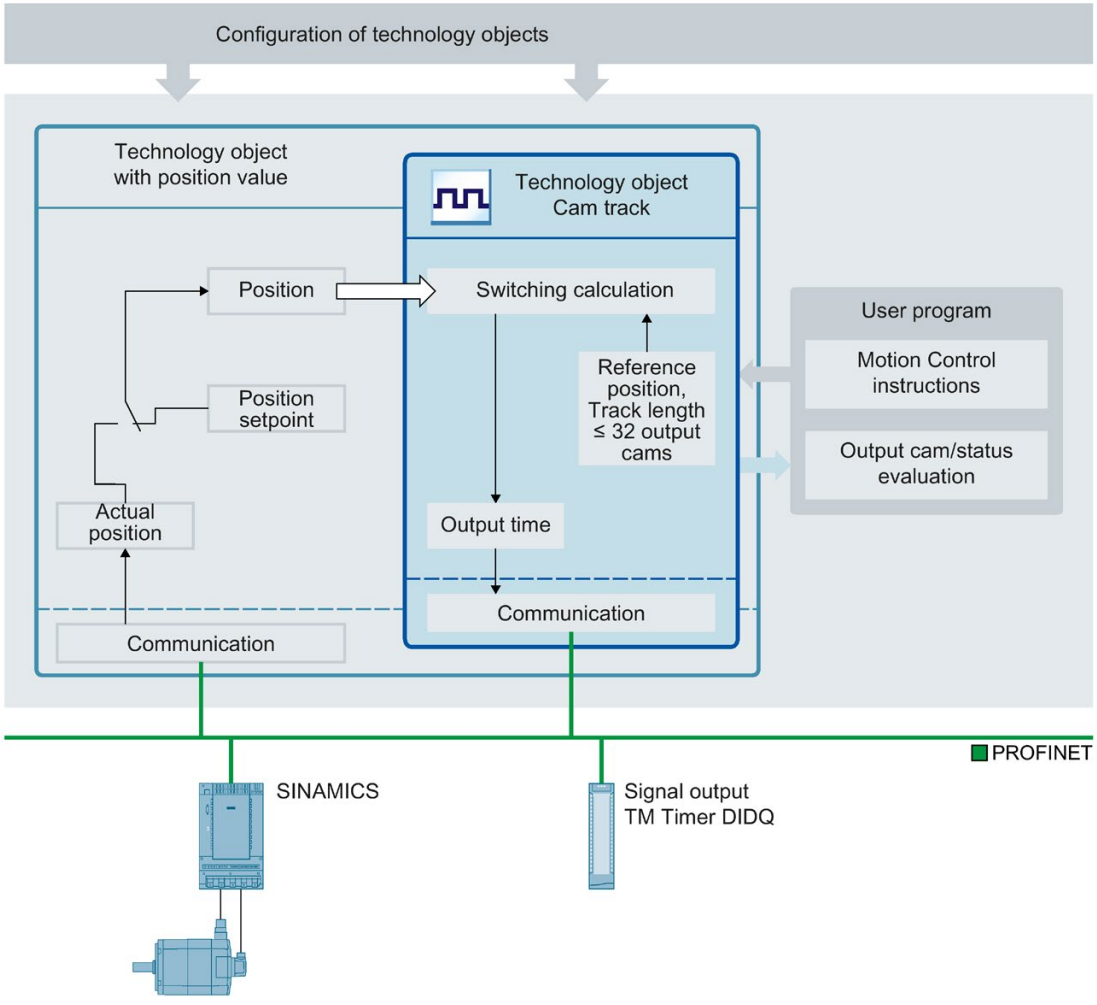

Definition of cam track

A cam track consists of up to 32 individual output cams that are specified within an adjustable track length.

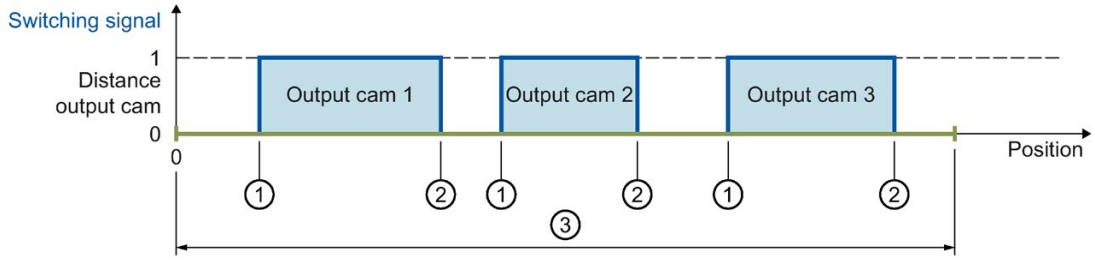

① Start position
② End position
③ Cam track length

Figure 3-2 Cam track with distance output cam

The output cam positions are defined relative to the cam track. The start of the cam track is always 0.0. The output cam positions on the cam track are thus always positive.

When the cam track is processed, the output cams with start position within the track length are taken into consideration.

If the end of a cam track is crossed, connected output cams behave as follows within the cam track:

- Time-based output cams remain switched on for the set on-load factor.
- Distance output cams whose end position lie outside the cam track are switched off when the cam track is left.

Cams whose start and end positions lie outside the cam track length are ignored. They become active only if the cam track length is increased so that at least the respective start position of an output cam is within the new track length.

Mapping of the cam track to the position of an axis or external encoder.

The start of the cam track is placed at the specified reference position of the interconnected technology object. Thus, the switching positions result from the cam track positions mapped onto the interconnected technology object starting from the reference position. The cam track is continued in both directions of the interconnected technology object.

The setting for the reference position can be either positive or negative.

Example

- Axis range = -1000 mm to +1000 mm
- Desired switching points of the output cam with reference to axis position:
  - Start position = -200 mm
  - End position = -100 mm
- Cam track length = 2000 mm
- Definition of output cam on the track:
  - Start position = 800 mm
  - End position = 900 mm

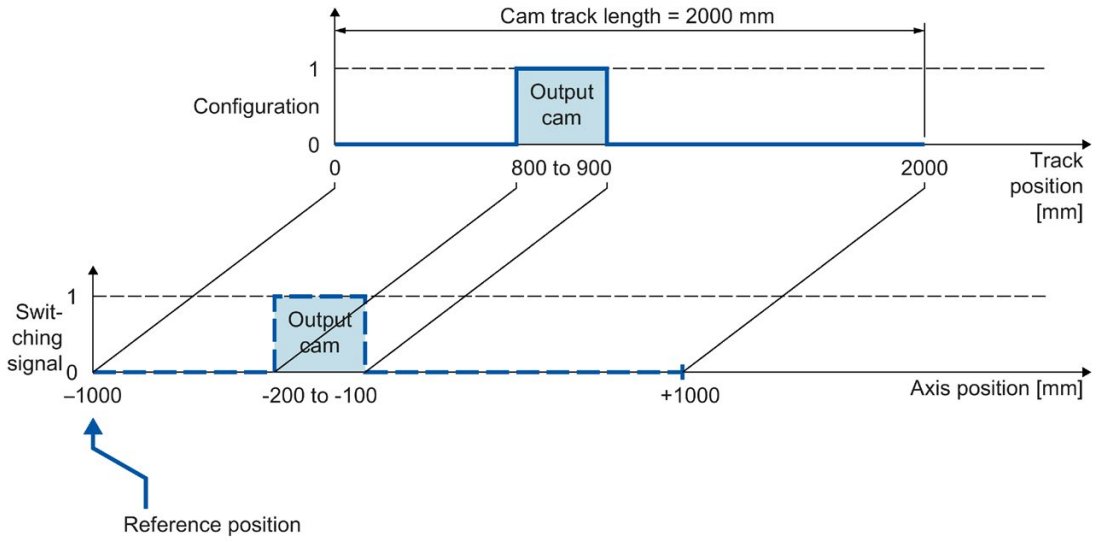

Figure 3-3 Cam track with output cam output at negative axis position

Processing of a cam track

The processing of a cam track occurs cyclically.

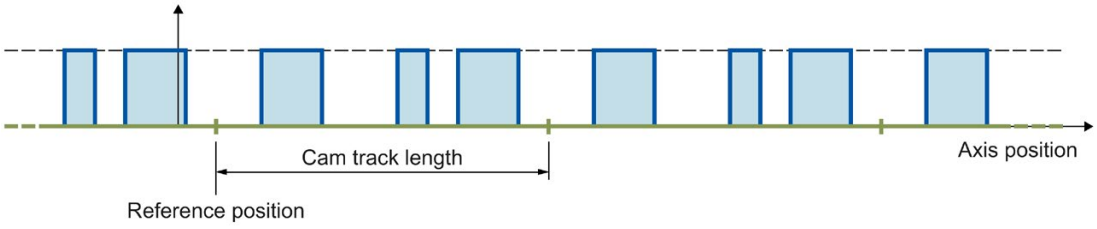

Figure 3-4 Cyclic mapping of a cam track

The cam track is mapped onto the position of the interconnected technology object starting from the reference position and is continued cyclically in both directions.

Track length and mapping to an axis with modulo function

When a cam track is mapped onto an axis with modulo function, a reference position specified outside the modulo range is mapped within the modulo range.

The track length can be less than or greater than the modulo length of the axis. In order for the cam track to be mapped without offset in the modulo range and to prevent unwanted overrides, an integer ratio of modulo length to track length, and vice versa, is required.

Example Mapping without offset

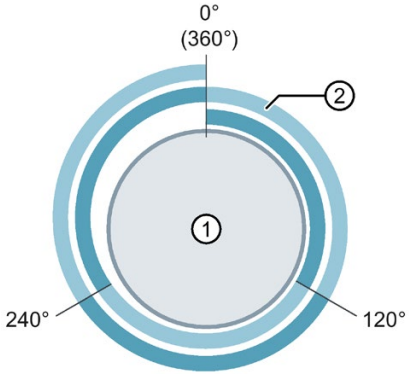

① Axis with modulo length 360°

② Cam track with track length 120°

⇒ Ratio = 360° / 120° = **3**

The cam track is output 3 times on a modulo length.

Example Mapping with offset

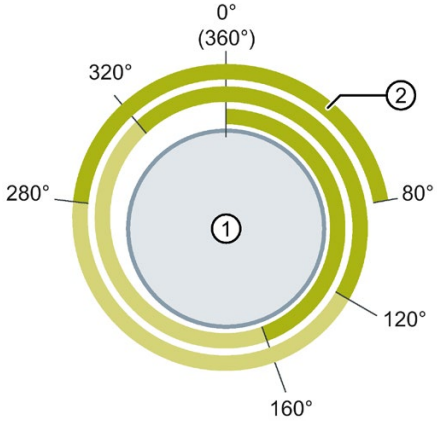

① Axis with modulo length 360°

② Cam track with track length 160°

⇒ Ratio = 360° / 160° = **2.25**

The cam track is output 2.25 times on the first modulo length and continued correspondingly in the other modulo lengths.

During cyclic processing of the cam track, the continued reference position of the current cam track is displayed in the <TO>.MatchPosition tag. The continued reference position is independent of direction and always the position of the left boundary of the cam track. The unique detection and output of the position is only possible when the assigned technology object is in motion. The distance to the current reference position of the current cam track (<TO>.MatchPosition) is displayed in the <TO>.TrackPosition tag.

Output cam types

The following output cam types are used:

- Distance output cam
- Time-based output cam

The output cams of the cam track can be set as distance output cams or time-based output cams, whereby only one of the two output cam types can be used in one cam track.

Assignment

The cam track technology object must always be assigned to another technology object whose position is evaluated.

The cam track technology object can be assigned to the following technology objects:

- Synchronous axis
- Positioning axis
- External encoder

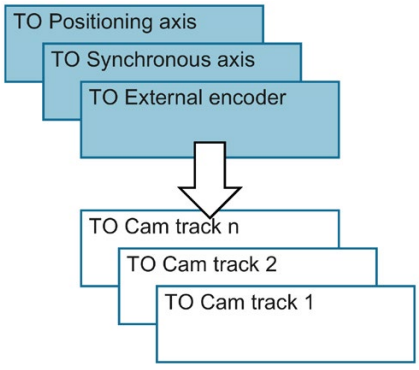

Exactly one axis or one external encoder can be assigned to a cam track.

Multiple cam tracks can be assigned to one axis or external encoder.

Position reference

The switching points of the output cams of a cam track can be referenced to the following positions, depending on the interconnected technology object.

- Actual position of a synchronous axis/positioning axis
- Position setpoint of a synchronous axis/positioning axis
- Position of an external encoder

Homing the interconnected technology object

A change to the position of an axis or external encoder using Motion Control instruction "MC_Home" is regarded as a sudden position change. An enabled cam track is referenced to the changed position and processed further from there.

- For axes with modulo function, homing also has an effect on the current position of the cam track (<TO>.TrackPosition). The position is formed again as quickly as possible due to the offset.
- Distance output cams are either skipped or correspondingly output.
- Time-based output cams are skipped. A time-based output cam is switched on only when the start position is crossed and remains switched on for the on-load factor.
- Switched time-based output cams are not canceled by a homing operation.

We recommend locking the cam track before or during homing.

Output of a cam track

The following output options are available for the digital cam track output:

- TM Timer DIDQ

  Digital output with high degree of accuracy and reproducibility in the microsecond range on ET 200MP TM Timer DIDQ 16x24V and ET 200SP TM Timer DIDQ 10x24V time-based IO modules

  Output by TM Timer DIDQ requires isochronous mode. Isochronous mode is only possible with PROFINET interface modules.

- Digital output module

  Digital output with switching accuracy depending on the output cycle of the I/O used

A maximum of two edges (by TM Timer DIDQ, positive and negative) or one edge (via digital output module, positive or negative) can be output per position control cycle clock. If multiple switch-on edges or switch-off edges are transmitted in one position control cycle clock, the last written values in each case are valid.

Masking of individual output cams of a cam track

In order for output cams to processed, they must be configured as valid in the technology data block with "<TO>.Parameter.Cam[1 … 32].Existent" = TRUE. In addition, output cams of a cam track configured as valid can be masked in the user program using bit masking ("<TO>.Parameter.CamMasking"). In the default setting, all valid output cams are enabled ("<TO>.Parameter.CamMasking" = 0xFFFFFFFF). The cam track itself is activated/deactivated using the Motion Control instruction "MC_CamTrack".

3.9.2 Effective direction

The cam track is always active for both directions of the position of the interconnected technology object.

Output of a cam track with distance output cam

Distance output cams are switched when the switch-on range is overtraveled.

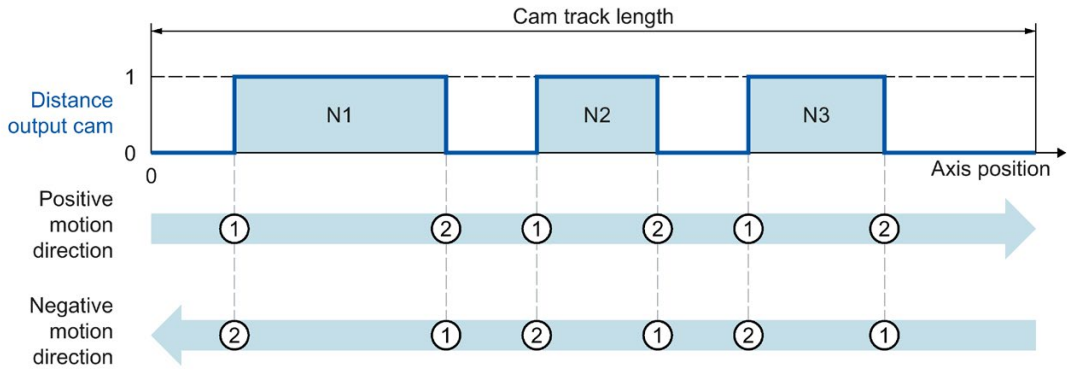

Figure 3-5 Executing a cam track with distance output cams dependent on the motion direction of the axis

- With positive motion direction, the output cams of the cam track are output in the order Output Cam N1, Output Cam N2, Output Cam N3
- In the case of negative motion direction, the output cams of the cam track are output in the order Output Cam N3, Output Cam N2, Output Cam N1
- The distance output cams switch on at ① and switch off at ②

Output of a cam track with time-based output cam

The time-based output cams are switched when the start position is crossed.

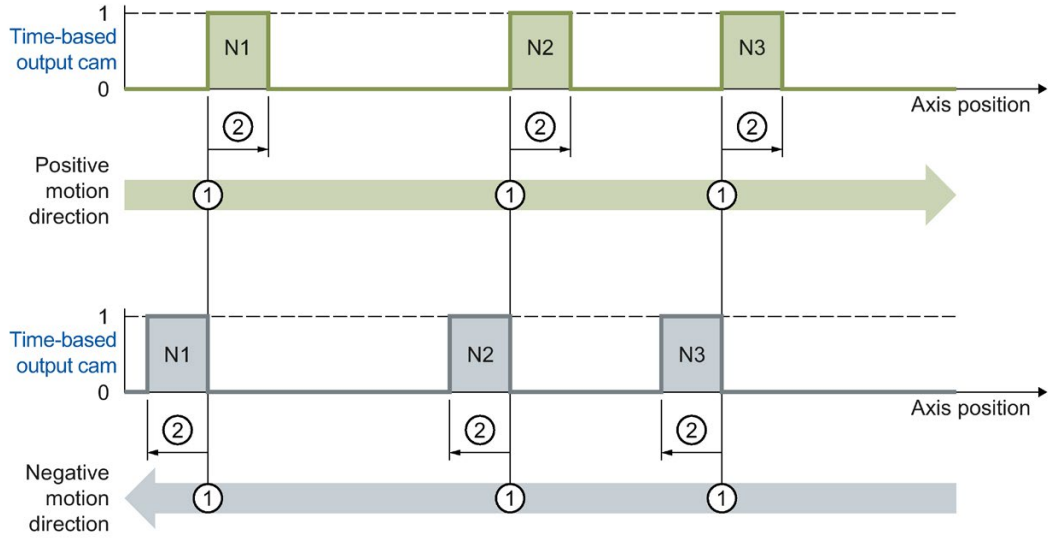

Figure 3-6 Executing a cam track with time-based output cams dependent on the motion direction of the axis

- With positive motion direction, the output cams of the cam track are output in the order Output Cam N1, Output Cam N2, Output Cam N3
- In the case of negative motion direction, the output cams of the cam track are output in the order Output Cam N3, Output Cam N2, Output Cam N1
- The time-based output cams switch on at ① and remain switched on for the set switch-on duration ②

3.9.3 Changing the cam track data during operation

The data of a cam track and the parameters of the associated Motion Control instruction "MC_CamTrack" can be changed while track processing is enabled. The active Motion Control instruction "MC_CamTrack" is not aborted. The modified parameters, however, only take effect at the next call of Motion Control instruction "MC_CamTrack".

The following parameters can be changed during operation and are in effect after another call of Motion Control instruction "MC_CamTrack".

- Cam track data in technology data block
  - Reference position (<TO>.Parameter.ReferencePosition)
  - Track length (<TO>.Parameter.CamTrackLength)
  - Bit masking of individual output cams (<TO>.Parameter.CamMasking)
  - Activation time (<TO>.Parameter.OnCompensation)
  - Deactivation time (<TO>.Parameter.OffCompensation)
  - Hysteresis value (<TO>.Parameter.Hysteresis)
  - Output cam data (<TO>.Parameter.Cam[1 … 32])
- Parameters in the function block
  - Enable (MC_CamTrack.Enable)
  - Mode (MC_CamTrack.Mode)
  - Inverted output (MC_CamTrack.InvertOutput)

Note the different activation behavior (Page 150) when changing the cam track data.

3.9.4 Activation behavior

A cam track is activated by the call of Motion Control instruction "MC_CamTrack" with "Enable" = TRUE. A distinction must be made here between:

- A first-time activation of the cam track
- The call after a change of the cam track data during active cam track processing

The difference relates to how the cam track data is applied. Depending on the set mode ("MC_CamTrack.Mode"), the configuration (cam track data, data in the function block) is applied at different times.

- First-time switch-on of a cam track

  The call of Motion Control instruction "MC_CamTrack" with "Enable" = TRUE activates the cam track immediately (<TO>.Status changes to 1) and configured cam track data takes effect immediately. This behavior is the same when "MC_CamTrack.Mode" = 0 and "MC_CamTrack.Mode" = 1.

- Change of cam track data of an already activated cam track(<TO>.Status = 1)
  - With the call of Motion Control instruction "MC_CamTrack" with "Enable" = TRUE and "Mode" = 0, the modified cam track data takes effect immediately.

    Previously activated distance output cams are aborted if their track signals are not still set due to the changed cam track data. Previously activated time-based output cams are always aborted.
  - With the call of Motion Control instruction "MC_CamTrack" with "Enable" = TRUE and "Mode" = 1, the cam track continues to be output with the prior configuration up to the cam track end. Modified cam track data takes effect at the end of the current track cycle.

    If you change a cam track with "MC_CamTrack.Mode" = 1 during runtime of the user program, keep in mind the lead time of the cam track as reserve for the first output cam. Define the first output cam position in the cam track only after the following position:

    Position of first output cam > velocity of axis x lead time of the cam track (<TO>.Parameter.OnCompensation)

    Also keep in mind the internal system time for output cam calculation, even if you set the lead time 0.0.

Changing cam track data when modulo length is not a multiple of the track length

For the switching times to be set correctly, we recommend the following procedure for changes:

- Enter changes as soon as possible after start of a new cam track
- Enter a new reference position (<TO>.Parameter.ReferencePosition) for the changed cam track. The new reference position is composed as follows depending on the direction:
  - Positive effective direction: Current reference position (<TO>.MatchPosition) + cam track length (<TO>.Parameter.CamTrackLength)
  - Negative effective direction: Current reference position (<TO>.MatchPosition) - cam track length (<TO>.Parameter.CamTrackLength)
- Output the changes of the cam track when calling the Motion Control instruction "MC_CamTrack" and "Mode" = 1.

Example

The following figure shows an example of the differences in the activation behavior.

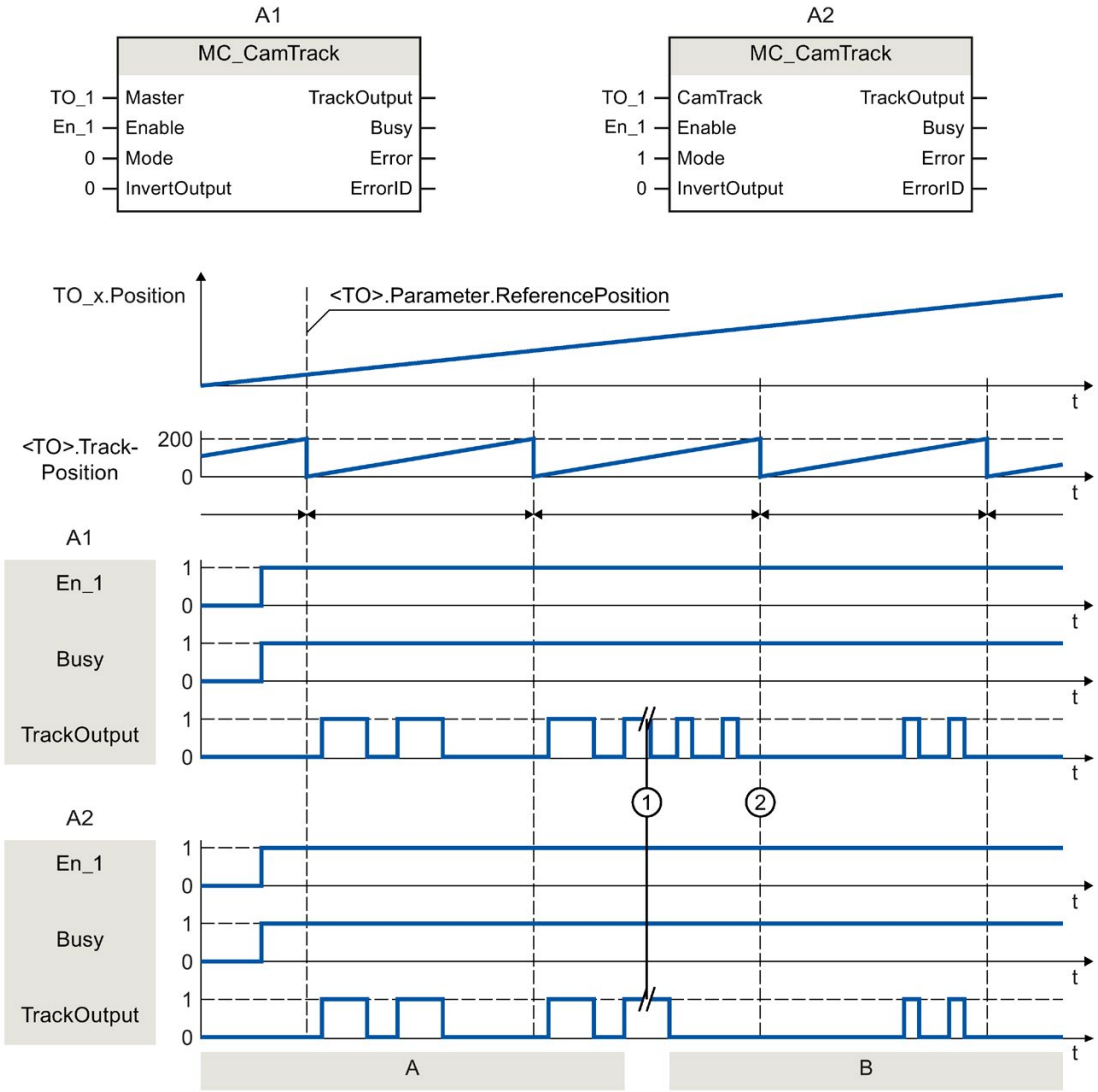

A1	A	The cam track is activated the first time with "MC_CamTrack.Enable" = TRUE and the output cams are output immediately with set "MC_CamTrack.Mode" = 0.
	B	After cam track data were changed (①), the cam track is activated by calling Motion Control instruction "MC_CamTrack" with "Enable" = TRUE and the modified data takes effect immediately (①) with set "MC_CamTrack.Mode" = 0.
A2	A	The cam track is activated the first time with "MC_CamTrack.Enable" = TRUE and the output cams are output immediately with set "MC_CamTrack.Mode" = 1.
	B	After cam track data were changed (①), the cam track is activated by calling Motion Control instruction "MC_CamTrack" with "Enable" = TRUE and the modified data takes effect at the end of the current track cycle (②) with set "MC_CamTrack.Mode" = 1.

3.9.5 Hysteresis

The hysteresis is set in the cam track technology object. The behavior and effect of the hysteresis setting corresponds to the hysteresis (Page 136) for the cam technology object.

3.9.6 Time offset of cam switching points

Switching times of the output and the connected actuator (e.g. valve) can be compensated for using the activation time or deactivation time of the cam track technology object.

The time offset of cam switching points corresponds to the activation time or deactivation time (Page 138) for the cam technology object.

3.9.7 Tags

Status display	
<TO>.Status	0: Inactive 1: Active 2: Active and waiting for next track
<TO>.TrackOutput	A cam of cam track is switched.
<TO>.SingleCamState	Switched on output cam (bit-masked)
<TO>.TrackPosition	Display of the current position within the cam track The distance to the current reference position of the current cam track (<TO>.MatchPosition) is displayed.
<TO>.MatchPosition	Reference position of the current cam track During cyclic processing of the cam track, the continued reference position of the current cam track is displayed. The unique detection and output of the position is only possible when the assigned technology object is in motion.
Parameters	
<TO>.Parameter.CamTrackType	Output cam type 0: Distance output cam 1: Time-based output cam
<TO>.Parameter.PositionType	Position reference 0: Position setpoint 1: Actual position
<TO>.Parameter.ReferencePosition	Reference position
<TO>.Parameter.CamTrackLength	Track length
<TO>.Parameter.CamMasking	Bit masking of individual output cams
<TO>.Parameter.OnCompensation	Activation time (lead time for the switch-on edge)
<TO>.Parameter.OffCompensation	Deactivation time (lead time for the switch-off edge)
<TO>.Parameter.Hysteresis	Hysteresis value
<TO>.Parameter.Cam[1 … 32].OnPosition	Start position (distance and time-based output cams)
<TO>.Parameter.Cam[1 … 32].OffPosition	End position (distance output cam)
<TO>.Parameter.Cam[1 … 32].Duration	Switch-on duration (time-based output cam)

<TO>.Parameter.Cam[1 … 32].Existent	Validity of an output cam FALSE: Output cam not used TRUE: Output cam is used
Interface	
<TO>.Interface.EnableOutput	Output cam output at the bit specified under "Address" FALSE: No output TRUE: Output
<TO>.Interface.Address	I/O address for digital cam output
Units	
<TO>.Units.LengthUnit	Unit of the length data
<TO>.Units.TimeUnit	Unit of the time data
StatusWord	
<TO>.StatusWord.X0 (Control)	The technology object is in operation.
<TO>.StatusWord.X1 (Error)	An error occurred at the technology object.
<TO>.StatusWord.X2 (RestartActive)	The technology object is being reinitialized. The tags of the technology data block are not updated with active restart.
<TO>.StatusWord.X3 (OnlineStart-ValuesChanged)	Data relevant for the restart has been changed. The changes are applied only after a restart of the technology object.
<TO>.StatusWord.X4 (OutputInverted)	The output cam output is inverted.
<TO>.StatusWord.X5 (CommunicationOk)	The cam track is synchronized with the output module and available for use.
<TO>.StatusWord.X6 (CamDataChanged)	The data of individual output cams has been changed but not yet taken effect with Motion Control instruction "MC_CamTrack".
ErrorWord	
<TO>.ErrorWord.X0 (SystemFault)	A system-internal error has occurred.
<TO>.ErrorWord.X1 (ConfigFault)	Configuration error One or more configuration parameters are inconsistent or invalid. The technology object was incorrectly configured, or editable configuration data were incorrectly modified during runtime of the user program.
<TO>.ErrorWord.X2 (UserFault)	Error in user program at a Motion Control instruction or its use.
<TO>.ErrorWord.X3 (CommandNot Accepted)	Command cannot be executed. A Motion Control instruction cannot be executed because necessary requirements have not been met.
<TO>.ErrorWord.X13 (PeripheralError)	Error accessing a logical address.
ErrorDetail	
<TO>.ErrorDetail.Number	Alarm number
<TO>.ErrorDetail.Reaction	Effective alarm reaction 0: No reaction 5: Cam track processing Is complete.

Using versions 4

4.1 Overview of versions

For S7-1500 Motion Control, a distinction is made between the version of the technology, the technology objects and the Motion Control instructions. The overview shown below includes S7-1500 and S7-1500T. Only one technology version can be operated on a CPU.

When changing to a CPU ≥ V1.6, you must change the technology version accordingly. Card replacement from a CPU < V1.6 to a ≥ CPU V1.6 is supported. In the TIA Portal, you can use a CPU ≥ 1.6 only to work on projects with a correspondingly higher technology version.

There are two ways of changing the technology version:

- Changing the version of the Motion Control instructions

  You change the version of the Motion Control instructions in the "Instructions" task card in the folder "Technology > Motion Control > S7-1500 Motion Control".

  If the Motion Control instruction version used does not correspond to the compatibility list, the relevant Motion Control instructions are highlighted in red in the program editor.

- Adding a technology object with an alternative version

  If a technology object with an alternative version is added in the "Add new object" dialog, the technology version is changed to the alternative version.

The technology objects and Motion Control instructions are only converted to the selected version of the technology during compilation.

The version of a technology object or a Motion Control instruction is indicated in the properties of the technology object, "General > Information" tab, "Version" field.

Compatibility list

The table below shows the compatibility of the technology version with the CPU version:

CPU	Technology	Technology object
V2.5	V4.0	Speed Axis V4.0 Positioning Axis V4.0 External Encoder V4.0 Synchronous Axis V4.0 Measuring input V4.0 Cam V4.0 Cam track V4.0 Cam V4.0 (S7-1500T) Kinematics V4.0 (S7-1500T)
V2.0, V2.1	V3.0	Speed Axis V3.0 Positioning axis V3.0 External encoder V3.0 Synchronous axis V3.0 Measuring input V3.0 Output cam V3.0 Cam track V3.0 Cam V3.0 (S7-1500T)
V1.6, V1.7, V1.8	V2.0	Speed Axis V2.0 Positioning axis V2.0 External encoder V2.0 Synchronous axis V2.0
V1.0, V1.1, V1.5[1]	V1.0	Speed Axis V1.0 Positioning axis V1.0 External encoder V1.0

1) Card replacement from a CPU < V1.6 to a CPU ≥ V1.6 is supported.

Parameter "Mode" of the Motion Control instruction "MC_Home"

The "MC_Home.Mode" parameter for S7-1200 Motion Control and S7-1500 Motion Control has been standardized within the framework of technology version V2.0. This results in a new assignment of the parameter values for the "MC_Home.Mode" parameter.

The table below shows a comparison of the "MC_Home.Mode" parameter for technology V1.0 and ≥ V2.0:

MC_Home.HomingMode V1.0	Parameter value	MC_Home.Mode ≥ V2.0
Direct homing (absolute)	0	Direct homing (absolute)
Direct homing (relative)	1	Direct homing (relative)
Passive homing	2	Passive homing (without reset)
Passive homing (with configured home position)	3	Active homing
Active homing	4	Reserved
Active homing (with configured home position)	5	Active homing (with configured home position)
Absolute encoder adjustment (relative)	6	Absolute encoder adjustment (relative)
Absolute encoder adjustment (absolute)	7	Absolute encoder adjustment (absolute)
Passive homing (without reset)	8	Passive homing
Abort passive homing	9	Abort passive homing
-	10	Passive homing (with configured home position)

You can find additional information about the "MC_Home.Mode" parameter in the description of the Motion Control instruction "MC_Home" (Page 369).

Tags of the technology object

Starting from technology version V3.0, all input and output addresses are specified using data type VREF. This results in the following changes to the tags of the technical object:

Tag of technology object	Changes starting from V3.0
<TO>.Actor.Interface.AddressIn	Data type: VREF
<TO>.Actor.Interface.AddressOut	Data type: VREF
<TO>.Sensor[n].Interface.AddressIn	Data type: VREF
<TO>.Sensor[n].Interface.AddressOut	Data type: VREF
<TO>.Actor.Interface.EnableDriveOutputAddress	Data type: VREF
<TO>.Actor.Interface.EnableDriveOutputBitNumber	Tag eliminated
<TO>.Actor.Interface.DriveReadyInputAddress	Data type: VREF
<TO>.Actor.Interface.DriveReadyInputBitNumber	Tag eliminated
<TO>.Sensor[n].ActiveHoming.DigitalInputAddress	Data type: VREF
<TO>.Sensor[n].ActiveHoming.DigitalInputBitNumber	Tag eliminated
<TO>.Sensor[n].PassiveHoming.DigitalInputAddress	Data type: VREF
<TO>.Sensor[n].PassiveHoming.DigitalInputBitNumber	Tag eliminated
<TO>.PositionLimits_HW.MinInputAddress	Data type: VREF
<TO>.PositionLimits_HW.MinInputBitNumber	Tag eliminated
<TO>.PositionLimits_HW.MaxInputAddress	Data type: VREF
<TO>.PositionLimits_HW.MaxInputBitNumber	Tag eliminated

4.2 Version V4.0

Innovations

Technology Version V4.0 contains the following new features:

- Exchange of torque data with the drive in the technological units of the technology object.
  - Additive setpoint torque
  - Current actual torque
  - Permissible torque range
- Extension of the data structure of the positioning axis and synchronous axis for using technology object kinematics
- Use of optimized data blocks (drive/encoder connection)

Additional innovations for S7-1500T:

Technology Version V4.0 contains the following additional features:

- Kinematic technology object (S7-1500T)
- Motion specification via MotionIn instructions (S7-1500T)
- Direct synchronous setting with MC_CamIn V4.0 (S7-1500T)

Motion Control instructions

Technology Version V4.0 contains the following Motion Control instructions:

- MC_Power V4.0
- MC_Reset V4.0
- MC_Home V4.0
- MC_Halt V4.0
- MC_MoveAbsolute V4.0
- MC_MoveRelative V4.0
- MC_MoveVelocity V4.0
- MC_MoveJog V4.0
- MC_MoveSuperimposed V4.0
- MC_SetSensor V4.0 (S7-1500T)
- MC_TorqueLimit V4.0
- MC_MeasuringInput V4.0
- MC_MeasuringInputCyclic V4.0
- MC_AbortMeasuringInput V4.0
- MC_OutputCam V4.0

- MC_CamTrack V4.0
- MC_GearIn V4.0
- MC_GearInPos V4.0 (S7-1500T)
- MC_PhasingAbsolute V4.0 (S7-1500T)
- MC_PhasingRelative V4.0 (S7-1500T)
- MC_CamIn V4.0 (S7-1500T)
- MC_SynchronizedMotionSimulation V4.0 (S7-1500T)
- MC_InterpolateCam V4.0 (S7-1500T)
- MC_GetCamFollowingValue V4.0 (S7-1500T)
- MC_GetCamLeadingValue V4.0 (S7-1500T)
- MC_MotionInVelocity V4.0 (S7-1500T)
- MC_MotionInPosition V4.0 (S7-1500T)
- MC_TorqueAdditive V4.0
- MC_TorqueRange V4.0
- MC_GroupInterrupt V4.0 (S7-1500T)
- MC_GroupContinue V4.0 (S7-1500T)
- MC_GroupStop V4.0 (S7-1500T)
- MC_MoveLinearAbsolute V4.0 (S7-1500T)
- MC_MoveLinearRelative V4.0 (S7-1500T)
- MC_MoveCircularAbsolute V4.0 (S7-1500T)
- MC_MoveCircularRelative V4.0 (S7-1500T)
- MC_DefineWorkspaceZone V4.0 (S7-1500T)
- MC_DefineKinematicsZone V4.0 (S7-1500T)
- MC_SetWorkspaceZoneActive V4.0 (S7-1500T)
- MC_SetWorkspaceZoneInactive V4.0 (S7-1500T)
- MC_SetKinematicsZoneActive V4.0 (S7-1500T)
- MC_SetKinematicsZoneInactive V4.0 (S7-1500T)
- MC_DefineTool V4.0 (S7-1500T)
- MC_SetTool V4.0 (S7-1500T)
- MC_SetOcsFrame V4.0 (S7-1500T)

Version-based UDT names

The following table shows the version-based UDT names for the control words and status words of the SIEMENS telegrams 10x:

UDT name <V4.0	UDT name ≥V4.0	WORD data type
PD_STW1	PD_STW1_611Umode	Control word 1 (STW1)
PD_STW2	PD_STW2_611Umode	Control word 2 (STW2)
PD_ZSW1	PD_ZSW1_611Umode	Status word 1 (ZSW1)
PD_ZSW2	PD_ZSW2_611Umode	Status word 2 (ZSW2)

If you switch from a technology version <V4.0 to ≥V4.0 or vice versa, an error occurs during the compilation. You have to adapt the UDT names manually.

4.3 Version V3.0

Innovations

Technology Version V3.0 contains the following new features:

- Technology object measuring input
- Technology object output cam
- Cam track technology object
- Force/torque limiting
- Fixed stop detection
- Axis type virtual axis
- MC-PreServo [OB67] and MC-PostServo [OB95]
- Technology CPU S7-1500T

Additional innovations for S7-1500T:

Technology Version V3.0 contains the following additional improvements:

- Cam technology object (S7-1500T)
- Gearing with MC_GearInPos (S7-1500T)
- Camming with MC_CamIn (S7-1500T)
- Using multiple encoders (S7-1500T)

Motion Control instructions

Technology Version V3.0 contains the following Motion Control instructions:

- MC_Power V3.0
- MC_Reset V3.0
- MC_Home V3.0
- MC_Stop V3.0
- MC_MoveAbsolute V3.0
- MC_MoveRelative V3.0
- MC_MoveVelocity V3.0
- MC_MoveJog V3.0
- MC_MoveSuperimposed V3.0
- MC_SetSensor V3.0 (S7-1500T)
- MC_TorqueLimit V3.0
- MC_MeasuringInput V3.0
- MC_MeasuringInputCyclic V3.0
- MC_AbortMeasuringInput V3.0
- MC_OutputCam V3.0
- MC_CamTrack V3.0
- MC_GearIn V3.0
- MC_GearInPos V3.0 (S7-1500T)
- MC_PhasingAbsolute V3.0 (S7-1500T)
- MC_PhasingRelative V3.0 (S7-1500T)
- MC_CamIn V3.0 (S7-1500T)
- MC_SynchronizedMotionSimulation V3.0 (S7-1500T)
- MC_InterpolateCam V3.0 (S7-1500T)
- MC_GetCamFollowingValue V3.0 (S7-1500T)
- MC_GetCamLeadingValue V3.0 (S7-1500T)

4.4 Version V2.0

Innovations

Technology Version V2.0 contains the following new features:

- Synchronous axis technology object
- Gearing with MC_GearIn
- Superimposed positioning with MC_MoveSuperimposed
- Standardization of the "MC_Home.Mode" parameter for S7-1200 Motion Control and S7-1500 Motion Control
- Simulation mode
- Support of safety functions of the drive

Motion Control instructions

Technology Version V2.0 contains the following Motion Control instructions:

- MC_Power V2.0
- MC_Reset V2.0
- MC_Home V2.0
- MC_Halt V2.0
- MC_MoveAbsolute V2.0
- MC_MoveRelative V2.0
- MC_MoveVelocity V2.0
- MC_MoveJog V2.0
- MC_MoveSuperimposed V2.0
- MC_GearIn V2.0

4.5 Version V1.0

Motion Control instructions

Technology Version V1.0 contains the following Motion Control instructions:

- MC_Power V1.0
- MC_Reset V1.0
- MC_Home V1.0
- MC_Halt V1.0
- MC_MoveAbsolute V1.0
- MC_MoveRelative V1.0
- MC_MoveVelocity V1.0
- MC_MoveJog V1.0

4.6 Changing a technology version

Before you can access all the benefits of a new technology version, you need to change the technology version for existing projects.

Changing a technology version

To change the technology version, follow these steps:

1. Replace the CPU in the project with a CPU with an appropriate higher version.
2. Open the program editor (e.g. by opening the OB1).

   The technology objects and Motion Control instructions are highlighted in red after the CPU is replaced.
3. In the "Instructions" task card, select the appropriate higher technology version in the "Technology > Motion Control" folder.
4. Save and compile the project.

   The version of the technology objects and Motion Control instructions is changed to the appropriate higher technology version during compilation of the project.

   Pay attention to any error information that is displayed during compilation. Deal with the causes of the errors indicated.
5. Check the configuration of the technology objects.

Resetting the "Mode" parameter of the Motion Control instruction "MC_Home"

When the technology version is changed from V1.0 to ≥ V2.0, the "MC_Home.HomingMode" parameter (V1.0) is renamed to "MC_Home.Mode" (≥ V2.0). The assignment of the parameter values is changed as well.

To reset the "MC_Home.Mode" parameter (V2.0), follow these steps:

1. To change the technology version, follow the instructions given above.

   When compiling the project, the "MC_Home.HomingMode"parameter (V1.0) is renamed to "MC_Home.Mode" (≥ V2.0):

   – The assignment of the parameter values is changed. A comparison of the "MC_Home.Mode" parameter for technology versions V1.0 and ≥ V2.0 is available in section Version overview (Page 155).

     You can find additional information about the "MC_Home.Mode" parameter in the description of the Motion Control instruction "MC_Home" (Page 369).

   – The value configured at the "MC_Home.HomingMode" parameter (V1.0) is lost. As a note on renaming, the following text is entered as the parameter value in the "MC_Home.Mode" parameter (≥ V2.0).

     "The interface has changed. You can find additional information in the description of the Motion Control instruction "MC_Home".

   – There is a message in the "Info > Compile" tab in the Inspector window stating that the operand has the wrong data type.

2. Change the value of the "MC_Home.Mode" parameter (≥ V2.0) in your user program according to the new assignment.
3. Save and compile the project.

4.7 Replacing devices

You can replace an S7-1500 with an S7-1500T and vice versa. The behavior with respect to functions and the existing configuration is different depending on what is being replaced.

- S7-1500 ⇒ S7-1500T

  The functions of the S7-1500 are expanded to include additional parameters for the extended functions of the S7-1500T. The additional parameters are preassigned with default values and must be configured appropriately.

- S7-1500T ⇒ S7-1500

  – Extended functions are only supported by an S7-1500T and are no longer available after a replacement with S7-1500.

  – Unsupported function blocks are marked.

  – Unsupported technology objects are displayed in an error message after compilation and must be deleted.

Configuring 5

5.1 Adding and configuring drives in the device configuration

5.1.1 Introduction

Adding and configuring a drive is described in the following section with the example of a SINAMICS S120 drive. If you use a SINAMICS V90 PN or a SINAMICS drive with Startdrive, you can find additional information in the following documentation.

Using SINAMICS V90 PN

You need the Hardware Support Package (HSP) V90 two add and configure a SINAMICS V90 PN drive in the TIA Portal. Information on configuring a SINAMICS V90 PN drive with SIMATIC S7-1500 in the TIA Portal is available in the Getting Started "SIMATIC/SINAMICS First Steps SINAMICS V90 PN on S7-1500 Motion Control":

https://support.industry.siemens.com/cs/document/109739497
(https://support.industry.siemens.com/cs/ww/en/view/109739497)

Using Startdrive

If you use a SINAMICS drive with Startdrive, you can find additional information in the hardware catalog in the "Drives & Starter" folder. For additional information on connecting via Startdrive, refer to:

- "Getting Started SINAMICS S120 in the Startdrive V14 SP1":

  https://support.industry.siemens.com/cs/document/109747452
  (https://support.industry.siemens.com/cs/ww/en/view/109747452)

- Application example "Positioning an S120 (Startdrive) with SIMATIC S7-1500 (TO)":

  https://support.industry.siemens.com/cs/document/109743270
  (https://support.industry.siemens.com/cs/ww/en/view/109743270)

Drives compatibility list

In the appendix (Page 555) you can find an overview of drives that can be interconnected with an S7-1500 CPU.

5.1.2 Add and configure PROFINET IO drives

Adding and configuring a PROFINET IO drive is described below with the example of a SINAMICS S120 drive. Adding and configuring other PROFINET IO drives may differ from the description in certain respects.

When you use a S7-1500C CPU you can use the inputs/outputs of the CPU as interface to the drive.

Requirements

- The SIMATIC S7-1500 device is created in the project.
- The desired drive can be selected in the hardware catalog.

If the drive is not available in the hardware catalog, it must be installed in the "Options" menu as a device description file (GSD).

Adding a drive and telegram in the device configuration

1. Open the device configuration and change to the network view.
2. In the hardware catalog, open the folder "Additional field devices > PROFINET IO > Drives > Siemens AG > SINAMICS".
3. Select the desired drive with the desired version, then drag it to the network view.
4. Assign the drive to the PROFINET interface of the PLC.
5. Open the drive in the device view.
6. Drag a Drive Object (DO) and a telegram from the hardware catalog and drop it onto a slot of the device overview of the drive.
7. Make sure that the order of the telegrams in the device configuration and in the drive parameter assignment are identical.

Depending on the version of the SINAMICS S120 drive, select "DO with telegram X", or "DO Servo" and a "Telegram X" for the telegram.

For more information on suitable telegrams, refer to the section PROFIdrive telegrams (Page 36).

Repeat step 6, if you want to add another drive and another standard telegram.

Activating isochronous mode of the drive in the device configuration

PROFINET drives can always be operated in isochronous mode or clock synchronized mode. Isochronous mode, however, increases the quality of the closed loop position control of the drive and is therefore recommended for drives such as SINAMICS S120.

To control the drive in isochronous mode, follow these steps:

1. Open the device view of the drive.
2. In the properties window, select the tab "PROFINET interface [X1] > Advanced options > Isochronous mode".
3. Select the "Isochronous mode" check box in this tab.

The entry for the telegram also has to be selected for isochronous mode in the detailed view.

Interconnecting the port of the PLC with the port of the drive

1. Open the topology view in the device configuration.
2. Interconnect the port of the drive as in the real configuration with the port of the PLC. At the same time, note the rules for topology configuration.

Configuring the PLC as the sync master and setting isochronous mode

1. Select the device view of the PLC.
2. In the Properties window, select the tab "PROFINET interface [X1] > Advanced options > Real-time settings > Synchronization".
3. Select "Sync master" from the "Synchronization role" drop-down list.
4. Click the "Domain settings" button.
5. Open the "Domain Management > Sync Domains" tab and set the desired "Send clock" (isochronous clock).

Select drive in the configuration of the technology object

1. Add a new technology object axis, or open the configuration of an existing axis.
2. Open the configuration "Hardware interface > Drive".
3. Select from the "PROFIdrive" entry in the "Drive type" drop-down list.
4. Select the Drive Object of the PROFINET drive from the "Drive" list.

For information on how to add a technology object, refer to the section Add technology object (Page 175).

Result

The technology object is connected to the drive and the "MC Servo" organization block can be checked / configured.

The telegram of the configured drive is assigned to the "PIP OB Servo" process image.

Checking/configuring the properties of the "MC-Servo"

1. Open the "Program blocks" folder in the project navigator.
2. Select the "MC-Servo" organization block.
3. Select the "Properties" command in the shortcut menu.
4. Select the "Cycle time" entry in the area navigation.
5. The option "Synchronous to the bus" must be selected in the dialog box.
6. A "PROFINET IO_System" must be selected in the "Distributed I/O" drop-down list.
7. The application cycle of "MC-Servo" must correspond to the send clock of the bus or be reduced by an integral factor relative to the send clock of the bus.

Result

The PROFINET IO drive is configured in such a way that it can be controlled in isochronous mode in the PROFINET IO network.

The properties of the SINAMICS drive must be configured according to the configuration of the axis with the STARTER software or SINAMICS Startdrive.

Checking isochronous mode on the drive

If the configuration sequence described above is not adhered to during configuration of the axis, and drive-specific error occurs when the project is compiled, the setting for isochronous mode on the drive must be checked.

1. Open the device view of the drive.
2. Select standard telegram in the device overview.
3. Select the properties dialog "General > I/O Addresses".
4. The following settings apply for the input and output addresses:
   - "Isochronous mode" is enabled.
   - "MC-Servo" must be selected for the "Organization block".
   - "PIP OB Servo" must be select the "Process image".

See also

PROFIdrive telegrams (Page 36)

Add technology object (Page 175)

5.1.3 Add and configure PROFIBUS DP drives

Adding and configuring a PROFIBUS drive is described below with the example of a SINAMICS S120 drive. Adding and configuring other PROFIBUS drives may differ from the description in certain respects.

When you use a S7-1500C CPU you can use the inputs/outputs of the CPU as interface to the drive.

Requirements

- The SIMATIC S7-1500 device is created in the project.
- The desired drive can be selected in the hardware catalog.

If the drive is not available in the hardware catalog, you must install the drive in the "Options" menu as a device description file (GSD).

Adding a drive and telegram in the device configuration

1. Open the device configuration and change to the network view.
2. In the hardware catalog, open the folder "Additional Field Devices > PROFIBUS DP > Drives > Siemens AG > SINAMICS".
3. Select the folder of the desired drive with the desired version, then drag the drive object to the network view.
4. Assign the drive to the PROFIBUS interface of the PLC.
5. Open the drive in the device view.
6. Drag-and-drop a telegram from the hardware catalog onto a slot in the device overview of the drive.

For more information on suitable telegrams, refer to the section PROFIdrive telegrams (Page 36).

If you want to add another drive and another telegram to the device overview, use the "Axis disconnector" in the hardware catalog.

Activating isochronous mode of the drive in the device configuration

PROFIBUS drives can be operated in cyclic mode or isochronous mode. Isochronous mode, however, increases the quality of the position control of the drive.

If you want to control the drive in isochronous mode, follow these steps:

1. Open the device view of the drive.
2. In the properties dialog, select the tab "General > Isochronous Mode".
3. Select the "Synchronize DP slave to constant DP bus cycle time" check box .

Setting isochronous mode

1. Select the network view.
2. Select the DP master system.
3. In the properties dialog, select the tab "General > Constant bus cycle time".
4. Select the desired "Constant DP bus cycle times".

Select drive in the configuration of the technology object

1. Add a new technology object axis, or open the configuration of an existing axis.
2. Open the configuration "Hardware interface > Drive".
3. Select from the "PROFIdrive" entry in the "Drive type" drop-down list.
4. Select the telegram of the PROFIBUS drive from the "Drive" list.

For information on how to add a technology object, refer to the section Add technology object (Page 175).

Result

The technology object is connected to the drive and the "MC-Servo" organization block can be checked / configured.

The telegram of the configured drive is assigned to the "PIP OB Servo" process image.

Checking/configuring the properties of the "MC-Servo"

1. Open the "Program blocks" folder in the project navigator.
2. Select the "MC-Servo" organization block.
3. Select the "Properties" command in the shortcut menu.

   The "MC-Servo" dialog opens.
4. Select the "Synchronous to the bus" option under "General > Cycle time".
5. In the "Distributed I/O" drop-down list, select a "PROFIBUS DP-System".

   The application cycle of "MC-Servo" must correspond to the send clock of the bus or be reduced by an integral factor relative to the send clock of the bus.

You can select a drive connected to the CPU via a communications processor/communications module (CP/CM) in the configuration of the technology object. You cannot select the DP master system of the CP/CM as the source clock for MC-Servo [OB91].

Result

The PROFIBUS DP drive is configured in such a way that it can be controlled in isochronous mode in the PROFIBUS network.

The properties of the SINAMICS drive must be configured according to the configuration of the axis with the STARTER software or SINAMICS Startdrive.

Checking isochronous mode on the drive

If the configuration sequence described above is not adhered to during configuration of the axis, and drive-specific error occurs when the project is compiled, isochronous mode can be checked on the drive.

1. Open the device view of the drive.
2. Select the entry of the telegram in the device overview.
3. Select the properties dialog "General > I/O Addresses".
4. The following settings apply for the input and output addresses:
   – "MC-Servo" must be selected for the "Organization block".
   – "PIP OB Servo" must be select the "Process image".

See also

PROFIdrive telegrams (Page 36)

Add technology object (Page 175)

5.1.4 Adding and configuring drives with analog connections

A description is provided below of how to add and configure a drive with an analog drive connection and an encoder. The connection is made for example as a positioning axis with an incremental encoder and using a technology module in the rack of the PLC.

When you use a S7-1500C CPU you can use the inputs/outputs of the CPU as interface to the drive.

Requirements

The SIMATIC S7-1500 device is created in the project.

Adding and configuring an analog output module in the device configuration

1. Open the device configuration of the PLC.
2. Select an analog output module from the hardware catalog and drag the module to the rack of the PLC.
3. Select the analog output module in the device view.
4. Open the "General" tab in the properties dialog and select there "Name of the Analog Output Module > I/O Addresses".
5. Enter the desired start address.
6. In the properties dialog, select the tab "General > IO Tags".
7. Enter the tag name for the desired analog output.

Adding and configuring a technology module

1. Switch to the device view of the PLC.
2. In the hardware catalog, open the folder "TM > Count > TM Count 2X24V".
3. Drag the counter module to a free slot in the rack.
   (When inserted in the rack of the PLC, the technology module cannot be operated in isochronous mode.)
4. Select the technology module in the device view.
5. In the properties dialog, open the "General" tab and select there "Count 2x24V > Basic Parameters > Channel X > Operating Mode" of the channel to be used.
6. Select "Position input for Motion Control" option for "Selection of the operating mode for the channel".
7. Under "Module parameters", adapt the parameters of the incremental encoder (steps per revolution = increments per revolution).
8. Under "Reaction to CPU STOP", select the item "Continue working".

Selecting the drive and encoder in the configuration of the technology object

1. Add a new positioning axis/synchronous axis technology object, or open the configuration of an existing positioning axis/synchronous axis.
2. Open the configuration "Hardware interface > Drive".
3. Select "Analog drive connection" from the "Drive type" drop-down list.
4. Select the previously defined tag name of the analog output from the "Output" list.
5. Open the configuration "Hardware interface > Encoder".
6. Under "Select encoder connection" select "Encoder on technology module (TM)".
7. Select the channel of the incremental encoder from the "Technology module" list under "local modules".
8. Open the configuration "Hardware interface > Data exchange with encoder > Fine resolution" and enter the "0" value for "bits in the incr. actual value".

For information on how to add a technology object, refer to the section Add technology object (Page 175)

Result

The analog drive connection and the encoder connection are configured.

The analog addresses and the addresses of the TM module are assigned to the process image "PIP OB Servo".

Checking the encoder connection / drive connection

The encoder data are applied to the position control cycle clock. If in doubt, check the following settings:

1. Switch to the device view of the PLC.
2. Select the module technology.
3. Open the properties dialog "Basic Parameters > I/O Addresses".
4. The following settings apply for the input and output addresses:
   – "MC-Servo" must be selected for the "Organization block".
   – "PIP OB Servo" must be select the "Process image".
5. Select the analog module.
6. Open the properties dialog "Name of the Analog Module > I/O Addresses".
7. The settings from Step 4 apply for the input and output addresses

See also

Add technology object (Page 175)

5.2 Configuration basics

5.2.1 Add technology object

The following describes how to add a technology object in the project tree.

Requirement

- A project with a CPU S7-1500 has been created.
- For the output cam, cam track, measuring input technology objects:

  A speed axis, positioning axis, synchronous axis or external encoder technology object is created in the project.

Procedure

To add a technology object, follow these steps:

1. Open the CPU's folder in the project navigator.
2. Open the "Technology Objects" folder.
3. Double-click "Add new object".

   The "Add new object" dialog opens.
4. Select the required technology object. You can infer the function of the technology object from the displayed description.
5. If you add output cams, cam tracks, measuring inputs to a technology object, select the higher-level technology object in the "Axis or external encoder that is to be assigned".
6. In the "Name" input field, adapt the name to your requirements.
7. To change the suggested data block number, select the "Manual" option.
8. To add your own information about the technology object, click "Additional information".
9. To open the configuration after adding the technology object, select the "Add new and open" check box.
10. To add the technology object, click "OK".

Result

The new technology object was created and created in the "Technology objects" folder in the project tree.

If the "MC-Servo" and "MC-Interpolator" organizational units were not yet available, they were added.

5.2.2 Copy technology object

You can copy a technology object in the following ways:

- Copying a technology object within a CPU
- Copying a technology object from a CPU S7-1500 to a CPU S7-1500T

  Additional parameters for the extended functions are pre-defined with default values and must be configured accordingly.
- Copying a technology object from a CPU S7-1500T to a CPU S7-1500

  Additional parameters, which are not supported by the CPU S7-1500, are reset to the default values.

When you copy a technology object that has lower-level technology objects such as output cams, cam tracks or measuring inputs, the lower-level technology object are also copied.

The following describes how to copy a technology object within a CPU. The procedure also applies accordingly to the other copying methods mentioned.

Requirement

- A project with a CPU S7-1500 has been created.
- You have created an technology object in the project.

Procedure

To copy a technology object, follow these steps:

1. Open the CPU's folder in the project navigator.
2. Open the "Technology Objects" folder.
3. If necessary, open the higher-level technology object.
4. Select the technology object to be copied.
5. Select "Copy" in the shortcut menu.
6. Select the "Technology objects" folder or the higher-level technology object.
7. Select "Paste" in the shortcut menu.

Result

The selected technology object, including lower-level technology objects, has been copied and created in the "Technology objects" folder of the project tree.

5.2.3 Delete technology object

You can delete technology objects in the project tree.

When you delete a technology object that has lower-level technology objects such as output cams, cam tracks or measuring inputs, the lower-level technology object are also deleted.

Requirement

- A project with a CPU S7-1500 has been created.
- You have created an technology object in the project.

Procedure

To delete a technology object, follow these steps:

1. Open the CPU's folder in the project navigator.
2. Open the "Technology Objects" folder.
3. Select the technology object to be deleted.
4. Select the "Delete" command in the shortcut menu.

   The "Confirm delete" dialog is opened.
5. To delete the technology object, click "Yes".

Result

The selected technology object has been deleted.

5.2.4 Working with the configuration editor

You configure the properties of a technology object in the configuration window. To open the configuration window of the technology object in the project view, follow these steps:

1. Open the device "Technology objects" group in the project navigator.
2. Select the technology object and double-click on "Configuration".

The configuration is divided into categories which depend on the object type, for example: Basic parameters, hardware interface, extended parameters.

Configuration editor icons

Icons in the area navigation of the configuration show additional details about the status of the configuration:

	The configuration contains default values and is complete. The configuration contains only default values. With these default values you can use the technology object without additional changes.
	The configuration contains user-defined or automatically adapted values and is complete. All input fields of the configuration contain valid values and at least one preset value has changed.
	The configuration is incomplete or incorrect. At least one input field or drop-down list contains an invalid value. The corresponding field or the drop-down list is displayed on a red background. Click the field shows you the roll-out error message that indicates the cause of error.

5.2.5 Compare values

If an online connection to the CPU is available, the "Monitor all" function appears in the configuration of the technology object.

The "Monitor all" function provides the following options:

- Comparison of configured start values of the project with the start values in the CPU and the actual values
- Direct editing of actual values and the start values of the project
- Immediate detection and display of input errors with suggested corrections
- Backup of actual values in the project
- Transfer of start values of the project to the CPU as actual values

---

Note

Differences between online and offline values

By adding or deleting technology objects that have a connection to other technology objects, such as cams, cam tracks, measuring inputs or synchronized axes, differences can occur when online and offline values are compared. These differences can be eliminated by re-compiling the project and then uploading it to the CPU.

Icons and operator controls

If there is an online connection to the CPU, the actual values are displayed at the parameters.

In addition to the actual values of the parameters, the following symbols appear:

Symbol	Description
	Start value in CPU matches the configured start value in project
	Start value in CPU does not match the configured start value in project
	Software error in lower-level component: The online and offline versions differ in at least one lower-level software component.
	The comparison of the Start value in CPU with the configured start value in project cannot be performed.
	Comparison of the online and offline values is not advisable.
	Use this button to show the start value of the CPU and the start value of the project for the respective parameter.

You can change the start value of the CPU directly and then download it to the CPU. For directly editable parameters, the actual value can also be changed and the change will be transferred directly to the CPU.

5.3 Configuring the Speed-Control Axis technology object

5.3.1 Configuration - Basic Parameters

Configure the basic properties of the technology object in the "Basic Parameters" configuration window.

Name

Define the name of the speed axis in this field. The technology object is listed under this name in the project tree. You can use the variables of the speed axis in the user program under this name.

Axis type

If you want to use the axis in the CPU exclusively as a virtual leading axis for synchronization, for example, select the "Virtual axis" check box. The configuration of a drive and encoder connection is not relevant.

Speed unit of measure

Select the desired unit of measure for speed in the drop-down list.

Simulation

If you want to move a real axis in the simulation mode, select the "Activate simulation" check box.

In simulation mode, speed, positioning and synchronous axes can be simulated in the CPU without connected drives and encoders. Simulation mode is possible as of Technology Version V3.0 even without a configured drive and encoder connection.

For simulation mode without hardware connected to the CPU, you can influence the startup time of the CPU via the "Configuration time for central and distributed I/Os" parameter. You can find the parameter in the CPU properties in the "Startup" area navigation.

See also

Units of measure (Page 32)

Axis in simulation (Page 49)

5.3.2 Hardware interface

5.3.2.1 Configuration - Drive

In the "Drive" configuration window, configure which drive type and which drive you want to use.

Drive type

In the drop-down list, select whether you want to deploy a PROFIdrive drive or a drive with an analog drive connection.

PROFIdrive drives are connected to the controller by means of a digital communication system (PROFINET or PROFIBUS). The communication is performed via PROFIdrive telegrams.

Drives with an analog drive connection receive the speed setpoint via an analog output signal (e.g. from -10 V to +10 V) from the PLC.

Drive type: PROFIdrive

Data connection

In the drop-down list, select whether the data connection is to be made directly with the drive device or via an editable data block in the user program.

Drive/data block

In the "Drive" field, select an already configured PROFIdrive drive/slot. If a PROFIdrive drive was selected, it can be configured using the "Device configuration" button.

Switch to the device configuration, and add a PROFIdrive drive in the network view, in the event that no PROFIdrive drive can be selected.

If "Data block" was selected for the data connection, a previously created data block containing a variable structure of data type "PD_TELx" must be selected here ("x" stands for the telegram number used).

Drive type: Analog drive connection

Analog output

In the "Output" field, select the PLC tag of the analog output over which the drive is to be controlled.

In order to be able to select an output, an analog output module must have been added in the device configuration, and the PLC tag name for the analog output must be defined.

Activating enable output

In the "Enable output" field, select the PLC tag of the digital output to enable the drive. With the enable output, the speed controller in the drive is enabled, or disabled.

In order to be able to select an enable output, a digital output module must have been added in the device configuration, and the PLC tag name for the digital output must be defined.

Note

If you do not use an enable output, the drive cannot be immediately disabled on the part of the system due to error reactions or monitoring functions. A controlled stop of the drive is not guaranteed.

Enable ready input

In the "Ready input" field, select the PLC tag of the digital input with which the drive is to report its operational readiness to the technology object. The power module is switched on and the analog speed setpoint input is enabled.

In order to be able to select a ready input, a digital input module must have been added in the device configuration, and the PLC tag name for the digital input must be defined.

Note

The enable output and the ready input can be separately enabled.

The following boundary conditions apply to the activated ready input:

- The axis is only enabled (MC_Power Status = TRUE) when a signal is present at the ready input.
- If the signal at the ready input goes away for an enabled axis, the axis is disabled with the alarm reaction "Remove enable".
- If the axis is disabled with the instruction MC_Power (Enable = FALSE), the axis is disabled even when a signal is present at the ready input.

See also

Configuration - Data exchange with the drive (Page 183)

Connect drive/encoder via data block (Page 269)

Drive and encoder connection (Page 34)

5.3.2.2 Configuration - Data exchange with the drive

You configure the data transmission to the drive in this configuration window.

Drive type: PROFIdrive

Drive telegram

The telegram to the drive that is set in the device configuration is preselected in the drop-down list.

Automatic data exchange for drive values (offline)

Select the check box if you want to transfer the offline values of the drive "Reference speed", "Maximum speed" and "Reference torque" to the configuration of the technology object in the project.

Automatic data exchange for drive values (online)

Select the check box if you want to transfer the effective values "Reference speed", "Maximum speed" and "Reference torque" online in the drive to the CPU during runtime. The drive parameters are transferred from the bus after the (re-)initialization of the technology object or the (re)start of the drive or the CPU.

Alternatively, you must synchronize the following parameters manually:

- **Reference speed**

  Configure the reference speed of the drive in accordance with the manufacturer's specifications in this field. The specification of the drive speed is a percentage of the reference speed in the range -200% to +200%.

- **Maximum speed**

  Configure the maximum speed of the drive in this field.

- **Reference torque**

  Configure the reference torque of the drive corresponding to its configuration in this field.

  The reference torque is needed for force/torque reduction, which is supported with telegram 10x.

Supplementary data

Select the "Torque data" check box if you want to configure the data connection of the torque data. If you have selected a drive with which the additional telegram 750 has been configured, the "Torque data" check box is preselected.

Data connection

In the drop-down list, define whether the data connection should be made via additional telegrams or data blocks:

- If you select the entry "Additional telegram" in the "Data connection" drop-down list, you can edit the "Additional telegram" drop-down list.
- If you select the "Data block" entry in the "Data connection" drop-down list, you can select the previously created data block which contains a tag structure of the "PD_TELx" data type ("x" stands for the additional telegram number that is used).

Data block / additional telegram

Select an additional telegram configured in the "Additional telegram" field.

Select the "Show all modules" check box if you want to display all submodules of the connected drive. You can also find self-defined additional telegrams with this function.

In the "Data block" field, select the data block which you want to use to integrate the torque data.

Note

Automatic transfer of drive parameters is only possible with SINAMICS drives as of V4.x. For this, "Drive" must be selected for the data connection in configuration window "Hardware interface > Drive".

Drive type: Analog drive connection

Reference speed

The reference speed of the drive is the speed at which the drive rotates when there is an output of 100% at the analog output. The reference speed must be configured for the drive and transferred in the configuration of the technology object.

The analog value that is output at 100% depends on the type of the analog output. For example, for an analog output with +/- 10 V, the value 10 V is output at 100%.

Analog outputs can be overdriven by about 17%. This means that an analog output can be operated in the range from -117% to 117%, insofar as the drive permits this.

See also

Automatic transfer of drive and encoder parameters in the device (Page 42)

Connect drive/encoder via data block (Page 269)

Drive and encoder connection (Page 34)

5.3.3 Extended Parameters

5.3.3.1 Configuration - Mechanics

Configure the connection of the load to the drive in the "Mechanics" configuration window.

Invert drive direction

Select the check box if the direction of rotation of the drive is to be inverted.

Load gear

Number of motor revolutions / number of load revolutions

The gear ratio of the load gear is specified as the ratio between motor revolutions and load revolutions. Specify here an integral number of motor revolutions and the resulting number of load revolutions.

See also

Mechanics (Page 53)

5.3.3.2 Configuration - Dynamic Defaults

In the "Dynamic default values" configuration window, configure the default values for speed, acceleration, deceleration jerk of the axis.

The default values have an effect, when values < 0 are specified in Motion Control instructions for the "Velocity", "Acceleration", "Deceleration" or "Jerk" parameters. The default values can be applied separately for each of the parameters just listed.

Speed

In this field, define the default value for the speed of the axis.

Acceleration / Deceleration - Ramp-up time / Ramp-down time

Set the desired default value for acceleration in the "Ramp-up time" or "Acceleration" fields. The desired deceleration can be set in the "Ramp-down time" or "Deceleration" fields.

The following equations show the relationship between the ramp-up time and acceleration and the ramp-down time and deceleration:

$$\text{Ramp-up time} = \frac{\text{Speed}}{\text{Acceleration}}$$

$$\text{Ramp-down time} = \frac{\text{Speed}}{\text{Deceleration}}$$

Note

A change in the velocity influences the acceleration and deceleration values of the axis. The ramp-up and ramp-down times are retained.

Smoothing time / jerk

You can enter the jerk limit parameters in the "Smoothing time" box, or alternatively in the "Jerk" box:

- Set the desired jerk for the acceleration and deceleration ramp in the "Jerk" field. The value 0 means that jerk limiting is deactivated.
- Set the desired smoothing time for the acceleration ramp in the "Smoothing time" field.

Note

The jerk value is identical for the acceleration and deceleration ramp. The smoothing time in effect for the deceleration ramp results from the following relationships:

- **Acceleration > Deceleration**

  A shorter smoothing time is used for the deceleration ramp compared with the acceleration ramp.
- **Acceleration < Deceleration**

  A longer smoothing time is used for the deceleration ramp compared with the acceleration ramp.
- **Acceleration = Deceleration**

  The smoothing times of the acceleration and deceleration ramp are equal.

If an error occurs, the axis decelerates with the configured emergency stop deceleration. A configured jerk limit is not taken into account for this.

The following equations show the relationship between the smoothing times and the jerk:

$$\text{Smoothing time (acceleration ramp)} = \frac{\text{Acceleration}}{\text{Jerk}}$$

$$\text{Smoothing time (deceleration ramp)} = \frac{\text{Deceleration}}{\text{Jerk}}$$

Motion jobs started in the user program are performed with the selected jerk.

See also

Velocity profile (Page 60)

5.3.3.3 Configuration - Emergency stop

In the "Emergency stop" configuration window, you can configure the emergency stop deceleration of the axis. In the event of an error, and when disabling the axis, the axis is brought to a standstill with this deceleration using the Motion Control instruction "MC_Power" (input parameter StopMode = 0).

Emergency stop deceleration / Emergency stop ramp-down time

Configure the deceleration value for emergency stop in the "Emergency stop deceleration" field or the "Emergency stop ramp-down time" field.

The relationship between emergency stop ramp-down time and emergency stop deceleration can be seen in the following equation:

$$\textit{Emergency stop ramp-down time} = \frac{\textit{Maximum speed}}{\textit{Emergency stop deceleration}}$$

The configuration of the emergency stop deceleration is related to the configured maximum speed of the axis. If the maximum speed of the axis changes, then the value of the emergency stop deceleration also changes (the emergency stop ramp-down time remains unchanged).

See also

Emergency stop deceleration (Page 62)

5.3.3.4 Limits

Configuration - Dynamic limits

In the "Dynamic limits" configuration window, configure the maximum values for speed, acceleration, deceleration and jerk of the axis.

Maximum speed

In this field, define the maximum permitted speed of the axis.

Maximum acceleration/maximum deceleration - ramp-up time/ramp-down time

Set the desired acceleration in the "Ramp-up time" or "Acceleration" fields. The desired deceleration can be set in the "Ramp-down time" or "Deceleration" fields.

The following equations show the relationship between the ramp-up time and acceleration and the ramp-down time and deceleration:

$$\text{Ramp-up time} = \frac{\text{Maximum velocity}}{\text{Acceleration}}$$

$$\text{Ramp-down time} = \frac{\text{Maximum speed}}{\text{Deceleration}}$$

Note

Change of maximum speed

A change in the maximum speed influences the acceleration and deceleration values of the axis. The ramp-up and ramp-down times are retained.

Smoothing time / jerk

You can enter the jerk limit parameters in the "Smoothing time" box, or alternatively in the "Jerk" box:

- Set the desired jerk for the acceleration ramp and the deceleration ramp in the "Maximum jerk" box. The value 0 means that the jerk is not limited.
- Set the desired smoothing time for the acceleration ramp in the "Smoothing time" field.

Note

Various acceleration and deceleration values

The configured smoothing time displayed in the configuration, applies only to the acceleration ramp.

If the values of the acceleration and deceleration differ, the smoothing time of the deceleration ramp is calculated and used according to the jerk of the acceleration ramp.

The smoothing time of the deceleration is adapted as follows:

- **Acceleration > Deceleration**
  A shorter smoothing time is used for the deceleration ramp compared with the acceleration ramp.
- **Acceleration < Deceleration**
  A longer smoothing time is used for the deceleration ramp compared with the acceleration ramp.
- **Acceleration = Deceleration**
  The smoothing times of the acceleration and deceleration ramp are equal.

If an error occurs, the axis decelerates with the configured emergency stop deceleration (Page 60) (alarm reaction "Stop with maximum dynamic values"). A configured jerk limit is not taken into account for this.

The following equations show the relationship between the smoothing times and the jerk:

$$\text{Smoothing time (acceleration ramp)} = \frac{\text{Acceleration}}{\text{Jerk}}$$

$$\text{Smoothing time (deceleration ramp)} = \frac{\text{Deceleration}}{\text{Jerk}}$$

Motion jobs started in the user program are performed with the selected jerk.

See also

Emergency stop deceleration (Page 62)

Dynamic limits in synchronous operation (Page 62)

Configuration - Torque limits

Configure the torque limiting of the drive in the "Torque limits" configuration window.

The configuration is now available if a drive that supports force/torque limiting is selected and a telegram 10x is used.

Effective

In the drop-down list, select whether the limit value is to be in effect "on load side" or "on motor side".

Torque limiting

Enter a default value for the torque limit in the specified unit of measure in this field.

The default value is in effect when the torque limiting is specified using Motion Control instruction "MC_TorqueLimiting", input parameter "Limit" < 0.

If the gear efficiency is critical, this can be set in the <TO>.Actor.Efficiency tag.

See also

Force/torque limiting (Page 63)

5.4 Configuring the positioning axis/synchronous axis technology object

5.4.1 Configuration - Basic Parameters

Configure the basic properties of the technology object in the "Basic Parameters" configuration window.

Name

Define the name of the positioning axis/synchronous axis in this field. The technology object is listed under this name in the project tree. The variables of the technology object can be used in the user program under this name.

Axis type

If you want to use the axis in the CPU exclusively as a virtual leading axis for synchronization, for example, select the "Virtual axis" check box. The configuration of a drive and encoder connection is not relevant.

In this selection, configure whether the axis should perform linear or rotary motions.

Units of measure

In the drop-down list, select the desired units of measure for the position, velocity, torque and force of the axis.

Modulo

Select the "Enable modulo" check box if you want to use a recurring system of units for the axis (e.g. 0 to 360° for an axis of the "rotary" axis type).

- Modulo start value

  In this field, define the position at which the modulo range should begin (e.g. 0° for an axis of the "rotary" axis type).

- Modulo length

  In this field, define the length of the modulo range (e.g. 360° for an axis of the "rotary" axis type).

Simulation

If you want to move a real axis in the simulation mode, select the "Activate simulation" check box.

In simulation mode, speed, positioning and synchronous axes can be simulated in the CPU without connected drives and encoders. Simulation mode is possible as of Technology Version V3.0 even without a configured drive and encoder connection.

For simulation mode without hardware connected to the CPU, you can influence the startup time of the CPU via the "Configuration time for central and distributed I/Os" parameter. You can find the parameter in the CPU properties in the "Startup" area navigation.

See also

Axis in simulation (Page 49)

Units of measure (Page 32)

Modulo setting (Page 33)

Mechanics (Page 53)

Positioning axis technology object (Page 104)

Synchronous axis technology object (Page 105)

5.4.2 Hardware interface

5.4.2.1 Configuration - Drive

In the "Drive" configuration window, configure which drive type and which drive you want to use.

Drive type

In the drop-down list, select whether you want to deploy a PROFIdrive drive or a drive with an analog drive connection.

PROFIdrive drives are connected to the controller by means of a digital communication system (PROFINET or PROFIBUS). The communication is performed via PROFIdrive telegrams.

Drives with an analog drive connection receive the speed setpoint via an analog output signal (e.g. from -10 V to +10 V) from the PLC.

Drive type: PROFIdrive

Data connection

In the drop-down list, select whether the data connection is to be made directly with the drive device or via an editable data block in the user program.

Drive/data block

In the "Drive" field, select an already configured PROFIdrive drive/slot. If you have selected a PROFIdrive drive, you can configure the PROFIdrive drive using the "Device configuration" button.

If no PROFIdrive drive is available for selection, switch to the device configuration, and add a PROFIdrive drive in the network view.

If you have selected "Data block" under the data connection, select a previously created data block which contains a variable structure of the data type "PD_TELx" ("x" stands for the telegram number to be used).

Drive type: Analog drive connection

Analog output

In the "Analog output" field, select the PLC tag of the analog output via which the drive is to be controlled.

In order to be able to select an output, you first need to add an analog output module in the device configuration and define the PLC tag name for the analog output.

Activating enable output

Select the "Activate enable output" check box if the drive supports an enable.

Select the PLC tag of the digital output for the drive enable in the corresponding field. With the enable output, the speed controller in the drive is enabled, or disabled.

In order to be able to select an enable output, a digital output module must be added in the device configuration and the PLC tag name must be defined for the digital output.

Note

If you do not use an enable output, the drive cannot be immediately disabled on the part of the system due to error reactions or monitoring functions. A controlled stop of the drive is not guaranteed.

Enable ready input

Select the "Enable ready input" check box if the drive can signal its readiness.

Select the PLC tag of the digital input via which the drive is to signal its operational readiness to the technology object in the corresponding field. The power module is switched on and the analog speed setpoint input is enabled.

In order to be able to select a ready input, you first need to add a digital input module in the device configuration and define the PLC tag name for the digital input.

Note

The enable output and the ready input can be separately enabled.

The following boundary conditions apply to the activated ready input:

- The axis is only enabled (MC_Power Status = TRUE) when a signal is present at the ready input.
- If a signal is not present at the ready input on an enabled axis, the axis is disabled with an error.
- If the axis is disabled with the instruction MC_Power (Enable = FALSE), the axis is disabled even when a signal is present at the ready input.

See also

Connect drive/encoder via data block (Page 269)

Data connection drive/encoder via data block (Page 50)

Positioning axis technology object (Page 104)

Synchronous axis technology object (Page 105)

5.4.2.2 Configuration - Encoder

For closed loop position control, positioning axes/synchronous axes require an actual position value in the form of an encoder position. The encoder position is transmitted to the controller by means of a PROFIdrive telegram.

Configure the encoder and encoder type in the "Encoder" configuration window.

Data connection

In the drop-down list, select whether the data connection should be established directly with the encoder or via a data block that can be edited in the user program.

The selection is only possible for encoders that are connected via PROFIdrive and support parameter P979.

Encoder / data block

Select a previously configured encoder in this configuration field.

The following encoders can be selected:

- **Connection to the drive (not with analog drive connection)**

  The encoder is configured via the configuration of the PROFIdrive drive. The drive evaluates the encoder signals and sends them to the controller in the PROFIdrive telegram.

- **Encoder on technology module (TM)**

  Select a previously configured technology module and the channel to be used. Only technology modules set to the "Position input for Motion Control" mode are displayed for selection.

  If no technology module is available for selection, change to the device configuration and add a technology module. If you have selected a technology module, you can access the configuration of the technology module using the "Device configuration" button.

  You can operate the technology module centrally on an S7-1500 CPU or decentrally on a distributed I/O. Isochronous mode is not possible with central operation in the CPU.

  You can identify the technology modules suitable for position detection for Motion Control in the documentation for the technology module and the catalog data.

- **PROFIdrive encoder on PROFINET/PROFIBUS (PROFIdrive)**

  In the "PROFIdrive encoder" field, select a configured encoder on PROFINET/PROFIBUS. If an encoder was selected, it can be configured using the "Device configuration" button.

  Switch to the device configuration in the network view, and add an encoder, in the event that no encoder can be selected.

If "Data block" was selected for the data connection, a previously created data block containing a variable structure of data type "PD_TELx" must be selected here ("x" stands for the telegram number used).

Encoder type

Select the encoder type of the encoder in the drop-down list. The following encoder types are available:

- Incremental
- Absolute
- Cyclic absolute

See also

Positioning axis technology object (Page 104)

Data connection drive/encoder via data block (Page 50)

Connect drive/encoder via data block (Page 269)

Synchronous axis technology object (Page 105)

5.4.2.3 Configuration - Data exchange with the drive

Configure the data exchange with the drive in the "Data exchange with the drive" configuration window.

The configuration differs according to the selected drive type:

Drive type: PROFIdrive

Drive telegram

The telegram to the drive that is set in the device configuration is preselected in the drop-down list.

Automatic data exchange for drive values (offline)

Select the check box if you want to transfer the offline values of the drive "Reference speed", "Maximum speed" and "Reference torque" to the configuration of the technology object in the project.

Automatic data exchange for drive values (online)

Select the check box if you want to transfer the effective values "Reference speed", "Maximum speed" and "Reference torque" online in the drive to the CPU during runtime. The drive parameters are transferred from the bus after the (re-)initialization of the technology object or the (re)start of the drive or the CPU.

Alternatively, you must synchronize the following parameters manually:

- **Reference speed**

  Configure the reference speed of the drive in accordance with the manufacturer's specifications in this field. The specification of the drive speed is a percentage of the reference speed in the range -200% to +200%.

- **Maximum speed**

  Configure the maximum speed of the drive in this field.

- **Reference torque**

  Configure the reference torque of the drive corresponding to its configuration in this field.

  The reference torque is needed for force/torque reduction, which is supported with telegram 10x.

Supplementary data

Select the "Torque data" check box if you want to configure the data connection of the torque data. If you have selected a drive with which the supplemental telegram 750 has been configured, the "Torque data" check box is preselected.

Data connection

In the drop-down list, define whether the data connection should be made via supplemental telegrams or data blocks:

- If you select the entry "Supplemental telegram" in the "Data connection" drop-down list, you can edit the "Supplemental telegram" drop-down list.
- If you select the "Data block" entry in the "Data connection" drop-down list, you can select the previously created data block which contains a tag structure of the "PD_TELx" data type ("x" stands for the additional telegram number that is used).

Data block / supplemental telegram

Select an supplemental telegram configured in the "Supplemental telegram" field.

Select the "Show all modules" check box if you want to display all submodules of the connected drive. You can also find self-defined supplemental telegrams with this function.

In the "Data block" field, select the data block which you want to use to integrate the torque data.

Note

Automatic transfer of drive parameters is only possible with SINAMICS drives as of V4.x. To do this, set the "Drive" data connection in the configuration window "Hardware interface > Drive".

Drive type: Analog drive connection

Reference speed

The reference speed of the drive is the speed at which the drive rotates when there is an output of 100% at the analog output. The reference speed must be configured for the drive and transferred in the configuration of the technology object.

The analog value that is output at 100% depends on the type of the analog output. For example, for an analog output with +/- 10 V, the value 10 V is output at 100%.

Analog outputs can be overdriven by about 17%. This means that an analog output can be operated in the range from -117% to 117%, insofar as the drive permits this.

Maximum speed

Specify the maximum speed of the drive in this field.

See also

Positioning axis technology object (Page 104)

Automatic transfer of drive and encoder parameters in the device (Page 42)

Connect drive/encoder via data block (Page 269)

Synchronous axis technology object (Page 105)

5.4.2.4 Configuration - Data exchange with encoder

Configure detailed encoder parameters and the data exchange with the encoder in the "Data exchange with encoder" configuration window.

The display and selection of the configuration parameters described here is dependent on the following parameters:

- Configuration window "Basic parameters": Drive type (linear/rotary)
- Configuration window "Hardware interface > Encoder": Encoder type (incremental/absolute/cyclic absolute)
- Configuration window - "Extended parameters > Mechanics": Encoder mounting type

Encoder telegram

The telegram to the encoder that is set in the device configuration is preselected in the drop-down list.

Automatic data exchange for encoder values (offline)

Select the check box if you want to transfer the offline values of the encoder to the configuration of the technology object in the project.

Note

Automatic transfer of encoder parameters is only possible with PROFIdrive encoders as of product version A16. For this, "Hardware interface > Encoder" must be selected as the "Encoder" data connection in the configuration window.

Automatic data exchange for encoder values (online)

Select the check box if you want to transfer the effective values online in the encoder to the CPU during runtime. The encoder parameters are transferred from the bus after the (re-)initialization of the technology object and (re)start of the encoder or the CPU.

Note

Automatic transfer of encoder parameters is only possible with PROFIdrive encoders as of product version A16. For this, "Hardware interface > Encoder" must be selected as the "Encoder" data connection in the configuration window.

Alternatively, you must manually calibrate the following parameters, depending on encoder type.

Encoder type

Depending on the selected encoder type, configure the following parameters:

Encoder type	Rotary incremental
Increments per revolution	Configure the number of increments that the encoder resolves per revolution in this field.
Bits for fine resolution in the incremental actual value (Gx_XIST1)	Configure the number of bits for fine resolution within the incremental actual value (Gx_XIST1) in this field.

Encoder type	Rotary absolute
Increments per revolution	Configure the number of increments that the encoder resolves per revolution in this field.
Number of revolutions	Configure the number of revolutions that the absolute encoder can detect in this field.
Bits for fine resolution in the incremental actual value (Gx_XIST1)	Configure the number of bits for fine resolution within the incremental actual value (Gx_XIST1) in this field.
Bits for fine resolution in the absolute actual value (Gx_XIST2)	Configure the number of bits for fine resolution within the absolute actual value (Gx_XIST2) in this field.

Encoder type	Rotary cyclic absolute
Increments per revolution	Configure the number of increments that the encoder resolves per revolution in this field.
Number of revolutions	Configure the number of revolutions that the absolute encoder can detect in this field.
Bits for fine resolution in the incremental actual value (Gx_XIST1)	Configure the number of bits for fine resolution within the incremental actual value (Gx_XIST1) in this field.
Bits for fine resolution in the absolute actual value (Gx_XIST2)	Configure the number of bits for fine resolution within the absolute actual value (Gx_XIST2) in this field.

Encoder type	Linear incremental
Distance between two increments	Configure the distance between two increments of the encoder in this field.
Bits for fine resolution in the incremental actual value (Gx_XIST1)	Configure the number of bits for fine resolution within the incremental actual value (Gx_XIST1) in this field.

Encoder type	Linear absolute
Distance between two increments	Configure the distance between two increments of the encoder in this field.
Bits for fine resolution in the incremental actual value (Gx_XIST1)	Configure the number of bits for fine resolution within the incremental actual value (Gx_XIST1) in this field.
Bits for fine resolution in the absolute actual value (Gx_XIST2)	Configure the number of bits for fine resolution within the absolute actual value (Gx_XIST2) in this field.

Encoder type	Linear cyclic absolute
Distance between two increments	Configure the distance between two increments of the encoder in this field.
Bits for fine resolution in the incremental actual value (Gx_XIST1)	Configure the number of bits for fine resolution within the incremental actual value (Gx_XIST1) in this field.
Bits for fine resolution in the absolute actual value (Gx_XIST2)	Configure the number of bits for fine resolution within the absolute actual value (Gx_XIST2) in this field.

See also

Positioning axis technology object (Page 104)

Automatic transfer of drive and encoder parameters in the device (Page 42)

Connect drive/encoder via data block (Page 269)

Synchronous axis technology object (Page 105)

Configuration - Data exchange (Page 232)

5.4.3 Configuration - leading value interconnections (synchronous axis only)

You can interconnect a synchronous axis with multiple leading value-capable technology objects. Leading value-capable technology objects are:

- Positioning axes
- Synchronous axes
- External encoders (only with S7-1500T CPU)

You can select only one leading value during runtime of your user program.

All interconnection required during operation must be set up during configuration of the technology object.

Possible leading values

In the "Possible leading values" column of the "Leading value interconnections" list, add all leading value-capable technology objects that you need during operation as a leading value for the synchronous axis.

You can interconnect the axes added in the list with the synchronous axis as a leading value with the corresponding Motion Control instruction.

All configured leading value interconnections for the technology object are displayed in the cross-reference list of the technology object.

Coupling type

In the "Type of coupling" column, configure whether the leading value is to be coupled via setpoint or actual value.

"Actual value" is available only for the S7-1500T CPU.

See also

Leading value coupling (Page 107)

Synchronous axis technology object (Page 105)

5.4.4 Extended Parameters

5.4.4.1 Configuration - Mechanics

Configuration - Mechanics

In the "Mechanics" configuration window, configure the mounting type of the encoder, and the adaptation of the actual encoder value to the mechanical conditions.

Settings for (S7-1500T)

In the drop-down list, select the encoder for which the following configurations are to apply.

Encoder mounting type

In the drop-down list, select how the encoder is mounted to the mechanics.

The configuration differs depending on the axis type and the encoder mounting type selected in the "Basic parameters" configuration window.

Axis type: Linear

- Linear - On motor shaft (Page 203)
- Linear - On load side (Page 203)
- Linear - External Measuring System (Page 204)

Axis type: Rotary

- Rotary - On motor shaft (Page 205)
- Rotary - On load side (Page 205)
- Rotary - External Measuring System (Page 206)

Invert encoder direction

Select this check box if you must invert the direction of rotation of the encoder.

See also

Positioning axis technology object (Page 104)

Synchronous axis technology object (Page 105)

Axis type: Linear

Linear - On motor shaft

The encoder is connected to the motor shaft in a mechanically fixed manner. Motor and encoder form a unit.

Invert drive direction

Select the check box if the direction of rotation of the drive is to be inverted.

Load gear

The gear ratio of the load gear is specified as the ratio between motor revolutions and load revolutions.

Number of motor revolutions

In this configuration field, configure the integer number of motor revolutions.

Number of load revolutions

In this configuration field, configure the integer number of load revolutions.

Position parameters

Leadscrew pitch

In this configuration field, configure the distance by which the load is moved when the leadscrew makes one revolution.

See also

Positioning axis technology object (Page 104)

Synchronous axis technology object (Page 105)

Linear - On load side

The encoder is mechanically connected to the load side of the gear.

Invert drive direction

Select the check box if the direction of rotation of the drive is to be inverted.

Load gear

The gear ratio of the load gear is specified as the ratio between motor revolutions and load revolutions.

Number of motor revolutions

In this configuration field, configure the integer number of motor revolutions.

Number of load revolutions

In this configuration field, configure the integer number of load revolutions.

Position parameters

Leadscrew pitch

In this configuration field, configure the distance by which the load is moved when the leadscrew makes one revolution.

See also

Positioning axis technology object (Page 104)

Synchronous axis technology object (Page 105)

Linear - External Measuring System

An external measuring system provides the position values of the linear load motion.

Distance per encoder revolution

In this configuration field, configure the linear load travel per encoder revolution.

Invert drive direction

Select the check box if the direction of rotation of the drive is to be inverted.

Load gear

The gear ratio of the load gear is specified as the ratio between motor revolutions and load revolutions.

Number of motor revolutions

In this configuration field, configure the integer number of motor revolutions.

Number of load revolutions

In this configuration field, configure the integer number of load revolutions.

Position parameters

Leadscrew pitch

In this configuration field, configure the distance by which the load is moved when the leadscrew makes one revolution.

See also

Positioning axis technology object (Page 104)

Synchronous axis technology object (Page 105)

Axis type: Rotary

Rotary - On motor shaft

The encoder is connected to the motor shaft in a mechanically fixed manner. Motor and encoder form a unit.

Invert drive direction

Select the check box if the direction of rotation of the drive is to be inverted.

Load gear

The gear ratio of the load gear is specified as the ratio between motor revolutions and load revolutions.

Number of motor revolutions

In this configuration field, configure the integer number of motor revolutions.

Number of load revolutions

In this configuration field, configure the integer number of load revolutions.

See also

Positioning axis technology object (Page 104)

Synchronous axis technology object (Page 105)

Rotary - On load side

The encoder is mechanically connected to the load side of the gear.

Invert drive direction

Select the check box if the direction of rotation of the drive is to be inverted.

Load gear

The gear ratio of the load gear is specified as the ratio between motor revolutions and load revolutions.

Number of motor revolutions

In this configuration field, configure the integer number of motor revolutions.

Number of load revolutions

In this configuration field, configure the integer number of load revolutions.

See also

Positioning axis technology object (Page 104)

Synchronous axis technology object (Page 105)

Rotary - External Measuring System

An external measuring system provides the position values of the rotary load motion.

Distance per encoder revolution

In this configuration field, configure the linear load travel per encoder revolution.

Invert drive direction

Select the check box if the direction of rotation of the drive is to be inverted.

Load gear

The gear ratio of the load gear is specified as the ratio between motor revolutions and load revolutions.

Number of motor revolutions

In this configuration field, configure the integer number of motor revolutions.

Number of load revolutions

In this configuration field, configure the integer number of load revolutions.

See also

Positioning axis technology object (Page 104)

Synchronous axis technology object (Page 105)

5.4.4.2 Configuration - Dynamic Defaults

In the "Dynamic default values" configuration window, configure the default values for velocity, acceleration, deceleration and jerk of the axis.

The default values take effect, when values < 0 are specified in Motion Control instructions for the "Velocity", "Acceleration", "Deceleration" or "Jerk" parameters. The default values can be applied separately for each of the parameters just listed.

The default values for acceleration and deceleration also act on the traversing motions of active homing.

Velocity

In this field, define the default value for the velocity of the axis.

Acceleration / Deceleration - Ramp-up time / Ramp-down time

Configure the desired default value for acceleration in the "Ramp-up time" or "Acceleration" fields. The desired deceleration can be set in the "Ramp-down time" or "Deceleration" fields.

The following equations show the relationship between the ramp-up time and acceleration and the ramp-down time and deceleration:

$$\text{Ramp-up time} = \frac{\text{Velocity}}{\text{Acceleration}}$$

$$\text{Ramp-down time} = \frac{\text{Velocity}}{\text{Deceleration}}$$

Note

A change in the velocity influences the acceleration and deceleration values of the axis. The ramp-up and ramp-down times are retained.

Smoothing time / jerk

You can enter the jerk limit parameters in the "Smoothing time" box, or alternatively in the "Jerk" box:

- Set the desired jerk for the acceleration and deceleration ramp in the "Jerk" field. The value 0 means that jerk limiting is deactivated.
- Set the desired smoothing time for the acceleration ramp in the "Smoothing time" field.

Note

The jerk value is identical for the acceleration and deceleration ramp. The smoothing time in effect for the deceleration ramp results from the following relationships:

- **Acceleration > Deceleration**
  A shorter smoothing time is used for the deceleration ramp compared with the acceleration ramp.
- **Acceleration < Deceleration**
  A longer smoothing time is used for the deceleration ramp compared with the acceleration ramp.
- **Acceleration = Deceleration**
  The smoothing times of the acceleration and deceleration ramp are equal.

If an error occurs, the axis decelerates with the configured emergency stop deceleration. A configured jerk limit is not taken into account for this.

The following equations show the relationship between the smoothing times and the jerk:

$$\text{Smoothing time (acceleration ramp)} = \frac{\text{Acceleration}}{\text{Jerk}}$$

$$\text{Smoothing time (deceleration ramp)} = \frac{\text{Deceleration}}{\text{Jerk}}$$

Motion jobs started in the user program are performed with the selected jerk.

See also

Positioning axis technology object (Page 104)

Velocity profile (Page 60)

Synchronous axis technology object (Page 105)

5.4.4.3 Configuration - Emergency stop

In the "Emergency stop" configuration window, you can configure the emergency stop deceleration of the axis. In the event of an error, and when disabling the axis, the axis is brought to a standstill with this deceleration using the Motion Control instruction "MC_Power" (input parameter StopMode = 0).

Emergency stop deceleration / Emergency stop ramp-down time

Configure the deceleration value for emergency stop in the "Emergency stop deceleration" field or the "Emergency stop ramp-down time" field.

The relationship between emergency stop ramp-down time and emergency stop deceleration can be seen in the following equation:

$$\textit{Emergency stop ramp-down time} = \frac{\textit{Maximum velocity}}{\textit{Emergency stop deceleration}}$$

The configuration of the emergency stop deceleration is related to the configured maximum velocity of the axis. If the maximum velocity of the axis changes, then the value of the emergency stop deceleration also changes (the emergency stop ramp-down time remains unchanged).

See also

Positioning axis technology object (Page 104)

Emergency stop deceleration (Page 62)

Synchronous axis technology object (Page 105)

5.4.4.4 Limits

Configuration - Position limits

Configure the hardware and software limit switches of the axis in the "Position limits" configuration window.

Enable HW limit switches

The check box activates the function of the negative and positive hardware limit switches. The negative hardware limit switch is located on the side in the negative direction of travel, and the positive hardware limit switch on the side in the positive direction of travel.

If a hardware limit switch is reached, technology alarm 531 is output, and the technology object is disabled (alarm response: remove enable).

Exception: If a hardware limit switch is crossed during an active home position approach with activated direction reversal at the hardware limit switch, the axis stops with the configured maximum deceleration and continues the home position approach in the opposite direction.

Note

Only use hardware limit switches that remain permanently switched after the approach. This switching state may only be canceled after the return into the permitted traversing range.

The digital inputs of the hardware limit switches are evaluated by default in cyclic data exchange. In the settings for the input module under "I/O addresses", select the entry "MC-Servo" for "Organization block" and the entry "TPA OB Servo" for "Process image" if the hardware limit switches are to be evaluated in the position control cycle clock of the drive.

Negative / positive HW limit switch input

In these fields, select the PLC tag of the digital input for the negative and positive HW limit switches.

In order to be able to select an input, a digital input module must have been added in the device configuration, and the PLC tag name for the digital input must be defined.

CAUTION

During installation of hardware limit switches, attention must be paid to the filter times of the digital inputs.

Based on the time for one position control cycle clock and the filter time of the digital inputs, the resulting delay times must be taken into account.

The filter time is configurable in individual digital input modules in the device configuration.

The digital inputs are set to a filter time of 6.4 ms by default. If these are used as hardware limit switches, undesired decelerations may occur. If this occurs, reduce the filter time for the relevant digital inputs.

The filter time can be set under "Input filter" in the device configuration of the digital inputs.

Negative / positive HW limit switch level selection

In the drop-down list, select the triggering signal level ("Low level" / "High level") of the hardware limit switch. With "Low level", the input signal is FALSE after the axis has reached or crossed the hardware limit switch. With "High level", the input signal is TRUE after the axis has reached or crossed the hardware limit switch.

Enable software limit switch

This check box activates the high and low software limit switches. When software switches are activated, an active motion comes to a stop at the position of the software limit switch. The technological object signals an error. After acknowledgment of the error, the axis can again be moved in the direction of its operating range.

Note

Activated software limit switches act only on a homed axis.

Position of negative / positive SW limit switch

Configure the operating range of the axis with the positions of the negative and positive software limit switches.

See also

Positioning axis technology object (Page 104)

Synchronous axis technology object (Page 105)

Configuration - Dynamic limits

In the "Dynamic limits" configuration window, configure the maximum values for velocity, acceleration, deceleration and jerk of the axis.

Maximum velocity

In this field, define the maximum permitted velocity of the axis.

Maximum acceleration / maximum deceleration - ramp-up time / ramp-down time

Set the desired acceleration in the "Ramp-up time" or "Acceleration" fields. The desired deceleration can be set in the "Ramp-down time" or "Deceleration" fields.

The following equations show the relationship between the ramp-up time and acceleration and the ramp-down time and deceleration:

$$\text{Ramp-up time} = \frac{\text{Maximum velocity}}{\text{Acceleration}}$$

$$\text{Ramp-down time} = \frac{\text{Maximum velocity}}{\text{Deceleration}}$$

Note

A change in the maximum velocity influences the acceleration and deceleration values of the axis. The ramp-up and ramp-down times are retained.

The "maximum deceleration" for active homing with change of direction at the hardware limit switch must be set sufficiently large, to brake the axis before reaching the mechanical endstop.

Smoothing time / jerk

You can enter the jerk limit parameters in the "Smoothing time" box, or alternatively in the "Jerk" box:

- Set the desired jerk for the acceleration and deceleration ramp in the "Jerk" field. The value 0 means that the jerk is not limited.
- Set the desired smoothing time for the acceleration ramp in the "Smoothing time" field.

Note

The configured smoothing time displayed in the configuration, applies only to the acceleration ramp.

If the values of the acceleration and deceleration differ, the smoothing time of the deceleration ramp is calculated and used according to the jerk of the acceleration ramp.

The smoothing time of the deceleration is adapted as follows:

- **Acceleration > Deceleration**
  A shorter smoothing time is used for the deceleration ramp compared with the acceleration ramp.
- **Acceleration < Deceleration**
  A longer smoothing time is used for the deceleration ramp compared with the acceleration ramp.
- **Acceleration = Deceleration**
  The smoothing times of the acceleration and deceleration ramp are equal.

If an error occurs, the axis decelerates with the configured emergency stop deceleration. A configured jerk limit is not taken into account for this.

The following equations show the relationship between the smoothing times and the jerk:

$$\text{Smoothing time (acceleration ramp)} = \frac{\text{Acceleration}}{\text{Jerk}}$$

$$\text{Smoothing time (deceleration ramp)} = \frac{\text{Deceleration}}{\text{Jerk}}$$

Motion jobs started in the user program are performed with the selected jerk.

See also

Velocity profile (Page 60)

Dynamic limits in synchronous operation (Page 62)

Positioning axis technology object (Page 104)

Synchronous axis technology object (Page 105)

Configuration - Torque limits

Configure the force/torque limiting of the drive in the "Torque limiting" configuration window.

The configuration is now available if a drive that supports force/torque limiting is selected and a telegram 10x is used. Telegram 101 cannot be used.

Effective

In the drop-down list, select whether the limit value is to be in effect "on load side" or "on motor side".

Torque limits

Enter a default value for the torque limiting in the specified unit of measurement in this field.

The default value is in effect when the torque limiting is specified using Motion Control instruction "MC_TorqueLimiting", input parameter "Limit" < 0.

Torque limiting applies to the following axis configurations:

- Axis type is "Rotary" and limit value is in effect "On load side" or "On motor side"
- Axis type is "Linear" and limit value is in effect "On motor side"

Force limit

Enter a default value for the force limit in the specified unit of measure in this field.

The default value is in effect when the force limit is specified using Motion Control instruction "MC_TorqueLimiting", input parameter "Limit" < 0.

The force limit applies to the following axis configuration: Axis type is "Linear" and limit value is in effect "On load side"

If the gear and leadscrew efficiency is crucial, this can be set in the <TO>.Actor.Efficiency tag.

Disable/enable position-based monitoring

As a result of the force/torque limiting on the drive, a larger following error may occur or the axis standstill may not be detected reliably in positioning monitoring.

Deactivate "Position-related monitoring" in order to deactivate monitoring of the following error and the positioning monitoring during force/torque limiting.

Interconnection in the SINAMICS drive

The following interconnection is required in the SINAMICS drive:

- P1522 must be interconnected to a fixed value of + 100%,
- P1523 to a fixed value of -100% (e.g. through interconnection to fixed value parameter P2902[i]).

See also

Force/torque limiting (Page 63)

Positioning axis technology object (Page 104)

Synchronous axis technology object (Page 105)

Configuration - Fixed stop detection

Configure the fixed stop detection in the configuration window.

A "Travel to fixed stop" can be realized by activating fixed stop detection using the Motion Control instruction "MC_TorqueLimiting" and a position-controlled motion job. The operation is also referred to as clamping.

Positioning tolerance

In this configuration field, configure the positioning tolerance that is regarded as a breaking away or turning back of the fixed stop when exceeded. To detect the breaking away or turning back of the fixed stop, the position setpoint must be located outside the positioning tolerance. The configured position tolerance must be less than the configured following error.

Following error

If the drive is stopped by a mechanical fixed stop during a motion job, the following error is increased. The accumulating following error serves as a criterion for fixed stop detection. In the "Following error" configuration field, configure the value of the following error starting from which the fixed stop detection is to take effect. The configured following error must be greater than the configured position tolerance.

Note

If the following error monitoring was activated in the position monitoring configuration, the "Maximum following error" configured there must be greater than the "Following error" of the fixed stop detection.

See also

Fixed stop detection (Page 65)

Positioning axis technology object (Page 104)

Synchronous axis technology object (Page 105)

5.4.4.5 Homing

Homing means matching the position value of a technology object to the real, physical location of the drive. Absolute target positions of the axis can only be approached with a homed axis.

In S7-1500 Motion Control, the axis is homed with the Motion Control instruction, "MC_Home". A distinction is made between the following operating modes of the Motion Control instruction:

Operating modes of the Motion Control instruction "MC_Home"

- **Active homing (incremental encoder)**

  With active homing, the Motion Control instruction "MC_Home" performs the configured home position approach. Active traversing motions are aborted. When the homing mark is detected, the position of the axis is set according to the configuration.

- **Passive homing (incremental encoder)**

  With passive homing, the Motion Control instruction "MC_Home" instruction does not carry out any homing motion. The traversing motion required for this must be implemented by the user with other Motion Control instructions. Active traversing motions are not aborted upon start of passive homing. When the homing mark is detected, the axis is set according to the configuration.

- **Direct homing absolute (incremental encoder or absolute encoder)**

  The axis position is set without taking into consideration the home position switch. Active traversing motions are not aborted. The value of input parameter "Position" of Motion Control instruction "MC_Home" is set immediately as the actual position of the axis.

- **Direct homing (relative) (incremental encoder or absolute encoder)**

  The axis position is set without taking into consideration the home position switch. Active traversing motions are not aborted. The following statement applies to the axis position after homing:

  New axis position = Current axis position + Value of parameter "Position" of instruction "MC_Home".

See also

Positioning axis technology object (Page 104)

Synchronous axis technology object (Page 105)

Homing (Page 69)

Active homing

Configuration - Active homing

In the "Active Homing" configuration window, configure the parameters for active homing. "Active homing" is performed using the Motion Control instruction "MC_Home " Mode = 3 and 5.

Note

Parameter "MC_Home.Mode" (S7-1500 CPU)

The "MC_Home.Mode" parameter for S7-1200 Motion Control and S7-1500 Motion Control has been standardized within the framework of technology version V2.0. This results in a new assignment of the parameter values for the "MC_Home.Mode" parameter. A comparison of the "MC_Home.Mode" parameter for technology versions V1.0 and V2.0 is available in the section Version overview (Page 155).

Settings for

In the drop-down list, select the encoder for which the homing settings are to apply (only for S7-1500T).

Select the homing mode

Select from among the following homing modes:

- Reference cam and zero mark via PROFIdrive telegram (Page 218)
- Use zero mark via PROFIdrive telegram (Page 219)
- Homing mark via digital input (Page 220)

See also

Homing (Page 69)

Positioning axis technology object (Page 104)

Synchronous axis technology object (Page 105)

Reference cam and zero mark via PROFIdrive telegram

Enable direction reversal at the hardware limit switch

Select this check box to use the hardware limit switch as a reversing cam for the home position approach. After the axis has reached the hardware limit switch during active homing, it is ramped down at the configured maximum deceleration rate and the direction is then reversed. The reference cam is then searched for in the reverse direction. If this function is not enabled and the axis reaches the hardware limit switch during active homing, then the drive is disabled and braked with the ramp configured in the drive.

Approach direction

Select the approach direction for the reference cam search.

"Positive" is the approach direction in the direction of positive position values; "negative" in the direction of negative position values.

Homing direction

Select the direction in which the zero mark should be approached for homing.

Approach velocity

In this field, specify the velocity at which the reference cam is searched for during the homing procedure. Any configured home position offset is traversed at the same velocity.

Homing velocity

In this field, specify the velocity at which the axis approaches the zero mark for homing. For zero mark detection, the reference cam must be exited.

Home position offset

In the case of a differing zero mark position and home position, enter the corresponding home position offset in this field. The axis approaches the home position at approach velocity.

Home position

In this field, configure the absolute coordinate of the home position. The home position configured here is in effect, when the Motion Control instruction "MC_Home" is executed with Mode = 5.

See also

Positioning axis technology object (Page 104)

Synchronous axis technology object (Page 105)

Homing (Page 69)

Use zero mark via PROFIdrive telegram

Enable direction reversal at the hardware limit switch

Select this check box to use the hardware limit switch as a reversing cam for the home position approach. After the axis has reached the hardware limit switch during active homing, it is ramped down at the configured maximum deceleration rate and the direction is then reversed. The zero mark is then sought in the reverse direction. If this function is not enabled and the axis reaches the hardware limit switch during active homing, then the drive is disabled and braked with the ramp configured in the drive.

Homing direction

Select the direction in which the next zero mark should be approached for homing.

"Positive" is the homing direction in the direction of positive position values; "negative" in the direction of negative position values.

Approach velocity

In the "Zero mark via PROFIdrive frame" homing mode, the approach velocity for traversing the home position offset is used.

Homing velocity

In this field, specify the velocity at which the axis approaches the zero mark for homing.

Home position offset

In the case of a differing zero mark position and home position, enter the corresponding home position offset in this field. The axis approaches the home position at approach velocity.

Home position

In this field, configure the absolute coordinate of the home position. The home position configured here is in effect, when the Motion Control instruction "MC_Home" is executed with Mode = 5.

See also

Positioning axis technology object (Page 104)

Synchronous axis technology object (Page 105)

Homing (Page 69)

Homing mark via digital input

When a digital input is used as a homing mark, the accuracy of the homing process is not as high as for hardware-supported homing using zero marks.

You can improve the accuracy by using a low homing velocity.

Pay attention to the setting of short filter times for the digital input as well.

Digital input homing mark/cam

In this configuration field, select the PLC tag of the digital input that is to act as a homing mark (reference cam). Also select the level at which the homing mark is to be detected.

In order to be able to select an input, a digital input module must have been added in the device configuration, and the PLC tag name for the digital input must be defined.

Enable direction reversal at the hardware limit switch

Select this check box to use the hardware limit switch as a reversing cam for the home position approach. After the axis has reached the hardware limit switch during active homing, it is ramped down at the configured maximum deceleration rate and then reversed. The homing mark is then sensed in reverse direction. If this function is not enabled and the axis reaches the hardware limit switch during active homing, then the drive is disabled and braked with the ramp configured in the drive.

Approach direction

Select the approach direction for the homing mark search.

"Positive" is the approach direction in the direction of positive position values; "negative" in the direction of negative position values.

Homing direction

Select the direction in which the homing mark for homing is to be approached.

Homing mark

Select the switch position of the "digital input" that is to be used as the homing mark.

When a "digital input" is crossed, two switching edges that are spatially separated from one another are generated. The selection of the positive or negative side ensures that the homing mark is always evaluated at the same mechanical position.

The positive side is the switch position with a greater position value; the negative side is the switch position with the lesser position value.

The selection of the side is independent of the approach direction, and independent of whether it causes a rising or falling edge.

Approach velocity

In this field, specify the velocity at which the axis searches for the "digital input" during the home position approach. Any configured home position offset is traversed at the same velocity.

Homing velocity

In this field, specify the velocity at which the axis approaches the home position for homing.

Home position offset

If the homing mark position is different from the home position, enter the corresponding home position offset in this field. The axis approaches the home position at approach velocity.

Home position

In this field, configure the absolute coordinate of the home position. The home position configured here is in effect, when the Motion Control instruction "MC_Home" is executed with Mode = 5.

See also

Positioning axis technology object (Page 104)

Synchronous axis technology object (Page 105)

Homing (Page 69)

Passive homing

Configuration - Passive homing

Configure the parameters for passive homing in the "Passive Homing" (homing on the fly) configuration window. Passive homing is performed using the Motion Control instruction "MC_Home" Mode = 2, 8 and 10.

Note

Parameter "MC_Home.Mode" (S7-1500 CPU)

The "MC_Home.Mode" parameter for S7-1200 Motion Control and S7-1500 Motion Control has been standardized within the framework of technology version V2.0. This results in a new assignment of the parameter values for the "MC_Home.Mode" parameter. A comparison of the "MC_Home.Mode" parameter for technology versions V1.0 and V2.0 is available in the section Version overview (Page 155).

Settings for

In the drop-down list, select the encoder for which the homing settings are to apply (only for S7-1500T).

Select the homing mode

Select from among the following homing modes:

- Zero mark via PROFIdrive frame (Page 223)
- Zero mark via PROFIdrive telegram and reference cam (Page 224)
- Homing mark via digital input (Page 225)

See also

Homing (Page 69)

Positioning axis technology object (Page 104)

Synchronous axis technology object (Page 105)

Zero mark via PROFIdrive frame

Homing direction

Select the direction in which the next zero mark should be approached for homing. The following options are available:

- **Positive**

  Axis moves in the direction of higher position values.

- **Negative**

  Axis moves in the direction of lower position values.

- **Current**

  The currently effective approach direction is used for homing.

Home position

In this field, configure the absolute coordinate of the home position. The home position configured here is in effect when the Motion Control instruction "MC_Home" is executed with Mode = 10.

Note

Parameter "MC_Home.Mode"

The "MC_Home.Mode" parameter for S7-1200 Motion Control and S7-1500 Motion Control has been standardized within the framework of technology version V2.0. This results in a new assignment of the parameter values for the "MC_Home.Mode" parameter. A comparison of the "MC_Home.Mode" parameter for technology versions V1.0 and V2.0 is available in the section Version overview (Page 155).

See also

Positioning axis technology object (Page 104)

Synchronous axis technology object (Page 105)

Homing (Page 69)

Zero mark via PROFIdrive telegram and reference cam

Homing direction

Select the direction in which the zero mark should be approached for homing. The next zero mark after leaving the reference cam is used.

The following options are available:

- **Positive**

  Axis moves in the direction of higher position values.

- **Negative**

  Axis moves in the direction of lower position values.

- **Current**

  The currently effective approach direction is used for homing.

Home position

In this field, configure the absolute coordinate of the home position. The home position configured here is in effect when the Motion Control instruction "MC_Home" is executed with Mode = 10.

Note

Parameter "MC_Home.Mode"

The "MC_Home.Mode" parameter for S7-1200 Motion Control and S7-1500 Motion Control has been standardized within the framework of technology version V2.0. This results in a new assignment of the parameter values for the "MC_Home.Mode" parameter. A comparison of the "MC_Home.Mode" parameter for technology versions V1.0 and V2.0 is available in the section Version overview (Page 155).

See also

Positioning axis technology object (Page 104)

Synchronous axis technology object (Page 105)

Homing (Page 69)

Homing mark via digital input

Digital input homing mark/cam

In this dialog field, select a digital input that is to act as a homing mark (reference cam). Also select the level at which the homing mark is to be detected.

Homing direction

Select the direction in which the homing mark for homing is to be approached.

The following options are available:

- **Positive**

  Axis moves in the direction of higher position values.

- **Negative**

  Axis moves in the direction of lower position values.

- **Current**

  The currently effective approach direction is used for homing.

Homing mark

Select which switch position of the "digital input" is to be used as the homing mark.

When a "digital input" is crossed, two switching edges that are spatially separated from one another are generated. The selection of the positive or negative side ensures that the homing mark is always evaluated at the same mechanical position.

The positive side is the switch position with a greater position value; the negative side is the switch position with the lesser position value.

The selection of the side is independent of the approach direction, and independent of whether it causes a rising or falling edge.

Home position

In this field, configure the absolute coordinate of the home position. The home position configured here is in effect when the Motion Control instruction "MC_Home" is executed with Mode = 10.

Note

Parameter "MC_Home.Mode"

The "MC_Home.Mode" parameter for S7-1200 Motion Control and S7-1500 Motion Control has been standardized within the framework of technology version V2.0. This results in a new assignment of the parameter values for the "MC_Home.Mode" parameter. A comparison of the "MC_Home.Mode" parameter for technology versions V1.0 and V2.0 is available in the section Version overview (Page 155).

See also

Positioning axis technology object (Page 104)

Synchronous axis technology object (Page 105)

Homing (Page 69)

5.4.4.6 Position monitoring functions

Configuration - Positioning monitoring

In the "Positioning monitoring" configuration window, configure the criteria for monitoring the target position.

Positioning window:

Configure the size of the positioning window in this field. If the axis is located within this window, the position is considered to be "reached".

Tolerance time

In this field, configure the tolerance time within which the position value must reach the positioning window.

Minimum dwell time in positioning window:

Configure the minimum dwell time in this field. The current position value must be located in the positioning window for at least the "minimum dwell time".

If one of the criteria is violated, then the axis is stopped and a positioning alarm is displayed.

See also

Positioning axis technology object (Page 104)

Synchronous axis technology object (Page 105)

Position monitoring functions (Page 88)

Configuration - Following error

In the "Following Error" configuration window, configure the permissible deviation of the actual position of the axis from the position setpoint. The following error can be dynamically adapted to the current velocity of the axis.

Enable following error monitoring

Select this check box, if you want to enable following error monitoring. When following error monitoring is enabled, the axis will be stopped in the error range (orange); in the warning range an alarm will be displayed.

When following error monitoring is disabled, the configured limits have no effect.

Maximum following error:

Configure the following error that is permissible at maximum velocity in this field.

Warning level:

Configure a percentage of the current following error limit, above which a following error warning should be output in this field.

Example: The current maximum following error is 100 mm; the warning level is configured at 90%. If the current following error exceeds a value of 90 mm, then a following error warning will be output.

Following error:

In this field, configure the permissible following error for low velocities (without dynamic adjustment of the following error).

Start of dynamic adjustment:

Configure the velocity starting from which the following error is to be dynamically adjusted in this field. Starting from this velocity, the following error up to the maximum velocity will be adjusted to the maximum following error.

See also

Positioning axis technology object (Page 104)

Synchronous axis technology object (Page 105)

Position monitoring functions (Page 88)

Configuration - Standstill signal

In the "Standstill signal" configuration window, configure the criteria for standstill detection.

Standstill window:

Configure the size of the standstill window in this field. For standstill to be indicated, the velocity of the axis must be within this window.

Minimum dwell time in standstill window:

Configure the minimum dwell time in the standstill window in this field. The velocity of the axis must also be in the standstill window for the specified duration.

If both criteria are met, then the standstill of the axis is indicated.

See also

Positioning axis technology object (Page 104)

Standstill signal (Page 90)

Synchronous axis technology object (Page 105)

5.4.4.7 Configuration - Control loop

In the "Control loop" configuration window, configure the precontrol and the gain Kv of the position control loop.

The Kv factor affects the following parameters:

- Positioning accuracy and stop control
- Uniformity of motion
- Positioning time

The better the mechanical conditions of the axis are (high stiffness), the higher the Kv factor can be configured. This reduces the following error, and a higher dynamic response is achieved.

For basic information, refer to the section Closed-loop control (Page 92).

Precontrol

Configure the percentage velocity precontrol in this field.

Speed control loop substitute time

Configure the speed control loop substitute time in this field (T_{vtc}).

When speed precontrol is activated, the setpoint is delayed by the speed control loop substitute time before the control deviation is established. This prevents an overshoot or a leading of the actual value compared with the position setpoint. The speed control loop substitute time is a simplified substitute model of the dynamic behavior of the speed control loop. The speed control loop substitute time is included in the balancing filter.

Gain (Kv factor)

In the input field, enter the gain Kv of the position control loop.

Dynamic Servo Control (DSC)

For position-controlled axes (positioning axes/synchronous axes), the closed loop position control can occur either in the CPU or in the drive, provided the drive supports Dynamic Servo Control (DSC). Select your preferred control process:

- **Position control in the drive (DSC enabled)**
  With the Dynamic Servo Control (DSC) function, the position controller is executed in the drive in the cycle clock of the speed control loop. This enables you to set a much larger position controller gain factor Kv. This increases the dynamics for setpoint sequence and disturbance variable correction for highly dynamic drives.
- **Position control in the PLC**

Note

Dynamic Servo Control (DSC) is only possible with one of the following PROFIdrive telegrams:

- Standard telegram 5 or 6
- SIEMENS telegram 105 or 106

See also

Closed-loop control (Page 92)

Control structure (Page 93)

Function and structure of the optimization (Page 325)

Positioning axis technology object (Page 104)

Synchronous axis technology object (Page 105)

5.5 Configuring the technology object external encoder

5.5.1 Configuration - Basic Parameters

Configure the basic properties of the technology object in the "Basic Parameters" configuration window.

Name

Define the name of the external encoder in this field. The technology object is listed under this name in the project tree. The tags of the external encoder can be used in the user program under this name.

External encoder type

In this selection, configure whether the external encoder records linear or rotary motions.

Units of measure

In the drop-down list, select the desired units of measure for the position and velocity of the external encoder.

Modulo

Select the check box "Enable modulo", if you want to use a recurring measuring system for the external encoder (e.g. 0-360° for an external encoder of the "rotary" type).

- **Modulo start value**

  In this field, define the position at which the modulo range should begin (e.g. 0° for an external encoder of the "rotary" type).

- **Modulo length**

  In this field, define the length of the modulo range (e.g. 360° for an external encoder of the "rotary" type).

See also

Units of measure (Page 32)

Modulo setting (Page 33)

Technology object external encoder (Page 110)

5.5.2 Hardware interface

5.5.2.1 Configuration - Encoder

The external encoder records the position of an externally controlled drive. The encoder required for this purpose communicates the encoder position to the controller by means of a PROFIdrive telegram. Configure the encoder and encoder type in the "Encoder" configuration window.

Data connection

In the drop-down list, select whether the data connection should be established directly with the encoder or via a data block that can be edited in the user program.

The selection is only possible for encoders that are connected via PROFIdrive and support parameter P979.

Encoder / Data block

Select the encoder you have configured in the device configuration in this area.

The following encoders can be used:

- Encoder on technology module (TM)

  In the "Encoder" configuration field, select a previously configured technology module and the channel to be used. Only technology modules set to the "Position input for Motion Control" mode are displayed for selection.

  You can operate the technology module centrally on an S7-1500 PLC or decentrally on a distributed I/O. Isochronous mode is not possible with central operation in the CPU.

  You can identify the technology modules suitable for position detection for Motion Control in the documentation for the technology module and the catalog data.

- Encoder via PROFINET/PROFIBUS (PROFIdrive)

  In the " Encoder" configuration field, select a configured encoder on the PROFINET/PROFIBUS.

If "Data block" was selected for the data connection, a previously created data block containing a variable structure of data type "PD_TELx" must be selected here ("x" stands for the telegram number used).

Encoder type

Select the encoder type in this configuration field. The following encoder types are available for selection:

- Incremental encoder
- Absolute encoder
- Absolute encoder cyclic absolute

See also

Technology object external encoder (Page 110)

Data connection drive/encoder via data block (Page 50)

Connect drive/encoder via data block (Page 269)

5.5.2.2 Configuration - Data exchange

Configuration - Data exchange

Configure detailed encoder parameters and the data exchange with the encoder in the "Data exchange with encoder" configuration window. The configuration varies according to the encoder connection:

- Encoder to technology module (Page 232)
- Encoder to PROFINET/PROFIBUS (Page 235)

See also

Technology object external encoder (Page 110)

Encoder to technology module

Data exchange with encoder

In this area, you can configure the encoder telegram and the criteria for how the encoder data are to be evaluated. The specifications must match those in the device configuration.

Encoder telegram

In the drop-down list for the technology module, select the telegram that you have configured in the technology module.

Automatic data exchange for encoder values (offline)

Select the check box if you want to transfer the offline values of the encoder to the configuration of the technology object in the project.

Note

Automatic transfer of encoder parameters is only possible with PROFIdrive encoders as of product version A16. For this, "Hardware interface > Encoder" must be selected as the "Encoder" data connection in the configuration window.

Automatic data exchange for encoder values (online)

Select the check box if you want to transfer the effective values online in the encoder to the CPU during runtime. The encoder parameters are transferred from the bus after the (re-)initialization of the technology object and (re)start of the encoder or the CPU.

Note

Automatic transfer of encoder parameters is only possible with PROFIdrive encoders as of product version A16. For this, "Hardware interface > Encoder" must be selected as the "Encoder" data connection in the configuration window.

Alternatively, you must calibrate the following parameters manually:

Encoder type

Configure how the encoder data are to be evaluated in this area. The specifications must match those in the device configuration.

Encoder type	Rotary incremental
Increments per revolution:	Configure the number of increments that the encoder resolves per revolution in this field.
Bits for fine resolution in the incremental actual value (Gx_XIST1)	Configure the number of bits for fine resolution within the incremental actual value (Gx_XIST1) in this field.

Encoder type	Rotary absolute
Increments per revolution:	Configure the number of increments that the encoder resolves per revolution in this field.
Number of revolutions:	Configure the number of revolutions that the absolute encoder can detect in this field.
Bits for fine resolution in the incremental actual value (Gx_XIST1)	Configure the number of bits for fine resolution within the incremental actual value (Gx_XIST1) in this field.
Bits for fine resolution in the absolute actual value (Gx_XIST2)	Configure the number of bits for fine resolution within the absolute actual value (Gx_XIST2) in this field.

Encoder type	Rotary cyclic absolute
Increments per revolution:	Configure the number of increments that the encoder resolves per revolution in this field.
Number of revolutions:	Configure the number of revolutions that the absolute encoder can detect in this field.

Encoder type	Rotary cyclic absolute
Bits for fine resolution in the incremental actual value (Gx_XIST1)	Configure the number of bits for fine resolution within the incremental actual value (Gx_XIST1) in this field.
Bits for fine resolution in the absolute actual value (Gx_XIST2)	Configure the number of bits for fine resolution within the absolute actual value (Gx_XIST2) in this field.

Encoder type	Linear incremental
Distance between two increments:	Configure the distance between two increments of the encoder in this field.
Bits for fine resolution in the incremental actual value (Gx_XIST1)	Configure the number of bits for fine resolution within the incremental actual value (Gx_XIST1) in this field.

Encoder type	Linear absolute
Distance between two increments:	Configure the distance between two increments of the encoder in this field.
Bits for fine resolution in the incremental actual value (Gx_XIST1)	Configure the number of bits for fine resolution within the incremental actual value (Gx_XIST1) in this field.
Bits for fine resolution in the absolute actual value (Gx_XIST2)	Configure the number of bits for fine resolution within the absolute actual value (Gx_XIST2) in this field.

Encoder type	Linear cyclic absolute
Distance between two increments	Configure the distance between two increments of the encoder in this field.
Bits for fine resolution in the incremental actual value (Gx_XIST1)	Configure the number of bits for fine resolution within the incremental actual value (Gx_XIST1) in this field.
Bits for fine resolution in the absolute actual value (Gx_XIST2)	Configure the number of bits for fine resolution within the absolute actual value (Gx_XIST2) in this field.

See also

Configuration - Data exchange (Page 232)

Encoder to PROFINET/PROFIBUS (Page 235)

Technology object external encoder (Page 110)

Encoder to PROFINET/PROFIBUS

Data exchange with encoder

In this area, you can configure the encoder telegram and the criteria for how the encoder data are to be evaluated. The specifications must match those in the device configuration.

Encoder telegram

The telegram to the encoder that is set in the device configuration is preselected in the drop-down list.

Automatic data exchange for encoder values (offline)

Select the check box if you want to transfer the offline values of the encoder to the configuration of the technology object in the project.

Note

Automatic transfer of encoder parameters is only possible with PROFIdrive encoders as of product version A16. For this, "Hardware interface > Encoder" must be selected as the "Encoder" data connection in the configuration window.

Automatic data exchange for encoder values (online)

Select the check box if you want to transfer the effective values online in the encoder to the CPU during runtime. The encoder parameters are transferred from the bus after the (re-)initialization of the technology object and (re)start of the encoder or the CPU.

Note

Automatic transfer of encoder parameters is only possible with PROFIdrive encoders as of product version A16. For this, "Hardware interface > Encoder" must be selected as the "Encoder" data connection in the configuration window.

Alternatively, you must calibrate the following parameters manually:

Encoder type

Depending on the selected encoder type, configure the following parameters:

Encoder type	Rotary incremental
Increments per revolution	Configure the number of increments that the encoder resolves per revolution in this field.
Bits for fine resolution in the incremental actual value (Gx_XIST1)	Configure the number of bits for fine resolution within the incremental actual value (Gx_XIST1) in this field.

Encoder type	Rotary absolute
Increments per revolution	Configure the number of increments that the encoder resolves per revolution in this field.
Number of revolutions	Configure the number of revolutions that the absolute encoder can detect in this field.
Bits for fine resolution in the incremental actual value (Gx_XIST1)	Configure the number of bits for fine resolution within the incremental actual value (Gx_XIST1) in this field.
Bits for fine resolution in the absolute actual value (Gx_XIST2)	Configure the number of bits for fine resolution within the absolute actual value (Gx_XIST2) in this field.

Encoder type	Rotary cyclic absolute
Increments per revolution	Configure the number of increments that the encoder resolves per revolution in this field.
Number of revolutions	Configure the number of revolutions that the absolute encoder can detect in this field.
Bits for fine resolution in the incremental actual value (Gx_XIST1)	Configure the number of bits for fine resolution within the incremental actual value (Gx_XIST1) in this field.
Bits for fine resolution in the absolute actual value (Gx_XIST2)	Configure the number of bits for fine resolution within the absolute actual value (Gx_XIST2) in this field.

Encoder type	Linear incremental
Distance between two increments	Configure the distance between two increments of the encoder in this field.
Bits for fine resolution in the incremental actual value (Gx_XIST1)	Configure the number of bits for fine resolution within the incremental actual value (Gx_XIST1) in this field.

Encoder type	Linear absolute
Distance between two increments	Configure the distance between two increments of the encoder in this field.
Bits for fine resolution in the incremental actual value (Gx_XIST1)	Configure the number of bits for fine resolution within the incremental actual value (Gx_XIST1) in this field.
Bits for fine resolution in the absolute actual value (Gx_XIST2)	Configure the number of bits for fine resolution within the absolute actual value (Gx_XIST2) in this field.

Encoder type	Linear cyclic absolute
Distance between two increments	Configure the distance between two increments of the encoder in this field.
Bits for fine resolution in the incremental actual value (Gx_XIST1)	Configure the number of bits for fine resolution within the incremental actual value (Gx_XIST1) in this field.
Bits for fine resolution in the absolute actual value (Gx_XIST2)	Configure the number of bits for fine resolution within the absolute actual value (Gx_XIST2) in this field.

See also

Configuration - Data exchange (Page 232)

Encoder to technology module (Page 232)

Technology object external encoder (Page 110)

5.5.3 Extended Parameters

5.5.3.1 Configuration - Mechanics

Configuration - Mechanics

Configure the encoder parameters for the position of the externally controlled drive in the "Mechanics" configuration window.

The configuration varies according to the type of encoder:

- Linear (Page 238)
- Rotary (Page 239)

See also

Technology object external encoder (Page 110)

Mechanics (Page 53)

Linear

Invert encoder direction

Select this check box if you would like to invert the actual value of the encoder.

Load gear

Number of motor revolutions / number of load revolutions

The gear ratio of the measuring gearbox is specified as the ratio between motor revolutions and load revolutions. Specify here an integer number of motor revolutions and the resulting number of load revolutions.

Select the same values for the number of motor revolutions and load revolutions, if no load gear is present.

Position parameters

Leadscrew pitch

In this configuration field, configure the distance by which the load is moved when the leadscrew makes one revolution.

See also

Configuration - Mechanics (Page 238)

Rotary (Page 239)

Technology object external encoder (Page 110)

Mechanics (Page 53)

Rotary

Invert encoder direction

Select this check box if you would like to invert the actual value of the encoder.

Load gear

Number of motor revolutions / number of load revolutions

The gear ratio of the measuring gearbox is specified as the ratio between encoder revolutions and load revolutions. Specify here an integral number of load revolutions and the resulting number of encoder revolutions.

Select the same values for the number of motor revolutions and load revolutions, if no load gear is present.

See also

Configuration - Mechanics (Page 238)

Linear (Page 238)

Technology object external encoder (Page 110)

Mechanics (Page 53)

5.5.3.2 Homing

Configuration - Homing

Configure the parameters for homing the external encoder in the "Homing" configuration window. Homing is performed using the Motion Control instruction "MC_Home" Mode = 2, 8 and 10.

Note

Parameter "MC_Home.Mode"

The "MC_Home.Mode" parameter for S7-1200 Motion Control and S7-1500 Motion Control has been standardized within the framework of technology version V2.0. This results in a new assignment of the parameter values for the "MC_Home.Mode" parameter. A comparison of the "MC_Home.Mode" parameter for technology versions V1.0 and V2.0 is available in the section Version overview (Page 155).

Select the homing mode

Select from among the following homing modes:

- Reference cam and zero mark via PROFIdrive telegram (Page 241)
- Use zero mark via PROFIdrive telegram (Page 242)
- Homing mark via digital input (Page 243)

See also

Technology object external encoder (Page 110)

Reference cam and zero mark via PROFIdrive telegram

Homing direction

Select the direction in which the zero mark should be approached for homing. The next zero mark after leaving the reference cam is used.

The following options are available:

- **Positive**

  Axis moves in the direction of higher position values.

- **Negative**

  Axis moves in the direction of lower position values.

- **Current**

  The currently effective approach direction is used for homing.

Home position

In this field, configure the absolute coordinate of the home position. The home position configured here is in effect when the Motion Control instruction "MC_Home" is executed with Mode = 10.

Note

Parameter "MC_Home.Mode"

The "MC_Home.Mode" parameter for S7-1200 Motion Control and S7-1500 Motion Control has been standardized within the framework of technology version V2.0. This results in a new assignment of the parameter values for the "MC_Home.Mode" parameter. A comparison of the "MC_Home.Mode" parameter for technology versions V1.0 and V2.0 is available in the section Version overview (Page 155).

See also

Configuration - Homing (Page 240)

Use zero mark via PROFIdrive telegram (Page 242)

Homing mark via digital input (Page 243)

Technology object external encoder (Page 110)

Use zero mark via PROFIdrive telegram

Homing direction

Select the direction in which the next zero mark should be approached for homing. The following options are available:

- **Positive**

  Axis moves in the direction of higher position values.

- **Negative**

  Axis moves in the direction of lower position values.

- **Current**

  The currently effective approach direction is used for homing.

Home position

In this field, configure the absolute coordinate of the home position. The home position configured here is in effect when the Motion Control instruction "MC_Home" is executed with Mode = 10.

Note

Parameter "MC_Home.Mode"

The "MC_Home.Mode" parameter for S7-1200 Motion Control and S7-1500 Motion Control has been standardized within the framework of technology version V2.0. This results in a new assignment of the parameter values for the "MC_Home.Mode" parameter. A comparison of the "MC_Home.Mode" parameter for technology versions V1.0 and V2.0 is available in the section Version overview (Page 155).

See also

Configuration - Homing (Page 240)

Reference cam and zero mark via PROFIdrive telegram (Page 241)

Homing mark via digital input (Page 243)

Technology object external encoder (Page 110)

Homing mark via digital input

Digital input homing mark

In this configuration field, select a digital input that is to act as a homing mark (reference cam). Also select the level at which the homing mark is to be detected.

Homing direction

Select the direction in which the homing mark for homing is to be approached.

The following options are available:

- **Positive**

  Axis moves in the direction of higher position values.

- **Negative**

  Axis moves in the direction of lower position values.

- **Current**

  The currently effective approach direction is used for homing.

Homing mark

Select which switch position of the "digital input" is to be used as the homing mark.

When a "digital input" is crossed, two switching edges that are spatially separated from one another are generated. The selection of the positive or negative side ensures that the homing mark is always evaluated at the same mechanical position.

The positive side is the switch position with a greater position value; the negative side is the switch position with the lesser position value.

The selection of the side is independent of the approach direction, and independent of whether it causes a rising or falling edge.

Home position

In this field, configure the absolute coordinate of the home position. The home position configured here is in effect when the Motion Control instruction "MC_Home" is executed with Mode = 10.

Note

Parameter "MC_Home.Mode"

The "MC_Home.Mode" parameter for S7-1200 Motion Control and S7-1500 Motion Control has been standardized within the framework of technology version V2.0. This results in a new assignment of the parameter values for the "MC_Home.Mode" parameter. A comparison of the "MC_Home.Mode" parameter for technology versions V1.0 and V2.0 is available in the section Version overview (Page 155).

See also

Configuration - Homing (Page 240)

Use zero mark via PROFIdrive telegram (Page 242)

Reference cam and zero mark via PROFIdrive telegram (Page 241)

Technology object external encoder (Page 110)

5.6 Configuring the technology object measuring input

5.6.1 Configuration - Basic Parameters

Configure the basic properties of the technology object in the "Basic Parameters" configuration window.

Name

Define the name of the measuring input in this field. The technology object is listed under this name in the project tree. The tags of the measuring input can be used in the user program under this name.

Assigned axis or external encoder

The axis or external encoder assigned to the measuring input is displayed. You can use the link to directly access the configuration of the basic parameters of the higher-level technology object.

Unit of measure

The indicated unit of measure for the position of the measuring input corresponds to the unit of measure of the higher-level technology object.

See also

Units of measure (Page 32)

Technology object measuring input (Page 111)

5.6.2 Configuration - Hardware interface

Measuring input type

Select the measuring input type.

- Measuring using TM Timer DIDQ
- Measurement via SINAMICS measuring input
- Measurement using PROFIdrive telegram (drive or external encoder)

Measurement using TM Timer DIDQ

Select a measurement input for a measurement using a Timer DI. The selection box shows all channels that are configured correctly.

Measurement via SINAMICS measuring input

Select a measuring input for a measurement via SINAMICS measurement sensing input. The selection box shows all compatible telegram types. You are shown all terminals that can potentially be used as measuring inputs. For the assignment, note that the inputs of must be assigned to the measuring inputs (P680) in the telegram without gaps and in ascending order.

With P728.8 to P728.15, you configure all DI/DOs used as a measurement input on the control unit. Use P680 of the control unit to specify the terminals for the global measuring inputs.

Measurement using PROFIdrive telegram (drive or external encoder)

For a measurement via PROFIdrive telegram, select the number of the measuring input in the telegram in the "Number of the measuring input" drop-down list. The input field is preset with the value "1".

Two communication channels are available for the transmission of measured values in the PROFIdrive telegram. These communication channels are assigned to one measurement input/digital input each in the drive. Use the PROFIdrive parameters to configure the digital input on the drive that is to be used for the configured communication channel.

- Measurement input for the first communication channel

  (<TO>.Parameter.PROFIdriveProbeNumber = 1)

  If you use two encoders, you must select the associated DI in the SINAMICS for each encoder. Various results are the transferred to the technology object depending on the selected encoder. The sensors are configured using the parameters P488[0] and P488[1].

- Measurement input for the second communication channel

  (<TO>.Parameter.PROFIdriveProbeNumber = 2)

  If you use two encoders, you must select the associated DI in the SINAMICS for each encoder. Various results are the transferred to the technology object depending on the selected encoder. The sensors are configured using the parameters P489[0] and P489[1].

Correction time for the measuring signal

Specify a correction time if possible delay times in the measurement signal are to be compensated.

See also

Automatic transfer of drive and encoder parameters in the device (Page 42)

Technology object measuring input (Page 111)

Configuring technology modules for Motion Control (Page 255)

5.6.3 Configuration - Extended parameters

Adjustment for activation time of the measuring range

To adjust the activation time defined on the system side, enter an additional activation time here.

The configuration window also displays the following times calculated on the system side:

- Time after the measuring job request until the measuring event can be recoreded
- Time after the measuring event until the measurement result is displayed (for measuring of one or two edges)

See also

Measuring with measuring range (Page 121)

Time-related boundary conditions (Page 122)

Technology object measuring input (Page 111)

5.7 Configuring the cam technology object

5.7.1 Configuration - Basic Parameters

Configure the basic properties of the technology object in the "Basic Parameters" configuration window.

Name

Define the name of the output cam in this field. The technology object is listed under this name in the project tree. The tags of the output cam can be used in the user program under this name.

Assigned axis or external encoder

The axis or external encoder assigned to the output cam is displayed. You can use the link to directly access the configuration of the basic parameters of the higher-level technology object.

Output cam type

Select based on the desired switching behavior of an output cam type:

- Distance output cam (position-dependent switch-on/switch-off)
- Time-based output cam (position-dependent switch-on and position-independent or time-dependent switch-off)

Output cam reference

Configure in this selection whether the switching points of the output cam are to reference the actual position or the position setpoint.

Unit of measure

The indicated unit of measure for the position of the output cam corresponds to the unit of measure of the higher-level technology object.

When a time-based output cam is selected as the output cam type, the unit of measure for the switch-on duration and other times is also indicated. For output cams, this is always ms.

See also

Units of measure (Page 32)

Technology object output cam (Page 126)

5.7.2 Configuration - Hardware interface

Output cam output

Select whether the generated switching signals are to be output at the digital output.

- **Activate output**

  Select one of the following two output options for the output cam output:

  – **Output by TM Timer DIDQ**

    For output by TM Timer DIDQ, select a previously configured technology module and the channel to be used in the "Output" field.

    If no technology module is available for selection, change to the device configuration and add a technology module.

  – **Output by digital output module**

    For output by a digital output module, select this in the "Cam output" field. Only the digital outputs with previously defined PLC tags are displayed for selection.

  Select the logical operation of the output cam signal at the output. The logic operation relates to the last signal to be output after the set inversion, if any.

  All output cams that use the selected output are shown graphically.

- **Output deactivated**

  When the output is deactivated, the output cam is evaluated only in the software.

See also

Technology object output cam (Page 126)

Configuring technology modules for Motion Control (Page 255)

5.7.3 Extended parameters

5.7.3.1 Configuration - Activation time

The specified output cam type is indicated in the upper area of the "Activation time" configuration window.

Activation time and deactivation time

For a time shift of the switch-on and switch-off times of an output cam, enter an activation time and a deactivation time.

See also

Compensation of actuator switching times (Page 138)

Technology object output cam (Page 126)

5.7.3.2 Configuration - Hysteresis

To prevent unwanted changes in the switching state of the output cam of a cam track, enter a hysteresis value.

When using an output cam with reference to actual position, always enter a hysteresis value (> 0.0).

See also

Hysteresis (Page 136)

Technology object output cam (Page 126)

5.8 Configuring the cam track technology object

5.8.1 Configuration - Basic Parameters

Configure the basic properties of the technology object in the "Basic Parameters" configuration window.

Name

Define the name of the cam track in this field. The technology object is listed under this name in the project tree. The tags of the cam track can be used in the user program under this name.

Assigned axis or external encoder

The axis or external encoder assigned to the cam track is displayed. You can use the link to directly access the configuration of the basic parameters of the higher-level technology object.

Output cam type

Select based on the desired switching behavior of an output cam type for the cam track:

- Distance output cam (position-dependent switch-on/switch-off)
- Time-based output cam (position-dependent switch-on and position-independent or time-dependent switch-off)

Output cam reference

In this selection, configure whether the switching points of the cam track are to reference the actual position or the position setpoint.

Unit of measure

The indicated unit of measure for the position of the cam track corresponds to the unit of measure of the higher-level technology object.

When a time-based output cam is selected as the output cam type, the unit of measure for the switch-on duration and other times is also indicated. For output cams, this is always ms.

See also

Units of measure (Page 32)

Cam track technology object (Page 141)

5.8.2 Configuration - Hardware interface

Output cam track

Select whether the generated switching signals are to be output at the digital output.

- **Activate output**

  Select one of the following two output options for the output track:

  – **Output by TM Timer DIDQ**

    For output by TM Timer DIDQ, select a previously configured technology module and the channel to be used in the "Output" field.

    If no technology module is available for selection, change to the device configuration and add a technology module.

  – **Output by digital output module**

    For output by a digital output module, select this in the "Cam output" field. Only the digital outputs with previously defined PLC tags are displayed for selection.

- **Output deactivated**

  When the output is deactivated, the cam track is evaluated only in the software.

See also

Cam track technology object (Page 141)

Configuring technology modules for Motion Control (Page 255)

5.8.3 Extended parameters

5.8.3.1 Track data

Configuration - Activation time

The specified output cam type is displayed.

Activation time and deactivation time

Enter the activation time and the deactivation time.

For a time shift of the switch-on and switch-off times of the output cam of a cam track, enter an activation time and a deactivation time.

See also

Time offset of cam switching points (Page 153)

Cam track technology object (Page 141)

Configuration - Hysteresis

To prevent unwanted changes in the switching state of the output cam of a cam track, enter a hysteresis value.

When using an output cam with reference to actual position, always enter a hysteresis value (> 0.0).

See also

Hysteresis (Page 153)

Cam track technology object (Page 141)

Configuration - Track dimensions

Track length

Enter the corresponding track length.

Also take into account the output cam data of the individual output cams when defining the track length. Output cams, the start position of which lies outside the cam track length are not included. They become active only if the cam track length is increased so that at least the respective start position of an output cam is within the new track length.

Axis reference position

Enter the position of an axis or external encoder starting from which the output of the cam track is to occur. The start of the cam track is placed at the entered position.

You can enter a negative or positive value for the reference position.

Modulo length of the axis

When an axis with modulo function is used, the modulo length of the axis is displayed.

See also

Cam track technology object (Page 141)

5.8.3.2 Configuration - Output cam data

The specified output cam type is displayed.

Enter the properties for the output cams of the cam track that are to be output. You can set up to 32 individual output cams on a cam track.

Also take into account any previously defined track length when defining the output cam data. Output cams, the start position of which lies outside the cam track length are not included. They become active only if the cam track length is increased so that at least the respective start position of an output cam is within the new track length.

The input options described below are displayed in the Output cam data configuration window according to the configured output cam type.

- **Valid**

  Only output cams set as "valid" are output and have a status display.

- **Start position**
  - The start position may not be greater than the end position for distance output cams.
  - If the start position is equal to the end position, the distance output cam does not switch.
  - The switching ranges of individual output cams are permitted to overlap.

- **End position**
  - The "End position" column is only displayed when distance output cam is set for the output cam type.
  - The end position must not be less than the start position.

- **Switch-on duration**

  The "Switch-on duration" column is only displayed when time-based output cam is set for the cam type.

See also

Cam track technology object (Page 141)

5.9 Configuring technology modules for Motion Control

5.9.1 Overview

Use of technology modules with Motion Control

You can use technology modules as well as compact CPUs with Motion Control. To use the technology functions for Motion Control, the parameters of the device configuration of the technology module or the compact CPU and the parameters of the configuration of the technology object must be configured accordingly. Which parameters are relevant for the function is described below. You can set additional parameters that are not listed here. The description of the parameters is found in the documentation of the respective technology module.

The following technology modules support Motion Control functionalities:

S7-1500/ET 200MP	ET 200 SP
TM Count 2x24V (Page 256)	TM Count 1x24V (Page 256)
TM PosInput 2 (Page 258)	TM PosInput 1 (Page 258)
TM Timer DIDQ 16x24V (Page 260) *	TM Timer DIDQ 10x24V (Page 260) *
–	TM Pulse 2x24V (Page 261)
TM PTO 4 (Page 262)	–
CPU 1511C-1 PN / CPU 1512C-1 PN (Page 264)	–

* ET 200MP and ET 200SP: Isochronous mode required

Isochronous mode

Technology modules can be used centrally or distributed in the system. However, isochronous mode is supported only in distributed operation with suitable PROFINET interface modules.

5.9.2 TM Count 1x24V / TM Count 2x24V

For use with Motion Control, the following parameters must be configured:

Configuration		
Technology module TM Count 1x24V / TM Count 2x24V	Technology object	
	Axis	External encoder
TM Count 1x24V / TM Count 2x24V > Channel 0/1 > Operating mode	–	–
Select "Position detection for Motion Control technology object" mode		
TM Count 1x24V / TM Count 2x24V > Channel 0/1 > Module parameters	**Hardware interface > Encoder**	**Hardware interface > Encoder**
–	Select "Encoder" data connection and the channel configured for Motion Control on the technology module as encoder	Select "Encoder" data connection and the channel configured for Motion Control on the technology module as encoder
Signal type • Incremental encoder	Select encoder type corresponding to configuration for technology module • Incremental	Select encoder type corresponding to configuration for technology module • Incremental
–	**Hardware interface > Data exchange with encoder**	**Hardware interface > Data exchange**
	Telegram "DP_TEL83_STANDARD" is automatically selected after the selection of the encoder.	Telegram "DP_TEL83_STANDARD" is automatically selected after the selection of the encoder.
	Disable "Automatic transfer of encoder parameter values"	Disable "Automatic transfer of encoder parameter values"
	Select rotary or linear measuring system type	Select rotary or linear measuring system type
Signal evaluation • Single • Double • Quadruple	Select fine resolution corresponding to configuration for technology module • 0 = Single • 1 = Double • 2 = Quadruple	Select fine resolution corresponding to configuration for technology module • 0 = Single • 1 = Double • 2 = Quadruple
• Rotary type: Enter increments per revolution • Linear type: Configuration not relevant	• Rotary type: Enter increments per revolution corresponding to configuration at technology module (1:1) • Linear type: Enter distance between increments	• Rotary type: Enter increments per revolution corresponding to configuration at technology module (1:1) • Linear type: Enter distance between increments

Configuration		
Technology module TM Count 1x24V / TM Count 2x24V	Technology object	
	Axis	External encoder
–	Hardware interface > Data exchange with the drive	–
• Rotary type: Enter reference speed corresponding to configuration for technology object (1:1) • Linear type: Configuration not relevant	Enter reference speed	
–	Homing	Homing
Select the homing signal for homing mark 0: • Signal N of the incremental encoder • DI0	Use the homing mode "Use zero mark via PROFIdrive telegram".	Use the homing mode "Use zero mark via PROFIdrive telegram".
TM Count 2x24V > I/O addresses	–	–
The organization block ("MC-Servo") and the process image ("TPA OB Servo") are selected automatically for the input and output addresses by selecting the channel in the encoder configuration at the technology object.		
Process image: PIP OB servo		

5.9.3 TM PosInput 1 / TM PosInput 2

For use with Motion Control, the following parameters must be configured:

Configuration		
Technology module	**Technology object**	
TM PosInput 1 / TM PosInput 2	**Axis**	**External encoder**
TM PosInput 1/2 > Channel 0/1 > Operating mode Select "Position detection for Motion Control technology object" mode	–	–
TM PosInput 1/2 > Channel 0/1 > Module parameters You set the parameters for the encoder signals of the channel under "Module parameters" in the "Position input for Motion Control" mode. The parameters must be set depending on the encoder used. The configuration of the encoder is required for use with an SSI absolute encoder. Information on the configuration is available in the documentation for the respective technology module.	**Hardware interface > Encoder**	**Hardware interface > Encoder**
–	Select "Encoder" data connection and the channel activated and configured as encoder on the technology module	Select "Encoder" data connection and the channel activated and configured as encoder on the technology module
Signal type • Incremental encoder • Absolute encoder	Select encoder type corresponding to configuration for technology module • Incremental • Absolute / cyclic absolute	Select encoder type corresponding to configuration for technology module • Incremental • Absolute / cyclic absolute
–	**Hardware interface > Data exchange with encoder**	**Hardware interface > Data exchange**
	Telegram "DP_TEL83_STANDARD" is automatically selected after the selection of the encoder.	Telegram "DP_TEL83_STANDARD" is automatically selected after the selection of the encoder.
	Disable "Automatic transfer of encoder parameter values"	Disable "Automatic transfer of encoder parameter values"
	Select rotary or linear measuring system type	Select rotary or linear measuring system type
Signal evaluation • Single • Double • Quadruple	Select fine resolution corresponding to configuration for technology module • Incremental encoder: – 0 = Single – 1 = Double – 2 = Quadruple • Absolute encoder: – 0 = Single	Select fine resolution corresponding to configuration for technology module • Incremental encoder: – 0 = Single – 1 = Double – 2 = Quadruple • Absolute encoder: – 0 = Single

Configuration		
Technology module TM PosInput 1 / TM PosInput 2	Technology object	
	Axis	External encoder
• Rotary type: Enter increments per revolution • Linear type: Configuration not relevant	• Rotary type: Enter increments per revolution corresponding to configuration at technology module (1:1) • Linear type: Enter distance between increments	• Rotary type: Enter increments per revolution corresponding to configuration at technology module (1:1) • Linear type: Enter distance between increments
–	**Hardware interface > Data exchange with the drive**	–
• Rotary type: Enter reference speed corresponding to configuration for technology object (1:1) • Linear type: Configuration not relevant	Enter reference speed	
–	**Homing**	**Homing**
Select the homing signal for homing mark 0: • Signal N of the incremental encoder • DI0	Use the homing mode "Use zero mark via PROFIdrive telegram".	Use the homing mode "Use zero mark via PROFIdrive telegram".
TM PosInput 1/2 > I/O addresses	–	–
The organization block ("MC-Servo") and the process image ("TPA OB Servo") are selected automatically for the input and output addresses by selecting the channel in the encoder configuration at the technology object.		

"–" No configuration for technology module/technology object is required for these parameters

5.9.4 TM Timer DIDQ 10x24V / TM Timer DIDQ 16x24V

You can operate the TM Timer DIDQ technology module centrally on an S7-1500 CPU or decentrally on a distributed I/O. For use with a measuring input, output cam or cam track, the technology module must be used decentrally and with isochronous mode.

For use with Motion Control, the following parameters must be configured:

Use with output cam / cam track technology object

Configuration	
Technology module TM Timer DIDQ 10x24V / TM Timer DIDQ 16x24V	Technology object Output cam / Cam track
Basic parameters	–
Select desired number of outputs under channel configuration (ET 200MP TM Timer DIDQ 16x24V only)	
Channel parameters	**Hardware interface > Output cam output / Output cam track**
–	Activate output
	Select output by TM Timer DIDQ
Select "Timer DQ" mode for the respective output	Select output cam output
I/O addresses	–
Select "Isochronous mode"	
The organization block ("MC-Servo") and the process image ("TPA OB Servo") are updated automatically for the input and output addresses by selecting the channel in the encoder configuration at the technology object.	

"–" No configuration for technology module/technology object is required for these parameters

Use with technology object measuring input

Configuration	
Technology module TM Timer DIDQ 10x24V / TM Timer DIDQ 16x24V	Technology object Measuring input
Basic parameters	–
Select desired number of inputs under channel configuration	
Channel parameters	**Hardware interface > Measuring input**
Configuration of DI group: Use inputs individually	–
Select "Timer DI" mode for the respective input	Select measuring using TM Timer DIDQ
–	Select measuring input
Select application-dependent input delay	–
I/O addresses	
Select "Isochronous mode"	
The organization block ("MC-Servo") and the process image ("TPA OB Servo") are updated automatically for the input and output addresses by selecting the channel in the input configuration at the technology object.	

"–" No configuration for technology module/technology object is required for these parameters

5.9.5 TM Pulse 2x24V

For use with Motion Control, the parameters described below must each be configured:

Drive connection using PWM (pulse width modulation)

Configuration	
TM Pulse 2x24V	Technology object
	Axis
TM Pulse 2x24V > Channel configuration	–
Select if you want to use 1 or 2 channels.	
TM Pulse 2x24V > Channel > Operating mode	
Select "Pulse width modulation PWM" or "PWM with DC motor" operating mode	
TM Pulse 2x24V > Channel > Parameters	**Hardware interface > Drive**
Select "S7 analog output" output format	Select analog drive connection For the selection of the analog output, create a PLC tag of the "Int" type with corresponding address. The offset for the PLC tag to the start address is 2. To activate the output of the PWM signal, set the following two bits of the control interface of the PWM channel in the user program: • SW_ENABLE (= Bit 0 in Byte 9) • TM_CTRL_DQ (= Bit 1 in Byte 9) The offset for byte 9 to the start address of the PWM channel is 9.
TM Pulse 2x24V > Channel > I/O addresses	–
Select the organization block "MC-Servo" for the input and output addresses. The "TPA OB Servo" process image is selected automatically for the input and output addresses by selecting the organization block.	

"–" No configuration for technology object is required for these parameters

5.9.6 TM PTO 4

For use with Motion Control, the following parameters must be configured.

Configuration	
Technology module TM PTO 4	Technology object Axis
TM PTO 4 > Channel configuration	–
Configure the number of channels (1 to 4) you want to use.	
TM PTO 4 > Channel 0…3 > Operating mode	
Select signal type: • PTO (pulse (P) and direction (D)) • PTO (count up (A) and count down (B)) • PTO (A, B phase-shifted) • PTO (A, B phase-shifted - quadruple)	
Select signal interface: • RS422, symmetrical / TTL (5V), asymmetrical • 24V asymmetric	
Configure the interpulse pause for direction reversal.	
–	**Hardware interface > Drive**
	Select drive type "PROFIdrive" and "Drive" data connection. Select the pulse output configured at the technology module as drive.
	Hardware interface > Encoder
	The encoder of the actuator telegram (simulated encoder) is automatically selected. Alternatively, an existing encoder interface can be selected.
TM PTO 4 > Channel 0...3 > Diagnostic interrupts	-
When the "Enable diagnostic interrupts" check box is selected, diagnostic interrupts are activated if: • No supply voltage • Errors occur at digital outputs The detected error is displayed for the respective channel with feedback bit Fault_Present and Sensor_Error.	
TM PTO 4 > Channel 0…3 > Axis parameters	**Data exchange with the drive**
–	Telegram "DP_TEL3_STANDARD" is automatically selected after the selection of the drive.
	Deselect "Automatic transfer of drive parameter values"
Enter reference speed corresponding to configuration for technology object (1:1)	Enter reference speed of the drive
Enter maximum speed corresponding to configuration for technology object (1:1)	Enter maximum speed of the drive. If the maximum speed is exceeded, technology alarm 102 is triggered and displayed.

Configuration	
Technology module **TM PTO 4**	**Technology object** **Axis**
–	**Data exchange with encoder**
	Telegram "DP_TEL3_STANDARD" is automatically selected after the selection of the encoder.
	Disable "Automatic transfer of encoder parameter values"
	Select rotary measuring system type.
Enter increments per revolution	Enter increments per revolution corresponding to configuration at technology module (1:1)
Configure fine resolution • 0 = Single • 2 = Quadruple	Configure fine resolution corresponding to configuration for technology module. • 0 = Single • 2 = Quadruple
Configure stop behavior • Quick stop time • Ramp stop time	-
TM PTO 4 > Channel 0…3 > Hardware inputs/outputs	–
If you want to use a hardware output to enable the drive, select the "Use drive enable" check box. Next select one of the two hardware outputs DQ0 or DIQ2.	No setting required at the technology object. The output is automatically controlled by the MC_Power.
	Homing
Activate the hardware input (DI0) for the reference cam.	Use the homing mode "Use zero mark via PROFIdrive telegram".
Select the edge of the hardware input for triggering the reference cam function.	
When using a measuring input, select the "Use DI1 check box as measuring input".	**"Measuring input > Configuration > Hardware interface" technology object**
	Select the measuring input type "Measurement using PROFIdrive telegram (drive or external encoder)". Select the measuring input "1" under hardware connection.
Select the "Use "drive ready"" check box. In the ""Drive ready" input", select the hardware input that is to be used to display whether the drive is ready.	No setting required at the technology object. When the input is used, MC_Power waits until the input signal is present before it sets the drive enable.
Configuring input delay	–
TM PTO 4 > Channel 0…3 > Sign-of-life error	
Configure tolerated number of sign-of-life errors	
TM PTO 4 > I/O addresses	
The organization block ("MC-Servo") and the process image ("TPA OB Servo") are selected automatically for the input and output addresses by selecting the PTO channel for the technology object.	

"–" No configuration required for these parameters at the technology module/technology object

5.9.7 CPU 1511C-1 PN / CPU 1512C-1 PN

For use with Motion Control, the parameters described below must be configured.

Drive connection via PTO (Pulse Train Output)

Configuration	
CPU 1511C-1 PN / CPU 1512C-1 PN	Technology object
	Axis
Pulse generators (PTO/PWM) > PTO1…4/PWM1…4 > General	–
To activate a channel for PTO mode, select one of the following operating modes: • PTO (pulse (A) and direction (B)) • PTO (count up (A), count down (B)) • PTO (A,B phase shifted) • PTO (A,B phase shifted, quadruple)	
–	**Hardware interface > Drive**
	Select drive type "PROFIdrive" and "Drive" data connection. Select the pulse generator of the CPU configured for PTO mode as drive.
	Hardware interface > Encoder
	The encoder of the actuator telegram (simulated encoder) is automatically selected. Alternatively, an existing encoder interface can be selected.
Pulse generators (PTO/PWM) > PTO1…4/PWM1…4 > Axis parameters	**Hardware interface > Data exchange with the drive**
–	Telegram "DP_TEL3_STANDARD" is automatically selected after the selection of the drive.
	Deselect "Automatic transfer of drive parameter values"
Enter reference speed corresponding to configuration for technology object (1:1)	Enter reference speed of the drive
Enter reference speed corresponding to configuration for technology object (1:1)	Enter maximum speed of the drive. If the maximum speed is exceeded, technology alarm 102 is triggered and displayed.
–	**Hardware interface > Data exchange with encoder**
	Telegram "DP_TEL3_STANDARD" is automatically selected after the selection of the encoder.
	Disable "Automatic transfer of encoder parameter values"
	Select rotary measuring system type.
Enter increments per revolution	Enter increments per revolution corresponding to configuration for CPU (1:1)
The fine resolution has the fixed value "0 bit" (= single) and cannot be changed.	Enter the fine resolution corresponding to the configuration for CPU Bits in incr. actual value (G1_XIST1): 0 (= single)

Configuration	
CPU 1511C-1 PN / CPU 1512C-1 PN	Technology object
	Axis
Pulse generators (PTO/PWM) > PTO1…4/PWM1…4 > Hardware inputs/outputs	**Homing**
Select the hardware input for the reference switch In addition, configure the input delay for the selected hardware input. You configure the input delay in the device configuration at the corresponding DI channel (DI 16/DQ 16 > Inputs > Channel > Input parameters > Input delay).	Use the homing mode "Use zero mark via PROFIdrive telegram" for drive connection via PTO.
Select the edge of the hardware input for triggering the reference cam function.	
When using a measuring input, select the hardware input of the measuring input. The following table includes the configuration description.	–
Select the hardware input that is used to display whether the drive is ready. In addition, configure the input delay for the selected hardware input. You configure the input delay in the device configuration at the corresponding DI channel (DI 16/DQ 16 > Inputs > Channel > Input parameters > Input delay).	
With selected "PTO (PTO (pulse (A) and direction (B))" mode, the hardware output for the PTO signal A ("Pulse output (A)") is automatically selected through the device configuration and cannot be changed. For PTO signal B ("Direction output (B)") select one of the hardware outputs offered in the selection box. The hardware outputs for the PTO signals are selected through the device configuration for the following operating modes and cannot be changed: • PTO (count up (A), count down (B)) • PTO (A,B phase shifted) • PTO (A,B phase shifted, quadruple)	
Pulse generators (PTO/PWM) > PTO1…4/PWM1…4 > I/O addresses	
The organization block ("MC-Servo") and the process image ("TPA OB Servo") are selected automatically for the input and output addresses by selecting the PTO channel for the technology object.	

"–" No configuration for CPU/technology object is required for these parameters

Additional configuration for use with the technology object measuring input

Configuration	
Technology module CPU 1511C-1 PN / CPU 1512C-1 PN	Technology object Measuring input
Pulse generators (PTO/PWM) > PTO1…4/PWM1…4 > Hardware inputs/outputs	**Hardware interface > Measuring input**
Select the hardware input of the measuring input. In addition, configure the input delay for the selected hardware input. You configure the input delay in the device configuration at the corresponding DI channel (DI 16/DQ 16 > Inputs > Channel > Input parameters > Input delay).	Measuring using PROFIdrive telegram (drive or external encoder) In the "Number of the measuring input" selection box, select "1" (measuring input 1).

Drive connection using PWM (pulse width modulation)

Note that only travel in the positive direction is possible with a drive connection using the integrated PWM function of the compact CPU.

Configuration	
CPU 1511C-1 PN / CPU 1512C-1 PN	Technology object Speed axis
Pulse generators (PTO/PWM) > PTO1…4/PWM1…4 > General	–
Select "Pulse width modulation PWM" mode	
Pulse generators (PTO/PWM) > PTO1…4/PWM1…4 > Hardware inputs/outputs	
Select the hardware output to be used for pulse output.	
Select whether the set hardware output is to work as a fast push-pull switch or as P switch.	
Pulse generators (PTO/PWM) > PTO1…4/PWM1…4 > Parameters	**Hardware interface > Drive**
Select "S7 analog output" output format	Select analog drive connection For the selection of the analog output, create a PLC tag of the "Int" type with corresponding address. The offset for the PLC tag of the control interface of the PWM channel is 2. To activate the output of the PWM signal, set the following two bits of the control interface of the PWM channel in the user program: • SW_ENABLE (= Bit 0 in Byte 9) • TM_CTRL_DQ (= Bit 1 in Byte 9) The offset for byte 9 to the start address of the PWM channel is 9.

Configuration	
CPU 1511C-1 PN / CPU 1512C-1 PN	Technology object
	Speed axis
Select minimum pulse width of 0 µs	–
Select required period duration (e.g. 100 µs)	
Pulse generators (PTO/PWM) > PTO1…4/PWM1…4 > I/O addresses	
Select the organization block "MC-Servo" for the input and output addresses. The "TPA OB Servo" process image is selected automatically for the input and output addresses by selecting the organization block.	

"–" No configuration for technology object is required for these parameters

Encoder connection via HSC (High-speed counter)

Configuration		
CPU 1511C-1 PN / CPU 1512C-1 PN	Technology object	
	Axis	External encoder
High-speed counter (HSC) > HSC 1…6 > General > Enable	–	–
Enable high-speed counter		
High-speed counter (HSC) > HSC 1…6 > Basic parameters > Operating mode		
Select "Position input for Motion Control" mode		
High-speed counter (HSC) > HSC 1…6 > Basic parameters > Module parameters	**Hardware interface > Encoder**	**Hardware interface > Encoder**
–	Select "Encoder" data connection and the high-speed counter activated and configured as encoder on the CPU	Select "Encoder" data connection and the high-speed counter activated and configured as encoder on the CPU
Signal type • Incremental encoder	Select encoder type according to the device configuration of the CPU • Incremental	Select encoder type according to the device configuration of the CPU • Incremental
–	**Hardware interface > Data exchange with encoder**	**Hardware interface > Data exchange**
	Telegram "DP_TEL83_STANDARD" is automatically selected after the selection of the encoder.	Telegram "DP_TEL83_STANDARD" is automatically selected after the selection of the encoder.
	Deselect "Automatic transfer of encoder parameter values"	Deselect "Automatic transfer of encoder parameter values"
	Select rotary measuring system type.	Select rotary measuring system type.

Configuration		
CPU 1511C-1 PN / CPU 1512C-1 PN	Technology object	
	Axis	External encoder
Signal evaluation • Single • Double • Quadruple	Set fine resolution according to the configured signal evaluation set for the high-speed counter (HSC) • 0 = Single • 1 = Double • 2 = Quadruple	Set fine resolution according to the configured signal evaluation set for the high-speed counter (HSC) • 0 = Single • 1 = Double • 2 = Quadruple
Enter increments per revolution	Enter increments per revolution corresponding to device configuration for CPU (1:1)	Enter increments per revolution corresponding to device configuration for CPU (1:1)
–	**Hardware interface > Data exchange with the drive**	–
Enter reference speed corresponding to configuration for technology object (1:1)	Enter reference speed	
–	**Homing**	**Homing**
Select the homing signal for homing mark 0: • Signal N of the incremental encoder • DI0 (can be set with the hardware inputs/outputs) In addition, configure the input delay for the selected hardware input. You configure the input delay in the device configuration at the corresponding DI channel (DI 16/DQ 16 > Inputs > Channel > Input parameters > Input delay).	Use the homing mode "Use zero mark via PROFIdrive telegram".	Use the homing mode "Use zero mark via PROFIdrive telegram".
High-speed counter (HSC) > HSC 1…6 > I/O addresses	–	–
The organization block ("MC-Servo") and the process image ("TPA OB Servo") are selected automatically for the input and output addresses by selecting the HSC channel for the technology object.		

"–" No configuration for CPU/technology object is required for these parameters

Additional configuration for use with the technology object measuring input

Configuration	
Technology module CPU 1511C-1 PN / CPU 1512C-1 PN	Technology object Measuring input
High-speed counter (HSC) > HSC 1…6 > Hardware inputs/outputs	Hardware interface > Measuring input
Select the hardware input of the measuring input. In addition, configure the input delay for the selected hardware input. You configure the input delay in the device configuration at the corresponding DI channel (DI 16/DQ 16 > Inputs > Channel > Input parameters > Input delay).	Measuring using PROFIdrive telegram (drive or external encoder) In the "Number of the measuring input" selection box, select "1" (measuring input 1).

5.10 Connect drive/encoder via data block

Creating the data block for data connection

1. Create a new data block of type "Global DB".
2. Select the data block in the project tree and select "Properties" from the shortcut menu.
3. Disable the following attributes under Attributes and accept the change with "OK":
   - "Only store in load memory"
   - "Data block write-protected in the device"
   - "Optimized block access" for technology version < V4.0
4. Open the data block in the block editor.
5. Insert a tag structure of type "PD_TELx" textually in the block editor.

This tag structure contains the "Input" tag structure for the input area of the telegram and the "Output" tag structure for the output area of the telegram.

Note

"Input" and "Output" relate to the view of the closed loop position control. For example, the input area contains the actual values of the drive and the output area contains the setpoints for the drive.

The data block may contain the data structures of multiple axes and encoders and other contents.

Configuring data connection via a data block

1. Open the configuration window "Hardware interface > Drive" or "Hardware interface > Encoder".
2. In the Data block drop-down list, select "Data block".
3. In the "Data block" field, select the previously created data block.
   Open this data block and select the tag name defined for the drive and encoder.

Programming MC-PreServo and MC-PostServo

1. Assign the previously defined PLC tag of the input range of the data block to MC-PreServo .
2. Assign the previously defined PLC tag of the output range of the data block to MC-PostServo.

NOTICE
Machine damage Improper manipulation of drive and encoder telegrams may result in unwanted drive motions. Check your user program for consistency in the drive and encoder connection.

An application example for the use of MC-PreServo and MC-PostServo is available at:

https://support.industry.siemens.com/cs/document/109741575
(https://support.industry.siemens.com/cs/document/109741575)

See also

PROFIdrive telegrams (Page 36)

Data connection drive/encoder via data block (Page 50)

5.11 Parameter view

5.11.1 Introduction to the parameter view

The Parameter view provides you with a general overview of all relevant parameters of a technology object. You obtain an overview of the parameter settings and can easily change them in offline and online mode.

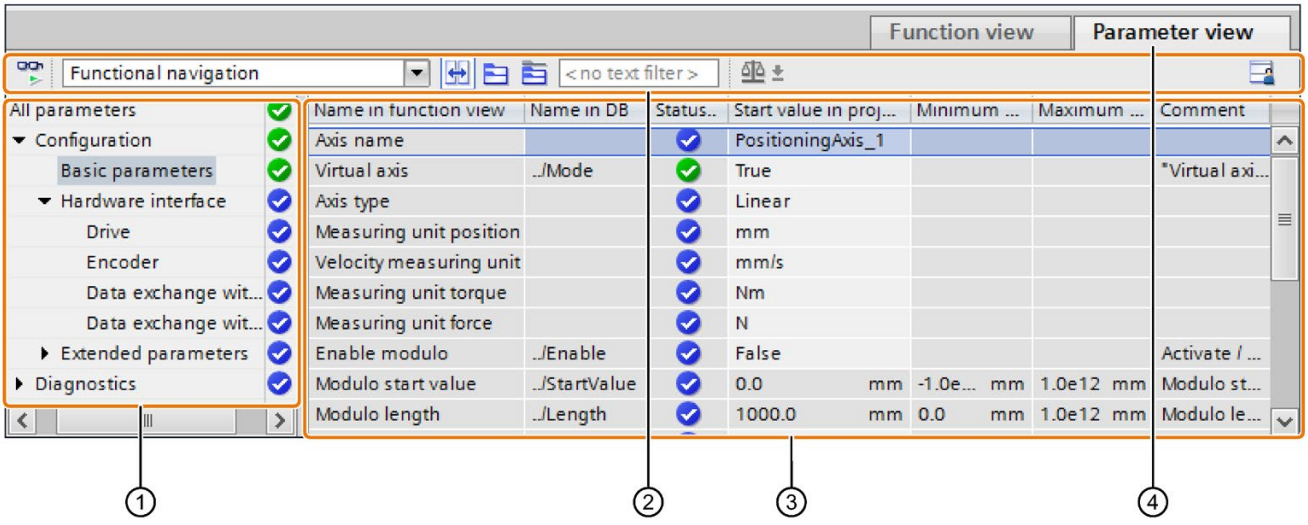

① Navigation (Page 273)
② Toolbar (Page 272)
③ Parameter table (Page 273)
④ "Parameter view" tab

Function scope

The following functions are available for analyzing the parameters of the technology objects and for enabling targeted monitoring and modification.

Display functions:

- Display of parameter values in offline and online mode
- Display of status information of the parameters
- Display of value deviations and option for direct correction
- Display of configuration errors
- Display of value changes as a result of parameter dependencies
- Display of all memory values of a parameter: Start value PLC, Start value in project, Monitor value
- Display of the parameter comparison of the memory values of a parameter

Operator control functions:

- Navigation for quickly changing between the parameters and parameter structures.
- Text filter for faster searches for particular parameters.
- Sorting function for customizing the order of parameters and parameter groups to requirements.
- Memory function for backing up structural settings of the Parameter view.
- Monitoring and modifying of parameter values online.
- Function for saving a snapshot of parameter values of the CPU in order to capture momentary situations and to respond to them.
- Function for applying a snapshot of parameter values as start values.
- Download of modified start values to the CPU.
- Comparison functions for comparing parameter values with one another.

5.11.2 Structure of the parameter view

5.11.2.1 Toolbar

The following functions can be selected in the toolbar of the parameter view.

Symbol	Function	Explanation
	Monitor all	Starts monitoring of the visible tags in the active table.
Functional navigation	Select navigation structure	Toggle between function-based navigation and the view of the data structure of the technology data block.
	Couples the function view and parameter view for the objects selected in the navigation	Enables the targeted toggling between the parameter view and function-based view.
	Collapse/expand all nodes and objects	Collapses or expands all nodes and objects of the navigation or the data structure in the currently active view.
	Collapse/expand the nodes below the marked nodes	Collapses or expands the marked nodes and objects of the navigation or the data structure in the currently active view.
< no text filter >	Text filter...	After entry of a character string: Display of all parameters containing the entered string in one of the currently visible columns.
	Selection of compare values	Selection of parameter values that are to be compared with one another in online mode (Start value in project, Start value PLC) Only in online mode.
	Save window settings	Saves your display settings for the Parameter view (e.g. selected navigation structure, activated table columns, etc.)

5.11.2.2 Navigation

Within the "Parameter view" tab, the following alternative navigation structures can be selected.

Navigation		Explanation
Functional navigation	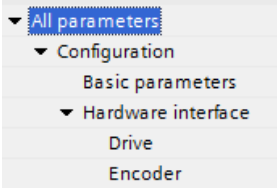	In the functional navigation, the structure of the parameters is based on the structure in the configuration window ("Function view" tab), commissioning window and diagnostics window.
Data structure	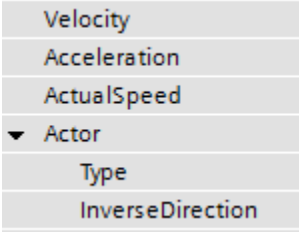	In the "Data structure" navigation, the structure of the parameters is based on the structure of the technology data block.

You can use the "Select navigation structure" drop-down list to toggle the navigation structure.

5.11.2.3 Parameter table

The table below shows the meaning of the individual columns of the parameter table. You can show or hide the columns as required.

- Column "Offline" = X: Column is visible in offline mode.
- Column "Online" = X: Column is visible in online mode (online connection to the CPU).

Column	Explanation	Offline	Online
Name in function view	Name of the parameter in the function view. The display field is empty for parameters that are not configured via the technology object.	X	X
Name in DB	Name of the parameter in the technology data block. If the parameter is part of a structure or UDT, the prefix "../" is added. The display field is empty for parameters that are not contained in the technology data block.	X	X
Full name in DB	Complete path of the parameter in the instance DB. The display field is empty for parameters that are not contained in the technology data block.	X	X
Status of configuration	Display of the completeness of the configuration using status symbols.	X	
Compare result	Result of the "Compare values" function. This column is displayed when there is an online connection.		X

Column	Explanation	Offline	Online
Start value in project	Configured start value in project. Error indication if entered values have a syntax or process-related error.	X	X
Default value	Value that is pre-assigned to the parameter. The display field is empty for parameters that are not contained in the technology data block.	X	X
Start value PLC	Start value in the CPU. This column is displayed when there is an online connection.		X
Monitor value	Current value in the CPU. This column is displayed when there is an online connection.		X
Modify value	Value that is to be used to change the monitor value. This column is displayed when there is an online connection.		X
Minimum value	Minimum process-related value of the parameter. If the minimum value is dependent on other parameters, it is defined: • Offline: by the start value in the project. • Online: by the monitor values.	X	X
Maximum value	Maximum process-related value of the parameter. If the maximum value is dependent on other parameters, it is defined: • Offline: by the start value in the project. • Online: by the monitor values.	X	X
Setpoint	Designates the parameter as a setpoint. These parameters can be initialized online.	X	X
Data type	Data type of the parameter. The display field is empty for parameters that are not contained in the technology data block.	X	X
Retain	Designates the value as a retentive value. The values of retentive parameters are retained even after the voltage supply is switched off.	X	X
Accessible from HMI	Indicates whether the HMI can access this parameter during runtime.	X	X
Visible in HMI	Indicates whether the parameter is visible in the selection list of the HMI by default.	X	X
Comment	Brief description of the parameter.	X	X

5.11.3 Opening the parameter view

Requirement

The technology object was added in the project navigator.

Procedure

1. Open the "Technology objects" folder in the project tree.
2. Open the technology object in the project tree.
3. Double-click the "Configuration" object.
4. Select the "Parameter view" tab in the top right corner.

Result

The Parameter view opens. Each displayed parameter is represented by one row in the parameter table.

The displayable parameter properties (table columns) vary depending on whether you are working with the Parameter view in offline or online mode.

In addition, you can selectively display and hide individual table columns.

5.11.4 Working with the parameter view

5.11.4.1 Overview

The following table provides an overview of the functions of the Parameter view in online and offline mode described in the following.

- Column "Offline" = X: This function is possible in offline mode.
- Column "Online" = X: This function is possible in online mode.

Function/action	Offline	Online
Filtering the parameter table (Page 276)	X	X
Sorting the parameter table (Page 277)	X	X
Transferring parameter data to other editors (Page 277)	X	X
Indicating errors (Page 278)	X	X
Editing start values in the project (Page 278)	X	X
Monitoring values online in the parameter view (Page 280)		X
Modifying values (Page 281)		X
Comparing values (Page 282)		X

5.11.4.2 Filtering the parameter table

You can filter the parameters in the parameter table in the following ways:

- With the text filter
- With the subgroups of the navigation

Both filter methods can be used simultaneously.

With the text filter

You can filter according to texts that are visible in the parameter table. This means that it can only be filtered by text in displayed parameter lines and displayed columns.

1. Enter the desired character string for filtering in the “Text filter...” input box.

   The parameter table displays only the parameters containing the character string.

The text filtering is reset.

- When another parameter group is selected in the navigation.
- When navigation is changed from data navigation to functional navigation, or vice versa.

With the subgroups of the navigation

1. Click the desired parameter group in the navigation, e.g., "Static".

   The parameter table only shows the static parameters. You can select further subgroups for some groups of the navigation.

2. Click “All parameters” in the navigation if all parameters are to be shown again.

5.11.4.3 Sorting the parameter table

The values of the parameters are arranged in rows. The parameter table can be sorted by any displayed column.

- In columns containing numerical values, sorting is based on the magnitude of the numerical value.
- In text columns, sorting is alphabetical.

Sort column-by-column

1. Position the cursor in the header cell of the desired column.

   The background of this cell turns blue.
2. Click the column header.

Result

The entire parameter table is sorted by the selected column. A triangle with tip facing up appears in the column header.

Clicking the column header again changes the sorting as follows:

- Symbol "▲": Parameter table is sorted in ascending order.
- Symbol "▼": Parameter table is sorted in descending order.
- No symbol: The sorting is removed again. The parameter table assumes the default display.

The "../" prefix in the "Name in DB" column is ignored when sorting.

5.11.4.4 Transferring parameter data to other editors

You can paste parameters of the parameter view in the following editors:

- Program editor
- Watch table
- Signal table for Trace

The following options are available for pasting:

- Drag-and-drop
- <Ctrl+C>/<Ctrl+V>
- Copy/Paste via shortcut menu

5.11.4.5 Indicating errors

Error display

Parameter assignment errors that result in compilation errors (e.g. limit violation) are indicated in the Parameter view.

Every time a value is entered in the Parameter view, a check is made for process-related and syntax errors and displayed with the following indicators:

- Red error symbol in the "Status of configuration" (offline mode) or "Compare result" (online mode, depending on the selected comparison type) columns
- Table field with red background

  If you click the bad field, a roll-out error message appears with information of the permissible value range or the required syntax (format)

Compilation error

From the error message of the compiler, you can directly open the Parameter view (functional navigation) containing the parameter causing the error in situations where the parameter is not displayed in the configuration window.

5.11.4.6 Editing start values in the project

With the Parameter view, you can edit the start values in the project in offline mode and online mode.

- You make value changes in the "Start value in project" column of the parameter table.
- In the "Status of configuration" column of the parameter table, the progress of the configuration is indicated by the familiar status symbols from the configuration window of the technology object.

Boundary conditions

- If other parameters depend on the parameter whose start value was changed, the start value of the dependent parameters are also adapted.
- If a parameter of a technology object is not editable, it is also not editable in the parameter view. The ability to edit a parameter can also depend on the values of other parameters.

Defining new start values

To define start values for parameters in the Parameter view, follow these steps:

1. Open the Parameter view of the technology object.
2. Enter the desired start values in the "Start value in project" column. The value must match the data type of the parameter and must not exceed the value range of the parameter.
   The limits of the value range can be seen in the "Maximum value" and "Minimum value" columns.

The "Status of configuration" column indicates the progress of the configuration with colored symbols.

Following adaptation of the start values and downloading of the technology object to the CPU, the parameters take the defined value at startup if they are not declared as retentive ("Retain" column).

Error display

When a start value is input, a check is made for process-related and syntax errors and the result is indicated.

Bad start values are indicated by:

- Red error symbol in the "Status of configuration" (offline mode) or "Compare result" (online mode, depending on the selected comparison type) columns

and/or

- Red background in the "Start value in project" field
  If you click on the bad field, a roll-out error message appears with information of the permissible value range or the necessary syntax (format)

Correcting bad start values

1. Correct bad start values using information from the roll-out error message.

   Red error symbol, red field background, and roll-out error message are no longer displayed.

The project cannot be successfully compiled unless the start values are error-free.

5.11.4.7 Monitoring values online in the parameter view

You can monitor the values currently taken by the parameters of the technology object in the CPU (monitor values) directly in the Parameter view.

Requirements

- There is an online connection.
- The technology object is downloaded to the CPU.
- The Parameter view of the technology object is open.

Procedure

As soon as the Parameter view is online, the following columns are additionally displayed:

- Compare result
- Start value PLC
- Monitor value
- Modify value
- Selection for transmission

The "Monitor value" column shows the current parameter values on the CPU.

Display

All columns that are only available online have an orange background:

- Values in light-orange cells can be changed.
- Values in cells with a dark orange background cannot be changed.

See also

Parameter table (Page 273)

5.11.4.8 Modifying values

With the Parameter view, you can modify values of the technology object in the CPU.

You can assign values to the parameter once (Modify value) and modify them immediately. The modify request is executed as quickly as possible without reference to any particular point in the user program.

DANGER

Danger when modifying:

Changing the parameter values while the plant is operating may result in severe damage to property and personal injury in the event of malfunctions or program errors.

Make sure that dangerous states cannot occur before you use the "Modify" function.

Requirements

- There is an online connection.
- The technology object is downloaded to the CPU.
- The Parameter view of the technology object is open.
- The parameter can be modified (associated field in the "Modify value" column has a light-orange background).

Procedure

To modify parameters immediately, follow these steps:

- Enter the desired modify values in the “Modify values” column of the parameter table.

The selected parameters are modified once and immediately with the specified values and can be monitored in the "Monitor values" column. The check boxes for modifying in the "Selection for transmission" column are automatically cleared after the modify request is complete.

Error display

When a start value is input, a check is made immediately for process-related and syntax errors and the result is indicated.

Bad start values are indicated by:

- Red background in the “Modify value” field

and

- If you click the bad field, a roll-out error message appears with information of the permissible value range or the necessary syntax (format)

Bad modify values

- Modify values with process-related errors can be transmitted.
- Modify values with syntax errors **cannot** be transmitted.

5.11.4.9 Comparing values

You can use comparison functions to compare the following memory values of a parameter:

- Start value in project
- Start value PLC

Requirements

- There is an online connection.
- The technology object is downloaded to the CPU.
- The Parameter view of the technology object is open.

Procedure

To compare the start values on the various target systems, follow these steps:

1. Click the "Selection of compare values" icon .

   A selection list containing the comparison options opens:

   – Start value in project - Start value PLC (default setting)

2. Select the desired comparison option.

   The selected comparison option is executed as follows:

   – A scales symbol appears in the header cells of the two columns selected for comparison.

   – Symbols are used in the "Compare result" column to indicate the result of the comparison of the selected columns.

Symbol in "Compare result" column

Symbol	Meaning
	The compare values are equal and error-free.
	The compare values are not equal and error-free.
	At least one of the two compare values has a process-related or syntax error.
	The comparison cannot be performed. At least one of the two compare values is not available (e.g., snapshot).

Symbol in the navigation

The symbols are shown in the same way in the navigation if the compare result applies to at least one of the parameters below the displayed navigation structure.

Programming 6

6.1 Introduction

The "Programming" section contains general information on supplying and evaluating the Motion Control instructions and on technology data blocks.

You can find an overview of the Motion Control instructions in the Functions (Page 27) section.

You can use Motion Control instructions in the user program to assign jobs to the technology object. You define the job using the input parameters of the Motion Control instructions. The current job status is indicated in the output parameters.

The technology data block is available to you as an additional interface to the technology object.

6.2 Technology data block

6.2.1 Introduction

The properties of real objects (e.g. drives) are configured by means of the technology objects and saved in a technology data block. The technology data block contains all configuration data, setpoint and actual values, and status information of the technology object. The TIA Portal automatically creates the technology data block when the technology object is created. You access the data of the technology data block (read/write access) with your user program.

A listing and description of the tags can be found in the Appendix (Page 431).

6.2.2 Evaluating the technology data block

Access to data in the technology data block occurs in accordance with the access to standard data blocks. Only tags with elementary data types can be accessed in the technology data block. It is not possible to access tags with composite data types (such as STRUCT, ARRAY).

Reading values from the technology data block

In your user program you can read actual values (e.g. current position) and status information, or detect error messages in the technology object. When you program a query in your user program (e.g. current velocity), the value is directly read from the technology object.

Reading values from the technology data block takes longer than for other data blocks. If you use these tags several times in a single cycle of your user program, it is recommended to copy the tag values to local tags, and use the local tags in your program.

Writing values to the technology data block

The configuration of the technology object in the TIA Portal is used to write the corresponding data to the technology data block. After they have been loaded into the CPU, these data are stored in the CPU on the SIMATIC Memory Card (load memory).

In the following cases, it may be necessary for the user program to write values to the technology data block:

- Adaptation of the configuration of the technology object (e.g. dynamic limits, software limit switches)
- Use of overrides
- Adaptation of position control (e.g. "Kv" parameter)

Changes to values in the technology data block by the user program can take effect at various points in time. The relevant property of the individual tags can be found in their descriptions in the Appendix (Page 431):

Effectiveness of changes	Description	
Direct (DIR)	You write changes using direct assignments. The changes are applied only at the start of the next MC-Servo [OB91]. The changes are retained until the next POWER OFF of the CPU or restart of the technology object.	
	LREAL (e.g. <TO>.Override.Velocity)	The technology object performs a range check on the written value, and immediately starts using the new value. If range limits are violated when writing, the technology object automatically corrects the values. If the value is below the range, then the value is set to the low limit of the range; if the range is exceeded, then the value is set to the high limit of the range.
	DINT/BOOL (e.g. <TO>.Position Limits_SW.Active)	Changes are only permitted in the defined value range. Value changes outside the value range are not applied. If you enter invalid values, the programming error OB (OB 121) is started.
When Motion Control instruction is called (CAL) (e.g. <TO>.Sensor[n].ActiveHoming.HomePositionOffset)	You write changes using direct assignments. The changes are applied at the start of the next MC-Servo [OB91] after the call of the corresponding Motion Control instruction in the user program. The changes are retained until the next POWER OFF of the CPU or restart of the technology object.	
Restart (RES) (e.g. <TO>.Homing.AutoReversal)	Since restart-relevant tags have dependencies on other tags, value changes cannot be applied at any arbitrary time. The changes are only used after reinitialization (restart) of the technology object. During a restart the technology object is reinitialized with the data in load memory. You therefore write changes to the start value in the load memory with the extended instruction "WRIT_DBL" (write to data block in load memory). You trigger the restart in your user program using the Motion Control instruction "MC_Reset" with parameter "Restart" = TRUE. Additional information regarding the restart can be found in the Restarting technology objects (Page 314) section.	
Read only (RON) (e.g. <TO>.Position)	The tag cannot and must not be changed during runtime of the user program.	

Note

Save changes with "WRIT_DBL"

Changes to tags immediately in effect are lost on POWER OFF of the CPU, or restart of the technology object.

If changes in the technology data block should also be retained after POWER OFF of the CPU, or restart of the technology object, you must write the changes to the start value in the load memory with the extended instruction "WRIT_DBL".

Note

Using the "READ_DBL" and "WRIT_DBL" data block functions

The "READ_DBL" and "WRIT_DBL" data block functions may only be used on individual tags in conjunction with the tags of the technology object. The "READ_DBL" and "WRIT_DBL" data block functions must not be applied to data structures of the technology object.

Isochronous evaluation of data

If you want to process data of the technology data block in isochronous mode from a Motion Control application cycle, there is the option of evaluating this data in the MC-PreServo [OB67]/MC-PostServo [OB95] as of technology version V3.0.

See also

Organization Blocks for Motion Control (Page 95)

6.2.3 Evaluate StatusWord, ErrorWord and WarningWord

To be able to symbolically use individual status and error information from the "StatusWord", "ErrorWord" and "WarningWord" data double words, you can evaluate them as described below. For consistent evaluation, you should avoid using bit addressing to access these data double words in the technology data block. Access to an individual bit in the technology data block only lasts as long as the access to the entire data word.

When required, copy the required data double word to a tag of a data structure and query the individual bits of the tag.

The allocation of the individual bits in the data double words can be found in the Appendix (Page 431) in the description of the tags of the corresponding technology object.

Requirements

The technology object has been created.

Procedure

To evaluate the individual bits in the data word "StatusWord", follow these steps:

1. Crate a global data structure. Name the data structure, e.g. as "Status".
2. Create a double word (DWORD) in the data structure "Status". Name the double word, e.g. as "Temp".
3. Create 32 Boolean tags in the "Status" data structure. You can obtain a clearer overview by giving the individual Boolean tags identical names as the bits in the technology DB (e.g. name the fifth Boolean tag "HomingDone").
4. Copy the tag <TO>.StatusWord as needed from the technology data block to the double word "Temp" in your data structure.
5. Copy the individual bits of double word "Temp" to the corresponding Boolean tags with bit accesses.
6. Use the Boolean tags to query the status bits.

Evaluate the data words "ErrorWord" and "WarningWord" as specified in steps 1 to 6.

Example

The following example shows how you can read out and save the fifth bit "HomingDone" of the data word "StatusWord":

SCL	Explanation
`#Status.Temp := "TO".StatusWord;`	`//Copy status word`
`#Status.HomingDone := #Status.Temp.%X5;`	`//Copy individual bits per bit access`

STL	Explanation
`L "TO".StatusWord`	`//Copy status word`
`T #Status.Temp`	
`U #Status.Temp.%X5`	`//Copy individual bits per bit access`
`= #Status.HomingDone`	

6.2.4 Change restart-relevant data

In order to change restart-relevant data in the technology data block, write to the starting values of the tags in load memory using the extended instruction "WRIT_DBL". In order for the changes to be applied, a restart of the technology object must be performed.

Whether changes to the value of a tag are relevant for the restart can be found in the description of the tags in the Appendix (Page 445).

Requirement

The technology object has been created.

Procedure

To change restart-relevant data, proceed as follows:

1. Create a data block and fill it with the restart-relevant values, that you want to change in the technology data block. In doing so, the data types must match the tags to be changed.
2. Write the values from your data block to the starting values of the tags of the technology data block in load memory, using the extended instruction "WRIT_DBL".

   If restart-relevant data were changed, this will be indicated in the <TO>.StatusWord.X3 (OnlineStartValuesChanged) tag of the technology object.
3. Perform a restart of the technology object using the Motion Control instruction "MC_Reset" with parameter "Restart" = TRUE.

After the restart of the technology object, the new value is transferred into the technology data block in work memory, and is effective.

6.3 Motion Control instructions

6.3.1 Motion Control instruction parameters

Description

The individual Motion Control instructions are described in detail in the section MC_Power V4 (Page 361).

When creating your user program, take the following explanations of the Motion Control instruction parameters into account.

Reference to the technology object

The technology object is specified for the Motion Control instruction as follows:

- **Parameter "Axis"**

  The "Axis" input parameter of a Motion Control instruction contains a reference to the technology object that is to execute the corresponding job.

  The corresponding technology object is also referenced in the following parameters:

  – Parameter "Master"

  – Parameter "Slave"

  – Parameter "Cam"

  – Parameter "MeasuringInput"

  – Parameter "OutputCam"

  – Parameter "CamTrack"

  As of technology version V3.0, the reference to the technology object can also be specified with the data type DB_ANY.

Job start and transfer of input parameters of a Motion Control instruction

For the start of jobs and the transfer of modified parameter values, a distinction is made between the following Motion Control instructions:

- **Motion Control instructions with "Execute" parameter**

  With a positive edge at the "Execute" parameter, the job is started and the existing values for the input parameters are transferred.

  Subsequently changed parameter values are not transferred until the next job start.

  Resetting the "Execute" parameter does not end the job, but it does affect the display duration of the job status. As long as "Execute" is set to TRUE, the output parameters will be updated. If "Execute" is reset before the completion of a job, the parameters "Done", "Error" and "CommandAborted" are correspondingly set for only one call cycle.

- **Motion Control instructions with "Enable" parameter**

  The job is started by setting the "Enable" parameter.

  As long as "Enable" = TRUE, the job remains active and changed parameter values will be transferred each time the instruction is called in the user program.

  The job is ended by resetting the "Enable" parameter.

  The input parameters "JogForward" and "JogBackward" of the Motion Control instruction "MC_MoveJog" correspond in their behavior to the "Enable" parameter.

Job status

The following output parameters indicate the status of the job execution:

- **Motion Control instructions with "Done" parameter**

  The normal completion of a job is indicated with parameter "Done" = TRUE.

- **Motion Control instructions without "Done" parameter**

  The achievement of the job objective is indicated by other parameters (e.g. "Status", "InVelocity"). For more information, refer to the section Tracking running jobs (Page 302).

- **Parameter "Busy"**

  As long as a job is being processed, the "Busy" parameter shows the value TRUE. If a job was ended or aborted, "Busy" shows the value FALSE.

- **Parameter "CommandAborted"**

  If a job was aborted by another job, the CommandAborted parameter shows the value "TRUE".

- **Parameter "Error"**

  If a Motion Control instruction error occurs, the "Error" parameter shows the value TRUE. The ErrorID parameter indicates the cause of the error.

As long as the "Execute" or "Enable" parameter is set to TRUE, the output parameters will be updated. Otherwise the parameters "Done", "Error" and CommandAborted" are correspondingly set for only one cycle.

Abort of running jobs

An active Motion Control job is aborted by the start of a new Motion Control job. In the process, the current dynamic setpoints (acceleration, deceleration, jerk, velocity) are set to the values of the overriding job.

Example of parameter behavior

The behavior of the parameters of Motion Control instructions is shown in the following chart using the example of two "MC_MoveAbsolute" jobs.

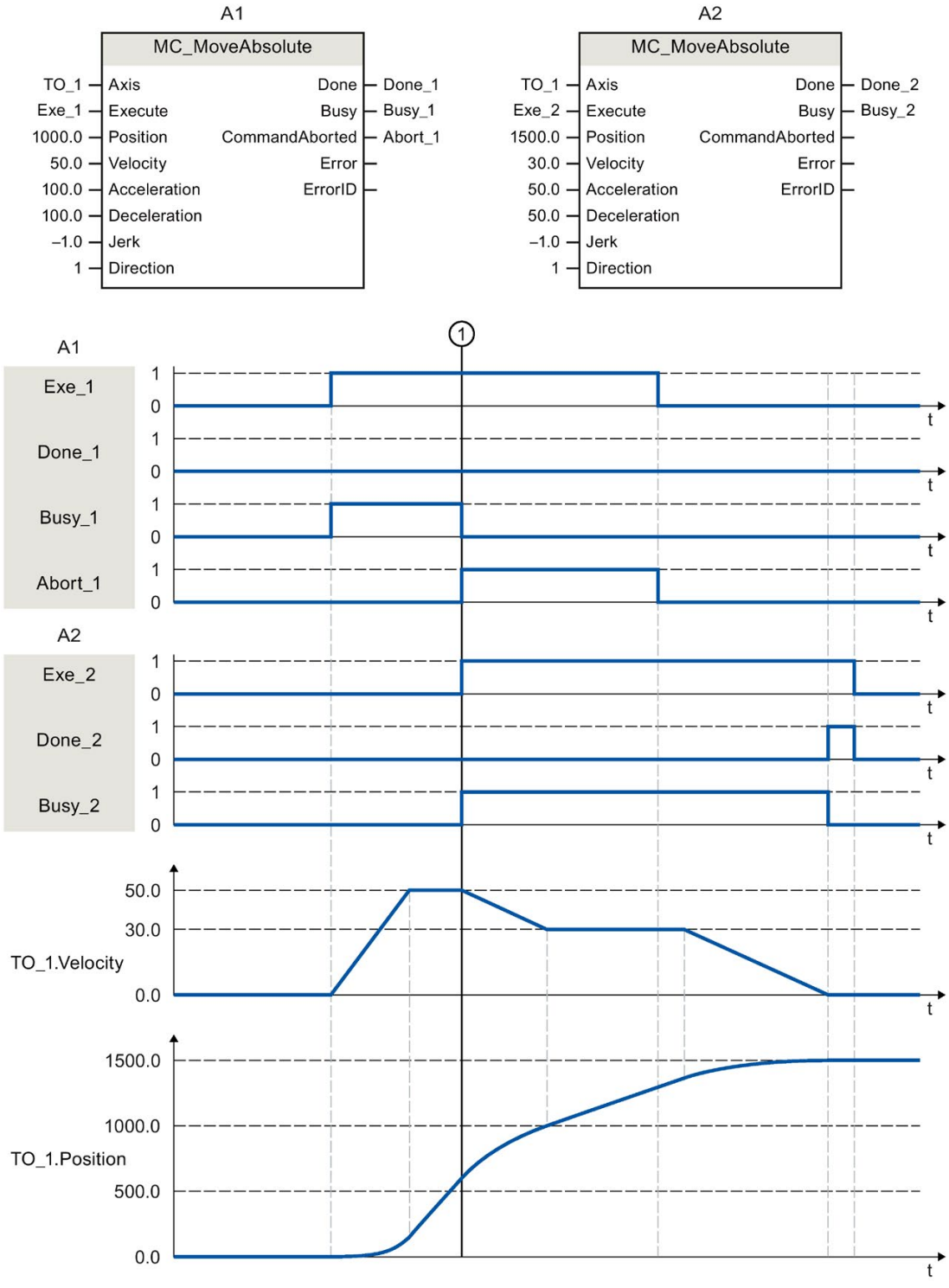

Using "Exe_1", an "MC_MoveAbsolute" job (A1) with target position 1000.0 is initiated. "Busy_1" is set to TRUE. The axis is accelerated to the specified velocity and moved to the target position (see TO_1.Velocity and TO_1.Position). Before the target position is reached, the job is overridden at time ① by another "MC_MoveAbsolute" job (A2). The abort is signaled via "Abort_1", and "Busy_1" is set to FALSE. The axis is braked to the velocity specified in A2 and moved to the new target position 1500.0. When the axis reaches the target position, this is signaled via "Done_2".

Non position-controlled operation

The position control of the axis can be deactivated with the following parameters:

- MC_Power.StartMode = 0
- MC_MoveVelocity.PositionControlled = FALSE
- MC_MoveJog.PositionControlled = FALSE

For more information, refer to the section " Non position-controlled operation (Page 298).

See also

Instructions (Page 361)

6.3.2 Add Motion Control instructions

You add Motion Control instructions to a program block in the same way as other instructions. You control all available functions of the technology object using the Motion Control instructions.

Requirements

The technology object was created.

Procedure

To add Motion Control instructions in your user program, proceed as follows:

1. Double click your program block in the project tree (the program block must be called in the cyclical program).

   The program block is opened in the programming editor, and the available instructions are displayed.

2. In the "Instructions" task card, open the "Technology > Motion Control" folder.
3. Using drag-and-drop, move the Motion Control instruction, e.g. "MC_Power", to the desired segment of the program block.

   The "Call options" dialog opens.

4. In the dialog, specify a name and a number for the instance data block of the Motion Control instruction.
5. Click "OK".

   The Motion Control instruction "MC_Power" is inserted into the network.

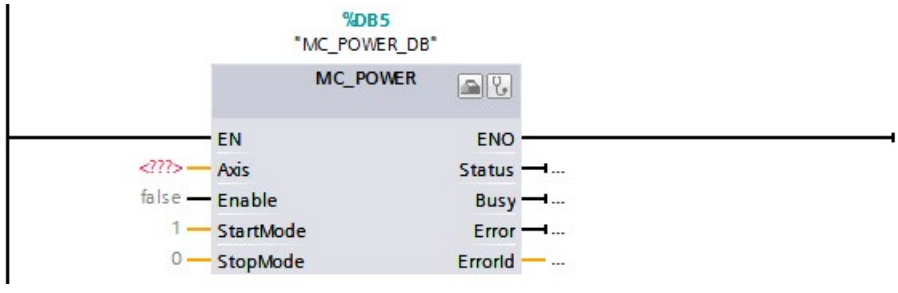

   The instance data block is automatically created under "Program Blocks > System Blocks > Program Resources".

6. Input parameters without a default value (e.g. "Axis"), must be assigned. Select the technology object in the project tree and move it onto <...> in the "Axis" parameter using drag-and-drop.

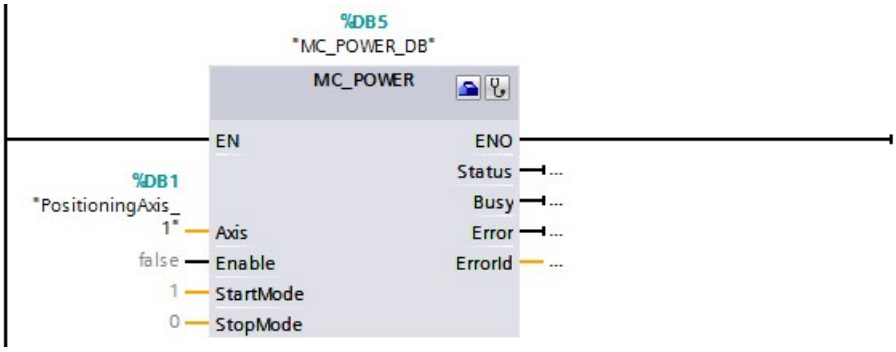

Once the technology object is specified in the "Axis" parameter, the following buttons are available to you:

	To open the configuration of the technology object, click on the toolbox icon.
	To open the diagnostics of the technology object, click on the stethoscope icon.

7. Add additional Motion Control instructions in accordance with steps 3 through 6.

See also

Tracking active jobs (Page 302)

Tags of the positioning axis/synchronous axis technology object (Page 445)

6.3.3 Parameter transfer for function blocks

If you want to reuse a function block with Motion Control instructions for different technology objects, create an input parameter of the data type of the respective technology object in the block interface of the calling function block. You assign the data type in the block interface with a direct input. The parameter is then transferred as reference to the technology object to the "Axis" parameter of the Motion Control instructions. The data types of technology objects correspond to the structure of the associated technology data block.

By specifying the data type, you can address the tags of the technology object in the function block (<parameters of the block interface>.<tag of the technology object>).

The data types for the reference to the technology objects are available in the appendix (Page 555).

Example 1

The following table shows the declaration of the tags used:

Tag	Declaration	Data type	Description
axis	Input	TO_PositioningAxis	Reference to the technology object
on	Input	BOOL	Signal to enable the axis
actPosition	Output	LReal	Query of the actual position from the technology data block
instMC_POWER	Static	MC_POWER	Multiinctance of the Motion Control instruction MC_Power

The following SCL program shows how to implement this task:

SCL	Explanation
`#instMC_POWER(Axis := #axis, Enable := #on);`	`//Call of the Motion Control instruction MC_Power with enable of the axis`
`#actPosition := #axis.ActualPosition;`	`//Query of the actual position from the technology data block`

Example 2

The data type "DB_Any" provides a further option for the transfer of specific data types of the technology object. Unlike the data types of the technology object in the program, "DB_Any" can be assigned during runtime.

This example shows how you can program variable switching of up to four cams at "MC_CamIn".

To do this, tags of the data type "DB_Any" are first created as input parameter of the block. The cam to be used is assigned by an additional input parameter.

The following table shows the declaration of the tags used:

Tag	Declaration	Data type	Description
cam1	Input	DB_ANY	Cam 1
cam2	Input	DB_ANY	Cam 2
cam3	Input	DB_ANY	Cam 3
cam4	Input	DB_ANY	Cam 4
camToUse	Input	Int	Selection of cam 1 to 4
instMC_CAMIN	Static	MC_CAMIN	Multi-instance of the MC_CamIn
tempCamSel	Temp	DB_ANY	Current cam

The example below shows the basic procedure:

```
SCL                                                  Explanation
                                                     //Selection of the desired cam 1..4
                                                     //Using an input tag of data type Int
CASE #camToUse OF
     1:  #tempCamSel := #cam1;                       //Instruction for scenario 1
     2:  #tempCamSel := #cam2;                       //Instruction for scenario 2
     3:  #tempCamSel := #cam3;                       //Instruction for scenario 3
     4:  #tempCamSel := #cam4;                       //Instruction for scenario 4
   ELSE                                              //Instruction for Int ≤ 0 or > 4
     #tempCamSel := #cam1;                           //Corresponds to default cam 1
END_CASE;
                                                     //Calling of the MC_CamIn with variable transfer
                                                     of the cam technology object using the temporary
                                                     tag "tempCamSel"

#instMC_CAMIN(Master := "PositioningAxis_1",         //Direct assignment of the technology object of
                                                     the leading axis
              Slave := "SynchronousAxis_1",          //Direct assignment of the technology object of
                                                     the following axis
              Cam := #tempCamSel);                   //Indirect assignment of the cam technology object
```

Additional information

You can find more program examples using the data type "DB_Any" in the following FAQ:

https://support.industry.siemens.com/cs/document/109750880
(https://support.industry.siemens.com/cs/ww/en/view/109750880)

6.3.4 Non position-controlled operation

The closed loop position control of an axis can be switched off/switched with the following Motion Control instructions:

- MC_Power
- MC_MoveVelocity
- MC_MoveJog

The non-position-controlled operation is displayed with <TO>.StatusWord.X28 (NonPositionControlled) = TRUE.

MC_Power

The axis is enabled without closed loop position control with "MC_Power" and the parameter "StartMode" = 0. The closed loop position control remain switched off until a different Motion Control instruction changes the status of the closed loop position control.

MC_MoveVelocity and MC_MoveJog

A "MC_MoveVelocity" or "MC_MoveJog" job with "PositionControlled" = FALSE forces non-position-controlled operation.

A "MC_MoveVelocity" or "MC_MoveJog" job with "PositionControlled" = TRUE forces position-controlled operation.

The selected mode remains in effect after the job is completed.

Influence of additional Motion Control instructions

Starting the following Motion Control instructions forces position-controlled operation of the axis:

- MC_Home with "Mode" = 3, 5
- MC_MoveAbsolute
- MC_MoveRelative
- MC_MoveSuperimposed
- MC_GearIn
- MC_GearInPos (S7-1500T)
- MC_CamIn (S7-1500T)

The closed loop position control remains active after completing the corresponding jobs.

The Motion Control instruction MC_Halt is executed in position-controlled and non-position-controlled operation. The status of the closed loop position control is not changed by "MC_Halt".

A torque limiting activated with "MC_TorqueLimiting" is in effect even with non-position-controlled operation.

Synchronous operation with setpoint coupling

A following axis is set into position-controlled operation with the start of a synchronous operation job. If the leading axis is in non-position-controlled operation at the start of the synchronous operation, the synchronous operation job remains waiting. Synchronization is started only after position control has been activated and the start position of the synchronization has been reached.

Note

If the leading axis is set to the non-position-controlled mode during active synchronization, your setpoint is then set to zero. A setpoint step change is obtained as a result of coupling the setpoint of following axis. The setpoint step change is compensated according to the constant function. The only limiting factor is the maximum speed of the drive.

Synchronous operation with actual value coupling (S7-1500T)

A following axis is set into position-controlled operation with the start of a synchronous operation job. If the leading axis is in non-position-controlled operation at the start of the synchronous operation and the actual values are valid, synchronization is started.

If the leading axis is set to the non-position-controlled mode during active synchronization, the synchronization remains active.

6.4 Starting Motion Control jobs

Description

Motion Control jobs are started by setting the "Execute" or "Enable" parameter of the Motion Control instruction. The call of the Motion Control instructions for a technology object should occur in an execution level.

When executing Motion Control jobs, you should also take note of the status of the technology object.

Starting Motion Control jobs should be performed in the following steps:

1. Query the status of the technology object.
2. Initiate new job for the technology object.
3. Check job status.

These steps are explained using the example of a job for absolute positioning.

1. Query the status of the technology object

Make sure that the technology object is in the appropriate status to perform the desired job:

- **Has the technology object been released?**

  To execute motion jobs, the technology object must be enabled.

  Enabling is performed using the Motion Control instruction "MC_Power".

  The "MC_Power.Status" parameter (<TO>.StatusWord.X0 (Enable)) must show the value TRUE.

- **Is a technology alarm pending?**

  To perform motion commands, no technology alarms or alarm responses may be pending. The tags of the technology objects <TO>.ErrorDetail.Number and <TO>.ErrorDetail.Reaction must show the value zero. After resolving the error, acknowledge any pending alarms using the Motion Control instruction "MC_Reset".

  A list of the technology alarms and alarm reactions can be found in the appendix, Technology alarms (Page 513).

- **Has the technology object been homed?**

  In order to perform a job for absolute positioning, the positioning axis/synchronous axis technology object must be homed. The referencing occurs via the Motion Control instruction "MC_Home". The "<TO>.StatusWord.X5 (HomingDone) " tag of the technology object must show the value TRUE .

2. Initiate new command for the technology object

In the "Position" parameter of the "MC_MoveAbsolute" instruction, specify the position to which the axis should be moved. Start the job with a positive edge at the "Execute" parameter.

3. Check command status

Parameter "Done" of the Motion Control instruction indicates successful completion of a job (target reached, in this case).

If an error is detected, the "Error" parameter of the Motion Control instruction is set to TRUE, and the job is rejected.

You can program an error handling routine for the Motion Control job. For this purpose, evaluate the error indicated in the "Error" parameter. The cause of the error is indicated in the ErrorID parameter. After resolving the cause of the error, restart the job.

Output of the "Error" = TRUE and "ErrorID" = 16#8001 status information during job processing indicates that a technology alarm was triggered.

You can find a list of the ErrorIDs in the Error detection (Page 542) appendix.

Additional information

An option for the evaluation of the individual status bits, error bits, and warning bits can be found in the Evaluating StatusWord, ErrorWord and WarningWord (Page 288) section.

6.5 Tracking active jobs

6.5.1 Introduction

The current status of the job processing is made available via the output parameters of the Motion Control instruction. These parameters are updated with each call of the Motion Control instruction.

When tracking jobs, a distinction is made between three groups:

- Motion Control instructions with "Done" parameter (Page 302)
- Motion Control instructions without "Done" parameter (Page 306)
- Motion Control instruction "MC_MoveJog" (Page 310)

6.5.2 Motion Control instructions with "Done" parameter

Description

Jobs of Motion Control instructions with the "Done" parameter are started with a positive edge at the "Execute" parameter. If the job was completed without errors or interruption by another job (e.g. "MC_MoveAbsolute": Target position reached), the "Done" parameter shows the value TRUE.

The following Motion Control instructions have a "Done" parameter:

- MC_Home
- MC_MoveRelative
- MC_MoveAbsolute
- MC_MoveSuperimposed
- MC_Halt
- MC_Reset
- MC_MeasuringInput
- MC_AbortMeasuringInput

The behavior of the parameters is shown below by way of example for various situations:

Complete execution of the job

If the Motion Control job has been completely executed all the way to the end, this is indicated with parameter "Done" = TRUE. The signal state of the "Execute" parameter influences the display duration for the "Done" parameter:

You set "Execute" **after completion** of the job to FALSE.	You set "Execute" **during processing** of the job to FALSE.
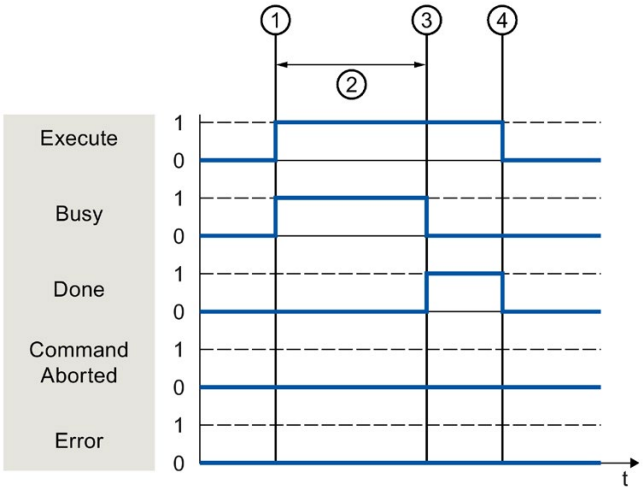	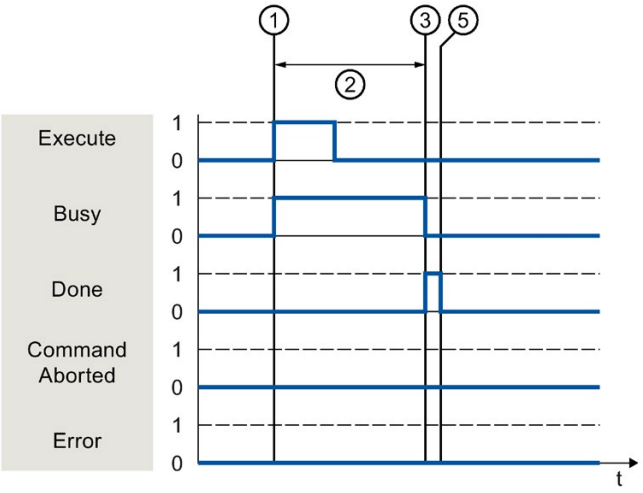

①	The job is started with a positive edge at the "Execute" parameter. Depending on the programming, "Execute" can be reset to the value FALSE during the job or the value TRUE can be retained until after completion of the job.
②	While the job is being executed, the "Busy" parameter shows the value TRUE.
③	At the completion of the job (for example, with Motion Control instruction "MC_MoveAbsolute": Target position reached), the "Busy" parameter changes to FALSE and the "Done" parameter to TRUE.
④	As long as the "Execute" parameter retains the value TRUE after completion of the job, the "Done" parameter also retains the value TRUE.
⑤	If the "Execute" parameter was already set to FALSE before completion of the job, the "Done" parameter shows the value TRUE for only one execution cycle.

Job abort

If the Motion Control job is aborted during processing by another job, this is indicated in the "CommandAborted" parameter with the value TRUE. The signal state of the "Execute" parameter influences the display duration for the "CommandAborted" parameter:

You set "Execute" **after** the job is aborted to FALSE.	You set "Execute" **before** the job is aborted to FALSE.
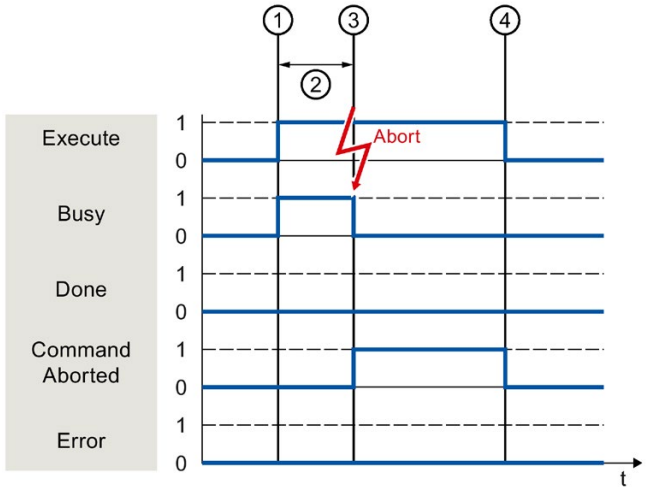	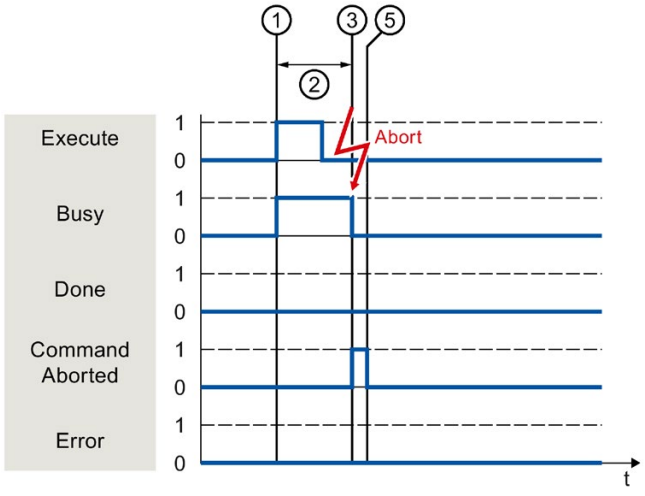

①	The job is started with a positive edge at the "Execute" parameter. Depending on the programming, "Execute" can be reset to the value FALSE during the job or the value TRUE can be retained until after completion of the job.
②	While the job is being executed, the parameter "Busy" shows the value TRUE.
③	During job execution, the job is aborted by another Motion Control job. When the job is aborted, the "Busy" parameter changes to "FALSE" and "CommandAborted" changes to TRUE.
④	As long as the "Execute" parameter retains the value TRUE after completion of the job, the "CommandAborted" parameter also retains the value TRUE.
⑤	If the "Execute" parameter was already set to FALSE before the job is aborted, the "CommandAborted" parameter shows the value TRUE for only one execution cycle.

Error during job execution

If an error occurs during execution of the Motion Control job, this is indicated with parameter "Error" = TRUE. The signal state of the "Execute" parameter influences the display duration for the "Error" parameter:

You set "Execute" **after** the occurrence of the error to FALSE.	You set "Execute" **before** the occurrence of the error to FALSE.
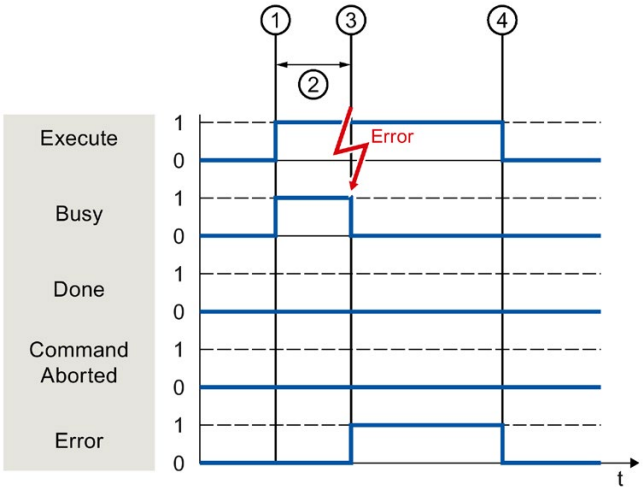	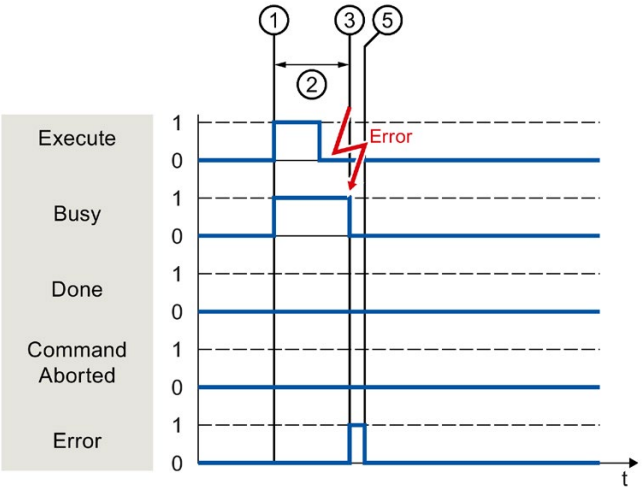

①	The job is started with a positive edge at the "Execute" parameter. Depending on the programming, "Execute" can be reset to the value FALSE during the job or the value TRUE can be retained until after completion of the job.
②	While the job is being executed, the "Busy" parameter shows the value TRUE.
③	An error occurs during the execution of the job. When the error occurs, the "Busy" parameter changes to FALSE and the "Error" parameter to TRUE.
④	As long as the "Execute" parameter retains the value TRUE after the occurrence of the error, the "Error" parameter also retains the value TRUE.
⑤	If the "Execute" parameter was already set to FALSE before the occurrence of the error, the "Error" parameter shows the value TRUE for only one execution cycle.

6.5.3 Motion Control instructions without "Done" parameter

Description

Motion Control instructions without the "Done" parameter use a special parameter to indicate that the command objective (e.g. "InVelocity", "InGear") has been achieved. The target state or motion is stopped until the job is aborted or an error occurs.

The following Motion Control instructions have a special parameter for indicating the job status:

- MC_Power ("Status" parameter)
- MC_MoveVelocity ("InVeloctity" parameter)
- MC_GearIn ("InGear" parameter)
- MC_MoveJog ("InVelocity" parameter)

  The special behavior of "MC_MoveJog" is described in the section Motion Control instruction MC_MoveJog (Page 310).
- MC_TorqueLimiting ("InClamping" and "InLimitation") parameters

The following Motion Control instructions have no special parameter for indicating the job status: Feedback is provided via the following tags:

- MC_MeasuringInputCyclic

  The execution of a measuring job is indicated with parameter "Busy" = TRUE. Completed measuring events are indicated in the corresponding event counters <TO>.MeasuredValues.MeasuredValue1Counter and <TO>.MeasuredValues.MeasuredValue2Counter of the technology data block.
- MC_OutputCam

  The execution of a job is indicated with parameter "Busy" = TRUE. The CamOutput tag in the associated technology data block indicates the switching state of the output cam.
- MC_CamTrack

  The execution of a job is indicated with parameter "Busy" = TRUE. The TrackOutput tag in the associated technology data block indicates the switching state of the output cam.

The behavior of the parameter is shown for various situations using the Motion Control instruction "MC_MoveVelocity" as an example:

Example "MC_MoveVelocity"

An "MC_MoveVelocity" job is started with a positive edge at the "Execute" parameter. The job objective is fulfilled when the assigned velocity is reached and the axis travels at constant velocity. When the assigned velocity is reached and maintained, this is indicated in the "InVelocity" parameter with the value TRUE.

The motion of the axis can, for example, be stopped with an "MC_Halt" job.

The assigned velocity is reached and maintained

The achievement of the assigned velocity is indicated with parameter "InVelocity" = TRUE. The "Execute" parameter has no effect on the display duration for the "InVelocity" parameter.

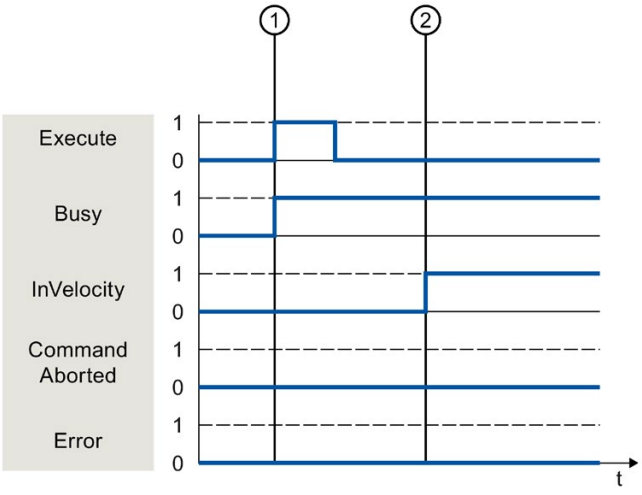

①	The job is started with a positive edge at the "Execute" parameter. Depending on the programming, "Execute" can be reset to the value FALSE before or after the assigned velocity has been reached. While the job is being executed, the parameter "Busy" shows the value TRUE.
②	When the assigned velocity is reached, the "InVelocity" parameter changes to TRUE. The "Busy" and "InVelocity" parameters retain the value TRUE until another Motion Control job overrides the "MC_MoveVelocity" job.

The job is aborted before the assigned velocity is reached

If the Motion Control job is aborted by another job before the assigned velocity is reached, this is indicated with parameter "CommandAborted" = TRUE. The signal state of the "Execute" parameter influences the display duration for the "CommandAborted" parameter.

You set "Execute" **after** the job is aborted to FALSE.	You set "Execute" **before** the job is aborted to FALSE.
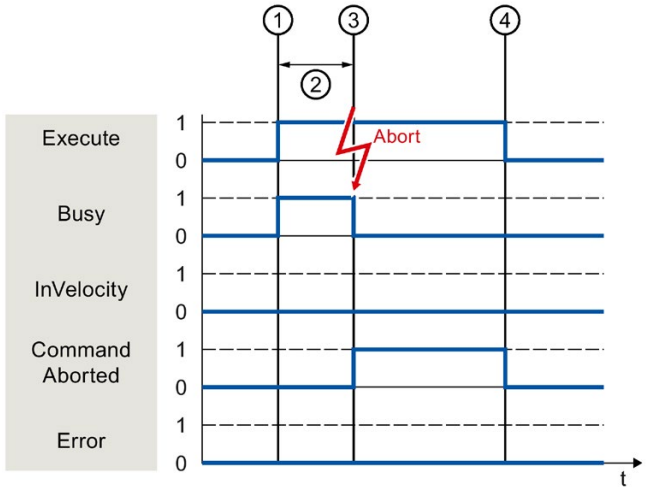	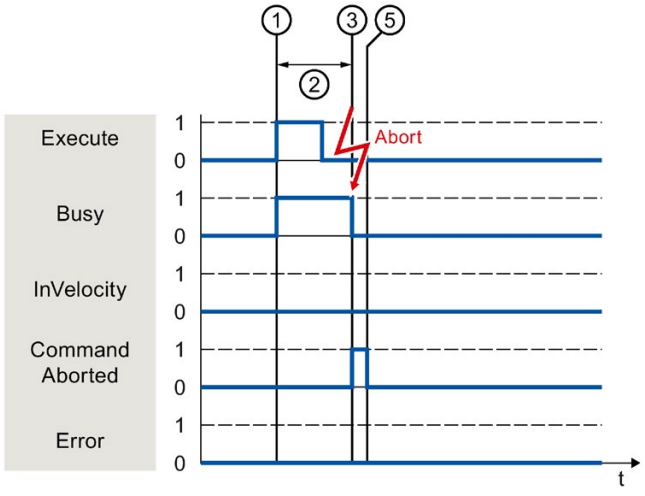

①	The job is started with a positive edge at the "Execute" parameter. Depending on the programming, "Execute" can be reset to the value FALSE during the job or the value TRUE can be retained until after the job is aborted.
②	While the job is being executed, the "Busy" parameter shows the value TRUE.
③	During job execution, the job is aborted by another Motion Control job. When the job is aborted, the "Busy" parameter changes to "FALSE" and "CommandAborted" changes to TRUE.
④	As long as the "Execute" parameter retains the value TRUE after completion of the job, the "CommandAborted" parameter also retains the value TRUE.
⑤	If the "Execute" parameter was already set to FALSE before the job is aborted, the "CommandAborted" parameter shows the value TRUE for only one execution cycle.

An error has occurred prior to reaching the assigned velocity

If an error occurs during execution of the Motion Control job before the assigned velocity has been reached, this is indicated with parameter "Error" = TRUE. The signal state of the "Execute" parameter influences the display duration for the "Error" parameter.

You set "Execute" **after** the occurrence of the error to FALSE.	You set "Execute" **before** the occurrence of the error to FALSE.
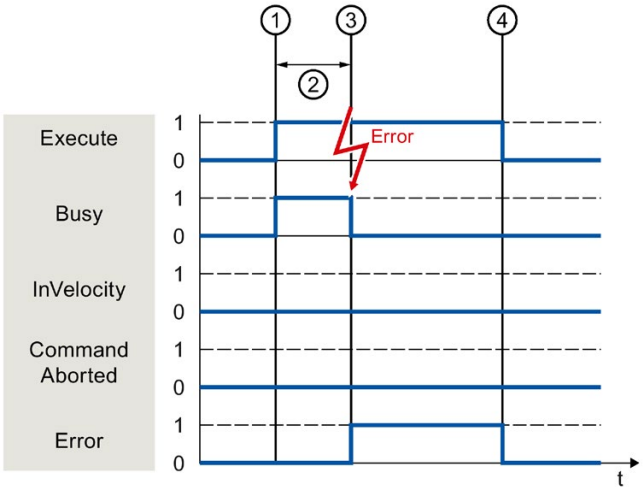	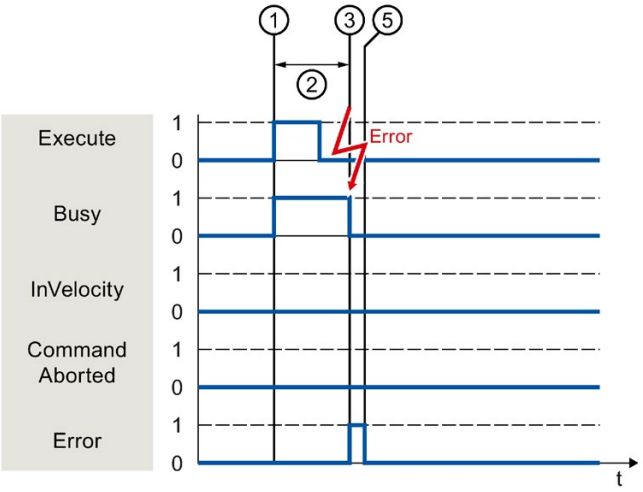

①	The job is started with a positive edge at the "Execute" parameter. Depending on the programming, "Execute" can be reset to the value FALSE during the job or the value TRUE can be retained until after the error has occurred.
②	While the job is being executed, the "Busy" parameter shows the value TRUE.
③	An error occurs during the execution of the job. When the error occurs, the "Busy" parameter changes to FALSE, and the "Error" parameter to TRUE.
④	As long as the "Execute" parameter retains the value TRUE after completion of the job, the "Error" parameter also retains the value TRUE.
⑤	If the "Execute" parameter was already set to FALSE before the job is aborted, the "Error" parameter shows the value TRUE for only one execution cycle.

6.5.4 Motion Control instruction "MC_MoveJog"

Description

An "MC_MoveJog" job is started by setting the "JogForward" or "JogBackward" parameter. The job objective is fulfilled when the assigned velocity is reached and the axis travels at constant velocity. When the assigned velocity is reached and maintained, this is indicated in the "InVelocity" parameter with the value TRUE.

The job is complete when the "JogForward" or "JogBackward" parameter has been set to the value FALSE and the axis has come to a standstill.

The behavior of the parameters is presented below for various example situations:

The assigned velocity is reached and maintained

If the Motion Control job has been performed up to the point of reaching the assigned velocity, then this is indicated in the "InVelocity" parameter with the value TRUE.

Jog mode is controlled by the "JogForward" parameter.	Jog mode is controlled by the "JogBackward" parameter.
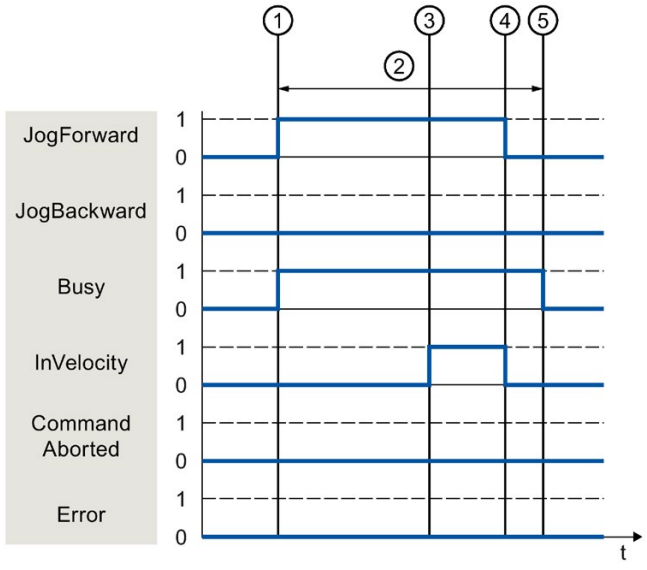	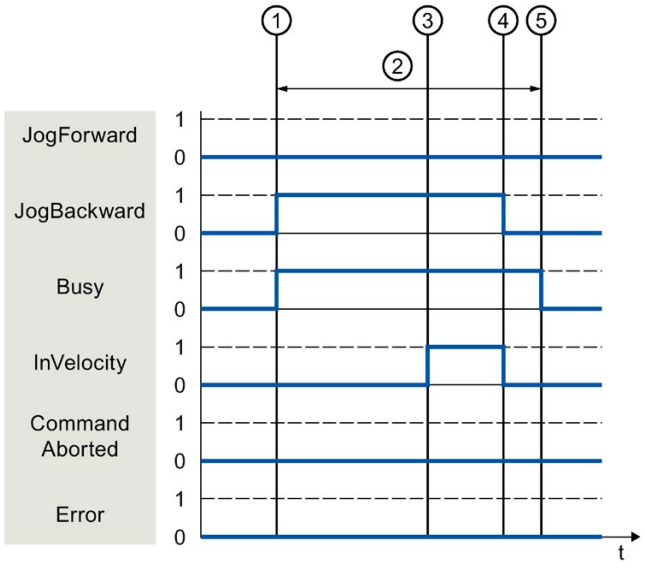

①	The job is started by setting the "JogForward" or "JogBackward" parameter.
②	While the job is being executed, the "Busy" parameter shows the value TRUE.
③	When the assigned velocity is reached, the "InVelocity" parameter changes to TRUE.
④	When the "JogForward" or "JogBackward" parameter is reset, the motion of the axis ends. The axis decelerates. The "InVelocity" parameter changes to FALSE.
⑤	If the axis has come to a standstill, then the Motion Control job is complete and the "Busy" parameter changes to FALSE.

The job is aborted during execution

If the Motion Control job is aborted during processing by another job, this is indicated in the "CommandAborted" parameter with the value TRUE. The behavior of the "CommandAborted" parameter is independent of reaching the assigned velocity.

Jog mode is controlled by the "JogForward" parameter.	Jog mode is controlled by the "JogBackward" parameter.
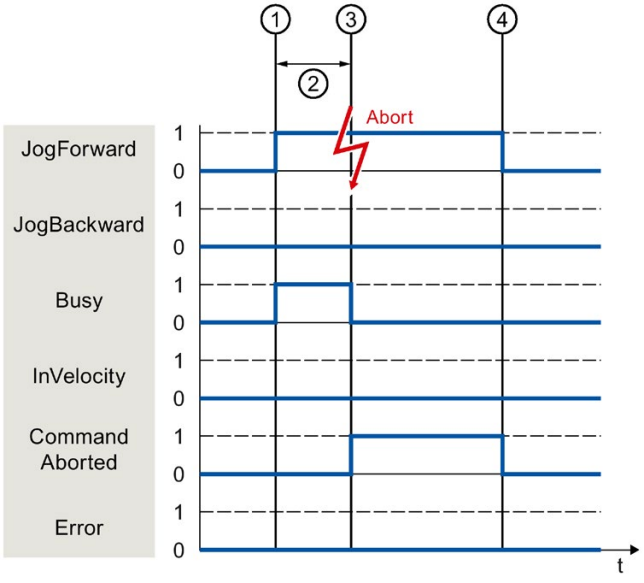	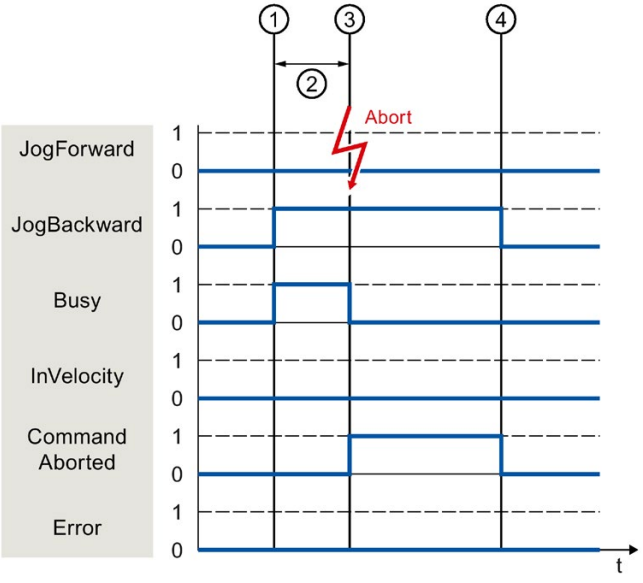

①	The job is started by setting the "JogForward" or "JogBackward" parameter.
②	While the job is processing, the "Busy" parameter shows the value TRUE.
③	During job execution, the job is aborted by another Motion Control job. When the job is aborted, the "Busy" parameter changes to "FALSE" and "CommandAborted" changes to TRUE.
④	When the "JogForward" or "JogBackward" parameter is reset, the "CommandAborted" parameter likewise changes to FALSE.

An error occurs during the execution of the job

If an error occurs during execution of the Motion Control job, this is indicated in the "Error" parameter with the value TRUE. The behavior of the "Error" parameter is independent of reaching the assigned velocity.

Jog mode is controlled by the "JogForward" parameter.	Jog mode is controlled by the "JogBackward" parameter.
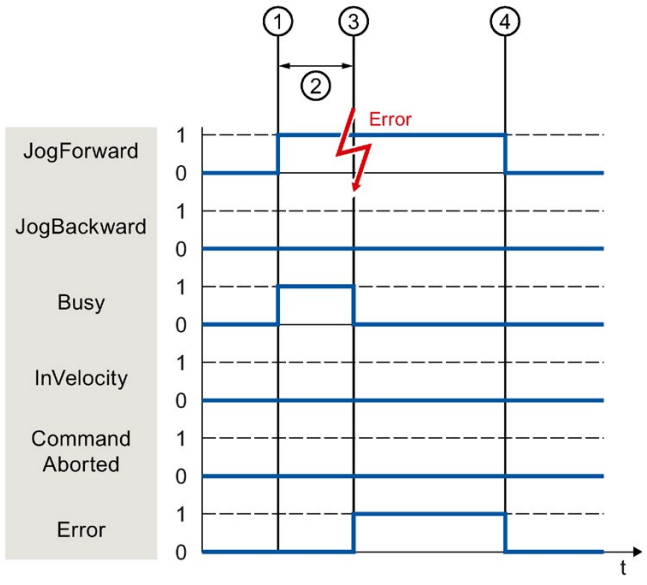	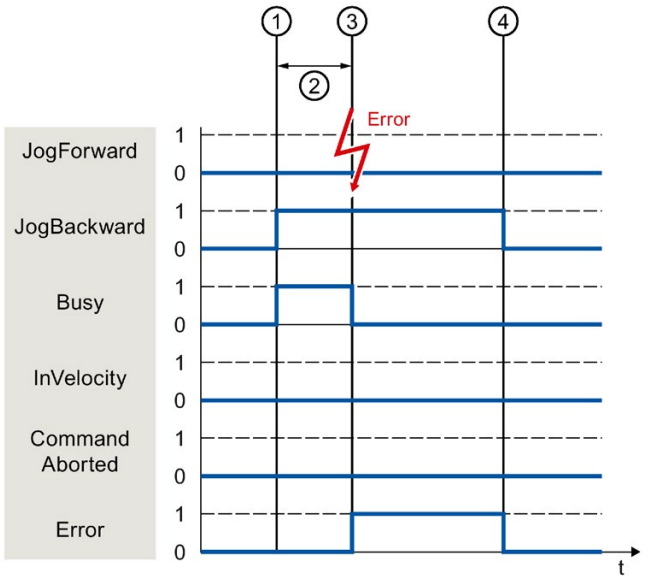

①	The job is started by setting the "JogForward" or "JogBackward" parameter.
②	While the job is being executed, the "Busy" parameter shows the value TRUE.
③	An error occurs during the execution of the job. When the error occurs, the "Busy" parameter changes to "FALSE", and "Error" changes to TRUE.
④	When the "JogForward" or "JogBackward" is reset to the value FALSE, the "Error" parameter likewise changes to FALSE.

6.6 Ending Motion Control jobs

When a job is ended, a distinction is made between error-free completion of the job and a motion abort.

Completion of job

The completion of a Motion Control job is indicated as described in the Tracking running jobs (Page 302) section.

Job termination

The termination and substitution behavior are described in the section Override response of Motion Control jobs V4 (Page 428). Special pending jobs can be cancelled with "MC_Power".

Motion abort

If a motion must be aborted, you can perform the following measures:

- Execute "MC_Halt (Page 374)"

  To abort a motion and stop the axis, you can use the "MC_Halt" instruction.

- Deactivate "MC_Power (Page 361)"

  In an emergency, you can stop the axis via an emergency stop ramp. To do so, set the "Enable" parameter of the "MC_Power" instruction to FALSE. The axis is decelerated according to the selected "StopMode" and all jobs for the technology object are aborted.

Measuring job abort

With the Motion Control instruction "MC_AbortMeasuringInput", an active one-time or cyclic measuring job is aborted.

Cancellation of an active output cam/cam track

- "MC_OutputCam (Page 407)"

  An active output cam is disabled when the "Enable" parameter of Motion Control instruction "MC_OutputCam" is set to FALSE.

- "MC_CamTrack (Page 410)"

  An active cam track is disabled when the "Enable" parameter of Motion Control instruction "MC_CamTrack" is set to FALSE.

6.7 Restart of technology objects

Description

After the CPU is switched on, or after technology objects are downloaded into the CPU, the system automatically initializes the technology objects with the start values from the technology data blocks. If restart-relevant changes are detected during a reload into the CPU, a restart of the technology object is automatically performed.

If restart-relevant data have been changed in RUN mode by the user program, then the technology object must be reinitialized by the user in order for the changes to be used. At a RUN → STOP transition, the CPU automatically performs a restart of technology objects with restart-relevant changes.

If changes in the technology data block should also be retained after the restart of the technology object, then you must write the changes to the start value in load memory using the extended instruction "WRIT_DBL".

Restart required

A necessary TO restart is indicated at "Technology object > Diagnostics > Status and error bits > Axis status or Encoder status > Online start value changed", as well as in the tag of technology object <TO>.StatusWord.X3 (OnlineStartValuesChanged).

Restarting a technology object

A restart of the technology object is triggered by the user by means of the "MC_Reset" Motion Control instruction, with parameter "Restart" = TRUE.

During a restart, all configuration data of the technology object are loaded from load memory into work memory. In the process, the actual values in the technology data block are overwritten.

Note the following during a restart of the technology object:

- A restart resets the "Referenced" status of a technology object with incremental actual values (<TO>.StatusWord.X5 (HomingDone).
- While a restart is being performed, the technology object cannot perform any jobs. An active restart will be indicated under "Technology object > Diagnostics > Status and error bits > Axis status or Encoder status > Restart active", and in the <TO>.StatusWord.X2 (RestartActive) tag of the technology object.
- Motion Control jobs are rejected during a restart with the "Error" = TRUE and "ErrorID" = 16#800D parameters (job not executable, because a restart is active).
- While a restart is being executed, you cannot access the technology data block.

See also

Change restart-relevant data (Page 289)

Downloading to CPU 7

Description

When downloading to the CPU S7-1500, it is always verified that the project files are consistent online and offline after the download.

The data of the technology objects are saved in technology data blocks. The conditions for downloading blocks thus apply when loading new or modified technology objects.

Load in RUN mode

When loading in the CPU's RUN mode, it is checked whether a load without restart of the technology objects is possible.

If restart-relevant configuration values were changed, then a restart of the technology object is automatically performed after the load into the CPU.

Loading a technology object is only possible if the technology object is disabled.

You **cannot** download the following changes to the CPU in RUN mode:

- Changes to the MC-Servo clock speeds
- Changes to the hardware interface of the technology object in "Technology object > Configuration > Hardware interface"

Commissioning 8

8.1 Introduction

The following guidelines describe the steps that you should note when commissioning the Motion Control-specific components of your equipment.

The commissioning of other components of your automation system depends on the particular equipment configuration. Commissioning (not Motion Control) is described in the Automation System S7-1500 (http://support.automation.siemens.com/WW/view/en/59191792) system manual.

8.2 Commissioning guidelines

These guidelines serve as recommendations for commissioning equipment with Motion Control. The procedure is described using the example of a positioning axis technology object.

Requirement

- The configuration of the following components is complete:
  - CPU
  - BUS communication
  - Drives
  - Technology objects
- The user program has been created.
- The wiring of the CPU and of the associated I/O is complete.
- The commissioning and optimization of the drive is complete.

Procedure

Proceed as follows to commission the Motion Control-specific components of your equipment:

Step	Action to be performed	Supported by TIA Portal
Turn on CPU	Turn on the power supply and the CPU.	-
"Disable" position controller	Set the gain (Kv factor) of the position control loop to zero. (This setting avoids unwanted drive movements that may be caused by incorrect parameterization of the position control loop.)	"Technology object > Configuration > Extended parameters > Control loop"
Activate precontrol	Set the precontrol to 100 %.	"Technology object > Configuration > Extended parameters > Control loop"
Load project into the CPU	Bring the CPU to the STOP mode. Download your project to the CPU (load hardware and software).	• "Toolbar > Stop CPU" • "Toolbar > Download to device"
Create online connection to the CPU	Select the "Receive messages" check box under "Online & Diagnostics > Online Access". Configure the interface of the TIA Portal, and create an online connection with the CPU.	• Device configuration • "Online & Diagnostics > Online Access"
Disable Motion Control specific user program	In order to avoid conflicts with the axis control panel, lock the enabling of technology objects in your user program (MC_Power.Enable = FALSE).	• PLC programming • Motion Control instructions
Evaluating pending messages	Evaluate the message display in the inspector window. Resolve the causes of pending technology alarms. Acknowledge the technology alarms (Page 333).	"Inspector window > Diagnostics > Message display"
Check hardware limit switches	Click the hardware limit switches. Check for correct message display (technology alarm 531). Acknowledge the technology alarm.	"Inspector window > Diagnostics > Message display"
Check the connection and configuration of the drive (setpoint)	Bring the CPU into the RUN mode. Open the Axis control panel (Page 319) and take over control. Perform the following steps: • Enable the technology object. ⇒ The drive must turn itself on, and where applicable release the brake. The position is held. • Move the axis in jog mode at low velocity in the positive direction. ⇒ The drive must move. The actual position value must increase (positive direction). • Disable the technology object. ⇒ The drive must turn itself off, and where applicable apply the brake.	"Technology object > Commissioning > Axis control panel"

Step	Action to be performed	Supported by TIA Portal
Check the connection and configuration of the encoder (actual value)	Check the scaling of the actual values (rotation direction, distance evaluation, and resolution of the encoder) ⇒ The change in the actual mechanical position must match the change in the actual values.	• "Technology object > Diagnostics > PROFIdrive frame" • "Technology object > Commissioning > Axis control panel"
Checking the reference speed	Traverse the axis in jog mode at low velocity in the positive direction. ⇒ The displayed current velocity must match the velocity setpoint. If the displayed current velocity deviates significantly from the velocity setpoint, adjust the reference speed.	• "Technology object > Hardware interface > Data exchange" • "Technology object > Commissioning > Axis control panel"
Optimize position controller	Use the Optimization (Page 325) commissioning function to optimize the gain (Kv) of the position control loop. For this purpose, adapt following error limits as needed.	"Technology object > Commissioning > Optimization"
Transfer the gain Kv to the project.	Enter the gain Kv that you determined by means of the optimization function in your configuration data. Load your project into the CPU.	"Technology object > Configuration > Extended parameters > Control loop"
Enable Motion Control specific user program	Unlock the enabling technology objects lock in your user program (MC_Power.Enable = TRUE).	• PLC programming • Motion Control instructions
Check the functioning of the user program	Check the programmed functions of your user program.	• Watch and force tables • Online and diagnostic functions
End of commissioning for a positioning axis technology object	To commission additional technology objects, perform the corresponding steps again.	See above.

8.3 Axis control panel

8.3.1 Function and structure of the axis control panel

You traverse individual axes with the axis control panel. A user program is not necessary for the operation of the axis control panel. With the axis control panel, you assume master control for a technology object and control the motions of the axis.

WARNING

Uncontrolled axis motions

During operation with the axis control panel, the axis can execute uncontrolled motions (e.g. due to erroneous configuration of the drive or the technology object). Furthermore, any synchronized following axis is moved as well when moving a leading axis with the axis control panel.

Therefore, perform the following protective measures before operation with the axis control panel:

- Ensure that the EMERGENCY OFF switch is within the reach of the operator.
- Enable the hardware limit switches.
- Enable the software limit switches.
- Ensure that following error monitoring is enabled.
- Make sure that no following axis is coupled to the axis to be moved.

The axis control panel of the speed axis, positioning axis and synchronous axis can be found in the project tree under "Technology object > Commissioning".

The axis control panel is divided into the following areas:

- Master control
- Axis
- Operating mode
- Modify
- Axis status
- Actual values

Elements of the axis control panel

The following table lists the elements of the axis control panel:

Area	Element	Description
Master control		In the "Master control" area, you assume master control of the technology object or return it to your user program.
	"Activate" button	With the "Activate" button, you set up an online connection to the CPU and take over master control for the selected technology object. • To take over master control, the technology object must be disabled in the user program. • Any synchronized following axis is moved as well when moving a leading axis with the axis control panel. • If the online connection to the CPU is lost during operation with the axis control panel, then after the sign of life monitoring has elapsed, the axis will be stopped with maximum deceleration. In this case, an error message is displayed ("ErrorID" = 16#8013) and the master control is passed back to the user program. • If the axis control panel is covered by a dialog, such as "Save as", during its operation with the axis control panel, the axis is stopped with maximum deceleration and the master control is returned to the user program. If the "Stop" button is covered during operation with the axis control panel, for example by scrolling or by another window, the master control is retained but the axis is stopped with maximum deceleration. If you change to another window within the TIA Portal, to the project tree for example, during operation with the axis control panel, the master control and motion of the axis is maintained, provided that the axis control panel is embedded in the TIA Portal. If the axis control panel is replaced by the TIA Portal and you change to another window within the TIA Portal, to the project tree for example, the master control is retained but the axis is stopped with maximum deceleration. If you change to another window outside the TIA Portal during operation with the axis control panel, the master control is retained but the axis is stopped with maximum deceleration. • When you click the "Activate" button, a warning message is displayed. In the warning, you can adapt the sign-of-life monitoring (100 to 60000 ms). If the master control of the axis control panel is lost repeatedly without a direct error message, the online connection to the CPU may be impaired because the communication load is too high. In this case, the message "Error during commissioning" is entered in the message display log. Sign-of-life failure between controller and TIA Portal" is displayed. To eliminate this error, adapt the sign-of-life monitoring in the warning. • Until master control is returned, the user program has no influence on the functions of the technology object. Motion Control jobs from the user program to the technology object are rejected with error ("ErrorID" = 16#8012: Axis control panel enabled).

Area	Element	Description
		• When master control is taken over, the configuration of the technology object is adopted. Changes to the configuration of the technology object do not take effect until leading control has been returned. Therefore, make any necessary changes before master control is assumed again. If master control has been taken over for the technology object, the axis control panel is blocked for access by another instance of the TIA Portal (Team Engineering as of CPU V1.5).
	"Deactivate" button	With the "Deactivate" button, you return master control to your user program.
Axis		In the "Axis" area, you can enable or disable the technology object.
	"Enable" button	With the "Enable" button, you enable the selected technology object
	"Disable" button	With the "Disable" button, you disable the selected technology object
Operating mode		Select the required mode in the "Operating mode" drop-down list.
Modify		The "Control" area displays the parameters for traversing with the axis control panel according to the selected operating mode.
	Position	Position to which the axis is homed. ("Homing" and "Set home position" modes only)
	Distance	Distance the axis is traversed. ("Relative positioning" mode only)
	Target position	Position to which the axis is traversed. ("Absolute positioning" mode only)
	Velocity/ Velocity setpoint	Velocity or speed at which the axis is traversed. Default: 10% of the default value (Velocity/speed setpoint, "Jog" and "Positioning" modes only)
	Acceleration	Acceleration with which the axis is traversed. Default: 10% of the default value
	Deceleration	Deceleration with which the axis is traversed. Default: 10% of the default value
	Jerk	Jerk with which the axis is traversed. Default: 100% of default value
	"Start" button	With the "Start" button, you start a job according to the selected operating mode.
	"Forward" button	With the "Forward" button, you start a motion in the positive direction according to the selected operating mode.
	"Backward" button	With the "Backward" button, you start a motion in the negative direction according to the selected operating mode.
	"Stop" button	With the "Stop" button, you cancel a job or stop the axis. If the "Stop" button is covered during operation with the axis control panel, for example by scrolling or by another window, the master control is retained but the axis is stopped with maximum deceleration.

Area	Element	Description
Axis status		The "Axis status" area displays the status of the axis and the status of the drive.
	Drive ready	Drive is ready to execute setpoints.
	Error	An error occurred at the technology object.
	Enabled	The technology object has been enabled. The axis can be moved with motion jobs.
	Homed	The technology object is homed.
	More	The "More" link takes you to the window "Technology object > Diagnostics > Status and error bits".
	Active errors	The error that occurred most recently is displayed in the "Active errors" text field.
	"Confirm" button	With the "Confirm" button, you acknowledge pending errors.
	Alarm display	You can access the alarm display in the Inspector window by clicking on the "Alarm display" link.
Actual values		The "Current values" area shows the actual values of the axis.
	Position	Actual position of the axis
	Velocity	Actual velocity of the axis

Note

No transfer of the parameters

The configured parameter values are discarded when master control is returned. Transfer the values as needed into your configuration.

If you have changed configuration values during operation with the axis control panel, these changes have no effect on the operation of the axis control panel.

Operating mode

The following table shows the operating modes of the axis control panel:

Operating mode	Description
Homing	This function corresponds to active homing. The parameters for homing (Page 69) must be configured. Homing is not possible with an absolute encoder. The technology object is not referenced when this mode is used with an absolute encoder.
Set home position	This function corresponds to direct homing (absolute). With the "Start" button, you set the actual position to the value specified in "Position" and the "Homed" status is set.
Jog	Motion commands occur by means of jogging. With the "Forward" or "Backward" button you start motion in the positive or negative direction. The motion runs for as long as you hold down the left mouse button.
Velocity specification/speed setpoint	The axis is moved at the specified velocity or speed until you stop the movement. The motion commands are performed according to the setpoints assigned under "Controller".
Positioning relative	The positioning is executed as a controlled, relative traversing motion according to the defaults assigned under "Controller".
Positioning absolute	The positioning is executed as a controlled, absolute traversing motion according to the defaults assigned under "Controller". If you have enabled the "Modulo" setting of the technology object, the buttons "Forward" and "Backward" are shown in the "Controller" area. The axis is positioned within the modulo range. Position settings outside the modular range are recalculated to the modulo range. If you have not enabled the "Modulo" setting of the technology object, only the "Start" button is shown in the "Controller" area. You can directly approach the entered position.

8.3.2 Using the axis control panel

You traverse individual axes with the axis control panel. You assume master control of a technology object and control the motions of the axis.

Requirement

- The project has been created and downloaded to the CPU.
- The CPU must be in the RUN mode.
- The technology object is disabled by your user program ("MC_Power.Enable" = FALSE).
- The axis control panel for the technology object is not used by another instance of the TIA Portal (Team Engineering as of CPU V1.5).

Procedure

Proceed as follows to enable control the axis using the axis control panel:

1. To assume master control of the technology object and to set up an online connection to the CPU, click "Activate" in the "Master control" area.

   A warning message is displayed.
2. If necessary, adapt the sign-of-life monitoring and click "OK".
3. To enable the technology object, click the "Enable" button in the "Axis" area.
4. In the drop-down list in the "Operation mode" area, select the desired function of the axis control panel.
5. In the "Control" area, specify the parameter values for your job.
6. Depending on the mode selected, click the "Start", "Forward" or "Backward" button to start the job.
7. Click the "Stop" button to stop the job.
8. Repeat steps 4 through 6 for additional jobs.
9. To disable the technology object, click the "Disable" button in the "Axis" area.
10. To return master control to your user program, click the "Deactivate" button in the "Master control" area.

8.4 Optimization

8.4.1 Function and structure of the optimization

Description

The "Optimization" function supports you in determining the optimal precontrol and gain (Kv factor) for the closed loop position control of the axis. The axis velocity profile is recorded by means of the Trace function for this purpose for the duration of a configurable positioning movement. You can then evaluate the recording, and adjust the precontrol and gain accordingly.

WARNING

Uncontrolled axis motions

During operation with the optimization, the axis can execute uncontrolled motions (for example, due to erroneous configuration of the drive or the technology object). In addition, when a leading axis is moved, any synchronized following axis is also moved.

Therefore, perform the following protective measures before operation with the optimization:

- Ensure that the EMERGENCY OFF switch is within the reach of the operator.
- Enable the hardware limit switches.
- Enable the software limit switches.
- Ensure that following error monitoring is enabled.
- Make sure that no following axis is coupled to the axis to be moved.

The "Optimization" function for the positioning axis and synchronous axis technology objects can be found in the project tree under "Technology object > Commissioning".

The "Tuning" dialog is divided into the following areas:

- Master control
- Axis
- Measurement configuration
- Optimize position controller
- Run measurement
- Trace

The following table lists the elements of optimization:

Area	Element	Description
Master control		In the "Master control" area, you take over master control of the technology object, or return it to your user program.
	"Activate" button	With the "Activate" button, you set up an online connection to the CPU and take over master control for the selected technology object. • To take over master control, the technology object must be disabled in the user program. • Any synchronized following axis is moved as well when moving a leading axis with the axis control panel. • If the online connection to the CPU is lost during operation with the axis control panel, then after the sign of life monitoring has elapsed, the axis will be stopped with maximum deceleration. In this case, an error message is displayed ("ErrorID" = 16#8013) and the master control is passed back to the user program. • When you click the "Activate" button, a warning message is displayed. You can adapt the sign-of-life monitoring here (100 to 60000 ms). If the master control of the axis control panel is lost repeatedly without a direct error message, the online connection to the CPU may be impaired because the communication load is too high. In this case, the message "Error during commissioning" is entered in the message display log. Sign-of-life failure between controller and TIA Portal" is displayed. To eliminate this error, adapt the sign-of-life monitoring in the warning. • Until master control is returned, the user program has no influence on the functions of the technology object. Motion Control jobs from the user program to the technology object are rejected with error ("ErrorID" = 16#8012: Axis control panel enabled). • When master control is taken over, the configuration of the technology object is adopted. Changes to the configuration of the technology object do not take effect until master control has been returned. For this reason, make any necessary changes before master control is taken over. • If master control has been taken over for the technology object, the axis control panel is blocked for access by another installation of the TIA Portal (Team Engineering as of CPU V1.5).
	"Deactivate" button	With the "Deactivate" button, you return master control to your user program.
Axis		In the "Axis" area, enable or disable the technology object.
	"Enable" button	With the "Enable" button, you enable the selected technology object
	"Disable" button	With the "Disable" button, you disable the selected technology object

Area	Element	Description
Measurement configuration		In the "Measurement configuration" area, you configure the settings for a test step.
	Distance	Travel distance for a test step
	Measurement duration	Time for a test step
	"Customize dynamics" check box	The "Dynamics adapt" check box allows you to adapt the acceleration, deceleration and maximum velocity. As long as the "Commissioning" working area is open, the previously set values are displayed when the check box is selected again.
	Acceleration	Presetting of the acceleration for a test step
	Deceleration	Default setting for delaying a test step
	Maximum velocity	Presetting of the maximum velocity for a test step
Optimize position controller		In the "Optimize position controller" area, you make the settings for optimization of the controller characteristics. You open a list of values using the symbol next to the field. The list of values contains the following values of the respective parameter: • Online actual value • Online start value • Project start value Enter the new value in the text field for the actual value. The new value is applied by clicking the "Forward" or "Backward" button in the "Run measurement" area.
	Precontrol	Current percentage velocity precontrol of the position controller
	Speed control loop substitute time	Current speed control loop substitute time With velocity precontrol, a simplified speed control loop model can be generated using the speed control loop substitute time. This prevents overmodulation by the position controller of the manipulated variable for velocity during the acceleration and deceleration phases. To accomplish this, the position setpoint of the position controller is delayed by the amount of the speed control loop substitute time in relation to the velocity precontrol.
	Gain	Current gain of the position controller (Kv)
Run measurement		In the "Run measurement" area, you perform the test steps.
	"Forward" button	With the "Forward" button, you start a test step for optimization in the positive direction.
	"Backward" button	With the "Backward" button, you start a test step for optimization in the negative direction.
	"Stop" button	You stop a test step with the "Stop" button. The axis decelerates with the configured maximum deceleration. If another window is superimposed on the "Stop" button, the axis stops.
Trace		The Trace function is displayed in the lower area of the "Tuning" dialog. With each test step, a Trace recording of the required parameters is automatically started and displayed after completion of the test step. After master control has been returned, the Trace recording is deleted. You can find a full description of the trace function in the section on using the trace and logic analyzer function.

Note

No automatic transfer of the parameters to the technology object

The configured parameter values are discarded after master control is returned.

Transfer the values as needed into your configuration. You can apply the values for the gain, precontrol and speed control loop substitute time in your configuration using the "Project start value" value.

See also

Closed-loop control (Page 92)

8.4.2 Optimize position controller

Requirements

- The CPU must be in the RUN mode.
- The project has been created and downloaded to the CPU.
- The technology object is disabled by your user program (MC_Power.Enable = FALSE).
- The axis control panel for the technology object is not used by another installation of the TIA Portal (Team Engineering as of CPU V1.5).

Optimizing position control gain (Kv)

Proceed as follows to optimize the gain (Kv):

1. In the "Master control" area, click the "Activate" button to activate master control for the technology object, and to establish an online connection to the CPU.

   A warning message is displayed.
2. If necessary, adapt the sign-of-life monitoring and confirm with "OK".
3. In the "Axis" area, click the "Enable" button to enable the technology object.
4. If necessary, configure values for the distance, duration, and dynamics of a test step in the "Measurement configuration" area.
5. If necessary, configure values for the precontrol and speed control loop substitute time of a test step in the "Configure position controller" area.
6. Enter a start value for the gain. Start with a low value.
7. Click the "Forward" or "Start" button to start a test step for the optimization.
   For the specified duration, a setpoint is output according to the specified distance. The axis moves by the specified distance. A trace recording of the motion (setpoint and actual values) is created automatically.

   You can find a full description of the trace function in the section on using the trace and logic analyzer function.

   Note

   Adapt following error limits

   If error messages from following error monitoring are repeatedly displayed during optimization, temporarily adapt the following error limits.

8. Evaluate the curve of the trace recording. Adapt the gain incrementally. Click the "Forward" or "Backward" button after each value you enter. This applies the value and start a new movement and trace recording each time.

When adjusting the gain, pay attention to the following properties of the curve:

- The curve shows a brief compensation time.
- The curve does not show any motion reversal of the actual position.
- When approaching the position setpoint, no overshoot occurs.
- The curve shows a stable overall behavior (oscillation-free curve).

The following trace recording shows a curve with a long settling time:

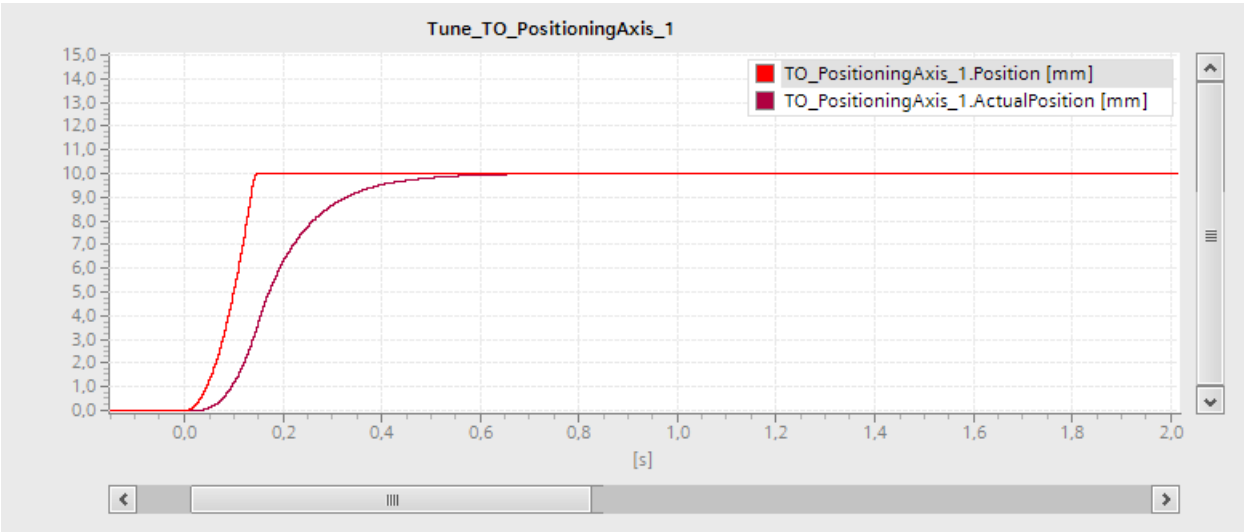

The following trace recording shows a curve with overshoot when approaching the setpoint:

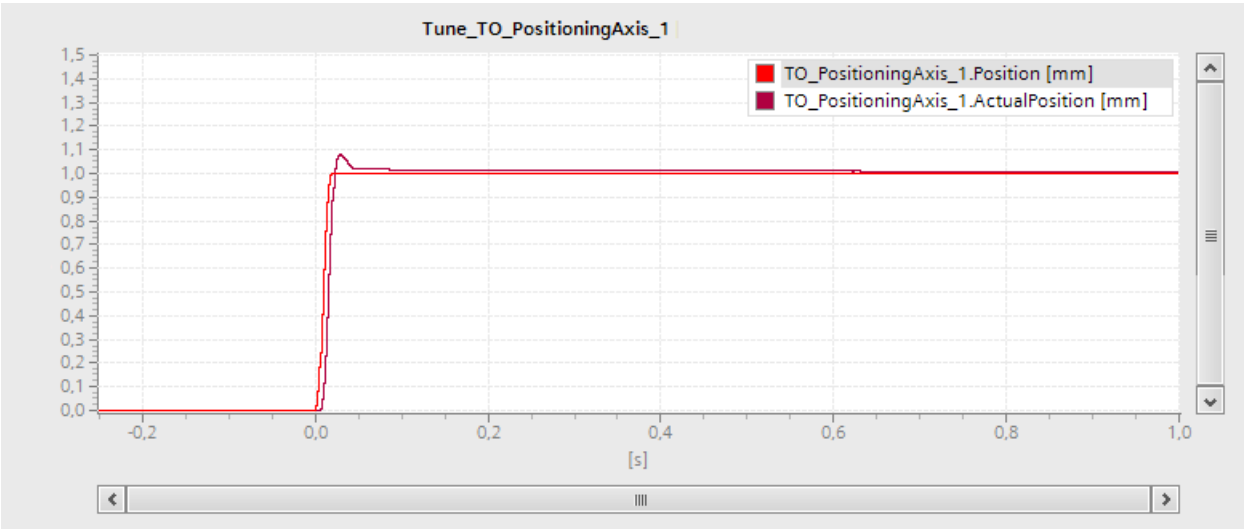

The following trace recording shows a curve in which the gain is optimal and the overall response is steady:

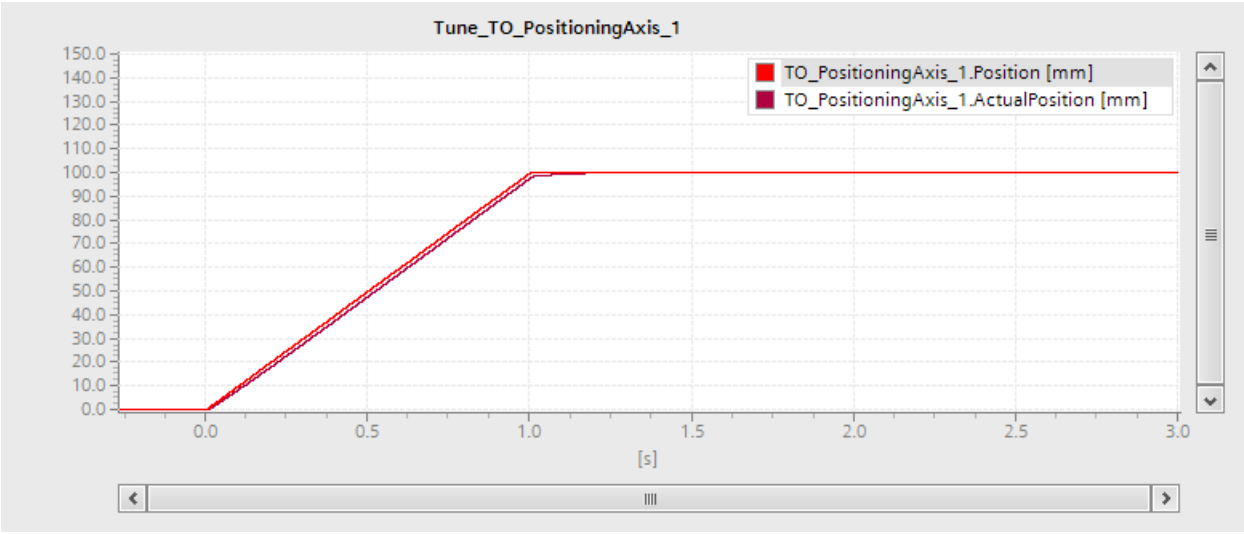

Transferring the parameter values of the position controller to the project

To transfer the determined parameter values of the position controller to your project, follow these steps:

1. Click the icon next to the field of the respective parameter.

   A list of values is displayed.

2. Enter the measured value in the "Project start value" field of the value list.
3. In the "Axis" area, click the "Disable" button to disable the technology object.
4. In the "Master control" area, click the "Deactivate" button to return master control to your user program.
5. Load your project into the CPU.

Diagnostics 9

9.1 Introduction

The Diagnostics section is limited to describing the diagnostic concept for Motion Control and describing the Diagnostics view of the individual technology objects in the TIA Portal.

For more information about system diagnostics with the S7-1500 CPU, refer to the "Diagnostics" (http://support.automation.siemens.com/WW/view/en/59192926) function manual.

9.2 Diagnostic concept

The diagnostic concept encompasses alarms and associated messages, as well as error messages in the Motion Control instructions. The TIA Portal also supports you with consistency checks during configuration of the technology objects, and during the creation of your user program.

All alarms in runtime (from the CPU, technology, hardware etc.) are displayed in the Inspector window of the TIA Portal. Diagnostic information that relates to technology objects (technology alarms, status information) are additionally displayed in the Diagnostics window of the respective technology object.

During motion control, if an error occurs at a technology object (e.g. approaching a hardware limit switch), then a technology alarm (Page 333) is triggered, and a corresponding message is displayed in the TIA Portal as well as on HMI devices.

In your user program, technology alarms are generally signaled via error bits in the technology data block. The number of the technology alarm with the highest priority is also displayed. In order to simplify error evaluation, the "Error" and "ErrorID" parameters of the Motion Control instructions also indicate that a technology alarm is pending.

Program errors (Page 337) can occur during parameter assignment or during the processing sequence of the Motion Control instructions (e.g. invalid parameter specification when calling the instruction, initiation of a job without enable via MC_Power). Motion Control instruction errors are indicated at the call of instructions using the "Error" and "ErrorID" parameters.

9.3 Technology alarms

Description

If an error occurs at a technology object (e.g. approaching a hardware limit switch), a technology alarm is triggered and indicated. The impact of a technology alarm on the technology object is specified by the alarm reaction.

Alarm classes

Technology alarms are divided into three classes:

- Acknowledgeable warning

  The processing of Motion Control job is continued. The current motion of the axis can be influenced, e.g. by limiting the current dynamic values to the configured limit values.

- Alarm requiring acknowledgment

  Motion jobs are aborted in accordance with the alarm reaction. You must acknowledge the alarms in order to continue execution of new jobs after eliminating the cause of the error.

- Fatal error

  Motion jobs are aborted in accordance with the alarm reaction.

  To be able to use the technology object again after eliminating the cause of the error, you must restart the technology object (Page 314).

Display of technology alarms

A technology alarm is displayed in the following locations:

- TIA Portal
  - "Technology object > Diagnostics > Status and error bits"

    Display of pending technology alarms for each technology object.
  - "Technology object > Commissioning > Axis control panel"

    Display of the last pending technology alarm for each technology object.
  - "Inspector window > Diagnostics > Message display"

    Select the "Receive messages" check box under "Online & Diagnostics > Online Access" in order to display technology alarms via the message display.

    With an online connection to the CPU, the pending technology alarms for all technology objects are displayed. Additionally, the archive view is available to you.

    The message display can also be activated and displayed on a connected HMI.
  - "CPU > Online & diagnostics"

    Display of the technology alarms that have been entered in the diagnostic buffer.
- User program
  - Tags <TO>.ErrorDetail.Number and <TO>.ErrorDetail.Reaction

    Indication of the number and the reaction of the technology alarm with the highest priority.
  - Tag <TO>.StatusWord

    A pending technology alarm is indicated with bit 1 ("Error").
  - Tag <TO>.ErrorWord

    Indication of alarms and fatal errors.
  - Tag <TO>.WarningWord

    Indication of warnings.
  - Parameter "Error" and "ErrorID"

    In a Motion Control instruction, the parameters "Error" = TRUE and "ErrorID" = 16#8001 indicate that a technology alarm is pending.
- Display of the CPU

  In order to show technology alarms on the CPU display, make the following setting when loading to the CPU:
  In the "Load preview" dialog, select the action "Consistent download" for the "Text libraries" entry.

Alarm reaction

A technology alarm always contains an alarm reaction, which describes the impact on the technology object. The alarm reaction is specified by the system.

The following table shows possible alarm reactions:

Alarm reaction	Description
Axes (speed axis, positioning axis, synchronous axis)	
No reaction (warnings only) <TO>.ErrorDetail.Reaction = 0	The processing of Motion Control job is continued. The current motion of the axis can be influenced, e.g. by limiting the current dynamic values to the configured limit values.
Stop with current dynamic values <TO>.ErrorDetail.Reaction = 1	Active motion commands are aborted. The axis is braked with the dynamic values that present in the Motion Control instruction and brought to a standstill.
Stop with maximum dynamic values <TO>.ErrorDetail.Reaction = 2	Active motion commands are aborted. The axis is braked with the dynamic values configured under "Technology object > Extended parameters > Dynamic limits", and brought to a standstill. The configured maximum jerk is hereby taken into account.
Stop with emergency stop ramp <TO>.ErrorDetail.Reaction = 3	Active motion commands are aborted. The axis is braked with the emergency stop deceleration configured under "Technology object > Extended parameters > Emergency stop ramp", without any jerk limit, and brought to a standstill.
Remove enable <TO>.ErrorDetail.Reaction = 4	Active motion commands are aborted. The setpoint zero is output and the enable is removed. The axis is braked to a standstill according to the configuration in the drive.
Track setpoints <TO>.ErrorDetail.Reaction = 5	Active motion commands are aborted. The setpoint zero is output and the enable is removed. The actual values supplied by the drive are automatically tracked as setpoints.
Other technology objects (output cam, cam track, measuring input, cam, external encoder)	
No reaction (warnings only) <TO>.ErrorDetail.Reaction = 0	The processing of Motion Control job is continued. The current motion of the axis can be influenced, e.g. by limiting the current dynamic values to the configured limit values.
Terminate processing of the technology object: • Output cam <TO>.ErrorDetail.Reaction = 6 • Cam track <TO>.ErrorDetail.Reaction = 7 • Measuring input <TO>.ErrorDetail.Reaction = 8 • Cam <TO>.ErrorDetail.Reaction = 9 • External encoder <TO>.ErrorDetail.Reaction = 10	Processing of the technology object is terminated. All running Motion Control jobs are aborted.

Acknowledging technology alarms

You can acknowledge technology alarms as follows:

- TIA Portal
  - "Technology object > Commissioning > Axis control panel"

    Click "Confirm" to acknowledge all alarms and warnings pending for the selected technology object.
  - "Inspector window > Diagnostics > Message display"

    You can acknowledge the alarms and warnings for all technology objects either individually, or all at once.
- HMI

  At an HMI with enabled message display, you can acknowledge the alarms and warnings for all technology objects either individually, or all at once.
- User program

  Acknowledge pending technology alarms for a technology object with the Motion Control instruction "MC_Reset".

Additional information

You can find a list of the technology alarms and alarm reactions in the Technology alarms (Page 513) appendix.

9.4 Errors in Motion Control instructions

Description

Errors in Motion Control instructions (e.g. invalid parameter value setting) are indicated by the "Error" and "ErrorID" output parameters.

Under the following conditions, "Error" = TRUE and "ErrorID" = 16#8xxx are indicated for the Motion Control instruction:

- Illegal status of the technology object, which prevents the execution of the job.
- Invalid parameter assignment of the Motion Control instruction, which prevents the execution of the job.
- As a result of the alarm reaction for a technology object error.

Error display

If there is a Motion Control instruction error, the "Error" parameter shows the value TRUE. The cause of the error is given in the "ErrorID" parameter.

Jobs to the technology object are rejected when "Error" = TRUE. Running jobs are not influenced by rejected jobs.

If "Error" = TRUE and "ErrorID" = 16#8001 is indicated during job execution, a technology alarm has occurred. In this case, evaluate the indication of the technology alarm.

If "Error" = TRUE is displayed during execution of a "MC_MoveJog" job, the axis is braked and brought to a standstill. In this case, the deceleration configured for the "MC_MoveJog" instruction takes effect.

Acknowledge error

Acknowledging errors in Motion Control instructions is not required.

Restart a job after resolving the error.

Additional information

You can find a list of the ErrorIDs in the Error detection (Page 542) appendix.

9.5 Speed-controlled axis technology object

9.5.1 Status and error bits

Description

You use the "Technology object > Diagnostics > Status and error bits" diagnostic function in the TIA Portal to monitor the status and error messages for the technology object. The Diagnostics function is available in online operation.

The meaning of the status and error messages is described in the following tables. The associated technology object tag is given in parentheses.

Axis status

The following table shows the possible axis status values:

Status	Description
Simulation active	The axis is simulated in the CPU. Setpoints are not output to the drive.
Enabled	The technology object has been enabled. The axis can be moved with motion jobs. (<TO>.StatusWord.X0 (Enable))
Error	An error occurred at the technology object. Detailed information about the error is available in the "Error" area, and in the <TO>.ErrorDetail.Number and <TO>.ErrorDetail.Reaction tags of the technology object. (<TO>.StatusWord.X1 (Error))
Restart active	The technology object is being reinitialized. (<TO>.StatusWord.X2 (RestartActive))
Axis control panel enabled	The axis control panel is active. The axis control panel has master control over the technology object. The axis cannot be controlled from the user program. (<TO>.StatusWord.X4 (ControlPanelActive))
Drive ready	Drive is ready to execute setpoints. (<TO>.StatusDrive.InOperation)
Restart required	Data relevant for the restart has been changed. The changes are applied only after a restart of the technology object. (<TO>.StatusWord.X3 (OnlineStartValuesChanged))

Motion status

The following table shows the possible axis motion status values:

Status	Description
Done (no job running)	No motion job is running for the technology object. (<TO>.StatusWord.X6 (Done))
Jog	The axis is being moved with a job for jog mode of Motion Control instruction "MC_MoveJog" or from the axis control panel. (<TO>.StatusWord.X9 (JogCommand))
Speed setpoint	The axis is traversed with a job with speed setpoint of the Motion Control instruction "MC_MoveVelocity" or using the axis control panel. (<TO>.StatusWord.X10 (VelocityCommand))
Constant speed	The axis is moved with constant speed or is stationary. (<TO>.StatusWord.X12 (ConstantVelocity))
Accelerating	Axis is being accelerated. (<TO>.StatusWord.X13 (Accelerating))
Decelerating	The axis is being decelerated. (<TO>.StatusWord.X14 (Decelerating))
Torque limiting enabled	The configured threshold for the force/torque affects the axis. (<TO>.StatusWord.X27 (InLimitation))

Warnings

The following table shows the possible warnings:

Warning	Description
Configuration	One or several configuration parameters are adapted internally at a given time. (<TO>.WarningWord.X1 (ConfigWarning))
Job rejected	A job cannot be executed. A Motion Control instruction cannot be executed because necessary requirements have not been met. (<TO>.WarningWord.X3 (CommandNotAccepted))
Dynamic limitation	The dynamic values are limited to the dynamic limits. (<TO>.WarningWord.X6 (DynamicError))

Error

The following table shows the possible errors:

Error	Description
System	A system-internal error has occurred. (<TO>.ErrorWord.X0 (SystemFault))
Configuration	A configuration error has occurred. One or more configuration parameters are inconsistent or invalid. The technology object was incorrectly configured, or editable configuration data were incorrectly modified during runtime of the user program. (<TO>.ErrorWord.X1 (ConfigFault))
User program	An error occurred in the user program with a Motion Control instruction or its use. (<TO>.ErrorWord.X2 (UserFault))
Drive	An error occurred in the drive. (<TO>.ErrorWord.X4 (DriveFault))
Data exchange	Communication with a connected device is faulty. (<TO>.ErrorWord.X7 (CommunicationFault))
I/O	An error occurred accessing a logical address. (<TO>.ErrorWord.X13 (PeripheralError))
Job rejected	A job cannot be executed. A Motion Control instruction cannot be executed because necessary requirements have not been met (e.g. technology object not homed). (<TO>.ErrorWord.X3 (CommandNotAccepted))
Dynamic limitation	The dynamic values are limited to the dynamic limits. (<TO>.ErrorWord.X6 (DynamicError))

Alarm display

For additional information and to acknowledge the error, go to the Inspector window by clicking on the "Alarm display" link.

Additional information

An option for the evaluation of the individual status bits can be found in the Evaluating StatusWord, ErrorWord and WarningWord (Page 288) section.

See also

StatusWord tag (speed axis) (Page 439)

ErrorWord tag (speed axis) (Page 441)

WarningWord tag (speed axis) (Page 443)

9.5.2 Motion status

Description

You use the "Technology object > Diagnostics > Motion status" diagnostic function in the TIA Portal to monitor the motion status of the axis. The Diagnostics function is available in online operation.

"Setpoints" area

The following table shows the meaning of the status data:

Status	Description
Speed setpoint	Speed setpoint of the axis (<TO>.Velocity)
Speed override	Speed setpoint correction as percentage The speed setpoint specified in motion control instructions or set by the axis control panel are superimposed with an override signal and corrected as a percentage. Valid speed correction values range from 0.0 % to 200.0 %. (<TO>.Override.Velocity)

"Current values" area

The following table shows the meaning of the status data:

Status	Description
Actual speed	Actual speed of the axis (<TO>.ActualSpeed)

"Dynamic limits" area

This area displays the limit values for the dynamic parameters.

The following table shows the meaning of the status data:

Status	Description
Speed	Configured maximum speed (<TO>.DynamicLimits.MaxVelocity)
Acceleration	Configured maximum acceleration (<TO>.DynamicLimits.MaxAcceleration)
Deceleration	Configured maximum deceleration (<TO>.DynamicLimits.MaxDeceleration)
Jerk	Configured maximum jerk (<TO>.DynamicLimits.MaxJerk)

9.5.3 PROFIdrive telegram

Description

The "Technology object > Diagnostics > PROFIdrive telegram" diagnostics function is used in the TIA Portal to monitor the PROFIdrive telegram that the drive returns to the controller. The Diagnostics function is available in online operation.

"Drive" area

This area displays the following parameters contained in the PROFIdrive telegram from the drive to the controller:

- Status words "ZSW1" and "ZSW2"
- The speed setpoint (NSET) that was output to the drive
- The actual speed that was signaled from the drive (NACT)

9.6 Positioning axis/synchronous axis technology object

9.6.1 Status and error bits

Description

You use the "Technology object > Diagnostics > Status and error bits" diagnostic function in the TIA Portal to monitor the status and error messages for the technology object. The Diagnostics function is available in online operation.

The meaning of the status and error messages is described in the following tables. The associated technology object tag is given in parentheses.

Axis status

The following table shows the possible axis status values:

Status	Description
Simulation active	The axis is simulated in the CPU. Setpoints are not output to the drive. (<TO>.StatusWord.X25 (AxisSimulation))
Enabled	The technology object has been enabled. You can move the axis with motion jobs. (<TO>.StatusWord.X0 (Enable))
Position-controlled mode	The axis is in position-controlled mode. (Inversion of <TO>.StatusWord.X28 (NonPositionControlled))
Homed	The technology object is homed. The relationship between the position in the technology object and the mechanical position was successfully created. (<TO>.StatusWord.X5 (HomingDone))
Error	An error occurred at the technology object. Detailed information about the error is available in the "Error" area, and in the <TO>.ErrorDetail.Number and <TO>.ErrorDetail.Reaction tags of the technology object. (<TO>.StatusWord.X1 (Error))
Restart active	The technology object is being reinitialized. (<TO>.StatusWord.X2 (RestartActive))
Axis control panel enabled	The axis control panel is active. The axis control panel has master control over the technology object. You cannot control the axis from the user program. (<TO>.StatusWord.X4 (ControlPanelActive))
Drive ready	Drive is ready to execute setpoints. (<TO>.StatusDrive.InOperation)
Encoder values valid	The actual encoder values are valid. (<TO>.StatusSensor[n].State)
Active encoder	Current encoder on the axis (<TO>.OperativeSensor)
Restart required	Data relevant for the restart has been changed. The changes are applied only after a restart of the technology object. (<TO>.StatusWord.X3 (OnlineStartValuesChanged))

Status limit switch

The following table shows the possibilities for enabling the software and hardware limit switches:

Status	Description
Negative SW limit switch approached.	The negative software limit switch was reached. (<TO>.StatusWord.X15 (SWLimitMinActive))
Positive SW limit switch approached.	The positive software limit switch was reached. (<TO>.StatusWord.X16 (SWLimitMaxActive))
Negative HW limit switch approached.	The negative hardware limit switch has been approached or overtraveled. (<TO>.StatusWord.X17 (HWLimitMinActive))
Positive HW limit switch approached.	The positive hardware limit switch has been approached or overtraveled. (<TO>.StatusWord.X18 (HWLimitMaxActive))

Motion status

The following table shows the possible axis motion status values:

Status	Description
Done (no job running)	No job active at technology object. (<TO>.StatusWord.X6 (Done))
Homing job	The technology object executes a homing job of the Motion Control instruction "MC_Home" or from the axis control panel. (<TO>.StatusWord.X11 (HomingCommand))
Jog	The axis is being moved with a command for jog mode of Motion Control instruction "MC_MoveJog". (<TO>.StatusWord.X9 (JogCommand))
Velocity specification	The axis is traversed with a job with velocity specification of the Motion Control instruction "MC_MoveVelocity" or from the axis control panel. (<TO>.StatusWord.X10 (VelocityCommand))
Positioning job	The axis is traversed with a positioning job of Motion Control instruction "MC_MoveAbsolute" or "MC_MoveRelative" or from the axis control panel. (<TO>.StatusWord.X8 (PositioningCommand))
Constant velocity	The axis is moved with constant velocity or is stationary. (<TO>.StatusWord.X12 (ConstantVelocity))
Standstill	The axis is in standstill. (<TO>.StatusWord.X7 (StandStill))
Accelerating	Axis is being accelerated. (<TO>.StatusWord.X13 (Accelerating))
Decelerating	The axis is being decelerated. (<TO>.StatusWord.X14 (Decelerating))
Torque limiting enabled	The configured threshold for the force/torque affects the axis. (<TO>.StatusWord.X27 (InLimitation))

Status	Description
Synchronization	Synchronous axis only The axis is synchronized to the leading value of a leading axis. (<TO>.StatusWord.X21 (Synchronizing))
Synchronous operation	Synchronous axis only The axis is synchronized and moves synchronously to the leading axis. (<TO>.StatusWord.X22 (Synchronous))

Warnings

The following table shows the possible warnings:

Warning	Description
Configuration	One or several configuration parameters are adjusted internally at a certain time. (<TO>.WarningWord.X1 (ConfigWarning))
Job rejected	Job cannot be executed. You cannot execute a Motion Control instruction because necessary requirements are not fulfilled. (<TO>.WarningWord.X3 (CommandNotAccepted))
Dynamic limitation	The dynamic values are limited to the dynamic limits. (<TO>.WarningWord.X6 (DynamicError))
Synchronization	Synchronous axis only An error occurred during synchronization. The leading axis specified for the corresponding Motion Control instruction was not configured as a possible leading axis. (<TO>.WarningWord.X14 (SynchronousError))

Error

The following table shows the possible errors:

Error	Description
System	A system-internal error has occurred. (<TO>.ErrorWord.X0 (SystemFault))
Configuration	A configuration error has occurred. One or more configuration parameters are inconsistent or invalid. The technology object was incorrectly configured, or editable configuration data were incorrectly modified during runtime of the user program. (<TO>.ErrorWord.X1 (ConfigFault))
User program	An error occurred in the user program with a Motion Control instruction or its use. (<TO>.ErrorWord.X2 (UserFault))
Drive	An error occurred in the drive. (<TO>.ErrorWord.X4 (DriveFault))
Encoder	An error occurred in the encoder system. (<TO>.ErrorWord.X5 (SensorFault))
Data exchange	Communication with a connected device is faulty. (<TO>.ErrorWord.X7 (CommunicationFault))
I/O	An error occurred accessing a logical address. (<TO>.ErrorWord.X13 (PeripheralError))
Job rejected	A job cannot be executed. You cannot execute a Motion Control instruction because necessary requirements are not fulfilled (for example, technology object not homed). (<TO>.ErrorWord.X3 (CommandNotAccepted))
Homing	An error occurred during a homing process. (<TO>.ErrorWord.X10 HomingFault))
Positioning	The positioning axis was not positioned correctly at the end of a positioning motion. (<TO>.ErrorWord.X12 (PositioningFault))
Dynamic limitation	The dynamic values are limited to the dynamic limits. (<TO>.ErrorWord.X6 (DynamicError))
Following error	The maximum permitted following error has been exceeded. (<TO>.ErrorWord.X11 (FollowingErrorFault))
SW limit switch	A software limit switch has been reached. (<TO>.ErrorWord.X8 (SwLimit))
HW limit switch	A hardware limit switch has been reached or overtraveled. (<TO>.ErrorWord.X9 (HWLimit))
Adaptation	An error occurred during data adaption. (<TO>.ErrorWord.X15 (AdaptionError))
Synchronization	Synchronous axis only An error occurred during synchronization. The leading axis specified for the corresponding Motion Control instruction was not configured as a possible leading axis. (<TO>.ErrorWord.X14 (SynchronousError))

Alarm display

For additional information and to acknowledge the error, go to the Inspector window by clicking on the "Alarm display" link.

Additional information

An option for the evaluation of the individual status bits can be found in the Evaluating StatusWord, ErrorWord and WarningWord (Page 288) section.

See also

StatusWord tag (positioning axis/synchronous axis) (Page 472)

ErrorWord tag (positioning axis/synchronous axis) (Page 475)

WarningWord tag (positioning axis/synchronous axis) (Page 477)

Additional displays for the technology CPU (Page 350)

9.6.2 Motion status

Description

You use the "Technology object > Diagnostics > Motion status" diagnostic function in the TIA Portal to monitor the motion status of the axis. The Diagnostics function is available in online operation.

"Setpoints" area

The following table shows the meaning of the status data:

Status	Description
Target position	Current target position of an active positioning job The target position value is only valid during execution of a positioning job. (<TO>.StatusPositioning.TargetPosition)
Position setpoint	Setpoint position of the axis (<TO>.Position)
Velocity setpoint	Velocity setpoint of the axis (<TO>.Velocity)
Velocity override	Percentage correction of the velocity specification The velocity setpoint specified in Motion Control instructions or set by the axis control panel is superimposed with an override signal and corrected as a percentage. Valid velocity correction values range from 0.0 % to 200.0 %. (<TO>.Override.Velocity)

"Current values" area

The following table shows the meaning of the status data:

Status	Description
Operative encoder	Operative encoder of the axis
Actual position	Actual position of the axis If the technology object is not homed, then the value is displayed relative to the position that existed when the technology object was enabled. (<TO>.ActualPosition)
Actual velocity	Actual velocity of the axis (<TO>.ActualVelocity)
Following error	Following error of the axis (<TO>.StatusPositioning.FollowingError)

"Dynamic limits" area

This area displays the limit values for the dynamic parameters.

The following table shows the meaning of the status data:

Status	Description
Velocity	Configured maximum velocity (<TO>.DynamicLimits.MaxVelocity)
Acceleration	Configured maximum acceleration (<TO>.DynamicLimits.MaxAcceleration)
Deceleration	Configured maximum deceleration (<TO>.DynamicLimits.MaxDeceleration)
Jerk	Configured maximum jerk (<TO>.DynamicLimits.Jerk)

See also

Additional displays for the technology CPU (Page 350)

9.6.3 PROFIdrive telegram

Description

The "Technology object > Diagnostics > PROFIdrive telegram" diagnostics function is used in the TIA Portal to monitor the PROFIdrive telegrams returned by the drive and encoder. The display of the Diagnostics function is available in online operation.

"Drive" area

This area displays the following parameters contained in the PROFIdrive telegram from the drive to the controller:

- Status words "ZSW1" and "ZSW2"
- The speed setpoint (NSET) that was output to the drive
- The actual speed that was signaled from the drive (NACT)

"Encoder" area

This area displays the following parameters contained in the PROFIdrive telegram from the encoder to the controller:

- Status word "Gx_ZSW"
- The actual position value "Gx_XIST1" (cyclic actual encoder value)
- The actual position value "Gx_XIST2" (absolute encoder value)

See also

Additional displays for the technology CPU (Page 350)

9.6.4 Additional displays for the technology CPU

The diagnostic functions contain expanded/additional displays for the S7-1500T technology CPU.

Status and error bits

The following table shows the expanded/additional displays of the status and error bits (Page 343):

Axis status	
Encoder values valid	The actual encoder values (encoder 1, encoder 2, encoder 3 or encoder 4) are valid. (<TO>.StatusSensor[n].State)
Active encoder	The encoder in effect operationally is encoder 1, encoder 2, encoder 3 or encoder 4. (<TO>.OperativeSensor)

Motion status

The following table shows the expanded/additional displays for the status of the motion (Page 347):

Current values	Description
Operative encoder	Operative encoder of the axis

PROFIdrive telegram

The "Encoder 1" to "Encoder 4" areas display the following parameters from the PROFIdrive telegram (Page 349) of the corresponding encoder to the controller:

- Status word "Gx_ZSW"
- The actual position value "Gx_XIST1" (cyclic actual encoder value)
- The actual position value "Gx_XIST2" (absolute encoder value)

See also

Status and error bits (Page 343)

Motion status (Page 347)

PROFIdrive telegram (Page 349)

9.7 Technology object external encoder

9.7.1 Status and error bits

Description

You use the "Technology object > Diagnostics > Status and error bits" diagnostic function in the TIA Portal to monitor the status and error messages for the technology object. The Diagnostics function is available in online operation.

The meaning of the status and error messages is described in the following tables. The associated technology object tag is given in parentheses.

Encoder status

The following table shows the possible external encoder status values:

Status	Description
Encoder enabled	The technology object has been enabled. (<TO>.StatusWord.X0 (Enable))
Homed	The technology object is homed. The relationship between the position in the technology object and the mechanical position was successfully created. (<TO>.StatusWord.X5 (HomingDone))
Error	An error occurred at the technology object. Detailed information about the error is available in the "Error" area, and in the <TO>.ErrorDetail.Number and <TO>.ErrorDetail.Reaction tags of the technology object. (<TO>.StatusWord.X1 (Error))
Restart active	The technology object is being reinitialized. (<TO>.StatusWord.X2 (RestartActive))
Encoder values valid	The actual encoder values are valid. (<TO>.StatusSensor[n].State)
Restart required	Data relevant for the restart has been changed. The changes are applied only after a re-start of the technology object. (<TO>.StatusWord.X3 (OnlineStartValuesChanged))

Motion status

The following table shows the possible states of the job execution:

Status	Description
Done (no job running)	No Motion Control job is running for the technology object. (Enable by "MC_Power" job excepted) (<TO>.StatusWord.X6 (Done))
Homing job	The technology object executes a homing job of the Motion Control instruction "MC_Home". (<TO>.StatusWord.X11 (HomingCommand))

Error

The following table shows the possible errors:

Error	Description
System	A system-internal error has occurred. (<TO>.ErrorWord.X0 (SystemFault))
Configuration	A configuration error has occurred. One or more configuration parameters are inconsistent or invalid. The technology object was incorrectly configured, or editable configuration data were incorrectly modified during runtime of the user program. (<TO>.ErrorWord.X1 (ConfigFault))
User program	An error occurred in the user program with a Motion Control instruction or its use. (<TO>.ErrorWord.X2 UserFault))
Encoder	An error occurred in the encoder system. (<TO>.ErrorWord.X5 (SensorFault))
Data exchange	Missing or faulty communication. (<TO>.ErrorWord.X7 (CommunicationFault))
Adaptation	An error occurred during data adaption. (<TO>.ErrorWord.X15 (AdaptionError))

Alarm display

For additional information and to acknowledge the error, go to the Inspector window by clicking on the "Alarm display" link.

Additional information

An option for the evaluation of the individual status bits can be found in the Evaluating StatusWord, ErrorWord and WarningWord (Page 288) section.

See also

StatusWord tag (external encoder) (Page 488)

ErrorWord tag (external encoder) (Page 489)

WarningWord tag (external encoder) (Page 491)

9.7.2 Motion status

Description

You use the "Technology object > Diagnostics > Motion status" diagnostic function in the TIA Portal to monitor the actual encoder values. The Diagnostics function is available in online operation.

"Current values" area

The following table shows the meaning of the status data:

Status	Description
Actual position	Actual position of the axis If the technology object is not homed, then the value is displayed relative to the position that existed when the technology object was enabled. (<TO>.ActualPosition)
Actual velocity	Actual velocity of the axis (<TO>.ActualVelocity)

9.7.3 PROFIdrive frame

Description

The "Technology object > Diagnostics > PROFIdrive interface" diagnostic function is used in the TIA Portal to monitor the PROFIdrive frame of the encoder. The display of the diagnostics function is available in the online mode TO.

"Encoder" area

This area displays the following parameters contained in the PROFIdrive frame that the encoder returns to the controller:

- Status word "G1_ZSW"
- The actual position value "G1_XIST1" (cyclic actual encoder value)
- The actual position value "G1_XIST2" (absolute value of the encoder)

9.8 Technology object measuring input

9.8.1 Status and error bits

Description

You use the "Technology object > Diagnostics > Status and error bits" diagnostic function in the TIA Portal to monitor the status and error messages for the technology object. The Diagnostics function is available in online operation.

The meaning of the status and error messages is described in the following tables. The associated technology object tag is given in parentheses.

Measuring input status

The following table shows the possible states of the measuring input:

Status	Description
Active	The technology object is in operation. (<TO>.StatusWord.X0 (Control))
Waiting for measuring event	The measuring input is waiting for a measuring event. The technology data block tag "<TO>.Status" has the value "1" ("WAITING_FOR_TRIGGER").
Measured value present	The measuring input has acquired one or more measured values. The technology data block tag "<TO>.Status" has the value "2" ("TRIGGER_OCCURRED").
Error	An error occurred at the technology object. Detailed information about the error is available in the "Error" area, and in the <TO>.ErrorDetail.Number and <TO>.ErrorDetail.Reaction tags of the technology object. (<TO>.StatusWord.X1 (Error))
Restart active	The technology object is being reinitialized. The tags of the technology data block are not updated with active restart. (<TO>.StatusWord.X2 (RestartActive))
Measuring input ready	The measuring input is synchronized with the measuring module and can be used. (<TO>.StatusWord.X5 (CommunicationOK))
Restart required	Data relevant for the restart has been changed. The changes are applied only after a re-start of the technology object. (<TO>.StatusWord.X3 (OnlineStartValuesChanged))

Error

The following table shows the possible errors:

Error	Description
System	A system-internal error has occurred. (<TO>.ErrorWord.X0 (SystemFault))
Configuration	A configuration error has occurred. One or more configuration parameters are inconsistent or invalid. The technology object was incorrectly configured, or editable configuration data were incorrectly modified during runtime of the user program. (<TO>.ErrorWord.X1 (ConfigFault))
User program	An error occurred in the user program with a Motion Control instruction or its use. (<TO>.ErrorWord.X2 (UserFault))
Job rejected	A job cannot be executed. A Motion Control instruction cannot be executed because the necessary conditions are not met (e.g. axis assigned to the measuring input is not homed). (<TO>.ErrorWord.X3 (CommandNotAccepted))
I/O	An error occurred accessing a logical address. (<TO>.ErrorWord.X13 (PeripheralError))

Alarm display

For additional information and to acknowledge the error, go to the Inspector window by clicking on the "Alarm display" link.

Additional information

An option for the evaluation of the individual status bits can be found in the Evaluating StatusWord, ErrorWord and WarningWord (Page 288) section.

See also

StatusWord tag (measuring input) (Page 496)

ErrorWord tag (measuring input) (Page 497)

WarningWord tag (measuring input) (Page 499)

9.9 Technology object output cam

9.9.1 Status and error bits

Description

You use the "Technology object > Diagnostics > Status and error bits" diagnostic function in the TIA Portal to monitor the status and error messages for the technology object. The Diagnostics function is available in online operation.

The meaning of the status and error messages is described in the following tables. The associated technology object tag is given in parentheses.

Output cam status

The following table shows the possible states of the output cam:

Status	Description
Active	The technology object is in operation. (<TO>.StatusWord.X0 (Control))
Switched	The output cam is switched. (<TO>.CamOutput)
Inverted output cam output	The output cam output is inverted. (<TO>.StatusWord.X4 (OutputInverted))
Error	An error occurred at the technology object. Detailed information about the error is available in the "Error" area, and in the <TO>.ErrorDetail.Number and <TO>.ErrorDetail.Reaction tags of the technology object. (<TO>.StatusWord.X1 (Error))
Restart active	The technology object is being reinitialized. The tags of the technology data block are not updated with active restart. (<TO>.StatusWord.X2 (RestartActive))
Output cam output ready	The cam is synchronized with the output module and available for use. (<TO>.StatusWord.X5 (CommunicationOk))
Restart required	Data relevant for the restart has been changed. The changes are applied only after a re-start of the technology object. (<TO>.StatusWord.X3 (OnlineStartValuesChanged))

Error

The following table shows the possible errors:

Error	Description
System	A system-internal error has occurred. (<TO>.ErrorWord.X0 (SystemFault))
Configuration	A configuration error has occurred. One or more configuration parameters are inconsistent or invalid. The technology object was incorrectly configured, or editable configuration data were incorrectly modified during runtime of the user program. (<TO>.ErrorWord.X1 (ConfigFault))
User program	An error occurred in the user program with a Motion Control instruction or its use. (<TO>.ErrorWord.X2 (UserFault))
Job rejected	A job cannot be executed. A Motion Control instruction cannot be executed because the necessary conditions are not met (e.g. axis assigned to the output cam is not homed). (<TO>.ErrorWord.X3 (CommandNotAccepted))
I/O	An error occurred accessing a logical address. (<TO>.ErrorWord.X13 (PeripheralError))

Alarm display

For additional information and to acknowledge the error, go to the Inspector window by clicking on the "Alarm display" link.

Additional information

An option for the evaluation of the individual status bits can be found in the Evaluating StatusWord, ErrorWord and WarningWord (Page 288) section.

See also

StatusWord tag (output cam) (Page 503)

ErrorWord tag (output cam) (Page 504)

WarningWord tag (output cam) (Page 505)

9.10 Cam track technology object

9.10.1 Status and error bits

Description

You use the "Technology object > Diagnostics > Status and error bits" diagnostic function in the TIA Portal to monitor the status and error messages for the technology object. The Diagnostics function is available in online operation.

The meaning of the status and error messages is described in the following tables. The associated technology object tag is given in parentheses.

Cam track status

The following table shows the possible states of the cam track:

Status	Description
Active	The technology object is in operation. (<TO>.StatusWord.X0 (Control))
Switched	A cam of cam track is switched. (<TO>.TrackOutput)
Inverted output cam output	The output cam output is inverted. (<TO>.StatusWord.X4 (OutputInverted))
Error	An error occurred at the technology object. Detailed information about the error is available in the "Error" area, and in the <TO>.ErrorDetail.Number and <TO>.ErrorDetail.Reaction tags of the technology object. (<TO>.StatusWord.X1 (Error))
Restart active	The technology object is being reinitialized. The tags of the technology data block are not updated with active restart. (<TO>.StatusWord.X2 (RestartActive))
Cam track output ready	The cam track is synchronized with the output module and available for use. (<TO>.StatusWord.X5 (CommunicationOk))
Restart required	Data relevant for the restart has been changed. The changes are applied only after a re-start of the technology object. (<TO>.StatusWord.X3 (OnlineStartValuesChanged))

Error

The following table shows the possible errors:

Error	Description
System	A system-internal error has occurred. (<TO>.ErrorWord.X0 (SystemFault))
Configuration	A configuration error has occurred. One or more configuration parameters are inconsistent or invalid. The technology object was incorrectly configured, or editable configuration data were incorrectly modified during runtime of the user program. (<TO>.ErrorWord.X1 (ConfigFault))
User program	An error occurred in the user program with a Motion Control instruction or its use. (<TO>.ErrorWord.X2 (UserFault))
Job rejected	A job cannot be executed. A Motion Control instruction cannot be executed because the necessary conditions are not met (e.g. axis assigned to the cam track is not homed). (<TO>.ErrorWord.X3 (CommandNotAccepted))
I/O	An error occurred accessing a logical address. (<TO>.ErrorWord.X13 (PeripheralError))

Alarm display

For additional information and to acknowledge the error, go to the Inspector window by clicking on the "Alarm display" link.

Additional information

An option for the evaluation of the individual status bits can be found in the Evaluating StatusWord, ErrorWord and WarningWord (Page 288) section.

See also

StatusWord tag (cam track) (Page 510)

ErrorWord tag (cam track) (Page 511)

WarningWord tag (cam track) (Page 512)

9.10.2 Cam track status

Description

You use the "Technology object > Diagnostics > Cam track status" diagnostics function in the TIA Portal to monitor the status of the cam track. The Diagnostics function is available in online operation.

"Validity and masking of the output cams" area

The individual cams of a cam track are shown in this area along with the status for the following properties:

Status	Description
Valid	Validity of the individual cams of the cam track (<TO>.Parameter.Cam[1 … 32].Existent)
Masked	Bit masking of the individual cams of the cam track (<TO>.Parameter.CamMasking)
Effective	Switched on output cam (bit-masked) (<TO>.SingleCamState)

"Positions" area

The following status values are displayed in this area:

Status	Description
Current position in the cam track	Position during cam track processing within a cam track cycle The distance to the current reference position of the current cam track (<TO>.MatchPosition) is displayed. (<TO>.TrackPosition)
Current cam track start	Reference position of the current cam track During cyclic processing of the cam track, the continued reference position of the current cam track is displayed. The unique detection and output of the position is only possible when the assigned technology object is in motion. (<TO>.MatchPosition)

Instructions 10

10.1 MC_Power V4

10.1.1 MC_Power: Enable, disable technology object V4

Description

With the Motion Control instruction "MC_Power", a technology object is enabled or disabled.

Applies to

- Synchronous axis
- Positioning axis
- Speed axis
- External encoder

Requirement

- The technology object has been configured correctly.
- Cyclic BUS communication is established between controller and encoder (<TO>.StatusSensor[n].CommunicationOK = TRUE).
- Cyclic BUS communication is established between controller and drive (<TO>.StatusDrive.CommunicationOK = TRUE).

Override response

- An "MC_Power" job cannot be aborted by any other Motion Control job.
- An "MC_Power" job with parameter "Enable"TRUE enables a technology object but does not thereby abort any other Motion Control instructions.
- Disabling the technology object (parameter "Enable" = FALSE) aborts all Motion Control jobs on the corresponding technology object in accordance with the selected "StopMode". This process cannot be canceled by the user.

Parameters

The following table shows the parameters of Motion Control instruction "MC_Power":

Parameters	Declaration	Data type	Default value	Description	
Axis	INPUT	TO_Axis	-	Technology object	
Enable	INPUT	BOOL	FALSE	TRUE	The technology object is enabled.
				FALSE	The technology object is disabled. All current jobs at the technology object are aborted in accordance with the configured "StopMode".
StartMode	INPUT	DINT	1	0	Enable positioning axis/synchronous axis not position-controlled
				1	Enable positioning axis/synchronous axis position-controlled
				The parameter initially takes effect when the positioning axis is enabled (Enable changes from FALSE to TRUE) and when the axis is enabled after acknowledgment of an interrupt that caused the axis to be disabled. This parameter is ignored when a speed axis or an external encoder is used.	
StopMode	INPUT	INT	0	Not applicable to the technology object external encoder If you disable a technology object with a negative edge at parameter "Enable", the axis decelerates in accordance with the selected "StopMode".	
				0	Emergency stop When the technology object is disabled, the axis brakes to a standstill without jerk limit, using the emergency stop deceleration configured in "Technology object > Configuration > Extended parameters > Emergency stop ramp". The enable is then canceled. (<TO>.DynamicDefaults.EmergencyDeceleration)
				1	Immediate stop When a technology object is disabled, the setpoint zero is output, and the enable is canceled. The axis is braked to a standstill according to the configuration in the drive.
				2	Stop with maximum dynamic values When the technology object is disabled, the axis is braked to a standstill using the maximum deceleration configured in "Technology object > Configuration > Extended parameters > Dynamic limits". The configured maximum jerk is hereby taken into account. The enable is then canceled. (<TO>.DynamicLimits.MaxDeceleration; <TO>.DynamicLimits.MaxJerk)

Parameters	Declaration	Data type	Default value	Description	
Status	OUTPUT	BOOL	FALSE	Technology object enable status	
				FALSE	Disabled • A positioning axis, synchronous axis or speed axis does not accept any motion control jobs. • Speed control and positioning control are not active. • The actual values of the technology object are not checked for validity.
				TRUE	Enabled • An enabled positioning axis, synchronous axis or speed axis accepts Motion Control jobs. • Speed control and positioning control are active. • The actual values of the technology object are valid.
Busy	OUTPUT	BOOL	FALSE	TRUE	Job is running.
Error	OUTPUT	BOOL	FALSE	TRUE	An error occurred in Motion Control instruction MC_Power. The cause of the error can be found in the "ErrorID" parameter.
ErrorID	OUTPUT	WORD	16#0000	Error ID (Page 542) for parameter "ErrorID"	

Enabling technology objects

To enable a technology object, set the "Enable" parameter to TRUE.

The following two cases are differentiated:

- Enable at a standstill
- Enable in motion of axis

Enable at a standstill

Depending on the "StartMode" parameter, the position is held (StartMode = 1) or the velocity setpoint zero is output (StartMode = 0). When the "Status" parameter shows the value TRUE, the technology object is enabled.

Enable in motion of axis

If StartMode = 1, the position at the time of the setting of the enable input is effective as set position for the position controller. The axis is braked to a standstill and adjusted to the set position depending on the maximum deceleration configured under "Technology object > Configuration > Extended parameters > Dynamic limits". If monitoring operation or dynamic limits are hereby exceeded, this leads to corresponding alarm reactions.

If StartMode = 0, the axis is braked as much as possible by the specification of the velocity setpoint zero. Monitoring operations and dynamic limits are not active in this case.

When the "Status" parameter shows the value TRUE, the technology object is enabled.

Note

Automatic enable after acknowledgment of a technology alarm

If the technology object is disabled due to a technology alarm, the technology object will be enabled again automatically after the cause has been eliminated and the alarm has been acknowledged. This requires the "Enable" parameter to have retained the value TRUE during this process.

Disabling technology objects

To disable a technology object, set the "Enable" parameter to FALSE.

If an axis is in motion, it is braked to a standstill according to the selected "StopMode".

When the "Busy" and "Status" parameters show the value FALSE, the disabling of the technology object is complete.

Drive connection by means of PROFIdrive

When a drive is connected using PROFIdrive, the setpoint, enable and drive status are transmitted via the PROFIdrive telegram.

- **Enable technology object and activate drive**

  With parameter "Enable" = TRUE, the technology object is enabled. The drive is enabled according to the PROFIdrive standard.

  When the <TO>.StatusDrive.InOperation tag shows the value TRUE, the drive is ready to execute setpoints. The "Status" parameter is set to the value TRUE.

- **Disable technology object and deactivate drive**

  With "Enable" = FALSE parameter, the "Status" parameter is set to the value FALSE, and the axis is braked according to the selected "StopMode". The drive is disabled according to the PROFIdrive standard.

Analog drive connection

The setpoint is output via an analog output. Optionally, you can configure an enabling signal via digital output (<TO>.Actor.Interface.EnableDriveOutput), and a readiness signal via digital input (<TO>.Actor.Interface.DriveReadyInput).

- **Enable technology object and activate drive**

  With parameter "Enable" = TRUE, the enable output ("Enable drive output") is set.

  When the drive returns the readiness signal via the ready input ("Drive ready input"), the "Status" parameter and the technology object's <TO>.StatusDrive.InOperation tag are set to TRUE, and the setpoint is switched to the analog output.

- **Disable technology object and deactivate drive**

  With parameter "Enable" = FALSE, the "Status" parameter is set to the value FALSE, and the axis is braked according to the selected "StopMode". When the setpoint zero is reached, the enable output is set to FALSE.

Additional information

Additional information on enabling and disabling technology objects and drives can be found in the appendix, MC_Power Function Charts (Page 547).

See also

Error ID for Motion Control instructions (Page 542)

10.1.2 MC_Power: Function chart V4

Function chart: Enabling a technology object and example of alarm response

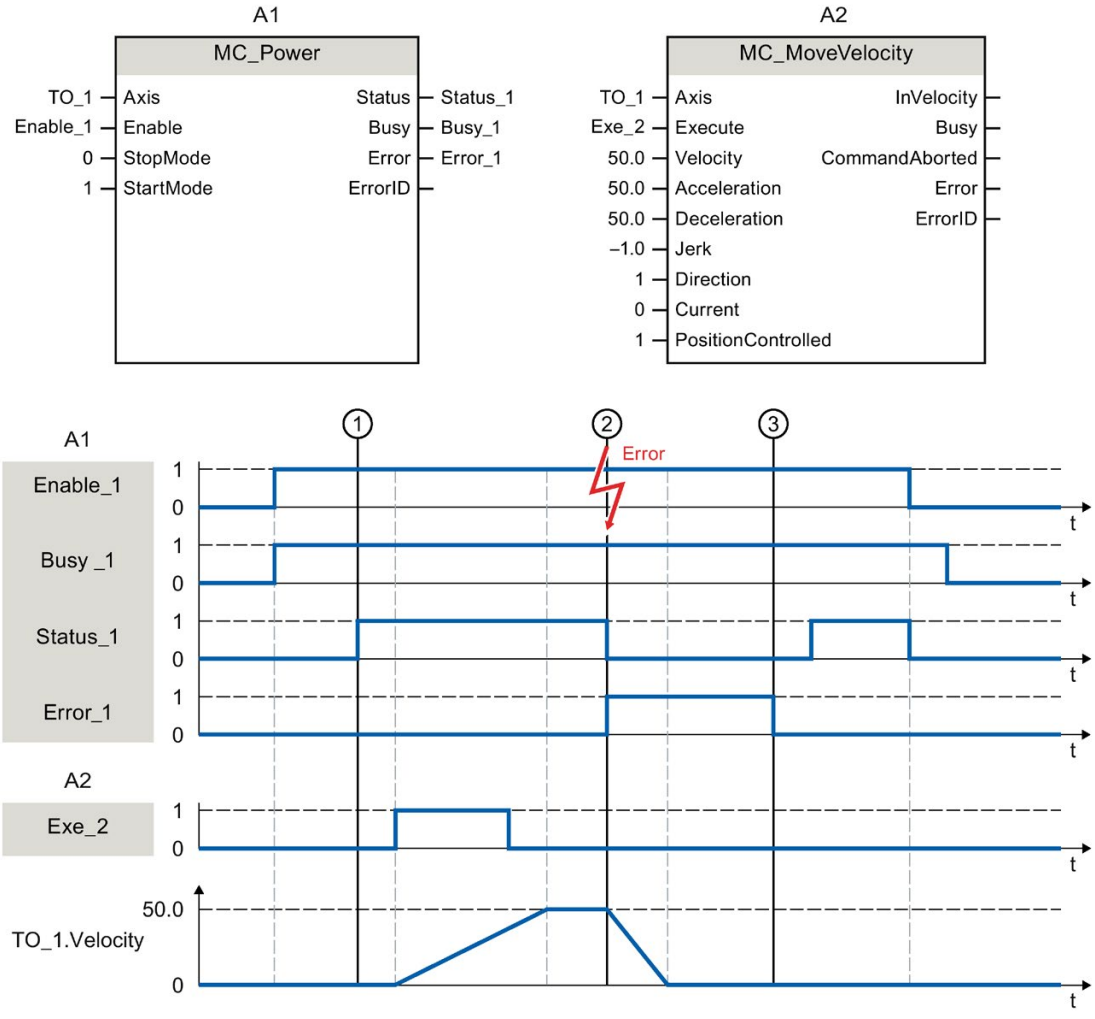

A technology object is enabled with "Enable_1= TRUE". The successful enable can be read from "Status_1" at time ①. The axis will then move with an "MC_MoveVelocity" job (A2). The velocity profile of the axis can be read from "TO_1.Velocity".

At time ② an error occurs in the technology object, which results in the disabling of the technology object (alarm response: remove enable). The axis is braked to a standstill according to the configuration in the drive. When the technology object is disabled, "Status_1" is reset. Since the axis was not disabled using "Enable_1" = FALSE, the selected "StopMode" does not apply. The cause of the error is corrected and the alarm is acknowledged at time ③.

Since "Enable_1" is still set, the technology object is enabled again. The successful enable can be read from "Status_1". Finally, the technology object is disabled with "Enable_1" = FALSE.

10.2 MC_Reset V4

10.2.1 MC_Reset: Acknowledge alarms, restart technology object V4

Description

With the Motion Control instruction "MC_Reset", you acknowledge all technology alarms that can be acknowledged in the user program. Acknowledgment also resets the "Error" and "Warning" bits in the technology data block.

With the Motion Control instruction "MC_Reset" with "Restart" = TRUE, you start reinitialization (restart) of technology objects. Upon restart of the technology object, the new configuration data are applied in the technology data block.

Applies to

- All technology objects

Requirement

- Positioning/synchronous axis, speed axis and external encoder technology objects:

  For a restart, the technology object must be disabled.

  ("MC_Power.Status" = FALSE and "MC_Power.Busy" = FALSE)

Override response

- Parameter "Restart" = FALSE:

  Processing of the "MC_Reset" instruction with parameter "Restart" = FALSE cannot be aborted by any other Motion Control job. The MC_Reset job does not abort any active motion control jobs.

- Parameter "Restart" = TRUE:

  Processing of the "MC_Reset" instruction with parameter "Restart" = TRUE cannot be aborted by any other Motion Control job.

Parameters

The following table shows the parameters of Motion Control instruction "MC_Reset":

Parameter	Declaration	Data type	Default value	Description	
Axis	INPUT	TO_Object	-	Technology object	
Execute	INPUT	BOOL	FALSE	TRUE	Start job with a positive edge
Restart	INPUT	BOOL	FALSE	TRUE	"Restart" Reinitialization of the technology object and acknowledgment of pending technology alarms. The technology object is reinitialized with the configured start values.
				FALSE	Acknowledgment of queued technology alarms.
Done	OUTPUT	BOOL	FALSE	TRUE	Error has been acknowledged. Restart has been executed.
Busy	OUTPUT	BOOL	FALSE	TRUE	Job is running.
CommandAborted	OUTPUT	BOOL	FALSE	TRUE	The job was aborted by another job during execution.
Error	OUTPUT	BOOL	FALSE	TRUE	An error occurred during execution of the job. The job is rejected. The cause of the error can be found in the "ErrorID" parameter.
ErrorID	OUTPUT	WORD	16#0000	Error ID (Page 542) for parameter "ErrorID"	

Acknowledging technology alarms

To acknowledge technology alarms, follow these steps:

1. Check the requirements indicated above.
2. Set the parameter "Restart" = FALSE.
3. Start the acknowledgment of the error with a positive edge at parameter "Execute".

When the "Done" parameter shows the value TRUE, the error has been acknowledged.

Note

Acknowledge with "Restart" = FALSE

If only the technology alarms are to be acknowledged, set "Restart"FALSE. The technology object cannot be used during a restart.

Restarting a technology object

To restart a technology object, follow these steps:

1. Check the requirements indicated above.
2. Set the parameter "Restart" = TRUE.
3. Perform the restart with a positive edge at parameter "Execute".

When the "Done" parameter shows the value TRUE, the restart of the technology object is complete.

Additional information regarding the restart can be found in the section "Restarting technology objects (Page 314)".

See also

Error ID for Motion Control instructions (Page 542)

10.3 MC_Home V4

10.3.1 MC_Home: Home technology object, set home position V4

Description

With the Motion Control instruction "MC_Home", you create the relationship between the position in the technology object and the mechanical position. The actual position value in the technology object is assigned to a homing mark at the same time. This homing mark represents a known mechanical position.

Homing is performed according to the mode selected with the "Mode" parameter and the configuration under "Technology object > Configuration > Extended parameters > Homing".

The "MC_Home.Mode" parameter for S7-1200 Motion Control and S7-1500 Motion Control has been standardized within the framework of technology version V2.0. This results in a new assignment of the parameter values for the "MC_Home.Mode" parameter. A comparison of the "MC_Home.Mode" parameter for technology versions V1.0 and ≥ V2.0 is available in section "Version overview (Page 155)".

The preset values under "Technology object > Configuration > Extended parameters > Dynamic default values" are used for the dynamic values Acceleration, Deceleration and Jerk.

Applies to

- Synchronous axis
- Positioning axis
- External encoder

The following table shows which modes are possible with each of the technology objects:

Operating mode	Positioning axis/ synchronous axis with incremental encoder	Positioning axis/ synchronous axis with absolute encoder	External incremen-tal encoder	External absolute encoder
Active homing ("Mode" = 3, 5)	X	-	-	-
Passive homing ("Mode" = 2, 8, 10)	X	-	X	-
Set actual position ("Mode" = 0)	X	X	X	X
Relative shift of the actual position ("Mode" = 1)	X	X	X	X
Absolute encoder adjustment ("Mode" = 6, 7)	-	X	-	X

Requirement

- The technology object has been configured correctly.
- "Mode" = 2, 3, 5, 8, 10
  The technology object is enabled.
- "Mode" = 0, 1, 6, 7, 8
  The actual encoder values are valid (<TO>.StatusSensor[n].State = 2).
- "Mode" = 6, 7

  The axis is in position-controlled mode.

Override response

The override response for "MC_Home" jobs is described in section "Override response V4: Homing and motion jobs (Page 428)".

Parameters

The following table shows the parameters of Motion Control instruction "MC_Home":

Parameter	Declaration	Data type	Default value	Description	
Axis	INPUT	TO_Axis	-	Technology object	
Execute	INPUT	BOOL	FALSE	TRUE	Start job with a positive edge
Position	INPUT	LREAL	0.0	The specified value is used according to the selected "Mode".	
Mode	INPUT	INT	0	Operating mode	
				0	Direct homing (absolute) The current position of the technology object is set to the value of parameter "Position".
				1	Direct homing (relative) The current position of the technology object is shifted by the value of parameter "Position".
				2	Passive homing (without reset) Functions like "Mode" 8, with the difference that the "homed" status is **not** reset when the function is enabled.
				3	Active homing The TO positioning axis/synchronous axis performs a homing movement according to the configuration. After the completion of the motion, the axis is positioned at the value of the "Position" parameter.
				4	Reserved
				5	Active homing ("Position" parameter has no effect) The TO positioning axis/synchronous axis performs a homing movement according to the configuration. After completion of the motion, the axis is positioned at the home position configured under "Technology object > Configuration > Extended parameters > Homing > Active homing". (<TO>.Homing.HomePosition)
				6	Absolute encoder adjustment (relative) The current position is shifted by the value of parameter "Position". The calculated absolute value offset is stored retentively in the CPU. (<TO>.StatusSensor[n].AbsEncoderOffset)
				7	Absolute encoder adjustment (absolute) The current position is set to the value of parameter "Position". The calculated absolute value offset is stored retentively in the CPU. (<TO>.StatusSensor[n].AbsEncoderOffset)
				8	Passive homing When the homing mark is detected, the actual value is set to the value of the "Position" parameter.

Parameter	Declaration	Data type	Default value	Description	
				9	Abort passive homing An active job for passive homing is aborted.
				10	Passive homing ("Position" parameter has no effect) When the homing mark is detected, the actual value is set to the home position configured under "Technology object > Configuration > Extended parameters > Homing > Passive homing". (<TO>.Homing.HomePosition)
Reference-MarkPosition	OUTPUT	LREAL	0.0	Display of the position at which the technology object was homed (valid when "Done" = TRUE)	
Done	OUTPUT	BOOL	FALSE	TRUE	Job is completed.
Busy	OUTPUT	BOOL	FALSE	TRUE	Job is running.
Command Aborted	OUTPUT	BOOL	FALSE	TRUE	The job was aborted by another job during execution.
Error	OUTPUT	BOOL	FALSE	TRUE	An error occurred during execution of the job. The job is rejected. The cause of the error can be found in the "ErrorID" parameter.
ErrorID	OUTPUT	WORD	16#0000	Error ID (Page 542) for parameter "ErrorID"	

Resetting the "Homed" status

The "Homed" status of a technology object is reset under the following conditions (<TO>.StatusWord.X5 (HomingDone)):

- **Technology objects with incremental actual values:**
  - Starting an "MC_Home" job with "Mode" = 3, 5, 8, 10

    (After successful completion of the homing operation, the "Homed" status is reset.)
  - Error in the encoder system, or encoder failure
  - Restart of the technology object
  - After POWER OFF -> POWER ON of the CPU
  - Memory reset
  - Modification of the encoder configuration
- **Technology objects with absolute actual values:**
  - Error in sensor system/encoder failure
  - Replacement of the CPU
  - Modification of the encoder configuration
  - Restoration of the CPU factory settings
  - Transfer of a different project into the controller

Homing a technology object with "Mode" = 1..8, 10

To home a technology object, follow these steps:

1. Check the requirements indicated above.
2. Specify the desired homing function in the "Mode" parameter.
3. Initialize the necessary parameters with values, and start the homing operation with a positive edge at the "Execute" parameter.

When the "Done" parameter shows the value TRUE, the "MC_Home" job has been completed according to the selected "Mode". The "Homed" status of the technology object is indicated under "Technology object > Diagnostics > Status and error bits > Motion status > Homed" (<TO>.StatusWord.X5 (HomingDone)).

Abort of a passive homing with "Mode" = 9

With "Mode" = 9, the technology object is not homed. When an active "MC_Home" job for passive homing ("Mode" = 2, 8, 10) is overridden by another "MC_Home" job with "Mode" = 9, the running job is aborted with parameter "CommandAborted" = TRUE. The overriding job with "Mode" = 9 signals successful execution with parameter "Done" = TRUE.

Additional information

An option for the evaluation of the individual status bits can be found in the section "Evaluating StatusWord, ErrorWord and WarningWord (Page 288)".

See also

Override response V4: Homing and motion jobs (Page 428)

Error ID for Motion Control instructions (Page 542)

Homing (Page 69)

10.4 MC_Halt V4

10.4.1 MC_Halt: Pause axis V4

Description

With the Motion Control instruction "MC_Halt", you brake an axis until it comes to a standstill.

You define the dynamic behavior of the braking operation with parameters "Jerk" and "Deceleration".

Applies to

- Synchronous axis
- Positioning axis
- Speed axis

Requirement

- The technology object has been configured correctly.
- The technology object is enabled.

Override response

The override response for "MC_Halt" jobs is described in section "Override response V4: Homing and motion jobs (Page 428)".

Parameters

The following table shows the parameters of Motion Control instruction "MC_Halt":

Parameters	Declaration	Data type	Default value	Description	
Axis	INPUT	TO_SpeedAxis	-	Technology object	
Execute	INPUT	BOOL	FALSE	TRUE	Start job with a positive edge
Deceleration	INPUT	LREAL	-1.0	Deceleration	
				> 0.0	The specified value is used.
				= 0.0	Not permitted
				< 0.0	The deceleration configured in "Technology object > Configuration > Extended parameters > Dynamic defaults" is used. (<TO>.DynamicDefaults.Deceleration)
Jerk	INPUT	LREAL	-1.0	Jerk	
				> 0.0	Constant-acceleration velocity profile; the specified jerk is used
				= 0.0	Trapezoid velocity profile
				< 0.0	The jerk configured in "Technology object > Configuration > Extended parameters > Dynamic defaults" is used. (<TO>.DynamicDefaults.Jerk)
AbortAcceleration	INPUT	BOOL	FALSE	FALSE	The current acceleration at the start of the job is reduced using the configured jerk. Afterwards, the deceleration builds up
				TRUE	The acceleration is set to 0.0 at the start of the job, and the deceleration immediately builds up.
Done	OUTPUT	BOOL	FALSE	TRUE	Zero velocity reached
Busy	OUTPUT	BOOL	FALSE	TRUE	Job is running.
CommandAborted	OUTPUT	BOOL	FALSE	TRUE	The job was aborted by another job during execution.
Error	OUTPUT	BOOL	FALSE	TRUE	An error occurred during execution of the job. The job is rejected. The cause of the error can be found in the "ErrorID" parameter.
ErrorID	OUTPUT	WORD	16#0000	Error ID (Page 542) for parameter "ErrorID"	

Braking an axis with "MC_Halt"

Proceed as follows to decelerate an axis to a standstill:

1. Check the requirements indicated above.
2. Supply the parameters "Deceleration", "Jerk" and "AbortAcceleration" with the desired values.
3. Start the "MC_Halt" job with a positive edge at parameter "Execute".

The current motion state is indicated in "Busy", "Done" and "Error". The standstill of the axis is indicated under "Technology object > Diagnostics > Status and error bits > Motion status > Standstill" (<TO>.StatusWord.X7 (Standstill)).

Braking an axis with active force/torque limit

With active force/torque limiting the permitted torque may not be sufficient to move the calculated braking ramp. The "MC_Halt" command does not signal "Done" = TRUE.

To brake an axis with active force/torque limiting, use the Motion Control instruction "MC_MoveVelocity" with "MC_MoveVelocity.Velocity" = 0.0 and "MC_MoveVelocity.PositionControlled" = FALSE.

Additional information

An option for the evaluation of the individual status bits can be found in the Evaluating StatusWord, ErrorWord and WarningWord (Page 288) section.

See also

Override response V4: Homing and motion jobs (Page 428)

Error ID for Motion Control instructions (Page 542)

MC_MoveVelocity: Move axis at velocity/speed setpoint V4 (Page 386)

10.4.2 MC_Halt: Function chart V4

Function chart: Stopping an axis and the overriding job characteristics

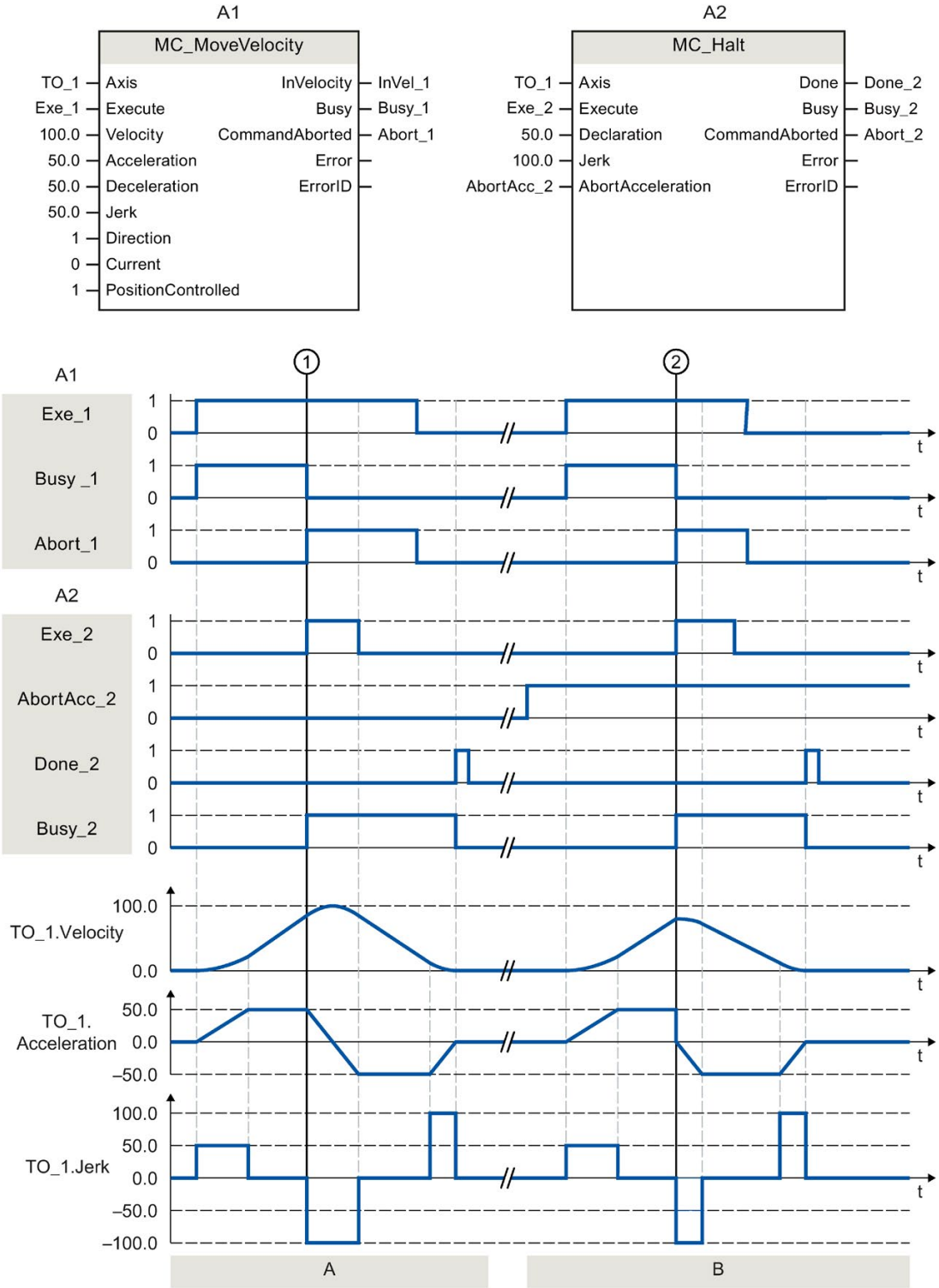

Section A	An axis is moved with an "MC_MoveVelocity" job (A1). At time ①, the "MC_MoveVelocity" job is overridden by an "MC_Halt" job (A2). The job abort is signaled via "Abort_1". With "AbortAcc_2" = FALSE, the current acceleration is reduced with the specified jerk. Afterward, the deceleration builds up and the axis is braked to a standstill. The completion of the "MC_Halt" job is reported via "Done_2".
Section B	The axis is moved with an "MC_MoveVelocity" job (A1). At time ②, the "MC_MoveVelocity" job is overridden by an "MC_Halt" job (A2). The job abort is signaled via "Abort_1". With "AbortAcc_2" = TRUE, the current acceleration is set to zero immediately and the deceleration builds up. The axis is braked to a standstill. The completion of the "MC_Halt" job is reported via "Done_2".

10.5 MC_MoveAbsolute V4

10.5.1 MC_MoveAbsolute: Position axis absolutely V4

Description

With the Motion Control instruction "MC_MoveAbsolute", you can move an axis to an absolute position.

You define the dynamic behavior of the motion with parameters "Velocity", "Jerk", "Acceleration" and "Deceleration".

Applies to

- Synchronous axis
- Positioning axis

Requirement

- The technology object has been configured correctly.
- The technology object is enabled.
- The technology object is homed.

Override response

The override response for "MC_MoveAbsolute" jobs is described in section "Override response V4: Homing and motion jobs (Page 428)".

Parameters

The following table shows the parameters of Motion Control instruction "MC_MoveAbsolute":

Parameters	Declaration	Data type	Default value	Description	
Axis	INPUT	TO_PositioningAxis	-	Technology object	
Execute	INPUT	BOOL	FALSE	TRUE	Start job with a positive edge
Position	INPUT	LREAL	0.0	Absolute target position	
Velocity	INPUT	LREAL	-1.0	Velocity setpoint for the positioning	
				> 0.0	The specified value is used.
				= 0.0	Not permitted
				< 0.0	The velocity configured in "Technology object > Configuration > Extended parameters > Dynamic defaults" is used. (<TO>.DynamicDefaults.Velocity)
Acceleration	INPUT	LREAL	-1.0	Acceleration	
				> 0.0	The specified value is used.
				= 0.0	Not permitted
				< 0.0	The acceleration configured in "Technology object > Configuration > Extended parameters > Dynamic defaults" is used. (<TO>.DynamicDefaults.Acceleration)
Deceleration	INPUT	LREAL	-1.0	Deceleration	
				> 0.0	The specified value is used.
				= 0.0	Not permitted
				< 0.0	The deceleration configured in "Technology object > Configuration > Extended parameters > Dynamic defaults" is used. (<TO>.DynamicDefaults.Deceleration)
Jerk	INPUT	LREAL	-1.0	Jerk	
				> 0.0	Constant-acceleration velocity profile; the specified jerk is used
				= 0.0	Trapezoid velocity profile
				< 0.0	The jerk configured in "Technology object > Configuration > Extended parameters > Dynamic defaults" is used. (<TO>.DynamicDefaults.Jerk)
Direction	INPUT	INT	1	Motion direction of the axis Is only evaluated with "modulo" enabled. "Technology object > Configuration > Basic parameters > Enable modulo	
				1	Positive direction
				2	Negative direction
				3	Shortest distance
Done	OUTPUT	BOOL	FALSE	TRUE	Target position reached.

Parameters	Declaration	Data type	Default value	Description	
Busy	OUTPUT	BOOL	FALSE	TRUE	Job is running.
CommandAborted	OUTPUT	BOOL	FALSE	TRUE	The job was aborted by another job during execution.
Error	OUTPUT	BOOL	FALSE	TRUE	An error occurred during execution of the job. The job is rejected. The cause of the error can be found in the "ErrorID" parameter.
ErrorID	OUTPUT	WORD	16#0000	Error ID (Page 542) for parameter "ErrorID"	

Moving an axis to an absolute position

Proceed as follows to move an axis to an absolute position:

1. Check the requirements indicated above.
2. Specify the desired target position in the "Position" parameter.
3. Start the "MC_MoveAbsolute" job with a positive edge at parameter "Execute".

The current motion state is indicated in "Busy", "Done" and "Error".

See also

Override response V4: Homing and motion jobs (Page 428)
Error ID for Motion Control instructions (Page 542)

10.5.2 MC_MoveAbsolute: Function chart V4

Function chart: Absolute positioning of an axis, and the response to an overriding job

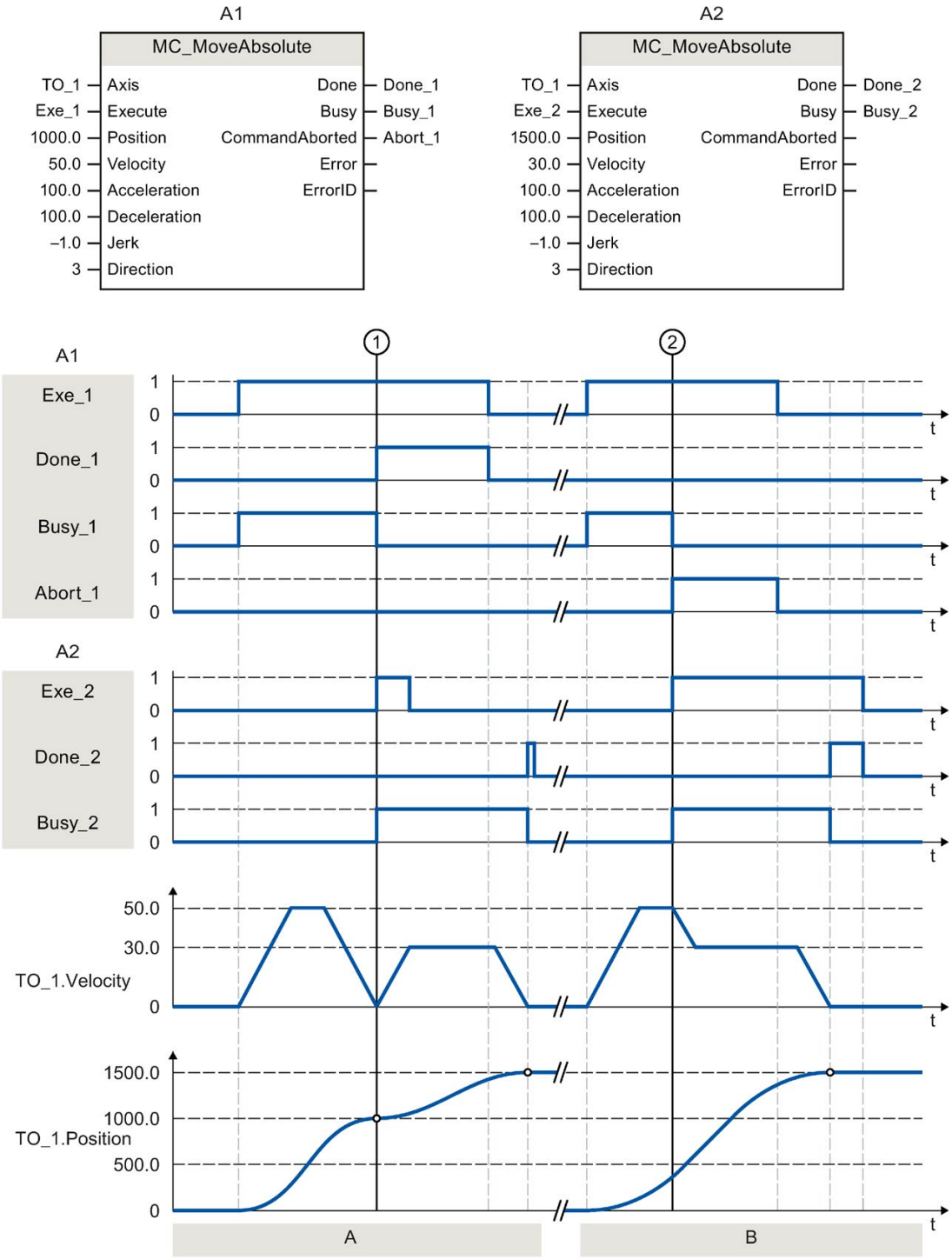

Section A	An axis is moved to absolute position 1000.0 with an "MC_MoveAbsolute" job (A1). When the axis reaches the target position, this is signaled at time ① via "Done_1". At this time ①, another "MC_MoveAbsolute" job (A2) with target position 1500.0 is started. When the axis reaches the target position 1500.0, this is signaled via "Done_2". Since "Exe_2" was previously reset, "Done_2" is applied only to one cycle.
Section B	An active "MC_MoveAbsolute" job (A1) is overridden at time ② by another "MC_MoveAbsolute" job (A2). The abort is signaled via "Abort_1". The axis is braked to the changed velocity and moved to the new target position 1500.0. When the new target position is reached, this is signaled via "Done_2".

10.6 MC_MoveRelative V4

10.6.1 MC_MoveRelative: Position axis relatively V4

Description

With the Motion Control instruction "MC_MoveRelative", you move an axis relative to its position when execution of the job began.

You define the dynamic behavior of the motion with parameters "Velocity", "Jerk", "Acceleration" and "Deceleration".

Applies to

- Synchronous axis
- Positioning axis

Requirement

- The technology object has been configured correctly.
- The technology object is enabled.

Override response

The override response for "MC_MoveRelative" jobs is described in section "Override response V4: Homing and motion jobs (Page 428)".

Parameters

The following table shows the parameters of Motion Control instruction "MC_MoveRelative":

Parameter	Declaration	Data type	Default value	Description	
Axis	INPUT	TO_PositioningAxis	-	Technology object	
Execute	INPUT	BOOL	FALSE	TRUE	Start job with a positive edge
Distance	INPUT	LREAL	0.0	Distance for the positioning process (negative or positive)	
Velocity	INPUT	LREAL	-1.0	Velocity setpoint for the positioning	
				> 0.0	The specified value is used.
				= 0.0	Not permitted
				< 0.0	The velocity configured in "Technology object > Configuration > Extended parameters > Dynamic defaults" is used. (<TO>.DynamicDefaults.Velocity)
Acceleration	INPUT	LREAL	-1.0	Acceleration	
				> 0.0	The specified value is used.
				= 0.0	Not permitted
				< 0.0	The acceleration configured in "Technology object > Configuration > Extended parameters > Dynamic defaults" is used. (<TO>.DynamicDefaults.Acceleration)
Deceleration	INPUT	LREAL	-1.0	Deceleration	
				> 0.0	The specified value is used.
				= 0.0	Not permitted
				< 0.0	The deceleration configured in "Technology object > Configuration > Extended parameters > Dynamic defaults" is used. (<TO>.DynamicDefaults.Deceleration)
Jerk	INPUT	LREAL	-1.0	Jerk	
				> 0.0	Constant-acceleration velocity profile; the specified jerk is used
				= 0.0	Trapezoid velocity profile
				< 0.0	The jerk configured in "Technology object > Configuration > Extended parameters > Dynamic defaults" is used. (<TO>.DynamicDefaults.Jerk)
Done	OUTPUT	BOOL	FALSE	TRUE	Target position reached
Busy	OUTPUT	BOOL	FALSE	TRUE	Job is running.
CommandAborted	OUTPUT	BOOL	FALSE	TRUE	The job was aborted by another job during execution.

Parameter	Declaration	Data type	Default value	Description	
Error	OUTPUT	BOOL	FALSE	TRUE	An error occurred during execution of the job. The job is rejected. The cause of the error can be found in the "ErrorID" parameter.
ErrorID	OUTPUT	WORD	16#0000	Error ID (Page 542) for parameter "ErrorID"	

Moving an axis relative to the starting position

Proceed as follows to move an axis relative to the starting position:

1. Check the requirements indicated above.
2. Specify distance to be moved in the "Distance" parameter.
3. Start the "MC_MoveRelative" job with a positive edge at parameter "Execute".

The current motion state is indicated in "Busy", "Done" and "Error".

See also

Override response V4: Homing and motion jobs (Page 428)
Error ID for Motion Control instructions (Page 542)

10.6.2 MC_MoveRelative: Function chart V4

Function chart: Relative positioning of an axis, and the overriding job characteristics

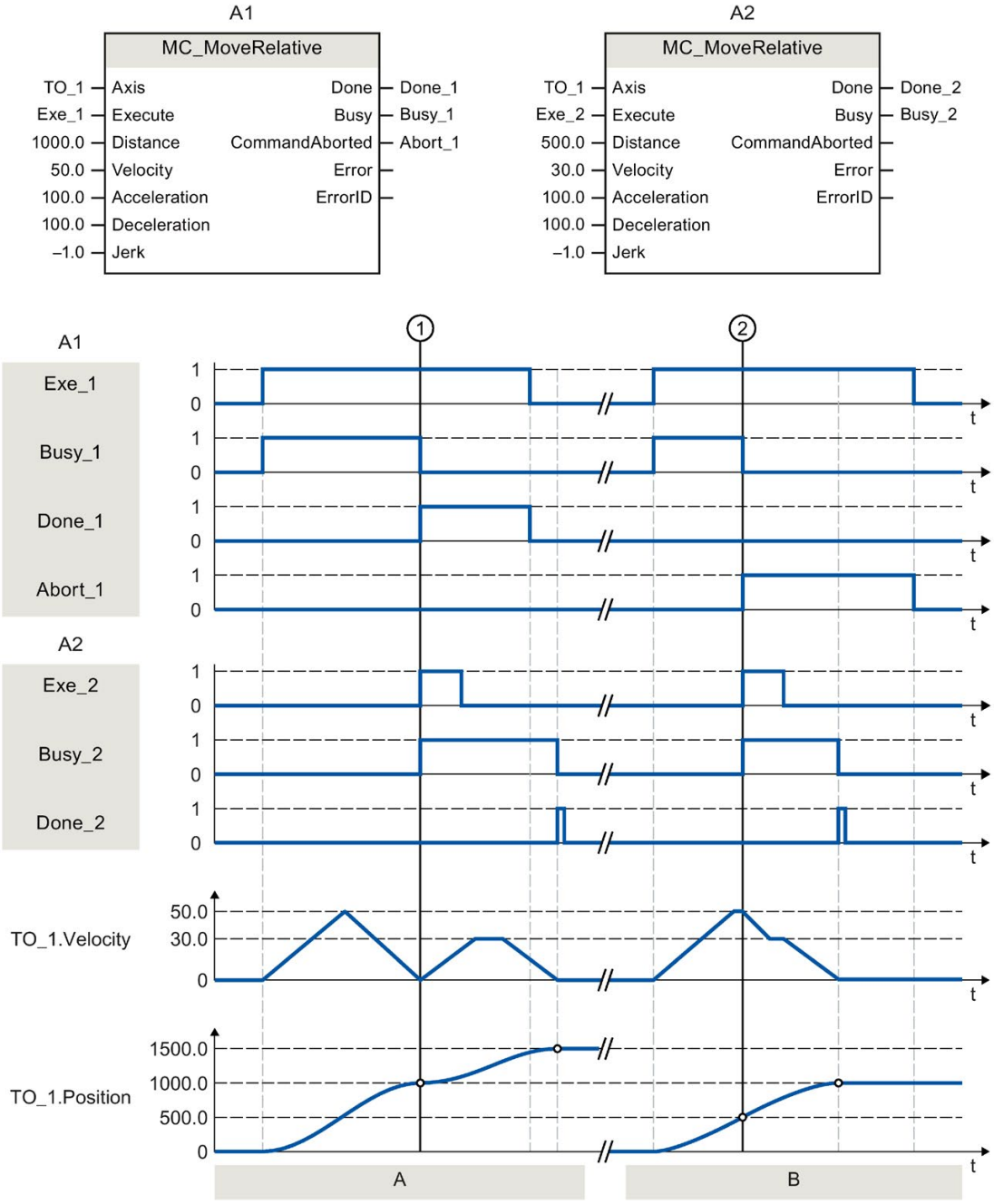

Section A	The axis is moved by an "MC_MoveRelative" job (A1) by the distance ("Distance") 1000.0 (the starting position here is 0.0). When the axis reaches the target position, this is signaled at time ① via "Done_1". At this time ①, another "MC_MoveRelative" job (A2) with distance 500.0 is started. When the new target position is reached, this is signaled via "Done_2". Since "Exe_2" was previously reset, "Done_2" is applied only to one cycle.
Section B	An active "MC_MoveRelative" job (A1) is overridden by another "MC_MoveRelative" job (A2). The abort is signaled at time ② via "Abort_1". The axis is then moved at the new velocity by the distance ("Distance") 500.0. When the new target position is reached, this is signaled via "Done_2".

10.7 MC_MoveVelocity V4

10.7.1 MC_MoveVelocity: Move axis at velocity/speed setpoint V4

Description

With the Motion Control instruction "MC_MoveVelocity", you move an axis at constant velocity/speed.

You define the dynamic behavior of the motion with parameters"Velocity", "Jerk", "Acceleration" and "Deceleration".

- Positioning axis/synchronous axis:

  A velocity is specified in the "Velocity" parameter.
- Speed axis:

  A speed is specified in the "Velocity" parameter.

Applies to

- Synchronous axis
- Positioning axis
- Speed axis

Requirement

- The technology object has been configured correctly.
- The technology object is enabled.

Override response

The override response for "MC_MoveVelocity" jobs is described in section Override response V4: Homing and motion jobs (Page 428).

Parameters

The following table shows the parameters of Motion Control instruction "MC_MoveVelocity":

Parameters	Declaration	Data type	Default value	Description	
Axis	INPUT	TO_SpeedAxis	-	Technology object	
Execute	INPUT	BOOL	FALSE	TRUE	Start job with a positive edge
Velocity	INPUT	LREAL	100.0	Velocity setpoint / speed setpoint for the motion ("Velocity" = 0.0 is permitted)	
Acceleration	INPUT	LREAL	-1.0	Acceleration	
				> 0.0	The specified value is used.
				= 0.0	Not permitted
				< 0.0	The acceleration configured in "Technology object > Configuration > Extended parameters > Dynamic defaults" is used. (<TO>.DynamicDefaults.Acceleration)
Deceleration	INPUT	LREAL	-1.0	Deceleration	
				> 0.0	The specified value is used.
				= 0.0	Not permitted
				< 0.0	The deceleration configured in "Technology object > Configuration > Extended parameters > Dynamic defaults" is used. (<TO>.DynamicDefaults.Deceleration)
Jerk	INPUT	LREAL	-1.0	Jerk	
				> 0.0	Constant-acceleration velocity profile; the specified jerk is used.
				= 0.0	Trapezoid velocity profile
				< 0.0	The jerk configured in "Technology object > Configuration > Extended parameters > Dynamic defaults" is used. (<TO>.DynamicDefaults.Jerk)
Direction	INPUT	INT	0	Direction of rotation of the axis	
				0	The sign of the velocity specified at the "Velocity" parameter defines the direction of rotation.
				1	Positive direction of rotation Value of "Velocity" is used.
				2	Negative direction of rotation Value of "Velocity" is used.
Current	INPUT	BOOL	FALSE	Maintain current velocity	
				FALSE	Deactivated The values of parameters "Velocity" and "Direction" are taken into account.

Parameters	Declaration	Data type	Default value	Description	
				TRUE	activated The values at the parameters "Velocity" and "Direction" are not taken into account. The current velocity and direction at function start are retained. When the axis resumes motion at the velocity that was current at function start, the "InVelocity" parameter returns the value TRUE.
Position Controlled	INPUT	BOOL	TRUE	FALSE	Non position-controlled operation
				TRUE	Position-controlled mode
				The parameter applies as long as the "MC_MoveVelocity" job is being executed. After this, the setting of the following job applies. This parameter is ignored when a speed axis is used.	
InVelocity	OUTPUT	BOOL	FALSE	TRUE	The velocity setpoint / speed setpoint was reached and will be maintained.
Busy	OUTPUT	BOOL	FALSE	TRUE	Job is running.
Command Aborted	OUTPUT	BOOL	FALSE	TRUE	The job was aborted by another job during execution.
Error	OUTPUT	BOOL	FALSE	TRUE	An error occurred during execution of the job. The cause of the error can be found in the "ErrorID" parameter.
ErrorID	OUTPUT	WORD	16#0000	Error ID (Page 542) for parameter "ErrorID"	

Behavior with velocity setpoint / speed setpoint zero ("Velocity" = 0.0)

An "MC_MoveVelocity" job with "Velocity" = 0.0 stops the axis with the configured deceleration. When the velocity setpoint / speed setpoint zero is reached, the parameter "InVelocity" will indicate the value TRUE.

Under "Technology object > Diagnostics > Status and error bits > Motion status", "constant velocity" and "standstill" will be displayed (<TO>.StatusWord.X12 (ConstantVelocity); <TO>.StatusWord.X7 (Standstill)).

The parameters "InVelocity" and "Busy" show the value TRUE until the "MC_MoveVelocity" job is overridden by another Motion Control job.

Moving an axis with constant velocity / speed

Proceed as follows to move an axis with constant velocity / speed:

1. Check the requirements indicated above.
2. At the parameter "Velocity", specify the velocity / speed, with which the axis should be moved.
3. Start the "MC_MoveVelocity" job with a positive edge at parameter "Execute".

The current motion state is indicated in "Busy", "InVelocity" and "Error".

If the "InVelocity" parameter shows the value TRUE, then the velocity setpoint / speed setpoint was reached. The axis continues moving at this constant velocity. The parameters "InVelocity" and "Busy" show the value TRUE until the "MC_MoveVelocity" job is overridden by another Motion Control job.

Note

Response to a change in the override

If the velocity / speed is influenced during constant motion by a change in the override (<TO>.Override.Velocity), the "InVelocity" parameter is reset during the acceleration or deceleration. When the newly calculated velocity / speed is reached ("Velocity" × "Override" %), then "InVelocity" is reset.

Additional information

An option for the evaluation of the individual status bits can be found in the section "Evaluating StatusWord, ErrorWord and WarningWord (Page 288)".

See also

Override response V4: Homing and motion jobs (Page 428)

Error ID for Motion Control instructions (Page 542)

10.7.2 MC_MoveVelocity: Function chart V4

Function chart: Moving an axis with velocity specification, and the response to an overriding job

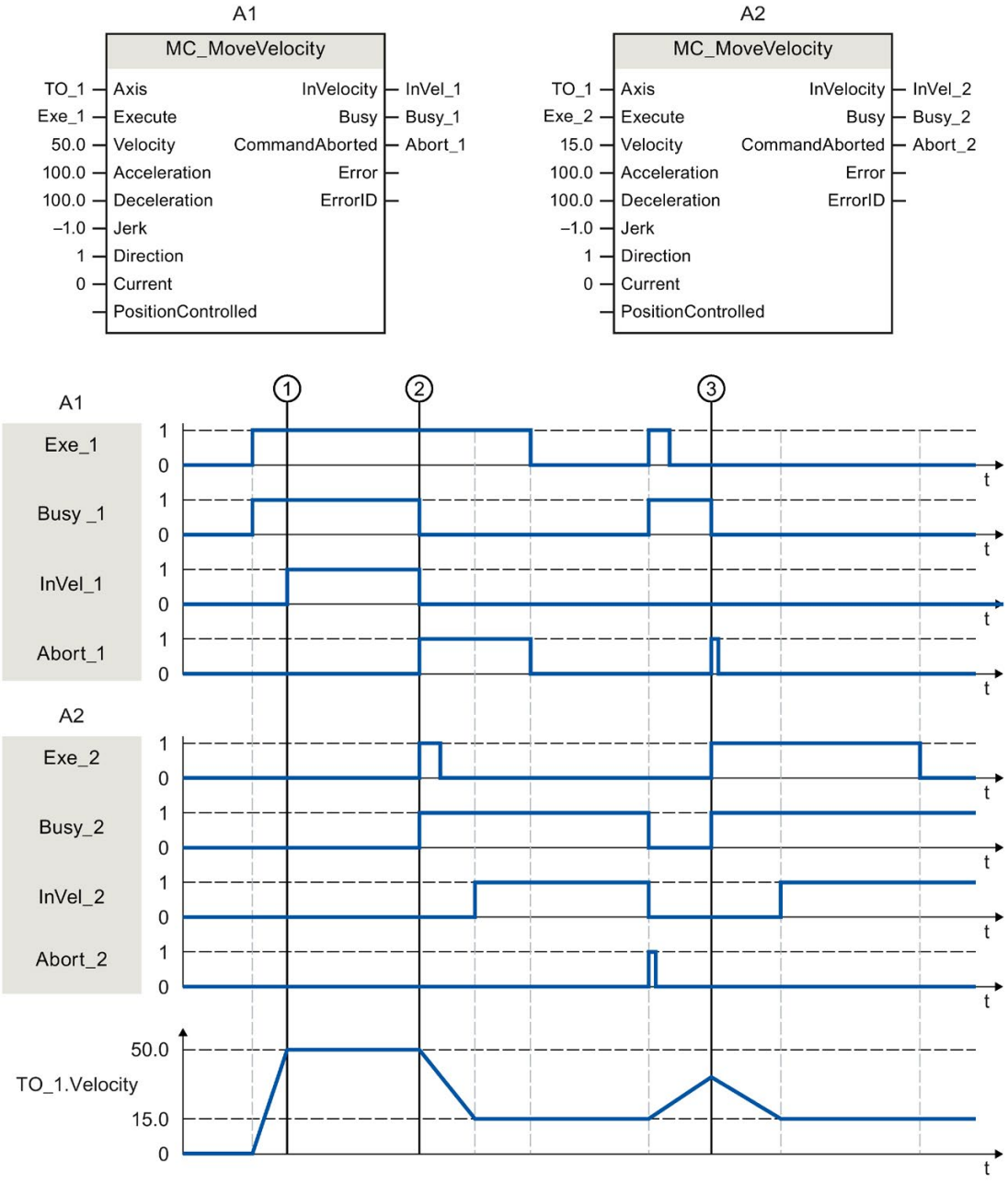

An "MC_MoveVelocity" job (A1) initiated via "Exe_1" accelerates the axis and signals at time ① via "InVel_1" that the velocity setpoint 50.0 has been reached.

At time ②, the job is overridden by another "MC_MoveVelocity" job (A2). The abort is signaled via "Abort_1". When the new velocity setpoint 15.0 is reached, this is signaled via "InVel_2". The axis then continues moving at the constant velocity 15.0.

The running "MC_MoveVelocity" job (A2) is overridden by another "MC_MoveVelocity" job (A1). The abort is signaled via "Abort_2". The axis is accelerated to the new velocity setpoint 50.0. Before the velocity setpoint is reached, the current "MC_MoveVelocity" job (A1) is overridden at time ③ by another "MC_MoveVelocity" job A2). The abort is signaled via "Abort_1". When the new velocity setpoint 15.0 is reached, this is signaled via "InVel_2". The axis then continues moving at the constant velocity 15.0.

10.8 MC_MoveJog V4

10.8.1 MC_MoveJog: Move axis in jog mode V4

Description

With the Motion Control instruction "MC_MoveJog", you move an axis in jog mode.

You define the dynamic behavior of the motion with parameters "Velocity", "Jerk", "Acceleration" and "Deceleration".

- Positioning axis/synchronous axis:

  A velocity is specified in the "Velocity" parameter.
- Speed axis:

  A speed is specified in the "Velocity" parameter.

Applies to

- Synchronous axis
- Positioning axis
- Speed axis

Requirement

- The technology object has been configured correctly.
- The technology object is enabled.

Override response

The override response for "MC_MoveJog" jobs is described in section Override response V4: Homing and motion jobs (Page 428).

Parameters

The following table shows the parameters of Motion Control instruction "MC_MoveJog":

Parameter	Declaration	Data type	Default value	Description	
Axis	INPUT	TO_SpeedAxis	-	Technology object	
JogForward	INPUT	BOOL	FALSE	TRUE	As long as the parameter is TRUE, the axis moves in the positive direction at the velocity specified in parameter "Velocity".
JogBackward	INPUT	BOOL	FALSE	TRUE	As long as the parameter is TRUE, the axis moves in the negative direction at the velocity specified in parameter "Velocity".
Velocity	INPUT	LREAL	100.0	Velocity setpoint / speed setpoint for the motion	
				> 0.0	The specified value is used.
				< 0.0	The absolute value of the specified value is used.
				("Velocity" = 0.0 is permitted)	
Acceleration	INPUT	LREAL	-1.0	Acceleration	
				> 0.0	The specified value is used.
				= 0.0	Not permitted
				< 0.0	The acceleration configured in "Technology object > Configuration > Extended parameters > Dynamic defaults" is used. (<TO>.DynamicDefaults.Acceleration)
Deceleration	INPUT	LREAL	-1.0	Deceleration	
				> 0.0	The specified value is used.
				= 0.0	Not permitted
				< 0.0	The deceleration configured in "Technology object > Configuration > Extended parameters > Dynamic defaults" is used. (<TO>.DynamicDefaults.Deceleration)
Jerk	INPUT	LREAL	-1.0	Jerk	
				> 0.0	Constant-acceleration velocity profile; the specified jerk is used.
				= 0.0	Trapezoid velocity profile
				< 0.0	The jerk configured in "Technology object > Configuration > Extended parameters > Dynamic defaults" is used. (<TO>.DynamicDefaults.Jerk)
PositionControlled	INPUT	BOOL	TRUE	FALSE	Non position-controlled operation
				TRUE	Position-controlled mode
				The parameter applies as long as the "MC_MoveJog" job is being executed. After this, the setting of the following job applies. This parameter is ignored when a speed axis is used.	
InVelocity	OUTPUT	BOOL	FALSE	TRUE	The velocity setpoint / speed setpoint was reached and will be maintained.
Busy	OUTPUT	BOOL	FALSE	TRUE	Job is running.

Parameter	Declaration	Data type	Default value	Description	
CommandAborted	OUTPUT	BOOL	FALSE	TRUE	The job was aborted by another job during execution.
Error	OUTPUT	BOOL	FALSE	TRUE	An error occurred during execution of the job. The job is rejected. The cause of the error can be found in the "ErrorID" parameter.
ErrorID	OUTPUT	WORD	16#0000	Error ID (Page 542) for parameter "ErrorID"	

Behavior with zero setpoint velocity/speed ("Velocity" = 0.0)

An "MC_MoveJog" job with "Velocity" = 0.0 stops the axis with the configured deceleration. When the velocity setpoint / speed setpoint zero is reached, the parameter "InVelocity" will indicate the value TRUE.

Under "Technology object > Diagnostics > Status and error bits > Motion status", "constant velocity" and "standstill" will be displayed (<TO>.StatusWord.X12 (ConstantVelocity); <TO>.StatusWord.X7 (Standstill)).

Moving an axis in jog mode

Proceed as follows to move an axis in jog mode:

1. Check the requirements indicated above.
2. Move the axis in the positive direction with "JogForward", or in the negative direction with "JogBackward".

The current motion state is indicated in "Busy", "InVelocity" and "Error".

If both "JogForward" and "JogBackward" are set to TRUE, the axis is braked at the last valid deceleration. The error 16#8007 (incorrect direction specification) is output.

Note

Response to a change in the override

If the velocity/speed is influenced during constant motion by a change in the override (<TO>.Override.Velocity), the "InVelocity" parameter is reset during the acceleration or deceleration. When the newly calculated velocity is reached ("Velocity" × "Override" %), then "InVelocity" is set again.

Additional information

An option for the evaluation of the individual status bits can be found in the section "Evaluating StatusWord, ErrorWord and WarningWord" (Page 288).

See also

Override response V4: Homing and motion jobs (Page 428)

Error ID for Motion Control instructions (Page 542)

10.8.2 MC_MoveJog: Function chart V4

Function chart: Moving an axis in jog mode

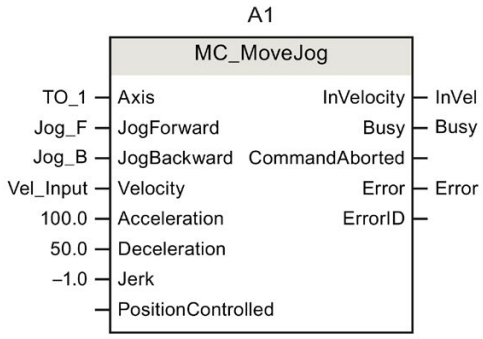

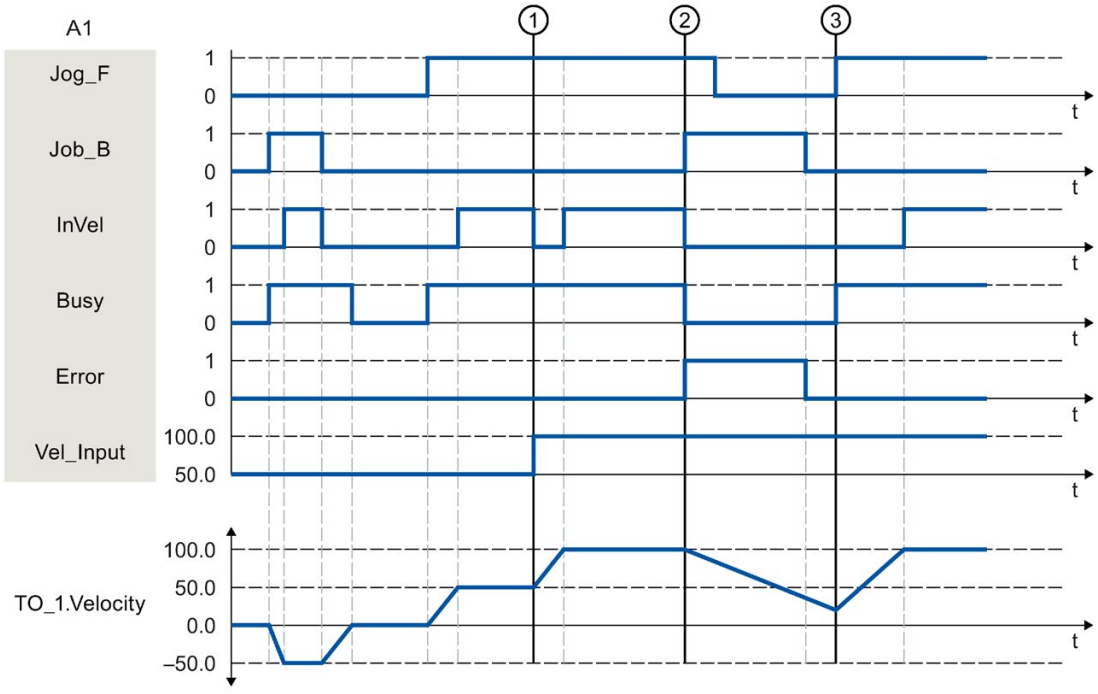

The axis is moved in the negative direction in jog mode via "Jog_B". When the velocity setpoint -50.0 is reached, this is signaled via "InVel" = TRUE. After "Jog_B" is reset, the axis is braked and brought to a standstill. Then the axis is moved in the positive direction via "Jog_F". When the velocity setpoint 50.0 is reached, this is signaled via "InVel" = TRUE.

At time ①, if "Jog_F" is set, the velocity setpoint is changed to 100.0 by means of "Vel_Input". Alternatively, you can also change the velocity setpoint using the velocity override. "InVel" is reset. Axis is being accelerated. When the new velocity setpoint 100.0 is reached, this is signaled via "InVel" = TRUE.

If "Jog_F" is set, "Jog_B" is likewise set at time ②. If both "Jog_F" and "Jog_B" are set, then the axis is braked with the last applicable deceleration. An error is indicated via "Error", and the "ErrorID" of the error 16#8007 (incorrect direction specification) is output.

This error is resolved by resetting the two inputs "Jog_F" and "Jog_B".

During the braking ramp, "Jog_F" is set at time ③. The axis is accelerated to the last configured velocity. When the velocity setpoint 100.0 is reached, this is signaled via "InVel" = TRUE.

10.9 MC_MoveSuperimposed V4

10.9.1 MC_MoveSuperimposed: Position axes overlapping V4

Description

With the Motion Control instruction "MC_MoveSuperimposed", you start a relative positioning motion that is superimposed on a active basic motion.

You define the dynamic behavior of the motion with parameters "VelocityDiff", "Jerk", "Acceleration" and "Deceleration" . The dynamic values are added to the values of the basic motion. The duration of the basic motion is not extended by a superimposed motion.

The dynamics of the total axis motion is the sum of the dynamic values of the basic motion and the superimposed motion.

The behavior of the total motion depends on the type of basic motion:

- The basic motion is a single-axis motion:
  - The maximum dynamics of the superimposed motion is the difference between the current dynamic values of the basic motion and the dynamic limits.
  - The entire motion is limited to the configured dynamic limits.
- The basic motion is a synchronous motion:
  - The maximum dynamics of the superimposed motion is the difference between the current dynamic values of the basic motion and the dynamic limits.
  - The synchronous motion of the following axis is not limited to the dynamic limits of the following axis.
  - An "MC_MoveSuperimposed" job on a leading axis in synchronous operation affects the leading axis and the following axis.
  - An "MC_MoveSuperimposed" job on a following axis in synchronous operation only affects the following axis.

It is always the dynamics of the total motion that is displayed in the technology data block and in the TIA Portal.

Applies to

- Synchronous axis
- Positioning axis

Requirement

- The technology object has been configured correctly.
- The technology object is enabled.

Override response

The override response for "MC_MoveSuperimposed" jobs is described in section Override response V4: Homing and motion jobs (Page 428).

Parameters

The following table shows the parameters of Motion Control instruction "MC_MoveSuperimposed":

Parameters	Declaration	Data type	Default value	Description	
Axis	INPUT	TO_PositioningAxis	-	Axis technology object	
Execute	INPUT	BOOL	FALSE	TRUE	Start job with a positive edge
Distance	INPUT	LREAL	0.0	Additional distance for the overlapping positioning process (negative or positive)	
VelocityDiff	INPUT	LREAL	-1.0	Maximum velocity deviation compared to the active motion	
				> 0.0	The specified value is used.
				= 0.0	Not permitted
				< 0.0	The velocity configured in "Technology object > Configuration > Extended parameters > Dynamic defaults" is used. (<TO>.DynamicDefaults.Velocity)
Acceleration	INPUT	LREAL	-1.0	Acceleration	
				> 0.0	The specified value is used.
				= 0.0	Not permitted
				< 0.0	The acceleration configured in "Technology object > Configuration > Extended parameters > Dynamic defaults" is used. (<TO>.DynamicDefaults.Acceleration)
Deceleration	INPUT	LREAL	-1.0	Deceleration	
				> 0.0	The specified value is used.
				= 0.0	Not permitted
				< 0.0	The deceleration configured in "Technology object > Configuration > Extended parameters > Dynamic defaults" is used. (<TO>.DynamicDefaults.Deceleration)
Jerk	INPUT	LREAL	-1.0	Jerk	
				> 0.0	Constant-acceleration velocity profile; the specified jerk is used
				= 0.0	Trapezoid velocity profile

Parameters	Declaration	Data type	Default value	Description	
				< 0.0	The jerk configured in "Technology object > Configuration > Extended parameters > Dynamic defaults" is used. (<TO>.DynamicDefaults.Jerk)
Done	OUTPUT	BOOL	FALSE	TRUE	Superimposed positioning complete
Busy	OUTPUT	BOOL	FALSE	TRUE	Job is running.
CommandAborted	OUTPUT	BOOL	FALSE	TRUE	The job was aborted by another job during execution.
Error	OUTPUT	BOOL	FALSE	TRUE	An error occurred while processing the job. The job is rejected. The cause of the error can be found in the "ErrorID" parameter.
ErrorID	OUTPUT	WORD	0	Error ID (Page 542) for parameter "ErrorID"	

Starting superimposed positioning motion

To start a superimposed positioning motion with Motion Control instruction "MC_MoveSuperimposed", follow these steps:

1. Check the requirements indicated above.
2. Specify the additional distance to be moved in the "Distance" parameter.
3. Start the "MC_MoveSuperimposed" job with a positive edge at parameter "Execute".

The current motion state is indicated in "Busy", "Done" and "Error".

See also

Override response V4: Homing and motion jobs (Page 428)

Error ID for Motion Control instructions (Page 542)

10.9.2 MC_MoveSuperimposed: Function chart V4

Function chart: Positioning axes overlapping

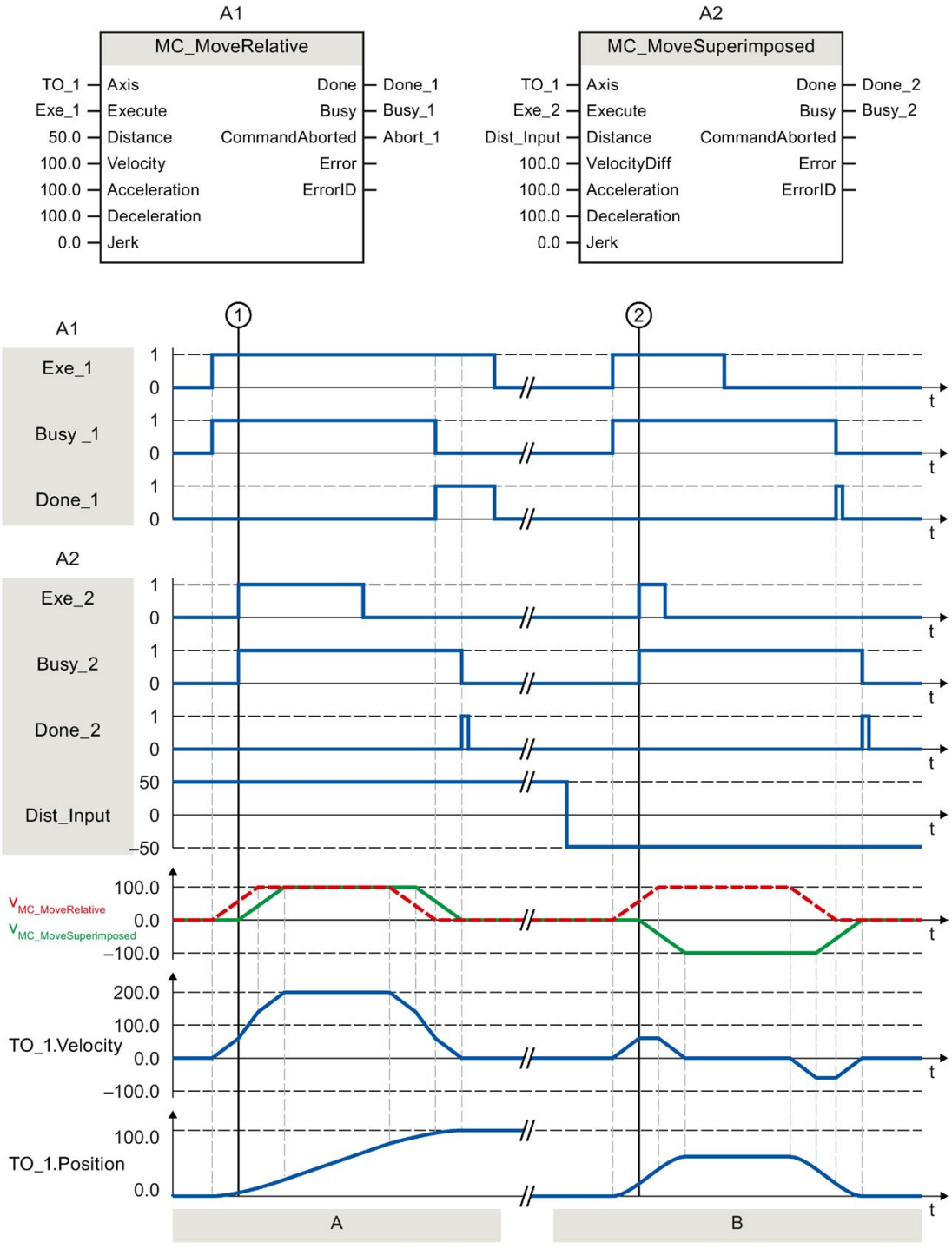

Section A	Using "Exe_1", an "MC_MoveRelative" job with a distance of 50.0 is initiated. At time ①, using "Exe_2", an MC_MoveSuperimposed job with a distance of 50.0 is initiated. The axis is moved with the added dynamic values of both jobs by the distance 50 + 50 = 100.0. When the axis reaches the target position, this is signaled via "Done_2".
Section B	Using "Exe_1", an "MC_MoveRelative" job with a distance of 50.0 is initiated. At time ②, using "Exe_2", a MC_MoveSuperimposed job with a distance of -50.0 is initiated. The axis reverses and is moved with the added dynamic values of both jobs by the distance 50.0 - 50.0 = 0.0. When the axis reaches the target position, this is signaled via "Done_2".

10.10 Measuring input, output cam, cam track

10.10.1 MC_MeasuringInput V4

10.10.1.1 MC_MeasuringInput: Start measuring once V4

Description

With the Motion Control instruction "MC_MeasuringInput", a one-time measuring is started.

With the one-time measuring, one or two edges can be detected with one measuring job. The position of the respective technology object axis or external encoder is assigned to the measuring event. The measurement result is indicated in the function block and in the technology data block and can be further processed in the user program. This completes the measuring job.

Another measuring job must be started again using "MC_MeasuringInput.Execute" = TRUE.

Applies to

- Measuring input

Requirement

- The technology object has been configured correctly.
- The encoder of the axis must have "valid" status (StatusSensor[1..4].State = valid). Otherwise, the measuring job is rejected in the function block with an error indication.
- Measuring using PROFIdrive is not possible during active or passive homing.

Override response

The override response for "MC_MeasuringInput" jobs is described in section Override response V4: Measuring input jobs (Page 430).

Parameters

The following table shows the parameters of Motion Control instruction "MC_MeasuringInput":

Parameters	Declaration	Data type	Default value	Description	
MeasuringInput	INPUT	TO_Measuring Input	-	Technology object	
Execute	INPUT	BOOL	FALSE	TRUE	Start job with a positive edge
Mode	INPUT	DINT	0	Type of measurement	
				0	Measurement of next positive edge
				1	Measurement of next negative edge
				2	Measurement of next two edges
				3	Measurement of two edges, beginning with the positive edge • Rising edge = "MeasuredValue1" (measured value 1) • Falling edge = "MeasuredValue2" (measured value 2)
				4	Measurement of two edges, beginning with the negative edge • Falling edge = "MeasuredValue1" • Rising edge = "MeasuredValue2"
MeasuringRange	INPUT	BOOL	FALSE	Acquisition of measured values Observe the time-related boundary conditions (Page 122).	
				FALSE	Always acquire measured values
				TRUE	Acquire measured values only within the measuring range
StartPosition	INPUT	LREAL	0.0	Start position of the measuring range For an axis or external encoder with active modulo function, position data outside the modulo range is mirrored in the modulo range.	
EndPosition	INPUT	LREAL	0.0	End position of the measuring range For an axis or external encoder with active modulo function, position data outside the modulo range is mirrored in the modulo range.	
Done	OUTPUT	BOOL	FALSE	TRUE	The block has been completely processed. Measured values are valid.
Busy	OUTPUT	BOOL	FALSE	TRUE	Job is running.
CommandAborted	OUTPUT	BOOL	FALSE	TRUE	The measuring job has been aborted.
Error	OUTPUT	BOOL	FALSE	TRUE	An error occurred while processing the job. The cause of the error can be found in the "ErrorID" parameter.
ErrorID	OUTPUT	WORD	16#0000	Error ID (Page 542) for parameter "ErrorID"	
MeasuredValue1	OUTPUT	LREAL	0.0	First measured value	
MeasuredValue2	OUTPUT	LREAL	0.0	Second measured value (for measurement of two edges)	

See also

Time-related boundary conditions (Page 122)
Error ID for Motion Control instructions (Page 542)
One-time measurement (Page 116)
Override response V4: Measuring input jobs (Page 430)

10.10.1.2 MC_MeasuringInput: Function chart V4

Function chart: Start measuring job once

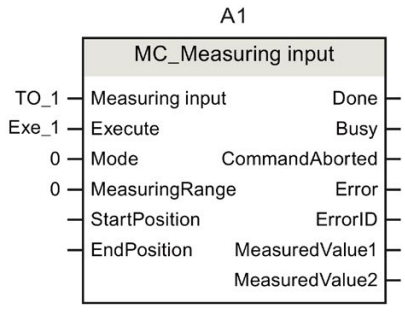

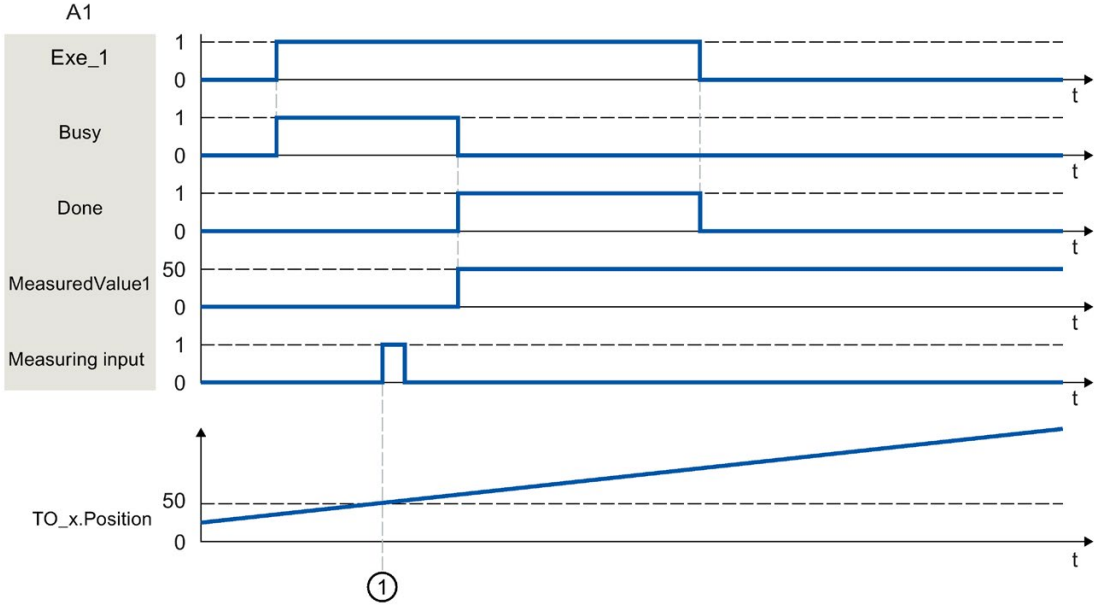

A "MC_MeasuringInput" job with "Mode" = 0 initiated using "Execute" performs a measurement of the next positive edge. A successfully completed measurement is signaled with "Done" = TRUE. The determined measured value ① (in example: 50) is output using "MeasuredValue1".

10.10.2 MC_MeasuringInputCyclic V4

10.10.2.1 MC_MeasuringInputCyclic: Start cyclic measuring V4

Description

With the Motion Control instruction "MC_MeasuringInputCyclic", a cyclic measuring is started.

With cyclic measuring, up to two measuring events are detected by the system and the associated measuring positions displayed. The measurements are continued cyclically until they are ended per command.

Applies to

- Measuring input

Requirement

- The technology object has been configured correctly.
- Cyclic measuring is only possible when measuring using TM Timer DIDQ.
- The operationally active encoder of the axis must have "valid" status (StatusSensor[1..4].State = valid). Otherwise, the measuring job is rejected in the function block with an error indication.

Override response

The override response for "MC_MeasuringInputCyclic" jobs is described in section Override response V4: Measuring input jobs (Page 430).

Parameters

The following table shows the parameters of Motion Control instruction "MC_MeasuringInputCyclic":

Parameters	Declaration	Data type	Default value	Description	
MeasuringInput	INPUT	TO_Measuring Input	-	Technology object	
Execute	INPUT	BOOL	FALSE	TRUE	Start job with a positive edge
Mode	INPUT	DINT	0	Type of measurement	
				0	Measurement of positive edges
				1	Measurement of negative edges
				2	Measurement of both edges
MeasuringRange	INPUT	BOOL	FALSE	Acquisition of measured values Observe the time-related boundary conditions (Page 122).	
				FALSE	Always acquire measured values
				TRUE	Acquire measured values only within the measuring range
StartPosition	INPUT	LREAL	0.0	Start position of the measuring range For an axis or external encoder with active modulo function, position data outside the modulo range is mirrored in the modulo range.	
EndPosition	INPUT	LREAL	0.0	End position of the measuring range For an axis or external encoder with active modulo function, position data outside the modulo range is mirrored in the modulo range.	
Busy	OUTPUT	BOOL	FALSE	TRUE	Job is running.
CommandAborted	OUTPUT	BOOL	FALSE	TRUE	The measuring job has been aborted.
Error	OUTPUT	BOOL	FALSE	TRUE	An error occurred while processing the job. The cause of the error can be found in the "ErrorID" parameter.
ErrorID	OUTPUT	WORD	16#0000	Error ID (Page 542) for parameter "ErrorID"	
MeasuredValue1	OUTPUT	LREAL		First measured value	
MeasuredValue2	OUTPUT	LREAL		Second measured value (when measuring multiple edges in one position control cycle)	
MeasuredValue1Counter	OUTPUT	UDINT	0	Count value for the first measured value	
MeasuredValue2Counter	OUTPUT	UDINT	0	Count value for the second measured value	
LostEdgeCounter1	OUTPUT	UDINT	0	Count value for the lost edges in the cycle clock of the first measured value acquisition	
LostEdgeCounter2	OUTPUT	UDINT	0	Count value for the lost edges in the cycle clock of the second measured value acquisition	

See also

Time-related boundary conditions (Page 122)
Error ID for Motion Control instructions (Page 542)
Cyclic measuring (Page 117)
Override response V4: Measuring input jobs (Page 430)

10.10.2.2 MC_MeasuringInputCyclic: Function chart V4

Function chart: Start cyclic measuring job

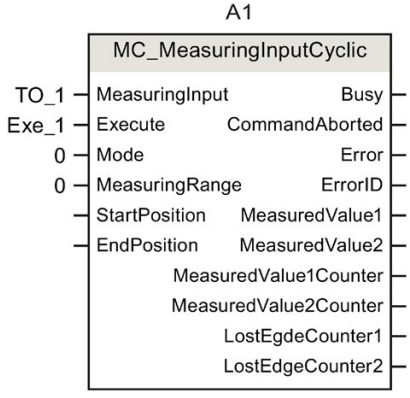

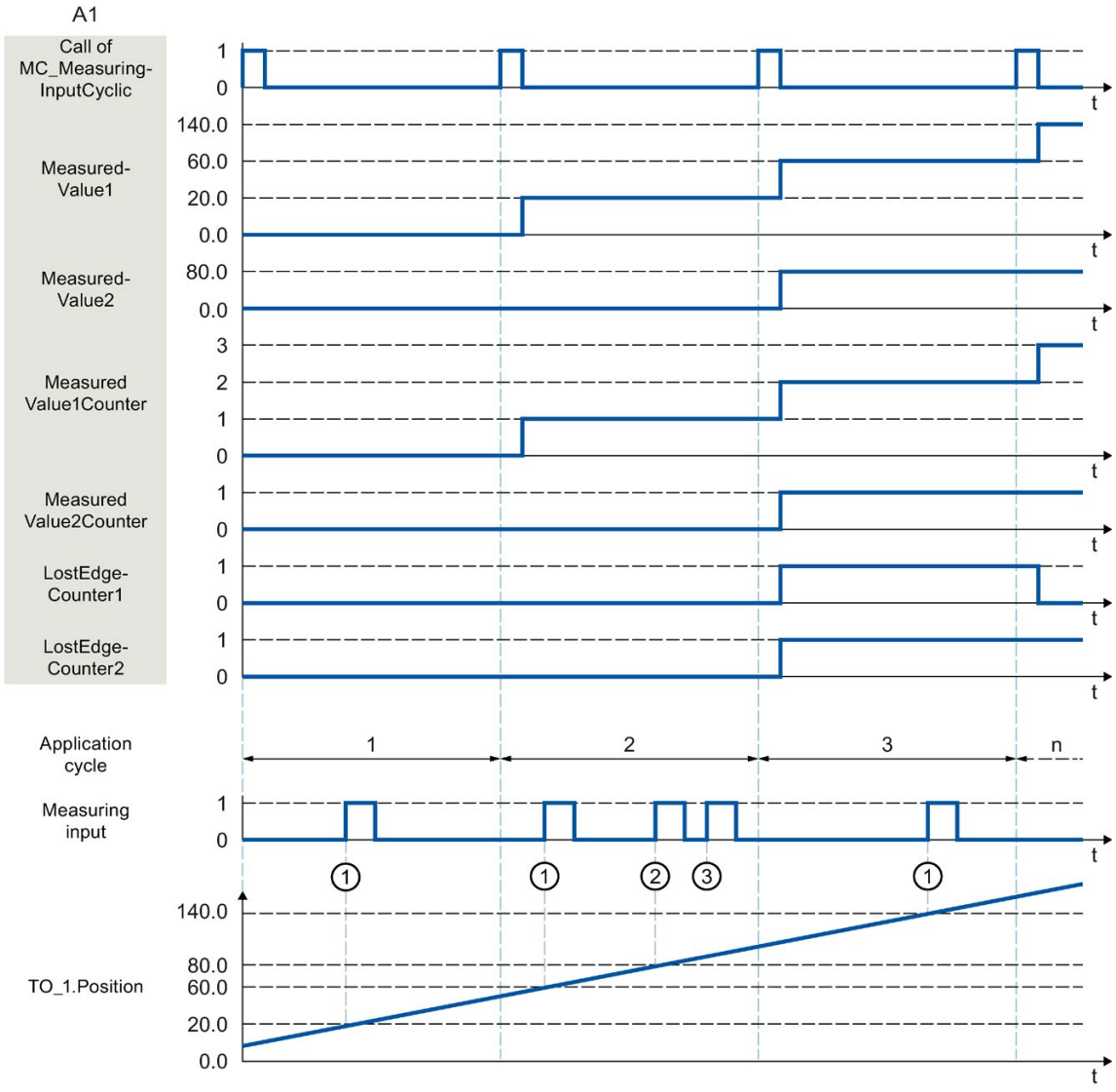

A "MC_MeasuringInputCyclic" command initiated using "Execute" (signal and start point not shown) (e.g. call in MC-PreServo [OB67]) with "Mode" = 0 and without specified measuring range "MeasuringRange" = FALSE performs a measurement of the positive edges. By calling the Motion Control instruction "MC_MeasuringInputCyclic" in MC-PreServo [OB67] or MC-PreServo [OB67], the measuring command as well as the measurement itself is called in the same application cycle.

The actual position determined at the time of the first positive edge ① in the position control cycle is output using "MeasuredValue1", and count tag "MeasuredValue1Counter" is incremented by "1".

The actual position determined at the time of the second positive edge ② in the position control cycle is output using "MeasuredValue2", and count tag "MeasuredValue2Counter" is incremented by "1".

If additional positive edges occur in the same position control cycle ③, these are recorded in LostEdgeCounter1 and LostEdgeCounter2.

10.10.3 MC_AbortMeasuringInput V4

10.10.3.1 MC_AbortMeasuringInput: Abort active measuring V4

Description

With the Motion Control instruction "MC_AbortMeasuringInput", an active one-time or cyclic measuring job is aborted.

Applies to

- Measuring input

Requirement

- The technology object has been configured correctly.

Override response

The override response for "MC_AbortMeasuringInput" jobs is described in section Override response V4: Measuring input jobs (Page 430).

Parameters

The following table shows the parameters of Motion Control instruction "MC_AbortMeasuringInput":

Parameters	Declaration	Data type	Default value	Description	
MeasuringInput	INPUT	TO_MeasuringInput	-	Technology object	
Execute	INPUT	BOOL	FALSE	TRUE	Start job with a positive edge
Done	OUTPUT	BOOL	0	The function block has been processed. The measuring job has been deactivated.	
Busy	OUTPUT	BOOL	FALSE	TRUE	Job is running.
CommandAborted	OUTPUT	BOOL	FALSE	TRUE	The job has been aborted.
Error	OUTPUT	BOOL	FALSE	TRUE	An error occurred while processing the job. The cause of the error can be found in the "ErrorID" parameter.
ErrorID	OUTPUT	WORD	16#0000	Error ID (Page 542) for parameter "ErrorID"	

See also

Error ID for Motion Control instructions (Page 542)

Override response V4: Measuring input jobs (Page 430)

Technology object measuring input (Page 111)

10.10.4 MC_OutputCam V4

10.10.4.1 MC_OutputCam: Activate/deactivate cam V4

Description

You use Motion Control instruction "MC_OutputCam" to activate the specified cam.

Depending on the cam type, the following input parameters are in effect:

- Distance output cam
  - "OnPosition"
  - "OffPosition"
- Time-based output cam
  - "OnPosition"
  - "Duration"

You define the operating mode and the effective direction of the cam with parameters "Mode" and "Direction".

When "MC_OutputCam.Enable" = TRUE, the input parameters are always read and take effect at the next position control cycle.

When a technological alarm occurs, the cam is processed again after error acknowledgment.

Applies to

- Output cam

Requirement

- The technology object has been configured correctly.
- The higher-level technology object must have a valid position.
- Setpoint output cams are not output for an axis in non-position-controlled operation.
- A setpoint output cam with the setting "MC_OutputCam.OnPosition" = 0 switches at position setpoint = 0.

Override response

The "MC_OutputCam" is canceled by:

- Disabling of the cam with "MC_OutputCam.Enable" = FALSE
- Only one instance of the "MC_OutputCam" function block can be active on an output cam in the user program. A second instance of the "MC_OutputCam" function block on a currently active output cam is rejected with an error.

Parameters

The following table shows the parameters of Motion Control instruction "MC_OutputCam":

Parameters	Declaration	Data type	Default value	Description	
OutputCam	INPUT	TO_OutputCam	-	Technology object	
Enable	INPUT	BOOL	FALSE	FALSE	Cam is disabled
				TRUE	Cam is being processed
OnPosition	INPUT	LREAL	0.0	Start position of the cam [unit of measurement of the interconnected technology object] For an axis or external encoder with active modulo function, position data outside the modulo range is mirrored in the modulo range.	
OffPosition	INPUT	LREAL	0.0	End position of the distance output cam [unit of measurement of the interconnected technology object] For an axis or external encoder with active modulo function, position data outside the modulo range is mirrored in the modulo range.	
Duration	INPUT	LREAL	0.0	Switch-on duration of the time-based output cam [unit of measurement: ms] The value for the switch-on duration of a time-based output cam must be greater than 0.0.	
Mode	INPUT	DINT	1	Operating mode	
				1	Standard Cam functionality (output not inverted)
				2	Cam functionality with inverted output
				3	Cam always ON (while "Enable" = TRUE)
Direction	INPUT	DINT	1	Activation direction of the cam	
				1	Positive direction
				2	Negative direction
				3	Both directions
CamOutput	OUTPUT	BOOL	-	Status display based on last call of Motion Control instruction "MC_OutputCam"	
Busy	OUTPUT	BOOL	FALSE	TRUE	Processing of the cam is active.
Error	OUTPUT	BOOL	FALSE	TRUE	An error occurred while processing the job. The cause of the error can be found in the "ErrorID" parameter.
ErrorID	OUTPUT	WORD	16#0000	Error ID (Page 542) for parameter "ErrorID"	

See also

Error ID for Motion Control instructions (Page 542)

Technology object output cam (Page 126)

10.10.4.2 MC_OutputCam: Function chart V4

Function chart: Activate the specified cam type

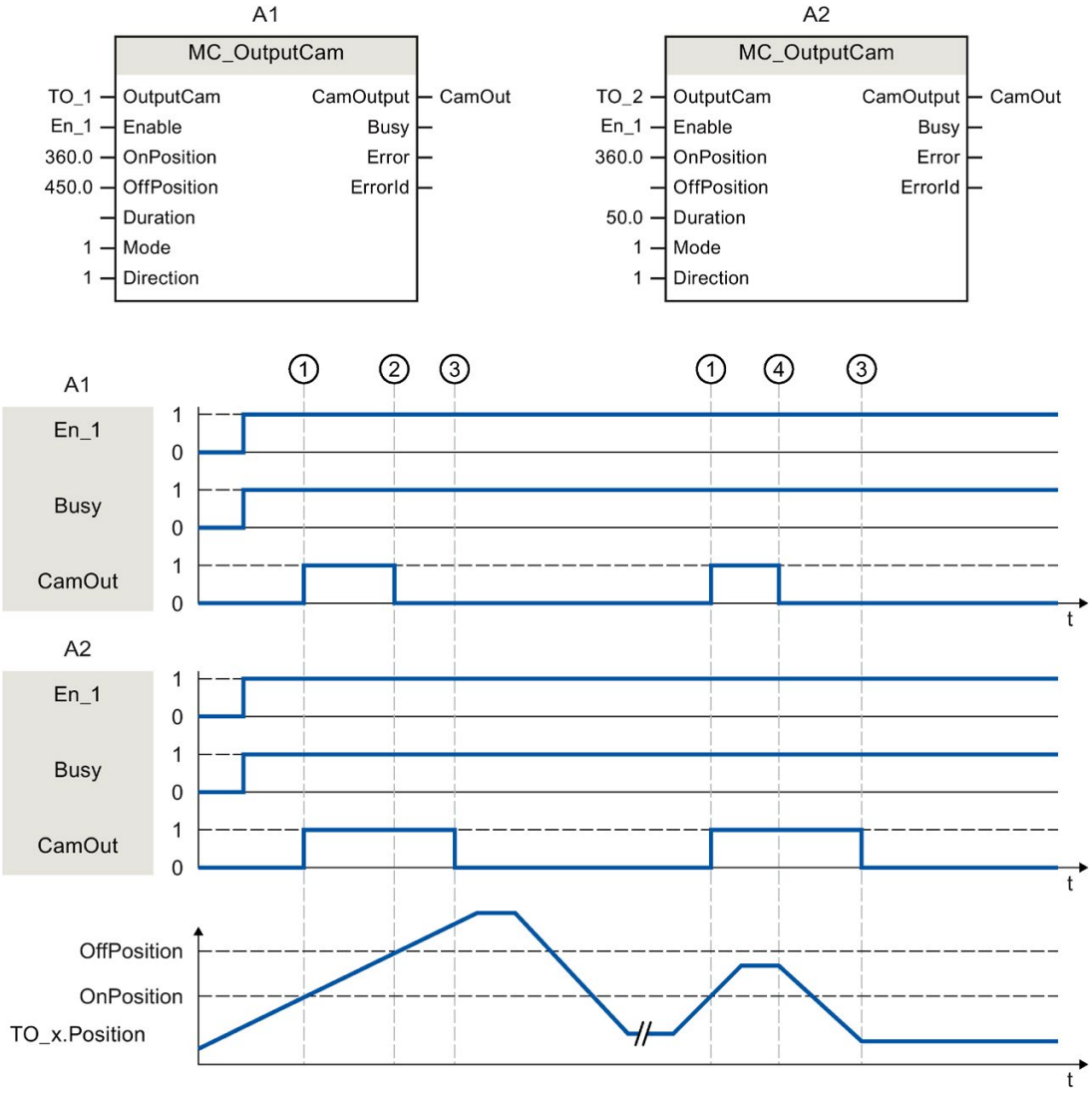

A1 Distance output cam

A2 Time-based output cam

A cam is activated with "Enable" = TRUE. The cam is output corresponding to the parameters.

The processing of the cam is indicated with "Busy" = TRUE.

When activation direction "Direction" = 1 (positive) is set, the cam behaves as follows, regardless of the cam type setting:

- The distance output cam switches on at "OnPosition" ① and switches off again at "OffPosition" ②. At a direction reversal the cam is switched off ④.
- The time-based output cam switches on at "OnPosition" ① and switches off again after expiration of the specified time "Duration" ③. A switched on time-based output cam remains active for the specified switch-on duration "Duration", even if overtravel of the start position occurs again in the reverse direction.

The switching state of the cam is output using "CamOutput".

With "Enable" = FALSE, the specified cam type is deactivated. "Busy" = FALSE shows that the cam is not being processed.

10.10.5 MC_CamTrack V4

10.10.5.1 MC_CamTrack: Activate/deactivate cam track V4

Description

With the Motion Control instruction "MC_CamTrack", the processing of a cam track is enabled.

Applies to

- Cam track

Requirement

- The technology object has been configured correctly.
- The higher-level technology object must have a valid position.
- Setpoint output cams are not output for an axis in non-position-controlled operation.

Override response

- The "MC_CamTrack" is aborted by the disabling of the cam track with "MC_CamTrack.Enable" = FALSE.
- Only one instance of the "MC_CamTrack" function block can be active on a cam track in the user program. A second instance of the "MC_CamTrack" function block on a currently active cam track is rejected with an error.
- The cam track is recalculated at a change of the parameters of the Motion Control instruction "MC_CamTrack" or in the technology data block. The cam track is processed in accordance with all parameter settings.

Parameters

The following table shows the parameters of Motion Control instruction "MC_CamTrack":

Parameters	Declaration	Data type	Default value	Description	
CamTrack	INPUT	TO_CamTrack	-	Technology object	
Enable	INPUT	BOOL	FALSE	TRUE	Cam track is processed
				FALSE	Cam track is disabled
Mode	INPUT	INT	1	0	When "Enable" = TRUE: Cam track processing is activated immediately Cam track data takes effect immediately Previously activated distance output cams are aborted if their track signal is not still set due to the changed cam track data. Previously activated time-based output cams are always aborted.
					When "Enable" = FALSE: Cam track processing is stopped immediately, distance output/time-based output cams are aborted immediately.
				1	When "Enable" = TRUE: Cam track processing is activated immediately/with the next track cycle: • When a cam track is activated for the first time, the cam track processing begins immediately. • If the cam track processing is already active, the current cam track is output up to the end of the track cycle. The new cam track data then takes effect.
					When "Enable" = FALSE: Cam track processing is ended at the end of the cam track
				2	When "Enable" = TRUE: Cam track output is switched on immediately and remains switched on
					When "Enable" = FALSE: Cam track output is switched off immediately
InvertOutput	INPUT	BOOL	FALSE	Inverted output	
				TRUE	Track output is output inverted
				FALSE	Track output is output not inverted
TrackOutput	OUTPUT	BOOL	-	Indicates the switching state of the cam track.	
Busy	OUTPUT	BOOL	FALSE	TRUE	Processing of the cam track is active.
Error	OUTPUT	BOOL	FALSE	TRUE	An error occurred while processing the job. The cause of the error can be found in the "ErrorID" parameter.
ErrorID	OUTPUT	WORD	16#0000	Error ID (Page 542) for parameter "ErrorID"	

See also

Error ID for Motion Control instructions (Page 542)
Cam track technology object (Page 141)

10.10.5.2 MC_CamTrack: Function chart V4

Function chart: Activate cam track

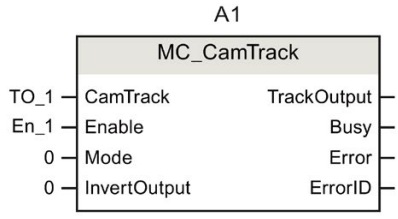

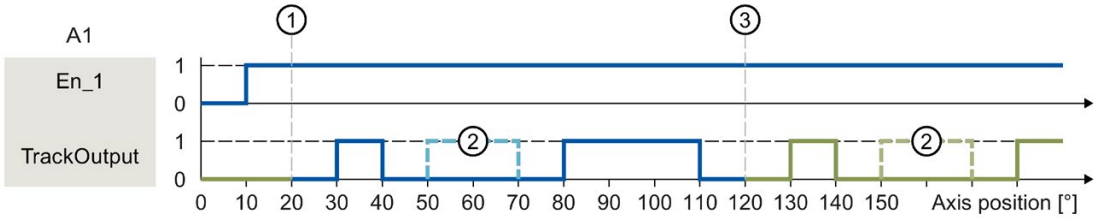

① Axis reference position
② Cam configured as invalid
③ Start of cyclically continued cam track

A cam track is activated with "Enable" = TRUE. The cam track is output in accordance with the parameters set in the technology data block.

Tag		Value	Description
<TO>Parameter.			
	CamTrackType	0	Specified cam type for the cam track is distance output cam
	ReferencePosition	20.0	Specified axis reference position for the cam track
	CamTrackLength	100.0	Specified length of the cam track
	CamTrack[1].Existent	TRUE	The first distance output cam of the cam track is specified as valid
	CamTrack[1].OnPosition	10.0	Start position for the first cam of the cam track
	CamTrack[1].OffPosition	20.0	End position for the first cam of the cam track
	CamTrack[2].Existent	FALSE	The second distance output cam of the cam track is specified as invalid
	CamTrack[2].OnPosition	30.0	Start position for the second cam of the cam track
	CamTrack[2].OffPosition	50.0	End position for the second cam of the cam track
	CamTrack[3].Existent	TRUE	The third distance output cam of the cam track is specified as valid
	CamTrack[3].OnPosition	60.0	Start position for the third cam of the cam track
	CamTrack[3].OffPosition	90.0	End position for the third cam of the cam track

10.11 Synchronous motion

10.11.1 MC_GearIn V4

10.11.1.1 MC_GearIn: Start gear synchronization V4

Description

With the Motion Control instruction "MC_GearIn", you start a gearing (Page 107) operation between a leading axis and a following axis.

You define the dynamic behavior of the following axis for synchronization with parameters "Jerk", "Acceleration" and "Deceleration".

The synchronization duration and distance are dependent on the following parameters:

- Start time of the "MC_GearIn" job
- Dynamics of the following axis at the start time
- Dynamic settings for synchronization
- Dynamics of the leading axis

You specify the gear ratio as the relationship between two integers (numerator/denominator) with the parameters "RatioNumerator" and "RatioDenominator".

The numerator of the gear ratio is specified as positive or negative. This yields the following behavior:

- **Positive gear ratio:**

  The leading and following axes move in the same direction.

- **Negative gear ratio**:

  The following axis moves in the opposite direction of the leading axis.

You can start synchronous operation when the leading axis is at a standstill or when it is in motion.

Applies to

- Synchronous axis

Requirement

- The technology objects of the leading axis and the following axis have been configured correctly.
- The leading axis is a positioning axis, synchronous axis, or external encoder.
- The following axis is a synchronous axis.
- The leading axis is specified as possible leading axis in the configuration of the following axis in "Technology object > Configuration > Leading value interconnections".
- The following axis is enabled.

Override response

The override response for "MC_GearIn" jobs is described in section Override response V4: Synchronous operation jobs (Page 429).

Disabling the following axis with "MC_Power.Enable" = FALSE aborts the synchronous operation in every status.

Disabling the leading axis with "MC_Power", in contrast, does not abort synchronous operation. The following axis follows the leading axis even during the braking ramp and after the leading axis is enabled again.

Parameters

The following table shows the parameters of Motion Control instruction "MC_GearIn":

Parameters	Declaration	Data type	Default value	Description	
Master	INPUT	TO_Axis	-	Leading axis technology object	
Slave	INPUT	TO_SynchronousAxis	-	Following axis technology object	
Execute	INPUT	BOOL	FALSE	TRUE	Start job with a positive edge
RatioNumerator	INPUT	DINT	1	Gear ratio numerator Permitted integer values: -2147483648 to 2147483648 (value 0 not permitted)	
RatioDenominator	INPUT	DINT	1	Gear ratio denominator Permitted integer values: 1 to 2147483648	
Acceleration	INPUT	LREAL	-1.0	Acceleration	
				> 0.0	The specified value is used.
				= 0.0	Not permitted
				< 0.0	The acceleration configured in "Technology object > Configuration > Extended parameters > Dynamic defaults" is used. (<TO>.DynamicDefaults.Acceleration)

Parameters	Declaration	Data type	Default value	Description	
Deceleration	INPUT	LREAL	-1.0	Deceleration	
				> 0.0	The specified value is used.
				= 0.0	Not permitted
				< 0.0	The deceleration configured in "Technology object > Configuration > Extended parameters > Dynamic defaults" is used. (<TO>.DynamicDefaults.Deceleration)
Jerk	INPUT	LREAL	-1.0	Jerk	
				> 0.0	Constant-acceleration velocity profile; the specified jerk is used
				= 0.0	Trapezoid velocity profile
				< 0.0	The jerk configured in "Technology object > Configuration > Extended parameters > Dynamic defaults" is used. (<TO>.DynamicDefaults.Jerk)
InGear	OUTPUT	BOOL	FALSE	TRUE	Synchronous operation reached The following axis is synchronized and moves synchronously to the leading axis.
Busy	OUTPUT	BOOL	FALSE	TRUE	Job is running.
CommandAborted	OUTPUT	BOOL	FALSE	TRUE	The job was aborted by another job during execution.
Error	OUTPUT	BOOL	FALSE	TRUE	An error occurred while processing the job. The job is rejected. The cause of the error can be found in the "ErrorID" parameter.
ErrorID	OUTPUT	WORD	0	Error ID (Page 542) for parameter "ErrorID"	

Starting synchronous operation

To start synchronous operation with the Motion Control instruction "MC_GearIn", follow these steps:

1. Check the requirements indicated above.
2. Specify the leading axis, the following axis and the gear ratio at the corresponding parameters.
3. Start the "MC_GearIn" job with a positive edge at parameter "Execute".

The following axis is synchronized to the leading value of the leading axis. If the "InGear" parameter shows the value TRUE, the following axis is synchronized and moves synchronously to the leading axis. The parameters "InGear" and "Busy" show the value TRUE until the "MC_GearIn" job is overridden by another Motion Control job.

See also

Error ID for Motion Control instructions (Page 542)

Override response V4: Synchronous operation jobs (Page 429)

10.11.1.2 MC_GearIn: Function chart V4

Function chart: Synchronizing and switching the leading value

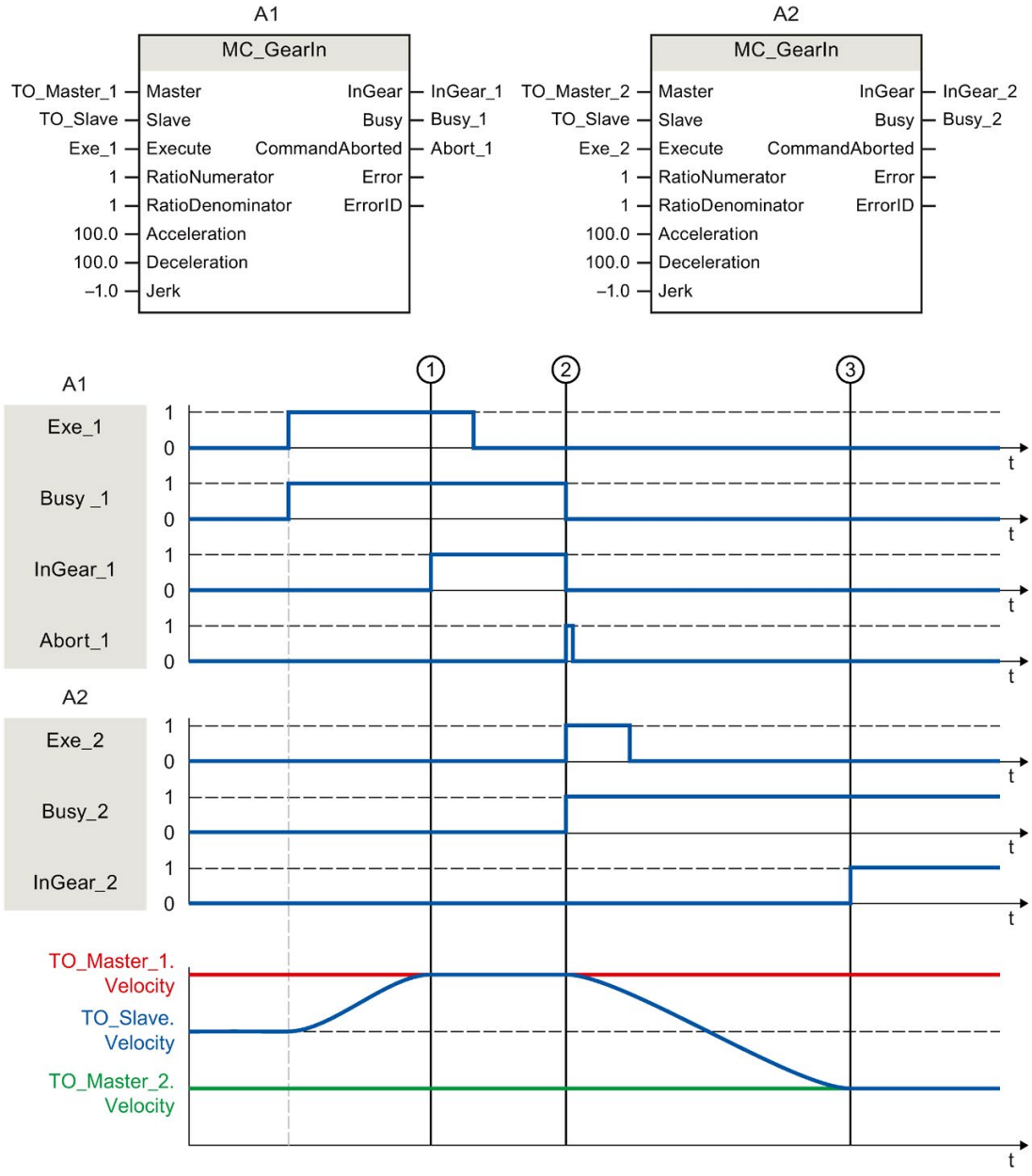

Using "Exe_1", an "MC_GearIn" job (A1) is initiated. The following axis (TO_Slave) is synchronized to the leading axis (TO_Master_1). "InGear_1" signals at time ① that the following axis is synchronized and moves synchronously to the leading axis.

At time ②, synchronous operation is overridden by another "MC_GearIn" job (A2). The abort is signaled via "Abort_1". The following axis is synchronized to the new leading axis (TO_Master_2). "InGear_2" signals at time ③ that the following axis is synchronized and moves synchronously to the leading axis.

10.12 Torque data

10.12.1 MC_TorqueLimiting V4

10.12.1.1 MC_TorqueLimiting: Activate and deactivate force/torque limit / fixed stop detection V4

Description

With the Motion Control instruction "MC_TorqueLimiting", you activate and assign parameters for force/torque limiting and fixed stop detection. Together with a position-controlled motion job, a "Travel to fixed stop" can be realized with the fixed stop detection. In the axis configuration, you can configure whether the force/torque limiting is to relate to the drive side or the load side.

The functions of the Motion Control instruction "MC_TorqueLimiting" can be activated and deactivated before and during a motion job.

Force/torque limiting applies to

- Speed axis
- Positioning axis
- Synchronous axis

Requirements for force/torque limiting

- The technology object and the reference torque of the drive have been configured correctly.
- No enable-preventing errors are pending for the technology object (the technology object does not have to be enabled).
- The drive must support force/torque reduction. Only PROFIdrive drives with SIEMENS telegram 10x support force/torque limiting.
- Interconnection in the SINAMICS drive:
  - P1522 to a fixed value of 100%
  - P1523 to a fixed value of -100% (e.g. through interconnection to fixed value parameter P2902[i]).

Fixed stop detection applies to

- Positioning axis
- Synchronous axis

Requirement for fixed stop detection

- The fixed stop detection can only be applied to position-controlled axes. For fixed stop detection, the axis must be enabled as position-controlled axis; motion commands must be executed as position-controlled motion commands.
- The technology object has been configured correctly.
- When a drive and telegram that support force/torque limiting is used, the reference torque of the drive must be correctly configured for the technology object.
- No enable-preventing errors are pending for the technology object (the technology object does not have to be enabled).

Override response

- An "MC_TorqueLimiting" job cannot be aborted by any other Motion Control job.
- A new "MC_TorqueLimiting" job does not abort any active Motion Control jobs.
- If the high and low torque limiting is active via the "MC_TorqueRange" job, the "MC_TorqueLimiting" job is rejected with an error message and vice versa. The functions do not override one another.

Parameters

The following table shows the parameters of Motion Control instruction "MC_TorqueLimiting":

Parameter	Declaration	Data type	Default value	Description	
Axis	INPUT	TO_SpeedAxis	-	Technology object	
Enable	INPUT	BOOL	FALSE	TRUE	Activate function corresponding to input parameter Mode
Limit	INPUT	LREAL	-1.0	Value of force/torque limiting (in the configured unit of measurement) If drive and telegram do not support force/torque limiting, the specified value is irrelevant.	
				≥ 0	Use the value specified in the parameter ("0" value is permissible)
				< 0	Use the value configured in the "Torque limiting" configuration window. Tag Torque Limit: <TO>.TorqueLimiting.LimitDefaults.Torque Tag Force Limit: <TO>.TorqueLimiting.LimitDefaults.Force
Mode	INPUT	DINT	0	0	Force/torque limiting
				1	Fixed stop detection If drive and telegram support force/torque limiting, this is applied.
InClamping	OUTPUT	BOOL	FALSE	TRUE	Mode = 1: The drive is kept at the fixed stop (clamping), the axis position is within the positioning tolerance.
InLimitation	OUTPUT	BOOL	FALSE	TRUE	Mode = 0 and 1: Drive is operating at the force/torque limit.
Busy	OUTPUT	BOOL	FALSE	TRUE	Job is running.
Error	OUTPUT	BOOL	FALSE	TRUE	An error occurred while processing the job. The job is rejected. The cause of the error can be found in the "ErrorID" parameter.
ErrorID	OUTPUT	WORD	16#0000	Error ID (Page 542) for parameter "ErrorID"	

Changes to input parameters "Limit" and "Mode" are also transferred at the cyclic call of the Motion Control instruction when "Enable = TRUE".

See also

Error ID for Motion Control instructions (Page 542)

Fixed stop detection (Page 65)

Force/torque limiting (Page 63)

10.12.1.2 MC_TorqueLimiting: Function chart V4

Function chart: Stopping an axis when the torque limit is reached

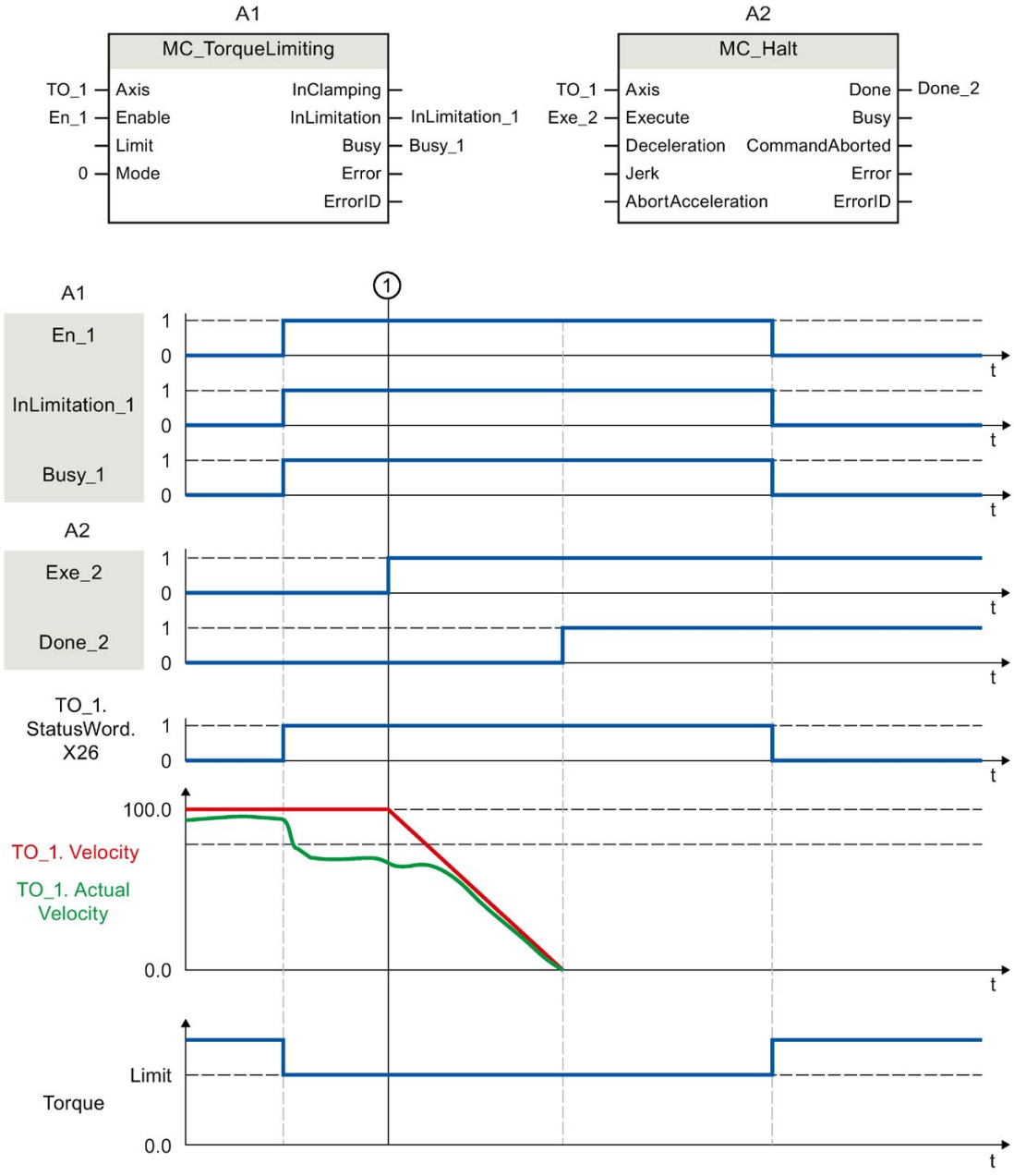

At time ①, an "MC_Halt" job (A2) is executed on an axis with active torque limiting "MC_TorqueLimiting" (A1). Torque limiting is still active "MC_TorqueLimiting.Enable" = TRUE and any accumulated following error is retained and will be reduced with the time. When the actual velocity is "0.0" and the minimum dwell time in the standstill window has elapsed, the tag "MC_Halt.Done" shows = TRUE. When position monitoring is activated, reaching of the target position is also monitored.

Function chart: Torque limiting with fixed stop detection (mode = 1)

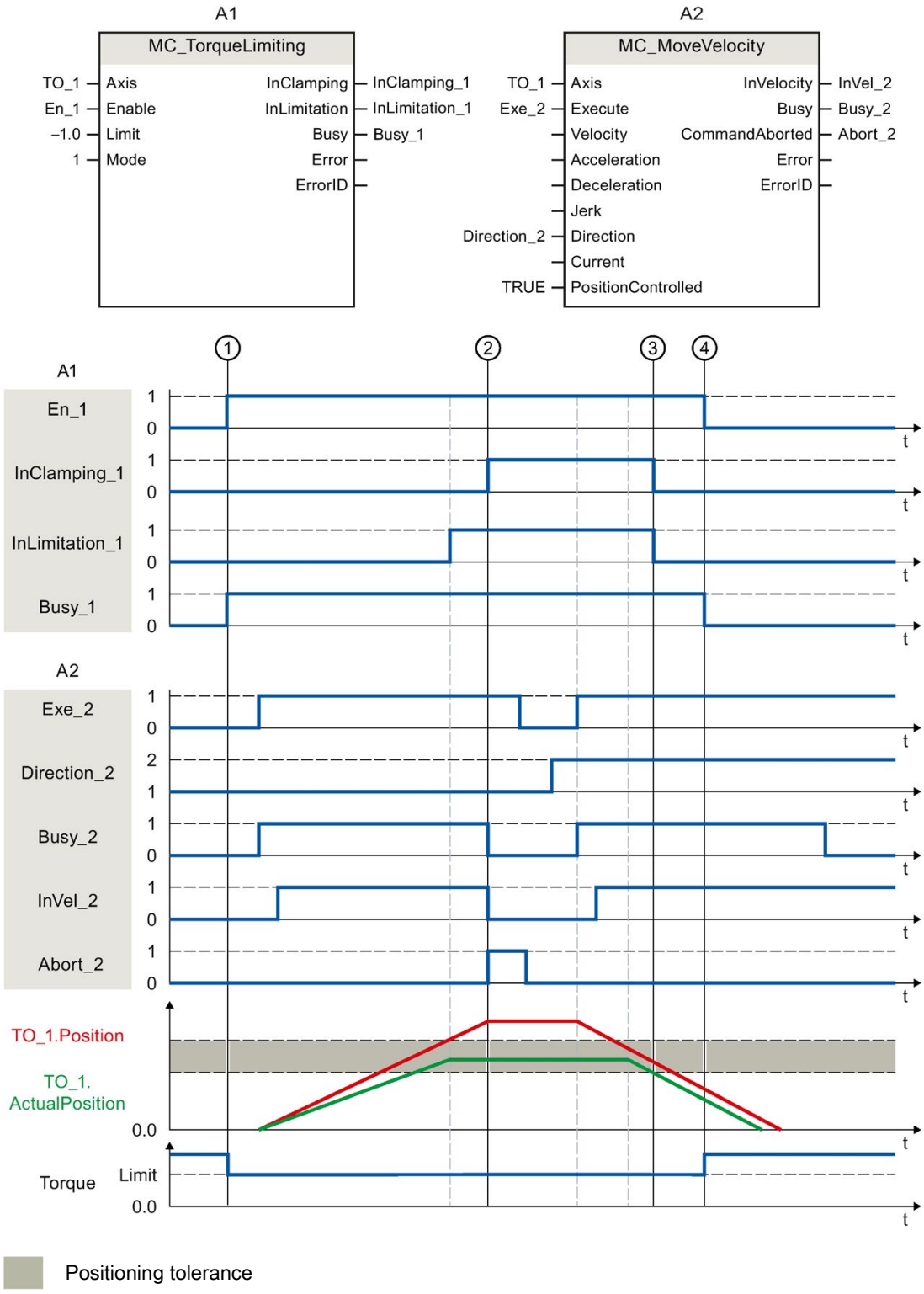

At time ①, a "MC_TorqueLimiting" job (A1) is initiated via "En_1". An "MC_MoveVelocity" job (A2) is executed on the axis with active torque limiting. The torque limiting is still active "MC_TorqueLimiting.Enable" = TRUE. When the following error limit ② is reached, the "MC_MoveVelocity" job is aborted with "Abort" = TRUE. The drive is kept at the fixed stop (clamping). The actual position of the axis is within the positioning tolerance. An "MC_MoveVelocity" job is once again called via the two tags "Execute" = TRUE and "Direction_2" = TRUE and the axis moves with constant velocity in the opposite direction. The clamping is hereby reduced when the positioning tolerance ③ is exited. At time ④, the torque limiting is cancelled.

10.12.2 MC_TorqueAdditive V4

10.12.2.1 MC_TorqueAdditive: Specify additive torque V4

Description

With the Motion Control instruction "MC_TorqueAdditive", you specify an additive torque for the drive to which the technology object is assigned. The torque data are transferred via the telegram 750.

With the "Value" parameter, you specify the additive setpoint torque. The specification of the additive torque setpoint is overriding. An additional torque may be positive or negative. If you invert the setpoint for the technology object, the value for the additive torque is also inverted and transferred inverted to the drive.

Applies to

- Positioning axis
- Speed axis
- Synchronous axis

Requirement

- The technology object has been configured correctly.
- The technology object is enabled.
- The drive is connected via PROFIdrive telegram.
- Telegram 750 is configured.

  Telegram 750 is available for SINAMICS drives V4.9 and higher.

Override response

- An "MC_TorqueAdditive" job is not aborted by any other Motion Control job.
- A new "MC_TorqueAdditive" job does not abort any active Motion Control jobs.

Parameters

The following table shows the parameters of Motion Control instruction "MC_TorqueAdditive":

Parameter	Declaration	Data type	Default value	Description	
Axis	INPUT	TO_SpeedAxis	-	Technology object	
Enable	INPUT	BOOL	FALSE	TRUE	The specified setpoint is used as long as the parameter is set to TRUE.
				FALSE	The additive torque transferred to the drive is zero.
Value	INPUT	LREAL	0.0	Additive setpoint torque Permissible values: -1.0E12 to 1.0E12	
Busy	OUTPUT	BOOL	FALSE	TRUE	The job is being processed.
Error	OUTPUT	BOOL	FALSE	TRUE	An error occurred while processing the job. The job is rejected. The cause of the error can be found in the "ErrorID" parameter.
ErrorID	OUTPUT	WORD	16#0000	Error ID (Page 542) for parameter "ErrorID"	

See also

Error ID for Motion Control instructions (Page 542)

PROFIdrive telegrams (Page 36)

Additive setpoint torque (Page 66)

10.12.2.2 MC_TorqueAdditive: Function chart V4

Function chart: Activate/deactivate additive setpoint torque

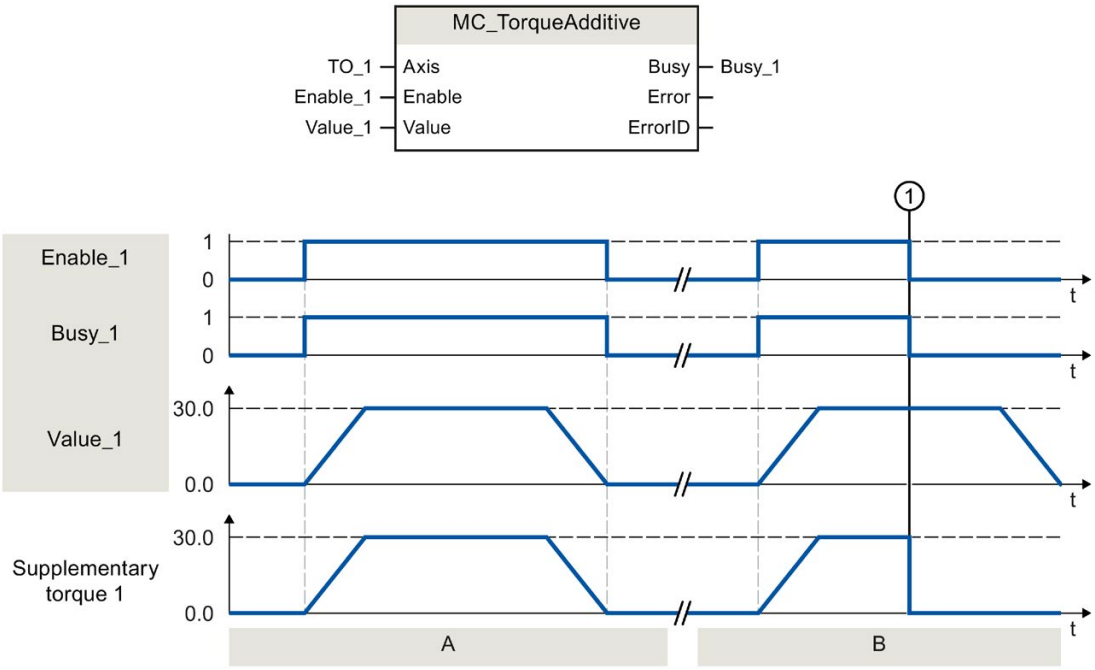

Section A	With "Enable_1 = TRUE", an additive setpoint torque "Value_1" is specified for the drive assigned to the technology object. This setting is transferred to the drive parameter "p1511 - Supplementary torque 1" using telegram 750.
Section B	With "Enable_1 = TRUE", an additive setpoint torque "Value_1" is specified for the drive assigned to the technology object. This setting is transferred to the drive parameter "p1511 - Supplementary torque 1" using telegram 750. The additive setpoint torque is first built up. At time ①, "Enable_1" is already set to FALSE, before the additive setpoint torque is reduced again. The reduction of the torque setpoint is transmitted directly to the drive.

10.12.3 MC_TorqueRange V4

10.12.3.1 MC_TorqueRange: Set high and low torque limits V4

Description

With the Motion Control instruction "MC_TorqueRange", you can specify an upper and lower torque limit to the drive assigned to the technology object. The torque data are transferred via the telegram 750.

With the "UpperLimit" parameter you specify the upper torque limit and with "LowerLimit" the lower torque limit. The specification of the torque limits has smoothing effect on the movements. If you invert the setpoints for the technology object, the values for the high and low torque limit are also inverted and transferred inverted to the drive.

If the high and low torque limits are active, the following monitors and limits are disabled by default:

- Following error monitoring
- Time limitations for positioning and standstill monitoring

Monitoring remains in effect if you have selected the option "Leave position-related monitoring enabled" under "Technology object > Configuration > Extended parameters > Limits > Torque limit".

Applies to

- Positioning axis
- Speed axis
- Synchronous axis

Requirement

- The technology object has been configured correctly.
- The drive is connected via PROFIdrive telegram.
- Telegram 750 is configured.

  Telegram 750 is available for SINAMICS drives V4.9 and higher.

Override response

- An "MC_TorqueRange" job is not aborted by any other Motion Control job.
- A new "MC_TorqueRange" job does not abort any active Motion Control jobs.
- If the torque limiting is active via the "MC_TorqueLimiting" job, the "MC_TorqueRange" job is rejected with an error message and vice versa. The functions do not override one another.

Parameters

The following table shows the parameters of Motion Control instruction "MC_TorqueRange":

Parameter	Declaration	Data type	Default value	Description	
Axis	INPUT	TO_SpeedAxis	-	Technology object	
Enable	INPUT	BOOL	FALSE	TRUE	The specified values are used as long as the TRUE parameter is set.
				FALSE	No values for the high and low torque limit are transferred to the drive.
UpperLimit	INPUT	LREAL	1.0 E12	Upper torque limit (in the configured unit)	
				Permitted range of values: -1.0 E12 to 1.0 E12 The value of the parameter "UpperLimit" must not be greater than the value of the parameter "LowerLimit".	
LowerLimit	INPUT	LREAL	-1.0 E12	Lower torque limit (in the configured unit)	
				Permitted range of values: -1.0 E12 to 1.0 E12 The value of the parameter "LowerLimit" must not be less than the value of the parameter "UpperLimit".	
Busy	OUTPUT	BOOL	FALSE	TRUE	The job is being processed.
Error	OUTPUT	BOOL	FALSE	TRUE	An error occurred while processing the job. The job is rejected. The cause of the error can be found in the "ErrorID" parameter.
ErrorID	OUTPUT	WORD	16#0000	Error ID (Page 542) for parameter "ErrorID"	

See also

Error ID for Motion Control instructions (Page 542)

PROFIdrive telegrams (Page 36)

Permissible torque range (Page 67)

10.12.3.2 MC_TorqueRange: Function chart V4

Function chart: Set high and low torque limits

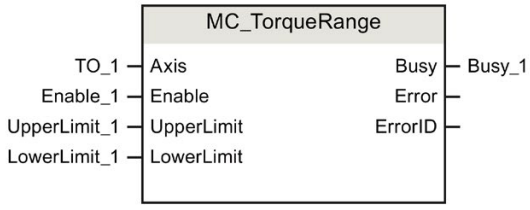

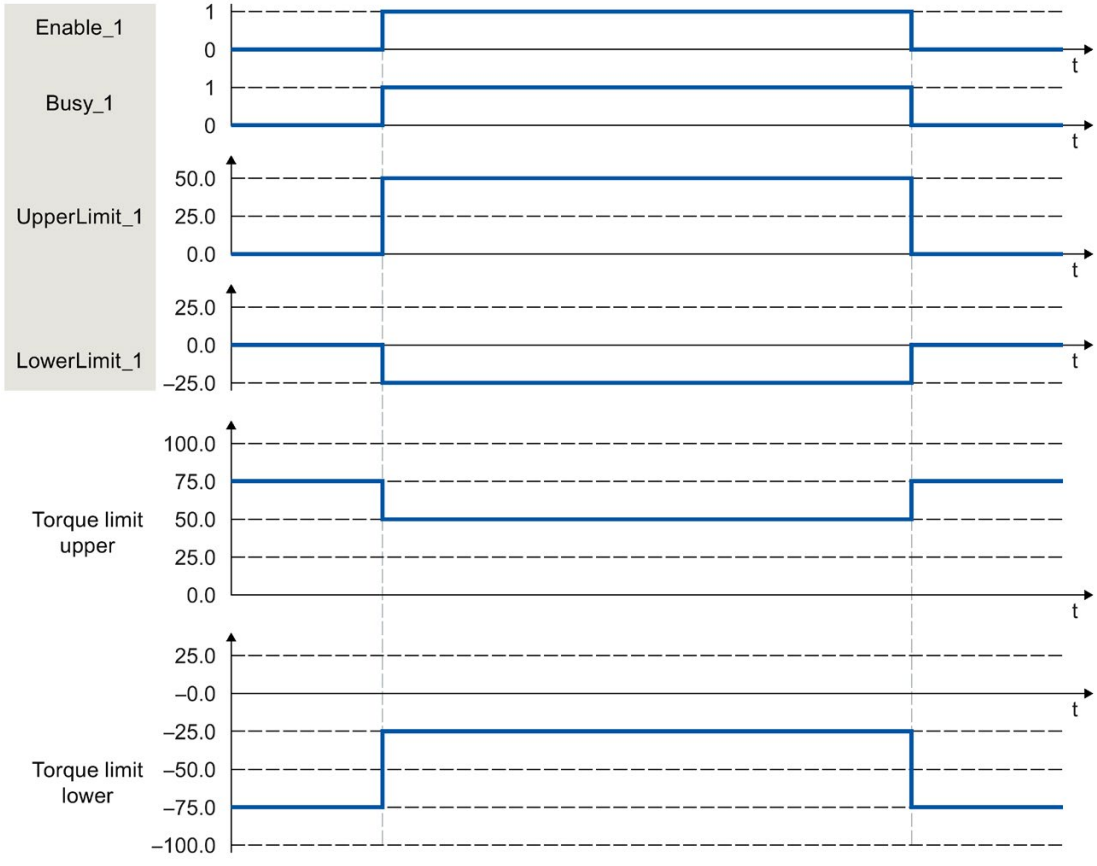

With "Enable_1 = TRUE" an upper torque limit "UpperLimit_1" and a lower torque limit "LowerLimit_1" are specified to the drive assigned to the technology object. These settings are transferred directly to the drive parameters "p1522 - Torque limit upper" and "p1523 - Torque limit lower" using telegram 750. If "Enable_1" is reset to FALSE, the upper and lower torque limits are no longer active.

10.13 Override response of Motion Control jobs V4

10.13.1 Override response V4: Homing and motion jobs

The following table shows how a new Motion Control job affects active homing and motion jobs:

⇒ Active job ⇓ New job	MC_Home "Mode" = 2, 8, 10	MC_Home ("Mode" = 3, 5)	MC_Halt MC_MoveAbsolute MC_MoveRelative MC_MoveVelocity MC_MoveJog	MC_MoveSuper-imposed	MC_MotionIn Velocity MC_MotionIn Position
MC_Home "Mode" = 3, 5	A	A	A	A	A
MC_Home "Mode" = 9	A	-	-	-	-
MC_Halt MC_MoveAbsolute MC_MoveRelative MC_MoveVelocity MC_MoveJog MC_MotionInVelocity MC_MotionInPosition	-	A	A	A	A
MC_MoveSuperimposed	-	-	-	A	-
MC_GearIn	-	A	A	A	-
MC_GearInPos pending[1)]	-	-	-	-	-
MC_GearInPos active[2)]	-	A	A	A	-
MC_CamIn pending[1)]	-	-	-	-	-
MC_CamIn active[2)]	-	A	A	A	-

A The running job is aborted with "CommandAborted" = TRUE.

- No effect. Running job continues to be executed.

1) "Busy" = TRUE, "StartSync" = FALSE, "InSync" = FALSE

2) "Busy" = TRUE, "StartSync" or "InSync" = TRUE

10.13.2 Override response V4: Synchronous operation jobs

The following table shows how a new Motion Control job affects the motion of the axis on active synchronous operation jobs:

⇒ Active job ⇓ New job	MC_GearIn	MC_GearInPos pending[1]	MC_GearInPos active[2]	MC_Phasing-Absolute MC_Phasing-Relative	MC_CamIn pending[1]	MC_CamIn active[2]
MC_Home "Mode" = 3, 5	A	-	-	-	-	-
MC_Halt	A	-	A	A	-	A
MC_MoveAbsolute MC_MoveRelative MC_MoveVelocity MC_MoveJog	A	-	A	A	-	A
MC_MotionInVelocity MC_MotionInPosition	A	A	A	-	A	A
MC_MoveSuperimposed	-	-	-	-	-	-
MC_GearIn	A	A	A	A	A	A
MC_GearInPos pending[1]	-	A	-	-	A	-
MC_GearInPos active[2]	A	A	A	A	A	A
MC_PhasingAbsolute MC_PhasingRelative	-	-	-	A	-	-
MC_CamIn pending[1]	-	A	-	-	A	-
MC_CamIn active[2]	A	A	A	A	A	A

A The running job is aborted with "CommandAborted" = TRUE.

- No effect. Running job continues to be executed.

1) A pending synchronous operation ("Busy" = TRUE, "StartSync" = FALSE, "InSync" = FALSE) does not cancel active commands. A pending synchronous operation job can only be overridden by a further synchronous operation job on the same following axis. Cancellation is possible with "MC_Power".

2) The status "Busy" = TRUE, "StartSync" or "InSync" = TRUE corresponds to active synchronous operation.

10.13.3 Override response V4: Measuring input jobs

The following table shows which new Motion Control jobs will override active measuring input jobs:

⇒ Active job ⇓ New job	MC_MeasuringInput	MC_MeasuringInputCyclic
MC_Home "Mode" = 2, 3, 5, 8, 9, 10	A	A
MC_Home "Mode" = 0, 1, 6, 7	-	-
MC_MeasuringInput MC_MeasuringInputCyclic MC_AbortMeasuringInput	A	A

A The running job is aborted with "CommandAborted" = TRUE.

- No effect. Running job continues to be executed.

Appendix A

A.1 Tags of the speed axis technology object

A.1.1 Legend

Tag	Name of the tag	
Data type	Data type of the tag	
Values	Value range of the tag - minimum value to maximum value If no specific value is shown, the value range limits of the relevant data type apply or the information under "Description".	
W	Effectiveness of changes in the technology data block	
	DIR	Direct: Values are changed directly and take effect at the start of the next MC-Servo [OB91].
	CAL	At call of Motion Control instruction: Values are changed directly and take effect at the start of the next MC-Servo [OB91] after the call of the corresponding Motion Control instruction in the user program.
	RES	Restart: Changes to the start value in the load memory are made using the extended instruction "WRIT_DBL" (write to DB in load memory). Changes will not take effect until after restart of the technology object.
	RON	Read only: The tag cannot and must not be changed during runtime of the user program.
Descrip-tion	Description of the tag	

Access to the tags is with "<TO>.<tag name>". The placeholder <TO> represents the name of the technology object.

A.1.2 Actual values and setpoints (speed axis)

The following tags indicate the setpoint and actual values of the technology object.

Tags

Legend (Page 431)

Tag	Data type	Values	W	Description
Velocity	LREAL	-	RON	Velocity setpoint / speed setpoint
ActualSpeed	LREAL	-	RON	Actual speed of the motor (with analog setpoint = 0.0)
Acceleration	LREAL	-	RON	Setpoint acceleration

A.1.3 Variable simulation (speed axis)

The tag structure <TO>.Simulation.<tag name> contains the configuration of the simulation mode. In simulation mode, you can simulate axes without a real drive in the CPU.

Tags

Legend (Page 431)

Tag		Data type	Values	W	Description
Simulation.		STRUCT			
	Mode	UDINT	-	RES[1)]	Simulation mode 0: No simulation, normal operation 1: Simulation mode

1) Technology version V2.0: RON

A.1.4 VirtualAxis tag (speed axis)

The tag structure <TO>.VirtualAxis.<tag name> contains the configuration of the simulation mode. In simulation mode, you can simulate axes without a real drive in the CPU.

Tags

Legend (Page 431)

Tag		Data type	Values	W	Description
VirtualAxis.		STRUCT			
	Mode	UDINT	-	RON	Virtual axis 0: No virtual axis 1: Axis is always and exclusively operated as virtual axis

A.1.5 Actor tags (speed axis)

The tag structure <TO>.Actor.<tag name> contains the controller-side configuration of the drive.

Tags

Legend (Page 431)

Tag			Data type	Values	W	Description
Actor.			STRUCT			
	Type		DINT	-	RON	Drive connection 0: Analog output 1: PROFIdrive telegram
	InverseDirection		BOOL	-	RES	Inversion of the setpoint FALSE: no TRUE: Yes
	DataAdaption		DINT	-	RES	Automatic transfer of the drive values reference speed, maximum speed and reference torque in the device 0: No automatic transfer, manual configuration of values 1: Automatic transfer of values configured in the drive to the configuration of the technology object
	Efficiency		LREAL	0.0 to 1.0	RES	Efficiency of gear
	Interface.		STRUCT			
		AddressIn	VREF	0 to 65535	RON	Input address for the PROFIdrive telegram
		AddressOut	VREF	0 to 65535	RON	Output address for the PROFIdrive telegram or the analog setpoint
		EnableDriveOutput	BOOL	-	RES	"Enable output" for analog drives FALSE: disabled TRUE: Activated
		EnableDriveOutput Address	VREF	0 to 65535	RON	Address for the "Enable output" for analog setpoint
		DriveReadyInput	BOOL	-	RES	"Ready input" for analog drives The analog drive signals its readiness to receive speed setpoints. FALSE: disabled TRUE: Activated
		DriveReadyInput Address	VREF	0 to 65535	RON	Address for the "Enable input" for analog setpoint
		EnableTorqueData	BOOL	-	RES	Torque data FALSE: Deactivated TRUE: Activated
		TorqueDataAddressIn	VREF	0 to 65535	RON	Input Address of the Telegram 750
		TorqueDataAddress Out	VREF	0 to 65535	RON	Output address of the telegram 750
	DriveParameter.					

Tag			Data type	Values	W	Description
		ReferenceSpeed	LREAL	0.0 to 1.0E12	RES	Reference value (100%) for the speed setpoint (N-set) of the drive The speed setpoint is transferred in the PROFIdrive telegram as a normalized value from -200% to 200% of the "ReferenceSpeed". For setpoint specification via an analog output, the analog output can be operated in the range from -117% to 117%, provided the drive permits this.
		MaxSpeed	LREAL	0.0 to 1.0E12	RES	Maximum value for the speed setpoint of the drive (N-set) (PROFIdrive: MaxSpeed ≤ 2 × ReferenceSpeed Analog setpoint: MaxSpeed ≤ 1.17 × ReferenceSpeed)
		ReferenceTorque	LREAL	0.0 to 1.0E12	RES	Reference torque of drive (p2003). Valid for standard motor setting.

A.1.6 Torque Limiting tag (speed axis)

The tag structure <TO>.TorqueLimiting.<tag name> contains the configuration of the torque limiting.

Tags

Legend (Page 431)

Tag			Data type	Values	W	Description
TorqueLimiting.			STRUCT			
	LimitBase		DINT	-	RES	Torque limiting 0: Motor side 1: Load side
	PositionBased Monitorings		DINT	-	RES	Positioning and following error monitoring 0: Monitoring deactivated 1: Monitoring activated
	LimitDefaults.		STRUCT			
		Torque	LREAL	0.0 to 1.0E12	CAL	Limiting torque
		Force	LREAL	0.0 to 1.0E12	CAL	Limiting force

A.1.7 LoadGear tags (speed axis)

The tag structure <TO>.LoadGear.<tag name> contains the configuration of the load gear.

Tags

Legend (Page 431)

Tag		Data type	Value range	W	Description
LoadGear.		STRUCT			
	Numerator	UDINT	1 to 4294967295	RES	Load gear numerator
	Denominator	UDINT	1 to 4294967295	RES	Load gear denominator

A.1.8 Units tags (speed axis)

The tag structure <TO>.Units.<tag name> shows the set technological units.

Tags

Legend (Page 431)

Tag		Data type	Values	W	Description	
Units.		STRUCT				
	VelocityUnit	UDINT	-	RON	Unit for velocity	
					1082	1/s
					1083	1/min
					1528	1/h
	TimeUnit	UDINT	-	RON	Unit for time	
					1054	s
	TorqueUnit	UDINT	-	RON	Unit for torque	
					1126	Nm
					1128	kNm
					1529	lbf in (pound-force-inch)
					1530	lbf ft
					1531	ozf in (ounce-force-inch)
					1532	ozf ft
					1533	pdl in (poundal-inch)
					1534	pdl ft
	ForceUnit	UDINT	-	RON	Unit for force	
					1120	N
					1122	kN
					1094	lbf (pound-force)
					1093	ozf (ounce-force)
					1535	pdl (poundals)

A.1.9 DynamicLimits tags (speed axis)

The tag structure <TO>.DynamicLimits.<tag name> contains the configuration of the dynamic limits. During Motion Control, no dynamic values greater than the dynamic limits are permitted. If you have specified greater values in a Motion Control instruction, then motion is performed using the dynamic limits, and a warning is indicated (alarm 501 to 503 - Dynamic values were limited).

Tags

Legend (Page 431)

Tag		Data type	Values	W	Description
DynamicLimits.		STRUCT			
	MaxVelocity	LREAL	0.0 to 1.0E12	RES	Maximum permissible velocity of the axis
	MaxAcceleration	LREAL	0.0 to 1.0E12	DIR	Maximum permissible acceleration of the axis
	MaxDeceleration	LREAL	0.0 to 1.0E12	DIR	Maximum permissible deceleration of the axis
	MaxJerk	LREAL	0.0 to 1.0E12	DIR	Maximum permissible jerk on the axis

A.1.10 DynamicDefaults tags (speed axis)

The tag structure <TO>.DynamicDefaults.<tag name> contains the configuration of the dynamic defaults. These settings will be used when you specify a dynamic value less than 0.0 in a Motion Control instruction (exceptions: MC_MoveJog.Velocity, MC_MoveVelocity.Velocity). Changes to the default dynamic values will be applied at the next positive edge at the "Execute" parameter of a Motion Control instruction.

Tags

Legend (Page 431)

Tag		Data type	Values	W	Description
DynamicDefaults.		STRUCT			
	Velocity	LREAL	0.0 to 1.0E12	CAL	Default velocity
	Acceleration	LREAL	0.0 to 1.0E12	CAL	Default acceleration
	Deceleration	LREAL	0.0 to 1.0E12	CAL	Default deceleration
	Jerk	LREAL	0.0 to 1.0E12	CAL	Default jerk
	EmergencyDeceleration	LREAL	0.0 to 1.0E12	DIR	Emergency stop deceleration

A.1.11 Override tags (speed axis)

The tag structure <TO>.Override.<tag name> contains the configuration for the override parameters. The override parameters are used to apply a correction percentage to default values. An override change takes effect immediately, and is performed with the dynamic settings in effect in the Motion Control instruction.

Tags

Legend (Page 431)

Tag		Data type	Values	W	Description
Override.		STRUCT			
	Velocity	LREAL	0.0 to 200.0%	DIR	Velocity or speed override Percentage correction of the velocity/speed

A.1.12 StatusDrive tags (speed axis)

The tag structure <TO>.StatusDrive.<tag name> indicates the status of the drive.

Tags

Legend (Page 431)

Tag		Data type	Values	W	Description
StatusDrive.		STRUCT			
	InOperation	BOOL	-	RON	Operational status of the drive FALSE: Drive not ready. Setpoints will not be executed. TRUE: Drive ready. Setpoints can be executed.
	CommunicationOK	BOOL	-	RON	Cyclic BUS communication between controller and drive FALSE: Not established TRUE: Established
	Error	BOOL	-	RON	FALSE: No drive error TRUE: Drive error
	AdaptionState	DINT	-	RON	Status of automatic data transfer of drive parameters 0: "NOT_ADAPTED" (Data not transferred) 1: "IN_ADAPTION" (Data transfer in progress) 2: "ADAPTED" (Data transfer complete) 3: "NOT_APPLICABLE" (Data transfer not selected, not possible) 4: "ADAPTION_ERROR" (Error during data transfer)

A.1.13 StatusTorqueData tags (speed axis)

The tag structure <TO>.StatusTorqueData.<tag name> indicates the status of the torque.

Tags

Legend (Page 431)

Tag		Data type	Value range	W	Description
StatusTorqueData.		STRUCT			
	CommandAdditive TorqueActive	DINT	-	RON	Additive torque setpoint function 0: Deactivated 1: Activated
	CommandTorqueRange Active	DINT	-	RON	Torque range above high and low limit of the torque function 0: Deactivated 1: Activated
	ActualTorque	LREAL	-1.0E12 to 1.0E12	RON	Actual torque of the axis in the technological unit of the TO for torque

A.1.14 StatusMotionIn tags (speed axis)

The tag structure <TO>.StatusMotionIn.<tag name> indicates the motion status.

Tags

Legend (Page 431)

Tag		Data type	Value range	W	Description
StatusMotionIn.		STRUCT			
	FunctionState	DINT	-	RON	0: No MotionIn function active 1: MotionInVelocity active 2: MotionInPosition active

A.1.15 StatusWord tag (speed axis)

The <TO>.StatusWord tag contains the status information of the technology object.

Information on the evaluation of the individual bits (e.g. bit 0 "Enable") can be found in the section Evaluating StatusWord, ErrorWord and WarningWord (Page 288).

Tag

Legend (Page 431)

Tag	Data type	Values	W	Description
Status-Word	DWORD	-	RON	Status data of the technology object
Bit 0	-	-	-	"Enable" Enable status 0: Technology object disabled 1: Technology object enabled
Bit 1	-	-	-	"Error" 0: No error present 1: Error present
Bit 2	-	-	-	"RestartActive" 0: No "Restart" active 1: "Restart" active. The technology object is being reinitialized.
Bit 3	-	-	-	"OnlineStartValuesChanged" 0: "Restart" tags unchanged 1: Change to "Restart" tags. For the changes to be applied, the technology object must be reinitialized.
Bit 4	-	-	-	"ControlPanelActive" Axis control panel 0: Deactivated 1: Activated
Bit 5	-	-	-	Reserved
Bit 6	-	-	-	"Done" 0: Motion job is running, or Axis control panel enabled 1: No motion job is running and axis control panel disabled
Bit 7	-	-	-	Reserved
Bit 8	-	-	-	Reserved
Bit 9	-	-	-	"JogCommand" 0: No "MC_MoveJog" job running 1: "MC_MoveJog" job running
Bit 10	-	-	-	"VelocityCommand" 0: No "MC_MoveVelocity" job running 1: "MC_MoveVelocity" job running
Bit 11	-	-	-	Reserved
Bit 12	-	-	-	"ConstantVelocity" 0: Axis is accelerating or decelerating. 1: Velocity setpoint reached. The axis is traversing at this constant velocity or is at a standstill.

Tag	Data type	Values	W	Description
Bit 13	-	-	-	"Accelerating" 0: No acceleration process active 1: Acceleration process active
Bit 14	-	-	-	"Decelerating" 0: No deceleration process active 1: Deceleration process active
Bit 15... Bit 24	-	-	-	Reserved
Bit 25	-	-	-	"AxisSimulation" 0: No simulation 1: Simulation is active
Bit 26	-	-	-	"TorqueLimitingCommand" 0: No "MC_TorqueLimiting" job is running 1: "MC_TorqueLimiting" job is running
Bit 27	-	-	-	"InLimitation" 0: Drive is not operating at the torque limit 1: Drive is operating at the torque limit
Bit 28... Bit 31	-	-	-	Reserved

A.1.16 ErrorWord tag (speed axis)

The <TO>.ErrorWord tag indicates technology object errors (technology alarms).

Information on the evaluation of the individual bits (e.g. bit 3 "CommandNotAccepted") can be found in the Evaluating StatusWord, ErrorWord and WarningWord (Page 288) section.

Tag

Legend (Page 431)

Tag	Data type	Values	W	Description
Error-Word	DWORD	-	RON	
Bit 0	-	-	-	"SystemFault" System error
Bit 1	-	-	-	"ConfigFault" Configuration error One or more configuration parameters are inconsistent or invalid.
Bit 2	-	-	-	"UserFault" Error in user program at a Motion Control instruction or its use
Bit 3	-	-	-	"CommandNotAccepted" Command cannot be executed. A Motion Control instruction cannot be executed because necessary requirements have not been met.
Bit 4	-	-	-	"DriveFault" Error in drive
Bit 5	-	-	-	Reserved
Bit 6	-	-	-	"DynamicError" Specified dynamic values are limited to permissible values.
Bit 7	-	-	-	"CommunicationFault" Communication error Missing or faulty communication.
Bit 8	-	-	-	Reserved
Bit 9	-	-	-	Reserved
Bit 10	-	-	-	Reserved
Bit 11	-	-	-	Reserved
Bit 12	-	-	-	Reserved
Bit 13	-	-	-	"PeripheralError" Error accessing a logical address
Bit 14	-	-	-	Reserved
Bit 15	-	-	-	"AdaptionError" Error during data transfer
Bit 16... Bit 31	-	-	-	Reserved

A.1.17 ErrorDetail tags (speed axis)

The tag structure <TO>.ErrorDetail.<tag name> contains the alarm number and the effective local alarm reaction for the technology alarm that is currently pending for the technology object.

You can find a list of the technology alarms and alarm reactions in the Technology alarms (Page 513) appendix.

Tags

Legend (Page 431)

Tag		Data type	Values	W	Description
ErrorDetail.		STRUCT			
	Number	UDINT	-	RON	Alarm number
	Reaction	DINT	0 to 5	RON	Effective alarm reaction 0: No reaction 1: Stop with current dynamic values 2: Stop with maximum dynamic values 3: Stop with emergency stop ramp 4: Remove enable 5: Track setpoints

A.1.18 WarningWord tag (speed axis)

The <TO>.WarningWord tag indicates pending warnings for the technology object.

Information on the evaluation of the individual bits (e.g. bit 13 "PeripheralWarning") can be found in the Evaluating StatusWord, ErrorWord and WarningWord (Page 288) section.

Tag

Legend (Page 431)

Tag	Data type	Values	W	Description
Warning-Word	DWORD	-	RON	
Bit 0	-	-	-	"SystemWarning" A system-internal error has occurred.
Bit 1	-	-	-	"ConfigWarning" Configuration error One or several configuration parameters are adjusted internally.
Bit 2	-	-	-	"UserWarning" Error in user program at a Motion Control instruction or its use
Bit 3	-	-	-	"CommandNotAccepted" Command cannot be executed. A Motion Control instruction cannot be executed because necessary requirements have not been met.
Bit 4	-	-	-	"DriveWarning" Error in drive
Bit 5	-	-	-	Reserved
Bit 6	-	-	-	"DynamicWarning" Specified dynamic values are limited to permissible values.
Bit 7				"CommunicationWarning" Communication error Missing or faulty communication.
Bit 8... Bit 12				Reserved
Bit 13				"PeripheralWarning" Error accessing a logical address
Bit 14				Reserved
Bit 15				"AdaptionWarning" Error in automatic data transfer
Bit 16... Bit 31	-	-	-	Reserved

A.1.19 ControlPanel tags (speed axis)

The tag structure <TO>.ControlPanel.<tag name> contains no user-relevant data. This tag structure is internally used.

Tags

Legend (Page 431)

Tag				Data type	Values	W	Description
ControlPanel.				STRUCT			
	Input.			STRUCT			
		TimeOut		LREAL	100 to 60000	DIR	
		EsLifeSign		UDINT	-	DIR	
		Command.		ARRAY [1..2] OF STRUCT			
			ReqCounter	UDINT	-	DIR	-
			Type	UDINT	-	DIR	-
			Position	LREAL	-	DIR	-
			Velocity	LREAL	-	DIR	-
			Acceleration	LREAL	-	DIR	-
			Deceleration	LREAL	-	DIR	-
			Jerk	LREAL	-	DIR	-
			Param	LREAL	-	DIR	-
	Output.			STRUCT			
		RTLifeSign		UDINT	-	RON	
		Command.		ARRAY [1..2] OF STRUCT			
			AckCounter	UDINT	-	RON	-
			Error	BOOL	-	RON	-
			ErrorID	UDINT	-	RON	-
			Done	BOOL	-	RON	-
			Aborted	BOOL	-	RON	-

A.1.20 InternalToTrace tags (speed axis)

The tag structure <TO>.InternalToTrace.<tag name> contains no user-relevant data. This tag structure is internally used.

Tags

Legend (Page 431)

Tag		Data type	Values	W	Description
InternalToTrace.		ARRAY [1..4] OF STRUCT			
	Id	DINT	-	DIR	-
	Value	LREAL	-	DIR	-

A.2 Tags of the positioning axis/synchronous axis technology object

A.2.1 Legend

Tag	Name of the tag	
Data type	Data type of the tag	
Values	Value range of the tag - minimum value to maximum value (L - linear specification R - rotary specification) If no specific value is shown, the value range limits of the relevant data type apply or the information under "Description".	
W	Effectiveness of changes in the technology data block	
	DIR	Direct: Values are changed directly and take effect at the start of the next MC-Servo [OB91].
	CAL	At call of Motion Control instruction: Values are changed directly and take effect at the start of the next MC-Servo [OB91] after the call of the corresponding Motion Control instruction in the user program.
	RES	Restart: Changes to the start value in the load memory are made using the extended instruction "WRIT_DBL" (write to DB in load memory). Changes will not take effect until after restart of the technology object.
	RON	Read only: The tag cannot and must not be changed during runtime of the user program.
Description	Description of the tag	

Access to the tags is with "<TO>.<tag name>". The placeholder <TO> represents the name of the technology object.

A.2.2 Actual values and setpoints (positioning axis/synchronous axis)

The following tags indicate the setpoint and actual values of the technology object.

Tags

Legend (Page 445)

Tag	Data type	Values	W	Description
Position	LREAL	-	RON	Position setpoint
Velocity	LREAL	-	RON	Velocity setpoint / speed setpoint
ActualPosition	LREAL	-	RON	Actual position
ActualVelocity	LREAL	-	RON	Actual velocity
ActualSpeed	LREAL	-	RON	Actual speed of the motor (with analog setpoint = 0.0)
Acceleration	LREAL	-	RON	Setpoint acceleration
ActualAcceleration	LREAL	-	RON	Actual acceleration
OperativeSensor	UDINT	1 to 4	RON	Operative encoder

A.2.3 Simulation tag (positioning axis / synchronous axis)

The tag structure <TO>.Simulation.<tag name> contains the configuration of the simulation mode. In simulation mode, you can simulate axes without a real drive in the CPU.

Tags

Legend (Page 445)

Tag		Data type	Values	W	Description
Simulation.		STRUCT			
	Mode	UDINT	-	RES[1)]	Simulation mode 0: No simulation, normal operation 1: Simulation mode

1) Technology version V2.0: RON

A.2.4 VirtualAxis tag (positioning axis/synchronous axis)

The tag structure <TO>.VirtualAxis.<tag name> contains the configuration of the simulation mode. In simulation mode, you can simulate axes without a real drive in the CPU.

Tags

Legend (Page 445)

Tag		Data type	Values	W	Description
VirtualAxis.		STRUCT			
	Mode	UDINT	-	RON	Virtual axis 0: No virtual axis 1: Axis is always and exclusively operated as virtual axis

A.2.5 Actor tags (positioning axis/synchronous axis)

The tag structure <TO>.Actor.<tag name> contains the controller-side configuration of the drive.

Tags

Legend (Page 445)

Tag			Data type	Values	W	Description
Actor.			STRUCT			
	Type		DINT	-	RON	Drive connection 0: Analog output 1: PROFIdrive telegram
	InverseDirection		BOOL	-	RES	Inversion of the setpoint FALSE: no TRUE: Yes
	DataAdaption		DINT	-	RES	Automatic transfer of the drive values reference speed, maximum speed and reference torque 0: No automatic transfer, manual configuration of values 1: Automatic transfer of values configured in the drive to the configuration of the technology object
	Efficiency		LREAL	0.0 to 1.0	RES	Efficiency of mechanics (gear and leadscrew)
	Interface.		STRUCT			
		AddressIn	VREF	0 to 65535	RON	Input address for the PROFIdrive telegram
		AddressOut	VREF	0 to 65535	RON	Output address for the PROFIdrive telegram or the analog setpoint

Tag			Data type	Values	W	Description
		EnableDriveOutput	BOOL	-	RES	"Enable output" for analog drives FALSE: disabled TRUE: Activated
		EnableDriveOutput Address	VREF	0 to 65535	RON	Address for the "Enable output" for analog set-point
		DriveReadyInput	BOOL	-	RES	"Ready input" for analog drives The analog drive signals its readiness to receive speed setpoints. FALSE: disabled TRUE: Activated
		DriveReadyInput Address	VREF	0 to 65535	RON	Address for the "Enable input" for analog set-point
		EnableTorqueData	BOOL	-	RES	Torque data FALSE: Deactivated TRUE: Activated
		TorqueDataAddressIn	VREF	0 to 65535	RON	Input address of the supplemental telegram
		TorqueDataAddress Out	VREF	0 to 65535	RON	Output address of the supplemental telegram
	DriveParameter.					
		ReferenceSpeed	LREAL	0.0 to 1.0E12	RES	Reference value (100%) for the speed setpoint (N-set) of the drive The speed setpoint is transferred in the PROFIdrive telegram as a normalized value from -200% to 200% of the "ReferenceSpeed". For setpoint specification via an analog output, the analog output can be operated in the range from -117% to 117%, provided the drive permits this.
		MaxSpeed	LREAL	0.0 to 1.0E12	RES	Maximum value for the speed setpoint of the drive (N-set) (PROFIdrive: MaxSpeed ≤ 2 × ReferenceSpeed Analog setpoint: MaxSpeed ≤ 1.17 × ReferenceSpeed)
		ReferenceTorque	LREAL	0.0 to 1.0E12	RES	Reference value (100%) for the drive torque

See also

Evaluating the technology data block (Page 285)

A.2.6 TorqueLimiting tag (positioning axis/synchronous axis)

The tag structure <TO>.TorqueLimiting.<tag name> contains the configuration of the torque limiting.

Tags

Legend (Page 445)

Tag			Data type	Values	W	Description
TorqueLimiting.			STRUCT			
	LimitBase		DINT	-	RES	Torque limiting 0: Motor side 1: Load side
	PositionBased Monitorings		DINT	-	RES	Positioning and following error monitoring 0: Monitoring deactivated 1: Monitoring activated
	LimitDefaults.		STRUCT			
		Torque	LREAL	0.0 to 1.0E12	CAL	Limiting torque
		Force	LREAL	0.0 to 1.0E12	CAL	Limiting force

A.2.7 Clamping tag (positioning axis/synchronous axis)

The tag structure <TO>.Clamping.<tag name> contains the configuration of the fixed stop detection.

Tags

Legend (Page 445)

Tag		Data type	Values	W	Description
Clamping.		STRUCT			
	FollowingErrorDeviation	LREAL	0.001 to 1.0E12	DIR	Value of the following error starting from which the fixed stop is detected.
	PositionTolerance	LREAL	0.001 to 1.0E12	DIR	Position tolerance for clamping monitoring

A.2.8 Sensor[n] tags (positioning axis/synchronous axis)

The tag structure <TO>.Sensor[n].<tag name> contains the controller-end configuration for the encoder, and the configuration for active and passive homing.

Tags

Legend (Page 445)

Tag			Data type	Values	W	Description
Sensor[n].			ARRAY [1..4] OF STRUCT			
	Existent		BOOL	-	RON	Displaying created encoders
	Type		DINT	-	RON	Encoder type 0: "INCREMENTAL" (incremental) 1: "ABSOLUTE" (absolute) 2: "CYCLIC_ABSOLUTE" (cyclic absolute)
	InverseDirection		BOOL	-	RES	Inversion of the actual value FALSE: no TRUE: Yes
	System		DINT	-	RES	Encoder system 0: "LINEAR" (linear encoder) 1: "ROTATORY" (rotary encoder)
	MountingMode		DINT	-	RES	Mounting type of encoder 0: On motor shaft 1: On load side 2: External measuring system
	DataAdaption		DINT	-	RES	Automatic transfer of the drive values reference speed, maximum speed and reference torque in the device 0: No automatic transfer, manual configuration of values 1: Automatic transfer of values configured in the drive to the configuration of the technology object
	Interface.					
		AddressIn	VREF	0 to 65535	RON	Input address for the PROFIdrive telegram
		AddressOut	VREF	0 to 65535	RON	Output address for the PROFIdrive telegram
		Number	UDINT	1 to 2	RON	Number of the encoder in the telegram
	Parameter.					
		Resolution	LREAL	1.0E-12 to 1.0E12	RES	Resolution of a linear encoder (offset between two encoder pulses)
		StepsPerRevolution	UDINT	1 to 8388608	RES	Increments per rotary encoder revolution
		FineResolutionXist1	UDINT	0 to 31	RES	Number of bits for fine resolution Gx_XIST1 (cyclic actual encoder value)
		FineResolutionXist2	UDINT	0 to 31	RES	Number of bits for fine resolution Gx_XIST2 (absolute value of encoder)

Tag			Data type	Values	W	Description
		Determinable Revolutions	UDINT	0 to 8388608	RES	Number of differentiable encoder revolutions for a multi-turn absolute encoder (For a single-turn absolute encoder = 1; for an incremental encoder = 0)
		DistancePer Revolution	LREAL	0.0 to 1.0E12	RES	Load distance per revolution of an externally mounted encoder
	ActiveHoming.		STRUCT			
		Mode	DINT	-	RES	Homing mode 0: Use zero mark via PROFIdrive telegram 1: Use zero mark via PROFIdrive telegram and reference cam 2: Use homing mark via digital input
		SideInput	BOOL	-	CAL	Side of the digital input for active homing: FALSE: Negative side TRUE: Positive side
		Direction	DINT	-	CAL	Homing direction / homing mark approach direction 0: Positive homing direction 1: Negative homing direction
		DigitalInputAddress	VREF	0 to 65535	RON	Address of digital input
		HomePositionOffset	LREAL	-1.0E12 to 1.0E12	CAL	Home position offset
		SwitchLevel	BOOL	-	RES	Signal level that is present at the digital input when homing mark is approached FALSE: Low level TRUE: High level
	PassiveHoming.		STRUCT			
		Mode	DINT	-	RES	Homing mode 0: Use zero mark via PROFIdrive telegram 1: Use zero mark via PROFIdrive telegram and reference cam 2: Use homing mark via digital input
		SideInput	BOOL	-	CAL	Side of digital input during passive homing: FALSE: Negative side TRUE: Positive side
		Direction	DINT	-	CAL	Homing direction / homing mark approach direction 0: Positive homing direction 1: Negative homing direction 2: Current homing direction
		DigitalInputAddress	VREF	0 to 65535	RON	Address of digital input
		SwitchLevel	BOOL	-	RES	Signal level that is present at the digital input when homing mark is approached FALSE: Low level TRUE: High level

See also

Evaluating the technology data block (Page 285)

A.2.9 Extrapolation tag (positioning axis/synchronous axis)

The tag structure <TO>.Extrapolation.<tag name> contains the configuration of the actual value extrapolation.

Tags

Legend (Page 445)

Tag			Data type	Values	W	Description
Extrapolation.			STRUCT			
	LeadingAxisDependent Time		LREAL	-	RON	Extrapolation time component (caused by leading axis) Results from the following times: • Time of actual value acquisition for the leading axis • Ipo cycle • Time of actual position filter of leading axis (T1 + T2)
	FollowingAxis DependentTime		LREAL	0.0 to 1.0E12	DIR	Extrapolation time component (caused by following axis) Results from the following times: • For a following axis with set velocity precontrol: – Communication cycle – Ipo cycle – Speed control loop substitute time for the following axis – Output time of the setpoint for the following axis • For a following axis without velocity precontrol: – Communication cycle – Ipo cycle – Position control loop equivalent time (1/Kv from <TO>.PositionControl.Kv) – Output time of the setpoint for the following axis
	PositionFilter.		STRUCT			
		T1	LREAL	0.0 to 1.0E12	DIR	Position filter time constant T1
		T2	LREAL	0.0 to 1.0E12	DIR	Position filter time constant T2
	VelocityFilter.		STRUCT			
		T1	LREAL	0.0 to 1.0E12	DIR	Velocity filter time constant T1
	VelocityTolerance.		STRUCT			
		Range	LREAL	0.0 to 1.0E12	DIR	Tolerance band width for velocity
	Hysteresis.		STRUCT			
		Value	LREAL	0.0 to 1.0E12	DIR	Hysteresis value

A.2.10 LoadGear tags (positioning axis/synchronous axis)

The tag structure <TO>.LoadGear.<tag name> contains the configuration for the load gear.

Tags

Legend (Page 445)

Tag		Data type	Value range	W	Description
LoadGear.		STRUCT			
	Numerator	UDINT	1 to 4294967295	RES	Load gear counter
	Denominator	UDINT	1 to 4294967295	RES	Load gear denominator

A.2.11 Properties tags (positioning axis/synchronous axis)

The tag structure <TO>.Properties.<tag name> contains the configuration of the type of axis or motion.

Tags

Legend (Page 445)

Tag		Data type	Value range	W	Description
Properties.		STRUCT			
	MotionType	DINT	-	RON	Indication of axis or motion type: 0: Linear axis or motion 1: Rotary axis or motion

A.2.12 Units tag (positioning axis/synchronous axis)

The tag structure <TO>.Units.<tag name> shows the set technological units.

Tags

Legend (Page 445)

Tag		Data type	Values	W	Description	
Units.		STRUCT				
	LengthUnit	UDINT	-	RON	Unit for position	
					1010	m
					1013	mm
					1011	km
					1014	µm
					1015	nm
					1019	in
					1018	ft
					1021	mi
					1004	rad
					1005	°
	VelocityUnit	UDINT	-	RON	Unit for velocity	
					1521	°/s
					1522	°/min
					1086	rad/s
					1523	rad/min
					1062	mm/s
					1061	m/s
					1524	mm/min
					1525	m/min
					1526	mm/h
					1063	m/h
					1527	km/min
					1064	km/h
					1066	in/s
					1069	in/min
					1067	ft/s
					1070	ft/min
					1075	mi/h
	TimeUnit	UDINT	-	RON	Unit for time	
					1054	s
	TorqueUnit	UDINT	-	RON	Unit for torque	
					1126	Nm
					1128	kNm

Tag		Data type	Values	W	Description	
					1529	lbf in (pound-force-inch)
					1530	lbf ft
					1531	ozf in (ounce-force-inch)
					1532	ozf ft
					1533	pdl in (poundal-inch)
					1534	pdl ft
	ForceUnit	UDINT	-	RON	Unit for force	
					1120	N
					1122	kN
					1094	lbf (pound-force)
					1093	ozf (ounce-force)
					1535	pdl (poundals)

A.2.13 Mechanics tags (positioning axis/synchronous axis)

The tag structure <TO>.Mechanics.<tag name> contains the configuration of the mechanics.

Tags

Legend (Page 445)

Tag		Data type	Value range	W	Description
Mechanics.		STRUCT			
	LeadScrew	LREAL	0.0 to 1.0E12	RES	Leadscrew pitch

A.2.14 Modulo tags (positioning axis/synchronous axis)

The tag structure <TO>.Modulo.<tag name> contains the configuration of the modulo function.

Tags

Legend (Page 445)

Tag		Data type	Values	W	Description
Modulo.		STRUCT			
	Enable	BOOL	-	RES	FALSE: Modulo conversion disabled TRUE: Modulo conversion enabled When modulo conversion is enabled, a check is made for modulo length > 0.0
	Length	LREAL	0.001 to 1.0E12	RES	Modulo length
	StartValue	LREAL	-1.0E12 to 1.0E12	RES	Modulo start value

See also

Evaluating the technology data block (Page 285)

A.2.15 DynamicLimits tags (positioning axis/synchronous axis)

The tag structure <TO>.DynamicLimits.<tag name> contains the configuration of the dynamic limits. During Motion Control, no dynamic values greater than the dynamic limits are permitted. If you have specified greater values in a Motion Control instruction, then motion is performed using the dynamic limits, and a warning is indicated (alarm 501 to 503 - Dynamic values were limited).

Tags

Legend (Page 445)

Tag		Data type	Values	W	Description
DynamicLimits.		STRUCT			
	MaxVelocity	LREAL	0.0 to 1.0E12	RES	Maximum permissible velocity of the axis
	Velocity	LREAL	0.0 to 1.0E12	DIR	Current maximum velocity of the axis
	MaxAcceleration	LREAL	0.0 to 1.0E12	DIR	Maximum permissible acceleration of the axis
	MaxDeceleration	LREAL	0.0 to 1.0E12	DIR	Maximum permissible deceleration of the axis
	MaxJerk	LREAL	0.0 to 1.0E12	DIR	Maximum permissible jerk on the axis

See also

Evaluating the technology data block (Page 285)

A.2.16 DynamicDefaults tags (positioning axis/synchronous axis)

The tag structure <TO>.DynamicDefaults.<tag name> contains the configuration of the dynamic defaults. These settings will be used when you specify a dynamic value less than 0.0 in a Motion Control instruction (exceptions: MC_MoveJog.Velocity, MC_MoveVelocity.Velocity). Changes to the default dynamic values will be applied at the next positive edge at the "Execute" parameter of a Motion Control instruction.

Tags

Legend (Page 445)

Tag		Data type	Values	W	Description
DynamicDefaults.		STRUCT			
	Velocity	LREAL	0.0 to 1.0E12	CAL	Default velocity
	Acceleration	LREAL	0.0 to 1.0E12	CAL	Default acceleration
	Deceleration	LREAL	0.0 to 1.0E12	CAL	Default deceleration
	Jerk	LREAL	0.0 to 1.0E12	CAL	Default jerk
	EmergencyDeceleration	LREAL	0.0 to 1.0E12	DIR	Emergency stop deceleration

See also

Evaluating the technology data block (Page 285)

A.2.17 PositionLimits_SW tags (positioning axis/synchronous axis)

The tag structure <TO>.PositionLimits_SW.<tag name> contains the configuration for position monitoring with software limit switches. Software limit switches are used to limit the operating range of a positioning axis.

Tags

Legend (Page 445)

Tag		Data type	Values	W	Description
PositionLimits_SW.		STRUCT			
	Active	BOOL	-	DIR	FALSE: Monitoring disabled TRUE: Monitoring enabled
	MinPosition	LREAL	-1.0E12 to 1.0E12	DIR	Position of negative software limit switches
	MaxPosition	LREAL	-1.0E12 to 1.0E12	DIR	Position of positive software limit switches ("MaxPosition" > "MinPosition")

See also

Evaluating the technology data block (Page 285)

A.2.18 PositionLimits_HW tags (positioning axis/synchronous axis)

The tag structure <TO>.PositionLimits_HW.<tag name> contains the configuration of position monitoring with hardware limit switches. Hardware limit switches are used to limit the traversing range of a positioning axis.

Tags

Legend (Page 445)

Tag		Data type	Values	W	Description
PositionLimits_HW.		STRUCT			
	Active	BOOL	-	RES	FALSE: Monitoring disabled TRUE: Monitoring enabled With "Active", both (negative and positive) hardware limit switches are activated or deactivated.
	MinSwitchLevel	BOOL	-	RES	Level selection for activation of the negative hardware limit switch: FALSE: Low level (Low active) TRUE: High level (High active)
	MinSwitchAddress	VREF	0 to 65535	RON	Address for the negative hardware limit switch
	MaxSwitchLevel	BOOL	-	RES	Level selection for enabling of the positive hardware limit switch: FALSE: Low level (Low active) TRUE: High level (High active)
	MaxSwitchAddress	VREF	0 to 65535	RON	Address for the positive hardware limit switch

See also

Evaluating the technology data block (Page 285)

A.2.19 Homing tags (positioning axis/synchronous axis)

The tag structure <TO>.Homing.<tag name> contains the configuration for homing the TO.

Tags

Legend (Page 445)

Tag		Data type	Values	W	Description
Homing.		STRUCT			
	AutoReversal	BOOL	-	RES	Reversal at the hardware limit switches FALSE: no TRUE: Yes
	ApproachDirection	BOOL	-	CAL	Direction of approach to the homing position switch FALSE: positive direction TRUE: Negative direction
	ApproachVelocity	LREAL	L: 0.0 to 10000.0 mm/s R: 0.0 to 360000.0°/s	CAL	Approach velocity Velocity during active homing at which the reference cam and home position are approached.
	ReferencingVelocity	LREAL	L: 0.0 to 1000.0 mm/s R: 0.0 to 36000.0°/s	CAL	Homing velocity Velocity during active homing at which the home position is approached.
	HomePosition	LREAL	-1.0E12 to 1.0E12	CAL	Home position

See also

Evaluating the technology data block (Page 285)

A.2.20 Override tags (positioning axis/synchronous axis)

The tag structure <TO>.Override.<tag name> contains the configuration for the override parameters. The override parameters are used to apply a correction percentage to default values. An override change takes effect immediately, and is performed with the dynamic settings in effect in the Motion Control instruction.

Tags

Legend (Page 445)

Tag		Data type	Values	W	Description
Override.		STRUCT			
	Velocity	LREAL	0.0 to 200.0%	DIR	Velocity or speed override Percentage correction of the velocity/speed

See also

Evaluating the technology data block (Page 285)

A.2.21 PositionControl tags (positioning axis/synchronous axis)

The tag structure <TO>.PositionControl.<tag name> contains the settings of closed loop position control.

Tags

Legend (Page 445)

Tag		Data type	Values	W	Description
PositionControl.		STRUCT			
	Kv	LREAL	0.0 to 2147480.0	DIR	Proportional gain of the closed loop position control ("Kv" > 0.0)
	Kpc	LREAL	0.0 to 150.0%	DIR	Velocity precontrol of the position control Recommended setting: • Isochronous drive connection via PROFIdrive: 100.0% • Non-isochronous drive connection via PROFIdrive: 0.0 to 100.0% • Analog drive connection: 0.0 to 100.0%
	EnableDSC	BOOL	-	RES	Dynamic Servo Control (DSC) FALSE: DSC disabled TRUE: DSC enabled DSC is only possible with one of the following PROFIdrive telegrams: • Standard telegram 5 or 6 • SIEMENS telegram 105 or 106
	SmoothingTimeBy-ChangeDifference	LREAL	0.0 to 1.0E+12	DIR	Manipulated variable ramp at step change of control deviation due to encoder switchover.
	InitialOperativeSensor	UDINT	-	RES	Active encoder after initialization of the axis. (encoder number 1 to 4) This encoder is used after startup of the CPU and after a restart of the technology object (Page 314). At an operating mode transition from STOP → RUN of the CPU (without restart of the technology object), the encoder that was also active before the STOP is still being used.
	ControlDifference Quantization.	STRUCT			

Tag			Data type	Values	W	Description
		Mode	DINT	-	RES	Type of quantification Configuration of a quantization when a drive with stepper motor interface is connected 0: No quantification 1: Quantization corresponding to encoder resolution 2: Quantization to a direct value (configuration is performed using the parameter view (data structure))
		Value	LREAL	0.001 to 1.0E+12	RES	Value of quantification Configuration of a value for quantization to a direct value (<TO>.PositionControl.ControlDifferenceQuantization.Mode = 2) (configuration is performed using the parameter view (data structure))

See also

Evaluating the technology data block (Page 285)

A.2.22 DynamicAxisModel tags (positioning axis/synchronous axis)

The tag structure <TO>.DynamicAxisModel.<tag name> contains the settings of the balancing filter.

Tags

Legend (Page 445)

Tag		Data type	Values	W	Description
DynamicAxisModel.		STRUCT			
	VelocityTimeConstant	LREAL	0.0 to 1.0E12	DIR	Speed control loop substitute time [s]
	AdditionalPosition-TimeConstant	LREAL	0.0 to 1.0E12	DIR	Additive position control loop substitute time [s]

A.2.23 FollowingError tags (positioning axis/synchronous axis)

The tag structure <TO>.FollowingError.<tag name> contains the configuration for following error monitoring.

If the permissible following error is exceeded, then technology alarm 521 is output, and the technology object is disabled (alarm reaction: remove enable).

When the warning level is reached, a warning is output (technology alarm 522).

Tags

Legend (Page 445)

Tag		Data type	Values	W	Description
FollowingError.		STRUCT			
	EnableMonitoring	BOOL	-	RES	FALSE: Following error monitoring disabled TRUE: Following error monitoring enabled
	MinValue	LREAL	L: 0.0 to 1.0E12 R: 0.001 to 1.0E12	DIR	Permissible following error at velocities below the value of "MinVelocity".
	MaxValue	LREAL	L: 0.0 to 1.0E12 R: 0.002 to 1.0E12	DIR	Maximum permissible following error, which may be reached at the maximum velocity.
	MinVelocity	LREAL	0.0 to 1.0E12	DIR	"MinValue" is permissible below this velocity and is held constant.
	WarningLevel	LREAL	0.0 to 100.0	DIR	Warning level: Percentage value relative to the valid maximum following error.

See also

Evaluating the technology data block (Page 285)

A.2.24 PositionMonitoring tags (positioning axis/synchronous axis)

The tag structure <TO>.PositioningMonitoring.<tag name> contains the configuration for position monitoring at the end of a positioning motion.

If the actual position value at the end of a positioning motion is reached within the tolerance time and remains in the positioning window for the minimum dwell time, then <TO>.StatusWord.X5 (Done) is set in the technology data block. This completes a Motion Control job.

If the tolerance time is exceeded, then technology alarm 541 "Positioning monitoring" with supplemental value 1: Display "Target range not reached".

If the minimum dwell time is not met, then technology alarm 541 "Positioning monitoring" with supplemental value 2: Display "Exit target range again".

Tags

Legend (Page 445)

Tag		Data type	Values	W	Description
PositioningMonitoring.		STRUCT			
	ToleranceTime	LREAL	0.0 to 1.0E12	DIR	Tolerance time Maximum permitted duration from reaching velocity setpoint zero, until entrance into the positioning window.
	MinDwellTime	LREAL	0.0 to 1.0E12	DIR	Minimum dwell time in the positioning window:
	Window	LREAL	0.0 to 1.0E12	DIR	Positioning window

See also

Evaluating the technology data block (Page 285)

A.2.25 StandstillSignal tags (positioning axis/synchronous axis)

The tag structure <TO>.StandstillSignal.<tag name> contains the configuration for the standstill signal.

If the actual velocity value is below the velocity threshold, and does not exceed it during the minimum dwell time, then the standstill signal <TO>.StatusWord.X7 (Standstill) is set.

Tags

Legend (Page 445)

Tag		Data type	Values	W	Description
StandstillSignal.		STRUCT			Configuration for the standstill signal
	VelocityThreshold	LREAL	0.0 to 1.0E12	DIR	Velocity threshold If velocity is below this threshold, then the minimum dwell time begins.
	MinDwellTime	LREAL	0.0 to 1.0E12	DIR	Minimum dwell time

See also

Evaluating the technology data block (Page 285)

A.2.26 StatusPositioning tags (positioning axis/synchronous axis)

The tag structure <TO>.StatusPositioning.<tag name> indicates the status of a positioning motion.

Tags

Legend (Page 445)

Tag		Data type	Values	W	Description
StatusPositioning.		STRUCT			
	Distance	LREAL	-1.0E12 to 1.0E12	RON	Distance to the target position
	TargetPosition	LREAL	-1.0E12 to 1.0E12	RON	Target position
	FollowingError	LREAL	-1.0E12 to 1.0E12	RON	Current following error
	SetpointExecutionTime	LREAL	-1.0E12 to 1.0E12	RON	Setpoint execution time of the axis (Results from T_{lpo}, T_{vtc} or 1/kv, T_{Send} and T_O of the axis)

See also

Evaluating the technology data block (Page 285)

A.2.27 StatusDrive tags (positioning axis/synchronous axis)

The tag structure <TO>.StatusDrive.<tag name> indicates the status of the drive.

Tags

Legend (Page 445)

Tag		Data type	Values	W	Description
StatusDrive.		STRUCT			
	InOperation	BOOL	-	RON	Operational status of the drive FALSE: Drive not ready. Setpoints will not be executed. TRUE: Drive ready. Setpoints can be executed.
	CommunicationOK	BOOL	-	RON	Cyclic BUS communication between controller and drive FALSE: Not established TRUE: Established
	Error	BOOL	-	RON	FALSE: No drive error TRUE: Drive error
	AdaptionState	DINT	-	RON	Status of automatic data transfer of drive parameters 0: "NOT_ADAPTED" (Data not transferred) 1: "IN_ADAPTION" (Data transfer in progress) 2: "ADAPTED" (Data transfer complete) 3: "NOT_APPLICABLE" (Data transfer not selected, not possible) 4: "ADAPTION_ERROR" (Error during data transfer)

See also

Evaluating the technology data block (Page 285)

A.2.28 StatusServo tags (positioning axis/synchronous axis)

The tag structure <TO>.StatusServo.<tag name> indicates the status for the balancing filter.

Tags

Legend (Page 445)

Tag		Data type	Values	W	Description
StatusServo.		STRUCT			
	BalancedPosition	LREAL	-	RON	Position after the balancing filter.
	ControlDifference	LREAL	-	RON	Control error

A.2.29 StatusSensor[n] tags (positioning axis/synchronous axis)

The tag structure <TO>.StatusSensor[n].<tag name> indicates the status of the measuring system.

Tags

Legend (Page 445)

Tag		Data type	Values	W	Description
StatusSensor[n].		ARRAY [1..4] OF STRUCT			
	State	DINT	-	RON	Status of actual encoder value 0: "NOT_VALID" (not valid) 1: "WAITING_FOR_VALID" (waiting for valid status) 2: "VALID" (valid)
	CommunicationOK	BOOL	-	RON	Cyclic BUS communication between controller and encoder FALSE: Not established TRUE: Established
	Error	BOOL	-	RON	FALSE: No error in the measuring system TRUE: Error in the measuring system.
	AbsEncoderOffset	LREAL	-	RON	Home point offset to the value of an absolute value encoder. The value will be retentively stored in the CPU.
	Control	BOOL	-	RON	FALSE: Encoder is not active TRUE: Encoder is active
	Position	LREAL	-	RON	Encoder position
	Velocity	LREAL	-	RON	Encoder velocity
	AdaptionState	DINT	-	RON	Status of automatic data transfer of encoder parameters 0: "NOT_ADAPTED" (Data not transferred) 1: "IN_ADAPTION" (Data transfer in progress) 2: "ADAPTED" (Data transfer complete) 3: "NOT_APPLICABLE" (Data transfer not selected, not possible) 4: "ADAPTION_ERROR" (Error during data transfer)

See also

Evaluating the technology data block (Page 285)

A.2.30 StatusExtrapolation tag (positioning axis/synchronous axis)

The tag structure <TO>.StatusExtrapolation.<tag name> indicates the status of the actual value extrapolation.

Tags

Legend (Page 445)

Tag		Data type	Values	W	Description
Extrapolation.		STRUCT			
	FilteredPosition	LREAL	-1.0E12 to 1.0E12	RON	Position after position filter
	FilteredVelocity	LREAL	-1.0E12 to 1.0E12	RON	Velocity according to tolerance band
	ExtrapolatedPosition	LREAL	-1.0E12 to 1.0E12	RON	Extrapolated position
	ExtrapolatedVelocity	LREAL	-1.0E12 to 1.0E12	RON	Extrapolated velocity

A.2.31 StatusSynchronizedMotion tags (synchronous axis)

The tag structure <TO>.StatusSynchronizedMotion.<tag name> indicates the status of the synchronous operation.

Tags

Legend (Page 445)

Tag			Data type	Value range	W	Description
StatusSynchronizedMotion.			STRUCT			
	FunctionState		DINT	-	RON	Indication of which synchronous operation function is active 0: No synchronous operation active 1: Gearing (MC_GearIn) 2: Gearing with specified synchronous positions (MC_GearInPos) 3: Camming (MC_CamIn)
	PhaseShift		LREAL	-1.0E12 to 1.0E12	RON	Current absolute leading value shift
	ActualMaster		DB_ANY	0 to 65535	RON	At the start of a "MC_GearIn" job, the number of the technology data block of the currently used leading axis is displayed. "ActualMaster" = 0 when synchronous operation is inactive
	ActualCam		DB_ANY	0 to 65535	RON	Cam that is currently being used for camming
	MasterOffset		LREAL	-1.0E12 to 1.0E12	RON	Current shift of the leading value range of the cam
	MasterScaling		LREAL	-1.0E12 to 1.0E12	RON	Current scaling of the leading value range of the cam
	SlaveOffset		LREAL	-1.0E12 to 1.0E12	RON	Current shift of the following value range of the cam
	SlaveScaling		LREAL	-1.0E12 to 1.0E12	RON	Current scaling of the following value range of the cam
	StatusWord.		STRUCT			
	Bit 0	MaxVelocity-Exceeded	BOOL	-	RON	Configured maximum velocity is exceeded during synchronous operation.
	Bit 1	Max-Acceleration-Exceeded	BOOL	-	RON	Configured maximum acceleration is exceeded during synchronous operation.
	Bit 2	Max-Deceleration-Exceeded	BOOL	-	RON	Configured maximum deceleration is exceeded during synchronous operation.
	Bit 3	InSimulation	BOOL	-	RON	FALSE: Synchronous operation not simulated TRUE: Synchronous operation is being simulated
	Bit 4... Bit 31	-	BOOL	-	RON	Reserved

See also

Synchronous axis technology object (Page 105)

A.2.32 StatusKinematicsMotion tag (positioning axis/synchronous axis)

The <TO>.StatusKinematicsMotion tag contains the status information of the technology object.

Information on the evaluation of the individual bits (e.g. bit 2 "MaxDecelerationExceeded") can be found in the Evaluating StatusWord, ErrorWord and WarningWord (Page 288) section.

Tag

Legend (Page 445)

Tag	Data type	Values	W	Description
StatusKinematics-Motion	DWORD	-	RON	Status data of the technology object
Bit 0	-	-	-	"MaxVelocityExceeded" 0: The TO Kinematics has a lower velocity setpoint calculated than the one configured on the axis 1: The TO Kinematics has a higher velocity setpoint calculated than the one configured on the axis.
Bit 1	-	-	-	"MaxAccelerationExceeded" 0: The TO Kinematics has a lower acceleration setpoint calculated as maxAcceleration of the axis. 1: The TO Kinematics has a higher acceleration setpoint calculated as maxAcceleration of the axis.
Bit 2	-	-	-	"MaxDecelerationExceeded" 0: The TO Kinematics has a lower delay setpoint calculated as maxDeceleration of the axis. 1: The TO Kinematics has a higher delay setpoint calculated as maxDeceleration of the axis.

A.2.33 StatusTorqueData tags (positioning axis/synchronous axis)

The tag structure <TO>.StatusTorqueData.<tag name> indicates the status of the torque data.

Tags

Legend (Page 445)

Tag		Data type	Value range	W	Description
StatusTorqueData.		STRUCT			
	CommandAdditive TorqueActive	DINT	-	RON	Additive torque setpoint active function 0: No 1: Yes
	CommandTorqueRange Active	DINT	-	RON	Torque limits B +, B- active function 0: No 1: Yes
	ActualTorque	LREAL	-1.0E12 to 1.0E12	RON	Actual torque of the axis

A.2.34 StatusMotionIn tags (positioning axis/synchronous axis)

The tag structure <TO>.StatusMotionIn.<tag name> indicates the status of the MotionIn function.

Tags

Legend (Page 445)

Tag		Data type	Value range	W	Description
StatusMotionIn.		STRUCT			
	FunctionState	DINT	-	RON	0: No MotionIn function active 1: MotionInVelocity active 2: MotionInPosition active

A.2.35 StatusWord tag (positioning axis/synchronous axis)

The <TO>.StatusWord tag contains the status information of the technology object.

Information on the evaluation of the individual bits (e.g. bit 5 "HomingDone") can be found in the Evaluating StatusWord, ErrorWord and WarningWord (Page 288) section.

Tag

Legend (Page 445)

Tag	Data type	Values	W	Description
Status-Word	DWORD	-	RON	Status information of the technology object
Bit 0	-	-	-	"Enable" Enable status 0: The technology object is disabled. 1: The technology object is enabled.
Bit 1	-	-	-	"Error" 0: No error present. 1: An error is present.
Bit 2	-	-	-	"RestartActive" 0: No "Restart" is active. 1: A "Restart" is active. The technology object is being reinitialized.
Bit 3	-	-	-	"OnlineStartValuesChanged" 0: The "Restart" tags are unchanged. 1: The "Restart" tags were changed. For the changes to be applied, the technology object must be reinitialized.
Bit 4	-	-	-	"ControlPanelActive" 0: The axis control panel is disabled. 1: The axis control panel is active.
Bit 5	-	-	-	"HomingDone" Homing status 0: The technology object is not homed. 1: The technology object is homed.
Bit 6	-	-	-	"Done" 0: A motion job is in progress or the axis control panel is activated. 1: No motion job is in progress and the axis control panel is deactivated.
Bit 7	-	-	-	"Standstill" Standstill signal 0: The axis is in motion. 1: The axis is at a standstill.
Bit 8	-	-	-	"PositioningCommand" 0: No positioning job is in progress. 1: A positioning job is running ("MC_MoveRelative", "MC_MoveAbsolute").

Tag	Data type	Values	W	Description
Bit 9	-	-	-	"JogCommand" 0: No "MC_MoveJog" job is running. 1: An "MC_MoveJog" job is running
Bit 10	-	-	-	"VelocityCommand" 0: No "MC_MoveVelocity" job is running. 1: An "MC_MoveVelocity" job is running
Bit 11	-	-	-	"HomingCommand" 0: No "MC_Home" job in progress. 1: An "MC_Home" job is being processed.
Bit 12	-	-	-	"ConstantVelocity" 0: The axis is accelerated or decelerated. 1: The setpoint velocity is reached. The axis is traversing at this constant velocity or is at a standstill.
Bit 13	-	-	-	"Accelerating" 0: No acceleration job is in progress. 1: An acceleration operation is active.
Bit 14	-	-	-	"Decelerating" 0: No deceleration process is running. 1: A deceleration operation is active.
Bit 15	-	-	-	"SWLimitMinActive" 0: No negative software limit switch was reached. 1: A negative software limit switch was reached or exceeded.
Bit 16	-	-	-	"SWLimitMaxActive" 0: No positive software limit switch was reached. 1: A positive software limit switch was reached or exceeded.
Bit 17	-	-	-	"HWLimitMinActive" 0: No negative hardware limit switch was reached. 1: A negative hardware limit switch was reached or exceeded.
Bit 18	-	-	-	"HWLimitMaxActive" 0: No positive hardware limit switch was reached. 1: A positive hardware limit switch was reached or exceeded.
Bit 19	-	-	-	Reserved
Bit 20	-	-	-	Reserved
Bit 21	-	-	-	Positioning axis technology object: Reserved Synchronous axis technology object: "Synchronizing" 0: The axis does not synchronize to a leading value. 1: The axis synchronizes to a leading value.

Tag	Data type	Values	W	Description
Bit 22	-	-	-	Positioning axis technology object: Reserved Synchronous axis technology object: "Synchronous" 0: The axis moves asynchronous to a leading value. 1: The axis moves synchronously to a leading value.
Bit 23	-	-	-	"SuperimposedMotionCommand" 0: No overlaid movement is active. 1: No overlaid movement is running.
Bit 24	-	-	-	Positioning axis technology object: Reserved Synchronous axis technology object: "PhasingCommand" 0: No Motion Control instruction for leading value shift is running. 1: A Motion Control instruction for leading value shift is active.
Bit 25	-	-	-	"AxisSimulation" 0: The simulation is not running. 1: The simulation is active.
Bit 26	-	-	-	"TorqueLimitingCommand" 0: No "MC_TorqueLimiting" job is running. 1: An "MC_TorqueLimiting" job is running
Bit 27	-	-	-	"InLimitation" 0: The drive does not operate at the torque limit. 1: The drive is operating at the torque limit.
Bit 28	-	-	-	"NonPositionControlled" 0: The axis is in position-controlled mode. 1: The axis is not in position-controlled mode.
Bit 29	-	-	-	"KinematicsMotionCommand" 0: The axis is not used for a kinematics job. 1: The axis is used for a kinematics job.
Bit 30	-	-	-	"InClamping" 0: The axis is not clamped at a fixed stop. 1: The axis is clamped at a fixed stop.
Bit 31	-	-	-	"MotionInCommand" 0: No MotionIn function is active. 1: The "MotionInVelocity" job is running. 2: The "MotionInPosition" job is running

See also

Evaluating the technology data block (Page 285)

A.2.36 ErrorWord tag (positioning axis/synchronous axis)

The <TO>.ErrorWord tag indicates technology object errors (technology alarms).

Information on the evaluation of the individual bits (e.g. bit 3 "CommandNotAccepted") can be found in the Evaluating StatusWord, ErrorWord and WarningWord (Page 288) section.

Tag

Legend (Page 445)

Tag	Data type	Values	W	Description
ErrorWord	DWORD	-	RON	
Bit 0	-	-	-	"SystemFault" A system-internal error has occurred.
Bit 1	-	-	-	"ConfigFault" Configuration error One or more configuration parameters are inconsistent or invalid.
Bit 2	-	-	-	"UserFault" Error in user program at a Motion Control instruction or its use
Bit 3	-	-	-	"CommandNotAccepted" Command cannot be executed. A Motion Control instruction cannot be executed because necessary requirements have not been met.
Bit 4	-	-	-	"DriveFault" Error in drive
Bit 5	-	-	-	"SensorFault" Error in encoder system
Bit 6	-	-	-	"DynamicError" Specified dynamic values are limited to permissible values.
Bit 7	-	-	-	"CommunicationFault" Communication error Missing or faulty communication.
Bit 8	-	-	-	"SWLimit" Software limit switch reached or overtraveled.
Bit 9	-	-	-	"HWLimit" Hardware limit switch reached or overtraveled.
Bit 10	-	-	-	"HomingError" Error during homing operation The homing cannot be completed.
Bit 11	-	-	-	"FollowingErrorFault" Following error limits exceeded
Bit 12	-	-	-	"PositioningFault" Positioning error
Bit 13	-	-	-	"PeripheralError" Error accessing a logical address

Tag	Data type	Values	W	Description
Bit 14	-	-	-	Positioning axis technology object: Reserved Synchronous axis technology object: "SynchronousError" Error during synchronous operation The leading axis specified for the Motion Control instruction "MC_GearIn" was not configured as a possible leading axis.
Bit 15	-	-	-	"AdaptionError" Error in automatic data transfer
Bit 16... Bit 31	-	-	-	Reserved

See also

Evaluating the technology data block (Page 285)

A.2.37 ErrorDetail tags (positioning axis/synchronous axis)

The tag structure <TO>.ErrorDetail.<tag name> contains the alarm number and the effective local alarm reaction for the technology alarm that is currently pending for the technology object.

You can find a list of the technology alarms and alarm reactions in the Technology alarms (Page 513) appendix.

Tags

Legend (Page 445)

Tag		Data type	Values	W	Description
ErrorDetail.		STRUCT			
	Number	UDINT	-	RON	Alarm number
	Reaction	DINT	0 to 5	RON	Effective alarm reaction 0: No reaction 1: Stop with current dynamic values 2: Stop with maximum dynamic values 3: Stop with emergency stop ramp 4: Remove enable 5: Track setpoints

See also

Evaluating the technology data block (Page 285)

Technology alarms (Page 333)

A.2.38 WarningWord tag (positioning axis/synchronous axis)

The <TO>.WarningWord tag indicates pending warnings for the technology object.

Information on the evaluation of the individual bits (e.g. bit 13 "PeripheralWarning") can be found in the Evaluating StatusWord, ErrorWord and WarningWord (Page 288) section.

Tag

Legend (Page 445)

Tag	Data type	Values	W	Description
Warning-Word	DWORD	-	RON	
Bit 0	-	-	-	"SystemWarning" A system-internal error has occurred.
Bit 1	-	-	-	"ConfigWarning" Configuration error One or several configuration parameters are adjusted internally.
Bit 2	-	-	-	"UserWarning" Error in user program at a Motion Control instruction or its use
Bit 3	-	-	-	"CommandNotAccepted" Command cannot be executed. A Motion Control instruction cannot be executed because necessary requirements have not been met.
Bit 4	-	-	-	"DriveWarning" Error in drive
Bit 5	-	-	-	"SensorWarning" Error in encoder system
Bit 6	-	-	-	"DynamicError" Specified dynamic values are limited to permissible values.
Bit 7	-	-	-	"CommunicationWarning" Communication error Missing or faulty communication.
Bit 8	-	-	-	"SWLimitMin"
Bit 9	-	-	-	"SWLimitMax"
Bit 10	-	-	-	"HomingWarning" Error during homing operation The homing cannot be completed.
Bit 11	-	-	-	"FollowingErrorWarning" Warning limit of following error monitoring reached/exceeded
Bit 12	-	-	-	"PositioningWarning" Positioning error
Bit 13	-	-	-	"PeripheralWarning" Error accessing a logical address

Tag	Data type	Values	W	Description
Bit 14	-	-	-	Positioning axis technology object: Reserved Synchronous axis technology object: "SynchronousWarning" Error during synchronous operation The leading axis specified for the Motion Control instruction "MC_GearIn" was not configured as a possible leading axis.
Bit 15	-	-	-	"AdaptionWarning" Error in automatic data transfer
Bit 16... Bit 31	-	-	-	Reserved

See also

Evaluating the technology data block (Page 285)

A.2.39 ControlPanel tags (positioning axis/synchronous axis)

The tag structure <TO>.ControlPanel.<tag name> contains no user-relevant data. This tag structure is internally used.

See also

Evaluating the technology data block (Page 285)

A.2.40 InternalToTrace tags (positioning axis/synchronous axis)

The tag structure <TO>.InternalToTrace.<tag name> contains no user-relevant data. This tag structure is internally used.

See also

Evaluating the technology data block (Page 285)

A.3 Tags of the technology object external encoder

A.3.1 Legend

Tag	Name of the tag	
Data type	Data type of the tag	
Values	Value range of the tag - minimum value to maximum value If no specific value is shown, the value range limits of the relevant data type apply or the information under "Description".	
W	Effectiveness of changes in the technology data block	
	DIR	Direct: Values are changed directly and take effect at the start of the next MC-Servo [OB91].
	CAL	At call of Motion Control instruction: Values are changed directly and take effect at the start of the next MC-Servo [OB91] after the call of the corresponding Motion Control instruction in the user program.
	RES	Restart: Changes to the start value in the load memory are made using the extended instruction "WRIT_DBL" (write to DB in load memory). Changes will not take effect until after restart of the technology object.
	RON	Read only: The tag cannot and must not be changed during runtime of the user program.
Description	Description of the tag	

Access to the tags is with "<TO>.<tag name>". The placeholder <TO> represents the name of the technology object.

A.3.2 Actual values and setpoints (external encoder)

The following tags indicate the setpoint and actual values of the technology object.

Tags

Legend (Page 479)

Tag	Data type	Values	W	Description
ActualPosition	LREAL	-	RON	Actual position
ActualVelocity	LREAL	-	RON	Actual velocity
ActualAcceleration	LREAL	-	RON	Actual acceleration

A.3.3 Sensor tags (external encoder)

The tag structure <TO>.Sensor.<tag name> contains the controller-end configuration for the encoder, and the configuration for active and passive homing.

Tags

Legend (Page 479)

Tag			Data type	Values	W	Description
Sensor.			STRUCT			
	Type		DINT	-	RES	Encoder type 0: "INCREMENTAL" (incremental) 1: "ABSOLUTE" (absolute) 2: "CYCLIC_ABSOLUTE" (cyclic absolute)
	InverseDirection		BOOL	-	RES	Inversion of the actual value FALSE: no TRUE: Yes
	System		DINT	-	RES	Encoder system 0: "LINEAR" (linear encoder) 1: "ROTATORY" (rotary encoder)
	MountingMode		DINT	-	RES	Mounting type of encoder 0: On motor shaft 1: On load side 2: External measuring system
	DataAdaption		DINT	-	RES	Automatic transfer of the drive values reference speed, maximum speed and reference torque in the device 0: No automatic transfer, manual configuration of values 1: Automatic transfer of values configured in the drive to the configuration of the technology object
	Interface.					
		AddressIn	VREF	0 to 65535	RON	Input address for the PROFIdrive telegram
		AddressOut	VREF	0 to 65535	RON	Output address for the PROFIdrive telegram
		Number	UDINT	1 to 2	RON	Number of the encoder in the telegram
	Parameter.					
		Resolution	LREAL	-1.0E12 to 1.0E12	RES	Resolution of a linear encoder (offset between two encoder pulses)
		StepsPerRevolution	UDINT	1 to 8388608	RES	Increments per rotary encoder revolution
		FineResolutionXist1	UDINT	0 to 31	RES	Number of bits for fine resolution Gx_XIST1 (cyclic actual encoder value)
		FineResolutionXist2	UDINT	0 to 31	RES	Number of bits for fine resolution Gx_XIST2 (absolute value of encoder)
		Determinable Revolutions	UDINT	0 to 8388608	RES	Number of differentiable encoder revolutions for a multi-turn absolute encoder (For a single-turn absolute encoder = 1; for an incremental encoder = 0)

Tag			Data type	Values	W	Description
		DistancePer Revolution	LREAL	0.0 to 1.0E12	RES	Load distance per revolution of an externally mounted encoder
	PassiveHoming.		STRUCT			
		Mode	DINT	-	RES	Homing mode 0: Use zero mark via PROFIdrive telegram 1: Use zero mark via PROFIdrive telegram and reference cam 2: Use homing mark via digital input
		SideInput	BOOL	-	CAL	Side of digital input during passive homing: FALSE: Negative side TRUE: Positive side
		Direction	DINT	-	CAL	Homing direction / homing mark approach direction 0: Positive homing direction 1: Negative homing direction 2: Current homing direction
		DigitalInputAddress	VREF	0 to 65535	RES	Address of the digital input
		SwitchLevel	BOOL	-	RON	Signal level that is present at the digital input when homing mark is approached FALSE: Low level TRUE: High level

A.3.4 Extrapolation tag (external encoder)

The tag structure <TO>.Extrapolation.<tag name> contains the configuration of the actual value extrapolation.

Tags

Legend (Page 479)

Tag			Data type	Values	W	Description
Extrapolation.			STRUCT			
	LeadingAxisDependent Time		LREAL	-	RON	Extrapolation time component (caused by leading axis) Results from the following times: • Time of actual value acquisition for the leading axis • Ipo cycle • Time of actual position filter of leading axis (T1 + T2)
	FollowingAxis DependentTime		LREAL	0.001 to 1.0E12	DIR	Extrapolation time component (caused by following axis) Results from the following times: • For a following axis with set velocity precontrol: – Communication cycle – Ipo cycle – Speed control loop substitute time for the following axis – Output time of the setpoint for the following axis • For a following axis without velocity precontrol: – Communication cycle – Ipo cycle – Position control loop equivalent time (1/Kv from <TO>.PositionControl.Kv) – Output time of the setpoint for the following axis
	PositionFilter.		STRUCT			
		T1	LREAL	0.001 to 1.0E12	DIR	Position filter time constant T1
		T2	LREAL	0.001 to 1.0E12	DIR	Position filter time constant T2
	VelocityFilter.		STRUCT			
		T1	LREAL	0.001 to 1.0E12	DIR	Velocity filter time constant T1
	VelocityTolerance.		STRUCT			
		Range	LREAL	0.001 to 1.0E12	DIR	Tolerance band width for velocity
	Hysteresis.		STRUCT			
		Value	LREAL	0.001 to 1.0E12	DIR	Hysteresis value

A.3.5 LoadGear tags (external encoder)

The tag structure <TO>.LoadGear.<tag name> contains the configuration for the load gear.

Tags

Legend (Page 479)

Tag		Data type	Value range	W	Description
LoadGear.		STRUCT			
	Numerator	UDINT	1 to 4294967295	RES	Load gear counter
	Denominator	UDINT	1 to 4294967295	RES	Load gear denominator

A.3.6 Properties tags (external encoder)

The tag structure <TO>.Properties.<tag name> contains the configuration of the type of axis or motion.

Tags

Legend (Page 479)

Tag		Data type	Value range	W	Description
Properties.					
	MotionType	DINT	-	RON	Indication of axis or motion type: 0: Linear axis or motion 1: Rotary axis or motion

A.3.7 Units tag (external encoder)

The tag structure <TO>.Units.<tag name> shows the set technological units.

Tags

Legend (Page 479)

Tag		Data type	Values	W	Description	
Units.		STRUCT				
	LengthUnit	UDINT	-	RON	Unit for position	
					1010	m
					1013	mm
					1011	km
					1014	µm
					1015	nm
					1019	in
					1018	ft
					1021	mi
					1004	rad
					1005	°
	VelocityUnit	UDINT	-	RON	Unit for velocity	
					1521	°/s
					1522	°/min
					1086	rad/s
					1523	rad/min
					1062	mm/s
					1061	m/s
					1524	mm/min
					1525	m/min
					1526	mm/h
					1063	m/h
					1527	km/min
					1064	km/h
					1066	in/s
					1069	in/min
					1067	ft/s
					1070	ft/min
					1075	mi/h
	TimeUnit	UDINT	-	RON	Unit for time	
					1054	s

A.3.8 Mechanics tags (external encoder)

The tag structure <TO>.Mechanics.<tag name> contains the configuration of the mechanics.

Tags

Legend (Page 479)

Tag		Data type	Value range	W	Description
Mechanics.					
	LeadScrew	LREAL	0.0 to 1.0E12	RES	Leadscrew pitch

A.3.9 Modulo tags (external encoder)

The tag structure <TO>.Modulo.<tag name> contains the configuration of the modulo function.

Tags

Legend (Page 479)

Tag		Data type	Values	W	Description
Modulo.		STRUCT			
	Enable	BOOL	-	RES	FALSE: Modulo conversion disabled TRUE: Modulo conversion enabled When modulo conversion is enabled, a check is made for modulo length > 0.0
	Length	LREAL	0.001 to 1.0E12	RES	Modulo length
	StartValue	LREAL	-1.0E12 to 1.0E12	RES	Modulo start value

A.3.10 Homing tags (external encoder)

The tag structure <TO>.Homing.<tag name> contains the configuration for homing the TO.

Tags

Legend (Page 479)

Tag		Data type	Values	W	Description
Homing.		STRUCT			
	HomePosition	LREAL	-1.0E12 to 1.0E12	CAL	Home position

A.3.11 StatusSensor tags (external encoder)

The tag structure <TO>.StatusSensor.<tag name> indicates the status of the measuring system.

Tags

Legend (Page 479)

Tag		Data type	Values	W	Description
StatusSensor.		STRUCT			
	State	DINT	-	RON	Status of actual encoder value 0: "NOT_VALID" (not valid) 1: "WAITING_FOR_VALID" (waiting for valid status) 2: "VALID" (valid)
	CommunicationOK	BOOL	-	RON	Cyclic BUS communication between controller and encoder FALSE: Not established TRUE: Established
	Error	BOOL	-	RON	FALSE: No error in the measuring system TRUE: Error in the measuring system.
	AbsEncoderOffset	LREAL	-	RON	Home point offset to the value of an absolute value encoder. The value will be retentively stored in the CPU.
	Control	BOOL	-	RON	FALSE: Encoder is not active TRUE: Encoder is active
	Position	LREAL	-	RON	Encoder position
	Velocity	LREAL	-	RON	Encoder velocity
	AdaptionState	DINT	-	RON	Status of automatic data transfer of encoder parameters 0: "NOT_ADAPTED" (Data not transferred) 1: "IN_ADAPTION" (Data transfer in progress) 2: "ADAPTED" (Data transfer complete) 3: "NOT_APPLICABLE" (Data transfer not selected, not possible) 4: "ADAPTION_ERROR" (Error during data transfer)

A.3.12 StatusExtrapolation tag (external encoder)

The tag structure <TO>.StatusExtrapolation.<tag name> indicates the status of the actual value extrapolation.

Tags

Legend (Page 479)

Tag		Data type	Values	W	Description
Extrapolation.		STRUCT			
	FilteredPosition	LREAL	-1.0E12 to 1.0E12	RON	Position after position filter
	FilteredVelocity	LREAL	-1.0E12 to 1.0E12	RON	Velocity according to tolerance band
	ExtrapolatedPosition	LREAL	-1.0E12 to 1.0E12	RON	Extrapolated position
	ExtrapolatedVelocity	LREAL	-1.0E12 to 1.0E12	RON	Extrapolated velocity

A.3.13 StatusWord tag (external encoder)

The <TO>.StatusWord tag contains the status information of the technology object.

Information on the evaluation of the individual bits (e.g. bit 5 "HomingDone") can be found in the Evaluating StatusWord, ErrorWord and WarningWord (Page 288) section.

Tag

Legend (Page 479)

Tag	Data type	Values	W	Description
Status Word	DWORD	-	RON	Status data of the technology object
Bit 0	-	-	-	"Enable" Enable status 0: Technology object disabled 1: Technology object enabled
Bit 1	-	-	-	"Error" 0: No error present 1: Error present
Bit 2	-	-	-	"RestartActive" 0: No "Restart" active 1: "Restart" active. The technology object is being reinitialized.
Bit 3	-	-	-	"OnlineStartValuesChanged" 0: "Restart" tags unchanged 1: Change to "Restart" tags. For the changes to be applied, the technology object must be reinitialized.
Bit 4	-	-	-	Reserved
Bit 5	-	-	-	"HomingDone" Homing status 0: Technology object not homed 1: Technology object homed
Bit 6	-	-	-	"Done" 0: Motion job is running, or Axis control panel enabled 1: No motion job is running and axis control panel disabled
Bit 7	-	-	-	Reserved
Bit 8	-		-	Reserved
Bit 9	-	-	-	Reserved
Bit 10	-	-	-	Reserved
Bit 11	-	-	-	"HomingCommand" 0: No "MC_Home" job is running 1: "MC_Home" job is running
Bit 12... Bit 31	-	-	-	Reserved

A.3.14 ErrorWord tag (external encoder)

The <TO>.ErrorWord tag indicates technology object errors (technology alarms).

Information on the evaluation of the individual bits (e.g. bit 3 "CommandNotAccepted") can be found in the Evaluating StatusWord, ErrorWord and WarningWord (Page 288) section.

Tag

Legend (Page 479)

Tag	Data type	Values	W	Description
Error-Word	DWORD	-	RON	
Bit 0	-	-	-	"SystemFault" A system-internal error has occurred.
Bit 1	-	-	-	"ConfigFault" Configuration error One or more configuration parameters are inconsistent or invalid.
Bit 2	-	-	-	"UserFault" Error in user program at a Motion Control instruction or its use
Bit 3	-	-	-	"CommandNotAccepted" Command cannot be executed. A Motion Control instruction cannot be executed because necessary requirements have not been met.
Bit 4	-	-	-	Reserved
Bit 5	-	-	-	"SensorFault" Error in encoder system
Bit 6	-	-	-	Reserved
Bit 7	-	-	-	"CommunicationFault" Communication error Missing or faulty communication.
Bit 8	-	-	-	Reserved
Bit 9	-	-	-	Reserved
Bit 10	-	-	-	"HomingError" Error during homing operation The homing cannot be completed.
Bit 11	-	-	-	Reserved
Bit 12	-	-	-	Reserved
Bit 13	-	-	-	"PeripheralError" Error accessing a logical address
Bit 14... Bit 31	-	-	-	Reserved

A.3.15 ErrorDetail tags (external encoder)

The tag structure <TO>.ErrorDetail.<tag name> contains the alarm number and the effective local alarm reaction for the technology alarm that is currently pending for the technology object.

You can find a list of the technology alarms and alarm reactions in the Technology alarms (Page 513) appendix.

Tags

Legend (Page 479)

Tag		Data type	Values	W	Description
ErrorDetail.		STRUCT			
	Number	UDINT	-	RON	Alarm number
	Reaction	DINT	0, 10	RON	Effective alarm reaction 0: No reaction 10: Remove enable For the technology object external encoder, only alarm reactions 0 and 4 are possible.

A.3.16 WarningWord tag (external encoder)

The <TO>.WarningWord tag indicates pending warnings for the technology object.

Information on the evaluation of the individual bits (e.g. bit 13 "PeripheralWarning") can be found in the Evaluating StatusWord, ErrorWord and WarningWord (Page 288) section.

Tag

Legend (Page 479)

Tag	Data type	Values	W	Description
Warning Word	DWORD	-	RON	
Bit 0	-	-	-	"SystemWarning" A system-internal error has occurred.
Bit 1	-	-	-	"ConfigWarning" Configuration error One or several configuration parameters are adjusted internally.
Bit 2	-	-	-	"UserWarning" Error in user program at a Motion Control instruction or its use
Bit 3	-	-	-	"CommandNotAccepted" Command cannot be executed. A Motion Control instruction cannot be executed because necessary requirements have not been met.
Bit 4	-	-	-	Reserved
Bit 5	-	-	-	"SensorWarning" Error in encoder system
Bit 6	-	-	-	Reserved
Bit 7	-	-	-	"CommunicationWarning" Communication error Missing or faulty communication.
Bit 8	-	-	-	Reserved
Bit 9	-	-	-	Reserved
Bit 10	-	-	-	"HomingWarning" Error during homing operation The homing cannot be completed.
Bit 11	-	-	-	Reserved
Bit 12	-	-	-	Reserved
Bit 13	-	-	-	"PeripheralWarning" Error accessing a logical address
Bit 14... Bit 31	-	-	-	Reserved

A.3.17 InternalToTrace tags (external encoder)

The tag structure <TO>.InternalToTrace.<tag name> contains no application-relevant data. This tag structure is internally used.

Tags

Legend (Page 479)

Tag		Data type	Values	W	Description
InternalToTrace.		ARRAY [1..4] OF STRUCT			
	Id	DINT	-	DIR	-
	Value	LREAL	-	RON	-

A.4 Tags of the measuring input technology object

A.4.1 Legend

Tag	Name of the tag	
Data type	Data type of the tag	
Values	Value range of the tag - minimum value to maximum value If no specific value is shown, the value range limits of the relevant data type apply or the information under "Description".	
W	Effectiveness of changes in the technology data block	
	DIR	Direct: Values are changed directly and take effect at the start of the next MC-Servo [OB91].
	CAL	At call of Motion Control instruction: Values are changed directly and take effect at the start of the next MC-Servo [OB91] after the call of the corresponding Motion Control instruction in the user program.
	RES	Restart: Changes to the start value in the load memory are made using the extended instruction "WRIT_DBL" (write to DB in load memory). Changes will not take effect until after restart of the technology object.
	RON	Read only: The tag cannot and must not be changed during runtime of the user program.
Description	Description of the tag	

Access to the tags is with "<TO>.<tag name>". The placeholder <TO> represents the name of the technology object.

A.4.2 Display data (measuring input)

The <TO>.Status and <TO>.InputState tags show the status of the measuring input function and the input of the measuring input.

Tags

Legend (Page 492)

Tag	Data type	Values	W	Description
Status	DINT	-	RON	Measuring input function status 0: "INACTIVE" (measurement is not active) 1: "WAITING_FOR_TRIGGER" (measuring input is waiting for measuring event) 2: "TRIGGER_OCCURRED" (one or more measured values have been acquired) 3: "MEASURING_ERROR" (error during the measurement)
InputState	BOOL	-	RON	Measuring input input status FALSE: Input of measuring input not active TRUE: Input of measuring input active

A.4.3 Parameter tags (measuring input)

The tag structure <TO>.Parameter.<tag name> contains the configuration of the basic parameters of the measuring input technology object.

Tags

Legend (Page 492)

Tag		Data type	Values	W	Description
Parameter.		STRUCT			
	MeasuringInputType	DINT	-	RON	Measuring input type 0: "TIME_BASED" (measurement using time stamp) 1: "PROFIDRIVE" (measuring event using PROFIdrive telegram)
	PROFIdriveProbe Number	UDINT	1, 2	RES	Number of the measuring input to be used for a measurement using PROFIdrive telegram
	MeasuringRangeActivation Time	LREAL	0.0 to 1.0E12	RON	System share for activation time of measuring range
	MeasuringRangeAdditional ActivationTime	LREAL	0.0 to 1.0E12	RES	Additional activation time when using measuring range limits [ms]
	CorrectionTime	LREAL	0.0 to 1.0E12	RES	Correction time for the measurement result [ms]

A.4.4 Interface tags (measuring input)

The tag structure <TO>.Interface.<tag name> contains the configuration of the input properties for the technology object measuring input.

Tags

Legend (Page 492)

Tag		Data type	Values	W	Description
Interface.		STRUCT			
	Address	VREF	-	RON	I/O address for the digital measuring input

A.4.5 Units tags (measuring input)

The tag structure <TO>.Units.<tag name> shows the set technological units.

Tags

Legend (Page 492)

Tag		Data type	Values	W	Description	
Units.		STRUCT				
	LengthUnit	UDINT	-	RON	Unit for position	
					1010	m
					1013	mm
					1011	km
					1014	µm
					1015	nm
					1019	in
					1018	ft
					1021	mi
					1004	rad
					1005	°
	TimeUnit	UDINT	-	RON	Unit for time	
					1056	ms

A.4.6 MeasuredValues tags (measuring input)

The tag structure <TO>.MeasuredValues.<tag name> displays the measurement results.

Tags

Legend (Page 492)

Tag	Data type	Values	W	Description
MeasuredValues.	STRUCT			
MeasuredValue1	LREAL	-1.0E12 to 1.0E12	RON	First measured value
MeasuredValue2	LREAL	-1.0E12 to 1.0E12	RON	Second measured value
MeasuredValue1Counter	UDINT	0 to 2147483647	RON	Count value for the first measured value
MeasuredValue2Counter	UDINT	0 to 2147483647	RON	Count value for the second measured value
LostEdgeCounter1	UDINT	0 to 7	RON	LEC for measured value 1 (zero in the case of one-time measurement)
LostEdgeCounter2	UDINT	0 to 7	RON	LEC for measured value 2 (zero in the case of one-time measurement)

A.4.7 StatusWord tag (measuring input)

The <TO>.StatusWord tag contains the status information of the technology object.

Information on the evaluation of the individual bits (e.g. bit 2 "RestartActive") can be found in the Evaluating StatusWord, ErrorWord and WarningWord (Page 288) section.

Tags

Legend (Page 492)

Tag	Data type	Values	W	Description
Status Word	DWORD	-	RON	Status information of the technology object
Bit 0	-	-	-	"Control" 0: Technology object not in operation 1: Technology object in operation
Bit 1	-	-	-	"Error" 0: No error present 1: Error present
Bit 2	-	-	-	"RestartActive" 0: No "Restart" active 1: "Restart" active. The technology object is being reinitialized.
Bit 3	-	-	-	"OnlineStartValuesChanged" 0: "Restart" tags unchanged 1: Change to "Restart" tags. For the changes to be applied, the technology object must be reinitialized.
Bit 4	-	-	-	Reserved
Bit 5	-	-	-	"CommunicationOK" Communication between measuring input and measuring module 0: Not established 1: Established
Bit 6... Bit 31	-	-	-	Reserved

A.4.8 ErrorWord tag (measuring input)

The <TO>.ErrorWord tag indicates technology object errors (technology alarms).

Information on the evaluation of the individual bits (e.g. bit 3 "CommandNotAccepted") can be found in the Evaluating StatusWord, ErrorWord and WarningWord (Page 288) section.

Tags

Legend (Page 492)

Tag	Data type	Values	W	Description
Error-Word	DWORD	-	RON	
Bit 0	-	-	-	"SystemFault" A system-internal error has occurred.
Bit 1	-	-	-	"ConfigFault" Configuration error One or more configuration parameters are inconsistent or invalid.
Bit 2	-	-	-	"UserFault" Error in user program at a Motion Control instruction or its use
Bit 3	-	-	-	"CommandNotAccepted" Command cannot be executed. A Motion Control instruction cannot be executed because necessary requirements have not been met.
Bit 4... Bit 12	-	-	-	Reserved
Bit 13	-	-	-	"PeripheralError" Error accessing a logical address
Bit 14... Bit 31	-	-	-	Reserved

A.4.9 ErrorDetail tags (measuring input)

The tag structure <TO>.ErrorDetail.<tag name> contains the alarm number and the effective local alarm reaction for the technology alarm that is currently pending for the technology object.

You can find a list of the technology alarms and alarm reactions in the Technology alarms (Page 513) appendix.

Tags

Legend (Page 492)

Tag		Data type	Values	W	Description
ErrorDetail.		STRUCT			
	Number	UDINT	-	RON	Alarm number
	Reaction	DINT	0, 8	RON	Effective alarm reaction 0: No reaction 8: End measuring input processing

A.4.10 WarningWord tag (measuring input)

The <TO>.WarningWord tag indicates pending warnings for the technology object.

Information on the evaluation of the individual bits (e.g. bit 1 "ConfigWarning") can be found in the Evaluating StatusWord, ErrorWord and WarningWord (Page 288) section.

Tag

Legend (Page 492)

Tag	Data type	Values	W	Description
Warning Word	DWORD	-	RON	
Bit 0	-	-	-	"SystemWarning" A system-internal error has occurred.
Bit 1	-	-	-	"ConfigWarning" Configuration error One or several configuration parameters are adjusted internally.
Bit 2	-	-	-	"UserWarning" Error in user program at a Motion Control instruction or its use
Bit 3	-	-	-	"CommandNotAccepted" Command cannot be executed. A Motion Control instruction cannot be executed because necessary requirements have not been met.
Bit 4... Bit 12	-	-	-	Reserved
Bit 13				"PeripheralWarning" Error accessing a logical address
Bit 14... Bit 31	-	-	-	Reserved

A.5 Tags of the cam technology object

A.5.1 Legend

Tag	Name of the tag	
Data type	Data type of the tag	
Values	Value range of the tag - minimum value to maximum value If no specific value is shown, the value range limits of the relevant data type apply or the information under "Description".	
W	Effectiveness of changes in the technology data block	
	DIR	Direct: Values are changed directly and take effect at the start of the next MC-Servo [OB91].
	CAL	At call of Motion Control instruction: Values are changed directly and take effect at the start of the next MC-Servo [OB91] after the call of the corresponding Motion Control instruction in the user program.
	RES	Restart: Changes to the start value in the load memory are made using the extended instruction "WRIT_DBL" (write to DB in load memory). Changes will not take effect until after restart of the technology object.
	RON	Read only: The tag cannot and must not be changed during runtime of the user program.
Description	Description of the tag	

Access to the tags is with "<TO>.<tag name>". The placeholder <TO> represents the name of the technology object.

A.5.2 Display data (cam)

The <TO>.CamOutput tag indicates the switching state of the cam.

Tags

Legend (Page 500)

Tag	Data type	Values	W	Description
CamOutput	BOOL	-	RON	Switching state of output cam FALSE: not interconnected TRUE: Switched

A.5.3 Parameter tags (cam)

The tag structure <TO>.Parameter.<tag name> contains the configuration of the basic parameters of the output cam technology object.

Tags

Legend (Page 500)

Tag		Data type	Values	W	Description
Parameter.		STRUCT			
	OutputCamType	DINT	-	RES	Output cam type 0: Distance output cam 1: Time-based output cam
	PositionType	DINT	-	RES	Position reference 0: Position setpoint 1: Actual position
	OnCompensation	LREAL	0.0 to 1.0E12	DIR	Activation time Lead time for the switch-on edge
	OffCompensation	LREAL	0.0 to 1.0E12	DIR	Deactivation time Lead time for the switch-off edge
	Hysteresis	LREAL	0.0 to 1.0E12	DIR	Hysteresis value For output cams with reference to actual position, always enter a hysteresis value (> 0.0).

A.5.4 Interface tags (cam)

The tag structure <TO>.Interface.<tag name> contains the configuration of the output properties for the output cam technology object.

Tags

Legend (Page 500)

Tag		Data type	Values	W	Description
Interface.		STRUCT			
	EnableOutput	BOOL	-	RES	Activation of the output cam output FALSE: Output is deactivated TRUE: Output is activated
	Address	VREF	-	RON	I/O address of the output cam
	LogicOperation	DINT	-	RON	Logical operation of the output cam signals at the output 0: OR operation 1: AND operation

A.5.5 Units tags (cam)

The tag structure <TO>.Units.<tag name> shows the set technological units.

Tags

Legend (Page 500)

Tag		Data type	Values	W	Description	
Units.		STRUCT				
	LengthUnit	UDINT	-	RON	Unit for position	
					1010	m
					1013	mm
					1011	km
					1014	µm
					1015	nm
					1019	in
					1018	ft
					1021	mi
					1004	rad
					1005	°
	TimeUnit	UDINT	-	RON	Unit for time	
					1056	ms

A.5.6 StatusWord tag (output cam)

The <TO>.StatusWord tag contains the status information of the technology object.

Information on the evaluation of the individual bits (e.g. bit 2 "RestartActive") can be found in the Evaluating StatusWord, ErrorWord and WarningWord (Page 288) section.

Tags

Legend (Page 500)

Tag	Data type	Values	W	Description
Status Word	DWORD	-	RON	Status information of the technology object
Bit 0	-	-	-	"Control" 0: Technology object not in operation 1: Technology object in operation
Bit 1	-	-	-	"Error" 0: No error present 1: Error present
Bit 2	-	-	-	"RestartActive" 0: No "Restart" active 1: "Restart" active. The technology object is being reinitialized.
Bit 3	-	-	-	"OnlineStartValuesChanged" 0: "Restart" tags unchanged 1: Change to "Restart" tags. For the changes to be applied, the technology object must be reinitialized.
Bit 4	-	-	-	"OutputInverted" 0: Output cam output not inverted 1: Output cam output inverted
Bit 5	-	-	-	"CommunicationOK" Communication between output cam and output module 0: Not established 1: Established
Bit 6... Bit 31	-	-	-	Reserved

A.5.7 ErrorWord tag (output cam)

The <TO>.ErrorWord tag indicates technology object errors (technology alarms).

Information on the evaluation of the individual bits (e.g. bit 3 "CommandNotAccepted") can be found in the Evaluating StatusWord, ErrorWord and WarningWord (Page 288) section.

Tags

Legend (Page 500)

Tag	Data type	Values	W	Description
Error-Word	DWORD	-	RON	
Bit 0	-	-	-	"SystemFault" A system-internal error has occurred.
Bit 1	-	-	-	"ConfigFault" Configuration error One or more configuration parameters are inconsistent or invalid.
Bit 2	-	-	-	"UserFault" Error in user program at a Motion Control instruction or its use
Bit 3	-	-	-	"CommandNotAccepted" Command cannot be executed. A Motion Control instruction cannot be executed because necessary requirements have not been met.
Bit 4... Bit 12	-	-	-	Reserved
Bit 13	-	-	-	"PeripheralError" Error accessing a logical address
Bit 14... Bit 31	-	-	-	Reserved

A.5.8 ErrorDetail tags (cam)

The tag structure <TO>.ErrorDetail.<tag name> contains the alarm number and the effective local alarm reaction for the technology alarm that is currently pending for the technology object.

You can find a list of the technology alarms and alarm reactions in the Technology alarms (Page 513) appendix.

Tags

Legend (Page 500)

Tag		Data type	Values	W	Description
ErrorDetail.		STRUCT			
	Number	UDINT	-	RON	Alarm number
	Reaction	DINT	0, 6	RON	Effective alarm reaction 0: No reaction 6: Output cam processing is complete.

A.5.9 WarningWord tag (output cam)

The <TO>.WarningWord tag indicates pending warnings for the technology object.

Information on the evaluation of the individual bits (e.g. bit 1 "ConfigWarning") can be found in the Evaluating StatusWord, ErrorWord and WarningWord (Page 288) section.

Tag

Legend (Page 500)

Tag	Data type	Values	W	Description
Warning Word	DWORD	-	RON	
Bit 0	-	-	-	"SystemWarning" A system-internal error has occurred.
Bit 1	-	-	-	"ConfigWarning" Configuration error One or several configuration parameters are adjusted internally.
Bit 2	-	-	-	"UserWarning" Error in user program at a Motion Control instruction or its use
Bit 3	-	-	-	"CommandNotAccepted" Command cannot be executed. A Motion Control instruction cannot be executed because necessary requirements have not been met.

Tag	Data type	Values	W	Description
Bit 4... Bit 12	-	-	-	Reserved
Bit 13				"PeripheralWarning" Error accessing a logical address
Bit 14... Bit 31	-	-	-	Reserved

A.6 Tags of the cam track technology object

A.6.1 Legend

Tag	Name of the tag	
Data type	Data type of the tag	
Values	Value range of the tag - minimum value to maximum value If no specific value is shown, the value range limits of the relevant data type apply or the information under "Description".	
W	Effectiveness of changes in the technology data block	
	DIR	Direct: Values are changed directly and take effect at the start of the next MC-Servo [OB91].
	CAL	At call of Motion Control instruction: Values are changed directly and take effect at the start of the next MC-Servo [OB91] after the call of the corresponding Motion Control instruction in the user program.
	RES	Restart: Changes to the start value in the load memory are made using the extended instruction "WRIT_DBL" (write to DB in load memory). Changes will not take effect until after restart of the technology object.
	RON	Read only: The tag cannot and must not be changed during runtime of the user program.
Description	Description of the tag	

Access to the tags is with "<TO>.<tag name>". The placeholder <TO> represents the name of the technology object.

A.6.2 Display data (cam track)

The following tags indicate the status of the cam track:

Tags

Legend (Page 506)

Tag	Data type	Values	W	Description
Status	DINT	-	RON	0: "INACTIVE" (inactive) 1: "ACTIVE" (active) 2: "ACTIVE_WAITING_FOR_NEXT_CYCLE" (active and waiting for next track)
TrackOutput	BOOL	-	RON	FALSE: Cam track is not output. TRUE: Cam track is output.
SingleCamState	DWORD	16#0 to 16#FFFF_FFFF	RON	Switched on output cam (bit-masked) 0: Output cam is not switched on 1: Output cam is switched on
TrackPosition	LREAL	-1.0E12 to 1.0E12	RON	Display of the current position within the cam track
MatchPosition	LREAL	-1.0E12 to 1.0E12	RON	Reference position of the current cam track During cyclic processing of the cam track, the continued reference position of the current cam track is displayed. The unique detection and output of the position is only possible when the assigned technology object is in motion.

A.6.3 Parameter tags (cam track)

The tag structure <TO>.Parameter.<tag name> contains the configuration of the basic parameters of the cam track technology object.

Tags

Legend (Page 506)

Tag			Data type	Values	W	Description
Parameter.			STRUCT			
	CamTrackType		DINT	-	RES	Output cam type 0: Distance output cam 1: Time-based output cam
	PositionType		DINT	-	RES	Position reference 0: Position setpoint 1: Actual position
	ReferencePosition		LREAL	-1.0E12 to 1.0E12	DIR	Reference position
	CamTrackLength		LREAL	0.001 to 1.0E12	DIR	Track length
	CamMasking		DWORD	16#0 to 16#FFFF_FFFF	DIR	Bit masking of individual output cams
	OnCompensation		LREAL	0.0 to 1.0E12	DIR	Activation time Lead time for the switch-on edge
	OffCompensation		LREAL	0.0 to 1.0E12	DIR	Deactivation time Lead time for the switch-off edge
	Hysteresis		LREAL	0.0 to 1.0E12	DIR	Hysteresis value For output cams with reference to actual position, always enter a hysteresis value (> 0.0).
	Cam[1 … 32].		STRUCT			
		OnPosition	LREAL	0.0 to 1.0E12	CAL	Start position (distance and time-based output cams)
		Offposition	LREAL	0.0 to 1.0E12	CAL	End position (distance output cam)
		Duration	LREAL	0.001 to 1.0E12	CAL	Switch-on duration (time-based output cam)
		Existent	BOOL	-	CAL	FALSE: Output cam not used TRUE: Output cam is used

A.6.4 Interface tags (cam track)

The tag structure <TO>.Interface.<tag name> contains the configuration of the output properties for the cam track technology object.

Tags

Legend (Page 506)

Tag		Data type	Values	W	Description
Interface.		STRUCT			
	EnableOutput	BOOL	-	RES	Output cam output at the bit specified under "<TO>.Interface.Address" FALSE: No output TRUE: Output
	Address	VREF	-	RON	I/O address for digital cam output

A.6.5 Units tags (cam track)

The tag structure <TO>.Units.<tag name> shows the set technological units.

Tags

Legend (Page 506)

Tag		Data type	Values	W	Description	
Units.		STRUCT				
	LengthUnit	UDINT	-	RON	Unit for position	
					1010	m
					1013	mm
					1011	km
					1014	µm
					1015	nm
					1019	in
					1018	ft
					1021	mi
					1004	rad
					1005	°
	TimeUnit	UDINT	-	RON	Unit for time	
					1056	ms

A.6.6 StatusWord tag (cam track)

The <TO>.StatusWord tag contains the status information of the technology object.

Information on the evaluation of the individual bits (e.g. bit 2 "RestartActive") can be found in the Evaluating StatusWord, ErrorWord and WarningWord (Page 288) section.

Tags

Legend (Page 506)

Tag	Data type	Values	W	Description
Status Word	DWORD	-	RON	Status information of the technology object
Bit 0	-	-	-	"Control" 0: Technology object not in operation 1: Technology object in operation
Bit 1	-	-	-	"Error" 0: No error present 1: Error present
Bit 2	-	-	-	"RestartActive" 0: No "Restart" active 1: "Restart" active. The technology object is being reinitialized.
Bit 3	-	-	-	"OnlineStartValuesChanged" 0: "Restart" tags unchanged 1: Change to "Restart" tags. For the changes to be applied, the technology object must be reinitialized.
Bit 4	-	-	-	"OutputInverted" 0: Output cam output not inverted 1: Output cam output inverted
Bit 5	-	-	-	"CommunicationOK" Communication between cam track and output module 0: Not established 1: Established
Bit 6... Bit 31	-	-	-	Reserved

A.6.7 ErrorWord tag (cam track)

The <TO>.ErrorWord tag indicates technology object errors (technology alarms).

Information on the evaluation of the individual bits (e.g. bit 3 "CommandNotAccepted") can be found in the Evaluating StatusWord, ErrorWord and WarningWord (Page 288) section.

Tags

Legend (Page 506)

Tag	Data type	Values	W	Description
Error-Word	DWORD	-	RON	
Bit 0	-	-	-	"SystemFault" A system-internal error has occurred.
Bit 1	-	-	-	"ConfigFault" Configuration error One or more configuration parameters are inconsistent or invalid.
Bit 2	-	-	-	"UserFault" Error in user program at a Motion Control instruction or its use
Bit 3	-	-	-	"CommandNotAccepted" Command cannot be executed. A Motion Control instruction cannot be executed because necessary requirements have not been met.
Bit 4... Bit 12	-	-	-	Reserved
Bit 13	-	-	-	"PeripheralError" Error accessing a logical address
Bit 14... Bit 31	-	-	-	Reserved

A.6.8 ErrorDetail tags (cam track)

The tag structure <TO>.ErrorDetail.<tag name> contains the alarm number and the effective local alarm reaction for the technology alarm that is currently pending for the technology object.

You can find a list of the technology alarms and alarm reactions in the Technology alarms (Page 513) appendix.

Tags

Legend (Page 506)

Tag		Data type	Values	W	Description
ErrorDetail.		STRUCT			
	Number	UDINT	-	RON	Alarm number
	Reaction	DINT	0, 7	RON	Effective alarm reaction 0: No reaction 7: Cam track processing Is complete.

A.6.9 WarningWord tag (cam track)

The <TO>.WarningWord tag indicates pending warnings for the technology object.

Information on the evaluation of the individual bits (e.g. bit 1 "ConfigWarning") can be found in the Evaluating StatusWord, ErrorWord and WarningWord (Page 288) section.

Tag

Legend (Page 492)

Tag	Data type	Values	W	Description
Warning Word	DWORD	-	RON	
Bit 0	-	-	-	"SystemWarning" A system-internal error has occurred.
Bit 1	-	-	-	"ConfigWarning" Configuration error One or several configuration parameters are adjusted internally.
Bit 2	-	-	-	"UserWarning" Error in user program at a Motion Control instruction or its use
Bit 3	-	-	-	"CommandNotAccepted" Command cannot be executed. A Motion Control instruction cannot be executed because necessary requirements have not been met.

Tag	Data type	Values	W	Description
Bit 4... Bit 12	-	-	-	Reserved
Bit 13				"PeripheralWarning" Error accessing a logical address
Bit 14... Bit 31	-	-	-	Reserved

A.7 Technology alarms

A.7.1 Overview

The following table shows an overview of the technology alarms and the corresponding alarm reactions. When a technology alarm occurs, evaluate the entire indicated alarm text, in order to find the precise cause.

Legend

No.	Number of the technology alarm (corresponds to <TO>.ErrorDetail.Number)
Reaction	Effective alarm reaction (corresponds to <TO>.ErrorDetail.Reaction)
Error bit	Bit that is set in <TO>.ErrorWord when the technology alarm occurs A description of the bits can be found in the appendix (Page 475).
Warning bit	Bit that is set in <TO>.WarningWord when the technology alarm occurs A description of the bits can be found in the appendix (Page 477).
Restart	To acknowledge the technology alarm, the technology object must be reinitialized (Restart).
Diagnostic buffer	The alarm is entered in the diagnostics buffer.
Alarm text	Displayed alarm test (limited)

List of the technology alarms

No.	Reaction	Error bit	Warning bit	Restart	Diagnostic buffer	Alarm text
101	Remove enable	X1	-	X	X	Configuration error.
102	Remove enable	X15	-	X	X	Drive configuration adaptation error.
103	Remove enable	X15	-	X	X	Encoder configuration adaptation error.
104	Stop with maximum dynamic values	X1	-	-	-	SW limit switch specification error.
105	Remove enable	X1	-	X	X	Drive configuration error.
106	Remove enable	X1	-	-	X	Drive connection configuration error.
107	Remove enable	X1	-	X	X	Encoder configuration error.
108	Remove enable	X1	-	-	X	Encoder connection configuration error.
109	Remove enable	X1	-	X	-	Configuration error.
110	No reaction	-	X1	-	-	Configuration is adjusted internally.
111	No reaction	-	X15	-	X	TO and drive configuration inconsistent.
112	No reaction	-	X15	-	X	TO and encoder configuration inconsistent.
113	Remove enable	X2	-	X	-	Isochronous mode not possible.
201	Remove enable	X0	-	X	X	Internal error.
202	No reaction	X0	-	X	-	Internal configuration error.
203	Remove enable	X0	-	X	-	Internal error.
204	Remove enable	X0	-	-	-	Commissioning error.
304	Stop with emergency stop ramp	X2	-	-	-	Velocity limit is zero.
305	Stop with emergency stop ramp	X2	-	-	-	• Acceleration limit is zero. • Deceleration limit is zero.
306	Stop with emergency stop ramp	X2	-	-	-	Jerk limit is zero.
307	Stop with maximum dynamic values	X2	-	-	X	• Negative numerical value range of the position reached. • Positive numerical value range of the position reached.
308	Remove enable	X2	-	-	X	• Negative numerical value range of the position exceeded. • Positive numerical value range of the position exceeded.
321	Stop with emergency stop ramp	X3	-	-	-	Axis not homed.
322	No reaction	-	X3	-	-	Restart not executed.
323	Remove enable	X3	-	-	-	MC_Home could not be performed.
341	Stop with maximum dynamic values	X10	-	-	-	Error in homing data.
342	Stop with emergency stop ramp	X10	-	-	-	Reference cam/encoder zero mark not found.

No.	Reaction	Error bit	Warning bit	Restart	Diagnostic buffer	Alarm text
343	Remove enable	X1	-	-	-	Homing function not supported by device.
401	Remove enable	X13	-	-	X	Error accessing logical address.
411	Remove enable	X5	-	-	X	Faulty encoder at the logical address.
412	Remove enable	X5	-	-	-	Permitted actual value range exceeded.
421	Remove enable	X4	-	-	X	Faulty drive at the logical address.
431	Remove enable	X7	-	-	X	Faulty communication with device at logical address.
501	No reaction	-	X6	-	-	Programmed velocity is limited.
502	No reaction	-	X6	-	-	• Programmed acceleration is being limited. • Programmed deceleration is being limited.
503	No reaction	-	X6	-	-	Programmed jerk is limited.
504	No reaction	-	X6	-	-	Speed setpoint monitoring active.
511	No reaction	-	X6	-	-	Dynamic limits are violated by the kinematics motion.
521	Remove enable	X11	-	-	-	Following error.
522	No reaction	-	X11	-	-	Warning following error tolerance.
531	Remove enable	X9	-	-	-	• Positive HW limit switch approached. • Negative HW limit switch approached. • Illegal free travel direction of active hardware limit switch. • HW limit switch polarity reversed, free travel not possible. • Both hardware limit switches active, retraction not possible.
533	Stop with maximum dynamic values	X8	-	-	-	• Negative SW limit switch approached. • Positive SW limit switch approached.
534	Remove enable	X8	-	-	-	• Negative SW limit switch is crossed. • Positive SW limit switch is crossed.
541	Remove enable	X12	-	-	-	Position monitoring error.
542	Remove enable	X2	-	-	-	Clamping monitoring error: Axis leaving clamping tolerance window.
550	Track setpoints	X4	-	-	-	Drive-autonomous motion is being executed.
551	No reaction	X2	X6	-	-	Maximum velocity cannot be reached with drive/axis parameters.
552	Remove enable	X15	-	-	-	Adaptation error of encoder during power-up.
601	Stop with maximum dynamic values	X14	-	-	-	Leading axis is not assigned or defective.
603	Remove enable	X14	-	-	-	Leading axis is not in position-controlled mode.
608	Stop with maximum dynamic values	X14	-	-	-	Error during synchronization.

No.	Reaction	Error bit	Warning bit	Restart	Diagnostic buffer	Alarm text
611	Remove enable	X2	-	-	-	The cam specified in the MC_CamIn.Cam parameter has not been configured or is not available or is not interpolated.
612	Remove enable	X2	-	-	-	Specified cam has not been interpolated.
700	Remove enable	X2	-	-	-	Output cam limiting error.
701	Remove enable	X13	-	-	-	I/O output error.
702	Remove enable	X2	-	-	-	Position value valid.
703	Remove enable	X2	-	-	-	Cam track data faulty.
704	Remove enable	X2	-	-	-	Output cam data faulty.
750	Remove enable	X2	-	-	-	Measuring job not possible during homing of assigned axis.
752	Remove enable	X2	-	-	-	Validity range of measuring job not recognized.
753	Remove enable	X2	-	-	-	Only one measuring input can access an encoder at a time.
754	Remove enable	X2	-	-	-	Measuring input configuration in external device is not correct.
755	Remove enable	X13	-	-	-	Measuring job not possible.
758	No reaction	X2	-	-	-	A measuring edge was not evaluated.

See also

Technology alarms (Page 333)

A.7.2 Technology alarms 101-113

Technology alarm 101

Alarm reaction: Remove enable

Restart: Required

Alarm text	Remedy
Configuration error.	
Value in <tag> not allowed.	Adjust the specified value.
Faulty load gear factors.	Adjust the load gear factors in <TO>.LoadGear.Numerator and/or <TO>.LoadGear.Denominator .
At least one encoder required. Sensor[].existent	Configure at least one encoder.
Sensor[1] must be configured for DSC.	Configure Sensor[1]
Values in Sensor.Parameter.FineResolutionXist1 and P979 are not identical.	Set the identical fine resolution on the technology as on the drive.
Controller parameter incorrect.	Adjust the <TO>.PositionController.Kv value.
PROFIBUS parameter assignment is inconsistent; sum Ti and To greater than send clock.	Adjust the send clock in the hardware configuration.
Drive or drive telegram type or encoder not suitable for DSC.	Check whether the drive can be operated with DSC and adjust the drive telegram if required.
TimeOut parameter outside of limits.	Set the monitoring time of the axis control panel to a valid value.
Simulation.Mode parameter outside of limits.	Set the parameter to a valid value.
Telegram in Actor.Interface.AddressIn and AddressOut are not identical.	Set the identical drive telegram type for sending and receiving direction.
Illegal combination for referencing data incremental. encoder.	Check the active and passive homing settings.
Telegram in Sensor.Interface.AddressIn and AddressOut are not identical.	Set the identical encoder telegram type for sending and receiving direction.

Technology alarm 102

Alarm reaction: Remove enable

Restart: Required

Alarm text	Remedy
Drive configuration adaptation error.	
Drive is not assigned to a SINAMICS device.	The drive adaptation is only available for SINAMICS drives.
Drive is not interconnected directly to I/O area.	During configuration of the axis, the log addresses were set to a data block or bit memory, for example. The adaptation is only possible when the encoder has been directly interconnected to an I/O area.
Adaptation canceled due to insufficient resources.	Check whether your device supports acyclic data communication according to PROFIdrive.
Parameter does not exist, value unreadable or invalid.	
Maximum speed	
Maximum torque/force (P1520)	
Maximum torque/force (P1521)	
Torque resolution	
Rated speed	
Rated torque	
Motor type	

Technology alarm 103

Alarm reaction: Remove enable

Restart: Required

Alarm text	Remedy
Encoder configuration adaptation error.	
Encoder is not assigned to a SINAMICS device.	The encoder adaptation is only available for SINAMICS devices and external Siemens encoders.
Encoder is not interconnected directly to I/O area.	During configuration of the axis, the log addresses were set to a data block or bit memory address area, for example. The adaptation is only possible when the encoder has been directly interconnected to an I/O area.
Adaptation canceled due to insufficient resources.	Check whether your device supports acyclic data communication according to PROFIdrive.
Parameter does not exist, value unreadable or invalid.	
Encoder system	
Encoder resolution	
Encoder fine resolution Gx_XIST1	
Encoder fine resolution Gx_XIST2	
Encoder revolutions	

Technology alarm 104

Alarm reaction: Stop with maximum dynamic values

Restart: Not required

Alarm text	Remedy
SW limit switch specification error.	
Neg. SW limit switch greater than pos. SW limit switch.	Change the position of the software limit switches.

Technology alarm 105

Alarm reaction: Remove enable

Restart: Required

Alarm text	Remedy
Drive configuration error.	
HW Configuration.	• Connect a suitable device. • Check the device (I/Os). • Check the topology of the project. • Compare the device configuration and the configuration of the technology object. • Contact customer service.
The TO needs a smaller servo cycle clock.	
Error in internal communication.	• Check the project for consistency and download it to the controller again. • Contact customer service.
Address for drive data does not exist in project.	Check the project for consistency and download it to the controller again.

Technology alarm 106

Alarm reaction: Remove enable

Restart: Not required

Alarm text	Remedy
Drive connection configuration error.	
System has no communication with drive.	Internal system error. • Check the project for consistency and download it to the controller again. • Contact customer service.
Drive not initialized during ramp-up.	• Ensure that the communication between the controller and drive is established. To do this, evaluate <TO>.StatusDrive.CommunicationOK before enabling the axis. • To enable a technology object, the drive initialization must be complete. Trigger the job again later.

Technology alarm 107

Alarm reaction: Remove enable

Restart: Required

Alarm text	Remedy
Encoder configuration error.	
HW Configuration	• Connect a suitable device. • Check the device (I/Os). • Check the topology of the project. • Compare the device configuration and the configuration of the technology object. • Contact customer service.
The TO needs a smaller servo cycle clock.	
Error internal communication.	• Check the project for consistency and download it to the controller again. • Contact customer service.

Technology alarm 108

Alarm reaction: Remove enable

Restart: Not required

Alarm text	Remedy
Encoder connection configuration error.	
System without communication to encoder.	Internal system error. • Check the project for consistency and download it to the controller again. • Contact customer service.
Encoder not initialized during ramp-up.	• Ensure that the communication between the controller and encoder is established. To do this, evaluate <TO>.StatusSensor[1..4].CommunicationOK before enabling the axis and also check if the status of the encoder actual value is <TO>.StatusSensor[1..4].State = VALID (2). • To enable a technology object, the encoder initialization must be complete. Trigger the job again later.
Encoder data address missing in project.	Check the project for consistency and download it to the controller again.

Technology alarm 109

Alarm reaction: Remove enable

Restart: Required

Alarm text	Remedy
Configuration error.	
Neg. HW limit switch.	• Connect a suitable device. • Check the device (I/Os). • Check the topology of the project. • Compare the device configuration and the configuration of the technology object. • Contact customer service.
Pos. HW limit switch	
Reference cam "Active homing".	
Reference cam "Passive homing".	
Enable bit for the analog drive interface.	
DriveReady bit of the analog drive interface.	
Measurement sensing input is faulty.	
Output cam output faulty.	

Technology alarm 110

Alarm reaction: No reaction

Restart: Not required

Alarm text	Remedy
Configuration is adjusted internally.	
Actor.DriveParameter.MaxSpeed is limited.	• Correct the reference value in the drive and in the configuration of the technology object to <TO>.Actor.MaxSpeed /2. • With analog drive connection, correct the reference value in the drive and in the configuration of the technology object to <TO>.Actor.MaxSpeed /1.17. • The value can be set in the drive, for example, in p2000 = p1082.
PositioningMonitoring.ToleranceTime is limited.	Change the configuration data.
DynamicDefaults.EmergencyDeceleration is limited.	
DriveParameter.ReferenceTorque is too low.	

Technology alarm 111

Alarm reaction: No reaction

Restart: Not required

Alarm text	Remedy
TO and drive configuration inconsistent.	
Different telegram.	Match the telegram configuration for the technology object with the telegram configuration in the drive. (P922 in drive)
Incompatible torque resolution.	Adjust the high torque resolution for the drive.
Master application cycle and servo cycle clock not the same.	Adjust the cycle of the master application in the device configuration for the PROFIBUS slave.
Servo cycle clock and drive cycle clock not equal.	
Linear motor configured.	Set round-frame motor (P300) in the drive.

Technology alarm 112

Alarm reaction: No reaction

Restart: Not required

Alarm text	Remedy
TO and encoder configuration inconsistent.	
Different telegram type.	Match the telegram configuration for the technology object with the telegram configuration in the drive. (P922 in drive)
Encoder is not an absolute encoder.	Configure the encoder for the technology object as an incremental encoder.
Master application cycle and servo cycle clock not the same.	Adjust the cycle of the master application in the device configuration for the PROFIBUS slave.
Servo cycle clock and drive cycle clock not equal.	

Technology alarm 113

Alarm reaction: Remove enable

Restart: Required

Alarm text	Remedy
Isochronous mode not possible.	• The configured output for the cam or cam track technology object or the input for the technology object measuring input cannot be used in isochronous mode. Configure the I/O in the device configuration as isochronous I/O. • Make sure that the organization block MC_Servo [OB91] is called synchronously with the bus system.

A.7.3 Technology alarms 201-204

Technology alarm 201

Alarm reaction: Remove enable

Restart: Required

Alarm text	Solution
Internal error.	Contact customer service.

Technology alarm 202

Alarm reaction: No reaction

Restart: Required

Alarm text	Solution
Internal configuration error.	Contact customer service.

Technology alarm 203

Alarm reaction: Remove enable

Restart: Required

Alarm text	Solution
Internal error.	Contact customer service.

Technology alarm 204

Alarm reaction: Remove enable

Restart: Not required

Alarm text	Solution
Commissioning error.	
Connection to the TIA Portal interrupted.	Check the connection properties.

A.7.4 Technology alarms 304-343

Technology alarm 304

Alarm reaction: Stop with emergency stop ramp

Restart: Not required

Alarm text	Remedy
Velocity limit is zero.	Enter a non-zero value for the maximum velocity (DynamicLimits.MaxVelocity) in the dynamic limits.

Technology alarm 305

Alarm reaction: Stop with emergency stop ramp

Restart: Not required

Alarm text	Remedy
Acceleration/deceleration limit is zero.	
Acceleration	Enter a non-zero value for the maximum acceleration (DynamicLimits.MaxAcceleration) in the dynamic limits.
Deceleration	Enter a non-zero value for the maximum deceleration (DynamicLimits.MaxDeceleration) in the dynamic limits.

Technology alarm 306

Alarm reaction: Stop with emergency stop ramp

Restart: Not required

Alarm text	Remedy
Jerk limit is zero.	Enter a non-zero value for the maximum jerk (DynamicLimits.MaxJerk) in the dynamic limits.

Technology alarm 307

Alarm reaction: Stop with maximum dynamic values

Restart: Not required

Alarm text	Remedy
Negative/positive numerical value range of the position reached.	
Negative	Enable the "Modulo" setting for the technology object.
Positive	

Technology alarm 308

Alarm reaction: Remove enable

Restart: Not required

Alarm text	Remedy
Negative/positive numerical value range of the position exceeded.	
Negative	Enable the "Modulo" setting for the technology object.
Positive	

Technology alarm 321

Alarm reaction: Stop with emergency stop ramp

Restart: Not required

Alarm text	Remedy
Axis not homed.	To perform an absolute positioning motion, you must home the technology object.

Technology alarm 322

Alarm reaction: No reaction

Restart: Not required

Alarm text	Remedy
Restart not executed.	
The technology object is not ready for restart.	Download the project again.
The condition for restart of the technology object is not satisfied.	Disable the technology object.

Technology alarm 323

Alarm reaction: Remove enable

Restart: Not required

Alarm text	Remedy
MC_Home could not be performed.	• Enable the "Modulo" setting for the technology object. • Adjust the position value for use of the Motion Control instruction "MC_Home".

Technology alarm 341

Alarm reaction: Stop with maximum dynamic values

Restart: Not required

Alarm text	Remedy
Error in homing data.	
Approach velocity is zero.	Check the configuration for homing (Homing.ApproachVelocity).
Homing velocity is zero.	Check the configuration for homing (Homing.ReferencingVelocity).

Technology alarm 342

Alarm reaction: Stop with emergency stop ramp

Restart: Not required

Alarm text	Remedy
Reference cam/encoder zero mark not found.	The reference cam configured for homing was not found in the traversing range of the axis.

Technology alarm 343

Alarm reaction: Remove enable

Restart: Not required

Alarm text	Remedy
Homing function not supported by device.	Configure a reference switch input for the pulse generator output used in the properties of the C-CPU. ("Pulse generators (PTO/PWM) > PTO[n]/PWN[n] > Hardware inputs/outputs") When homing across a zero mark, the CPU transfers the reference switch input as zero mark.

A.7.5 Technology alarms 401-431

Technology alarm 401

Alarm reaction: Remove enable

Restart: Not required

Alarm text	Solution
Error accessing logical address.	
Invalid address.	• Connect a suitable device. • Check the device (I/Os). • Check the topology of the project. • Compare the device configuration and the configuration of the technology object. • Contact customer service.
Input address is invalid.	
Output address is invalid.	

Technology alarm 411

Alarm reaction: Remove enable

Restart: Not required

Alarm text	Solution
Faulty encoder at the logical address.	
Alarm message from encoder.	Check the function, connections and I/Os of the encoder.
HW error encoder.	
Encoder dirty.	
Read error encoder absolute value.	Compare the encoder type in the drive or encoder parameter P979 with the configuration data of the technology object.
Zero mark monitoring encoder.	Encoder signals error in zero mark monitoring (fault code 0x0002 in Gx_XIST2, see PROFIdrive profile).
Encoder in Parking state.	• Search for the cause of the error in the connected drive or encoder. • Check whether the alarm was possibly triggered by a commissioning action involving the drive or encoder.

Technology alarm 412

Alarm reaction: Remove enable

Restart: Not required

Alarm text	Remedy
Permitted actual value range exceeded.	
Positive.	Home the axis/encoder in a valid actual value range.
Negative.	
Modulo length.	Adjust the modulo length to the utilized encoder.

Technology alarm 421

Alarm reaction: Remove enable

Restart: Not required

Alarm text	Solution
Faulty encoder at the logical address.	
Alarm message from drive.	• Check the functions and connections of the drive. • Enable and acknowledge safety function in the drive.
No drive control required.	
Drive has shut down.	
Drive enable not possible.	

Technology alarm 431

Alarm reaction: Remove enable

Restart: Not required

Alarm text	Solution
Faulty communication with device at logical address.	
Drive failed.	Check the function, connections and I/Os of the drive .
Signs of life of drive faulty.	• Check the function, connections and I/Os of the drive . • Compare the clock parameters in the device configuration (PROFIBUS line, slave OM for drive or encoder) and the execution system. Tmapc and servo must be set to the same cycle time. (Incorrect parameter assignment is indicated by reason 0x0080.) • If you call the application cycle of the MC-Servo [OB91] reduced to the send clock of a PROFINET IO system and the technology alarm 431 (Signs of life of drive faulty) is repeatedly shown, increase the update time of the send clock.
Encoder failed.	Check the function, connections and I/Os of the encoder.
Signs of life of encoder faulty.	• Check the function, connections and I/Os of the encoder. • Compare the clock parameters in the device configuration (PROFIBUS line, slave OM for drive or encoder) and the execution system. Tmapc and servo must be set to the same cycle time.

A.7.6 Technology alarms 501-552

Technology alarm 501

Alarm reaction: No reaction

Restart: Not required

Alarm text	Remedy
Programmed velocity is limited.	• Check the value for the velocity of the Motion Control instruction. • Check the configuration of the dynamic limits.

Technology alarm 502

Alarm reaction: No reaction

Restart: Not required

Alarm text	Remedy
Programmed acceleration/deceleration is being limited.	
Acceleration	• Check the value for the acceleration of the Motion Control instruction. • Check the configuration of the dynamic limits.
Deceleration	• Check the value for the deceleration of the Motion Control instruction. • Check the configuration of the dynamic limits.

Technology alarm 503

Alarm reaction: No reaction

Restart: Not required

Alarm text	Remedy
Programmed jerk is limited.	• Check the value for the jerk of the Motion Control instruction. • Check the configuration of the dynamic limits.

Technology alarm 504

Alarm reaction: No reaction

Restart: Not required

Alarm text	Solution
Speed setpoint monitoring active.	• Check the mechanical configuration. • Check the encoder connection. • Check the configuration of the speed setpoint interface. • Check the configuration of the control loop. • Check the value for the maximum velocity DynamicLimits.MaxVelocity.

Technology alarm 511

Alarm reaction: No reaction

Restart: Not required

Alarm text	Remedy
Dynamic limits are violated by the kinematics motion.	
Velocity	Reduce the velocity of the kinematics motion.
Acceleration	Reduce the acceleration of the kinematics motion.
Deceleration	Reduce the deceleration of the kinematics motion.

Technology alarm 521

Alarm reaction: Remove enable

Restart: Not required

Alarm text	Solution
Following error.	• Check the configuration of the control loop. • Check the direction signal of the encoder. • Check the configuration of the following error monitoring.

Technology alarm 522

Alarm reaction: No reaction

Restart: Not required

Alarm text	Solution
Warning following error tolerance.	• Check the configuration of the control loop. • Check the direction signal of the encoder. • Check the configuration of the following error monitoring.

Technology alarm 531

Alarm reaction: Remove enable

Restart: Not required

Alarm text	Solution
Pos. HW limit switch reached.	Acknowledge the alarm. After the acknowledgment, motions in the negative direction are allowed.
Neg. HW limit switch reached.	Acknowledge the alarm. After the acknowledgment, motions in the positive direction are allowed.
Illegal free travel direction of active hardware limit switch.	The programmed direction of movement is disabled due to the active hardware limit switch. Retract the axis in the opposite direction.
HW limit switch polarity reversed, free travel not possible.	• Check the mechanical configuration of the hardware limit switch. • Check the limit switches. • The error can be acknowledged by switching the controller off and on or using "MC_Reset" with "Restart" = TRUE.
Both hardware limit switches active, retraction not possible.	

Technology alarm 533

Alarm reaction: Stop with maximum dynamic values

Restart: Not required

Alarm text	Solution
Negative/positive SW limit switch approached.	
Negative	The software limit switch was reached from an active motion. Move the axis away from the software limit switch in the positive direction.
Positive	The software limit switch was reached from an active motion. Move the axis away from the software limit switch in the negative direction.

Technology alarm 534

Alarm reaction: Remove enable

Restart: Not required

Alarm text	Solution
Negative/positive SW limit switch is crossed.	
Negative	The SW limit switch was crossed. Acknowledge the alarm. After the acknowledgment, motions in the positive direction are allowed.
Positive	The SW limit switch was crossed. Acknowledge the alarm. After the acknowledgment, motions in the negative direction are allowed.

Technology alarm 541

Alarm reaction: Remove enable

Restart: Not required

Alarm text	Solution
Position monitoring error.	
Target range not reached.	The target range was not reached within the tolerance time. • Check the configuration of the position monitoring. • Check the configuration of the control loop.
Exit target range again.	The target range was exited within the minimum dwell time. • Check the configuration of the position monitoring. • Check the configuration of the control loop.

Technology alarm 542

Alarm reaction: Remove enable

Restart: Not required

Alarm text	Solution
Clamping monitoring error: Axis leaving clamping tolerance window.	The axis has executed a motion greater than the permissible tolerance at the fixed stop. Check whether the fixed stop has broken away.

Technology alarm 550

Alarm reaction: Track setpoints

Restart: Not required

Alarm text	Solution
Drive-autonomous motion is being executed.	The drive is performing a motion that was not specified by the technology object. Check whether there is an active safety function in the drive.

Technology alarm 551

Alarm reaction: No reaction

Restart: Not required

Alarm text	Solution
Maximum velocity cannot be reached with drive/axis parameters.	The configured maximum velocity cannot be reached with the configured mechanics of the axis. Check the configuration of the mechanics and the set reference speed.

Technology alarm 552

Alarm reaction: Remove enable

Restart: Not required

Alarm text		Solution
Adaptation error of encoder during power-up.		
	Encoder is not assigned to a SINAMICS device.	• The operationally active encoder could not be adapted. However, there are other encoders that can be used. Use the encoder switch (MC_SetSensor). • The encoder set as the operationally active encoder could not be adapted. • Specify a different sensor for the initialization of the technology object.
	Encoder is not interconnected directly to I/O area.	During configuration of the axis, the log addresses were set to a data block area or bit memory area. The adaptation is only possible when the encoder has been directly interconnected to an I/O area.
	Adaptation canceled due to insufficient resources.	Check whether your device supports acyclic data communication according to PROFIdrive.
	Parameter does not exist, value unreadable or invalid.	
	Encoder system	
	Encoder resolution	
	Encoder fine resolution	
	Encoder revolutions	

A.7.7 Technology alarms 601-618

Technology alarm 601

Alarm reaction: Stop with maximum dynamic values

Restart: Not required

Alarm text	Solution
Leading axis is not assigned or defective.	Configure the possible leading value axes for the following axis under Configuration > Leading value interconnections.

Technology alarm 603

Alarm reaction: No reaction

Restart: Not required

Alarm text	Solution
Leading axis is not in position-controlled mode.	The following axis must be operated in position-controlled mode for synchronous operation functionality.

Technology alarm 608

Alarm reaction: Stop with maximum dynamic values

Restart: Not required

Alarm text	Solution
Error during synchronization.	Prevent a reversing leading value motion during the synchronization operation.

Technology alarm 611

Alarm reaction: Remove enable

Restart: Not required

Alarm text	Solution
The cam specified in the MC_CamIn.Cam parameter has not been configured or is not available.	Configure and interpolate the cam. Restart the job.

Technology alarm 612

Alarm reaction: Remove enable

Restart: Not required

Alarm text	Solution
Specified cam has not been interpolated.	Interpolate the cam used for camming with the Motion Control instruction "MC_InterpolateCam".

A.7.8 Technology alarms 700-758

Technology alarm 700

Alarm reaction: Remove enable

Restart: Not required

Alarm text	Remedy
Output cam limiting error.	
Cam position: OnPosition	The position for the OnPosition could not be calculated. Invalid positions (e.g. OnPosition > OffPosition) were calculated due to lead times. The output cam cannot be switched due to the axis dynamics and compensation times.
Cam position: OffPosition	The position for the OffPosition could not be calculated. Invalid positions (e.g. OffPosition < OnPosition) were calculated due to lead times. The output cam cannot be switched due to the axis dynamics and compensation times.

Technology alarm 701

Alarm reaction: Remove enable

Restart: Not required

Alarm text	Remedy
I/O output error.	The digital output for the output cam or cam track technology object cannot be addressed. Download the device configuration again.

Technology alarm 702

Alarm reaction: Remove enable

Restart: Not required

Alarm text	Remedy
Position value valid.	• A Motion Control job "MC_Reset" is being executed on the axis. Wait until the "Restart" of the technology object is complete. • The encoder values are invalid due to an encoder error. Check the encoder and adjust the configuration if necessary.

Technology alarm 703

Alarm reaction: Remove enable

Restart: Not required

Alarm text	Remedy
Output cam data faulty.	
Output cam: Output cam number	Check the configuration of the relevant output cam in the cam track and adjust the values if necessary. Examples of a correct configuration: • <TO>.Parameter.Cam[].OnPosition < <TO>.Parameter.Cam[].OffPosition • <TO>.Parameter.Cam[].Duration > <TO>.Parameter.OffCompensation - <TO>.Parameter.OnCompensation

Technology alarm 704

Alarm reaction: Remove enable

Restart: Not required

Alarm text	Remedy
Output cam data faulty.	Check the configuration of the output cam and adjust the values if necessary. Examples of a correct configuration: • MC_OutputCam.OnPosition < MC_OutputCam.OffPosition • MC_OutputCam.Duration > <TO>.Parameter.OffCompensation - <TO>.Parameter.OnCompensation

Technology alarm 750

Alarm reaction: Remove enable

Restart: Not required

Alarm text	Remedy
Measuring job not possible during homing of assigned axis.	Do not use the motion instructions "MC_Home" and "MC_MeasuringInput" simultaneously.

Technology alarm 752

Alarm reaction: No reaction

Restart: Not required

Alarm text	Remedy
Validity range of measuring job not recognized.	The measuring range specified in Motion Control instruction "MC_MeasuringInput" was not recognized. Adjust the measuring range.

Technology alarm 753

Alarm reaction: Remove enable

Restart: Not required

Alarm text	Remedy
Only one measuring input can access an encoder at a time.	Use only one Motion Control instruction "MC_MeasurinInput" for an encoder.

Technology alarm 754

Alarm reaction: Remove enable

Restart: Not required

Alarm text	Remedy
Measuring input configuration in external device is not correct.	Check the configuration of the measuring inputs on the external device.

Technology alarm 755

Alarm reaction: Remove enable

Restart: Not required

Alarm text	Remedy
Measuring job not possible.	
Device has reported an error.	The measurement was aborted with error. Check the measuring input functionality in the utilized device
Cyclic measuring is not possible with telegram 39x.	• Use the Motion Control instruction "MC_MeasuringInput" for starting a one-time measurement. • Cyclic measuring is only possible when measuring using TM Timer DIDQ. Change the configuration of the measuring input type to "TM Timer DIDQ".

Technology alarm 758

Alarm reaction: None

Restart: Not required

Alarm text	Remedy
A measuring edge was not evaluated.	An edge was already detected at the input of the measuring input even though the module was not yet ready. The measured value is provided at the next edge.

A.8 Error ID for Motion Control instructions

Errors in Motion Control instructions are signaled using the parameters "Error" and "ErrorID".

Under the following conditions, "Error" = TRUE and "ErrorID" = 16#8xxx are indicated for the Motion Control instruction:

- Illegal status of the technology object, which prevents the execution of the job.
- Illegal parameter assignment of the Motion Control instruction, which prevents the execution of the job.
- As a result of the alarm reaction for a technology object error.

The following tables list all "ErrorIDs" that can be indicated for Motion Control instructions. Besides the cause of the error, remedies for eliminating the error are also listed:

16#0000 - 16#800F

ErrorID	Description	Remedy
16#0000	No error	-
16#8001	A technology alarm (technology object error) occurred while processing the Motion Control instruction.	In the technology data block, an error message is output at the "ErrorDetail.Number" tag. You can find a list of the technology alarms and alarm reactions in the Technology alarms (Page 513) appendix.
16#8002	Illegal specification of the technology object	• Check the specification of the technology object for the "Axis", "Master", "SlaveOutputCamCamTrack-MeasuringInput" or "Cam" parameter. • You can use a kinematics technology object only for the "AxesGroup" parameter. • For MC_MeasuringInputCyclic: Specify a valid measuring input type for parameter "MeasuringInputType".
16#8003	Illegal velocity specification	Specify a permissible value for the velocity for parameter "Velocity".
16#8004	Illegal acceleration specification	Specify a permissible value for the acceleration for parameter "Acceleration".
16#8005	Illegal deceleration specification	Specify a permissible value for the deceleration for parameter "Deceleration".
16#8006	Illegal jerk specification	Specify a permissible value for the jerk for parameter "Jerk".
16#8007	Illegal direction specification	Specify a permissible value for the rotation direction for parameter "Direction" or "SyncDirection".
	Invalid entry Both the "JogForward" and "JogBackward" parameters are set to TRUE at the same time. The axis is braked at the last valid deceleration.	Reset both the "JogForward" parameter and the "JogBackward" parameter.
16#8008	Invalid distance specification	Set a valid distance value at parameter "Distance".
16#8009	Invalid position specification	Set a valid position value at parameter "Position".
16#800A	Illegal operating mode	Specify a permissible operating mode for parameter "Mode".

ErrorID	Description	Remedy
16#800B	Illegal stop mode specifications	Specify a permissible value for the stop mode at the "StopMode" parameter.
16#800C	Only one instance of the instruction per technology object is allowed.	The instruction is called at multiple points in the user program with identical value for parameter "Axis", "Master", "Slave" or "Cam". Ensure that only one instruction with the value for parameter "Axis", "Master", "Slave" or "Cam" is called.
16#800D	The job is not permitted in the current state. "Restart" is executed.	While a "Restart" is being performed, the technology object cannot perform any jobs. Wait until the "Restart" of the technology object is complete.
16#800E	If the technology object is enabled, a "Restart" is not possible.	Before a "Restart", deactivate the technology object with "MC_Power.Enable"FALSE.
16#800F	The job cannot be executed because the technology object is locked.	Enable the technology object with "MC_Power.Enable" = TRUE. Restart the job.

16#8010 - 16#802F

ErrorID	Description	Remedy
16#8010	Invalid homing mode for incremental encoder	Absolute value adjustment is not possible with an incremental encoder ("Mode" = 6, 7). Start a homing process for an incremental encoder using parameter "Mode" = 0, 1, 2, 3, 5, 8, 10.
16#8011	Invalid homing mode for absolute encoder	Passive and active homing ("Mode" = 2, 3, 5, 8, 10) are not possible for an absolute value encoder. Start a homing process for an absolute encoder using parameter "Mode" = 0, 1, 6, 7.
16#8012	The job cannot be executed because the axis control panel is active.	Return master control to your user program. Restart the job.
16#8013	The online connection between the CPU and the TIA Portal is down.	Check the online connection to the CPU.
16#8014	No internal job memory available.	The maximum possible number of Motion Control job has been reached. Reduce the number of jobs to be executed (parameter "Execute" = FALSE).
16#8015	Error acknowledgment with "MC_Reset" is not possible. Error in the configuration of the technology object.	Check the configuration of the technology object.
16#8016	The actual values are not valid.	To execute a "MC_Home" or positioning job, the actual values must be valid. Check the status of the actual values. The technology object tag "<TO>.StatusSensor[n].State" must show the value 2 (valid).
16#8017	Illegal value for gear ratio numerator	Specify a permissible value for the gear ratio numerator for parameter "RatioNumerator". Permitted integer values: -2147483648 to 2147483648 (value 0 not permitted)

ErrorID	Description	Remedy
16#8018	Illegal value for gear ratio denominator	Specify a permissible value for the gear ratio denominator for parameter "RatioDenominator". Permitted integer values: 1 to 2147483648
16#8019	Job cannot be executed. The specified following axis is the original leading value for the synchronous operation chain.	Recursive interconnections are not possible. A leading axis cannot be interconnected as a following axis to its own leading value. Specify a permissible following axis for parameter "Slave".
16#8021	Illegal value for shift of the leading value range	Specify a permissible value for the shift of the leading value range for parameter "MasterOffset".
16#8022	Illegal value for shift of the following value range	Specify a permissible value for the shift of the leading value range for parameter "SlaveOffset".
16#8023	Illegal value for scaling of the leading value range	Specify a permissible value for the scaling of the leading value range for parameter "MasterScaling".
16#8024	Illegal value for scaling of the following value range	Specify a permissible value for the scaling of the following value range for parameter "SlaveScaling".
16#8026	Illegal value for leading value distance	Specify a permissible value for the leading value distance for parameter "MasterStartDistance".
16#8027	Illegal value for use of cam	Specify a permissible value for cyclic/acyclic use of the cam for parameter "ApplicationMode".

16#8030 - 16#807F

ErrorID	Description	Remedy
16#8034	Illegal value for synchronous position of the leading axis	Specify a permissible value for the synchronous position of the leading axis for parameter "MasterSyncPosition".
16#8035	Illegal value for synchronous position of the following axis	Specify a permissible value for the synchronous position of the following axis for parameter "SlaveSyncPosition".
16#8036	Illegal value for type of synchronization	Specify a permissible value for the type of synchronization for parameter "SyncProfileReference".
16#8040	Illegal value for start position of output cam	Specify a permissible value for the start position of the output cam for parameter "OnPosition".
16#8041	Illegal value for end position of distance output cam	Specify a permissible value for the end position of the distance output cam for parameter "OffPosition".
16#8042	Illegal value for switch-on duration of time-based output cam	Specify a permissible value for the switch-on duration of the time-based output cam for parameter "Duration".
16#8043	Illegal value for force/torque limiting	Specify a value within the permissible range at the "Limit" parameter. Permitted integer values: -2147483648 to 2147483648
16#8044	The axis is not configured for torque reduction.	Select drive telegram 102, 103, 105 or 106
16#8045	The job cannot be executed because a job for traveling to fixed stop is active.	Switchover to non-position-controlled mode is not possible during active travel to fixed stop.
16#8046	The "MC_TorqueLimiting" job cannot be deactivated in the "InClamping" state.	Retract the axis and deactivate "MC_TorqueLimiting".
16#8047	The motion results in a fixed stop.	Only motions away from the fixed stop are permitted.

ErrorID	Description	Remedy
16#804A	Illegal value for additive torque setpoint	Specify a permissible value for the additive torque setpoint at the "Value" parameter.
16#804B	Illegal value for torque high limit	Specify a permissible value for the high limit of the torque at the "UpperLimit" parameter.
16#804C	Illegal value for torque low limit	Specify a permissible value for the low limit of the torque at the "LowerLimit" parameter.
16#804D	The value of the high limit of the torque is less than or equal to the value of the low limit of the torque.	Adapt the values of the "UpperLimit" and "LowerLimit" parameters so that the high limit of the torque is greater than the value of the low limit of the torque.
16#804E	The job cannot be executed because the "MC_TorqueLimiting" job is active.	Stop the force / torque limit or fixed stop detection. Restart the "MC_TorqueRange" job.
	The job cannot be executed because a "MC_TorqueRange" job is active.	Exit the setting of the high and low torque limits. Restart the "MC_TorqueLimiting" job.
16#804F	The axis is not configured for additional torque values.	Use supplemental telegram 750.
16#8050	Illegal encoder number	Specify a permissible number of the new encoder (1 to 4) for parameter "MC_SetSensor.Sensor".
16#8051	Illegal number of the reference encoder	Specify a permissible number of the reference encoder for parameter "MC_SetSensor.ReferenceSensor".
16#8062	Illegal approach value	Specify a permissible approach value for the searched for leading value for parameter "ApproachLeadingValue".
16#8063	A valid mapping to the definition range (leading values) does not exist for the specified following value.	Specify a permissible following value for parameter "FollowingValue".
16#8064	A valid mapping to the range of the function (following values) does not exist for the specified leading value.	Specify a permissible leading value for parameter "LeadingValue".
16#8070	Illegal value for leading value shift	Specify a permissible value for the leading value shift for parameter "PhaseShift".
16#8071	The job cannot be executed because the axis is not in position-controlled mode.	Activate position-controlled mode.
16#8074	The job cannot be executed because the "MC_Home" job is active.	During active or passive homing, an encoder switchover is rejected. Wait until the "MC_Home" job is complete. Restart the job.
16#8075	The job cannot be executed because no synchronization operation is active on the axis.	Switch on the synchronous operation function. Restart the job.
16#8076	The job cannot be executed because synchronization is being simulated at the specified axis.	End the simulation of the synchronous operation. Restart the job.

16#80A0 - 16#8FFF

ErrorID	Description	Remedy
16#80A1	The order cannot be executed because a synchronous operation job is active.	A "MC_Home" job on a following axis is not executed when a "MC_CamIn" or "MC_GearInPos" job is active. Exit the synchronous operation job. Restart the job.
16#80A2	The measuring range is invalid with the configured modulo axis settings.	Check and adjust the measuring input and adjust the measuring range positions, if necessary.
16#80A3	The measuring input job via PROFIdrive telegram could not be started because a homing job is active.	Simultaneous execution of a homing job and a measuring input job via PROFIdrive telegram is not possible. Wait until the homing job has ended. Restart the measuring job via PROFIdrive telegram.
16#80A5	Illegal value for start position of measuring range	Specify a permissible value for the start position of the measuring range for parameter "MC_MeasuringInput.StartPosition" or MC_MeasuringInputCyclic.StartPosition.
16#80A6	Illegal value for end position of measuring range	Specify a permissible value for the end position of the measuring range for parameter "MC_MeasuringInput.EndPosition" or MC_MeasuringInputCyclic.EndPosition.
16#80A7	A measurement is performed when measuring with the measuring range, but the calculated position is outside the specified measuring range. The measured value is discarded.	Check and adjust the measuring input and adjust the measuring range positions, if necessary.
16#80A8	The job cannot be executed because camming is active on the axis.	The Motion Control instructions "MC_PhasingRelative" and "MC_PhasingAbsolute" can only be applied to active gearing with "MC_GearIn" or "MC_GearInPos" ("MC_GearIn.InGear" = TRUE or "MC_GearInPos.InSync" = TRUE).
16#80A9	The job cannot be executed because the following axis is synchronized ("MC_GearInPos.StartSync" = TRUE) or a kinematics motion is active.	The Motion Control instructions "MC_PhasingRelative" and "MC_PhasingAbsolute" can only be applied to active gearing with "MC_GearIn" or "MC_GearInPos" ("MC_GearIn.InGear" = TRUE or "MC_GearInPos.InSync" = TRUE).
16#80AA	The cam contains no points or segments and cannot be interpolated.	Fill the cam with points/segments. Restart the job.
16#80AB	The cam is currently being used and cannot be interpolated.	End the current use of the cam. Restart the job.
16#80AC	The cam contains incorrect points or segments and cannot be interpolated. (for example, the cam contains only one point.)	Fill the cam with permissible points/segments. Restart the job.
16#80AD	The specified synchronous position is outside the definition range of the cam.	Specify a permissible synchronous position for parameter "MasterSyncPosition". Restart the job.
16#80AE	The job cannot be executed because a kinematic motion is active.	End the current kinematic motion. Restart the job.
16#8FFF	Unspecified error	Contact your local Siemens representative or support center. You can find your contact at Industry Automation and Drive Technologies at: http://www.siemens.com/automation/partner)

See also

Errors in Motion Control instructions (Page 337)

A.9 MC_Power function chart

A.9.1 Drive connection via PROFIdrive

A.9.1.1 StopMode 0, 2

Function chart: Enabling a technology object and disabling with "StopMode" = 0, 2

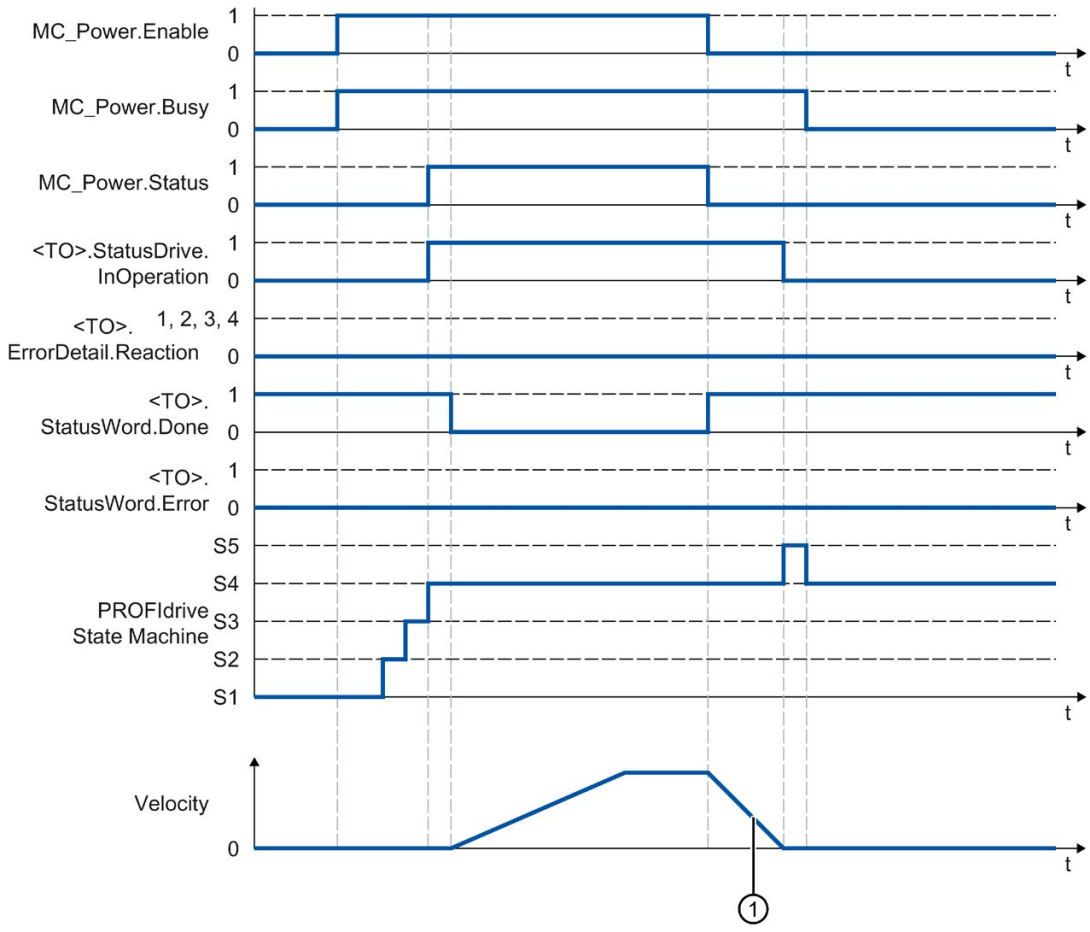

①
- "StopMode" = 0

  The axis is braked with the configured emergency stop deceleration.
- "StopMode" = 2

  The axis decelerates with the configured maximum deceleration.

A.9.1.2 StopMode 1

Function chart: Enabling a technology object and disabling with "StopMode" = 1

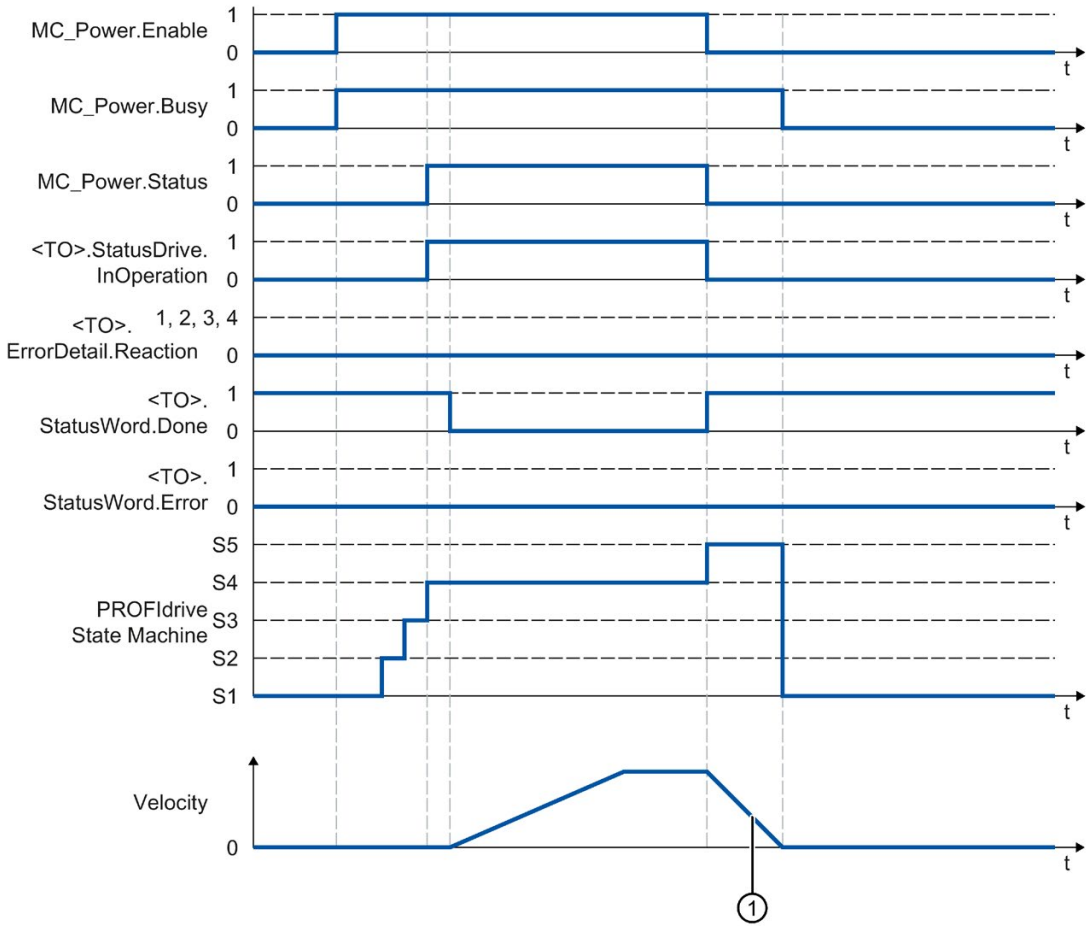

① The deceleration ramp depends on the configuration in the drive.

A.9.1.3 Alarm reactions with braking ramp via the technology object

Function chart: Enabling a technology object and occurrence of a technology alarm with braking ramp via the technology object

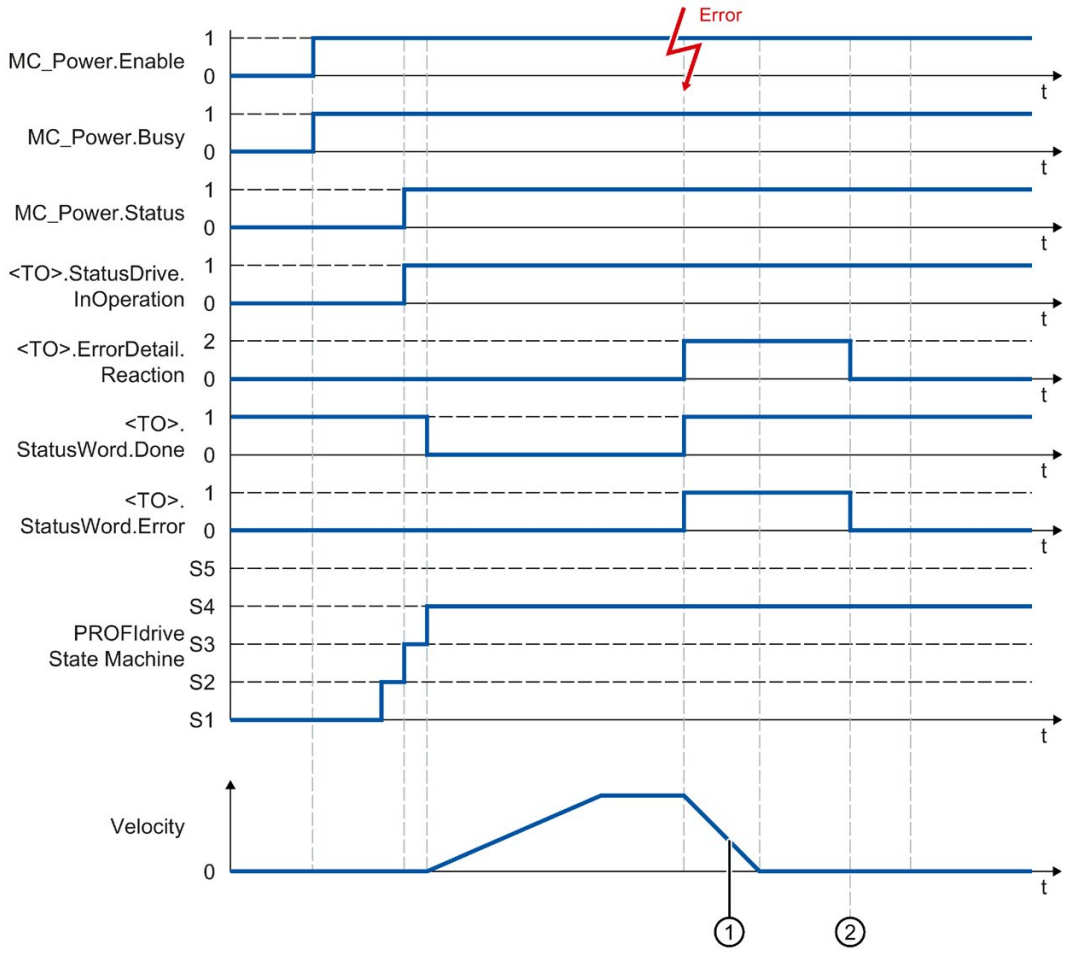

① The axis is braked based on the alarm reaction:

- Stop with current dynamic values (<TO>.ErrorDetail.Reaction = 1)

  The axis is braked with the deceleration in the Motion Control instruction.
- Stop with maximum dynamic values (<TO>.ErrorDetail.Reaction = 2)

  The axis decelerates with the configured maximum deceleration.
- Stop with emergency stop ramp (<TO>.ErrorDetail.Reaction = 3)

  The axis is braked with the configured emergency stop deceleration.

② The technology alarm is acknowledged.

A.9.1.4 Alarm response "Remove enable"

Function chart: Enabling a technology object and occurrence of a technology alarm with alarm reaction "Remove enable"

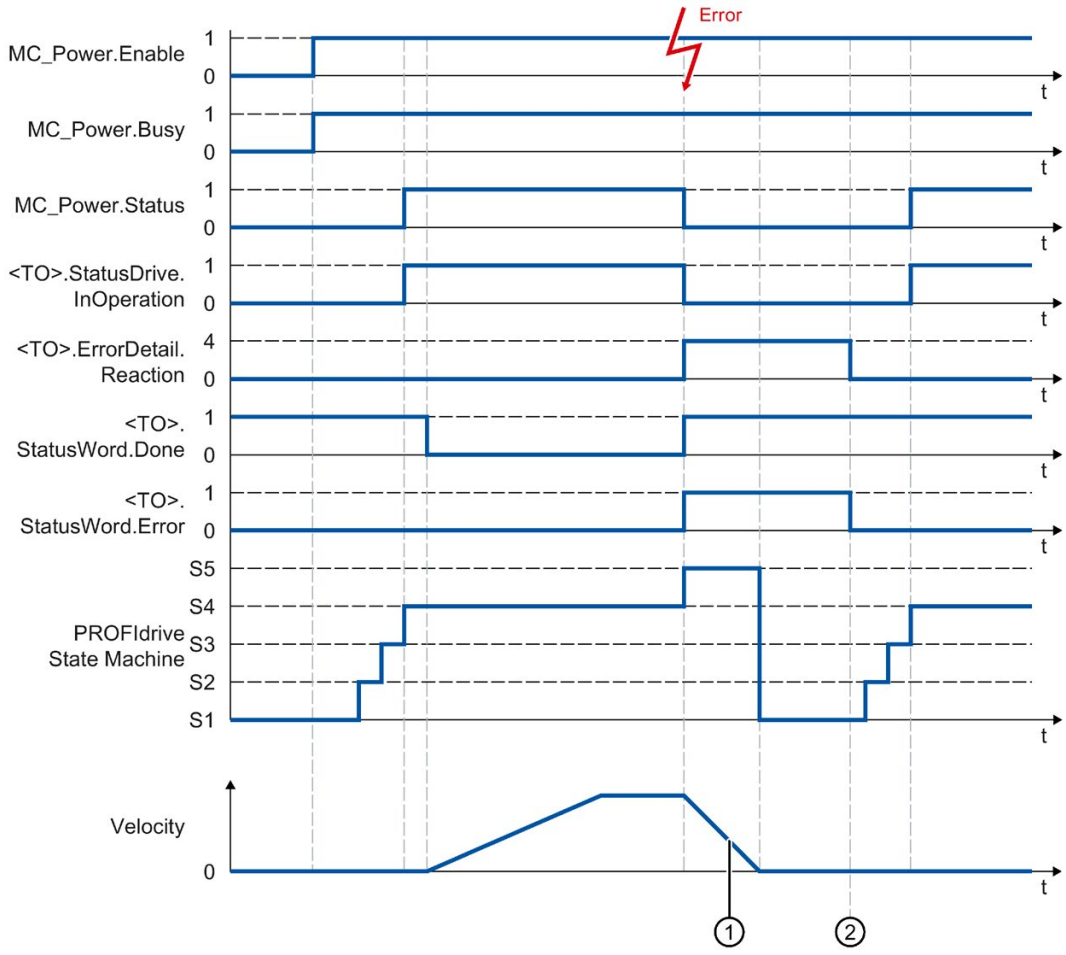

① The deceleration ramp depends on the configuration in the drive.

② The technology alarm is acknowledged at time ②.

A.9.2 Analog drive connection

A.9.2.1 StopMode 0, 2

Function chart: Enabling a technology object and disabling with "StopMode" = 0, 2

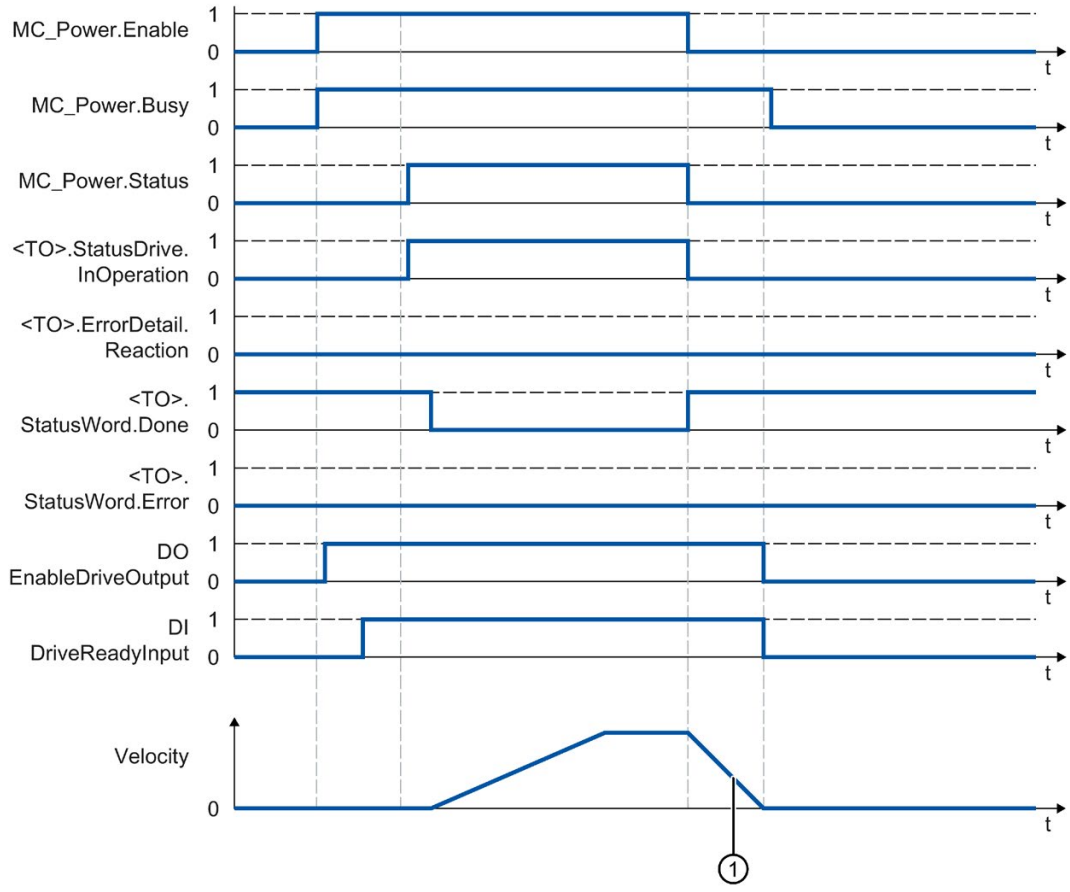

①
- "StopMode" = 0

  The axis is braked with the configured emergency stop deceleration.
- "StopMode" = 2

  The axis decelerates with the configured maximum deceleration.

A.9.2.2 StopMode 1

Function chart: Enabling a technology object and disabling with "StopMode" = 1

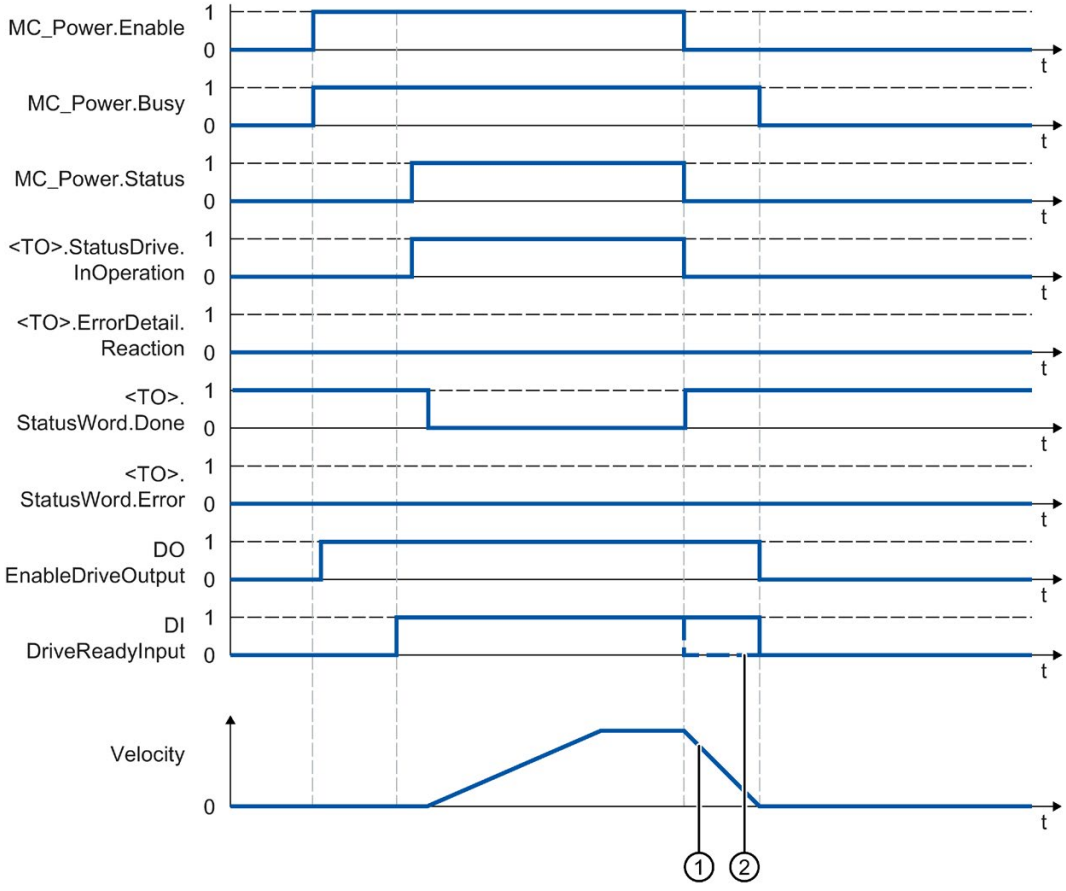

① The deceleration ramp depends on the configuration in the drive.

② The behavior of the ready signal of the drive "DI DriveReadyInput" is manufacturer-specific.

A.9.2.3 Alarm reactions with braking ramp via the technology object

Function chart: Enabling a technology object and occurrence of a technology alarm with braking ramp via the technology object

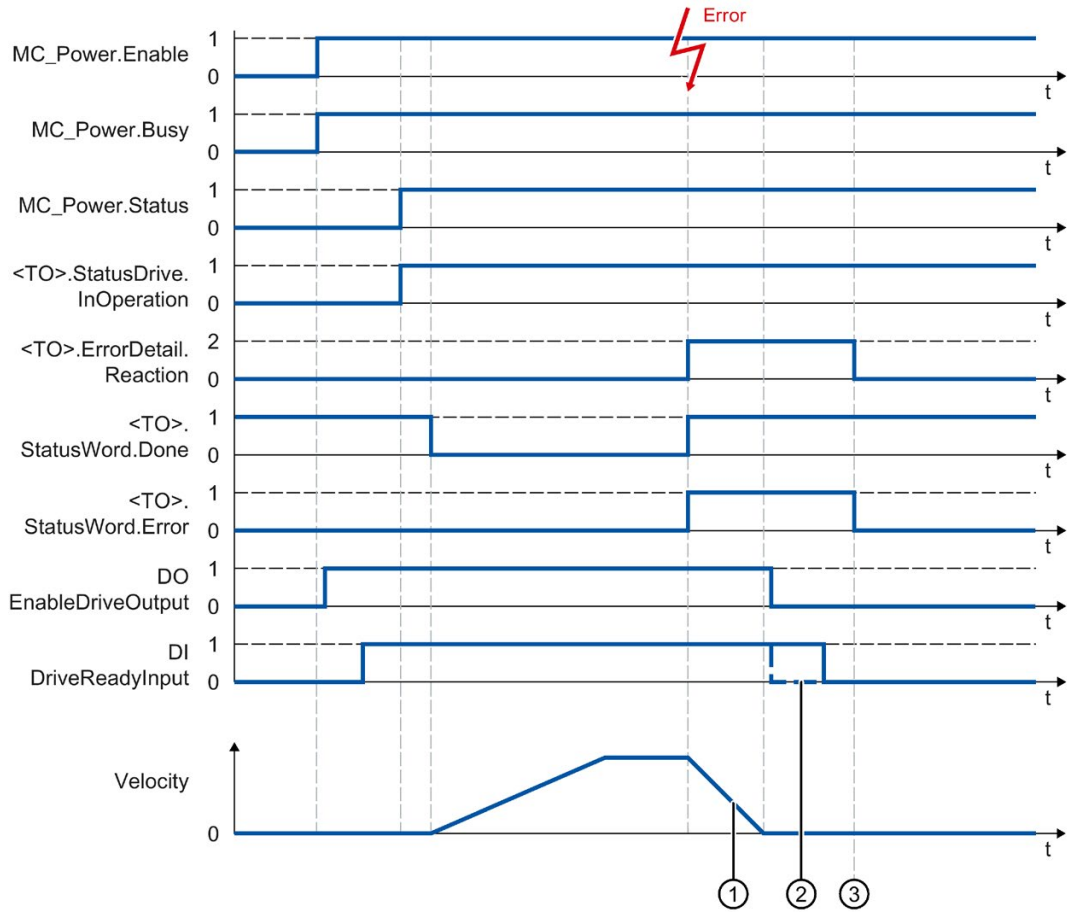

① The axis is braked based on the alarm reaction:

- Stop with current dynamic values (<TO>.ErrorDetail.Reaction = 1)

  The axis is braked with the deceleration in the Motion Control instruction.
- Stop with maximum dynamic values (<TO>.ErrorDetail.Reaction = 2)

  The axis decelerates with the configured maximum deceleration.
- Stop with emergency stop ramp (<TO>.ErrorDetail.Reaction = 3)

  The axis is braked with the configured emergency stop deceleration.

② The behavior of the ready signal of the drive "DI DriveReadyInput" is manufacturer-specific.

③ The technology alarm is acknowledged at time ③.

A.9.2.4 Alarm response "Remove enable"

Function chart: Enabling a technology object and occurrence of a technology alarm with alarm reaction "Remove enable"

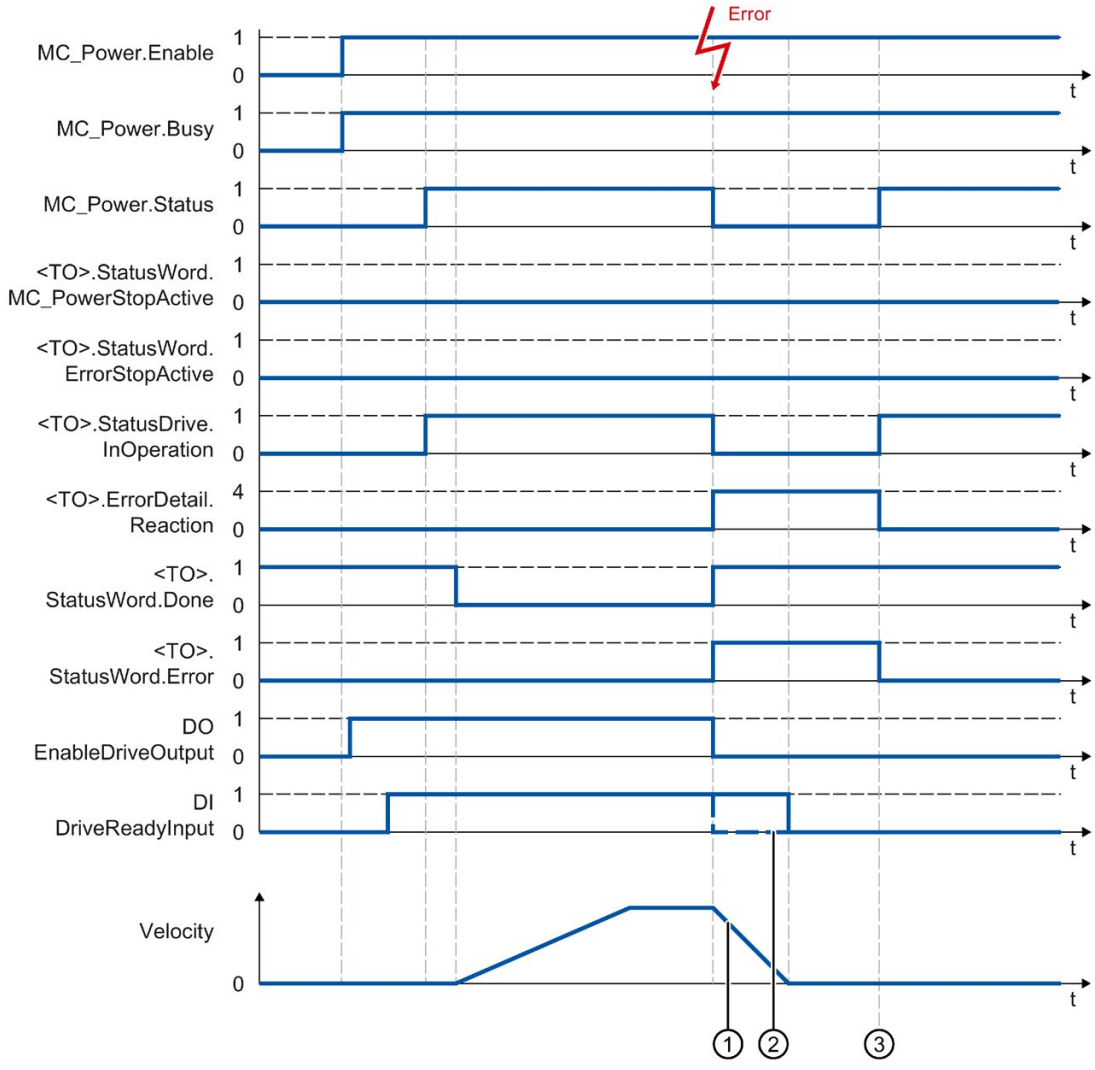

① The deceleration ramp depends on the configuration in the drive.

② The behavior of the ready signal of the drive "DI DriveReadyInput" is manufacturer-specific.

③ The technology alarm is acknowledged at time ③.

A.10 SINAMICS drives

A.10.1 Compatibility list

An overview of drives that can be interconnected with an S7-1500 CPU is available at:

https://support.industry.siemens.com/cs/document/109750431
(https://support.industry.siemens.com/cs/ww/en/view/109750431)

A.10.2 Homing SINAMICS drives with external zero marks

For SINAMICS drives with external zero marks, synchronization during homing must always occur on the left side of the external zero mark's signal. That is to say, with a positive direction of travel synchronization is done on a positive edge, and with a negative direction of travel synchronization is done on a negative edge.

By inverting the signal, synchronization can also be done on the right sight of the signal of the external zero mark. The inversion can be configured in the drive using SINAMICS parameter P490.

Homing to an encoder zero mark or an external zero mark is configured in SINAMICS parameter P495.

A.11 Data types

Data type for use with technology as of V4.0

The table below contains the data types for reference to the respective technology object:

Data type	Structure
TO_SpeedAxis	Speed axis
TO_PositioningAxis	Positioning axis
TO_SynchronousAxis	Synchronous axis
TO_Encoder	External encoder
TO_OutputCam	Output cam
TO_CamTrack	Cam track
TO_MeasuringInput	Measuring input
TO_Cam	Cam (S7-1500T)
TO_Kinematics	Kinematics (S7-1500T)
PD_TELx	Telegram no. "x"
PD_STW1_611Umode	Control word 1 (STW1)
PD_STW2_611Umode	Control word 2 (STW2)
PD_ZSW1_611Umode	Status word 1 (ZSW1)
PD_ZSW2_611Umode	Status word 2 (ZSW2)

See also

PROFIdrive telegrams (Page 36)

Glossary

Absolute synchronous operation

Function corresponds to the Motion Control instruction MC_GearInPos or MC_CamIn.

Absolute value encoder

Position encoder which outputs the position in the form of a digital numerical value. This numerical value is unique within the entire measuring range of the absolute value encoder.

Axis control panel

The axis control panel allows you to move the axis in manual mode, optimize the axis settings, and test the operation of the axis in your system.

Axis type

The axis type differs depending on the unit of measurement according to which the axis is positioned.

Depending on the execution of the mechanics, an axis is implemented as a linear axis or rotary axis:

- For linear axes, the position of the axis is specified as a linear measure, e.g. millimeters (mm).
- For rotary axes, the position of the axis is specified as an angular measure, e.g. degrees (°).

Communication processor (CP)

Module for expanded communications tasks covering special applications, for example in the area of security.

Communications module (CM)

Module for communications tasks which is used as an interface expansion of the CPU (for example PROFIBUS) or provides additional communications options (e.g. PtP) in an automation system.

Drive

The combination of motor (electric or hydraulic), actuator (converter, valve), control system, measuring system and supply (infeed, accumulator).

Dynamic Servo Control (DSC)

In drives that support DSC, you can optionally use the position controller in the drive. The position controller in the drive is usually implemented with a rapid speed-control cycle. This improves the control performance for digitally coupled drives.

Following error

The following error is the difference between the position setpoint and the actual position value. The transmission times of the setpoint to the drive, and of the actual position value to the controller, are taken into account in the calculation of the following error.

GSD file

As a Generic Station Description, this file contains all properties of a PROFINET or PROFIBUS device that are necessary for its configuration.

Hardware limit switch

Mechanical limit position switch that limits the maximum permissible traversing range of the axis.

Homing

With homing, you create the relationship between the position in the technology object and the mechanical position of the axis. The position value in the technology object is assigned to a homing mark at the same time. This homing mark represents a known mechanical position.

Incremental encoder

Position encoder which outputs the position change incrementally in the form of a digital numerical value.

Kv factor

Gain factor of the position controller

Master value

Input value for synchronous operation

Motion Control instruction

Use the Motion Control instructions to start Motion Control jobs at technology objects in your user program and thus execute the desired functionality at the technology objects. You track the status of running jobs with the output parameters of the Motion Control instructions.

Override

Percentage correction of the velocity/speed

Processing cycle clock

The processing of a technology object in the servo cycle clock.

PROFIdrive

PROFIdrive is a profile specified by the PNO (PROFIBUS user organization) for PROFIBUS DP and PROFINET IO for speed- and position-controlled drives.

PROFIdrive frame

Frame for communication according to PROFIdrive.

Proximity switch

Position switch which is activated with the moving part without mechanical contact.

Relative gearing

Function corresponds to the Motion Control instruction MC_GearIn.

Restart

The technology object is reinitialized with the current configuration parameters.

Safe Stop 1 (SS1)

The Safe Stop 1 (SS1) safety function brings a drive to standstill quickly and safely via an internal rapid stop ramp. Safe Torque Off (STO) is activated after standstill. STO ensures that no more torque generating energy acts on a drive. This prevents unintended startup of the drive.

You can use the SS1 safety function when a fast stop of the drive with a subsequent transition to STO is required. SS1 is used, for example, to quickly stop high inertia loads or to brake drives quickly and safely at high speeds

Safe Stop 2 (SS2)

The Safe Stop 2 (SS2) safety function brings a drive to standstill quickly and safely via an internal rapid stop ramp. After standstill is reached, the standstill position is monitored on the drive side. The drive can deliver full torque to maintain the standstill.

SS2, for example, is used for processing machines and machine tools.

Safe Torque Off (STO)

The Safe Torque Off (STO) safety function is the most commonly used and most basic drive-internal safety function. STO ensures that no more torque generating energy acts on a drive. This prevents unintended startup of the drive. The pulses of the drive are eliminated. The drive is reliably torque-free. This state is monitored internally in the drive.

You can use STO when the drive comes to a standstill in a sufficiently short time on its own due to the load torque or due to friction. Other areas of use are where "coasting" of the drive has no relevance for safety.

Software limit switch

A programmable position which limits the traversing range of an axis.

Synchronization

The phase of the following axis to reach synchronous movement.

Synchronous operation

Defined synchronous movement after synchronization of a following axis to a leading axis.

Technology alarm

If an error occurs at a technology object (e.g. approaching a hardware limit switch), a technology alarm is triggered and indicated.

The impact of a technology alarm on the technology object is specified by the alarm reaction (e.g. remove enable). The alarm reaction is specified by the system.

Technology data block

The technology data block represents the technology object and contains all configuration data, setpoint and actual values, and status information of the technology object.

Technology module (TM)

Module for technological tasks, e.g. counting, measuring and positioning.

Zero mark

Position reference for the movement of rotary and linear incremental encoders. The zero mark of an incremental encoder is used as a homing mark, for example.

Index

A

Absolute actual value, 39, 41
Absolute encoder adjustment, 70
Absolute value adjustment, 85
Active homing, 70, 73, 76, 78, 217
Actuator, 26
Additive setpoint torque, 66
Axis control panel, 319, 324
Axis type, 31

C

Cam track
    Basics, 141
    Configuration, 250
    Diagnostics, 358, 360
    Functions, 28
    Tags, 506
Closed loop position control, 92, 93, 94, 228
Closed-loop control, 92, 93, 94, 228
Compatibility list, 555

D

DB_ANY, 296
Diagnostics
    S7-1500 Motion Control, 332, 333, 337
Direct homing, 70, 85
Direction reversal at the hardware limit switch, 71, 84, 218
Drive
    Compatibility list, 555
Drives compatibility list, 166
DSC (Dynamic Servo Control), 92, 93, 94, 228
Dynamic default values, 60, 207
Dynamic Servo Control (DSC), 92, 93, 94, 228

E

Emergency stop deceleration, 62, 209
Encoder mounting type, 53, 54, 202
Error ID, 337, 542
ErrorID
    Basics, 332, 337
    List of ErrorIDs, 542
Errors in Motion Control instructions, 332, 337, 542
External encoder
    Adding, 175
    Basics, 24, 110
    Configuration, 230
    Deleting, 177
    Diagnostics, 351, 353, 353
    Functions, 28
    Moving, 176
    Tags, 479

F

Following error monitoring, 88, 90, 91, 226

G

Gear ratio, 107
Gearing, 107

H

Hardware limit switches, 55, 55, 210
Hardware limit switches, 55, 55, 210
Home position, 71
Homing mark, 71

I

Incremental actual value, 39, 40
Interpolator OB, 95, 98

J

Jerk limit, 60, 207, 211

L

Leading value coupling, 107
Leadscrew pitch, 53, 54, 202
Limit switches, 55, 55, 57, 210
Limits for dynamics, 59, 211

Linear axis, 31
Load gear, 53, 54, 202

M

Master control, 319
MC_AbortMeasuringInput, 406
MC_CamTrack, 410, 412
MC_GearIn, 413, 416
MC_Halt, 374, 377
MC_Home, 369
MC_MeasuringInput, 399, 401
MC_MeasuringInputCyclic, 402, 404
MC_MoveAbsolute, 378, 381
MC_MoveJog, 391, 394
MC_MoveRelative, 382, 385
MC_MoveSuperimposed, 395, 398
MC_MoveVelocity, 386, 390
MC_OutputCam, 407, 409
MC_Power, 361, 366
MC_Reset, 367
MC_TorqueAdditive, 66, 422, 424
MC_TorqueLimiting, 417, 420
MC_TorqueRange, 67, 425, 427
MC-Interpolator OB, 95, 98
MC-Servo OB, 95, 98
Measuring input
    Basics, 112
    Configuration, 244
    Diagnostics, 354
    Functions, 28
    Tags, 492
Modulo, 33, 191

O

Optimize position controller, 325, 329
Output cam
    Basics, 126
    Configuration, 247
    Diagnostics, 356
    Functions, 28
    Tags, 500

P

Passive homing, 70, 80, 81, 83, 222
Position limits, 55, 55, 57, 58, 210
Positioning axis
    Adding, 175
    Basics, 23, 104
    Configuration, 191
    Deleting, 177
    Diagnostics, 343, 347, 349
    Functions, 27
    Moving, 176
    Tags, 445
Positioning monitoring, 88, 88, 91, 226
Process image partition "OB Servo PIP", 97
PROFIdrive, 35, 42
Proximity switch, 71

R

Ramp-down time, 207, 211
Ramp-up time, 207, 211
Reduction ratio, 95
Reinitialization of technology objects, 314
Restart of technology objects, 314
Reversing cam, 71, 84, 218
Rotary axis, 31

S

S7-1500 Motion Control
    Actual value, 39, 40, 41
    Axis type, 31
    Closed-loop control, 92, 93, 94, 228
    Commissioning, 316, 316, 319, 324, 325, 329
    Configuration, 175, 176, 177, 178, 179, 191
    Configuration limits, 30
    Diagnostics, 332, 333, 337
    Downloading to CPU, 315
    Drive and encoder
    connection, 26, 34, 36, 42, 52, 166, 167, 170, 172, 192, 194, 194
    Dynamic defaults, 62
    Dynamic settings, 59, 60, 68, 207, 211
    Guidelines for operation, 29
    Homing, 69, 71, 72, 73, 80, 84, 85, 85, 86, 87, 216, 217, 222
    How it works, 22
    Introduction, 21, 22
    Mechanics, 53, 54, 202
    Modulo, 33, 191
    Motion Control instruction, 25, 27, 28, 290, 294
    Motion Control Instruction, 300
    Position limits, 55, 55, 57, 58, 210
    Position monitoring, 88, 88, 90, 91, 226, 226, 227
    Process response, 95, 97, 98, 100
    PROFIdrive, 35, 42
    Programming, 284, 285, 290, 300, 314

Synchronous operation, 107, 107, 109, 201
Technology alarms, 332, 333, 513
Technology data block, 24, 284, 285, 288, 289
Technology
object, 23, 27, 28, 28, 103, 104, 105, 110, 112, 126, 141, 175, 176, 177, 191, 314
Telegram, 36, 42, 52
Unit of measure, 32
Versions, 155, 164
S7-1500 Motion Control actual value, 39, 40, 41
S7-1500 Motion Control
commissioning, 316, 316, 319, 324, 325, 329
S7-1500 Motion Control drive
connection, 26, 34, 36, 42, 52, 166, 167, 170, 172, 192
S7-1500 Motion Control encoder
connection, 26, 34, 36, 42, 52, 166, 167, 170, 172, 194
S7-1500 Motion Control homing
Absolute encoder adjustment, 70
Absolute value adjustment, 85
active, 76, 78
Active, 70, 73, 217
Basics, 69
Configuration, 216
direct, 85
Direct, 70
Home position, 71
Homing mark, 71
Homing mode, 70, 72
on the fly, 81, 83
On the fly, 70, 80, 222
passive, 81, 83
Passive, 70, 80, 222
Proximity switch, 71
Reversing cam, 71, 84, 218
Zero mark, 71
S7-1500 Motion Control instruction, 25
Ending a Motion Control job, 313
Errors in Motion Control instructions, 332, 337, 542
Inserting, 294
Overview, 27, 28
Parameters, 290
Starting Motion Control job, 300
Tracking Motion Control job, 302
S7-1500 Motion Control mechanics, 53, 54, 202
S7-1500 Motion Control operating mode, 100
S7-1500 Motion Control optimization, 325, 329
S7-1500 Motion Control telegram, 36, 42, 52
Sensor, 26
Servo OB, 95, 98
SINAMICS V90 PN, 166
Software limit switches, 55, 57, 210
Speed axis
Adding, 175
Basics, 23, 103
Configuration, 180
Deleting, 177
Diagnostics, 338, 341, 342
Functions, 27
Moving, 176
Tags, 431
Startdrive, 166
Synchronous axis
Adding, 175
Basics, 23, 105
Deleting, 177
Diagnostics, 343, 347, 349
Functions, 27
Moving, 176
Tags, 445
Synchronous operation, 107, 107, 201

T

Tags of the cam technology object, 500
Tags of the cam track technology object, 506
Tags of the measuring input technology object, 492
Tags of the positioning axis technology object, 445
Tags of the speed axis technology object, 431
Tags of the synchronous axis technology object, 445
Tags of the technology object external encoder, 479
Technology alarms
Basics, 332, 333
List of the technology alarms, 513
Technology data block
Analyzing, 285
Basics, 24, 284
Change restart-relevant data, 289
Evaluating StatusWord, ErrorWord and WarningWord, 288
Tags of the cam technology object, 500
Tags of the cam track technology object, 506
Tags of the measuring input technology object, 492
Tags of the positioning axis technology object, 445
Tags of the speed axis technology object, 431
Tags of the synchronous axis technology object, 445
Tags of the technology object external encoder, 479
Technology object
Cam track, 28, 141, 250, 358, 360
Data types, 296
External
encoder, 24, 28, 110, 175, 176, 177, 230, 351, 353, 353

Measuring input, 28, 112, 244, 354
Output cam, 28, 126, 247, 356
Positioning
axis, 23, 27, 104, 175, 176, 177, 191, 343, 347, 349
Speed
axis, 23, 27, 103, 175, 176, 177, 180, 338, 341, 342
Synchronous
axis, 23, 27, 105, 175, 176, 177, 191, 343, 347, 349
Torque limits, 67
Torque setpoint, 66
Traversing range limitation, 55, 55, 57, 58, 210

U

Unit of measure, 32

V

Velocity precontrol, 92
Velocity profile, 60

Z

Zero mark, 71

SIEMENS

SIMATIC

S7-1200, S7-1500

PID control

Function manual

Edition 10/2018

siemens.com

SIEMENS

SIMATIC

S7-1200, S7-1500
PID control

Function Manual

Preface

Documentation guide 1

Principles for control 2

Configuring a software controller 3

Using PID_Compact 4

Using PID_3Step 5

Using PID_Temp 6

Using PID basic functions 7

Auxiliary functions 8

Instructions 9

Service & Support A

10/2018

A5E35300227-AD

Legal information

Warning notice system

This manual contains notices you have to observe in order to ensure your personal safety, as well as to prevent damage to property. The notices referring to your personal safety are highlighted in the manual by a safety alert symbol, notices referring only to property damage have no safety alert symbol. These notices shown below are graded according to the degree of danger.

⚠ DANGER

indicates that death or severe personal injury **will** result if proper precautions are not taken.

⚠ WARNING

indicates that death or severe personal injury **may** result if proper precautions are not taken.

⚠ CAUTION

indicates that minor personal injury can result if proper precautions are not taken.

NOTICE

indicates that property damage can result if proper precautions are not taken.

If more than one degree of danger is present, the warning notice representing the highest degree of danger will be used. A notice warning of injury to persons with a safety alert symbol may also include a warning relating to property damage.

Qualified Personnel

The product/system described in this documentation may be operated only by **personnel qualified** for the specific task in accordance with the relevant documentation, in particular its warning notices and safety instructions. Qualified personnel are those who, based on their training and experience, are capable of identifying risks and avoiding potential hazards when working with these products/systems.

Proper use of Siemens products

Note the following:

⚠ WARNING

Siemens products may only be used for the applications described in the catalog and in the relevant technical documentation. If products and components from other manufacturers are used, these must be recommended or approved by Siemens. Proper transport, storage, installation, assembly, commissioning, operation and maintenance are required to ensure that the products operate safely and without any problems. The permissible ambient conditions must be complied with. The information in the relevant documentation must be observed.

Trademarks

All names identified by ® are registered trademarks of Siemens AG. The remaining trademarks in this publication may be trademarks whose use by third parties for their own purposes could violate the rights of the owner.

Disclaimer of Liability

We have reviewed the contents of this publication to ensure consistency with the hardware and software described. Since variance cannot be precluded entirely, we cannot guarantee full consistency. However, the information in this publication is reviewed regularly and any necessary corrections are included in subsequent editions.

Siemens AG
Division Digital Factory
Postfach 48 48
90026 NÜRNBERG
GERMANY

A5E35300227-AD
℗ 09/2018 Subject to change

Copyright © Siemens AG 2018.
All rights reserved

Preface

Purpose of the documentation

This documentation will support you in configuring and programming control tasks with the S7-1200 and S7-1500 automation systems.

Basic knowledge required

The following knowledge is required in order to understand the documentation:

- General knowledge of automation technology
- Knowledge of the industrial automation system SIMATIC
- Experience of working with STEP 7 (TIA Portal)

Validity of the documentation

This documentation applies to the use of SW controllers on the CPUs of automation systems S7-1200 and S7-1500 together with STEP 7 (TIA Portal). Additional SW controllers that are not covered in this documentation are available for the use of S7-300 and S7-400 with STEP 7 (TIA Portal). Section Overview of software controller (Page 39) gives a complete overview of all SW controllers in STEP 7 (TIA Portal) and their possible applications.

Conventions

Please observe notes marked as follows:

Note

The notes contain important information on the product described in the documentation, on the handling of the product or on part of the documentation to which particular attention should be paid.

Additional assistance

- Information on the offers of our Technical Support are available in the appendix Service & Support (Page 566).
- The range of technical documentation for the individual SIMATIC products and automation systems is available on the Internet (http://www.siemens.com/simatic-tech-doku-portal).
- The online catalog and the ordering system are available on the Internet (http://mall.automation.siemens.com).

Table of contents

Preface 3
1 Documentation guide 12
2 Principles for control 17
2.1 Controlled system and actuators 17
2.2 Controlled systems 19
2.3 Characteristic values of the control section 21
2.4 Pulse controller 24
2.5 Response to setpoint changes and disturbances 28
2.6 Control Response at Different Feedback Structures 30
2.7 Selection of the controller structure for specified controlled systems 37
2.8 PID parameter settings 38
3 Configuring a software controller 39
3.1 Overview of software controller 39
3.2 Steps for the configuration of a software controller 41
3.3 Add technology objects 41
3.4 Configure technology objects 42
3.5 Call instruction in the user program 43
3.6 Downloading technology objects to device 44
3.7 Commissioning software controller 45
3.8 Save optimized PID parameter in the project 45
3.9 Comparing values 46
3.9.1 Comparison display and boundary conditions 46
3.9.2 Comparing values 47
3.10 Parameter view 49
3.10.1 Introduction to the parameter view 49
3.10.2 Structure of the parameter view 51
3.10.2.1 Toolbar 51
3.10.2.2 Navigation 51
3.10.2.3 Parameter table 52
3.10.3 Opening the parameter view 54
3.10.4 Default setting of the parameter view 55

3.10.5 Working with the parameter view 58
3.10.5.1 Overview 58
3.10.5.2 Filtering the parameter table 58
3.10.5.3 Sorting the parameter table 59
3.10.5.4 Transferring parameter data to other editors 59
3.10.5.5 Indicating errors 60
3.10.5.6 Editing start values in the project 60
3.10.5.7 Status of configuration (offline) 62
3.10.5.8 Monitoring values online in the parameter view 63
3.10.5.9 Change display format of value 64
3.10.5.10 Create snapshot of monitor values 65
3.10.5.11 Modifying values 66
3.10.5.12 Comparing values 68
3.10.5.13 Applying values from the online program as start values 70
3.10.5.14 Initializing setpoints in the online program 71

3.11 Display instance DB of a technology object. 72

4 Using PID_Compact 73

4.1 Technology object PID_Compact 73

4.2 PID_Compact V2 74
4.2.1 Configuring PID_Compact V2 74
4.2.1.1 Basic settings V2 74
4.2.1.2 Process value settings V2 78
4.2.1.3 Advanced settings V2 79
4.2.2 Commissioning PID_Compact V2 88
4.2.2.1 Pretuning V2 88
4.2.2.2 Fine tuning V2 90
4.2.2.3 "Manual" mode V1 92
4.2.3 Override control with PID_Compact V2 93
4.2.4 Simulating PID_Compact V2 with PLCSIM 97

4.3 PID_Compact V1 98
4.3.1 Configuring PID_Compact V1 98
4.3.1.1 Basic settings V1 98
4.3.1.2 Process value settings V1 102
4.3.1.3 Advanced settings V1 103
4.3.2 Commissioning PID_Compact V1 111
4.3.2.1 Commissioning V1 111
4.3.2.2 Pretuning V1 112
4.3.2.3 Fine tuning V1 114
4.3.2.4 "Manual" mode V1 116
4.3.3 Simulating PID_Compact V1 with PLCSIM 117

5 Using PID_3Step 118

5.1 Technology object PID_3Step 118

5.2 PID_3Step V2 119
5.2.1 Configuring PID_3Step V2 119
5.2.1.1 Basic settings V2 119
5.2.1.2 Process value settings V2 124
5.2.1.3 Final controlling element settings V2 125
5.2.1.4 Advanced settings V2 129
5.2.2 Commissioning PID_3Step V2 133
5.2.2.1 Pretuning V2 133
5.2.2.2 Fine tuning V2 135
5.2.2.3 Commissioning with manual PID parameters V2 137
5.2.2.4 Measuring the motor transition time V2 138
5.2.3 Simulating PID_3Step V2 with PLCSIM 141

5.3 PID_3Step V1 142
5.3.1 Configuring PID_3Step V1 142
5.3.1.1 Basic settings V1 142
5.3.1.2 Process value settings V1 147
5.3.1.3 V1 final controlling element setting 148
5.3.1.4 Advanced settings V1 151
5.3.2 Commissioning PID_3Step V1 154
5.3.2.1 Commissioning V1 154
5.3.2.2 Pretuning V1 155
5.3.2.3 Fine tuning V1 156
5.3.2.4 Commissioning with manual PID parameters V1 157
5.3.2.5 Measuring the motor transition time V1 158
5.3.3 Simulating PID_3Step V1 with PLCSIM 160

6 Using PID_Temp 161

6.1 Technology object PID_Temp 161

6.2 Configuring PID_Temp 162
6.2.1 Basic settings 162
6.2.1.1 Introduction 162
6.2.1.2 Controller type 163
6.2.1.3 Setpoint 163
6.2.1.4 Process value 164
6.2.1.5 Heating and cooling output value 164
6.2.1.6 Cascade 166
6.2.2 Process value settings 167
6.2.2.1 Process value limits 167
6.2.2.2 Process value scaling 167
6.2.3 Output settings 168
6.2.3.1 Basic settings of output 168
6.2.3.2 Output value limits and scaling 171
6.2.4 Advanced settings 174
6.2.4.1 Process value monitoring 174
6.2.4.2 PWM limits 175
6.2.4.3 PID parameters 177

6.3 Commissioning PID_Temp 185
6.3.1 Commissioning 185
6.3.2 Pretuning....186
6.3.3 Fine tuning 189
6.3.4 "Manual" mode....193
6.3.5 Substitute setpoint 194
6.3.6 Cascade commissioning....194

6.4 Cascade control with PID_Temp 195
6.4.1 Introduction 195
6.4.2 Program creation 197
6.4.3 Configuration....199
6.4.4 Commissioning 201
6.4.5 Substitute setpoint 202
6.4.6 Operating modes and fault response....202

6.5 Multi-zone controlling with PID_Temp 203

6.6 Override control with PID_Temp....206

6.7 Simulating PID_Temp with PLCSIM 211

7 Using PID basic functions 212

7.1 CONT_C 212
7.1.1 Technology object CONT_C 212
7.1.2 Configure controller difference CONT_C....213
7.1.3 Configure the controller algorithm CONT_C....214
7.1.4 Configure the output value CONT_C 215
7.1.5 Programming a pulse controller....216
7.1.6 Commissioning CONT_C....217

7.2 CONT_S....218
7.2.1 Technology object CONT_S 218
7.2.2 Configure controller difference CONT_S 219
7.2.3 Configuring control algorithm CONT_S 220
7.2.4 Configure manipulated value CONT_S....220
7.2.5 Commissioning CONT_S 221

7.3 TCONT_CP....222
7.3.1 Technology object TCONT_CP 222
7.3.2 Configure TCONT_CP 223
7.3.2.1 Controller difference....223
7.3.2.2 Controlling algorithm....224
7.3.2.3 Manipulated value continual controller 225
7.3.2.4 Manipulated value pulse controller 226
7.3.3 Commissioning TCONT_CP 229
7.3.3.1 Optimization of TCONT_CP....229
7.3.3.2 Requirements for an optimization....232
7.3.3.3 Possibilities for optimization....234
7.3.3.4 Tuning result 237

7.3.3.5 Parallel tuning of controller channels ... 238
7.3.3.6 Fault descriptions and corrective measures ... 239
7.3.3.7 Performing pretuning ... 242
7.3.3.8 Performing fine tuning ... 242
7.3.3.9 Cancelling pretuning or fine tuning ... 243
7.3.3.10 Manual fine-tuning in control mode ... 243
7.3.3.11 Performing fine tuning manually ... 245

7.4 TCONT_S ... 246
7.4.1 Technology object TCONT_S ... 246
7.4.2 Configure controller difference TCONT_S ... 247
7.4.3 Configure controller algorithm TCONT_S ... 248
7.4.4 Configure manipulated value TCONT_S ... 248
7.4.5 Commissioning TCONT_S ... 249

8 Auxiliary functions ... 250

8.1 Polyline ... 250

8.2 SplitRange ... 250

8.3 RampFunction ... 251

9 Instructions ... 252

9.1 PID_Compact ... 252
9.1.1 New features of PID_Compact ... 252
9.1.2 Compatibility with CPU and FW ... 256
9.1.3 CPU processing time and memory requirement PID_Compact V2.x ... 257
9.1.4 PID_Compact V2 ... 258
9.1.4.1 Description of PID_Compact V2 ... 258
9.1.4.2 Mode of operation of PID_Compact V2 ... 261
9.1.4.3 Input parameters of PID_Compact V2 ... 264
9.1.4.4 Output parameters of PID_Compact V2 ... 266
9.1.4.5 In/out parameters of PID_Compact V2 ... 267
9.1.4.6 Static tags of PID_Compact V2 ... 268
9.1.4.7 Changing the PID_Compact V2 interface ... 276
9.1.4.8 Parameters State and Mode V2 ... 278
9.1.4.9 Parameter ErrorBits V2 ... 282
9.1.4.10 Tag ActivateRecoverMode V2 ... 284
9.1.4.11 Tag Warning V2 ... 286
9.1.4.12 IntegralResetMode V2 tag ... 287
9.1.4.13 Sample program for PID_Compact ... 289
9.1.5 PID_Compact V1 ... 297
9.1.5.1 Description of PID_Compact V1 ... 297
9.1.5.2 Input parameters of PID_Compact V1 ... 301
9.1.5.3 Output parameters of PID_Compact V1 ... 302
9.1.5.4 Static tags of PID_Compact V1 ... 303
9.1.5.5 Parameters State and sRet.i_Mode V1 ... 308
9.1.5.6 Parameter Error V1 ... 312
9.1.5.7 Parameter Reset V1 ... 313
9.1.5.8 Tag sd_warning V1 ... 315
9.1.5.9 Tag i_Event_SUT V1 ... 315
9.1.5.10 Tag i_Event_TIR V1 ... 316

9.2 PID_3Step 317
9.2.1 New features of PID_3Step 317
9.2.2 Compatibility with CPU and FW 319
9.2.3 CPU processing time and memory requirement PID_3Step V2.x 320
9.2.4 PID_3Step V2 321
9.2.4.1 Description of PID_3Step V2 321
9.2.4.2 Mode of operation of PID_3Step V2 326
9.2.4.3 Changing the PID_3Step V2 interface 330
9.2.4.4 Input parameters of PID_3Step V2 331
9.2.4.5 Output parameters of PID_3Step V2 333
9.2.4.6 In/out parameters of PID-3Step V2 335
9.2.4.7 Static tags of PID_3Step V2 336
9.2.4.8 Parameters State and Mode V2 346
9.2.4.9 Parameter ErrorBits V2 351
9.2.4.10 Tag ActivateRecoverMode V2 354
9.2.4.11 Tag Warning V2 356
9.2.5 PID_3Step V1 357
9.2.5.1 Description PID_3Step V1 357
9.2.5.2 Operating principle PID_3Step V1 362
9.2.5.3 PID_3Step V1 input parameters 365
9.2.5.4 PID_3Step V1 output parameters 367
9.2.5.5 PID_3Step V1 static tags 369
9.2.5.6 Parameter State and Retain.Mode V1 378
9.2.5.7 Parameter ErrorBits V1 385
9.2.5.8 Parameter Reset V1 387
9.2.5.9 Tag ActivateRecoverMode V1 388
9.2.5.10 Tag Warning V1 390
9.2.5.11 Tag SUT.State V1 391
9.2.5.12 Tag TIR.State V1 391

9.3 PID_Temp 392
9.3.1 New features of PID_Temp 392
9.3.2 Compatibility with CPU and FW 392
9.3.3 CPU processing time and memory requirement PID_Temp V1 393
9.3.4 PID_Temp 394
9.3.4.1 Description of PID_Temp 394
9.3.4.2 Mode of operation of PID_Temp 399
9.3.4.3 Input parameters of PID_Temp 405
9.3.4.4 Output parameters of PID_Temp 407
9.3.4.5 In/out parameters of PID_Temp V2 409
9.3.4.6 PID_Temp static tags 411
9.3.4.7 PID_Temp state and mode parameters 446
9.3.4.8 PID_Temp ErrorBits parameter 455
9.3.4.9 PID_Temp ActivateRecoverMode tag 458
9.3.4.10 PID_Temp Warning tag 460
9.3.4.11 PwmPeriode tag 461
9.3.4.12 IntegralResetMode tag 464

9.4 PID basic functions ... 466
9.4.1 CONT_C ... 466
9.4.1.1 Description CONT_C ... 466
9.4.1.2 How CONT_C works ... 467
9.4.1.3 CONT_C block diagram ... 469
9.4.1.4 Input parameter CONT_C ... 470
9.4.1.5 Output parameters CONT_C ... 472
9.4.2 CONT_S ... 473
9.4.2.1 Description CONT_S ... 473
9.4.2.2 Mode of operation CONT_S ... 474
9.4.2.3 Block diagram CONT_S ... 475
9.4.2.4 Input parameters CONT_S ... 476
9.4.2.5 Output parameters CONT_S ... 477
9.4.3 PULSEGEN ... 478
9.4.3.1 Description PULSEGEN ... 478
9.4.3.2 Mode of operation PULSEGEN ... 479
9.4.3.3 Mode of operation PULSEGEN ... 482
9.4.3.4 Three-step control ... 483
9.4.3.5 Two-step control ... 486
9.4.3.6 Input parameters PULSEGEN ... 487
9.4.3.7 Output parameter PULSEGEN ... 488
9.4.4 TCONT_CP ... 489
9.4.4.1 Description TCONT_CP ... 489
9.4.4.2 Mode of operation TCONT_CP ... 490
9.4.4.3 Operating principle of the pulse generator ... 499
9.4.4.4 Block diagram TCONT_CP ... 502
9.4.4.5 Input parameters TCONT_CP ... 504
9.4.4.6 Output parameters TCONT_CP ... 505
9.4.4.7 In/out parameters TCONT_CP ... 506
9.4.4.8 Static variables TCONT_CP ... 507
9.4.4.9 Parameter STATUS_H ... 512
9.4.4.10 Parameters STATUS_D ... 513
9.4.5 TCONT_S ... 514
9.4.5.1 Description TCONT_S ... 514
9.4.5.2 Mode of operation TCONT_S ... 515
9.4.5.3 Block diagram TCONT_S ... 519
9.4.5.4 Input paramters TCONT_S ... 520
9.4.5.5 Output parameters TCONT_S ... 521
9.4.5.6 In/out parameters TCONT_S ... 521
9.4.5.7 Static variables TCONT_S ... 522
9.4.6 Integrated system functions ... 523
9.4.6.1 CONT_C_SF ... 523
9.4.6.2 CONT_S_SF ... 523
9.4.6.3 PULSEGEN_SF ... 524

9.5 Polyline ... 525
9.5.1 Compatibility with CPU and FW ... 525
9.5.2 Description Polyline ... 525
9.5.3 Operating principle Polyline ... 529
9.5.4 Input parameters of Polyline ... 533
9.5.5 Output parameters of Polyline ... 533
9.5.6 Static tags of Polyline ... 534
9.5.7 ErrorBits parameter ... 536

9.6 SplitRange 541
9.6.1 Compatibility with CPU and FW....541
9.6.2 SplitRange description....541
9.6.3 SplitRange input parameters 544
9.6.4 SplitRange output parameters 544
9.6.5 SplitRange static tags 545
9.6.6 ErrorBits parameter....546

9.7 RampFunction....549
9.7.1 Compatibility with CPU and FW....549
9.7.2 RampFunction description 549
9.7.3 RampFunction mode of operation 554
9.7.4 RampFunction input parameters 558
9.7.5 RampFunction output parameters 558
9.7.6 RampFunction static tags 559
9.7.7 ErrorBits parameter....561

A Service & Support.... 566

Index.... 569

Documentation guide

1

The documentation for the SIMATIC S7-1500 automation system, for CPU 1516pro-2 PN based on SIMATIC S7-1500, and for the distributed I/O systems SIMATIC ET 200MP, ET 200SP and ET 200AL is divided into three areas.
This division allows you easier access to the specific information you require.

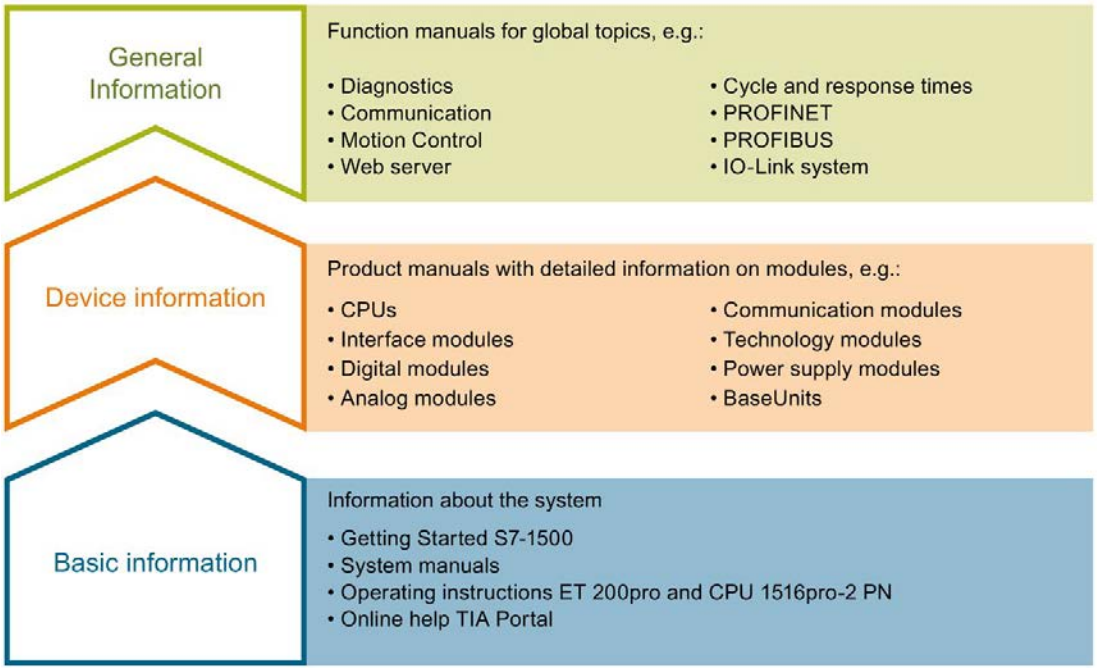

Basic information

System manuals and Getting Started manuals describe in detail the configuration, installation, wiring and commissioning of the SIMATIC S7-1500, ET 200MP, ET 200SP and ET 200AL systems; use the corresponding operating instructions for CPU 1516pro-2 PN. The STEP 7 online help supports you in configuration and programming.

Device information

Product manuals contain a compact description of the module-specific information, such as properties, terminal diagrams, characteristics and technical specifications.

General information

The function manuals contain detailed descriptions on general topics such as diagnostics, communication, Motion Control, Web server, OPC UA.

You can download the documentation free of charge from the Internet (http://w3.siemens.com/mcms/industrial-automation-systems-simatic/en/manual-overview/Pages/Default.aspx).

Changes and additions to the manuals are documented in product information sheets.

You will find the product information on the Internet:

- S7-1500/ET 200MP (https://support.industry.siemens.com/cs/us/en/view/68052815)
- ET 200SP (https://support.industry.siemens.com/cs/us/en/view/73021864)
- ET 200AL (https://support.industry.siemens.com/cs/us/en/view/99494757)

Manual Collections

The Manual Collections contain the complete documentation of the systems put together in one file.

You will find the Manual Collections on the Internet:

- S7-1500/ET 200MP (https://support.industry.siemens.com/cs/ww/en/view/86140384)
- ET 200SP (https://support.industry.siemens.com/cs/ww/en/view/84133942)
- ET 200AL (https://support.industry.siemens.com/cs/ww/en/view/95242965)

"mySupport"

With "mySupport", your personal workspace, you make the best out of your Industry Online Support.

In "mySupport", you can save filters, favorites and tags, request CAx data and compile your personal library in the Documentation area. In addition, your data is already filled out in support requests and you can get an overview of your current requests at any time.

You must register once to use the full functionality of "mySupport".

You can find "mySupport" on the Internet (https://support.industry.siemens.com/My/ww/en).

"mySupport" - Documentation

In the Documentation area in "mySupport" you can combine entire manuals or only parts of these to your own manual.
You can export the manual as PDF file or in a format that can be edited later.

You can find "mySupport" - Documentation on the Internet (http://support.industry.siemens.com/My/ww/en/documentation).

"mySupport" - CAx data

In the CAx data area in "mySupport", you can access the current product data for your CAx or CAe system.

You configure your own download package with a few clicks.

In doing so you can select:

- Product images, 2D dimension drawings, 3D models, internal circuit diagrams, EPLAN macro files
- Manuals, characteristics, operating manuals, certificates
- Product master data

You can find "mySupport" - CAx data on the Internet (http://support.industry.siemens.com/my/ww/en/CAxOnline).

Application examples

The application examples support you with various tools and examples for solving your automation tasks. Solutions are shown in interplay with multiple components in the system - separated from the focus on individual products.

You will find the application examples on the Internet (https://support.industry.siemens.com/sc/ww/en/sc/2054).

TIA Selection Tool

With the TIA Selection Tool, you can select, configure and order devices for Totally Integrated Automation (TIA).
This tool is the successor of the SIMATIC Selection Tool and combines the known configurators for automation technology into one tool.
With the TIA Selection Tool, you can generate a complete order list from your product selection or product configuration.

You can find the TIA Selection Tool on the Internet (http://w3.siemens.com/mcms/topics/en/simatic/tia-selection-tool).

SIMATIC Automation Tool

You can use the SIMATIC Automation Tool to run commissioning and maintenance activities simultaneously on different SIMATIC S7 stations as a bulk operation, independently of the TIA Portal.

The SIMATIC automation tool provides a variety of functions:

- Scanning of a PROFINET/Ethernet plant network and identification of all connected CPUs
- Address assignment (IP, subnet, gateway) and station name (PROFINET device) to a CPU
- Transfer of the date and programming device/PC time converted to UTC time to the module
- Program download to CPU
- Operating mode switchover RUN/STOP
- CPU localization by means of LED flashing
- Reading out CPU error information
- Reading of CPU diagnostic buffer
- Reset to factory settings
- Updating the firmware of the CPU and connected modules

You can find the SIMATIC Automation Tool on the Internet (https://support.industry.siemens.com/cs/ww/en/view/98161300).

PRONETA

With SIEMENS PRONETA (PROFINET network analysis), you analyze the plant network during commissioning. PRONETA features two core functions:

- The topology overview independently scans PROFINET and all connected components.
- The IO check is a fast test of the wiring and the module configuration of a plant.

You can find SIEMENS PRONETA on the Internet (https://support.industry.siemens.com/cs/ww/en/view/67460624).

SINETPLAN

SINETPLAN, the Siemens Network Planner, supports you in planning automation systems and networks based on PROFINET. The tool facilitates professional and predictive dimensioning of your PROFINET installation as early as in the planning stage. In addition, SINETPLAN supports you during network optimization and helps you to exploit network resources optimally and to plan reserves. This helps to prevent problems in commissioning or failures during productive operation even in advance of a planned operation. This increases the availability of the production plant and helps improve operational safety.

The advantages at a glance

- Network optimization thanks to port-specific calculation of the network load
- Increased production availability thanks to online scan and verification of existing systems
- Transparency before commissioning through importing and simulation of existing STEP 7 projects
- Efficiency through securing existing investments in the long term and optimal exploitation of resources

You can find SINETPLAN on the Internet (https://www.siemens.com/sinetplan).

Principles for control 2

2.1 Controlled system and actuators

Controlled system

Room temperature control by means of a heating system is a simple example of a controlled system. A sensor measures the room temperature and transfers the value to a controller. The controller compares the current room temperature with a setpoint and calculates an output value (manipulated variable) for heating control.

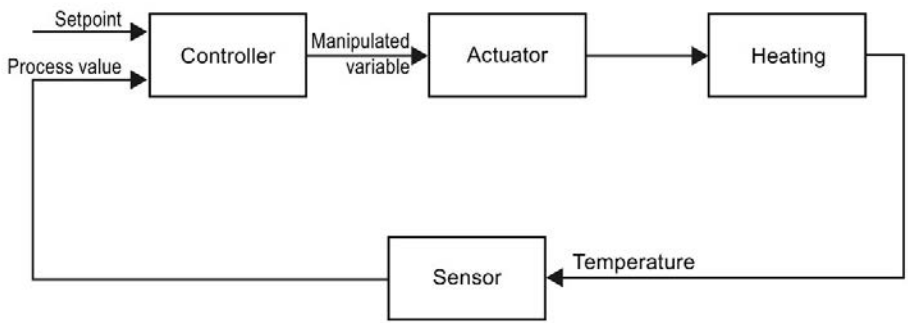

A properly set PID controller reaches this setpoint as quickly as possible and then holds it a constant value. After a change in the output value, the process value often changes only with a time delay. The controller has to compensate for this response.

Actuators

The actuator is an element of the controlled system and is influenced by the controller. Its function modifies mass and energy flows.

The table below provides an overview of actuator applications.

Application	Actuator
Liquid and gaseous mass flow	Valve, shutter, gate valve
Solid mass flow, e.g., bulk material	Articulated baffle, conveyor, vibrator channel
Flow of electrical power	Switching contact, contactor, relay, thyristor
	Variable resistor, variable transformer, transistor

Actuators are distinguished as follows:

- Proportional actuators with constant actuating signal

  These elements set degrees of opening, angular positions or positions in proportion to the output value. The output value has an analog effect on the process within the control range.

  Actuators in this group include spring-loaded pneumatic drives, as well as motorized drives with position feedback for which a position control system is formed.

  An continuous controller, such as PID_Compact, generates the output value.

- Proportional actuators with pulse-width modulated signal

  These actuators are used to generate the output of pulses with a length proportional to the output value within the sampling time intervals. The actuator - e.g. a heating resistor or cooling apparatus - is switched on in isochronous mode for durations that differ depending on the output value.

  The actuating signal can assume unipolar "On" or "Off" states, or represent bipolar states such as "open/close", "forward/backward", "accelerate/brake".

  The output value is generated by a two-step controller such as PID_Compact with pulse-width modulation.

- Actuators with integral action and three-step actuating signal

  Actuators are frequently operated by motors with an on period that is proportional to the actuator travel of the choke element. This includes elements such as valves, shutters, and gate valves. In spite of their different design, all of these actuators follow the effect of an integral action at the input of the controlled system.

  A step controller, such as PID_3Step. generates the output value.

2.2 Controlled systems

The properties of a controlled system can hardly be influenced as these are determined by the technical requirements of the process and machinery. Acceptable control results can only be achieved by selecting a suitable controller type for the specific controlled system and adapting the controller to the time response of the controlled system. Therefore, it is is indispensable for the configuration of the proportional, integral and derivative actions of the controller to have precise knowledge of the type and parameters of the controlled system.

Controlled system types

Controlled systems are classified based on their time response to step changes of the output value.

We distinguish between the following controlled systems:

- Self-regulating controlled systems
  - Proportional-action controlled systems
  - PT1 controlled systems
  - PT2 controlled systems
- Non-self-regulating controlled systems
- Controlled systems with and without dead time

Self-regulating controlled systems

Proportional-action controlled systems

In proportional-action controlled systems, the process value follows the output value almost immediately. The ratio between the process value and output value is defined by the proportional Gain of the controlled system.

Examples:

- Gate valve in a piping system
- Voltage dividers
- Step-down function in hydraulic systems

PT1 controlled systems

In a PT1 controlled system, the process value initially changes in proportion to the change of the output value. The rate of change of the process value is reduced as a function of the time until the end value is reached, i.e., it is delayed.

Examples:

- Spring damping system
- Charge of RC elements
- Water container that is heated with steam.

The time constants are often identical for heating and cooling processes, or for charging and discharge characteristics. With different time constants, controlling is clearly more complex.

PT2 controlled systems

In a PT2 controlled system, the process value does not immediately follow a step change of the output value, i.e., it increases in proportion to the positive rate of rise and then approaches the setpoint at a decreasing rate of rise. The controlled system shows a proportional response characteristic with second order delay element.

Examples:

- Pressure control
- Flow rate control
- Temperature control

Non-self-regulating controlled systems

Non-self-regulating controlled systems have an integral response. The process value approaches an infinite maximum value.

Example:

- Liquid flow into a container

Controlled systems with dead time

A dead time always represents the runtime or transport time that has to expire before a change to the system input can be measured at the system output.

In controlled systems with dead time, the process value change is delayed by the amount of the dead time.

Example:

Conveyor

2.3 Characteristic values of the control section

Determining the time response from the step response

Time response of the controlled system can be determined based on the time characteristic of process value x following a step change of output value y. Most controlled systems are self-regulating controlled systems.

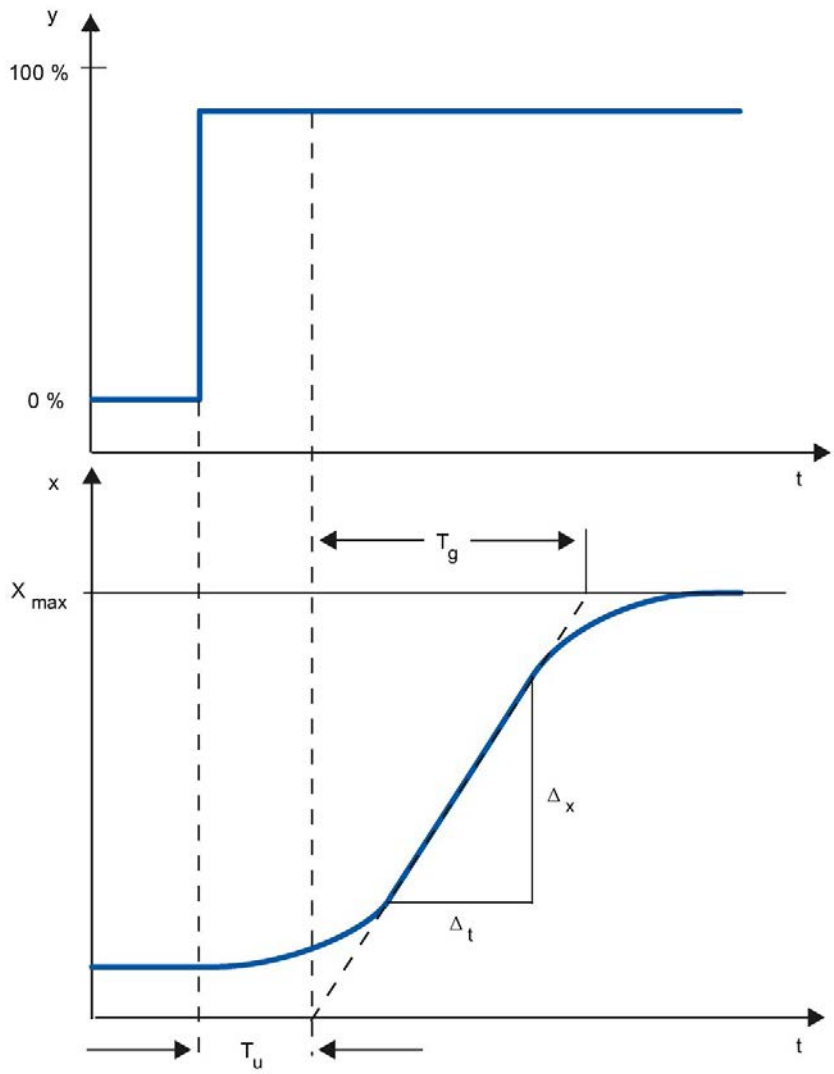

The time response can be determined by approximation using the variables Delay time T_u, Recovery time T_g and Maximum value X_{max}. The variables are determined by applying tangents to the maximum value and the inflection point of the step response. In many situations, it is not possible to record the response characteristic up to the maximum value because the process value cannot exceed specific values. In this case, the rate of rise v_{max} is used to identify the controlled system ($v_{max} = \Delta_x/\Delta_t$).

The controllability of the controlled system can be estimated based on the ratio T_u/T_g, or $T_u \times v_{max}/X_{max}$. Rule:

Process type	T_u / T_g	Suitability of the controlled system for controlling
I	< 0.1	can be controlled well
II	0.1 to 0.3	can still be controlled
III	> 0.3	difficult to control

Influence of the dead time on the controllability of a controlled system

A controlled system with dead time and recovery reacts as follows to a jump of the output value.

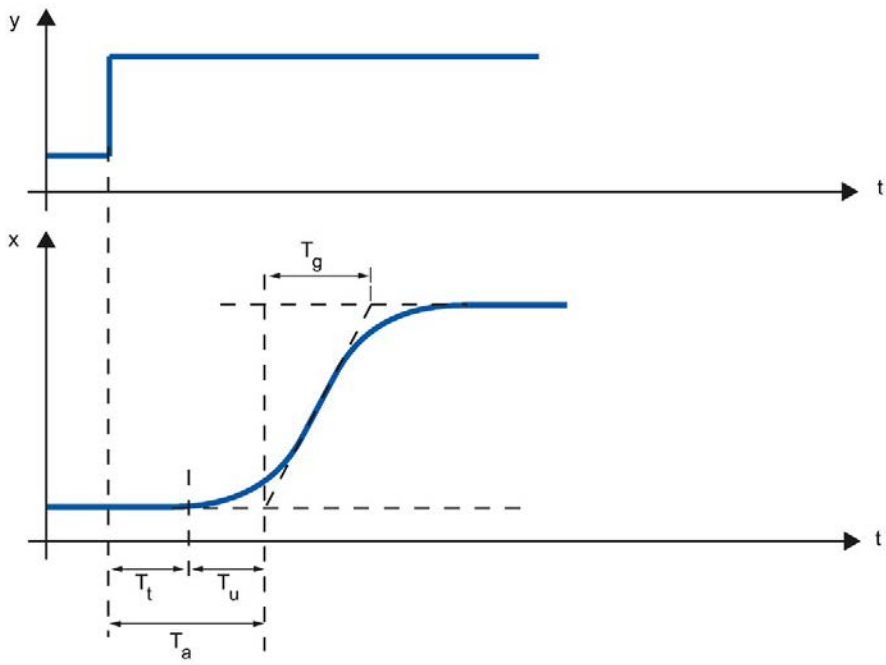

T_t	Dead time
T_u	Delay time
T_g	Recovery time
y	Output value
x	Process value

The controllability of a self-regulating controlled system with dead time is determined by the ratio of T_t to T_g. T_t must be small compared to T_g. Rule:

$T_t/T_g \leq 1$

Response rate of controlled systems

Controlled systems can be judged on the basis of the following values:

T_u < 0.5 min, T_g < 5 min = fast controlled system

T_u > 0.5 min, T_g > 5 min = slow controlled system

Parameters of certain controlled systems

Physical quantity	Controlled system	Delay time T_u	Recovery time T_g	Rate of rise v_{max}
Temperature	Small electrically heated furnace	0.5 to 1 min	5 to 15 min	Up to 60 K/min.
	Large electrically heated annealing furnace	1 to 5 min	10 to 20 min	Up to 20 K/min.
	Large gas-heated annealing furnace	0.2 to 5 min	3 to 60 min	1 to 30 K/min
	Distillation tower	1 to 7 min	40 to 60 min	0.1 to 0.5° C/s
	Autoclaves (2.5 m^3)	0.5 to 0.7 min	10 to 20 min	Not specified
	High-pressure autoclaves	12 to 15 min	200 to 300 min	Not specified
	Steam superheater	30 s to 2.5 min	1 to 4 min	2°C/s
	Injection molding machines	0.5 to 3 min	3 to 30 min	5 to 20 K/min
	Extruders	1 to 6 min	5 to 60 min	
	Packaging machines	0.5 to 4 min	3 to 40 min	2 to 35 K/min
	Room heating	1 to 5 min	10 to 60 min	1° C/min
Flow rate	Pipeline with gas	0 to 5 s	0.2 to 10 s	Not relevant
	Pipeline with liquid	None	None	
Pressure	Gas pipeline	None	0.1 s	Not relevant
	Drum boiler with gas or oil firing	None	150 s	Not relevant
	Drum boiler with impact grinding mills	1 to 2 min	2 to 5 min	Not relevant
Vessel level	Drum boiler	0.6 to 1 min	Not specified	0.1 to 0.3 cm/s
Speed	Small electric drive	None	0.2 to 10 s	Not relevant
	Large electric drive	None	5 to 40 s	Not relevant
	Steam turbine	None	Not specified	50 min^{-1}
Voltage	Small generators	None	1 to 5 s	Not relevant
	Large generators	None	5 to 10 s	Not relevant

2.4 Pulse controller

Two-step controllers without feedback

Two-step controllers have the state "ON" and "OFF" as the switching function. This corresponds to 100% or 0% output. This behavior generates a sustained oscillation of process value x around setpoint w.

The amplitude and duration of the oscillation increase in proportion to the ratio between the delay time T_u and recovery time T_g of the controlled system. These controllers are used mainly for simple temperature control systems (such as electrically directly heated furnaces) or as limit-value signaling units.

The following diagram shows the characteristic of a two-step controller

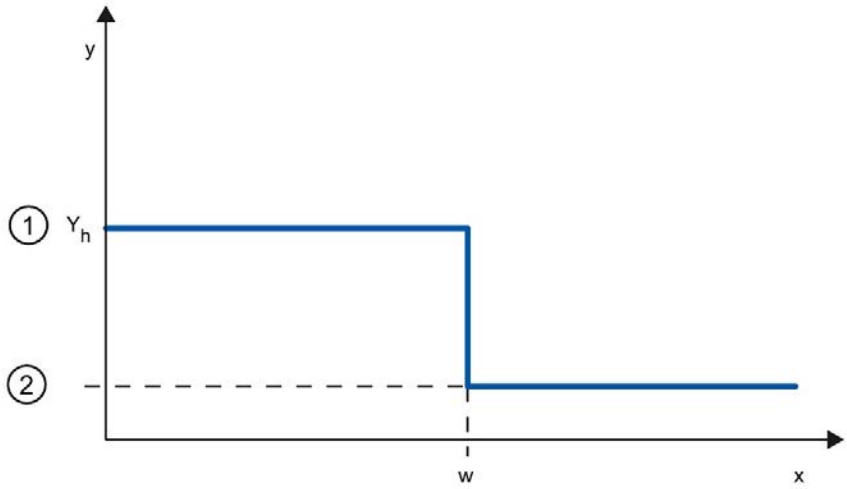

①	ON
②	OFF
Y_h	Control range
w	Setpoint

The following diagram shows the control function of a two-step controller

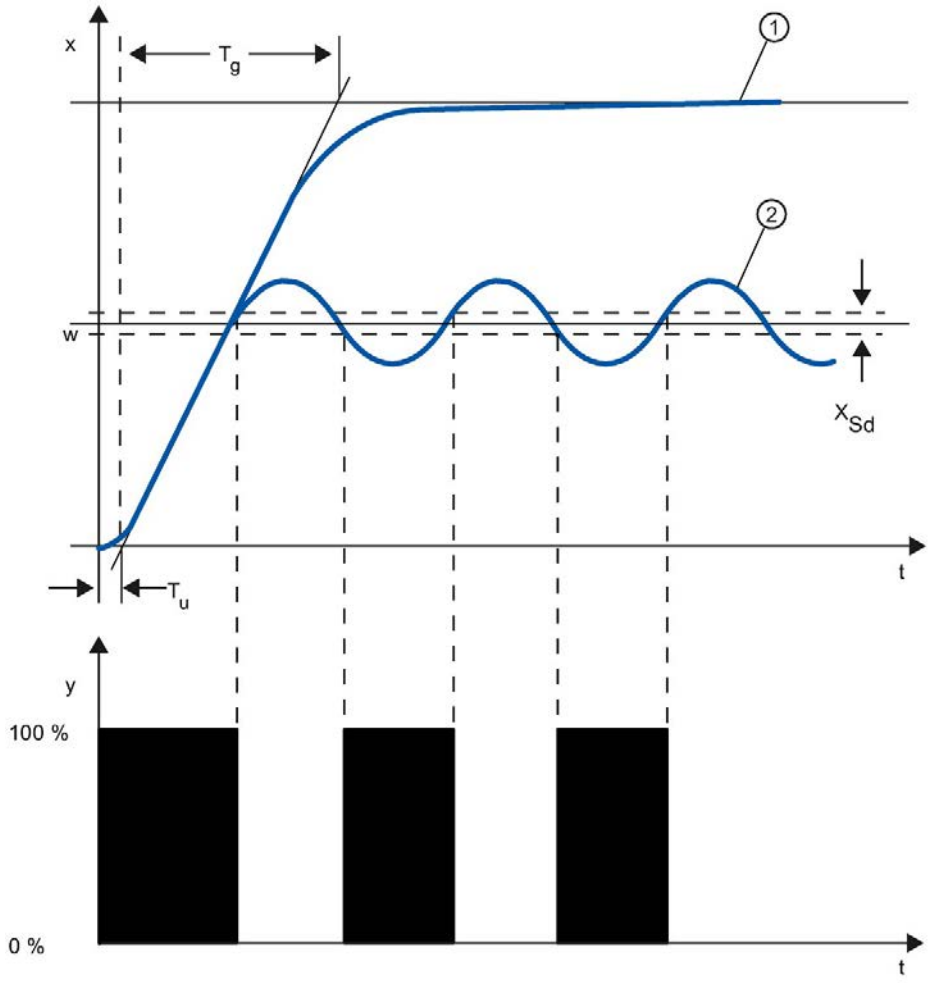

①	Response characteristic without controller
②	Response characteristic with two-step controller
T_u	Delay time
T_g	Recovery time
X_{Sd}	Switching difference

Two-step controllers with feedback

The behavior of two-step controllers in the case of controlled systems with larger delay times, such as furnaces where the functional space is separated from the heating, can be improved by the use of electronic feedback.

The feedback is used to increase the switching frequency of the controller, which reduces the amplitude of the process value. In addition, the control-action results can be improved substantially in dynamic operation. The limit for the switching frequency is set by the output level. It should not exceed 1 to 5 switches per minute at mechanical actuators, such as relays and contactors. In the case of voltage and current outputs with downstream thyristor or Triac controllers high switching frequencies can be selected that exceed the limit frequency of the controlled system by far.

Since the switching pulses can no longer be determined at the output of the controlled system, results comparable with those of continuous controllers are obtained.

The output value is generated by pulse-width modulation of the output value of a continuous controller.

Two-step controllers with feedback are used for temperature control in furnaces, at processing machines in the plastics, textile, paper, rubber and foodstuff industries as well as for heating and cooling devices.

Three-step controllers

Three-step controllers are used for heating / cooling. These controllers have two switching points as their output. The control-action results are optimized through electronic feedback structures. Fields of applications for such controllers are heating, low-temperature, climatic chambers and tool heating units for plastic-processing machines.

The following diagram shows the characteristic of a three-step controller

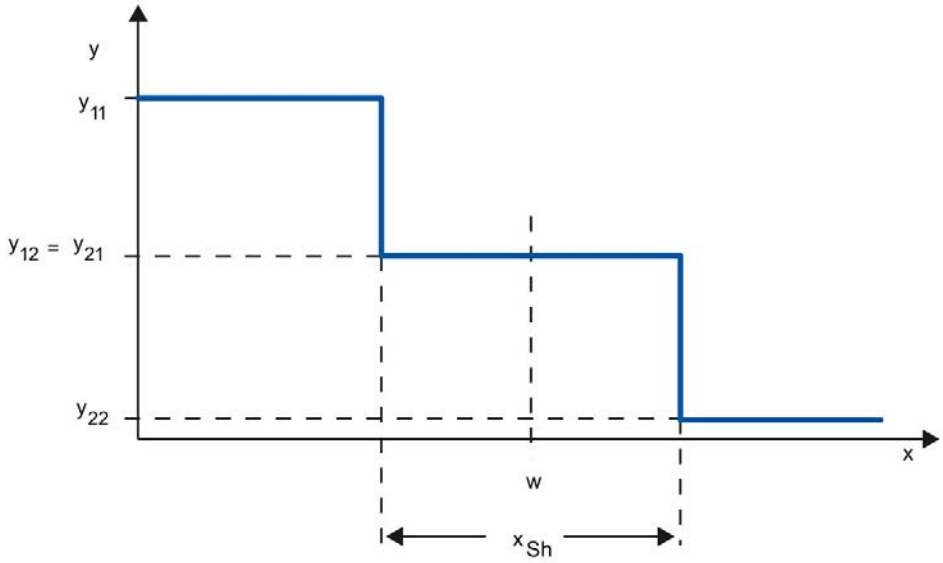

y	Output value, e.g. y11 = 100% heating y12 = 0% heating y21 = 0% cooling y22 = 100% cooling
x	Physical quantity of the process value, e.g., temperature in° C
w	Setpoint
x_{Sh}	Distance between Switching Point 1 and Switching Point 2

2.5 Response to setpoint changes and disturbances

Response to setpoint changes

The process value should follow a setpoint change as quickly as possible. The response to setpoint changes is improved by minimizing fluctuation of the process value and the time required to reach the new setpoint.

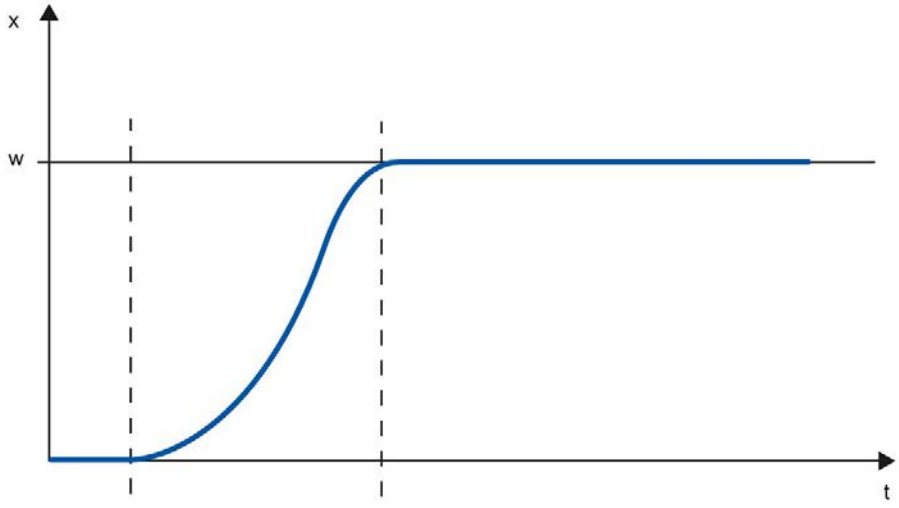

x Process value

w Setpoint

Response to disturbances

The setpoint is influenced by disturbance variables. The controller has to eliminate the resulting control deviations in the shortest time possible. The response to disturbances is improved by minimizing fluctuation of the process value and the time required to reach the new setpoint.

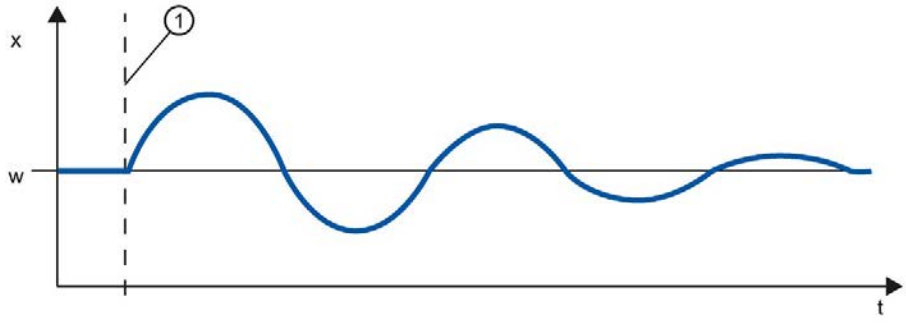

x Process value

w Setpoint

① Influencing a disturbance variable

Disturbance variables are corrected by a controller with integral action. A persistent disturbance variable does not reduce control quality because the control deviation is relatively constant. Dynamic disturbance variables have a more significant impact on control quality because of control deviation fluctuation. The control deviation is eliminated again only by means of the slow acting integral action.

A measurable disturbance variable can be included in the controlled system. This inclusion would significantly accelerated the response of the controller.

2.6 Control Response at Different Feedback Structures

Control behavior of controllers

A precise adaptation of the controller to the time response of the controlled system is decisive for the controller's precise settling to the setpoint and optimum response to disturbance variables.

The feedback circuit can have a proportional action (P), proportional-derivative action (PD), proportional-integral action (PI), or proportional-integral-derivative action (PID).

If step functions are to be triggered by control deviations, the step responses of the controllers differ depending on their type.

Step response of a proportional action controller

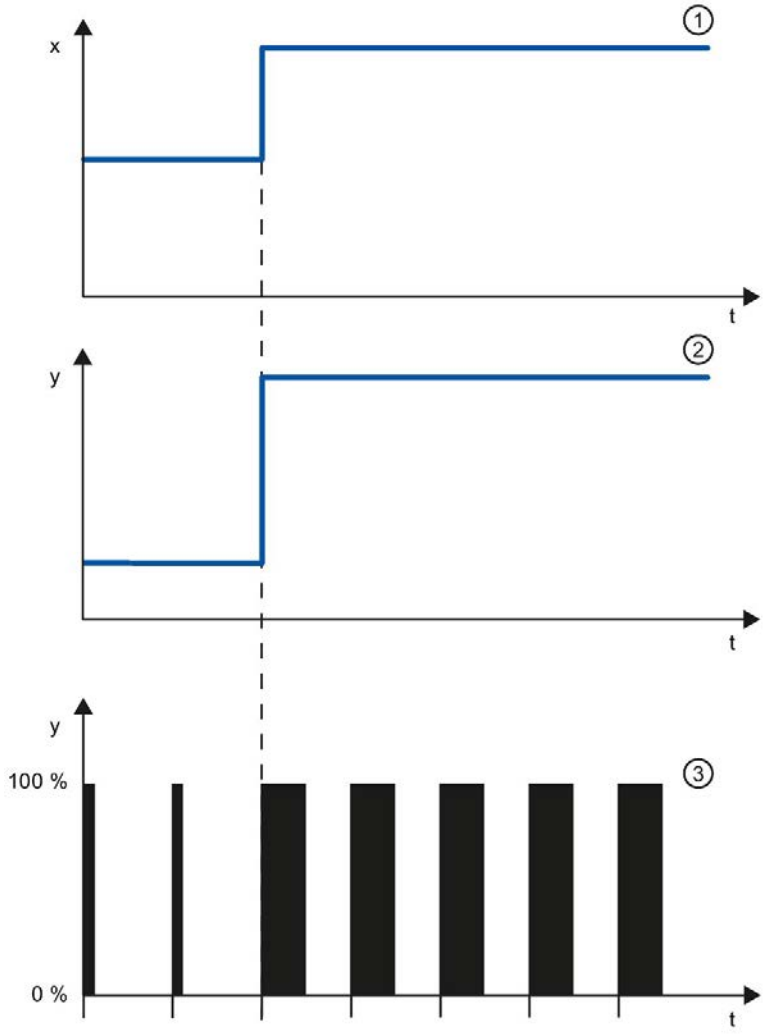

① Control deviation
② Output value of a continuous controller
③ Output value of a pulse controller

Equation for proportional action controller

Output value and control deviation are directly proportional, meaning:

Output value = proportional gain × control deviation

y = GAIN × x

Step response of a PD-action controller

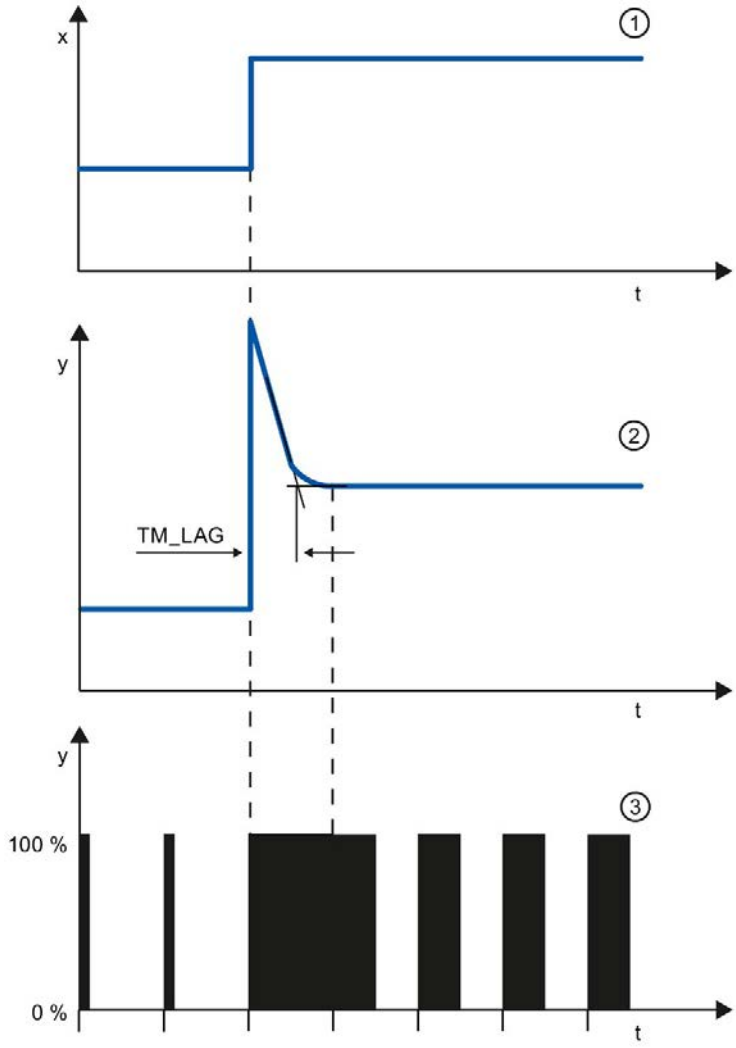

①	Control deviation
②	Output value of a continuous controller
③	Output value of a pulse controller
TM_LAG	Delay of the Derivative action

Equation for PD-action controller

The following applies for the step response of the PD-action controller in the time range:

$$y = GAIN \cdot X_W \cdot \left(1 + \frac{TD}{TM_LAG} \cdot e^{\frac{-t}{TM_LAG}} \right)$$

t = time interval since the step of the control deviation

The derivative action generates a output value as a function of the rate of change of the process value. A derivative action by itself is not suitable for controlling because the output value only follows a step of the process value. As long as the process value remains constant, the output value will no longer change.

The response to disturbances of the derivative action is improved in combination with a proportional action. Disturbances are not corrected completely. The good dynamic response is advantageous. A well attenuated, non-oscillating response is achieved during approach and setpoint change.

A controller with derivative action is not appropriate if a controlled system has pulsing measured quantities, for example, in the case of pressure or flow control systems.

Step response of a PI-action controller

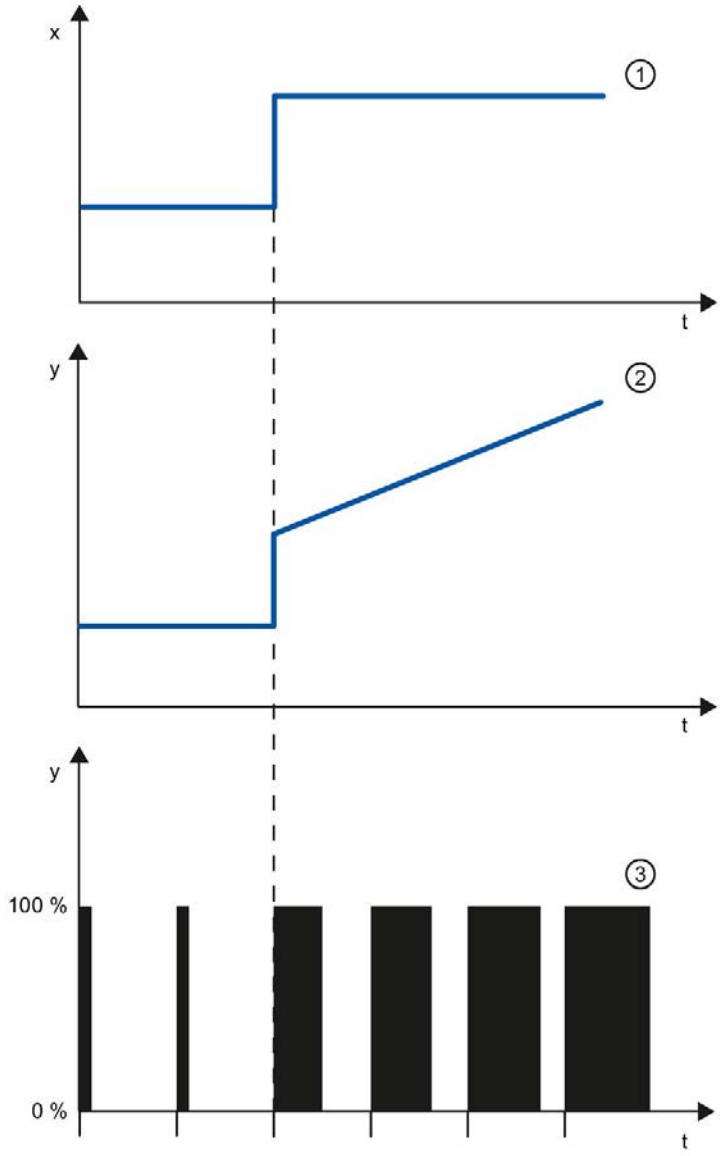

① Control deviation
② Output value of a continuous controller
③ Output value of a pulse controller

An integral action in the controller adds the control deviation as a function of the time. This means that the controller corrects the system until the control deviation is eliminated. A sustained control deviation is generated at controllers with proportional action only. This effect can be eliminated by means of an integral action in the controller.

In practical experience, a combination of the proportional, integral and derivative actions is ideal, depending on the requirements placed on the control response. The time response of the individual components can be described by the controller parameters proportional gain GAIN, integral action time TI (integral action), and derivative action time TD (derivative action).

Equation for PI-action controller

The following applies for the step response of the PI-action controller in the time range:

$$y = GAIN \cdot X_W \cdot \left(1 + \frac{1}{TI \cdot t}\right)$$

t = time interval since the step of the control deviation

Step response of a PID controller

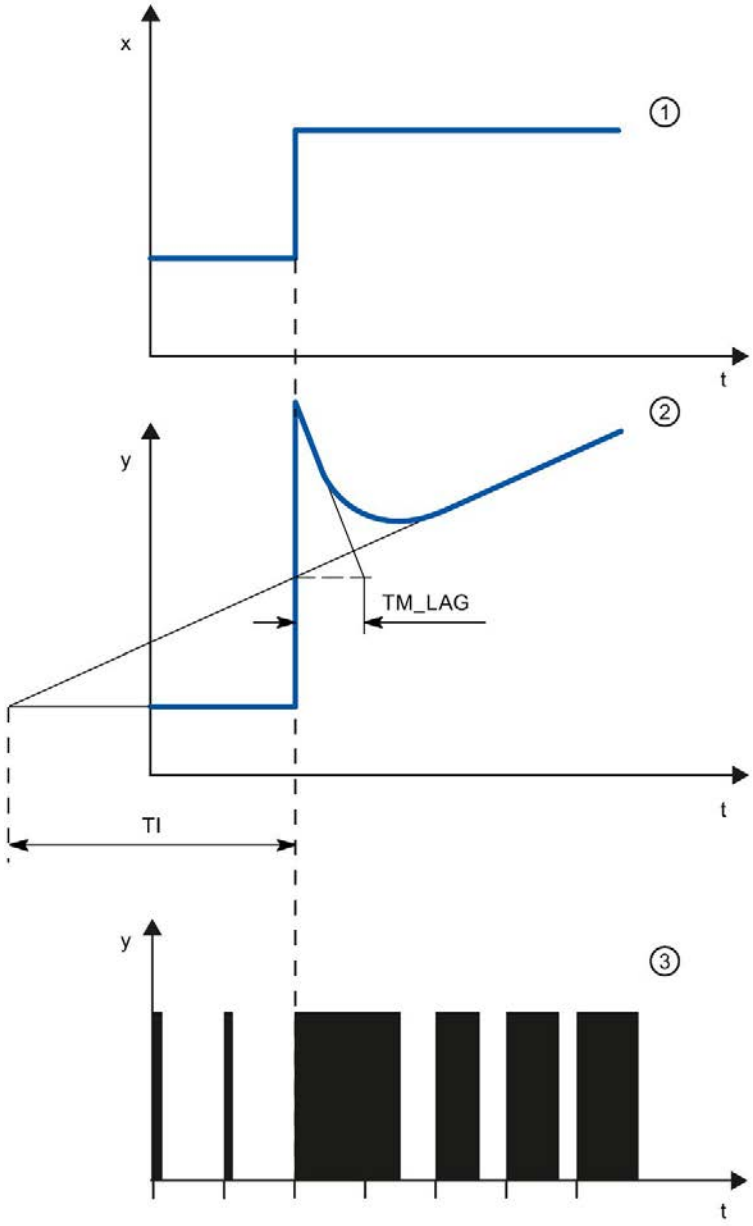

①	Control deviation
②	Output value of a continuous controller
③	Output value of a pulse controller
TM_LAG	Delay of the Derivative action
T_i	Integral action time

Equation for PID controller

The following applies for the step response of the PID controller in the time range:

$$y = GAIN \cdot X_w \cdot \left(1 + \frac{1}{TI \cdot t} + \frac{TD}{TM_LAG} \cdot e^{\frac{-t}{TM_LAG}} \right)$$

t = time interval since the step of the control deviation

Response of a controlled system with different controller structures

Most of the controller systems occurring in process engineering can be controlled by means of a controller with PI-action response. In the case of slow controlled system with a large dead time, for example temperature control systems, the control result can be improved by means of a controller with PID action.

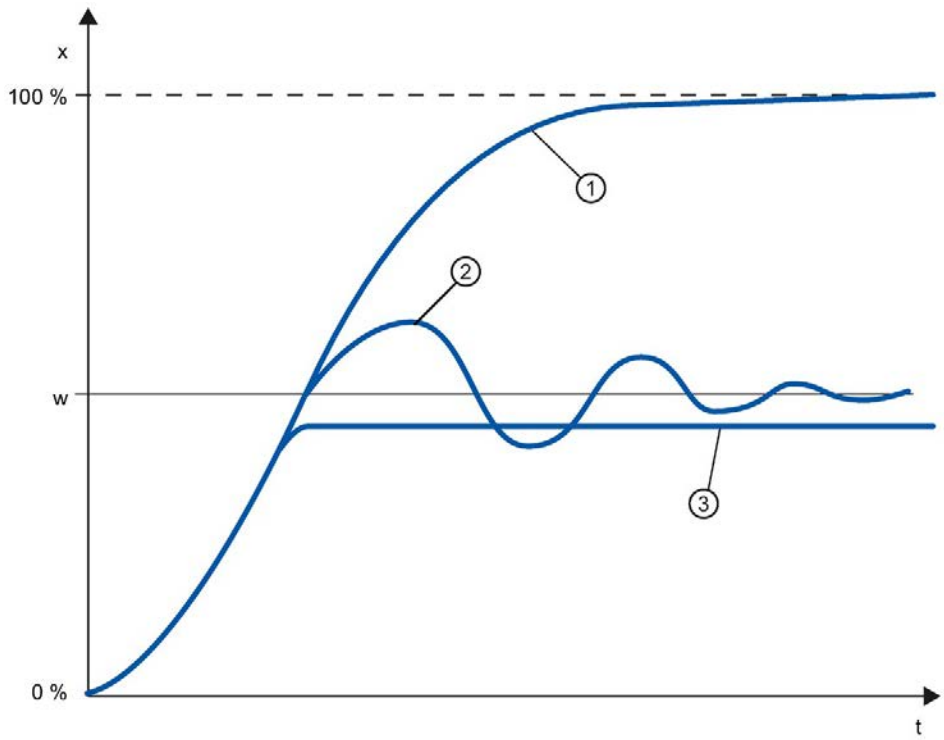

①	No controller
②	PID controller
③	PD-action controller
w	Setpoint
x	Process value

Controllers with PI and PID action have the advantage that the process value does not have any deviation from the setpoint value after settling. The process value oscillates over the setpoint during approach.

2.7 Selection of the controller structure for specified controlled systems

Selection of the Suitable Controller Structures

To achieve optimum control results, select a controller structure that is suitable for the controlled system and that you can adapt to the controlled system within specific limits.

The table below provides an overview of suitable combinations of a controller structure and controlled system.

Controlled system		Controller structure			
		P	PD	PI	PID
	With dead time only	Unsuitable	Unsuitable	Suitable	Unsuitable
	PT1 with dead time	Unsuitable	Unsuitable	Well suited	Well suited
	PT2 with dead time	Unsuitable	Suited conditionally	Well suited	Well suited
	Higher order	Unsuitable	Unsuitable	Suited conditionally	Well suited
	Not self-regulating	Well suited	Well suited	Well suited	Well suited

The table below provides an overview of suitable combinations of a controller structure and physical quantity.

Physical quantity	Controller structure			
	P	PD	PI	PID
	Sustained control deviation		No sustained control deviation	
Temperature	For low performance requirements and proportional action controlled systems with $T_u/Tg < 0,1$	Well suited	The most suitable controller structures for high performance requirements (except for specially adapted special controllers)	
Pressure	Suitable, if the delay time is inconsiderable	Unsuitable	The most suitable controller structures for high performance requirements (except for specially adapted special controllers)	
Flow rate	Unsuitable, because required GAIN range is usually too large	Unsuitable	Suitable, but integral action controller alone often better	Hardly required

2.8 PID parameter settings

Rule of Thumb for the Parameter Setting

Controller structure	Setting
P	GAIN ≈ v_{max} × T_u [° C]
PI	GAIN ≈ 1.2 × v_{max} × T_u [° C] TI ≈ 4 × T_u [min]
PD	GAIN ≈ 0.83 × v_{max} × T_u [° C] TD ≈ 0.25 × v_{max} × T_u [min] TM_LAG ≈ 0.5 × TD[min]
PID	GAIN ≈ 0.83 × v_{max} × T_u [° C] TI ≈ 2 × T_u [min] TD ≈ 0.4 × T_u [min] TM_LAG ≈ 0.5 × TD[min]
PD/PID	GAIN ≈ 0.4 × v_{max} × T_u [° C] TI ≈ 2 × T_u [min] TD ≈ 0.4 × T_u [min] TM_LAG ≈ 0.5 × TD[min]

Instead of $v_{max} = \Delta x / \Delta t$, you can use X_{max} / T_g.

In the case of controllers with PID structure the setting of the integral action time and differential-action time is usually coupled with each other.

The ratio TI / TD lies between 4 and 5 and is optimal for most controlled systems.

Non-observance of the differential-action time TD is uncritical at PD controllers.

In the case of PI and PID controllers, control oscillations occur if the integral action time TI has been select by more than half too small.

An integral action time that is too large slows down the settling times of disturbances. One cannot expect that the control loops operate "optimally" after the first parameter settings. Experience shows that adjusting is always necessary, when a system exists that is "difficult to control" with $T_u / T_g > 0.3$.

Configuring a software controller 3

3.1 Overview of software controller

For the configuration of a software controller, you need an instruction with the control algorithm and a technology object. The technology object for a software controller corresponds with the instance DB of the instruction. The configuration of the controller is saved in the technology object. In contrast to the instance DBs of other instructions, technology objects are not stored for the program resources, but rather under CPU > Technology objects.

Technology objects and instructions

CPU	Library	Instruction	Technology object	Description
S7-1200	Compact PID	PID_Compact V1.x	PID_Compact V1.x	Universal PID controller with integrated tuning
S7-1200		PID_3Step V1.x	PID_3Step V1.x	PID controller with integrated tuning for valves
S7-1500 S7-1200 V4.x		PID_Compact V2.x	PID_Compact V2.x	Universal PID controller with integrated tuning
S7-1500 S7-1200 V4.x		PID_3Step V2.x	PID_3Step V2.x	PID controller with integrated tuning for valves
S7-1500 ≥ V1.7 S7-1200 ≥ V4.1		PID_Temp V1.x	PID_Temp V1.x	Universal PID temperature controller with integrated tuning
S7-1500/300/400	PID basic functions	CONT_C	CONT_C	Continuous controller
S7-1500/300/400		CONT_S	CONT_S	Step controller for actuators with integrating behavior
S7-1500/300/400		PULSEGEN	-	Pulse generator for actuators with proportional behavior
S7-1500/300/400		TCONT_CP	TCONT_CP	Continuous temperature controller with pulse generator
S7-1500/300/400		TCONT_S	TCONT_S	Temperature controller for actuators with integrating behavior

CPU	Library	Instruction	Technology object	Description
S7-300/400	PID Self Tuner	TUN_EC	TUN_EC	Optimization of a continuous controller
S7-300/400		TUN_ES	TUN_ES	Optimization of a step controller
S7-300/400	Standard PID Control (PID Professional optional package)	PID_CP	PID_CP	Continuous controller with pulse generator
S7-300/400		PID_ES	PID_ES	Step controller for actuators with integrating behavior
S7-300/400		LP_SCHED	-	Distribute controller calls
S7-300/400	Modular PID Control (PID Professional optional package)	A_DEAD_B	-	Filter interfering signal from control deviation
S7-300/400		CRP_IN	-	Scale analog input signal
S7-300/400		CRP_OUT	-	Scale analog output signal
S7-300/400		DEAD_T	-	Delay output of input signal
S7-300/400		DEADBAND	-	Suppress small fluctuations to the process value
S7-300/400		DIF	-	Differentiate input signals over time
S7-300/400		ERR_MON		Monitor control deviation
S7-300/400		INTEG	-	Integrate input signals over time
S7-300/400		LAG1ST	-	First-order delay element
S7-300/400		LAG2ND	-	Second-order delay element
S7-300/400		LIMALARM	-	Report limit values
S7-300/400		LIMITER	-	Limiting the manipulated variable
S7-300/400		LMNGEN_C	-	Determine manipulated variable for continuous controller
S7-300/400		LMNGEN_S	-	Determine manipulated variable for step controller
S7-300/400		NONLIN	-	Linearize encoder signal
S7-300/400		NORM	-	Scale process value physically
S7-300/400		OVERRIDE	-	Switch manipulated variable from 2 PID controllers to 1 actuator
S7-300/400		PARA_CTL	-	Switch parameter sets
S7-300/400		PID	-	PID algorithm
S7-300/400		PUSLEGEN_M	-	Generate pulse for proportional actuators
S7-300/400		RMP_SOAK	-	Specify setpoint according to ramp / soak
S7-300/400		ROC_LIM	-	Limit rate of change
S7-300/400		SCALE_M	-	Scale process value
S7-300/400		SP_GEN	-	Specify setpoint manually
S7-300/400		SPLT_RAN	-	Split manipulated variable range
S7-300/400		SWITCH	-	Switch analog values
S7-300/400		LP_SCHED_M	-	Distribute controller calls

3.2 Steps for the configuration of a software controller

All SW-controllers are configured according to the same scheme:

Step	Description
1	Add technology object (Page 41)
2	Configure technology object (Page 42)
3	Call instruction in the user program (Page 43)
4	Download technology object to device (Page 44)
5	Commission software controller (Page 45)
6	Save optimized PID parameters in the project (Page 45)
7	Comparing values (Page 47)
8	Display instances of a technology object (Page 72)

3.3 Add technology objects

Add technology object in the project navigator

When a technology object is added, an instance DB is created for the instruction of this technology object. The configuration of the technology object is stored in this instance DB.

Requirement

A project with a CPU has been created.

Procedure

To add a technology object, proceed as follows:

1. Open the CPU folder in the project tree.
2. Open the "Technology objects" folder.
3. Double-click "Add new object".
   The "Add new object" dialog box opens.
4. Click on the "PID" button.
   All available PID-controllers for this CPU are displayed.
5. Select the instruction for the technology object, for example, PID_Compact.
6. Enter an individual name for the technology object in the "Name" input field.
7. Select the "Manual" option if you want to change the suggested data block number of the instance DB.
8. Click "Further information" if you want to add own information to the technology object.
9. Confirm with "OK".

Result

The new technology object has been created and stored in the project tree in the "Technology objects" folder. The technology object is used if the instruction for this technology object is called in a cyclic interrupt OB.

Note

You can select the "Add new and open" check box at the bottom of the dialog box. This opens the configuration of the technology object after adding has been completed.

3.4 Configure technology objects

The properties of a technology object on a S7-1200 CPU can be configured in two ways.

- In the Inspector window of the programming editor
- In the configuration editor

The properties of a technology object on a S7-300/400 CPU can only be configured in the configuration editor.

Inspector window of the programming editor

In the Inspector window of the programming editor you can only configure the parameters required for operation.

The offline values of the parameters are also shown in online mode. You can only change the online values in the commissioning window.

To open the Inspector window of the technology object, follow these steps:

1. Open the "Program blocks" folder in the project tree.
2. Double click the block (cyclic interrupt OB) in which you open the instruction of the SW-controller.
   The block is opened in the work area.
3. Click on the instruction of the SW-controller.
4. In the Inspector window, select the "Properties" and "Configuration" tabs consecutively.

Configuration window

For each technology object, there is a specific configuration window in which you can configure all properties.

To open the configuration window of the technology object, follow these steps:

1. Open the "Technology objects" folder in the project tree.
2. Open the technology object in the project tree.
3. Double-click the "Configuration" object.

Symbols

Icons in the area navigation of the configuration and in the Inspector window show additional details about the completeness of the configuration:

	The configuration contains default values and is complete. The configuration exclusively contains default values. With these default values the use of the technology object is possible without further changes.
	The configuration contains user-defined or automatically adjusted values and is complete All input fields of the configuration contain valid values and at least one default setting was changed.
	The configuration is incomplete or faulty At least one input field or a collapsible list contains no or one invalid value. The corresponding field or the drop-down list box has a red background. When clicked, the roll-out error message indicates the cause of the error.

The properties of a technology object are described in detail in the section for the technology object.

3.5 Call instruction in the user program

The instruction of the software controller must be called in a cyclic interrupt OB. The sampling time of the software controller is determined by the interval between the calls in the cyclic interrupt OB.

Requirement

The cyclic interrupt OB is created and the cycle time of the cyclic interrupt OB is correctly configured.

Procedure

Proceed as follows to call the instruction in the user program:

1. Open the CPU folder in the project tree.
2. Open the "Program blocks" folder.
3. Double-click the cyclic interrupt OB.
   The block is opened in the work area.
4. Open the "Technology" group in the "Instructions" window and the "PID Control" folder.
   The folder contains all instructions for software controllers that can be configured on the CPU.
5. Select the instruction and drag it to your cyclic interrupt OB.
   The "Call options" dialog box opens.
6. Select a technology object or type the name for a new technology object from the "Name" list.

Result

If the technology object does not exist yet, it is added. The instruction is added in the cyclic interrupt OB. The technology object is assigned to this call of the instruction.

3.6 Downloading technology objects to device

A new or modified configuration of the technology object must be downloaded to the CPU for the online mode. The following characteristics apply when downloading retentive data:

- Software (changes only)
  - S7-1200, S7-1500:
    Retentive data is retained.
  - S7-300/400:
    Retentive data is updated immediately. CPU does not change to Stop.
- Download PLC program to device and reset
  - S7-1200, S7-1500:
    Retentive data is updated at the next change from Stop to RUN. The PLC program can only be downloaded completely.
  - S7-300/400:
    Retentive data is updated at the next change from Stop to RUN.

Downloading retentive data to an S7-1200 or S7-1500 CPU

Note

The download and reset of the PLC program during ongoing system operation can result in serious damages or injuries in the case of malfunctions or program errors.

Make sure that dangerous states cannot occur before you download and reset the PLC program.

Proceed as follows to download the retentive data:

1. Select the entry of the CPU in the project tree.
2. Select the command "Download and reset PLC program" from the "Online" menu.
   - If you have not established an online connection yet, the "Extended download" dialog opens. In this case, set all required parameters for the connection and click "Download".
   - If the online connection has been defined, the project data is compiled, if necessary, and the dialog "Load preview" opens. This dialog displays messages and recommends actions necessary for download.
3. Check the messages.

   As soon as download is possible, the "Download" button becomes active.
4. Click on "Download".

   The complete PLC program is downloaded and the "Load results" dialog opens. This dialog displays the status and the actions after the download.
5. If the modules are to restart immediately after the download, select the check box "Start all".
6. Close the dialog "Download results" with "Finish".

Result

The complete PLC program is downloaded to the device. Blocks that only exist online in the device are deleted. By downloading all affected blocks and by deleting any blocks in the device that are not required, you avoid inconsistencies between the blocks in the user program.

The messages under "Info > General" in the Inspector window indicate whether the download was successful.

3.7 Commissioning software controller

Procedure

To open the "Commissioning" work area of the technology object, follow these steps:

1. Open the "Technology objects" folder in the project tree.
2. Open the technology object in the project tree.
3. Double-click the "Commissioning" object.

The commissioning functions are specific for each controller and are described there.

3.8 Save optimized PID parameter in the project

The software controller is optimized in the CPU. Through this, the values in the instance-DB on the CPU no longer agree with those in the project.

To update the PID parameter in the project with the optimized PID parameters, proceed as follows:

Requirement

- An online connection to the CPU is established and the CPU is in "RUN" mode.
- The functions of the commissioning window have been enabled by means of the "Start" button.

Procedure

1. Open the CPU folder in the project tree.
2. Open the "Technology objects" folder.
3. Open a technology object.
4. Double click on "Commissioning".
5. Click on the icon "Upload PID parameters".
6. Save the project.

Result

The currently active PID parameters are stored in the project data. When reloading the project data in the CPU, the optimized parameters are used.

3.9 Comparing values

3.9.1 Comparison display and boundary conditions

The "Compare values" function provides the following options:

- Comparison of configured start values of the project with the start values in the CPU and the actual values
- Direct editing of actual values and the start values of the project
- Immediate detection and display of input errors with suggested corrections
- Backup of actual values in the project
- Transfer of start values of the project to the CPU as actual values

Icons and operator controls

The following icons and operator controls are available:

Icon	Function
	Start value PLC matches the configured Start value project
	Start value PLC does not match the configured Start value project
	The comparison of the Start value PLC with the configured Start value project cannot be performed
	At least one of the two comparison values has a process-related or syntax error.
	Transfers actual values to the offline project
	Transfers updated start values in the project to the CPU (initialize setting values)
	Opens the "Compare values" dialog

Boundary conditions

The "Compare values" function is available for S7-1200 and S7-1500 without limitations.

The following limitation applies to S7-300 and S7-400:

In monitoring mode, an S7-300/S7-400 cannot transfer the start values to the CPU. These values cannot be displayed online with "Compare values".

The actual values of the technology object are displayed and can be changed directly.

3.9.2 Comparing values

The procedure is shown in the following using "PID Parameters" as an example.

Requirements

- A project with a software controller is configured.
- The project is downloaded to the CPU.
- The configuration dialog is open in the project navigator.

Procedure

1. Open the desired software controller in the project navigation.
2. Double-click the "Configuration" object.
3. Navigate within the configuration window to the "PID Parameters" dialog.
4. Click the icon to activate monitoring mode.

   The icons and operator controls (Page 46) of the "Compare values" function are shown behind the parameters.
5. Click the desired parameter in the input box and change the parameter values manually by entering them directly.
   - If the background of the input box is gray, this value is a read-only value and cannot be changed.
   - To change the values in the "PID Parameters" dialog, enable manual entry by selecting the "Enable manual entry" check box beforehand.
6. Click the icon to open the dialog for the start values.

   This dialog indicates two values of the parameter:
   - Start value in CPU: The start value in the CPU is shown in the top part.
   - Start value in the project: The configured start value in the project is shown in the bottom part.
7. Enter the desired value in the input box for the project.

Error detection

The input of incorrect values is detected. Corrections are suggested in this case.

If you enter a value with incorrect syntax, a rollout containing the corresponding error message opens below the parameter. The incorrect value is not applied.

If you enter a value that is incorrect for the process, a dialog opens containing the error message and a suggested correction:

- Click "No" to accept this suggested correction and correct your input.
- Click "OK" to apply the incorrect value.

NOTICE
Malfunctions of the controller Values incorrect for the process can result in controller malfunctions.

Backing up actual values

Click the icon to transfer the actual controller values to the start values of your configured project.

Transferring project values to the CPU

Click the icon to transfer the configured values of your project to the CPU.

CAUTION
Prevent personal injury and property damage! Downloading and resetting of the user program while the plant is operating may result in significant property damage and severe personal injuries in the event of malfunctions or program errors. Make sure that dangerous states cannot occur before you download and reset the user program.

3.10 Parameter view

3.10.1 Introduction to the parameter view

The Parameter view provides you with a general overview of all relevant parameters of a technology object. You obtain an overview of the parameter settings and can easily change them in offline and online mode.

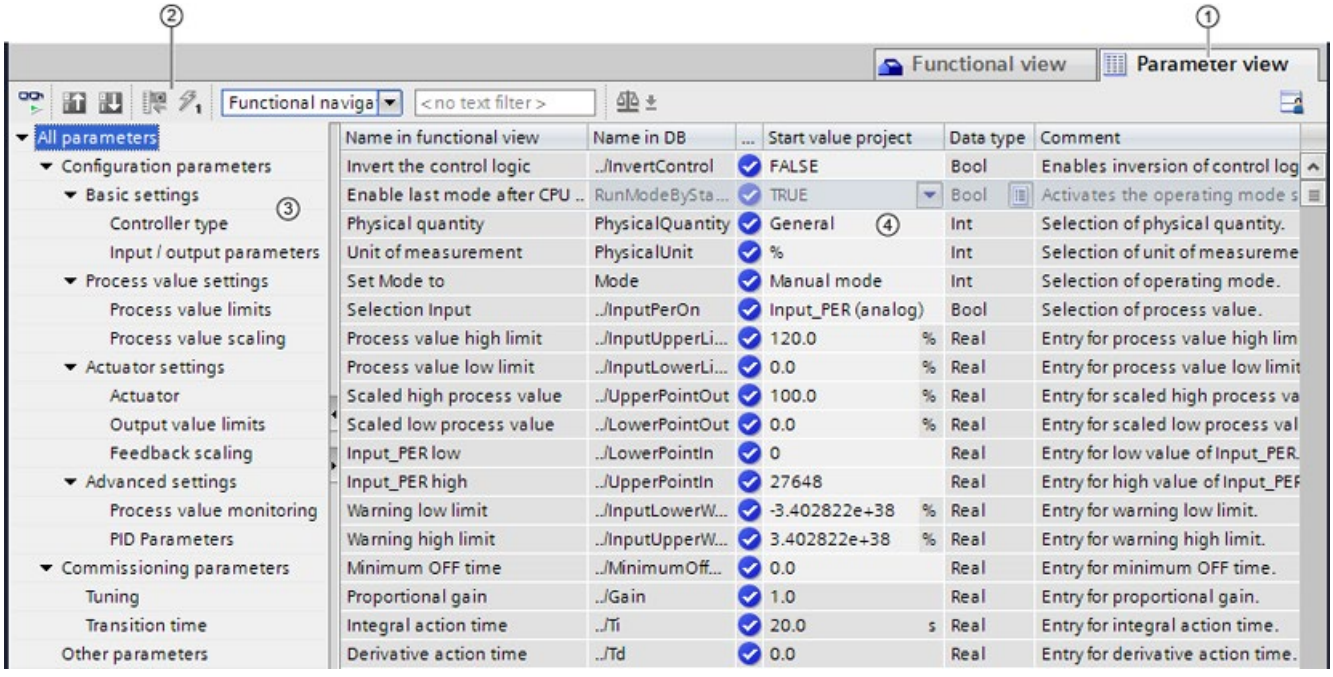

① "Parameter view" tab

② Toolbar (Page 51)

③ Navigation (Page 51)

④ Parameter table (Page 52)

Function scope

The following functions are available for analyzing the parameters of the technology objects and for enabling targeted monitoring and modification.

Display functions:

- Display of parameter values in offline and online mode
- Display of status information of the parameters
- Display of value deviations and option for direct correction
- Display of configuration errors
- Display of value changes as a result of parameter dependencies

- Display of all memory values of a parameter: Start value PLC, Start value project, Monitor value
- Display of the parameter comparison of the memory values of a parameter

Operator control functions:

- Navigation for quickly changing between the parameters and parameter structures.
- Text filter for faster searches for particular parameters.
- Sorting function for customizing the order of parameters and parameter groups to requirements.
- Memory function for backing up structural settings of the Parameter view.
- Monitoring and modifying of parameter values online.
- Change display format of value.
- Function for saving a snapshot of parameter values of the CPU in order to capture momentary situations and to respond to them.
- Function for applying a snapshot of parameter values as start values.
- Download of modified start values to the CPU.
- Comparison functions for comparing parameter values with one another.

Validity

The Parameter view described here is available for the following technology objects:

- PID_Compact
- PID_3Step
- PID_Temp
- CONT_C (S7-1500 only)
- CONT_S (S7-1500 only)
- TCONT_CP (S7-1500 only)
- TCONT_S (S7-1500 only)
- TO_Axis_PTO (S7-1200 Motion Control)
- TO_Positioning_Axis (S7-1200 Motion Control)
- TO_CommandTable_PTO (S7-1200 Motion Control)
- TO_CommandTable (S7-1200 Motion Control)

3.10.2 Structure of the parameter view

3.10.2.1 Toolbar

The following functions can be selected in the toolbar of the parameter view.

Icon	Function	Explanation
	Monitor all	Starts the monitoring of visible parameters in the active Parameter view (online mode).
	Create snapshot of monitor values and accept setpoints of this snapshot as start values	Applies the current monitor values to the “Snapshot” column and updates the start values in the project. Only in online mode for PID_Compact, PID_3Step and PID_Temp.
	Initialize setpoints	Transfers the start values updated in the project to the CPU. Only in online mode for PID_Compact, PID_3Step and PID_Temp.
	Create snapshot of monitor values	Applies the current monitor values to the “Snapshot” column. Only in online mode.
	Modify all selected parameters immediately and once	This command is executed once and as quickly as possible without reference to any particular point in the user program. Only in online mode.
Functional naviga	Select navigation structure	Toggles between functional navigation and data navigation.
< no text filter >	Text filter...	After entry of a character string: Display of all parameters containing the specified string in one of the currently visible columns.
	Selection of compare values	Selection of parameter values that are to be compared with one another in online mode (Start value project, Start value PLC, Snapshot) Only in online mode.
	Save window settings	Saves your display settings for the Parameter view (e.g., selected navigation structure, activated table columns, etc.)

3.10.2.2 Navigation

Within the "Parameter view" tab, the following alternative navigation structures can be selected.

Navigation		Explanation
Functional navigation	All parameters Configuration parameters Commissioning parameters Other parameters	In the functional navigation, the structure of the parameters is based on the structure in the configuration dialog ("Functional view" tab), commissioning dialog, and diagnostics dialog. The last group "Other parameters" contains all other parameters of the technology object.
Data navigation	All parameters Input Output InOut Static Other parameters	In the data navigation, the structure of the parameters is based on the structure in the instance DB / technology DB. The last group "Other parameters" contains the parameters that are not contained in the instance DB / technology DB.

You can use the "Select navigation structure" drop-down list to toggle the navigation structure.

3.10.2.3 Parameter table

The table below shows the meaning of the individual columns of the parameter table. You can show or hide the columns as required.

- Column "Offline" = X: Column is visible in offline mode.
- Column "Online" = X: Column is visible in online mode (online connection to the CPU).

Column	Explanation	Offline	Online
Name in functional view	Name of the parameter in the functional view. The display field is empty for parameters that are not configured via the technology object.	X	X
Full name in DB	Complete path of the parameter in the instance DB / technology DB. The display field is empty for parameters that are not contained in the instance DB / technology DB.	X	X
Name in DB	Name of the parameter in the instance DB / technology DB. If the parameter is part of a structure or UDT, the prefix ". ./" is added. The display field is empty for parameters that are not contained in the instance DB / technology DB.	X	X
Status of configuration	Display of the completeness of the configuration using status symbols. see Status of configuration (offline) (Page 62)	X	
Compare result	Result of the "Compare values" function. This column is shown if there is an online connection and the "Monitor all" button is selected.		X
Start value project	Configured start value in the project. Error indication if entered values have a syntax or process-related error.	X	X
Default value	Value that is pre-assigned to the parameter. The display field is empty for parameters that are not contained in the instance DB / technology DB.	X	X
Snapshot	Snapshot of the current values in the CPU (monitor values). Error indication if values have a process-related error.	X	X
Start value PLC	Start value in the CPU. This column is shown if there is an online connection and the "Monitor all" button is selected. Error indication if values have a process-related error.		X
Monitor value	Current value in the CPU. This column is shown if there is an online connection and the "Monitor all" button is selected. Error indication if values have a process-related error.		X
Modify value	Value that is to be used to change the monitor valuet. This column is shown if there is an online connection and the "Monitor all" button is selected. Error indication if entered values have a syntax or process-related error.		X

Column	Explanation	Offline	Online
Selection for transmission	Selection of the Modify values that are to be transmitted using the "Modify all selected parameters immediately and once" button. This column is displayed together with the "Modify value" column.		X
Minimum value	Minimum process-related value of the parameter. If the minimum value is dependent on other parameters, it is defined: • Offline: By the Start value project. • Online: By the Monitor values.	X	X
Maximum value	Maximum process-related value of the parameter. If the maximum value is dependent on other parameters, it is defined: • Offline: By the Start value project. • Online: By the Monitor values.	X	X
Setpoint	Designates the parameter as a setpoint. These parameters can be initialized online.	X	X
Data type	Data type of the parameter. The display field is empty for parameters that are not contained in the instance DB / technology DB.	X	X
Retain	Designates the value as a retentive value. The values of retentive parameters are retained even after the voltage supply is switched off.	X	X
Accessible from HMI	Indicates whether the HMI can access this parameter during runtime.	X	X
Visible in HMI	Indicates whether the parameter is visible in the selection list of the HMI by default.	X	X
Comment	Brief description of the parameter.	X	X

See also

Comparing values (Page 46)

3.10.3 Opening the parameter view

Requirement

The technology object has been added in the project tree, i.e., the associated instance DB / technology DB of the instruction has been created.

Procedure

1. Open the "Technology objects" folder in the project tree.
2. Open the technology object in the project tree.
3. Double-click the "Configuration" object.
4. Select the "Parameter view" tab in the top right corner.

Result

The Parameter view opens. Each displayed parameter is represented by one row in the parameter table.

The displayable parameter properties (table columns) vary depending on whether you are working with the Parameter view in offline or online mode.

In addition, you can selectively display and hide individual table columns.

See also

Default setting of the parameter view (Page 55)

3.10.4 Default setting of the parameter view

Default settings

To enable you to work efficiently with the Parameter view, you can customize the parameter display and save your settings.

The following customizations are possible and can be saved:

- Show and hide columns
- Change column width
- Change order of the columns
- Toggle navigation
- Select parameter group in the navigation
- Selection of compare values

Show and hide columns

To show or hide columns in the parameter table, follow these steps:

1. Position the cursor in the header of the parameter table.
2. Select the "Show/Hide" command in the shortcut menu.
   The selection of available columns is displayed.
3. To show a column, select the check box for the column.
4. To hide a column, clear the check box for the column.

or

1. Position the cursor in the header of the parameter table.
2. Select the "Show all columns" command in the shortcut menu if all columns of the offline or online mode are to be displayed.

Some columns can only be displayed in online mode: see Parameter table (Page 52).

Change column width

To customize the width of a column so that all texts in the rows can be read, follow these steps:

1. Position the cursor in the header of the parameter table to the right of the column to be customized until the shape of the cursor changes to a cross.
2. Then double-click this location.

or

1. Open the shortcut menu on the header of the parameter table.
2. Click
   - "Optimize column width" or
   - "Optimize width of all columns".

If the column width setting is too narrow, the complete content of individual fields are shown if you hover the cursor briefly over the relevant field.

Change order of the columns

The columns of the parameter table can be arranged in any way.

To change the order of the columns, follow these steps:

1. Click on the column header and use a drag-and-drop operation to move it to the desired location.

   When you release the mouse button, the column is anchored to the new position.

Toggle navigation

To toggle the display form of the parameters, follow these steps:

1. Select the desired navigation in the “Select navigation structure” drop-down list.
   - Data navigation
   - Functional navigation

See also Navigation (Page 51).

Select parameter group in the navigation

Within the selected navigation, you choose between the “All parameters” display or the display of a subordinate parameter group of your choice.

1. Click the desired parameter group in the navigation.

   The parameter table only displays the parameters of the parameter group.

Selection of compare values (online)

To set the compare values for the “Compare values” function, follow these steps:

1. Select the desired compare values in the “Selection of compare values” drop-down list.
   - Start value project / Start value PLC
   - Start value project / Snapshot
   - Start value PLC / Snapshot

The “Start value project / Start value PLC” option is set by default.

Saving the default setting of the Parameter view

To save the above customizations of the Parameter view, follow these steps:

1. Customize the Parameter view according to your requirements.
2. Click the “Save window settings” button at the top right of the Parameter view.

3.10.5 Working with the parameter view

3.10.5.1 Overview

The following table provides an overview of the functions of the Parameter view in online and offline mode described in the following.

- Column "Offline" = X: This function is possible in offline mode.
- Column "Online" = X: This function is possible in online mode.

Function/action	Offline	Online
Filtering the parameter table (Page 58)	X	X
Sorting the parameter table (Page 59)	X	X
Transferring parameter data to other editors (Page 59)	X	X
Indicating errors (Page 60)	X	X
Editing start values in the project (Page 60)	X	X
Status of configuration (offline) (Page 62)	X	
Monitoring values online in the parameter view (Page 63)		X
Create snapshot of monitor values (Page 65)		X
Modifying values (Page 66)		X
Comparing values (Page 68)		X
Applying values from the online program as start values (Page 70)		X
Initializing setpoints in the online program (Page 71)		X

3.10.5.2 Filtering the parameter table

You can filter the parameters in the parameter table in the following ways:

- With the text filter
- With the subgroups of the navigation

Both filter methods can be used simultaneously.

With the text filter

Texts that are visible in the parameter table can be filtered. This means only texts in displayed parameter rows and columns can be filtered.

1. Enter the desired character string for filtering in the “Text filter...” input box.

   The parameter table displays only the parameters containing the character string.

The text filtering is reset.

- When another parameter group is selected in the navigation.
- When navigation is changed from data navigation to functional navigation, or vice versa.

With the subgroups of the navigation

1. Click the desired parameter group in the navigation, e.g., "Static".

   The parameter table only shows the static parameters. You can select further subgroups for some groups of the navigation.
2. Click “All parameters” in the navigation if all parameters are to be shown again.

3.10.5.3 Sorting the parameter table

The values of the parameters are arranged in rows. The parameter table can be sorted by any displayed column.

- In columns containing numerical values, sorting is based on the magnitude of the numerical value.
- In text columns, sorting is alphabetical.

Sorting by column

1. Position the cursor in the header cell of the desired column.

   The background of this cell turns blue.
2. Click the column header.

Result

The entire parameter table is sorted by the selected column. A triangle with tip facing up appears in the column header.

Clicking the column header again changes the sorting as follows:

- Symbol "▲": Parameter table is sorted in ascending order.
- Symbol "▼": Parameter table is sorted in descending order.
- No symbol: The sorting is removed again. The parameter table assumes the default display.

The "../" prefix in the "Name in DB" column is ignored when sorting.

3.10.5.4 Transferring parameter data to other editors

After selecting an entire parameter row of the parameter table, you can use the following:

- Drag-and-drop
- <Ctrl+C>/<Ctrl+V>
- Copy/Paste via shortcut menu

Transfer parameters to the following editors of the TIA Portal:

- Program editor
- Watch table
- Signal table for trace function

The parameter is inserted with its full name: See information in "Full name in DB" column.

3.10.5.5 Indicating errors

Error indication

Parameter assignment errors that result in compilation errors (e.g. limit violation) are indicated in the Parameter view.

Every time a value is input in the Parameter view, a check is made for process-related and syntax errors and the result is indicated.

Bad values are indicated by:

- Red error symbol in the "Status of configuration" (offline mode) or "Compare result" (online mode, depending on the selected comparison type) columns

and/or

- Table field with red background

  If you click the bad field, a roll-out error message appears with information of the permissible value range or the required syntax (format)

Compilation error

From the error message of the compiler, you can directly open the Parameter view (functional navigation) containing the parameter causing the error in situations where the parameter is not displayed in the configuration dialog.

3.10.5.6 Editing start values in the project

With the Parameter view, you can edit the start values in the project in offline mode and online mode.

- You make value changes in the “Start value project” column of the parameter table.
- In the “Status of configuration” column of the parameter table, the progress of the configuration is indicated by the familiar status symbols from the configuration dialog of the technology object.

Boundary conditions

- If other parameters depend on the parameter whose start value was changed, the start value of the dependent parameters are also adapted.
- If a parameter of a technology object is not editable, it is also not editable in the parameter view. The ability to edit a parameter can also depend on the values of other parameters.

Defining new start values

To define start values for parameters in the Parameter view, follow these steps:

1. Open the Parameter view of the technology object.
2. Enter the desired start values in the "Start value project" column. The value must match the data type of the parameter and must not exceed the value range of the parameter. The limits of the value range can be seen in the “Maximum value” and “Minimum value” columns.

The "Status of configuration" column indicates the progress of the configuration with colored symbols.

See also Status of configuration (offline) (Page 62)

Following adaptation of the start values and downloading of the technology object to the CPU, the parameters take the defined value at startup if they are not declared as retentive (“Retain” column).

Error indication

When a start value is input, a check is made for process-related and syntax errors and the result is indicated.

Bad start values are indicated by:

- Red error symbol in the "Status of configuration" (offline mode) or "Compare result" (online mode, depending on the selected comparison type) columns

and/or

- Red background in the “Start value project” field
  If you click on the bad field, a roll-out error message appears with information of the permissible value range or the necessary syntax (format)

Correcting bad start values

1. Correct bad start values using information from the roll-out error message.

   Red error symbol, red field background, and roll-out error message are no longer displayed.

The project cannot be successfully compiled unless the start values are error-free.

3.10.5.7 Status of configuration (offline)

The status of the configuration is indicated by icons:

- In the “Status of configuration” column in the parameter table
- In the navigation structure of the functional navigation and data navigation

Symbol in “Status of configuration” column

Symbol	Meaning
	The start value of the parameter corresponds to the default value and is valid. A start value has not yet been defined by the user.
	The start value of the parameter contains a value defined by the user or an automatically adjusted value. The start value is different than the default value. The start value is error-free and valid.
	The start value of the parameter is invalid (syntax or process-related error). The input box has a red background. When clicked, the roll-out error message indicates the cause of the error.
	Only for S7-1200 Motion Control: The start value of the parameter is valid but contains warnings. The input box has a yellow background.
	The parameter is not relevant in the current configuration.

Symbol in the navigation

The symbols in the navigation indicate the progress of the configuration in the same way as in the configuration dialog of the technology object.

See also

Configure technology objects (Page 42)

3.10.5.8 Monitoring values online in the parameter view

You can monitor the values currently taken by the parameters of the technology object in the CPU (monitor values) directly in the Parameter view.

Requirements

- There is an online connection.
- The technology object is downloaded to the CPU.
- The program execution is active (CPU in "RUN").
- The Parameter view of the technology object is open.

Procedure

1. Start the monitoring by clicking .

   As soon as the Parameter view is online, the following columns are additionally displayed:

   – Compare result
   – Start value PLC
   – Monitor value
   – Modify value
   – Selection for transmission

   The "Monitor value" column shows the current parameter values on the CPU.

   Meaning of the additional columns: see Parameter table (Page 52)

2. Stop the monitoring by clicking again.

Display

All columns that are only available online have an orange background:

- Values in light-orange cells can be changed.
- Values in cells with a dark orange background cannot be changed.

3.10.5.9 Change display format of value

The display format of the value can be selected via the shortcut menu of a table row in the Parameter view of the technology object.

The display format of the following values can be changed both in online mode and in offline mode:

- Start value project
- Start value PLC
- Maximum value
- Minimum value
- Snapshot
- Monitor value
- Default value
- Modify value

The set display format applies to all values of the table row.

The following display formats of the value can be changed:

- Default
- Hex
- Octal
- Bin
- Dec (+/-)
- DEC

Depending on the parameter selected in the parameter view, only the supported display formats can be selected.

Requirements

- The Parameter view of the technology object is open.

Procedure

To change the display format of the value, proceed as follows:

1. Select one or more table rows in which you want to change the display format.
2. Select the "Display format" command in the shortcut menu.
3. Select the desired display format.

Note

To change the display format of a certain data type in multiple table rows, sort the Parameter view by this data type. Then select the first and last table row with this data type while keeping the <Shift> key pressed and change the display format for the selected table rows.

3.10.5.10 Create snapshot of monitor values

You can back up the current values of the technology object on the CPU (monitor values) and display them in the Parameter view.

Requirements

- There is an online connection.
- The technology object is downloaded to the CPU.
- The program execution is active (CPU in "RUN").
- The Parameter view of the technology object is open.
- The “Monitor all” button is selected.

Procedure

To show the current parameter values, follow these steps:

1. In the Parameter view, click the “Create snapshot of monitor values" icon .

Result

The current monitor values are transferred once to the "Snapshot" column of the parameter table.

You can analyze the values "frozen" in this way while the monitor values continue to be updated in the "Monitor values" column.

3.10.5.11 Modifying values

With the Parameter view, you can modify values of the technology object in the CPU.

You can assign values to the parameter once (Modify value) and modify them immediately. The modify request is executed as quickly as possible without reference to any particular point in the user program.

DANGER

Danger when modifying:

Changing the parameter values while the plant is operating may result in severe damage to property and personal injury in the event of malfunctions or program errors.

Make sure that dangerous states cannot occur before you use the "Modify" function.

Requirements

- There is an online connection.
- The technology object is downloaded to the CPU.
- The program execution is active (CPU in "RUN").
- The Parameter view of the technology object is open.
- The “Monitor all” button is selected.
- The parameter can be modified (associated field in the "Modify value" column has a light-orange background).

Procedure

To modify parameters immediately, follow these steps:

1. Enter the desired modify values in the “Modify values” column of the parameter table.
2. Check whether the check box for modifying is selected in the "Select for transmission" column.

   The modify values and associated check boxes of dependent parameters are automatically adapted at the same time.
3. Click the “Modify all selected parameters immediately and once” icon .

The selected parameters are modified once and immediately with the specified values and can be monitored in the "Modify values" column. The check boxes for modifying in the "Selection for transmission" column are automatically cleared after the modify request is complete.

Error indication

When a start value is input, a check is made immediately for process-related and syntax errors and the result is indicated.

Bad start values are indicated by:

- Red background in the “Modify value” field

and

- If you click the bad field, a roll-out error message appears with information of the permissible value range or the necessary syntax (format)

Bad modify values

- Modify values with process-related errors can be transmitted.
- Modify values with syntax errors **cannot** be transmitted.

3.10.5.12 Comparing values

You can use comparison functions to compare the following memory values of a parameter:

- Start value project
- Start value PLC
- Snapshot

Requirements

- There is an online connection.
- The technology object is downloaded to the CPU.
- The program execution is active (CPU in "RUN").
- The Parameter view of the technology object is open.
- The “Monitor all” button is selected.

Procedure

To compare the start values on the various target systems, follow these steps:

1. Click the "Selection of compare values" icon .

   A selection list containing the comparison options opens:

   – Start value project - Start value PLC (default setting)

   – Start value project - Snapshot

   – Start value PLC - Snapshot

2. Select the desired comparison option.

   The selected comparison option is executed as follows:

   – A scales symbol appears in the header cells of the two columns selected for comparison.

   – Symbols are used in the "Compare result" column to indicate the result of the comparison of the selected columns.

Symbol in "Compare result" column

Symbol	Meaning
	The compare values are equal and error-free.
	The compare values are not equal and error-free.
	At least one of the two compare values has a process-related or syntax error.
	The comparison cannot be performed. At least one of the two comparison values is not available (e.g. snapshot).
	Comparison of the value is inappropriate since it is not relevant in one of the configurations.

Symbol in the navigation

The symbols are shown in the same way in the navigation if the comparison result applies to at least one of the parameters below the displayed navigation structure.

3.10.5.13 Applying values from the online program as start values

In order to apply optimized values from the CPU to the project as start values, you create a snapshot of the monitor values. Values of the snapshot marked as a "Setpoint" are then applied to the project as start values.

Requirements

- The technology object is of type "PID_Compact" or "PID_3Step".
- There is an online connection.
- The technology object is downloaded to the CPU.
- The program execution is active (CPU in "RUN").
- The Parameter view of the technology object is open.
- The “Monitor all” button is selected.

Procedure

To apply optimized values from the CPU, follow these steps:

1. Click the "Create snapshot of monitor values and accept setpoints of this snapshot as start values" icon .

Result

The current monitor values are applied to the "Snapshot" column and their setpoints are copied to the "Start value project" column as new start values.

Note

Applying values of individual parameters

You can also apply the values of individual parameters that are not marked as a setpoint from the "Snapshot" column to the "Start values project" column. To do so, copy the values and insert them into the "Start value project" column using the "Copy" and "Paste" commands in the shortcut menu.

3.10.5.14 Initializing setpoints in the online program

You can initialize all parameters that are marked as a "Setpoint" in the Parameter view with new values in the CPU in one step. In so doing, the start values are downloaded from the project to the CPU. The CPU remains in "RUN" mode.

To avoid data loss on the CPU during a cold restart or warm restart, you must also download the technology object to the CPU.

DANGER

Danger when changing parameter values

Changing the parameter values while the plant is operating may result in severe damage to property and personal injury in the event of malfunctions or program errors.

Make sure that dangerous states cannot occur before you reinitialize the setpoints.

Requirements

- The technology object is of type "PID_Compact" or "PID_3Step".
- There is an online connection.
- The technology object is downloaded to the CPU.
- The program execution is active (CPU in "RUN").
- The Parameter view of the technology object is open.
- The “Monitor all” button is selected.
- The parameters marked as a "Setpoint" have a "Start value project" that is free of process-related and syntax errors

Procedure

To initialize all setpoints, follow these steps:

1. Enter the desired values in the "Start value project" column.

   Ensure that the start values are free of process-related and syntax errors.
2. Click the "Initialize setpoints" icon .

Result

The setpoints in the CPU are initialized with the start values from the project.

3.11 Display instance DB of a technology object.

An instance DB, in which the parameter and static variables are saved, is created for each technology object.

Procedure

To display the instance DB of a technology object, proceed as follows:

1. Open the CPU folder in the project tree.
2. Open the "Technology objects" folder.
3. Highlight a technology object.
4. Select the command "Open DB editor" in the shortcut menu.

Using PID_Compact

4

4.1 Technology object PID_Compact

The technology object PID_Compact provides a continuous PID controller with integrated optimization. You can alternatively configure a pulse controller. Both manual and automatic mode are possible.

PID-Compact continuously acquires the measured process value within a control loop and compares it with the required setpoint. From the resulting control deviation, the instruction PID_Compact calculates an output value by which the process value is adapted as quickly and stable as possible to the setpoint. The output value for the PID controller consists of three actions:

- **Proportional** action

  The proportional action of the output value increases in proportion to the control deviation.

- **I** action

  The integral action of the output value increases until the control deviation has been balanced.

- **D** action

  The derivative action increases with the rate of change of control deviation. The process value is corrected to the setpoint as quickly as possible. The derivative action will be reduced again if the rate of change of control deviation drops.

The instruction PID_Compact calculates the proportional, integral and derivative parameters for your controlled system during pretuning. Fine tuning can be used to tune the parameters further. You do not need to manually determine the parameters.

Additional information

- Overview of software controller (Page 39)
- Add technology objects (Page 41)
- Configure technology objects (Page 42)
- Configuring PID_Compact V2 (Page 74)
- Configuring PID_Compact V1 (Page 98)

FAQ

For more information, see the following FAQs in the Siemens Industry Online Support:

- Entry ID 79047707 (https://support.industry.siemens.com/cs/ww/en/view/79047707)

4.2 PID_Compact V2

4.2.1 Configuring PID_Compact V2

4.2.1.1 Basic settings V2

Introduction V2

Configure the following properties of the "PID_Compact" technology object under "Basic settings" in the Inspector window or in the configuration window:

- Physical quantity
- Control logic
- Start-up behavior after reset
- Setpoint (only in the Inspector window)
- Process value (only in the Inspector window)
- Output value (only in the Inspector window)

Setpoint, process value and output value

You can only configure the setpoint, process value and output value in the Inspector window of the programming editor. Select the source for each value:

- Instance DB

  The value saved in the instance DB is used.

  Value must be updated in the instance DB by the user program.

  There should be no value at the instruction.

  Change via HMI possible.

- Instruction

  The value connected to the instruction is used.
  The value is written to the instance DB each time the instruction is called.

  No change via HMI possible.

Control mode V2

Physical quantity

Select the physical quantity and unit of measurement for setpoint, process value, and disturbance variable in the "Controller type" group. Setpoint, process value, and disturbance variable is displayed in this unit of measurement.

Control logic

An increase of the output value is generally intended to cause an increase in the process value. This is referred to as a normal control logic.

PID_Compact does not work with negative proportional gain. Select the check box "Invert control logic" to reduce the process value with a higher output value.

Examples

- Opening the drain valve will reduce the level of a container's contents.
- Increasing cooling will reduce the temperature.

Startup characteristics

1. To switch to "Inactive" mode after CPU restart, clear the "Activate Mode after CPU restart" check box.

   To switch to the operating mode saved in the Mode parameter after CPU restart, select the "Activate Mode after CPU restart" check box.

2. In the "Set Mode to" drop-down list, select the mode that is to be enabled after a complete download to the device.

   After a complete download to the device, PID_Compact starts in the selected operating mode. With each additional restart, PID_Compact starts in the mode that was last saved in Mode.

Example

You have selected the "Activate Mode after CPU restart" check box and the entry "Pretuning" in the "Set Mode to" list. After a complete download to the device, PID_Compact starts in the "Pretuning" mode. If pretuning is still active, PID_Compact starts in "Pretuning" mode again after restart of the CPU. If pretuning was successfully completed and automatic mode is active, PID_Compact starts in "Automatic mode" after restart of the CPU.

Setpoint V2

Procedure

Proceed as follows to define a fixed setpoint:

1. Select "Instance DB".
2. Enter a setpoint, e.g. 80° C.
3. Delete any entry in the instruction.

Proceed as follows to define a variable setpoint:

1. Select "Instruction".
2. Enter the name of the REAL variable in which the setpoint is saved.

   Program-controlled assignment of various values to the REAL variable is possible, for example for the time controlled change of the setpoint.

Process value V2

PID_Compact will scale the value of the analog input to the physical quantity if you use the analog input value directly.

You will need to write a program for processing if you wish first to process the analog input value. The process value is, for example, not directly proportional to the value at the analog input. The processed process value must be in floating point format.

Procedure

Proceed as follows to use the analog input value without processing:

1. Select the entry "Input_PER" in the drop-down list "Input".
2. Select "Instruction" as source.
3. Enter the address of the analog input.

Proceed as follows to use the processed process value in floating point format:

1. Select the entry "Input" in the drop-down list "Input".
2. Select "Instruction" as source.
3. Enter the name of the variable in which the processed process value is saved.

Output value V2

PID_Compact offers three output values. Your actuator will determine which output value you use.

- Output_PER

  The actuator is triggered via an analog output and controlled with a continuous signal, e.g. 0...10V, 4...20mA.

- Output

  The output value needs to be processed by the user program, for example because of nonlinear actuator response.

- Output_PWM

  The actuator is controlled via a digital output. Pulse width modulation creates minimum ON and minimum OFF times.

Procedure

Proceed as follows to use the analog output value:

1. Select the entry "Output_PER (analog)" in the drop-down list "Output".
2. Select "Instruction".
3. Enter the address of the analog output.

Proceed as follows to process the output value using the user program:

1. Select the entry "Output" in the drop-down list "Output".
2. Select "Instance DB".

   The calculated output value is saved in the instance data block.

3. For the preparation of the output value, use the output parameter Output.
4. Transfer the processed output value to the actuator via a digital or analog CPU output.

Proceed as follows to use the digital output value:

1. Select the entry "Output_PWM" in the drop-down list "Output".
2. Select "Instruction".
3. Enter the address of the digital output.

4.2.1.2 Process value settings V2

Process value scaling V2

If you have configured the use of Input_PER in the basic setting, you must convert the value of the analog input to the physical quantity of the process value. The current configuration is displayed in the Input_PER display.

Input_PER will be scaled using a low and high value pair if the process value is directly proportional to the value of the analog input.

Procedure

To scale the process value, follow these steps:

1. Enter the low pair of values in the "Scaled low process value" and "Low" input fields.
2. Enter the high pair of values in the "Scaled high process value" and "High" input boxes.

Default settings for the value pairs are stored in the hardware configuration. To use the value pairs from the hardware configuration, follow these steps:

1. Select the PID_Compact instruction in the programming editor.
2. Interconnect Input_PER with an analog input in the basic settings.
3. Click the "Automatic setting" button in the process value settings.

The existing values will be overwritten with the values from the hardware configuration.

Process value limits V2

You must specify an appropriate absolute high limit and low limit for the process value as limit values for your controlled system. As soon as the process value violates these limits, an error occurs (ErrorBits = 0001h). Tuning is canceled when the process value limits are violated. You can configure how PID_Compact reacts to an error in automatic mode in the output value settings.

4.2.1.3 Advanced settings V2

Process value monitoring V2

Configure a warning high and low limit for the process value in the "Process value monitoring" configuration window. If one of the warning limits is exceeded or undershot during operation, a warning will be displayed at the PID_Compact instruction:

- At the InputWarning_H output parameter if the warning high limit has been exceeded
- At the InputWarning_L output parameter if the warning low limit has been undershot

The warning limits must be within the process value high and low limits.

The process value high and low limits will be used if you do not enter values.

Example

Process value high limit = 98 °C; warning high limit = 90 °C

Warning low limit = 10 °C; process value low limit = 0 °C

PID_Compact will respond as follows:

Process value	InputWarning_H	InputWarning_L	ErrorBits	Operating mode
> 98 °C	TRUE	FALSE	0001h	Inactive or Substitute output value with error monitoring
≤ 98 °C and > 90 °C	TRUE	FALSE	0000h	Automatic mode
≤ 90 °C and ≥ 10 °C	FALSE	FALSE	0000h	Automatic mode
< 10 °C and ≥ 0 °C	FALSE	TRUE	0000h	Automatic mode
< 0 °C	FALSE	TRUE	0001h	Inactive or Substitute output value with error monitoring

In the output value settings, you can specify the reaction of PID_Compact when the process value high limit or low limit is violated.

See also

Parameters State and Mode V2 (Page 278)

PWM limits V2

The value at the output parameter Output is transformed into a pulse sequence that is output at output parameter Output_PWM by means of a pulse width modulation. Output is calculated in the PID algorithm sampling time, Output_PWM is output in the PID_Compact sampling time.

The PID algorithm sampling time is determined during pretuning or fine tuning. If manually setting the PID parameters, you will also need to configure the PID algorithm sampling time. The PID_Compact sampling time is equivalent to the cycle time of the calling OB.

The pulse duration is proportional to the value at Output and is always an integer multiple of the PID_Compact sampling time.

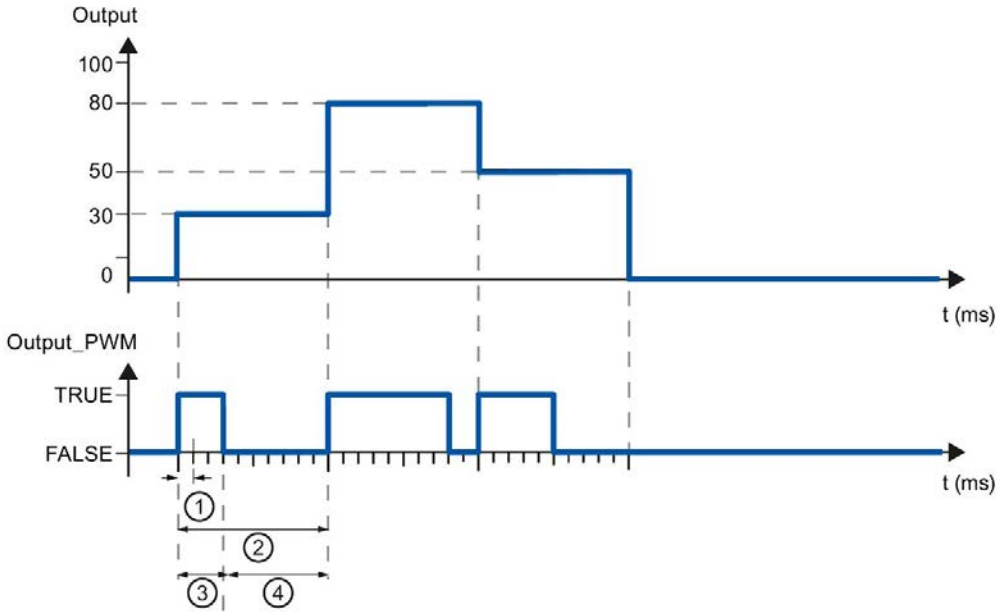

① PID_Compact sampling time
② PID algorithm sampling time
③ Pulse duration
④ Break time

The "Minimum ON time" and the "Minimum OFF time" are rounded to an integer multiple of the PID_Compact sampling time.

A pulse or a break is never shorter than the minimum ON or OFF time. The inaccuracies this causes are added up and compensated in the next cycle.

Example

PID_Compact sampling time = 100 ms

PID algorithm sampling time = 1000 ms

Minimum ON time = 200 ms

Output is a constant 15%. The smallest pulse that PID_Compact can output is 20%. In the first cycle, no pulse is output. In the second cycle, the pulse not output in the first cycle is added to the pulse of the second cycle.

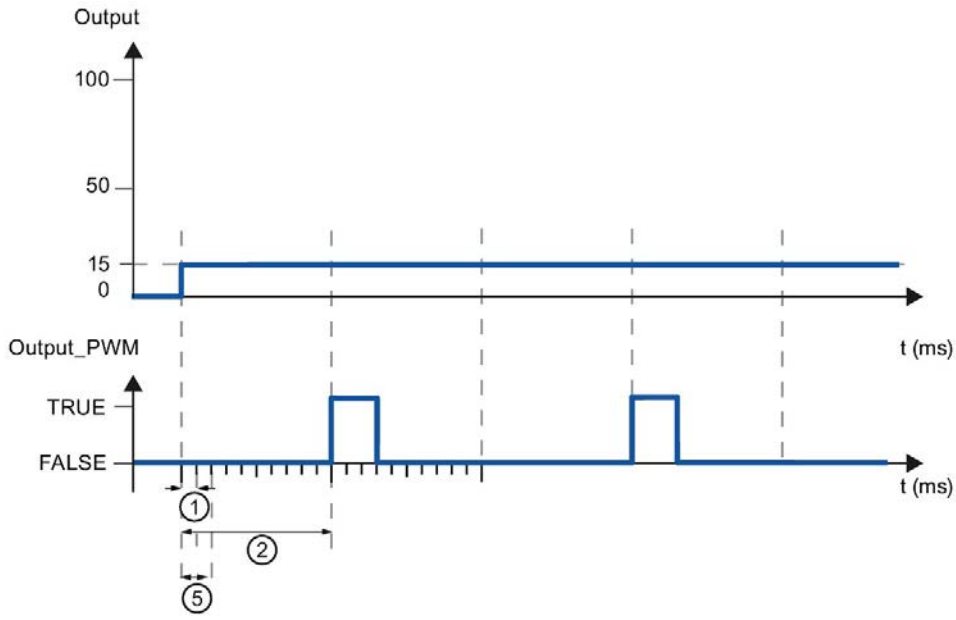

① PID_Compact sampling time
② PID algorithm sampling time
⑤ Minimum ON time

In order to minimize operation frequency and conserve the actuator, extend the minimum ON and OFF times.

If you are using "Output" or "Output_PER", you must configure the value 0.0 for the minimum ON and OFF times.

Note

The minimum ON and OFF times only affect the output parameter Output_PWM and are not used for any pulse generators integrated in the CPU.

Output value V2

Output value limits

In the "Output value limits" configuration window, configure the absolute limits of your output value in percent. Absolute output value limits are not violated in neither manual mode nor automatic mode. If an output value outside the limits is specified in manual mode, the effective value is limited in the CPU to the configured limits.

The output value limits must match the control logic.

The valid output value limit values depend on the Output used.

Output	-100.0 to 100.0%
Output_PER	-100.0 to 100.0%
Output_PWM	0.0 to 100.0%

Reaction to error

NOTICE
Your system may be damaged. If you output "Current value while error pending " or "Substitute output value while error pending" in the event of an error, PID_Compact remains in automatic mode. This may cause a violation of the process value limits and damage your system. It is essential to configure how your controlled system reacts in the event of an error to protect your system from damage.

PID_Compact is preset so that the controller stays active in most cases in the event of an error. If errors occur frequently in controller mode, this default reaction has a negative effect on the control response. In this case, check the Errorbits parameter and eliminate the cause of the error.

PID_Compact generates a programmable output value in response to an error:

- Zero (inactive)

  PID_Compact outputs 0.0 as output value for all errors and switches to "Inactive" mode. The controller is only reactivated by a falling edge at Reset or a rising edge at ModeActivate.

- Current value while error is pending

  If the following errors occur in **automatic mode**, PID_Compact returns to automatic mode as soon as the errors are no longer pending.

  If one or more of the following errors occur, PID_Compact stays in automatic mode:

  – 0001h: The "Input" parameter is outside the process value limits.

  – 0800h: Sampling time error

  – 40000h: Invalid value at Disturbance parameter.

  If one or more of the following errors occur in **automatic mode**, PID_Compact switches to "Substitute output value with error monitoring" mode and outputs the last valid output value:

  – 0002h: Invalid value at Input_PER parameter.

  – 0200h: Invalid value at Input parameter.

  – 0400h: Calculation of output value failed.

  – 1000h: Invalid value at Setpoint parameter.

  If an error occurs in **manual mode**, PID_Compact continues using the manual value as the output value. If the manual value is invalid, the substitute output value is used. If the manual value and substitute output value are invalid, the output value low limit is used.

  If the following error occurs during a **pretuning or fine tuning**, PID_Compact remains in active mode:

  – 0020h: Pretuning is not permitted during fine tuning.

  When any other error occurs, PID_Compact cancels the tuning and switches to the mode from which tuning was started.

  As soon as no errors are pending, PID_Compact returns to automatic mode.

- Substitute output value while error is pending

  PID_Compact outputs the substitute output value.

  If the following error occurs, PID_Compact stays in "Substitute output value with error monitoring" mode and outputs the output value low limit:

  – 20000h: Invalid value at SubstituteOutput tag.

  For all other errors, PID_Compact reacts as described for "Current value while error is pending".

See also

Parameters State and Mode V2 (Page 278)

PID parameters V2

The PID parameters are displayed in the "PID Parameters" configuration window. The PID parameters will be adapted to your controlled system during controller tuning. You do not need to enter the PID parameters manually.

Note

The currently active PID parameters are located for PID_Compact V1 in the sRet structure and for PID_Compact V2 in the Retain.CtrlParams structure.

Change the currently active PID parameters only in "Inactive" mode online to prevent malfunction of the PID controller.

If you want to change the PID parameters in "Automatic mode" or "Manual mode" online, change the PID parameters as follows:

- PID_Compact V1: Change the PID parameters in the sBackUp structure and apply these changes with sPid_Cmpt.b_LoadBackUp = TRUE to the sRet structure.
- PID_Compact V2: Change the PID parameters in the CtrlParamsBackUp structure and apply these changes with LoadBackUp = TRUE to the Retain.CtrlParams structure.

Online changes to the PID parameters in "Automatic mode" can result in jumps at the output value.

The PID algorithm operates according to the following equation:

$$y = K_p \left[(b \cdot w - x) + \frac{1}{T_I \cdot s} (w - x) + \frac{T_D \cdot s}{a \cdot T_D \cdot s + 1} (c \cdot w - x) \right]$$

y	Output value of the PID algorithm
K_p	Proportional gain
s	Laplace operator
b	Proportional action weighting
w	Setpoint
x	Process value
T_I	Integral action time
a	Derivative delay coefficient (derivative delay T1 = a × T_D)
T_D	Derivative action time
c	Derivative action weighting

The diagram below illustrates the integration of the parameters into the PID algorithm:

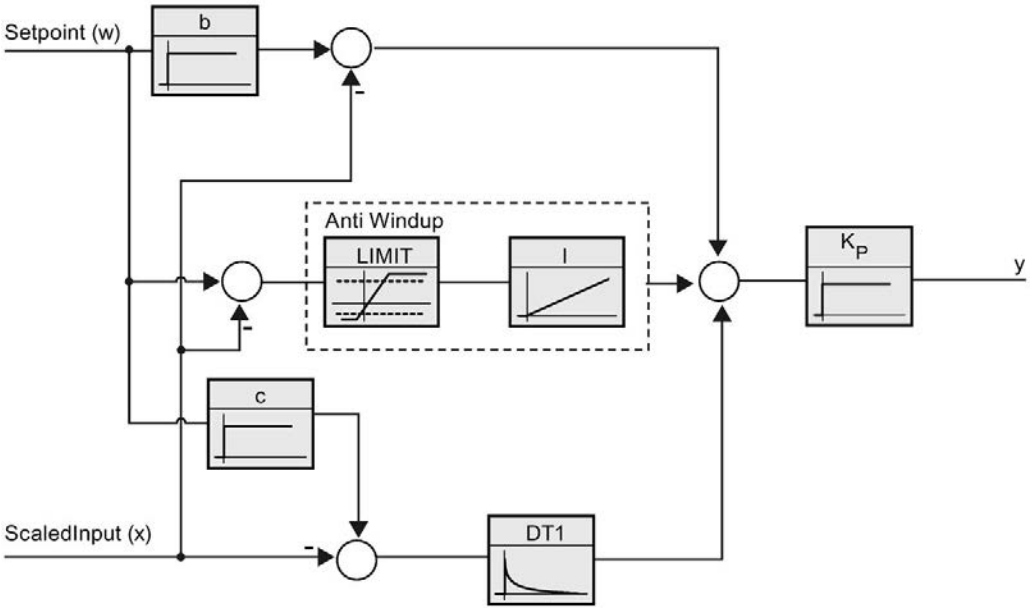

All PID parameters are retentive. If you enter the PID parameters manually, you must completely download PID_Compact.

Downloading technology objects to device (Page 44)

Proportional gain

The value specifies the proportional gain of the controller. PID_Compact does not work with a negative proportional gain. Control logic is inverted under Basic settings > Controller type.

Integral action time

The integral action time determines the time behavior of the integral action. The integral action is deactivated with integral action time = 0.0. When the integral action time is changed from a different value to 0.0 online in "Automatic mode", the previous integral action is deleted and the output value jumps.

Derivative action time

The derivative action time determines the time behavior of the derivative action. Derivative action is deactivated with derivative action time = 0.0.

Derivative delay coefficient

The derivative delay coefficient delays the effect of the derivative action.

Derivative delay = derivative action time × derivative delay coefficient

- 0.0: Derivative action is effective for one cycle only and therefore almost not effective.
- 0.5: This value has proved useful in practice for controlled systems with **one** dominant time constant.
- > 1.0: The greater the coefficient, the longer the effect of the derivative action is delayed.

Proportional action weighting

The proportional action may weaken with changes to the setpoint.

Values from 0.0 to 1.0 are applicable.

- 1.0: Proportional action for setpoint change is fully effective
- 0.0: Proportional action for setpoint change is not effective

The proportional action is always fully effective when the process value is changed.

Derivative action weighting

The derivative action may weaken with changes to the setpoint.

Values from 0.0 to 1.0 are applicable.

- 1.0: Derivative action is fully effective upon setpoint change
- 0.0: Derivative action is not effective upon setpoint change

The derivative action is always fully effective when the process value is changed.

PID algorithm sampling time

The controlled system needs a certain amount of time to respond to changes in the output value. It is therefore not advisable to calculate the output value in every cycle. The sampling time of the PID algorithm represents the time between two calculations of the output value. It is calculated during tuning and rounded to a multiple of the cycle time. All other functions of PID_Compact are executed at every call.

If you use Output_PWM, the accuracy of the output signal is determined by the ratio of the PID algorithm sampling time to the cycle time of the OB. The PID algorithm sampling time corresponds to the time period of the pulse width modulation. The cycle time should be at least 10 times the PID algorithm sampling time.

Rule for tuning

Select whether PI or PID parameters are to be calculated in the "Controller structure" drop-down list.

- **PID**

  Calculates PID parameters during pretuning and fine tuning.

- **PI**

  Calculates PI parameters during pretuning and fine tuning.

- **User-defined**

  The drop-down list displays "User-defined" if you have configured different controller structures for pretuning and fine tuning via a user program.

4.2.2 Commissioning PID_Compact V2

4.2.2.1 Pretuning V2

The pretuning determines the process response to a jump change of the output value and searches for the point of inflection. The PID parameters are calculated from the maximum rate of rise and dead time of the controlled system. You obtain the best PID parameters when you perform pretuning and fine tuning.

The more stable the process value is, the easier it is to calculate the PID parameters and the more precise the result will be. Noise on the process value can be tolerated as long as the rate of rise of the process value is significantly higher compared to the noise. This is most likely the case in operating modes "Inactive" and "manual mode". The PID parameters are backed up before being recalculated.

Requirement

- The "PID_Compact" instruction is called in a cyclic interrupt OB.
- ManualEnable = FALSE
- Reset = FALSE
- PID_Compact is in one of the following modes: "Inactive", "Manual mode", or "Automatic mode".
- The setpoint and the process value lie within the configured limits (see "Process value monitoring" configuration).
- The difference between setpoint and process value is greater than 30% of the difference between process value high limit and process value low limit.
- The distance between the setpoint and the process value is > 50% of the setpoint.

Procedure

To perform pretuning, follow these steps:

1. Double-click the "PID_Compact > Commissioning" entry in the project tree.
2. Select the entry "Pretuning" in the "Tuning mode" drop-down list.
3. Click the "Start" icon.
   - An online connection will be established.
   - Value recording is started.
   - Pretuning is started.
   - The "Status" field displays the current steps and any errors that may have occurred. The progress bar indicates the progress of the current step.

   Note

   Click the "Stop" icon when the progress bar has reached 100% and it can be assumed the controller tuning function is blocked. Check the configuration of the technology object and, if necessary, restart controller tuning.

Result

If pretuning was performed without an error message, the PID parameters have been tuned. PID_Compact switches to automatic mode and uses the tuned parameters. The tuned PID parameters will be retained during power OFF and a restart of the CPU.

If pretuning is not possible, PID_Compact responds with the configured reaction to errors.

See also

Parameters State and Mode V2 (Page 278)

4.2.2.2 Fine tuning V2

Fine tuning generates a constant, limited oscillation of the process value. The PID parameters are tuned for the operating point from the amplitude and frequency of this oscillation. All PID parameters are recalculated from the results. PID parameters from fine tuning usually have better master control and disturbance characteristics than PID parameters from pretuning. You obtain the best PID parameters when you perform pretuning and fine tuning.

PID_Compact automatically attempts to generate an oscillation greater than the noise of the process value. Fine tuning is only minimally influenced by the stability of the process value. The PID parameters are backed up before being recalculated.

Requirement

- The PID_Compact instruction is called in a cyclic interrupt OB.
- ManualEnable = FALSE
- Reset = FALSE
- The setpoint and the process value lie within the configured limits.
- The control loop has stabilized at the operating point. The operating point is reached when the process value corresponds to the setpoint.
- No disturbances are expected.
- PID_Compact is in one of the following operating modes: Inactive, automatic mode, or manual mode.

Process depends on initial situation

Fine tuning can be started from the following operating modes: "Inactive", "automatic mode", or "manual mode". Fine tuning proceeds as follows when started from:

- Automatic mode

  Start fine tuning from automatic mode if you wish to improve the existing PID parameters through tuning.

  PID_Compact controls the system using the existing PID parameters until the control loop has stabilized and the requirements for fine tuning have been met. Only then will fine tuning start.

- Inactive or manual mode

  If the requirements for pretuning are met, pretuning is started. The determined PID parameters will be used for control until the control loop has stabilized and the requirements for fine tuning have been met. Only then will fine tuning start. If pretuning is not possible, PID_Compact responds with the configured reaction to errors.

  An attempt is made to reach the setpoint with the minimum or maximum output value if the process value for pretuning is already too near the setpoint. This can produce increased overshoot.

Procedure

To perform fine tuning, follow these steps:

1. Select the entry "Fine tuning" in the "Tuning mode" drop-down list.
2. Click the "Start" icon.
   - An online connection will be established.
   - Value recording is started.
   - The process of fine tuning is started.
   - The "Status" field displays the current steps and any errors that may have occurred. The progress bar indicates the progress of the current step.

Note

Click the "Stop" icon in the "Tuning mode" group when the progress bar has reached 100% and it is to be assumed that tuning is blocked. Check the configuration of the technology object and, if necessary, restart controller tuning.

Result

If no errors occurred during fine tuning, the PID parameters have been tuned. PID_Compact switches to automatic mode and uses the tuned parameters. The tuned PID parameters will be retained during power OFF and a restart of the CPU.

If errors occurred during "fine tuning", PID_Compact responds with the configured response to errors.

See also

Parameters State and Mode V2 (Page 278)

4.2.2.3 "Manual" mode V1

The following section describes how you can use the "manual mode" operating mode in the commissioning window of the "PID_Compact" technology object. Manual mode is also possible when an error is pending.

Requirement

- The "PID_Compact" instruction is called in a cyclic interrupt OB.
- An online connection to the CPU has been established and the CPU is in the "RUN" mode.

Procedure

Use "Manual mode" in the commissioning window if you want to test the controlled system by specifying a manual value. To define a manual value, follow these steps:

1. Click the "Start" icon.
2. Select the "Manual mode" check box in the "Online status of controller" area.

   PID_Compact operates in manual mode. The most recent current output value remains in effect.
3. Enter the manual value in the "Output" field as a % value.
4. Click the icon.

Result

The manual value is written to the CPU and immediately goes into effect.

Clear the "Manual mode" check box if the output value is to be specified again by the PID controller. The switchover to automatic mode is bumpless.

See also

Parameters State and Mode V2 (Page 278)

4.2.3 Override control with PID_Compact V2

Override control

In case of override control, two or more controllers share one actuator. Only one controller has access to the actuator at any time and influences the process.

A logic operation decides which controller has access to the actuator. This decision is often made based on a comparison of the output values of all controllers, for example, in case of a maximum selection, the controller with the largest output value gets access to the actuator.

The selection based on the output value requires that all controllers operate in automatic mode. The controllers that do not have an effect on the actuator are updated. This is necessary to prevent windup effects and their negative impacts on the control response and the switchover between the controllers.

PID_Compact supports override controls as of version 2.3 by offering a simple process for updating the controllers that are not active:

- By using the OverwriteInitialOutputValue and PIDCtrl.PIDInit tags, you can preassign the integral action of the controller in automatic mode as though the PID algorithm had calculated Output = OverwriteInititalOutputValue for the output value in the last cycle.
- To do this, OverwriteInitialOutputValue is interconnected with the output value of the controller that currently has access to the actuator.
- By setting the bit PIDCtrl.PIDInit, you trigger the pre-assignment of the integral action as well as the restart of the controller cycle and the PWM period.
- The subsequent calculation of the output value in the current cycle takes place based on the pre-assigned (and synchronized for all controllers) integral action as well as the proportional action and integral action from the current control deviation.
- The derivative action is not active during the call with PIDCtrl.PIDInit = TRUE and therefore does not contribute to the output value.

This procedure ensures that the calculation of the current output value and thus the decision on which controller is to have access to the actuator is only based on the current process state and the PI parameters. Windup effects for controllers that are not active and thus incorrect decisions of the switchover logic are prevented.

Requirements

- PIDCtrl.PIDInit is only effective if the integral action is activated (Retain.CtrlParams.Ti tag > 0.0).
- You must assign PIDCtrl.PIDInit and OverwriteInitialOutputValue in your user program yourself (see example below). PID_Compact does not automatically change these tags.
- PIDCtrl.PIDInit is only effective when PID_Compact is in automatic mode (parameter State = 3)
- If possible, select the sampling time of the PID algorithm (Retain.CtrlParams.Cycle tag) in such a way that it is identical for all controllers, and call all controllers in the same cyclic interrupt OB. In this way, you ensure that the switchover does not take place within a controller cycle or a PWM period.

Note

Constant adaptation of the output value limits

Instead of the active updating of the controllers without access to the actuator described here, this is implemented alternatively by constant adaptation of the output value limits in other controller systems.

This is not possible with PID_Compact, because a change of the output value limits is not supported in automatic mode.

Example: Control of a gas pipeline

PID_Compact is used for control of a gas pipeline.

The main goal is to control the flow rate Input1. The controller PID_Compact_1 is used for this purpose. In addition, the pressure Input2 (measured in flow direction in front of the valve) is to be kept below the high limit with the limiting controller PID_Compact_2.

Flow rate and pressure are controlled by a single solenoid valve. The output value of the controller corresponds to the valve opening: The valve is opened when the output value increases. This means the flow rate increases (normal control logic) while the pressure drops (inverted control logic).

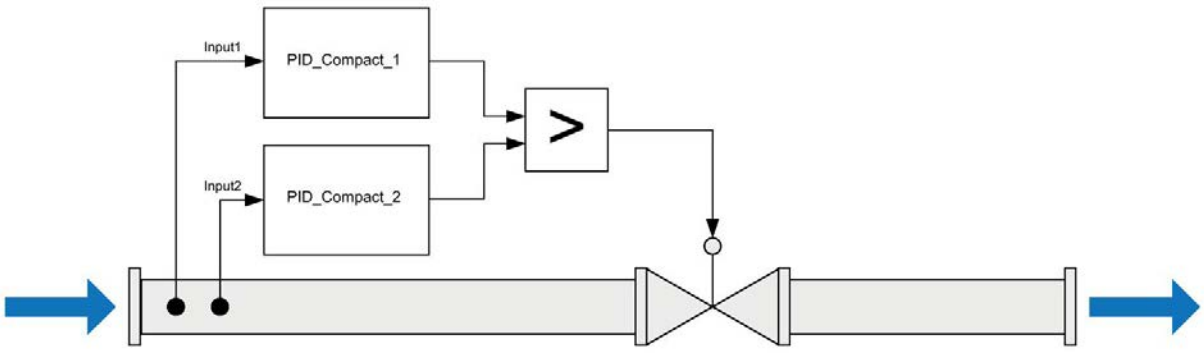

The valve is controlled with the output value of PID_Compact in I/O format (parameter Output_PER) by writing the program tag ActuatorInput.

The setpoint for the flow rate is specified at the parameter PID_Compact_1.Setpoint.

The pressure high limit is specified as setpoint at the parameter PID_Compact_2.Setpoint.

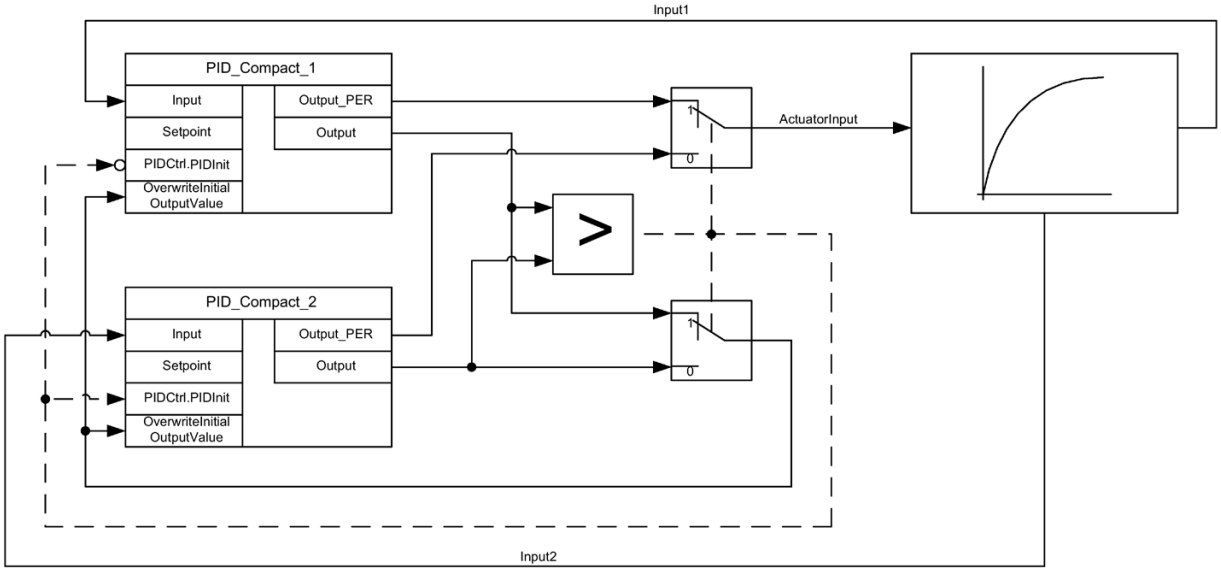

Both controllers must share one valve as shared actuator. The logic that decides which controller gets access to the actuator is implemented by a maximum selection of the output value (in Real format, parameter Output) in this case. Because the output value corresponds to the opening of the valve, the controller that requires the larger valve opening gets the control.

Note

Activate inversion of the control logic

Because a decrease of the actual value (pressure) is to be achieved with the pressure regulator PID_Compact_2 when the output value increases (valve opening), the inversion of the control logic must be activated: PID_Compact_2.Config.InvertControl = TRUE.

In normal operation of the plant, the actual value of the flow rate corresponds to the setpoint. The flow controller PID_Compact_1 has settled on a stationary output value PID_Compact_1.Output. The actual value of the pressure in normal operation is significantly below the high limit that is specified as setpoint for PID_Compact_2. The pressure regulator therefore wants to close the valve even further to increase the pressure, which means it will calculate an output value PID_Compact_2.Output that is smaller than the output value of the flow controller PID_Compact_1.Output. The maximum selection of the switchover logic therefore gives the flow controller PID_Compact_1 continued access to the actuator. In addition, it is ensured that PID_Compact_2 is updated by means of the assignments PID_Compact_2.OverwriteInitialOutputValue = PID_Compact_1.Output and PID_Compact_2.PIDCtrl.PIDInit = TRUE.

If the pressure now approaches the high limit or exceeds it, for example due to a fault, the pressure regulator PID_Compact_2 calculates a higher output value to open the valve even further and thus reduce the pressure. If PID_Compact_2.Output is greater than PID_Compact_1.Output, the pressure regulator PID_Compact_2 receives access to the actuator through the maximum selection and opens it. It is ensured that PID_Compact_1 is updated by means of the assignments PID_Compact_1.OverwriteInitialOutputValue = PID_Compact_2.Output and PID_Compact_1.PIDCtrl.PIDInit = TRUE.

The pressure is reduced while the flow rate increases and can no longer be kept at the setpoint.

Once the fault has been remedied, the pressure will continue to drop and the opening of the valve is reduced by the pressure regulator. If the flow controller calculates a larger opening as output value, the plant returns to normal operation so that the flow controller PID_Compact_1 once again has access to the actuator.

This example can be implemented with the following SCL program code:

```
"PID Compact 1"(Input := "Input1");
"PID Compact 2"(Input := "Input2");
IF "PID Compact 1".Output >= "PID Compact 2".Output THEN
  "ActuatorInput" := "PID_Compact_1".Output_PER;

  "PID_Compact_1".PIDCtrl.PIDInit := FALSE;

  "PID_Compact_2".PIDCtrl.PIDInit := TRUE;

  "PID_Compact_2".OverwriteInitialOutputValue := "PID_Compact_1".Output;

ELSE
  "ActuatorInput" := "PID_Compact_2".Output_PER;

  "PID_Compact_1".PIDCtrl.PIDInit := TRUE;

  "PID_Compact_2".PIDCtrl.PIDInit := FALSE;

  "PID_Compact_1".OverwriteInitialOutputValue := "PID_Compact_2".Output;

END IF;
```

4.2.4 Simulating PID_Compact V2 with PLCSIM

Note

Simulation with PLCSIM

The simulation of PID_Compact V2.x with PLCSIM for CPU S7-1200 is not supported.

PID_Compact V2.x can only be simulated for CPU S7-1500 with PLCSIM.

For the simulation with PLCSIM, the time behavior of the simulated PLC is not exactly identical to that of a "real" PLC. The actual cycle clock of a cyclic interrupt OB can have larger fluctuations with a simulated PLC than with "real" PLCs.

In the standard configuration, PID_Compact determines the time between calls automatically and monitors them for fluctuations.

For the simulation of PID_Compact with PLCSIM, for example, a sampling time error (ErrorBits = DW#16#00000800) can therefore be detected.

This results in ongoing tuning being aborted.

The response in automatic mode depends on the value of the ActivateRecoverMode tag.

To prevent this from happening, you should configure PID_Compact for simulation with PLCSIM as follows:

- CycleTime.EnEstimation = FALSE
- CycleTime.EnMonitoring = FALSE
- CycleTime.Value: Assign the cycle clock of the calling cyclic interrupt OB in seconds to this tag.

4.3 PID_Compact V1

4.3.1 Configuring PID_Compact V1

4.3.1.1 Basic settings V1

Introduction V1

Configure the following properties of the "PID_Compact" technology object under "Basic settings" in the Inspector window or in the configuration window:

- Physical quantity
- Control logic
- Start-up behavior after reset
- Setpoint (only in the Inspector window)
- Process value (only in the Inspector window)
- Output value (only in the Inspector window)

Setpoint, process value and output value

You can only configure the setpoint, process value and output value in the Inspector window of the programming editor. Select the source for each value:

- Instance DB

  The value saved in the instance DB is used.

  Value must be updated in the instance DB by the user program.

  There should be no value at the instruction.

  Change via HMI possible.

- Instruction

  The value connected to the instruction is used.
  The value is written to the instance DB each time the instruction is called.

  No change via HMI possible.

Control mode V1

Physical quantity

Select the unit of measurement and physical quantity for the setpoint and process value in the "Controller type" group. The setpoint and process value will be displayed in this unit.

Control logic

An increase of the output value is generally intended to cause an increase in the process value. This is referred to as a normal control logic.

PID_Compact does not work with negative proportional gain. Select the check box "Invert control logic" to reduce the process value with a higher output value.

Examples

- Opening the drain valve will reduce the level of a container's contents.
- Increasing cooling will reduce the temperature.

Start-up behavior after reset

To change straight to the last active mode after restarting the CPU, select the "Enable last mode after CPU restart" check box.

PID_Compact will remain in "Inactive" mode if the check box is cleared.

Setpoint V1

Procedure

Proceed as follows to define a fixed setpoint:

1. Select "Instance DB".
2. Enter a setpoint, e.g. 80° C.
3. Delete any entry in the instruction.

Proceed as follows to define a variable setpoint:

1. Select "Instruction".
2. Enter the name of the REAL variable in which the setpoint is saved.

   Program-controlled assignment of various values to the REAL variable is possible, for example for the time controlled change of the setpoint.

Process value V1

PID_Compact will scale the value of the analog input to the physical quantity if you use the analog input value directly.

You will need to write a program for processing if you wish first to process the analog input value. The process value is, for example, not directly proportional to the value at the analog input. The processed process value must be in floating point format.

Procedure

Proceed as follows to use the analog input value without processing:

1. Select the entry "Input_PER" in the drop-down list "Input".
2. Select "Instruction" as source.
3. Enter the address of the analog input.

Proceed as follows to use the processed process value in floating point format:

1. Select the entry "Input" in the drop-down list "Input".
2. Select "Instruction" as source.
3. Enter the name of the variable in which the processed process value is saved.

Output value V1

PID_Compact offers three output values. Your actuator will determine which output value you use.

- Output_PER

  The actuator is triggered via an analog output and controlled with a continuous signal, e.g. 0...10V, 4...20mA.

- Output

  The output value needs to be processed by the user program, for example because of nonlinear actuator response.

- Output_PWM

  The actuator is controlled via a digital output. Pulse width modulation creates minimum ON and minimum OFF times.

Procedure

Proceed as follows to use the analog output value:

1. Select the entry "Output_PER (analog)" in the drop-down list "Output".
2. Select "Instruction".
3. Enter the address of the analog output.

Proceed as follows to process the output value using the user program:

1. Select the entry "Output" in the drop-down list "Output".
2. Select "Instance DB".

   The calculated output value is saved in the instance data block.
3. For the preparation of the output value, use the output parameter Output.
4. Transfer the processed output value to the actuator via a digital or analog CPU output.

Proceed as follows to use the digital output value:

1. Select the entry "Output_PWM" in the drop-down list "Output".
2. Select "Instruction".
3. Enter the address of the digital output.

4.3.1.2 Process value settings V1

Configure the scaling of your process value and specify the process value absolute limits In the "Process value settings" configuration window.

Scaling the process value

If you have configured the use of Input_PER in the basic settings, you will need to convert the value of the analog input into the physical quantity of the process value. The current configuration will be displayed in the Input_PER display.

Input_PER will be scaled using a low and high value pair if the process value is directly proportional to the value of the analog input.

1. Enter the low pair of values in the "Scaled low process value" and "Low" input fields.
2. Enter the high pair of values in the "Scaled high process value" and "High" input boxes.

Default settings for the value pairs are saved in the hardware configuration. Proceed as follows to use the value pairs from the hardware configuration:

1. Select the instruction PID_Compact in the programming editor.
2. Connect Input_PER with an analog input in the basic settings.
3. Click on the "Automatic setting" button in the process value settings.

The existing values will be overwritten with the values from the hardware configuration.

Monitoring process value

Specify the absolute high and low limit of the process value. As soon as these limits are violated during operation, the controller switches off and the output value is set to 0%. You must enter reasonable limits for your controlled system. Reasonable limits are important during optimization to obtain optimal PID parameters.

The default for the "High limit process value" is 120 %. At the I/O input, the process value can be a maximum of 18% higher than the standard range (overrange). An error is no longer reported for a violation of the "High limit process value". Only a wire-break and a short-circuit are recognized and the PID_Compact switches to "Inactive" mode.

⚠ WARNING
If you set very high process value limits (for example $-3.4*10^{38}$...$+3.4*10^{38}$), process value monitoring will be disabled. Your system may then be damaged if an error occurs.

See also

Process value monitoring V1 (Page 103)

PWM limits V1 (Page 104)

Output value limits V1 (Page 106)

PID parameters V1 (Page 107)

4.3.1.3 Advanced settings V1

Process value monitoring V1

Configure a warning high and low limit for the process value in the "Process value monitoring" configuration window. If one of the warning limits is exceeded or undershot during operation, a warning will be displayed at the PID_Compact instruction:

- At the InputWarning_H output parameter if the warning high limit has been exceeded
- At the InputWarning_L output parameter if the warning low limit has been undershot

The warning limits must be within the process value high and low limits.

The process value high and low limits will be used if you do not enter values.

Example

Process value high limit = 98° C; warning high limit = 90° C

Warning low limit = 10° C; process value low limit = 0° C

PID_Compact will respond as follows:

Process value	InputWarning_H	InputWarning_L	Operating mode
> 98° C	TRUE	FALSE	Inactive
≤ 98° C and > 90° C	TRUE	FALSE	Automatic mode
≤ 90° C and ≥ 10° C	FALSE	FALSE	Automatic mode
< 10° C and ≥ 0° C	FALSE	TRUE	Automatic mode
< 0° C	FALSE	TRUE	Inactive

See also

Process value settings V1 (Page 102)

PWM limits V1 (Page 104)

Output value limits V1 (Page 106)

PID parameters V1 (Page 107)

PWM limits V1

The value at the output parameter Output is transformed into a pulse sequence that is output at output parameter Output_PWM by means of a pulse width modulation. Output is calculated in the PID algorithm sampling time, Output_PWM is output in the PID_Compact sampling time.

The PID algorithm sampling time is determined during pretuning or fine tuning. If manually setting the PID parameters, you will also need to configure the PID algorithm sampling time. The PID_Compact sampling time is equivalent to the cycle time of the calling OB.

The pulse duration is proportional to the value at Output and is always an integer multiple of the PID_Compact sampling time.

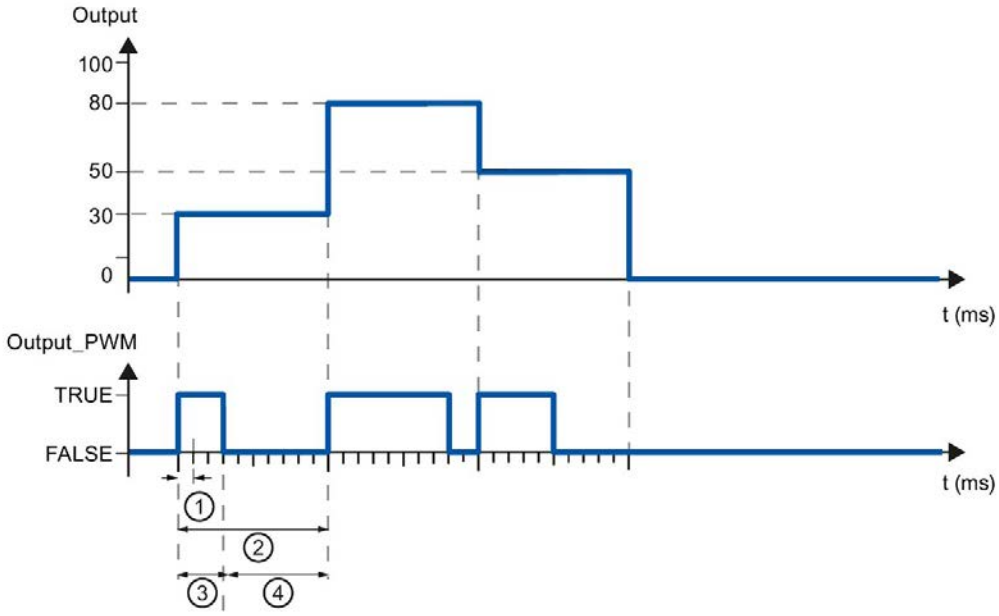

① PID_Compact sampling time
② PID algorithm sampling time
③ Pulse duration
④ Break time

The "Minimum ON time" and the "Minimum OFF time" are rounded to an integer multiple of the PID_Compact sampling time.

A pulse or a break is never shorter than the minimum ON or OFF time. The inaccuracies this causes are added up and compensated in the next cycle.

Example

PID_Compact sampling time = 100 ms

PID algorithm sampling time = 1000 ms

Minimum ON time = 200 ms

Output is a constant 15%. The smallest pulse that PID_Compact can output is 20%. In the first cycle, no pulse is output. In the second cycle, the pulse not output in the first cycle is added to the pulse of the second cycle.

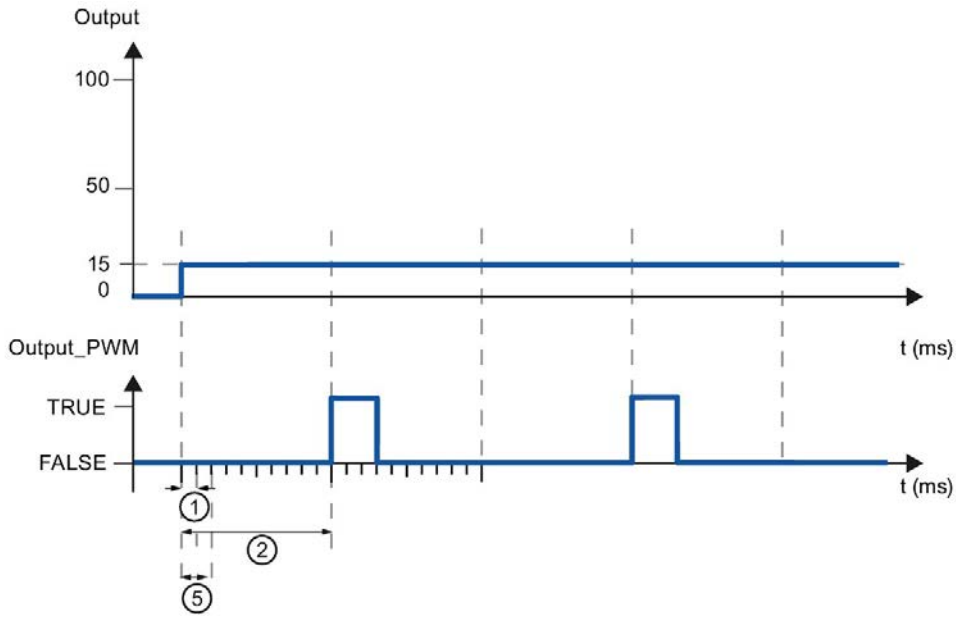

① PID_Compact sampling time
② PID algorithm sampling time
⑤ Minimum ON time

In order to minimize operation frequency and conserve the actuator, extend the minimum ON and OFF times.

If you are using "Output" or "Output_PER", you must configure the value 0.0 for the minimum ON and OFF times.

Note

The minimum ON and OFF times only affect the output parameter Output_PWM and are not used for any pulse generators integrated in the CPU.

See also

Process value settings V1 (Page 102)

Process value monitoring V1 (Page 103)

Output value limits V1 (Page 106)

PID parameters V1 (Page 107)

Output value limits V1

In the "Output value limits" configuration window, configure the absolute limits of your output value in percent. Absolute output value limits are not violated in neither manual mode nor in automatic mode. If a output value outside the limits is specified in manual mode, the effective value is limited in the CPU to the configured limits.

The valid output value limit values depend on the Output used.

Output	-100.0 to 100.0
Output_PER	-100.0 to 100.0
Output_PWM	0.0 to 100.0

PID_Compact sets the output value to 0.0 if an error occurs. 0.0 must therefore always be within the output value limits. You will need to add an offset to Output and Output_PER in the user program if you want an output value low limit of greater than 0.0.

See also

Process value settings V1 (Page 102)

Process value monitoring V1 (Page 103)

PWM limits V1 (Page 104)

PID parameters V1 (Page 107)

PID parameters V1

The PID parameters are displayed in the "PID Parameters" configuration window. The PID parameters will be adapted to your controlled system during controller tuning. You do not need to enter the PID parameters manually.

Note

The currently active PID parameters are located for PID_Compact V1 in the sRet structure and for PID_Compact V2 in the Retain.CtrlParams structure.

Change the currently active PID parameters only in "Inactive" mode online to prevent malfunction of the PID controller.

If you want to change the PID parameters in "Automatic mode" or "Manual mode" online, change the PID parameters as follows:

- PID_Compact V1: Change the PID parameters in the sBackUp structure and apply these changes with sPid_Cmpt.b_LoadBackUp = TRUE to the sRet structure.
- PID_Compact V2: Change the PID parameters in the CtrlParamsBackUp structure and apply these changes with LoadBackUp = TRUE to the Retain.CtrlParams structure.

Online changes to the PID parameters in "Automatic mode" can result in jumps at the output value.

The PID algorithm operates according to the following equation:

$$y = K_p \left[(b \cdot w - x) + \frac{1}{T_I \cdot s} (w - x) + \frac{T_D \cdot s}{a \cdot T_D \cdot s + 1} (c \cdot w - x) \right]$$

y	Output value of the PID algorithm
K_p	Proportional gain
s	Laplace operator
b	Proportional action weighting
w	Setpoint
x	Process value
T_I	Integral action time
a	Derivative delay coefficient (derivative delay T1 = a × T_D)
T_D	Derivative action time
c	Derivative action weighting

The diagram below illustrates the integration of the parameters into the PID algorithm:

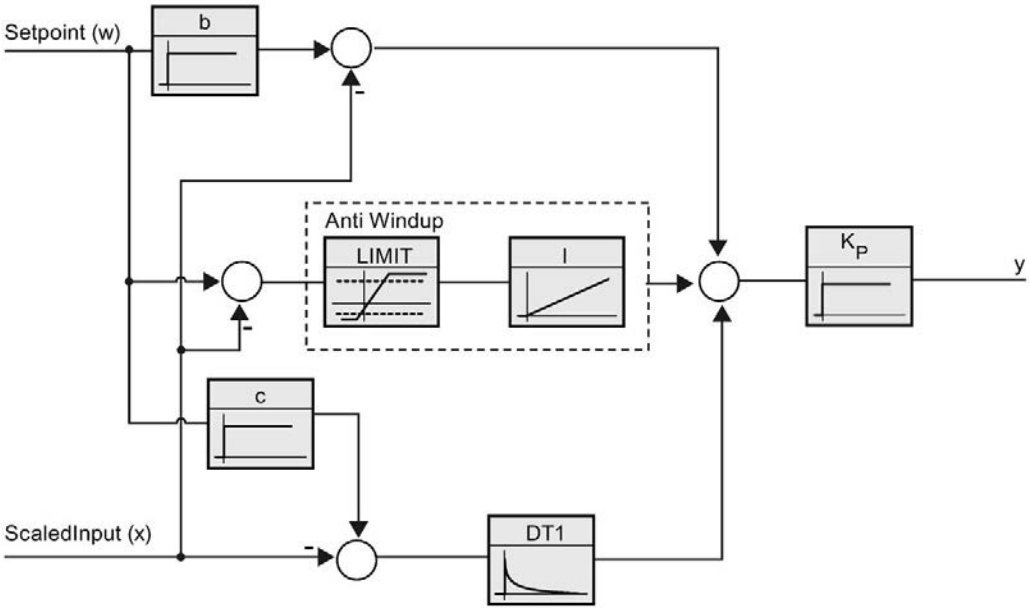

All PID parameters are retentive. If you enter the PID parameters manually, you must completely download PID_Compact.

Downloading technology objects to device (Page 44)

Proportional gain

The value specifies the proportional gain of the controller. PID_Compact does not work with a negative proportional gain. Control logic is inverted under Basic settings > Controller type.

Integral action time

The integral action time determines the time behavior of the integral action. The integral action is deactivated with integral action time = 0.0. When the integral action time is changed from a different value to 0.0 online in "Automatic mode", the previous integral action is deleted and the output value jumps.

Derivative action time

The derivative action time determines the time behavior of the derivative action. Derivative action is deactivated with derivative action time = 0.0.

Derivative delay coefficient

The derivative delay coefficient delays the effect of the derivative action.

Derivative delay = derivative action time × derivative delay coefficient

- 0.0: Derivative action is effective for one cycle only and therefore almost not effective.
- 0.5: This value has proved useful in practice for controlled systems with **one** dominant time constant.
- > 1.0: The greater the coefficient, the longer the effect of the derivative action is delayed.

Proportional action weighting

The proportional action may weaken with changes to the setpoint.

Values from 0.0 to 1.0 are applicable.

- 1.0: Proportional action for setpoint change is fully effective
- 0.0: Proportional action for setpoint change is not effective

The proportional action is always fully effective when the process value is changed.

Derivative action weighting

The derivative action may weaken with changes to the setpoint.

Values from 0.0 to 1.0 are applicable.

- 1.0: Derivative action is fully effective upon setpoint change
- 0.0: Derivative action is not effective upon setpoint change

The derivative action is always fully effective when the process value is changed.

PID algorithm sampling time

The controlled system needs a certain amount of time to respond to changes in the output value. It is therefore not advisable to calculate the output value in every cycle. The sampling time of the PID algorithm represents the time between two calculations of the output value. It is calculated during tuning and rounded to a multiple of the cycle time. All other functions of PID_Compact are executed at every call.

If you use Output_PWM, the accuracy of the output signal is determined by the ratio of the PID algorithm sampling time to the cycle time of the OB. The PID algorithm sampling time corresponds to the time period of the pulse width modulation. The cycle time should be at least 10 times the PID algorithm sampling time.

Rule for tuning

Select whether PI or PID parameters are to be calculated in the "Controller structure" drop-down list.

- **PID**

  Calculates PID parameters during pretuning and fine tuning.

- **PI**

  Calculates PI parameters during pretuning and fine tuning.

- **User-defined**

  The drop-down list displays "User-defined" if you have configured different controller structures for pretuning and fine tuning via a user program.

4.3.2 Commissioning PID_Compact V1

4.3.2.1 Commissioning V1

The commissioning window helps you commission the PID controller. You can monitor the values for the setpoint, process value and output value along the time axis in the trend view. The following functions are supported in the commissioning window:

- Controller pretuning
- Controller fine tuning

  Use fine tuning for fine adjustments to the PID parameters.
- Monitoring the current closed-loop control in the trend view
- Testing the controlled system by specifying a manual output value

All functions require an online connection to the CPU to have been established.

Basic handling

- Select the desired sampling time in the "Sampling time" drop-down list.

  All values in the commissioning window are updated in the selected update time.
- Click the "Start" icon in the measuring group if you want to use the commissioning functions.

  Value recording is started. The current values for the setpoint, process value and output value are entered in the trend view. Operation of the commissioning window is enabled.
- Click the "Stop" icon if you want to end the commissioning functions.

  The values recorded in the trend view can continue to be analyzed.

Closing the commissioning window will terminate recording in the trend view and delete the recorded values.

See also

Pretuning V1 (Page 112)

Fine tuning V1 (Page 114)

"Manual" mode V1 (Page 116)

4.3.2.2 Pretuning V1

The pretuning determines the process response to a jump change of the output value and searches for the point of inflection. The tuned PID parameters are calculated as a function of the maximum slope and dead time of the controlled system.

The more stable the process value is, the easier it is to calculate the PID parameters and the more precise the result will be. Noise on the process value can be tolerated as long as the rate of rise of the process value is significantly higher compared to the noise. The PID parameters are backed up before being recalculated.

Requirement

- The "PID_Compact" instruction is called in a cyclic interrupt OB.
- ManualEnable = FALSE
- PID_Compact is in "inactive" or "manual" mode.
- The setpoint may not be changed during controller tuning. PID_Compact will otherwise be deactivated.
- The setpoint and the process value lie within the configured limits (see "Process value monitoring" configuration).
- The difference between setpoint and process value is greater than 30% of the difference between process value high limit and process value low limit.
- The distance between the setpoint and the process value is > 50% of the setpoint.

Procedure

To perform pretuning, follow these steps:

1. Double-click the "PID_Compact > Commissioning" entry in the project tree.
2. Select the entry "Pretuning" in the "Tuning mode" drop-down list.
3. Click the "Start" icon.
   - An online connection will be established.
   - Value recording is started.
   - Pretuning is started.
   - The "Status" field displays the current steps and any errors that may have occurred. The progress bar indicates the progress of the current step.

   Note

   Click the "Stop" icon when the progress bar has reached 100% and it is to be assumed the controller tuning function is blocked. Check the configuration of the technology object and, if necessary, restart controller tuning.

Result

If pretuning was performed without an error message, the PID parameters have been tuned. PID_Compact switches to automatic mode and uses the tuned parameters. The tuned PID parameters will be retained during power OFF and a restart of the CPU.

If pretuning is not possible, PID_Compact will change to "Inactive" mode.

See also

Parameters State and sRet.i_Mode V1 (Page 308)

Commissioning V1 (Page 111)

Fine tuning V1 (Page 114)

"Manual" mode V1 (Page 116)

4.3.2.3 Fine tuning V1

Fine tuning generates a constant, limited oscillation of the process value. The PID parameters are optimized for the operating point from the amplitude and frequency of this oscillation. All PID parameters are recalculated on the basis of the findings. PID parameters from fine tuning usually have better master control and disturbance behavior than PID parameters from pretuning.

PID_Compact automatically attempts to generate an oscillation greater than the noise of the process value. Fine tuning is only minimally influenced by the stability of the process value. The PID parameters are backed up before being recalculated.

Requirement

- The PID_Compact instruction is called in a cyclic interrupt OB.
- ManualEnable = FALSE
- The setpoint and the process value lie within the configured limits (see "Process value monitoring" configuration).
- The control loop has stabilized at the operating point. The operating point is reached when the process value corresponds to the setpoint.
- No disturbances are expected.
- The setpoint may not be changed during controller tuning.
- PID_Compact is in inactive mode, automatic mode or manual mode.

Process depends on initial situation

Fine tuning can be started in "inactive", "automatic" or "manual" mode. Fine tuning proceeds as follows when started in:

- Automatic mode

  Start fine tuning in automatic mode if you wish to improve the existing PID parameters using controller tuning.

  PID_Comact will regulate using the existing PID parameters until the control loop has stabilized and the requirements for fine tuning have been met. Only then will fine tuning start.

- Inactive or manual mode

  If the requirements for pretuning are met, pretuning is started. The PID parameters established will be used for adjustment until the control loop has stabilized and the requirements for fine tuning have been met. Only then will fine tuning start. If pretuning is not possible, PID_Compact will change to "Inactive" mode.

  An attempt is made to reach the setpoint with a minimum or maximum output value if the process value for pretuning is already too near the setpoint. This can produce increased overshoot.

Procedure

Proceed as follows to carry out "fine tuning":

1. Select the entry "Fine tuning" in the "Tuning mode" drop-down list.
2. Click the "Start" icon.
   - An online connection will be established.
   - Value recording is started.
   - The process of fine tuning is started.
   - The "Status" field displays the current steps and any errors that may have occurred. The progress bar indicates the progress of the current step.

Note

Click the "Stop" icon in the "Tuning mode" group when the progress bar has reached 100% and it is to be assumed the controller tuning function is blocked. Check the configuration of the technology object and, if necessary, restart controller tuning.

Result

The PID parameters will have been optimized if fine tuning has been executed without errors. PID_Compact changes to automatic mode and uses the optimized parameters. The optimized PID parameters will be retained during power OFF and a restart of the CPU.

If errors occurred during "fine tuning", PID_Compact will change to "inactive" mode.

See also

Parameters State and sRet.i_Mode V1 (Page 308)

Commissioning V1 (Page 111)

Pretuning V1 (Page 112)

"Manual" mode V1 (Page 116)

4.3.2.4 "Manual" mode V1

The following section describes how you can use the "Manual" operating mode in the commissioning window of the "PID Compact" technology object.

Requirement

- The "PID_Compact" instruction is called in a cyclic interrupt OB.
- An online connection to the CPU has been established and the CPU is in the "RUN" mode.
- The functions of the commissioning window have been enabled via the "Start" icon.

Procedure

Use "Manual mode" in the commissioning window if you want to test the process by specifying a manual value. To define a manual value, proceed as follows:

1. Select the check box "Manual mode" in the "Online status of the controller" area.

   PID_Compact operates in manual mode. The most recent current output value remains in effect.
2. Enter the manual value in the "Output" field as a % value.
3. Click the control icon .

Result

The manual value is written to the CPU and immediately goes into effect.

Note

PID_Compact continues to monitor the process value. If the process value limits are exceeded, PID_Compact is deactivated.

Clear the "Manual mode" check box if the output value is to be specified again by the PID controller. The change to automatic mode is bumpless.

See also

Parameters State and sRet.i_Mode V1 (Page 308)

Commissioning V1 (Page 111)

Pretuning V1 (Page 112)

Fine tuning V1 (Page 114)

4.3.3 Simulating PID_Compact V1 with PLCSIM

Note

Simulation with PLCSIM

For the simulation with PLCSIM, the time behavior of the simulated PLC is not exactly identical to that of a "real" PLC. The actual cycle clock of a cyclic interrupt OB can have larger fluctuations with a simulated PLC than with "real" PLCs.

In the standard configuration, PID_Compact determines the time between calls automatically and monitors them for fluctuations.

For a simulation of PID_Compact with PLCSIM, for example, a sampling time error (ErrorBits = DW#16#00000800) can therefore be detected.

PID_Compact switches to "Inactive" mode (State = 0) in this case.

To prevent this from happening, you should configure PID_Compact for simulation with PLCSIM as follows:

- sb_EnCyclEstimation = FALSE
- sb_EnCyclMonitoring = FALSE
- sPid_Calc.r_Cycle: Assign the cycle clock of the calling cyclic interrupt OB in seconds to this tag.

Using PID_3Step

5

5.1 Technology object PID_3Step

The technology object PID_3Step provides a PID controller with tuning for valves or actuators with integral response.

You can configure the following controllers:

- Three-point step controller with position feedback
- Three-point step controller without position feedback
- Valve controller with analog output value

PID_3Step continuously acquires the measured process value within a control loop and compares it with the setpoint. From the resulting control deviation, PID_3Step calculates an output value through which the process value reaches the setpoint as quickly and steadily as possible. The output value for the PID controller consists of three actions:

- **Proportional** action

  The proportional action of the output value increases in proportion to the control deviation.

- **I** action

  The integral action of the output value increases until the control deviation has been balanced.

- **D** action

  The derivative action increases with the rate of change of control deviation. The process value is corrected to the setpoint as quickly as possible. The derivative action will be reduced again if the rate of change of control deviation drops.

The instruction PID_3Step calculates the proportional, integral and derivative parameters for your controlled system during pretuning. Fine tuning can be used to tune the parameters further. You do not need to manually determine the parameters.

Additional information

- Overview of software controller (Page 39)
- Add technology objects (Page 41)
- Configure technology objects (Page 42)
- Configuring PID_3Step V2 (Page 119)
- Configuring PID_3Step V1 (Page 142)

Principle

For more information, see the following FAQs in the Siemens Industry Online Support:

- Entry ID 68011827 (https://support.industry.siemens.com/cs/ww/en/view/68011827)

5.2 PID_3Step V2

5.2.1 Configuring PID_3Step V2

5.2.1.1 Basic settings V2

Introduction V2

Configure the following properties of the "PID_3Step" technology object under "Basic settings" in the Inspector window or in the configuration window:

- Physical quantity
- Control logic
- Start-up behavior after reset
- Setpoint (only in the Inspector window)
- Process value (only in the Inspector window)
- Output value (only in the Inspector window)
- Position feedback (only in the Inspector window)

Setpoint, process value, output value and position feedback

You can only configure the setpoint, process value, output value and position feedback in the Inspector window of the programming editor. Select the source for each value:

- Instance DB

  The value saved in the instance DB is used.

  Value must be updated in the instance DB by the user program.

  There should be no value at the instruction.

  Change via HMI possible.

- Instruction

  The value connected to the instruction is used.
  The value is written to the instance DB each time the instruction is called.

  No change via HMI possible.

Control mode V2

Physical quantity

Select the physical quantity and unit of measurement for setpoint, process value, and disturbance variable in the "Controller type" group. Setpoint, process value, and disturbance variable is displayed in this unit of measurement.

Control logic

An increase of the output value is generally intended to cause an increase in the process value. This is referred to as a normal control logic.

PID_3Step does not work with negative proportional gain. Select the check box "Invert control logic" to reduce the process value with a higher output value.

Examples

- Opening the drain valve will reduce the level of a container's contents.
- Increasing cooling will reduce the temperature.

Startup characteristics

1. To switch to "Inactive" mode after CPU restart, clear the "Activate Mode after CPU restart" check box.

   To switch to the operating mode saved in the Mode parameter after CPU restart, select the "Activate Mode after CPU restart" check box.

2. In the "Set Mode to" drop-down list, select the mode that is to be enabled after a complete download to the device.

   After a complete download to the device, PID_3Step starts in the selected operating mode. With each additional restart, PID_3Step starts in the mode that was last saved in Mode.

Example

You have selected the "Activate Mode after CPU restart" check box and the entry "Pretuning" in the "Set Mode to" list. After a complete download to the device, PID_3Step starts in the "Pretuning" mode. If pretuning is still active, PID_3Step starts in "Pretuning" mode again after restart of the CPU. If pretuning was successfully completed and automatic mode is active, PID_3Step starts in "Automatic mode" after restart of the CPU.

Setpoint V2

Procedure

Proceed as follows to define a fixed setpoint:

1. Select "Instance DB".
2. Enter a setpoint, e.g. 80° C.
3. Delete any entry in the instruction.

Proceed as follows to define a variable setpoint:

1. Select "Instruction".
2. Enter the name of the REAL variable in which the setpoint is saved.

   Program-controlled assignment of various values to the REAL variable is possible, for example for the time controlled change of the setpoint.

Process value V2

PID_3Step will scale the value of the analog input to the physical quantity if you use the analog input value directly.

You will need to write a program for processing if you wish first to process the analog input value. The process value is, for example, not directly proportional to the value at the analog input. The processed process value must be in floating point format.

Procedure

Proceed as follows to use the analog input value without processing:

1. Select the entry "Input_PER" in the drop-down list "Input".
2. Select "Instruction" as source.
3. Enter the address of the analog input.

Proceed as follows to use the processed process value in floating point format:

1. Select the entry "Input" in the drop-down list "Input".
2. Select "Instruction" as source.
3. Enter the name of the variable in which the processed process value is saved.

Position feedback V2

Position feedback configuration depends upon the actuator used.

- Actuator without position feedback
- Actuator with digital endstop signals
- Actuator with analog position feedback
- Actuator with analog position feedback and endstop signals

Actuator without position feedback

Proceed as follows to configure PID_3Step for an actuator without position feedback:

1. Select the entry "No Feedback" in the drop-down list "Feedback".

Actuator with digital endstop signals

Proceed as follows to configure PID_3Step for an actuator with endstop signals:

1. Select the entry "No Feedback" in the drop-down list "Feedback".
2. Activate the "Actuator endstop signals" check box.
3. Select "Instruction" as source for Actuator_H and Actuator_L.
4. Enter the addresses of the digital inputs for Actuator_H and Actuator_L.

Actuator with analog position feedback

Proceed as follows to configure PID_3Step for an actuator with analog position feedback:

1. Select the entry "Feedback" or "Feedback_PER" in the drop-down list "Feedback".
   - Use the analog input value for Feedback_PER. Configure Feedback_PER scaling in the actuator settings.
   - Process the analog input value for Feedback using your user program.
2. Select "Instruction" as source.
3. Enter the address of the analog input or the variable of your user program.

Actuator with analog position feedback and endstop signals

Proceed as follows to configure PID_3Step for an actuator with analog position feedback and endstop signals:

1. Select the entry "Feedback" or "Feedback_PER" in the drop-down list "Feedback".
2. Select "Instruction" as source.
3. Enter the address of the analog input or the variable of your user program.
4. Activate the "Actuator endstop signals" check box.
5. Select "Instruction" as source for Actuator_H and Actuator_L.
6. Enter the addresses of the digital inputs for Actuator_H and Actuator_L.

Output value V2

PID_3Step offers an analog output value (Output_PER) and digital output values (Output_UP, Output_DN). Your actuator will determine which output value you use.

- Output_PER

  The actuator has a relevant motor transition time and is triggered via an analog output and controlled with a continuous signal, e.g. 0...10 V or 4...20 mA. The value at Output_PER corresponds to the target position of the valve, e.g. Output_PER = 13824, when the valve is to be opened by 50%.

  For auto-tuning and anti windup behavior, for example, PID_3Step takes into consideration that the analog output value has a delayed effect on the process due to the motor transition time. If no relevant motor transition time is in effect in your process (e.g. with solenoid valves), so that the output value has a direct and full effect on the process, use PID_Compact instead.

- Output_UP, Output_DN

  The actuator has a relevant motor transition time and is controlled by two digital outputs.
  Output_UP moves the valve in the open state direction.
  Output_DN moves the valve in the closed state direction.

The motor transition time is taken into consideration in the calculation of the analog output value as well as in the calculation of the digital output values. It is mainly required for correct operation during auto-tuning and the anti-windup behavior. You should therefore configure the motor transition time under "Actuator settings" with the value that the motor requires to move the actuator from the closed to the opened state.

Procedure

Proceed as follows to use the analog output value:

1. Select the entry "Output (analog)" in the drop-down list "Output".
2. Select "Instruction".
3. Enter the address of the analog output.

Proceed as follows to use the digital output value:

1. Select the entry "Output (digital)" in the drop-down list "Output".
2. Select "Instruction" for Output_UP and Output_DN.
3. Enter the addresses of the digital outputs.

Proceed as follows to process the output value using the user program:

1. Select the entry corresponding to the actuator in the drop-down list "Output".
2. Select "Instruction".
3. Enter the name of the tag you are using to process the output value.
4. Transfer the processed output value to the actuator by means of an analog or digital CPU output.

5.2.1.2 Process value settings V2

Process value scaling V2

If you have configured the use of Input_PER in the basic setting, you must convert the value of the analog input to the physical quantity of the process value. The current configuration is displayed in the Input_PER display.

Input_PER will be scaled using a low and high value pair if the process value is directly proportional to the value of the analog input.

Procedure

To scale the process value, follow these steps:

1. Enter the low pair of values in the "Scaled low process value" and "Low" text boxs.
2. Enter the high pair of values in the "Scaled high process value" and "High" input boxes.

Default settings for the value pairs are stored in the hardware configuration. To use the value pairs from the hardware configuration, follow these steps:

1. Select the PID_3Step instruction in the programming editor.
2. Interconnect Input_PER with an analog input in the basic settings.
3. Click the "Automatic setting" button in the process value settings.

The existing values will be overwritten with the values from the hardware configuration.

Process value limits V2

You must specify an appropriate absolute high limit and low limit for the process value as limit values for your controlled system. As soon as the process value violates these limits, an error occurs (ErrorBits = 0001h). Tuning is canceled when the process value limits are violated. You can specify how PID_3Step responds to errors in automatic mode in the actuator settings.

5.2.1.3 Final controlling element settings V2

Final controlling element V2

Actuator-specific times

Configure the motor transition time and the minimum ON and OFF times to prevent damage to the actuator. You can find the specifications in the actuator data sheet.

The motor transition time is the time in seconds the motor requires to move the actuator from the closed to the opened state. You can measure the motor transition time during commissioning.

The motor transition time is taken into consideration in the calculation of the analog output value as well as in the calculation of the digital output values. It is mainly required for correct operation during auto-tuning and the anti-windup behavior.

If no relevant motor transition time is in effect in your process (e.g. with solenoid valves), so that the output value has a direct and full effect on the process, use PID_Compact instead.

The motor transition time is retentive. If you enter the motor transition time manually, you must completely download PID_3Step.

Downloading technology objects to device (Page 44)

If you are using "Output_UP" or "Output_DN", you can reduce the switching frequency with the minimum on and minimum OFF time.

The on or off times calculated are totaled in automatic mode and only become effective when the sum is greater than or equal to the minimum on or OFF time.

Manual_UP = TRUE or Manual_DN = TRUE in manual mode operates the actuator for at least the minimum ON or OFF time.

If you have selected the analog output value Output_PER, the minimum ON time and the minimum OFF time are not evaluated and cannot be changed.

Reaction to error

PID_3Step is preset so that the controller stays active in most cases in the event of an error. If errors occur frequently in controller mode, this default reaction has a negative effect on the control response. In this case, check the Errorbits parameter and eliminate the cause of the error.

NOTICE
Your system may be damaged. If you output "Current value while error pending" or "Substitute output value while error pending" in the event of an error, PID_3Step remains in automatic mode even if the process value limits are violated. This may damage your system. It is essential to configure how your controlled system reacts in the event of an error to protect your system from damage.

PID_3Step generates a programmable output value in the case of an error:

- Current value

  PID_3Step is switched off and no longer modifies the actuator position.

- Current value for error while error is pending

  The controller functions of PID_3Step are switched off and the position of the actuator is no longer changed.

  If the following errors occur in automatic mode, PID_3Step returns to automatic mode as soon as the errors are no longer pending.

  – 0002h: Invalid value at Input_PER parameter.
  – 0200h: Invalid value at Input parameter.
  – 0400h: Calculation of output value failed.
  – 1000h: Invalid value at Setpoint parameter.
  – 2000h: Invalid value at Feedback_PER parameter.
  – 4000h: Invalid value at Feedback parameter.
  – 8000h: Error during digital position feedback.
  – 20000h: Invalid value at SavePosition tag.

If one or more of the following errors occur, PID_3Step stays in automatic mode:

– 0001h: The Input parameter is outside the process value limits.

– 0800h: Sampling time error

– 40000h: Invalid value at Disturbance parameter.

PID_3Step remains in manual mode if an error occurs in manual mode.

If an error occurs during tuning or transition time measurement, PID_3Step switches to the mode in which tuning or transition time measurement was started. Only in the event of the following error is tuning not aborted:

– 0020h: Pretuning is not permitted during fine tuning.

- Substitute output value

  PID_3Step moves the actuator to the substitute output value and then switches off.

- Substitute output value while error is pending

  PID_3Step moves the actuator to the substitute output value. When the substitute output value is reached, PID_3Step reacts as it does with "Current value for while error is pending".

Enter the substitute output value in "%".

Only substitute output values 0% and 100% can be approached precisely in the case of actuators without analog position feedback. A substitute output value not equal to 0% or 100% is approached via an internally simulated position feedback. This procedure does not, however, allow the exact approach of substitute output value.

All substitute output values can be approached precisely with actuators with analog position feedback.

Scaling V2 position feedback

Scaling position feedback

If you have configured the use of Feedback_PER in the basic settings, you will need to convert the value of the analog input into %. The current configuration will be displayed in the "Feedback" display.

Feedback_PER is scaled using a low and high value pair.

1. Enter the low pair of values in the "Low endstop" and "Low" input boxes.
2. Enter the high pair of values in the "High endstop" and "High" input boxes.

"Low endstop" must be less than "High endstop"; "Low" must be less than "High".

The valid values for "High endstop" and "Low endstop" depend upon:

- No Feedback, Feedback, Feedback_PER
- Output (analog), Output (digital)

Output	Feedback	Low endstop	High endstop
Output (digital)	No Feedback	Cannot be set (0.0%)	Cannot be set (100.0%)
Output (digital)	Feedback	-100.0% or 0.0%	0.0% or +100.0%
Output (digital)	Feedback_PER	-100.0% or 0.0%	0.0% or +100.0%
Output (analog)	No Feedback	Cannot be set (0.0%)	Cannot be set (100.0%)
Output (analog)	Feedback	-100.0% or 0.0%	0.0% or +100.0%
Output (analog)	Feedback_PER	-100.0% or 0.0%	0.0% or +100.0%

Output value limits V2

Limiting the output value

You can exceed or undershoot the output value limits during the transition time measurement and with mode = 10. The output value is limited to these values in all other modes.

Enter the absolute output value limits in the "Output value high limit" and "Output value low limit" input boxes. The output value limits must be within "Low endstop" and "High endstop".

If no Feedback is available and Output (digital) is set, you cannot limit the output value. Output_UP and Output_DN are then reset upon Actuator_H = TRUE or Actuator_L = TRUE. If no endstop signals are available, Output_UP and Output_DN are reset after a travel time of 150% of the motor actuating time.

The default value of 150% can be adjusted using the tagConfig.VirtualActuatorLimit. As of PID_3Step Version 2.3 the monitoring and limiting of the travel time can be deactivated with Config.VirtualActuatorLimit = 0.0.

5.2.1.4 Advanced settings V2

Actual value monitoring V2

Configure a warning high and low limit for the process value in the "Process value monitoring" configuration window. If one of the warning limits is exceeded or undershot during operation, a warning will be displayed at the PID_3Step instruction:

- At the InputWarning_H output parameter if the warning high limit has been exceeded
- At the InputWarning_L output parameter if the warning low limit has been undershot

The warning limits must be within the process value high and low limits.

The process value high and low limits will be used if you do not enter values.

Example

Process value high limit = 98° C; warning high limit = 90° C

Warning low limit = 10° C; process value low limit = 0° C

PID_3Step will respond as follows:

Process value	InputWarning_H	InputWarning_L	ErrorBits	Operating mode
> 98° C	TRUE	FALSE	0001h	As configured
≤ 98° C and > 90° C	TRUE	FALSE	0000h	Automatic mode
≤ 90° C and ≥ 10° C	FALSE	FALSE	0000h	Automatic mode
< 10° C and ≥ 0° C	FALSE	TRUE	0000h	Automatic mode
< 0° C	FALSE	TRUE	0001h	As configured

In the actuator settings, you can configure the response of PID_3Step when the process value high limit or low limit is violated.

PID parameters V2

The PID parameters are displayed in the "PID Parameters" configuration window. The PID parameters will be adapted to your controlled system during controller tuning. You do not need to enter the PID parameters manually.

Note

The currently active PID parameters are located in the Retain.CtrlParams structure.

Change the currently active PID parameters only in "Inactive" mode online to prevent malfunction of the PID controller.

If you want to change the PID parameters in "Automatic mode" or "Manual mode" online, change the PID parameters in the CtrlParamsBackUp structure and apply these changes to the Retain.CtrlParams structure as follows:

- PID_3Step V1: Apply the changes with Config.LoadBackUp = TRUE
- PID_3Step V2: Apply the changes with LoadBackUp = TRUE

Online changes to the PID parameters in "Automatic mode" can result in jumps at the output value.

The PID algorithm operates according to the following equation:

$$\Delta y = K_p \cdot s \cdot \left[(b \cdot w - x) + \frac{1}{T_I \cdot s} (w - x) + \frac{T_D \cdot s}{a \cdot T_D \cdot s + 1} (c \cdot w - x) \right]$$

Δy	Output value of the PID algorithm
K_p	Proportional gain
s	Laplace operator
b	Proportional action weighting
w	Setpoint
x	Process value
T_I	Integration time
a	Derivative delay coefficient (derivative delay T1 = a × T_D)
T_D	Derivative action time
c	Derivative action weighting

The diagram below illustrates the integration of the parameters into the PID algorithm:

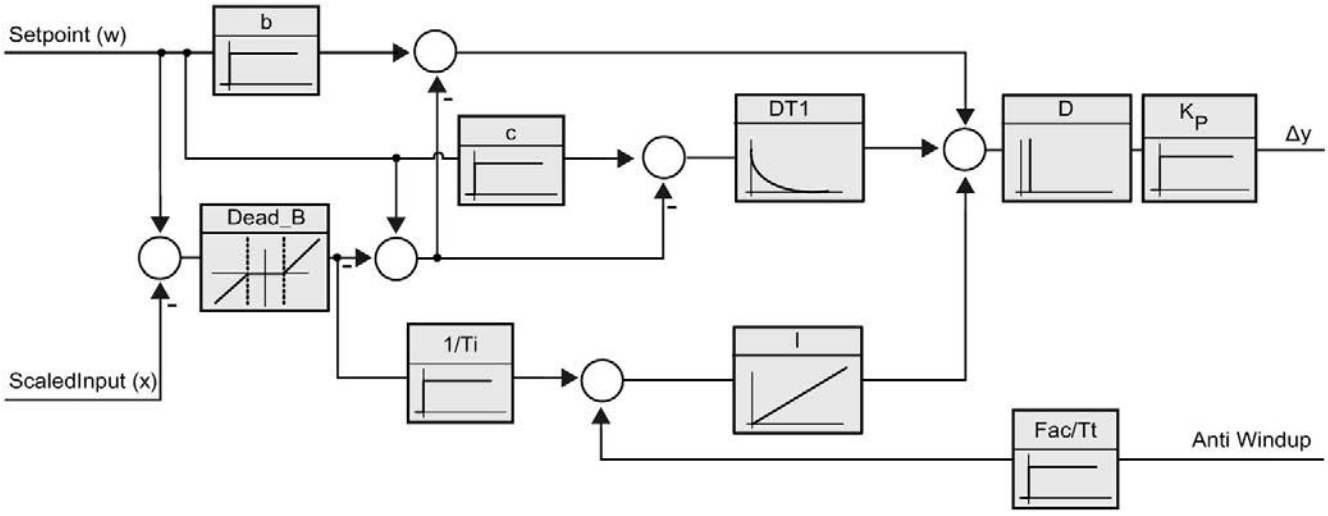

All PID parameters are retentive. If you enter the PID parameters manually, you must completely download PID_3Step.

Downloading technology objects to device (Page 44)

Proportional gain

The value specifies the proportional gain of the controller. PID_3Step does not work with a negative proportional gain. Control logic is inverted under Basic settings > Controller type.

Integration time

The integration time determines the time behavior of the integral action. The integral action is deactivated with integration time = 0.0. When the integral action time is changed from a different value to 0.0 online in "Automatic mode", the previous integral action is deleted and the output value jumps.

Derivative action time

The derivative action time determines the time behavior of the derivative action. Derivative action is deactivated with derivative action time = 0.0.

Derivative delay coefficient

The derivative delay coefficient delays the effect of the derivative action.

Derivative delay = derivative action time × derivative delay coefficient

- 0.0: Derivative action is effective for one cycle only and therefore almost not effective.
- 0.5: This value has proved useful in practice for controlled systems with **one** dominant time constant.
- > 1.0: The greater the coefficient, the longer the effect of the derivative action is delayed.

Proportional action weighting

The proportional action may weaken with changes to the setpoint.

Values from 0.0 to 1.0 are applicable.

- 1.0: Proportional action for setpoint change is fully effective
- 0.0: Proportional action for setpoint change is not effective

The proportional action is always fully effective when the process value is changed.

Derivative action weighting

The derivative action may weaken with changes to the setpoint.

Values from 0.0 to 1.0 are applicable.

- 1.0: Derivative action is fully effective upon setpoint change
- 0.0: Derivative action is not effective upon setpoint change

The derivative action is always fully effective when the process value is changed.

PID algorithm sampling time

The controlled system needs a certain amount of time to respond to changes in the output value. It is therefore not advisable to calculate the output value in every cycle. The sampling time of the PID algorithm represents the time between two calculations of the output value. It is calculated during tuning and rounded to a multiple of the PID_3Step sampling time. All other functions of PID_3Step are executed at every call.

Dead band width

The deadband suppresses the noise component in the steady controller state. The dead band width specifies the size of the dead band. The dead band is off if the dead band width is 0.0.

If values not equal to 1.0 are configured for the proportional action weighting or the derivative action weighting, setpoint changes even within the dead zone affect the output value. Process value changes within the dead zone do not affect the output value, regardless of the weighting.

5.2.2 Commissioning PID_3Step V2

5.2.2.1 Pretuning V2

The pretuning determines the process response to a pulse of the output value and searches for the point of inflection. The tuned PID parameters are calculated as a function of the maximum slope and dead time of the controlled system. You obtain the best PID parameters when you perform pretuning and fine tuning.

The more stable the process value is, the easier it is to calculate the PID parameters and the more precise the result will be. Noise on the process value can be tolerated as long as the rate of rise of the process value is significantly higher compared to the noise. This is most likely the case in operating modes "Inactive" and "manual mode". The PID parameters are backed up before being recalculated.

The setpoint is frozen during pretuning.

Requirement

- The PID_3Step instruction is called in a cyclic interrupt OB.
- ManualEnable = FALSE
- Reset = FALSE
- The motor transition time has been configured or measured.
- PID_3Step is in one of the following modes: "Inactive", "Manual mode", or "Automatic mode".
- The setpoint and the process value lie within the configured limits (see "Process value settings" configuration).

Procedure

To perform pretuning, follow these steps:

1. Double-click the "PID_3Step > Commissioning" entry in the project tree.
2. Select the entry "Pretuning" in the "Tuning mode" drop-down list in the working area "Tuning".
3. Click the "Start" icon.
   - An online connection will be established.
   - Value recording is started.
   - Pretuning is started.
   - The "Status" field displays the current steps and any errors that may have occurred. The progress bar indicates the progress of the current step.

Note

Click the "Stop" icon when the progress bar has reached 100% and it is to be assumed the controller tuning function is blocked. Check the configuration of the technology object and, if necessary, restart controller tuning.

Result

If pretuning was performed without an error message, the PID parameters have been tuned. PID_3Step switches to automatic mode and uses the tuned parameters. The tuned PID parameters will be retained during power OFF and a restart of the CPU.

If pretuning is not possible, PID_3Step responds with the configured reaction to errors.

5.2.2.2 Fine tuning V2

Fine tuning generates a constant, limited oscillation of the process value. The PID parameters are tuned for the operating point from the amplitude and frequency of this oscillation. All PID parameters are recalculated from the results. PID parameters from fine tuning usually have better master control and disturbance characteristics than PID parameters from pretuning. You obtain the best PID parameters when you perform pretuning and fine tuning.

PID_3Step automatically attempts to generate an oscillation greater than the noise of the process value. Fine tuning is only minimally influenced by the stability of the process value. The PID parameters are backed up before being recalculated.

The setpoint is frozen during fine tuning.

Requirement

- The PID_3Step instruction is called in a cyclic interrupt OB.
- ManualEnable = FALSE
- Reset = FALSE
- The motor transition time has been configured or measured.
- The setpoint and the process value lie within the configured limits (see "Process value settings" configuration).
- The control loop has stabilized at the operating point. The operating point is reached when the process value corresponds to the setpoint.
- No disturbances are expected.
- PID_3Step is in inactive mode, automatic mode or manual mode.

Process depends on initial situation

Fine tuning proceeds as follows when started from:

- Automatic mode

  Start fine tuning from automatic mode if you wish to improve the existing PID parameters through tuning.

  PID_3Step controls the system using the existing PID parameters until the control loop has stabilized and the requirements for fine tuning have been met. Only then will fine tuning start.

- Inactive or manual mode

  Pretuning is always started first. The determined PID parameters will be used for control until the control loop has stabilized and the requirements for fine tuning have been met. Only then will fine tuning start.

Procedure

To perform fine tuning, follow these steps:

1. Select the entry "Fine tuning" in the "Tuning mode" drop-down list.
2. Click the "Start" icon.
   - An online connection will be established.
   - Value recording is started.
   - The process of fine tuning is started.
   - The "Status" field displays the current steps and any errors that may have occurred. The progress bar indicates the progress of the current step.

Note

Click the "Stop" icon in the "Tuning mode" group when the progress bar has reached 100% and it is to be assumed the controller tuning function is blocked. Check the configuration of the technology object and, if necessary, restart controller tuning.

Result

If no errors occurred during fine tuning, the PID parameters have been tuned. PID_3Step switches to automatic mode and uses the tuned parameters. The tuned PID parameters will be retained during power OFF and a restart of the CPU.

If errors occurred during fine tuning, PID_3Step responds with the configured response to errors.

5.2.2.3 Commissioning with manual PID parameters V2

Requirement

- The PID_3Step instruction is called in a cyclic interrupt OB.
- ManualEnable = FALSE
- Reset = FALSE
- The motor transition time has been configured or measured.
- PID_3Step is in "inactive" mode.
- The setpoint and the process value lie within the configured limits (see "Process value settings" configuration).

Procedure

Proceed as follows to commission PID_3Step with manual PID parameters:

1. Double-click on "PID_3Step > Configuration" in the project tree.
2. Click on "Advanced settings > PID Parameters" in the configuration window.
3. Select the check box "Enable direct input".
4. Enter the PID parameters.
5. Double-click the "PID_3Step > Commissioning" entry in the project tree.
6. Establish an online connection to the CPU.
7. Load the PID parameters to the CPU.
8. Click the "Start PID_3Step" icon.

Result

PID_3Step changes to automatic mode and controls using the current PID parameters.

See also

PID parameters V2 (Page 130)

5.2.2.4 Measuring the motor transition time V2

Introduction

PID_3Step requires the motor transition time to be as accurate as possible for good controller results. The data in the actuator documentation contains average values for this type of actuator. The value for the specific actuator used may differ.

You can measure the motor transition time during commissioning if you are using actuators with position feedback or endstop signals. The output value limits are not taken into consideration during the motor transition time measurement. The actuator can travel to the high or the low endstop.

The motor transition time cannot be measured if neither position feedback nor endstop signals are available.

Actuators with analog position feedback

Proceed as follows to measure motor transition time with position feedback:

Requirement

- Feedback or Feedback_PER has been selected in the basic settings and the signal has been connected.
- An online connection to the CPU has been established.

1. Select the "Use position feedback" check box.
2. Enter the position to which the actuator is to be moved in the "Target position" input field.

   The current position feedback (starting position) will be displayed. The difference between "Target position" and "Position feedback" must be at least 50% of the valid output value range.
3. Click the "Start" icon.

Result

The actuator is moved from the starting position to the target position. Time measurement starts immediately and ends when the actuator reaches the target position. The motor transition time is calculated according to the following equation:

Motor transition time = (output value high limit – output value low limit) × Measuring time / AMOUNT (target position – starting position).

The progress and status of transition time measurement are displayed. The transition time measured is saved in the instance data block on the CPU and displayed in the "Measured transition time" field. When the transition time measurement is ended and ActivateRecoverMode = TRUE, PID_3Step switches to the operating mode from which the transition time measurement was started. If the transition time measurement is ended and ActivateRecoverMode = FALSE, PID_3Step changes to "Inactive" mode.

Note

Click on the icon "Upload measured transition time" to load the motor transition time measured to the project.

Actuators with endstop signals

Proceed as follows to measure the transition time of actuators with endstop signals:

Requirement

- The "Endstop signals" check box in the basic settings has been selected and Actuator_H and Actuator_L are connected.
- An online connection to the CPU has been established.

Proceed as follows to measure motor transition time with endstop signals:

1. Select the "Use actuator endstop signals" check box.
2. Select the direction in which the actuator is to be moved.
   - Open - Close - Open

     The actuator is moved first to the high endstop, then to the low endstop and then back to the high endstop.
   - Close - Open - Close

     The actuator is moved first to the low endstop, then to the high endstop and then back to the low endstop.
3. Click the "Start" icon.

Result

The actuator is moved in the selected direction. Time measurement will start once the actuator has reached the first endstop and will end when the actuator reaches this endstop for the second time. The motor transition time is equal to the time measured divided by two.

The progress and status of transition time measurement are displayed. The transition time measured is saved in the instance data block on the CPU and displayed in the "Measured transition time" field. When the transition time measurement is ended and ActivateRecoverMode = TRUE, PID_3Step switches to the operating mode from which the transition time measurement was started. If the transition time measurement is ended and ActivateRecoverMode = FALSE, PID_3Step changes to "Inactive" mode.

Cancelling transition time measurement

PID_3Step switches to "Inactive" mode if you cancel transition time measurement by pressing the Stop button.

5.2.3 Simulating PID_3Step V2 with PLCSIM

Note

Simulation with PLCSIM

The simulation of PID_3Step V2.x with PLCSIM for CPU S7-1200 is not supported.

PID_3Step V2.x can only be simulated for CPU S7-1500 with PLCSIM.

For the simulation with PLCSIM, the time behavior of the simulated PLC is not exactly identical to that of a "real" PLC. The actual cycle clock of a cyclic interrupt OB can have larger fluctuations with a simulated PLC than with "real" PLCs.

In the standard configuration, PID_3Step determines the time between calls automatically and monitors them for fluctuations.

For a simulation of PID_3Step with PLCSIM, for example, a sampling time error ((ErrorBits = DW#16#00000800) can therefore be detected.

This results in ongoing tuning being aborted.

The response in automatic mode depends on the value of the ActivateRecoverMode tag.

To prevent this from happening, you should configure PID_3Step for simulation with PLCSIM as follows:

- CycleTime.EnEstimation = FALSE
- CycleTime.EnMonitoring = FALSE
- CycleTime.Value: Assign the cycle clock of the calling cyclic interrupt OB in seconds to this tag.

5.3 PID_3Step V1

5.3.1 Configuring PID_3Step V1

5.3.1.1 Basic settings V1

Introduction V1

Configure the following properties of the "PID_3Step" technology object under "Basic settings" in the Inspector window or in the configuration window:

- Physical quantity
- Control logic
- Start-up behavior after reset
- Setpoint (only in the Inspector window)
- Process value (only in the Inspector window)
- Output value (only in the Inspector window)
- Position feedback (only in the Inspector window)

Setpoint, process value, output value and position feedback

You can only configure the setpoint, process value, output value and position feedback in the Inspector window of the programming editor. Select the source for each value:

- Instance DB

  The value saved in the instance DB is used.

  Value must be updated in the instance DB by the user program.

  There should be no value at the instruction.

  Change via HMI possible.

- Instruction

  The value connected to the instruction is used.
  The value is written to the instance DB each time the instruction is called.

  No change via HMI possible.

Control mode V1

Physical quantity

Select the unit of measurement and physical quantity for the setpoint and process value in the "Controller type" group. The setpoint and process value will be displayed in this unit.

Control logic

An increase of the output value is generally intended to cause an increase in the process value. This is referred to as a normal control logic.

PID_3Step does not work with negative proportional gain. Select the check box "Invert control logic" to reduce the process value with a higher output value.

Examples

- Opening the drain valve will reduce the level of a container's contents.
- Increasing cooling will reduce the temperature.

Start-up behavior after reset

To change straight to the last active mode after restarting the CPU, select the "Enable last mode after CPU restart" check box.

PID_3Step will remain in "Inactive" mode if the check box is cleared.

Setpoint V1

Procedure

Proceed as follows to define a fixed setpoint:

1. Select "Instance DB".
2. Enter a setpoint, e.g. 80° C.
3. Delete any entry in the instruction.

Proceed as follows to define a variable setpoint:

1. Select "Instruction".
2. Enter the name of the REAL variable in which the setpoint is saved.

   Program-controlled assignment of various values to the REAL variable is possible, for example for the time controlled change of the setpoint.

Process value V1

PID_3Step will scale the value of the analog input to the physical quantity if you use the analog input value directly.

You will need to write a program for processing if you wish first to process the analog input value. The process value is, for example, not directly proportional to the value at the analog input. The processed process value must be in floating point format.

Procedure

Proceed as follows to use the analog input value without processing:

1. Select the entry "Input_PER" in the drop-down list "Input".
2. Select "Instruction" as source.
3. Enter the address of the analog input.

Proceed as follows to use the processed process value in floating point format:

1. Select the entry "Input" in the drop-down list "Input".
2. Select "Instruction" as source.
3. Enter the name of the variable in which the processed process value is saved.

Position feedback V1

Position feedback configuration depends upon the actuator used.

- Actuator without position feedback
- Actuator with digital endstop signals
- Actuator with analog position feedback
- Actuator with analog position feedback and endstop signals

Actuator without position feedback

Proceed as follows to configure PID_3Step for an actuator without position feedback:

1. Select the entry "No Feedback" in the drop-down list "Feedback".

Actuator with digital endstop signals

Proceed as follows to configure PID_3Step for an actuator with endstop signals:

1. Select the entry "No Feedback" in the drop-down list "Feedback".
2. Activate the "Actuator endstop signals" check box.
3. Select "Instruction" as source for Actuator_H and Actuator_L.
4. Enter the addresses of the digital inputs for Actuator_H and Actuator_L.

Actuator with analog position feedback

Proceed as follows to configure PID_3Step for an actuator with analog position feedback:

1. Select the entry "Feedback" or "Feedback_PER" in the drop-down list "Feedback".
   - Use the analog input value for Feedback_PER. Configure Feedback_PER scaling in the actuator settings.
   - Process the analog input value for Feedback using your user program.
2. Select "Instruction" as source.
3. Enter the address of the analog input or the variable of your user program.

Actuator with analog position feedback and endstop signals

Proceed as follows to configure PID_3Step for an actuator with analog position feedback and endstop signals:

1. Select the entry "Feedback" or "Feedback_PER" in the drop-down list "Feedback".
2. Select "Instruction" as source.
3. Enter the address of the analog input or the variable of your user program.
4. Activate the "Actuator endstop signals" check box.
5. Select "Instruction" as source for Actuator_H and Actuator_L.
6. Enter the addresses of the digital inputs for Actuator_H and Actuator_L.

Output value V1

PID_3Step offers an analog output value (Output_PER) and digital output values (Output_UP, Output_DN). Your actuator will determine which output value you use.

- Output_PER

  The actuator has a relevant motor transition time and is triggered via an analog output and controlled with a continuous signal, e.g. 0...10 V or 4...20 mA. The value at Output_PER corresponds to the target position of the valve, e.g. Output_PER = 13824, when the valve is to be opened by 50%.

  For auto-tuning and anti windup behavior, for example, PID_3Step takes into consideration that the analog output value has a delayed effect on the process due to the motor transition time. If no relevant motor transition time is in effect in your process (e.g. with solenoid valves), so that the output value has a direct and full effect on the process, use PID_Compact instead.

- Output_UP, Output_DN

  The actuator has a relevant motor transition time and is controlled by two digital outputs.
  Output_UP moves the valve in the open state direction.
  Output_DN moves the valve in the closed state direction.

The motor transition time is taken into consideration in the calculation of the analog output value as well as in the calculation of the digital output values. It is mainly required for correct operation during auto-tuning and the anti-windup behavior. You should therefore configure the motor transition time under "Actuator settings" with the value that the motor requires to move the actuator from the closed to the opened state.

Procedure

Proceed as follows to use the analog output value:

1. Select the entry "Output (analog)" in the drop-down list "Output".
2. Select "Instruction".
3. Enter the address of the analog output.

Proceed as follows to use the digital output value:

1. Select the entry "Output (digital)" in the drop-down list "Output".
2. Select "Instruction" for Output_UP and Output_DN.
3. Enter the addresses of the digital outputs.

Proceed as follows to process the output value using the user program:

1. Select the entry corresponding to the actuator in the drop-down list "Output".
2. Select "Instruction".
3. Enter the name of the tag you are using to process the output value.
4. Transfer the processed output value to the actuator by means of an analog or digital CPU output.

5.3.1.2 Process value settings V1

Configure the scaling of your process value and specify the process value absolute limits In the "Process value settings" configuration window.

Scaling the process value

If you have configured the use of Input_PER in the basic settings, you will need to convert the value of the analog input into the physical quantity of the process value. The current configuration will be displayed in the Input_PER display.

Input_PER will be scaled using a low and high value pair if the process value is directly proportional to the value of the analog input.

1. Enter the low pair of values in the "Scaled low process value" and "Low" input fields.
2. Enter the high pair of values in the "Scaled high process value" and "High" input boxes.

Default settings for the value pairs are saved in the hardware configuration. Proceed as follows to use the value pairs from the hardware configuration:

1. Select the instruction PID_3Step in the programming editor.
2. Connect Input_PER to an analog input in the basic settings.
3. Click on the "Automatic setting" button in the process value settings.

   The existing values will be overwritten with the values from the hardware configuration.

Monitoring process value

Specify the absolute high and low limit of the process value. You must enter reasonable limits for your controlled system. Reasonable limits are important during optimization to obtain optimal PID parameters. The default for the "High limit process value" is 120 %. At the I/O input, the process value can be a maximum of 18% higher than the standard range (overrange). This setting ensures that an error is no longer signaled due to a violation of the "Process value high limit". Only a wire-break and a short-circuit are recognized and PID_3Step reacts according to the configured reaction to error.

NOTICE
Your system may be damaged. If you set very high process value limits (for example $-3.4*10^{38}...+3.4*10^{38}$), process value monitoring will be disabled. Your system may then be damaged if an error occurs. You need to configure useful process value limits for your controlled system.

5.3.1.3 V1 final controlling element setting

Actuator-specific times

Configure the motor transition time and the minimum ON and OFF times to prevent damage to the actuator. You can find the specifications in the actuator data sheet.

The motor transition time is the time in seconds the motor requires to move the actuator from the closed to the opened state. The maximum time that the actuator is moved in one direction is 110% of the motor transition time. You can measure the motor transition time during commissioning.

The motor transition time is taken into consideration in the calculation of the analog output value as well as in the calculation of the digital output values. It is mainly required for correct operation during auto-tuning and the anti-windup behavior.

If no relevant motor transition time is in effect in your process (e.g. with solenoid valves), so that the output value has a direct and full effect on the process, use PID_Compact instead.

If you are using "Output_UP" or "Output_DN", you can reduce the switching frequency with the minimum on and minimum OFF time.

The on or off times calculated are totaled in automatic mode and only become effective when the sum is greater than or equal to the minimum on or OFF time.

A rising edge at Manual_UP or Manual_DN in manual mode will operate the actuator for at least the minimum on or OFF time.

If you have selected the analog output value Output_PER, the minimum ON time and the minimum OFF time are not evaluated and cannot be changed.

Reaction to error

PID_3Step is preset so that the controller stays active in most cases in the event of an error. If errors occur frequently in controller mode, this default reaction has a negative effect on the control response. In this case, check the Errorbits parameter and eliminate the cause of the error.

PID_3Step generates a programmable output value in response to an error:

- Current value

  PID_3Step is switched off and no longer modifies the actuator position.

- Current value for error while error is pending

  The controller functions of PID_3Step are switched off and the position of the actuator is no longer changed.

  If the following errors occur in automatic mode, PID_3Step returns to automatic mode as soon as the errors are no longer pending.

  – 0002h: Invalid value at Input_PER parameter.
  – 0200h: Invalid value at Input parameter.
  – 0800h: Sampling time error
  – 1000h: Invalid value at Setpoint parameter.
  – 2000h: Invalid value at Feedback_PER parameter.
  – 4000h: Invalid value at Feedback parameter.
  – 8000h: Error during digital position feedback.

  If one of these error occurs in manual mode, PID_3Step remains in manual mode.

  If an error occurs during the tuning or transition time measurement, PID_3Step is switched off.

- Substitute output value

  PID_3Step moves the actuator to the substitute output value and then switches off.

- Substitute output value while error is pending

  PID_3Step moves the actuator to the substitute output value. When the substitute output value is reached, PID_3Step reacts as it does with "Current value for while error is pending".

Enter the substitute output value in "%".

Only substitute output values 0% and 100% can be approached precisely in the case of actuators without analog position feedback. The actuator is moved in one direction at 110% of the motor transition time to ensure the high or low endstop is reached. There endstop signals take priority. A substitute output value not equal to 0% or 100% is approached via an internally simulated position feedback. This procedure does not, however, allow the exact approach of substitute output value.

All substitute output values can be approached precisely with actuators with analog position feedback.

Scaling position feedback

If you have configured the use of Feedback_PER in the basic settings, you will need to convert the value of the analog input into %. The current configuration will be displayed in the "Feedback" display.

Feedback_PER is scaled using a low and high value pair.

1. Enter the low pair of values in the "Low endstop" and "Low" input boxes.
2. Enter the high pair of values in the "High endstop" and "High" input boxes.

"Low endstop" must be less than "High endstop"; "Low" must be less than "High".

The valid values for "High endstop" and "Low endstop" depend upon:

- No Feedback, Feedback, Feedback_PER
- Output (analog), Output (digital)

Output	Feedback	Low endstop	High endstop
Output (digital)	No Feedback	Cannot be set (0.0%)	Cannot be set (100.0%)
Output (digital)	Feedback	-100.0% or 0.0%	0.0% or +100.0%
Output (digital)	Feedback_PER	-100.0% or 0.0%	0.0% or +100.0%
Output (analog)	No Feedback	Cannot be set (0.0%)	Cannot be set (100.0%)
Output (analog)	Feedback	-100.0% or 0.0%	0.0% or +100.0%
Output (analog)	Feedback_PER	-100.0% or 0.0%	0.0% or +100.0%

Limiting the output value

You can only exceed or undershoot the output value limits during the transition time measurement. The output value is limited to these values in all other modes.

Enter the absolute output value limits in the "Output value high limit" and "Output value low limit" input boxes. The output value limits must be within "Low endstop" and "High endstop".

If no Feedback is available and Output (digital) is set, you cannot limit the output value. The digital outputs are reset with Actuator_H = TRUE or Actuator_L = TRUE, or after a travel time amounting to 110% of the motor transition time.

5.3.1.4 Advanced settings V1

Actual value monitoring V1

Configure a warning high and low limit for the process value in the "Process value monitoring" configuration window. If one of the warning limits is exceeded or undershot during operation, a warning will be displayed at the PID_3Step instruction:

- At the InputWarning_H output parameter if the warning high limit has been exceeded
- At the InputWarning_L output parameter if the warning low limit has been undershot

The warning limits must be within the process value high and low limits.

The process value high and low limits will be used if you do not enter values.

Example

Process value high limit = 98° C; warning high limit = 90° C

Warning low limit = 10° C; process value low limit = 0° C

PID_3Step will respond as follows:

Process value	InputWarning_H	InputWarning_L	Operating mode
> 98° C	TRUE	FALSE	Inactive
≤ 98° C and > 90° C	TRUE	FALSE	Automatic mode
≤ 90° C and ≥ 10° C	FALSE	FALSE	Automatic mode
< 10° C and ≥ 0° C	FALSE	TRUE	Automatic mode
< 0° C	FALSE	TRUE	Inactive

PID parameters V1

The PID parameters are displayed in the "PID Parameters" configuration window. The PID parameters will be adapted to your controlled system during controller tuning. You do not need to enter the PID parameters manually.

Note

The currently active PID parameters are located in the Retain.CtrlParams structure.

Change the currently active PID parameters only in "Inactive" mode online to prevent malfunction of the PID controller.

If you want to change the PID parameters in "Automatic mode" or "Manual mode" online, change the PID parameters in the CtrlParamsBackUp structure and apply these changes to the Retain.CtrlParams structure as follows:

- PID_3Step V1: Apply the changes with Config.LoadBackUp = TRUE
- PID_3Step V2: Apply the changes with LoadBackUp = TRUE

Online changes to the PID parameters in "Automatic mode" can result in jumps at the output value.

The PID algorithm operates according to the following equation:

$$\Delta y = K_p \cdot s \cdot \left[(b \cdot w - x) + \frac{1}{T_I \cdot s}(w - x) + \frac{T_D \cdot s}{a \cdot T_D \cdot s + 1}(c \cdot w - x) \right]$$

Δy	Output value of the PID algorithm
K_p	Proportional gain
s	Laplace operator
b	Proportional action weighting
w	Setpoint
x	Process value
T_I	Integration time
a	Derivative delay coefficient (derivative delay T1 = a × T_D)
T_D	Derivative action time
c	Derivative action weighting

The diagram below illustrates the integration of the parameters into the PID algorithm:

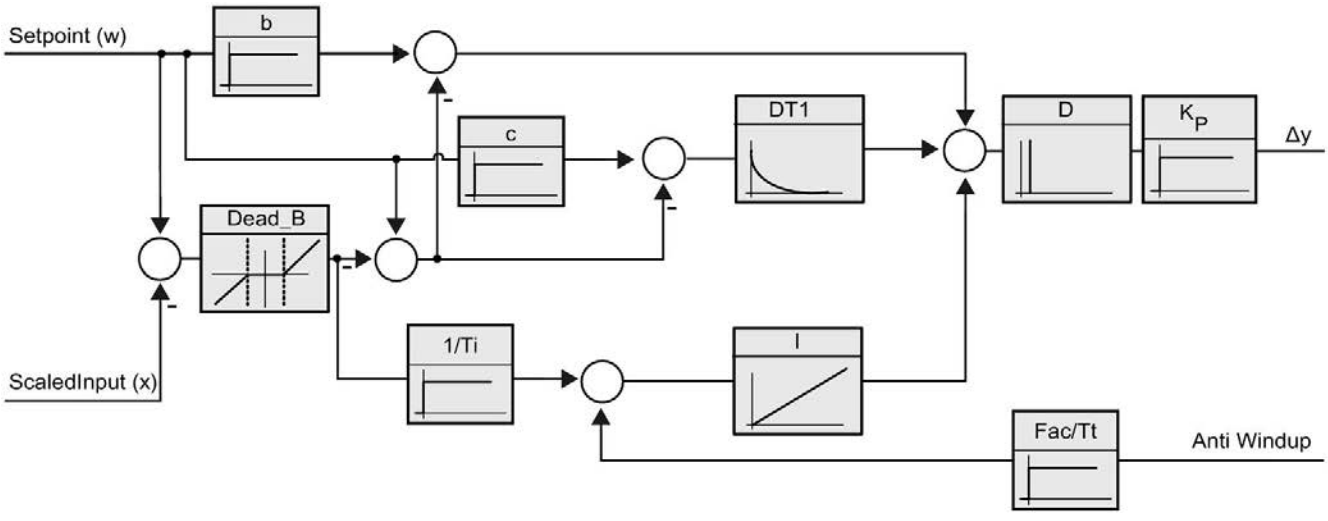

All PID parameters are retentive. If you enter the PID parameters manually, you must completely download PID_3Step.

Downloading technology objects to device (Page 44)

Proportional gain

The value specifies the proportional gain of the controller. PID_3Step does not work with a negative proportional gain. Control logic is inverted under Basic settings > Controller type.

Integration time

The integration time determines the time behavior of the integral action. The integral action is deactivated with integration time = 0.0. When the integral action time is changed from a different value to 0.0 online in "Automatic mode", the previous integral action is deleted and the output value jumps.

Derivative action time

The derivative action time determines the time behavior of the derivative action. Derivative action is deactivated with derivative action time = 0.0.

Derivative delay coefficient

The derivative delay coefficient delays the effect of the derivative action.

Derivative delay = derivative action time × derivative delay coefficient

- 0.0: Derivative action is effective for one cycle only and therefore almost not effective.
- 0.5: This value has proved useful in practice for controlled systems with **one** dominant time constant.
- > 1.0: The greater the coefficient, the longer the effect of the derivative action is delayed.

Proportional action weighting

The proportional action may weaken with changes to the setpoint.

Values from 0.0 to 1.0 are applicable.

- 1.0: Proportional action for setpoint change is fully effective
- 0.0: Proportional action for setpoint change is not effective

The proportional action is always fully effective when the process value is changed.

Derivative action weighting

The derivative action may weaken with changes to the setpoint.

Values from 0.0 to 1.0 are applicable.

- 1.0: Derivative action is fully effective upon setpoint change
- 0.0: Derivative action is not effective upon setpoint change

The derivative action is always fully effective when the process value is changed.

PID algorithm sampling time

The controlled system needs a certain amount of time to respond to changes in the output value. It is therefore not advisable to calculate the output value in every cycle. The sampling time of the PID algorithm represents the time between two calculations of the output value. It is calculated during tuning and rounded to a multiple of the PID_3Step sampling time. All other functions of PID_3Step are executed at every call.

Dead band width

The deadband suppresses the noise component in the steady controller state. The dead band width specifies the size of the dead band. The dead band is off if the dead band width is 0.0.

If values not equal to 1.0 are configured for the proportional action weighting or the derivative action weighting, setpoint changes even within the dead zone affect the output value. Process value changes within the dead zone do not affect the output value, regardless of the weighting.

5.3.2 Commissioning PID_3Step V1

5.3.2.1 Commissioning V1

You can monitor the setpoint, process value and output value over time in the "Tuning" working area. The following commissioning functions are supported in the curve plotter:

- Controller pretuning
- Controller fine tuning
- Monitoring the current closed-loop control in the trend view

All functions require an online connection to the CPU to have been established.

Basic handling

- Select the desired sampling time in the "Sampling time" drop-down list.

  All values in the tuning working area are updated in the selected update time.
- Click the "Start" icon in the measuring group if you want to use the commissioning functions.

  Value recording is started. The current values for the setpoint, process value and output value are entered in the trend view. Operation of the commissioning window is enabled.
- Click the "Stop" icon if you want to end the commissioning functions.

  The values recorded in the trend view can continue to be analyzed.
- Closing the commissioning window will terminate recording in the trend view and delete the recorded values.

5.3.2.2 Pretuning V1

The pretuning determines the process response to a pulse of the output value and searches for the point of inflection. The tuned PID parameters are calculated as a function of the maximum slope and dead time of the controlled system.

The more stable the process value is, the easier it is to calculate the PID parameters and the more precise the result will be. Noise on the process value can be tolerated as long as the rate of rise of the process value is significantly higher compared to the noise. The PID parameters are backed up before being recalculated.

The setpoint is frozen during pretuning.

Requirement

- The PID_3Step instruction is called in a cyclic interrupt OB.
- ManualEnable = FALSE
- PID_3Step is in "inactive" or "manual" mode.
- The setpoint and the process value lie within the configured limits (see "Process value settings" configuration).

Procedure

To perform pretuning, follow these steps:

1. Double-click the "PID_3Step > Commissioning" entry in the project tree.
2. Select the entry "Pretuning" in the "Tuning mode" drop-down list in the working area "Tuning".
3. Click the "Start" icon.
   - An online connection will be established.
   - Value recording is started.
   - Pretuning is started.
   - The "Status" field displays the current steps and any errors that may have occurred. The progress bar indicates the progress of the current step.

Note

Click the "Stop" icon when the progress bar has reached 100% and it is to be assumed the controller tuning function is blocked. Check the configuration of the technology object and, if necessary, restart controller tuning.

Result

If pretuning was performed without an error message, the PID parameters have been tuned. PID_3Step switches to automatic mode and uses the tuned parameters. The tuned PID parameters will be retained during power OFF and a restart of the CPU.

If pretuning is not possible, PID_3Step changes to "Inactive" mode.

5.3.2.3 Fine tuning V1

Fine tuning generates a constant, limited oscillation of the process value. The PID parameters are optimized for the operating point from the amplitude and frequency of this oscillation. All PID parameters are recalculated on the basis of the findings. PID parameters from fine tuning usually have better master control and disturbance behavior than PID parameters from pretuning.

PID_3Step automatically attempts to generate an oscillation greater than the noise of the process value. Fine tuning is only minimally influenced by the stability of the process value. The PID parameters are backed up before being recalculated.

The setpoint is frozen during fine tuning.

Requirement

- The PID_3Step instruction is called in a cyclic interrupt OB.
- ManualEnable = FALSE
- The motor transition time has been configured or measured.
- The setpoint and the process value lie within the configured limits (see "Process value settings" configuration).
- The control loop has stabilized at the operating point. The operating point is reached when the process value corresponds to the setpoint.
- No disturbances are expected.
- PID_3Step is in inactive mode, automatic mode or manual mode.

Process depends on initial situation

Fine tuning proceeds as follows when started in:

- Automatic mode

  Start fine tuning in automatic mode if you wish to improve the existing PID parameters using controller tuning.

  PID_3Step will regulate using the existing PID parameters until the control loop has stabilized and the requirements for fine tuning have been met. Only then will fine tuning start.

- Inactive or manual mode

  Pretuning is always started first. The PID parameters established will be used for adjustment until the control loop has stabilized and the requirements for fine tuning have been met. Only then will fine tuning start.

Procedure

Proceed as follows to carry out "fine tuning":

1. Select the entry "Fine tuning" in the "Tuning mode" drop-down list.
2. Click the "Start" icon.
   - An online connection will be established.
   - Value recording is started.
   - The process of fine tuning is started.
   - The "Status" field displays the current steps and any errors that may have occurred. The progress bar indicates the progress of the current step.

Note

Click the "Stop" icon in the "Tuning mode" group when the progress bar has reached 100% and it is to be assumed the controller tuning function is blocked. Check the configuration of the technology object and, if necessary, restart controller tuning.

Result

The PID parameters will have been optimized if fine tuning has been executed without errors. PID_3Step changes to automatic mode and uses the optimized parameters. The optimized PID parameters will be retained during power OFF and a restart of the CPU.

If errors occurred during fine tuning, PID_3Step will change to "inactive" mode.

5.3.2.4 Commissioning with manual PID parameters V1

Procedure

Proceed as follows to commission PID_3Step with manual PID parameters:

1. Double-click on "PID_3Step > Configuration" in the project tree.
2. Click on "Advanced settings > PID Parameters" in the configuration window.
3. Select the check box "Enable direct input".
4. Enter the PID parameters.
5. Double-click on "PID_3Step > Commissioning" in the project tree.
6. Establish an online connection to the CPU.
7. Load the PID parameters to the CPU.
8. Click on the "Activate controller" icon.

Result

PID_3Step changes to automatic mode and controls using the current PID parameters.

5.3.2.5 Measuring the motor transition time V1

Introduction

PID_3Step requires the motor transition time to be as accurate as possible for good controller results. The data in the actuator documentation contains average values for this type of actuator. The value for the specific actuator used may differ.

You can measure the motor transition time during commissioning if you are using actuators with position feedback or endstop signals. The output value limits are not taken into consideration during the motor transition time measurement. The actuator can travel to the high or the low endstop.

The motor transition time cannot be measured if neither position feedback nor endstop signals are available.

Actuators with analog position feedback

Proceed as follows to measure motor transition time with position feedback:

Requirement

- Feedback or Feedback_PER has been selected in the basic settings and the signal has been connected.
- An online connection to the CPU has been established.

1. Select the "Use position feedback" check box.
2. Enter the position to which the actuator is to be moved in the "Target position" input field.

   The current position feedback (starting position) will be displayed. The difference between "Target position" and "Position feedback" must be at least 50% of the valid output value range.
3. Click the "Start transition time measurement" icon.

Result

The actuator is moved from the starting position to the target position. Time measurement starts immediately and ends when the actuator reaches the target position. The motor transition time is calculated according to the following equation:

Motor transition time = (output value high limit – output value low limit) × Measuring time / AMOUNT (target position – starting position).

The progress and status of transition time measurement are displayed. The transition time measured is saved in the instance data block on the CPU and displayed in the "Measured transition time" field. PID_3Step will change to "Inactive" mode once transition time measurement is complete.

Note

Click on the icon "Upload measured transition time" to load the motor transition time measured to the project.

Actuators with endstop signals

Proceed as follows to measure the transition time of actuators with endstop signals:

Requirement

- The "Endstop signals" check box in the basic settings has been selected and Actuator_H and Actuator_L are connected.
- An online connection to the CPU has been established.

Proceed as follows to measure motor transition time with endstop signals:

1. Select the "Use actuator endstop signals" check box.
2. Select the direction in which the actuator is to be moved.
   - Open - Close - Open

     The actuator is moved first to the high endstop, then to the low endstop and then back to the high endstop.
   - Close - Open - Close

     The actuator is moved first to the low endstop, then to the high endstop and then back to the low endstop.
3. Click the "Start transition time measurement" icon.

Result

The actuator is moved in the selected direction. Time measurement will start once the actuator has reached the first endstop and will end when the actuator reaches this endstop for the second time. The motor transition time is equal to the time measured divided by two.

The progress and status of transition time measurement are displayed. The transition time measured is saved in the instance data block on the CPU and displayed in the "Measured transition time" field. PID_3Step will change to "Inactive" mode once transition time measurement is complete.

Cancelling transition time measurement

PID_3Step will change to "Inactive" mode immediately if you cancel transition time measurement. The actuator will stop being moved. You can reactive PID-3Step in the curve plotter.

5.3.3 Simulating PID_3Step V1 with PLCSIM

Note

Simulation with PLCSIM

For the simulation with PLCSIM, the time behavior of the simulated PLC is not exactly identical to that of a "real" PLC. The actual cycle clock of a cyclic interrupt OB can have larger fluctuations with a simulated PLC than with "real" PLCs.

In the standard configuration, PID_3Step determines the time between calls automatically and monitors them for fluctuations.

For a simulation of PID_3Step with PLCSIM, for example, a sampling time error (ErrorBits = DW#16#00000800) can therefore be detected.

This results in ongoing tuning being aborted.

The response in automatic mode depends on the value of the ActivateRecoverMode tag.

To prevent this from happening, you should configure PID_3Step for simulation with PLCSIM as follows:

- CycleTime.EnEstimation = FALSE
- CycleTime.EnMonitoring = FALSE
- CycleTime.Value: Assign the cycle clock of the calling cyclic interrupt OB in seconds to this tag.

Using PID_Temp 6

6.1 Technology object PID_Temp

The PID_Temp technology object provides a continuous PID controller with integrated tuning. PID_Temp is especially designed for temperature control and is suited for heating or heating/cooling applications. Two outputs are available for this purpose, one each for heating and cooling. PID_Temp can also be used for other control tasks. PID_Temp is cascadable and can be used in manual or automatic mode.

PID_Temp continuously acquires the measured process value within a control loop and compares it with the set setpoint. From the resulting control deviations, the instruction PID_Temp calculates the output value for heating and/or cooling which is used to adjust the process value to the setpoint. The output values for the PID controller consist of three actions:

- Proportional action

  The proportional action of the output value increases in proportion to the control deviation.

- Integral action

  The integral action of the output value increases until the control deviation has been balanced.

- Derivative action

  The derivative action increases with the rate of change of control deviation. The process value is corrected to the setpoint as quickly as possible. The derivative action will be reduced again if the rate of change of control deviation drops.

The instruction PID_Temp calculates the proportional, integral and derivative parameters for your controlled system during "pretuning". "Fine tuning" can be used to tune the parameters further. You do not need to manually determine the parameters.

Either a fixed cooling factor or two PID parameter sets can be used for heating-and-cooling applications.

Additional information

- Overview of software controller (Page 39)
- Add technology objects (Page 41)
- Configure technology objects (Page 42)
- Configuring PID_Temp (Page 162)

6.2 Configuring PID_Temp

6.2.1 Basic settings

6.2.1.1 Introduction

Configure the following properties of the "PID_Temp" technology object under "Basic settings" in the Inspector window or in the configuration window:

- Physical quantity
- Start-up behavior after reset
- Source and input of the setpoint (only in the Inspector window)
- Selection of the process value
- Source and input of the process value (only in the Inspector window)
- Selection of the heating output value
- Source and input of the heating output value (only in the Inspector window)
- Activation and selection of the cooling output value
- Source and input of the cooling output value (only in the Inspector window)
- Activation of PID_Temp as master or slave of a cascade
- Number of slaves
- Selection of the master (only in the Inspector window)

Setpoint, process value, heating output value and cooling output value

You can select the source and enter values or tags for the setpoint, process value, heating output value and cooling output value in the Inspector window of the programming editor.

Select the source for each value:

- Instance DB:

  The value saved in the instance DB is used. The value must be updated by the user program in the instance DB. There should be no value at the instruction. Can be changed using HMI.

- Instruction:

  The value connected to the instruction is used. The value is written to the instance DB each time the instruction is called. Cannot be changed using HMI.

6.2.1.2 Controller type

Physical quantity

Select the unit of measurement and physical quantity for the setpoint and the process value in the "Controller type" group. The setpoint and the process value are displayed in this unit.

Startup characteristics

1. To switch to "Inactive"mode after CPU restart, clear the "Activate Mode after CPU restart"check box.

   To switch to the operating mode saved in the Mode parameter after CPU restart, select the "Activate Mode after CPU restart" check box.

2. In the "Set Mode to" drop-down list, select the mode that is to be enabled after a complete download to the device.

   After a complete "Download to device", PID_Temp starts in the selected operating mode. With each additional restart, PID_Temp starts in the mode that was last saved in Mode.

   When selecting pretuning or fine tuning, you also have to set or reset the Heat.EnableTuning and Cool.EnableTuning tags in order to choose between tuning for heating and tuning for cooling.

Example:

You have selected the "Activate Mode after CPU restart" check box and the "Pretuning" entry in the "Set Mode to" list. After a complete "Download to device", PID_Temp starts in the "Pretuning" mode. If pretuning is still active, PID_Temp starts in "Pretuning" mode again after restart of the CPU (heating/cooling depends on the tags Heat.EnableTuning and Cool.EnableCooling). If pretuning was successfully completed and automatic mode is active, PID_Temp starts in "Automatic mode" after restart of the CPU.

6.2.1.3 Setpoint

Procedure

Proceed as follows to define a fixed setpoint:

1. Select "Instance DB".
2. Enter a setpoint, e.g. 80° C.
3. Delete any entry in the instruction.

Proceed as follows to define a variable setpoint:

1. Select "Instruction".
2. Enter the name of the REAL tag in which the setpoint is saved.

   Program-controlled assignment of various values to the REAL tag is possible, for example for the time-controlled change of the setpoint.

6.2.1.4 Process value

PID_Temp will scale the value of the analog input to the physical quantity if you use the analog input value directly.

You will need to write a program for processing if you wish first to process the analog input value. The process value is, for example, not directly proportional to the value at the analog input. The processed process value must be in floating point format.

Procedure

Proceed as follows to use the analog input value without processing:

1. Select the entry "Input_PER" in the drop-down list "Input".
2. Select "Instruction" as source.
3. Enter the address of the analog input.

Proceed as follows to use the processed process value in floating point format:

1. Select the entry "Input" in the drop-down list "Input".
2. Select "Instruction" as source.
3. Enter the name of the variable in which the processed process value is saved.

6.2.1.5 Heating and cooling output value

The PID_Temp instruction provides a PID controller with integrated tuning for temperature processes. PID_Temp is suitable for heating or heating-and-cooling applications.

PID_Temp provides the following output values. Your actuator will determine which output value you use.

- OutputHeat

  Heating output value (floating-point format): The output value for heating needs to be processed by the user program, for example, because of non-linear actuator response.
- OutputHeat_PER

  Analog heating output value: The actuator for heating is triggered via an analog output and controlled with a continuous signal, e.g. 0...10 V, 4...20 mA.
- OutputHeat_PWM

  Pulse-width modulated heating output value: The actuator for heating is controlled via a digital output. Pulse width modulation creates variable ON and OFF times.
- OutputCool

  Cooling output value (floating-point format): The output value for cooling needs to be processed by the user program, for example because of non-linear actuator response.
- OutputCool_PER

  Analog cooling output value: The actuator for cooling is triggered via an analog output and controlled with a continuous signal, e.g. 0...10 V, 4...20 mA.
- OutputCool_PWM

  Pulse-width modulated cooling output value: The actuator for cooling is controlled via a digital output. Pulse width modulation creates variable ON and OFF times.

The cooling output is only available if it was activated via the "Activate cooling" check box.

- If the check box is cleared, the output value of the PID algorithm (PidOutputSum) is scaled and output at the outputs for heating.
- If the check box is selected, positive output values of the PID algorithm (PidOutputSum) are scaled and output at the outputs for heating. Negative output values of the PID algorithm are scaled and output at the outputs for cooling. You can choose between two methods for output value calculation at the output settings.

Note

Note:

- The OutputHeat_PWM, OutputHeat_PER, OutputCool_PWM, OutputCool_PER outputs are only calculated if you select these correspondingly from the drop-down list.
- The OutputHeat output is always calculated.
- The OutputCool output is calculated if the check box for cooling is selected.
- The "Activate cooling" check box is only available if the controller is not configured as a master in a cascade.

Procedure

Proceed as follows to use the analog output value:

1. Select the entry "OutputHeat_PER" or "OutputCool_PER" in the drop-down list "OutputHeat" or "OutputCool".
2. Select "Instruction".
3. Enter the address of the analog output.

Proceed as follows to use the pulse-width modulated output value:

1. Select the entry "OutputHeat_PWM" or "OutputCool_PWM" in the drop-down list "OutputHeat" or "OutputCool".
2. Select "Instruction".
3. Enter the address of the digital output.

Proceed as follows to process the output value using the user program:

1. Select the entry "OutputHeat" or "OutputCool" in the drop-down list "OutputHeat" or "OutpuCool".
2. Select "Instruction".
3. Enter the name of the variable you are using to process the output value.
4. Transfer the processed output value to the actuator by means of an analog or digital CPU output.

6.2.1.6 Cascade

If a PID_Temp instance receives its setpoint from a higher-level master controller and outputs its output value in turn to a subordinate slave controller, this PID_Temp instance is both a master controller and a slave controller simultaneously. Both configurations listed below then have to be carried out for such a PID_Temp instance. This is the case, for example, for the middle PID_Temp instance in a cascade control system with three concatenated measured variables and three PID_Temp instances.

Configuring a controller as master in a cascade

A master controller defines the setpoint of a slave controller with its output.

In order to use PID_Temp as master in a cascade, you have to deactivate the cooling in the basic settings. In order to configure this PID_Temp instance as a master controller in a cascade, activate the "Controller is master" check box. The selection of the output value for heating is set automatically to OutputHeat.

OutputHeat_PWM and OutputHeat_PER cannot be used at a master in a cascade.

Subsequently specify the number of directly subordinate slave controllers that receive their setpoint from this master controller.

If no own scaling function is used when assigning the OutputHeat parameter of the master to the Setpoint parameter of the slave, it may be necessary to adapt the output value limits and the output scaling of the master to the setpoint/process value range of the slave. This can be done in the output settings of the master in the "OutputHeat / OutputCool" section.

Configuring a controller as a slave in a cascade

A slave controller receives its setpoint (Setpoint parameter) from the output of its master controller (OutputHeat parameter).

In order to configure this PID_Temp instance as a slave controller in a cascade, activate the "Controller is slave" check box in the basic settings.

Subsequently select the PID_Temp instance that is to be used as the master controller for this slave controller in the Inspector window of the programming editor. The Master and Setpoint parameters of the slave controller are interconnected with the selected master controller through this selection (the existing interconnections at these parameters are overwritten). This interconnection allows the exchange of information and the setpoint specification between master and slave. If required, the interconnection can be changed subsequently at the Setpoint parameter of the slave controller in order, for example, to insert an additional filter. The interconnection at the parameter Master may not be changed subsequently.

The "Controller is master" check box has to be selected and the number of slaves has to be configured correctly at the selected master controller. The master controller has to be called before the slave controller in the same cyclic interrupt OB.

Additional information

Additional information about program creation, configuration and commissioning when PID_Temp is used in cascade control systems is available under Cascade control with PID_Temp (Page 195).

6.2.2 Process value settings

6.2.2.1 Process value limits

You must specify an appropriate absolute high limit and low limit for the process value as limit values for your controlled system. As soon as the process value violates these limits, an error occurs (ErrorBits = 0001h). Tuning is canceled when the process value limits are violated. You can specify how PID_Temp responds to errors in automatic mode in the output settings.

6.2.2.2 Process value scaling

If you have configured the use of Input_PER in the basic settings, you will need to convert the value of the analog input into the physical quantity of the process value. The current configuration is displayed in the Input_PER display.

Input_PER is scaled using a low and high value pair if the process value is directly proportional to the value of the analog input.

Procedure

To scale the process value, follow these steps:

1. Enter the low pair of values in the "Scaled low process value" and "Low" input fields.
2. Enter the high pair of values in the "Scaled high process value" and "High" input fields.

Default settings for the value pairs are saved in the hardware configuration. Proceed as follows to use the value pairs from the hardware configuration:

1. Select the instruction PID_Temp in the programming editor.
2. Interconnect Input_PER with an analog input in the basic settings.
3. Click on the "Automatic setting" button in the process value settings.

The existing values are overwritten with the values from the hardware configuration.

6.2.3 Output settings

6.2.3.1 Basic settings of output

Method for heating and cooling

If cooling is activated in the basic settings, two methods are available for calculating the PID output value:

- PID parameter switching (Config.AdvancedCooling = TRUE):

  The output value calculation for cooling takes place by means of a separate PID parameter set. Based on the calculated output value and the control deviation, the PID algorithm decides whether the PID parameter for heating or cooling is used. This method is suitable if the heating and cooling actuators have different time responses and different gains.

  Pretuning and fine tuning for cooling are only available if this method is selected.

- Cooling factor (Config.AdvancedCooling = FALSE):

  Output value calculation for cooling is effected with the PID parameters for heating under consideration of the configurable cooling factor Config.CoolFactor. This method is suitable if the heating and cooling actuators have a similar time response but different gains. If this method is selected, pretuning and fine tuning for cooling as well as the PID parameter set for cooling are not available. You can only execute the tuning for heating.

Cooling factor

If the cooling factor is selected as the method for heating/cooling, this factor is used in the calculation of the output value for cooling. This allows different gains of heating and cooling actuators to be taken into account.

The cooling factor is not set automatically or adjusted during tuning. You have to configure the correct cooling factor manually by using the ratio "Heating actuator gain/Cooling actuator gain".

Example: Cooling factor = 2.0 means that the heating actuator gain is twice as high as the cooling actuator gain.

The cooling factor is only effective and can only be changed if "Cooling factor" is selected as the method for heating/cooling.

Reaction to error

NOTICE
Your system may be damaged. If you output "Current value while error is pending " or "Substitute output value while error is pending" in the event of an error, PID_Temp remains in automatic mode or in manual mode. This may cause a violation of the process value limits and damage your system. It is essential to configure how your controlled system reacts in the event of an error to protect your system from damage.

PID_Temp is preset so that the controller stays active in most cases in the event of an error.

If errors occur frequently in controller mode, this default reaction has a negative effect on the control response. In this case, check the ErrorBits parameter and eliminate the cause of the error.

PID_Temp generates a programmable output value in response to an error:

- Zero (inactive)

  At all errors, PID_Temp switches to the "Inactive" operating mode and outputs the following:

  – 0.0 as PID output value (PidOutputSum)

  – 0.0 as output value for heating (OutputHeat) and output value for cooling (OutputCool)

  – 0 as analog output value for heating (OutputHeat_PER) and analog output value for cooling (OutputCool_PER)

  – FALSE as PWM output value for heating (OutputHeat_PWM) and PWM output value for cooling (OutputCool_PWM)

  This is independent of the configured output value limits and the scaling. The controller is only reactivated by a falling edge at Reset or a rising edge at ModeActivate.

- Current value while error is pending

  The error response depends on the error occurring and the operating mode.

  If one or more of the following errors occur in automatic mode, PID_Temp stays in automatic mode:

  – 0000001h: The Input parameter is outside the process value limits.

  – 0000800h: Sampling time error

  – 0040000h: Invalid value at Disturbance parameter.

  – 8000000h: Error during the calculation of the PID parameters.

If one or more of the following errors occur in automatic mode, PID_Temp switches to "Substitute output value with error monitoring" mode and outputs the last valid PID output value (PidOutputSum):

– 0000002h: Invalid value at Input_PER parameter.

– 0000200h: Invalid value at Input parameter.

– 0000400h: Calculation of output value failed.

– 0001000h: Invalid value at Setpoint or SubstituteSetpoint parameter.

The values at the outputs for heating and cooling resulting from the PID output value are produced by the configured output scaling.

As soon as the errors are no longer pending, PID_Temp switches back to automatic mode.

If an error occurs during manual mode, PID_Temp remains in manual mode and continues to use the manual value as the PID output value.

If the manual value is invalid, the configured substitute output value is used.

If the manual value and substitute output value are invalid, the low limit of the PID output value for heating (Config.Output.Heat.PidLowerLimit) is used.

If the following error occurs during pretuning or fine tuning, PID_Temp remains in active mode:

– 0000020h: Pretuning is not permitted during fine tuning.

When any other error occurs, PID_Temp cancels the tuning and switches to the mode from which tuning was started.

- Substitute output value while error is pending

  PID_Temp behaves as described at "Current value while error is pending", but outputs the configured substitute output value (SubstituteOutput) as a PID output value (PidOutputSum) in "Substitute output value with error monitoring" operating mode.

  The values at the outputs for heating and cooling resulting from the PID output value are produced by the configured output scaling.

  In the case of controllers with activated cooling output (Config.ActivateCooling = TRUE), enter:

  – A positive substitute output value to output the value at the outputs for heating.

  – A negative substitute output value to output the value at the outputs for cooling.

  If the following error occurs, PID_Temp stays in "Substitute output value with error monitoring" mode and outputs the low limit of the PID output value for heating (Config.Output.Heat.PidLowerLimit):

  – 0020000h: Invalid value at SubstituteOutput tag.

6.2.3.2 Output value limits and scaling

Depending on the operating mode, the PID output value (PidOutputSum) is calculated automatically by the PID algorithm or by the manual value (ManualValue) or the configured substitute output value (SubstituteOutput).

The PID output value is limited depending on the configuration:

- If the cooling is deactivated in the basic settings (Config.ActivateCooling = FALSE), the value is limited to the high limit of the PID output value (heating) (Config.Output.Heat.PidUpperLimit) and the low limit of the PID output value (heating) (Config.Output.Heat.PidLowerLimit).

  You can configure both limits at the horizontal axis of the scaling characteristic line in the "OutputHeat / OutputCool" section. These are displayed in the "OutputHeat_PWM / OutputCool_PWM" and "OutputHeat_PER / OutputCool_PER" sections, but cannot be changed.

- If the cooling is activated in the basic settings (Config.ActivateCooling = TRUE), the value is limited to the high limit of the PID output value (Config.Output.Heat.PidUpperLimit) and the low limit of the PID output value (cooling) (Config.Output.Cool.PidLowerLimit).

  You can configure both limits at the horizontal axis of the scaling characteristic line in the "OutputHeat / OutputCool" section. These are displayed in the "OutputHeat_PWM / OutputCool_PWM" and "OutputHeat_PER / OutputCool_PER" sections, but cannot be changed.

  The low limit of the PID output value (heating) (Config.Output.Heat.PidLowerLimit) and the high limit of the PID output value (cooling) (Config.Output.Cool.PidUpperLimit) cannot be changed and have to be assigned the value 0.0.

The PID output value is scaled and output at the outputs for heating and cooling. Scaling can be specified separately for each output and is specified across 2 value pairs each, consisting of a limit value of the PID output value and a scaling value:

Output	Value pair	Parameter
OutputHeat	Value pair 1	PID output value high limit (heating) Config.Output.Heat.PidUpperLimit, Scaled high output value (heating) Con- fig.Output.Heat.UpperScaling
	Value pair 2	PID output value low limit (heating) Config.Output.Heat.PidLowerLimit, Scaled low output value (heating) Con- fig.Output.Heat.LowerScaling
OutputHeat_PWM	Value pair 1	PID output value high limit (heating) Config.Output.Heat.PidUpperLimit, Scaled high PWM output value (heating) Config.Output.Heat.PwmUpperScaling
	Value pair 2	PID output value low limit (heating) Config.Output.Heat.PidLowerLimit, Scaled low PWM output value (heating) Config.Output.Heat.PwmLowerScaling

Output	Value pair	Parameter
OutputHeat_PER	Value pair 1	PID output value high limit (heating) Config.Output.Heat.PidUpperLimit, Scaled high analog output value (heating) Config.Output.Heat.PerUpperScaling
	Value pair 2	PID output value low limit (heating) Config.Output.Heat.PidLowerLimit, Scaled low analog output value (heating) Config.Output.Heat.PerLowerScaling
OutputCool	Value pair 1	PID output value low limit (cooling) Config.Output.Cool.PidLowerLimit, Scaled high output value (cooling) Config.Output.Cool.UpperScaling
	Value pair 2	PID output value high limit (cooling) Config.Output.Cool.PidUpperLimit, Scaled low output value (cooling) Config.Output.Cool.LowerScaling
OutputCool_PWM	Value pair 1	PID output value low limit (cooling) Config.Output.Cool.PidLowerLimit, Scaled high PWM output value (cooling) Config.Output.Cool.PwmUpperScaling
	Value pair 2	PID output value high limit (cooling) Config.Output.Cool.PidUpperLimit, Scaled low PWM output value (cooling) Config.Output.Cool.PwmLowerScaling
OutputCool_PER	Value pair 1	PID output value low limit (cooling) Config.Output.Cool.PidLowerLimit, Scaled high analog output value (cooling) Config.Output.Cool.PerUpperScaling
	Value pair 2	PID output value high limit (cooling) Config.Output.Cool.PidUpperLimit, Scaled low analog output value (cooling) Config.Output.Cool.PerLowerScaling

The low limit of PID output value (heating) (Config.Output.Heat.PidLowerLimit) has to have the value 0.0, if the cooling is activated (Config.ActivateCooling = TRUE).

The high limit of PID output value (cooling) (Config.Output.Cool.PidUpperLimit) must always have the value 0.0.

Example:

Output scaling when the OutputHeat output is used (cooling deactivated. The low limit of PID output value (heating) (Config.Output.Heat.PidLowerLimit) may be unequal to 0.0):

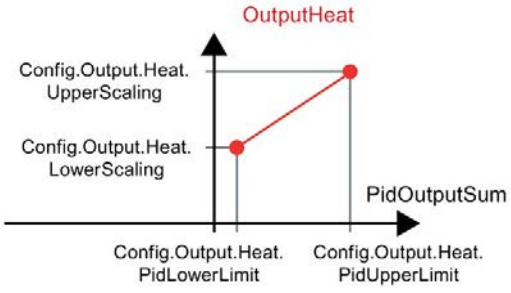

Example:

Output scaling when the OutputHeat_PWM and OutputCool_PER outputs are used (cooling activated. The low limit of PID output value (heating) (Config.Output.Heat.PidLowerLimit) must be 0.0):

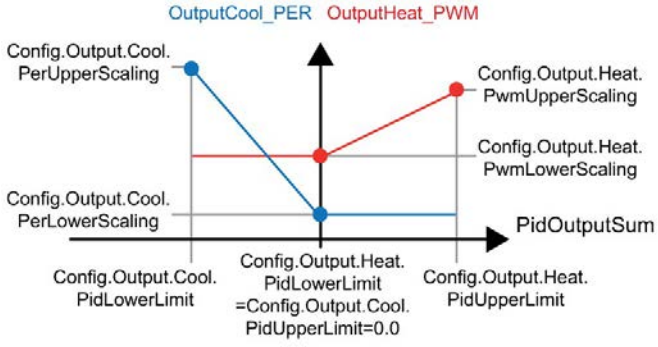

With the exception of the "Inactive" operating mode, the value at an output always lies between its scaled high output value and the scaled low output value, for example for OutputHeat always between the scaled high output value (heating) (Config.Output.Heat.UpperScaling) and the scaled low output value (heating) (Config.Output.Heat.LowerScaling).

If you want to limit the value at the associated output, you therefore have to adapt these scaling values as well.

You can configure the scaling values of an output at the vertical axes of the scaling characteristic line. Each output has two separate scaling values. These can only be changed for OutputHeat_PWM, OutputCool_PWM, OutputHeat_PER and OutputCool_PER if the corresponding output is selected in the basic settings. The cooling has to be activated additionally in the basic settings at all the outputs for cooling.

The trend view in the commissioning dialog box only records the values of OutputHeat and OutputCool, irrespective of the selected output in the basic settings. Therefore, if necessary, adapt the scaling values for OutputHeat or OutputCool if you use OutputHeat_PWM or OutputHeat_PER or OutputCool_PWM or OutputCool_PER and want to use the trend view in the commissioning dialog.

6.2.4 Advanced settings

6.2.4.1 Process value monitoring

Configure a warning high and low limit for the process value in the "Process value monitoring" configuration window. If one of the warning limits is exceeded or undershot during operation, a warning is displayed at the PID_Temp instruction:

- At the InputWarning_H output parameter if the warning high limit has been exceeded
- At the InputWarning_L output parameter if the warning low limit has been undershot

The warning limits must be within the process value high and low limits.

The process value high and low limits are used if you do not enter values.

Example

Process value high limit = 98° C; warning high limit = 90° C

Warning low limit = 10° C; process value low limit = 0° C

PID_Temp will respond as follows:

Process value	InputWarning_H	InputWarning_L	ErrorBits
> 98 °C	TRUE	FALSE	0001h
≤ 98° C and > 90° C	TRUE	FALSE	0000h
≤ 90° C and ≥ 10° C	FALSE	FALSE	0000h
< 10° C and ≥ 0° C	FALSE	TRUE	0000h
< 0° C	FALSE	TRUE	0001h

You can configure the response of PID_Temp when the process value high limit or low limit is violated in the output settings.

6.2.4.2 PWM limits

The PID output value PidOutputSum is scaled and transformed via a pulse width modulation into a pulse train that is output at the output parameter OutputHeat_PWM or OutputCool_PWM. The "Sampling time of PID algorithm" represents the time between two calculations of the PID output value. The sampling time is used as time period of the pulse width modulation.

During heating, the PID output value is always calculated in the "Sampling time of PID algorithm for heating".

Calculation of the PID output value during cooling depends on the type of cooling selected in "Basic settings Output":

- If the cooling factor is used, the "Sampling time of PID algorithm for heating" applies.
- If the PID parameter switching is used, the "Sampling time of PID algorithm for cooling" applies.

OutputHeat_PWM and OutputCool_PWM are output in the sampling time PID_Temp (corresponds to the cycle time of the calling OB).

The PID algorithm sampling time for heating or cooling is determined during pretuning or fine tuning. If you set the PID parameters manually, you will also need to configure the PID algorithm sampling time for heating or cooling. The PID_Temp sampling time is equivalent to the cycle time of the calling OB.

The pulse duration is proportional to the PID output value and is always an integer multiple of the PID_Temp sampling time.

Example for OutputHeat_PWM

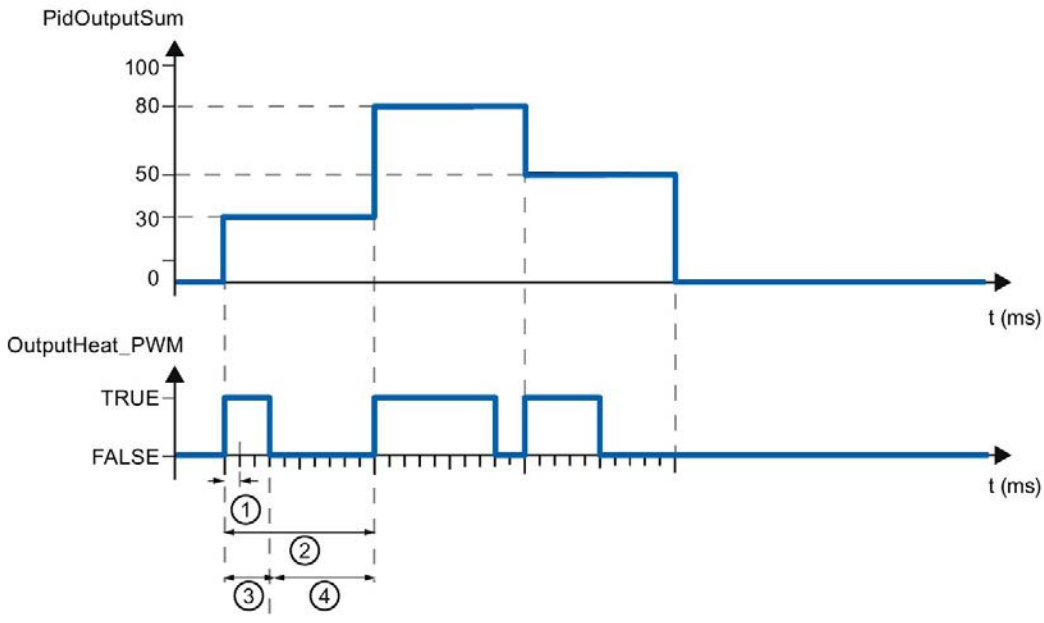

① PID_Temp sampling time
② PID algorithm sampling time for heating
③ Pulse duration
④ Break time

The "Minimum ON time" and the "Minimum OFF time" can be set separately for heating and cooling, rounded to an integer multiple of the PID_Temp sampling time.

A pulse or a break is never shorter than the minimum ON or OFF time. The inaccuracies this causes are added up and compensated in the next cycle.

Example for OutputHeat_PWM

PID_Temp sampling time = 100 ms

PID algorithm sampling time = 1000 ms

Minimum ON time = 200 ms

The PID output value PidOutputSum amounts to 15% constantly. The smallest pulse that PID_Temp can output corresponds to 20%. In the first cycle, no pulse is output. In the second cycle, the pulse not output in the first cycle is added to the pulse of the second cycle.

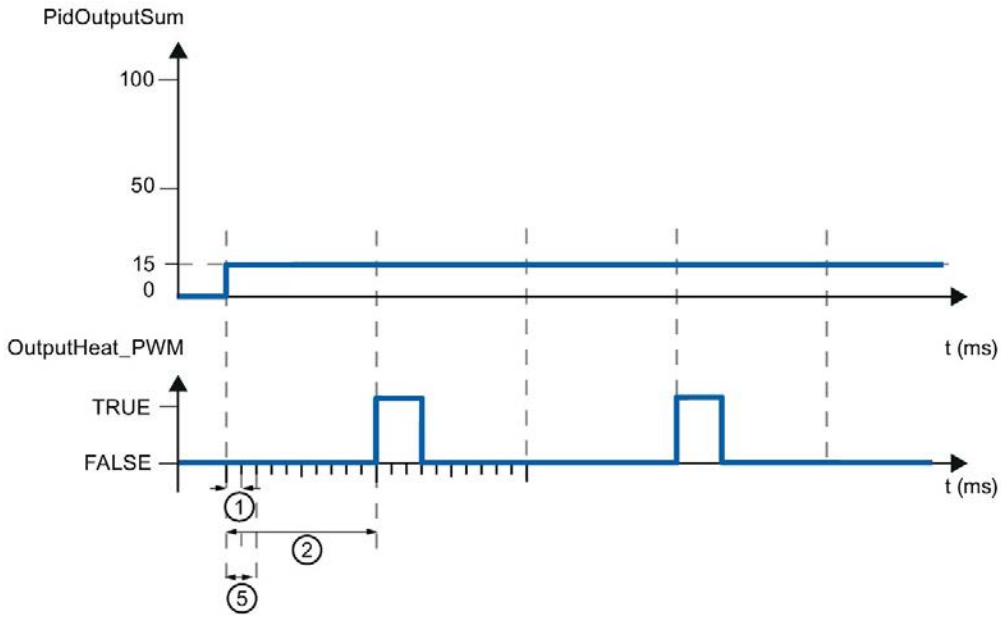

① PID_Temp sampling time

② PID algorithm sampling time for heating

⑤ Minimum ON time

In order to minimize operation frequency and conserve the actuator, extend the minimum ON and OFF times.

If you have selected OutputHeat/OutputCool or OutputHeat_PER/OutputCool_PER as the output in the basic settings, the minimum ON time and the minimum OFF time are not evaluated and cannot be changed.

If the "Sampling time of PID algorithm" (Retain.CtrlParams.Heat.Cycle or Retain.CtrlParams.Cool.Cycle) and thus the period duration of the pulse width modulation is very high when OutputHeat_PWM or OutputCool_PWM is used, you can specify a deviating shorter period duration at the parameters Config.Output.Heat.PwmPeriode or Config.Output.Cool.PwmPeriode in order to improve smoothness of the process value (see also AUTOHOTSPOT).

Note

The minimum ON and OFF times only affect the output parameters OutputHeat_PWM or OutputCool_PWM and are not used for any pulse generators integrated in the CPU.

6.2.4.3 PID parameters

The PID parameters are displayed in the "PID Parameters" configuration window.

If cooling is activated in the basic settings and PID parameter switching is selected as the method for heating/cooling in the output settings, two parameter sets are available: One for heating and one for cooling.

In this case, the PID algorithm decides on the basis of the calculated output value and the control deviation whether the PID parameters for heating or cooling are used.

If cooling is deactivated or the cooling factor is selected as the method for heating/cooling, the parameter set for heating is always used.

During tuning, the PID parameters are adapted to the controlled system with the exception of the dead zone width that has to be configured manually.

Note

The currently active PID parameters are located in the Retain.CtrlParams structure.

Change the currently active PID parameters only in "Inactive" mode online to prevent malfunction of the PID controller.

If you want to change the PID parameters in "Automatic mode" or "Manual mode" online, change the PID parameters in the CtrlParamsBackUp structure and apply these changes with LoadBackUp = TRUE to the Retain.CtrlParams structure.

Online changes to the PID parameters in "Automatic mode" can result in jumps at the output value.

PID_Temp is a PIDT1 controller with anti-windup and weighting of the proportional and derivative actions.

The PID algorithm operates according to the following equation (control zone and dead zone deactivated):

$$y = K_p \left[(b \cdot w - x) + \frac{1}{T_I \cdot s} (w - x) + \frac{T_D \cdot s}{a \cdot T_D \cdot s + 1} (c \cdot w - x) \right]$$

Symbol	Description	Associated parameters of the PID_Temp instruction
y	Output value of the PID algorithm	-
K_p	Proportional gain	Retain.CtrlParams.Heat.Gain Retain.CtrlParams.Cool.Gain CoolFactor
s	Laplace operator	-
b	Proportional action weighting	Retain.CtrlParams.Heat.PWeighting Retain.CtrlParams.Cool.PWeighting
w	Setpoint	CurrentSetpoint
x	Process value	ScaledInput
T_I	Integral action time	Retain.CtrlParams.Heat.Ti Retain.CtrlParams.Cool.Ti
T_D	Derivative action time	Retain.CtrlParams.Heat.Td Retain.CtrlParams.Cool.Td
a	Coefficient for derivative-action delay (Derivative delay T1 = a × T_D)	Retain.CtrlParams.Heat.TdFiltRatio Retain.CtrlParams.Cool.TdFiltRatio
c	Derivative action weighting	Retain.CtrlParams.Heat.DWeighting Retain.CtrlParams.Cool.DWeighting
DeadZone	Dead zone width	Retain.CtrlParams.Heat.DeadZone Retain.CtrlParams.Cool.DeadZone
ControlZone	Control zone width	Retain.CtrlParams.Heat.ControlZone Retain.CtrlParams.Cool.ControlZone

The diagram below illustrates the integration of the parameters into the PID algorithm:

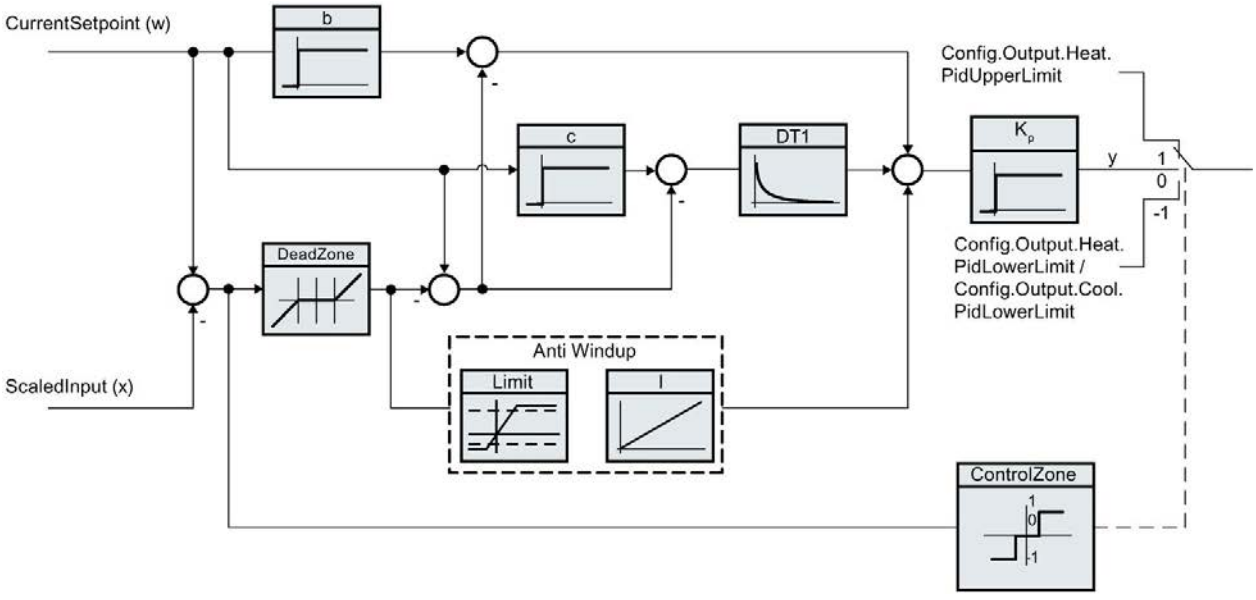

All PID parameters are retentive. If you enter the PID parameters manually, you must completely download PID_Temp (Downloading technology objects to device (Page 44)).

PID_Temp block diagram

The following block diagram shows how the PID algorithm is integrated in the PID_Temp.

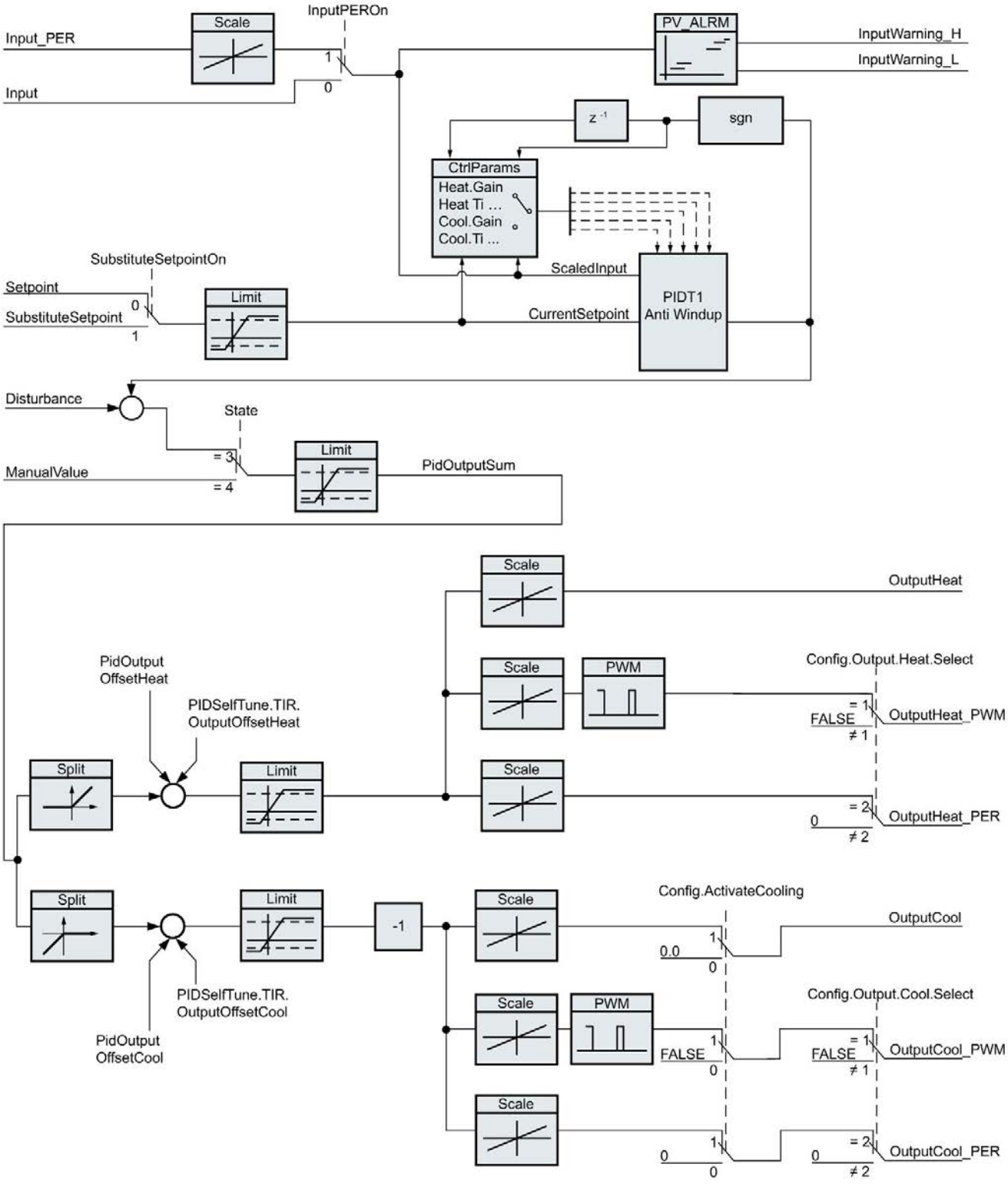

Proportional gain

The value specifies the proportional gain of the controller. PID_Temp does not operate with a negative proportional gain and only supports the normal control direction, meaning that an increase in the process value is achieved by an increase in the PID output value (PidOutputSum).

Integral action time

The integral action time determines the time behavior of the integral action. The integral action is deactivated with integral action time = 0.0. When the integral action time is changed from a different value to 0.0 online in "Automatic mode", the previous integral action is deleted and the output value jumps.

Derivative action time

The derivative action time determines the time behavior of the derivative action. Derivative action is deactivated with derivative action time = 0.0.

Derivative delay coefficient

The derivative delay coefficient delays the effect of the derivative action.

Derivative delay = derivative action time × derivative delay coefficient

- 0.0: Derivative action is effective for one cycle only and therefore almost not effective.
- 0.5: This value has proved useful in practice for controlled systems with one dominant time constant.
- > 1.0: The greater the coefficient, the longer the effect of the derivative action is delayed.

Proportional action weighting

The proportional action may weaken with changes to the setpoint.

Values from 0.0 to 1.0 are applicable.

- 1.0: Proportional action for setpoint change is fully effective
- 0.0: Proportional action for setpoint change is not effective

The proportional action is always fully effective when the process value is changed.

Derivative action weighting

The derivative action may weaken with changes to the setpoint.

Values from 0.0 to 1.0 are applicable.

- 1.0: Derivative action is fully effective upon setpoint change
- 0.0: Derivative action is not effective upon setpoint change

The derivative action is always fully effective when the process value is changed.

PID algorithm sampling time

The controlled system needs a certain amount of time to respond to changes in the output value. It is therefore not advisable to calculate the output value in every cycle. The sampling time of "PID algorithm" represents the time between two calculations of the PID output value. It is calculated during tuning and rounded to a multiple of the PID_Temp sampling time (cycle time of the cyclic interrupt OB). All other functions of PID_Temp are executed at every call.

If you use OutputHeat_PWM or OutputCool_PWM, the sampling time of the PID algorithm is used as the period duration of the pulse width modulation. The accuracy of the output signal is determined by the ratio of the PID algorithm sampling time to the cycle time of the OB. The cycle time should be no more than a tenth of the PID algorithm sampling time.

The sampling time of the PID algorithm that is used as the period duration of the pulse width modulation at OutputCool_PWM depends on the method for heating/cooling selected in "Basic settings Output":

- If the cooling factor is used, the "sampling time of the PID algorithm for heating" also applies to OutputCool_PWM.
- If PID parameter switching is used, the "sampling time PID algorithm for cooling" applies as the period duration for OutputCool_PWM.

If the sampling time of the PID algorithm and thus the period duration of the pulse width modulation is very high when OutputHeat_PWM or OutputCool_PWM is used, you can specify a deviating shorter period duration at the parameters Config.Output.Heat.PwmPeriode or Config.Output.Cool.PwmPeriode in order to improve smoothness of the process value.

Dead zone width

If the process value is affected by noise, the noise can also have an effect on the output value. The output value may fluctuate considerably when controller gain is high and the derivative action is activated. If the process value lies within the dead zone around the setpoint, the control deviation is suppressed so that the PID algorithm does not react and unnecessary fluctuations of the output value are reduced.

The dead zone width for heating or cooling is not set automatically during tuning. You have to correctly configure the dead zone width manually. The dead zone is deactivated by setting the dead zone width = 0.0.

When the dead zone is switched on, the result can be a permanent control deviation (deviation between setpoint and process value). This can have a negative effect on fine tuning.

If cooling is activated in the basic settings and PID parameter switching is selected as the method for heating/cooling in the output settings, the dead zone lies between "Setpoint - dead zone width (heating)" and "Setpoint + dead zone width (cooling)".

If cooling is deactivated in the basic settings or the cooling factor is used, the dead zone lies symmetrically between "Setpoint - dead zone width (heating)" and "Setpoint + dead zone width (heating)".

If values not equal to 1.0 are configured for the proportional action weighting or the derivative action weighting, setpoint changes even within the dead zone affect the output value. Process value changes within the dead zone do not affect the output value, regardless of the weighting.

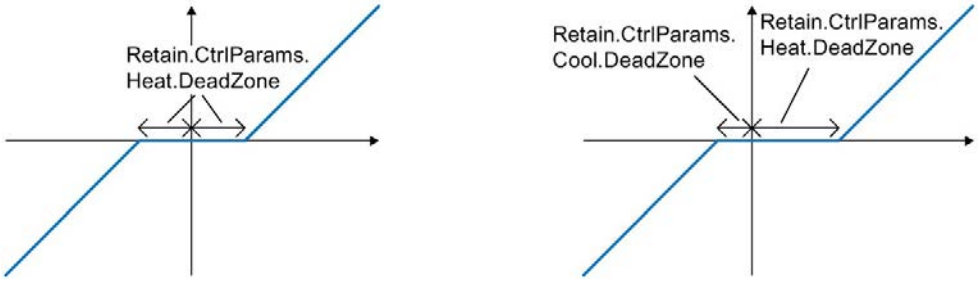

Dead zone with deactivated cooling or cooling factor (left) or activated cooling and PID parameter switching (right). The x / horizontal axis displays the control deviation = setpoint - process value. The y / vertical axis shows the output signal of the dead zone that is passed to the PID algorithm.

Control zone width

If the process value exits the control zone around the setpoint, the minimum or maximum output value is output. This means that the process value reaches the setpoint faster.

If the process value lies within the control zone around the setpoint, the output value is calculated by the PID algorithm.

The control zone width for heating or cooling is only set automatically during the pretuning, if "PID (temperature)" is selected as the controller structure for cooling or heating.

The control zone is deactivated by setting the control zone width = 3.402822e+38.

If cooling is deactivated in the basic settings or the cooling factor is used, the control zone lies symmetrically between "Setpoint - control zone width (heating)" and "Setpoint + control zone width (heating)".

If cooling is activated in the basic settings and PID parameter switching is selected as the method for heating/cooling in the output settings, the control zone lies between "Setpoint - control zone width (heating)" and "Setpoint + control zone width (cooling)".

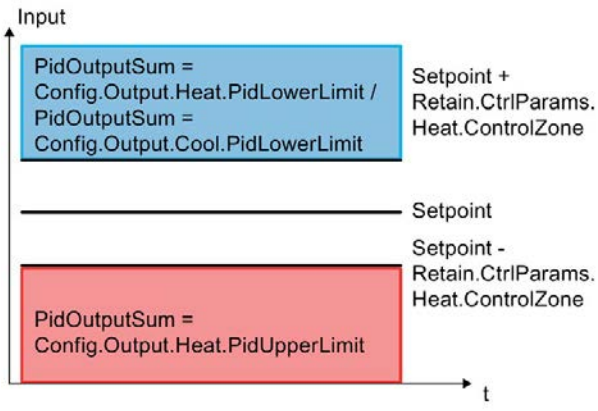

Control zone with deactivated cooling or cooling factor.

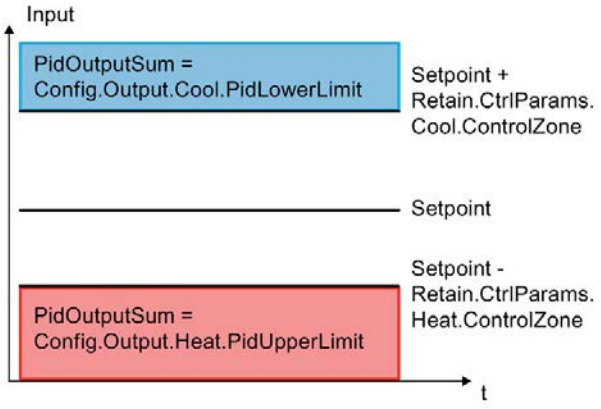

Control zone with activated cooling and PID parameter switching.

Rule for tuning

Select whether PI or PID parameters are to be calculated in the "Controller structure" drop-down list. You can specify the rules for tuning for heating and for tuning for cooling separately.

- PID (temperature)

  Calculates PID parameters during pretuning and fine tuning.

  Pretuning is designed for temperature processes and results in a slower and rather asymptotic control response with lower overshoot than with the "PID" option. Fine tuning is identical to the "PID" option.

  The control zone width is determined automatically during pretuning only if this option is selected.

- PID

  Calculates PID parameters during pretuning and fine tuning.

- PI

  Calculates PI parameters during pretuning and fine tuning.

- User-defined

  The drop-down list displays "User-defined" if you have configured different controller structures for pretuning and fine tuning via a user program or the parameter view.

6.3 Commissioning PID_Temp

6.3.1 Commissioning

The commissioning window helps you commission the PID controller. You can monitor the values for the setpoint, process value and the output values for heating and cooling along the time axis in the trend view. The following functions are supported in the commissioning window:

- Controller pretuning
- Controller fine tuning

  Use fine tuning for fine adjustments to the PID parameters.
- Monitoring the current closed-loop control in the trend view
- Testing the controlled system by specifying a manual PID output value and a substitute setpoint
- Saving the actual values of the PID parameters to an offline project.

All functions require an online connection to the CPU.

The online connection to the CPU is established, if it does not exist already, and operation of the commissioning window is enabled by means of the "Monitor all" or "Start" buttons of the trend view.

Operation of the trend view

- Select the desired sampling time in the "Sampling time" drop-down list.

  All the values of the trend view are updated in the selected sampling time.
- Click the "Start" icon in the Measurement group if you want to use the trend view.

  Value recording is started. The current values for the setpoint, process value and output values for heating and cooling are entered in the trend view.
- Click the "Stop" icon if you want to end the trend view.

  The values recorded in the trend view can continue to be analyzed.

Closing the commissioning window will terminate recording in the trend view and delete the recorded values.

6.3.2 Pretuning

The pretuning determines the process response to a jump change of the output value and searches for the point of inflection. The tuned PID parameters are calculated as a function of the maximum slope and dead time of the controlled system. You obtain the best PID parameters when you perform pretuning and fine tuning.

The more stable the process value is, the easier it is to calculate the PID parameters and the more precise the result will be. Noise on the process value can be tolerated as long as the rate of rise of the process value is significantly higher compared to the noise. This is most likely the case in operating modes "Inactive" or "Manual mode". The PID parameters are backed up before being recalculated.

PID_Temp offers different pretuning types depending on the configuration:

- Pretuning heating

  A jump is output at the output value heating, the PID parameters for heating are calculated and then the setpoint is used as the control variable in automatic mode.

- Pretuning heating and cooling

  A jump is output at the output value heating.

  As soon as the process value is close to the setpoint, a jump change is output at the output value cooling.

  The PID parameters for heating (Retain.CtrlParams.Heat structure) and cooling (Retain.CtrlParams.Cool structure) are calculated and then the setpoint is used as the control variable in automatic mode.

- Pretuning cooling

  A jump is output at the output value cooling.

  The PID parameters for cooling are calculated and then the setpoint is used as the control variable in automatic mode.

If you want to tune the PID parameters for heating and cooling, you can expect a better control response with "Pretuning heating" followed by "Pretuning cooling" rather than with "Pretuning heating and cooling". However, carrying out pretuning in two steps takes more time.

General requirements

- The PID_Temp instruction is called in a cyclic interrupt OB.
- ManualEnable = FALSE
- Reset = FALSE
- PID_Temp is in one of the following modes: "Inactive", "Manual mode", or "Automatic mode".
- The setpoint and the process value lie within the configured limits (see Process value monitoring (Page 174) configuration).

Requirements for pretuning heating

- The difference between setpoint and process value is greater than 30% of the difference between process value high limit and process value low limit.
- The distance between the setpoint and the process value is greater than 50% of the setpoint.
- The setpoint is greater than the process value.

Requirements for pretuning heating and cooling

- The cooling output in the "Basic settings" is activated (Config.ActivateCooling = TRUE).
- The PID parameter switching in the "Basic settings of output value" is activated (Config.AdvancedCooling = TRUE).
- The difference between setpoint and process value is greater than 30% of the difference between process value high limit and process value low limit.
- The distance between the setpoint and the process value is greater than 50% of the setpoint.
- The setpoint is greater than the process value.

Requirements for pretuning cooling

- The cooling output in the "Basic settings" is activated (Config.ActivateCooling = TRUE).
- The PID parameter switching in the "Basic settings of output value" is activated (Config.AdvancedCooling = TRUE).
- "Pretuning heating" or "Pretuning heating and cooling" has been carried out successfully (PIDSelfTune.SUT.ProcParHeatOk = TRUE). The same setpoint should be used for all tunings.
- The difference between setpoint and process value is smaller than 5% of the difference between process value high limit and process value low limit.

Procedure

To perform pretuning, follow these steps:

1. Double-click the "PID_Temp > Commissioning" entry in the project tree.
2. Activate the "Monitor all" button or start the trend view.

   An online connection will be established.
3. Select the desired pretuning entry from the "Tuning mode" drop-down list.
4. Click the "Start" icon.
   - Pretuning is started.
   - The "Status" field displays the current steps and any errors that may have occurred. The progress bar indicates the progress of the current step.

Note

Click the "Stop" icon when the progress bar ("Progress" tag) has not changed for a long period and it is to be assumed that the tuning function is blocked. Check the configuration of the technology object and, if necessary, restart controller tuning.

Result

If pretuning was performed without an error message, the PID parameters have been tuned. PID_Temp switches to automatic mode and uses the tuned parameters. The tuned PID parameters will be retained during power OFF and a restart of the CPU.

If pretuning is not possible, PID_Temp responds with the configured reaction to errors.

6.3.3 Fine tuning

Fine tuning generates a constant, limited oscillation of the process value. The PID parameters are tuned for the operating point from the amplitude and frequency of this oscillation. The PID parameters are recalculated from the results. PID parameters from fine tuning usually have better master control and disturbance characteristics than PID parameters from pretuning. You obtain the best PID parameters when you perform pretuning and fine tuning.

PID_Temp automatically attempts to generate an oscillation greater than the noise of the process value. Fine tuning is only minimally influenced by the stability of the process value. The PID parameters are backed up before being recalculated.

PID_Temp offers different fine tuning types depending on the configuration:

- Fine tuning heating:

  PID_Temp generates an oscillation of the process value with periodic changes at the output value heating and calculates the PID parameters for heating.

- Fine tuning cooling:

  PID_Temp generates an oscillation of the process value with periodic changes at the output value cooling and calculates the PID parameters for cooling.

Temporary tuning offset for heating/cooling controllers

If PID_Temp is used as a heating/cooling controller (Config.ActivateCooling = TRUE), the PID output value (PidOutputSum) at the setpoint has to fulfill the following requirements so that process value oscillation can be generated and fine tuning can be carried out successfully:

- Positive PID output value for fine tuning heating
- Negative PID output value for fine tuning cooling

If this condition is not fulfilled, you can specify a temporary offset for fine tuning that is output at the opposing output.

- Offset for cooling output (PIDSelfTune.TIR.OutputOffsetCool) with fine tuning heating.

  Before starting tuning, enter a negative tuning offset cooling that is smaller than the PID output value (PidOutputSum) at the setpoint in the stationary state.

- Offset for heating output (PIDSelfTune.TIR.OutputOffsetHeat) at fine tuning cooling

  Before starting tuning, enter a positive tuning offset heating that is greater than the PID output value (PidOutputSum) at the setpoint in the stationary state.

The defined offset is balanced by the PID algorithm so that the process value remains at the setpoint. The height of the offset allows the PID output value to be adapted correspondingly so that it fulfills the requirement mentioned above.

To avoid larger overshoots of the process value when defining the offset, it can also be increased in several steps.

If PID_Temp exits the fine tuning mode, the tuning offset is reset.

Example: Specification of an offset for fine tuning cooling

- Without offset
  - Setpoint = Process value (ScaledInput) = 80 °C
  - PID output value (PidOutputSum) = 30.0
  - Output value heating (OutputHeat) = 30.0
  - Output value cooling (OutputCool) = 0.0

    Oscillation of the process value around the setpoint cannot be generated with the cooling output alone. Fine tuning would fail here.
- With offset for heating output (PIDSelfTune.TIR.OutputOffsetHeat) = 80.0
  - Setpoint = Process value (ScaledInput) = 80 °C
  - PID output value (PidOutputSum) = -50.0
  - Output value heating (OutputHeat) = 80.0
  - Output value cooling (OutputCool) = -50.0

    Thanks to the specification of an offset for the heating output, the cooling output can now generate oscillation of the process value around the setpoint. Fine tuning can now be carried out successfully.

General requirements

- The PID_Temp instruction is called in a cyclic interrupt OB.
- ManualEnable = FALSE
- Reset = FALSE
- The setpoint and the process value lie within the configured limits (see "Process value settings" configuration).
- The control loop has stabilized at the operating point. The operating point is reached when the process value corresponds to the setpoint.

  When the dead zone is switched on, the result can be a permanent control deviation (deviation between setpoint and actual value). This can have a negative effect on fine tuning.
- No disturbances are expected.
- PID_Temp is in inactive mode, automatic mode or manual mode.

Requirements for fine tuning heating

- Heat.EnableTuning = TRUE
- Cool.EnableTuning = FALSE
- If PID_Temp is configured as a heating-and-cooling controller (Config.ActivateCooling = TRUE), the heating output has to be active at the operating point where tuning is to be carried out.

  PidOutputSum > 0.0 (see tuning offset)

Requirements for fine tuning cooling

- Heat.EnableTuning = FALSE
- Cool.EnableTuning = TRUE
- The cooling output is activated (Config.ActivateCooling = TRUE).
- The PID parameter switching is activated (Config.AdvancedCooling = TRUE).
- The cooling output has to be active at the operating point where tuning is to be carried out.

  PidOutputSum < 0.0 (see tuning offset)

Process depends on initial situation

Fine tuning can be started from the following operating modes: "Inactive", "automatic mode", or "manual mode".

Fine tuning proceeds as follows when started from:

- Automatic mode with PIDSelfTune.TIR.RunIn = FALSE (default)

  Start fine tuning from automatic mode if you wish to improve the existing PID parameters through tuning.

  PID_Temp controls the system using the existing PID parameters until the control loop has stabilized and the requirements for fine tuning have been met. Only then will fine tuning start.

- Inactive, manual mode or automatic mode with PIDSelfTune.TIR.RunIn = TRUE

  An attempt is made to reach the setpoint with the minimum or maximum output value (two-point control):

  – With minimum or maximum output value heating at fine tuning heating.
  – With minimum or maximum output value cooling for fine tuning cooling.

  This can produce increased overshoot. Fine tuning starts when the setpoint is reached.

  If the setpoint cannot be reached, PID_Temp does not automatically abort tuning.

Procedure

To perform fine tuning, follow these steps:

1. Double-click the "PID_Temp > Commissioning" entry in the project tree.
2. Activate the "Monitor all" button or start the trend view.

   An online connection will be established.
3. Select the desired fine tuning entry from the "Tuning mode" drop-down list.

4. If required (see tuning offset), specify a tuning offset and wait until the stationary state is reached again.
5. Click the "Start" icon.
   – The process of fine tuning is started.
   – The "Status" field displays the current steps and any errors that may have occurred.

     The progress bar indicates the progress of the current step.

Note

Click the "Stop" icon in the "Tuning mode" group if the progress bar ("Progress" tag) has not changed for a long period and it is to be assumed that the tuning function is blocked. Check the configuration of the technology object and, if necessary, restart controller tuning.

In the following phases in particular, tuning is not aborted automatically if the setpoint cannot be reached.

- "Attempting to reach setpoint for heating with two-point control."
- "Attempting to reach setpoint for cooling with two-point control."

Result

If fine tuning was performed without errors, the PID parameters have been tuned. PID_Temp switches to automatic mode and uses the tuned parameters. The tuned PID parameters will be retained during power OFF and a restart of the CPU.

If errors occurred during fine tuning, PID_Temp responds with the configured response to errors.

6.3.4 "Manual" mode

The following section describes how you can use "Manual mode" in the commissioning window of the "PID_Temp" technology object.

Manual mode is also possible when an error is pending.

Requirement

- The "PID_Temp" instruction is called in a cyclic interrupt OB.
- An online connection to the CPU has been established.
- The CPU is in "RUN" mode.

Procedure

If you want to test the controlled system by specifying a manual value, use "Manual mode" in the commissioning window.

To define a manual value, follow these steps:

1. Double-click the "PID_Temp > Commissioning" entry in the project tree.
2. Activate the "Monitor all" button or start the trend view.

   An online connection will be established.
3. Select the "Manual mode" check box in the "Online status of controller" area.

   PID_Temp operates in manual mode. The most recent current output value remains in effect.
4. Enter the manual value in the editable field as a % value.

   If cooling is activated in the basic settings, enter the manual value as follows:

   – Enter a positive manual value to output the value at the outputs for heating.

   – Enter a negative manual value to output the value at the outputs for cooling.
5. Click the icon.

Result

The manual value is written to the CPU and immediately goes into effect.

Clear the "Manual mode" check box if the output value is to be specified again by the PID controller.

The switchover to automatic mode is bumpless.

6.3.5 Substitute setpoint

The following section describes how you can use the substitute setpoint in the commissioning window of the "PID_Temp" technology object.

Requirement

- The "PID_Temp" instruction is called in a cyclic interrupt OB.
- An online connection to the CPU has been established.
- The CPU is in "RUN" mode.

Procedure

If you want to use a different value as the setpoint than that specified at the "Setpoint" parameter (for example to tune a slave in a cascade), use the substitute setpoint in the commissioning window.

Proceed as follows to specify a substitute setpoint:

1. Double-click the "PID_Temp > Commissioning" entry in the project tree.
2. Activate the "Monitor all" button or start the trend view.

   An online connection will be established.
3. Select the "Subst.Setpoint" check box in the "Online status of controller" section.

   The substitute setpoint (SubstituteSetpoint tag) is initialized with the most recently updated setpoint and now used.
4. Enter the substitute setpoint in the editable field.
5. Click the icon.

Result

The substitute setpoint is written to the CPU and immediately goes into effect.

Clear the "Subst.Setpoint" check box if the value at the "Setpoint" parameter is to be used again as setpoint.

The switchover is not bumpless.

6.3.6 Cascade commissioning

Information about cascade commissioning with PID_Temp is available under Commissioning (Page 201).

6.4 Cascade control with PID_Temp

6.4.1 Introduction

In cascade control, several control loops are nested within each other. In the process, slaves receive their setpoint (Setpoint) from the output value (OutputHeat) of the respective higher-level master.

A prerequisite for establishing a cascade control system is that the controlled system can be divided into subsystems, each with its own measured variable.

Setpoint specification for the controlled variable is carried out at the outmost master.

The output value of the innermost slave is applied to the actuator and thus acts on the controlled system.

The following major advantages result from the use of a cascade control system in comparison with a single-loop control system:

- Thanks to the additional subordinate control loops, disturbances which occur there are corrected quickly. Their influence on the controlled variable is reduced considerably. The disturbance behavior is thus improved.
- The subordinate control loops act in linearizing form. The negative effects of such non-linearities on the controlled variable are thus moderated.

PID_Temp offers the following functionality especially for use in cascade control systems:

- Specification of a substitute setpoint
- Exchange of status information between master and slave (for example, current operating mode)
- Different Anti-Wind-Up modes (response of the master to limitation of its slave)

Example

The following block diagram shows a cascade control system with PID_Temp using the simplified example of a chocolate melting unit:

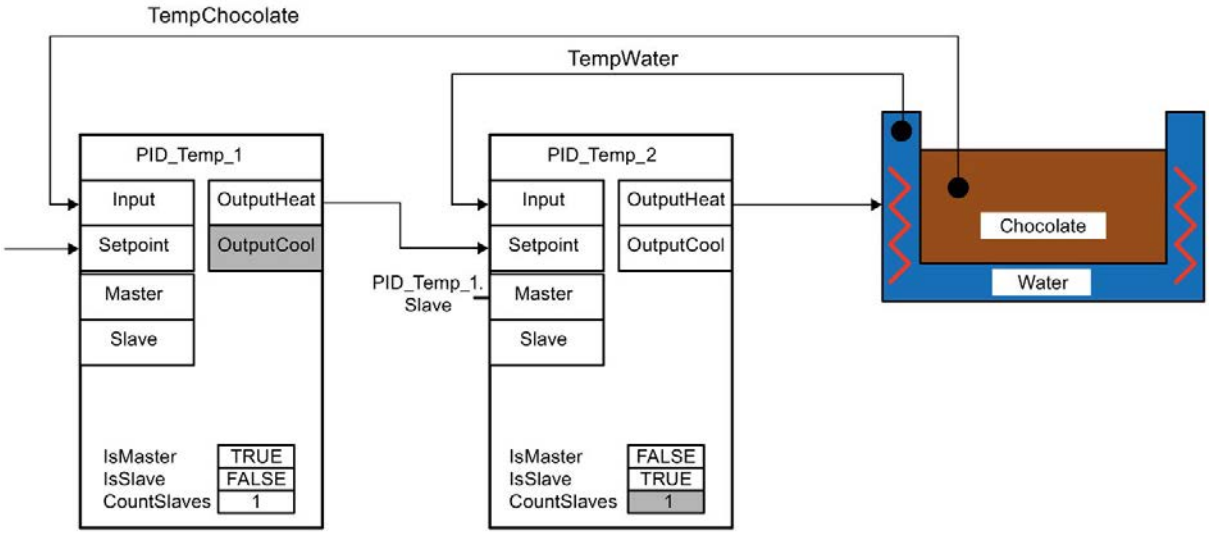

The PID_Temp_1 master compares the process value of the chocolate temperature (TempChocolate) with the setpoint specification by the user at the Setpoint parameter. Its output value OutputHeat forms the setpoint of the slave PID_Temp_2.

PID_Temp_2 attempts to regulate the process value of the water-bath temperature (TempWater) to this setpoint. The output value of PID_Temp_2 acts directly on the actuator of the controlled system (heating of the water bath) and thus influences the water-bath temperature. The water-bath temperature in turn has an effect on the chocolate temperature.

FAQ

For more information, see the following FAQs in the Siemens Industry Online Support:

- Entry ID 103526819 (https://support.industry.siemens.com/cs/ww/en/view/103526819)

See also

Program creation (Page 197)

6.4.2 Program creation

Observe the following points during program creation:

- Number of PID_Temp instances

  The number of different PID_Temp instances called up in a cyclic interrupt OB has to agree with the number of concatenated measured variables in the process.

  There are two concatenated measured variables in the example: TempChocolate and TempWater. Therefore two PID_Temp instances are required.

- Call sequence

  A master has to be called before its slaves in the same cyclic interrupt OB.

  The outermost master at which the user setpoint is specified is called first.

  The slave whose setpoint is specified by the outermost master is called next, etc.

  The innermost slave that acts on the actuator of the process with its output value is called last.

  In the example, PID_Temp_1 is called before PID_Temp_2.

- Interconnection of the measured variables

  The outermost master is interconnected with the outermost measured variable that is to be regulated to the user setpoint.

  The innermost slave is interconnected with the innermost measured variable that is influenced directly by the actuator.

  Interconnection of the measured variables with PID_Temp is carried out with the parameters Input or Input_PER.

  In the example, the outermost measured variable TempChocolate is interconnected with PID_Temp_1 and the innermost measured variable TempWater with PID_Temp_2.

- Interconnection of the output value of the master to the setpoint of the slave

  The output value (OutputHeat) of a master has to be assigned to the setpoint (Setpoint) of its slave.

  This interconnection can be carried out in the programming editor or automatically in the Inspector window of the slave in the basic settings via the selection of the master.

  If required, you can insert your own filter or scaling functions, for example in order to adapt the output value range of the master to the setpoint/process value range of the slave.

  In the example, OutputHeat of PID_Temp_1 is assigned to Setpoint of PID_Temp_2.

- Interconnection of the interface for information exchange between master and slave

  The "Slave" parameter of a master has to be assigned to the "Master" parameter of all its directly subordinate slaves (which receive their setpoint from this master). The assignment should be carried out via the interface of the slave in order to allow the interconnection of a master with multiple slaves and the display of the interconnection in the Inspector window of the slave in the basic settings.

  This interconnection can be carried out in the programming editor or automatically in the Inspector window of the slave in the basic settings via the selection of the master.

  The Anti-Wind-Up functionality and the evaluation of the slave operating modes at the master can only function correctly if this interconnection is carried out.

  In the example, the "Slave" parameter of PID_Temp_1 is assigned to the "Master" parameter of PID_Temp_2.

Program code of the example using SCL (without assignment of the output value of the slave to the actuator):

```
"PID_Temp_1"(Input:="TempChocolate");

"PID_Temp_2"(Input:="TempWater", Master := "PID_Temp_1".Slave, Setpoint :=
"PID_Temp_1".OutputHeat);
```

See also

PID_Temp ActivateRecoverMode tag (Page 458)

6.4.3 Configuration

You can carry out the configuration via your user program, the configuration editor or the Inspector window of the PID_Temp call.

When using PID_Temp in a cascade control system, ensure the correct configuration of the settings specified below.

If a PID_Temp instance receives its setpoint from a superior master controller and outputs its output value in turn to a subordinate slave controller, this PID_Temp instance is both a master controller and a slave controller simultaneously. Both configurations listed below have to be carried out for such a PID_Temp instance. This is the case, for example, for the middle PID_Temp instance in a cascade control system with three concatenated measured variables and three PID_Temp instances.

Configuration of a master

Setting in the configuration editor or Inspector window	DB parameter	Explanation
Basic settings → Cascade: Activate "Controller is master" check box	Config.Cascade.IsMaster = TRUE	Activates this controller as a master in a cascade
Basic settings → Cascade: Number of slaves	Config.Cascade.CountSlaves	Number of directly subordinate slaves that receive their setpoint directly from this master
Basic settings → Input/output parameters: Selection of the output value (heating) = OutputHeat	Config.Output.Heat.Select = 0	The master only uses the output parameter OutputHeat. OutputHeat_PWM and OutputHeat_PER are deactivated.
Basic settings → Input/output parameters: Clear "Activate cooling" check box	Config.ActivateCooling = FALSE	The cooling has to be deactivated at a master.

Setting in the configuration editor or Inspector window	DB parameter	Explanation
Output settings → Output limits and scaling → OutputHeat / OutputCool: PID output value low limit (heating), PID output value high limit (heating), Scaled low output value (heating), Scaled high output value (heating)	Config.Output.Heat .PidLowerLimit, Config.Output.Heat .PidUpperLimit, Config.Output.Heat .LowerScaling, Config.Output.Heat .UpperScaling	If no own scaling function is used when assigning OutputHeat of the master to Setpoint of the slave, it may be necessary to adapt the output value limits and the output scaling of the master to the setpoint/process value range of the slave.
This tag is not available in the Inspector window or in the functional view of the configuration editor. You can change it via the parameter view of the configuration editor.	Config.Cascade .AntiWindUpMode	The Anti-Wind-Up mode determines how the integral action of this master is treated if directly subordinate slaves reach their output value limits. Options are: • AntiWindUpMode = 0: The AntiWindUp functionality is deactivated. The master does not react to the limitation of its slaves. • AntiWindUpMode = 1 (default): The integral action of the master is reduced in the relationship "Slaves in limitation/Number of slaves". This reduces the effects of the limitation on the control behavior. • AntiWindUpMode = 2: The integral action of the master is held as soon as a slave is in limitation.

Configuration of a slave

Setting in the configuration editor or Inspector window	DB parameter	Explanation
Basic settings → Cascade: Select the "Controller is slave" check box	Config.Cascade.IsSlave = TRUE	Activates this controller as a slave in a cascade

6.4.4 Commissioning

After compiling and loading of the program, you can start commissioning of the cascade control system.

Begin with the innermost slave at commissioning (implementation of tuning or change to automatic mode with existing PID parameters) and continue outwards until the outermost master has been reached.

In the above example, commissioning starts with PID_Temp_2 and is continued with PID_Temp_1.

Tuning the slave

Tuning of PID_Temp requires a constant setpoint. Therefore, activate the substitute setpoint of a slave (SubstituteSetpoint and SubstituteSetpointOn tags) to tune the slave or set the associated master to manual mode with a corresponding manual value. This ensures that the setpoint of the slave remains constant during tuning.

Tuning the master

In order for a master to influence the process or to carry out tuning, all the downstream slaves have to be in automatic mode and their substitute setpoint has to be deactivated. A master evaluates these conditions through the interface for information exchange between master and slave (Master parameter and Slave parameter) and displays the current state at the AllSlaveAutomaticState and NoSlaveSubstituteSetpoint tags. Corresponding status messages are output in the commissioning editor.

Status message in the commissioning editor of the master	DB parameter of the master	Correction
One or more slaves are not in automatic mode.	AllSlaveAutomaticState = FALSE, NoSlaveSubstituteSetpoint = TRUE	First, carry out commissioning of all downstream slaves. Ensure that the following conditions are fulfilled before carrying out tuning or activating manual mode or automatic mode of the master: • All downstream slaves are in automatic mode (state = 3). • All downstream slaves have deactivated the substitute setpoint (SubstituteSetpointOn = FALSE).
One or more slaves have activated the substitute setpoint.	AllSlaveAutomaticState = TRUE, NoSlaveSubstituteSetpoint = FALSE	
One or more slaves are not in automatic mode and have activated the substitute setpoint.	AllSlaveAutomaticState = FALSE, NoSlaveSubstituteSetpoint = FALSE	

If pretuning or fine tuning is started for a master, PID_Temp aborts tuning in the following cases and displays an error with ErrorBits = DW#16#0200000:

- One or more slaves are not in automatic mode (AllSlaveAutomaticState = FALSE)
- One or more slaves have activated the substitute setpoint (NoSlaveSubstituteSetpoint = FALSE).

The subsequent operating mode changeover depends on ActivateRecoverMode.

6.4.5 Substitute setpoint

In order to specify a setpoint, PID_Temp offers a substitute setpoint at the SubstituteSetpoint tag in addition to the Setpoint parameter. This can be activated by setting SubstituteSetpointOn = TRUE or by selecting the corresponding check box in the commissioning editor.

The substitute setpoint allows you to specify the setpoint temporarily directly at the slave, for example during commissioning or tuning.

In this case, the interconnection of the output value of the master with the setpoint of the slave that is required for normal operation of the cascade control system does not have to be changed in the program

In order for a master to influence the process or to carry out tuning, the substitute setpoint has to be deactivated at all downstream slaves.

You can monitor the currently effective setpoint as it is used by the PID algorithm for calculation at the CurrentSetpoint tag.

6.4.6 Operating modes and fault response

The master or slave of a PID_Temp instance does not change the operating mode of this PID_Temp instance.

If a fault occurs at one of its slaves, the master remains in its current operating mode.

If a fault occurs at its master, the slave remains in its current operating mode. However, further operation of the slave then depends on the fault and the configured fault response of the master since the output value of the master is used as the setpoint of the slave:

- If ActivateRecoverMode = TRUE is configured at the master. and the fault does not prevent the calculation of OutputHeat, the fault does not have any effect on the slave.
- If ActivateRecoverMode = TRUE is configured at the master and the fault prevents the calculation of OutputHeat, the master outputs the last output value or the configured substitute output value SubstituteOutput, depending on SetSubstituteOutput. This is then used by the slave as the setpoint.

  PID_Temp is preconfigured so that the substitute output value 0.0 is output in this case (ActivateRecoverMode = TRUE, SetSubstituteOutput = TRUE, SubstituteOutput = 0.0). Configure a suitable substitute output value for your application or activate the use of the last valid PID output value (SetSubstituteOutput = FALSE).
- If ActivateRecoverMode = FALSE is configured at the master, the master changes to the "Inactive" mode when a fault occurs and outputs OutputHeat = 0.0. The slave then uses 0.0 as the setpoint.

The fault response is located in the output settings in the configuration editor.

6.5 Multi-zone controlling with PID_Temp

Introduction

In a multi-zone control system, several sections, so-called zones, of a plant are controlled simultaneously to different temperatures. A multi-zone control system is characterized by the mutual influence of the temperature zones through thermal coupling, i.e. the process value of one zone can influence the process value of a different zone through thermal coupling. The strength that this influence has depends on the structure of the plant and the selected operating points of the zones.

Example: Extrusion plant as it is used, for example, in plastics processing.

The substance mixture that passes through the extruder has to be controlled to different temperatures for optimal processing. For example, different temperatures can be required at the filling point of the extruder than at the outlet nozzle. The individual temperature zones mutually influence each other through thermal coupling.

When PID_Temp is used in multi-zone control systems, each temperature zone is controlled by a separate PID_Temp instance.

Observe the following explanations if you want to use the PID_Temp in a multi-zone control system.

Separate pretuning for heating and cooling

Initial commissioning of a plant as a rule begins with the carrying out of pretuning in order to carry out initial setting of the PID parameters and control to the operating point. The pretuning for multi-zone control systems is often carried out simultaneously for all zones.

PID_Temp offers the possibility of carrying out pretuning for heating and cooling in one step (Mode = 1, Heat.EnableTuning = TRUE, Cool.EnableTuning = TRUE) for controllers with activated cooling and PID parameter switching as the method for heating/cooling (Config.ActivateCooling = TRUE, Config.AdvancedCooling = TRUE).

However, it is advisable not to use this tuning for simultaneous pretuning of several PID_Temp instances in a multi-zone control system. Instead, first carry out the pretuning for heating (Mode = 1, Heat.EnableTuning = TRUE, Cool.EnableTuning = FALSE) and the pretuning for cooling (Mode = 1, Heat.EnableTuning = FALSE, Cool.EnableTuning = TRUE) separately.

Pretuning for cooling should not be started until all zones have completed pretuning for heating and have reached their operating points.

This reduces mutual influencing through thermal coupling between the zones during tuning.

Adapting the delay time

If PID_Temp is used in a multi-zone control system with strong thermal couplings between the zones, you should ensure that the adaption of the delay time is deactivated for pretuning with PIDSelfTune.SUT.AdaptDelayTime = 0. Otherwise, the determination of the delay time can be incorrect if the cooling of a zone is prevented by the thermal influence of other zones during the adapting of the delay time (heating is deactivated in this phase).

Temporary deactivation of cooling

PID_Temp offers the possibility of deactivating cooling temporarily in automatic mode for controllers with active cooling (Config.ActivateCooling = TRUE) by setting DisableCooling = TRUE.

This ensures that this controller does not cool in automatic mode during commissioning while the controllers of other zones have not yet completed tuning of heating. The tuning could otherwise be influenced negatively by the thermal coupling between the zones.

Procedure

You can proceed as follows during the commissioning of multi-zone control systems with relevant thermal couplings:

1. Set DisableCooling = TRUE for all controllers with activated cooling.
2. Set PIDSelfTune.SUT.AdaptDelayTime = 0 for all controllers.
3. Specify the desired setpoints (Setpoint parameter) and start pretuning for heating (Mode = 1, Heat.EnableTuning = TRUE, Cool.EnableTuning = FALSE) simultaneously for all controllers.
4. Wait until all the controllers have completed pretuning for heating.
5. Set DisableCooling = FALSE for all controllers with activated cooling.
6. Wait until the process values of all the zones are steady and close to the respective setpoint.

   If the setpoint cannot be reached permanently for a zone, the heating or cooling actuator is too weak.
7. Start pretuning for cooling (Mode = 1, Heat.EnableTuning = FALSE, Cool.EnableTuning = TRUE) for all controllers with activated cooling.

Note

Limit violation of the process value

If the cooling is deactivated in automatic mode with DisableCooling = TRUE, this can cause the process value to exceed the setpoint and the process value limits while DisableCooling = TRUE. Observe the process values and intervene, if appropriate, if you use DisableCooling.

Note

Multi-zone control systems

For multi-zone control systems, the thermal couplings between the zones can result in increased overshoots, permanent or temporary violation of limits and permanent or temporary control deviations during commissioning or operation. Observe the process values and be ready to intervene. Depending on the system, it can be necessary to deviate from the procedure described above.

Synchronization of several fine tuning processes

If fine tuning is started from automatic mode with PIDSelfTune.TIR.RunIn = FALSE, PID_Temp tries to reach the setpoint with PID controlling and the current PID parameters. The actual tuning does not start until the setpoint is reached. The time required to reach the setpoint can be different for the individual zones of a multi-zone control system.

If you want to carry out fine tuning for several zones simultaneously, PID_Temp offers the possibility to synchronize these by waiting with the further tuning steps after the setpoint has been reached.

Procedure

This ensures that all the controllers have reached their setpoint when the actual tuning steps start. This reduces mutual influencing through thermal coupling between the zones during tuning.

Proceed as follows for controllers for whose zones you want to carry out fine tuning simultaneously:

1. Set PIDSelfTune.TIR.WaitForControlIn = TRUE for all controllers.

   These controllers have to be in automatic mode with PIDSelfTune.TIR.RunIn = FALSE.
2. Specify the desired setpoints (Setpoint parameters) and start fine tuning for all controllers.
3. Wait until PIDSelfTune.TIR.ControlInReady = TRUE at all controllers.
4. Set PIDSelfTune.TIR.FinishControlIn = TRUE for all controllers.

All controllers then start the actual tuning simultaneously.

6.6 Override control with PID_Temp

Override control

In case of override control, two or more controllers share one actuator. Only one controller has access to the actuator at any time and influences the process.

A logic operation decides which controller has access to the actuator. This decision is often made based on a comparison of the output values of all controllers, for example, in case of a maximum selection, the controller with the largest output value gets access to the actuator.

The selection based on the output value requires that all controllers operate in automatic mode. The controllers that do not have an effect on the actuator are updated. This is necessary to prevent windup effects and their negative impacts on the control response and the switchover between the controllers.

PID_Temp supports override controls as of version 1.1 by offering a simple process for updating the controllers that are not active: By using the tags OverwriteInitialOutputValue and PIDCtrl.PIDInit, you can pre-assign the integral action of the controller in automatic mode as though the PID algorithm had calculated PidOutputSum = OverwriteInititalOutputValue for the PID output value in the last cycle. To do this, OverwriteInitialOutputValue is interconnected with the PID output value of the controller that currently has access to the actuator. By setting the bit PIDCtrl.PIDInit, you trigger the pre-assignment of the integral action as well as the restart of the controller cycle and the PWM period. The subsequent calculation of the PID output value in the current cycle takes place based on the pre-assigned (and synchronized for all controllers) integral action as well as the proportional action and integral action from the current control deviation. The derivative action is not active during the call with PIDCtrl.PIDInit = TRUE and therefore does not contribute to the output value.

This procedure ensures that the calculation of the current PID output value and thus the decision on which controller is to have access to the actuator is only based on the current process state and the PI parameters. Windup effects for controllers that are not active and thus incorrect decisions of the switchover logic are prevented.

Requirement

- PIDCtrl.PIDInit is only effective if the integral action is activated (tags Retain.CtrlParams.Heat.Ti and Retain.CtrlParams.Cool.Ti > 0.0).
- You must assign PIDCtrl.PIDInit and OverwriteInitialOutputValue in your user program yourself (see example below). PID_Temp does not automatically change these tags.
- PIDCtrl.PIDInit is only effective when PID_Temp is in automatic mode (parameter State = 3).
- If possible, select the sampling time of the PID algorithm (Retain.CtrlParams.Heat.Cycle and Retain.CtrlParams.Cool.Cycle tags) so that it is identical for all controllers, and call all controllers in the same cyclic interrupt OB. In this way, you ensure that the switchover does not take place within a controller cycle or a PWM period.

Note

Constant adaptation of the output value limits

Instead of the active updating of the controllers without access to the actuator described here, this is implemented alternatively by constant adaptation of the output value limits in other controller systems.

This is not possible with PID_Temp, because a change of the output value limits is not supported in automatic mode.

Example: Control of a large boiler

PID_Temp is used for control of a large boiler.

The main goal is to control the temperature Input1. The controller PID_Temp_1 is used for this purpose. In addition, the temperature Input2 is to be kept below a high limit at an additional measuring point with the limiting controller PID_Temp_2.

Both temperatures are influenced by only one heater. The output value of the controller corresponds to the heating power.

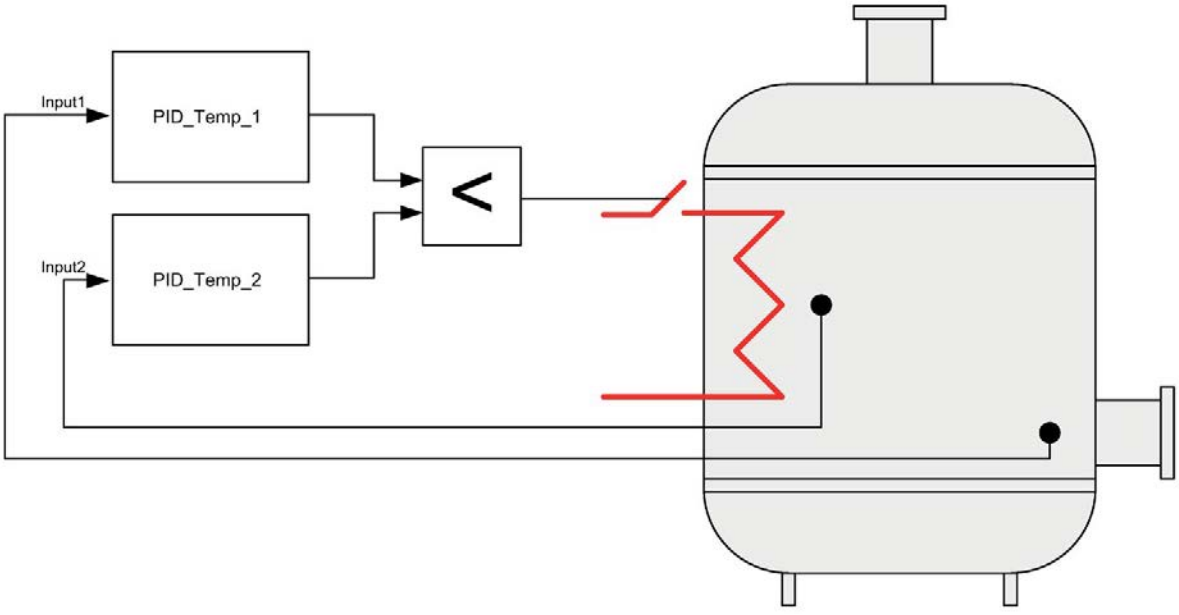

The heater is controlled with the pulse-width modulated output value of PID_Temp (parameter OutputHeat_PWM) by writing the program tag ActuatorInput. The setpoint for the temperature Input1 is specified at the parameter PID_Temp_1.Setpoint. The temperature high limit for the additional measuring point is specified as setpoint at the parameter PID_Temp_2.Setpoint.

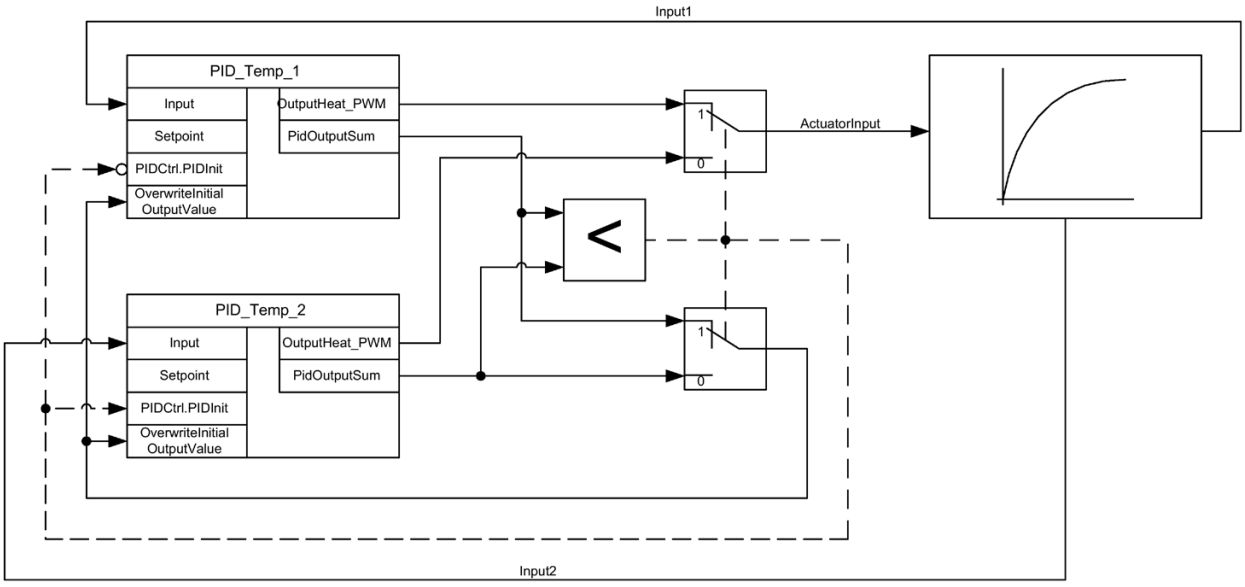

Both controllers must share one heater as shared actuator. The logic that decides which controller gets access to the actuator is implemented by a minimum selection of the PID output value (in Real format, parameter PidOutputSum) in this case. Because the PID output value corresponds to the heating power, the controller that requires lower heating power gets the control.

In normal operation of the plant, the process value of the main controlled variable corresponds to the setpoint. The main controller PID_Temp_1 has settled on a stationary PID output value PID_Temp_1.PidOutputSum. The process value of the limiting controller Input2 in normal operation is significantly below the high limit that is specified as setpoint for für PID_Temp_2. The limiting controller therefore wants to increase the heating power to increase its process value, which means it will calculate a PID output value PID_Temp_2.PidOutputSum that is greater than the main controller PID_Temp_1.PidOutputSum. The minimum selection of the switchover logic therefore gives the main controller PID_Temp_1 continued access to the actuator. In addition, it is ensured that PID_Temp_2 is updated by means of the assignments PID_Temp_2.OverwriteInitialOutputValue = PID_Temp_1.PidOutputSum and PID_Temp_2.PIDCtrl.PIDInit = TRUE.

If Input2 now approaches the high limit or exceeds it, for example due to a fault, the limiting controller PID_Temp_2 calculates a smaller PID output value to restrict the heating power and thus reduce Input2. If PID_Temp_2.PidOutputSum is smaller than PID_Temp_1.PidOutputSum, the limiting controller PID_Temp_2 receives access to the actuator through the minimum selection and reduces the heating power. It is ensured that PID_Temp_1 is updated by means of the assignments PID_Temp_1.OverwriteInitialOutputValue = PID_Temp_2.PidOutputSum and PID_Temp_1.PIDCtrl.PIDInit = TRUE.

The temperature at the additional measuring point Input2 drops. The temperature of the main controlled variable Input1 drops as well and cannot be held at the setpoint any longer.

Once the fault has been remedied, the Input2 will continue to drop and the heating power is further increased by the limiting controller. As soon as the main controller has calculated a lower heating power as output value, the plant returns to normal operation so that the main controller PID_Temp_1 once again has access to the actuator. This example can be implemented with the following SCL program code:

```
"PID Temp 1"(Input := "Input1");
"PID Temp 2"(Input := "Input2");
IF "PID Temp 1".PidOutputSum <= "PID Temp 2".PidOutputSum THEN
  "ActuatorInput" := "PID_Temp_1".OutputHeat_PWM;

  "PID_Temp_1".PIDCtrl.PIDInit := FALSE;

  "PID_Temp_2".PIDCtrl.PIDInit := TRUE;

  "PID_Temp_2".OverwriteInitialOutputValue := "PID_Temp_1".PidOutputSum;

ELSE
  "ActuatorInput" := "PID_Temp_2".OutputHeat_PWM;

  "PID_Temp_1".PIDCtrl.PIDInit := TRUE;

  "PID_Temp_2".PIDCtrl.PIDInit := FALSE;

  "PID_Temp_1".OverwriteInitialOutputValue := "PID_Temp_2".PidOutputSum;

END IF;
```

6.7 Simulating PID_Temp with PLCSIM

Note

Simulation with PLCSIM

The simulation of PID_Temp with PLCSIM for CPU S7-1200 is not supported.

PID_TEMP can be simulated only for CPU S7-1500 with PLCSIM.

For the simulation with PLCSIM, the time behavior of the simulated PLC is not exactly identical to that of a "real" PLC. The actual cycle clock of a cyclic interrupt OB can have larger fluctuations with a simulated PLC than with "real" PLCs.

In the standard configuration, PID_Temp determines the time between calls automatically and monitors them for fluctuations.

For the simulation of PID_Temp with PLCSIM, for example, a sampling time error (ErrorBits = DW#16#00000800) can therefore be detected.

This results in ongoing tuning being aborted.

The response in automatic mode depends on the value of the ActivateRecoverMode tag.

To prevent this from happening, you should configure PID_Temp for simulation with PLCSIM as follows:

- CycleTime.EnEstimation = FALSE
- CycleTime.EnMonitoring = FALSE
- CycleTime.Value: Assign the cycle clock of the calling cyclic interrupt OB in seconds to this tag.

Using PID basic functions 7

7.1 CONT_C

7.1.1 Technology object CONT_C

The technology object CONT_C provides a continual PID-controller for automatic and manual mode. It corresponds to the instance data block of the instruction CONT_C. You can configure a pulse controller using the PULSEGEN instruction.

The proportional, integral (INT) and differential components (DIF) are switched parallel to each other and can be turned on and off individually. With this, P-, I, PI-, PD- and PID-controller can be set.

S7-1500
All parameters and tags of the technology object are retentive and can only be changed during download to the device if you completely download CONT_C.

See also

Overview of software controller (Page 39)

Add technology objects (Page 41)

Configure technology objects (Page 42)

Downloading technology objects to device (Page 44)

CONT_C (Page 466)

7.1.2 Configure controller difference CONT_C

Use process value periphery

To use the process value in the periphery format at the PV_PER input parameter, follow these steps:

1. Select the "Enable I/O" check box.
2. If the process value is available as a physical size, enter the factor and offset for the scaling in percent.
   The process value is then determined according to the following formula:
   PV = PV_PER × PV_FAC + PV_OFF

Use internal process values

To use the process value in the floating-point format at the PV_IN input parameter, follow these steps:

1. Clear the "Enable I/O" check box.

Control deviation

Set a dead zone range under the following requirement:

- The process value signal is noisy.
- The controller gain is high.
- The derivative action is activated.

The noise component of the process value causes strong deviations of the output value in this case. The dead zone suppresses the noise component in the steady controller state. The dead zone range specifies the size of the dead zone. With a dead zone range of 0.0, the dead zone is turned off.

See also

How CONT_C works (Page 467)

7.1.3 Configure the controller algorithm CONT_C

General

To determine which components of the control algorithm are activated, proceed as follows:

1. Select an entry from the "Controller structure" list.
   You can only specify required parameters for the selected controller structure.

Proportional action

1. If the controller structure contains a proportional action, enter the "proportional gain".

Integral action

1. If the controller structure contains an integral action, enter the integral action time.
2. To give the integral action an initialization value, select the check box "Initialize integral action" and enter the initialization value.
3. In order to permanently set the integral action to this initialization value, select the "Integral action hold" check box.

Derivative action

1. If the controller structure contains a derivative action, enter the derivative action time, the derivative action weighting and the delay time.

See also

How CONT_C works (Page 467)

7.1.4 Configure the output value CONT_C

General

You can set CONT_C in the manual or automatic mode.

1. To set a manual manipulated value, activate the option "Activate manual mode" option check box.
   You can specify a manual manipulated value on the input parameter MAN.

Manipulated value limits

The manipulated value is limited at the top and bottom so that it can only accept valid values. You cannot turn off the limitation. Exceeding the limits is displayed through the output parameters QLMN_HLM and QLMN_LLM.

1. Enter a value for the high and low manipulated value limits.
   If the manipulated value is a physical size, the units for the high and low manipulated value limits must match.

Scaling

The manipulated value can be scaled for output as a floating point and periphery value through a factor and an offset according to the following formula.

Scaled manipulated value = manipulated value x factor + offset

Default is a factor of 1.0 and an offset of 0.0.

1. Enter a value for the factor and offset.

See also

How CONT_C works (Page 467)

7.1.5 Programming a pulse controller

With the continuous controller CONT_C and the pulse shaper PULSEGEN, you can implement a fixed setpoint controller with a switching output for proportional actuators. The following figure shows the signal flow of the control loop.

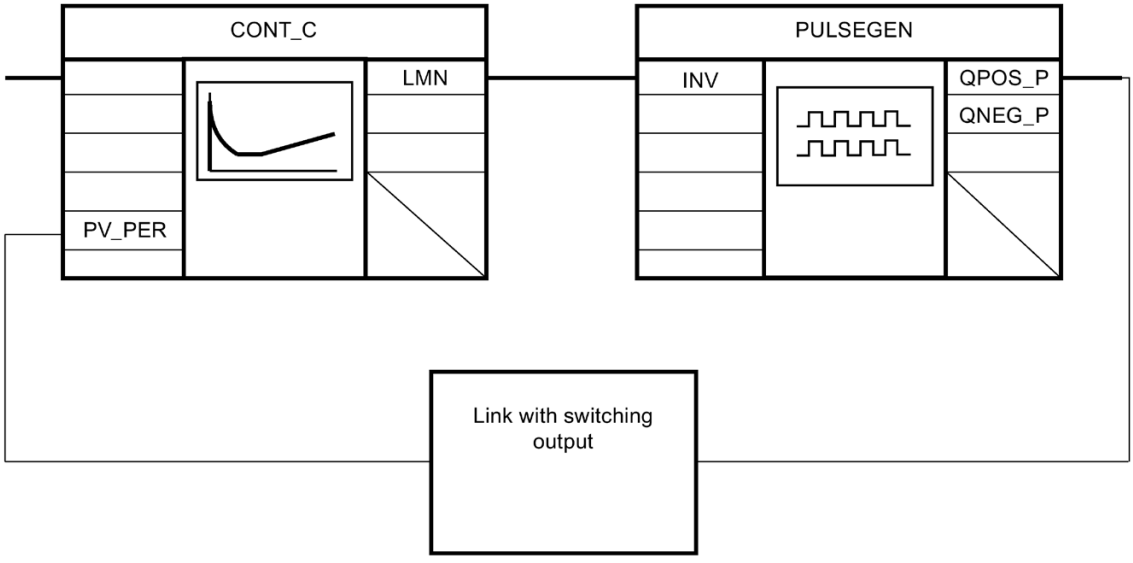

The continuous controller CONT_C forms the output value LMN that is converted by the pulse shaper PULSEGEN into pulse/break signals QPOS_P or QNEG_P.

See also

PULSEGEN (Page 478)

7.1.6 Commissioning CONT_C

Requirements

- The instruction and the technology object are loaded on the CPU.

Procedure

In order to manually determine the optimal PID parameter, proceed as follows:

1. Click the "Start" icon.

   If there is no online connection, this will be established. The current values for the setpoint, process value and output value are recorded.
2. Enter new PID parameters in the "P", "I", "D" and "Delay time" fields.
3. Click on the icon "Send parameter to CPU" in the "Tuning" group.
4. Select the "Change setpoint" check box in the "Current values" group.
5. Enter a new setpoint and click in the "Current Values" group on the icon .
6. Clear the "Manual mode" check box.

   The controller works with the new PID parameters and controls the new setpoint.
7. Check the quality of the PID parameter to check the curve points.
8. Repeat steps 2 to 6 until you are satisfied with the controller results.

7.2 CONT_S

7.2.1 Technology object CONT_S

The technology object CONT_S provides a step controller for actuators with integrating behavior and is used to control technical temperature processes with binary output value output signals. The technology object corresponds to the instance data block of the CONT_S instruction. The operating principle is based on the PI control algorithm of the sampling controller. The step controller operates without a position feedback signal. Both manual and automatic mode are possible.

S7-1500
All parameters and tags of the technology object are retentive and can only be changed during download to the device if you completely download CONT_S.

See also

Overview of software controller (Page 39)

Add technology objects (Page 41)

Configure technology objects (Page 42)

Downloading technology objects to device (Page 44)

CONT_S (Page 473)

7.2.2 Configure controller difference CONT_S

Use process value periphery

To use the process value in the periphery format at the PV_PER input parameter, follow these steps:

1. Select the "Enable I/O" check box.
2. If the process value is available as a physical quantity, enter the factor and offset for the scaling in percent.
   The process value is then determined according to the following formula:
   PV = PV_PER × PV_FAC + PV_OFF

Use internal process values

To use the process value in the floating-point format at the PV_IN input parameter, follow these steps:

1. Clear the "Enable I/O" check box.

Control deviation

Set a deadband range under the following requirement:

- The process value signal is noisy.
- The controller gain is high.
- The derivative action is activated.

The noise component of the process value causes strong deviations of the manipulated variable in this case. The deadband suppresses the noise component in the steady controller state. The deadband range specifies the size of the deadband. With a deadband range of 0.0, the deadband is turned off.

See also

Mode of operation CONT_S (Page 474)

7.2.3 Configuring control algorithm CONT_S

PID algorithm

1. Enter the "proportional amplification" for the P-component.
2. Enter the integration time for the time behavior of the I-component.
   With an integration time of 0.0, the I-component is switched off.

See also

Mode of operation CONT_S (Page 474)

7.2.4 Configure manipulated value CONT_S

General

You can set CONT_S in the manual or automatic mode.

1. To set a manual manipulated value, activate the "Activate manual mode" option check box.
   Enter a manual manipulated value for the input parameters LMNUP and LMNDN.

Pulse generator

1. Enter the minimum impulse duration and minimum pause duration.
   The values must be greater than or equal to the cycle time for the input parameter CYCLE. The frequency of operation is reduced through this.
2. Enter the motor setting time.
   The value must be greater than or equal to the cycle time of the input parameter CYCLE.

See also

Mode of operation CONT_S (Page 474)

7.2.5 Commissioning CONT_S

Requirements

- The instruction and the technology object have been loaded to the CPU.

Procedure

To manually determine the optimal PID parameters, proceed as follows:

1. Click the "Start" icon.

   If there is no online connection, this will be established. The current values for the setpoint, process value and output value are recorded.
2. In the fields "P" and "I", enter a new proportional value and a new integration time.
3. Click on the icon "Send parameter to CPU" in the "Tuning" group.
4. Select the "Change setpoint" check box in the "Current values" group.
5. Enter a new setpoint and click in the "Current Values" group on the icon .
6. Clear the "Manual mode" check box.

   The controller works with the new parameters and controls the new setpoint.
7. Check the quality of the PID parameter to check the curve points.
8. Repeat steps 2 to 6 until you are satisfied with the controller results.

7.3 TCONT_CP

7.3.1 Technology object TCONT_CP

The technology object TCONT_CP provides a continual temperature controller with pulse generator. It corresponds to the instance data block of the instruction TCONT_CP. The operation is based on the PID control algorithm of the sampling controller. Both manual and automatic mode are possible.

The instruction TCONT_CP calculates the proportional, integral and derivative parameters for your controlled system during pretuning. "Fine tuning" can be used to tune the parameters further. You can also enter the PID parameters manually.

S7-1500
All parameters and tags of the technology object are retentive and can only be changed during download to the device if you completely download TCONT_CP.

See also

Overview of software controller (Page 39)

Add technology objects (Page 41)

Configure technology objects (Page 42)

Downloading technology objects to device (Page 44)

TCONT_CP (Page 489)

7.3.2 Configure TCONT_CP

7.3.2.1 Controller difference

Use process value periphery

To use the input parameter PV_PER, proceed as follows:

1. Select the entry "Periphery" from the "Source" list.
2. Select the "sensor type".
   Depending on the sensor type, the process value is scaled according to different formulas.
   - Standard
     Thermoelements; PT100/NI100

     PV = 0.1 × PV_PER × PV_FAC + PV_OFFS
   - Cooling;
     PT100/NI100

     PV = 0.01 × PV_PER × PV_FAC + PV_OFFS
   - Current/voltage

     PV = 100/27648 × PV_PER × PV_FAC + PV_OFFS
3. Enter the factor and offset for the scaling of the process value periphery.

Use internal process values

To use the input parameter PV_IN, proceed as follows:

1. Select the entry "Internal" from the "Source" list.

Control deviation

Set a deadband range under the following requirement:

- The process value signal is noisy.
- The controller gain is high.
- The derivative action is activated.

The noise component of the process value causes strong deviations of the manipulated variable in this case. The deadband suppresses the noise component in the steady controller state. The deadband range specifies the size of the deadband. With a deadband range of 0.0, the deadband is turned off.

See also

Mode of operation TCONT_CP (Page 490)

7.3.2.2 Controlling algorithm

General

1. Enter the "Sampling time PID algorithm".
   A controller sampling time should not exceed 10 % of the determined integratl action time of the controller (TI).
2. If the controller structure contains a proportional action, enter the "proportional gain".
   A negative proportional gain inverts the rule meaning.

Proportional action

For changes of the setpoint, it may lead to overshooting of the proportional action. Through the weighting of the proportional action, you can select how strongly the proportional action should react when setpoint changes are made. The weakening of the proportional action is reached through a compensation of the integral action.

1. To weaken the proportional action for setpoint changes, enter a "Proportional action weighting".
   - 1.0: Proportional action for setpoint change is fully effective
   - 0.0: Proportional action for setpoint change is not effective

Integral action

With a limitation of the manipulated value, the integral action is stopped. With a control deviation that moves the integral action in the direction of an internal setting range, the integral action is released again.

1. If the controller structure contains an integral action, enter the "integral action time".
   With an integral action time of 0.0, the integral action is switched off.
2. To give the integral action an initialization value, select the "Initialize integral action" check box and enter the "Initialization value".
   Upon restart or COM_RST = TRUE, the integral action is set to this value.

Derivative action

1. If the controller structure contains a derivative action, enter the derivative action time (TD) and the coefficients DT1 (D_F).
   With switched derivative action, the following equation should be maintained:
   TD = 0.5 × CYCLE× D_F.
   The delay time is calculated from this according to the formula:
   delay time = TD/D_F

Set PD-controller with operating point

1. Enter the integral action time 0.0.
2. Activate the "Initialize integral action" check box.
3. Enter the operating point as the initialization value.

Set P-controller with operating point

1. Set a PD-controller with an operating point.
2. Enter the derivative action time 0.0.
   The derivative action is disabled.

Control zone

The control zone limits the value range of the control deviation. If the control deviation is outside of this value range, the manipulated value limits are used.

With an occurrence in the control zone, the derivative action leads to a very quick reduction of the manipulated variable. Thus, the control zone only makes sense for switched on derivative actions. Without control zone, only the reducing proportional action would reduce the manipulated value. The control zone leads to a quick oscillation without over/under shooting if the emitted minimum or maximum manipulated values are removed from the manipulated value required for the new operating point.

1. Activate the "Activate" check box in the "control zone" group.
2. Enter a setpoint value in the "Width" input field from which the process value may deviate above or below.

See also

Mode of operation TCONT_CP (Page 490)

7.3.2.3 Manipulated value continual controller

Manipulated value limits

The manipulated value is limited at the top and bottom so that it can only accept valid values. You cannot turn off the limitation. Exceeding the limits is displayed through the output parameters QLMN_HLM and QLMN_LLM.

1. Enter a value for the high and low manipulated value limits.

Scaling

The manipulated value can be scaled for output as a floating point and periphery value through a factor and an offset according to the following formula.

Scaled manipulated value = manipulated value x factor + offset

Default is a factor of 1.0 and an offset of 0.0.

1. Enter a value for the factor and offset.

Pulse generator

The pulse generator must be turned on for a continual controller.

1. Disable the "Activate" option check box in the "Pulse generator" group.

See also

Mode of operation TCONT_CP (Page 490)

7.3.2.4 Manipulated value pulse controller

Pulse generator

The analog manipulated value (LmnN) can be emitted through pulse-duration modulation on the output parameter QPULSE as an impulse sequence.

To use the pulse generator, proceed as follows:

1. Activate the "Activate" option check box in the "pulse generator" group.
2. Enter the "sampling time pulse generator", the "minimum impulse/break duration" and the "period duration".

The following graphics clarify the connection between the "sampling pulse generator" (CYCLE_P), the "minimum impulse/break duration" (P_B_TM) and the "period duration" (PER_TM):

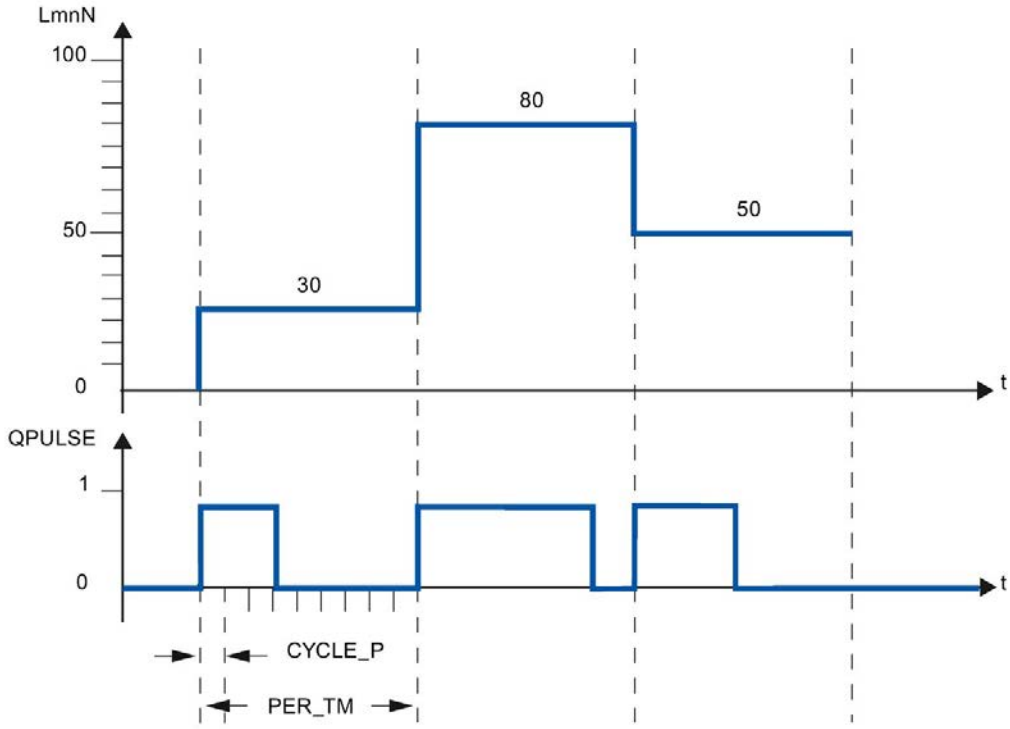

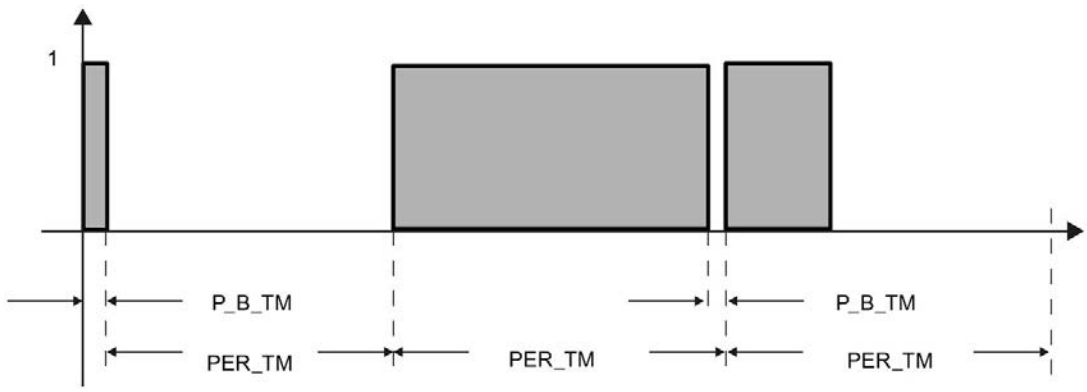

Sampling time pulse generator

The sampling time pulse generator must agree with the time tact of the cyclic interrupt OB being called. The duration of the created impulse is always a whole number factor of this value. For an adequately precise manipulated value resolution, the following relationship should apply:
CYCLE_P ≤ PER_TM/50

Minimum impulse/break duration

Through the minimum impulse/break duration, short on or off times on the actuator are avoided. An impulse smaller than P_B_TM is suppressed.

Recommended are values P_B_TM ≤ 0.1 × PER_TM.

Period duration

The period duration should not exceed 20% of the determined integration time of the controller (TI):
PER_TM ≤ TI/5

Example for the effect of the parameter CYCLE_P, CYCLE and PER_TM:

Period duration PER_TM = 10 s

Sampling time PID-algorithm CYCLE = 1 s

Sampling time pulse generator CYCLE_P = 100 ms.

Every second, a new manipulated value, every 100 ms the comparison of the manipulated value occurs with the previously emitted impulse length and break length.

- If an impulse is emitted, there are 2 possibilities:
  - The calculated manipulated value is larger than the previous impulse length/PER_TM. Then the impulse is extended.
  - The calculated manipulated value is less than or equal to the previous impulse length/PER_TM. Then no impulse signal will be emitted.
- If no impulse is emitted, there are also 2 possibilities:
  - The value (100 % - calculated manipulated value) is greater than the previous break length / PER_TM. Then the break is extended.
  - The value (100 % - calculated manipulated value) is less than or equal to the previous break length / PER_TM. Then an impulse signal will be emitted.

See also

Mode of operation TCONT_CP (Page 490)

Operating principle of the pulse generator (Page 499)

7.3.3 Commissioning TCONT_CP

7.3.3.1 Optimization of TCONT_CP

Application possibilities

The controller optimization for heating or cooling processes from process type I is applicable. But you can use the block for processes with higher levels like process type II or III.

The PI/PID parameters are automatically determined and set. The controller draft is designed for an optimal disruption behavior The "precise" parameters resulting from this lead to overshooting of 10% to 40% of the jump height for setpoint jump heights.

Phases of controller optimization

For the controller optimization, individual phases are run through, which you can read on the parameter PHASE .

PHASE = 0

No tuning is running. TCONT_CP works in automatic or manual mode.

During PHASE = 0, you can make sure that the controlled system fulfills the requirements for an optimization.

At the end of the optimization, TCONT_CP changes back into PHASE = 0.

PHASE = 1

TCONT_CP is prepared for optimization. PHASE = 1 may only be started if the requirements for an optimization are fulfilled.

During PHASE = 1, the following values are determined:

- Process value noise NOISE_PV
- Initial slope PVDT0
- Average of the manipulated variable
- Sampling time PID algorithm CYCLE
- Sampling time pulse generator CYCLE_P

PHASE = 2

In phase 2, the process value attempts to detect the point of inflection with a constant manipulated variable. This method prevents the point of inflection from being found too early as a result of process variable noise.

With the pulse controller, the process variable is averaged over N pulse cycles and then made available to the controller stage. There is a further averaging of the process variable in the controller stage: Initially, this averaging is inactive; in other words, averaging always takes place over 1 cycle. As long as the noise exceeds a certain level, the number of cycles is doubled.

The period and amplitude of the noise are calculated. The search for the point of inflection is canceled and phase 2 is exited only when the gradient is always smaller than the maximum rise during the estimated period. TU and T_P_INF are, however, calculated at the actual point of inflection.

Tuning, however, is only ended when the following two conditions are met:

1. The process value is more than 2*NOISE_PV away from the point of inflection.
2. The process value has exceeded the point of inflection by 20%.

Note

When exciting the process using a setpoint step change, tuning is ended at the latest when the process value exceeds 75% of the setpoint step change (SP_INT-PV0) (see below).

PHASE = 3, 4, 5

The phases 3, 4 and 5 last 1 cycle each.

In Phase 3, the valid PI/PID parameters are saved before the optimization and the process parameter is calculated.

In Phase 4, the new PI/PID parameters are calculated.

In Phase 5, the new manipulated variable is calculated and the controlled system is given.

PHASE = 7

The process type is inspected in Phase 7, because TCONT_CP always changes to automatic mode after optimization. The automatic mode starts with LMN = LMN0 + 0.75*TUN_DLMN as a manipulated variable. The testing of the process type occurs **in the automatic mode** with the recently recalculated controller parameters and ends at the latest 0.35*TA (equilibrium time) after the point of inflection. If the process order deviates strongly from the estimated value, the controller parameters are newly calculated and STATUS_D is counted up by 1, otherwise, the controller parameters remain unchanged.

Then the optimization mode is complete and TCONT_CP is back in PHASE = 0. At the STATUS_H parameter, you can identify whether the tuning was successfully completed.

Premature cancellation of the optimization

In Phase 1, 2 or 3, you can cancel the optimization by resetting TUN_ON = FALSE without calculating new parameters. The controller starts in the automatic mode with LMN = LMN0 + TUN_DLMN. If the controller was in manual mode before the tuning, the old manual manipulated variable is output.

If the tuning is canceled in Phase 4, 5 or 7 with TUN_ON = FALSE, the determined controlled parameters are contained until then.

7.3.3.2 Requirements for an optimization

Transient response

The process must have a stable, asymptotic transient response with time lag.

The process value must settle to steady state after a step change of the manipulated variable. This therefore excludes processes that already show an oscillating response without control, as well as processes with no recovery (integrator in the control system).

WARNING

This may result in death, severe injury or considerable property damage.

During an tuning, the parameter MAN_ON is ineffective. Through this, the output value or process value may take on undesired - even extreme - values.

The output value is defined through the tuning. To cancel the tuning, you first have to set TUN_ON = FALSE. This makes MAN_ON effective again.

Guaranteeing a stationary initial state (phase 0)

With lower-frequency oscillations of the process value, for example, due to incorrect controller parameters, the controller must be put in manual mode before the tuning is started and wait for the oscillation to stop. Alternatively, you could switch to a "soft" set PI controller (small loop gain large integration time).

Now you have to wait until the stationary state is reached, this means, until the process value and output value have a steady state. It is also permissible to have an asymptotic transient oscillation or slow drifting of the process value (stationary state, see the following image). The output value must be constant or fluctuate by a constant average.

Note

Avoid changing the manipulated variable shortly before starting the tuning. A change of the manipulated variable can occur in an unintended manner through the establishment of the test conditions (for example, closing an oven door)! If this does happen, you have to at least wait until the process value has an asymptotic transient oscillation in a stationary state again. Better controller parameters can be reached if you wait until the transient effect has completely subsided.

In the following image, the transient oscillation is illustrated in the stationary state:

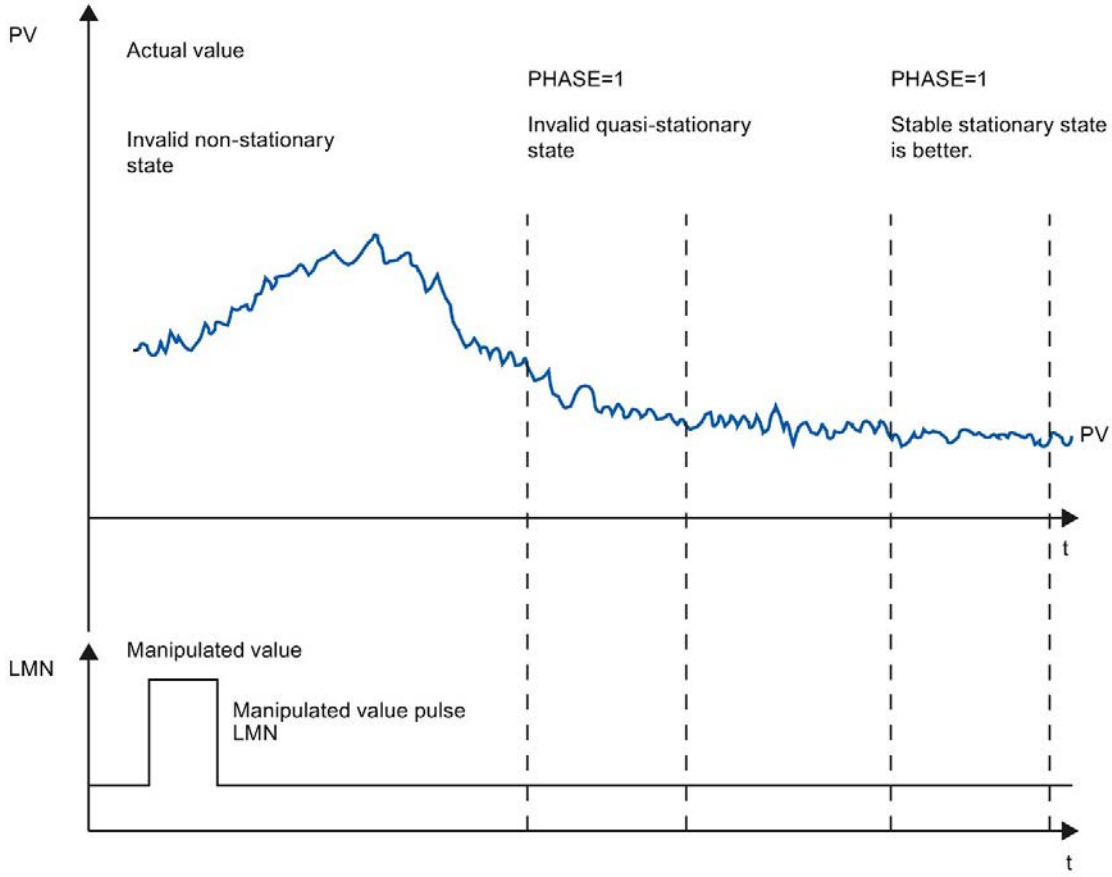

Linearity and operating range

The process response must be linear across the operating range. Non-linear response occurs, for example, when an aggregation state changes. Tuning must take place in a linear part of the operating range.

This means, during tuning and normal control operation non-linear effects within the operating range must be insignificant. It is, however possible to retune the process when the operating point changes, providing tuning is repeated in the close vicinity of the new operating point and non-linearity does not occur during tuning.

If a specific static non-linearity (e.g., valve characteristics) is known, it is always advisable to compensate this with a polyline to linearize the process response.

Disturbance in temperature processes

Disturbances such as the transfer of heat to neighboring zones must not affect the overall temperature process too much. For example, when optimizing the zones of an extruder, all zones must be heated simultaneously.

7.3.3.3 Possibilities for optimization

The following possibilities for tuning exist:

- Pretuning
- Fine tuning
- Manual fine-tuning in control mode

Pretuning

During this tuning, the working point is approached from the cold state through a setpoint jump.

With TUN_ON = TRUE, you can establish the tuning readiness. The controller switches from PHASE = 0 to PHASE = 1.

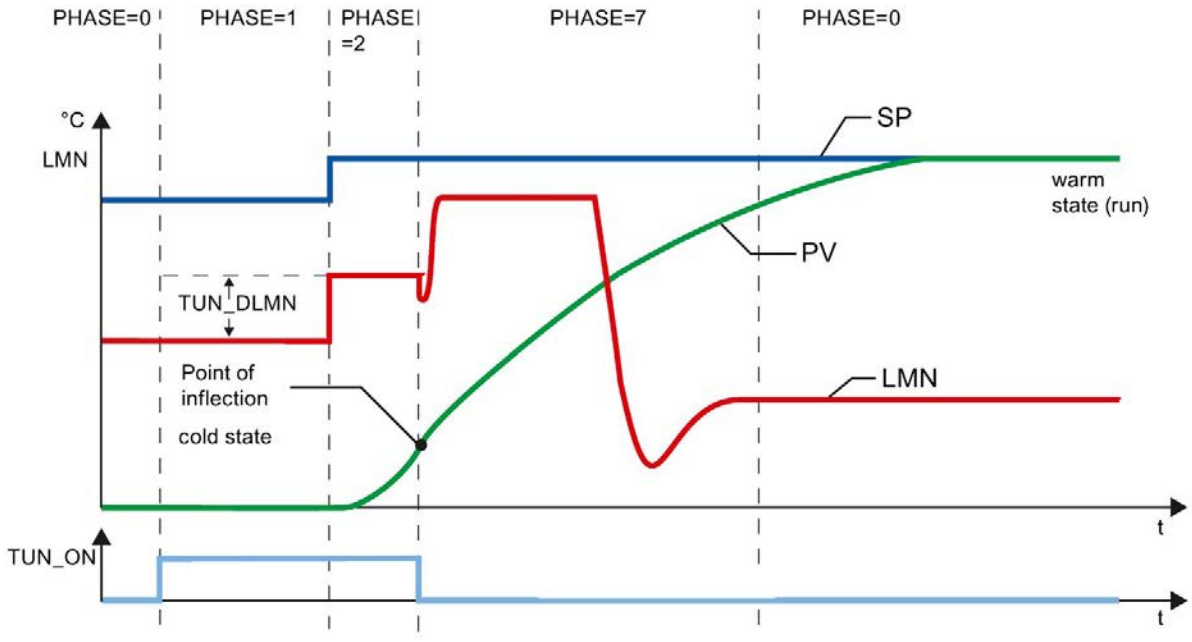

The tuning manipulated variable (LMN0 + TUN_DLMN) is activated by a setpoint change (transition phase 1 -> 2). The setpoint is not effective until the inflection point has been reached (automatic mode is not enabled until this point is reached).

The user is responsible for defining the output excitation delta (TUN_DLMN) according to the permitted process value change. The sign of TUN_DLMN must be set depending on the intended process value change (take into account the direction in which the control is operating).

The setpoint step change and TUN_DLMN must be suitably matched. If the value of TUN_DLMN is too high, there is a risk that the point of inflection will not be found before 75% of the setpoint step change is reached.

TUN_DLMN must nonetheless be high enough to ensure that the process value reaches at least 22 % of the setpoint step change. Otherwise, the process will remain in tuning mode (phase 2).

Remedy: Reduce the setpoint value during the inflection point search.

Note

If processes are extremely sluggish, it is advisable during tuning to specify a target setpoint that is somewhat lower than the desired operating point and to monitor the status bits and PV closely (risk of overshooting).

Tuning only in the linear range:

The signals of certain processes (e.g., zinc or magnesium smelters) will pass a non-linear area at the approach of the operating range (change in the state of aggregation).

By selecting a suitable setpoint step change, tuning can be limited to the linear range. When the process value has passed 75% of the setpoint step change (SP_INT-PV0), tuning is ended.

At the same time, TUN_DLMN should be reduced to the extent that the point of inflection is guaranteed to be found before 75% of the setpoint step change is reached.

Fine tuning

During this tuning, the process with a constant setpoint is activated through a output value jump.

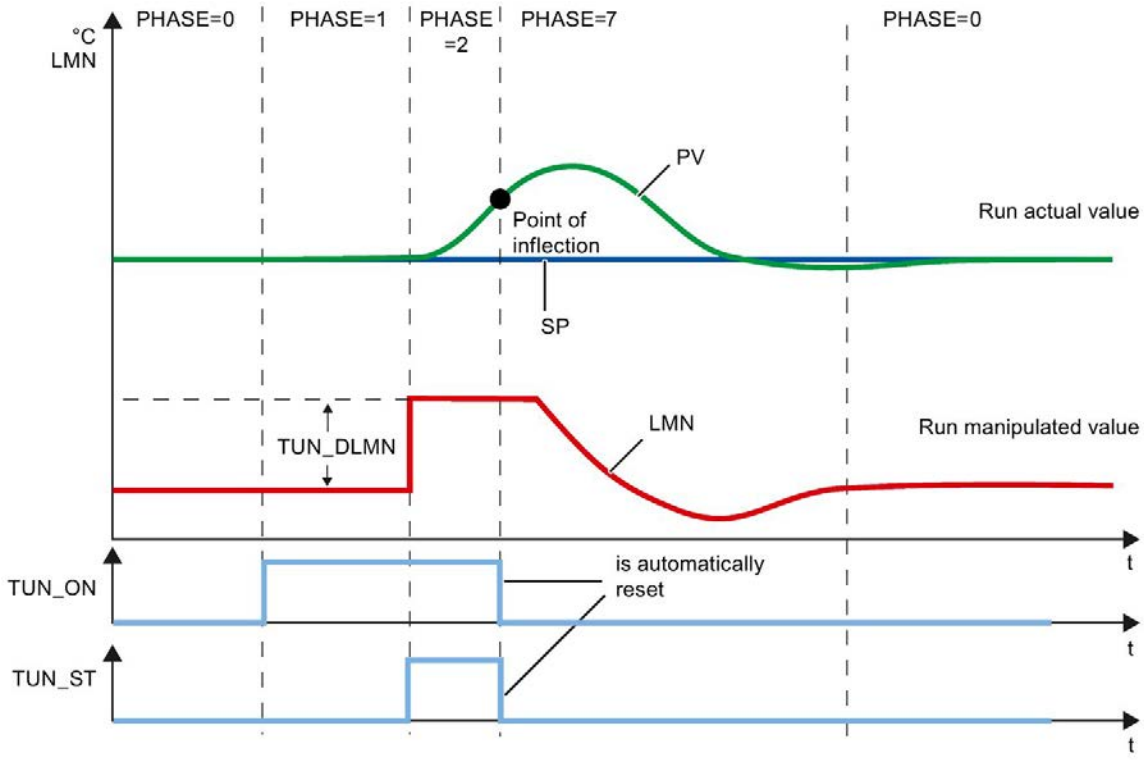

The tuning manipulated variable (LMN0 + TUN_DLMN) is activated by setting the start bit TUN_ST (transition from phase 1 -> 2). When you modify the setpoint value, the new value will not take effect until the point of inflection has been reached (automatic mode will not be enabled until this point has been reached).

The user is responsible for defining the output excitation delta (TUN_DLMN) according to the permitted process value change. The sign of TUN_DLMN must be set depending on the intended process value change (take into account the direction in which the control is operating).

NOTICE
Safety off at 75% is not available when you excite the process via TUN_ST. Tuning is ended when the point of inflection is reached. However, in noisy processes the point of inflection may be significantly exceeded.

Manual fine-tuning in control mode

The following measures can be employed to achieve an overshoot-free setpoint response:

- Adapting the control zone
- Optimize command action
- Attenuation of control parameters
- Modifying control parameters

7.3.3.4 Tuning result

The left cipher of STATUS_H displays the tuning status

STATUS_H	Result
0	Default, i.e., new controller parameters have not (yet) been found.
10000	Suitable control parameters found.
2xxxx	Control parameters have been found via estimated values; check the control response or check the STATUS_H diagnostic message and repeat controller tuning.
3xxxx	An operator error has occurred; check the STATUS_H diagnostic message and repeat controller tuning.

The CYCLE and CYCLE_P sampling times were already checked in phase 1.

The following controller parameters are updated on TCONT_CP:

- P (proportional GAIN)
- I (integration time TI)
- D (derivative time TD)
- Weighting of the proportional action PFAC_SP
- Coefficient DT1 (D_F)
- Control zone on/off CONZ_ON
- Control zone width CON_ZONE

The control zone is only activated if the process type is suitable (process type I and II) and a PID controller is used (CONZ_ON = TRUE).

Depending on PID_ON, control is implemented either with a PI or a PID controller. The old controller parameters are saved and can be retrieved with UNDO_PAR. A PI parameter record and a PID parameter record are saved additionally in the PI_CON and PID_CON structures. Using LOAD_PID and making a suitable setting for PID_ON, it is also possible to switch later between the tuned PI or PID parameters.

7.3.3.5 Parallel tuning of controller channels

Adjacent zones (strong heat coupling)

If two or more controllers are controlling the temperature, on a plate, for example (in other words, there are two heaters and two measured process values with strong heat coupling), proceed as follows:

1. OR the two outputs QTUN_RUN.
2. Interconnect each TUN_KEEP input with the output of the OR element.
3. Start both controllers by specifying a setpoint step change at the same time or by setting TUN_ST at the same time.

The following schematic illustrates the parallel tuning of controller channels.

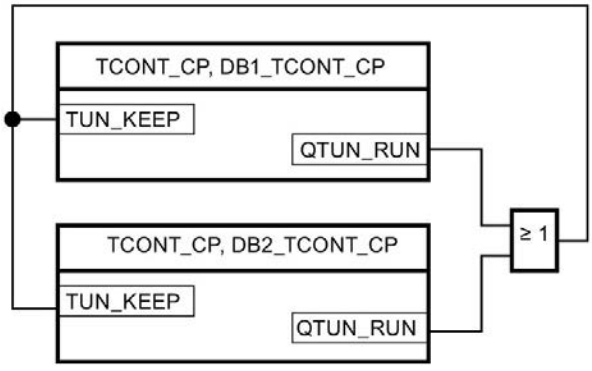

Advantage:

Both controllers output LMN0 + TUN_DLMN until both controllers have left phase 2. This prevents the controller that completes tuning first from falsifying the tuning result of the other controller due to the change in its manipulated variable.

NOTICE
Reaching 75% of the setpoint step change causes an exiting of phase 2 and resetting of output QTUN_RUN. However, automatic mode does not start until TUN_KEEP is also 0.

Adjacent zones (weak heat coupling)

In general terms, tuning should be carried out to reflect the way in which the controller will operate subsequently. If zones are operated together during production such that the temperature differences between the zones remain the same, the temperature of the adjacent zones ought to be increased accordingly during tuning.

Differences in temperature at the beginning of the tuning are irrelevant since they will be compensated by the initial heating (-> initial rise = 0).

7.3.3.6 Fault descriptions and corrective measures

Compensating operator errors

Operator error	STATUS and action	Comment
TUN_ON and setpoint step change or TUN_ST are set simultaneously	Transition to phase 1; however, tuning is not started. • SP_INT = SP_{old} or • TUN_ST = FALSE	The setpoint change is canceled. This prevents the controller from settling to the new setpoint value and from leaving the stationary operating point unnecessarily.
Effective TUN_DLMN < 5% (end of phase 1)	STATUS_H = 30002 • Transition to phase 0 • TUN_ON = FALSE • SP = SP_{old}	Tuning is canceled. The setpoint change is canceled. This prevents the controller from settling to the new setpoint value and from leaving the stationary operating point unnecessarily.

Point of inflection not reached (only if excited by setpoint step change)

At the latest, tuning is ended when the process value has passed 75% of the setpoint step change (SP_INT-PV0). This is signaled by "inflection point not reached" in STATUS_H (2xx2x).

The currently valid setpoint always applies. By reducing the setpoint, it is possible to achieve an earlier end of the tuning function.

In typical temperature processes, cancelation of tuning at 75% of the setpoint step change is normally adequate to prevent overshoot. However, **caution** is advised, particularly in processes with a greater delay (TU/TA > 0.1, process type III). If manipulated variable excitation is too strong compared to the setpoint step change, the process value can overshoot heavily (up to a factor of 3).

In higher-order processes, if the point of inflection is still a long way off after reaching 75% of the setpoint step change, there will be significant overshoot. In addition, the controller parameters are too stringent. In this case, you should reduce the controller parameters or repeat the attempt.

The following schematic illustrates the overshoot of the process variable when the excitation is too strong (process type III):

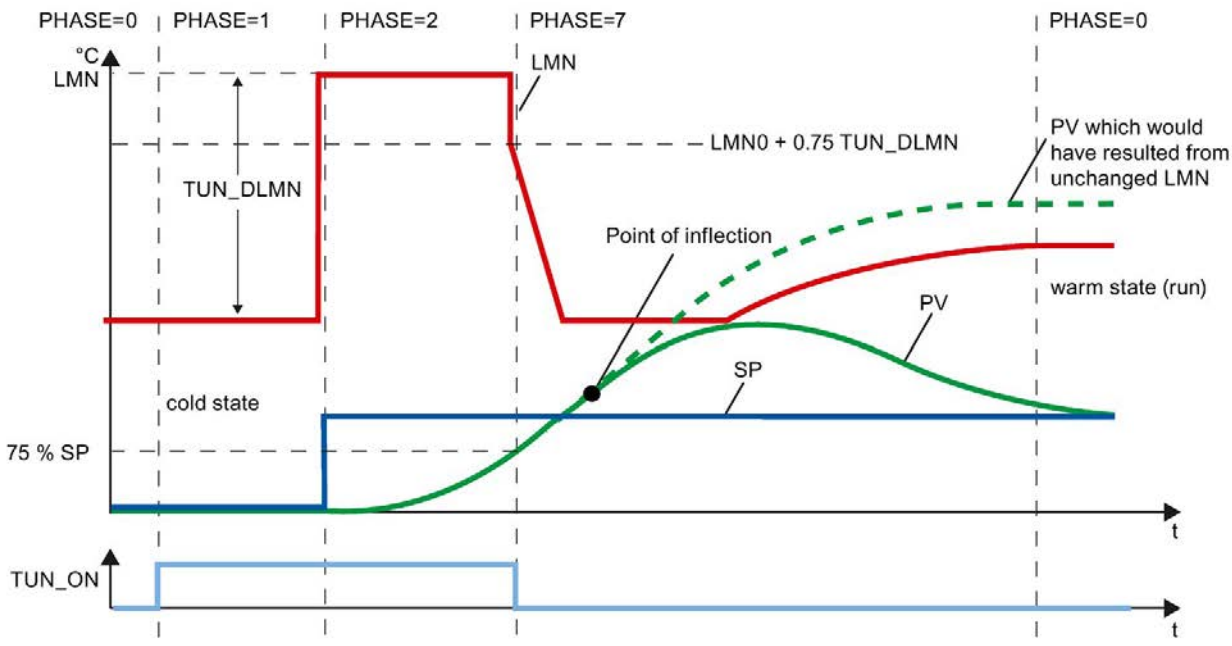

In typical temperature processes, cancelation shortly before reaching the point of inflection is not critical in terms of the controller parameters.

If you repeat the attempt, reduce TUN_DLMN or increase the setpoint step change.

Principle: The value of the manipulated variable used for tuning must be suitable for the setpoint step change.

Error estimating the delay time or order

The delay time (STATUS_H = 2x1xx or 2x3xx) or order (STATUS_H = 21xxx or 22xxx) were not acquired correctly. Operation continues with an estimate that can lead to non-optimum controller parameters.

Repeat the tuning procedure and ensure that disturbances do not occur at the process value.

Note

The special case of a PT1-only process is also indicated by STATUS_H = 2x1xx (TU <= 3*CYCLE). In this case, it is not necessary to repeat the attempt. Reduce the controller parameters if the control oscillates.

Quality of measuring signals (measurement noise, low-frequency interference)

The results of tuning can be distorted by measurement noise or by low-frequency interference. Note the following:

- If you encounter measurement noise, set the sampling frequency higher rather than lower. During one noise period, the process value should be sampled at least twice. In pulse mode, integrated mean value filtering can be helpful. This assumes, however, that the process variable PV is transferred to the instruction in the fast pulse cycle. The degree of noise should not exceed 5% of the useful signal change.
- High-frequency interference cannot be filtered out by TCONT_CP. This should be filtered earlier in the measuring sensor to prevent the aliasing effect.

  The following schematic illustrates the aliasing effect when the sampling time is too long:

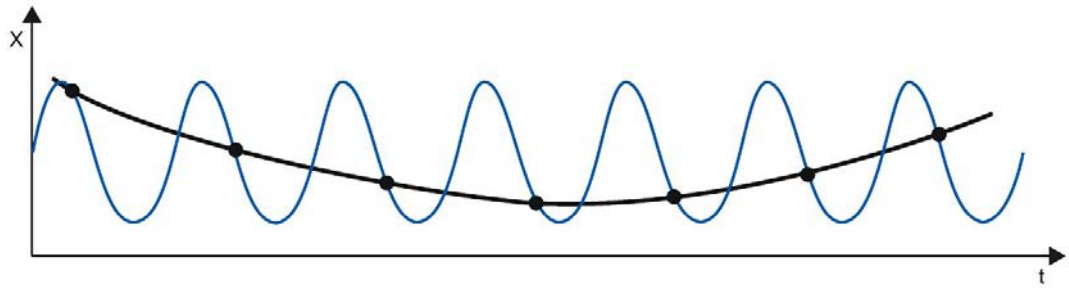

- With low-frequency interference, it is relatively easy to ensure an adequately high sampling rate. However, the TCONT_CP must then generate a uniform measuring signal by having a large interval in the mean value filtering. Mean value filtering must extend over at least two noise periods. Internally in the block, this soon results in higher sampling times such that the accuracy of the tuning is adversely affected. Adequate accuracy is guaranteed with at least 40 noise periods up to the point of inflection.

  Possible remedy when repeating the attempt:

  Increase TUN_DLMN.

Overshoot

Overshoot can occur in the following situations:

Situation	Cause	Remedy
End of tuning	• Excitation by a too high manipulated value change compared with the set-point step change (see above). • PI controller activated by PID_ON = FALSE.	• Increase the setpoint step change or reduce the manipulated value step change. • If the process permits a PID controller, start tuning with PID_ON = TRUE.
Tuning in phase 7	Initially, less aggressive controller parameters were determined (process type III); these can lead to an overshoot in phase 7.	-
Control mode	PI controller with PFAC_SP = 1.0 for process type I.	If the process permits a PID controller, start tuning with PID_ON = TRUE.

7.3.3.7 Performing pretuning

Requirements

- The instruction and the technology object are loaded on the CPU.

Procedure

To manually determine the optimum PID parameters for initial commissioning, follow these steps:

1. Click the "Start" icon.

   If there is no online connection, this will be established. The current values for the setpoint, process value and output value are recorded.

2. Select "Pretuning" from the "Mode" drop-down list.

   TCONT_CP is ready for tuning.

3. In the "Output value jump" field, specify how much the output value should be increased.
4. Enter a setpoint in the "Setpoint" field. The output value jump only takes effect when another setpoint is entered.
5. Click the "Start tuning" icon.

   The pretuning starts. The status of the tuning is displayed.

7.3.3.8 Performing fine tuning

Requirements

- The instruction and the technology object are loaded on the CPU.

Procedure

To determine the optimal PID parameters at the operating point, follow these steps:

1. Click the "Start" icon.

   If there is no online connection, this will be established. The current values for the setpoint, process value and output value are recorded.

2. Select "Fine tuning" from the "Mode" drop-down list.

   TCONT_CP is ready for tuning.

3. In the "Output value jump" field, specify how much the output value should be increased.
4. Click the "Start tuning" icon.

   Fine tuning starts. The status of the tuning is displayed.

7.3.3.9 Cancelling pretuning or fine tuning

To cancel pretuning or fine tuning, click on the ■ icon, "Stop tuning".

If the PID parameters have not yet been calculated and stored, TCONT_CP starts in automatic mode LMN = LMN0 + TUN_DLMN. If the controller was in manual mode before the tuning, the old manual manipulated variable is output.

If the calculated PID parameters have already been saved, TCONT_CP starts in automatic mode and works with the previously determined PID parameters.

7.3.3.10 Manual fine-tuning in control mode

The following measures can be employed to achieve an overshoot-free setpoint response:

Adapting the control zone

During tuning, "TCONT_CP" determines a control zone CON_ZONE and activated if the process type is suitable (process type I and II) and a PID controller is used (CONZ_ON = TRUE). In control mode, you can modify the control zone or switch it off completely (with CONZ_ON = FALSE).

Note

Activating the control zone with higher-order processes (process type III) does not normally provide any benefit since the control zone is then larger than the control range that can be achieved with a 100% manipulated variable. There is also no advantage in activating the control zone for PI controllers.

Before you switch on the control zone manually, make sure that the control zone is not too narrow. If the control zone is set too narrow, oscillations occur in the manipulated variable and the process value.

Continuous attenuation of the control response with PFAC_SP

The control response can be attenuated with the PFAC_SP parameter. This parameter specifies the percentage of proportional component that is effective for setpoint step changes.

Regardless of the process type, PFAC_SP is set to a default value of 0.8 by the tuning function; you can later modify this value if required. To limit overshoot during setpoint step changes (with otherwise correct controller parameters) to approximately 2%, the following values are adequate for PFAC_SP:

	Process type I	Process type II	Process type III
	Typical temperature process	Intermediate range	Higher-order temperature process
PI	0.8	0.82	0.8
PID	0.6	0.75	0.96

Adjust the default factor (0.8) in the following situations, in particular:

- Process type I with PID (0.8 →0.6): Setpoint step changes within the control zone still lead to approximately 18% overshoot with PFAC_SP = 0.8.
- Process type III with PID (0.8 →0.96): Setpoint step changes with PFAC_SP = 0.8 are attenuated too strongly. This leads to a significantly slower response time.

Attenuation of control parameters

When a closed-loop control circuit oscillates or if overshoot occurs after setpoint step changes, you can reduce the controller GAIN (e.g., to 80% of the original value) and increase integral time TI (e.g., to 150% of the original value). If the analog output value of the continuous controller is converted to binary actuating signals by a pulse shaper, quantization noise may cause minor permanent oscillation. You can eliminate this by increasing the controller deadband DEADB_W.

Modifying control parameters

Proceed as follows to modify control parameters:

1. Save the current parameters with SAVE_PAR.
2. Modify the parameters.
3. Test the control response.

If the new parameter settings are worse than the old ones, retrieve the old parameters with UNDO_PAR.

7.3.3.11 Performing fine tuning manually

Requirements

- The instruction and the technology object have been loaded to the CPU.

Procedure

To manually determine the optimal PID parameters, proceed as follows:

1. Click the "Start" icon.

   If there is no online connection, this will be established. The current values for the setpoint, process value and output value are recorded.
2. Select "Manual" from the "Mode" drop-down list.
3. Enter the new PID parameters.
4. Click on the icon "Send parameter to CPU" in the "Tuning" group.
5. Select the "Change setpoint" check box in the "Current values" group.
6. Enter a new setpoint and click in the "Current Values" group on the icon .
7. Clear the "Manual mode" check box.

   The controller works with the new PID parameters and controls the new setpoint.
8. Check the quality of the PID parameter to check the curve points.
9. Repeat steps 3 to 8 until you are satisfied with the controller results.

7.4 TCONT_S

7.4.1 Technology object TCONT_S

The technology object TCONT_S provides a step controller for actuators with integrating behavior and is used to control technical temperature processes with binary output value output signals. The technology object corresponds to the instance data block of the TCONT_S instruction. The operating principle is based on the PI control algorithm of the sampling controller. The step controller operates without a position feedback signal. Both manual and automatic mode are possible.

S7-1500
All parameters and tags of the technology object are retentive and can only be changed during download to the device if you completely download TCONT_S.

See also

Overview of software controller (Page 39)

Add technology objects (Page 41)

Configure technology objects (Page 42)

Downloading technology objects to device (Page 44)

TCONT_S (Page 514)

7.4.2 Configure controller difference TCONT_S

Use process value periphery

To use the input parameter PV_PER, proceed as follows:

1. Select the entry "Periphery" from the "Source" list.
2. Select the "sensor type".
   Depending on the sensor type, the process value is scaled according to different formulas.
   - Standard
     Thermoelements; PT100/NI100

     PV = 0.1 × PV_PER × PV_FAC + PV_OFFS
   - Cooling;
     PT100/NI100

     PV = 0.01 × PV_PER × PV_FAC + PV_OFFS
   - Current/voltage

     PV = 100/27648 × PV_PER × PV_FAC + PV_OFFS
3. Enter the factor and offset for the scaling of the process value periphery.

Use internal process values

To use the input parameter PV_IN, proceed as follows:

1. Select the entry "Internal" from the "Source" list.

Control deviation

Set a dead zone range under the following requirement:

- The process value signal is noisy.
- The controller gain is high.
- The derivative action is activated.

The noise component of the process value causes strong deviations of the output value in this case. The dead zone suppresses the noise component in the steady controller state. The dead zone range specifies the size of the dead zone. With a dead zone range of 0.0, the dead zone is turned off.

See also

Mode of operation TCONT_S (Page 515)

7.4.3 Configure controller algorithm TCONT_S

General

1. Enter the "Sampling time PID algorithm".
   A controller sampling time should not exceed 10 % of the determined integral action time of the controller (TI).
2. If the controller structure contains a proportional action, enter the "proportional gain".
   A negative proportional gain inverts the rule meaning.

Proportional action

For changes of the setpoint, it may lead to overshooting of the proportional action. Through the weighting of the proportional action, you can select how strongly the proportional action should react when setpoint changes are made. The weakening of the proportional action is reached through a compensation of the integral action.

1. To weaken the proportional action for setpoint changes, enter a "Proportional action weighting".
   - 1.0: Proportional action for setpoint change is fully effective
   - 0.0: Proportional action for setpoint change is not effective

Integral action

1. If the controller structure contains an integral action, enter the "integral action time".
   With an integral action time of 0.0, the integral action is switched off.

See also

Mode of operation TCONT_S (Page 515)

7.4.4 Configure manipulated value TCONT_S

Pulse generator

1. Enter the minimum impulse duration and minimum pause duration.
   The values must be greater than or equal to the cycle time for the input parameter CYCLE. The frequency of operation is reduced through this.
2. Enter the motor setting time.
   The value must be greater than or equal to the cycle time of the input parameter CYCLE.

See also

Mode of operation TCONT_S (Page 515)

7.4.5 Commissioning TCONT_S

Requirements

- The instruction and the technology object have been loaded to the CPU.

Procedure

To manually determine the optimal PID parameters, proceed as follows:

1. Click the "Start" icon.

   If there is no online connection, this will be established. The current values for the setpoint, process value and output value are recorded.
2. Enter new PID parameters in the "P", "I" and weighting proportional action fields.
3. Click on the icon "Send parameter to CPU" in the "Tuning" group.
4. Select the "Change setpoint" check box in the "Current values" group.
5. Enter a new setpoint and click in the "Current Values" group on the icon .
6. Clear the "Manual mode" check box.

   The controller works with the new parameters and controls the new setpoint.
7. Check the quality of the PID parameter to check the curve points.
8. Repeat steps 2 to 6 until you are satisfied with the controller results.

Auxiliary functions 8

8.1 Polyline

Polyline

The Polyline instruction provides a function with the characteristic curve of the polyline whose points can be used, for example, to linearize the behavior of non-linear sensors.

The Polyline instruction can be used with an S7-1500 CPU Firmware 2.0 and higher and an S7-1200 CPU Firmware 4.2 and higher.

Additional information

Description Polyline (Page 525)

Operating principle Polyline (Page 529)

Input parameters of Polyline (Page 533)

Output parameters of Polyline (Page 533)

Static tags of Polyline (Page 534)

ErrorBits parameter (Page 536)

8.2 SplitRange

SplitRange

The SplitRange instruction splits the output value range of the PID controller into multiple subranges. These subranges enable control of a process that is influenced by multiple actuators.

The SplitRange instruction can be used with an S7-1500 CPU Firmware 2.0 and higher and an S7-1200 CPU Firmware 4.2 and higher.

Additional information

SplitRange description (Page 541)

SplitRange input parameters (Page 544)

SplitRange static tags (Page 545)

SplitRange output parameters (Page 544)

ErrorBits parameter (Page 546)

8.3 RampFunction

RampFunction

The RampFunction instruction limits the slew rate of a signal. A signal jump at the input is output as ramp function of the output value, to achieve a smoother response, for example, without influencing the disturbance reaction.

The RampFunction instruction can be used with an S7-1500 CPU Firmware 2.0 and higher and an S7-1200 CPU Firmware 4.2 and higher.

Additional information

RampFunction description (Page 549)

RampFunction mode of operation (Page 554)

RampFunction input parameters (Page 558)

RampFunction output parameters (Page 558)

RampFunction static tags (Page 559)

ErrorBits parameter (Page 561)

Instructions 9

9.1 PID_Compact

9.1.1 New features of PID_Compact

PID_Compact V2.4

- **Initialization of the integral action**

  PID_Compact now initializes the integral action if you use OverwriteInitialOutputValue together with inverted control logic.

  If you have been using OverwriteInitialOutputValue together with inverted control logic up to now, please note that the sign of the output value changes with PID_Compact V2.4.

PID_Compact V2.3

- **Response of the output value when switching from "Inactive" operating mode to "Automatic mode"**

  The new option IntegralResetMode = 4 was added and defined as default. With IntegralResetMode = 4, the integral action is automatically pre-assigned when switching from "Inactive" operating mode to "Automatic mode" so that a control deviation results in a jump of the output value with identical sign.

- **Initialization of the integral action in automatic mode**

  The integral action can be initialized in automatic mode with the tags OverwriteInitialOutputValue and PIDCtrl.PIDInit. This simplifies the use of PID_Compact for override controls.

PID_Compact V2.2

- **Use with S7-1200**

  As of PID_Compact V2.2, the instruction with V2 functionality can also be used on S7-1200 with firmware version 4.0 or higher.

PID_Compact V2.0

- **Reaction to error**

  The reaction to error has been completely overhauled. PID_Compact now reacts in a more fault-tolerant manner in the default setting. This reaction is set when copying PID_Compact V1.X from an S7-1200 CPU to an S7-1500 CPU.

NOTICE
Your system may be damaged. If you use the default setting, PID_Compact remains in automatic mode when the process value limits are exceeded. This may damage your system. It is essential to configure how your controlled system reacts in the event of an error to protect your system from damage.

  The Error parameter indicates if an error is pending. When the error is no longer pending, Error = FALSE. The ErrorBits parameter shows which errors have occurred. Use ErrorAck to acknowledge the errors and warnings without restarting the controller or clearing the integral action. Switching operating modes no longer clears errors that are no longer pending.

  You can configure the reaction to error with SetSubstituteOutput and ActivateRecoverMode.

- **Substitute output value**

  You can configure a substitute output value that is to be output if an error occurs.

- **Switching the operating mode**

  You specify the operating mode at the Mode in/out parameter and use a rising edge at ModeActivate to start the operating mode. The sRet.i_Mode tag has been omitted.

- **Multi-instance capability**

  You can call up PID_Compact as multi-instance DB. No technology object is created in this case and no parameter assignment interface or commissioning interface is available. You must assign parameters for PID_Compact directly in the multi-instance DB and commission it via a watch table.

- **Startup characteristics**

  The operating mode specified at the Mode parameter is also started on a falling edge at Reset and during a CPU cold restart, if RunModeByStartup = TRUE.

- **ENO characteristics**

  ENO is set depending on the operating mode.

  If State = 0, then ENO = FALSE.

  If State ≠ 0, then ENO = TRUE.

- **Setpoint value specification during tuning**

  You configure the permitted fluctuation of the setpoint during tuning at the CancelTuningLevel tag.

- **Value range for output value limits**

  The value 0.0 no longer has to fall within the output value limits.

- **Pre-assigning the integral action**

  Using the tags IntegralResetMode and OverwriteInitialOutputValue, you can determine the pre-assignment of the integral action when switching from "Inactive" operating mode to "Automatic mode".

- **Switching a disturbance variable on**

  You can switch a disturbance variable on at the Disturbance parameter.

- **Default value of PID parameters**

  The following default settings have been changed:

  – Proportional action weighting (PWeighting) from 0.0 to 1.0
  – Derivative action weighting (DWeighting) from 0.0 to 1.0
  – Coefficient for derivative delay (TdFiltRatio) from 0.0 to 0.2

- **Renaming tags**

  The static tags have been given new names that are compatible with PID_3Step.

PID_Compact V1.2

- **Manual mode on CPU startup**

  If ManualEnable = TRUE when the CPU starts, PID_Compact starts in manual mode. A rising edge at ManualEnable is not necessary.

- **Pretuning**

  If the CPU is switched off during pretuning, pretuning starts again when the CPU is switched back on.

PID_Compact V1.1

- **Manual mode on CPU startup**

  When the CPU starts up, PID_Compact only switches to manual mode with a rising edge at ManualEnable. Without rising edge, PID_Compact starts in the last operating mode in which ManualEnable was FALSE.

- **Reaction to reset**

  A rising edge at Reset resets the errors and warnings and clears the integral action. A falling edge at Reset triggers a switchover to the most recently active operating mode.

- **Default of process value high limit**

  The default value of r_Pv_Hlm has been changed to 120.0.

- Monitoring the sampling time
  - An error is no longer output when the current sampling time is ≥ 1.5 x current mean value or when the current sampling time is ≤ 0.5 x current mean value. The sampling time may deviate much more in automatic mode.
  - PID_Compact is compatible with FW, V2.0 or higher.
- Access to tags

  The following tags can now be used in the user program.
  - i_Event_SUT
  - i_Event_TIR
  - r_Ctrl_Ioutv
- Troubleshooting

  PID_Compact now outputs the correct pulses when the shortest ON time is not equal to the shortest OFF time.

9.1.2 Compatibility with CPU and FW

The following table shows which version of PID_Compact can be used on which CPU.

CPU	FW	PID_Compact
S7-1200	V4.2 or higher	V2.3 V2.2 V1.2
	V4.0 to V4.1	V2.2 V1.2
	V3.x	V1.2 V1.1
	V2.x	V1.2 V1.1
	V1.x	V1.0
S7-1500	as of V2.5	V2.4 V2.3 V2.2 V2.1 V2.0
	V2.0 and V2.1	V2.3 V2.2 V2.1 V2.0
	V1.5 to V1.8	V2.2 V2.1 V2.0
	V1.1	V2.1 V2.0
	V1.0	V2.0

9.1.3 CPU processing time and memory requirement PID_Compact V2.x

CPU processing time

Typical CPU processing times of the PID_Compact technology object as of Version V2.0, depending on CPU type.

CPU	Typ. CPU processing time PID_Compact V2.x
CPU 1211C ≥ V4.0	300 µs
CPU 1215C ≥ V4.0	300 µs
CPU 1217C ≥ V4.0	300 µs
CPU 1505S ≥ V1.0	45 µs
CPU 1510SP-1 PN ≥ V1.6	85 µs
CPU 1511-1 PN ≥ V1.5	85 µs
CPU 1512SP-1 PN ≥ V1.6	85 µs
CPU 1516-3 PN/DP ≥ V1.5	50 µs
CPU 1518-4 PN/DP ≥ V1.5	4 µs

Memory requirement

Memory requirement of an instance DB of the PID_Compact technology object as of Version V2.0.

Memory requirement	Memory requirement of the instance DB of PID_Compact V2.x
Load memory requirement	Approx. 12000 bytes
Total work memory requirement	788 bytes
Retentive work memory requirement	44 bytes

9.1.4 PID_Compact V2

9.1.4.1 Description of PID_Compact V2

Description

The PID_Compact instruction provides a PID controller with integrated tuning for actuators with proportional action.

The following operating modes are possible:

- Inactive
- Pretuning
- Fine tuning
- Automatic mode
- Manual mode
- Substitute output value with error monitoring

For a more detailed description of the operating modes, see the State parameter.

PID algorithm

PID_Compact is a PIDT1 controller with anti-windup and weighting of the proportional and derivative actions. The PID algorithm operates according to the following equation:

$$y = K_p \left[(b \cdot w - x) + \frac{1}{T_I \cdot s}(w - x) + \frac{T_D \cdot s}{a \cdot T_D \cdot s + 1}(c \cdot w - x) \right]$$

Symbol	Description
y	Output value of the PID algorithm
K_p	Proportional gain
s	Laplace operator
b	Proportional action weighting
w	Setpoint
x	Process value
T_I	Integral action time
T_D	Derivative action time
a	Derivative delay coefficient (derivative delay T1 = a × T_D)
c	Derivative action weighting

Block diagram of PID_Compact

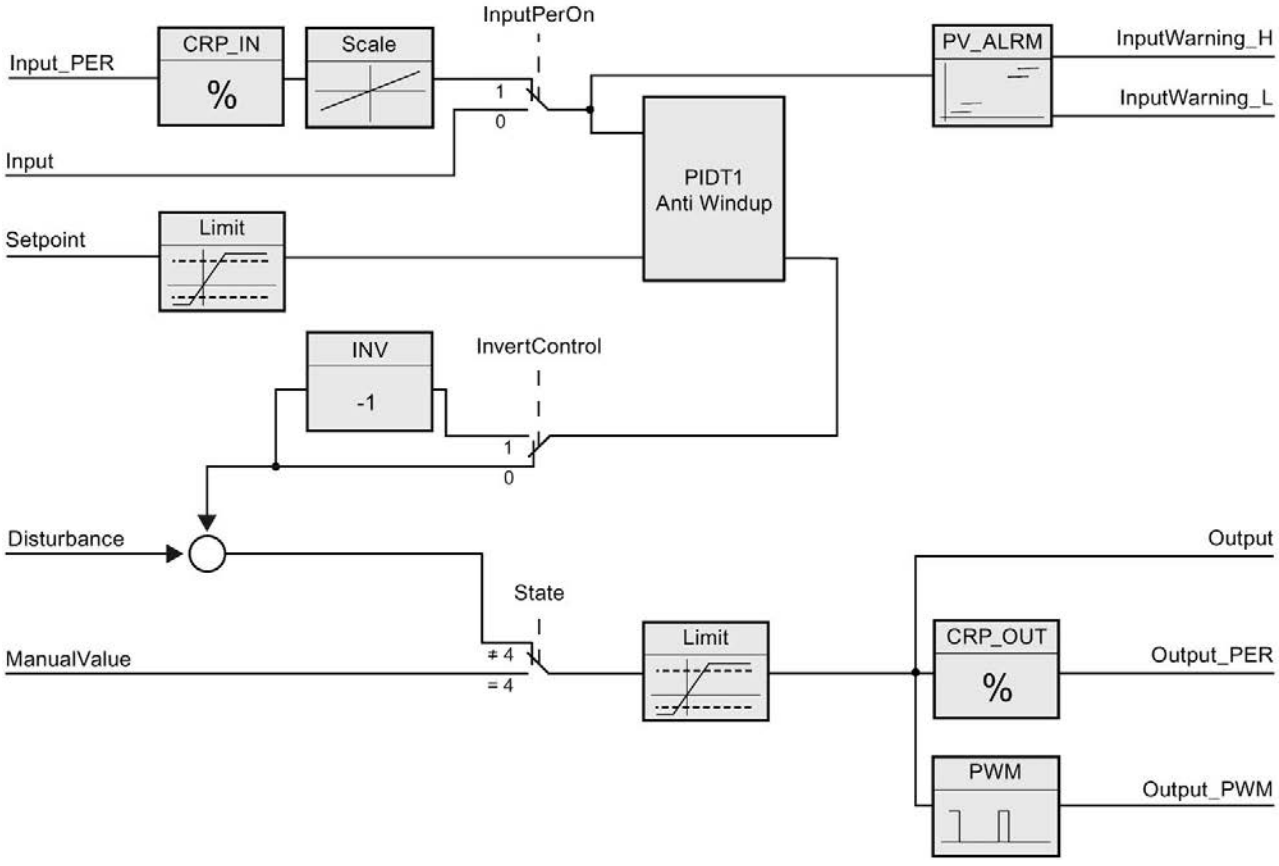

Block diagram of PIDT1 with anti-windup

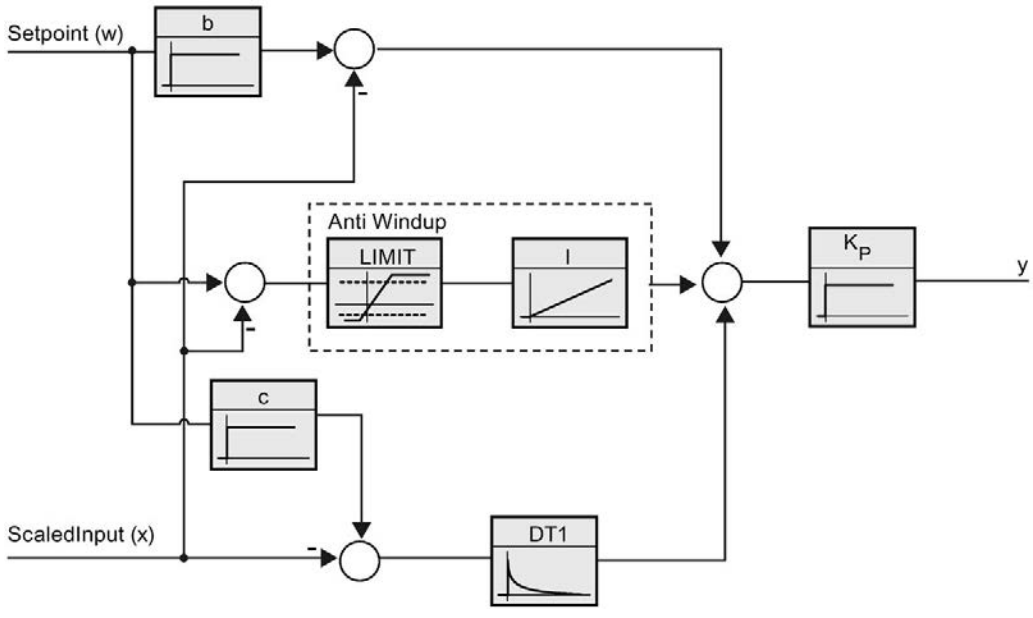

Call

PID_Compact is called in the constant time scale of a cycle interrupt OB.

If you call PID_Compact as a multi-instance DB, no technology object is created. No parameter assignment interface or commissioning interface is available. You must assign parameters for PID_Compact directly in the multi-instance DB and commission it via a watch table.

Download to device

The actual values of retentive variables are only updated when you download PID_Compact completely.

Downloading technology objects to device (Page 44)

Startup

When the CPU starts up, PID_Compact starts in the operating mode that is saved in the Mode in/out parameter. To switch to "Inactive" operating mode during startup, set RunModeByStartup = FALSE.

Reaction to error

In automatic mode and during commissioning, the reaction to error depends on the SetSubstituteOutput and ActivateRecoverMode variables. In manual mode, the reaction is independent of SetSubstituteOutput and ActivateRecoverMode. If ActivateRecoverMode = TRUE, the reaction additionally depends on the error that occurred.

SetSubstitute-Output	Acti-vateRecov-erMode	Configuration editor > output value > Set Output to	Reaction
Not relevant	FALSE	Zero (inactive)	Switch to "Inactive" mode (State = 0) The value 0.0 0 is transferred to the actuator.
FALSE	TRUE	Current output value while error is pending	Switch to "Substitute output value with error monitoring" mode (State = 5) The current output value is transferred to the actuator while the error is pending.
TRUE	TRUE	Substitute output value while error is pending	Switch to "Substitute output value with error monitoring" mode (State = 5) The value at SubstituteOutput is transferred to the actuator while the error is pending.

In manual mode, PID_Compact uses ManualValue as output value, unless ManualValue is invalid. If ManualValue is invalid, SubstituteOutput is used. If ManualValue and SubstituteOutput are invalid, Config.OutputLowerLimit is used.

The Error parameter indicates if an error is pending. When the error is no longer pending, Error = FALSE. The ErrorBits parameter shows which errors have occurred. ErrorBits is reset by a rising edge at Reset or ErrorAck.

9.1.4.2 Mode of operation of PID_Compact V2

Monitoring process value limits

You specify the high limit and low limit of the process value in the Config.InputUpperLimit and Config.InputLowerLimit tags. If the process value is outside these limits, an error occurs (ErrorBits = 0001h).

You specify a high and low warning limit of the process value in the Config.InputUpperWarning and Config.InputLowerWarning tags. If the process value is outside these warning limits, a warning occurs (Warning = 0040h), and the InputWarning_H or InputWarning_L output parameter changes to TRUE.

Limiting the setpoint

You specify a high limit and low limit of the setpoint in the Config.SetpointUpperLimit and Config.SetpointLowerLimit tags. PID_Compact automatically limits the setpoint to the process value limits. You can limit the setpoint to a smaller range. PID_Compact checks whether this range falls within the process value limits. If the setpoint is outside these limits, the high or low limit is used as the setpoint, and output parameter SetpointLimit_H or SetpointLimit_L is set to TRUE.

The setpoint is limited in all operating modes.

Limiting the output value

You specify a high limit and low limit of the output value in the Config.OutputUpperLimit and Config.OutputLowerLimit tags. Output, ManualValue and SubstituteOutput are limited to these values. The output value limits must match the control logic.

The valid output value limit values depend on the Output used.

Output	-100.0 to 100.0%
Output_PER	-100.0 to 100.0%
Output_PWM	0.0 to 100.0%

Rule:

OutputUpperLimit > OutputLowerLimit

Note

Use with two or more actuators

PID_Compact is not suitable for use with two or more actuators (for example, in heating/cooling applications), because different actuators need different PID parameters to achieve a good control response. Use PID_Temp for applications with two actuators acting in opposite directions.

Substitute output value

In the event of an error, PID_Compact can output a substitute output value that you define at the SubstituteOutput tag. The substitute output value must be within the output value limits.

Monitoring signal validity

The values of the following parameters are monitored for validity when used:

- Setpoint
- Input
- Input_PER
- Disturbance
- ManualValue
- SubstituteOutput
- Output
- Output_PER
- Output_PWM

Monitoring of the sampling time PID_Compact

Ideally, the sampling time is equivalent to the cycle time of the calling OB. The PID_Compact instruction measures the time interval between two calls. This is the current sampling time. On every switchover of operating mode and during the initial startup, the mean value is formed from the first 10 sampling times. Too great a difference between the current sampling time and this mean value triggers an error (Error = 0800h).

The error occurs during tuning if:

- New mean value >= 1.1 x old mean value
- New mean value <= 0.9 x old mean value

The error occurs in automatic mode if:

- New mean value >= 1.5 x old mean value
- New mean value <= 0.5 x old mean value

If you deactivate the sampling time monitoring (CycleTime.EnMonitoring = FALSE), you can also call PID_Compact in OB1. You must then accept a lower control quality due to the deviating sampling time.

Sampling time of the PID algorithm

The controlled system needs a certain amount of time to respond to changes in the output value. It is therefore not advisable to calculate the output value in every cycle. The sampling time of the PID algorithm represents the time between two calculations of the output value. It is calculated during tuning and rounded to a multiple of the cycle time. All other functions of PID_Compact are executed at every call.

If you use Output_PWM, the accuracy of the output signal is determined by the ratio of the PID algorithm sampling time to the cycle time of the OB. The cycle time should be at least 10 times the PID algorithm sampling time.

Control logic

An increase of the output value is generally intended to cause an increase in the process value. This is referred to as a normal control logic. For cooling and discharge control systems, it may be necessary to invert the control logic. PID_Compact does not work with negative proportional gain. If InvertControl = TRUE, an increasing control deviation causes a reduction in the output value. The control logic is also taken into account during pretuning and fine tuning.

9.1.4.3 Input parameters of PID_Compact V2

Table 9- 1 Input parameters of PID_Compact V2

Parameter	Data type	Default	Description
Setpoint	REAL	0.0	Setpoint of the PID controller in automatic mode
Input	REAL	0.0	A tag of the user program is used as source for the process value. If you are using parameter Input, then Config.InputPerOn = FALSE must be set.
Input_PER	INT	0	An analog input is used as the source of the process value. If you are using parameter Input_PER, then Config.InputPerOn = TRUE must be set.
Disturbance	REAL	0.0	Disturbance variable or precontrol value
ManualEnable	BOOL	FALSE	• A FALSE -> TRUE edge activates "manual mode", while State = 4, Mode remains unchanged. As long as ManualEnable = TRUE, you cannot change the operating mode via a rising edge at ModeActivate or use the commissioning dialog. • A TRUE -> FALSE edge activates the operating mode that is specified by Mode. We recommend that you change the operating mode using ModeActivate only.
ManualValue	REAL	0.0	Manual value This value is used as the output value in manual mode. Values from Config.OutputLowerLimit to Config .OutputUpperLimit are permitted.
ErrorAck	BOOL	FALSE	• FALSE -> TRUE edge ErrorBits and Warning are reset.

Parameter	Data type	Default	Description
Reset	BOOL	FALSE	Restarts the controller. • FALSE -> TRUE edge – Switch to "Inactive" mode – ErrorBits and Warnings are reset. • As long as Reset = TRUE, – PID_Compact remains in "Inactive" mode (State = 0). – You cannot change the operating mode with Mode and ModeActivate or ManualEnable. – You cannot use the commissioning dialog. • TRUE -> FALSE edge – If ManualEnable = FALSE, PID_Compact switches to the operating mode that is saved in Mode. – If Mode = 3, the integral action is treated as configured with the tag IntegralResetMode.
ModeActivate	BOOL	FALSE	• FALSE -> TRUE edge PID_Compact switches to the operating mode that is saved in the Mode parameter.

9.1.4.4 Output parameters of PID_Compact V2

Table 9- 2 Output parameters of PID_Compact V2

Parameter	Data type	Default	Description
ScaledInput	REAL	0.0	Scaled process value
The "Output", "Output_PER", and "Output_PWM" outputs can be used concurrently.			
Output	REAL	0.0	Output value in REAL format
Output_PER	INT	0	Analog output value
Output_PWM	BOOL	FALSE	Pulse-width-modulated output value The output value is formed by by variable On and Off times.
SetpointLimit_H	BOOL	FALSE	If SetpointLimit_H = TRUE, the absolute setpoint high limit is reached (Setpoint ≥ Config.SetpointUpperLimit). The setpoint is limited to Config.SetpointUpperLimit .
SetpointLimit_L	BOOL	FALSE	If SetpointLimit_L = TRUE, the absolute setpoint low limit has been reached (Setpoint ≤ Config.SetpointLowerLimit). The setpoint is limited to Config.SetpointLowerLimit .
InputWarning_H	BOOL	FALSE	If InputWarning_H = TRUE, the process value has reached or exceeded the warning high limit.
InputWarning_L	BOOL	FALSE	If InputWarning_L = TRUE, the process value has reached or fallen below the warning low limit.
State	INT	0	The State parameter (Page 278) shows the current operating mode of the PID controller. You can change the operating mode using the input parameter Mode and a rising edge at ModeActivate. • State = 0: Inactive • State = 1: Pretuning • State = 2: Fine tuning • State = 3: Automatic mode • State = 4: Manual mode • State = 5: Substitute output value with error monitoring
Error	BOOL	FALSE	If Error = TRUE, at least one error message is pending in this cycle.
ErrorBits	DWORD	DW#16#0	The ErrorBits parameter (Page 282) shows which error messages are pending. ErrorBits is retentive and is reset upon a rising edge at Reset or ErrorAck.

9.1.4.5 In/out parameters of PID_Compact V2

Table 9- 3 In/out parameters of PID_Compact V2

Parameter	Data type	Default	Description
Mode	INT	4	At Mode, specify the operating mode to which PID_Compact is to switch. Options are: • Mode = 0: Inactive • Mode = 1: Pretuning • Mode = 2: Fine tuning • Mode = 3: Automatic mode • Mode = 4: Manual mode The operating mode is activated by: • Rising edge at ModeActivate • Falling edge at Reset • Falling edge at ManualEnable • Cold restart of CPU if RunModeBy-Startup = TRUE Mode is retentive. A detailed description of the operating modes can be found in Parameters State and Mode V2 (Page 278).

See also

Parameters State and Mode V2 (Page 278)

9.1.4.6 Static tags of PID_Compact V2

Note

Change the tags identified with (1) only in "Inactive" mode to prevent malfunction of the PID controller.

Tag	Data type	Default	Description
IntegralResetMode	INT	Up to V2.2: 1, V2.3 or higher: 4	The IntegralResetMode V2 tag (Page 287) determines how the integral actionPIDCtrl.IntegralSum is pre-assigned when switching from "Inactive" operating mode to "Automatic mode". This setting only works for one cycle. Options are: • IntegralResetMode = 0: Smooth • IntegralResetMode = 1: Delete • IntegralResetMode = 2: Hold • IntegralResetMode = 3: Pre-assign • IntegralResetMode = 4: Like setpoint change (only for PID_Compact with version ≥ 2.3)
OverwriteInitialOutputValue	REAL	0.0	If one of the following conditions is met, the integral action PIDCtrl.IntegralSum is pre-assigned automatically as if Output = OverwriteInitialOutputValue in the previous cycle: • IntegralResetMode = 3 when switching from "Inactive" operating mode to "Automatic mode". • TRUE -> FALSE edge at parameter Reset and parameter Mode = 3 • PIDCtrl.PIDInit = TRUE in "Automatic mode" (available as of PID_Compact version 2.3)
RunModeByStartup	BOOL	TRUE	Activate operating mode at Mode parameter after CPU restart If RunModeByStartup = TRUE, PID_Compact starts in the operating mode saved in the Mode parameter after CPU startup. If RunModeByStartup = FALSE, PID_Compact remains in "Inactive" mode after CPU startup.
LoadBackUp	BOOL	FALSE	If LoadBackUp = TRUE, the last set of PID parameters is reloaded. The set was saved prior to the last tuning. LoadBackUp is automatically set back to FALSE.
PhysicalUnit	INT	0	Unit of measurement of the process value and setpoint, e.g., ºC, or ºF.
PhysicalQuantity	INT	0	Physical quantity of the process value and setpoint, e.g., temperature.
ActivateRecoverMode	BOOL	TRUE	The Tag ActivateRecoverMode V2 (Page 284) determines the reaction to error.

Tag	Data type	Default	Description
Warning	DWORD	0	Tag Warning V2 (Page 286) shows the warnings since Reset = TRUE or ErrorAck =TRUE. Warning is retentive.
Progress	REAL	0.0	Progress of tuning as a percentage (0.0 - 100.0)
CurrentSetpoint	REAL	0.0	CurrentSetpoint always displays the current setpoint. This value is frozen during tuning.
CancelTuningLevel	REAL	10.0	Permissible fluctuation of setpoint during tuning. Tuning is not canceled until: • Setpoint > CurrentSetpoint + CancelTuningLevel or • Setpoint < CurrentSetpoint - CancelTuningLevel
SubstituteOutput	REAL	0.0	Substitute output value When the following conditions are met, the substitute output value is used: • An error has occurred in automatic mode. • SetSubstituteOutput = TRUE • ActivateRecoverMode = TRUE
SetSubstituteOutput	BOOL	TRUE	If SetSubstituteOutput = TRUE and ActivateRecoverMode = TRUE, the substitute output value configured is output as long as an error is pending. If SetSubstituteOutput = FALSE and ActivateRecoverMode = TRUE, the actuator remains at the current output value as long as an error is pending. If ActivateRecoverMode = FALSE, SetSubstituteOutput is not effective. If SubstituteOutput is invalid (ErrorBits = 20000h), the substitute output value cannot be output.
Config.InputPerOn(1)	BOOL	TRUE	If InputPerOn = TRUE, the Input_PER parameter is used. If InputPerOn = FALSE, the Input parameter is used.
Config.InvertControl(1)	BOOL	FALSE	Invert control logic If InvertControl = TRUE, an increasing control deviation causes a reduction in the output value.
Config.InputUpperLimit(1)	REAL	120.0	High limit of the process value Input and Input_PER are monitored to ensure adherence to this limit. At the I/O input, the process value can be a maximum of 18% higher than the standard range (overrange). This pre-assignment ensures that an error is no longer signaled due to a violation of the "Process value high limit". Only a wire-break and a short-circuit are recognized and PID_Compact reacts according to the configured reaction to error. InputUpperLimit > InputLowerLimit

Tag	Data type	Default	Description
Config.InputLowerLimit(1)	REAL	0.0	Low limit of the process value Input and Input_PER are monitored to ensure adherence to this limit. InputLowerLimit < InputUpperLimit
Config.InputUpperWarning(1)	REAL	3.402822e+38	Warning high limit of the process value If you set InputUpperWarning outside the process value limits, the configured absolute process value high limit is used as the warning high limit. If you configure InputUpperWarning within the process value limits, this value is used as the warning high limit. InputUpperWarning > InputLowerWarning InputUpperWarning ≤ InputUpperLimit
Config.InputLowerWarning(1)	REAL	-3.402822e+38	Warning low limit of the process value If you set InputLowerWarning outside the process value limits, the configured absolute process value low limit is used as the warning low limit. If you configure InputLowerWarning within the process value limits, this value is used as the warning low limit. InputLowerWarning < InputUpperWarning InputLowerWarning ≥ InputLowerLimit
Config.OutputUpperLimit(1)	REAL	100.0	High limit of output value For details, see OutputLowerLimit OutputUpperLimit > OutputLowerLimit
Config.OutputLowerLimit(1)	REAL	0.0	Low limit of output value For Output and Output_PER, the range of values from -100.0 to +100.0, including zero, is valid. At -100.0, Output_PER = -27648; at +100.0, Output_PER = 27648. For Output_PWM, the value range 0.0 to +100.0 applies. The output value limits must match the control logic. OutputLowerLimit < OutputUpperLimit
Config.SetpointUpperLimit(1)	REAL	3.402822e+38	High limit of setpoint If you configure SetpointUpperLimit outside the process value limits, the configured process value absolute high limit is used as the setpoint high limit. If you configure SetpointUpperLimit within the process value limits, this value is used as the setpoint high limit.
Config.SetpointLowerLimit(1)	REAL	-3.402822e+38	Low limit of the setpoint If you set SetpointLowerLimit outside the process value limits, the configured process value absolute low limit is used as the setpoint low limit. If you set SetpointLowerLimit within the process value limits, this value is used as the setpoint low limit.

Tag	Data type	Default	Description
Config.MinimumOnTime(1)	REAL	0.0	The minimum ON time of the pulse width modulation in seconds is rounded to MinimumOnTime = n×CycleTime.Value
Config.MinimumOffTime(1)	REAL	0.0	The minimum OFF time of the pulse width modulation in seconds is rounded to MinimumOffTime = n×CycleTime.Value
Config.InputScaling.UpperPointIn(1)	REAL	27648.0	Scaling Input_PER high Input_PER is converted to percent based on the two value pairs UpperPointOut, UpperPointIn and LowerPointOut, LowerPointIn.
Config.InputScaling.LowerPointIn(1)	REAL	0.0	Scaling Input_PER low Input_PER is converted to percent based on the two value pairs UpperPointOut, UpperPointIn and LowerPointOut, LowerPointIn.
Config.InputScaling .UpperPointOut(1)	REAL	100.0	Scaled high process value Input_PER is converted to percent based on the two value pairs UpperPointOut, UpperPointIn and LowerPointOut, LowerPointIn.
Config.InputScaling .LowerPointOut(1)	REAL	0.0	Scaled low process value Input_PER is converted to percent based on the two value pairs UpperPointOut, UpperPointIn and LowerPointOut, LowerPointIn.
CycleTime.StartEstimation	BOOL	TRUE	If CycleTime.StartEstimation = TRUE, the automatic determination of the cycle time is started. CycleTime.StartEstimation = FALSE once measurement is complete.
CycleTime.EnEstimation	BOOL	TRUE	If CycleTime.EnEstimation = TRUE, the PID_Compact sampling time is calculated. If CycleTime.EnEstimation = FALSE, the PID_Compact sampling time is not calculated and you need to correct the configuration of CycleTime.Value manually.
CycleTime.EnMonitoring	BOOL	TRUE	If CycleTime.EnMonitoring = FALSE, the PID_Compact sampling time is not monitored. If it is not possible to execute PID_Compact within the sampling time, no error (ErrorBits=0800h) is output and PID_Compact does not switch to "Inactive" mode.
CycleTime.Value(1)	REAL	0.1	PID_Compact sampling time in seconds CycleTime.Value is determined automatically and is usually equivalent to the cycle time of the calling OB.
CtrlParamsBackUp.Gain	REAL	1.0	Saved proportional gain You can reload values from the CtrlParamsBackUp structure with LoadBackUp = TRUE.
CtrlParamsBackUp.Ti	REAL	20.0	Saved integral action time [s]
CtrlParamsBackUp.Td	REAL	0.0	Saved derivative action time [s]
CtrlParamsBackUp.TdFiltRatio	REAL	0.2	Saved derivative delay coefficient
CtrlParamsBackUp.PWeighting	REAL	1.0	Saved proportional action weighting factor

Tag	Data type	Default	Description
CtrlParamsBackUp.DWeighting	REAL	1.0	Saved derivative action weighting factor
CtrlParamsBackUp.Cycle	REAL	1.0	Saved sampling time of PID algorithm
PIDSelfTune.SUT.CalculateParams	BOOL	FALSE	The properties of the controlled system are saved during tuning. If SUT.CalculateParams = TRUE, the parameters for pretuning are recalculated according to these properties. This enables you to change the parameter calculation method without having to repeat controller tuning. SUT.CalculateParams is set to FALSE after the calculation.
PIDSelfTune.SUT.TuneRule	INT	0	Methods used to calculate parameters during pretuning: • SUT.TuneRule = 0: PID according to Chien, Hrones and Reswick • SUT.TuneRule = 1: PI according to Chien, Hrones and Reswick
PIDSelfTune.SUT.State	INT	0	The SUT.State tag indicates the current phase of pretuning: • State = 0: Initialize pretuning • State = 100: Calculate the standard deviation • State = 200: Find the point of inflection • State = 9900: Pretuning successful • State = 1: Pretuning not successful
PIDSelfTune.TIR.RunIn	BOOL	FALSE	With the RunIn tag, you can specify that fine tuning can also be performed without pretuning. • RunIn = FALSE Pretuning is started when fine tuning is started from inactive or manual mode. If the requirements for pretuning are not met, PID_Compact reacts as if RunIn = TRUE. If fine tuning is started from automatic mode, the system uses the existing PID parameters to control to the setpoint. Only then will fine tuning start. If pretuning is not possible, PID_Compact switches to the mode from which tuning was started. • RunIn = TRUE The pretuning is skipped. PID_Compact tries to reach the setpoint with minimum or maximum output value. This can produce increased overshoot. Fine tuning then starts automatically. RunIn is set to FALSE after fine tuning.

Tag	Data type	Default	Description
PIDSelfTune.TIR.CalculateParams	BOOL	FALSE	The properties of the controlled system are saved during tuning. If TIR.CalculateParams = TRUE, the parameters for fine tuning are recalculated according to these properties. This enables you to change the parameter calculation method without having to repeat controller tuning. TIR.CalculateParams is set to FALSE after the calculation.
PIDSelfTune.TIR.TuneRule	INT	0	Methods used to calculate parameters during fine tuning: • TIR.TuneRule = 0: PID automatic • TIR.TuneRule = 1: PID fast • TIR.TuneRule = 2: PID slow • TIR.TuneRule = 3: Ziegler-Nichols PID • TIR.TuneRule = 4: Ziegler-Nichols PI • TIR.TuneRule = 5: Ziegler-Nichols P
PIDSelfTune.TIR.State	INT	0	The TIR.State tag indicates the current phase of fine tuning: • State = -100 Fine tuning is not possible. Pretuning will be performed first. • State = 0: Initialize fine tuning • State = 200: Calculate the standard deviation • State = 300: Attempt to reach setpoint • State = 400: Attempt to reach setpoint with existing PID parameters (if pretuning was successful) • State = 500: Determine oscillation and calculate parameters • State = 9900: Fine tuning successful • State = 1: Fine tuning not successful
PIDCtrl.IntegralSum(1)	REAL	0.0	Current integral action
PIDCtrl.PIDInit	BOOL	FALSE	PIDCtrl.PIDInit is available as of PID_Compact version 2.3. If PIDCtrl.PIDInit = TRUE in "Automatic mode", the integral action PIDCtrl.IntegralSum is pre-assigned automatically as if Output = OverwriteInitialOutputValue in the previous cycle. This can be used for a Override control with PID_Compact V2 (Page 93).
Retain.CtrlParams.Gain(1)	REAL	1.0	Active proportional gain To invert the control logic, use the Config.InvertControl tag. Negative values at Gain also invert the control logic. We recommend you use only InvertControl to set the control logic. The control logic is also inverted if InvertControl = TRUE and Gain < 0.0. Gain is retentive.

Tag	Data type	Default	Description
Retain.CtrlParams.Ti(1)	REAL	20.0	• CtrlParams.Ti > 0.0: Active integral action time • CtrlParams.Ti = 0.0: Integral action is deactivated Ti is retentive.
Retain.CtrlParams.Td(1)	REAL	0.0	• CtrlParams.Td > 0.0: Active derivative action time • CtrlParams.Td = 0.0: Derivative action is deactivated Td is retentive.
Retain.CtrlParams.TdFiltRatio(1)	REAL	0.2	Active derivative delay coefficient The derivative delay coefficient delays the effect of the derivative action. Derivative delay = derivative action time × derivative delay coefficient • 0.0: Derivative action is effective for one cycle only and therefore almost not effective. • 0.5: This value has proved useful in practice for controlled systems with **one** dominant time constant. • > 1.0: The greater the coefficient, the longer the effect of the derivative action is delayed. TdFiltRatio is retentive.
Retain.CtrlParams.PWeighting(1)	REAL	1.0	Active proportional action weighting The proportional action may weaken with changes to the setpoint. Values from 0.0 to 1.0 are applicable. • 1.0: Proportional action for setpoint change is fully effective • 0.0: Proportional action for setpoint change is not effective The proportional action is always fully effective when the process value is changed. PWeighting is retentive.

Tag	Data type	Default	Description
Retain.CtrlParams.DWeighting(1)	REAL	1.0	Active derivative action weighting The derivative action may weaken with changes to the setpoint. Values from 0.0 to 1.0 are applicable. • 1.0: Derivative action is fully effective upon set-point change • 0.0: Derivative action is not effective upon set-point change The derivative action is always fully effective when the process value is changed. DWeighting is retentive.
Retain.CtrlParams.Cycle(1)	REAL	1.0	Active sampling time of the PID algorithm CtrlParams.Cycle is calculated during tuning and rounded to an integer multiple of CycleTime .Value.CtrlParams.Cycle is used as time period of the pulse width modulation. Cycle is retentive.

See also

Tag ActivateRecoverMode V2 (Page 284)
Tag Warning V2 (Page 286)
Downloading technology objects to device (Page 44)

9.1.4.7 Changing the PID_Compact V2 interface

The following table shows what has changed in the PID_Compact instruction interface.

PID_Compact V1	PID_Compact V2	Change
Input_PER	Input_PER	Data type from Word to Int
	Disturbance	New
	ErrorAck	New
	ModeActivate	New
Output_PER	Output_PER	Data type from Word to Int
Error	ErrorBits	Renamed
	Error	New
	Mode	New
sb_RunModeByStartup	RunModeByStartup	Function
	IntegralResetMode	
	OverwriteInitialOutputValue	New
	SetSubstituteOutput	New
	CancelTuningLevel	New
	SubstituteOutput	New

The following table shows which variables have been renamed.

PID_Compact V1.x	PID_Compact V2
sb_GetCycleTime	CycleTime.StartEstimation
sb_EnCyclEstimation	CycleTime.EnEstimation
sb_EnCyclMonitoring	CycleTime.EnMonitoring
sb_RunModeByStartup	RunModeByStartup
si_Unit	PhysicalUnit
si_Type	PhysicalQuantity
sd_Warning	Warning
sBackUp.r_Gain	CtrlParamsBackUp.Gain
sBackUp.r_Ti	CtrlParamsBackUp.Ti
sBackUp.r_Td	CtrlParamsBackUp.Td
sBackUp.r_A	CtrlParamsBackUp.TdFiltRatio
sBackUp.r_B	CtrlParamsBackUp.PWeighting
sBackUp.r_C	CtrlParamsBackUp.DWeighting
sBackUp.r_Cycle	CtrlParamsBackUp.Cycle
sPid_Calc.r_Cycle	CycleTime.Value
sPid_Calc.b_RunIn	PIDSelfTune.TIR.RunIn
sPid_Calc.b_CalcParamSUT	PIDSelfTune.SUT.CalculateParams
sPid_Calc.b_CalcParamTIR	PIDSelfTune.TIR.CalculateParams
sPid_Calc.i_CtrlTypeSUT	PIDSelfTune.SUT.TuneRule
sPid_Calc.i_CtrlTypeTIR	PIDSelfTune.TIR.TuneRule
sPid_Calc.r_Progress	Progress

PID_Compact V1.x	PID_Compact V2
sPid_Cmpt.r_Sp_Hlm	Config.SetpointUpperLimit
sPid_Cmpt.r_Sp_Llm	Config.SetpointLowerLimit
sPid_Cmpt.r_Pv_Norm_IN_1	Config.InputScaling.LowerPointIn
sPid_Cmpt.r_Pv_Norm_IN_2	Config.InputScaling.UpperPointIn
sPid_Cmpt.r_Pv_Norm_OUT_1	Config.InputScaling.LowerPointOut
sPid_Cmpt.r_Pv_Norm_OUT_2	Config.InputScaling.UpperPointOut
sPid_Cmpt.r_Lmn_Hlm	Config.OutputUpperLimit
sPid_Cmpt.r_Lmn_Llm	Config.OutputLowerLimit
sPid_Cmpt.b_Input_PER_On	Config.InputPerOn
sPid_Cmpt.b_LoadBackUp	LoadBackUp
sPid_Cmpt.b_InvCtrl	Config.InvertControl
sPid_Cmpt.r_Lmn_Pwm_PPTm	Config.MinimumOnTime
sPid_Cmpt.r_Lmn_Pwm_PBTm	Config.MinimumOffTime
sPid_Cmpt.r_Pv_Hlm	Config.InputUpperLimit
sPid_Cmpt.r_Pv_Llm	Config.InputLowerLimit
sPid_Cmpt.r_Pv_HWrn	Config.InputUpperWarning
sPid_Cmpt.r_Pv_LWrn	Config.InputLowerWarning
sParamCalc.i_Event_SUT	PIDSelfTune.SUT.State
sParamCalc.i_Event_TIR	PIDSelfTune.TIR.State
sRet.i_Mode	sRet.i_Mode has been omitted. The operating mode is changed using Mode and ModeActivate.
sRet.r_Ctrl_Gain	Retain.CtrlParams.Gain
sRet.r_Ctrl_Ti	Retain.CtrlParams.Ti
sRet.r_Ctrl_Td	Retain.CtrlParams.Td
sRet.r_Ctrl_A	Retain.CtrlParams.TdFiltRatio
sRet.r_Ctrl_B	Retain.CtrlParams.PWeighting
sRet.r_Ctrl_C	Retain.CtrlParams.DWeighting
sRet.r_Ctrl_Cycle	Retain.CtrlParams.Cycle

9.1.4.8 Parameters State and Mode V2

Correlation of the parameters

The State parameter shows the current operating mode of the PID controller. You cannot change the State parameter.

With a rising edge at ModeActivate, PID_Compact switches to the operating mode saved in the Mode in-out parameter.

When the CPU is switched on or switches from Stop to RUN mode, PID_Compact starts in the operating mode that is saved in the Mode parameter. To leave PID_Compact in "Inactive" mode, set RunModeByStartup = FALSE.

Meaning of values

State / Mode	Description of operating mode
0	Inactive In "Inactive" operating mode, the output value 0.0 is always output, regardless of Config.OutputUpperLimit and Config.OutputLowerLimit. Pulse width modulation is off.
1	Pretuning The pretuning determines the process response to a jump change of the output value and searches for the point of inflection. The PID parameters are calculated from the maximum rate of rise and dead time of the controlled system. You obtain the best PID parameters when you perform pretuning and fine tuning. Pretuning requirements: • Inactive (State = 0), manual mode (State = 4), or automatic mode (State = 3) • ManualEnable = FALSE • Reset = FALSE • The process value must not be too close to the setpoint. |Setpoint - Input| > 0.3 * | Config.InputUpperLimit - Config.InputLowerLimit| and |Setpoint - Input| > 0.5 * |Setpoint| • The setpoint and the process value lie within the configured limits. The more stable the process value is, the easier it is to calculate the PID parameters and the more precise the result will be. Noise on the process value can be tolerated as long as the rate of rise of the process value is significantly higher compared to the noise. The setpoint is frozen in the CurrentSetpoint tag. Tuning is canceled when: • Setpoint > CurrentSetpoint + CancelTuningLevel or • Setpoint < CurrentSetpoint - CancelTuningLevel Before the PID parameters are recalculated, they are backed up and can be reactivated with LoadBackUp. The controller switches to automatic mode following successful pretuning. If pretuning is unsuccessful, the switchover of the operating mode is dependent on ActivateRecoverMode. The phase of pretuning is indicated with PIDSelfTune.SUT.State.

State / Mode	Description of operating mode
2	Fine tuning Fine tuning generates a constant, limited oscillation of the process value. The PID parameters are recalculated based on the amplitude and frequency of this oscillation. PID parameters from fine tuning usually have better master control and disturbance characteristics than PID parameters from pretuning. You obtain the best PID parameters when you perform pretuning and fine tuning. PID_Compact automatically attempts to generate an oscillation greater than the noise of the process value. Fine tuning is only minimally influenced by the stability of the process value. The setpoint is frozen in the CurrentSetpoint tag. Tuning is canceled when: • Setpoint > CurrentSetpoint + CancelTuningLevel or • Setpoint < CurrentSetpoint - CancelTuningLevel Before the PID parameters are recalculated, they are backed up and can be reactivated with LoadBackUp. Requirements for fine tuning: • No disturbances are expected. • The setpoint and the process value lie within the configured limits. • ManualEnable = FALSE • Reset = FALSE • Automatic (State = 3), inactive (State = 0) or manual (State = 4) mode Fine tuning proceeds as follows when started from: • Automatic mode (State = 3) Start fine tuning from automatic mode if you wish to improve the existing PID parameters through tuning. PID_Compact controls the system using the existing PID parameters until the control loop has stabilized and the requirements for fine tuning have been met. Only then will fine tuning start. • Inactive (State = 0) or manual mode (State = 4) If the requirements for pretuning are met, pretuning is started. The determined PID parameters will be used for control until the control loop has stabilized and the requirements for fine tuning have been met. If the process value for pretuning is already too near the setpoint or PIDSelfTune.TIR.RunIn = TRUE, an attempt is made to reach the setpoint with the minimum or maximum output value. This can produce increased overshoot. Only then will fine tuning start. The controller switches to automatic mode following successful fine tuning. If fine tuning is unsuccessful, the switchover of the operating mode is dependent on ActivateRecoverMode. The "Fine tuning" phase is indicated with PIDSelfTune.TIR.State.
3	Automatic mode In automatic mode, PID_Compact corrects the controlled system in accordance with the parameters specified. The controller switches to automatic mode if one the following requirements is fulfilled: • Pretuning successfully completed • Fine tuning successfully completed • Changing of the Mode in-out parameter to the value 3 and a rising edge at ModeActivate. The switchover from automatic mode to manual mode is only bumpless if carried out in the commissioning editor. The ActivateRecoverMode tag is taken into consideration in automatic mode.

State / Mode	Description of operating mode
4	Manual mode In manual mode, you specify a manual output value in the ManualValue parameter. You can also activate this operating mode using ManualEnable = TRUE. We recommend that you change the operating mode using Mode and ModeActivate only. The switchover from manual mode to automatic mode is bumpless. Manual mode is also possible when an error is pending.
5	Substitute output value with error monitoring The control algorithm is deactivated. The SetSubstituteOutput tag determines which output value is output in this operating mode. • SetSubstituteOutput = FALSE: Last valid output value • SetSubstituteOutput = TRUE: Substitute output value You cannot activate this operating mode using Mode = 5. In the event of an error, it is activated instead of "Inactive" operating mode if all the following conditions are met: • Automatic mode (Mode = 3) • ActivateRecoverMode = TRUE • One or more errors have occurred in which ActivateRecoverMode is effective. As soon as the errors are no longer pending, PID_Compact switches back to automatic mode.

ENO characteristics

If State = 0, then ENO = FALSE.

If State ≠ 0, then ENO = TRUE.

Automatic switchover of operating mode during commissioning

Automatic mode is activated following successful pretuning or fine tuning. The following table shows how Mode and State change during successful pretuning.

Cycle no.	Mode	State	Action
0	4	4	Set Mode = 1
1	1	4	Set ModeActivate = TRUE
1	4	1	Value of State is saved in Mode parameter Pretuning is started
n	4	1	Pretuning successfully completed
n	3	3	Automatic mode is started

PID_Compact automatically switches the operating mode in the event of an error. The following table shows how Mode and State change during pretuning with errors.

Cycle no.	Mode	State	Action
0	4	4	Set Mode = 1
1	1	4	Set ModeActivate = TRUE
1	4	1	Value of State is saved in Mode parameter Pretuning is started
n	4	1	Pretuning canceled
n	4	4	Manual mode is started

If ActivateRecoverMode = TRUE, the operating mode that is saved in the Mode parameter is activated. At the start of pretuning or fine tuning, PID_Compact has saved the value of State in the Mode in/out parameter. PID_Compact therefore switches to the operating mode from which tuning was started.

If ActivateRecoverMode = FALSE, the system switches to "Inactive" operating mode.

See also

Output parameters of PID_Compact V2 (Page 266)

9.1.4.9 Parameter ErrorBits V2

If several errors are pending simultaneously, the values of the ErrorBits are displayed with binary addition. The display of ErrorBits = 0003h, for example, indicates that the errors 0001h and 0002h are pending simultaneously.

In manual mode, PID_Compact uses ManualValue as output value. The exception is Errorbits = 10000h.

ErrorBits (DW#16#...)	Description
0000	There is no error.
0001	The "Input" parameter is outside the process value limits. • Input > Config.InputUpperLimit or • Input < Config.InputLowerLimit If automatic mode was active before the error occurred and ActivateRecoverMode = TRUE, PID_Compact remains in automatic mode. If pretuning or fine tuning mode was active before the error occurred and ActivateRecoverMode = TRUE, PID_Compact switches to the operating mode that is saved in the Mode parameter.
0002	Invalid value at "Input_PER" parameter. Check whether an error is pending at the analog input. If automatic mode was active before the error occurred and ActivateRecoverMode = TRUE, PID_Compact outputs the configured substitute output value. As soon as the error is no longer pending, PID_Compact switches back to automatic mode. If pretuning or fine tuning mode was active before the error occurred and ActivateRecoverMode = TRUE, PID_Compact switches to the operating mode that is saved in the Mode parameter.
0004	Error during fine tuning. Oscillation of the process value could not be maintained. If ActivateRecoverMode = TRUE before the error occurred, PID_Compact cancels the tuning and switches to the operating mode that is saved in the Mode parameter.
0008	Error at start of pretuning. The process value is too close to the setpoint. Start fine tuning. If ActivateRecoverMode = TRUE before the error occurred, PID_Compact cancels the tuning and switches to the operating mode that is saved in the Mode parameter.
0010	The setpoint was changed during tuning. You can set the permitted fluctuation of the setpoint at the CancelTuningLevel tag. If ActivateRecoverMode = TRUE before the error occurred, PID_Compact cancels the tuning and switches to the operating mode that is saved in the Mode parameter.
0020	Pretuning is not permitted during fine tuning. If ActivateRecoverMode = TRUE before the error occurred, PID_Compact remains in fine tuning mode.
0080	Error during pretuning. The output value limits are not configured correctly or the actual value does not react as expected. Check whether the limits of the output value are configured correctly and match the control logic. Also make sure that the actual value does not oscillate strongly before starting pretuning. If ActivateRecoverMode = TRUE before the error occurred, PID_Compact cancels the tuning and switches to the operating mode that is saved in the Mode parameter.
0100	Error during fine tuning resulted in invalid parameters. If ActivateRecoverMode = TRUE before the error occurred, PID_Compact cancels the tuning and switches to the operating mode that is saved in the Mode parameter.

ErrorBits (DW#16#...)	Description
0200	Invalid value at "Input" parameter: Value has an invalid number format. If automatic mode was active before the error occurred and ActivateRecoverMode = TRUE, PID_Compact outputs the configured substitute output value. As soon as the error is no longer pending, PID_Compact switches back to automatic mode. If pretuning or fine tuning mode was active before the error occurred and ActivateRecoverMode = TRUE, PID_Compact switches to the operating mode that is saved in the Mode parameter.
0400	Calculation of output value failed. Check the PID parameters. If automatic mode was active before the error occurred and ActivateRecoverMode = TRUE, PID_Compact outputs the configured substitute output value. As soon as the error is no longer pending, PID_Compact switches back to automatic mode. If pretuning or fine tuning mode was active before the error occurred and ActivateRecoverMode = TRUE, PID_Compact switches to the operating mode that is saved in the Mode parameter.
0800	Sampling time error: PID_Compact is not called within the sampling time of the cyclic interrupt OB. If automatic mode was active before the error occurred and ActivateRecoverMode = TRUE, PID_Compact remains in automatic mode. If pretuning or fine tuning mode was active before the error occurred and ActivateRecoverMode = TRUE, PID_Compact switches to the operating mode that is saved in the Mode parameter. If this error occurred during simulation with PLCSIM, see the notes under Simulating PID_Compact V2 with PLCSIM (Page 97).
1000	Invalid value at "Setpoint" parameter: Value has an invalid number format. If automatic mode was active before the error occurred and ActivateRecoverMode = TRUE, PID_Compact outputs the configured substitute output value. As soon as the error is no longer pending, PID_Compact switches back to automatic mode. If pretuning or fine tuning mode was active before the error occurred and ActivateRecoverMode = TRUE, PID_Compact switches to the operating mode that is saved in the Mode parameter.
10000	Invalid value at ManualValue parameter. Value has an invalid number format. If ActivateRecoverMode = TRUE before an error occurred, PID_Compact uses SubstituteOutput as the output value. As soon as you specify a valid value in ManualValue, PID_Compact uses it as the output value.
20000	Invalid value at SubstituteOutput tag. Value has an invalid number format. PID_Compact uses the output value low limit as the output value. If automatic mode was active before the error occurred, ActivateRecoverMode = TRUE, and the error is no longer pending, PID_Compact switches back to automatic mode.
40000	Invalid value at Disturbance parameter. Value has an invalid number format. If automatic mode was active and ActivateRecoverMode = TRUE before the error occurred, Disturbance is set to zero. PID_Compact remains in automatic mode. If pretuning or fine tuning mode was active and ActivateRecoverMode = TRUE before the error occurred, PID_Compact switches to the operating mode saved in the Mode parameter. If Disturbance in the current phase has no effect on the output value, tuning is not be canceled.

9.1.4.10 Tag ActivateRecoverMode V2

The ActivateRecoverMode tag determines the reaction to error. The Error parameter indicates if an error is pending. When the error is no longer pending, Error = FALSE. The ErrorBits parameter shows which errors have occurred.

Automatic mode

NOTICE
Your system may be damaged. If ActivateRecoverMode = TRUE, PID_Compact remains in automatic mode even if there is an error and the process limit values are exceeded. This may damage your system. It is essential to configure how your controlled system reacts in the event of an error to protect your system from damage.

ActivateRecov-erMode	Description
FALSE	PID_Compact automatically switches to "Inactive" mode in the event of an error. The controller is only activated by a falling edge at Reset or a rising edge at ModeActivate.
TRUE	If errors occur frequently in automatic mode, this setting has a negative effect on the control response, because PID_Compact switches between the calculated output value and the substitute output value at each error. In this case, check the ErrorBits parameter and eliminate the cause of the error. If one or more of the following errors occur, PID_Compact stays in automatic mode: • 0001h: The "Input" parameter is outside the process value limits. • 0800h: Sampling time error • 40000h: Invalid value at parameter Disturbance. If one or more of the following errors occur, PID_Compact switches to "Substitute output value with error monitoring" mode: • 0002h: Invalid value at Input_PER parameter. • 0200h: Invalid value at Input parameter. • 0400h: Calculation of output value failed. • 1000h: Invalid value at Setpoint parameter. If the following error occurs, PID_Compact switches to "Substitute output value with error monitoring" mode and moves the actuator to Config.OutputLowerLimit: • 20000h: Invalid value at SubstituteOutput tag. Value has an invalid number format. This characteristics are independent of SetSubstituteOutput. As soon as the errors are no longer pending, PID_Compact switches back to automatic mode.

Pretuning and fine tuning

ActivateRecov-erMode	Description
FALSE	PID_Compact automatically switches to "Inactive" mode in the event of an error. The controller is only activated by a falling edge at Reset or a rising edge at ModeActivate.
TRUE	If the following error occurs, PID_Compact remains in the active mode: • 0020h: Pretuning is not permitted during fine tuning. The following errors are ignored: • 10000h: Invalid value at ManualValue parameter. • 20000h: Invalid value at SubstituteOutput tag. When any other error occurs, PID_Compact cancels the tuning and switches to the mode from which tuning was started.

Manual mode

ActivateRecoverMode is not effective in manual mode.

9.1.4.11 Tag Warning V2

If several warnings are pending simultaneously, the values of the Warning tag are displayed with binary addition. The display of warning 0003h, for example, indicates that the warnings 0001h and 0002h are pending simultaneously.

Warning (DW#16#....)	Description
0000	No warning pending.
0001	The point of inflection was not found during pretuning.
0004	The setpoint was limited to the configured limits.
0008	Not all the necessary controlled system properties were defined for the selected method of calculation. Instead, the PID parameters were calculated using the TIR.TuneRule = 3 method.
0010	The operating mode could not be changed because Reset = TRUE or ManualEnable = TRUE.
0020	The cycle time of the calling OB limits the sampling time of the PID algorithm. Improve results by using shorter OB cycle times.
0040	The process value exceeded one of its warning limits.
0080	Invalid value at Mode. The operating mode is not switched.
0100	The manual value was limited to the limits of the controller output.
0200	The specified rule for tuning is not supported. No PID parameters are calculated.
1000	The substitute output value cannot be reached because it is outside the output value limits.

The following warnings are deleted as soon as the cause is eliminated:

- 0001h
- 0004h
- 0008h
- 0040h
- 0100h

All other warnings are cleared with a rising edge at Reset or ErrorAck.

9.1.4.12 IntegralResetMode V2 tag

The IntegralResetMode tag determines how the integral action PIDCtrl.IntegralSum is pre-assigned:

- When switching from "Inactive" operating mode to "Automatic mode"
- With edge TRUE -> FALSE at parameter Reset and parameter Mode = 3

This setting only works for one cycle and is only effective if the integral action is activated (Retain.CtrlParams.Ti > 0.0 tag).

IntegralReset-Mode	Description
0	Smooth The value of PIDCtrl.IntegralSum is pre-assigned so that the switchover is bumpless, which means "Automatic mode" starts with the output value = 0.0 (parameter Output) and there is no jump of the output value regardless of the control deviation (setpoint – actual value).
1	Delete We recommend setting the weighting of the proportional action (Retain.CtrlParams.PWeighting) to 1.0 if this option is used. The value of PIDCtrl.IntegralSum is deleted. Any control deviation will cause a jump change of the output value. The direction of the output value jump depends on the configured weighting of the proportional action (Retain.CtrlParams.PWeighting tag) and the control deviation: • Proportional action weighting = 1.0: Output value jump and control deviation have identical signs. Example: If the actual value value is smaller than the setpoint (positive control deviation), the output value jumps to a positive value. • Proportional action weighting < 1.0: For large control deviations, the output value jump and control deviation have identical signs. Example: If the actual value is much smaller than the setpoint (positive control deviation), the output value jumps to a positive value. For small control deviations, the output value jump and control deviation have different signs. Example: If the actual value value is just below the setpoint (positive control deviation), the output value jumps to a negative value. This is usually not desirable, because it results in a temporary increase in the control deviation. The smaller the configured weighting of the proportional action, the greater the control deviation must be to receive an output value jump with identical sign. We recommend setting the weighting of the proportional action (Retain.CtrlParams.PWeighting) to 1.0 when this option is used. Otherwise, you may experience the undesirable behavior described for small control deviations. Alternatively, you can also use IntegralResetMode = 4. This option guarantees identical signs of the output value jump and control deviation independent of the configured weighting of the proportional action and the control deviation.
2	Hold The value of PIDCtrl.IntegralSum is not changed. You can define a new value using the user program.

IntegralReset-Mode	Description
3	Pre-assign The value of PIDCtrl.IntegralSum is automatically pre-assigned as if Output = OverwriteInitialOutput-Value in the last cycle.
4	Like setpoint change (only for PID_Compact with version ≥ 2.3) The value of PIDCtrl.IntegralSum is automatically pre-assigned so that a similar output value jump results as for a PI controller in automatic mode in case of a setpoint change from the current actual value to the current setpoint. Any control deviation will cause a jump of the output value. Output value jump and control deviation have identical signs. Example: If the actual value value is smaller than the setpoint (positive control deviation), the output value jumps to a positive value. This is independent of the configured weighting of the proportional action and the control deviation.

If IntegralResetMode is assigned a value outside the valid value range, PID_Compact behaves as with the pre-assignment of IntegralResetMode:

- PID_Compact up to V2.2: IntegralResetMode = 1
- PID_Compact V2.3 and higher: IntegralResetMode = 4

All statements made above regarding the sign of the output value jump are based on a normal control logic (Config.InvertControl = FALSE tag). With an inverted control logic (Config.InvertControl = TRUE), the output value jump will have a reverse sign.

9.1.4.13 Sample program for PID_Compact

In the following example, you are controlling temperature values with the technology object of the instruction "PID_Compact". The temperature values are simulated based on a block which simulates a delay element of the third order (PT3 element). The PID parameters of the technology object can be set automatically via the pretuning.

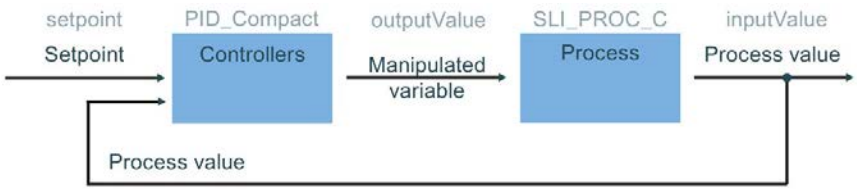

Data storage

Create seven tags in a global data block for storage of the interconnection data.

SLI_gDB_PID_Compact

		Name	Data type	Start value
1		Static		
2		setpoint	Real	75.0
3		inputValue	Real	0.0
4		outputValue	Real	0.0
5		state	Int	0
6		error	Bool	false
7		errorBits	DWord	16#0
8		resetAll	Bool	false

Interconnection of the parameters

You call the following interconnections in a cyclic interrupt OB.

Network 1: You interconnect the parameters of the instruction "PID_Compact" as follows.

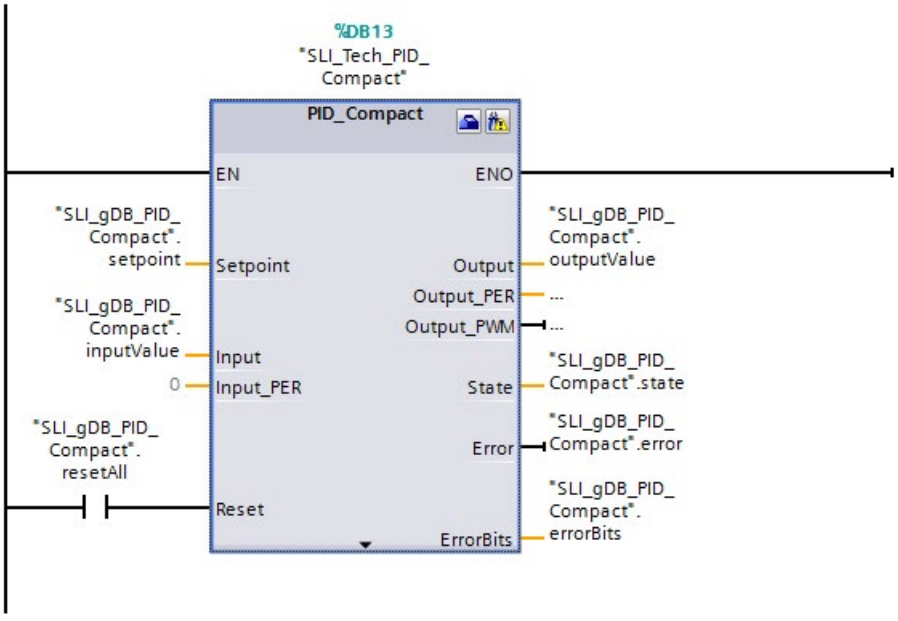

Network 2: You interconnect the parameters of the block simulating the temperature values "SLI_PROC_C" as follows.

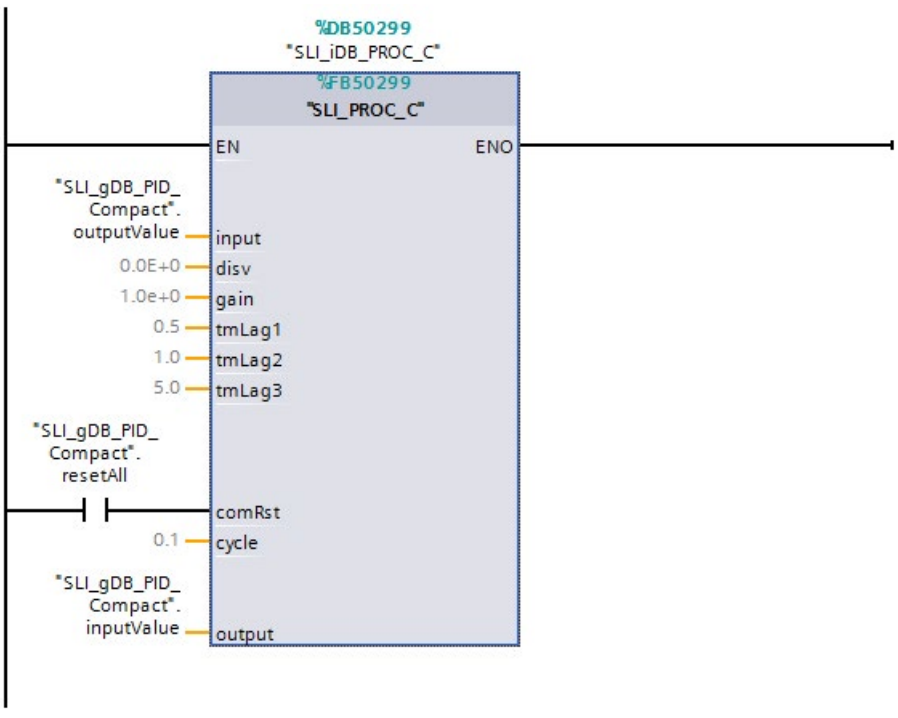

Technology object

You configure the technology object with the properties of the instruction "PID_Compact" or by using the path Technology object > Configuration. The controller type and the input/output parameters are important for the example. With the controller type, you make a preselection for the unit of the value to the controlled. In this example, "Temperature" with the unit "°C" is used as controller type. The parameters of the "PID_Compact" are already interconnected with global tags. Therefore, the information on use of the parameters Input and Output is sufficient.

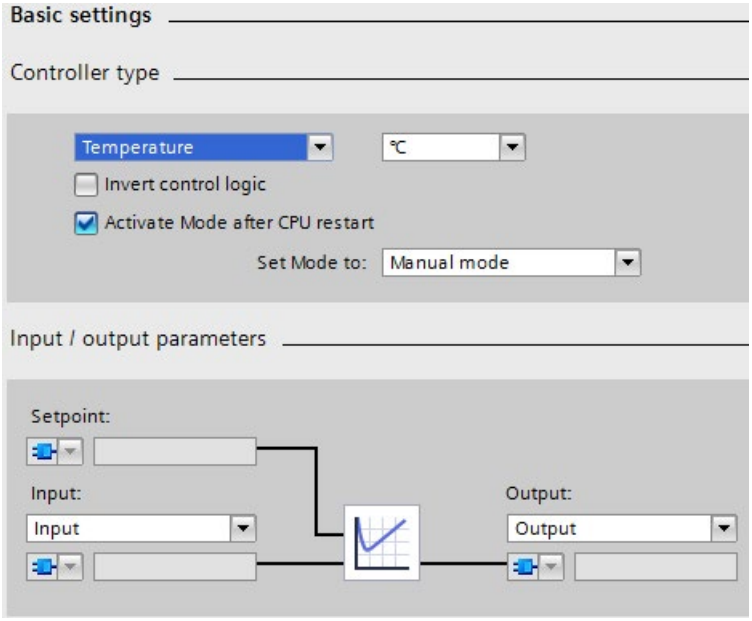

Procedure for starting the control

After the download to the CPU the PID_Compact is in manual mode with manual value 0.0. To start the control, follow these steps:

1. Open the Commissioning of the technology object "SLI_Tech_PID_Compact".
2. Click the "Start" button in the "Measurement" area.

   Measurement starts and PID_Compact can be activated.

3. Pretuning is selected.

   Click the "Start" button in the "Tuning mode" area.

   A pretuning is performed. The PID parameters are automatically adjusted to the process. After the completion of the pretuning PID_Compact switches to automatic mode.

Note

Alternative to start PID_Compact

Alternatively, you can switch PID_Compact to automatic mode in the "Online status of controller" area with the "Stop PID_Compact" / "Start PID_Compact" without pretuning. In this case the controller uses default values for the PID parameters and shows a worse controller behavior for the application case.

Procedure for stopping control

To stop and exit PID_Compact and the program, follow these steps:

1. Click the "Stop PID_Compact" button in the technology object "SLI_Tech_PID_Compact" in the "Online status of controller" area.

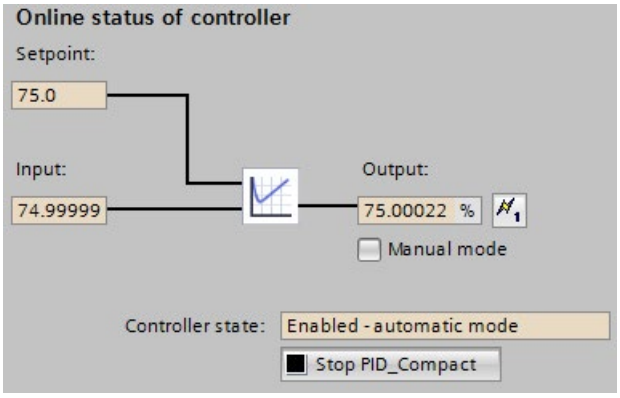

   The instruction "PID_Compact" exits the control and outputs the value "0.0" as manipulated variable.

2. Click the "Stop" button in the "Measurement" area.
3. To set the process value immediately to the value "0.0", follow these steps:

   In the block "SLI_OB_PID_Compact", set the "resetAll" tag to the value "TRUE", and then to the value "FALSE".

"PID_Compact" instruction

The setpoint for the temperature that is to be controlled is specified at the parameter Setpoint ("setpoint"). The control is started when the instruction "PID_Compact" was started with the technology object. The instruction "PID_Compact" outputs a manipulated variable at the output parameter Output ("outputValue"). The process value of the temperature is transferred to the instruction "PID_Compact" with the input parameter Input ("inputValue").

The instruction "PID_Compact" adjusts the manipulated variable ("outputValue") depending on the history of the difference between setpoint ("setpoint") and process value ("inputValue") . The process is repeated so that the process value ("inputValue") approaches the setpoint ("setpoint") through the manipulated variable ("outputValue").

The current operating mode of the instruction "PID_Compact" is displayed at the output parameter State ("state"). After pretuning (the value of "state" is "1"), the PID_Compact switches to automatic mode (the value is "3").

The output parameter Error ("error") currently shows that no error is pending. The output parameter ErrorBits ("errorBits") provides information on the error type in case of error. If an error occurs, this can be acknowledged in the technology object, in the optimization status area with the "ErrorAck" button.

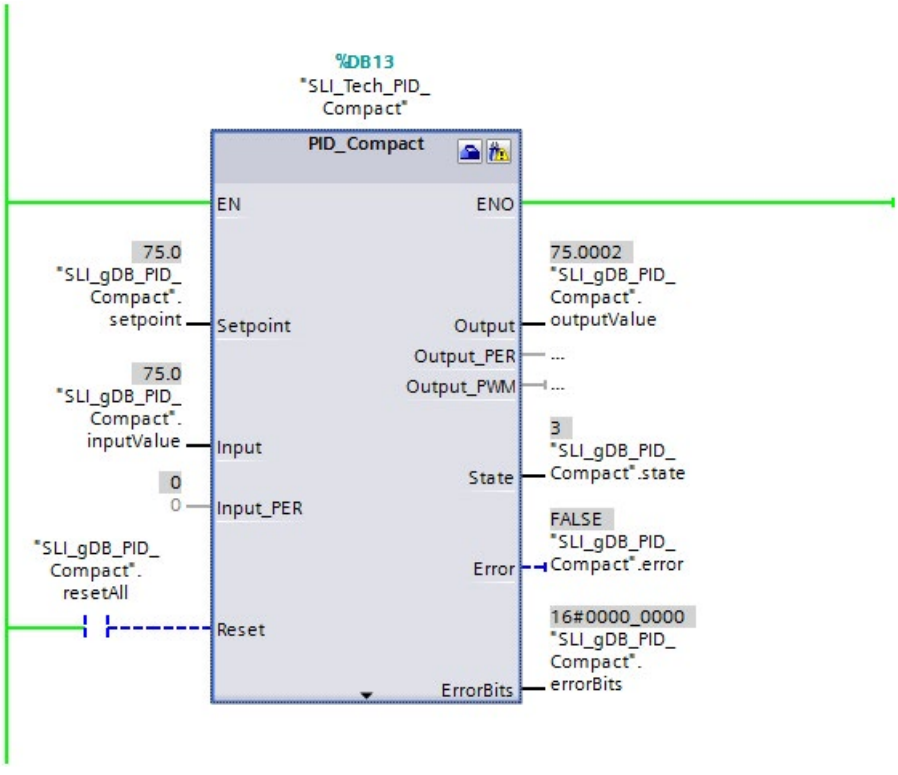

"SLI_PROC_C" block

The "SLI_PROC_C" block simulates the process value ("inputValue") of the rising temperature of a plant. The block "SLI_PROC_C" contains the manipulated variable of the controller ("outputValue) and simulates the temperature behavior of the process. This temperature is fed as process value ("inputValue") into the controller.

A change in the values of the "resetAll" tag (of the comRst parameter) has the following effects:

Parameter comRst ("resetAll")	The instruction "PID_Compact" is running	The instruction "PID_Compact" was stopped
comRst ("resetAll") remains set to the value "FALSE"	The "SLI_PROC_C" block outputs a new process value ("inputValue") based on a manipulated variable ("outputValue").	The "SLI_PROC_C" block does not receive a manipulated variable > "0.0", but it still outputs a new process value > "0.0".
comRst ("resetAll"): Change from "FALSE" to the value "TRUE"	Both manipulated variable ("outputValue") and output process value ("inputValue") are reset to "0.0".	The output process value ("inputValue") / the temperature of the "SLI_PROC_C" block is reset to "0.0".
comRst ("resetAll"): Change from "TRUE" to the value "FALSE"	Temperature control starts again.	The output process value / the temperature ("inputValue") remains "0.0".

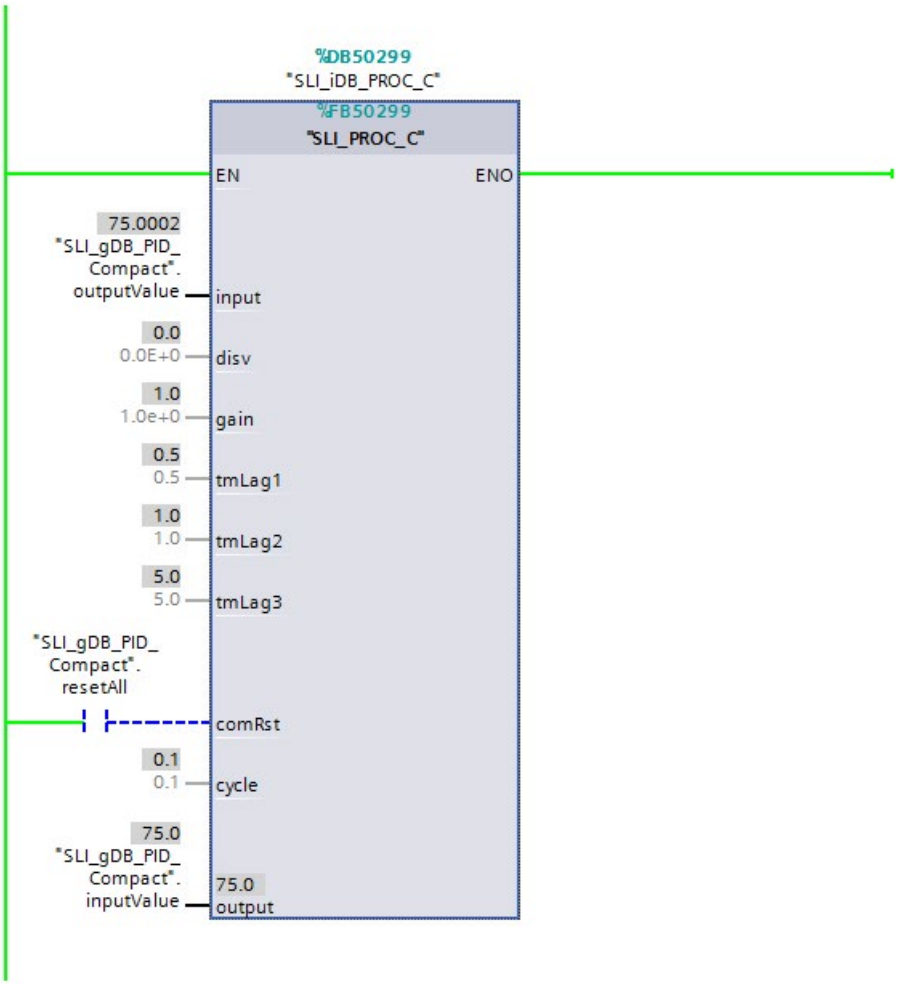

Program code

You can find additional information about the program code for the above-named example under the keyword "Sample Library for Instructions".

9.1.5 PID_Compact V1

9.1.5.1 Description of PID_Compact V1

Description

The PID_Compact instruction provides a PID controller with integrated tuning for automatic and manual mode.

Call

PID_Compact is called in the constant interval of the cycle time of the calling OB (preferably in a cyclic interrupt OB).

Download to device

The actual values of retentive tags are only updated when you download PID_Compact completely.

Downloading technology objects to device (Page 44)

Startup

At the startup of the CPU, PID_Compact starts in the operating mode that was last active. To retain PID_ Compact in "Inactive" mode, set sb_RunModeByStartup = FALSE.

Monitoring of the sampling time PID_Compact

Ideally, the sampling time is equivalent to the cycle time of the calling OB. The PID_Compact instruction measures the time interval between two calls. This is the current sampling time. On every switchover of operating mode and during the initial startup, the mean value is formed from the first 10 sampling times. If the current sampling time deviates too much from this mean value, Error = 0800 hex occurs and PID_Compact switches to "Inactive" mode.

PID_Compact, Version 1.1 or higher is set to "Inactive" mode during controller tuning under the following conditions:

- New mean value >= 1.1 x old mean value
- New mean value <= 0.9 x old mean value

In automatic mode, PID_Compact, Version 1.1 or higher, is set to "Inactive" mode under the following conditions:

- New mean value >= 1.5 x old mean value
- New mean value <= 0.5 x old mean value

During controller tuning and in automatic mode, PID_Compact 1.0 is set to "Inactive" operating mode under the following conditions:

- New mean value >= 1.1 x old mean value
- New mean value <= 0.9 x old mean value
- Current sampling time >= 1.5 x current mean value
- Current sampling time <= 0.5 x current mean value

Sampling time of the PID algorithm

The controlled system needs a certain amount of time to respond to changes in the output value. It is therefore not advisable to calculate the output value in every cycle. The sampling time of the PID algorithm represents the time between two calculations of the output value. It is calculated during tuning and rounded to a multiple of the cycle time. All other functions of PID_Compact are executed at every call.

PID algorithm

PID_Compact is a PIDT1 controller with anti-windup and weighting of the proportional and derivative actions. The following equation is used to calculate the output value.

$$y = K_p \left[(b \cdot w - x) + \frac{1}{T_I \cdot s} (w - x) + \frac{T_D \cdot s}{a \cdot T_D \cdot s + 1} (c \cdot w - x) \right]$$

Symbol	Description
y	Output value
K_p	Proportional gain
s	Laplace operator
b	Proportional action weighting
w	Setpoint
x	Process value
T_I	Integral action time
a	Derivative delay coefficient (T1 = a × T_D)
	Derivative action time
c	Derivative action weighting

Block diagram of PID_Compact

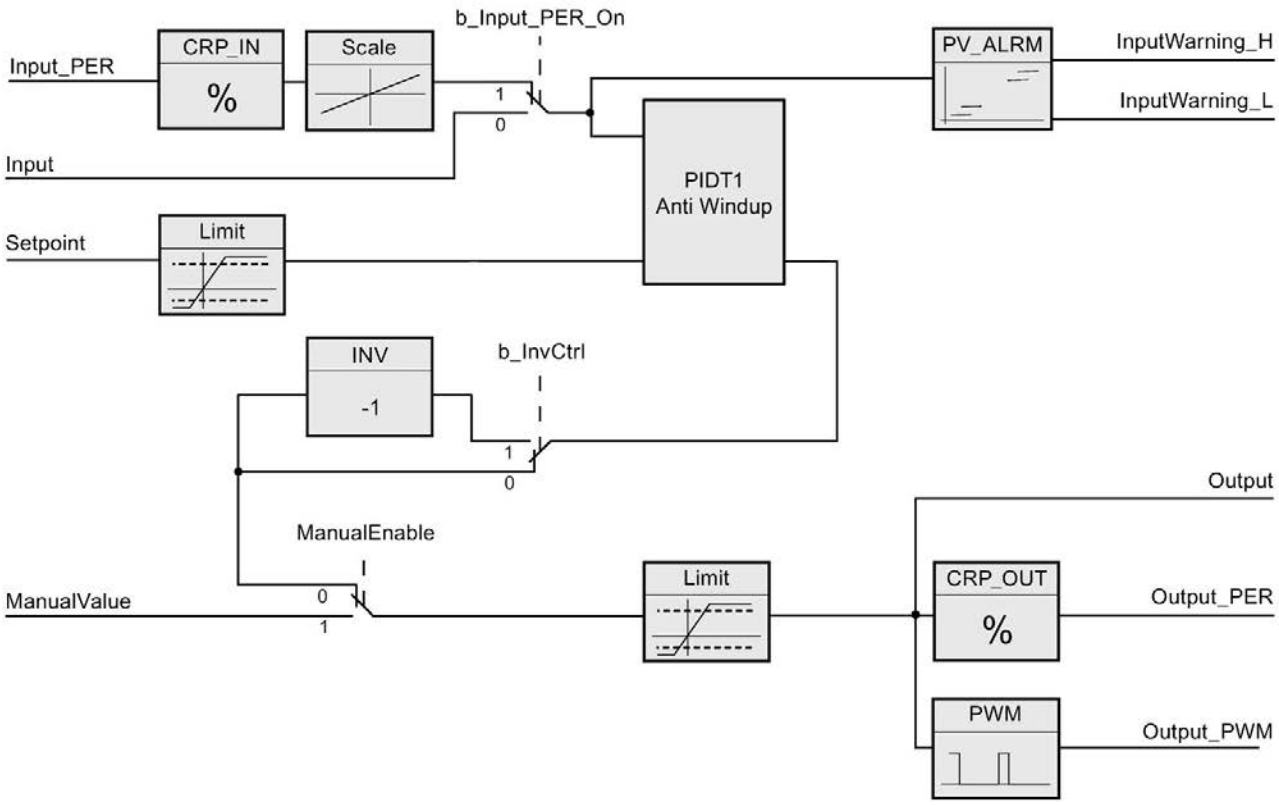

Block diagram of PIDT1 with anti-windup

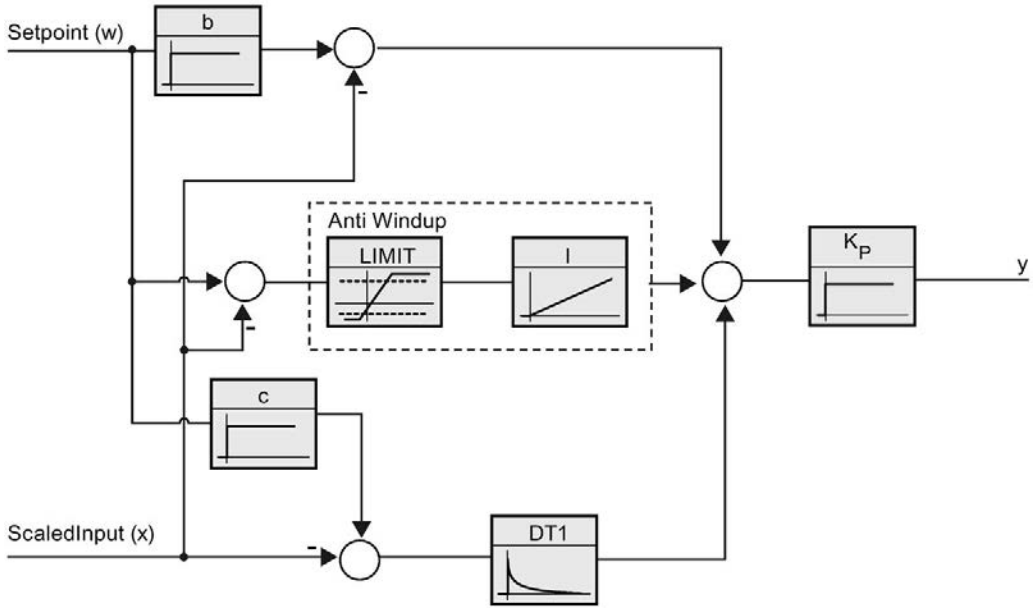

Reaction to error

If errors occur, they are output in parameter Error, and PID_Compact changes to "Inactive" mode. Reset the errors using the Reset parameter.

Control logic

An increase of the output value is generally intended to cause an increase in the process value. This is referred to as a normal control logic. For cooling and discharge control systems, it may be necessary to invert the control logic. PID_Compact does not work with negative proportional gain. If InvertControl = TRUE, an increasing control deviation causes a reduction in the output value. The control logic is also taken into account during pretuning and fine tuning.

See also

Control mode V1 (Page 99)

9.1.5.2 Input parameters of PID_Compact V1

Table 9- 4 Input parameters of PID_Compact V1

Parameter	Data type	Default	Description
Setpoint	REAL	0.0	Setpoint of the PID controller in automatic mode
Input	REAL	0.0	A variable of the user program is used as source for the process value. If you are using parameter Input, then sPid_Cmpt.b_Input_PER_On = FALSE must be set.
Input_PER	WORD	W#16#0	Analog input as the source of the process value If you are using parameter Input_PER, then sPid_Cmpt.b_Input_PER_On = TRUE must be set.
ManualEnable	BOOL	FALSE	• A FALSE -> TRUE edge selects "Manual mode", while State = 4, sRet.i_Mode remains unchanged. • A TRUE -> FALSE edge selects the most recently active operating mode, State =sRet.i_Mode A change of sRet.i_Mode will not take effect during ManualEnable = TRUE. The change of sRet.i_Mode will only be considered upon a TRUE -> FALSE edge at ManualEnable . **PID_Compact V1.2 und PID_Compact V1.0** If at start of the CPU ManualEnable = TRUE, PID_Compact starts in manual mode. A rising edge (FALSE > TRUE) at ManualEnable is not necessary. **PID_Compact V1.1** At the start of the CPU, PID_Compact only switches to manual mode with a rising edge (FALSE->TRUE) at ManualEnable . Without rising edge, PID_Compact starts in the last operating mode in which ManualEnable was FALSE.
ManualValue	REAL	0.0	Manual value This value is used as the output value in manual mode.
Reset	BOOL	FALSE	The Reset parameter (Page 313) restarts the controller.

9.1.5.3 Output parameters of PID_Compact V1

Table 9- 5 Output parameters of PID_Compact V1

Parameter	Data type	Default	Description
ScaledInput	REAL	0.0	Output of the scaled process value
Outputs "Output", "Output_PER", and "Output_PWM" can be used concurrently.			
Output	REAL	0.0	Output value in REAL format
Output_PER	WORD	W#16#0	Analog output value
Output_PWM	BOOL	FALSE	Pulse-width-modulated output value The output value is formed by minimum On and Off times.
SetpointLimit_H	BOOL	FALSE	If SetpointLimit_H = TRUE, the setpoint absolute high limit is reached. The setpoint in the CPU is limited to the configured setpoint absolute high limit. The configured process value absolute high limit is the default for the setpoint high limit. If you set sPid_Cmpt.r_Sp_Hlm to a value within the process value limits, this value is used as the setpoint high limit.
SetpointLimit_L	BOOL	FALSE	If SetpointLimit_L = TRUE, the setpoint absolute low limit has been reached. In the CPU, the setpoint is limited to the configured setpoint absolute low limit. The configured process value absolute low limit is the default setting for the setpoint low limit. If you set sPid_Cmpt.r_Sp_Llm to a value within the process value limits, this value is used as the setpoint low limit.
InputWarning_H	BOOL	FALSE	If InputWarning_H = TRUE, the process value has reached or exceeded the warning high limit.
InputWarning_L	BOOL	FALSE	If InputWarning_L = TRUE, the process value has reached or fallen below the warning low limit.
State	INT	0	The State parameter (Page 308) shows the current operating mode of the PID controller. To change the operating mode, use variable sRet.i_Mode. • State = 0: Inactive • State = 1: pretuning • State = 2: fine tuning • State = 3: Automatic mode • State = 4: Manual mode
Error	DWORD	W#16#0	The Error parameter (Page 312) indicates the error messages. Error = 0000: No error pending.

9.1.5.4 Static tags of PID_Compact V1

Note

You must not change tags that are not listed. These are used for internal purposes only.

Change the tags identified with (1) only in "Inactive" mode to prevent malfunction of the PID controller. "Inactive" mode is forced by setting the "sRet.i_Mode" tag to "0".

Table 9- 6 Static tags of PID_Compact V1

Tag	Data type	Default	Description
sb_GetCycleTime	BOOL	TRUE	If sb_GetCycleTime = TRUE, the automatic determination of the cycle time is started. CycleTime.StartEstimation = FALSE once measurement is complete.
sb_EnCyclEstimation	BOOL	TRUE	If sb_EnCyclEstimation = TRUE, the PID_Compact sampling time is not monitored.
sb_EnCyclMonitoring	BOOL	TRUE	If sb_EnCyclMonitoring = FALSE, the PID_Compact sampling time is not monitored. If it is not possible to execute PID_Compact within the sampling time, an 0800 error is not output and PID_Compact does not change to "Inactive" mode.
sb_RunModeByStartup	BOOL	TRUE	Activate Mode after CPU restart If sb_RunModeByStartup = FALSE, the controller will remain inactive after a CPU startup. After a CPU startup and if sb_RunModeByStartup = TRUE, the controller will return to the most recently active operating mode.
si_Unit	INT	0	Unit of measurement of the process value and setpoint, e.g., ºC, or ºF.
si_Type	INT	0	Physical quantity of the process value and setpoint, e.g., temperature.
sd_Warning	DWORD	DW#16#0	Variable sd_warning (Page 315) displays the warnings generated since the reset, or since the last change of the operating mode.
sBackUp.r_Gain	REAL	1.0	Saved proportional gain You can reload values from the sBackUp structure with sPid_Cmpt.b_LoadBackUp = TRUE.
sBackUp.r_Ti	REAL	20.0	Saved integral action time [s]
sBackUp.r_Td	REAL	0.0	Saved derivative action time [s]
sBackUp.r_A	REAL	0.0	Saved derivative delay coefficient
sBackUp.r_B	REAL	0.0	Saved proportional action weighting factor
sBackUp.r_C	REAL	0.0	Saved derivative action weighting factor
sBackUp.r_Cycle	REAL	1.0	Saved sampling time of PID algorithm

Tag	Data type	Default	Description
sPid_Calc.r_Cycle(1)	REAL	0.1	Sampling time of the PID_Compact instruction r_Cycle is determined automatically and is usually equivalent to the cycle time of the calling OB.
sPid_Calc.b_RunIn	BOOL	FALSE	• b_RunIn = FALSE Pretuning is started when fine tuning is started from inactive or manual mode. If the requirements for pretuning are not met, PID_Compact reacts as if b_RunIn = TRUE. If fine tuning is started from automatic mode, the system uses the existing PID parameters to control to the setpoint. Only then will fine tuning start. If pretuning is not possible, PID_Compact switches to "Inactive" mode. • b_RunIn = TRUE The pretuning is skipped. PID_3Compact tries to reach the setpoint with minimum or maximum output value. This can produce increased overshoot. Fine tuning then starts automatically. b_RunIn is set to FALSE after fine tuning.
sPid_Calc.b_CalcParamSUT	BOOL	FALSE	The parameters for pretuning will be recalculated if b_CalcParamSUT = TRUE. This enables you to change the parameter calculation method without having to repeat controller tuning. b_CalcParamSUT is set to FALSE after the calculation.
sPid_Calc.b_CalcParamTIR	BOOL	FALSE	The parameters for fine tuning will be recalculated if b_CalcParamTIR = TRUE. This enables you to change the parameter calculation method without having to repeat controller tuning. b_CalcParamTIR will be set to FALSE after calculation.
sPid_Calc.i_CtrlTypeSUT	INT	0	Methods used to calculate parameters during pretuning: • i_CtrlTypeSUT = 0: PID according to Chien, Hrones and Reswick • i_CtrlTypeSUT = 1: PI according to Chien, Hrones and Reswick

Tag	Data type	Default	Description
sPid_Calc.i_CtrlTypeTIR	INT	0	Methods used to calculate parameters during fine tuning: • i_CtrlTypeTIR = 0: PID automatic • i_CtrlTypeTIR = 1: PID fast • i_CtrlTypeTIR = 2: PID slow • i_CtrlTypeTIR = 3: Ziegler-Nichols PID • i_CtrlTypeTIR = 4: Ziegler-Nichols PI • i_CtrlTypeTIR = 5: Ziegler-Nichols P
sPid_Calc.r_Progress	REAL	0.0	Progress of tuning as a percentage (0.0 - 100.0)
sPid_Cmpt.r_Sp_Hlm(1)	REAL	+3.402822e+38	High limit of setpoint If you configure sPid_Cmpt.r_Sp_Hlm outside the process value limits, the configured process value absolute high limit is used as the setpoint high limit. If you set sPid_Cmpt.r_Sp_Hlm within the process value limits, this value is used as the setpoint high limit.
sPid_Cmpt.r_Sp_Llm(1)	REAL	-3.402822e+38	Low limit of the setpoint If you set sPid_Cmpt.r_Sp_Llm outside the process value limits, the configured process value absolute low limit is used as the setpoint low limit. If you set sPid_Cmpt.r_Sp_Llm within the process value limits, this value is used as the setpoint low limit.
sPid_Cmpt.r_Pv_Norm_IN_1(1)	REAL	0.0	Scaling Input_PER low Input_PER is converted to percent based on the two value pairs r_Pv_Norm_OUT_1, r_Pv_Norm_IN_1 and r_Pv_Norm_OUT_2, r_Pv_Norm_IN_2 from the sPid_Cmpt structure.
sPid_Cmpt.r_Pv_Norm_IN_2(1)	REAL	27648.0	Scaling Input_PER high Input_PER is converted to percent based on the two value pairs r_Pv_Norm_OUT_1, r_Pv_Norm_IN_1 and r_Pv_Norm_OUT_2, r_Pv_Norm_IN_2 from the sPid_Cmpt structure.
sPid_Cmpt.r_Pv_Norm_OUT_1(1)	REAL	0.0	Scaled low process value Input_PER is converted to percent based on the two value pairs r_Pv_Norm_OUT_1, r_Pv_Norm_IN_1 and r_Pv_Norm_OUT_2, r_Pv_Norm_IN_2 from the sPid_Cmpt structure.
sPid_Cmpt.r_Pv_Norm_OUT_2(1)	REAL	100.0	Scaled high process value Input_PER is converted to percent based on the two value pairs r_Pv_Norm_OUT_1, r_Pv_Norm_IN_1 and r_Pv_Norm_OUT_2, r_Pv_Norm_IN_2 from the sPid_Cmpt structure.
sPid_Cmpt.r_Lmn_Hlm(1)	REAL	100.0	Output value high limit for output parameter "Output"
sPid_Cmpt.r_Lmn_Llm(1)	REAL	0.0	Low output value limit for output parameter "Output"

Tag	Data type	Default	Description
sPid_Cmpt.b_Input_PER_On(1)	BOOL	TRUE	If b_Input_PER_On = TRUE, then parameter Input_PER is used. If b_Input_PER_On = FALSE, then parameter Input is used.
sPid_Cmpt.b_LoadBackUp	BOOL	FALSE	Activate the back-up parameter set. If an optimization has failed, you can reactivate the previous PID parameters by setting this bit.
sPid_Cmpt.b_InvCtrl(1)	BOOL	FALSE	Invert control logic With b_InvCtrl = TRUE, an increasing control deviation causes a reduction in the output value.
sPid_Cmpt.r_Lmn_Pwm_PPTm(1)	REAL	0.0	The minimum ON time of the pulse width modulation in seconds is rounded to r_Lmn_Pwm_PPTm = r_Cycle or r_Lmn_Pwm_PPTm = n*r_Cycle
sPid_Cmpt.r_Lmn_Pwm_PBTm(1)	REAL	0.0	The minimum OFF time of the pulse width modulation in seconds is rounded to r_Lmn_Pwm_PBTm = r_Cycle or r_Lmn_Pwm_PBTm = n*r_Cycle
sPid_Cmpt.r_Pv_Hlm(1)	REAL	120.0	High limit of the process value At the I/O input, the process value can be a maximum of 18% higher than the standard range (overrange). An error is no longer reported for a violation of the "Process value high limit". Only a wire-break and a short-circuit are recognized and the PID_Compact switches to "Inactive" mode. r_Pv_Hlm > r_Pv_Llm
sPid_Cmpt.r_Pv_Llm(1)	REAL	0.0	Low limit of the process value r_Pv_Llm < r_Pv_Hlm
sPid_Cmpt.r_Pv_HWrn(1)	REAL	+3.402822e+38	Warning high limit of the process value If you set r_Pv_HWrn outside the process value limits, the configured process value absolute high limit is used as the warning high limit. If you configure r_Pv_HWrn within the process value limits, this value is used as the warning high limit. r_Pv_HWrn > r_Pv_LWrn r_Pv_HWrn ≤ r_Pv_Hlm
sPid_Cmpt.r_Pv_LWrn(1)	REAL	-3.402822e+38	Warning low limit of the process value If you set r_Pv_LWrn outside the process value limits, the configured process value absolute low limit is used as the warning low limit. If you configure r_Pv_LWrn within the process value limits, this value is used as the warning low limit. r_Pv_LWrn < r_Pv_HWrn r_Pv_LWrn ≥ r_Pv_LWrn
sPidCalc.i_Ctrl_IOutv(1)	REAL	0.0	Current integral action
sParamCalc.i_Event_SUT	INT	0	Variable i_Event_SUT (Page 315) indicates the current phase of "pretuning":

Tag	Data type	Default	Description
sParamCalc.i_Event_TIR	INT	0	Variable i_Event_TIR (Page 316) indicates the current phase of "fine tuning":
sRet.i_Mode	INT	0	The operating mode is changed edge-triggered. The following operating mode is enabled on a change to • i_Mode = 0: "Inactive" mode (controller stop) • i_Mode = 1: "Pretuning" mode • i_Mode = 2: "Fine tuning" mode • i_Mode = 3: "Automatic" mode • i_Mode = 4: "Manual" mode i_Mode is retentive.
sRet.r_Ctrl_Gain(1)	REAL	1.0	Active proportional gain Gain is retentive.
sRet.r_Ctrl_Ti(1)	REAL	20.0	• r_Ctrl_Ti > 0.0: Active integral action time • r_Ctrl_Ti = 0.0: Integral action is deactivated r_Ctrl_Ti is retentive.
sRet.r_Ctrl_Td(1)	REAL	0.0	• r_Ctrl_Td > 0.0: Active derivative action time • r_Ctrl_Td = 0.0: Derivative action is deactivated r_Ctrl_Td is retentive.
sRet.r_Ctrl_A(1)	REAL	0.0	Active derivative delay coefficient r_Ctrl_A is retentive.
sRet.r_Ctrl_B(1)	REAL	0.0	Active proportional action weighting r_Ctrl_B is retentive.
sRet.r_Ctrl_C(1)	REAL	0.0	Active derivative action weighting r_Ctrl_C is retentive.
sRet.r_Ctrl_Cycle(1)	REAL	1.0	Active sampling time of the PID algorithm r_Ctrl_Cycle is calculated during tuning and rounded to an integer multiple of r_Cycle. r_Ctrl_Cycle is used as time period of the pulse width modulation. r_Ctrl_Cycle is retentive.

See also

Downloading technology objects to device (Page 44)

9.1.5.5 Parameters State and sRet.i_Mode V1

Correlation of the parameters

The State parameter indicates the current operating mode of the PID controller. You cannot modify the State parameter.

You need to modify the sRet.i_Mode tag to change the operating mode. This also applies when the value for the new operating mode is already in sRet.i_Mode. First set sRet.i_Mode = 0 and then sRet.i_Mode = 3. Provided the current operating mode of the controller supports this change, State is set to the value of sRet.i_Mode.

When PID_Compact automatically switches the operating mode, the following applies: State != sRet.i_Mode.

Examples:

- Successful pretuning
  State = 3 and sRet.i_Mode = 1
- Error
  State = 0 and sRet.i_Mode remains at the same value, e.g sRet.i_Mode = 3
- ManualEnalbe = TRUE
  State = 4 and sRet.i_Mode remain at the previous value, for example, sRet.i_Mode = 3

Note

You wish to repeat successful fine tuning without exiting automatic mode with i_Mode = 0.

Setting sRet.i_Mode to an invalid value such as 9999 for one cycle has no effect on State. Set Mode = 2 in the next cycle. You can generate a change to sRet.i_Mode without first switching to "inactive" mode.

Meaning of values

State / sRet.i_Mode	Description of the operating mode
0	Inactive The controller is switched off. The controller was in "inactive" mode before pretuning was performed. The PID controller will change to "inactive" mode when running if an error occurs or if the "Deactivate controller" icon is clicked in the commissioning window.
1	Pretuning The pretuning determines the process response to a jump of the output value and searches for the point of inflection. The optimized PID parameters are calculated as a function of the maximum rate of rise and dead time of the controlled system. Pretuning requirements: • The controller is in inactive mode or manual mode • ManualEnable = FALSE • The process value must not be too close to the setpoint. |Setpoint - Input| > 0.3 * |sPid_Cmpt.r_Pv_Hlm - sPid_Cmpt.r_Pv_Llm| and |Setpoint - Input| > 0.5 * |Setpoint| • The setpoint may not be changed during pretuning. The higher the stability of the process value, the easier it is to calculate the PID parameters and increase precision of the result. Noise on the process value can be tolerated as long as the rate of rise of the process value is significantly higher compared to the noise. PID parameters are backed up before they are recalculated and can be reactivated with sPid_Cmpt.b_LoadBackUp. There is a change to automatic mode following successful pretuning and to "inactive" mode following unsuccessful pretuning. The phase of pretuning is indicated with Tag i_Event_SUT V1 (Page 315).

State / sRet.i_Mode	Description of the operating mode
2	Fine tuning Fine tuning generates a constant, limited oscillation of the process value. The PID parameters are optimized based on the amplitude and frequency of this oscillation. The differences between the process response during pretuning and fine tuning are analyzed. All PID parameters are recalculated on the basis of the findings. PID parameters from fine tuning usually have better master control and disturbance behavior than PID parameters from pretuning. PID_Compact automatically attempts to generate an oscillation greater than the noise of the process value. Fine tuning is only minimally influenced by the stability of the process value. PID parameters are backed up before they are recalculated and can be reactivated with sPid_Cmpt.b_LoadBackUp. Requirements for fine tuning: • No disturbances are expected. • The setpoint and the process value lie within the configured limits. • The setpoint may not be changed during fine tuning. • ManualEnable = FALSE • Automatic (State = 3), inactive (State = 0) or manual (State = 4) mode Fine tuning proceeds as follows when started in: • Automatic mode (State = 3) Start fine tuning in automatic mode if you wish to improve the existing PID parameters using controller tuning. PID_Comact will regulate using the existing PID parameters until the control loop has stabilized and the requirements for fine tuning have been met. Only then will fine tuning start. • Inactive (State = 0) or manual (State = 4) mode If the requirements for pretuning are met, pretuning is started. The PID parameters established will be used for adjustment until the control loop has stabilized and the requirements for fine tuning have been met. Only then will fine tuning start. If pretuning is not possible, PID_Compact will change to "Inactive" mode. An attempt is made to reach the setpoint with a minimum or maximum output value if the process value for pretuning is already too near the setpoint or sPid_Calc.b_RunIn = TRUE. This can produce increased overshoot. The controller will change to "automatic mode" after successfully completed "fine tuning" and to "inactive" mode if "fine tuning" has not been successfully completed. The "Fine tuning" phase is indicated with Tag i_Event_TIR V1 (Page 316).

State / sRet.i_Mode	Description of the operating mode
3	Automatic mode In automatic mode, PID_Compact corrects the controlled system in accordance with the parameters specified. The controller changes to automatic mode if one the following conditions is fulfilled: • Pretuning successfully completed • Fine tuning successfully completed • Change of variable sRet.i_Mode to the value 3. After CPU startup or change from Stop to RUN mode, PID_Compact will start in the most recently active operating mode. To retain PID_Compact in "Inactive" mode, set sb_RunModeByStartup = FALSE.
4	Manual mode In manual mode, you specify a manual output value in the ManualValue parameter. This operating mode is enabled if sRet.i_Mode = 4, or at the rising edge on ManualEnable. If ManualEnable changes to TRUE, only State will change. sRet.i_Mode will retain its current value. PID_Compact will return to the previous operating mode upon a falling edge at ManualEnable. The change to automatic mode is bumpless.

See also

Output parameters of PID_Compact V1 (Page 302)

Pretuning V1 (Page 112)

Fine tuning V1 (Page 114)

"Manual" mode V1 (Page 116)

Tag i_Event_SUT V1 (Page 315)

Tag i_Event_TIR V1 (Page 316)

9.1.5.6 Parameter Error V1

If several errors are pending simultaneously, the values of the error codes are displayed with binary addition. The display of error code 0003, for example, indicates that the errors 0001 and 0002 are pending simultaneously.

Error (DW#16#...)	Description
0000	There is no error.
0001	The "Input" parameter is outside the process value limits. • Input > sPid_Cmpt.r_Pv_Hlm or • Input < sPid_Cmpt.r_Pv_Llm You cannot move the actuator again until you eliminate the error.
0002	Invalid value at "Input_PER" parameter. Check whether an error is pending at the analog input.
0004	Error during fine tuning. Oscillation of the process value could not be maintained.
0008	Error at start of pretuning. The process value is too close to the setpoint. Start fine tuning.
0010	The setpoint was changed during tuning.
0020	Pretuning is not permitted in automatic mode or during fine tuning.
0080	Error during pretuning. The output value limits are not configured correctly or the actual value does not react as expected. Check whether the limits of the output value are configured correctly and match the control logic. Also make sure that the actual value does not oscillate strongly before starting pretuning.
0100	Error during tuning resulted in invalid parameters.
0200	Invalid value at "Input" parameter: Value has an invalid number format.
0400	Calculation of output value failed. Check the PID parameters.
0800	Sampling time error: PID_Compact is not called within the sampling time of the cyclic interrupt OB. If this error occurred during simulation with PLCSIM, see the notes under Simulating PID_Compact V1 with PLCSIM (Page 117).
1000	Invalid value at "Setpoint" parameter: Value has an invalid number format.

See also

Output parameters of PID_Compact V1 (Page 302)

9.1.5.7 Parameter Reset V1

The response to Reset = TRUE depends on the version of the PID_Compact instruction.

Reset response PID_Compact V.1.1 or higher

A rising edge at Reset triggers a change to "Inactive" mode; errors and warnings are reset and the integral action is deleted. A falling edge at Reset triggers a change to the most recently active operating mode. If automatic mode was active before, the integral action is pre-assigned in such a way that the switchover is bumpless.

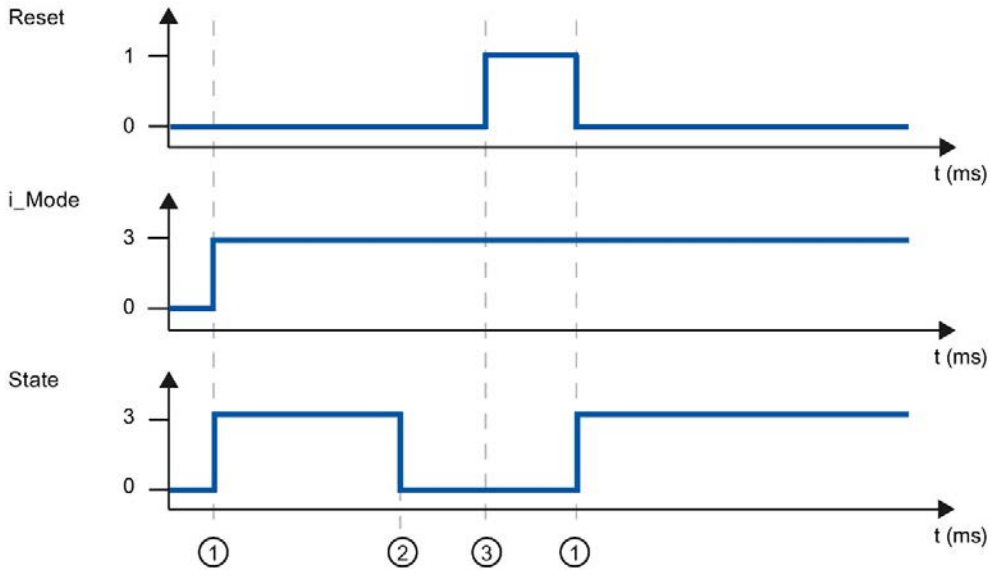

① Activation
② Error
③ Reset

Reset response PID_Compact V.1.0

A rising edge at Reset triggers a change to "Inactive" mode; errors and warnings are reset and the integral action is deleted. The controller is not reactivated until the next edge at i_Mode.

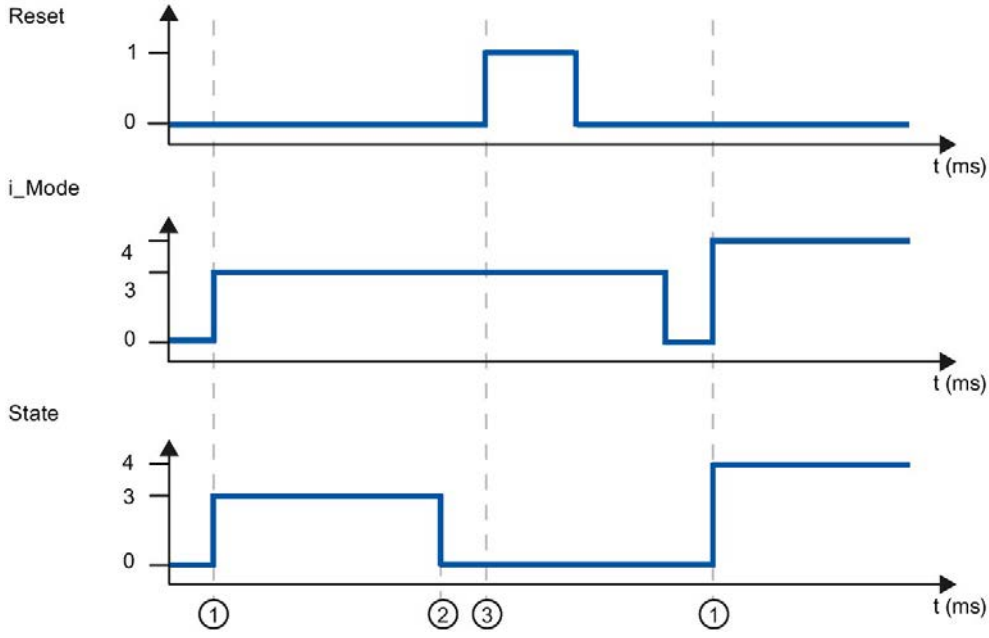

① Activation
② Error
③ Reset

9.1.5.8 Tag sd_warning V1

If several warnings are pending, the values of variable sd_warning are displayed by means of binary addition. The display of warning 0003, for example, indicates that the warnings 0001 and 0002 are also pending.

sd_warning (DW#16#....)	Description
0000	No warning pending.
0001	The point of inflection was not found during pretuning.
0002	Oscillation increased during fine tuning.
0004	The setpoint was outside the set limits.
0008	Not all the necessary controlled system properties were defined for the selected method of calculation. The PID parameters were instead calculated using the "i_CtrlTypeTIR = 3" method.
0010	The operating mode could not be changed because ManualEnable = TRUE.
0020	The cycle time of the calling OB limits the sampling time of the PID algorithm. Improve results by using shorter OB cycle times.
0040	The process value exceeded one of its warning limits.

The following warnings are deleted as soon as the cause is dealt with:

- 0004
- 0020
- 0040

All other warnings are cleared with a rising edge at Reset.

9.1.5.9 Tag i_Event_SUT V1

i_Event_SUT	Name	Description
0	SUT_INIT	Initialize pretuning
100	SUT_STDABW	Calculate the standard deviation
200	SUT_GET_POI	Find the point of inflection
9900	SUT_IO	Pretuning successful
1	SUT_NIO	Pretuning not successful

See also

Static tags of PID_Compact V1 (Page 303)

Parameters State and sRet.i_Mode V1 (Page 308)

9.1.5.10 Tag i_Event_TIR V1

i_Event_TIR	Name	Description
-100	TIR_FIRST_SUT	Fine tuning is not possible. Pretuning will be executed first.
0	TIR_INIT	Initialize fine tuning
200	TIR_STDABW	Calculate the standard deviation
300	TIR_RUN_IN	Attempt to reach the setpoint
400	TIR_CTRLN	Attempt to reach the setpoint with the existing PID parameters (if pretuning has been successful)
500	TIR_OSZIL	Determine oscillation and calculate parameters
9900	TIR_IO	Fine tuning successful
1	TIR_NIO	Fine tuning not successful

See also

Static tags of PID_Compact V1 (Page 303)

Parameters State and sRet.i_Mode V1 (Page 308)

9.2 PID_3Step

9.2.1 New features of PID_3Step

PID_3Step V2.3

- As of PID_3Step Version 2.3 the monitoring and limiting of the travel time can be deactivated with Config.VirtualActuatorLimit = 0.0.

PID_3Step V2.2

- **Use with S7-1200**

  As of PID_3Step V2.2, the instruction with V2 functionality can also be used on S7-1200 with firmware version 4.0 or higher.

PID_3Step V2.0

- **Reaction to error**

  The reaction to ActivateRecoverMode = TRUE has been completely overhauled. PID_3Step reacts in a more fault tolerant manner in the default setting.

NOTICE
Your system may be damaged. If you use the default setting, PID_3Step remains in automatic mode even if the process value limits are exceeded. This may damage your system. It is essential to configure how your controlled system reacts in the event of an error to protect your system from damage.

  You use the ErrorAck input parameter to acknowledge the errors and warnings without restarting the controller or clearing the integral action.

  Switching operating modes does not acknowledge errors that are no longer pending.

- **Switching the operating mode**

  You specify the operating mode at the Mode in/out parameter and use a positive edge at ModeActivate to start the operating mode. The Retain.Mode tag has been omitted.

  The transition time measurement can no longer be started with GetTransitTime.Start, but only with Mode = 6 and a positive edge at ModeActivate.

- **Multi-instance capability**

  You can call up PID_3Step as multi-instance DB. No technology object is created in this case and no parameter assignment interface or commissioning interface is available. You must assign parameters for PID_3Step directly in the multi-instance DB and commission it via a watch table.

- **Startup characteristics**

  The operating mode specified at the Mode parameter is also started on a negative edge at Reset and during a CPU cold restart, if RunModeByStartup = TRUE.

- **ENO characteristics**

  ENO is set depending on the operating mode.

  If State = 0, then ENO = FALSE.

  If State ≠ 0, then ENO = TRUE.

- **Manual mode**

  The Manual_UP and Manual_DN input parameters no longer function as edge-triggered parameters. Edge-triggered manual mode continues to be possible using the ManualUpInternal and ManualDnInternal tags.

  In "Manual mode without endstop signals" (Mode = 10), the endstop signals Actuator_H and Actuator_L are ignored even though they are activated.

- **Default value of PID parameters**

  The following default settings have been changed:

  – Proportional action weighting (PWeighting) from 0.0 to 1.0

  – Derivative action weighting (DWeighting) from 0.0 to 1.0

  – Coefficient for derivative delay (TdFiltRatio) from 0.0 to 0.2

- **Limiting of motor transition time**

  You configure the maximum percentage of the motor transition time that the actuator will travel in one direction in the Config.VirtualActuatorLimit tag.

- **Setpoint value specification during tuning**

  You configure the permitted fluctuation of the setpoint during tuning at the CancelTuningLevel tag.

- **Switching a disturbance variable on**

  You can switch a disturbance variable on at the Disturbance parameter.

- **Troubleshooting**

  If the endstop signals are not activated (ActuatorEndStopOn = FALSE), ScaledFeedback is determined without Actuator_H or Actuator_L.

PID_3Step V1.1

- **Manual mode on CPU startup**

  If ManualEnable = TRUE when the CPU starts, PID_3Step starts in manual mode. A positive edge at ManualEnable is not necessary.

- **Reaction to error**

  The ActivateRecoverMode tag is no longer effective in manual mode.

- **Troubleshooting**

  The Progress tag is reset following successful tuning or transition time measurement.

9.2.2 Compatibility with CPU and FW

The following table shows which version of PID_3Step can be used on which CPU.

CPU	FW	PID_3Step
S7-1200	V4.2 or higher	V2.3 V2.2 V1.1
	V4.0 to V4.1	V2.2 V1.1
	V3.x	V1.1 V1.0
	V2.x	V1.1 V1.0
	V1.x	-
S7-1500	V2.0 or higher	V2.3 V2.2 V2.1 V2.0
	V1.5 to V1.8	V2.2 V2.1 V2.0
	V1.1	V2.1 V2.0
	V1.0	V2.0

9.2.3 CPU processing time and memory requirement PID_3Step V2.x

CPU processing time

Typical CPU processing times of the PID_3Step technology object as of Version V2.0, depending on CPU type.

CPU	Typ. CPU processing time PID_3Step V2.x
CPU 1211C ≥ V4.0	410 µs
CPU 1215C ≥ V4.0	410 µs
CPU 1217C ≥ V4.0	410 µs
CPU 1505S ≥ V1.0	50 µs
CPU 1510SP-1 PN ≥ V1.6	120 µs
CPU 1511-1 PN ≥ V1.5	120 µs
CPU 1512SP-1 PN ≥ V1.6	120 µs
CPU 1516-3 PN/DP ≥ V1.5	65 µs
CPU 1518-4 PN/DP ≥ V1.5	5 µs

Memory requirement

Memory requirement of an instance DB of the PID_3Step technology object as of Version V2.0.

Memory requirement	Memory requirement of the instance DB of PID_3Step V2.x
Load memory requirement	Approx. 15000 bytes
Total work memory requirement	1040 bytes
Retentive work memory requirement	60 bytes

9.2.4 PID_3Step V2

9.2.4.1 Description of PID_3Step V2

Description

You use the PID_3Step instruction to configure a PID controller with self tuning for valves or actuators with integrating behavior.

The following operating modes are possible:

- Inactive
- Pretuning
- Fine tuning
- Automatic mode
- Manual mode
- Approach substitute output value
- Transition time measurement
- Error monitoring
- Approach substitute output value with error monitoring
- Manual mode without endstop signals

For a more detailed description of the operating modes, see the State parameter.

PID algorithm

PID_3Step is a PIDT1 controller with anti-windup and weighting of the proportional and derivative actions. The PID algorithm operates according to the following equation:

$$\Delta y = K_p \cdot s \cdot \left[(b \cdot w - x) + \frac{1}{T_I \cdot s} (w - x) + \frac{T_D \cdot s}{a \cdot T_D \cdot s + 1} (c \cdot w - x) \right]$$

Δy	Output value of the PID algorithm
K_p	Proportional gain
s	Laplace operator
b	Proportional action weighting
w	Setpoint
x	Process value
T_I	Integral action time
T_D	Derivative action time
a	Derivative delay coefficient (derivative delay T1 = a × T_D)
c	Derivative action weighting

Block diagram without position feedback

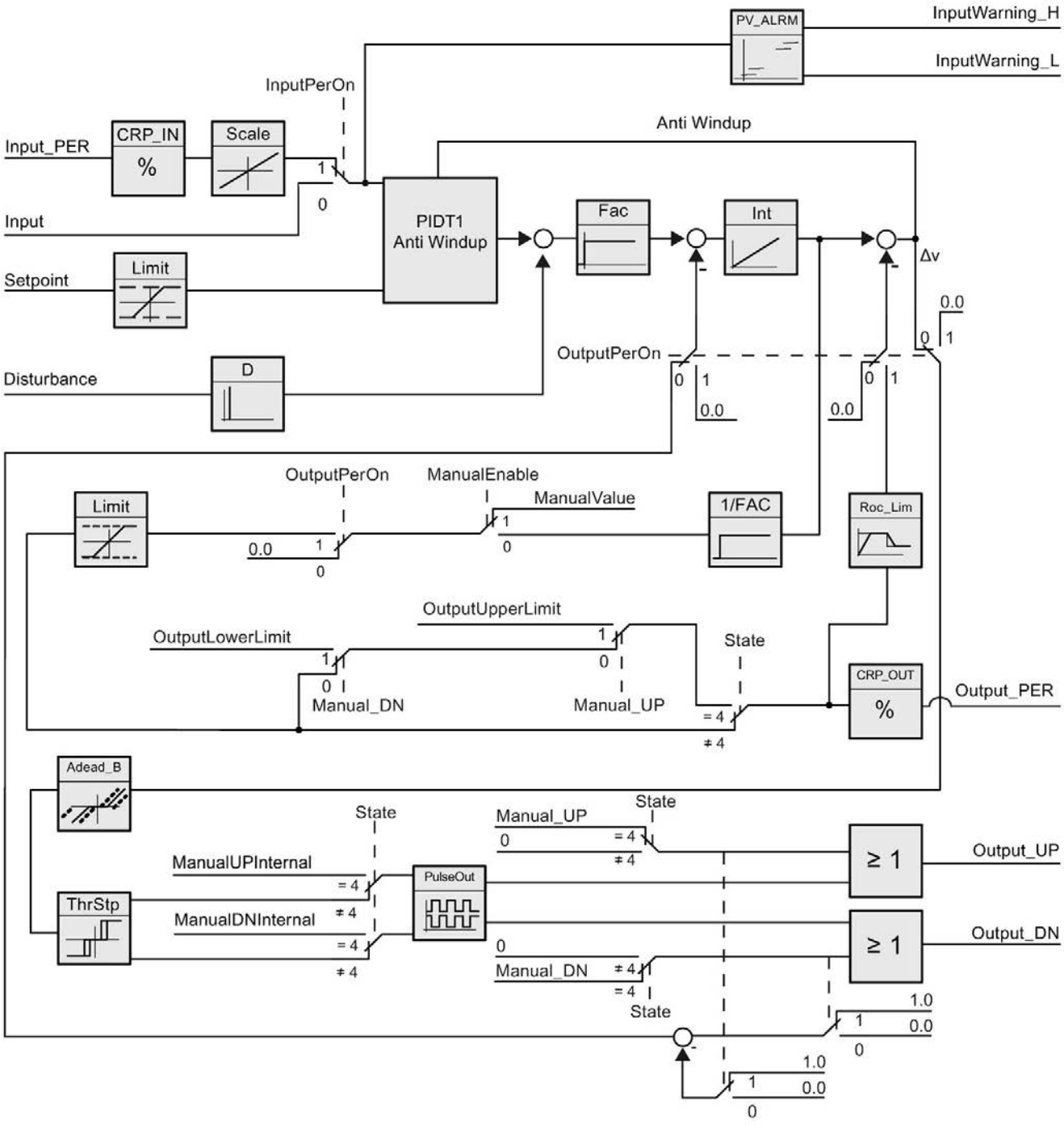

Block diagram with position feedback

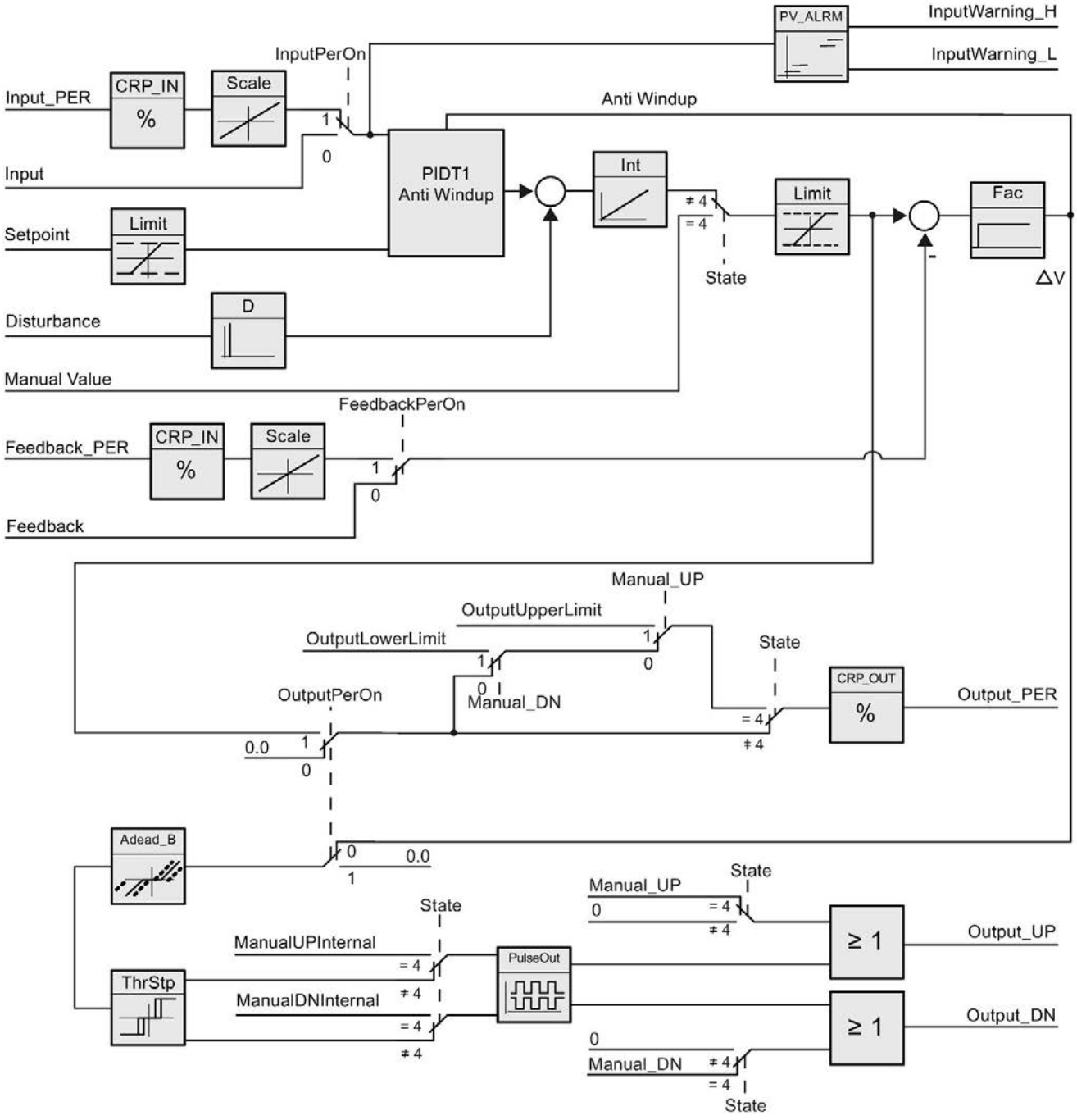

Block diagram of PIDT1 with anti-windup

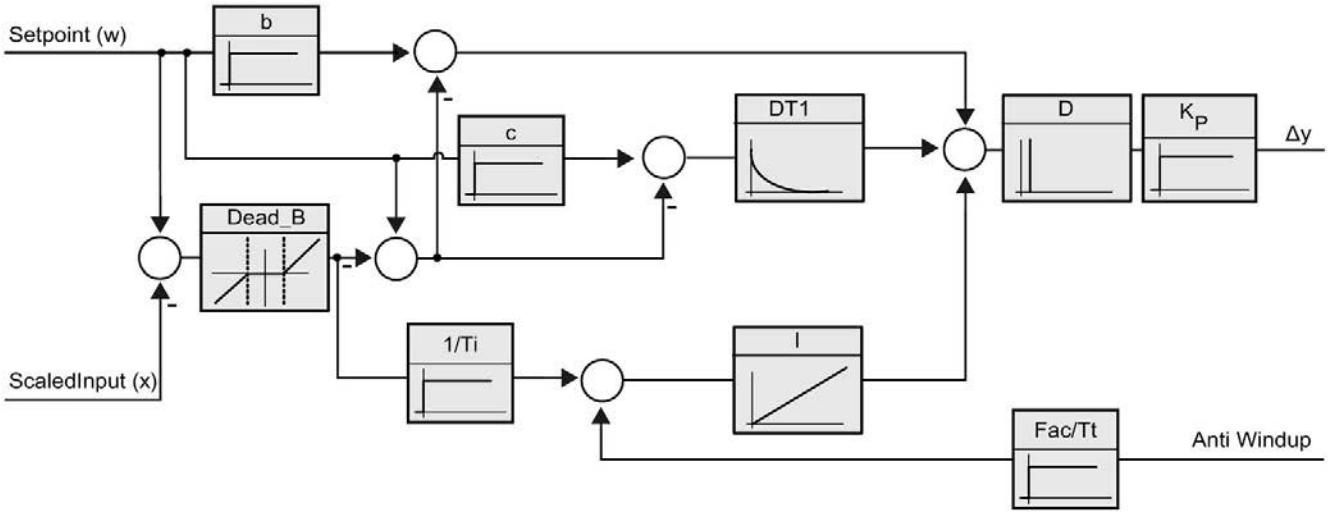

Call

PID_3Step is called in the constant time scale of a cycle interrupt OB.

If you call PID_3Step as a multi-instance DB, no technology object is created. No parameter assignment interface or commissioning interface is available. You must assign parameters for PID_3Step directly in the multi-instance DB and commission it via a watch table.

Download to device

The actual values of retentive tags are only updated when you download PID_3Step completely.

Downloading technology objects to device (Page 44)

Startup

When the CPU starts up, PID_3Step starts in the operating mode that is saved in the Mode in/out parameter. To leave PID_3Step in "Inactive" mode, set RunModeByStartup = FALSE.

Reaction to error

In automatic mode and during commissioning, the reaction to error depends on the ErrorBehaviour and ActivateRecoverMode tags. In manual mode, the reaction is independent of ErrorBehaviour and ActivateRecoverMode. If ActivateRecoverMode = TRUE, the reaction additionally depends on the error that occurred.

ErrorBe-haviour	Acti-vateRecover-Mode	Configuration editor > actuator setting > Set Output to	Reaction
FALSE	FALSE	Current output value	Switch to "Inactive" mode (State = 0) The actuator remains in the current position.
FALSE	TRUE	Current output value while error is pending	Switch to "Error monitoring" mode (State = 7) The actuator remains in the current position while the error is pending.
TRUE	FALSE	Substitute output value	Switch to "Approach substitute output value" mode (State = 5) The actuator moves to the configured substitute output value. Switch to "Inactive" mode (State = 0) The actuator remains in the current position.
TRUE	TRUE	Substitute output value while error is pending	Switch to "Approach substitute output value with error monitoring" mode (State = 8) The actuator moves to the configured substitute output value. Switch to "Error monitoring" mode (State = 7)

In manual mode, PID_3Step uses ManualValue as output value, unless the following errors occur:

- 2000h: Invalid value at Feedback_PER parameter.
- 4000h: Invalid value at Feedback parameter.
- 8000h: Error during digital position feedback.

You can only change the position of the actuator with Manual_UP and Manual_DN, not with ManualValue.

The Error parameter indicates whether an error has occurred in this cycle. The ErrorBits parameter shows which errors have occurred. ErrorBits is reset by a rising edge at Reset or ErrorAck.

See also

Parameters State and Mode V2 (Page 346)

Parameter ErrorBits V2 (Page 351)

Configuring PID_3Step V2 (Page 119)

9.2.4.2 Mode of operation of PID_3Step V2

Monitoring process value limits

You specify the high limit and low limit of the process value in the Config.InputUpperLimit and Config.InputLowerLimit tags. If the process value is outside these limits, an error occurs (ErrorBits = 0001h).

You specify a high and low warning limit of the process value in the Config.InputUpperWarning and Config.InputLowerWarning tags. If the process value is outside these warning limits, a warning occurs (Warning = 0040h), and the InputWarning_H or InputWarning_L output parameter changes to TRUE.

Limiting the setpoint

You specify a high limit and low limit of the setpoint in the Config.SetpointUpperLimit and Config.SetpointLowerLimit tags. PID_3Step automatically limits the setpoint to the process value limits. You can limit the setpoint to a smaller range. PID_3Step checks whether this range falls within the process value limits. If the setpoint is outside these limits, the high or low limit is used as the setpoint, and output parameter SetpointLimit_H or SetpointLimit_L is set to TRUE.

The setpoint is limited in all operating modes.

Limiting the output value

You specify a high limit and low limit of the output value in the Config.OutputUpperLimit and Config.OutputLowerLimit tags. The output value limits must be within "Low endstop" and "High endstop".

- High endstop: Config.FeedbackScaling.UpperPointOut
- Low endstop: Config.FeedbackScaling.LowerPointOut

Rule:

UpperPointOut ≥ OutputUpperLimit > OutputLowerLimit ≥ LowerPointOut

The valid values for "High endstop" and "Low endstop" depend upon:

- FeedbackOn
- FeedbackPerOn
- OutputPerOn

OutputPerOn	FeedbackOn	FeedbackPerOn	LowerPointOut	UpperPointOut
FALSE	FALSE	FALSE	Cannot be set (0.0%)	Cannot be set (100.0%)
FALSE	TRUE	FALSE	-100.0% or 0.0%	0.0% or +100.0%
FALSE	TRUE	TRUE	-100.0% or 0.0%	0.0% or +100.0%
TRUE	FALSE	FALSE	Cannot be set (0.0%)	Cannot be set (100.0%)
TRUE	TRUE	FALSE	-100.0% or 0.0%	0.0% or +100.0%
TRUE	TRUE	TRUE	-100.0% or 0.0%	0.0% or +100.0%

If OutputPerOn = FALSE and FeedbackOn = FALSE, you cannot limit the output value. Output_UP and Output_DN are then reset upon Actuator_H = TRUE or Actuator_L = TRUE. If endstop signals are also not present, Output_UP and Output_DN are reset after a travel time of Config.VirtualActuatorLimit × Retain.TransitTime/100. As of PID_3Step Version 2.3 the monitoring and limiting of the travel time can be deactivated with Config.VirtualActuatorLimit = 0.0.

The output value is 27648 at 100% and -27648 at -100%. PID_3Step must be able to completely close the valve.

Note

Use with two or more actuators

PID_3 Step is not suitable for use with two or more actuators (for example, in heating/cooling applications), because different actuators need different PID parameters to achieve a good control response.

Substitute output value

If an error has occurred, PID_3Step can output a substitute output value and move the actuator to a safe position that is specified in the SavePosition tag. The substitute output value must be within the output value limits.

Monitoring signal validity

The values of the following parameters are monitored for validity when used:

- Setpoint
- Input
- Input_PER
- Input_PER
- Feedback
- Feedback_PER
- Disturbance
- ManualValue
- SavePosition
- Output_PER

Monitoring the PID_3Step sampling time

Ideally, the sampling time is equivalent to the cycle time of the calling OB. The PID_3Step instruction measures the time interval between two calls. This is the current sampling time. On every switchover of operating mode and during the initial startup, the mean value is formed from the first 10 sampling times. Too great a difference between the current sampling time and this mean value triggers an error (ErrorBits = 0800h).

The error occurs during tuning if:

- New mean value >= 1.1 x old mean value
- New mean value <= 0.9 x old mean value

The error occurs in automatic mode if:

- New mean value >= 1.5 x old mean value
- New mean value <= 0.5 x old mean value

If you deactivate the sampling time monitoring (CycleTime.EnMonitoring = FALSE), you can also call PID_3Step in OB1. You must then accept a lower control quality due to the deviating sampling time.

Sampling time of the PID algorithm

The controlled system needs a certain amount of time to respond to changes in the output value. It is therefore not advisable to calculate the output value in every cycle. The sampling time of the PID algorithm represents the time between two calculations of the output value. It is calculated during tuning and rounded to a multiple of the cycle time. All other functions of PID_3Step are executed at every call.

Measuring the motor transition time

The motor transition time is the time in seconds the motor requires to move the actuator from the closed to the opened state. The actuator is moved in one direction for a maximum time of Config.VirtualActuatorLimit × Retain.TransitTime/100. PID_3Step requires the motor transition time to be as accurate as possible for good controller results. The data in the actuator documentation contains average values for this type of actuator. The value for the specific actuator used may differ. You can measure the motor transition time during commissioning. The output value limits are not taken into consideration during the motor transition time measurement. The actuator can travel to the high or the low endstop.

The motor transition time is taken into consideration in the calculation of the analog output value as well as in the calculation of the digital output values. It is mainly required for correct operation during auto-tuning and the anti-windup behavior. You should therefore configure the motor transition time with the value that the motor requires to move the actuator from the closed to the opened state.

If no relevant motor transition time is in effect in your process (e.g. with solenoid valves), so that the output value has a direct and full effect on the process, use PID_Compact instead.

Control logic

An increase of the output value is generally intended to cause an increase in the process value. This is referred to as a normal control logic. For cooling and discharge control systems, it may be necessary to invert the control logic. PID_3Step does not work with negative proportional gain. If InvertControl = TRUE, an increasing control deviation causes a reduction in the output value. The control logic is also taken into account during pretuning and fine tuning.

See also

Configuring PID_3Step V1 (Page 142)

9.2.4.3 Changing the PID_3Step V2 interface

The following table shows what has changed in the PID_3Step instruction interface.

PID_3Step V1	PID_3Step V2	Change
Input_PER	Input_PER	Data type from Word to Int
Feedback_PER	Feedback_PER	Data type from Word to Int
	Disturbance	New
Manual_UP	Manual_UP	Function
Manual_DN	Manual_DN	Function
	ErrorAck	New
	ModeActivate	New
Output_PER	Output_PER	Data type from Word to Int
	ManualUPInternal	New
	ManualDNInternal	New
	CancelTuningLevel	New
	VirtualActuatorLImit	New
Config.Loadbackup	Loadbackup	Renamed
Config.TransitTime	Retain.TransitTime	Renamed and retentivity added
GetTransitTime.Start		Replaced by Mode and ModeActivate
SUT.CalculateSUTParams	SUT.CalculateParams	Renamed
SUT.TuneRuleSUT	SUT.TuneRule	Renamed
TIR.CalculateTIRParams	TIR.CalculateParams	Renamed
TIR.TuneRuleTIR	TIR.TuneRule	Renamed
Retain.Mode	Mode	Function Declaration of static for in-out parameters

9.2.4.4 Input parameters of PID_3Step V2

Table 9- 7 Input parameters of PID_3Step V2

Parameter	Data type	Default	Description
Setpoint	REAL	0.0	Setpoint of the PID controller in automatic mode
Input	REAL	0.0	A tag of the user program is used as source for the process value. If you are using parameter Input, then Config.InputPerOn = FALSE must be set.
Input_PER	INT	0	An analog input is used as the source of the process value. If you are using parameter Input_PER, then Config.InputPerOn = TRUE must be set.
Actuator_H	BOOL	FALSE	Digital position feedback of the valve for the high endstop If Actuator_H = TRUE, the valve is at the high endstop and is no longer moved towards this direction.
Actuator_L	BOOL	FALSE	Digital position feedback of the valve for the low endstop If Actuator_L = TRUE, the valve is at the low endstop and is no longer moved towards this direction.
Feedback	REAL	0.0	Position feedback of the valve If you are using parameter Feedback, then Config.FeedbackPerOn = FALSE must be set.
Feedback_PER	INT	0	Analog position feedback of a valve If you are using parameter Feedback_PER, then Config.FeedbackPerOn = TRUE must be set. Feedback_PER is scaled based on the tags: • Config.FeedbackScaling.LowerPointIn • Config.FeedbackScaling.UpperPointIn • Config.FeedbackScaling.LowerPointOut • Config.FeedbackScaling.UpperPointOut
Disturbance	REAL	0.0	Disturbance variable or precontrol value
ManualEnable	BOOL	FALSE	• A FALSE -> TRUE edge activates "manual mode", while State = 4, Mode remains unchanged. As long as ManualEnable = TRUE, you cannot change the operating mode via a rising edge at ModeActivate or use the commissioning dialog. • A TRUE -> FALSE edge activates the operating mode that is specified by Mode. We recommend that you change the operating mode using ModeActivate only.
ManualValue	REAL	0.0	In manual mode, the absolute position of the valve is specified. ManualValue is only evaluated if you are using Output_PER, **or** if position feedback is available.

Parameter	Data type	Default	Description
Manual_UP	BOOL	FALSE	• Manual_UP = TRUE The valve is opened even if you are using Output_PER or a position feedback. The valve is no longer moved if the high endstop has been reached. See also Config.VirtualActuatorLimit • Manual_UP = FALSE If you are using Output_PER or a position feedback, the valve is moved to ManualValue. Otherwise, the valve is no longer moved. If Manual_UP and Manual_DN are set to TRUE simultaneously, the valve is not moved.
Manual_DN	BOOL	FALSE	• Manual_DN = TRUE The valve is closed even if you are using Output_PER or a position feedback. The valve is no longer moved if the low endstop has been reached. See also Config.VirtualActuatorLimit • Manual_DN = FALSE If you are using Output_PER or a position feedback, the valve is moved to ManualValue. Otherwise, the valve is no longer moved.
ErrorAck	BOOL	FALSE	• FALSE -> TRUE edge ErrorBits and Warning are reset.
Reset	BOOL	FALSE	Restarts the controller. • FALSE -> TRUE edge – Switch to "Inactive" mode – ErrorBits and Warnings are reset. • As long as Reset = TRUE, – PID_3Step remains in "Inactive" mode (State = 0). – You cannot change the operating mode with Mode and ModeActivate or ManualEnable. – You cannot use the commissioning dialog. • TRUE -> FALSE edge – If ManualEnable = FALSE, PID_3Step switches to the operating mode that is saved in Mode. – If Mode = 3, the integral action is treated as configured with the tag IntegralResetMode.
ModeActivate	BOOL	FALSE	• FALSE -> TRUE edge PID_3Step switches to the operating mode that is saved in the Mode parameter.

9.2.4.5 Output parameters of PID_3Step V2

Table 9- 8 Output parameters of PID_3Step V2

Parameter	Data type	Default	Description
ScaledInput	REAL	0.0	Scaled process value
ScaledFeedback	REAL	0.0	Scaled position feedback For an actuator without position feedback, the position of the actuator indicated by ScaledFeedback is very imprecise. ScaledFeedback may only be used for rough estimation of the current position in this case.
Output_UP	BOOL	FALSE	Digital output value for opening the valve If Config.OutputPerOn = FALSE, the Output_UP parameter is used.
Output_DN	BOOL	FALSE	Digital output value for closing the valve If Config.OutputPerOn = FALSE, the Output_DN parameter is used.
Output_PER	INT	0	Analog output value If Config.OutputPerOn = TRUE, Output_PER is used. Use Output_PER if you are using a valve as actuator which is triggered via an analog output and controlled with a continuous signal, e.g. 0...10 V or 4...20 mA. The value at Output_PER corresponds to the target position of the valve, e.g. Output_PER = 13824, when the valve is to be opened by 50%.
SetpointLimit_H	BOOL	FALSE	If SetpointLimit_H = TRUE, the absolute setpoint high limit is reached (Setpoint ≥ Config.SetpointUpperLimit). The setpoint is limited to Config.SetpointUpperLimit .
SetpointLimit_L	BOOL	FALSE	If SetpointLimit_L = TRUE, the absolute setpoint low limit has been reached (Setpoint ≤ Config.SetpointLowerLimit). The setpoint is limited to Config.SetpointLowerLimit .
InputWarning_H	BOOL	FALSE	If InputWarning_H = TRUE, the process value has reached or exceeded the warning high limit.
InputWarning_L	BOOL	FALSE	If InputWarning_L = TRUE, the process value has reached or fallen below the warning low limit.

Parameter	Data type	Default	Description
State	INT	0	The State parameter (Page 346) shows the current operating mode of the PID controller. You can change the operating mode using the input parameter Mode and a rising edge at ModeActivate. • State = 0: Inactive • State = 1: Pretuning • State = 2: Fine tuning • State = 3: Automatic mode • State = 4: Manual mode • State = 5: Approach substitute output value • State = 6: Transition time measurement • State = 7: Error monitoring • State = 8: Approach substitute output value with error monitoring • State = 10: Manual mode without endstop signals
Error	BOOL	FALSE	If Error = TRUE, at least one error message is pending in this cycle.
ErrorBits	DWORD	DW#16#0	The ErrorBits parameter (Page 351) shows which error messages are pending. ErrorBits is retentive and is reset upon a rising edge at Reset or ErrorAck.

See also

Parameters State and Mode V2 (Page 346)

Parameter ErrorBits V2 (Page 351)

9.2.4.6 In/out parameters of PID-3Step V2

Table 9- 9 In/out parameters of PID-3Step V2

Parameter	Data type	Default	Description
Mode	INT	4	At the Mode parameter, you specify the operating mode to which PID_3Step is to switch. Options are: • Mode = 0: Inactive • Mode = 1: Pretuning • Mode = 2: Fine tuning • Mode = 3: Automatic mode • Mode = 4: Manual mode • Mode = 6: Transition time measurement • Mode = 10: Manual mode without endstop signals The operating mode is activated by: • Rising edge at ModeActivate • Falling edge at Reset • Falling edge at ManualEnable • Cold restart of CPU if RunModeByStartup = TRUE Mode is retentive. A detailed description of the operating modes can be found in Parameters State and Mode V2 (Page 346).

9.2.4.7 Static tags of PID_3Step V2

Note

Change the tags identified with (1) only in "Inactive" mode to prevent malfunction of the PID controller.

Tag	Data type	Default	Description
ManualUpInternal	BOOL	FALSE	In manual mode, each rising edge opens the valve by 5% of the total control range or for the duration of the minimum motor transition time. ManualUpInternal is only evaluated if you are not using Output_PER or a position feedback. This tag is used in the commissioning dialog.
ManualDnInternal	BOOL	FALSE	In manual mode, every rising edge closes the valve by 5% of the total control range or for the duration of the minimum motor transition time. ManualDnInternal is only evaluated if you are not using Output_PER or position feedback. This tag is used in the commissioning dialog.
ActivateRecoverMode	BOOL	TRUE	The ActivateRecoverMode V2 (Page 354) tag determines the reaction to error.
RunModeByStartup	BOOL	TRUE	Activate operating mode at Mode parameter after CPU restart If RunModeByStartup = TRUE, PID_3Step starts in the operating mode saved in the Mode parameter after CPU startup. If RunModeByStartup = FALSE, PID_3Step remains in "Inactive" mode after CPU startup.
LoadBackUp	BOOL	FALSE	If LoadBackUp = TRUE, the last set of PID parameters is reloaded. The set was saved prior to the last tuning. LoadBackUp is automatically set back to FALSE.
PhysicalUnit	INT	0	Unit of measurement of the process value and setpoint, e.g., ºC, or ºF.
PhysicalQuantity	INT	0	Physical quantity of the process value and setpoint, e.g., temperature
ErrorBehaviour	BOOL	FALSE	If ErrorBehaviour = FALSE and an error has occurred, the valve stays at its current position and the controller switches directly to "Inactive" or "Error monitoring" mode. If ErrorBehaviour = TRUE and an error occurs, the actuator moves to the substitute output value and only then switches to "Inactive" or "Error monitoring" mode. If the following errors occur, you can no longer move the valve to a configured substitute output value. • 2000h: Invalid value at Feedback_PER parameter. • 4000h: Invalid value at Feedback parameter. • 8000h: Error during digital position feedback. • 20000h: Invalid value at SavePosition tag.

Tag	Data type	Default	Description
Warning	DWORD	DW#16#0	The Warning tag (Page 346) shows the warnings since Reset = TRUE or ErrorAck =TRUE. Warning is retentive. Cyclic warnings (for example, process value warning) are shown until the cause of the warning is removed. They are automatically deleted once their cause has gone. Non-cyclic warnings (for example, point of inflection not found) remain and are deleted like errors.
SavePosition	REAL	0.0	Substitute output value If ErrorBehaviour = TRUE, the actuator is moved to a position that is safe for the plant when an error occurs. As soon as the substitute output value has been reached, PID_3Step switches the operating mode according to ActivateRecoverMode.
CurrentSetpoint	REAL	0.0	Currently active setpoint. This value is frozen at the start of tuning.
CancelTuningLevel	REAL	10.0	Permissible fluctuation of setpoint during tuning. Tuning is not canceled until: • Setpoint > CurrentSetpoint + CancelTuningLevel or • Setpoint < CurrentSetpoint - CancelTuningLevel
Progress	REAL	0.0	Progress of tuning as a percentage (0.0 - 100.0)
Config.InputPerOn(1)	BOOL	TRUE	If InputPerOn = TRUE, the Input_PER parameter is used. If InputPerOn = FALSE, the Input parameter is used.
Config.OutputPerOn(1)	BOOL	FALSE	If OutputPerOn = TRUE, the Output_PER parameter is used. If OutputPerOn = FALSE, the Ouput_UP and Output_DN parameters are used.
Config.InvertControl(1)	BOOL	FALSE	Invert control logic If InvertControl = TRUE, an increasing control deviation causes a reduction in the output value.
Config.FeedbackOn(1)	BOOL	FALSE	If FeedbackOn = FALSE, a position feedback is simulated. Position feedback is generally activated when FeedbackOn = TRUE.
Config.FeedbackPerOn(1)	BOOL	FALSE	FeedbackPerOn is only effective when FeedbackOn = TRUE. If FeedbackPerOn = TRUE, the analog input is used for the position feedback (Feedback_PER parameter). If FeedbackPerOn = FALSE, the Feedback parameter is used for the position feedback.
Config.ActuatorEndStopOn(1)	BOOL	FALSE	If ActuatorEndStopOn = TRUE, the digital position feedback Actuator_L and Actuator_H are taken into consideration.

Tag	Data type	Default	Description
Config.InputUpperLimit(1)	REAL	120.0	High limit of the process value Input and Input_PER are monitored to ensure adherence to this limit. At the I/O input, the process value can be a maximum of 18% higher than the standard range (overrange). An error is no longer signaled due to a violation of the "Process value high limit". Only a wire-break and a short-circuit are recognized and PID_3Step reacts according to the configured reaction to error. InputUpperLimit > InputLowerLimit
Config.InputLowerLimit(1)	REAL	0.0	Low limit of the process value InputLowerLimit < InputUpperLimit
Config.InputUpperWarning(1)	REAL	+3.402822e+38	Warning high limit of the process value If you set InputUpperWarning outside the process value limits, the configured absolute process value high limit is used as the warning high limit. If you configure InputUpperWarning within the process value limits, this value is used as the warning high limit. InputUpperWarning > InputLowerWarning InputUpperWarning ≤ InputUpperLimit
Config.InputLowerWarning(1)	REAL	-3.402822e+38	Warning low limit of the process value If you set InputLowerWarning outside the process value limits, the configured absolute process value low limit is used as the warning low limit. If you configure InputLowerWarning within the process value limits, this value is used as the warning low limit. InputLowerWarning < InputUpperWarning InputLowerWarning ≥ InputLowerLimit
Config.OutputUpperLimit(1)	REAL	100.0	High limit of output value The following value range is permitted: UpperPointOut ≥ OutputUpperLimit > OutputLowerLimit For more details, see OutputLowerLimit.
Config.OutputLowerLimit(1)	REAL	0.0	Low limit of output value The following value range is permitted: OutputUpperLimit > OutputLowerLimit ≥ LowerPointOut When using Output_PER, an output value limit of -100% corresponds to the value Output_PER = -27648; 100% correspond to the value Output_PER = 27648. If OutputPerOn = FALSE and FeedbackOn = FALSE, OutputLowerLimit and OutputUpperLimit are not evaluated. Output_UP and Output_DN are then reset at Actuator_H = TRUE or Actuator_L = TRUE (if ActuatorEndStopOn = TRUE) or after a travel time of Config.VirtualActuatorLimit * Retain.TransitTime/100 (if ActuatorEndStopOn = FALSE).

Tag	Data type	Default	Description
Config.SetpointUpperLimit(1)	REAL	+3.402822e+38	High limit of setpoint If you set SetpointUpperLimit outside the process value limits, the configured absolute process value high limit is preassigned as the setpoint high limit. If you configure SetpointUpperLimit within the process value limits, this value is used as the setpoint high limit.
Config.SetpointLowerLimit(1)	REAL	- 3.402822e+38	Low limit of the setpoint If you set SetpointLowerLimit outside the process value limits, the configured absolute process value low limit is preassigned as the setpoint low limit. If you set SetpointLowerLimit within the process value limits, this value is used as the setpoint low limit.
Config.MinimumOnTime(1)	REAL	0.0	Minimum ON time Minimum time in seconds for which the servo drive must be switched on. Config.MinimumOnTime is only effective if Output_UP and Output_DN are used (Config.OutputPerOn = FALSE).
Config.MinimumOffTime(1)	REAL	0.0	Minimum OFF time Minimum time in seconds for which the servo drive must be switched off. Config.MinimumOffTime is only effective if Output_UP and Output_DN are used (Config.OutputPerOn = FALSE).
Config.VirtualActuatorLimit(1)	REAL	150.0	If all the following conditions have been satisfied, the actuator is moved in one direction for the maximum period of VirtualActuatorLimit × Retain.TransitTime/100 and the warning 2000h is output: • Config.OutputPerOn = FALSE • Config.ActuatorEndStopOn = FALSE • Config.FeedbackOn = FALSE If Config.OutputPerOn = FALSE and Config.ActuatorEndStopOn = TRUE or Config.FeedbackOn = TRUE, only the warning 2000h is output. If Config.OutputPerOn = TRUE, VirtualActuatorLimit is not taken into consideration. As of PID_3Step Version 2.3 the monitoring and limiting of the travel time can be deactivated with Config.VirtualActuatorLimit = 0.0.
Config.InputScaling .UpperPointIn(1)	REAL	27648.0	Scaling Input_PER high Input_PER is converted to a percentage based on the two value pairs UpperPointOut, UpperPointIn and LowerPointOut, LowerPointIn of the InputScaling structure.
Config.InputScaling .LowerPointIn(1)	REAL	0.0	Scaling Input_PER low Input_PER is converted to a percentage based on the two value pairs UpperPointOut, UpperPointIn and LowerPointOut, LowerPointIn of the InputScaling structure.

Tag	Data type	Default	Description
Config.InputScaling .UpperPointOut(1)	REAL	100.0	Scaled high process value Input_PER is converted to a percentage based on the two value pairs UpperPointOut, UpperPointIn and LowerPointOut, LowerPointIn of the InputScaling structure.
Config.InputScaling .LowerPointOut(1)	REAL	0.0	Scaled low process value Input_PER is converted to a percentage based on the two value pairs UpperPointOut, UpperPointIn and LowerPointOut, LowerPointIn of the InputScaling structure.
Config.FeedbackScaling .UpperPointIn(1)	REAL	27648.0	Scaling Feedback_PER high Feedback_PER is converted to a percentage based on the two value pairs UpperPointOut, UpperPointIn and LowerPointOut, LowerPointIn of the FeedbackScaling structure.
Config.FeedbackScaling .LowerPointIn(1)	REAL	0.0	Scaling Feedback_PER low Feedback_PER is converted to a percentage based on the two value pairs UpperPointOut, UpperPointIn and LowerPointOut, LowerPointIn of the FeedbackScaling structure.
Config.FeedbackScaling .UpperPointOut(1)	REAL	100.0	High endstop Feedback_PER is converted to a percentage based on the two value pairs UpperPointOut, UpperPointIn and LowerPointOut, LowerPointIn of the FeedbackScaling structure. The permitted value range is determined by the configuration. • FeedbackOn = FALSE: UpperPointOut = 100.0 • FeedbackOn = TRUE: UpperPointOut = 100.0 or 0.0 UpperPointOut ≠ LowerPointOut
Config.FeedbackScaling .LowerPointOut(1)	REAL	0.0	Low endstop Feedback_PER is converted to a percentage based on the two value pairs UpperPointOut, UpperPointIn and LowerPointOut, LowerPointIn of the FeedbackScaling structure. The permitted value range is determined by the configuration. • FeedbackOn = FALSE: LowerPointOut = 0.0 • FeedbackOn = TRUE: LowerPointOut = 0.0 or -100.0 LowerPointOut ≠ UpperPointOut
GetTransitTime.InvertDirection	BOOL	FALSE	If InvertDirection = FALSE, the valve is fully opened, closed, and then reopened in order to determine the valve transition time. If InvertDirection = TRUE, the valve is fully closed, opened, and then closed again.

Tag	Data type	Default	Description
GetTransitTime .SelectFeedback	BOOL	FALSE	If SelectFeedback = TRUE, then Feedback_PER, or Feedback is taken into consideration in the transition time measurement. If SelectFeedback = FALSE, then Actuator_H and Actuator_L are taken into consideration in the transition time measurement.
GetTransitTime.State	INT	0	Current phase of the transition time measurement • State = 0: Inactive • State = 1: Open valve completely • State = 2: Close valve completely • State = 3: Move valve to target position (NewOutput) • State = 4: Transition time measurement successfully completed • State = 5: Transition time measurement canceled
GetTransitTime.NewOutput	REAL	0.0	Target position for transition time measurement with position feedback The target position must be between "High endstop" and "Low endstop". The difference between NewOutput and ScaledFeedback must be at least 50% of the permissible control range.
CycleTime.StartEstimation	BOOL	TRUE	If StartEstimation = TRUE, the measurement of the PID_3Step sampling time is started. CycleTime.StartEstimation = FALSE once measurement is complete.
CycleTime.EnEstimation	BOOL	TRUE	If EnEstimation = TRUE, the PID_3Step sampling time is calculated. If CycleTime.EnEstimation = FALSE, the PID_3Step sampling time is not calculated and you need to correct the configuration of CycleTime.Value manually.
CycleTime.EnMonitoring	BOOL	TRUE	If EnMonitoring = TRUE, the PID_3Step sampling time is monitored. If it is not possible to execute PID_3Step within the sampling time, the error 0800h is output and the operating mode is switched. ActivateRecoverMode and ErrorBehaviour determine which operating mode is switched to. If EnMonitoring = FALSE, the PID_3Step sampling time is not monitored, the error 0800h is not output, and the operating mode is not switched.
CycleTime.Value(1)	REAL	0.1	PID_3Step sampling time in seconds CycleTime.Value is determined automatically and is usually equivalent to the cycle time of the calling OB.
CtrlParamsBackUp.SetByUser	BOOL	FALSE	Saved value of Retain.CtrlParams.SetByUser You can reload values from the CtrlParamsBackUp structure with LoadBackUp = TRUE.
CtrlParamsBackUp.Gain	REAL	1.0	Saved proportional gain
CtrlParamsBackUp.Ti	REAL	20.0	Saved integration time in seconds
CtrlParamsBackUp.Td	REAL	0.0	Saved derivative action time in seconds
CtrlParamsBackUp.TdFiltRatio	REAL	0.2	Saved derivative delay coefficient

Tag	Data type	Default	Description
CtrlParamsBackUp .PWeighting	REAL	1.0	Saved proportional action weighting
CtrlParamsBackUp .DWeighting	REAL	1.0	Saved derivative action weighting
CtrlParamsBackUp.Cycle	REAL	1.0	Saved sampling time of PID algorithm in seconds
CtrlParamsBackUp .InputDeadBand	REAL	0.0	Saved dead band width of the control deviation
PIDSelfTune.SUT .CalculateParams	BOOL	FALSE	The properties of the controlled system are saved during tuning. If CalculateParams = TRUE, the PID parameters are recalculated on the basis of these properties. The PID parameters are calculated using the method set in TuneRule. CalculateParams is set to FALSE following calculation.
PIDSelfTune.SUT.TuneRule	INT	1	Methods used to calculate parameters during pretuning: • SUT.TuneRule = 0: PID fast I • SUT.TuneRule = 1: PID slow I • SUT.TuneRule = 2: Chien, Hrones and Reswick PID • SUT.TuneRule = 3: Chien, Hrones, Reswick PI • SUT.TuneRule = 4: PID fast II • SUT.TuneRule = 5: PID slow II
PIDSelfTune.SUT.State	INT	0	The SUT.State tag indicates the current phase of pretuning: • State = 0: Initialize pretuning • State = 50: Determine start position without position feedback • State = 100: Calculate the standard deviation • State = 200: Find the point of inflection • State = 300: Determine the rise time • State = 9900: Pretuning successful • State = 1: Pretuning not successful

Tag	Data type	Default	Description
PIDSelfTune.TIR.RunIn	BOOL	FALSE	With the RunIn tag, you can specify that fine tuning can also be performed without pretuning. • RunIn = FALSE Pretuning is started when fine tuning is started from inactive or manual mode. If fine tuning is started from automatic mode, the system uses the existing PID parameters to control to the setpoint. Only then will fine tuning start. If pretuning is not possible, PID_3Step switches to the mode from which tuning was started. • RunIn = TRUE The pretuning is skipped. PID_3Step attempts to reach the setpoint with the minimum or maximum output value. This can produce increased overshoot. Only then will fine tuning start. RunIn is set to FALSE after fine tuning.
PIDSelfTune.TIR .CalculateParams	BOOL	FALSE	The properties of the controlled system are saved during tuning. If CalculateParams = TRUE, the PID parameters are recalculated on the basis of these properties. The PID parameters are calculated using the method set in TuneRule. CalculateParams is set to FALSE following calculation.
PIDSelfTune.TIR.TuneRule	INT	0	Methods used to calculate parameters during fine tuning: • TIR.TuneRule = 0: PID automatic • TIR.TuneRule = 1: PID fast • TIR.TuneRule = 2: PID slow • TIR.TuneRule = 3: Ziegler-Nichols PID • TIR.TuneRule = 4: Ziegler-Nichols PI • TIR.TuneRule = 5: Ziegler-Nichols P
PIDSelfTune.TIR.State	INT	0	The TIR.State tag indicates the current phase of fine tuning: • State = -100 Fine tuning is not possible. Pretuning will be performed first. • State = 0: Initialize fine tuning • State = 200: Calculate the standard deviation • State = 300: Attempt to reach the setpoint with the maximum or minimum output value • State = 400: Attempt to reach the setpoint with existing PID parameters (if pretuning was successful) • State = 500: Determine oscillation and calculate parameters • State = 9900: Fine tuning successful • State = 1: Fine tuning not successful

Tag	Data type	Default	Description
Retain.TransitTime(1)	REAL	30.0	Motor transition time in seconds Time in seconds the actuating drive requires to move the valve from the closed to the opened state. TransitTime is retentive.
Retain.CtrlParams .SetByUser(1)	BOOL	FALSE	If SetByUser = FALSE, the PID parameters are determined automatically and PID_3Step operates with a dead zone at the output value. The dead band width is calculated during tuning on the basis of the standard deviation of the output value and saved in Retain.CtrlParams.OutputDeadBand. If SetByUser = TRUE, the PID parameters are entered manually and PID_3 Step operates without a dead zone at the output value. Retain.CtrlParams.OutputDeadBand = 0.0 SetByUser is retentive.
Retain.CtrlParams.Gain(1)	REAL	1.0	Active proportional gain To invert the control logic, use the Config.InvertControl tag. Negative values at Gain also invert the control logic. We recommend you use only InvertControl to set the control logic. The control logic is also inverted if InvertControl = TRUE and Gain < 0.0. Gain is retentive.
Retain.CtrlParams.Ti(1)	REAL	20.0	• Ti > 0.0: Active integration time in seconds • Ti = 0.0: Integral action is deactivated Ti is retentive.
Retain.CtrlParams.Td(1)	REAL	0.0	• Td > 0.0: Active derivative action time in seconds • Td = 0.0: Derivative action is deactivated Td is retentive.
Retain.CtrlParams .TdFiltRatio(1)	REAL	0.2	Active derivative delay coefficient The derivative delay coefficient delays the effect of the derivative action. Derivative delay = derivative action time × derivative delay coefficient • 0.0: Derivative action is effective for one cycle only and therefore almost not effective. • 0.5: This value has proved useful in practice for controlled systems with **one** dominant time constant. • > 1.0: The greater the coefficient, the longer the effect of the derivative action is delayed. TdFiltRatio is retentive.

Tag	Data type	Default	Description
Retain.CtrlParams .PWeighting(1)	REAL	1.0	Active proportional action weighting The proportional action may weaken with changes to the setpoint. Values from 0.0 to 1.0 are applicable. • 1.0: Proportional action for setpoint change is fully effective • 0.0: Proportional action for setpoint change is not effective The proportional action is always fully effective when the process value is changed. PWeighting is retentive.
Retain.CtrlParams .DWeighting(1)	REAL	1.0	Active derivative action weighting The derivative action may weaken with changes to the setpoint. Values from 0.0 to 1.0 are applicable. • 1.0: Derivative action is fully effective upon setpoint change • 0.0: Derivative action is not effective upon setpoint change The derivative action is always fully effective when the process value is changed. DWeighting is retentive.
Retain.CtrlParams.Cycle(1)	REAL	1.0	Active sampling time of PID algorithm in seconds, rounded to an integer multiple of the cycle time of the calling OB. Cycle is retentive.
Retain.CtrlParams .InputDeadBand(1)	REAL	0.0	Dead band width of the control deviation InputDeadBand is retentive.

See also

Parameters State and Mode V2 (Page 346)

Tag ActivateRecoverMode V2 (Page 354)

Downloading technology objects to device (Page 44)

9.2.4.8 Parameters State and Mode V2

Correlation of the parameters

The State parameter shows the current operating mode of the PID controller. You cannot change the State parameter.

With a rising edge at ModeActivate, PID_3Step switches to the operating mode saved in the Mode in-out parameter.

When the CPU is switched on or switches from Stop to RUN mode, PID_3Step starts in the operating mode that is saved in the Mode parameter. To leave PID_3Step in "Inactive" mode, set RunModeByStartup = FALSE.

Meaning of values

State	Description of operating mode
0	Inactive The controller is switched off and no longer changes the valve position.
1	Pretuning The pretuning determines the process response to a pulse of the output value and searches for the point of inflection. The PID parameters are calculated from the maximum rate of rise and dead time of the controlled system. You obtain the best PID parameters when you perform pretuning and fine tuning. Pretuning requirements: • The motor transition time has been configured or measured. • Inactive (State = 0), manual mode (State = 4), or automatic mode (State = 3) • ManualEnable = FALSE • Reset = FALSE • The setpoint and the process value lie within the configured limits. The more stable the process value is, the easier it is to calculate the PID parameters and the more precise the result will be. Noise on the process value can be tolerated as long as the rate of rise of the process value is significantly higher as compared to the noise. This is most likely the case in operating modes "Inactive" and "manual mode". The setpoint is frozen in the CurrentSetpoint tag. Tuning is canceled when: • Setpoint > CurrentSetpoint + CancelTuningLevel or • Setpoint < CurrentSetpoint - CancelTuningLevel Before the PID parameters are recalculated, they are backed up and can be reactivated with LoadBackUp. The controller switches to automatic mode following successful pretuning. If pretuning is unsuccessful, the switchover of operating mode is dependent on ActivateRecoverMode and ErrorBehaviour. The pretuning phase is indicated with the SUT.State tag.

State	Description of operating mode
2	Fine tuning Fine tuning generates a constant, limited oscillation of the process value. The PID parameters are recalculated based on the amplitude and frequency of this oscillation. PID parameters from fine tuning usually have better master control and disturbance characteristics than PID parameters from pretuning. You obtain the best PID parameters when you perform pretuning and fine tuning. PID_3Step automatically attempts to generate an oscillation greater than the noise of the process value. Fine tuning is only minimally influenced by the stability of the process value. The setpoint is frozen in the CurrentSetpoint tag. Tuning is canceled when: • Setpoint > CurrentSetpoint + CancelTuningLevel or • Setpoint < CurrentSetpoint - CancelTuningLevel The PID parameters are backed up before fine tuning. They can be reactivated with LoadBackUp. Requirements for fine tuning: • The motor transition time has been configured or measured. • The setpoint and the process value lie within the configured limits. • ManualEnable = FALSE • Reset = FALSE • Automatic (State = 3), inactive (State = 0) or manual (State = 4) mode Fine tuning proceeds as follows when started from: • Automatic mode (State = 3) Start fine tuning from automatic mode if you wish to improve the existing PID parameters through tuning. PID_3Step controls the system using the existing PID parameters until the control loop has stabilized and the requirements for fine tuning have been met. Only then will fine tuning start. • Inactive (State = 0) or manual mode (State = 4) If the requirements for pretuning are met, pretuning is started. The determined PID parameters will be used for control until the control loop has stabilized and the requirements for fine tuning have been met. If PIDSelfTune.TIR.RunIn = TRUE, pretuning is skipped and an attempt is made to reach the setpoint with the minimum or maximum output value. This can produce increased overshoot. Fine tuning then starts automatically. The controller switches to automatic mode following successful fine tuning. If fine tuning is unsuccessful, the switchover of operating mode is dependent on ActivateRecoverMode and ErrorBehaviour. The fine tuning phase is indicated with the TIR.State tag.
3	Automatic mode In automatic mode, PID_3Step controls the controlled system in accordance with the parameters specified. The controller switches to automatic mode if one the following requirements is fulfilled: • Pretuning successfully completed • Fine tuning successfully completed • Changing of the Mode in-out parameter to the value 3 and a rising edge at ModeActivate. The switchover from automatic mode to manual mode is only bumpless if carried out in the commissioning editor. The ActivateRecoverMode tag is taken into consideration in automatic mode.

State	Description of operating mode
4	Manual mode In manual mode, you specify manual output values in the Manual_UP and Manual_DN parameters or ManualValue parameter. Whether or not the actuator can be moved to the output value in the event of an error is described in the ErrorBits parameter. You can also activate this operating mode using ManualEnable = TRUE. We recommend that you change the operating mode using Mode and ModeActivate only. The switchover from manual mode to automatic mode is bumpless. Manual mode is also possible when an error is pending.
5	Approach substitute output value This operating mode is activated in the event of an error, if Errorbehaviour = TRUE and ActivateRecoverMode = FALSE.. PID_3Step moves the actuator to the substitute output value and then switches to "Inactive" mode.
6	Transition time measurement The time that the motor needs to completely open the valve from the closed condition is determined. This operating mode is activated when Mode = 6 and ModeActivate = TRUE is set. If endstop signals are used to measure the transition time, the valve will be opened completely from its current position, closed completely, and opened completely again. If GetTransitTime.InvertDirection = TRUE, this behavior is inverted. If position feedback is used to measure the transition time, the actuator will be moved from its current position to a target position. The output value limits are not taken into consideration during the transition time measurement. The actuator can travel to the high or the low endstop.
7	Error monitoring The control algorithm is switched off and no longer changes the valve position. This operating mode is activated instead of "Inactive" mode in the event of an error. All the following conditions must be met: • Automatic mode (Mode = 3) • Errorbehaviour = FALSE • ActivateRecoverMode = TRUE • One or more errors have occurred in which ActivateRecoverMode (Page 354) is effective. As soon as the errors are no longer pending, PID_3Step switches back to automatic mode.
8	Approach substitute output value with error monitoring This operating mode is activated instead of "approach substitute output value" mode when an error occurs. PID_3Step moves the actuator to the substitute output value and then switches to "error monitoring" mode. All the following conditions must be met: • Automatic mode (Mode = 3) • Errorbehaviour = TRUE • ActivateRecoverMode = TRUE • One or more errors have occurred in which ActivateRecoverMode (Page 354) is effective. As soon as the errors are no longer pending, PID_3Step switches back to automatic mode.
10	Manual mode without endstop signals The endstop signals are **not** taken into consideration, even though Config.ActuatorEndStopOn = TRUE. The output value limits are not taken into consideration. Otherwise, PID_3Step behaves the same as in manual mode.

ENO characteristics

If State = 0, then ENO = FALSE.

If State ≠ 0, then ENO = TRUE.

Automatic switchover of operating mode during commissioning

Automatic mode is activated following successful pretuning or fine tuning. The following table shows how Mode and State change during successful pretuning.

Cycle no.	Mode	State	Action
0	4	4	Set Mode = 1
1	1	4	Set ModeActivate = TRUE
1	4	1	Value of State is saved in Mode parameter Pretuning is started
n	4	1	Pretuning successfully completed
n	3	3	Automatic mode is started

PID_3Step automatically switches the operating mode in the event of an error. The following table shows how Mode and State change during pretuning with errors.

Cycle no.	Mode	State	Action
0	4	4	Set Mode = 1
1	1	4	Set ModeActivate = TRUE
1	4	1	Value of State is saved in Mode parameter Pretuning is started
n	4	1	Pretuning canceled
n	4	4	Manual mode is started

If ActivateRecoverMode = TRUE, the operating mode that is saved in the Mode parameter is activated. At the start of transition time measurement, pretuning, or fine tuning, PID_3Step saved the value of State in the Mode in/out parameter. PID_3Step therefore switches to the operating mode from which transition time measurement or tuning was started.

If ActivateRecoverMode = FALSE, "Inactive" or "Approach substitute output value" mode is activated.

Automatic switchover of operating mode after transition time measurement

If ActivateRecoverMode = TRUE, the operating mode that is saved in the Mode parameter is activated after successful transition time measurement.

If ActivateRecoverMode = FALSE, the system switches to "Inactive" operating mode after successful transition time measurement.

Automatic switchover of operating mode in automatic mode

PID_3Step automatically switches the operating mode in the event of an error. The following diagram illustrates the influence of ErrorBehaviour and ActivateRecoverMode on this switchover of operating mode.

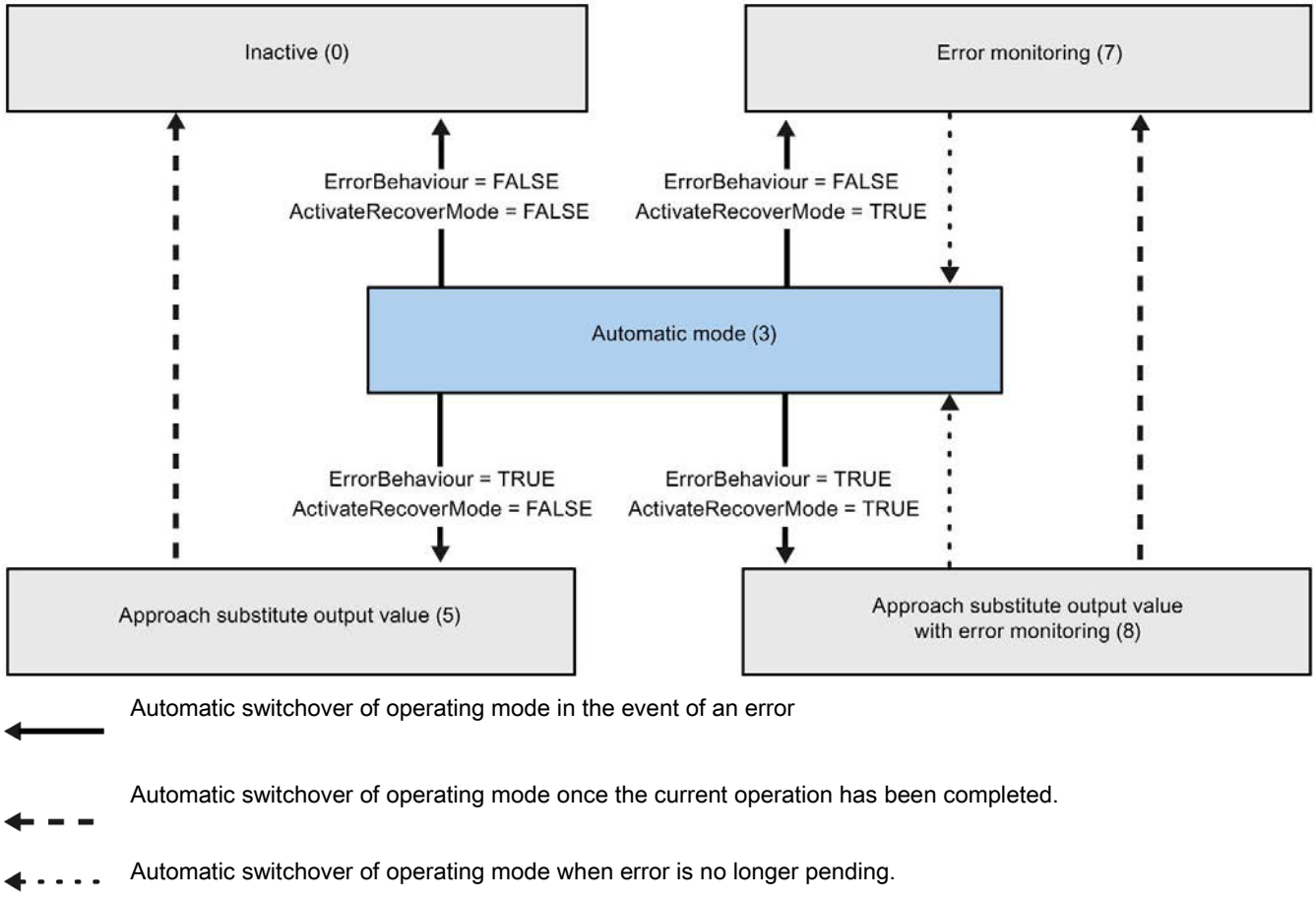

See also

Tag ActivateRecoverMode V2 (Page 354)

Parameter ErrorBits V2 (Page 351)

9.2.4.9 Parameter ErrorBits V2

If several errors are pending simultaneously, the values of the ErrorBits are displayed with binary addition. The display of ErrorBits = 0003h, for example, indicates that the errors 0001h and 0002h are pending simultaneously.

If there is a position feedback, PID_3Step uses ManualValue as output value in manual mode. The exception is Errorbits = 10000h.

ErrorBits (DW#16#...)	Description
0000	There is no error.
0001	The "Input" parameter is outside the process value limits. • Input > Config.InputUpperLimit or • Input < Config.InputLowerLimit If automatic mode was active before the error occurred and ActivateRecoverMode = TRUE, PID_3Step remains in automatic mode. If pretuning, fine tuning, or transition time measurement mode and ActivateRecoverMode = TRUE were active before the error occurred, PID_3Step switches to the operating mode that is saved in the Mode parameter.
0002	Invalid value at "Input_PER" parameter. Check whether an error is pending at the analog input. If automatic mode was active before the error occurred and ActivateRecoverMode = TRUE, PID_3Step switches to "Approach substitute output value with error monitoring" or "Error monitoring" mode. As soon as the error is no longer pending, PID_3Step switches back to automatic mode. If pretuning, fine tuning, or transition time measurement mode and ActivateRecoverMode = TRUE were active before the error occurred, PID_3Step switches to the operating mode that is saved in the Mode parameter.
0004	Error during fine tuning. Oscillation of the process value could not be maintained. If ActivateRecoverMode = TRUE before the error occurred, PID_3Step cancels the tuning and switches to the operating mode that is saved in the Mode parameter.
0010	The setpoint was changed during tuning. You can set the permitted fluctuation of the setpoint at the CancelTuningLevel tag. If ActivateRecoverMode = TRUE before the error occurred, PID_3Step cancels the tuning and switches to the operating mode that is saved in the Mode parameter.
0020	Pretuning is not permitted during fine tuning. If ActivateRecoverMode = TRUE before the error occurred, PID_3Step remains in fine tuning mode.
0080	Error during pretuning. The output value limits are not configured correctly or the actual value does not react as expected. Check whether the limits of the output value are configured correctly and match the control logic. Also make sure that the actual value does not oscillate strongly before starting pretuning. If ActivateRecoverMode = TRUE before the error occurred, PID_3Step cancels the tuning and switches to the operating mode that is saved in the Mode parameter.
0100	Error during fine tuning resulted in invalid parameters. If ActivateRecoverMode = TRUE before the error occurred, PID_3Step cancels the tuning and switches to the operating mode that is saved in the Mode parameter.

ErrorBits (DW#16#...)	Description
0200	Invalid value at "Input" parameter: Value has an invalid number format. If automatic mode was active before the error occurred and ActivateRecoverMode = TRUE, PID_3Step switches to "Approach substitute output value with error monitoring" or "Error monitoring" mode. As soon as the error is no longer pending, PID_3Step switches back to automatic mode. If pretuning, fine tuning, or transition time measurement mode and ActivateRecoverMode = TRUE were active before the error occurred, PID_3Step switches to the operating mode that is saved in the Mode parameter.
0400	Calculation of output value failed. Check the PID parameters. If automatic mode was active before the error occurred and ActivateRecoverMode = TRUE, PID_3Step switches to "Approach substitute output value with error monitoring" or "Error monitoring" mode. As soon as the error is no longer pending, PID_3Step switches back to automatic mode. If pretuning, fine tuning, or transition time measurement mode and ActivateRecoverMode = TRUE were active before the error occurred, PID_3Step switches to the operating mode that is saved in the Mode parameter.
0800	Sampling time error: PID_3Step is not called within the sampling time of the cyclic interrupt OB. If automatic mode was active before the error occurred and ActivateRecoverMode = TRUE, PID_3Step remains in automatic mode. If pretuning, fine tuning, or transition time measurement mode and ActivateRecoverMode = TRUE were active before the error occurred, PID_3Step switches to the operating mode that is saved in the Mode parameter. If this error occurred during simulation with PLCSIM, see the notes under Simulating PID_3Step V2 with PLCSIM (Page 141).
1000	Invalid value at "Setpoint" parameter: Value has an invalid number format. If automatic mode was active before the error occurred and ActivateRecoverMode = TRUE, PID_3Step switches to "Approach substitute output value with error monitoring" or "Error monitoring" mode. As soon as the error is no longer pending, PID_3Step switches back to automatic mode. If pretuning, fine tuning, or transition time measurement mode and ActivateRecoverMode = TRUE were active before the error occurred, PID_3Step switches to the operating mode that is saved in the Mode parameter.
2000	Invalid value at Feedback_PER parameter. Check whether an error is pending at the analog input. The actuator cannot be moved to the substitute output value and remains in its current position. In manual mode, you can change the position of the actuator only with Manual_UP and Manual_DN, and not with ManualValue. If automatic mode was active before the error occurred, ActivateRecoverMode = TRUE, and the error is no longer pending, PID_3Step switches back to automatic mode. If pretuning, fine tuning, or transition time measurement mode and ActivateRecoverMode = TRUE were active before the error occurred, PID_3Step switches to the operating mode that is saved in the Mode parameter.
4000	Invalid value at Feedback parameter. Value has an invalid number format. The actuator cannot be moved to the substitute output value and remains in its current position. In manual mode, you can change the position of the actuator only with Manual_UP and Manual_DN, and not with ManualValue. If automatic mode was active before the error occurred, ActivateRecoverMode = TRUE, and the error is no longer pending, PID_3Step switches back to automatic mode. If pretuning, fine tuning, or transition time measurement mode and ActivateRecoverMode = TRUE were active before the error occurred, PID_3Step switches to the operating mode that is saved in the Mode parameter.

ErrorBits (DW#16#...)	Description
8000	Error during digital position feedback. Actuator_H = TRUE and Actuator_L = TRUE. The actuator cannot be moved to the substitute output value and remains in its current position. Manual mode is not possible in this state. In order to move the actuator from this state, you must deactivate the "Actuator endstop" (Config.ActuatorEndStopOn = FALSE) or switch to manual mode without endstop signals (Mode = 10). If automatic mode was active before the error occurred, ActivateRecoverMode = TRUE, and the error is no longer pending, PID_3Step switches back to automatic mode. If pretuning, fine tuning, or transition time measurement mode and ActivateRecoverMode = TRUE were active before the error occurred, PID_3Step switches to the operating mode that is saved in the Mode parameter.
10000	Invalid value at ManualValue parameter. Value has an invalid number format. The actuator cannot be moved to the manual value and remains in its current position. Specify a valid value in ManualValue or move the actuator in manual mode with Manual_UP and Manual_DN.
20000	Invalid value at SavePosition tag. Value has an invalid number format. The actuator cannot be moved to the substitute output value and remains in its current position.
40000	Invalid value at Disturbance parameter. Value has an invalid number format. If automatic mode was active and ActivateRecoverMode = TRUE before the error occurred, Disturbance is set to zero. PID_3Step remains in automatic mode. If pretuning or fine tuning mode was active and ActivateRecoverMode = TRUE before the error occurred, PID_3Step switches to the operating mode saved in the Mode parameter. If Disturbance in the current phase has no effect on the output value, tuning is not be canceled. The error has no effect during transition time measurement.

9.2.4.10 Tag ActivateRecoverMode V2

The ActivateRecoverMode tag determines the reaction to error. The Error parameter indicates if an error is pending. When the error is no longer pending, Error = FALSE. The ErrorBits parameter shows which errors have occurred.

NOTICE
Your system may be damaged. If ActivateRecoverMode = TRUE, PID_3Step remains in automatic mode even if the process limit values are exceeded. This may damage your system. It is essential to configure how your controlled system reacts in the event of an error to protect your system from damage.

Automatic mode

ActivateRecov-erMode	Description
FALSE	In the event of an error, PID_3Step switches to "Inactive" or "Approach substitute output value" mode. The controller is only activated by a falling edge at Reset or a rising edge at ModeActivate.
TRUE	If errors occur frequently in automatic mode, this setting has a negative effect on the control response, because PID_3Step switches between the calculated output value and the substitute output value at each error. In this case, check the ErrorBits parameter and eliminate the cause of the error. If one or more of the following errors occur, PID_3Step stays in automatic mode: • 0001h: The "Input" parameter is outside the process value limits. • 0800h: Sampling time error • 40000h: Invalid value at Disturbance parameter. If one or more of the following errors occur, PID_3Step switches to "Approach substitute output value with error monitoring" or "Error monitoring" mode: • 0002h: Invalid value at Input_PER parameter. • 0200h: Invalid value at Input parameter. • 0400h: Calculation of output value failed. • 1000h: Invalid value at Setpoint parameter. If one or more of the following errors occur, PID_3Step can no longer move the actuator: • 2000h: Invalid value at Feedback_PER parameter. • 4000h: Invalid value at Feedback parameter. • 8000h: Error during digital position feedback. • 20000h: Invalid value at SavePosition tag. Value has an invalid number format. The characteristics are independent of ErrorBehaviour. As soon as the errors are no longer pending, PID_3Step switches back to automatic mode.

Pretuning, fine tuning, and transition time measurement

ActivateRecoverMode	Description
FALSE	In the event of an error, PID_3Step switches to "Inactive" or "Approach substitute output value" mode. The controller is only activated by a falling edge at Reset or a rising edge at ModeActivate. The controller changes to "Inactive" mode after successful transition time measurement.
TRUE	If the following error occurs, PID_3Step remains in the active mode: • 0020h: Pretuning is not permitted during fine tuning. The following errors are ignored: • 10000h: Invalid value at ManualValue parameter. • 20000h: Invalid value at SavePosition tag. When any other error occurs, PID_3Step cancels the tuning and switches to the mode from which tuning was started.

Manual mode

ActivateRecoverMode is not effective in manual mode.

See also

Static tags of PID_3Step V2 (Page 336)

Parameters State and Mode V2 (Page 346)

9.2.4.11 Tag Warning V2

If several warnings are pending simultaneously, their values are displayed with binary addition. The display of warning 0005h, for example, indicates that the warnings 0001h and 0004h are pending simultaneously.

Warning (DW#16#...)	Description
0000	No warning pending.
0001	The point of inflection was not found during pretuning.
0004	The setpoint was limited to the configured limits.
0008	Not all the necessary controlled system properties were defined for the selected method of calculation. Instead, the PID parameters were calculated using the TIR.TuneRule = 3 method.
0010	The operating mode could not be changed because Reset = TRUE or ManualEnable = TRUE.
0020	The cycle time of the calling OB limits the sampling time of the PID algorithm. Improve results by using shorter OB cycle times.
0040	The process value exceeded one of its warning limits.
0080	Invalid value at Mode. The operating mode is not switched.
0100	The manual value was limited to the limits of the controller output.
0200	The specified rule for tuning is not supported. No PID parameters are calculated.
0400	The transition time cannot be measured because the actuator settings do not match the selected measuring method.
0800	The difference between the current position and the new output value is too small for transition time measurement. This can produce incorrect results. The difference between the current output value and new output value must be at least 50% of the entire control range.
1000	The substitute output value cannot be reached because it is outside the output value limits.
2000	The actuator was moved in one direction for longer than Config.VirtualActuatorLimit × Retain .TransitTime. Check whether the actuator has reached an endstop signal.

The following warnings are deleted as soon as the cause is eliminated:

- 0001h
- 0004h
- 0008h
- 0040h
- 0100h
- 2000h

All other warnings are cleared with a rising edge at Reset or ErrorAck.

9.2.5 PID_3Step V1

9.2.5.1 Description PID_3Step V1

Description

You use the PID_3Step instruction to configure a PID controller with self tuning for valves or actuators with integrating behavior.

The following operating modes are possible:

- Inactive
- Pretuning
- Fine tuning
- Automatic mode
- Manual mode
- Approach substitute output value
- Transition time measurement
- Approach substitute output value with error monitoring
- Error monitoring

For a more detailed description of the operating modes, see the State parameter.

PID algorithm

PID_3Step is a PIDT1 controller with anti-windup and weighting of the proportional and derivative actions. The following equation is used to calculate the output value.

$$\Delta y = K_p \cdot s \cdot \left[(b \cdot w - x) + \frac{1}{T_I \cdot s}(w - x) + \frac{T_D \cdot s}{a \cdot T_D \cdot s + 1}(c \cdot w - x) \right]$$

Δy	Output value of the PID algorithm
K_p	Proportional gain
s	Laplace operator
b	Proportional action weighting
w	Setpoint
x	Process value
T_I	Integral action time
a	Derivative delay coefficient ($T1 = a \times T_D$)
T_D	Derivative action time
c	Derivative action weighting

Block diagram without position feedback

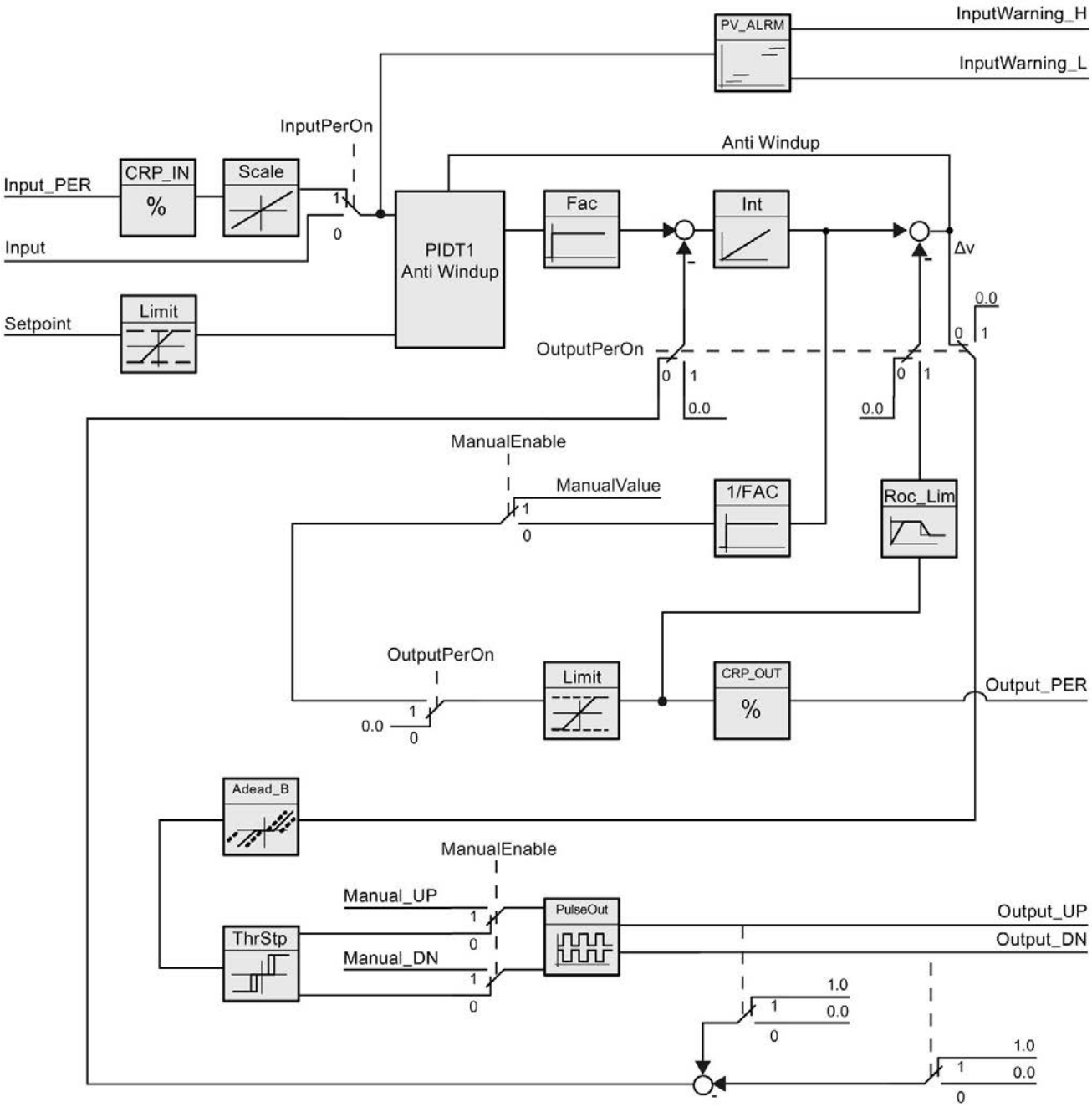

Block diagram with position feedback

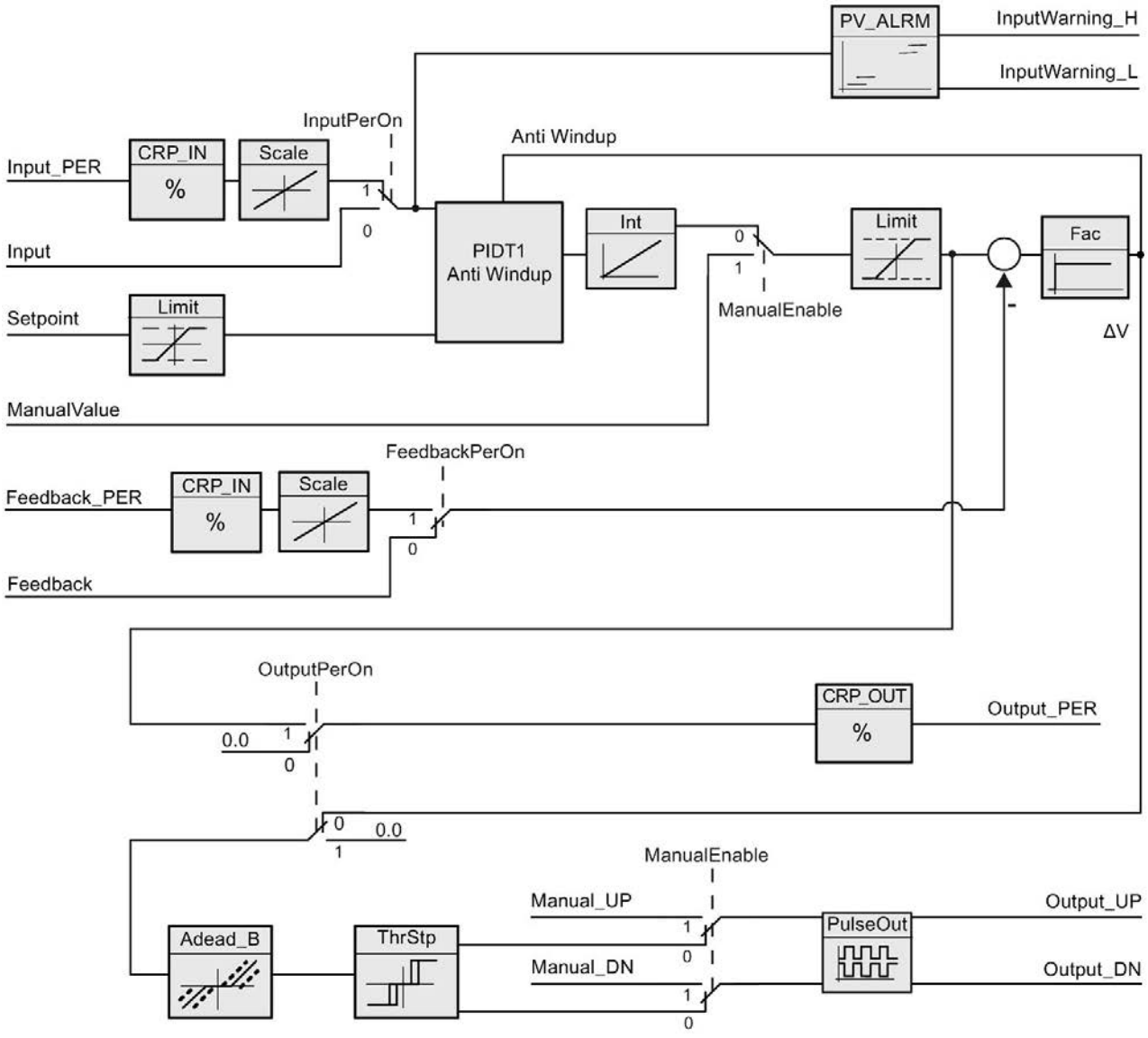

Block diagram of PIDT1 with anti-windup

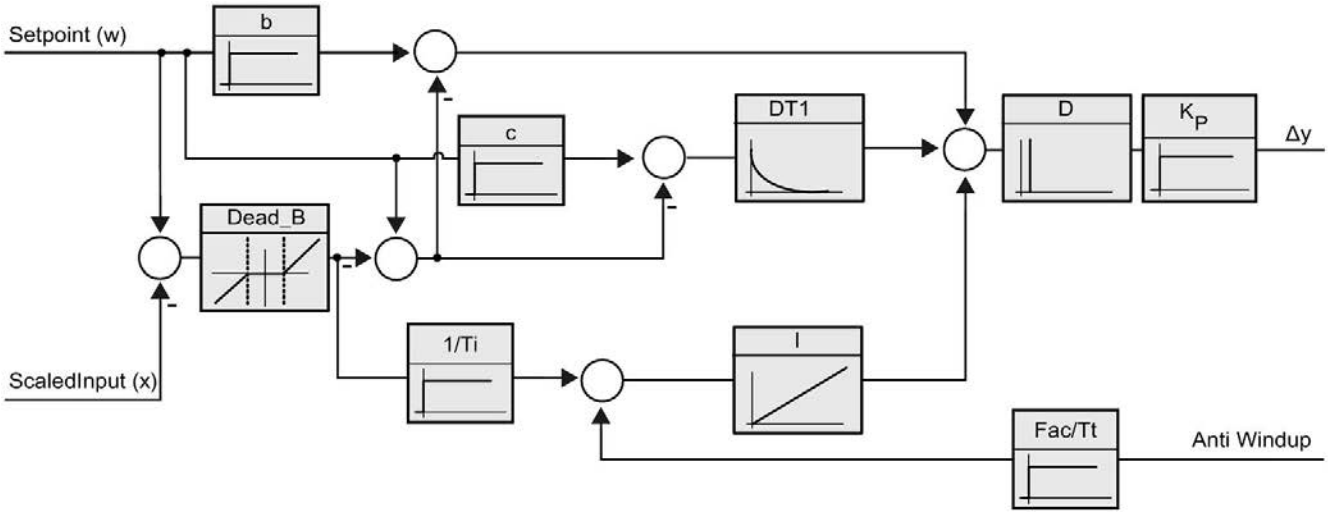

Call

PID_3Step is called in a constant time interval of the cycle time of the calling OB (preferably in a cyclic interrupt OB).

Download to device

The actual values of retentive tags are only updated when you download PID_3Step completely.

Downloading technology objects to device (Page 44)

Startup

At the startup of the CPU, PID_3Step starts in the operating mode that was last active. To leave PID_3Step in "Inactive" mode, set RunModeByStartup = FALSE.

Reaction to error

If errors occur, these are output in the Error parameter. You configure the reaction of PID_3Step using the ErrorBehaviour and ActivateRecoverMode tags.

ErrorBe-haviour	Acti-vateRecover-Mode	Actuator setting configuration Set Output to	Reaction
0	FALSE	Current output value	Switch to "Inactive" mode (Mode = 0)
0	TRUE	Current output value while error is pending	Switch to "Error monitoring" mode (Mode = 7)
1	FALSE	Substitute output value	Switch to "Approach substitute output value" mode (Mode = 5) Switch to "Inactive" mode (Mode = 0)
1	TRUE	Substitute output value while error is pending	Switch to "Approach substitute output value with error monitoring" mode (Mode = 8) Switch to "Error monitoring" mode (Mode = 7)

The ErrorBits parameter shows which errors have occurred.

See also

Parameter State and Retain.Mode V1 (Page 378)

Parameter ErrorBits V1 (Page 385)

Configuring PID_3Step V1 (Page 142)

9.2.5.2 Operating principle PID_3Step V1

Monitoring process value limits

You specify the high limit and low limit of the process value in the Config.InputUpperLimit and Config.InputLowerLimit tags. If the process value is outside these limits, an error occurs (ErrorBits = 0001hex).

You specify a high and low warning limit of the process value in the Config.InputUpperWarning and Config.InputLowerWarning tags. If the process value is outside these warning limits, a warning occurs (Warnings = 0040hex), and the InputWarning_H or InputWarning_L output parameter changes to TRUE.

Limiting the setpoint

You specify a high limit and low limit of the setpoint in the Config.SetpointUpperLimit and Config.SetpointLowerLimit tags. PID_3Step automatically limits the setpoint to the process value limits. You can limit the setpoint to a smaller range. PID_3Step checks whether this range falls within the process value limits. If the setpoint is outside these limits, the high or low limit is used as the setpoint, and output parameter SetpointLimit_H or SetpointLimit_L is set to TRUE.

The setpoint is limited in all operating modes.

Limiting the output value

You specify a high limit and low limit of the output value in the Config.OutputUpperLimit and Config.OutputLowerLimit tags. The output value limits must be within "Low endstop" and "High endstop".

- High endstop: Config.FeedbackScaling.UpperPointOut
- Low endstop: Config.FeedbackScaling.LowerPointOut

Rule:

UpperPointOut ≥ OutputUpperLimit > OutputLowerLimit ≥ LowerPointOut

The valid values for "High endstop" and "Low endstop" depend upon:

- FeedbackOn
- FeedbackPerOn
- OutputPerOn

OutputPerOn	FeedbackOn	FeedbackPerOn	LowerPointOut	UpperPointOut
FALSE	FALSE	FALSE	Cannot be set (0.0%)	Cannot be set (100.0%)
FALSE	TRUE	FALSE	-100.0% or 0.0%	0.0% or +100.0%
FALSE	TRUE	TRUE	-100.0% or 0.0%	0.0% or +100.0%
TRUE	FALSE	FALSE	Cannot be set (100.0%)	Cannot be set (100.0%)
TRUE	TRUE	FALSE	-100.0% or 0.0%	0.0% or +100.0%
TRUE	TRUE	TRUE	-100.0% or 0.0%	0.0% or +100.0%

If OutputPerOn = FALSE and FeedbackOn = FALSE, you cannot limit the output value. The digital outputs are reset with Actuator_H = TRUE or Actuator_L = TRUE, or after a travel time amounting to 110% of the motor transition time.

The output value is 27648 at 100% and -27648 at -100%. PID_3Step must be able to completely close the valve. Therefore, zero must be included in the output value limits.

Note

Use with two or more actuators

PID_3 Step is not suitable for use with two or more actuators (for example, in heating/cooling applications), because different actuators need different PID parameters to achieve a good control response.

Substitute output value

If an error has occurred, PID_3Step can output a substitute output value and move the actuator to a safe position that is specified in the SavePosition tag. The substitute output value must be within the output value limits.

Monitoring signal validity

The values of the following parameters are monitored for validity:

- Setpoint
- Input
- Input_PER
- Feedback
- Feedback_PER
- Output

Monitoring the PID_3Step sampling time

Ideally, the sampling time is equivalent to the cycle time of the calling OB. The PID_3Step instruction measures the time interval between two calls. This is the current sampling time. On every switchover of operating mode and during the initial startup, the mean value is formed from the first 10 sampling times. Too great a difference between the current sampling time and this mean value triggers an error (ErrorBits = 0800 hex).

PID_3Step is set to "Inactive" mode during tuning under the following conditions:

- New mean value >= 1.1 x old mean value
- New mean value <= 0.9 x old mean value

In automatic mode, PID_3Step is set to "Inactive" mode under the following conditions:

- New mean value >= 1.5 x old mean value
- New mean value <= 0.5 x old mean value

Sampling time of the PID algorithm

The controlled system needs a certain amount of time to respond to changes in the output value. It is therefore not advisable to calculate the output value in every cycle. The sampling time of the PID algorithm represents the time between two calculations of the output value. It is calculated during tuning and rounded to a multiple of the cycle time. All other functions of PID_3Step are executed at every call.

Measuring the motor transition time

The motor transition time is the time in seconds the motor requires to move the actuator from the closed to the opened state. The maximum time that the actuator is moved in one direction is 110% of the motor transition time. PID_3Step requires the motor transition time to be as accurate as possible for good controller results. The data in the actuator documentation contains average values for this type of actuator. The value for the specific actuator used may differ. You can measure the motor transition time during commissioning. The output value limits are not taken into consideration during the motor transition time measurement. The actuator can travel to the high or the low endstop.

The motor transition time is taken into consideration in the calculation of the analog output value as well as in the calculation of the digital output values. It is mainly required for correct operation during auto-tuning and the anti-windup behavior. You should therefore configure the motor transition time with the value that the motor requires to move the actuator from the closed to the opened state.

If no relevant motor transition time is in effect in your process (e.g. with solenoid valves), so that the output value has a direct and full effect on the process, use PID_Compact instead.

Control logic

An increase of the output value is generally intended to cause an increase in the process value. This is referred to as a normal control logic. For cooling and discharge control systems, it may be necessary to invert the control logic. PID_3Step does not work with negative proportional gain. If InvertControl = TRUE, an increasing control deviation causes a reduction in the output value. The control logic is also taken into account during pretuning and fine tuning.

See also

Configuring PID_3Step V1 (Page 142)

9.2.5.3 PID_3Step V1 input parameters

Table 9- 10 PID_3Step V1 input parameters

Parameters	Data type	Default	Description
Setpoint	REAL	0.0	Setpoint of the PID controller in automatic mode
Input	REAL	0.0	A tag of the user program is used as source for the process value. If you are using parameter Input, then Config.InputPerOn = FALSE must be set.
Input_PER	WORD	W#16#0	An analog input is used as the source of the process value. If you are using parameter Input_PER, then Config.InputPerOn = TRUE must be set.
Actuator_H	BOOL	FALSE	Digital position feedback of the valve for the high endstop If Actuator_H = TRUE, the valve is at the high endstop and is no longer moved towards this direction.
Actuator_L	BOOL	FALSE	Digital position feedback of the valve for the low endstop If Actuator_L = TRUE, the valve is at the low endstop and is no longer moved towards this direction.
Feedback	REAL	0.0	Position feedback of the valve If you are using parameter Feedback, then Config.FeedbackPerOn = FALSE must be set.
Feedback_PER	WORD	W#16#0	Analog position feedback of a valve If you are using parameter Feedback_PER, then Config.FeedbackPerOn = TRUE must be set. Feedback_PER is scaled based on the tags: • Config.FeedbackScaling.LowerPointIn • Config.FeedbackScaling.UpperPointIn • Config.FeedbackScaling.LowerPointOut • Config.FeedbackScaling.UpperPointOut
ManualEnable	BOOL	FALSE	• A FALSE -> TRUE edge selects "Manual mode", while State = 4, Retain.Mode remains unchanged. • A TRUE -> FALSE edge selects the most recently active operating mode A change of Retain.Mode will not take effect during ManualEnable = TRUE. The change of Retain.Mode will only be considered upon a TRUE -> FALSE edge at ManualEnable . **PID_3Step V1.1**If ManualEnable = TRUE when the CPU starts, PID_3Step starts in manual mode. A rising edge (FALSE > TRUE) at ManualEnable is not necessary. **PID_3Step V1.0** At the start of the CPU, PID_3Step only switches to manual mode with a rising edge (FALSE->TRUE) at ManualEnable . Without rising edge, PID_3Step starts in the last operating mode in which ManualEnable was FALSE.
ManualValue	REAL	0.0	In manual mode, you specify the absolute position of the valve. ManualValue will only be evaluated if you are using OutputPer, **or** if position feedback is available.

Parameters	Data type	Default	Description
Manual_UP	BOOL	FALSE	In manual mode, every rising edge opens the valve by 5% of the total control range, or for the duration of the minimum motor transition time. Manual_UP is evaluated only if you are not using Output_PER and there is no position feedback available.
Manual_DN	BOOL	FALSE	In manual mode, every rising edge closes the valve by 5% of the total control range, or for the duration of the minimum motor transition time. Manual_DN is evaluated only if you are not using Output_PER and there is no position feedback available.
Reset	BOOL	FALSE	Restarts the controller. • FALSE -> TRUE edge – Switch to "Inactive" mode – ErrorBits and Warning are reset – Intermediate controller values are reset (PID parameters are retained) • TRUE -> FALSE edge – Change in most recent active mode – If automatic mode was active before, switchover to automatic mode is bumpless.

9.2.5.4 PID_3Step V1 output parameters

Table 9- 11 PID_3Step V1 output parameters

Parameter	Data type	Default	Description
ScaledInput	REAL	0.0	Scaled process value
ScaledFeedback	REAL	0.0	Scaled position feedback For an actuator without position feedback, the position of the actuator indicated by ScaledFeedback is very imprecise. ScaledFeedback may only be used for rough estimation of the current position in this case.
Output_UP	BOOL	FALSE	Digital output value for opening the valve If Config.OutputPerOn = FALSE, the Output_UP parameter is used.
Output_DN	BOOL	FALSE	Digital output value for closing the valve If Config.OutputPerOn = FALSE, the Output_DN parameter is used.
Output_PER	WORD	W#16#0	Analog output value If Config.OutputPerOn = TRUE, Output_PER is used. Use Output_PER if you are using a valve as actuator which is triggered via an analog output and controlled with a continuous signal, e.g. 0...10 V or 4...20 mA. The value at Output_PER corresponds to the target position of the valve, e.g. Output_PER = 13824, when the valve is to be opened by 50%.
SetpointLimit_H	BOOL	FALSE	If SetpointLimit_H = TRUE, the absolute setpoint high limit is reached. In the CPU, the setpoint is limited to the configured absolute setpoint high limit. The configured absolute process value high limit is the default for the setpoint high limit. If you configure Config.SetpointUpperLimit to a value within the process value limits, this value is used as the setpoint high limit.
SetpointLimit_L	BOOL	FALSE	If SetpointLimit_L = TRUE, the absolute setpoint low limit has been reached. In the CPU, the setpoint is limited to the configured absolute setpoint low limit. The configured absolute process value low limit is the default setting for the setpoint low limit. If you configure Config.SetpointLowerLimit to a value within the process value limits, this value is used as the setpoint low limit.
InputWarning_H	BOOL	FALSE	If InputWarning_H = TRUE, the process value has reached or exceeded the warning high limit.
InputWarning_L	BOOL	FALSE	If InputWarning_L = TRUE, the process value has reached or fallen below the warning low limit.

Parameter	Data type	Default	Description
State	INT	0	The State parameter (Page 378) shows the current operating mode of the PID controller. You change the operating mode with the Retain.Mode tag. • State = 0: Inactive • State = 1: Pretuning • State = 2: Fine tuning • State = 3: Automatic mode • State = 4: Manual mode • State = 5: Approach substitute output value • State = 6: Transition time measurement • State = 7: Error monitoring • State = 8: Approach substitute output value with error monitoring
Error	BOOL	FALSE	If Error = TRUE, at least one error message is pending.
ErrorBits	DWORD	DW#16#0	The ErrorBits parameter (Page 385) indicates the error messages.

See also

Parameter State and Retain.Mode V1 (Page 378)

Parameter ErrorBits V1 (Page 385)

9.2.5.5 PID_3Step V1 static tags

Note

You must not change tags that are not listed. These are used for internal purposes only.

Change the tags identified with (1) only in "Inactive" mode to prevent malfunction of the PID controller. "Inactive" mode is forced by setting the "Retain.Mode" tag to "0".

Table 9- 12 PID_3Step V1 static tags

Tag	Data type	Default	Description
ActivateRecoverMode	BOOL	TRUE	The ActivateRecoverMode tag (Page 388) determines the reaction to error.
RunModeByStartup	BOOL	TRUE	Activate Mode after CPU restart If RunModeByStartup = TRUE, the controller returns to the last active operating mode after a CPU restart. If RunModeByStartup = FALSE, the controller remains inactive after a CPU restart.
PhysicalUnit	INT	0	Unit of measurement of the process value and setpoint, e.g., ºC, or ºF.
PhysicalQuantity	INT	0	Physical quantity of the process value and setpoint, e.g., temperature.
ErrorBehaviour	INT	0	If ErrorBehaviour = 0 and an error has occurred, the valve stays at its current position and the controller switches directly to "Inactive" or "Error monitoring" mode. If ErrorBehaviour = 1 and an error occurs, the actuator moves to the substitute output value and only then switches to "Inactive" or "Error monitoring" mode. If the following errors occur, you can no longer move the valve to a configured substitute output value. • 2000h: Invalid value at Feedback_PER parameter. • 4000h: Invalid value at Feedback parameter. • 8000h: Error during digital position feedback.
Warning	DWORD	DW#16#0	The Warning tag (Page 378) displays the warnings generated since a Reset or since the last operating mode switchover. Cyclic warnings (for example, process value warning) are shown until the cause of the warning is removed. They are automatically deleted once their cause has gone. Non-cyclic warnings (for example, point of inflection not found) remain and are deleted like errors.
SavePosition	REAL	0.0	Substitute output value If ErrorBehaviour = 1 and an error occurs, the actuator moves to a safe position for the plant and only then switches to "Inactive" mode.
CurrentSetpoint	REAL	0.0	Currently active setpoint. This value is frozen at the start of tuning.

Tag	Data type	Default	Description
Progress	REAL	0.0	Progress of tuning as a percentage (0.0 - 100.0)
Config.InputPerOn(1)	BOOL	TRUE	If InputPerOn = TRUE, the Input_PER parameter is used. If InputPerOn = FALSE, the Input parameter is used.
Config.OutputPerOn(1)	BOOL	FALSE	If OutputPerOn = TRUE, the Output_PER parameter is used. If OutputPerOn = FALSE, the Ouput_UP and Output_DN parameters are used.
Config.LoadBackUp	BOOL	FALSE	If LoadBackUp = TRUE, the last set of PID parameters is reloaded. The set was saved prior to the last tuning. LoadBackUp is automatically set back to FALSE.
Config.InvertControl(1)	BOOL	FALSE	Invert control logic If InvertControl = TRUE, an increasing control deviation causes a reduction in the output value.
Config.FeedbackOn(1)	BOOL	FALSE	If FeedbackOn = FALSE, a position feedback is simulated. Position feedback is generally activated when FeedbackOn = TRUE.
Config.FeedbackPerOn(1)	BOOL	FALSE	FeedbackPerOn is only effective when FeedbackOn = TRUE. If FeedbackPerOn = TRUE, the analog input is used for the position feedback (Feedback_PER parameter). If FeedbackPerOn = FALSE, the Feedback parameter is used for the position feedback.
Config.ActuatorEndStopOn(1)	BOOL	FALSE	If ActuatorEndStopOn = TRUE, the digital position feedback Actuator_L and Actuator_H are taken into consideration.
Config.InputUpperLimit(1)	REAL	120.0	High limit of the process value At the I/O input, the process value can be a maximum of 18% higher than the standard range (overrange). An error is no longer signaled due to a violation of the "Process value high limit". Only a wire-break and a short-circuit are recognized and PID_3Step reacts according to the configured reaction to error. InputUpperLimit > InputLowerLimit
Config.InputLowerLimit(1)	REAL	0.0	Low limit of the process value InputLowerLimit < InputUpperLimit
Config.InputUpperWarning(1)	REAL	+3.402822e+38	Warning high limit of the process value If you set InputUpperWarning outside the process value limits, the configured absolute process value high limit is used as the warning high limit. If you configure InputUpperWarning within the process value limits, this value is used as the warning high limit. InputUpperWarning > InputLowerWarning InputUpperWarning ≤ InputUpperLimit

Tag	Data type	Default	Description
Config.InputLowerWarning(1)	REAL	-3.402822e+38	Warning low limit of the process value If you set InputLowerWarning outside the process value limits, the configured absolute process value low limit is used as the warning low limit. If you configure InputLowerWarning within the process value limits, this value is used as the warning low limit. InputLowerWarning < InputUpperWarning InputLowerWarning ≥ InputLowerLimit
Config.OutputUpperLimit(1)	REAL	100.0	High limit of output value The following value range is permitted: UpperPointOut ≥ OutputUpperLimit > OutputLowerLimit For more details, see OutputLowerLimit.
Config.OutputLowerLimit(1)	REAL	0.0	Low limit of output value The following value range is permitted: OutputUpperLimit > OutputLowerLimit ≥ LowerPointOut When using Output_PER, an output value limit of -100% corresponds to the value Output_PER = -27648; 100% correspond to the value Output_PER = 27648. If OutputPerOn = FALSE and FeedbackOn = FALSE, OutputLowerLimit and OutputUpperLimit are not evaluated. Output_UP and Output_DN are then reset at Actuator_H = TRUE or Actuator_L = TRUE (if ActuatorEndStopOn = TRUE) or after a travel time of 110% * Config.TransitTime (if ActuatorEndStopOn = FALSE).
Config.SetpointUpperLimit(1)	REAL	+3.402822e+38	High limit of setpoint If you set SetpointUpperLimit outside the process value limits, the configured absolute process value high limit is preassigned as the setpoint high limit. If you configure SetpointUpperLimit within the process value limits, this value is used as the setpoint high limit.
Config.SetpointLowerLimit(1)	REAL	- 3.402822e+38	Low limit of the setpoint If you set SetpointLowerLimit outside the process value limits, the configured absolute process value low limit is preassigned as the setpoint low limit. If you set SetpointLowerLimit within the process value limits, this value is used as the setpoint low limit.
Config.MinimumOnTime(1)	REAL	0.0	Minimum ON time Minimum time in seconds for which the servo drive must be switched on. Config.MinimumOnTime is only effective if Output_UP and Output_DN are used (Config.OutputPerOn = FALSE).
Config.MinimumOffTime(1)	REAL	0.0	Minimum OFF time Minimum time in seconds for which the servo drive must be switched off. Config.MinimumOffTime is only effective if Output_UP and Output_DN are used (Config.OutputPerOn = FALSE).

Tag	Data type	Default	Description
Config.TransitTime(1)	REAL	30.0	Motor transition time Time in seconds the actuating drive requires to move the valve from the closed to the opened state.
Config.InputScaling .UpperPointIn(1)	REAL	27648.0	Scaling Input_PER high Input_PER is converted to a percentage based on the two value pairs UpperPointOut, UpperPointIn and LowerPointOut, LowerPointIn of the InputScaling structure.
Config.InputScaling .LowerPointIn(1)	REAL	0.0	Scaling Input_PER low Input_PER is converted to a percentage based on the two value pairs UpperPointOut, UpperPointIn and LowerPointOut, LowerPointIn of the InputScaling structure.
Config.InputScaling .UpperPointOut(1)	REAL	100.0	Scaled high process value Input_PER is converted to a percentage based on the two value pairs UpperPointOut, UpperPointIn and LowerPointOut, LowerPointIn of the InputScaling structure.
Config.InputScaling .LowerPointOut(1)	REAL	0.0	Scaled low process value Input_PER is converted to a percentage based on the two value pairs UpperPointOut, UpperPointIn and LowerPointOut, LowerPointIn of the InputScaling structure.
Config.FeedbackScaling .UpperPointIn(1)	REAL	27648.0	Scaling Feedback_PER high Feedback_PER is converted to a percentage based on the two value pairs UpperPointOut, UpperPointIn and LowerPointOut, LowerPointIn of the FeedbackScaling structure.
Config.FeedbackScaling .LowerPointIn(1)	REAL	0.0	Scaling Feedback_PER low Feedback_PER is converted to a percentage based on the two value pairs UpperPointOut, UpperPointIn and LowerPointOut, LowerPointIn of the FeedbackScaling structure.
Config.FeedbackScaling .UpperPointOut(1)	REAL	100.0	High endstop Feedback_PER is converted to a percentage based on the two value pairs UpperPointOut, UpperPointIn and LowerPointOut, LowerPointIn of the FeedbackScaling structure. The permitted value range is determined by the configuration. • FeedbackOn = FALSE: UpperPointOut = 100.0 • FeedbackOn = TRUE: UpperPointOut = 100.0 or 0.0 UpperPointOut ≠ LowerPointOut

Tag	Data type	Default	Description
Config.FeedbackScaling .LowerPointOut(1)	REAL	0.0	Low endstop Feedback_PER is converted to a percentage based on the two value pairs UpperPointOut, UpperPointIn and LowerPointOut, LowerPointIn of the FeedbackScaling structure. The permitted value range is determined by the configuration. • FeedbackOn = FALSE: LowerPointOut = 0.0 • FeedbackOn = TRUE: LowerPointOut = 0.0 or -100.0 LowerPointOut ≠ UpperPointOut
GetTransitTime.InvertDirection	BOOL	FALSE	If InvertDirection = FALSE, the valve is fully opened, closed, and then reopened in order to determine the valve transition time. If InvertDirection = TRUE, the valve is fully closed, opened, and then closed again.
GetTransitTime .SelectFeedback	BOOL	FALSE	If SelectFeedback = TRUE, then Feedback_PER, or Feedback is taken into consideration in the transition time measurement. If SelectFeedback = FALSE, then Actuator_H and Actuator_L are taken into consideration in the transition time measurement.
GetTransitTime.Start	BOOL	FALSE	If Start = TRUE, the transition time measurement is started.
GetTransitTime.State	INT	0	Current phase of the transition time measurement • State = 0: Inactive • State = 1: Open valve completely • State = 2: Close valve completely • State = 3: Move valve to target position (NewOutput) • State = 4: Transition time measurement successfully completed • State = 5: Transition time measurement canceled
GetTransitTime.NewOutput	REAL	0.0	Target position for transition time measurement with position feedback The target position must be between "High endstop" and "Low endstop". The difference between NewOutput and ScaledFeedback must be at least 50% of the permissible control range.
CycleTime.StartEstimation	BOOL	TRUE	If StartEstimation = TRUE, the measurement of the PID_3Step sampling time is started. CycleTime.StartEstimation = FALSE once measurement is complete.
CycleTime.EnEstimation	BOOL	TRUE	If EnEstimation = TRUE, the PID_3Step sampling time is calculated.

Tag	Data type	Default	Description
CycleTime.EnMonitoring	BOOL	TRUE	If EnMonitoring = TRUE, the PID_3Step sampling time is monitored. If it is not possible to execute PID_3Step within the sampling time, the error 0800h is output and the operating mode is switched. ActivateRecoverMode and ErrorBehaviour determine which operating mode is switched to. If EnMonitoring = FALSE, the PID_3Step sampling time is not monitored, the error 0800h is not output, and the operating mode is not switched.
CycleTime.Value(1)	REAL	0.1	PID_3Step sampling time in seconds CycleTime.Value is determined automatically and is usually equivalent to the cycle time of the calling OB.
CtrlParamsBackUp.SetByUser	BOOL	FALSE	Saved value of Retain.CtrlParams.SetByUser. You can reload values from the CtrlParamsBackUp structure with Config.LoadBackUp = TRUE.
CtrlParamsBackUp.Gain	REAL	1.0	Saved proportional gain
CtrlParamsBackUp.Ti	REAL	20.0	Saved integral action time
CtrlParamsBackUp.Td	REAL	0.0	Saved derivative action time
CtrlParamsBackUp.TdFiltRatio	REAL	0.0	Saved derivative delay coefficient
CtrlParamsBack-Up.PWeighting	REAL	0.0	Saved proportional action weighting
CtrlParamsBackUp .DWeighting	REAL	0.0	Saved derivative action weighting
CtrlParamsBackUp.Cycle	REAL	1.0	Saved sampling time of PID algorithm
CtrlParamsBackUp .InputDeadBand	REAL	0.0	Saved dead zone width of the control deviation
PIDSelfTune.SUT .CalculateSUTParams	BOOL	FALSE	The properties of the controlled system are saved during tuning. If CalculateSUTParams = TRUE, the PID parameters are recalculated on the basis of these properties. The PID parameters are calculated using the method set in TuneRuleSUT. CalculateSUTParams is set to FALSE following calculation.
PIDSelfTune.SUT .TuneRuleSUT	INT	1	Methods used to calculate parameters during pretuning: • TuneRuleSUT = 0: PID fast I • TuneRuleSUT = 1: PID slow I • TuneRuleSUT = 2: Chien, Hrones and Reswick PID • TuneRuleSUT = 3: Chien, Hrones, Reswick PI • TuneRuleSUT = 4: PID fast II • TuneRuleSUT = 5: PID slow II
PIDSelfTune.SUT.State	INT	0	The SUT.State tag indicates the current phase of pretuning:

Tag	Data type	Default	Description
PIDSelfTune.TIR.RunIn	BOOL	FALSE	• RunIn = FALSE Pretuning is started when fine tuning is started from inactive or manual mode. If fine tuning is started from automatic mode, the system uses the existing PID parameters to control to the setpoint. Only then will fine tuning start. If pretuning is not possible, PID_3Step switches to "Inactive" mode. • RunIn = TRUE The pretuning is skipped. PID_3Step attempts to reach the setpoint with the minimum or maximum output value. This can produce increased overshoot. Only then will fine tuning start. RunIn is set to FALSE after fine tuning.
PIDSelfTune.TIR .CalculateTIRParams	BOOL	FALSE	The properties of the controlled system are saved during tuning. If CalculateTIRParams = TRUE, the PID parameters are recalculated on the basis of these properties. The PID parameters are calculated using the method set in TuneRuleTIR. CalculateTIRParams is set to FALSE following calculation.
PIDSelfTune.TIR .TuneRuleTIR	INT	0	Methods used to calculate parameters during fine tuning: • TuneRuleTIR = 0: PID automatic • TuneRuleTIR = 1: PID fast • TuneRuleTIR = 2: PID slow • TuneRuleTIR = 3: Ziegler-Nichols PID • TuneRuleTIR = 4: Ziegler-Nichols PI • TuneRuleTIR = 5: Ziegler-Nichols P
PIDSelfTune.TIR.State	INT	0	The TIR.State tag indicates the current phase of "fine tuning":

Tag	Data type	Default	Description
Retain.Mode	INT	0	A change to the value of Retain.Mode initiates a switch to another operating mode. The following operating mode is enabled upon a change of Mode to: • Mode = 0: Inactive • Mode = 1: Pretuning • Mode = 2: Fine tuning • Mode = 3: Automatic mode • Mode = 4: Manual mode • Mode = 5: Approach substitute output value • Mode = 6: Transition time measurement • Mode = 7: Error monitoring • Mode = 8: Approach substitute output value with error monitoring Mode is retentive.
Retain.CtrlParams .SetByUser(1)	BOOL	FALSE	If SetByUser = FALSE, the PID parameters are determined automatically and PID_3Step operates with a dead zone at the output value. The dead zone width is calculated during tuning on the basis of the standard deviation of the output value and saved in Retain.CtrlParams.OutputDeadBand. If SetByUser = TRUE, the PID parameters are entered manually and PID_3 Step operates without a dead zone at the output value. Retain.CtrlParams.OutputDeadBand = 0.0 SetByUser is retentive.
Retain.CtrlParams.Gain(1)	REAL	1.0	Active proportional gain Gain is retentive.
Retain.CtrlParams.Ti(1)	REAL	20.0	• Ti > 0.0: Active integral action time • Ti = 0.0: Integral action is deactivated Ti is retentive.
Retain.CtrlParams.Td(1)	REAL	0.0	• Td > 0.0: Active derivative action time • Td = 0.0: Derivative action is deactivated Td is retentive.
Retain.CtrlParams .TdFiltRatio(1)	REAL	0.0	Active derivative delay coefficient TdFiltRatio is retentive.
Retain.CtrlParams .PWeighting(1)	REAL	0.0	Active proportional action weighting PWeighting is retentive.
Retain.CtrlParams .DWeighting(1)	REAL	0.0	Active derivative action weighting DWeighting is retentive.
Retain.CtrlParams .Cycle(1)	REAL	1.0	Active sampling time of PID algorithm in seconds, rounded to an integer multiple of the cycle time of the calling OB. Cycle is retentive.
Retain.CtrlParams .InputDeadBand(1)	REAL	0.0	Dead zone width of the control deviation InputDeadBand is retentive.

See also

Parameter State and Retain.Mode V1 (Page 378)
Tag ActivateRecoverMode V1 (Page 388)
Downloading technology objects to device (Page 44)

9.2.5.6 Parameter State and Retain.Mode V1

Correlation of the parameters

The State parameter shows the current operating mode of the PID controller. You cannot change the State parameter.

To switch from one operating mode to another, you must change the Retain.Mode tag. This also applies when the value for the new operating mode is already in Retain.Mode. For example, set Retain.Mode = 0 first and then Retain.Mode = 3. Provided the current operating mode of the controller permits this switchover, State will be set to the value of Retain.Mode.

When PID_3Step automatically switches from one operating mode to another, the following applies: State != Retain.Mode.

Examples:

- After successful pretuning
  State = 3 and Retain.Mode = 1
- In the event of an error
  State = 0 and Retain.Mode remain at the previous value, for example, Retain.Mode = 3
- ManualEnalbe = TRUE
  State = 4 and Retain.Mode remain at the previous value, e.g., Retain.Mode = 3

Note

You want, for example, to repeat successful fine tuning without exiting automatic mode with Mode = 0.

Setting Retain.Mode to an invalid value such as 9999 for one cycle has no effect on State. Set Mode = 2 in the next cycle. In this way, you can generate a change to Retain.Mode without first switching to "Inactive" mode.

Meaning of values

State / Retain.Mode	Description
0	Inactive The controller is switched off and no longer changes the valve position.
1	Pretuning The pretuning determines the process response to a pulse of the output value and searches for the point of inflection. The optimized PID parameters are calculated as a function of the maximum rate of rise and dead time of the controlled system. Pretuning requirements: • State = 0 or State = 4 • ManualEnable = FALSE • The motor transition time has been configured or measured. • The setpoint and the process value lie within the configured limits. The more stable the process value is, the easier it is to calculate the PID parameters and the more precise the result will be. Noise on the process value can be tolerated as long as the rate of rise of the process value is significantly higher as compared to the noise. Before the PID parameters are recalculated, they are backed up and can be reactivated with Config.LoadBackUp. The setpoint is frozen in the CurrentSetpoint tag. The controller switches to automatic mode following successful pretuning and to "Inactive" mode following unsuccessful pretuning. The pretuning phase is indicated with the SUT.State tag.
2	Fine tuning Fine tuning generates a constant, limited oscillation of the process value. The PID parameters are tuned based on the amplitude and frequency of this oscillation. The differences between the process response during pretuning and fine tuning are analyzed. All PID parameters are recalculated from the results. PID parameters from fine tuning usually have better master control and disturbance characteristics than PID parameters from pretuning. PID_3Step automatically attempts to generate an oscillation greater than the noise of the process value. Fine tuning is only minimally influenced by the stability of the process value. The PID parameters are backed up before fine tuning. They can be reactivated with Config.LoadBackUp. The setpoint is frozen in the CurrentSetpoint tag. Requirements for fine tuning: • The motor transition time has been configured or measured. • The setpoint and the process value lie within the configured limits. • ManualEnable = FALSE • Automatic (State = 3), inactive (State = 0) or manual (State = 4) mode

State / Retain.Mode	Description
2	Fine tuning proceeds as follows when started from: • Automatic mode (State = 3) Start fine tuning from automatic mode if you wish to improve the existing PID parameters through tuning. PID_3Step controls the system using the existing PID parameters until the control loop has stabilized and the requirements for fine tuning have been met. Only then will fine tuning start. • Inactive (State = 0) or manual mode (State = 4) Pretuning is always started first. The determined PID parameters will be used for control until the control loop has stabilized and the requirements for fine tuning have been met. If PIDSelfTune.TIR.RunIn = TRUE, pretuning is skipped and an attempt is made to reach the setpoint with the minimum or maximum output value. This can produce increased overshoot. Fine tuning then starts automatically. The controller switches to automatic mode following successful fine tuning. If fine tuning was not successful, the controller switches to "Inactive" mode. The fine tuning phase is indicated with the TIR.State tag.
3	Automatic mode In automatic mode, PID_3Step controls the controlled system in accordance with the parameters specified. The controller switches to automatic mode if one the following requirements is fulfilled: • Pretuning successfully completed • Fine tuning successfully completed • Changing the Retain.Mode tag to the value 3. When the CPU is switched on or switches from Stop to RUN mode, PID_3Step starts in the most recently active operating mode. To leave PID_3Step in "Inactive" mode, set RunModeByStartup = FALSE. The ActivateRecoverMode tag is taken into consideration in automatic mode.
4	Manual mode In manual mode, you specify manual output values in the Manual_UP and Manual_DN parameters or ManualValue parameter. Whether or not the actuator can be moved to the output value in the event of an error is described in the ErrorBits parameter. This operating mode is enabled if Retain.Mode = 4, or on a rising edge at ManualEnable. If ManualEnable changes to TRUE, only State changes. Retain.Mode retains its current value. On a falling edge at ManualEnable, PID_3Step returns to the previous operating mode. The switchover to automatic mode is bumpless. **PID_3Step V1.1** Manual mode is always possible in the event of an error. **PID_3Step V1.0** Manual mode is dependent on the ActivateRecoverMode tag in the event of an error.
5	Approach substitute output value This operating mode is activated in the event of an error or when Reset = TRUE if Errorbehaviour = 1 and ActivateRecoverMode = FALSE.. PID_3Step moves the actuator to the substitute output value and then switches to "Inactive" mode.

State / Retain.Mode	Description
6	Transition time measurement The time that the motor needs to completely open the valve from the closed condition is determined. This operating mode is activated when GetTransitTime.Start = TRUE is set. If endstop signals are used to measure the transition time, the valve will be opened completely from its current position, closed completely, and opened completely again. If GetTransit-Time.InvertDirection = TRUE, this behavior is inverted. If position feedback is used to measure the transition time, the actuator will be moved from its current position to a target position. The output value limits are not taken into consideration during the transition time measurement. The actuator can travel to the high or the low endstop.
7	Error monitoring The control algorithm is switched off and no longer changes the valve position. This operating mode is activated instead of "Inactive" mode in the event of an error. All the following conditions must be met: • Mode = 3 (automatic mode) • Errorbehaviour = 0 • ActivateRecoverMode = TRUE • One or more errors have occurred in which ActivateRecoverMode (Page 388) is effective. As soon as the errors are no longer pending, PID_3Step switches back to automatic mode.
8	Approach substitute output value with error monitoring This operating mode is activated instead of "Approach substitute output value" mode in the event of an error. PID_3Step moves the actuator to the substitute output value and then switches to "Error monitoring" mode. All the following conditions must be met: • Mode = 3 (automatic mode) • Errorbehaviour = 1 • ActivateRecoverMode = TRUE • One or more errors have occurred in which ActivateRecoverMode (Page 388) is effective. As soon as the errors are no longer pending, PID_3Step switches back to automatic mode.

Automatic switchover of operating mode during commissioning

PID_3Step automatically switches the operating mode in the event of an error. The following diagram illustrates the influence of ErrorBehaviour on the switchover of operating mode from transition time measurement, pretuning, and fine tuning modes.

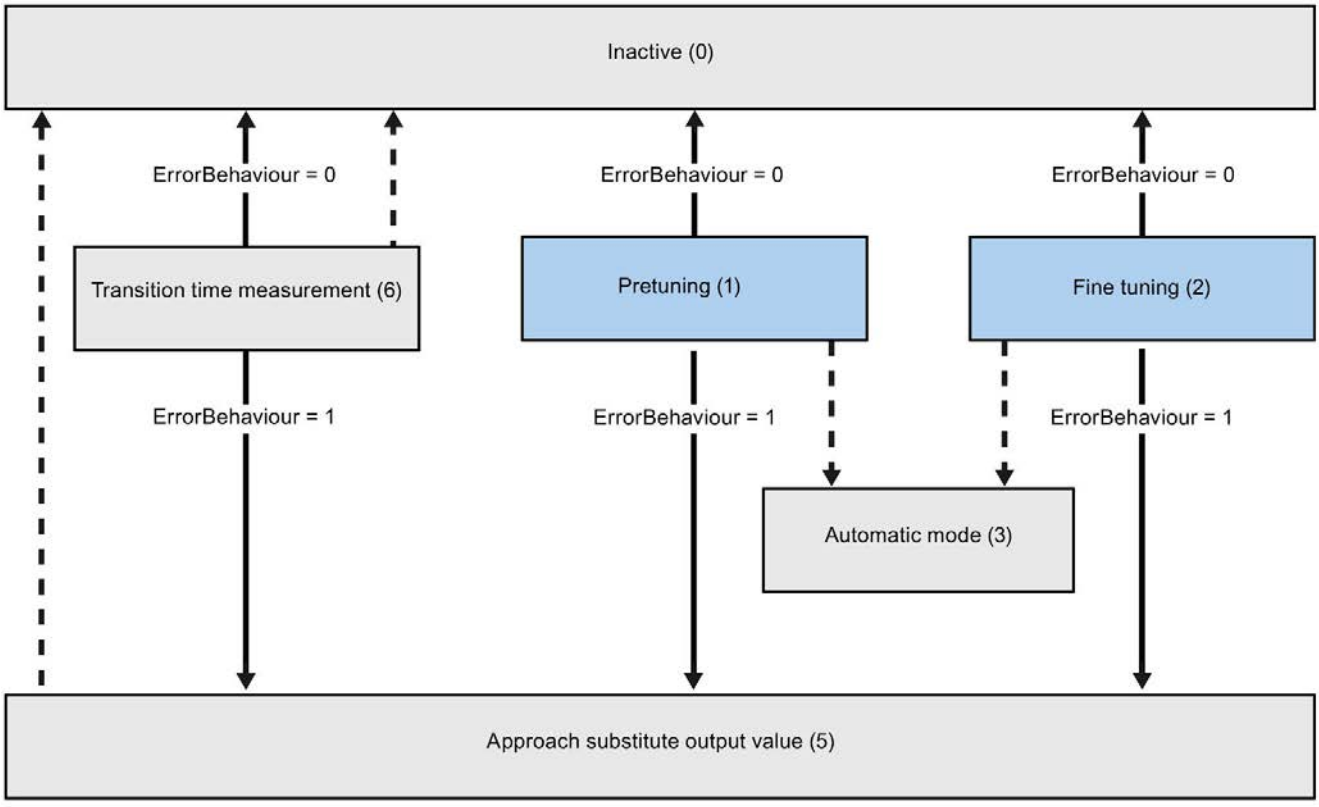

Automatic switchover of operating mode in the event of an error

Automatic switchover of operating mode once the current operation has been completed.

Automatic switchover of operating mode in automatic mode (PID_3Step V1.1)

PID_3Step automatically switches the operating mode in the event of an error. The following diagram illustrates the influence of ErrorBehaviour and ActivateRecoverMode on this switchover of operating mode.

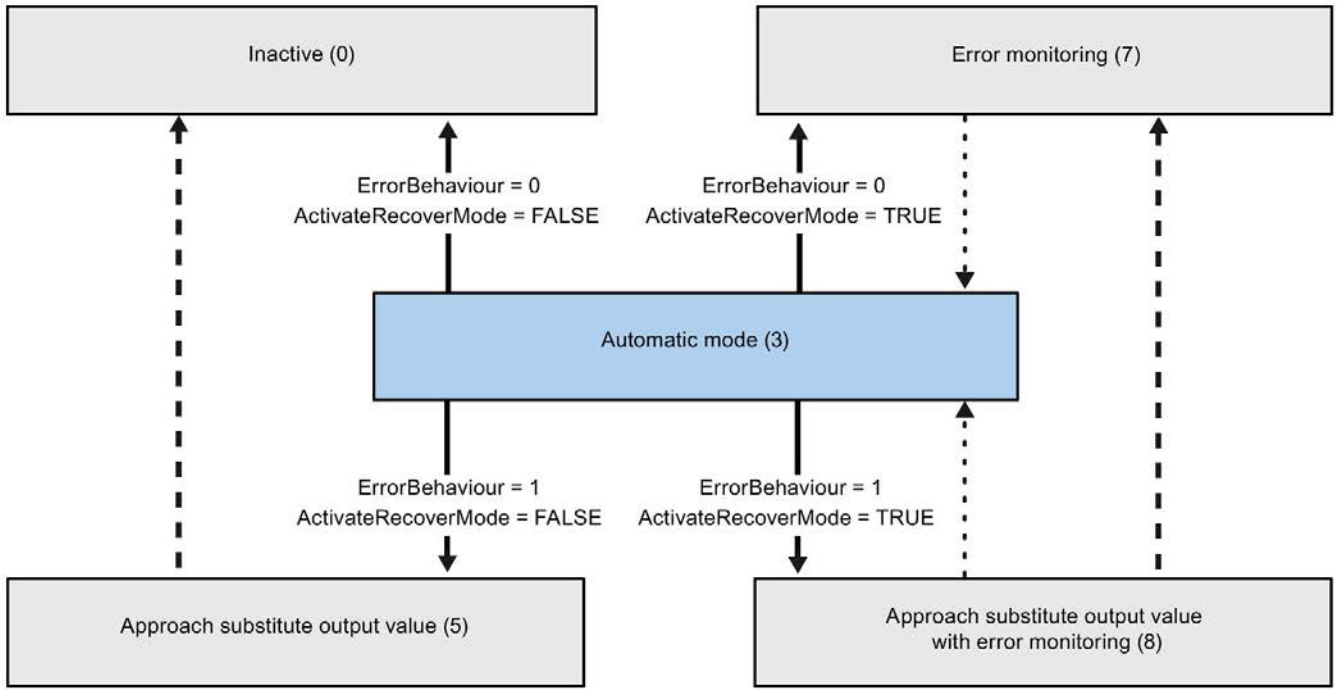

Automatic switchover of operating mode in the event of an error

Automatic switchover of operating mode once the current operation has been completed.

Automatic switchover of operating mode in automatic and manual modes (PID_3Step V1.0)

PID_3Step automatically switches the operating mode in the event of an error. The following diagram illustrates the influence of ErrorBehaviour and ActivateRecoverMode on this switchover of operating mode.

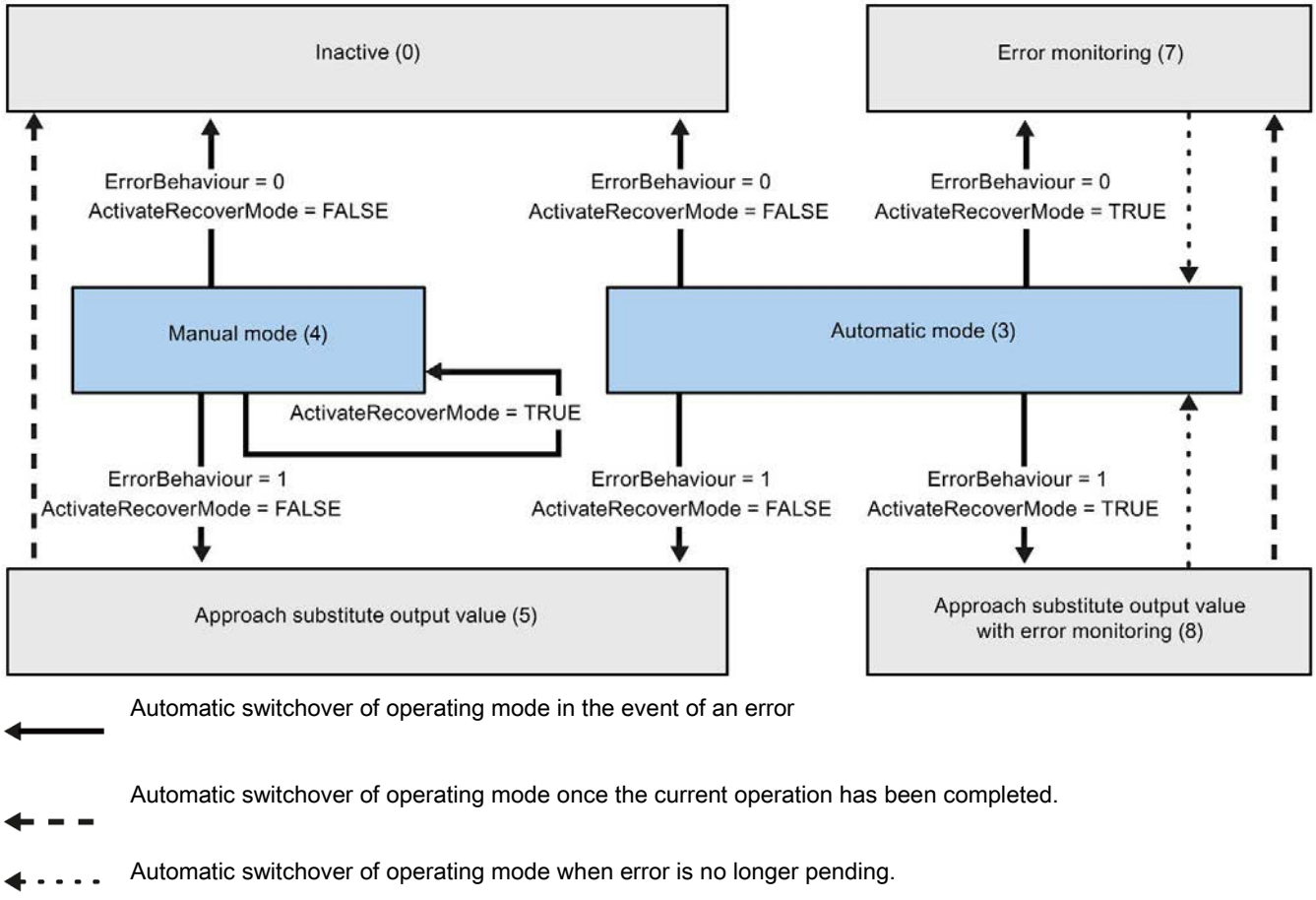

Automatic switchover of operating mode in the event of an error

Automatic switchover of operating mode once the current operation has been completed.

Automatic switchover of operating mode when error is no longer pending.

See also

Tag ActivateRecoverMode V1 (Page 388)

Parameter ErrorBits V1 (Page 385)

9.2.5.7 Parameter ErrorBits V1

If several errors are pending simultaneously, the values of the error codes are displayed with binary addition. The display of error code 0003, for example, indicates that the errors 0001 and 0002 are pending simultaneously.

ErrorBits (DW#16#...)	Description
0000	There is no error.
0001	The "Input" parameter is outside the process value limits. • Input > Config.InputUpperLimit or • Input < Config.InputLowerLimit If ActivateRecoverMode = TRUE and ErrorBehaviour = 1, the actuator moves to the substitute output value. If ActivateRecoverMode = TRUE and ErrorBehaviour = 0, the actuator stops in its current position. If ActivateRecoverMode = FALSE, the actuator stops in its current position. PID_3Step V1.1 You can move the actuator in manual mode. PID_3Step V1.0 Manual mode is not possible in this state. You cannot move the actuator again until you eliminate the error.
0002	Invalid value at "Input_PER" parameter. Check whether an error is pending at the analog input. If automatic mode was active before the error occurred, ActivateRecoverMode = TRUE, and the error is no longer pending, PID_3Step switches back to automatic mode.
0004	Error during fine tuning. Oscillation of the process value could not be maintained.
0020	Pretuning is not permitted in automatic mode or during fine tuning.
0080	Error during pretuning. The output value limits are not configured correctly or the actual value does not react as expected. Check whether the limits of the output value are configured correctly and match the control logic. Also make sure that the actual value does not oscillate strongly before starting pretuning.
0100	Error during fine tuning resulted in invalid parameters.
0200	Invalid value at "Input" parameter: Value has an invalid number format. If automatic mode was active before the error occurred, ActivateRecoverMode = TRUE, and the error is no longer pending, PID_3Step switches back to automatic mode.
0400	Calculation of output value failed. Check the PID parameters.
0800	Sampling time error: PID_3Step is not called within the sampling time of the cyclic interrupt OB. If automatic mode was active before the error occurred, ActivateRecoverMode = TRUE, and the error is no longer pending, PID_3Step switches back to automatic mode. If this error occurred during simulation with PLCSIM, see the notes under Simulating PID_3Step V1 with PLCSIM (Page 160).
1000	Invalid value at "Setpoint" parameter: Value has an invalid number format. If automatic mode was active before the error occurred, ActivateRecoverMode = TRUE, and the error is no longer pending, PID_3Step switches back to automatic mode.

ErrorBits (DW#16#...)	Description
2000	Invalid value at Feedback_PER parameter. Check whether an error is pending at the analog input. The actuator cannot be moved to the substitute output value and remains in its current position. Manual mode is not possible in this state. You must deactivate position feedback (Config. FeedbackOn = FALSE) to move the actuator from this state. If automatic mode was active before the error occurred, ActivateRecoverMode = TRUE, and the error is no longer pending, PID_3Step switches back to automatic mode.
4000	Invalid value at Feedback parameter. Value has an invalid number format. The actuator cannot be moved to the substitute output value and remains in its current position. Manual mode is not possible in this state. You must deactivate position feedback (Config. FeedbackOn = FALSE) to move the actuator from this state. If automatic mode was active before the error occurred, ActivateRecoverMode = TRUE, and the error is no longer pending, PID_3Step switches back to automatic mode.
8000	Error during digital position feedback. Actuator_H = TRUE and Actuator_L = TRUE. The actuator cannot be moved to the substitute output value and remains in its current position. Manual mode is not possible in this state. In order to move the actuator from this state, you must deactivate the "Actuator endstop" (Config.ActuatorEndStopOn = FALSE). If automatic mode was active before the error occurred, ActivateRecoverMode = TRUE, and the error is no longer pending, PID_3Step switches back to automatic mode.

9.2.5.8 Parameter Reset V1

A rising edge at Reset triggers a change to "Inactive" mode, and errors and warnings are reset. A falling edge at Reset triggers a change to the most recently active operating mode. If automatic mode was active before, switchover to automatic mode is bumpless.

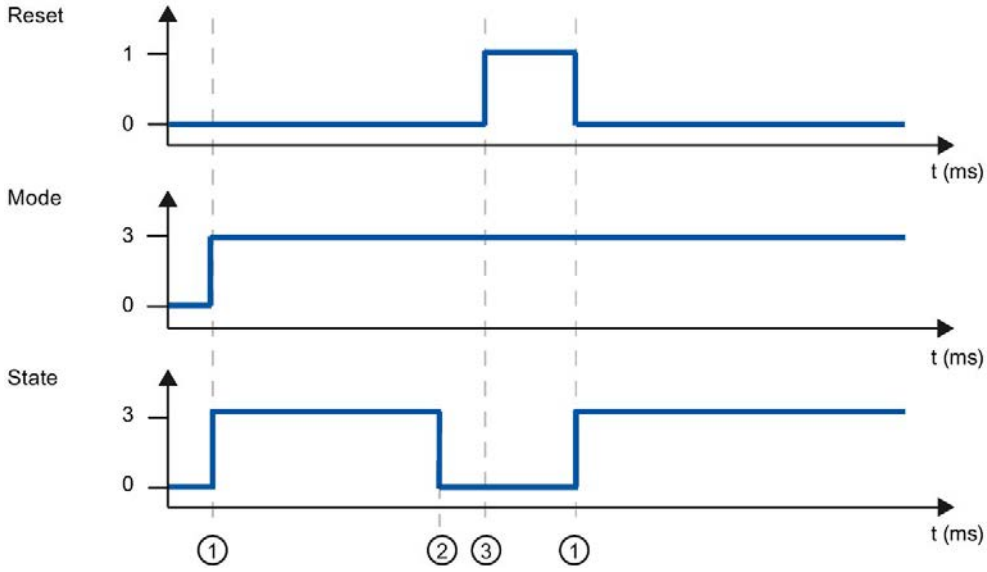

① Activation
② Error
③ Reset

9.2.5.9 Tag ActivateRecoverMode V1

The effect of the ActivateRecoverMode variable depends on the version of the PID_3Step.

Behavior in version 1.1

The ActivateRecoverMode variable determines the behavior in the event of an error in automatic mode. ActivateRecoverMode is not effective during pretuning, fine tuning and transition time measurement.

ActivateRecoverMode	Description
FALSE	In the event of an error, PID_3Step switches to "Inactive" or "Approach substitute output value" operating mode. The controller is activated by a reset or a change in Retain.Mode.
TRUE	If errors occur frequently in automatic mode, this setting has a negative effect on the control response. In this case, check the ErrorBits parameter and eliminate the cause of the error. If one or more errors occur, PID_3Step switches to "Approach substitute output value with error monitoring" or "Error monitoring" mode: • 0002h: Invalid value at parameter Input_PER. • 0200h: Invalid value at parameter Input. • 0800h: Sampling time error • 1000h: Invalid value at parameter Setpoint. • 2000h: Invalid value at parameter Feedback_PER. • 4000h: Invalid value at parameter Feedback. • 8000h: Error in digital position feedback. With errors 2000h, 4000h and 8000h, PID_3Step **cannot** approach the configured substitute output value. As soon as the errors are no longer pending, PID_3Step switches back to automatic mode.

Behavior in version 1.0

The ActivateRecoverMode variable determines the behavior in the event of an error in automatic and manual mode. ActivateRecoverMode is not effective during pretuning, fine tuning and transition time measurement.

ActivateRecoverMode	Description
FALSE	In the event of an error, PID_3Step switches to "Inactive" or "Approach substitute output value" operating mode. The controller is activated by a reset or a change in Retain.Mode.
TRUE	**Errors in automatic mode** If errors occur frequently in automatic mode, this setting has a negative effect on the control response. In this case, check the ErrorBits parameter and eliminate the cause of the error. If one or more errors occur, PID_3Step switches to "Approach substitute output value with error monitoring" or "Error monitoring" mode: • 0002h: Invalid value at parameter Input_PER. • 0200h: Invalid value at parameter Input. • 0800h: Sampling time error • 1000h: Invalid value at parameter Setpoint. • 2000h: Invalid value at parameter Feedback_PER. • 4000h: Invalid value at parameter Feedback. • 8000h: Error in digital position feedback. With errors 2000h, 4000h and 8000h, PID_3Step **cannot** approach the configured substitute output value. As soon as the errors are no longer pending, PID_3Step switches back to automatic mode. **Errors in manual mode** If one or more of the following errors occur, PID_3Step stays in manual mode: • 0002h: Invalid value at parameter Input_PER. • 0200h: Invalid value at parameter Input. • 0800h: Sampling time error • 1000h: Invalid value at parameter Setpoint. • 2000h: Invalid value at parameter Feedback_PER. • 4000h: Invalid value at parameter Feedback. • 8000h: Error in digital position feedback. With errors 2000h, 4000h and 8000h, you **cannot** move the valve to a suitable position.

See also

PID_3Step V1 static tags (Page 369)

Parameter State and Retain.Mode V1 (Page 378)

9.2.5.10 Tag Warning V1

If several warnings are pending simultaneously, their values are displayed with binary addition. The display of warning 0003, for example, indicates that the warnings 0001 and 0002 are pending simultaneously.

Warning (DW#16#...)	Description
0000	No warning pending.
0001	The point of inflection was not found during pretuning.
0002	Oscillation increased during fine tuning.
0004	The setpoint was limited to the configured limits.
0008	Not all the necessary controlled system properties were defined for the selected method of calculation. The PID parameters were instead calculated using the TuneRuleTIR = 3 method.
0010	The operating mode could not be changed because ManualEnable = TRUE.
0020	The cycle time of the calling OB limits the sampling time of the PID algorithm. Improve results by using shorter OB cycle times.
0040	The process value exceeded one of its warning limits.
0080	Invalid value at Retain.Mode. The operating mode is not switched.
0100	The manual value was limited to the limits of the controller output.
0200	The rule used for tuning produces an incorrect result, or is not supported.
0400	Method selected for transition time measurement not suitable for actuator. The transition time cannot be measured because the actuator settings do not match the selected measuring method.
0800	The difference between the current position and the new output value is too small for transition time measurement. This can produce incorrect results. The difference between the current output value and new output value must be at least 50% of the entire control range.
1000	The substitute output value cannot be reached because it is outside the output value limits.

The following warnings are deleted as soon as the cause is eliminated:

- 0004
- 0020
- 0040
- 0100

All other warnings are cleared with a rising edge at Reset.

9.2.5.11 Tag SUT.State V1

SUT.State	Name	Description
0	SUT_INIT	Initialize pretuning
50	SUT_TPDN	Determine start position without position feedback
100	SUT_STDABW	Calculate the standard deviation
200	SUT_GET_POI	Find the point of inflection
300	SUT_GET_RISETM	Determine the rise time
9900	SUT_IO	Pretuning successful
1	SUT_NIO	Pretuning not successful

9.2.5.12 Tag TIR.State V1

TIR.State	Name	Description
-100	TIR_FIRST_SUT	Fine tuning is not possible. Pretuning will be executed first.
0	TIR_INIT	Initialize fine tuning
200	TIR_STDABW	Calculate the standard deviation
300	TIR_RUN_IN	Attempt to reach the setpoint with the maximum or minimum output value
400	TIR_CTRLN	Attempt to reach the setpoint with the existing PID parameters (if pretuning has been successful)
500	TIR_OSZIL	Determine oscillation and calculate parameters
9900	TIR_IO	Fine tuning successful
1	TIR_NIO	Fine tuning not successful

9.3 PID_Temp

9.3.1 New features of PID_Temp

PID_Temp V1.1

- **Response of the output value on switchover from "Inactive" operating mode to "Automatic mode"**

  The new option IntegralResetMode = 4 was added and defined as default. With IntegralResetMode = 4, the integral action is automatically pre-assigned when switching from "Inactive" operating mode to "Automatic mode" so that a control deviation results in a jump of the PID output value with identical sign.

- **Initialization of the integral action in automatic mode**

  The integral action can be initialized in automatic mode with the tags OverwriteInitialOutputValue and PIDCtrl.PIDInit. This simplifies the use of PID_Temp for override controls.

9.3.2 Compatibility with CPU and FW

The following table shows which version of PID_Temp can be used on which CPU.

CPU	FW	PID_Temp
S7-1200	V4.2 or higher	V1.1 V1.0
	V4.1	V1.0
S7-1500	V2.0 or higher	V1.1 V1.0
	V1.7 to V1.8	V1.0

9.3.3 CPU processing time and memory requirement PID_Temp V1

CPU processing time

Typical CPU processing times of the PID_Temp technology object as of Version 1.0, depending on CPU type.

CPU	Typ. CPU processing time PID_Temp V1
CPU 1211C ≥ V4.1	580 µs
CPU 1215C ≥ V4.1	580 µs
CPU 1217C ≥ V4.1	580 µs
CPU 1505S ≥ V1.0	50 µs
CPU 1510SP-1 PN ≥ V1.7	130 µs
CPU 1511-1 PN ≥ V1.7	130 µs
CPU 1512SP-1 PN ≥ V1.7	130 µs
CPU 1516-3 PN/DP ≥ V1.7	75 µs
CPU 1518-4 PN/DP ≥ V1.7	6 µs

Memory requirement

Memory requirement of an instance DB of the PID_Temp technology object as of Version V1.0.

	Memory requirement of the instance DB of PID_Temp V1
Load memory requirement	Approx. 17000 bytes
Total work memory requirement	1280 bytes
Retentive work memory requirement	100 bytes

9.3.4 PID_Temp

9.3.4.1 Description of PID_Temp

Description

The PID_Temp instruction provides a PID controller with integrated tuning for temperature processes. PID_Temp can be used for pure heating or heating/cooling applications.

The following operating modes are possible:

- Inactive
- Pretuning
- Fine tuning
- Automatic mode
- Manual mode
- Substitute output value with error monitoring

For a more detailed description of the operating modes, see the State parameter.

PID algorithm

PID_Temp is a PIDT1 controller with anti-windup and weighting of the proportional and derivative actions. The PID algorithm operates according to the following equation (control zone and dead zone deactivated):

$$y = K_p \left[(b \cdot w - x) + \frac{1}{T_I \cdot s} (w - x) + \frac{T_D \cdot s}{a \cdot T_D \cdot s + 1} (c \cdot w - x) \right]$$

The table below shows the meaning of the icons used in the equation and in the subsequent figures.

Icon	Description	Associated parameters of the PID_Temp instruction
y	Output value of the PID algorithm	-
K_p	Proportional gain	Retain.CtrlParams.Heat.Gain Retain.CtrlParams.Cool.Gain CoolFactor
s	Laplace operator	-
b	Proportional action weighting	Retain.CtrlParams.Heat.PWeighting Retain.CtrlParams.Cool.PWeighting
w	Setpoint	CurrentSetpoint
x	Process value	ScaledInput
T_I	Integral action time	Retain.CtrlParams.Heat.Ti Retain.CtrlParams.Cool.Ti

Icon	Description	Associated parameters of the PID_Temp instruction
T_D	Derivative action time	Retain.CtrlParams.Heat.Td Retain.CtrlParams.Cool.Td
a	Derivative delay coefficient (derivative delay T1 = a × T_D)	Retain.CtrlParams.Heat.TdFiltRatio Retain.CtrlParams.Cool.TdFiltRatio
c	Derivative action weighting	Retain.CtrlParams.Heat.DWeighting Retain.CtrlParams.Cool.DWeighting
DeadZone	Dead zone width	Retain.CtrlParams.Heat.DeadZone Retain.CtrlParams.Cool.DeadZone
ControlZone	Control zone width	Retain.CtrlParams.Heat.ControlZone Retain.CtrlParams.Cool.ControlZone

PID_Temp block diagram

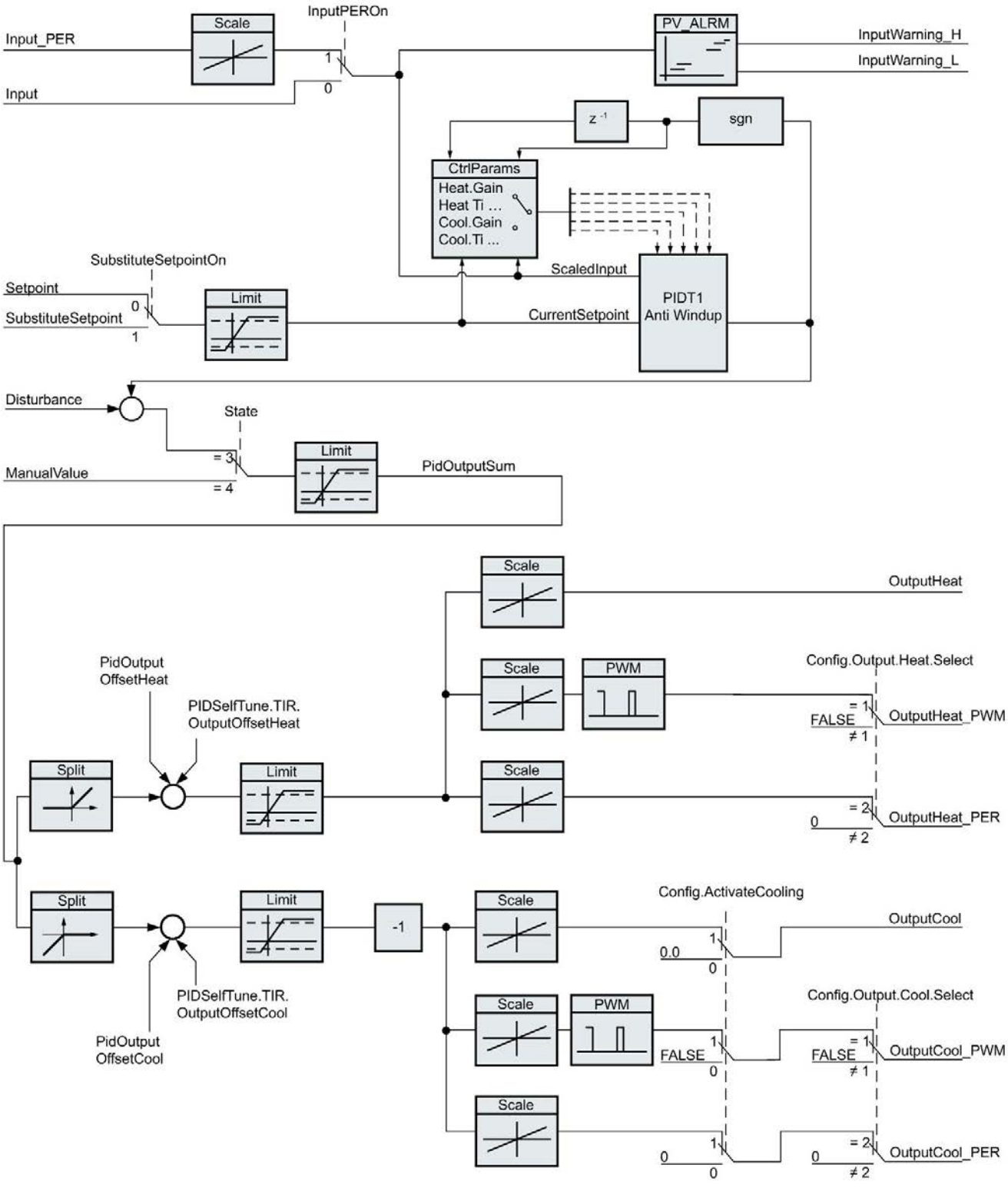

Block diagram of PIDT1 with anti-windup

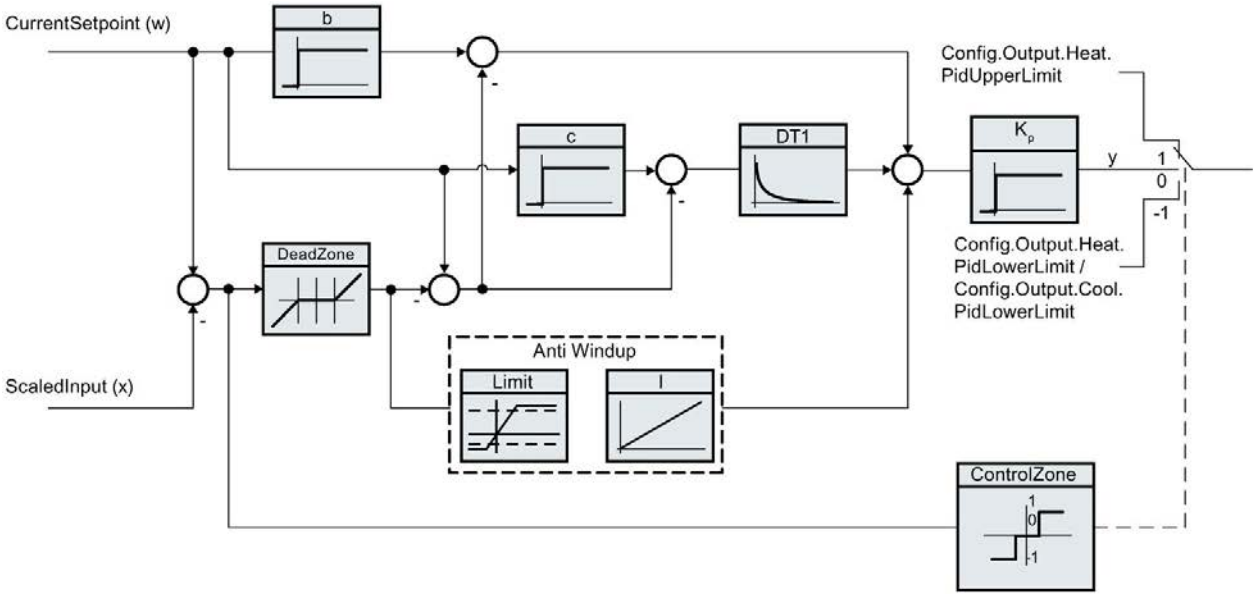

Call

PID_Temp is called in the constant time scale of a cyclic interrupt OB.

If you call PID_Temp as a multi-instance DB, no technology object is created. No parameter assignment interface or commissioning interface is available. You must assign parameters for PID_Temp directly in the multi-instance DB and commission it via a watch table.

Download to device

The process values of retentive tags are only updated when you download PID_Temp completely.

Download technology object to device (Page 44)

Startup

When the CPU starts up, PID_Temp starts in the operating mode that is saved in the Mode in/out parameter. To switch to "Inactive" operating mode during startup, set RunModeByStartup = FALSE.

Reaction to error

The behavior in the case of an error is determined by the tags SetSubstituteOutput and ActivateRecoverMode. If ActivateRecoverMode = TRUE, the behavior also depends on the error that occurred.

SetSubstitute-Output	Acti-vateRecov-erMode	Configuration editor > Basic settings of output > Set PidOutputSum to	Reaction
Not relevant	FALSE	Zero (inactive)	Switch to "Inactive" (State = 0) mode The output value of the PID algorithm and all outputs for heating and cooling are set to 0. The scaling of the outputs for heating and cooling is not active.
FALSE	TRUE	Current value for error while error is pending	Switch to "Substitute output value with error monitoring" mode (State = 5) The current output value is transferred to the actuator while the error is pending.
TRUE	TRUE	Substitute output value while error is pending	Switch to "Substitute output value with error monitoring" mode (State = 5) The value at SubstituteOutput is transferred to the actuator while the error is pending.

In manual mode, PID_Temp uses ManualValue as output value, unless ManualValue is invalid.

- If ManualValue is invalid, SubstituteOutput is used.
- If ManualValue and SubstituteOutput are invalid, Config.Output.Heat.PidLowerLimit is used.

The Error parameter indicates if an error is pending. When the error is no longer pending, Error = FALSE. The ErrorBits parameter shows which errors have occurred. ErrorBits is reset by a rising edge at Reset or ErrorAck.

9.3.4.2 Mode of operation of PID_Temp

Monitoring process value limits

You specify the high limit and low limit of the process value in the Config.InputUpperLimit and Config.InputLowerLimit tags. If the process value is outside these limits, an error occurs (ErrorBits = 0000001h).

You specify a high and low warning limit of the process value in the Config.InputUpperWarning and Config.InputLowerWarning tags. If the process value is outside these warning limits, a warning occurs (Warning = 0000040h), and the InputWarning_H or InputWarning_L output parameter changes to TRUE.

Limiting the setpoint

You specify a high limit and low limit of the setpoint in the Config.SetpointUpperLimit and Config.SetpointLowerLimit tags. PID_Temp automatically limits the setpoint to the process value limits. You can limit the setpoint to a smaller area. PID_Temp checks whether this area is within the process value limits. If the setpoint is outside these limits, the high or low limit is used as the setpoint, and output parameter SetpointLimit_H or SetpointLimit_L is set to TRUE.

The setpoint is limited in all operating modes.

Substitute setpoint

You can specify a substitute setpoint at the SubstituteSetpoint tag and activate it with SubstituteSetpointOn = TRUE. In this way, you can temporarily specify the setpoint directly, for example for a slave controller in a cascade, without having to change the user program. The limits set for the setpoint also apply to the substitute setpoint.

Heating and cooling

With the default setting, PID_Temp only uses the outputs for heating (OutputHeat, OutputHeat_PWM, OutputHeat_PER). The output value of the PID algorithm (PidOutputSum) is scaled and output at the outputs for heating. You specify with Config.Output.Heat.Select if OutputHeat_PWM or OutputHeat_PER is calculated. OutputHeat is always calculated.

With Config.ActivateCooling = TRUE, you can also activate the outputs for cooling (OutputCool, OutputCool_PWM, OutputCool_PER). Positive output values of the PID algorithm (PidOutputSum) are scaled and output at the outputs for heating. Negative output values of the PID algorithm are scaled and output at the outputs for cooling. You specify with Config.Output.Cool.Select if OutputCool_PWM or OutputCool_PER is calculated. OutputCool is always calculated.

Two methods are available to calculate the PID output value with activated cooling:

- Cooling factor (Config.AdvancedCooling = FALSE):

  The output value calculation for cooling takes place with the PID parameters for heating, taking into consideration the configurable cooling factor Config.CoolFactor. This method is suitable if the heating and cooling actuators have a similar time response but different gains. If this method is selected, pretuning and fine tuning for cooling as well as the PID parameter set for cooling are not available. You can only execute the tuning for heating.

- PID parameter switching (Config.AdvancedCooling = TRUE):

  The output value calculation for cooling takes place by means of a separate PID parameter set. Based on the calculated output value and the control deviation, the PID algorithm decides whether the PID parameter for heating or cooling is used. This method is suitable if the heating and cooling actuator have different time responses and different gains. Pretuning and fine tuning for cooling are only available if this method is selected.

Output value limits and scaling

Depending on the operating mode, the PID output value (PidOutputSum) is calculated automatically by the PID algorithm or defined by the manual value (ManualValue) or the configured substitute output value (SubstituteOutput).

The PID output value is limited according to the configuration:

- If cooling is deactivated (Config.ActivateCooling = FALSE), Config.Output.Heat.PidUpperLimit is the high limit and Config.Output.Heat.PidLowerLimit the low limit.
- If cooling is activated (Config.ActivateCooling = TRUE), Config.Output.Heat.PidUpperLimit is the high limit and Config.Output.Cool.PidLowerLimit the low limit.

The PID output value is scaled and output at the outputs for heating and cooling. Scaling can be defined separately for each output and is specified in the structures Config.Output.Heat or Config.Output.Cool with 2 value pairs each:

Output	Value pair	Parameter
OutputHeat	Value pair 1	PID output value high limit (heating) Config.Output.Heat.PidUpperLimit, Scaled high output value (heating) Con-fig.Output.Heat.UpperScaling
	Value pair 2	PID output value low limit (heating) Config.Output.Heat.PidLowerLimit, Scaled low output value (heating) Con-fig.Output.Heat.LowerScaling
OutputHeat_PWM	Value pair 1	PID output value high limit (heating) Config.Output.Heat.PidUpperLimit, Scaled high PWM output value (heating) Config.Output.Heat.PwmUpperScaling

Output	Value pair	Parameter
	Value pair 2	PID output value low limit (heating) Config.Output.Heat.PidLowerLimit, Scaled low PWM output value (heating) Config.Output.Heat.PwmLowerScaling
OutputHeat_PER	Value pair 1	PID output value high limit (heating) Config.Output.Heat.PidUpperLimit, Scaled high analog output value (heating) Config.Output.Heat.PerUpperScaling
	Value pair 2	PID output value low limit (heating) Config.Output.Heat.PidLowerLimit, Scaled low analog output value (heating) Config.Output.Heat.PerLowerScaling
OutputCool	Value pair 1	PID output value low limit (cooling) Config.Output.Cool.PidLowerLimit, Scaled high output value (cooling) Config.Output.Cool.UpperScaling
	Value pair 2	PID output value high limit (cooling) Config.Output.Cool.PidUpperLimit, Scaled low output value (cooling) Config.Output.Cool.LowerScaling
OutputCool_PWM	Value pair 1	PID output value low limit (cooling) Config.Output.Cool.PidLowerLimit, Scaled high PWM output value (cooling) Config.Output.Cool.PwmUpperScaling
	Value pair 2	PID output value high limit (cooling) Config.Output.Cool.PidUpperLimit, Scaled low PWM output value (cooling) Config.Output.Cool.PwmLowerScaling
OutputCool_PER	Value pair 1	PID output value low limit (cooling) Config.Output.Cool.PidLowerLimit, Scaled high analog output value (cooling) Config.Output.Cool.PerUpperScaling
	Value pair 2	PID output value high limit (cooling) Config.Output.Cool.PidUpperLimit, Scaled low analog output value (cooling) Config.Output.Cool.PerLowerScaling

If cooling is activated (Config.ActivateCooling = TRUE), Config.Output.Heat.PidLowerLimit must have the value 0.0.

Config.Output.Cool.PidUpperLimit must always have the value 0.0.

Example:

Output scaling when using output OutputHeat (cooling deactivated; Config.Output.Heat.PidLowerLimit may be unequal to 0.0):

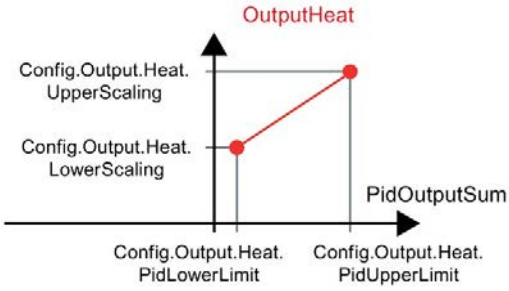

Example:

Output scaling when using output OutputHeat_PWM and OutputCool_PER (cooling activated; Config.Output.Heat.PidLowerLimit must be 0.0):

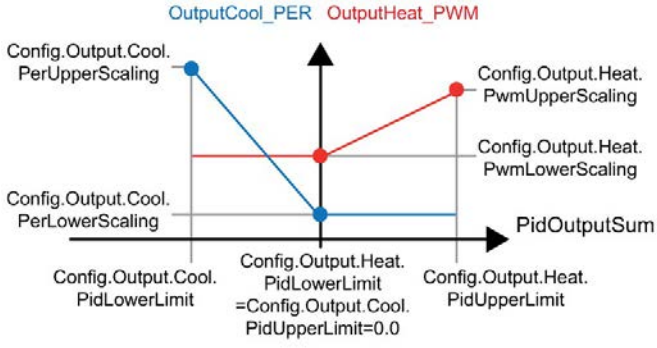

With the exception of the "Inactive" operating mode, the value at an output is always located between its scaled high output value and scaled low output value, for example, for OutputHeat always between Config.Output.Heat.UpperScaling and Config.Output.Heat.LowerScaling.

If you want to limit the value at the associated output, you therefore have to adapt these scaling values as well.

Cascading

PID_Temp supports you when you use cascade control (see: Program creation (Page 197)).

Substitute output value

In the event of an error, PID_Temp can output a substitute output value that you define at the SubstituteOutput tag. The substitute output value must be within the limits for the PID output value. The values at the outputs for heating and cooling resulting from the substitute output value are the result of the configured output scaling.

Monitoring signal validity

The values of the following parameters are monitored for validity when used:

- Setpoint
- SubstituteSetpoint
- Input
- Input_PER
- Disturbance
- ManualValue
- SubstituteOutput
- PID parameters in the structures Retain.CtrlParams.Heat and Retain.CtrlParams.Cool.

Monitoring the sampling time PID_Temp

Ideally, the sampling time is equivalent to the cycle time of the cyclic interrupt OB. The PID_Temp instruction measures the time interval between two calls. This is the current sampling time. On every switchover of operating mode and during the initial startup, the mean value is formed from the first 10 sampling times. Too great a difference between the current sampling time and this mean value triggers an error (Error = 0000800h).

The error occurs during tuning if:

- New mean value >= 1.1 x old mean value
- New mean value <= 0.9 x old mean value

The error occurs in automatic mode if:

- New mean value >= 1.5 x old mean value
- New mean value <= 0.5 x old mean value

If you deactivate the sampling time monitoring (CycleTime.EnMonitoring = FALSE), you can also call PID_Temp in OB1. You must then accept a lower control quality due to the deviating sampling time.

Sampling time of the PID algorithm

The controlled system needs a certain amount of time to respond to changes in the output value. It is therefore not advisable to calculate the output value in every cycle. The sampling time of the PID algorithm represents the time between two calculations of the output value. It is calculated during tuning and rounded to a multiple of the cycle time of the cyclic interrupt OB (sampling time PID_Temp). All other functions of the PID_Temp are executed at every call.

If cooling and PID parameter switching are activated, PID_Temp uses a separate sampling time of the PID algorithm for heating and cooling. In all other configurations, only the sampling time of the PID algorithm for heating is used.

If you use OutputHeat_PWM or OutputCool_PWM, the sampling time of the PID algorithm is used as time period of the pulse width modulation. The accuracy of the output signal is determined by the ratio of the PID algorithm sampling time to the cycle time of the OB. The cycle time should be no more than a tenth of the PID algorithm sampling time.

If the PID algorithm sampling time and thus the time period of the pulse width modulation is very high when you use OutputHeat_PWM or OutputCool_PWM, you can define a deviating shorter period duration at the Config.Output.Heat.PwmPeriode or Config.Output.Cool.PwmPeriode parameters to improve the smoothness of the process value.

Control logic

PID_Temp can be used for heating or heating/cooling applications and always works with normal control logic.

An increase of the PID output value (PidOutputSum) is intended to increase the process value. The values at the outputs for heating and cooling resulting from the PID output value are the result of the configured output scaling.

An inverted control logic or negative proportional gain are not supported.

If you only need an output value for your application in which an increase is to reduce the process value (for example, discharge control), you can use PID_Compact with inverted control logic.

9.3.4.3 Input parameters of PID_Temp

Parameter	Data type	Default	Description
Setpoint	REAL	0.0	Setpoint of the PID controller in automatic mode Valid range of values: Config.SetpointUpperLimit ≥ Setpoint ≥ Config.SetpointLowerLimit Config.InputUpperLimit ≥ Setpoint ≥ Config.InputLowerLimit
Input	REAL	0.0	A tag of the user program is used as source for the process value. If you are using the Input parameter, Config.InputPerOn = FALSE must be set.
Input_PER	INT	0	An analog input is used as the source of the process value. If you are using the Input_PER parameter, Config.InputPerOn = TRUE must be set.
Disturbance	REAL	0.0	Disturbance variable or precontrol value
Manual-Enable	BOOL	FALSE	• A FALSE -> TRUE edge activates "Manual mode", whileState = 4, Mode remains unchanged. As long as ManualEnable = TRUE, you cannot change the operating mode via a rising edge at ModeActivate or use the commissioning dialog. • A TRUE -> FALSE edge activates the operating mode that is specified by Mode. We recommend that you change the operating mode using Mode and ModeActivate only.
ManualValue	REAL	0.0	Manual value This value is used in manual mode as PID output value (PidOutputSum). The values at the outputs for heating and cooling resulting from this manual value are the result of the configured output scaling (structures Config.Output.Heat and Config.Output.Cool). For controllers with activated cooling output (Config.ActivateCooling = TRUE), define: • a positive manual value to output the value at the outputs for heating • a negative manual value to output the value at the outputs for cooling The permitted value range is determined by the configuration. • Cooling output deactivated (Config.ActivateCooling = FALSE): Config.Output.Heat.PidUpperLimit ≥ ManualValue ≥ Config.Output.Heat.PidLowerLimit • Cooling output activated (Config.ActivateCooling = TRUE): Config.Output.Heat.PidUpperLimit ≥ ManualValue ≥ Config.Output.Cool.PidLowerLimit
ErrorAck	BOOL	FALSE	• FALSE -> TRUE edge ErrorBits and Warning are reset.

Parameter	Data type	Default	Description
Reset	BOOL	FALSE	Restarts the controller. • FALSE -> TRUE edge – Switch to "Inactive" mode – ErrorBits and Warning are reset. • As long as Reset = TRUE, – PID_Temp remains in "Inactive" mode (State = 0). – you cannot change the operating mode with Mode and ModeActivate or ManualEnable – You cannot use the commissioning dialog. • TRUE -> FALSE edge – If ManualEnable = FALSE, PID_Temp switches to the operating mode that is saved in Mode. – If Mode = 3 (automatic mode), the integral action is treated as configured with the tag IntegralResetMode.
Mode-Activate	BOOL	FALSE	• FALSE -> TRUE edge PID_Temp switches to the operating mode that is saved at the Mode input.

9.3.4.4 Output parameters of PID_Temp

Parameter	Data type	Default	Description
ScaledInput	REAL	0.0	Scaled process value
OutputHeat	REAL	0.0	Output value (heating) in REAL format The PID output value (PidOutputSum) is scaled with the two value pairs Config.Output.Heat.PidUpperLimit, Config.Output.Heat.UpperScaling and Config.Output.Heat.PidLowerLimit, Config.Output.Heat.LowerScaling and output in REAL format at OutputHeat. OutputHeat is always calculated.
OutputCool	REAL	0.0	Output value (cooling) in REAL format The PID output value (PidOutputSum) is scaled with the two value pairs Config.Output.Cool.PidUpperLimit, Config.Output.Cool.LowerScaling and Config.Output.Cool.PidLowerLimit, Config.Output.Cool.UpperScaling and output in REAL format at OutputCool. OutputCool is only calculated if the cooling output is activated (Config.ActivateCooling = TRUE).
OutputHeat_PER	INT	0	Analog output value (heating) The PID output value (PidOutputSum) is scaled with the two value pairs Config.Output.Heat.PidUpperLimit, Config.Output.Heat.PerUpperScaling and Config.Output.Heat.PidLowerLimit, Config.Output.Heat.PerLowerScaling and output as analog value at OutputHeat_PER. OutputHeat_PER is only calculated if Config.Output.Heat.Select = 2.
OutputCool_PER	INT	0	Analog output value (cooling) The PID output value (PidOutputSum) is scaled with the two value pairs Config.Output.Cool.PidUpperLimit, Config.Output.Cool.PerLowerScaling and Config.Output.Cool.PidLowerLimit, Config.Output.Cool.PerUpperScaling and output as analog value at OutputCool_PER. OutputCool_PER is only calculated if the cooling output is activated (Config.ActivateCooling = TRUE) and Config.Output.Cool.Select = 2.
OutputHeat_PWM	BOOL	FALSE	Pulse-width modulated output value (heating) The PID output value (PidOutputSum) is scaled with the two value pairs Config.Output.Heat.PidUpperLimit, Config.Output.Heat.PwmUpperScaling and Config.Output.Heat.PidLowerLimit, Config.Output.Heat.PwmLowerScaling and output as pulse-width modulated value (variable switch on and switch off times) at OutputHeat_PWM. OutputHeat_PWM is only calculated if Config.Output.Heat.Select = 1.
OutputCool_PWM	BOOL	FALSE	Pulse-width modulated output value (cooling) The PID output value (PidOutputSum) is scaled with the two value pairs Config.Output.Cool.PidUpperLimit, Config.Output.Cool.PwmLowerScaling and Config.Output.Cool.PidLowerLimit, Config.Output.Cool.PwmUpperScaling and output as pulse-width modulated value (variable switch on and switch off times) at OutputCool_PWM. OutputCool_PWM is only calculated if the cooling output is activated (Config.ActivateCooling = TRUE) and Config.Output.Cool.Select = 1.
SetpointLimit_H	BOOL	FALSE	If SetpointLimit_H = TRUE, the absolute setpoint high limit is reached (Setpoint ≥ Config.SetpointUpperLimit) or Setpoint ≥ Config.InputUpperLimit. The setpoint high limit is the minimum of Config.SetpointUpperLimit and Config.InputUpperLimit.

Parameter	Data type	Default	Description
SetpointLimit_L	BOOL	FALSE	If SetpointLimit_L = TRUE, the absolute setpoint low limit is reached (Setpoint ≤ Config.SetpointLowerLimit) or Setpoint ≤ Config.InputLowerLimit. The setpoint low limit is the maximum of Config.SetpointLowerLimit and Config.InputLowerLimit.
InputWarning_H	BOOL	FALSE	If InputWarning_H = TRUE, the process value has reached or exceeded the warning high limit (ScaledInput ≥ Config.InputUpperWarning).
InputWarning_L	BOOL	FALSE	If InputWarning_L = TRUE, the process value has reached or fallen below the warning low limit (ScaledInput ≤ Config.InputLowerWarning).
State	INT	0	The PID_Temp state and mode parameters (Page 446) shows the current operating mode of the PID controller. You can change the operating mode using the input parameter Mode and a rising edge at ModeActivate. For pretuning and fine tuning, you specify with Heat.EnableTuning and Cool.EnableTuning whether tuning takes place for heating or cooling. • State = 0: Inactive • State = 1: Pretuning • State = 2: Fine tuning • State = 3: Automatic mode • State = 4: Manual mode • State = 5: Substitute output value with error monitoring
Error	BOOL	FALSE	If Error = TRUE, at least one error message is pending in this cycle.
ErrorBits	DWORD	DW#16#0	The PID_Temp ErrorBits parameter (Page 455) shows the pending error messages. ErrorBits is retentive and is reset with a rising edge at Reset or ErrorAck.

9.3.4.5 In/out parameters of PID_Temp V2

Parameter	Data type	Default	Description
Mode	INT	4	At Mode, specify the operating mode to which PID_Temp is to switch. Options are: • Mode = 0: Inactive • Mode = 1: Pretuning • Mode = 2: Fine tuning • Mode = 3: Automatic mode • Mode = 4: Manual mode The operating mode is activated by: • Rising edge at ModeActivate • Falling edge at Reset • Falling edge at ManualEnable • Cold restart of CPU if RunModeByStartup = TRUE For pretuning and fine tuning, you specify with Heat.EnableTuning and Cool.EnableTuning whether tuning takes place for heating or cooling. Mode is retentive. A detailed description of the operating modes can be found in State and Mode parameters (Page 446).
Master	DWORD	DW#16#0	Interface for cascade control If this PID_Temp instance is used as slave controller in a cascade (Config.Cascade.IsSlave = TRUE), assign the Master parameter at the instruction call with the Slave parameter of the master controller. Example: Call of a slave controller "PID_Temp_2" with master controller "PID_Temp_1" in SCL: ---------- `"PID_Temp_2"(Master := "PID_Temp_1".Slave, Setpoint := "PID_Temp_1".OutputHeat);` ---------- You use this interface to exchange slave controller information about operating mode, limit and substitute setpoint with your master controller. Keep in mind that the call of the master controller has to take place before the call of the slave controller in the same cyclic interrupt OB.

Parameter	Data type	Default	Description
Master	DWORD	DW#16#0	Assignment: • Bits 0 to 15: Unassigned • Bits 16 to 23 – Limit counter: A slave controller whose output value is limited increments this counter. Depending on the configured number of slaves (Config.Cascade.CountSlaves) and of the anti-windup mode (Config.Cascade.AntiWindUpMode), the master controller reacts accordingly. • Bit 24 – Automatic mode of the slave controllers: TRUE, if all slave controllers are in automatic mode • Bit 25 – Substitute setpoint of the slave controllers: TRUE, if a slave controller has activated the substitute setpoint (SubstituteSetpointOn = TRUE)
Slave	DWORD	DW#16#0	Interface for cascade control You use this interface to exchange slave controller information about operating mode, limit and substitute setpoint with your master controller. See description of Master parameter

See also

PID_Temp state and mode parameters (Page 446)

Program creation (Page 197)

Cascade control with PID_Temp (Page 195)

9.3.4.6 PID_Temp static tags

Note

Change the tags identified with (1) only in "Inactive" mode to prevent malfunction of the PID controller.

Tag	Data type	Default	Description
IntegralResetMode	Int	V1.0: 1, V1.1 or higher: 4	The IntegralResetMode tag (Page 464) determines how the integral action PIDCtrl.IOutputOld is pre-assigned when switching from "Inactive" operating mode to "Automatic mode". This setting only works for one cycle. • IntegralResetMode = 0: Smooth • IntegralResetMode = 1: Delete • IntegralResetMode = 2: Hold • IntegralResetMode = 3: Pre-assign • IntegralResetMode = 4: Like setpoint change (only for PID_Temp with version ≥ 1.1)
OverwriteInitialOutputValue	REAL	0.0	If one of the following conditions is met, the integral action PIDCtrl.IOutputOld is pre-assigned automatically as if PIDOutputSum = OverwriteInitialOutputValue in the previous cycle: • IntegralResetMode = 3 when switching from "Inactive" operating mode to "Automatic mode" • TRUE -> FALSE edge at parameter Reset and parameter Mode = 3 • PIDCtrl.PIDInit = TRUE in "Automatic mode" (available as of PID_Temp version 1.1)
RunModeByStartup	BOOL	TRUE	Activate operating mode at Mode parameter after CPU restart • If RunModeByStartup = TRUE, PID_Temp starts in the operating mode saved in the Mode parameter after CPU startup. • If RunModeByStartup = FALSE, PID_Temp remains in "Inactive" mode after CPU startup.
LoadBackUp	BOOL	FALSE	If LoadBackUp = TRUE, the last set of PID parameters is reloaded from the CtrlParamsBackUp structure. The set was saved prior to the last tuning. LoadBackUp is automatically set back to FALSE. The acceptance is bumpless.

Tag	Data type	Default	Description
SetSubstituteOutput	BOOL	TRUE	Selection of the output value while an error is pending (State = 5): • If SetSubstituteOutput = TRUE and ActivateRecoverMode = TRUE, the configured substitute output value SubstituteOutput is output as PID output value as long as an error is pending. • If SetSubstituteOutput = FALSE and ActivateRecoverMode = TRUE, the actuator remains at the current PID output value as long as an error is pending. • If ActivateRecoverMode = FALSE, SetSubstituteOutput is not effective. • If SubstituteOutput is invalid (ErrorBits = 0020000h), the substitute output value cannot be output. In this case, the low limit of the PID output value for heating (Config.Output.Heat.PidLowerLimit) is used as PID output value.
PhysicalUnit	INT	0	Unit of measurement of the process value and setpoint, e.g., ºC, or ºF. This parameter is used for display in the editors and does not influence the control algorithm.
PhysicalQuantity	INT	0	Physical quantity of the process value and setpoint, e.g., temperature. This parameter is used for display in the editors and does not influence the control algorithm.
ActivateRecoverMode	BOOL	TRUE	The ActivateRecoverMode tag determines the reaction to error.
Warning	DWORD	0	The Warning tag shows the warnings since Reset = TRUE or ErrorAck =TRUE. Warning is retentive.
Progress	REAL	0.0	Progress of current tuning phase as a percentage (0.0 - 100.0)
CurrentSetpoint	REAL	0.0	CurrentSetpoint always displays the currently effective setpoint. This value is frozen during tuning.
CancelTuningLevel	REAL	10.0	Permissible fluctuation of setpoint during tuning. Tuning is not canceled until: • Setpoint > CurrentSetpoint + CancelTuningLevel or • Setpoint < CurrentSetpoint - CancelTuningLevel

Tag	Data type	Default	Description
SubstituteOutput	REAL	0.0	The substitute output value is used as PID output value as long as the following conditions are met: • One or more errors are pending in automatic mode for which ActivateRecoverMode is in effect • SetSubstituteOutput = TRUE • ActivateRecoverMode = TRUE The values at the outputs for heating and cooling resulting from the substitute output value are the result of the configured output scaling (structures Config.Output.Heat and Config.Output.Cool). For controllers with activated cooling output (Config.ActivateCooling = TRUE), define: • a positive substitute output value to output the value at the outputs for heating • a negative substitute output value to output the value at the outputs for cooling The permitted value range is determined by the configuration. • Cooling output deactivated (Config.ActivateCooling = FALSE): Config.Output.Heat.PidUpperLimit ≥ SubstituteOutput ≥ Config.Output.Heat.PidLowerLimit • Cooling output activated (Config.ActivateCooling = TRUE): Config.Output.Heat.PidUpperLimit ≥ SubstituteOutput ≥ Config.Output.Cool.PidLowerLimit
PidOutputSum	REAL	0.0	PID output value PidOutputSum displays the output value of the PID algorithm. Depending on the operating mode, it is either calculated automatically or defined by the manual value or the configured substitute output value. The values at the outputs for heating and cooling resulting from the PID output value are the result of the configured output scaling (structures Config.Output.Heat and Config.Output.Cool). The PidOutputSum is limited as defined in the configuration. • Cooling output deactivated (Config.ActivateCooling = FALSE): Config.Output.Heat.PidUpperLimit ≥ PidOutputSum ≥ Config.Output.Heat.PidLowerLimit • Cooling output activated (ConfigActivateCooling = TRUE): Config.Output.Heat.PidUpperLimit ≥ PidOutputSum ≥ Config.Output.Cool.PidLowerLimit

Tag	Data type	Default	Description
PidOutputOffsetHeat	REAL	0.0	Offset of the PID output value heating PidOutputOffsetHeat is added to the value that results from PidOutputSum for the heating branch. Enter a positive value for PidOutputOffsetHeat to receive a positive offset at the outputs for heating. The resulting values at the outputs for heating are the result of the configured output scaling (Config.Output.Heat structure). This offset can be used for actuators which need a fixed minimum value, for example, fans with minimum speed.
PidOutputOffsetCool	REAL	0.0	Offset of the PID output value cooling PidOutputOffsetCool is added to the value that results from PidOutputSum for the cooling branch. Enter a negative value for PidOutputOffsetCool to receive a positive offset at the outputs for cooling. The resulting values at the outputs for cooling are the result of the configured output scaling (Config.Output.Cool structure). This offset can be used for actuators which need a fixed minimum value, for example, fans with minimum speed.
SubstituteSetpointOn	BOOL	FALSE	Activates the substitute setpoint as controller setpoint. • FALSE = the Setpoint parameter is used. • TRUE = the SubstituteSetpoint parameter is used as setpoint SubstituteSetpointOn can be used to specify the setpoint of a slave controller in a cascade directly without having to change the user program.
SubstituteSetpoint	REAL	0.0	Substitute setpoint If SubstituteSetpointOn = TRUE, the SubstituteSetpoint parameter is used as setpoint. Valid range of values: Config.SetpointUpperLimit ≥ SubstituteSetpoint ≥ Config.SetpointLowerLimit, Config.InputUpperLimit ≥ SubstituteSetpoint ≥ Config.InputLowerLimit
DisableCooling	BOOL	FALSE	DisableCooling = TRUE deactivates the cooling branch for heating/cooling controllers (Config.ActivateCooling = TRUE) in Automatic mode by setting PidOutputSum to 0.0 as low limit. PidOutputOffsetCool and the output scaling for the cooling outputs remain active. DisableCooling can be used for tuning of multi-zone applications to temporarily deactivate the cooling branch as long as all controllers have not completed their tuning yet. This parameter is set/reset by the user manually and is not automatically reset by the PID_Temp instruction.

Tag	Data type	Default	Description
AllSlaveAutomaticState	BOOL	FALSE	If this PID_Temp instance is used as master controller in a cascade (Config.Cascade.IsMaster = TRUE), AllSlaveAutomaticState = TRUE indicates that all slave controllers are in automatic mode. Tuning, manual mode or automatic mode of the master controller can only be executed accurately if all slave controllers are in automatic mode. AllSlaveAutomaticState is only determined if you interconnect the master controller and slave controller with the Master and Slave parameters. For details, see the Master parameter.
NoSlaveSubstituteSetpoint	BOOL	FALSE	If this PID_Temp instance is used as master controller in a cascade (Config.Cascade.IsMaster = TRUE), NoSlaveSubstituteSetpoint = TRUE indicates that no slave controller has activated its substitute setpoint. Tuning, manual mode or automatic mode of the master controller can only be executed accurately if no slave controller has activated its substitute setpoint. NoSlaveSubstituteSetpoint is only determined if you interconnect the master controller and slave controller with the Master and Slave parameters. For details, see the Master parameter.
Heat.EnableTuning	BOOL	TRUE	Enabling of tuning for heating Heat.EnableTuning must be set for the following tunings (at the same time or prior to the start with Mode and ModeActivate): • Pretuning heating • Pretuning heating and cooling • Fine tuning heating This parameter is not automatically reset by the PID_Temp instruction.
Cool.EnableTuning	BOOL	FALSE	Enabling of tuning for cooling Cool.EnableTuning must be set for the following tunings (simultaneously with or prior to the start with Mode and ModeActivate): • Pretuning cooling • Pretuning heating and cooling • Fine tuning cooling Only effective if the cooling output and PID parameter switching are activated ("Config.ActivateCooling" = TRUE and "Config.AdvancedCooling" = TRUE). This parameter is not automatically reset by the PID_Temp instruction.
Config.InputPerOn(1)	BOOL	TRUE	If InputPerOn = TRUE, the Input_PER parameter is used for detecting the process value. If InputPerOn = FALSE, the Input parameter is used.

Tag	Data type	Default	Description
Config.InputUpperLimit(1)	REAL	120.0	High limit of the process value Input and Input_PER are monitored to ensure adherence to this limit. If the limit is exceeded, an error is output and the reaction is determined by ActivateRecoverMode. At the I/O input, the process value can be a maximum of 18% higher than the nominal range (overrange). This means the limit cannot be exceeded when you use an I/O input with the pre-setting for high limit and process value scaling. When pretuning is started, the difference between high and low limit of the process value is checked to determine whether the distance between setpoint and process value meets the necessary requirements. InputUpperLimit > InputLowerLimit
Config.InputLowerLimit(1)	REAL	0.0	Low limit of the process value Input and Input_PER are monitored to ensure adherence to this limit. If the limit is undershot, an error is output and the reaction is determined by ActivateRecoverMode. InputLowerLimit < InputUpperLimit
Config.InputUpperWarning(1)	REAL	3.402822e+38	Warning high limit of the process value Input and Input_PER are monitored to ensure adherence to this limit. If the limit is exceeded, a warning is output at the Warning parameter. • If you set InputUpperWarning outside the process value limits, the configured absolute process value high limit is used as the warning high limit. • If you configure InputUpperWarning within the process value limits, this value is used as the warning high limit. InputUpperWarning > InputLowerWarning
Config.InputLowerWarning(1)	REAL	-3.402822e+38	Warning low limit of the process value Input and Input_PER are monitored to ensure adherence to this limit. If the limit is undershot, a warning is output at the Warning parameter. • If you set InputLowerWarning outside the process value limits, the configured absolute process value low limit is used as the warning low limit. • If you configure InputLowerWarning within the process value limits, this value is used as the warning low limit. InputLowerWarning < InputUpperWarning

Tag	Data type	Default	Description
Config.SetpointUpperLimit(1)	REAL	3.402822e+38	High limit of setpoint Setpoint and SubstituteSetpoint are monitored to ensure adherence to this limit. If the limit is exceeded, a warning is output at the Warning parameter. • If you configure SetpointUpperLimit outside the process value limits, the configured absolute process value high limit is used as the setpoint high limit. • If you configure SetpointUpperLimit within the process value limits, this value is used as the setpoint high limit. SetpointUpperLimit > SetpointLowerLimit
Config.SetpointLowerLimit(1)	REAL	-3.402822e+38	Low limit of the setpoint Setpoint and SubstituteSetpoint are monitored to ensure adherence to this limit. If the limit is undershot, a warning is output at the Warning parameter. • If you set SetpointLowerLimit outside the process value limits, the configured process value absolute low limit is used as the setpoint low limit. • If you configure SetpointLowerLimit within the process value limits, this value is used as the setpoint low limit. SetpointLowerLimit < SetpointUpperLimit
Config.ActivateCooling(1)	BOOL	FALSE	Activate cooling output • Config.ActivateCooling = FALSE Only the outputs for heating are used. • Config.ActivateCooling = TRUE The outputs for heating and cooling are used. If you are using the cooling output, the controller must not be configured as master controller (Config.Cascade.IsMaster must be FALSE) .

Tag	Data type	Default	Description
Config.AdvancedCooling(1)	BOOL	TRUE	Method for heating/cooling • Cooling factor (Config.AdvancedCooling = FALSE) The output value calculation for cooling takes place with the PID parameters for heating (Retain.CtrlParams.Heat structure) taking into consideration the configurable cooling factor Config.CoolFactor. This method is suitable if the heating and cooling actuators have a similar time response but different gains. Pretuning and fine tuning for cooling are not available when you select this method. You can only execute the tuning for heating. • PID parameter switching (Config.AdvancedCooling = TRUE) The output value calculation for cooling takes place by means of a separate PID parameter set (Retain.CtrlParams.Cool structure). This method is suitable if the heating and cooling actuator have different time responses and different gains. Pretuning and fine tuning for cooling are only available when you select this method (Mode = 1 or 2, Cool.EnableTuning = TRUE). Config.AdvancedCooling is only calculated if the cooling output is activated (Config.ActivateCooling = TRUE).
Config.CoolFactor(1)	REAL	1.0	Cooling factor If Config.AdvancedCooling = FALSE, Config.CoolFactor is considered as factor in the calculation of the output value for cooling. This allows different gains of heating and cooling actuators to be taken into account. Config.CoolFactor is not set automatically or adjusted during tuning. You must correctly configure Config.CoolFactor manually with the ratio "heating actuator gain/cooling actuator gain". Example: Config.CoolFactor = 2.0 means that the gain of the heating actuator is twice as high as the gain of the cooling actuator. Config.CoolFactor is only effective if the cooling output is activated (Config.ActivateCooling = TRUE) and cooling factor is selected as method for heating/cooling (Config.AdvancedCooling = FALSE). Config.CoolFactor > 0.0

Tag	Data type	Default	Description
Config.InputScaling .UpperPointIn(1)	REAL	27648.0	Scaling Input_PER high Input_PER is scaled based on the two value pairs UpperPointOut, UpperPointIn and LowerPointOut, LowerPointIn. Only effective if Input_PER is used for process value detection (Config.InputPerOn = TRUE). UpperPointIn > LowerPointIn
Config.InputScaling .LowerPointIn(1)	REAL	0.0	Scaling Input_PER low Input_PER is scaled based on the two value pairs UpperPointOut, UpperPointIn and LowerPointOut, LowerPointIn. Only effective if Input_PER is used for process value detection (Config.InputPerOn = TRUE). LowerPointIn < UpperPointIn
Config.InputScaling .UpperPointOut(1)	REAL	100.0	Scaled high process value Input_PER is scaled based on the two value pairs UpperPointOut, UpperPointIn and LowerPointOut, LowerPointIn. Only effective if Input_PER is used for process value detection (Config.InputPerOn = TRUE). UpperPointOut > LowerPointOut
Config.InputScaling .LowerPointOut(1)	REAL	0.0	Scaled low process value Input_PER is scaled based on the two value pairs UpperPointOut, UpperPointIn and LowerPointOut, LowerPointIn. Only effective if Input_PER is used for process value detection (Config.InputPerOn = TRUE). LowerPointOut < UpperPointOut
Config.Output.Heat.Select(1)	INT	1	Selecting the output value for heating Config.Output.Heat.Select specifies which outputs are used for heating: • Heat.Select = 0 - OutputHeat is used • Heat.Select = 1 - OutputHeat and OutputHeat_PWM are used • Heat.Select = 2 -OutputHeat and OutputHeat_PER are used Outputs that are not used are not calculated and remain at their default value.

Tag	Data type	Default	Description
Config.Output.Heat .PwmPeriode(1)	REAL	0.0	Period duration of the pulse width modulation (PWM) for heating (OutputHeat_PWM output) in seconds: • Heat.PwmPeriode = 0.0 The sampling time of the PID algorithm for heating (Retain.CtrlParams.Heat.Cycle) is used as period duration of the PWM. • Heat.PwmPeriode > 0.0 The value is rounded off to an integer multiple of the PID_Temp sampling time (CycleTime.Value) and used as period duration of the PWM. This setting can be used to improve the smoothing of the process value with a long sampling time of the PID algorithm. The value must meet the following conditions: – Heat.PwmPeriode ≤ Retain.CtrlParams.Heat.Cycle, – Heat.PwmPeriode > Config.Output.Heat.MinimumOnTime – Heat.PwmPeriode > Config.Output.Heat.MinimumOffTime
Config.Output.Heat .PidUpperLimit(1)	REAL	100.0	High limit of the PID output value for heating The PID output value (PidOutputSum) is limited to the high limit. Heat.PidUpperLimit forms a value pair together with the following parameters for scaling of the PID output value (PidOutputSum) to the outputs for heating: • Heat.UpperScaling for OutputHeat • Heat.PwmUpperScaling for OutputHeat_PWM • Heat.PerUpperScaling for OutputHeat_PER If you want to limit the value at the associated output, you must also adjust these scaling values. Heat.PidUpperLimit > Heat.PidLowerLimit

Tag	Data type	Default	Description
Config.Output.Heat .PidLowerLimit(1)	REAL	0.0	Low limit of the PID output value for heating For controllers with **deactivated** cooling output (Config.ActivateCooling = FALSE), the PID output value (PidOutputSum) is limited to this low limit. For controllers with **activated** cooling output (Config.ActivateCooling = TRUE), the value must be 0.0. Heat.PidLowerLimit forms a value pair together with the following parameters for scaling of the PID output value (PidOutputSum) to the outputs for heating: • Heat.LowerScaling for OutputHeat • Heat.PwmLowerScaling for OutputHeat_PWM • Heat.PerLowerScaling for OutputHeat_PER If you want to limit the value at the associated output, you must also adjust these scaling values. The permitted value range is determined by the configuration. • Cooling output deactivated (Config.ActivateCooling = FALSE): Heat.PidLowerLimit < Heat.PidUpperLimit • Cooling output activated (Config.ActivateCooling = TRUE): Heat.PidLowerLimit = 0.0
Config.Output.Heat .UpperScaling(1)	REAL	100.0	Scaled high output value for heating Heat.UpperScaling and Heat.PidUpperLimit form a value pair for scaling of the PID output value (PidOutputSum) to the output value for heating (OutputHeat). The OutputHeat value is always located between Heat.UpperScaling and Heat.LowerScaling. Heat.UpperScaling ≠ Heat.LowerScaling
Config.Output.Heat .LowerScaling(1)	REAL	0.0	Scaled low output value for heating Heat.LowerScaling and Heat.PidLowerLimit form a value pair for scaling of the PID output value (PidOutputSum) to the output value for heating (OutputHeat). The OutputHeat value is always located between Heat.UpperScaling and Heat.LowerScaling. Heat.UpperScaling ≠ Heat.LowerScaling

Tag	Data type	Default	Description
Config.Output.Heat .PwmUpperScaling(1)	REAL	100.0	Scaled high PWM output value for heating Heat.PwmUpperScaling and Heat.PidUpperLimit form a value pair for scaling of the PID output value (PidOutputSum) to the pulse-width modulated output value for heating (OutputHeat_PWM). The OutputHeat_PWM value is always located between Heat.PwmUpperScaling and Heat.PWMLowerScaling. Heat.PwmUpperScaling is only effective if OutputHeat_PWM is selected as output for heating (Heat.Select = 1) 100.0 ≥ Heat.PwmUpperScaling ≥ 0.0 Heat.PwmUpperScaling ≠ Heat.PwmLowerScaling
Config.Output.Heat .PwmLowerScaling(1)	REAL	0.0	Scaled low PWM output value for heating Heat.PwmLowerScaling and Heat.PidLowerLimit form a value pair for scaling of the PID output value (PidOutputSum) to the pulse-width modulated output value for heating (OutputHeat_PWM). The OutputHeat_PWM value is always located between Heat.PwmUpperScaling and Heat.PwmLowerScaling. Heat.PwmLowerScaling is only effective if OutputHeat_PWM is selected as output for heating (Heat.Select = 1) 100.0 ≥ Heat.PwmLowerScaling ≥ 0.0 Heat.PwmUpperScaling ≠ Heat.PwmLowerScaling
Config.Output.Heat .PerUpperScaling(1)	REAL	27648.0	Scaled high analog output value for heating Heat.PerUpperScaling and Heat.PidUpperLimit form a value pair for scaling of the PID output value (PidOutputSum) to the analog output value for heating (OutputHeat_PER). The OutputHeat_PER value is always located between Heat.PerUpperScaling and Heat.PerLowerScaling. Heat.PerUpperScaling is only effective if OutputHeat_PER is selected as output for heating (Heat.Select = 2) 32511.0 ≥ Heat.PerUpperScaling ≥ -32512.0 Heat.PerUpperScaling ≠ Heat.PerLowerScaling
Config.Output.Heat .PerLowerScaling(1)	REAL	0.0	Scaled low analog output value for heating Heat.PerLowerScaling and Heat.PidLowerLimit form a value pair for scaling of the PID output value (PidOutputSum) to the analog output value for heating (OutputHeat_PER). The OutputHeat_PER value is always located between Heat.PerUpperScaling and Heat.PerLowerScaling. Heat.PerLowerScaling is only effective if OutputHeat_PER is selected as output for heating (Heat.Select = 2) 32511.0 ≥ Heat.PerLowerScaling ≥ -32512.0 Heat.PerUpperScaling ≠ Heat.PerLowerScaling

Tag	Data type	Default	Description
Config.Output.Heat .MinimumOnTime(1)	REAL	0.0	Minimum on time of the pulse width modulation for heating (OutputHeat_PWM output) A PWM pulse is never shorter than this value. The value is rounded off to: Heat.MinimumOnTime = n × CycleTime.Value Heat.MinimumOnTime is only effective if the output for heating OutputHeat_PWM is selected (Heat.Select = 1)". 100000.0 ≥ Heat.MinimumOnTime ≥ 0.0
Config.Output.Heat .MinimumOffTime(1)	REAL	0.0	Minimum off time of the pulse width modulation for heating (OutputHeat_PWM output) A PWM pause is never shorter than this value. The value is rounded off to: Heat.MinimumOffTime = n × CycleTime.Value Heat.MinimumOffTime is only effective if the output for heating OutputHeat_PWM is selected (Heat.Select = 1)". 100000.0 ≥ Heat.MinimumOffTime ≥ 0.0
Config.Output.Cool.Select(1)	INT	1	Selecting the output value for cooling Config.Output.Cool.Select specifies which outputs are used for cooling: • Cool.Select = 0 - OutputCool is used • Cool.Select = 1 -OutputCool and OutputCool_PWM are used • Cool.Select = 2 - OutputCool and OutputCool_PER are used Outputs that are not used are not calculated and remain at their default value. Only effective if the cooling output is activated (Config.ActivateCooling = TRUE).

Tag	Data type	Default	Description
Config.Output.Cool .PwmPeriode(1)	REAL	0.0	Period duration of the pulse width modulation for cooling (OutputCool_PWM output) in seconds: • Cool.PwmPeriode = 0.0 and Config.AdvancedCooling = FALSE: sampling time of the PID algorithm for heating (Retain.CtrlParams.Heat.Cycle) is used as period duration of the PWM. • Cool.PwmPeriode = 0.0 and Config.AdvancedCooling = TRUE: The sampling time of the PID algorithm for cooling (Retain.CtrlParams.Cool.Cycle) is used as period duration of the PWM. • Cool.PwmPeriode > 0.0: The value is rounded off to an integer multiple of the PID_Temp sampling time (CycleTime.Value) and used as period duration of the PWM. This setting can be used to improve the smoothing of the process value with a long sampling time of the PID algorithm. The value must meet the following conditions: – Cool.PwmPeriode ≤ Retain.CtrlParams.Cool.Cycle or Retain.CtrlParams.Heat.Cycle – Cool.PwmPeriode > Config.Output.Cool.MinimumOnTime – Cool.PwmPeriode > Config.Output.Cool.MinimumOffTime Only effective if the cooling output is activated (Config.ActivateCooling = TRUE).
Config.Output.Cool .PidUpperLimit(1)	REAL	0.0	High limit of the PID output value for cooling The value must be 0.0. Cool.PidUpperLimit forms a value pair together with the following parameters for scaling of the PID output value (PidOutputSum) to the outputs for cooling: • Cool.LowerScaling for OutputCool • Cool.PwmLowerScaling for OutputCool_PWM • Cool.PerLowerScaling for OutputCool_PER If you want to limit the value at the associated output, you must also adjust these scaling values. Only effective if the cooling output is activated (Config.ActivateCooling = TRUE). Cool.PidUpperLimit = 0.0

Tag	Data type	Default	Description
Config.Output.Cool .PidLowerLimit(1)	REAL	-100.0	Low limit of the PID output value for cooling For controllers with activated cooling output (Config.ActivateCooling = TRUE), the PID output value (PidOutputSum) is limited to this low limit. Cool.PidLowerLimit forms a value pair together with the following parameters for scaling of the PID output value (PidOutputSum) to the outputs for cooling: • Cool.UpperScaling for OutputCool • Cool.PwmUpperScaling for OutputCool_PWM • Cool.PerUpperScaling for OutputCool_PER If you want to limit the value at the associated output, you must also adjust these scaling values. Only effective if the cooling output is activated (Config.ActivateCooling = TRUE). Cool.PidLowerLimit < Cool.PidUpperLimit
Config.Output.Cool .UpperScaling(1)	REAL	100.0	Scaled high output value for cooling Cool.UpperScaling and Cool.PidLowerLimit form a value pair for scaling of the PID output value (PidOutputSum) to the output value for cooling (OutputCool). The OutputCool value is always located between Cool.UpperScaling and Cool.LowerScaling. Only effective if the cooling output is activated (Config.ActivateCooling = TRUE). Cool.UpperScaling ≠ Cool.LowerScaling
Config.Output.Cool .LowerScaling(1)	REAL	0.0	Scaled low output value for cooling Cool.LowerScaling and Cool.PidUpperLimit form a value pair for scaling of the PID output value (PidOutputSum) to the output value for cooling (OutputCool). The OutputCool value is always located between Cool.UpperScaling and Cool.LowerScaling. Only effective if the cooling output is activated (Config.ActivateCooling = TRUE). Cool.UpperScaling ≠ Cool.LowerScaling
Config.Output.Cool .PwmUpperScaling(1)	REAL	100.0	Scaled high PWM output value for cooling Cool.PwmUpperScaling and Cool.PidLowerLimit form a value pair for scaling of the PID output value (PidOutputSum) to the pulse-width modulated output value for cooling (OutputCool_PWM). The OutputCool_PWM value is always located between Cool.PwmUpperScaling and Cool.PwmLowerScaling. Cool.PwmUpperScaling is only effective if the cooling output is activated (Config.ActivateCooling = TRUE) and OutputCool_PWM is selected as output for cooling (Cool.Select = 1). 100.0 ≥ Cool.PwmUpperScaling ≥ 0.0 Cool.PwmUpperScaling ≠ Cool.PwmLowerScaling

Tag	Data type	Default	Description
Config.Output.Cool .PwmLowerScaling(1)	REAL	0.0	Scaled low PWM output value for cooling Cool.PwmLowerScaling and Cool.PidUpperLimit form a value pair for scaling of the PID output value (PidOutputSum) to the pulse-width modulated output value for cooling (OutputCool_PWM). The OutputCool_PWM value is always located between Cool.PwmUpperScaling and CoolPwm.LowerScaling. Cool.PwmLowerScaling is only effective if the cooling output is activated (Config.ActivateCooling = TRUE) and OutputCool_PWM is selected as output for cooling (Cool.Select = 1). 100.0 ≥ Cool.PwmLowerScaling ≥ 0.0 Cool.PwmUpperScaling ≠ Cool.PwmLowerScaling
Config.Output.Cool .PerUpperScaling(1)	REAL	27648.0	Scaled high analog output value for cooling Cool.PerUpperScaling and Cool.PidLowerLimit form a value pair for scaling of the PID output value (PidOutputSum) to the analog output value for cooling (OutputCool_PER). The OutputCool_PER value is always located between Cool.PerUpperScaling and Cool.PerLowerScaling. Cool.PerUpperScaling is only effective if the cooling output is activated (Config.ActivateCooling = TRUE) and OutputCool_PER is selected as output for cooling (Cool.Select = 2). 32511.0 ≥ Cool.PerUpperScaling ≥ -32512.0 Cool.PerUpperScaling ≠ Cool.PerLowerScaling
Config.Output.Cool .PerLowerScaling(1)	REAL	0.0	Scaled low analog output value for cooling Cool.PerLowerScaling and Cool.PidUpperLimit form a value pair for scaling of the PID output value (PidOutputSum) to the analog output value for cooling (OutputCool_PER). The OutputCool_PER value is always located between Cool.PerUpperScaling and Cool.PerLowerScaling. Cool.PerLowerScaling is only effective if the cooling output is activated (Config.ActivateCooling = TRUE) and OutputCool_PER is selected as output for cooling (Cool.Select = 2). 32511.0 ≥ Cool.PerLowerScaling ≥ -32512.0 Cool.PerUpperScaling ≠ Cool.PerLowerScaling
Config.Output.Cool .MinimumOnTime(1)	REAL	0.0	Minimum on time of the pulse width modulation for cooling (OutputCool_PWM output) A PWM pulse is never shorter than this value. The value is rounded off to: Cool.MinimumOnTime = n × CycleTime.Value Cool.MinimumOnTime is only effective if the output for cooling OutputCool_PWM is selected (Cool.Select = 1). Only effective if the cooling output is activated (Config.ActivateCooling = TRUE). 100000.0 ≥ Cool.MinimumOnTime ≥ 0.0

Tag	Data type	Default	Description
Config.Output.Cool .MinimumOffTime(1)	REAL	0.0	Minimum off time of the pulse width modulation for cooling (OutputCool_PWM output) A PWM pause is never shorter than this value. The value is rounded off to: Cool.MinimumOffTime = n × CycleTime.Value Cool.MinimumOffTime is only effective if the output for cooling OutputCool_PWM is selected (Cool.Select = 1). Only effective if the cooling output is activated (Config.ActivateCooling = TRUE). 100000.0 ≥ Cool.MinimumOffTime ≥ 0.0
If you are using PID_Temp in a cascade, the master controller and slave controller exchange information via the Master and Slave parameters. You need to make the interconnection. For details, see the Master parameter.			
Config.Cascade.IsMaster(1)	BOOL	FALSE	The controller is master in a cascade and provides the slave setpoint. Set IsMaster = TRUE if you are using this PID_Temp instance as master controller in a cascade. A master controller defines the setpoint of a slave controller with its output. A PID_Temp instance can be master controller and slave controller at the same time. If the controller is used as master controller, the cooling output must be deactivated (Config.ActivateCooling = FALSE).
Config.Cascade.IsSlave(1)	BOOL	FALSE	The controller is slave in a cascade and receives its setpoint from the master. Set IsSlave = TRUE if you are using this PID_Temp instance as slave controller in a cascade. A slave controller receives its setpoint (Setpoint parameter) from the output of its master controller (OutputHeat parameter). A PID_Temp instance can be master controller and slave controller at the same time.
Config.Cascade .AntiWindUpMode(1)	INT	1	Anti-windup behavior in the cascade Options are: • Anti-windup = 0 The AntiWindUp functionality is deactivated. The master controller does not respond to the limit of its slave controllers. • Anti-windup = 1 The integral action of the master controller is reduced in the ratio "Slaves in limit" to "Number of slaves" ("CountSlaves" parameter). This reduces the effects of the limitation on the control behavior. • Anti-windup = 2 The integral action of the master controller is held as soon as a slave controller is in the limit. Only effective if the controller is configured as master controller (Config.Cascade.IsMaster = TRUE).

Tag	Data type	Default	Description
Config.Cascade.CountSlaves(1)	INT	1	Number of subordinate slaves Here you enter the number of directly subordinate slave controllers which receive their setpoint from this master controller. Only effective if the controller is configured as master controller (Config.Cascade.IsMaster = TRUE). 255 ≥ CountSlaves ≥ 1
CycleTime.StartEstimation	BOOL	TRUE	If CycleTime.EnEstimation = TRUE, CycleTime.StartEstimation = TRUE starts automatic determination of the PID_Temp sampling time (cycle time of the calling OB). CycleTime.StartEstimation = FALSE is set once measurement is complete.
CycleTime.EnEstimation	BOOL	TRUE	If CycleTime.EnEstimation = TRUE, the PID_Temp sampling time is determined automatically. If CycleTime.EnEstimation = FALSE, the sampling time PID_Temp is not determined automatically and must be configured correctly manually with CycleTime.Value.
CycleTime.EnMonitoring	BOOL	TRUE	If CycleTime.EnMonitoring = FALSE, the PID_Temp sampling time is not monitored. If PID_Temp cannot be executed within the sampling time, no error (ErrorBits=0000800h) is output and PID_Temp does not respond as configured with ActivateRecoverMode.
CycleTime.Value(1)	REAL	0.1	PID_Temp sampling time (cycle time of the calling OB) in seconds CycleTime.Value is determined automatically and is usually equivalent to the cycle time of the calling OB.
You can reload values from the CtrlParamsBackUp structure with LoadBackUp = TRUE.			
CtrlParamsBackUp.SetByUser	BOOL	FALSE	Saved value of Retain.CtrlParams.SetByUser
CtrlParamsBackUp.Heat.Gain	REAL	1.0	Saved proportional gain for heating
CtrlParamsBackUp.Heat.Ti	REAL	20.0	Saved integral action time for heating in seconds
CtrlParamsBackUp.Heat.Td	REAL	0.0	Saved derivative action time for heating in seconds
CtrlParamsBackUp .Heat.TdFiltRatio	REAL	0.2	Saved derivative delay coefficient for heating
CtrlParamsBackUp .Heat.PWeighting	REAL	1.0	Saved weighting of the proportional action for heating
CtrlParamsBackUp .Heat.DWeighting	REAL	1.0	Saved weighting of the derivative action for heating
CtrlParamsBackUp.Heat.Cycle	REAL	1.0	Saved sampling time of the PID algorithm for heating in seconds
CtrlParamsBackUp .Heat.ControlZone	REAL	3.402822e+38	Saved control zone width for heating
CtrlParamsBack-Up.Heat.DeadZone	REAL	0.0	Saved dead zone width for heating
CtrlParamsBackUp.Cool.Gain	REAL	1.0	Saved proportional gain for cooling
CtrlParamsBackUp.Cool.Ti	REAL	20.0	Saved integral action time for cooling in seconds
CtrlParamsBackUp.Cool.Td	REAL	0.0	Saved derivative action time for cooling in seconds

Tag	Data type	Default	Description
CtrlParamsBack-Up.Cool.TdFiltRatio	REAL	0.2	Saved derivative delay coefficient for cooling
CtrlParamsBack-Up.Cool.PWeighting	REAL	1.0	Saved proportional action weighting factor for cooling
CtrlParamsBack-Up.Cool.DWeighting	REAL	1.0	Saved derivative action weighting factor for cooling
CtrlParamsBackUp.Cool.Cycle	REAL	1.0	Saved sampling time of the PID algorithm for cooling in seconds
CtrlParamsBackUp.Cool .ControlZone	REAL	3.402822e+38	Saved control zone width for cooling
CtrlParamsBackUp.Cool .DeadZone	REAL	0.0	Saved dead zone width for cooling
PIDSelfTune.SUT .CalculateParamsHeat	BOOL	FALSE	The properties of the heating branch of the controlled system are saved during pretuning for heating. If SUT.CalculateParamsHeat = TRUE, the PID parameters for heating (Retain.CtrlParams.Heat structure) are recalculated on the basis of these properties. This enables you to change the parameter calculation method (PID-SelfTune.SUT.TuneRuleHeat parameter) without having to repeat the tuning. SUT.CalculateParamsHeat is set to FALSE after the calculation. Only possible if the pretuning was successful (SUT.ProcParHeatOk = TRUE).
PIDSelfTune.SUT .CalculateParamsCool	BOOL	FALSE	The properties of the cooling branch of the controlled system are saved during tuning for cooling. If SUT.CalculateParamsCool = TRUE, the PID parameters for cooling (Retain.CtrlParams.Cool structure) are recalculated on the basis of these properties. This enables you to change the parameter calculation method (PID-SelfTune.SUT.TuneRuleCool parameter) without having to repeat the tuning. SUT.CalculateParamsCool is set to FALSE after the calculation. Only possible if the pretuning was successful (SUT.ProcParCoolOk = TRUE). Only effective if Config.ActivateCooling = TRUE and Config.AdvancedCooling = TRUE.

Tag	Data type	Default	Description
PIDSelfTune.SUT .TuneRuleHeat	INT	2	Method for PID parameter calculation with pretuning for heating Options are: • SUT.TuneRuleHeat = 0: PID according to CHR • SUT.TuneRuleHeat = 1: PI according to CHR • SUT.TuneRuleHeat = 2: PID for temperature processes according to CHR (results in a slower and rather asymptomatic control response with lower overshoot than SUT.TuneRuleHeat = 0) (CHR = Chien, Hrones and Reswick) Only with SUT.TuneRuleHeat = 2 is the control zone Retain.CtrlParams.Heat.ControlZone automatically set during pretuning for heating.
PIDSelfTune.SUT .TuneRuleCool	INT	2	Method for PID parameter calculation with pretuning for cooling Options are: • SUT.TuneRuleCool = 0: PID according to CHR • SUT.TuneRuleCool = 1: PI according to CHR • SUT.TuneRuleCool = 2: PID for temperature processes according to CHR (results in a slower and rather asymptomatic control response with lower overshoot than SUT.TuneRuleCool = 0) (CHR = Chien, Hrones and Reswick) Only with SUT.TuneRuleCool = 2 is the control zone Retain.CtrlParams.Cool.ControlZone automatically set during pretuning for cooling. SUT.TuneRuleCool is only effective if the cooling output and PID parameter switching are activated (Config.ActivateCooling = TRUE, Config.AdvancedCooling = TRUE).

Tag	Data type	Default	Description
PIDSelfTune.SUT.State	INT	0	The SUT.State tag indicates the current phase of pretuning: • State = 0: Initialize pretuning • State = 100: Calculate standard deviation for heating • State = 200: Calculate standard deviation for cooling • State = 300: Determine point of inflection for heating • State = 400: Determine point of inflection for cooling • State = 500: Set heating to setpoint after reaching point of inflection • State = 600: Set cooling to setpoint after reaching point of inflection • State = 700: Compare efficiency of the heating actuator and cooling actuator • State = 800: Heating and cooling activated • State = 900: Cooling activated • State = 1000: Determine delay time after switching off heating • State = 9900: Pretuning successful • State = 1: Pretuning not successful
PIDSelfTune.SUT .ProcParHeatOk	BOOL	FALSE	TRUE: The calculation of the process parameters for pretuning heating was successful. This tag is set during tuning. It must be TRUE for calculation of the PID parameters for heating.
PIDSelfTune.SUT .ProcParCoolOk	BOOL	FALSE	TRUE: The calculation of the process parameters for pretuning cooling was successful. This tag is set during tuning. It must be TRUE for calculation of the PID parameters for cooling.

Tag	Data type	Default	Description
PIDSelfTune.SUT .AdaptDelayTime	INT	0	The AdaptDelayTime tag determines the adaptation of the delay time for heating at the operating point (for "Pretuning heating" and "Pretuning heating and cooling"). Options are: • SUT.AdaptDelayTime = 0: No adaptation of delay time. The SUT.State = 1000 phase is skipped. This option results in a shorter tuning time than with SUT.AdaptDelayTime = 1. • SUT.AdaptDelayTime = 1: Adaptation of the delay time to the setpoint in SUT.State = 1000 phase by switching off heating temporarily. This option results in a longer tuning time than withSUT.AdaptDelayTime = 0. It can improve the control response if the process behavior depends significantly on the operating point (non-linearity). This option should not be used for multi-zone applications with strong thermal connections.

Tag	Data type	Default	Description
PIDSelfTune.SUT.CoolingMode	INT	0	The CoolingMode tag determines the manipulated variable output to determine the cooling parameters (for pre-tuning heating and cooling). Options are: • SUT.CoolingMode = 0: Switch off heating and switch on cooling after reaching the setpoint. The SUT.State = 700 phase is skipped. Phase SUT.State = 500 is followed by phase SUT.State = 900. This option can improve the control response if the gain of the cooling actuator is low compared to the gain of the heating actuator. It results in a shorter tuning time than with SUT.CoolingMode = 1 or 2. • SUT.CoolingMode = 1: Switch on cooling in addition to heating after reaching the setpoint. The SUT.State = 700 phase is skipped. Phase SUT.State = 500 is followed by phase SUT.State = 800. This option can improve the control response if the gain of the cooling actuator is high compared to the gain of the heating actuator. • SUT.CoolingMode = 2: After heating up to the setpoint, a decision is automatically made in phase SUT.State = 700 as to whether heating is switched off. Phase SUT.State = 500 is followed by phase SUT.State = 700 and then SUT.State = 800 or SUT.State = 900. This option requires more time than options 0 and 1.

Tag	Data type	Default	Description
PIDSelfTune.TIR.RunIn	BOOL	FALSE	Use the RunIn tag to specify the sequence of fine tuning during start from automatic mode. • RunIn = FALSE If fine tuning is started from automatic mode, the system uses the existing PID parameters to control to the setpoint (TIR.State = 500 or 600). Only then will fine tuning start. • RunIn = TRUE PID_Temp tries to reach the setpoint with minimum or maximum output value (TIR.State = 300 or 400). This can produce increased overshoot. Fine tuning then starts automatically. RunIn is set to FALSE after fine tuning. During start of fine tuning from Inactive or Manual mode, PID_Temp reacts as described under RunIn = TRUE.
PIDSelfTune.TIR .CalculateParamsHeat	BOOL	FALSE	The properties of the heating branch of the controlled system are saved during fine tuning for heating. If TIR.CalculateParamsHeat= TRUE, the PID parameters for heating (Retain.CtrlParams.Heat structure) are recalculated on the basis of these properties. This enables you to change the parameter calculation method (PID-SelfTune.TIR.TuneRuleHeat parameter) without having to repeat the tuning. TIR.CalculateParamsHeat is set to FALSE after the calculation. Only possible if fine tuning heating was successful beforehand (TIR.ProcParHeatOk = TRUE).
PIDSelfTune.TIR .CalculateParamsCool	BOOL	FALSE	The properties of the cooling branch of the controlled system are saved during fine tuning for cooling. If TIR.CalculateParamsCool= TRUE, the PID parameters for cooling (Retain.CtrlParams.Cool structure) are recalculated on the basis of these properties. This enables you to change the parameter calculation method (PID-SelfTune.TIR.TuneRuleCool parameter) without having to repeat the tuning. TIR.CalculateParamsCool is set to FALSE after the calculation. Only possible if fine tuning cooling was successful beforehand (TIR.ProcParCoolOk = TRUE). Only effective if Config.ActivateCooling = TRUE and Config.AdvancedCooling = TRUE

Tag	Data type	Default	Description
PIDSelfTune.TIR .TuneRuleHeat	INT	0	Method for parameter calculation during fine tuning for heating Options are: • TIR.TuneRuleHeat = 0: PID automatic • TIR.TuneRuleHeat = 1: PID fast (faster control response with higher amplitudes of the output value than with TIR.TuneRuleHeat = 2) • TIR.TuneRuleHeat = 2: PID slow (slower control response with lower amplitudes of the output value than with TIR.TuneRuleHeat = 1) • TIR.TuneRuleHeat = 3: ZN PID • TIR.TuneRuleHeat = 4: ZN PI • TIR.TuneRuleHeat = 5: ZN P (ZN=Ziegler-Nichols) To be able to repeat the calculation of the PID parameters for heating with TIR.CalculateParamsHeat and TIR.TuneRuleHeat = 0, 1 or 2, the previous fine tuning also has to have been executed with TIR.TuneRuleHeat = 0, 1 or 2. If this is not the case, TIR.TuneRuleHeat = 3 is used. The recalculation of the PID parameters for heating with TIR.CalculateParamsHeat and TIR.TuneRuleHeat = 3, 4 or 5 is always possible.

Tag	Data type	Default	Description
PIDSelfTune.TIR .TuneRuleCool	INT	0	Method for parameter calculation during fine tuning for cooling Options are: • TIR.TuneRuleCool = 0: PID automatic • TIR.TuneRuleCool = 1: PID fast (faster control response with higher amplitudes of the output value than with TIR.TuneRuleCool = 2) • TIR.TuneRuleCool = 2: PID slow (slower control response with lower amplitudes of the output value than with TIR.TuneRuleCool = 1) • TIR.TuneRuleCool = 3: ZN PID • TIR.TuneRuleCool = 4: ZN PI • TIR.TuneRuleCool = 5: ZN P (ZN=Ziegler-Nichols) To be able to repeat the calculation of the PID parameters for cooling with TIR.CalculateParamsCool and TIR.TuneRuleCool = 0, 1 or 2, the previous fine tuning also has to have been executed with TIR.TuneRuleCool = 0, 1 or 2. If this is not the case, TIR.TuneRuleCool = 3 is used. The recalculation of the PID parameters for cooling with TIR.CalculateParamsCool and TIR.TuneRuleCool = 3, 4 or 5 is always possible. Only effective if the cooling output and PID parameter switching are activated (ConfigActivateCooling = TRUE and Config.AdvancedCooling = TRUE).

Tag	Data type	Default	Description
PIDSelfTune.TIR.State	INT	0	The TIR.State tag indicates the current phase of "fine tuning": • State = 0: Initialize fine tuning • State = 100: Calculate standard deviation for heating • State = 200: Calculate standard deviation for cooling • State = 300: Attempting to reach setpoint for heating with two-step control using heating • State = 400: Attempting to reach setpoint for cooling with two-step control using cooling • State = 500: Attempting to reach setpoint for heating with PID control • State = 600: Attempting to reach setpoint for cooling with PID control • State = 700: Calculate standard deviation for heating • State = 800: Calculate standard deviation for cooling • State = 900: Determine oscillation and calculate parameters for heating • State = 1000: Determine oscillation and calculate parameters for cooling • State = 9900: Fine tuning successful • State = 1: Fine tuning not successful
PIDSelfTune.TIR .ProcParHeatOk	BOOL	FALSE	TRUE: The calculation of the process parameters for fine tuning heating was successful. This tag is set during tuning. It must be met for calculation of the PID parameters for heating.
PIDSelfTune.TIR .ProcParCoolOk	BOOL	FALSE	TRUE: The calculation of the process parameters for fine tuning cooling was successful. This tag is set during tuning. It must be met for calculation of the PID parameters for cooling.

Tag	Data type	Default	Description
PIDSelfTune.TIR .OutputOffsetHeat	REAL	0.0	Tuning offset heating of the PID output value TIR.OutputOffsetHeat is added to the value that results from PidOutputSum for the heating branch. To receive a positive offset at the outputs for heating, define a positive value for TIR.OutputOffsetHeat. The resulting values at the outputs for heating are the result of the configured output scaling (Struktur Config.Output.Heat). This tuning offset can be used in controllers with activated cooling output and PID parameter switching (Config.ActivateCooling = TRUE, Config.AdvancedCooling = TRUE) for fine tuning cooling. If the outputs for cooling are not active at the setpoint that is to be tuned (PidOutputSum > 0.0), fine tuning cooling is not possible. In this case, define a positive tuning offset heating which is greater than the PID output value (PidOutputSum) at the setpoint in the steady state before you start tuning. This step increases the values at the outputs for heating and activates the outputs for cooling (PidOutputSum < 0.0). Fine tuning cooling is now possible. When fine tuning is complete, TIR.OutputOffsetHeat is reset to 0.0. Major changes at TIR.OutputOffsetHeat in one step can result in temporary overshoots. Config.Output.Heat.PidUpperLimit ≥ PIDSelfTune.TIR.OutputOffsetHeat ≥ Config.Output.Heat.PidLowerLimit

Tag	Data type	Default	Description
PIDSelfTune.TIR .OutputOffsetCool	REAL	0.0	Tuning offset cooling of the PID output value TIR.OutputOffsetCool is added to the value that results from PidOutputSum for the cooling branch. To receive a positive offset at the outputs for cooling, define a negative value for TIR.OutputOffsetCool. The resulting values at the outputs for cooling are the result of the configured output scaling (Struktur Config.Output.Coool). This tuning offset can be used in controllers with activated cooling output (Config.ActivateCooling = TRUE) for fine tuning heating. If the outputs for heating are not active at the setpoint that is to be tuned (PidOutputSum < 0.0), fine tuning heating is not possible. In this case, define a negative tuning offset cooling which is less than the PID output value (PidOutputSum) at the setpoint in the steady state before you start tuning. This step increases the values at the outputs for cooling and activates the outputs for heating (PidOutputSum > 0.0). Fine tuning heating is now possible. When fine tuning is complete, TIR.OutputOffsetCool is reset to 0.0. Major changes at TIR.OutputOffsetCool in one step can result in temporary overshoots. Config.Output.Cool.PidUpperLimit ≥ PIDSelfTune.TIR.OutputOffsetCool ≥ Config.Output.Cool.PidLowerLimit
PIDSelfTune.TIR .WaitForControlIn	BOOL	FALSE	Waiting with fine tuning after reaching the setpoint If TIR.WaitForControlIn = TRUE, fine tuning waits in between reaching the setpoint (TIR.State = 500 or 600) and calculation of the standard deviation (TIR.State = 700 or 800) until a FALSE -> TRUE edge is given at TIR.FinishControlIn. TIR.WaitForControlIn can be used for simultaneous fine tuning of several controllers in multi-zone applications to synchronize tuning of the individual zones. It ensures that all zones have reached their setpoints before the actual tuning starts. The influence of thermal connections between the zones on tuning can be reduced in this way. TIR.WaitForControlIn is only effective if fine tuning is started from automatic mode with PIDSelfTune.TIR.RunIn = FALSE.
PIDSelfTune.TIR .ControlInReady	BOOL	FALSE	If TIR.WaitForControlIn = TRUE, PID_Temp sets TIR.ControlInReady = TRUE as soon as the setpoint has been reached and waits with additional tuning steps until a FALSE -> TRUE edge is given at TIR.FinishControlIn.
PIDSelfTune.TIR .FinishControlIn	BOOL	FALSE	If TIR.ControlInReady = TRUE, a FALSE -> TRUE edge at TIR.FinishControlIn stops the wait and fine tuning resumes.
PIDCtrl.IOutputOld(1)	REAL	0.0	Integral action in last cycle

Tag	Data type	Default	Description
PIDCtrl.PIDInit	BOOL	FALSE	PIDCtrl.PIDInit is available as of PID_Temp version 1.1. If PIDCtrl.PIDInit = TRUE in "Automatic mode", the integral action PIDCtrl.IOutputOld is pre-assigned automatically as if PidOutputSum = OverwriteInitialOutputValue in the previous cycle. This can be used for a Override control with PID_Temp (Page 206).
Retain.CtrlParams.SetByUser(1)	BOOL	FALSE	If the PID parameters are entered manually in the configuration editor, SetByUser = TRUE. This parameter is used for display in the editors and does not influence the control algorithm. SetByUser is retentive.
Retain.CtrlParams.Heat.Gain(1)	REAL	1.0	Active proportional gain for heating Heat.Gain is retentive. Heat.Gain ≥ 0.0
Retain..CtrlParams.Heat.Ti(1)	REAL	20.0	Active integral action time for heating in seconds The integral action for heating is switched off with Heat.CtrlParams.Ti = 0.0. Heat.Ti is retentive. 100000.0 ≥ Heat.Ti ≥ 0.0
Retain.CtrlParams.Heat.Td(1)	REAL	0.0	Active derivative action time for heating in seconds The derivative action for heating is switched off with Heat.CtrlParams.Td = 0.0. Heat.Td is retentive. 100000.0 ≥ Heat.Td ≥ 0.0
Retain.CtrlParams.Heat .TdFiltRatio(1)	REAL	0.2	Active derivative delay coefficient for heating The derivative delay coefficient delays the effect of the derivative action. Derivative delay = derivative action time × derivative delay coefficient • 0.0: Derivative action is effective for one cycle only and therefore almost not effective. • 0.5: This value has proved useful in practice for controlled systems with **one** dominant time constant. • > 1.0: The greater the coefficient, the longer the effect of the derivative action is delayed. Heat.TdFiltRatio is retentive. Heat.TdFiltRatio ≥ 0.0

Tag	Data type	Default	Description
Retain.CtrlParams.Heat .PWeighting(1)	REAL	1.0	Active weighting of the proportional action for heating The proportional action may weaken with changes to the setpoint. Values from 0.0 to 1.0 are applicable. • 1.0: Proportional action for setpoint change is fully effective • 0.0: Proportional action for setpoint change is not effective The proportional action is always fully effective when the process value is changed. Heat.PWeighting is retentive. 1.0 ≥ Heat.PWeighting ≥ 0.0
Retain.CtrlParams.Heat .DWeighting(1)	REAL	1.0	Active weighting of the derivative action for heating The derivative action may weaken with changes to the setpoint. Values from 0.0 to 1.0 are applicable. • 1.0: Derivative action is fully effective upon setpoint change • 0.0: Derivative action is not effective upon setpoint change The derivative action is always fully effective when the process value is changed. Heat.DWeighting is retentive. 1.0 ≥ Heat.DWeighting ≥ 0.0
Retain.CtrlParams.Heat.Cycle(1)	REAL	1.0	Active sampling time of the PID algorithm for heating in seconds CtrlParams.Heat.Cycle is calculated during tuning and rounded to an integer multiple of CycleTime.Value. If Config.Output.Heat.PwmPeriode = 0.0, Heat.Cycle is used as period duration of the pulse width modulation for heating. If Config.Output.Cool.PwmPeriode = 0.0 and Con-fig.AdvancedCooling = FALSE, Heat.Cycle is used as period duration of the pulse width modulation for cooling. Heat.Cycle is retentive. 100000.0 ≥ Heat.Cycle > 0.0

Tag	Data type	Default	Description
Retain.CtrlParams.Heat .ControlZone(1)	REAL	3.402822e+38	Active control zone width for heating The control zone for heating is switched off with Heat.ControlZone = 3.402822e+38. Heat.ControlZone is only set automatically during pre-tuning heating or pretuning heating and cooling if PID-SelfTune.SUT.TuneRuleHeat = 2 is selected as method of the parameter calculation. For controllers with deactivated cooling output (Con-fig.ActivateCooling = FALSE) or controllers with activat-ed cooling output and cooling factor (Config.AdvancedCooling = FALSE), the control zone is symmetrically located between Setpoint – Heat.ControlZone and Setpoint + Heat.ControlZone. For controllers with activated cooling output and PID parameter switching (Config.ActivateCooling = TRUE, Config.AdvancedCooling = TRUE), the control zone is located between Setpoint – Heat.ControlZone and Set-point + Cool.ControlZone. Heat.ControlZone is retentive. Heat.ControlZone > 0.0
Retain.CtrlParams.Heat .DeadZone(1)	REAL	0.0	Active dead zone width for heating (see PID parameters (Page 177)) The dead zone for heating is switched off with Heat.DeadZone = 0.0. Heat.DeadZone is not set automatically or adjusted during tuning. You must correctly configure Heat.DeadZone manually. When the dead zone is switched on, the result can be a permanent control deviation (deviation between setpoint and process value). This can have a negative effect on fine tuning. For controllers with deactivated cooling output (Con-fig.ActivateCooling = FALSE) or controllers with activat-ed cooling output and cooling factor (Config.AdvancedCooling = FALSE), the dead zone is symmetrically located between Setpoint – Heat.DeadZone and Setpoint + Heat.DeadZone. For controllers with activated cooling output and PID parameter switching (Config.ActivateCooling = TRUE, Config.AdvancedCooling = TRUE), the dead zone is located between Setpoint – Heat.DeadZone and Set-point + Cool.DeadZone. Heat.DeadZone is retentive. Heat.DeadZone ≥ 0.0
Retain.CtrlParams.Cool.Gain(1)	REAL	1.0	Active proportional gain for cooling Cool.Gain is retentive. Only effective if the cooling output and PID parameter switching are activated (Config.ActivateCooling = TRUE and Config.AdvancedCooling = TRUE). Cool.Gain ≥ 0.0

Tag	Data type	Default	Description
Retain.CtrlParams.Cool.Ti(1)	REAL	20.0	Active integral action time for cooling in seconds The integral action for cooling is switched off with Cool.CtrlParams.Ti = 0.0. Cool.Ti is retentive. Only effective if the cooling output and PID parameter switching are activated (Config.ActivateCooling = TRUE and Config.AdvancedCooling = TRUE). 100000.0 ≥ Cool.Ti ≥ 0.0
Retain.CtrlParams.Cool.Td(1)	REAL	0.0	Active derivative action time for cooling in seconds The derivative action for cooling is switched off with Cool.CtrlParams.Td = 0.0. Cool.Td is retentive. Only effective if the cooling output and PID parameter switching are activated (Config.ActivateCooling = TRUE and Config.AdvancedCooling = TRUE). 100000.0 ≥ Cool.Td ≥ 0.0
Retain.CtrlParams.Cool .TdFiltRatio(1)	REAL	0.2	Active derivative delay coefficient for cooling The derivative delay coefficient delays the effect of the derivative action. Derivative delay = derivative action time × derivative delay coefficient • 0.0: Derivative action is effective for one cycle only and therefore almost not effective. • 0.5: This value has proved useful in practice for controlled systems with one dominant time constant. • > 1.0: The greater the coefficient, the longer the effect of the derivative action is delayed. Cool.TdFiltRatio is retentive. Only effective if the cooling output and PID parameter switching are activated (Config.ActivateCooling = TRUE and Config.AdvancedCooling = TRUE). Cool.TdFiltRatio ≥ 0.0
Retain.CtrlParams.Cool .PWeighting(1)	REAL	1.0	Active weighting of the proportional action for cooling The proportional action may weaken with changes to the setpoint. Values from 0.0 to 1.0 are applicable. • 1.0: Proportional action for setpoint change is fully effective • 0.0: Proportional action for setpoint change is not effective The proportional action is always fully effective when the process value is changed. Cool.PWeighting is retentive. Only effective if the cooling output and PID parameter switching are activated (Config.ActivateCooling = TRUE and Config.AdvancedCooling = TRUE). 1.0 ≥ Cool.PWeighting ≥ 0.0

Tag	Data type	Default	Description
Retain.CtrlParams.Cool .DWeighting(1)	REAL	1.0	Active weighting of the derivative action for cooling The derivative action may weaken with changes to the setpoint. Values from 0.0 to 1.0 are applicable. • 1.0: Derivative action is fully effective upon setpoint change • 0.0: Derivative action is not effective upon setpoint change The derivative action is always fully effective when the process value is changed. Cool.DWeighting is retentive. Only effective if the cooling output and PID parameter switching are activated (Config.ActivateCooling = TRUE and Config.AdvancedCooling = TRUE). 1.0 ≥ Cool.DWeighting ≥ 0.0
Retain.CtrlParams.Cool.Cycle(1)	REAL	1.0	Active sampling time of the PID algorithm for cooling in seconds CtrlParams.Cool.Cycle is calculated during tuning and rounded off to an integer multiple of CycleTime.. If Config.Output.Cool.PwmPeriode = 0.0 and Con-fig.AdvancedCooling = TRUE, Cool.Cycle is used as period duration of the pulse width modulation for cooling. If Config.Output.Cool.PwmPeriode = 0.0 and Con-fig.AdvancedCooling = FALSE, Heat.Cycle is used as period duration of the pulse width modulation for cooling. Cool.Cycle is retentive. Only effective if the cooling output and PID parameter switching are activated (Config.ActivateCooling = TRUE and Config.AdvancedCooling = TRUE). 100000.0 ≥ Cool.Cycle > 0.0

Tag	Data type	Default	Description
Retain.CtrlParams.Cool .ControlZone(1)	REAL	3.402822e+38	Active control zone width for cooling The control zone for cooling is switched off with Cool.ControlZone = 3.402822e+38. Cool.ControlZone is only set automatically during pretuning cooling or pretuning heating and cooling if PIDSelfTune.SUT.TuneRuleCool = 2 is selected as method of the parameter calculation. Cool.ControlZone is retentive. Only effective if the cooling output and PID parameter switching are activated (Config.ActivateCooling = TRUE and Config.AdvancedCooling = TRUE). Cool.ControlZone > 0.0
Retain.CtrlParams.Cool .DeadZone(1)	REAL	0.0	Active dead zone width for cooling (see PID parameters (Page 177)) The dead zone for cooling is switched off with Cool.DeadZone = 0.0. Cool.DeadZone is not set automatically or adjusted during tuning. You must correctly configure Cool.DeadZone manually. When the dead zone is switched on, the result can be a permanent control deviation (deviation between setpoint and process value). This can have a negative effect on fine tuning. Cool.DeadZone is retentive. Only effective if the cooling output and PID parameter switching are activated (Config.ActivateCooling = TRUE and Config.AdvancedCooling = TRUE). Cool.DeadZone ≥ 0.0

See also

PID_Temp ActivateRecoverMode tag (Page 458)

PID_Temp Warning tag (Page 460)

Multi-zone controlling with PID_Temp (Page 203)

9.3.4.7 PID_Temp state and mode parameters

Correlation of the parameters

The State parameter shows the current operating mode of the PID controller. You cannot change the State parameter.

With a rising edge at ModeActivate, PID_Temp switches to the operating mode saved in the Mode in-out parameter.

Heat.EnableTuning and Cool.EnableTuning specify for pretuning and fine tuning, if tuning takes place for heating or cooling.

If the CPU is switched on or switches from Stop to RUN mode, PID_Temp starts in the operating mode that is saved in the Mode parameter. To leave PID_Temp in "Inactive" mode, set RunModeByStartup = FALSE.

Meaning of values

State / Mode	Description of operating mode
0	**Inactive** The following output values are output in "Inactive" mode: • 0.0 as PID output value (PidOutputSum) • 0.0 as output value for heating (OutputHeat) and output value for cooling (OutputCool) • 0 as analog output value for heating (OutputHeat_PER) and analog output value for cooling (OutputCool_PER) • FALSE as PWM output value for heating (OutputHeat_PWM) and PWM output value for cooling (OutputCool_PWM) This does not depend on the configured output value limits and scaling in the structures Config.Output.Heat and Config.Output.Cool.
1	**Pretuning** The pretuning determines the process response to a jump change of the output value and searches for the point of inflection. The PID parameters are calculated from the maximum rate of rise and dead time of the controlled system. You obtain the best PID parameters when you perform pretuning and fine tuning. PID_Temp offers different pretuning types depending on the configuration: • Pretuning heating: A jump change is output at the output value heating, the PID parameters for heating are calculated (Retain.CtrlParams.Heat structure), and control to the setpoint then takes place in automatic mode. If the process behavior strongly depends on the operating point, an adaptation of the delay time can be activated at the setpoint with PIDSelfTune.SUT.AdaptDelayTime. • Pretuning heating and cooling: A jump is output at the output value heating. As soon as the process value is close to the setpoint, a jump change is output at the output value cooling. The PID parameters for heating (Retain.CtrlParams.Heat structure) and cooling (Retain.CtrlParams.Cool structure) are calculated. Then, control to the setpoint takes place in automatic mode. If the process behavior strongly depends on the operating point, an adaptation of the delay time can be activated at the setpoint with PIDSelfTune.SUT.AdaptDelayTime. Depending on the effect of the cooling actuator compared to the heating actuator, the quality of tuning can be influenced by whether or not the heating and cooling outputs are operated simultaneously during tuning. You can specify this with PIDSelfTune.SUT.CoolingMode. • Pretuning cooling: A jump change is output at the output value cooling and the PID parameters for cooling are calculated (Struktur Retain.CtrlParams.Cool). Then, control to the setpoint takes place in automatic mode. If you want to tune the PID parameters for heating and cooling, you can expect a better control response with "Pretuning heating" followed by "Pretuning cooling" rather than with "Pretuning heating and cooling". However, carrying out pretuning in two steps takes more time.

State / Mode	Description of operating mode
1	**General requirements for pretuning:** • The PID_Temp instruction is called in a cyclic interrupt OB. • Inactive (State = 0), manual mode (State = 4), or automatic mode (State = 3) • ManualEnable = FALSE • Reset = FALSE • The setpoint and the process value lie within the configured limits. **Requirements for pretuning heating:** • Heat.EnableTuning = TRUE • Cool.EnableTuning = FALSE • The process value must not be too close to the setpoint. |Setpoint - Input| > 0.3 * |Config.InputUpperLimit - Config.InputLowerLimit| and |Setpoint - Input| > 0.5 * |Setpoint| • The setpoint is greater than the process value. Setpoint > Input **Requirements for pretuning heating and cooling:** • Heat.EnableTuning = TRUE· • Cool.EnableTuning = TRUE • The cooling output is activated (Config.ActivateCooling = TRUE). • The PID parameter switching is activated (Config.AdvancedCooling = TRUE). • The process value must not be too close to the setpoint. |Setpoint - Input| > 0.3 * |Config.InputUpperLimit - Config.InputLowerLimit| and |Setpoint - Input| > 0.5 * |Setpoint| • The setpoint is greater than the process value. Setpoint > Input **Requirements for pretuning cooling:** • Heat.EnableTuning = FALSE· • Cool.EnableTuning = TRUE· • The cooling output is activated (Config.ActivateCooling = TRUE). • The PID parameter switching is activated (Config.AdvancedCooling = TRUE). • A "pretuning heating" or "pretuning heating and cooling" has been successful (PIDSelf-Tune.SUT.ProcParHeatOk = TRUE), if possible at the same setpoint. • The process value must be close to the setpoint. |Setpoint - Input| < 0.05 * |Config.InputUpperLimit - Config.InputLowerLimit| The more stable the process value is, the easier it is to calculate the PID parameters and the more precise the result will be. Noise on the process value can be tolerated as long as the rate of rise of the process value is significantly higher compared to the noise. This is most likely the case in operating modes "Inactive" or "Manual mode".

State / Mode	Description of operating mode
1	The setpoint is frozen in the CurrentSetpoint tag. Tuning is canceled when: • Setpoint > CurrentSetpoint + CancelTuningLevel or • Setpoint < CurrentSetpoint - CancelTuningLevel The method for calculation of the PID parameters can be specified separately for heating and cooling with PIDSelfTune.SUT.TuneRuleHeat and PIDSelfTune.SUT.TuneRuleCool. Before the PID parameters are recalculated, they are backed up in the CtrlParamsBackUp structure and can be reactivated with LoadBackUp. After successful pretuning, the switch is made to automatic mode. After unsuccessful pretuning, the switch to the mode is determined by ActivateRecoverMode. The phase of pretuning is indicated with PIDSelfTune.SUT.State.
2	Fine tuning Fine tuning generates a constant, limited oscillation of the process value. The PID parameters are tuned for the operating point from the amplitude and frequency of this oscillation. PID parameters from fine tuning usually have better master control and disturbance characteristics than PID parameters from pretuning. You obtain the best PID parameters when you perform pretuning and fine tuning. PID_Temp automatically attempts to generate an oscillation greater than the noise of the process value. Fine tuning is only minimally influenced by the stability of the process value. PID_Temp offers different fine tuning types depending on the configuration: • Fine tuning heating: PID_Temp generates an oscillation of the process value with periodic changes at the output value heating and calculates the PID parameters for heating (Struktur Retain.CtrlParams.Heat). • Fine tuning cooling: PID_Temp generates an oscillation of the process value with periodic changes at the output value cooling and calculates the PID parameters for cooling (Struktur Retain.CtrlParams.Cool).

State / Mode	Description of operating mode
2	**Temporary tuning offset for heating/cooling controllers** If PID_Temp is used as heating/cooling controller (Config.ActivateCooling = TRUE), the PID output value (PidOutputSum) at the setpoint must meet the following requirements for a process value oscillation to be generated and fine tuning to be successful: • Positive PID output value for fine tuning heating • Negative PID output value for fine tuning cooling If this requirement is not met, you can define a temporary offset for fine tuning which is output at the output with the opposite effect: • Offset for cooling output (PIDSelfTune.TIR.OutputOffsetCool) with fine tuning heating. Define a negative tuning offset cooling which is less than the PID output value (PidOutputSum) at the setpoint in the steady state before you start tuning. • Offset for heating output (PIDSelfTune.TIR.OutputOffsetHeat) with fine tuning cooling. Define a positive tuning offset heating which is greater than the PID output value (PidOutputSum) at the setpoint in the steady state before you start tuning. The defined offset is balanced by the PID algorithm so that the process value remains at the setpoint. The height of the offset allows the PID output value to be adapted correspondingly so that it fulfills the requirement mentioned above. To avoid larger overshoots of the process value when defining the offset, it can also be increased in several steps. If PID_Temp exits the fine tuning mode, the tuning offset is reset.
	Example for definition of an offset for fine tuning cooling: • Without offset: – Setpoint = Process value (ScaledInput) = 80°C – PID output value (PidOutputSum) = 30.0 – Output value heating (OutputHeat) = 30.0 – Output value cooling (OutputCool) = 0.0 Oscillation of the process value around the setpoint cannot be generated with the cooling output alone. Fine tuning would fail here. • With definition of an offset for heating output (PIDSelfTune.TIR.OutputOffsetHeat) = 80.0 – Setpoint = process value (ScaledInput) = 80°C – PID output value (PidOutputSum) = -50.0 – Output value heating (OutputHeat) = 80.0 – Output value cooling (OutputCool) = -50.0 By defining an offset for the heating output, the cooling output can now create an oscillation of the process value around the setpoint. Fine tuning can now be carried out successfully.

State / Mode	Description of operating mode
2	**General requirements for fine tuning:** • The PID_Temp instruction is called in a cyclic interrupt OB. • No disturbances are expected. • The setpoint and the process value lie within the configured limits. • The control loop has stabilized at the operating point. The operating point is reached when the process value corresponds to the setpoint. When the dead zone is switched on, the result can be a permanent control deviation (deviation between setpoint and actual value). This can have a negative effect on fine tuning. • ManualEnable = FALSE • Reset = FALSE • Automatic (State = 3), inactive (State = 0) or manual (State = 4) mode **Requirements for fine tuning heating:** • Heat.EnableTuning = TRUE • Cool.EnableTuning = FALSE • If PID_Temp is configured as heating/cooling controller (Config.ActivateCooling = TRUE), the heating output must be active at the operating point at which tuning is to take place (PidOutputSum > 0.0 (see tuning offset)). **Requirements for fine tuning cooling:** • Heat.EnableTuning = FALSE • Cool.EnableTuning = TRUE • The cooling output is activated (Config.ActivateCooling = TRUE). • The PID parameter switching is activated (Config.AdvancedCooling = TRUE) • The cooling output must be active at the operating point at which tuning is to take place (PidOutputSum < 0.0 (see tuning offset)).

State / Mode	Description of operating mode
2	**The course of fine tuning is determined by the mode from which it is started:** • Automatic mode (State = 3) with PIDSelfTune.TIR.RunIn = FALSE (default) Start fine tuning from automatic mode if you wish to improve the existing PID parameters through tuning. PID_Temp controls the system using the existing PID parameters until the control loop has stabilized and the requirements for fine tuning have been met. Only then will fine tuning start. • Inactive (State = 0), manual mode (State = 4), or automatic mode (State = 3) with PIDSelf-Tune.TIR.RunIn = TRUE Attempts are made to reach the setpoint with the minimum or maximum output value: – with minimum or maximum output value heating for fine tuning heating – With minimum or maximum output value cooling for fine tuning cooling. This can produce increased overshoot. Fine tuning starts when the setpoint is reached. If the setpoint cannot be reached, PID_Temp does not automatically abort tuning. The setpoint is frozen in the CurrentSetpoint tag. Tuning is canceled when: • Setpoint > CurrentSetpoint + CancelTuningLevel or • Setpoint < CurrentSetpoint - CancelTuningLevel The method for calculation of the PID parameters can be specified separately for heating and cooling with PIDSelfTune.TIR.TuneRuleHeat and PIDSelfTune.TIR.TuneRuleCool. Before the PID parameters are recalculated, they are backed up in the CtrlParamsBackUp structure and can be reactivated with LoadBackUp. The controller changes to automatic mode after successful fine tuning. After unsuccessful fine tuning, the switch to the mode is determined by ActivateRecoverMode. The "Fine tuning" phase is indicated with PIDSelfTune.TIR.State.
3	**Automatic mode** In automatic mode, PID_Temp corrects the controlled system in accordance with the parameters specified. The controller switches to automatic mode if one the following requirements is met: • Pretuning successfully completed • Fine tuning successfully completed • Changing of the Mode in-out parameter to the value 3 and a rising edge at ModeActivate. The switchover from automatic mode to manual mode is only bumpless if carried out in the commissioning editor. The ActivateRecoverMode tag is taken into consideration in automatic mode.

State / Mode	Description of operating mode
4	**Manual mode** In manual mode, you specify a manual PID output value in the ManualValue parameter. The values at the outputs for heating and cooling resulting from this manual value are the result of the configured output scaling. You can also activate this operating mode using ManualEnable = TRUE. We recommend that you change the operating mode using Mode and ModeActivate only. The switchover from manual mode to automatic mode is bumpless. The ActivateRecoverMode tag is taken into consideration in manual mode.
5	**Substitute output value with error monitoring** The control algorithm is deactivated. The SetSubstituteOutput tag determines which PID output value (PidOutputSum) is output in this operating mode. • SetSubstituteOutput = FALSE: Last valid PID output value • SetSubstituteOutput = TRUE: Substitute output value (SubstituteOutput) You cannot activate this operating mode using Mode = 5. In the event of an error, it is activated instead of "Inactive" operating mode if all the following conditions are met: • Automatic mode (State = 3) • ActivateRecoverMode = TRUE • One or more errors have occurred in which ActivateRecoverMode is effective. As soon as the errors are no longer pending, PID_Temp switches back to automatic mode.

ENO characteristics

If State = 0, then ENO = FALSE.

If State ≠ 0, then ENO = TRUE.

Automatic switchover of operating mode during commissioning

Automatic mode is activated following successful pretuning or fine tuning. The following table shows how Mode and State change during successful pretuning.

Cycle no.	Mode	State	Action
0	4	4	Set Mode = 1
1	1	4	Set ModeActivate = TRUE
1	4	1	Value of State is saved in Mode parameter Pretuning is started
n	4	1	Pretuning successfully completed
n	3	3	Automatic mode is started

PID_Temp automatically switches the operating mode in the event of an error.

The following table shows how Mode and State change during pretuning with errors.

Cycle no.	Mode	State	Action
0	4	4	Set Mode = 1
1	1	4	Set ModeActivate = TRUE
1	4	1	Value of State is saved in Mode parameter Pretuning is started
n	4	1	Pretuning canceled
n	4	4	Manual mode is started

If ActivateRecoverMode = TRUE, the operating mode that is saved in the Mode parameter is activated. When you start pretuning or fine tuning, PID_Temp has saved the value of State in the Mode in-out parameter. This means PID_Temp switches to the mode from which tuning was started.

If ActivateRecoverMode = FALSE, the system switches to "Inactive" operating mode.

See also

Output parameters of PID_Temp (Page 407)

In/out parameters of PID_Temp V2 (Page 409)

9.3.4.8 PID_Temp ErrorBits parameter

If several errors are pending simultaneously, the values of the ErrorBits are displayed with binary addition. The display of ErrorBits = 0000003h, for example, indicates that the errors 0000001h and 0000002h are pending simultaneously.

ErrorBits (DW#16#...)	Description
0000000	There is no error.
0000001	The "Input" parameter is outside the process value limits. • Input > Config.InputUpperLimit or • Input < Config.InputLowerLimit If automatic mode was active before the error occurred and ActivateRecoverMode = TRUE, PID_Temp remains in automatic mode. If manual mode was active before the error occurred and ActivateRecoverMode = TRUE, PID_Temp remains in manual mode. If pretuning or fine tuning mode was active before the error occurred and ActivateRecoverMode = TRUE, PID_Temp switches to the operating mode that is saved in the Mode parameter.
0000002	Invalid value at "Input_PER" parameter. Check whether an error is pending at the analog input. If automatic mode was active before the error occurred and ActivateRecoverMode = TRUE, PID_Temp outputs the configured substitute output value. As soon as the error is no longer pending, PID_Temp switches back to automatic mode. If manual mode was active before the error occurred and ActivateRecoverMode = TRUE, PID_Temp remains in manual mode. If pretuning or fine tuning mode was active before the error occurred and ActivateRecoverMode = TRUE, PID_Temp switches to the operating mode that is saved in the Mode parameter.
0000004	Error during fine tuning. Oscillation of the process value could not be maintained. If PID_Temp is used as heating-cooling controller (Config.ActivateCooling = TRUE), to be able to generate actual value oscillation, the PID output value (PidOutputSum) at the setpoint must be • positive for fine tuning heating • negative for fine tuning cooling If this requirement is not met, use the tuning offsets (PIDSelfTune.TIR.OutputOffsetCool and PIDSelfTune.TIR.OutputOffsetHeat tags), see Fine tuning (Page 189). If ActivateRecoverMode was = TRUE before the error occurred, PID_Temp cancels the tuning and switches to the operating mode that is saved in the Mode parameter.
0000008	Error at start of pretuning. The process value is too close to the setpoint or greater than the setpoint. Start fine tuning. If ActivateRecoverMode = TRUE before the error occurred, PID_Temp cancels the tuning and switches to the operating mode that is saved in the Mode parameter.
0000010	The setpoint was changed during tuning. You can set the permitted fluctuation of the setpoint at the CancelTuningLevel tag. If ActivateRecoverMode = TRUE before the error occurred, PID_Temp cancels the tuning and switches to the operating mode that is saved in the Mode parameter.
0000020	Pretuning is not permitted during fine tuning. If ActivateRecoverMode = TRUE before the error occurred, PID_Temp remains in fine tuning mode.
0000040	Error during pretuning. Cooling could not reduce the process value. If ActivateRecoverMode = TRUE before the error occurred, PID_Temp cancels the tuning and switches to the operating mode that is saved in the Mode parameter.

ErrorBits (DW#16#...)	Description
0000100	Error during fine tuning resulted in invalid parameters. If ActivateRecoverMode = TRUE before the error occurred, PID_Temp cancels the tuning and switches to the operating mode that is saved in the Mode parameter.
0000200	Invalid value at "Input" parameter: Value has an invalid number format. If automatic mode was active before the error occurred and ActivateRecoverMode = TRUE, PID_Temp outputs the configured substitute output value. As soon as the error is no longer pending, PID_Temp switches back to automatic mode. If manual mode was active before the error occurred and ActivateRecoverMode = TRUE, PID_Temp remains in manual mode. If pretuning or fine tuning mode was active before the error occurred and ActivateRecoverMode = TRUE, PID_Temp switches to the operating mode that is saved in the Mode parameter.
0000400	Calculation of output value failed. Check the PID parameters. If automatic mode was active before the error occurred and ActivateRecoverMode = TRUE, PID_Temp outputs the configured substitute output value. As soon as the error is no longer pending, PID_Temp switches back to automatic mode. If pretuning or fine tuning mode was active before the error occurred and ActivateRecoverMode = TRUE, PID_Temp switches to the operating mode that is saved in the Mode parameter.
0000800	Sampling time error: PID_Temp is not called within the sampling time of the cyclic interrupt OB. If automatic mode was active before the error occurred and ActivateRecoverMode = TRUE, PID_Temp remains in automatic mode. If manual mode was active before the error occurred and ActivateRecoverMode = TRUE, PID_Temp remains in manual mode. If pretuning or fine tuning mode was active before the error occurred and ActivateRecoverMode = TRUE, PID_Temp switches to the operating mode that is saved in the Mode parameter. If this error occurred during simulation with PLCSIM, see the notes under Simulating PID_Temp with PLCSIM (Page 211).
0001000	Invalid value at "Setpoint" parameter or "SubstituteSetpoint": Value has an invalid number format. If automatic mode was active before the error occurred and ActivateRecoverMode = TRUE, PID_Temp outputs the configured substitute output value. As soon as the error is no longer pending, PID_Temp switches back to automatic mode. If manual mode was active before the error occurred and ActivateRecoverMode = TRUE, PID_Temp remains in manual mode. If pretuning or fine tuning mode was active before the error occurred and ActivateRecoverMode = TRUE, PID_Temp switches to the operating mode that is saved in the Mode parameter.
0010000	Invalid value at ManualValue parameter. Value has an invalid number format. If ActivateRecoverMode = TRUE before the error occurred, PID_Temp remains in manual mode and uses SubstituteOutput as PID output value. As soon as you specify a valid value in ManualValue, PID_Temp uses it as the PID output value.
0020000	Invalid value at SubstituteOutput tag. Value has an invalid number format. PID_Temp remains in the "Substitute output value with error monitoring" mode or manual mode and uses the low limit of the PID output value for heating (Config.Output.Heat.PidLowerLimit) as PID output value. As soon as you specify a valid value in SubstituteOutput, PID_Temp uses it as the PID output value.

ErrorBits (DW#16#...)	Description
0040000	Invalid value at Disturbance parameter. Value has an invalid number format. If automatic mode was active and ActivateRecoverMode = TRUE before the error occurred, Disturbance is set to zero. PID_Temp remains in automatic mode. If pretuning or fine tuning mode was active before the error occurred and ActivateRecoverMode = TRUE, PID_Temp switches to the operating mode that is saved in the Mode parameter. If Disturbance in the current phase has no effect on the output value, tuning is not be canceled.
0200000	Error in master in the cascade: Slaves are not in automatic mode or have activated substitute setpoint and prevent tuning of the master. If ActivateRecoverMode = TRUE before the error occurred, PID_Temp cancels the tuning and switches to the operating mode that is saved in the Mode parameter.
0400000	Pretuning heating is not permitted while cooling is active. If ActivateRecoverMode = TRUE before the error occurred, PID_Temp cancels the tuning and switches to the operating mode that is saved in the Mode parameter.
0800000	The process value must be close to the setpoint to start pretuning cooling. If ActivateRecoverMode = TRUE before the error occurred, PID_Temp cancels the tuning and switches to the operating mode that is saved in the Mode parameter.
1000000	Error at start of tuning: Heat.EnableTuning and Cool.EnableTuning are not set or do not match the configuration. If ActivateRecoverMode = TRUE before the error occurred, PID_Temp cancels the tuning and switches to the operating mode that is saved in the Mode parameter.
2000000	Pretuning cooling requires successful pretuning heating. If ActivateRecoverMode = TRUE before the error occurred, PID_Temp cancels the tuning and switches to the operating mode that is saved in the Mode parameter.
4000000	Error at start of fine tuning: Heat.EnableTuning and Cool.EnableTuning must not be set simultaneously. If ActivateRecoverMode = TRUE before the error occurred, PID_Temp cancels the tuning and switches to the operating mode that is saved in the Mode parameter.
8000000	Error during calculation of the PID parameters resulted in invalid parameters. The invalid parameters are discarded and the original PID parameters are retained unchanged. We can distinguish between the following cases: • If automatic mode was active before the error occurred and ActivateRecoverMode = TRUE, PID_Temp remains in automatic mode. • If manual mode was active before the error occurred and ActivateRecoverMode = TRUE, PID_Temp remains in manual mode. • If pretuning or fine tuning mode was active before the error occurred and ActivateRecoverMode = TRUE, PID_Temp switches to the operating mode that is saved in the Mode parameter.

9.3.4.9 PID_Temp ActivateRecoverMode tag

The ActivateRecoverMode tag determines the reaction to error. The Error parameter indicates if an error is pending. When the error is no longer pending, Error = FALSE. The ErrorBits parameter shows which errors have occurred.

Automatic mode and manual mode

NOTICE
Your system may be damaged. If ActivateRecoverMode = TRUE, PID_Temp remains in automatic mode or in manual mode even if there is an error and the process limit values are exceeded. This may damage your system. It is essential to configure how your controlled system reacts in the event of an error to protect your system from damage.

ActivateRecov-erMode	Description
FALSE	PID_Temp switches to "Inactive" mode in the event of an error. The controller is only activated by a falling edge at Reset or a rising edge at ModeActivate.
TRUE	**Automatic mode** If errors occur frequently in automatic mode, this setting has a negative effect on the control response, because PID_Temp switches between the calculated PID output value and the substitute output value at each error. In this case, check the ErrorBits parameter and eliminate the cause of the error. If one or several of the following errors occur and automatic mode was active before the error occurred, PID_Temp remains in automatic mode: • 0000001h: The "Input" parameter is outside the process value limits. • 0000800h: Sampling time error • 0040000h: Invalid value at Disturbance parameter. • 8000000h: Error during calculation of the PID parameters If one or several of the following errors occur and automatic mode was active before the error occurred, PID_Temp switches to "Substitute output value with error monitoring" mode: • 0000002h: Invalid value at Input_PER parameter. • 0000200h: Invalid value at Input parameter. • 0000400h: Calculation of output value failed. • 0001000h: Invalid value at Setpoint parameter or SubstituteSetpoint. As soon as the errors are no longer pending, PID_Temp switches back to automatic mode. If the following error occurs in "Substitute output value with error monitoring" mode, PID_Temp sets the PID output value to Config.Output.Heat.PidLowerLimit as long as this error is pending: • 0020000h: Invalid value at SubstituteOutput tag. Value has an invalid number format. This behavior is independent of SetSubstituteOutput.

ActivateRecov-erMode	Description
TRUE	**Manual mode** If one or several errors occur and manual mode was active before the error occurred, PID_Temp remains in manual mode. If the following error occurs in manual mode, as long as this error is pending, PID_Temp sets the PID output value to SubstituteOutput: • 0010000h: Invalid value at ManualValue parameter. Value has an invalid number format. If the error 0010000h is pending in manual mode and the following error occurs, PID_Temp sets the PID output value to Config.Output.Heat.PidLowerLimit as long as this error is pending: • 0020000h: Invalid value at SubstituteOutput tag. Value has an invalid number format. This behavior is independent of SetSubstituteOutput.

Pretuning and fine tuning

ActivateRecov-erMode	Description
FALSE	PID_Temp switches to "Inactive" mode in the event of an error. The controller is only activated by a falling edge at Reset or a rising edge at ModeActivate.
TRUE	If the following error occurs, PID_Temp remains in the active mode: • 0000020h: Pretuning is not permitted during fine tuning. The following errors are ignored: • 0010000h: Invalid value at ManualValue parameter. • 0020000h: Invalid value at SubstituteOutput tag. When any other error occurs, PID_Temp cancels the tuning and switches to the mode from which tuning was started.

9.3.4.10 PID_Temp Warning tag

If several warnings are pending simultaneously, the values of the Warning tag are displayed with binary addition. If the warning 0000003h is displayed, for example, the warnings 0000001h and 0000002h are pending simultaneously.

Warning (DW#16#....)	Description
0000000	No warning pending.
0000001	The point of inflection was not found during pretuning.
0000004	The setpoint was limited to the configured limits.
0000008	Not all the necessary controlled system properties were defined for the selected method of calculation. Instead, the PID parameters were calculated using the method TIR.TuneRuleHeat = 3 or TIR.TuneRuleCool = 3.
0000010	The operating mode could not be changed because Reset = TRUE or ManualEnable = TRUE.
0000020	The cycle time of the calling OB limits the sampling time of the PID algorithm. Improve results by using shorter OB cycle times.
0000040	The process value exceeded one of its warning limits.
0000080	Invalid value at Mode. The operating mode is not switched.
0000100	The manual value was limited to the limits of the PID output value.
0000200	The specified rule for tuning is not supported. No PID parameters are calculated.
0001000	The substitute output value cannot be reached because it is outside the output value limits.
0004000	The specified selection of the output value for heating and/or cooling is not supported. Only the output OutputHeat or OutputCool is used.
0008000	Invalid value at PIDSelfTune.SUT.AdaptDelayTime. The default value 0 is used.
0010000	Invalid value at PIDSelfTune.SUT.CoolingMode. The default value 0 is used.
0020000	The activation of cooling (Config.ActivateCooling tag) is not supported by the controller that is used as master (Config.Cascade.IsMaster tag). PID_Temp works as heating controller. Set the Config.ActivateCooling tag to FALSE.
0040000	Invalid value at Retain.CtrlParams.Heat.Gain, Retain.CtrlParams.Cool.Gain oder Config.CoolFactor. PID_Temp supports only positive values for proportional gain (heating and cooling) and cooling factor. Automatic mode remains active with PID output value 0.0. The integral component is stopped.

The following warnings are deleted as soon as the cause has been remedied or you repeat the action with valid parameters:

- 0000001h
- 0000004h
- 0000008h
- 0000040h
- 0000100h

All other warnings are cleared with a rising edge at Reset or ErrorAck.

9.3.4.11 PwmPeriode tag

If the PID algorithm sampling time (Retain.CtrlParams.Heat.Cycle or Retain.CtrlParams.Heat.Cycle) and thus the time period of the pulse width modulation is very high when you use OutputHeat_PWM or OutputCool_PWM, you can define a deviating shorter time period at the Config.Output.Heat.PwmPeriode or Config.Output.Cool.PwmPeriode parameters to improve the smoothness of the process value.

Time period of the pulse width modulation at OutputHeat_PWM

Time period of the PWM at output OutputHeat_PWM depending on Config.Output.Heat.PwmPeriode:

- Heat.PwmPeriode = 0.0 (default)

  The sampling time of the PID algorithm for heating (Retain.CtrlParams.Heat.Cycle) is used as time period of the PWM.

- Heat.PwmPeriode > 0.0

  The value is rounded off to an integer multiple of the PID_Temp sampling time (CycleTime.Value) and used as time period of the PWM.

  The value must meet the following conditions:

  – Heat.PwmPeriode ≤ Retain.CtrlParams.Heat.Cycle
  – Heat.PwmPeriode > Config.Output.Heat.MinimumOnTime
  – Heat.PwmPeriode > Config.Output.Heat.MinimumOffTime

Time period of the pulse width modulation at OutputCool_PWM

Time period of the PWM at output OutputCool_PWM depending on Config.Output.Cool.PwmPeriode and the method for heating/cooling:

- Cool.PwmPeriode = 0.0 and cooling factor (Config.AdvancedCooling = FALSE):

  The sampling time of the PID algorithm for heating (Retain.CtrlParams.Heat.Cycle) is used as time period of the PWM.

- Cool.PwmPeriode = 0.0 and PID parameter switching (Config.AdvancedCooling = TRUE):

  The sampling time of the PID algorithm for cooling (Retain.CtrlParams.Cool.Cycle) is used as time period of the PWM.

- Cool.PwmPeriode > 0.0:

  The value is rounded off to an integer multiple of the PID_Temp sampling time (CycleTime.Value) and used as time period of the PWM.

  The value must meet the following conditions:

  – Cool.PwmPeriode ≤ Retain.CtrlParams.Cool.Cycle or Retain.CtrlParams.Heat.Cycle

  – Cool.PwmPeriode > Config.Output.Cool.MinimumOnTime

  – Cool.PwmPeriode > Config.Output.Cool.MinimumOffTime

Config.Output.Cool.PwmPeriode is only effective if the cooling output is activated (Config.ActivateCooling =TRUE).

When you use PwmPeriode, the accuracy of the PWM output signal is determined by the relationship of PwmPeriode to the PID_Temp sampling time (cycle time of the OB). PwmPeriode should be at least 10 times the PID_Temp sampling time.

If the sampling time of the PID algorithm is not an integer multiple of PwmPeriode, each last period of the PWM within the sampling time of the PID algorithm is extended accordingly.

Example for OutputHeat_PWM

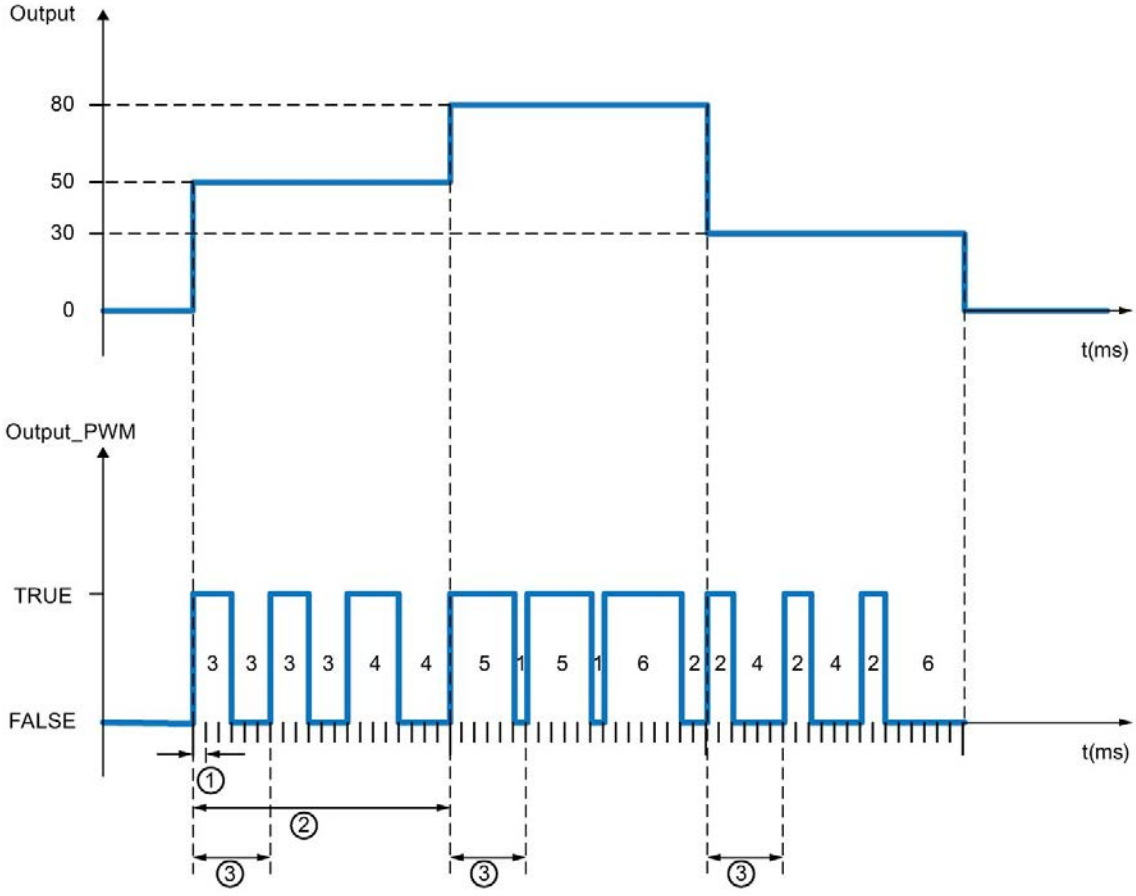

① PID_Temp sampling time = 100.0 ms (cycle time of the calling cyclic interrupt OB, CycleTime.Value tag)

② PID algorithm sampling time = 2000.0 ms (Retain.CtrlParams.Heat.Cycle tag)

③ Time period of the PWM for heating = 600.0 ms (Config.Output.Heat.PwmPeriode tag)

9.3.4.12 IntegralResetMode tag

The IntegralResetMode tag determines how the integral action PIDCtrl.IOutputOld is pre-assigned:

- When switching from "Inactive" operating mode to "Automatic mode"
- With edge TRUE -> FALSE at parameter Reset and parameter Mode = 3

This setting only works for one cycle and is only effective if the integral action is activated (Retain.CtrlParams.Heat.Ti and Retain.CtrlParams.Cool.Ti > 0.0 tags).

IntegralReset-Mode	Description
0	Smooth The value of PIDCtrl.IOutputOld is pre-assigned so that the switchover is bumpless, which means "Automatic mode" starts with the output value = 0.0 (parameter PidOutputSum) and there is no jump of the output value regardless of the control deviation (setpoint – process value).
1	Delete We recommend setting the weighting of the proportional action (Retain.CtrlParams.Heat.PWeighting and Retain.CtrlParams.Cool.PWeighting tags) to 1.0 if this option is used. The value of PIDCtrl.IOutputOld is deleted. Any control deviation will cause a jump of the PID output value. The direction of the output value jump depends on the active weighting of the proportional action (Retain.CtrlParams.Heat.PWeighting and Retain.CtrlParams.Cool.PWeighting tags) and the control deviation: • Active proportional action weighting = 1.0: Output value jump and control deviation have identical signs. Example: If the process value value is smaller than the setpoint (positive control deviation), the PID output value jumps to a positive value. • Active proportional action weighting < 1.0: For large control deviations, the PID output value jump and control deviation have identical signs. Example: If the process value is much smaller than the setpoint (positive control deviation), the PID output value jumps to a positive value. For small control deviations, the PID output value jump and control deviation have different signs. Example: If the process value is just below the setpoint (positive control deviation), the PID output value jumps to a negative value. This is usually not desirable, because it results in a temporary increase in the control deviation. The smaller the configured weighting of the proportional action, the greater the control deviation must be to receive a PID output value jump with identical sign. We recommend setting the weighting of the proportional action (Retain.CtrlParams.Heat.PWeighting and Retain.CtrlParams.Cool.PWeighting tags) to 1.0 when this option is used. Otherwise, you may experience the undesirable behavior described for small control deviations. Alternatively, you can also use IntegralResetMode = 4. This option guarantees identical signs of the PID output value jump and control deviation independent of the configured weighting of the proportional action and the control deviation.

IntegralReset-Mode	Description
2	Hold The value of PIDCtrl.IOutputOld is not changed. You can define a new value using the user program.
3	Pre-assign The value of PIDCtrl.IOutputOld is automatically pre-assigned as if PidOutputSum = OverwriteI-nitialOutputValue in the last cycle.
4	Like setpoint change (only for PID_Temp with version ≥ 1.1) The value of PIDCtrl.IOutputOld is automatically pre-assigned so that a similar PID output value jump results as for a PI controller in automatic mode in case of a setpoint change from the current process value to the current setpoint. Any control deviation will cause a jump of the PID output value. The PID output value jump and control deviation have identical signs. Example: If the process value value is smaller than the setpoint (positive control deviation), the PID output value jumps to a positive value. This is independent of the configured weighting of the proportional action and the control deviation.

If IntegralResetMode is assigned a value outside the valid value range, PID_Temp behaves as with the pre-assignment of IntegralResetMode:

- PID_Temp up to V1.0: IntegralResetMode = 1
- PID_Temp as of V1.1: IntegralResetMode = 4

9.4 PID basic functions

9.4.1 CONT_C

9.4.1.1 Description CONT_C

The CONT_C instruction is used on SIMATIC S7 automation systems to control technical processes with continuous input and output variables. You can assign parameters to enable or disable sub-functions of the PID controller and adapt it to the process. In addition to the functions in the setpoint and process value branches, the instruction implements a complete PID controller with continuous output value output and the option of manually influencing the value of the output value.

Application

You can use the controller as a PID fixed setpoint controller, or in multi-loop control systems, also as a cascade, blending or ratio controller. The functions of the controller are based on the PID control algorithm of the sampling controller with an analog signal, if necessary extended by including a pulse shaper stage to generate pulse-width modulated output signals for two or three step controllers with proportional actuators.

Call

The CONT_C instruction has an initialization routine that is run through when input parameter COM_RST = TRUE is set. During initialization, the integral action is set to the initialization value I_ITVAL. All the signal outputs are set to zero. COM_RST = FALSE has to be set after the initialization routine has been completed.

The calculation of the values in the control blocks is only correct if the block is called at regular intervals. You should therefore call the control blocks in a cyclic interrupt OB (OB 30 to OB 38). Enter the sampling time in the CYCLE parameter.

If you call the instruction CONT_C as a multiple instance DB, no technology object is created. No parameter assignment interface or commissioning interface is available. You must assign parameters for CONT_C directly in the multiple instance DB and commission it via a watch table.

Error information

The error message word RET_VAL is not evaluated by the block.

9.4.1.2 How CONT_C works

Setpoint branch

The setpoint is entered in floating-point format at the SP_INT input.

Process value branch

The process value can be input in I/O or floating-point format. The function CRP_IN converts the I/O value PV_PER to a floating-point format -100 to +100 % in accordance with the following rule:

Output of CRP_IN = PV_PER * 100 / 27648

The PV_NORM function scales the output of CRP_IN according to the following rule:

Output of PV_NORM = (output of CRP_IN) *PV_FAC + PV_OFF

PV_FAC has a default of 1 and PV_OFF a default of 0.

Forming the error signal

The difference between the setpoint and process value is the error signal. To suppress a minor sustained oscillation due to manipulated variable quantization (e.g. with a pulse width modulation with PULSEGEN), the error signal is applied to a dead band (DEADBAND). With DEADB_W = 0, the dead band is switched off.

PID Algorithm

The PID algorithm operates as a position algorithm. The proportional, integral (INT), and differential (DIF) actions are connected in parallel and can be activated or deactivated individually. This allows P, PI, PD, and PID controllers to be configured. Pure I controllers are also possible.

Manual value processing

It is possible to switch over between manual and automatic mode. In manual mode, the manipulated variable is corrected to a manually selected value.

The integral action (INT) is set internally to LMN - LMN_P - DISV and the derivative action (DIF) is set to 0 and synchronized internally. Changeover to automatic mode is therefore bumpless.

Manipulated value processing

You can use the LMNLIMIT function to limit the manipulated value to selected values. Alarm bits indicate when a limit is exceeded by the input variable.

The LMN_NORM function normalizes the output of LMNLIMIT according to the following rule:

LMN = (output of LMNLIMIT) * LMN_FAC + LMN_OFF

LMN_FAC has a default of 1 and LMN_OFF a default of 0.

The manipulated value is also available in I/O format. The CRP_OUT function converts the LMN floating-point value to a I/O value according to the following rule:

LMN_PER = LMN * 27648 / 100

Feedforward control

A disturbance variable can be added at the DISV input.

9.4.1.3 CONT_C block diagram

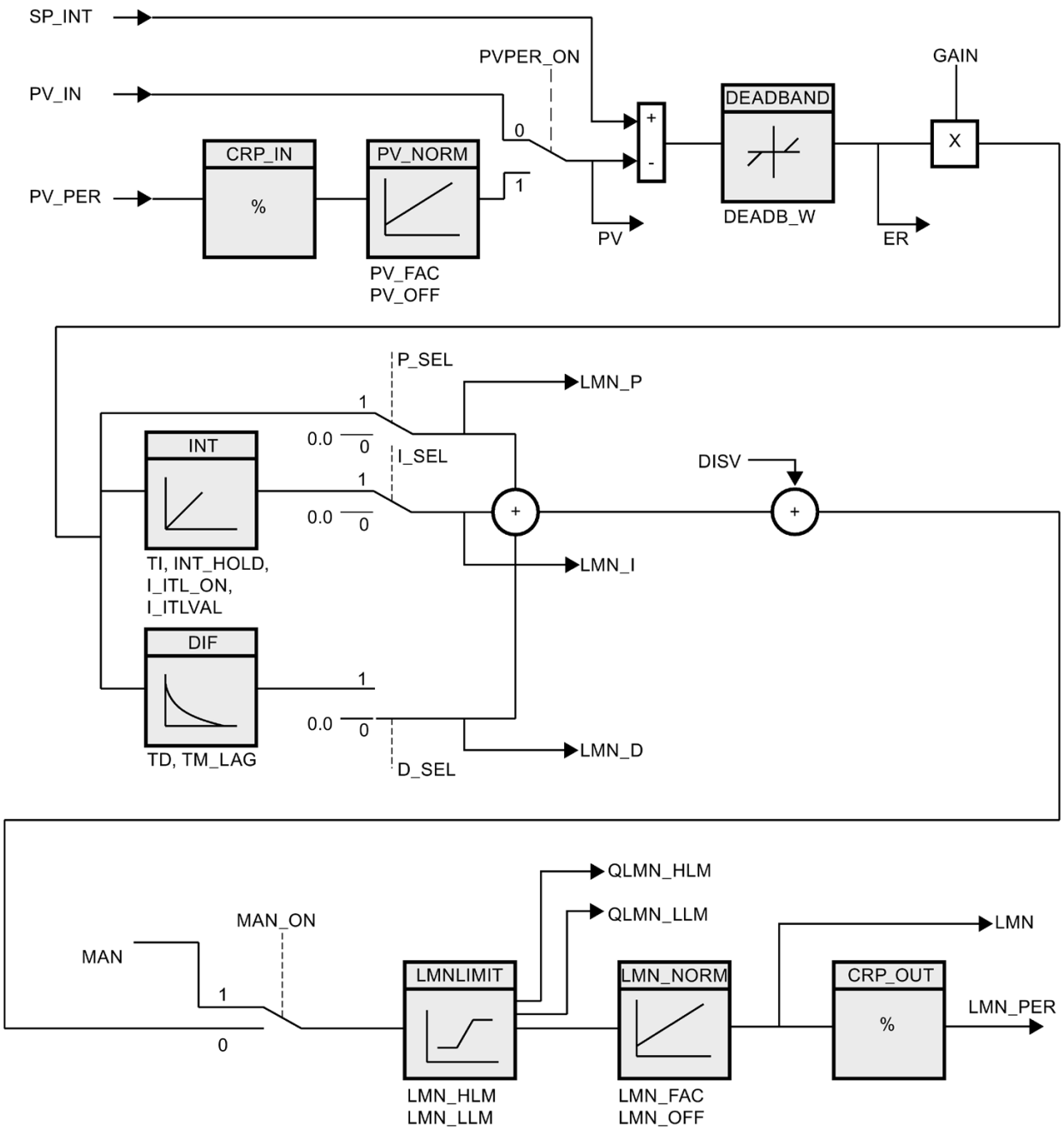

9.4.1.4 Input parameter CONT_C

Table 9- 13 Input parameter CONT_C

Parameters	Data type	Default	Description
COM_RST	BOOL	FALSE	The instruction has an initialization routine that is processed when the "Restart" input is set.
MAN_ON	BOOL	TRUE	If the input "Enable manual mode" is set then the control loop is interrupted. A manual value is set as the manipulated value.
PVPER_ON	BOOL	FALSE	If the process value is to be read in from the I/Os, the PV_PER input must be interconnected with the I/Os and the "Enable process value I/Os" input must be set.
P_SEL	BOOL	TRUE	The PID actions can be switched on and off individually in the PID algorithm. P-action is on when the "Enable P-action" input is set.
I_SEL	BOOL	TRUE	The PID actions can be switched on and off individually in the PID algorithm. I action is on when the input "I-action on" is set.
INT_HOLD	BOOL	FALSE	The output of the integral action can be frozen. For this the input "I-action hold" must be set.
I_ITL_ON	BOOL	FALSE	The output of the integral action can be set at the I_ITLVAL input. For this the input "Set I-action" must be set.
D_SEL	BOOL	FALSE	The PID actions can be switched on and off individually in the PID algorithm. D-action is on when the input "Enable D-action" is set.
CYCLE	TIME	T#1s	The time between block calls must be constant. The "Sampling time" input specifies the time between block calls. CYCLE >= 1ms
SP_INT	REAL	0.0	The input "Internal setpoint" is used to specify a setpoint. Permissible are values from -100 to 100 % or a physical variable 1).
PV_IN	REAL	0.0	At the "Process value input" you can assign parameters to a commissioning value or you can interconnect an external process value in floating-point format. Permissible are values from -100 to 100 % or a physical variable 1).
PV_PER	WORD	W#16#0000	The process value in I/O format is interconnected with the controller at the "Process value I/0" input.
MAN	REAL	0.0	The "Manual value" input is used to set a manual value using the operator interface functions. Permissible are values from -100 to 100 % or a physical variable 2).
GAIN	REAL	2.0	The "Proportional gain" input specifies controller amplification.
TI	TIME	T#20s	The "Integration time" input determines the time response of the integral action. TI >= CYCLE
TD	TIME	T#10s	The "Derivative action time" input determines the time response of the derivative action. TD >= CYCLE
TM_LAG	TIME	T#2s	Time lag of the D-action The algorithm of the D-action contains a delay for which parameters can be assigned at the input "Time lag of the D-action". TM_LAG >= CYCLE/2

Parameters	Data type	Default	Description
DEADB_W	REAL	0.0	A dead band is applied to the system deviation. The "Dead band width" input determines the size of the dead band. DEADB_W >= 0.0 (%) or a physical variable 1)
LMN_HLM	REAL	100.0	The manipulated value is always restricted to a high limit and low limit. The "High limit of manipulated value" input specifies the high limit. Permissible are real values starting at LMN_LLM (%) or a physical variable 2).
LMN_LLM	REAL	0.0	The manipulated value is always restricted to a high limit and low limit. The "Low limit of manipulated value" input specifies the low limit. Permissible are real values up to LMN_HLM (%) or a physical variable 2).
PV_FAC	REAL	1.0	The "Process value factor" input is multiplied by the process value. The input is used to scale the process value range.
PV_OFF	REAL	0.0	The input "Process value offset" is added to the process value. The input is used to scale the process value range.
LMN_FAC	REAL	1.0	The "Manipulated value factor" input is multiplied with the manipulated value. The input is used to scale the manipulated value range.
LMN_OFF	REAL	0.0	The input "Manipulated value offset" is added to the process value. The input is used to scale the manipulated value range.
I_ITLVAL	REAL	0.0	The output of the integral action can be set at the I_ITL_ON input. The initialization value is applied to the input "Initialization value of the I-action." Permissible are values of -100.0 to 100.0 (%) or a physical variable 2).
DISV	REAL	0.0	For feedforward control, the disturbance variable is interconnected to the "Disturbance variable" input. Permissible are values of -100.0 to 100.0 (%) or a physical variable 2).

1) Parameters in the setpoint and process value branches with the same unit

2) Parameters in the manipulated value branch with the same unit

9.4.1.5 Output parameters CONT_C

Table 9- 14 Output parameters CONT_C

Parameter	Data type	Default	Description
LMN	REAL	0.0	The effective "Manipulated value" is output in floating point format at the "Manipulated value" output.
LMN_PER	WORD	W#16#0000	The manipulated value in I/O format is interconnected on the input "Manipulated value I/O" with the controller.
QLMN_HLM	BOOL	FALSE	The manipulated value is always restricted to a high limit and low limit. The output "High limit of manipulated value reached" indicates that the high limit has been reached.
QLMN_LLM	BOOL	FALSE	The manipulated value is always restricted to a high limit and low limit. The output "Low limit of manipulated value reached" indicates that the low limit has been reached.
LMN_P	REAL	0.0	The "P-action" output contains the proportional action of the manipulated variable.
LMN_I	REAL	0.0	The "I-action" output contains the integral action of the manipulated variable.
LMN_D	REAL	0.0	The "D-action" output contains the derivative action of the manipulated variable.
PV	REAL	0.0	The effective process value is output at the "Process value" output.
ER	REAL	0.0	The effective system deviation is output at the "Error signal" output.

9.4.2 CONT_S

9.4.2.1 Description CONT_S

The CONT_S instruction is used on SIMATIC S7 automation systems to control technical processes with binary output value output signals for actuators with integrating behavior. During parameter assignment, you can activate or deactivate sub-functions of the PI step controller to adapt the controller to the controlled system. In addition to the functions in the process value branch, the instruction implements a complete proportional-plus-integral-action controller with binary output value output and the option of manually influencing the value of the output value. The step controller operates without a position feedback signal.

Application

You can use the controller as a PI fixed setpoint controller or in secondary control loops in cascade, blending or ratio controllers, however you cannot use it as the primary controller. The functions of the controller are based on the PI control algorithm of the sampling controller supplemented by the functions for generating the binary output signal from the analog actuating signal.

Call

The CONT_S instruction has an initialization routine that is run through when input parameter COM_RST = TRUE is set. All the signal outputs are set to zero. COM_RST = FALSE has to be set after the initialization routine has been completed.

The calculation of the values in the control blocks is only correct if the block is called at regular intervals. You should therefore call the control blocks in a cyclic interrupt OB (OB 30 to OB 38). Enter the sampling time in the CYCLE parameter.

If you call the instruction CONT_S as a multiple instance DB, no technology object is created. No parameter assignment interface or commissioning interface is available. You must assign parameters for CONT_S directly in the multiple instance DB and commission it via a watch table.

Error information

The error message word RET_VAL is not evaluated by the block.

9.4.2.2 Mode of operation CONT_S

Setpoint branch

The setpoint is entered in floating-point format at the SP_INT input.

Process value branch

The process value can be input in I/O or floating-point format. The function CRP_IN converts the I/O value PV_PER to a floating-point format -100 to +100 % in accordance with the following rule:

Output of CRP_IN = PV_PER * 100 / 27648

The PV_NORM function normalizes the output of CRP_IN according to the following rule:

Output of PV_NORM = (output of CRP_IN) * PV_FAC + PV_OFF

PV_FAC has a default of 1 and PV_OFF a default of 0.

Forming the error signal

The difference between the setpoint and process value is the error signal. To suppress a small constant oscillation due to the manipulated variable quantization (for example, due to a limited resolution of the manipulated value by the control valve), a dead band is applied to the error signal (DEADBAND). With DEADB_W = 0, the dead band is switched off.

PI step algorithm

The instruction operates without position feedback. The I-action of the PI algorithm and the assumed position feedback signal are calculated in one integral action (INT) and compared with the remaining P-action as a feedback value. The difference is applied to a three-step element (THREE_ST) and a pulse shaper (PULSEOUT) that generates the pulses for the control valve. The switching frequency of the controller can be reduced by adapting the response threshold of the three-step element.

Feedforward control

A disturbance variable can be added at the DISV input.

9.4.2.3 Block diagram CONT_S

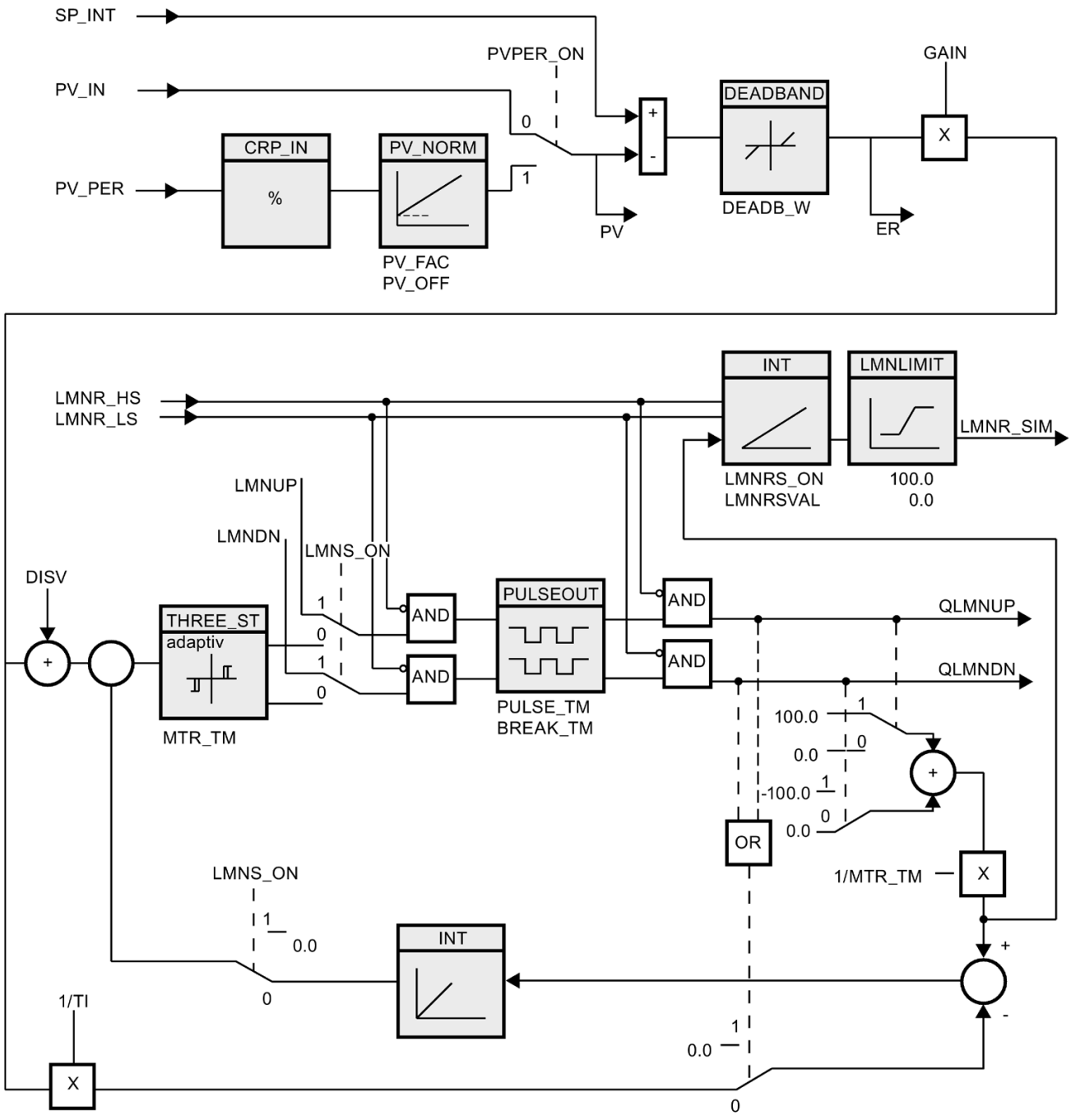

9.4.2.4 Input parameters CONT_S

Table 9- 15 Input parameters CONT_S

Parameters	Data type	Default	Description
COM_RST	BOOL	FALSE	The block has an initialization routine that is processed when the "Restart" input is set.
LMNR_HS	BOOL	FALSE	The signal "Control valve at high endstop" is interconnected at the input "High endstop signal of position feedback". LMNR_HS=TRUE means: The control valve is at high endstop.
LMNR_LS	BOOL	FALSE	The signal "Control valve at low endstop" is interconnected on the input "Low endstop signal of position feedback". LMNR_LS=TRUE means The control valve is at low endstop.
LMNS_ON	BOOL	FALSE	Manipulated value signal processing is switched to manual mode at the "Enable manual mode of manipulated signal".
LMNUP	BOOL	FALSE	The output signal QLMNUP is operated in manual mode of the manipulated value signals at the input "Manipulated value signal up".
LMNDN	BOOL	FALSE	The output signal QLMNDN is operated in manual mode of the manipulated value signals at the input "Manipulated value signal down"
PVPER_ON	BOOL	FALSE	If the process value is to be read from the I/O then the input PV_PER must be interconnected with the I/O and the input "Enable process value I/O" must be set.
CYCLE	TIME	T#1s	The time between block calls must be constant. The "Sampling time" input specifies the time between block calls. CYCLE >= 1ms
SP_INT	REAL	0.0	The input "Internal setpoint" is used to specify a setpoint. Permissible are values from -100 to 100 % or a physical variable [1].
PV_IN	REAL	0.0	At the "Process value input" you can assign parameters to a commissioning value or you can interconnect an external process value in floating-point format. Permissible are values from -100 to 100 % or a physical variable [1].
PV_PER	WORD	W#16#0000	The process value in I/O format is interconnected with the controller at the "Process value I/O" input.
GAIN	REAL	2.0	The "Proportional gain" input specifies controller amplification.
TI	TIME	T#20s	The "Integration time" input determines the time response of the integral action. TI >= CYCLE
DEADB_W	REAL	1.0	A dead band is applied to the system deviation. The "Dead band width" input determines the size of the dead band. Permissible are values from 0 to 100 % or a physical variable [1].
PV_FAC	REAL	1.0	The "Process value factor" input is multiplied by the process value. The input is used to scale the process value range.
PV_OFF	REAL	0.0	The input "Process value offset" is added to the process value. The input is used to scale the process value range.
PULSE_TM	TIME	T#3s	You can assign a minimum pulse time at the parameter "Minimum pulse time". PULSE_TM >= CYCLE
BREAK_TM	TIME	T#3s	You can assign a minimum break time at the parameter "Minimum break time". BREAK_TM >= CYCLE

Parameters	Data type	Default	Description
MTR_TM	TIME	T#30s	The time required by the actuator to move from limit stop to limit stop is entered at the "Motor actuating time" parameter. MTR_TM >= CYCLE
DISV	REAL	0.0	For feedforward control, the disturbance variable is interconnected to the "Disturbance variable" input. Permissible are values from -100 to 100 % or a physical variable [2].

[1] Parameters in setpoint and process value branches with identical unit

[2] Parameters in the manipulated value branch with same unit

9.4.2.5 Output parameters CONT_S

Table 9- 16 Output parameters CONT_S

Parameters	Data type	Default	Description
QLMNUP	BOOL	FALSE	If the output "Manipulated value signal up" is set then the control valve should be open.
QLMNDN	BOOL	FALSE	If the output "Manipulated value signal down" is set then the control valve should be closed.
PV	REAL	0.0	The effective process value is output at the "Process value" output.
ER	REAL	0.0	The effective system deviation is output at the "Error signal" output.

9.4.3 PULSEGEN

9.4.3.1 Description PULSEGEN

The instruction PULSEGEN serves as the structure of a PID controller with impulse output for proportional actuators. PULSEGEN transforms the input value INV (= LMN of the PID controller) through modulation of the impulse width in an impulse sequence with a constant period duration, which corresponds with the cycle time with which the input value is updated.

Application

You can use the PULSEGEN instruction to configure two- or three-step PID controllers with pulse width modulation. The function is normally used in conjunction with the continuous controller CONT_C.

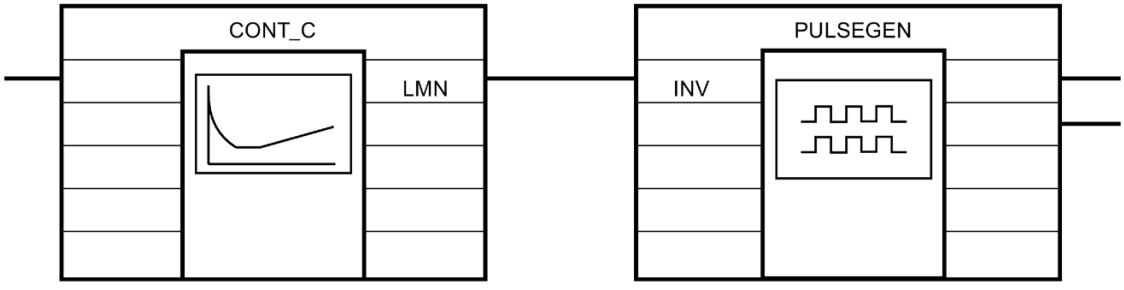

Call

The PULSEGEN instruction has an initialization routine that is run through when input parameter COM_RST = TRUE is set. All the signal outputs are set to zero. COM_RST = FALSE has to be set after the initialization routine has been completed.

The calculation of the values in the control blocks is only correct if the block is called at regular intervals. You should therefore call the control blocks in a cyclic interrupt OB (OB 30 to OB 38). Enter the sampling time in the CYCLE parameter.

Responses in the event of an error

The error message word RET_VAL is not evaluated by the block.

9.4.3.2 Mode of operation PULSEGEN

Impulse width modulation

The duration of a pulse per period duration is proportional to the input variable. The cycle assigned via PER_TM is not identical to the processing cycle of the PULSEGEN instruction. Rather, a PER_TM cycle is made up of several processing cycles of the PULSEGEN instruction, whereby the number of PULSEGEN calls per PER_TM cycle determines the accuracy of the pulse width.

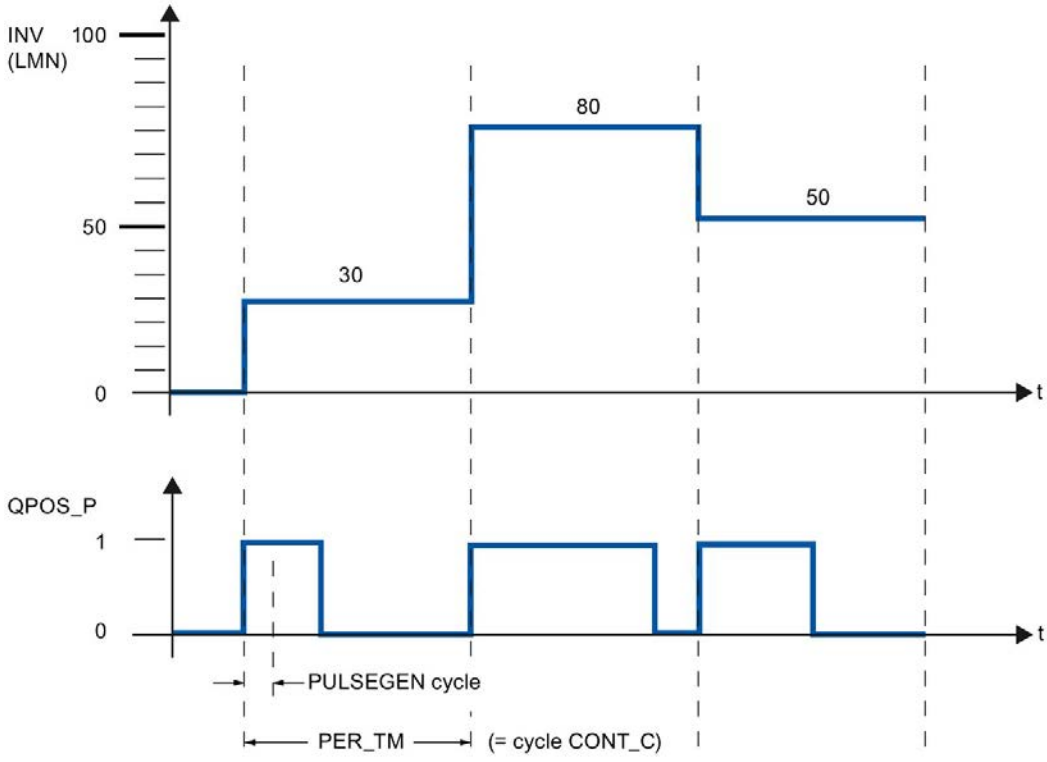

An input variable of 30% and 10 PULSEGEN calls per PER_TM mean the following:

- "One" at the QPOS_P output for the first three calls of PULSEGEN (30% of 10 calls)
- "Zero" at the QPOS_P output for seven further calls of PULSEGEN (70% of 10 calls)

Block diagram

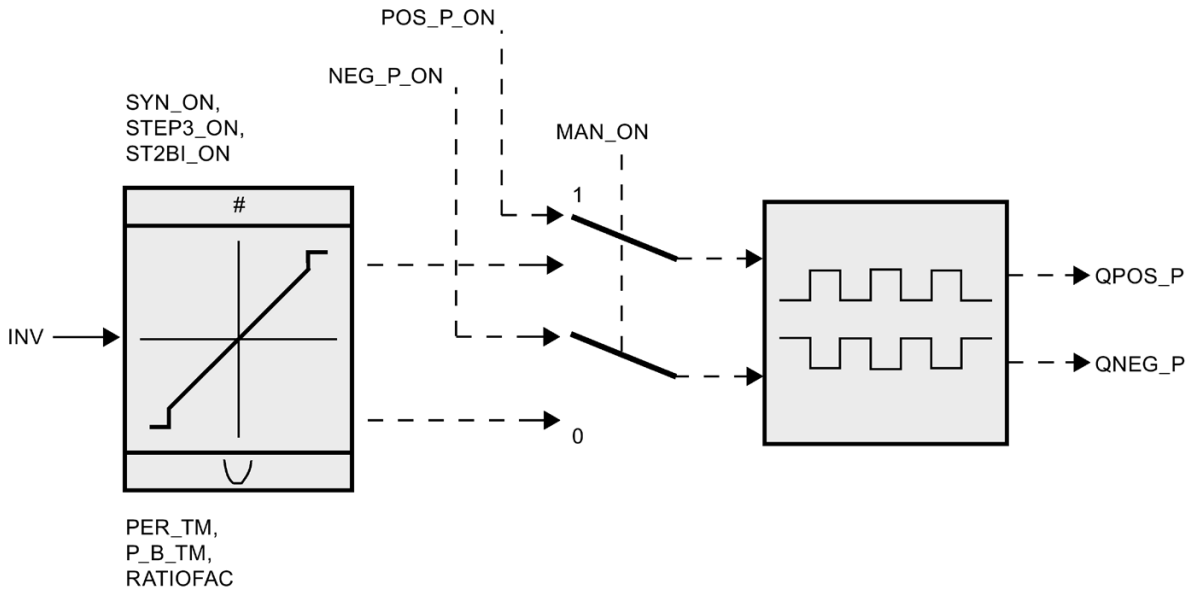

Accuracy of the manipulated value

With a "Sampling ratio" of 1:10 (CONT_C calls to PULSEGEN calls) the accuracy of the manipulated value in this example is restricted to 10%, in other words, set input values INV can only be simulated by a pulse duration at the QPOS_P output in steps of 10 %.

The accuracy is increased as the number of PULSEGEN calls per CONT_C call is increased.

If PULSEGEN is called, for example, 100 times more often than CONT_C, a resolution of 1 % of the manipulated value range is achieved.

Note

The reduction ratio of the call frequency must be programmed by the user.

Automatic synchronization

It is possible to automatically synchronize the pulse output with the instruction that updates the input variable INV (e.g. CONT_C). This ensures that a change in the input variable is output as quickly as possible as a pulse.

The pulse shaper evaluates the input value INV at intervals corresponding to the period duration PER_TM and converts the value into a pulse signal of corresponding length.

Since, however, INV is usually calculated in a slower cyclic interrupt class, the pulse shaper should start the conversion of the discrete value into a pulse signal as soon as possible after the updating of INV.

To allow this, the block can synchronize the start of the period using the following procedure:

If INV changes and if the block call is not in the first or last two call cycles of a period, a synchronization is performed. The pulse duration is recalculated and in the next cycle is output with a new period.

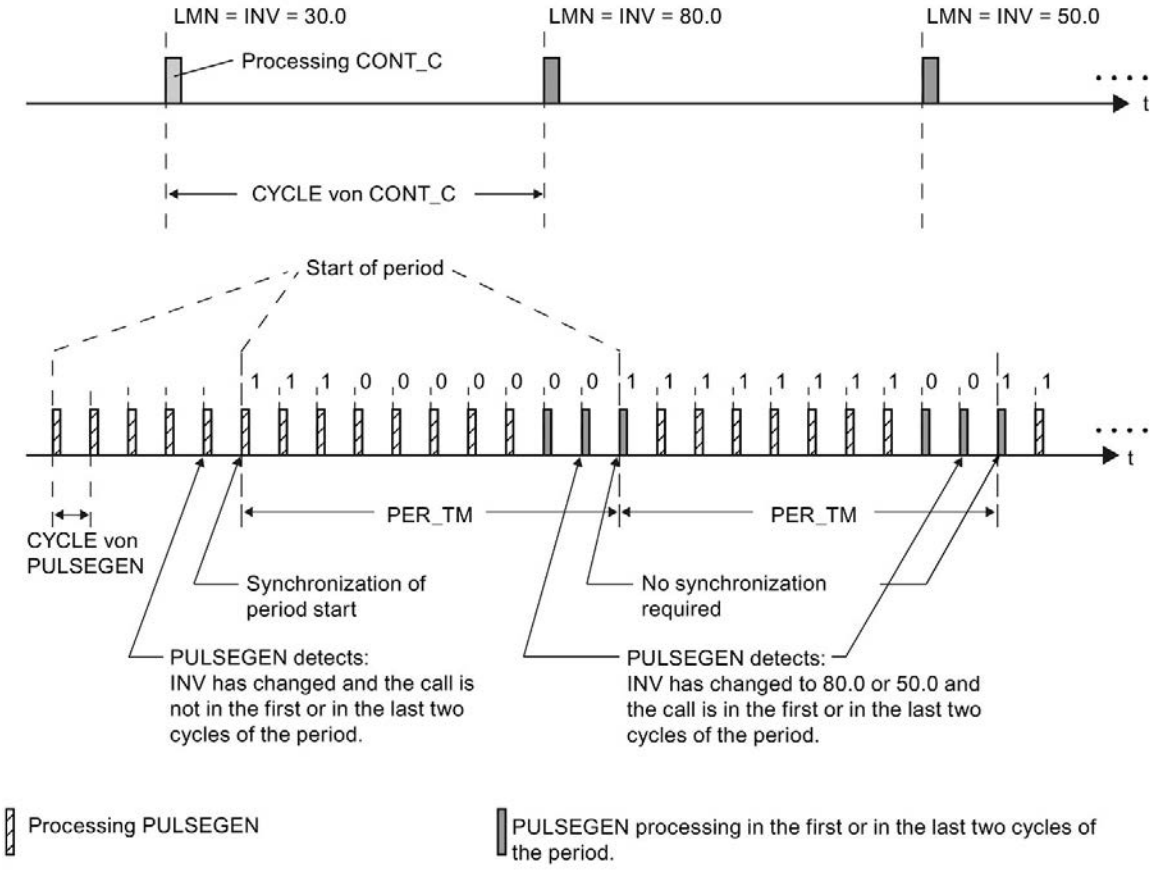

The automatic synchronization is switched off, if SYN_ON = FALSE.

Note

The start of a new period and subsequent synchronization usually leads to a certain imprecision when the old value of INV (i.e. of LMN) is mapped to the pulse signal.

9.4.3.3 Mode of operation PULSEGEN

Modes

Depending on the parameters assigned to the pulse shaper, PID controllers with a three-step output or with a bipolar or unipolar two-step output can be configured. The following table illustrates the setting of the switch combinations for the possible modes.

Mode	MAN_ON	STEP3_ON	ST2BI_ON
Three-step control	FALSE	TRUE	Any
Two-step control with bi-polar Manipulating range (-100 % to 100 %)	FALSE	FALSE	TRUE
Two-step control with unipolar Manipulating range (0 % to 100 %)	FALSE	FALSE	FALSE
Manual mode	TRUE	Any	Any

Manual mode in two/three-step control

In the manual mode (MAN_ON = TRUE), the binary outputs of the three-step or two-step controller can be set using the signals POS_P_ON and NEG_P_ON regardless of INV.

Control	POS_P_ON	NEG_P_ON	QPOS_P	QNEG_P
Three-step control	FALSE	FALSE	FALSE	FALSE
	TRUE	FALSE	TRUE	FALSE
	FALSE	TRUE	FALSE	TRUE
	TRUE	TRUE	FALSE	FALSE
Two-step control	FALSE	Any	FALSE	TRUE
	TRUE	Any	TRUE	FALSE

9.4.3.4 Three-step control

Three-step control

In "Three-step control" mode, it is possible to generate three statuses of the actuating signal. For this, the status values of the binary output signals QPOS_P and QNEG_P are assigned to the respective operating statuses of the actuator. The table shows the example of a temperature control:

Output signals	Heat	Off	Cool
QPOS_P	TRUE	FALSE	FALSE
QNEG_P	FALSE	FALSE	TRUE

The pulse duration is calculated from the input variable via a characteristic curve. The form of the characteristic curve is defined by the minimum pulse duration or minimum interval and the ratio factor. The normal value for the ratio factor is 1.

The "doglegs" in the curves are caused by the minimum pulse duration or minimum interval.

Minimum pulse duration or minimum interval

A correctly assigned minimum pulse duration or minimum interval P_B_TM can prevent short on/off times, which reduce the working life of switching elements and actuators. Small absolute values of input variable LMN that would otherwise generate a pulse duration shorter than P_B_TM are suppressed. Large input values that would generate a pulse duration longer than PER_TM - P_B_TM are set to 100% or -100%.

The duration of positive or negative pulses is calculated by multiplying the input variable (in %) by the period duration:

Pulse duration = INV / 100 * PER_TM

The following figure shows a symmetrical characteristic curve of the three-step controller (ratio factor = 1).

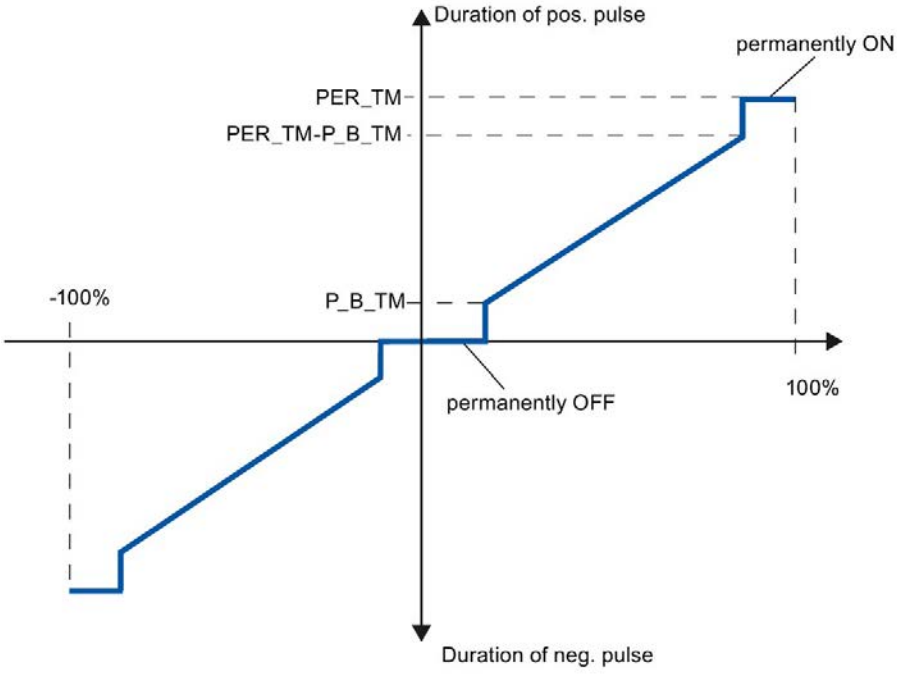

Asymmetrical three-step control

Using the ratio factor RATIOFAC, the ratio of the duration of positive to negative pulses can be changed. In a thermal process, for example, this would allow different system time constants for heating and cooling.

Ratio factor < 1

The pulse duration at the negative pulse output, calculated by multiplying the input variable by the period duration, is multiplied by the ratio factor.

Positive pulse duration = INV /100 * PER_TM

Negative pulse duration = INV / 100 * PER_TM * RATIOFAC

The following figure shows the asymmetrical characteristic curve of the three-step controller (ratio factor = 0.5):

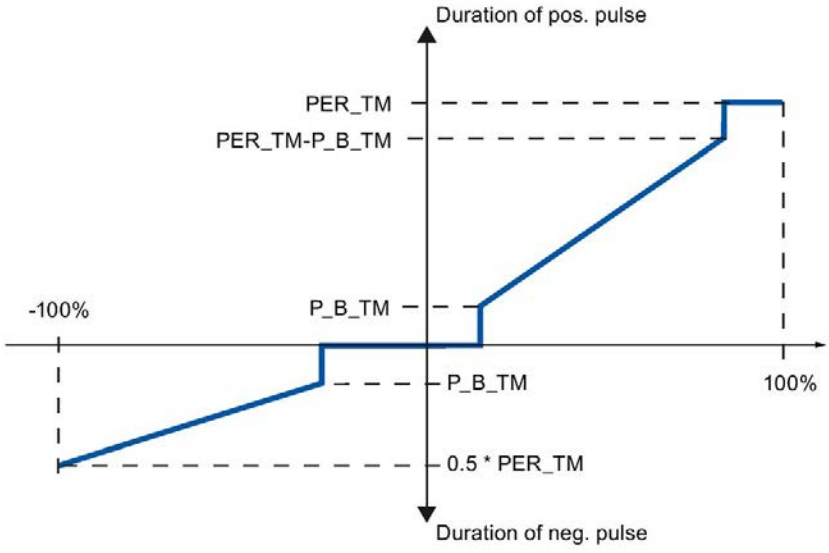

Ratio factor > 1

The pulse duration at the positive pulse output, calculated by multiplying the input variable by the period duration, is divided by the ratio factor.

Positive pulse duration = INV / 100 * PER_TM / RATIOFAC

Negative pulse duration = INV / 100 * PER_TM

9.4.3.5 Two-step control

In two-step control, only the positive pulse output QPOS_P of PULSEGEN is connected to the on/off actuator. Depending on the manipulated value range used, the two-step controller has a bipolar or a unipolar manipulated value range.

Two-step control with bipolar manipulated variable range (-100% to 100%)

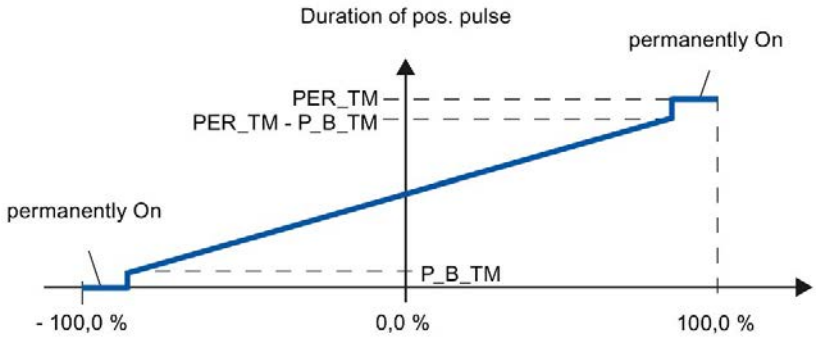

Two-step control with unipolar manipulated variable range (0% to 100%)

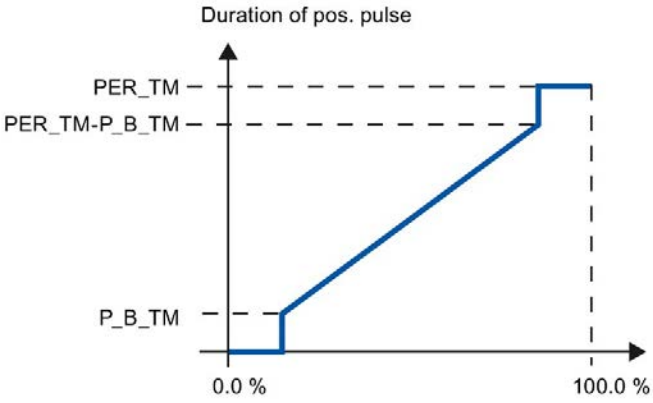

The negated output signal is available at QNEG_P if the connection of the two-step controller in the control loop requires a logically inverted binary signal for the actuating pulses.

Pulse	Actuator On	Actuator Off
QPOS_P	TRUE	FALSE
QNEG_P	FALSE	TRUE

9.4.3.6 Input parameters PULSEGEN

The values of the input parameters are not limited in the block. There is no parameter check.

Table 9- 17 Input parameters PULSEGEN

Parameters	Data type	Default	Description
INV	REAL	0.0	At the input parameter "Input variable" an analog manipulated variable is connected. Values from -100 to 100 % are permitted.
PER_TM	TIME	T#1s	At the parameter "Period duration" the constant period duration of the pulse width modulation is entered. This corresponds to the sampling time of the controller. The ratio between the sampling time of the pulse shaper and the sampling time of the controller determines the accuracy of the pulse width modulation. PER_TM >=20*CYCLE
P_B_TM	TIME	T#50 ms	You can assign a minimum pulse/break time at the parameter "Minimum pulse/break time". P_B_TM >= CYCLE
RATIOFAC	REAL	1.0	Using the "Ratio factor" input parameter the ratio of the duration of positive to negative pulses can be changed. In a thermal process, this would, for example, allow different time constants for heating and cooling to be compensated (for example, in a process with electrical heating and water cooling). Values from 0.1 to 10.0 are permitted.
STEP3_ON	BOOL	TRUE	At the input parameter "Enable three-step control" the appropriate mode is activated. In three-step control both output signals are active.
ST2BI_ON	BOOL	FALSE	At the input parameter "Enable two-step control for bipolar manipulated value range" you can select from the modes "Two-step control for bipolar manipulated value range" and "Two-step control for unipolar manipulated value range". STEP3_ON = FALSE is required.
MAN_ON	BOOL	FALSE	Setting the input parameter "Enable manual mode" allows the output signals to be set manually.
POS_P_ON	BOOL	FALSE	For manual mode three-step control, the output signal QPOS_P can be operated on the input parameter "Positive pulse on". In manual mode with two-step control, QNEG_P is always set inversely to QPOS_P.
NEG_P_ON	BOOL	FALSE	For manual mode three-step control, the output signal QNEG_P can be operated on the input parameter "Negative pulse on". In manual mode with two-step control, QNEG_P is always set inversely to QPOS_P.
SYN_ON	BOOL	TRUE	By setting the input parameter "Enable synchronization", it is possible to synchronize the pulse output automatically with the block that updates the input variable INV. This ensures that a change in the input variable is output as quickly as possible as a pulse.
COM_RST	BOOL	FALSE	The block has an initialization routine that is processed when the input "Restart" is set.
CYCLE	TIME	T#10ms	The time between block calls must be constant. The "Sampling time" input specifies the time between block calls. CYCLE >= 1ms

9.4.3.7 Output parameter PULSEGEN

Table 9- 18 Output parameter PULSEGEN

Parameters	Data type	Default	Description
QPOS_P	BOOL	FALSE	The output parameter "Output signal positive pulse" is set if a pulse will be output. In three-step control, this is always the positive pulse. In two-step control, the QNEG_P is always set inversely to QPOS_P.
QNEG_P	BOOL	FALSE	The output parameter "Output signal negative pulse" is set if a pulse will be output. In three-step control, this is always the negative pulse. In two-step control, QNEG_P is always set inversely to QPOS_P.

9.4.4 TCONT_CP

9.4.4.1 Description TCONT_CP

The instruction TCONT_CP is used to control temperature processes with continuous or pulsed control signals. The controller functionality is based on the PID control algorithm with additional functions for temperature processes. To improve the control response with temperature processes, the block includes a control zone and reduction of the proportional component if there is a setpoint step change.

The instruction can set the PI/PID parameters itself using the controller optimization function.

Application

The controller controls one actuator; in other words, with one controller you can either heat or cool but not both. If you use the block for cooling, GAIN must be assigned a negative value. This inversion of the controller means that if the temperature rises, for example, the manipulated variable LMN and with it the cooling action is increased.

Call

The instruction TCONT_CP must be called equidistant. To achieve this, use a cyclic interrupt priority class (for example, OB35 for an S7-300).

The TCONT_CP instruction has an initialization routine that is run through when input parameter COM_RST = TRUE is set. During initialization, the integral action is set to the initialization value I_ITVAL. All the signal outputs are set to zero. Following execution of the initialization routine, the block sets COM_RST back to FALSE. If you require initialization when the CPU restarts, call the block in OB100 with COM_RST = TRUE.

If you call the instruction TCONT_CP as a multiple instance DB, no technology object is created. No parameter assignment interface or commissioning interface is available. You must assign parameters for TCONT_CP directly in the multiple instance DB and commission it via a watch table.

See also

Operating principle of the pulse generator (Page 499)

Block diagram TCONT_CP (Page 502)

9.4.4.2 Mode of operation TCONT_CP

Setpoint branch

The setpoint is entered at input SP_INT in floating-point format as a physical value or percentage. The setpoint and process value used to form the control deviation must have the same unit.

Process value options (PVPER_ON)

Depending on PVPER_ON, the process value can be read in, in the I/O or floating-point format.

PVPER_ON	Process Value Input
TRUE	The process value is read in via the analog I/Os (PIW xxx) at input PV_PER.
FALSE	The process value is acquired in floating-point format at input PV_IN.

Process value format conversion CRP_IN (PER_MODE)

The CRP_IN function converts the I/O value PV_PER to floating-point format depending on the PER_MODE switch according to the following rules:

PER_MODE	Output of CRP_IN	Analog Input Type	Unit
0	PV_PER * 0.1	Thermoelements; PT100/NI100; standard	°C;°F
1	PV_PER * 0.01	PT100/NI100; climate;	°C;°F
2	PV_PER * 100/27648	Voltage/current	%

Process value scaling PV_NORM (PF_FAC, PV_OFFS)

The PV_NORM function calculates the output of CRP_IN according to the following rule:

"Output of PV_NORM" = "Output of CRP_IN)" * PV_FAC + PV_OFFS

It can be used for the following purposes:

- Process value adjustment with PV_FAC as process value factor and PV_OFFS as process value offset.
- Scaling of temperature to percentage

  You want to enter the setpoint as a percentage and must now convert the measured temperature value to a percentage.
- Scaling of percentage to temperature

  You want to enter the setpoint in the physical temperature unit and must now convert the measured voltage/current value to a temperature.

Calculation of the parameters:

- PV_FAC = range of PV_NORM/range of CRP_IN;
- PV_OFFS = LL (PV_NORM) - PV_FAC * LL(CRP_IN);

  where LL: Low limit

The scaling is switched off with the default values (PV_FAC = 1.0 and PV_OFFS = 0.0). The effective process value is output at the PV output.

Note

With pulse control, the process value must be transferred to the block in the fast pulse call (reason: mean value filtering). Otherwise, the control quality can deteriorate.

Example of Process Value Scaling

If you want to enter the setpoint as a percentage, and you have a temperature range of -20 to 85 °C applied to , CRP_IN you must normalize the temperature range as a percentage.

The diagram below shows an example of adapting the temperature range -20 to 85 °C to an internal scale of 0 to 100 %:

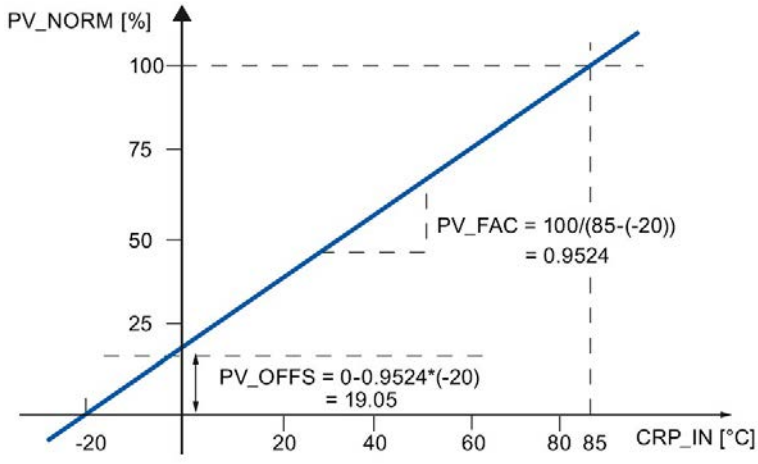

Forming the control deviation

The difference between the setpoint and process value is the control deviation before the dead band.

The setpoint and process value must exist in the same unit.

Dead band (DEADB_W)

To suppress a minor sustained oscillation due to the manipulated variable quantization (for example, in pulse width modulation with PULSEGEN) a dead band is applied to the (DEADBAND) control deviation. With DEADB_W = 0.0, the dead band is disabled. The effective control deviation is indicated by the ER parameter.

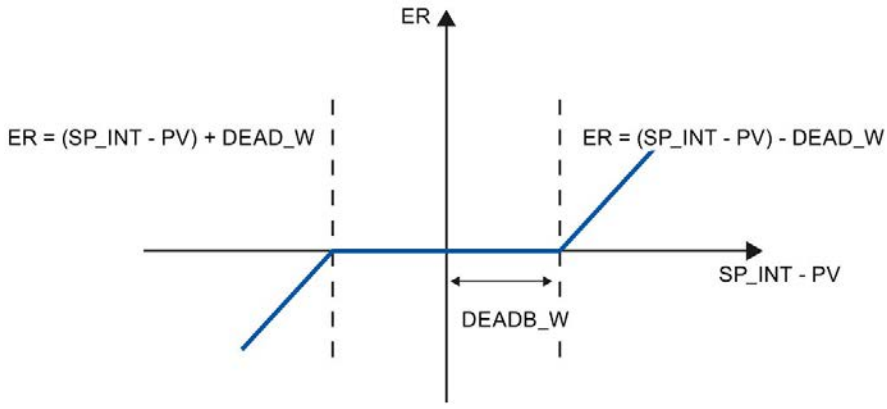

PID Algorithm

The following figure shows the block diagram of the PID algorithm.

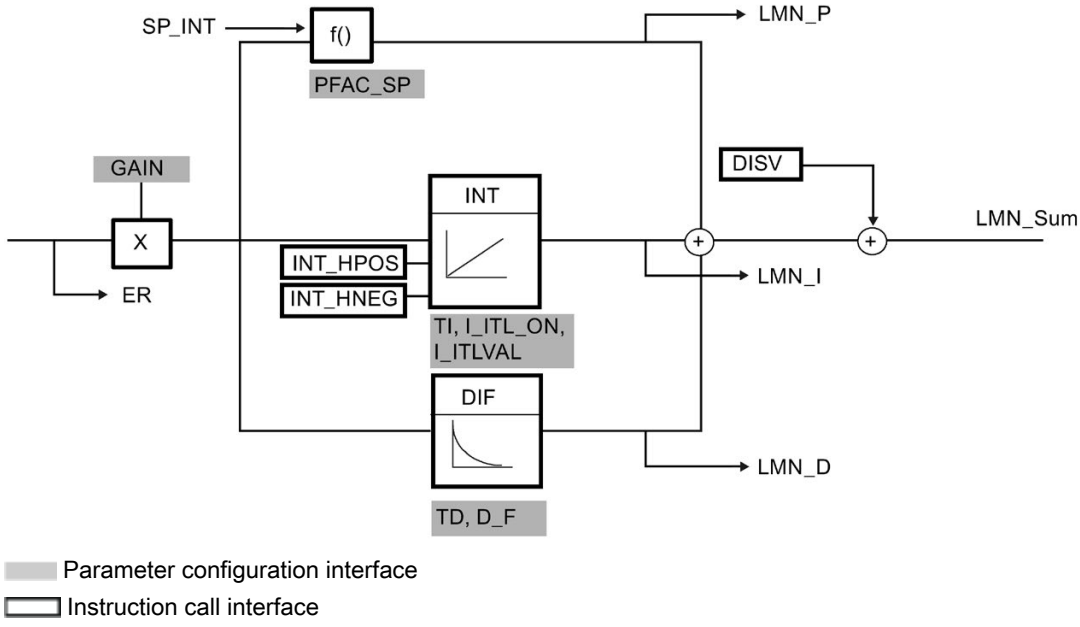

PID Algorithm (GAIN, TI, TD, D_F)

The PID algorithm operates as a position algorithm. The proportional, integral (INT), and derivative (DIF) actions are connected in parallel and can be activated or deactivated individually. This allows P, PI, PD, and PID controllers to be configured.

Controller tuning supports PI and PID controllers. Controller inversion is implemented using a negative GAIN (cooling controller).

If you set TI and TD to 0.0, you obtain a pure P controller at the operating point.

The step response in the time range is:

$$LMN_Sum(t) = GAIN \cdot ER(0) \cdot \left(1 + \frac{1}{TI} \cdot t + D_F \cdot e^{\frac{-t}{TD\ /\ D_F}} \right)$$

Where:

LMN_Sum(t) the manipulated variable in the controller's automatic mode

ER (0) is the step height of the normalized control deviation

GAIN is the controller gain

TI is the integration time

TD is the derivative action time

D_F is the derivative factor

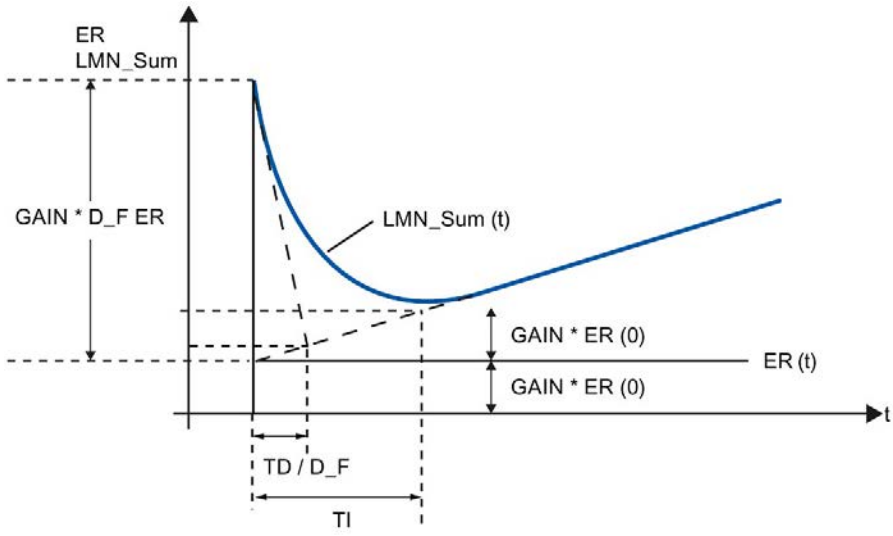

Integral action (TI, I_ITL_ON, I_ITLVAL)

In manual mode, it is corrected as follows: LMN_I = LMN - LMN_P - DISV.

If the output value is limited, the integral action is halted. If the control deviation moves the integral action back in the direction of the output range, the integral action is enabled again.

The integral action is also modified by the following measures:

- The integral action of the controller is deactivated by TI = 0.0
- Weakening of the proportional action when setpoint changes occur
- Control zone
- The output value limits can be modified online

Weakening of the proportional action when setpoint changes occur (PFAC_SP)

To prevent overshoot, you can weaken the proportional action using the parameter "Proportional factor for setpoint changes" (PFAC_SP). Using PFAC_SP, you can select continuously between 0.0 and 1.0 to decide the effect of the proportional action when the setpoint changes:

- PFAC_SP = 1.0: Proportional action has full effect if the setpoint changes
- PFAC_SP = 0.0: Proportional action has no effect if the setpoint changes

The weakening of the proportional action is achieved by compensating the integral action.

Derivative action (TD, D_F)

- The derivative action of the controller is deactivated by TD = 0.0
- If the derivative action is active, the following relationship should apply:

  TD = 0.5 * CYCLE * D_F

Parameter Settings of a P or PD Controller with Operating Point

In the user interface, deactivate the integral action (TI = 0.0) and possibly also the derivative action (TD = 0.0). Then make the following parameter settings:

- I_ITL_ON = TRUE
- I_ITLVAL = operating point;

Feedforward control (DISV)

A disturbance variable can be added at the DISV input.

Calculating the output value

The diagram below is the block diagram of the output value calculation:

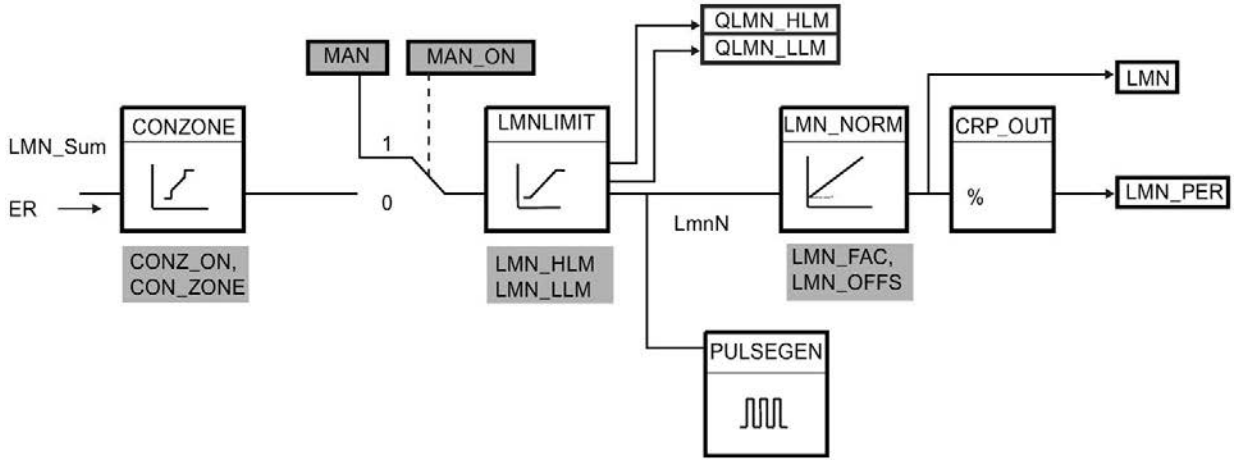

Parameter configuration interface

Instruction call interface

Parameter configuration interface, call interface

Control zone (CONZ_ON, CON_ZONE)

If CONZ_ON = TRUE, the controller operates with a control zone. This means that the controller operates according to the following algorithm:

- If process value PV exceeds the setpoint SP_INT by more than CON_ZONE, the value LMN_LLM is output as the manipulated variable.
- If the process value PV falls below setpoint SP_INT by more than CON_ZONE, LMN_HLM is output.
- If the process value PV is within the control zone (CON_ZONE), the output value takes its value from the PID algorithm LMN_Sum.

Note

Changing the manipulated variable from LMN_LLM or LMN_HLM to LMN_Sum occurs under compliance of a hysteresis of 20% of the control zone.

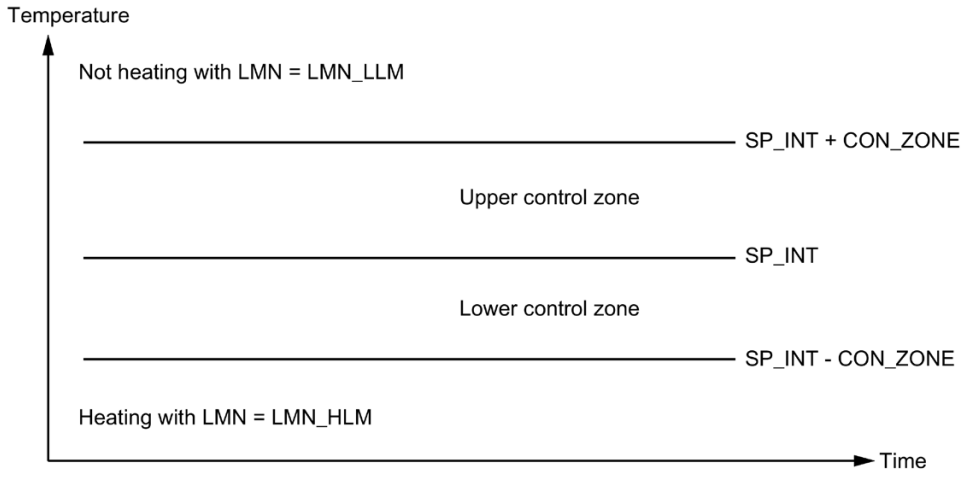

Note

Before enabling the control zone manually, make sure that the control zone band is not too narrow. If the control zone band is too small, oscillations will occur in the manipulated variable and process value.

Advantage of the Control Zone

When the process value enters the control zone, the D-action causes an extremely fast reduction of the manipulated variable. This means that the control zone is only useful when the D-action is activated. Without a control zone, only the reducing P-action would essentially reduce the manipulated variable. The control zone leads to faster settling without overshoot or undershoot if the output minimum or maximum manipulated variable is a long way from the manipulated variable required for the new operating point.

Manual value processing (MAN_ON, MAN)

You can change over between manual and automatic mode. In manual mode, the manipulated variable is corrected to a manually selected value.

The integral action (INT) is set internally to LMN - LMN_P - DISV and the derivative action (DIF) is set to 0 and synchronized internally. Changeover to automatic mode is therefore bumpless.

Note

The MAN_ON parameter has no effect during tuning.

Output value limit LMNLIMIT (LMN_HLM, LMN_LLM)

The LMNLIMIT function is used to limit the output value to the limits LMN_HLM and LMN_LLM. If these limits are reached, this is indicated by the message bits QLMN_HLM and QLMN_LLM.

If the output value is limited, the integral action is halted. If the control deviation moves the integral action back in the direction of the output range, the integral action is enabled again.

Changing the Manipulated Value Limits Online

If the range of the output value is reduced and the new unlimited value of the output value is outside the limits, the integral action and therefore the output value shifts.

The output value is reduced by the same amount as the output value limit changed. If the output value was unlimited prior to the change, it is set exactly to the new limit (described here for the high output value limit).

Scaling of output value LMN_NORM (LMN_FAC, LMN_OFFS)

The LMN_NORM function normalizes the output value according to the following rule:

LMN = LmnN * LMN_FAC + LMN_OFFS

It can be used for the following purposes:

- Output value scaling with LMN_FAC as output value factor and LMN_OFFS as output value offset.

The output value is also available in I/O format. The CRP_OUT function converts the LMN floating-point value to an I/O value according to the following rule:

LMN_PER = LMN * 27648/100

The scaling is switched off with the default values (LMN_FAC = 1.0 and LMN_OFFS = 0.0). The effective output value is sent to output LMN.

Save controller parameters SAVE_PAR

If you classify the current controller parameters as utilizable, you can save these before a manual change in structure parameters provided specifically for this in the instance DB of the instruction TCONT_CP. If you optimize the controller, the saved parameters are overwritten by the values that were valid prior to tuning.

PFAC_SP, GAIN, TI, TD, D_F, CONZ_ON and CONZONE are written to the structure PAR_SAVE.

Reloading Saved Controller Parameters UNDO_PAR

The last controller parameter settings you saved can be activated for the controller again using this function (in manual mode only).

Change between PI and PID parameters LOAD_PID (PID_ON)

Following tuning, the PI and PID parameters are stored in the PI_CON and PID_CON structures. Depending on PID_ON, you can use LOAD_PID in manual mode to write the PI or PID parameters to the effective controller parameters.

PID parameters PID_ON = TRUE	PI parameters PID_ON = FALSE
• GAIN = PID_CON.GAIN • TI = PID_CON.TI • TD = PID_CON.TD	• GAIN = PI_CON.GAIN • TI = PI_CON.TI

Note

The controller parameters are only written back to the controller with UNDO_PAR or LOAD_PID, if the controller gain is not equal to 0:

With LOAD_PID, the parameters are only copied if the corresponding GAIN <> 0 is (either the PI or PID parameters). This strategy takes into account the situation that no tuning has yet been made or that PID parameters are missing. If PID_ON = TRUE and PID.GAIN = FALSE, PID_ON is set to FALSE and the PI parameter is copied.

- D_F, PFAC_SP are preset by the the tuning. These can then be modified by the user. LOAD_PID does not change these parameters.
- With LOAD_PID, the control zone is always recalculated (CON_ZONE = 250/GAIN), even if CONZ_ON = FALSE.

See also

Operating principle of the pulse generator (Page 499)

Block diagram TCONT_CP (Page 502)

9.4.4.3 Operating principle of the pulse generator

The function PULSEGEN transforms the analog manipulated value LmnN through pulse width module into an impulse sequence with the period duration PER_TM. PULSEGEN is switched on with PULSE_ON = TRUE and is processed in the cycle CYCLE_P.

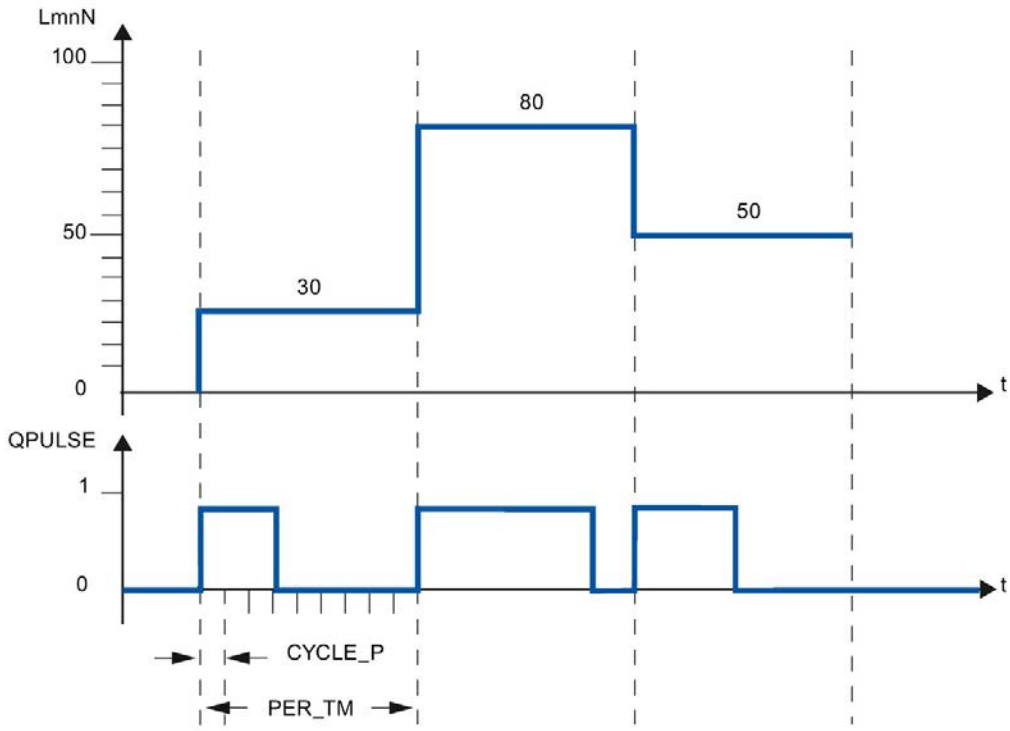

A manipulated value of LmnN = 30% and 10 PULSEGEN calls per PER_TM therefore means:

- TRUE at output QPULSE for the first three PULSEGEN calls (30% of 10 calls)
- FALSE at output QPULSE for seven further PULSEGEN calls (70% of 10 calls)

The duration of a pulse per pulse repetition period is proportional to the manipulated variable and is calculated as follows:

Pulse duration = PER_TM * LmnN /100

By suppressing the minimum pulse or break time, the characteristic curve of the conversion develops "knees" in the start and end regions.

The following diagram illustrates two-step control with a unipolar manipulated variable range (0% to 100%):

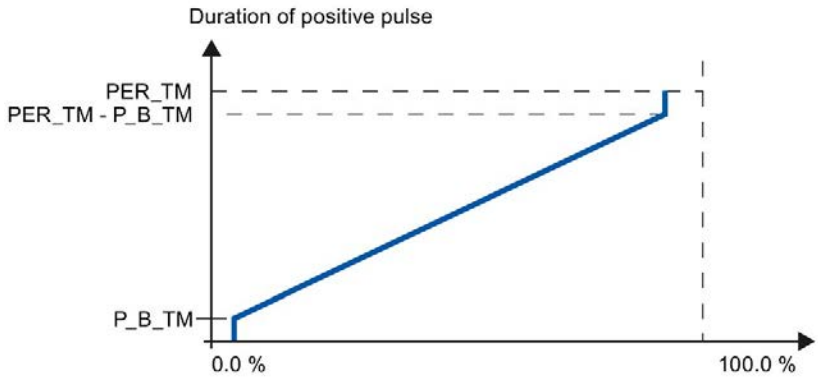

Minimum pulse or minimum break time (P_B_TM)

Short on or off times hinder the lifespan of actuators and fine controlling units. These can be avoided by setting a minimum pulse duration or minimum break time P_B_TM.

Small absolute values at the input variable LmnN that could otherwise generate a pulse duration shorter than P_B_TM are suppressed.

Large input values that would generate a pulse duration greater than PER_TM - P_B_TM are set to 100%. This reduces the dynamics of pulse generation.

Set values of P_B_TM ≤ 0,1 * PER_TM are recommended for the minimum pulse duration and the minimum break duration.

The "knees" in the curves in the diagram above are caused by the minimum pulse or minimum break times.

The following schematic illustrates the switching response of the pulse output:

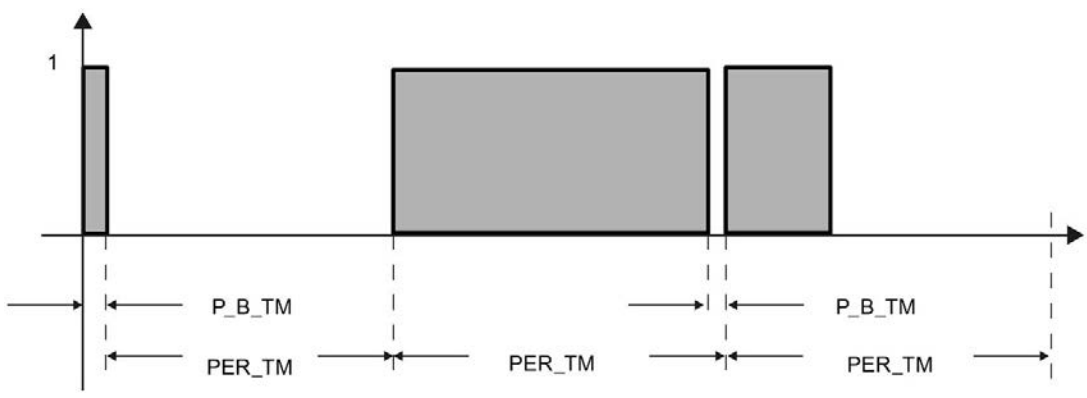

Accuracy of pulse generation

The smaller the pulse generator CYCLE_P is compared to the period duration PER_TM, the more precise the pulse width modulation is. To achieve sufficiently accurate control, the following relationship should apply:

CYCLE_P ≤ PER_TM/50

The manipulated value is transformed with a resolution of ≤ 2 % into an impulse.

Note

When calling the controller in the pulse shaper cycle, you must note the following:

Calling the controller in the pulse shaper cycle will cause the process value to be averaged. As a result, at output PV, different values may be at input PV_IN and PV_PER. If you want to track the setpoint value, you must save the process value at input parameter PV_IN at the call times for complete controller processing (QC_ACT = TRUE). For pulse shaper calls occurring between these times, you must supply the input parameters PV_IN and SP_INT with the saved process value.

See also

Description TCONT_CP (Page 489)

Mode of operation TCONT_CP (Page 490)

Block diagram TCONT_CP (Page 502)

Input parameters TCONT_CP (Page 504)

Output parameters TCONT_CP (Page 505)

In/out parameters TCONT_CP (Page 506)

Static variables TCONT_CP (Page 507)

Parameter STATUS_H (Page 512)

Parameters STATUS_D (Page 513)

9.4.4.4 Block diagram TCONT_CP

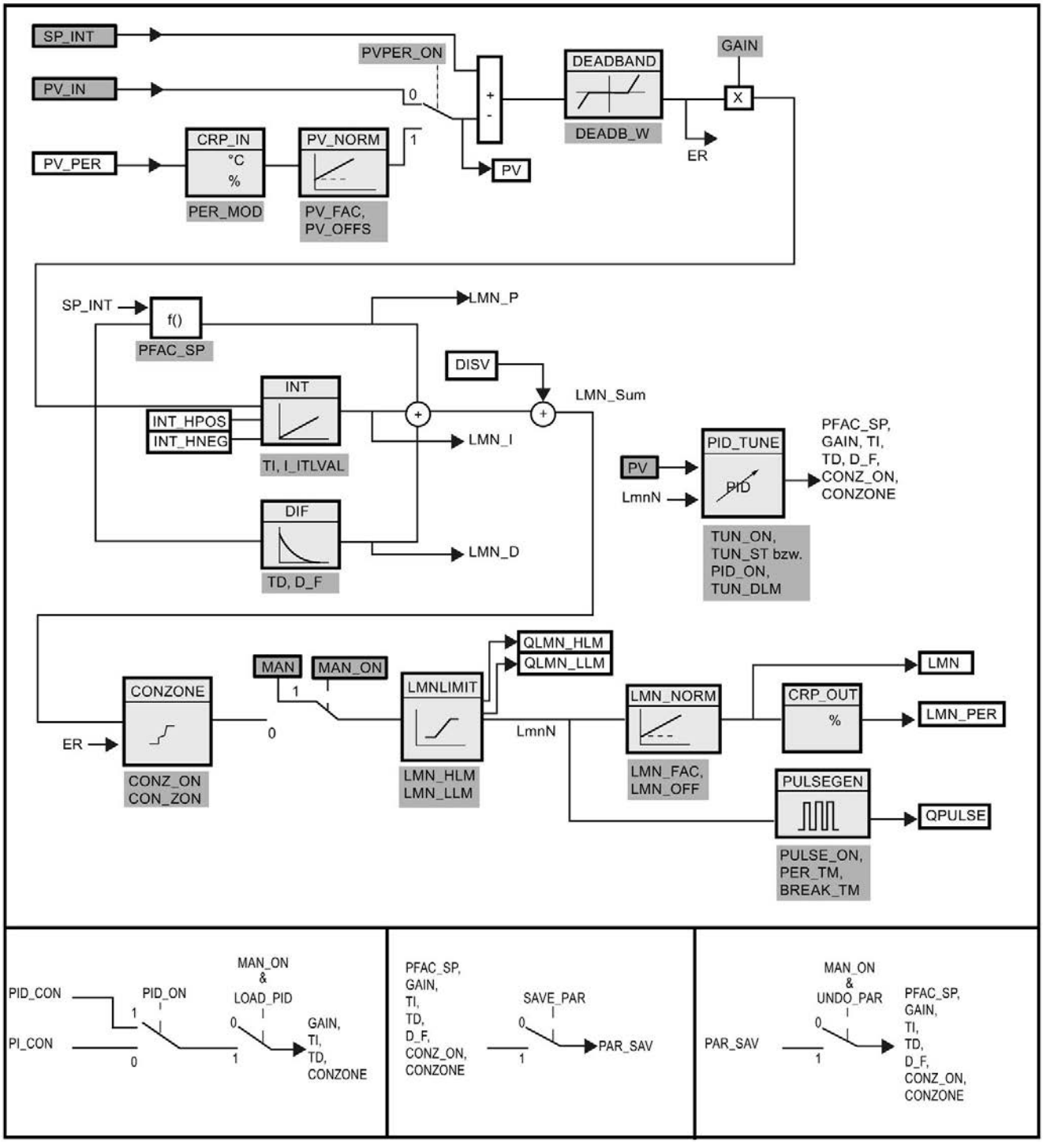

See also

Description TCONT_CP (Page 489)
Mode of operation TCONT_CP (Page 490)
Operating principle of the pulse generator (Page 499)
Input parameters TCONT_CP (Page 504)
Output parameters TCONT_CP (Page 505)
In/out parameters TCONT_CP (Page 506)
Static variables TCONT_CP (Page 507)
Parameter STATUS_H (Page 512)
Parameters STATUS_D (Page 513)

9.4.4.5 Input parameters TCONT_CP

Table 9- 19 Input parameters TCONT_CP

Parameters	Address	Data type	Default	Description
PV_IN	0.0	REAL	0.0	At the "Process value input" you can assign parameters to a commissioning value or you can interconnect an external process value in floating-point format. The valid values depend on the sensors used.
PV_PER	4.0	INT	0	The process value in I/O format is interconnected with the controller at the "Process value I/O" input.
DISV	6.0	REAL	0.0	For feedforward control, the disturbance variable is interconnected to the "Disturbance variable" input.
INT_HPOS	10.0	BOOL	FALSE	The output of the integral action can be held in the positive direction. For this, the input INT_HPOS must be set to TRUE. In a cascade control, INT_HPOS of the primary controller is connected to QLMN_HLM of the secondary controller.
INT_HNEG	10.1	BOOL	FALSE	The output of the integral action can be held in the negative direction. For this, the input INT_HNEG must be set to TRUE. In a cascade control, INT_HNEG of the primary controller is connected to QLMN_LLM of the secondary controller.
SELECT	12.0	INT	0	If the pulse shaper is on, there are several ways of calling the PID algorithm and pulse shaper: • SELECT = 0: The controller is called in a fast cyclic interrupt priority class and the PID algorithm and pulse shaper are processed. • SELECT = 1: The controller is called in OB1 and only the PID algorithm is processed. • SELECT = 2: The controller is called in a fast cyclic interrupt priority class and only the pulse shaper is processed. • SELECT = 3: The controller is called a slow cyclic interrupt priority class and only the PID algorithm is processed.

See also

Operating principle of the pulse generator (Page 499)

Block diagram TCONT_CP (Page 502)

9.4.4.6 Output parameters TCONT_CP

Table 9- 20 Output parameters TCONT_CP

Parameter	Address	Data type	Default	Description
PV	14.0	REAL	0.0	The effective process value is output at the "Process value" output. The valid values depend on the sensors used.
LMN	18.0	REAL	0.0	The effective "Manipulated value" is output in floating point format at the "Manipulated value" output.
LMN_PER	22.0	INT	0	The manipulated value in I/O format is interconnected with the controller on the output "Manipulated value I/O".
QPULSE	24.0	BOOL	FALSE	The manipulated value is pulse-width-modulated at the QPULSE output.
QLMN_HLM	24.1	BOOL	FALSE	The manipulated value is always restricted to a high limit and low limit. The output QLMN_HLM signals that the high limit has been reached.
QLMN_LLM	24.2	BOOL	FALSE	The manipulated value is always restricted to a high limit and low limit. The output QLMN_LLM signals that the low limit has been reached.
QC_ACT	24.3	BOOL	TRUE	This parameter indicates whether continuous control component will be processed the next time the block is called (relevant only when SELECT has the value 0 or 1).

See also

Operating principle of the pulse generator (Page 499)

Block diagram TCONT_CP (Page 502)

Parameter STATUS_H (Page 512)

Parameters STATUS_D (Page 513)

9.4.4.7 In/out parameters TCONT_CP

Table 9- 21 In/out parameters TCONT_CP

Parameters	Address	Data type	Default	Description
CYCLE	26.0	REAL	0.1 s	Sets the sampling time for the PID algorithm. In phase 1, the tuner calculates the sampling time and enters it in CYCLE. CYCLE > 0.001 s
CYCLE_P	30.0	REAL	0.02 s	At this input, you set the sampling time for the pulse shaper action. In phase 1, the TCONT_CP instruction calculates the sampling time and enters it in CYCLE_P. CYCLE_P > 0.001 s
SP_INT	34.0	REAL	0.0	The input "Internal setpoint" is used to specify a setpoint. The valid values depend on the sensors used.
MAN	38.0	REAL	0.0	The "Manual value" input is used to set a manual value. In automatic mode, it tracks the manipulated value.
COM_RST	42.0	BOOL	FALSE	The block has an initialization routine that is processed when the COM_RST input is set.
MAN_ON	42.1	BOOL	TRUE	If the input "Enable manual mode" is set then the control loop is interrupted. The manual value MAN is set as manipulated value.

See also

Operating principle of the pulse generator (Page 499)

Block diagram TCONT_CP (Page 502)

9.4.4.8 Static variables TCONT_CP

Table 9- 22 Static variables TCONT_CP

Parameters	Address	Data type	Default	Description
DEADB_W	44.0	REAL	0.0	A deadband is applied to the control deviation. The "Deadband width" input determines the size of the deadband. The valid values depend on the sensors used.
I_ITLVAL	48.0	REAL	0.0	The output of the integrator can be set at the I_ITL_ON input. The initialization value is applied to the "Initialization value of the I-action" input. During a restart COM_RST = TRUE, the I-action is set to the initialization value. Values from -100 to 100 % are permitted.
LMN_HLM	52.0	REAL	100.0	The output value is always restricted to a high limit and low limit. The "Manipulated value high limit" input specifies the high limit. LMN_HLM > LMN_LLM
LMN_LLM	56.0	REAL	0.0	The output value is always restricted to a high limit and low limit. The "Manipulated value low limit" input specifies the low limit. LMN_LLM < LMN_HLM
PV_FAC	60.0	REAL	1.0	The "Process value factor" input is multiplied by the "Process value I/O". The input is used to scale the process value range.
PV_OFFS	64.0	REAL	0.0	The "Process value offset" input is added to the "Process value I/O". The input is used to scale the process value range.
LMN_FAC	68.0	REAL	1.0	The "Output value factor" input is multiplied with the output value. The input is used to scale the output value range.
LMN_OFFS	72.0	REAL	0.0	The "Output value offset" input is added to the output value. The input is used to scale the output value range.
PER_TM	76.0	REAL	1.0 s	The period duration of the pulse width modulation is entered at the PER_TM parameter. The relationship of the period duration to the sampling time of the pulse shaper determines the accuracy of the pulse width modulation. PER_TM ≥ CYCLE
P_B_TM	80.0	REAL	0.02 s	You can assign a minimum pulse or break time at the parameter "Minimum pulse/break time". P_B_TM is internally limited to > CYCLE_P.
TUN_DLMN	84.0	REAL	20.0	Process excitation for controller tuning results from a output value step change at TUN_DLMN. Values from -100 to 100 % are permitted.

Parameters	Address	Data type	Default	Description
PER_MODE	88.0	INT	0	You can use this switch to enter the type of I/O module. The process value at input PV_PER is then scaled as follows at the PV output. • PER_MODE = 0: Thermoelements; PT100/NI100; standard PV_PER * 0.1 Unit: °C, °F • PER_MODE = 1: PT100/NI100; climate PV_PER * 0.01 Unit: °C, °F • PER_MODE = 2: Current/voltage PV_PER * 100/27648 Unit: %
PVPER_ON	90.0	BOOL	FALSE	If the process value is to be read in from the I/Os, the PV_PER input must be interconnected with the I/Os and the "Enable process value I/Os" input must be set.
I_ITL_ON	90.1	BOOL	FALSE	The output of the integrator can be set at the I_ITLVAL input. The "Set I-action" input must be set for this.
PULSE_ON	90.2	BOOL	FALSE	If PULSE_ON = TRUE is set, the pulse shaper is activated.
TUN_KEEP	90.3	BOOL	FALSE	The mode changes to automatic only when TUN_KEEP changes to FALSE.
ER	92.0	REAL	0.0	The effective control deviation is output at the "Control deviation" output. The valid values depend on the sensors used.
LMN_P	96.0	REAL	0.0	The "P-action" output contains the proportional action of the manipulated tag.
LMN_I	100.0	REAL	0.0	The "integral action" output contains the integral action of the manipulated tag.
LMN_D	104.0	REAL	0.0	The "D-action" output contains the derivative action of the manipulated tag.
PHASE	108.0	INT	0	The current phase of controller tuning is indicated at the PHASE output. • PHASE = 0: No tuning mode; automatic or manual mode • PHASE = 1: Ready to start tuning; check parameters, wait for excitation, measure the sampling times • PHASE = 2: Actual tuning: Searching for point of inflection with constant output value. Entering the sampling time in instance DB. • PHASE = 3: Calculating process parameters. Saving valid controller parameters prior to tuning. • PHASE = 4: Controller design • PHASE = 5: Following up the controller to the new manipulated tag • PHASE = 7: Validating the process type
STATUS_H	110.0	INT	0	STATUS_H indicates the diagnostic value via the search for the point of inflection during the heating process.
STATUS_D	112.0	INT	0	STATUS_D indicates the diagnostic value via the controller design during the heating process.

Parameters	Address	Data type	Default	Description
QTUN_RUN	114.0	BOOL	0	The tuning manipulated tag has been applied, tuning has started and is still in phase 2 (searching for point of inflection).
PI_CON	116.0	STRUCT		PI controller parameters
GAIN	+0.0	REAL	0.0	PI controller gain %/phys. unit
TI	+4.0	REAL	0.0 s	PI integration time [s]
PID_CON	124.0	STRUCT		PID controller parameters
GAIN	+0.0	REAL	0.0	PID controller gain
TI	+4.0	REAL	0.0s	PID integration time [s]
TD	+8.0	REAL	0.0s	PID derivative action time [s]
PAR_SAVE	136.0	STRUCT		The PID parameters are saved in this structure.
PFAC_SP	+0.0	REAL	1.0	Proportional factor for setpoint changes Values from 0.0 to 1.0 are permitted.
GAIN	+4.0	REAL	0.0	Controller gain %/phys. unit
TI	+8.0	REAL	40.0 s	Integration time [s]
TD	+12.0	REAL	10.0 s	Derivative action time (s)
D_F	+16.0	REAL	5.0	Derivative factor Values from 5.0 to 10.0 are permitted.
CON_ZONE	+20.0	REAL	100.0	Control zone band If the control deviation is greater than the control zone band, the high output value limit is output as output value. If the control deviation is less than the negative control zone band, the low output value limit is output as the output value. CON_ZONE ≥ 0.0
CONZ_ON	+24.0	BOOL	FALSE	Enable control zone
PFAC_SP	162.0	REAL	1.0	PFAC_SP specifies the effective P-action when there is a setpoint change. This is set between 0 and 1. • 1: P-action has full effect if the setpoint changes. • 0: P-action has no effect if the setpoint changes. Values from 0.0 to 1.0 are permitted.
GAIN	166.0	REAL	2.0	The "Proportional gain" input specifies controller amplification. The direction of control can be reversed by giving GAIN a negative sign. %/phys. unit
TI	170.0	REAL	40.0 s	The "Integration time" (integral-action time) input defines the integrator's time response.
TD	174.0	REAL	10.0 s	The "Derivative-action time" (rate time) input decides the time response of the differentiator.
D_F	178.0	REAL	5.0	The derivative factor decides the lag of the D-action. D_F = derivative-action time/"Lag of the D-action" Values from 5.0 to 10.0 are permitted.

Parameters	Address	Data type	Default	Description
CON_ZONE	182.0	REAL	100.0	If the control deviation is greater than the control zone band, the high output value limit is output as output value. If the control deviation is less than the negative control zone band, the low output value limit is output as the output value. The valid values depend on the sensors used.
CONZ_ON	186.0	BOOL	FALSE	You can use CONZ_ON =TRUE to enable the control zone.
TUN_ON	186.1	BOOL	FALSE	If TUN_ON=TRUE, the output value is averaged until the output value excitation TUN_DLMN is enabled either by a setpoint step-change or by TUN_ST=TRUE.
TUN_ST	186.2	BOOL	FALSE	If the setpoint is to remain constant during controller tuning at the operating point, a output value step-change by the amount of TUN_DLMN is activated by TUN_ST=1.
UNDO_PAR	186.3	BOOL	FALSE	Loads the controller parametersPFAC_SP, GAIN, TI, TD, D_FCONZ_ON and CON_ZONE from the data structure PAR_SAVE (only in manual mode).
SAVE_PAR	186.4	BOOL	FALSE	Saves the controller parameters PFAC_SP, GAIN, TI, TD, D_F, CONZ_ON and CON_ZONE in the data structure PAR_SAVE.
LOAD_PID	186.5	BOOL	FALSE	Loads the controller parametersGAIN, TI,TD depending on PID_ON from the data structure PI_CON or PID_CON (only in manual mode)
PID_ON	186.6	BOOL	TRUE	At the PID_ON input, you can specify whether or not the tuned controller will operate as a PI or PID controller. • PID controller: PID_ON = TRUE • PI controller: PID_ON = FALSE With certain process types it is nevertheless possible that only a PI controller will be designed despite PID_ON = TRUE.
GAIN_P	188.0	REAL	0.0	Identified process gain. In the case of process type I, GAIN_P tends to be estimated too low.
TU	192.0	REAL	0.0	Identified time lag of the process. TU ≥ 3*CYCLE
TA	196.0	REAL	0.0	Identified recovery time of the process. In the case of process type I, TA tends to be estimated too low.
KIG	200.0	REAL	0.0	Maximum process value rise at manipulated tag excitation from 0 to 100 % [1/s] GAIN_P = 0.01 * KIG * TA
N_PTN	204.0	REAL	0.0	The parameter specifies the order of the process. "Non-integer values" are also possible. Values from 1.01 to 10.0 are permitted.
TM_LAG_P	208.0	REAL	0.0	Time constants of a PTN model (practical values only for N_PTN >= 2).
T_P_INF	212.0	REAL	0.0	Time from process excitation until the point of inflection.
P_INF	216.0	REAL	0.0	Process value change from process excitation until the point of inflection. The valid values depend on the sensors used.
LMN0	220.0	REAL	0.0	Output value at the start of tuning Detected in phase 1 (mean value). Values from 0 to 100 % are permitted.
PV0	224.0	REAL	0.0	Process value at the start of tuning

Parameters	Address	Data type	Default	Description
PVDT0	228.0	REAL	0.0	Process value slew rate at start of tuning [1/s] Sign adapted.
PVDT	232.0	REAL	0.0	Current process value slew rate [1/s] Sign adapted.
PVDT_MAX	236.0	REAL	0.0	Max. change in the process value per second [1/s] Maximum derivative of the process value at the point of inflection (sign adapted, always > 0); is used to calculate TU and KIG.
NOI_PVDT	240.0	REAL	0.0	Noise action in PVDT_MAX in % The higher the noise action, the less accurate (less aggressive) the control parameters.
NOISE_PV	244.0	REAL	0.0	Absolute noise in process value Difference between maximum and minimum process value in phase 1.
FIL_CYC	248.0	INT	1	Number of cycles of the mean value filter The process value is determined through FIL_CYC cycles. FIL_CYC is increased from 1 to a max. of 1024 if needed.
POI_CMAX	250.0	INT	2	Maximum number of cycles after point of inflection This time is used to find another (i.e. better) inflection point for measuring noise. The tuning is completed only after this time.
POI_CYCL	252.0	INT	0	Number of cycles after inflection point

See also

Operating principle of the pulse generator (Page 499)

Block diagram TCONT_CP (Page 502)

9.4.4.9 Parameter STATUS_H

STATUS_H	Description	Remedy
0	Default, or no/no new controller parameters	
10000	Tuning completed + suitable controller parameters found	
2xxxx	Tuning completed + controller parameters uncertain	
2xx2x	Point of inflection not reached (only if excited via setpoint step-change)	If the controller oscillates, weaken the controller parameters, or repeat the test with a smaller manipulated value difference TUN_DLMN.
2x1xx	Estimation error (TU < 3*CYCLE)	Reduce CYCLE and repeat attempt. Special case for PT1-only process: Do not repeat test, if necessary reduce controller parameters.
2x3xx	Estimation error TU too high	Repeat test under better conditions.
21xxx	Estimation error N_PTN < 1	Repeat test under better conditions.
22xxx	Estimation error N_PTN > 10	Repeat test under better conditions.
3xxxx	Tuning canceled in phase 1 owing to faulty parameter assignment:	
30002	Effective manipulated value differential < 5%	Correct manipulated value differential TUN_DLMN.
30005	The sampling times CYCLE and CYCLE_P differ by more than 5% of the measured values.	Compare CYCLE and CYCLE_P with the cycle time of the cyclic interrupt priority class and note any loop scheduler. Check CPU load. An excessively loaded CPU can result in prolonged sampling times that are inconsistent with CYCLE or CYCLE_P.

Note

If you cancel tuning in phase 1 or 2, STATUS_H = 0 is set. However, STATUS_D still displays the status of the last controller calculation.

The higher the value of STATUS_D, the higher the order of the control process, the greater the TU/TA ratio and the gentler the controller parameters will be.

See also

Operating principle of the pulse generator (Page 499)

Block diagram TCONT_CP (Page 502)

9.4.4.10 Parameters STATUS_D

STATUS_D	Description
0	No controller parameters were calculated.
110	N_PTN <= 1.5 Process type I fast
121	N_PTN > 1.5 Process type I
200	N_PTN > 1.9 Process type II (transition range)
310	N_PTN >= 2.1 Process type III fast
320	N_PTN > 2.6 Process type III
111, 122, 201, 311, 321	Parameters have been corrected from phase 7.

Note

The higher the value of STATUS_D, the higher the order of the control process, the greater the TU/TA ratio and the gentler the controller parameters will be.

See also

Operating principle of the pulse generator (Page 499)

Block diagram TCONT_CP (Page 502)

9.4.5 TCONT_S

9.4.5.1 Description TCONT_S

The TCONT_S instruction is used on SIMATIC S7 automation systems to control technical temperature processes with binary manipulated value output signals for actuators with integrating behavior. The functionality is based on the PI control algorithm of the sampling controller. The step controller operates without a position feedback signal.

Application

You can also use the controller in a cascade control as a secondary position controller. You specify the actuator position via the setpoint input SP_INT. In this case, you must set the process value input and the parameter TI (integration time) to zero. An application might be, for example, temperature control with heating power control using pulse-break activation and cooling control using a butterfly valve. To close the valve completely, the manipulated variable (ER*GAIN) should be negative.

Call

The instruction TCONT_S must be called equidistant. To achieve this, use a cyclic interrupt priority class (for example, OB35 for an S7-300). The sampling time is specified at the CYCLE parameter.

If you call the instruction TCONT_S as a multiple instance DB, no technology object is created. No parameter assignment interface or commissioning interface is available. You must assign parameters for TCONT_S directly in the multiple instance DB and commission it via a watch table.

CYCLE sampling time

The CYCLE sampling time match the time difference between two calls (cycle time of the cyclic interrupt OB taking into account the reduction ratios).

The controller sampling time should not exceed 10% of the calculated integration time of the controller (TI). Generally, you must set the sampling time to a much lower value to achieve the required accuracy of the step controller.

Required accuracy G	MTR_TM	CYCLE = MTR_TM*G	Comment
0.5 %	10 s	0.05 s	The sampling time is determined by the required accuracy of the step controller.

Start-up

The TCONT_S instruction has an initialization routine that is run through when input parameter COM_RST = TRUE is set. Following execution of the initialization routine, the block sets COM_RST back to FALSE. All outputs are set to their initial values. If you require initialization when the CPU restarts, call the block in OB100 with COM_RST = TRUE.

See also

Block diagram TCONT_S (Page 519)

9.4.5.2 Mode of operation TCONT_S

Setpoint branch

The setpoint is entered at input SP_INT in floating-point format as a physical value or percentage. The setpoint and process value used to form the control deviation must have the same unit.

Process value options (PVPER_ON)

Depending on PVPER_ON, the process value can be read in, in the I/O or floating-point format.

PVPER_ON	Process Value Input
TRUE	The process value is read in via the analog I/Os (PIW xxx) at input PV_PER.
FALSE	The process value is acquired in floating-point format at input PV_IN.

Process value format conversion CRP_IN (PER_MODE)

The CRP_IN function converts the I/O value PV_PER to floating-point format depending on the PER_MODE switch according to the following rules:

PER_MODE	Output of CRP_IN	Analog Input Type	Unit
0	PV_PER * 0.1	Thermoelements; PT100/NI100; standard	°C;°F
1	PV_PER * 0.01	PT100/NI100; climate;	°C;°F
2	PV_PER * 100/27648	Voltage/current	%

Process value scaling PV_NORM (PF_FAC, PV_OFFS)

The PV_NORM function calculates the output of CRP_IN according to the following rule:

"Output of PV_NORM" = "Output of CRP_IN)" * PV_FAC + PV_OFFS

It can be used for the following purposes:

- Process value adjustment with PV_FAC as process value factor and PV_OFFS as process value offset.
- Normalization of temperature to percentage

  You want to enter the setpoint as a percentage and must now convert the measured temperature value to a percentage.
- Normalization of percentage to temperature

  You want to enter the setpoint in the physical temperature unit and must now convert the measured voltage/current value to a temperature.

Calculation of the parameters:

- PV_FAC = range of PV_NORM/range of CRP_IN;
- PV_OFFS = LL (PV_NORM) - PV_FAC * LL(CRP_IN);

  where LL: low limit

The normalization is switched off with the default values (PV_FAC = 1.0 and PV_OFFS = 0.0). The effective process value is output at the PV output.

Example of Process Value Normalization

If you want to enter the setpoint as a percentage, and you have a temperature range of -20 to 85 °C applied to , CRP_IN you must normalize the temperature range as a percentage.

The following diagram shows an example of adapting the temperature range -20 to 85 °C to an internal scale of 0 to 100 %:

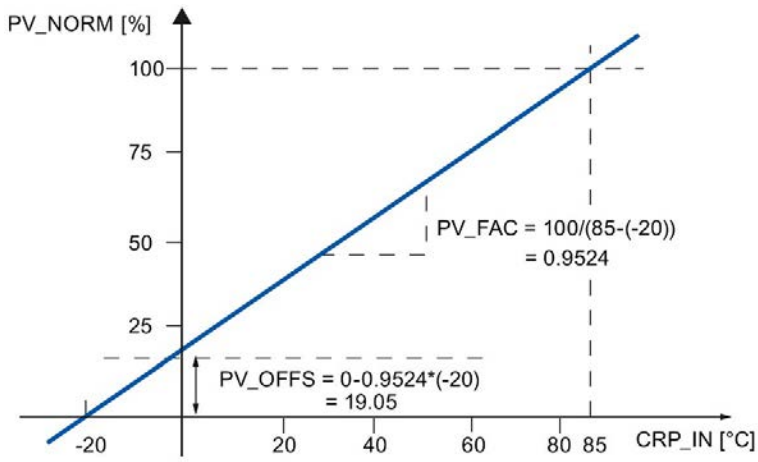

Forming the control deviation

The difference between the setpoint and process value is the control deviation before the dead band.

The setpoint and process value must exist in the same unit.

Dead band (DEADB_W)

To suppress a minor sustained oscillation due to the manipulated variable quantization (for example, in pulse width modulation with PULSEGEN) a dead band is applied to the (DEADBAND) control deviation. With DEADB_W = 0.0, the dead band is switched off.

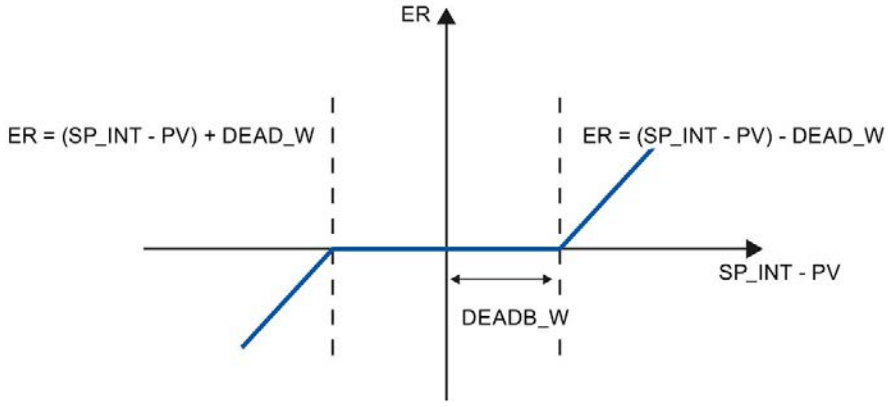

PI step controller algorithm

The instruction TCONT_S operates without position feedback. The I-action of the PI algorithm and the assumed position feedback signal are calculated in an integrator (INT) and compared as a feedback value with the remaining P-action. The difference is applied to a three-step element (THREE_ST) and a pulse shaper (PULSEOUT) that generates the pulses for the control valve. Adapting the response threshold of the three-step element reduces the switching frequency of the controller.

Weakening of the P-action when setpoint changes occur

To prevent overshoot, you can weaken the P-action using the "Proportional factor for setpoint changes" parameter (PFAC_SP). Using PFAC_SP, you can now select continuously between 0.0 and 1.0 to decide the effect of the P-action when the setpoint changes:

- PFAC_SP = 1.0: Proportional action for setpoint change is fully effective
- PFAC_SP = 0.0: Proportional action has no effect in the setpoint change

As in the case of the continuous controller, a value of PFAC_SP < 1.0 can reduce the overshoot if the motor run time MTR_TM is small compared with the recovery time TA and the ratio is TU/TA < 0.2. If MTR_TM reaches 20% of TA, only a slight improvement can still be achieved.

Feedforward control

A disturbance variable can be added at the DISV input.

Manual value processing (LMNS_ON, LMNUP, LMNDN)

With LMNS_ON, you can change between manual and automatic mode. In manual mode, the actuator is halted and the integral action (INT) is set to 0 internally. Using LMNUP and LMNDN, the actuator can be adjusted to OPEN and CLOSED. Switching over to automatic mode therefore involves a bump. As a result of the GAIN, the existing control deviation leads to a step change in the internal manipulated variable. The integral component of the actuator, however, results in a ramp-shaped excitation of the process.

See also

Block diagram TCONT_S (Page 519)

9.4.5.3 Block diagram TCONT_S

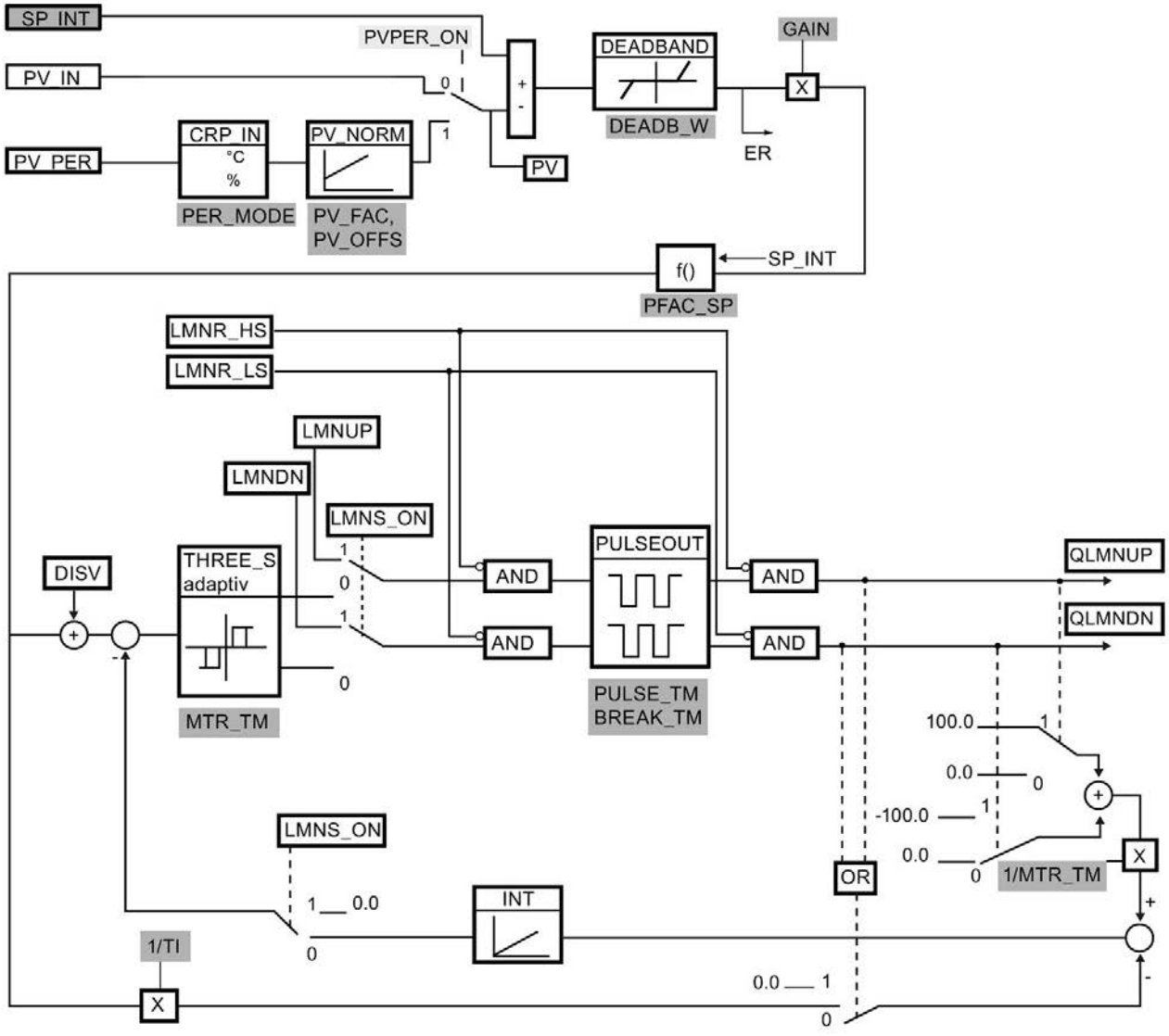

Parameter configuration interface
Instruction call interface
Parameter configuration interface, call interface

See also

Description TCONT_S (Page 514)
Mode of operation TCONT_S (Page 515)
Input paramters TCONT_S (Page 520)
Output parameters TCONT_S (Page 521)
In/out parameters TCONT_S (Page 521)
Static variables TCONT_S (Page 522)

9.4.5.4 Input paramters TCONT_S

Table 9- 23 Input paramters TCONT_S

Parameters	Address	Data type	Default	Description
CYCLE	0.0	REAL	0.1 s	At this input, you enter the sampling time for the controller. CYCLE ≥ 0.001
SP_INT	4.0	REAL	0.0	The input "Internal setpoint" is used to specify a setpoint. The valid values depend on the sensors used.
PV_IN	8.0	REAL	0.0	At the "Process variable input" you can assign parameters to a commissioning value or you can interconnect an external process value in floating-point format. The valid values depend on the sensors used.
PV_PER	12.0	INT	0	The process value in I/O format is interconnected with the controller at the "Process value I/O" input.
DISV	14.0	REAL	0.0	For feedforward control, the disturbance variable is interconnected to the "Disturbance variable" input.
LMNR_HS	18.0	BOOL	FALSE	The signal "Control valve at high endstop" is interconnected on the input "High endstop signal of position feedback". • LMNR_HS=TRUE: The control valve is at high endstop.
LMNR_LS	18.1	BOOL	FALSE	The signal "Control valve at low endstop" is interconnected on the input "Low endstop signal of position feedback". • LMNR_LS=TRUE: The control valve is at low endstop.
LMNS_ON	18.2	BOOL	TRUE	Manipulated value signal processing is switched to manual mode at the "Enable manual mode of manipulated signal".
LMNUP	18.3	BOOL	FALSE	In manual mode of manipulated signals, the output parameter QLMNUP is operated at the input parameter "Manipulated signal up".
LMNDN	18.4	BOOL	FALSE	In manual mode of the manipulated signals, the output parameter QLMNDN is operated at the input parameter "Manipulated signal down".

See also

Block diagram TCONT_S (Page 519)

9.4.5.5 Output parameters TCONT_S

Table 9- 24 Output parameters TCONT_S

Parameters	Address	Data type	Default	Description
QLMNUP	20.0	BOOL	FALSE	If the output "Manipulated value signal up" is set then the control valve should be open.
QLMNDN	20.1	BOOL	FALSE	If the output "Manipulated value signal down" is set then the control valve should be closed.
PV	22.0	REAL	0.0	The effective process value is output at the "Process value" output.
ER	26.0	REAL	0.0	The effective system deviation is output at the "Error signal" output.

See also

Block diagram TCONT_S (Page 519)

9.4.5.6 In/out parameters TCONT_S

Table 9- 25 In/out parameters TCONT_S

Parameters	Address	Data type	Default	Description
COM _RST	30.0	BOOL	FALSE	The block has an initialization routine that is processed when the COM_RST input is set.

See also

Block diagram TCONT_S (Page 519)

9.4.5.7 Static variables TCONT_S

Table 9- 26 Static variables TCONT_S

Parameters	Address	Data type	Default	Description
PV_FAC	32.0	REAL	1.0	The "Process value factor" input is multiplied by the process value. The input is used to scale the process value range.
PV_OFFS	36.0	REAL	0.0	The input "Process value offset" is added to the process value. The input is used to scale the process value range. The valid values depend on the sensors used.
DEADB_W	40.0	REAL	0.0	A deadband is applied to the control deviation. The "Deadband width" input determines the size of the deadband. DEADB_W ≥ 0.0
PFAC_SP	44.4	REAL	1.0	PFAC_SP specifies the effective P-action when there is a setpoint change. • 1: P-action has full effect if the setpoint changes. • 0: P-action has no effect if the setpoint changes. Values from 0.0 to 1.0 are permitted.
GAIN	48.0	REAL	2.0	The "Proportional gain" input specifies controller amplification. The direction of control can be reversed by giving GAIN a negative sign. %/phys. unit
TI	52.0	REAL	40.0 s	The "Integration time" (integral-action time) input defines the integrator's time response.
MTR_TM	56.0	REAL	30 s	The runtime from endstop to endstop of the control valve is entered at the "Motor actuating time" parameter. MTR_TM ≥ CYCLE
PULSE_TM	60.0	REAL	0.0 s	A minimum pulse time can be configured at the "Minimum pulse time" parameter.
BREAK_TM	64.0	REAL	0.0 s	You can assign a minimum break time at the parameter "Minimum break time".
PER_MODE	68.0	INT	0	You can use this switch to enter the type of I/O module. The process value at input PV_PER is then scaled as follows at the PV output. • PER_MODE = 0: Thermoelements; PT100/NI100; standard PV_PER * 0.1 Unit: °C, °F • PER_MODE = 1: PT100/NI100; climate PV_PER * 0.01 Unit: °C, °F • PER_MODE = 2: Current/voltage PV_PER * 100/27648 Unit: %
PVPER_ON	70.0	BOOL	FALSE	If the process value is to be read in from the I/Os, the PV_PER input must be interconnected with the I/Os and the "Enable process value I/Os" input must be set.

See also

Block diagram TCONT_S (Page 519)

9.4.6 Integrated system functions

9.4.6.1 CONT_C_SF

CONT_C_SF

The instruction CONT_C_SF is integrated in the S7-300 compact CPUs. The instruction must not be transmitted to the S7-300 CPU during loading. The scope of function corresponds with the instruction CONT_C.

See also

Description CONT_C (Page 466)

How CONT_C works (Page 467)

CONT_C block diagram (Page 469)

Input parameter CONT_C (Page 470)

Output parameters CONT_C (Page 472)

9.4.6.2 CONT_S_SF

CONT_S_SF

The instruction CONT_S_SF is integrated in the S7-300 compact CPUs. The instruction must not be transmitted to the S7-300 CPU during loading. The scope of function corresponds with the instruction CONT_S.

See also

Description CONT_S (Page 473)

Mode of operation CONT_S (Page 474)

Block diagram CONT_S (Page 475)

Input parameters CONT_S (Page 476)

Output parameters CONT_S (Page 477)

9.4.6.3 PULSEGEN_SF

PULSEGEN_SF

The instruction PULSEGEN_SF is integrated in the S7-300 compact CPUs. The instruction must not be transmitted to the S7-300 CPU during loading. The scope of function corresponds with the instruction PULSEGEN.

See also

Description PULSEGEN (Page 478)

Mode of operation PULSEGEN (Page 479)

Mode of operation PULSEGEN (Page 482)

Three-step control (Page 483)

Two-step control (Page 486)

Input parameters PULSEGEN (Page 487)

Output parameter PULSEGEN (Page 488)

9.5 Polyline

9.5.1 Compatibility with CPU and FW

The following table shows which version of Polyline can be used on which CPU:

CPU	FW	Polyline
S7-1200	V4.2 or higher	V1.0
S7-1500	V2.0 or higher	V1.0

9.5.2 Description Polyline

Description

The Polyline instruction maps input value Input onto output value Output using a characteristic curve. The characteristic curve is defined as a polyline with maximum 50 points. Linear interpolation is performed between the points. You can fit the polyline to the desired characteristic curve using the number and configuration of the points.

The Polyline instruction can be used, for example, to linearize non-linear characteristics of sensor or actuators.

Interpolation calculation

Polyline calculates the output value at the Output parameter for the input value at the Input parameter that lies between point values x_i and x_{i+1} with a linear interpolation. The linear interpolation is calculated according to the following formula:

$$Output = \frac{(Input - x_i)}{(x_{i+1} - x_i)} (y_{i+1} - y_i) + y_i$$

With parameter Reset = TRUE, an alternative output value can also be specified using the SubstituteOutput parameter.

Polyline data

The value pairs for the polyline are contained in the Static area of the instruction.

Note

- The minimum number of value pairs to be configured is 2.
- The maximum number of value pairs to be configured is 50.
- For a valid configuration, the x values must be specified in ascending order.

To allow the polyline data to be changed without the changes taking effect immediately, the value pairs of the polyline are duplicated and contained in the following structures:

- UserData

  The polyline data in this structure can be edited.

  Make use of this structure to specify or change the polyline data. Changes in this structure do not affect the interpolation calculation until the check and duplication of the data to the WorkingData structure is initiated. This happens by setting Validate = TRUE or automatically during the first processing of Polyline after the change of operating state of the CPU from STOP to RUN.

  The preassignment of values in this structure does not represent a valid configuration. To use the values for the interpolation calculation, change the tags to valid values.

- WorkingData

  The polyline data in this structure cannot be edited. This data is used for the interpolation calculation. Do not manually change the data in this structure.

Both structures have the same data type and thus the same content:

- NumberOfUsedPoints

  Number of points used for the interpolation calculation.

- Point

  The array with 50 elements contains value pairs of points Point[i].x and Point[i].y with index "i" from 1 to 50.

The following figure shows a polyline with four points.

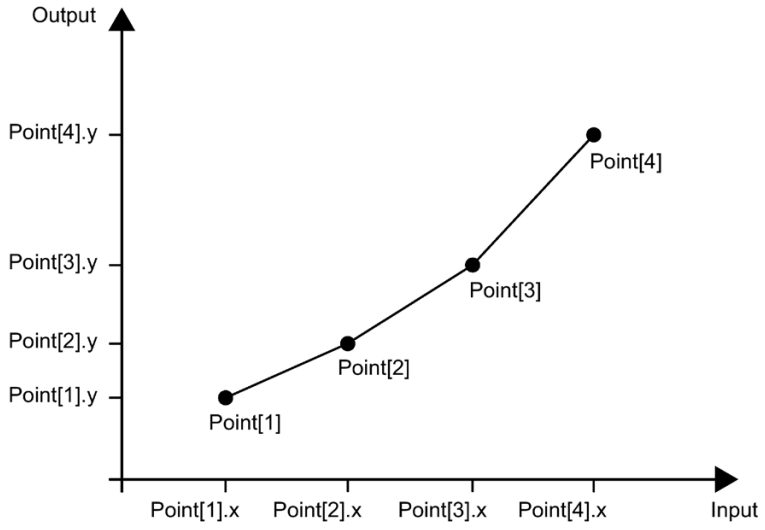

Call

Polyline is called as a single-instance DB in an OB. In an FB, Polyline can be called as both a single-instance DB and a multi-instance DB and as a parameter-instance DB.

When the instruction is called, no technology object is created. No parameter assignment interface or commissioning interface is available. You assign the Polyline parameters directly in the instance DB and commission Polyline using a watch table of the user program in the CPU or HMI.

Startup

The tags in the UserData and WorkingData structures are not retentive. These tags are initialized with the start values after each change of operating state of the CPU from STOP to RUN.

If you change the actual values in the UserData structure in online mode and these values are to be retained after the change of operating state of the CPU from STOP to RUN, back up these values in the start values of the data block.

At the first call of the Polyline instruction after the change of operating state of the CPU from STOP to RUN, the data in the UserData structure is automatically checked for validity. If the check is successful, the data is transferred to the WorkingData structure.

Reaction to error

The Polyline instruction detects different errors that may occur during interpolation calculation. The result of the interpolation calculation can be output at the output despite a pending error. If an error prevents correct calculation of the interpolation result, a substitute output value is output at the output.

You specify the substitute output value that is output if an error occurs that prevents correct calculation of the interpolation result as follows at the ErrorMode tag:

- If the ErrorMode tag is set to 0, Polyline outputs the input value at the Input parameter.
- If the ErrorMode tag is set to 1, Polyline outputs the substitute output value. You assign the substitute output value at the SubstituteOutput parameter.
- If the ErrorMode tag is set to 2, Polyline outputs the last valid output value at the Output parameter.

The Error parameter indicates if an error is pending. When the error is no longer pending, Error is set to FALSE. The ErrorBits parameter shows which errors have occurred. ErrorBits is retentive and is reset only by a positive edge at the Reset or ErrorAck parameter.

9.5.3 Operating principle Polyline

Polyline data

To change the polyline, you edit the values in the UserData structure. The values are then checked for validity and transferred to the WorkingData structure. Only in the WorkingData structure are the values used for the interpolation calculation.

The values are checked and transferred when

- You set the Validate parameter to TRUE while the Reset parameter is set to FALSE.
- Polyline is called for the first time after the change of operating state of the CPU from STOP to RUN while the Reset parameter is set to FALSE.

  If Polyline has already been called, for example in OB100, another automatic check of the values is not performed at the subsequent calls.

If the polyline data in the UserData structure is invalid, the previous polyline data in the WorkingData structure remains unchanged and a corresponding error message is output. If the check was performed for the first time, no valid values are available in the WorkingData structure and a corresponding error message is output. In this case, the Output parameter is specified with the substitute output value that you configure with the ErrorMode tag.

The check and transfer of the values from the UserData structure requires more CPU processing time than the interpolation calculation. In time-critical applications, the first execution of Polyline can be in startup OB 100. In this way, the time-consuming one-time check and transfer of the polyline data can be completed before the cyclic application program sections.

Validity of the polyline data

When the values in the UserData structure are checked, they must meet the following conditions so that a valid polyline is available for the interpolation calculation:

- 2 ≤ UserData.NumberOfUsedPoints ≤ 50
- UserData.Point[j].x < UserData.Point[j+1].x with index j = 1..(UserData.NumberOfUsedPoints – 1)
- -3.402823e+38 ≤ UserData.Point[i].x ≤ 3.402823e+38 with index i = 1..UserData.NumberOfUsedPoints
- -3.402823e+38 ≤ UserData.Point[i].y ≤ 3.402823e+38 with index i = 1..UserData.NumberOfUsedPoints
- UserData.Point[i].x and UserData.Point[i].y are valid REAL values (≠ NaN) with index i = 1..UserData.NumberOfUsedPoints

If one or more conditions are not met during the check, the values in the UserData structure are not transferred to the WorkingData structure. A corresponding error message is output at the ErrorBits (Page 536) parameter.

The preassignment of values in the UserData structure does not represent a valid configuration. Change the tags to valid values so that the tags can be used for the interpolation calculation.

Note

If more than the maximum number of 50 points are needed for your application, use two or more instances of Polyline.

Calculating the output value

If the input value at the Input parameter is below the first x-value or above the last x-value of the utilized points, configure the preassignment of the Output parameter with the following settings at the OutOfRangeMode tag:

- OutOfRangeMode = 0

  The output value is extrapolated with the slope of the first or last two points.

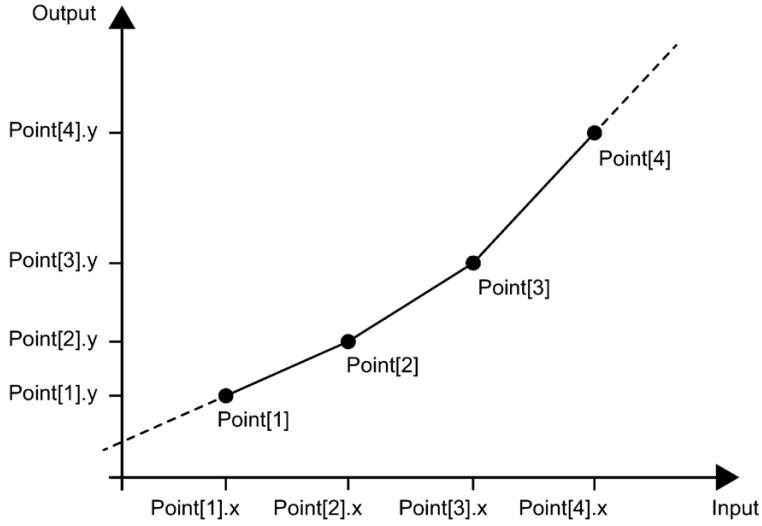

  If the OutOfRangeMode tag lies outside the permissible value range of 0 to 1, the default preassignment 0 becomes effective.

- OutOfRangeMode = 1

  The output value is limited to the y-value of the first or last point.

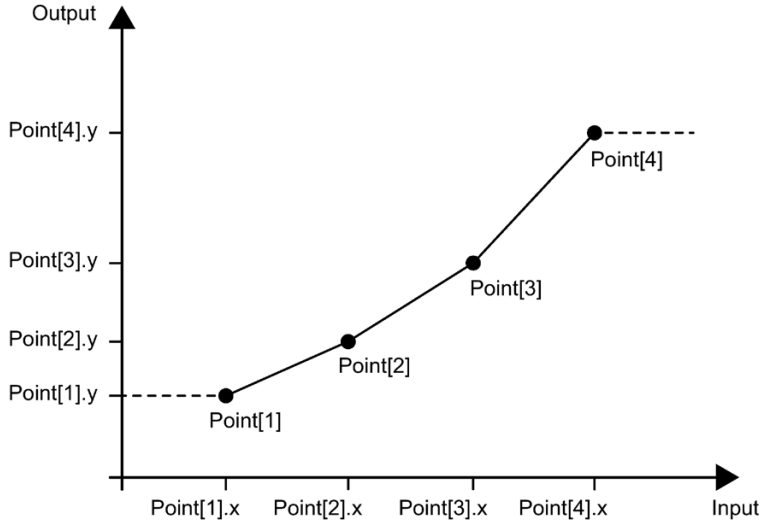

The Output parameter has a permissible value range of a REAL data type of -3.402823e+38 to 3.402823e+38. The output value at the Output parameter is checked for validity each time the Polyline instruction is executed. If the interpolation calculation yields an invalid REAL value, the output value is replaced with the setting at the ErrorMode tag.

Enable behavior EN/ENO

If one of the following conditions is met, enable output ENO is set to FALSE.

- Enable input EN is set to TRUE and the Output parameter is specified by a substitute output value in case of error messages ErrorBits ≥ 16#0001_0000.
- Enable input EN is set to FALSE.

If enable input EN is set to TRUE and the Output parameter can be determined as follows, enable output ENO is set to TRUE:

- With valid interpolation calculation when Reset = FALSE.

or

- With valid SubstituteOutput parameter when Reset = TRUE.

Currently utilized points

The NextXIndex index outputs the index of the next higher x-value for the current input value. You can use this to determine the points that are being used for the current interpolation calculation.

WorkingData.Point[NextXIndex-1].x < Input ≤ WorkingData.Point[NextXIndex].x

Example:

- If the value of the Input parameter is between WorkingData.Point[3].x and WorkingData.Point[4].x, the NextXIndex tag has the value 4.
- If the value of the Input parameter is less than WorkingData.Point[1].x, the NextXIndex tag has the value 1.
- If the value of the Input parameter is greater than WorkingData.Point[WorkingData.NumberOfUsedPoints].x and is thus greater than the last x-value of the polyline, the NextXIndex tag has the value of the WorkingData.NumberOfUsedPoints + 1 tag. Consequently, maximum permissible value of the NextXIndex tag is 51.

9.5.4 Input parameters of Polyline

Parameter	Data type	Default	Description
Input	REAL	0.0	Input value
Substitute-Output	REAL	0.0	SubstituteOutput is used as the substitute output value when • Reset = TRUE or • An error with error message ErrorBits ≥ 16#0001_0000 prevents correct calculation of the interpolation result, and the configured value of Error-Mode is 1 .
Validate	BOOL	FALSE	If Validate is set to TRUE, the polyline data in UserData is checked for validity and transferred to WorkingData.
ErrorAck	BOOL	FALSE	Deletes the error messages • Edge FALSE -> TRUE ErrorBits is reset
Reset	BOOL	FALSE	Performs a restart of the instruction • Edge FALSE -> TRUE ErrorBits is reset. • As long as Reset is set to TRUE, the substitute output value Substitute-Output is output at the output. • As long as Reset is set to FALSE, the interpolation calculation is performed.

9.5.5 Output parameters of Polyline

Parameter	Data type	Default	Description
Output	REAL	0.0	Output value
Error	BOOL	FALSE	When Error is set to TRUE, at least one error is currently pending.
ErrorBits	DWORD	DW#16#0	The ErrorBits parameter (Page 536) shows which error messages are pending. ErrorBits is retentive and is reset at a positive edge at Reset or ErrorAck .

9.5.6 Static tags of Polyline

Tag	Data type	Default	Description
UserData	AuxFct _PointTable	-	Input are for polyline data The polyline data in the UserData structure can be edited. Changes in this structure do not affect the interpolation calculation until the check and duplication of the data to the WorkingData structure is initiated.
UserData.NumberOfUsedPoints	INT	0	Number of points used for the interpolation calculation Permissible value range: 2 to 50
UserData.Point	Array[1..50] of AuxFct_Point	-	Points for the interpolation calculation The array with 50 elements of data type AuxFct_Point contains the value pairs of the points.
UserData.Point[i]	AuxFct_Point	-	Point for the interpolation calculation An element with index "i" from the "Point" array.
UserData.Point[i].x	REAL	0.0	x-value of the point Permissible value range: Point[i].x < Point[i+1].x
UserData.Point[i].y	REAL	0.0	y-value of the point
WorkingData	AuxFct _PointTable	-	Display area of the currently active polyline data The polyline data in the WorkingData structure cannot be edited. It is used for the interpolation calculation.
WorkingDa-ta.NumberOfUsedPoints	INT	0	Number of points used for the interpolation calculation Permissible value range: 2 to 50
WorkingData.Point	Array[1..50] of AuxFct_Point	-	Points for the interpolation calculation The array with 50 elements of type AuxFct_Point contains the value pairs of the points.
WorkingData.Point[i]	AuxFct_Point	-	Point for the interpolation calculation An element with index "i" from the "Point" array.
WorkingData.Point[i].x	REAL	0.0	x-value of the point Permissible value range: Point[i].x < Point[i+1].x
WorkingData.Point[i].y	REAL	0.0	y-value of the point
ErrorMode	INT	0	Selection of the substitute output value following an error • 0 = Input • 1 = SubstituteOutput • 2 = Last valid output value Permissible value range: 0 to 2

Tag	Data type	Default	Description
OutOfRangeMode	INT	0	Selection of the output value if the input value lies outside the defined x-values • 0 = Maintain slope • 1 = y-value of the first/last point Permissible value range: 0 to 1
NextXIndex	INT	2	Index of the next x-value Used for monitoring the index of the points that are being used for the current interpolation calculation. The following condition applies: WorkingData.Point[NextXIndex-1].x < Input ≤ WorkingData.Point[NextXIndex].x Do not change this value manually.

9.5.7 ErrorBits parameter

If several errors are pending simultaneously, the values of the ErrorBits are displayed with binary addition. The display of ErrorBits = 16#0000_0003, for example, indicates that the errors 16#0000_0001 and 16#0000_0002 are pending simultaneously.

For Polyline the errors output at the ErrorBits parameter are divided into two categories:

- Errors with error messages ErrorBits < 16#0001_0000
- Errors with error messages ErrorBits ≥ 16#0001_0000

Errors with error messages ErrorBits < 16#0001_0000

If one or more errors with error messages ErrorBits < 16#0001_0000 are pending, enable output ENO is not changed. The output value can be determined as follows despite this error:

- Interpolation calculation when Reset = FALSE.

or

- Output of SubstituteOutput when Reset = TRUE.

ErrorBits (DW#16#...)	Description
0000_0000	No error is pending.
0000_0001	The Output parameter was limited to -3.402823e+38 or +3.402823e+38. If the interpolation value is output at the output (Reset = FALSE and ErrorBits < 16#0001_0000), check the following tags used in the interpolation calculation: • Input • WorkingData.Point[i].x • WorkingData.Point[i].y If a substitute output value is output at the Output parameter when Reset = FALSE and ErrorBits ≥ 16#0001_0000, check the Input or SubstituteOutput parameter, depending on the value set at the ErrorMode tag. If Reset = TRUE, check the SubstituteOutput parameter. If the Output parameter is no longer limited, the error that is stored at the Error parameter is cleared.

ErrorBits (DW#16#...)	Description
0000_0002	One or more tags in the UserData structure have invalid values but valid polyline data is available in the WorkingData structure. The polyline data in the UserData structure was checked because the Validate parameter is set to TRUE while the Reset parameter is simultaneously set to FALSE. The polyline data in the UserData structure is not transferred to the WorkingData structure so that the changes made in the UserData structure will not become effective. The FB Polyline continues the interpolation calculation with the unchanged values in the WorkingData structure. Ensure that the following conditions are met when the Validate parameter is set to TRUE: 1. 2 ≤ UserData.NumberOfUsedPoints ≤ 50 2. UserData.Point[j].x < UserData.Point[j+1].x with index j = 1..(UserData.NumberOfUsedPoints - 1) 3. -3.402823e+38 ≤ UserData.Point[i].x ≤ 3.402823e+38 with index i = 1..UserData.NumberOfUsedPoints 4. -3.402823e+38 ≤ UserData.Point[i].y ≤ 3.402823e+38 with index i = 1..UserData.NumberOfUsedPoints 5. UserData.Point[i].x and UserData.Point[i].y are valid REAL values (≠ NaN) with index i = 1..UserData.NumberOfUsedPoints The error bit at the Error parameter is deleted when • The Validate parameter is set to FALSE. or • The Reset parameter is set to TRUE or • The Validate parameter is set to TRUE while the Reset parameter is set to FALSE and the five conditions for UserData named above are met.

Errors with error messages ErrorBits ≥ 16#0001_0000

If one or more errors with error messages ErrorBits ≥ 16#0001_0000 are pending, the output value cannot be determined as expected. The substitute output value is output instead. Enable output ENO is set to FALSE.

ErrorBits (DW#16#...)	Description
0001_0000	The SubstituteOutput or Input parameter that is being used as the output value has no valid REAL value. The output is set to 0.0. Possible error scenarios: • The Reset parameter is set to FALSE and an error with ErrorBits ≥ 16#0002_0000 is pending that prevents the interpolation calculation, and – the Input parameter has no valid REAL value, then tag ErrorMode = 0. – the SubstituteOutput parameter has no valid REAL value, then tag ErrorMode = 1. • The Reset parameter is set to TRUE while the SubstituteOutput parameter has no valid REAL value. The error bit at the Error parameter is cleared and enable output ENO is set to TRUE again, when • The SubstituteOutput or Input parameter is changed to a valid REAL value. or • The SubstituteOutput or Input parameter is no longer being used as the output value. If the SubstituteOutput or Input parameter is changed to a valid REAL value, FB Polyline uses the SubstituteOutput or Input parameter again as the output value.
0002_0000	The Input parameter has no valid REAL value, while the interpolation calculation is to be performed (Reset = FALSE). The Output parameter is assigned the substitute output value that you configure at the ErrorMode tag. Note that the output value is set to 0.0 when tag ErrorMode = 0 is set because the value at the Input parameter is not being used as a substitute output value in this case. The NextXIndex tag is not updated as long as the Input parameter has an invalid REAL value The error bit at the Error parameter is cleared and enable output ENO is set to TRUE again, when • The Input parameter is changed to a valid REAL value. or • The Reset parameter is set to TRUE. If the Input parameter is changed to a valid REAL value and the Reset parameter is set to FALSE, FB Polyline outputs the interpolation value again at the output.

ErrorBits (DW#16#...)	Description
0004_0000	The interpolation calculation yields an invalid REAL value for the Output parameter. Check the REAL values in the WorkingData structure for validity. The Output parameter is assigned the substitute output value that you configure at the ErrorMode tag. If you want to change the polyline data, first edit the UserData structure and then set parameter Validate = TRUE. Do not manually change the data in WorkingData structure. The NextXIndex tag can have an invalid value as long as this error is pending. The error bit at the Error parameter is cleared and enable output ENO is set to TRUE again, when • The interpolation calculation yields valid values for the Output parameter again. or • The Reset parameter is set to TRUE. If the interpolation calculation yields valid REAL values again and parameter Reset = FALSE is set, FB Polyline outputs the interpolation value again at the output.
0008_0000	One or more tags in the UserData structure have invalid values while no valid polyline data is available in the WorkingData structure. The polyline data in the UserData structure were checked because • The Validate parameter is set to TRUE while the Reset parameter is set to FALSE. or • When Polyline is executed for the first time after the change of operating state of the CPU from RUN to STOP , the Reset parameter is set to FALSE . The polyline data in the UserData structure is not transferred to the WorkingData structure so that the values in the UserData structure will not become effective. FB Polyline does not output the interpolation value at the Output parameter because no valid polyline data is contained in the WorkingData structure. The Output parameter is assigned the substitute output value that is configure at the ErrorMode tag. Ensure that the following conditions are met when the Validate parameter is set to TRUE or when the Reset parameter is set to FALSE while Polyline is being executed for the first time after the change of operating state of the CPU from STOP to RUN : 1. 2 ≤ UserData.NumberOfUsedPoints ≤ 50 2. UserData.Point[j].x < UserData.Point[j+1].x with index j = 1..(UserData.NumberOfUsedPoints – 1) 3. -3.402823e+38 ≤ UserData.Point[i].x ≤ 3.402823e+38 with index i = 1..UserData.NumberOfUsedPoints 4. -3.402823e+38 ≤ UserData.Point[i].y ≤ 3.402823e+38 with index i = 1..UserData.NumberOfUsedPoints 5. UserData.Point[i].x and UserData.Point[i].y are valid REAL values (≠ NaN) with index i = 1..UserData.NumberOfUsedPoints

ErrorBits (DW#16#...)	Description
0008_0000	Note that all tags in the UserData and WorkingData structures are not retentive. These tags are initialized with the start values after each change of operating state of the CPU from STOP to RUN. The error bit at the Error parameter is cleared and enable output ENO is set to TRUE again, when • The Validate parameter is set to TRUE while the Reset parameter is set to FALSE and the five conditions for UserData named above are met. or • When Polyline is executed for the first time after the change of operating state of the CPU from STOP to RUN, the Reset parameter is set to FALSE and the five conditions for UserData named above are met. or • The Reset parameter is set to TRUE. If the five conditions for UserData named above are met and the following conditions are met, FB Polyline outputs the interpolation value at the output again. • The Validate parameter is set to TRUE while the Reset parameter is set to FALSE. or • When Polyline is executed for the first time after the change of operating state of the CPU from RUN to STOP, the Reset parameter is set to FALSE.

9.6 SplitRange

9.6.1 Compatibility with CPU and FW

The following table shows which version of SplitRange can be used on which CPU:

CPU	FW	SplitRange
S7-1200	V4.2 or higher	V1.0
S7-1500	V2.0 or higher	V1.0

9.6.2 SplitRange description

Description

The SplitRange instruction converts the input value into an output value. The input value is located in the value range that is limited by Points.x1 and Points.x2. The output value is located in the value range that is limited by Points.y1 and Points.y2.

The following figure shows the relevant characteristic of an example configuration of the SplitRange instruction:

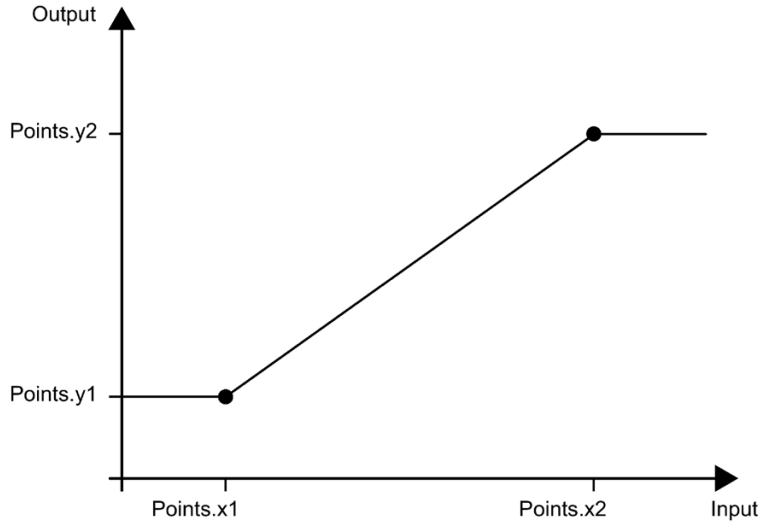

Use SplitRange when you need to control a process that is influenced by multiple actuators. SplitRange splits the output value range of the PID controller into multiple subranges. Assign a subrange to each actuator. The user program calls the block once per subrange. The input value of each SplitRange instance is connected to the output value of the PID controller.

The figure below shows an example of a control loop with two SplitRange instances and two actuators:

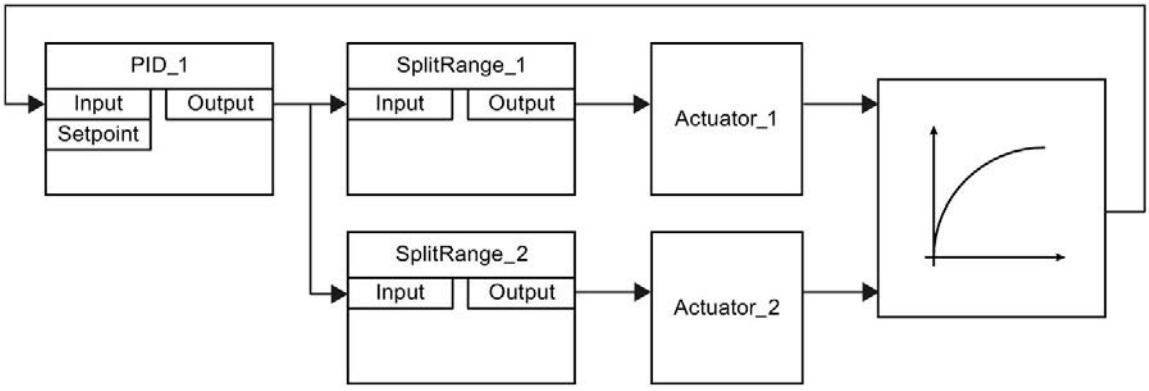

Validity of the SplitRange data

The value pairs in the Points structure define the input and output value range of SplitRange. The two value pairs are located in the static area of the block SplitRange.

SplitRange checks whether the following conditions are met for each call so that valid values are available for the calculation of the output value:

- Points.x1 < Points.x2
- Points.x1, Points.y1, Points.x2 and Points.y2 are within the permitted value range from -3.402823e+38 to 3.402823e+38
- Points.x1, Points.y1, Points.x2 and Points.y2 are valid REAL values (≠ NaN e.g. 16#7FFF_FFFF)

If one or more of these conditions are not met, correct calculation of the output value is not possible. A corresponding error message is output at the ErrorBits parameter.

The preassignment of the x and y values with 0.0 does not represent a valid configuration. Change the tags to valid values so that the tags can be used for the calculation of the output value.

Enable behavior EN/ENO

If one of the following conditions is met, enable output ENO is set to FALSE.

- Enable input EN is set to TRUE and the Output parameter is specified by a substitute output value in case of error messages ErrorBits ≥ 16#0001_0000.
- Enable input EN is set to FALSE.

If enable input EN is set to TRUE and the Output parameter can be determined as follows, enable output ENO is set to TRUE:

- With the valid calculation of the output value with Reset = FALSE.

or

- With valid SubstituteOutput parameter when Reset = TRUE.

Call

SplitRange is called as a single-instance DB in an OB. In an FB, SplitRange can be called as both a single-instance DB and a multi-instance DB and as a parameter-instance DB.

When the instruction is called, no technology object is created. No parameter assignment interface or commissioning interface is available. You assign the SplitRange parameters directly in the instance DB and commission SplitRange using a watch table of the user program in the CPU or HMI.

Startup

The tags in the static area of SplitRange are not retentive. These tags are initialized with the start values after each operating state transition of the CPU from STOP to RUN.

If you change the actual values in the Points structure in online mode and these values are to be retained after the operating state transition of the CPU from STOP to RUN, back up these values in the start values of the data block.

Reaction to error

The SplitRange instruction detects different errors that may occur during calculation of the output value. The result of the calculation can be output at the output despite a pending error. If an error prevents correct calculation of the output value, a substitute output value is output at the output.

You specify the substitute output value that is output if an error occurs that prevents correct calculation of the output value as follows at the ErrorMode tag:

- If the ErrorMode tag is set to 0, SplitRange outputs the input value at the Input parameter.
- If the ErrorMode tag is set to 1, SplitRange outputs the substitute output value. You assign the substitute output value at the SubstituteOutput parameter.
- If the ErrorMode tag is set to 2, SplitRange outputs the last valid output value at the Output parameter.

The Error parameter indicates if an error is pending. When the error is no longer pending, Error is set to FALSE. The ErrorBits parameter shows which errors have occurred. ErrorBits is retentive and is reset only by a positive edge at the Reset or ErrorAck parameter.

9.6.3 SplitRange input parameters

Parameter	Data type	Default	Description
Input	REAL	0.0	Input value
Substitute-Output	REAL	0.0	SubstituteOutput is used as the substitute output value when • Reset = TRUE or • An error with error message ErrorBits ≥ 16#0001_0000 prevents correct calculation of the output value, and the configured value of ErrorMode is 1.
ErrorAck	BOOL	FALSE	Deletes the error messages • Edge FALSE -> TRUE ErrorBits is reset
Reset	BOOL	FALSE	Performs a restart of the instruction • Edge FALSE -> TRUE ErrorBits is reset. • As long as Reset is set to TRUE, the substitute output value Substitute-Output is output at the output. • As long as Reset is set to FALSE, the calculation of the output value is performed.

9.6.4 SplitRange output parameters

Parameter	Data type	Default	Description
Output	REAL	0.0	Output value
ErrorBits	DWORD	DW#16#0	The ErrorBits parameter (Page 546) shows which error messages are pending. ErrorBits is retentive and is reset at a positive edge at Reset or ErrorAck .
Error	BOOL	FALSE	When Error is set to TRUE, at least one error is currently pending.

9.6.5 SplitRange static tags

Tag	Data type	Default	Description
Points	AuxFct_SplitRange_Points	-	Points data
Points.x1	REAL	0.0	x-value of point 1 Permissible value range: Points.x1 < Points.x2
Points.y1	REAL	0.0	y-value of point 1
Points.x2	REAL	0.0	x-value of point 2 Permissible value range: Points.x1 < Points.x2
Points.y2	REAL	0.0	y-value of point 2
ErrorMode	INT	0	Selection of the substitute output value following an error • 0 = Input • 1 = SubstituteOutput • 2 = Last valid output value Permissible value range: 0 to 2

9.6.6 ErrorBits parameter

If several errors are pending simultaneously, the values of the ErrorBits are displayed with binary addition. The display of ErrorBits = 16#0000_0003, for example, indicates that the errors 16#0000_0001 and 16#0000_0002 are pending simultaneously.

For SplitRange, the errors output at the ErrorBits parameter are divided into two categories:

- Errors with error messages ErrorBits < 16#0001_0000
- Errors with error messages ErrorBits ≥ 16#0001_0000

Errors with error messages ErrorBits < 16#0001_0000

If one or more errors with error messages ErrorBits < 16#0001_0000 are pending, enable output ENO is not changed. The output value can be determined as follows despite this error:

- Calculation of output value based on the input value and the value pairs in the Points structure when Reset = FALSE.

Or

- Output of SubstituteOutput when Reset = TRUE.

ErrorBits (DW#16#...)	Description
0000_0000	No error is pending.
0000_0001	The Output parameter was limited to -3.402823e+38 or +3.402823e+38. If a substitute output value is output at the Output parameter when Reset = FALSE and ErrorBits ≥ 16#0001_0000, check the Input or SubstituteOutput parameter, depending on the value set at the ErrorMode tag. If Reset = TRUE, check the SubstituteOutput parameter. If the Output parameter is no longer limited, the error that is stored at the Error parameter is cleared.

Errors with error messages ErrorBits ≥ 16#0001_0000

If one or more errors with error messages ErrorBits ≥ 16#0001_0000 are pending, the output value cannot be determined as expected. The substitute output value is output instead. Enable output ENO is set to FALSE.

ErrorBits (DW#16#...)	Description
0001_0000	The SubstituteOutput or Input parameter that is being used as the output value has no valid REAL value. The output is set to 0.0. Possible error scenarios: • The Reset parameter is set to FALSE and an error with ErrorBits ≥ 16#0002_0000 is pending that prevents the calculation of the output value, and – the Input parameter has no valid REAL value, then tag ErrorMode = 0. – the SubstituteOutput parameter has no valid REAL value, then tag ErrorMode = 1. • The Reset parameter is set to TRUE while the SubstituteOutput parameter has no valid REAL value. The error bit at the Error parameter is cleared and enable output ENO is set to TRUE again, when • The SubstituteOutput or Input parameter is changed to a valid REAL value. or • The SubstituteOutput or Input parameter is no longer being used as the output value. When the SubstituteOutput or Input parameter is changed to a valid REAL value, FB SplitRange uses the SubstituteOutput or Input parameter again as the output value.
0002_0000	The Input parameter has no valid REAL value while the calculation of the output value is being performed (Reset = FALSE). The Output parameter is assigned the substitute output value that you configure at the ErrorMode tag. Note that the output value is set to 0.0 when tag ErrorMode = 0 is set because the value at the Input parameter is not being used as a substitute output value in this case. The error bit at the Error parameter is cleared and enable output ENO is set to TRUE again, when • The Input parameter is changed to a valid REAL value. or • The Reset parameter is set to TRUE. When the Input parameter is changed to a valid REAL value and the Reset parameter is set to FALSE, FB SplitRange outputs the calculated output value again at the output.

ErrorBits (DW#16#...)	Description
0004_0000	One or more tags in the Points structure have invalid values. Or the calculation of the output value yields an invalid REAL value for the Output parameter. The Output parameter is assigned the substitute output value that you configure at the ErrorMode tag. Ensure that the following conditions are met: 1. Points.x1 < Points.x2 2. Points.x1, Points.y1, Points.x2 and Points.y2 are within the permitted value range from -3.402823e+38 to 3.402823e+38 3. Points.x1, Points.y1, Points.x2 and Points.y2 are valid REAL values (≠ NaN e.g. 16#7FFF_FFFF) Note that all tags in the Points structure are not retentive. These tags are initialized with the start values after each operating state transition of the CPU from STOP to RUN. The error bit at the Error parameter is cleared and enable output ENO is set to TRUE again, when • The three conditions listed above are met for the values in the Points structure. or • The Reset parameter is set to TRUE. When the three conditions listed above are met for the values in the Points structure and the Reset = FALSE parameter is set, FB SplitRange outputs the calculated output value again at the output.

9.7 RampFunction

9.7.1 Compatibility with CPU and FW

The following table shows which version of RampFunction can be used on which CPU:

CPU	FW	RampFunction
S7-1200	V4.2 or higher	V1.0
S7-1500	V2.0 or higher	V1.0

9.7.2 RampFunction description

Description

The RampFunction instruction limits the slew rate of a signal. RampFunction outputs a signal jump at the input as ramp function of the output value.

Use the RampFunction to prevent signal jumps, for example, in the following cases:

- Between setpoint source and setpoint input of the controller to achieve a smoother response without influencing the disturbance reaction.
- Between the controller output and the actuator input to preserve the actuator, for example, a motor with gears or the process.

The following limits can be set for the slew rate:

- Increasing slew rate in positive value range
- Decreasing slew rate in positive value range
- Increasing slew rate in negative value range
- Decreasing slew rate in negative value range

In addition, the RampFunction instruction limits the output value to the high and low limit.

When the slew rate limit or the low or high limit are reached, RampFunction sets the associated output bit to TRUE.

Function chart

The following figure shows the RampFunction instruction and a function chart as an example:

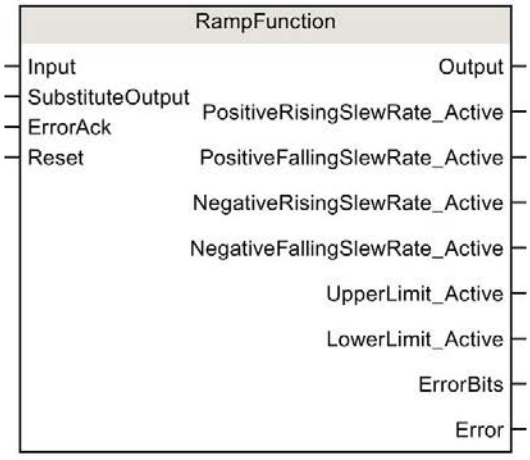

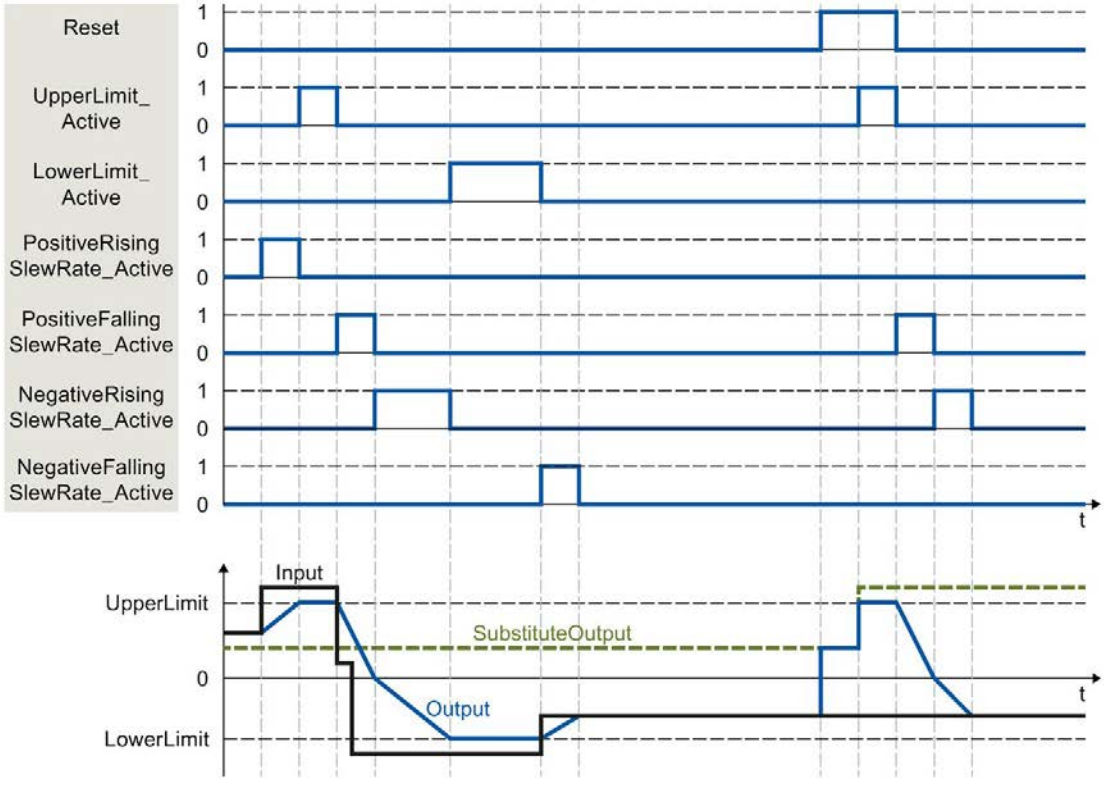

Call

RampFunction is called as a single-instance DB in an OB. In an FB, RampFunction can be called as both a single-instance DB and a multi-instance DB and as a parameter-instance DB.

When the instruction is called, no technology object is created. No parameter assignment interface or commissioning interface is available. You assign the RampFunction parameters directly in the instance DB and commission RampFunction using a watch table of the user program in the CPU or HMI.

Startup

The tags in the static area of RampFunction are not retentive. These tags are initialized with the start values after each operating state transition of the CPU from STOP to RUN.

If you change the actual values of the limits in online mode and these values are to be retained after the operating state transition of the CPU, back up these values in the start values of the data block.

You specify the initialization value for the Output parameter at the StartMode tag. The initialization value is output at the Output parameter during the first call of RampFunction after the operating state transition of the CPU. For subsequent calls, RampFunction calculates the output value, starting from this initialization value, based on the input value and the slew rate limits.

The following table shows the dependency between the StartMode tag and the Output parameter. The values in the Output column are output at the Output parameter after the operating state transition of the CPU.

StartMode	Output	Example
0	Value of the Input parameter	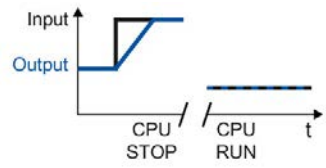
1	Value of the SubstituteOutput parameter	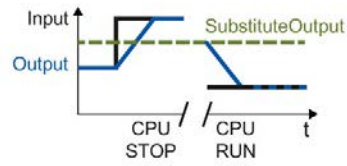
2	Remains unchanged. Output parameter is retentive.	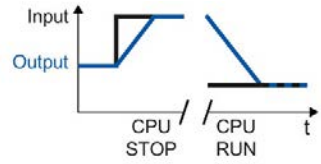

StartMode	Output	Example
3	0.0	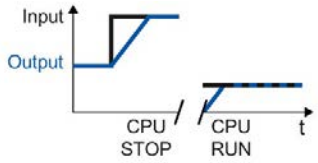
4	Value of the LowerLimit tag	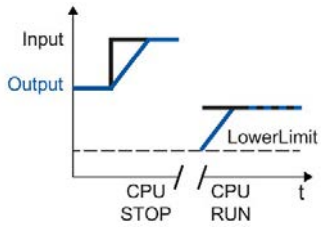
5	Value of the UpperLimit tag	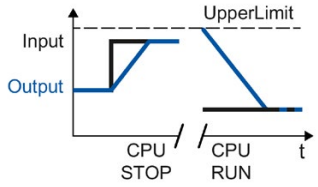

The following applies in addition for all values of the StartMode tag:

- When the values of the UpperLimit and LowerLimit tags are valid, the initialization value is limited to the value range of these tags. Only then is the initialization value output at the Output parameter.
- If the initialization value is invalid, the substitute output value is output at the Output parameter at the first call of the instruction after an operating state transition of the CPU. You configure the substitute output value at the ErrorMode tag. The substitute output value is limited by the value range of the tags UpperLimit and LowerLimit. For subsequent calls, the instruction calculates the output value starting from this substitute output value.
- The StartMode tag is only effective when the Reset = FALSE parameter is set at the first call of the instruction. If the Reset = TRUE parameter is set, the value of the SubstituteOutput parameter is output at the Output parameter.

Reaction to error

The RampFunction instruction detects different errors that may occur during calculation of the output value. The result of this calculation can be output at the output despite a pending error. If an error prevents correct calculation of the output value, a substitute output value is output at the output.

You specify the substitute output value that is output if an error occurs that prevents correct calculation of the output value at the ErrorMode tag.

The following table shows the dependency between the ErrorMode tag and the substitute output value that is output by the RampFunction at the Output parameter:

ErrorMode	Output
0	Value of the Input parameter
1	Value of the SubstituteOutput parameter
2	The last valid output value at the Output parameter
3	0.0
4	Value of the LowerLimit tag
5	Value of the UpperLimit tag

The following applies in addition for all values of the ErrorMode tag:

- If the substitute output value is not a valid REAL value, 0.0 is output as output value.
- When the values of the UpperLimit and LowerLimit tags are valid, the substitute output value is limited to the value range of these tags. Only then is the substitute output value output at the Output parameter.
- If an error is pending that prevents correct calculation of the output value, RampFunction changes at the Output parameter from the calculated output value to the substitute output value. A jump of the output value can occur, depending on the value of the ErrorMode tag.

The Error parameter indicates if an error is pending. When the error is no longer pending, Error is set to FALSE. The ErrorBits parameter shows which errors have occurred. ErrorBits is retentive and is reset only by a positive edge at the Reset or ErrorAck parameter.

9.7.3 RampFunction mode of operation

Limiting the slew rate

You can configure four limits for the slew rate of the input signal. The following factors determine which limit is currently in effect:

- Sign of the output value at the Output parameter
- Direction in which the amount of the output value changes at the Output parameter

The following table shows the effective tags for the slew rate limit depending on the Output parameter:

Output	Effective tag
Output ≥ 0 and |Output| rising	PositiveRisingSlewRate
Output ≥ 0 and |Output| falling	PositiveFallingSlewRate
Output < 0 and |Output| rising	NegativeRisingSlewRate
Output < 0 and |Output| falling	NegativeFallingSlewRate

The amount of the slew rate limits defines the maximum change of the output value per second.

Example:

The following scenario applies for the example:

- PositiveRisingSlewRate = 10.0
- Call time of RampFunction = 0.1 s
- Input > Output ≥ 0.0

Result:

The output value Output increases by 1.0 per call (10.0 per second) until the value at the Input parameter has been reached.

To disable the slew rate limit for one or more areas, set the corresponding tag to the value 3.402823e+38.

When the output value Output is currently limited by a slew rate limit, RampFunction sets the associated output bit to TRUE:

- PositiveRisingSlewRate_Active
- PositiveFallingSlewRate_Active
- NegativeRisingSlewRate_Active
- NegativeFallingSlewRate_Active

When the Reset parameter is set to TRUE, the slew rate limits are not in effect. This means jumps at the SubstituteOutput parameter result in jumps at the Output parameter.

RampFunction checks whether the following conditions for the tags PositiveRisingSlewRate, PositiveFallingSlewRate, NegativeRisingSlewRate and NegativeFallingSlewRate are met for each call:

- Values are within the permitted value range greater than 0.0 up to 3.402823e+38
- Values are valid REAL values (≠ NaN e.g. 16#7FFF_FFFF)

If one or more conditions are not met, the substitute output value is output at the Output parameter. A corresponding error message is output at the ErrorBits parameter.

Limiting the output value

The output value Output is always limited to the value range of the tags UpperLimit and LowerLimit as long as these tags have valid values.

When the output value Output is currently limited by this value range, RampFunction sets the associated output bit to TRUE:

- UpperLimit_Active
- LowerLimit_Active

The limit of the output value has a higher priority than the limit of the slew rate. Changes of the tags UpperLimit and LowerLimit therefore result in jumps of the output value Output, if this is required to observe the limits of the tags UpperLimit and LowerLimit. The limiting of the slew rate is not taken into account in this case.

Example:

If the UpperLimit is reduced from 100.0 to 80.0 while the values of the parameters Input and Output are 90.0, the output value Output jumps to 80.0. The output value Output jumps to 80.0 regardless whether or not it violates the configured limit for the slew rate.

RampFunction checks whether the following conditions are met for each call:

- LowerLimit < UpperLimit
- LowerLimit and UpperLimit are within the permitted value range from -3.402823e+38 to 3.402823e+38
- LowerLimit and UpperLimit are valid REAL values (≠ NaN e.g. 16#7FFF_FFFF)

If one or more conditions are not met, the substitute output value is output at the Output parameter. A corresponding error message is output at the ErrorBits parameter.

In addition, RampFunction checks for each call whether the output value Output has the permitted value range of a REAL data type from -3.402823e+38 to 3.402823e+38. If the calculation of the output value yields an invalid REAL value, the substitute output value is output at the Output parameter. You configure the substitute output value at the ErrorMode tag.

Enable behavior EN/ENO

If one of the following conditions is met, enable output ENO is set to FALSE.

- Enable input EN is set to TRUE and the Output parameter is specified by a substitute output value in case of error messages ErrorBits ≥ 16#0001_0000.
- Enable input EN is set to FALSE.

If enable input EN is set to TRUE and the Output parameter can be determined as follows, enable output ENO is set to TRUE:

- With the signal limiting the slew rate at Reset = FALSE.

or

- With valid SubstituteOutput parameter when Reset = TRUE.

Measuring the cycle time automatically

To calculate the slew rate of the output value RampFunction needs the time that has expired since the last call of RampFunction.

The cycle time by default is measured automatically and output as of the second call at the CycleTime.Value tag. RampFunction measures the cycle time for each call of the instruction and can therefore be used in non-equidistant call cycles, e.g. in OB1.

If measurement of the cycle time has an invalid result, RampFunction calculates the current output value with the last valid cycle time. In addition, RampFunction outputs an error message at the ErrorBits parameter.

When you disable automatic measurement of the cycle time by setting the tag CycleTime.EnableMeasurement = FALSE, you must enter the cycle time manually at the CycleTime.Value tag. RampFunction checks the CycleTime.Value tag for validity at each call.

Automatic measurement of the cycle time with breakpoints

When breakpoints are active between two calls of RampFunction, automatic measurement of the cycle time results in the actual time that has expired between two calls. When one breakpoint is active, the CPU is in HOLD operating state.

Note

The active breakpoints extend the time period between two calls of RampFunction.

The longer the time period between two calls, the greater the maximum permitted change of the output value at the Output parameter.

Example:

The following scenario applies for the example:

- PositiveRisingSlewRate = 10.0
- Call time of RampFunction = 0.1 s
- Input > Output ≥ 0.0

Result without breakpoints:

The output value Output increases by 1.0 per call until the value at the Input parameter has been reached.

Result with an active breakpoint of ten seconds:

With the next call, the output value Output increases by 100.0.

If you do not need the calculation of the output value based on the actual time with active breakpoints, follow these steps:

- Disable automatic measurement of the cycle times by setting the tag CycleTime.EnableMeasurement = FALSE.
- Enter the cycle time manually at the CycleTime.Value tag.

9.7.4 RampFunction input parameters

Parameter	Data type	Default	Description
Input	REAL	0.0	Input value
Substitute-Output	REAL	0.0	SubstituteOutput is used as the substitute output value when • Reset = TRUE or • An error with error message ErrorBits ≥ 16#0001_0000 prevents correct calculation of the output value, and the configured value of ErrorMode is 1.
ErrorAck	BOOL	FALSE	Deletes the error messages • Edge FALSE -> TRUE ErrorBits is reset
Reset	BOOL	FALSE	Performs a restart of the instruction • Edge FALSE -> TRUE ErrorBits is reset. • As long as Reset is set to TRUE, the substitute output value Substitute-Output is output at the output. • As long as Reset is set to FALSE, the calculation of the output value is performed.

9.7.5 RampFunction output parameters

Parameter	Data type	Default	Description
Output	REAL	0.0	Output value
PositiveRisingSle-wRate_Active	BOOL	FALSE	When PositiveRisingSlewRate_Active = TRUE, the output value is currently limited by PositiveRisingSlewRate .
PositiveFallingSle-wRate_Active	BOOL	FALSE	When PositiveFallingSlewRate_Active = TRUE, the output value is currently limited by PositiveFallingSlewRate.
NegativeRisingSle-wRate_Active	BOOL	FALSE	When NegativeRisingSlewRate_Active = TRUE, the output value is currently limited by NegativeRisingSlewRate.
NegativeFallingSle-wRate_Active	BOOL	FALSE	When NegativeFallingSlewRate_Active = TRUE, the output value is currently limited by NegativeFallingSlewRate.
UpperLimit_Active	BOOL	FALSE	When UpperLimit_Active = TRUE, the output value is currently limited by UpperLimit.
LowerLimit_Active	BOOL	FALSE	When LowerLimit_Active = TRUE, the output value is currently limited by LowerLimit.
ErrorBits	DWORD	DW#16#0	The ErrorBits parameter (Page 561) shows which error messages are pending. ErrorBits is retentive and is reset at a positive edge at Reset or ErrorAck .
Error	BOOL	FALSE	When Error = TRUE, at least one error is currently pending.

9.7.6 RampFunction static tags

Tag	Data type	Default	Description
PositiveRisingSlewRate	REAL	10.0	Limit for slew rate of the output value per second in positive range with rising amount With PositiveRisingSlewRate = 3.402823e+38, this slew rate limit is disabled. Permissible value range: > 0.0
PositiveFallingSlewRate	REAL	10.0	Limit for slew rate of the output value per second in positive range with falling amount With PositiveFallingSlewRate = 3.402823e+38, this slew rate limit is disabled. Permissible value range: > 0.0
NegativeRisingSlewRate	REAL	10.0	Limit for slew rate of the output value per second in negative range with rising amount With NegativeRisingSlewRate = 3.402823e+38, this slew rate limit is disabled. Permissible value range: > 0.0
NegativeFallingSlewRate	REAL	10.0	Limit for slew rate of the output value per second in negative range with falling amount With NegativeFallingSlewRate = 3.402823e+38, this slew rate limit is disabled. Permissible value range: > 0.0
UpperLimit	REAL	100.0	High limit of output value Permissible value range: > LowerLimit
LowerLimit	REAL	0.0	Low limit of output value Permissible value range: < UpperLimit
ErrorMode	INT	2	Selection of the substitute output value following an error • 0 = Input • 1 = SubstituteOutput • 2 = Last valid output value • 3 = 0.0 • 4 = LowerLimit • 5 = UpperLimit Permissible value range: 0 to 5
StartMode	INT	2	Selecting the output value for the first call of the instruction • 0 = Input • 1 = SubstituteOutput • 2 = Last output value • 3 = 0.0 • 4 = LowerLimit • 5 = UpperLimit Permissible value range: 0 to 5
CycleTime	AuxFct _CycleTime	-	Cycle time data

Tag	Data type	Default	Description
CycleTime.Value	REAL	0.1	Time interval between two calls of the instruction in seconds Permissible value range: > 0.0
CycleTime .EnableMeasurement	BOOL	TRUE	Enable automatic measurement of the cycle time

9.7.7 ErrorBits parameter

If several errors are pending simultaneously, the values of the ErrorBits are displayed with binary addition. The display of ErrorBits = 16#0000_0003, for example, indicates that the errors 16#0000_0001 and 16#0000_0002 are pending simultaneously.

The RampFunction instruction divides errors that are output at the ErrorBits parameter in two categories:

- Errors with error messages ErrorBits < 16#0001_0000
- Errors with error messages ErrorBits ≥ 16#0001_0000

Errors with error messages ErrorBits < 16#0001_0000

If one or more errors with error messages ErrorBits < 16#0001_0000 are pending, enable output ENO is not changed. The output value can be determined as follows despite this error:

- Calculation of output value based on the input value and the limits for the slew rate when Reset = FALSE.

or

- Output of SubstituteOutput when Reset = TRUE.

ErrorBits (DW#16#...)	Description
0000_0000	No error is pending.
0000_0002	The measurement of the cycle time yields in an invalid value while the output value is being calculated (Reset = FALSE). If a valid value of the cycle time has already been measured, RampFunction calculates the output value based on the last value of the CycleTime.Value tag. If no valid value of the cycle time was previously measured, RampFunction still outputs the output value at the Output parameter that is configured with the StartMode tag. The error bit at the Error parameter is deleted when • The measurement of the cycle time yields a valid value or • The Reset parameter is set to TRUE

Errors with error messages ErrorBits ≥ 16#0001_0000

If one or more errors with error messages ErrorBits ≥ 16#0001_0000 are pending, the output value cannot be calculated as expected. The substitute output value is output instead. Enable output ENO is set to FALSE.

The output value limit remains active as long as the tags LowerLimit and UpperLimit have valid values.

The slew rate limit is no longer active. Jumps at the output value can occur in one of the following scenarios:

- When the error is detected, RampFunction switches from the calculated output value to the replacement output value. Whether a jump occurs depends on the value of the tag ErrorMode.
- The substitute output value is changed while it is active.

ErrorBits (DW#16#...)	Description
0001_0000	The SubstituteOutput or a different tag that is being used as output value has no valid REAL value. The output value at the Output parameter is therefore set to 0.0 and limited by the tags LowerLimit and UpperLimit. Possible error scenarios: • The Reset parameter is set to FALSE and an error with ErrorBits ≥ 16#0002_0000 is pending that prevents the calculation of the output value, and – the Input parameter has no valid REAL value, then tag ErrorMode = 0. – the SubstituteOutput parameter has no valid REAL value, then tag ErrorMode = 1. – the LowerLimit tag has no valid REAL value, then tag ErrorMode= 4. – the UpperLimit tag has no valid REAL value, then tag ErrorMode= 5. • The Reset parameter is set to TRUE while the SubstituteOutput parameter has no valid REAL value. The error bit at the Error parameter is cleared and enable output ENO is set to TRUE again, when • The SubstituteOutput, Input, LowerLimit or UpperLimit parameter is changed to a valid REAL value. or • The SubstituteOutput, Input, LowerLimit or UpperLimit parameter is no longer being used as the output value. When the SubstituteOutput, Input, LowerLimit or UpperLimit parameter is changed to a valid REAL value, RampFunction outputs the value of this parameter again as the output value.
0002_0000	The Input parameter has no valid REAL value while the calculation of the output value is being performed (Reset = FALSE). The substitute output value is output at the Output parameter that is configured at the ErrorMode tag and is limited by the tags UpperLimit and LowerLimit. Note that the output value is set to 0.0 when tag ErrorMode = 0 is set because the value at the Input parameter is not being used as a substitute output value in this case. The error bit at the Error parameter is cleared and enable output ENO is set to TRUE again, when • The Input parameter is changed to a valid REAL value. or • The Reset parameter is set to TRUE. When the Input parameter is changed to a valid REAL value and the Reset parameter is set to FALSE, RampFunction outputs the calculated output value again at the Output parameter.

ErrorBits (DW#16#...)	Description
0004_0000	The calculation of the output value yields an invalid REAL value at the Output parameter. The substitute output value is output at the Output parameter that is configured at the ErrorMode tag and is limited by the tags UpperLimit and LowerLimit. The error bit at the Error parameter is cleared and enable output ENO is set to TRUE again, when • The calculation of the output value outputs valid values at the Output parameter again. or • The Reset parameter is set to TRUE. When the calculation of the output value yields valid REAL values again and the Reset parameter is set to FALSE, RampFunction outputs the calculated output value again at the Output parameter.
0008_0000	The LowerLimit or UpperLimit tag has an invalid value. The following value is output at the Output parameter, depending on the Reset parameter: • Reset = FALSE The substitute output value that is configured with the ErrorMode tag is output at the Output parameter. • Reset = TRUE The value of the SubstituteOutput parameter is output at the Output parameter. In both cases, the Ouput parameter is limited to the value range of the REAL data type from -3.402823e+38 to 3.402823e+38. Ensure that the following conditions are met: 1. LowerLimit < UpperLimit 2. LowerLimit and UpperLimit are within the permitted value range from -3.402823e+38 to 3.402823e+38 3. LowerLimit and UpperLimit are valid REAL values (≠ NaN e.g. 16#7FFF_FFFF) Note that the output value is set to 0.0 at the Output parameter when Reset = FALSE and • the LowerLimit tag has no valid REAL value, the tag ErrorMode = 4 or • the UpperLimit tag has no valid REAL value, then tag ErrorMode = 5. In this case, the values of the tags LowerLimit and UpperLimit are not output as substitute output values at the Output parameter because they are invalid. When the three conditions listed above for the LowerLimit and UpperLimit tags are met, the following applies: • The error bit at the Error parameter is cleared. • Enable output ENO is set to TRUE again. • RampFunction outputs the output value at the Output parameter again with – Reset = FALSE, by calculating and limiting the output value. – Reset = TRUE due to the limited value at the SubstituteOutput. parameter.

ErrorBits (DW#16#...)	Description
0010_0000	At least one of the following parameters has invalid values while the calculation of the output value is being performed (Reset = FALSE): 1. PositiveRisingSlewRate 2. PositiveFallingSlewRate 3. NegativeRisingSlewRate 4. NegativeFallingSlewRate The substitute output value is output at the Output parameter that is configured at the ErrorMode tag and is limited by the tags UpperLimit and LowerLimit. Ensure that the following conditions are met for all four parameters listed above: • The values are within the permitted value range greater than 0.0 up to 3.402823e+38 • The values are valid REAL values (≠ NaN e.g. 16#7FFF_FFFF) The error bit at the Error parameter is cleared and enable output ENO is set to TRUE again, when • The conditions listed above are met for the four parameters or • The Reset parameter is set to TRUE. When the conditions listed above are met for the four parameters and Reset is set to FALSE, RampFunction outputs the calculated output value at the Output parameter again.
0020_0000	The tag (configured with StartMode) for the initialization of the Output parameter at the first call of the instruction does not have a valid REAL value. The substitute output value is output with the first call of the instruction at the Output parameter that is configured at the ErrorMode tag and is limited by the tags LowerLimit and UpperLimit. For subsequent calls, RampFunction calculates the output value starting from this substitute output value. This error occurs at the first call of the instruction after the operating state transition of the CPU from STOP to RUN when Reset = FALSE and • The SubstituteOutput parameter has no valid REAL value with StartMode= 1. • The Output parameter has no valid REAL value with StartMode = 2. The following applies for the subsequent calls: • The error bit at the Error parameter is cleared and enable output ENO is set to TRUE again. • RampFunction outputs the calculated output value at the Output parameter again.
0040_0000	The CycleTime.Value tag has an invalid value, while the calculation of the output value is being performed (Reset = FALSE). The substitute output value is output at the Output parameter that is configured at the ErrorMode tag and is limited by the tags UpperLimit and LowerLimit. Ensure that the following conditions are met: • 0.0 < CycleTime.Value < 3.402823e+38 • CycleTime.Value is a valid REAL value (≠ NaN e.g. 16#7FFF_FFFF) To automatically calculate the value of the CycleTime.Value tag, set the CycleTime.EnableMeasurement tag to TRUE. The error bit at the Error parameter is cleared and enable output ENO is set to TRUE again, when • the conditions listed above are met for the CycleTime.Value tag or • The Reset parameter is set to TRUE. When the conditions listed above are met for the CycleTime.Value tag and Reset is set to FALSE, RampFunction outputs the calculated output value at the Output parameter again.

Service & Support

A

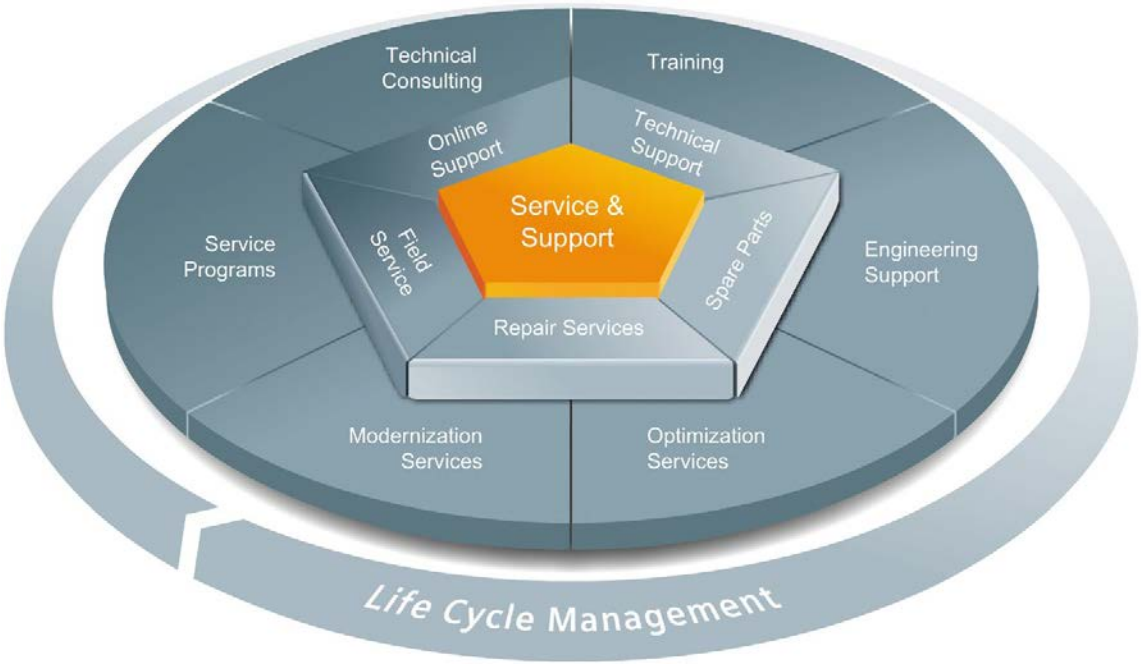

Unmatched complete service for the entire life cycle

For machine manufacturers, solution providers and plant operators: The service offering from Siemens Industry Automation and Drive Technologies includes comprehensive services for a wide range of different users in all sectors of the manufacturing and process industry.

To accompany our products and systems, we offer integrated and structured services that provide valuable support in every phase of the life cycle of your machine or plant – from planning and implementation through commissioning as far as maintenance and modernization.

Our Service & Support accompanies you worldwide in all matters concerning automation and drive technology from Siemens. We provide direct on-site support in more than 100 countries through all phases of the life cycle of your machines and plants.

You have an experienced team of specialists at your side to provide active support and bundled know-how. Regular training courses and intensive contact among our employees – even across continents – ensure reliable service in the most diverse areas.

Online Support

The comprehensive online information platform supports you in all aspects of our Service & Support at any time and from any location in the world.

You can find Online Support at the following address on the Internet.

Technical Consulting

Support in planning and designing your project: From detailed actual-state analysis, definition of the goal and consultation on product and system questions right through to the creation of the automation solution.

Technical Support

Expert advice on technical questions with a wide range of demand-optimized services for all our products and systems.

You can find Technical Support at the following address on the Internet.

Training

Extend your competitive edge – through practical know-how directly from the manufacturer.

You can find the training courses at the following address on the Internet.

Engineering Support

Support during project engineering and development with services fine-tuned to your requirements, from configuration through to implementation of an automation project.

Field Service

Our Field Service offers you services for commissioning and maintenance – to ensure that your machines and plants are always available.

Spare parts

In every sector worldwide, plants and systems are required to operate with constantly increasing reliability. We will provide you with the support you need to prevent a standstill from occurring in the first place: with a worldwide network and optimum logistics chains.

Repairs

Downtimes cause problems in the plant as well as unnecessary costs. We can help you to reduce both to a minimum – with our worldwide repair facilities.

Optimization

During the service life of machines and plants, there is often a great potential for increasing productivity or reducing costs.

To help you achieve this potential, we are offering a complete range of optimization services.

Modernization

You can also rely on our support when it comes to modernization – with comprehensive services from the planning phase all the way to commissioning.

Service programs

Our service programs are select service packages for an automation and drives system or product group. The individual services are coordinated with each other to ensure smooth coverage of the entire life cycle and support optimum use of your products and systems.

The services of a service program can be flexibly adapted at any time and used separately.

Examples of service programs:

- Service contracts
- Plant IT Security Services
- Life Cycle Services for Drive Engineering
- SIMATIC PCS 7 Life Cycle Services
- SINUMERIK Manufacturing Excellence
- SIMATIC Remote Support Services

Benefits at a glance:

- Reduced downtimes for increased productivity
- Optimized maintenance costs due to a tailored scope of services
- Costs that can be calculated and therefore planned
- Service reliability due to guaranteed response times and spare part delivery times
- Customer service personnel will be supported and relieved of additional tasks
- Comprehensive service from a single source, fewer interfaces and greater expertise

Contact

At your service locally, around the globe: your partner for consultation, sales, training, service, support, spare parts... for the entire range of products from Industry Automation and Drive Technologies.

You can find your personal contact in our contacts database on the Internet.

Index

C

CONT_C
- Block diagram, 469
- Input parameters, 470
- Mode of operation, 467
- Output parameters, 472

CONT_S
- Block diagram, 475
- Input parameters, 476
- Instruction, 473
- Mode of operation, 474
- Output parameters, 477

P

PID_3Step
- In/out parameters, 335
- Input parameters, 331, 365
- Instruction, 321, 357
- Output parameters, 333, 367
- Static tags, 369

PID_Compact
- In/out parameters, 267
- Input parameters, 264, 301
- Instruction, 297
- Output parameters, 266, 302
- Static tags, 303

PID_Temp
- ActivateRecoverMode tag, 458
- Cascade, 409
- Cascading, 195
- ErrorBits parameter, 455
- In/out parameters, 409
- Input parameters, 405
- Mode, 409
- Multi-zone applications, 203
- Operating principle, 399
- Output parameters, 407
- PID_Temp state and mode parameters, 446
- PwmPeriode, 461
- Tag Warning, 460

PULSEGEN
- Input parameters, 487
- Output parameters, 488

PULSEGEN
- Instruction, 478
- Mode of operation, 479

S

Software controller
- Configuring, 39

Symbol
- For value comparison, 46

T

TCONT_CP
- In/out parameters, 506
- Input parameters, 504
- Instruction, 489
- Mode of operation, 490
- Output parameters, 505
- Static tags, 507

TCONT_S
- In/out parameters, 521
- Input parameters, 520
- Instruction, 514
- Operating principle, 515
- Output parameters, 521
- Static tags, 522

Technology objects
- CONT_C, 212
- CONT_S, 218
- PID_3Step, 118
- PID_Compact, 73
- PID_Temp, 161
- TCONT_CP, 222
- TCONT_S, 246

V

Values
- Comparing, 46

SIEMENS

SIMATIC

S7-1500, ET 200MP, ET 200SP

Counting, measurement and position detection

Function manual

Edition 10/2018

siemens.com

SIEMENS

SIMATIC

S7-1500, ET 200MP, ET 200SP, ET 200AL
Counting, measurement and position detection

Function Manual

Preface

Documentation guide 1

The basics of counting, measurement and position input 2

Using the High_Speed_Counter technology object 3

Using the SSI_Absolute_Encoder technology object 4

Using the module 5

Service & Support A

10/2018

A5E32009889-AH

Legal information

Warning notice system

This manual contains notices you have to observe in order to ensure your personal safety, as well as to prevent damage to property. The notices referring to your personal safety are highlighted in the manual by a safety alert symbol, notices referring only to property damage have no safety alert symbol. These notices shown below are graded according to the degree of danger.

⚠ DANGER

indicates that death or severe personal injury **will** result if proper precautions are not taken.

⚠ WARNING

indicates that death or severe personal injury **may** result if proper precautions are not taken.

⚠ CAUTION

indicates that minor personal injury can result if proper precautions are not taken.

NOTICE

indicates that property damage can result if proper precautions are not taken.

If more than one degree of danger is present, the warning notice representing the highest degree of danger will be used. A notice warning of injury to persons with a safety alert symbol may also include a warning relating to property damage.

Qualified Personnel

The product/system described in this documentation may be operated only by **personnel qualified** for the specific task in accordance with the relevant documentation, in particular its warning notices and safety instructions. Qualified personnel are those who, based on their training and experience, are capable of identifying risks and avoiding potential hazards when working with these products/systems.

Proper use of Siemens products

Note the following:

⚠ WARNING

Siemens products may only be used for the applications described in the catalog and in the relevant technical documentation. If products and components from other manufacturers are used, these must be recommended or approved by Siemens. Proper transport, storage, installation, assembly, commissioning, operation and maintenance are required to ensure that the products operate safely and without any problems. The permissible ambient conditions must be complied with. The information in the relevant documentation must be observed.

Trademarks

All names identified by ® are registered trademarks of Siemens AG. The remaining trademarks in this publication may be trademarks whose use by third parties for their own purposes could violate the rights of the owner.

Disclaimer of Liability

We have reviewed the contents of this publication to ensure consistency with the hardware and software described. Since variance cannot be precluded entirely, we cannot guarantee full consistency. However, the information in this publication is reviewed regularly and any necessary corrections are included in subsequent editions.

Siemens AG
Division Digital Factory
Postfach 48 48
90026 NÜRNBERG
GERMANY

A5E32009889-AH
℗ 09/2018 Subject to change

Copyright © Siemens AG 2018.
All rights reserved

Preface

Purpose of the documentation

This documentation supports you in configuring and programming modules for counting and measurement tasks of the S7-1500, ET 200MP and ET 200SP, as well as in position feedback and position input.

Basic knowledge required

The following knowledge is required in order to understand the documentation:

- General knowledge of automation technology
- Knowledge of the industrial automation system SIMATIC
- Knowledge about the use of Windows-based computers
- Proficiency with STEP 7

Validity of the documentation

This documentation applies to the use of the following modules:

- S7-1500 modules
  - TM Count 2x24V (as of firmware version V1.3)
  - TM PosInput 2 (as of firmware version V1.3)
  - TM Timer DIDQ 16x24V
  - CPU 1511C-1 PN
  - CPU 1512C-1 PN
  - DI 32x24VDC HF (as of firmware version V2.1.0)
  - DI 16x24VDC HF (as of firmware version V2.1.0)
- ET 200SP modules
  - TM Count 1x24V (as of firmware version V1.3)
  - TM PosInput 1 (as of firmware version V1.3)
  - TM Timer DIDQ 10x24V
  - DI 8x24VDC HS
- ET 200AL modules
  - DIQ 16x24VDC/0.5A 8xM12

TM Count, TM PosInput and compact CPU are suitable for complex counting and measuring tasks and for position detection. TM Timer DIDQ and digital modules are suitable for simple counting tasks.

Conventions

Please observe notes marked as follows:

Note

The notes contain important information on the product described in the documentation, on the handling of the product or on part of the documentation to which particular attention should be paid.

Additional assistance

- You can find information about the technical support offerings in the appendix Service & Support (Page 234).
- The range of technical documentation for the individual SIMATIC products and automation systems is available on the Internet (http://www.siemens.com/simatic-tech-doku-portal).
- The online catalog and the ordering system are available on the Internet (https://mall.industry.siemens.com).

Table of contents

Preface 3

1 Documentation guide 9

2 The basics of counting, measurement and position input 14

2.1 Overview of modules and properties 14

2.2 Basics of counting, measuring and position input (TM Count, TM PosInput, Compact CPU) 18

2.2.1 Convention 18

2.2.2 Overview of applications 18

2.2.3 Recording of count signals 24

2.2.3.1 Counting with incremental or pulse encoder 24

2.2.3.2 Position input with SSI absolute encoder 26

2.2.4 Behavior at the counting limits 28

2.2.5 Gate control with incremental or pulse encoder 30

2.2.5.1 Software gate 30

2.2.5.2 Hardware gate 30

2.2.5.3 Internal gate 32

2.2.5.4 Counter behavior at gate start 33

2.2.6 Capture (Latch) 34

2.2.6.1 Capture with incremental or pulse encoder 34

2.2.6.2 Capture with SSI absolute encoder 37

2.2.7 Synchronization 39

2.2.7.1 Synchronization by digital input 42

2.2.7.2 Synchronization at signal N 44

2.2.8 Comparison values 47

2.2.8.1 Comparison values and outputs 47

2.2.8.2 Switching at comparison values with counter value as reference 48

2.2.8.3 Switching at comparison values with position value (SSI absolute value) as reference 52

2.2.8.4 Switching at comparison values with measured value as reference 56

2.2.9 Measured value determination 58

2.2.9.1 Overview of measuring functions 58

2.2.9.2 Measured value determination with incremental or pulse encoder 59

2.2.9.3 Measured value determination with SSI absolute encoder 63

2.2.10 Hysteresis 66

2.2.10.1 Hysteresis with incremental or pulse encoder 66

2.2.10.2 Hysteresis with SSI absolute encoder 68

2.2.11 Interrupts 70

2.2.12 Position detection for Motion Control 70

2.2.13 Encoder signals 71

2.2.13.1 24 V and TTL count signals 71

2.2.13.2 RS422 count signals 73

2.2.13.3 SSI signals 75

2.2.14 Signal evaluation of incremental signals ... 76
2.2.14.1 Overview ... 76
2.2.14.2 Single evaluation ... 76
2.2.14.3 Double evaluation ... 77
2.2.14.4 Quadruple evaluation ... 78
2.2.15 Clock synchronization (TM Count and TM PosInput) ... 79

2.3 Basics of counting (TM Timer DIDQ) ... 81
2.3.1 Overview of applications ... 81
2.3.2 Counting with incremental encoder ... 82
2.3.3 Counting with pulse encoder ... 83
2.3.4 24 V count signals ... 84
2.3.5 Isochronous mode ... 85

2.4 Basics of counting (digital modules) ... 86
2.4.1 Overview of applications ... 86
2.4.2 Counting with pulse encoders ... 87
2.4.3 Behavior at the counting limits ... 88
2.4.4 Gate control ... 90
2.4.4.1 Software gate ... 90
2.4.4.2 Hardware gate ... 90
2.4.4.3 Internal gate ... 91
2.4.5 Comparison values ... 92
2.4.6 Interrupts ... 95
2.4.7 24 V count signals ... 95
2.4.8 Isochronous mode ... 96

3 Using the High_Speed_Counter technology object ... 97

3.1 Convention ... 97

3.2 High_Speed_Counter technology object ... 97

3.3 Overview of the configuration steps ... 98

3.4 Add technology object ... 99

3.5 Configuring the High_Speed_Counter ... 101
3.5.1 Working with the configuration dialog ... 101
3.5.2 Basic parameters ... 103
3.5.3 Counter inputs (High_Speed_Counter) ... 104
3.5.4 Counter behavior ... 109
3.5.4.1 Counting limits and start value ... 109
3.5.4.2 Counter behavior at limits and gate start ... 109
3.5.5 Behavior of a DI (High_Speed_Counter) ... 111
3.5.6 Behavior of a DQ (High_Speed_Counter) ... 116
3.5.7 Specify measured value (High_Speed_Counter) ... 121

3.6 Programming the High_Speed_Counter ... 123
3.6.1 High_Speed_Counter instruction ... 123
3.6.2 Call instruction in the user program ... 124
3.6.3 Description High_Speed_Counter ... 125
3.6.4 High_Speed_Counter input parameters ... 131
3.6.5 High_Speed_Counter output parameters ... 132
3.6.6 Error codes of parameter ErrorID ... 134
3.6.7 High_Speed_Counter static variables ... 136

3.7 Commissioning the High_Speed_Counter 138
3.7.1 Commissioning the technology object 138
3.8 High_Speed_Counter diagnostics 140
3.8.1 Monitoring counter values, measured values, DIs and DQs 140
4 Using the SSI_Absolute_Encoder technology object 142
4.1 Technology object SSI_Absolute_Encoder 142
4.2 Overview of the configuration steps 143
4.3 Add technology object 144
4.4 Configuring SSI_Absolute_Encoder 146
4.4.1 Working with the configuration dialog 146
4.4.2 Basic parameters 147
4.4.3 SSI absolute encoder 148
4.4.4 Behavior of a DI (SSI_Absolute_Encoder) 151
4.4.5 Behavior of a DQ (SSI_Absolute_Encoder) 153
4.4.6 Specify measured value (SSI_Absolute_Encoder) 157
4.4.7 Examples of the frame format 159
4.5 Programming the SSI_Absolute_Encoder 162
4.5.1 Instruction SSI_Absolute_Encoder 162
4.5.2 Call instruction in the user program 163
4.5.3 Description SSI_Absolute_Encoder 164
4.5.4 Input parameter SSI_Absolute_Encoder 167
4.5.5 Output parameter SSI_Absolute_Encoder 168
4.5.6 Error codes of parameter ErrorID 170
4.5.7 Static tags SSI_Absolute_Encoder 171
4.6 Commissioning SSI_Absolute_Encoder 172
4.6.1 Commissioning the technology object 172
4.7 SSI_Absolute_Encoder diagnostics 173
4.7.1 Monitoring counter values, measured values, DIs and DQs 173
5 Using the module 175
5.1 Using the technology module 175
5.1.1 Convention 175
5.1.2 Configuring a module 175
5.1.2.1 Adding a technology module for hardware configuration (TM Count and TM PosInput) 175
5.1.2.2 Adding a technology module to hardware configuration (Compact CPU) 176
5.1.2.3 Open hardware configuration 177
5.1.2.4 Parameter assignment options 177
5.1.2.5 Basic parameters 179
5.1.2.6 Additional parameters for Compact CPU 188
5.1.2.7 Manual operation (incremental or pulse encoder) 190
5.1.2.8 Manual operation (SSI absolute encoder) 207
5.1.3 Online & diagnostics module 218
5.1.3.1 Displaying and evaluating diagnostics 218
5.1.4 Control and feedback interface (TM Count, TM PosInput) 219
5.1.4.1 Assignment of the control interface 219
5.1.4.2 Assignment of the feedback interface 222

5.2 Using the digital module ... 227
5.2.1 Configuring and assigning parameters to the module ... 227
5.2.1.1 Adding a module to the hardware configuration ... 227
5.2.1.2 Open hardware configuration ... 227
5.2.1.3 Counting operating mode ... 228
5.2.2 Online & diagnostics module ... 233
5.2.2.1 Displaying and evaluating diagnostics ... 233

A Service & Support ... 234

Index ... 237

Documentation guide

1

The documentation for the SIMATIC S7-1500 automation system, for CPU 1516pro-2 PN based on SIMATIC S7-1500, and for the distributed I/O systems SIMATIC ET 200MP, ET 200SP and ET 200AL is divided into three areas.
This division allows you easier access to the specific information you require.

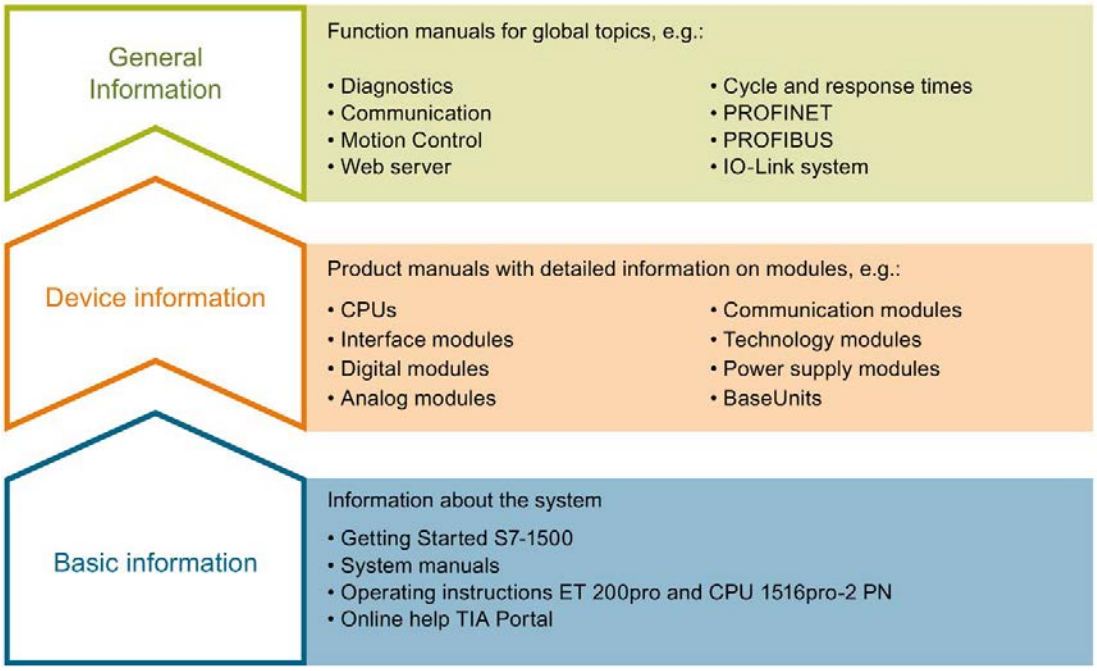

Basic information

System manuals and Getting Started manuals describe in detail the configuration, installation, wiring and commissioning of the SIMATIC S7-1500, ET 200MP, ET 200SP and ET 200AL systems; use the corresponding operating instructions for CPU 1516pro-2 PN. The STEP 7 online help supports you in configuration and programming.

Device information

Product manuals contain a compact description of the module-specific information, such as properties, terminal diagrams, characteristics and technical specifications.

General information

The function manuals contain detailed descriptions on general topics such as diagnostics, communication, Motion Control, Web server, OPC UA.

You can download the documentation free of charge from the Internet (http://w3.siemens.com/mcms/industrial-automation-systems-simatic/en/manual-overview/Pages/Default.aspx).

Changes and additions to the manuals are documented in product information sheets.

You will find the product information on the Internet:

- S7-1500/ET 200MP (https://support.industry.siemens.com/cs/us/en/view/68052815)
- ET 200SP (https://support.industry.siemens.com/cs/us/en/view/73021864)
- ET 200AL (https://support.industry.siemens.com/cs/us/en/view/99494757)

Manual Collections

The Manual Collections contain the complete documentation of the systems put together in one file.

You will find the Manual Collections on the Internet:

- S7-1500/ET 200MP (https://support.industry.siemens.com/cs/ww/en/view/86140384)
- ET 200SP (https://support.industry.siemens.com/cs/ww/en/view/84133942)
- ET 200AL (https://support.industry.siemens.com/cs/ww/en/view/95242965)

"mySupport"

With "mySupport", your personal workspace, you make the best out of your Industry Online Support.

In "mySupport", you can save filters, favorites and tags, request CAx data and compile your personal library in the Documentation area. In addition, your data is already filled out in support requests and you can get an overview of your current requests at any time.

You must register once to use the full functionality of "mySupport".

You can find "mySupport" on the Internet (https://support.industry.siemens.com/My/ww/en).

"mySupport" - Documentation

In the Documentation area in "mySupport" you can combine entire manuals or only parts of these to your own manual.
You can export the manual as PDF file or in a format that can be edited later.

You can find "mySupport" - Documentation on the Internet (http://support.industry.siemens.com/My/ww/en/documentation).

"mySupport" - CAx data

In the CAx data area in "mySupport", you can access the current product data for your CAx or CAe system.

You configure your own download package with a few clicks.

In doing so you can select:

- Product images, 2D dimension drawings, 3D models, internal circuit diagrams, EPLAN macro files
- Manuals, characteristics, operating manuals, certificates
- Product master data

You can find "mySupport" - CAx data on the Internet (http://support.industry.siemens.com/my/ww/en/CAxOnline).

Application examples

The application examples support you with various tools and examples for solving your automation tasks. Solutions are shown in interplay with multiple components in the system - separated from the focus on individual products.

You will find the application examples on the Internet (https://support.industry.siemens.com/sc/ww/en/sc/2054).

TIA Selection Tool

With the TIA Selection Tool, you can select, configure and order devices for Totally Integrated Automation (TIA).
This tool is the successor of the SIMATIC Selection Tool and combines the known configurators for automation technology into one tool.
With the TIA Selection Tool, you can generate a complete order list from your product selection or product configuration.

You can find the TIA Selection Tool on the Internet (http://w3.siemens.com/mcms/topics/en/simatic/tia-selection-tool).

SIMATIC Automation Tool

You can use the SIMATIC Automation Tool to run commissioning and maintenance activities simultaneously on different SIMATIC S7 stations as a bulk operation, independently of the TIA Portal.

The SIMATIC automation tool provides a variety of functions:

- Scanning of a PROFINET/Ethernet plant network and identification of all connected CPUs
- Address assignment (IP, subnet, gateway) and station name (PROFINET device) to a CPU
- Transfer of the date and programming device/PC time converted to UTC time to the module
- Program download to CPU
- Operating mode switchover RUN/STOP
- CPU localization by means of LED flashing
- Reading out CPU error information
- Reading of CPU diagnostic buffer
- Reset to factory settings
- Updating the firmware of the CPU and connected modules

You can find the SIMATIC Automation Tool on the Internet (https://support.industry.siemens.com/cs/ww/en/view/98161300).

PRONETA

With SIEMENS PRONETA (PROFINET network analysis), you analyze the plant network during commissioning. PRONETA features two core functions:

- The topology overview independently scans PROFINET and all connected components.
- The IO check is a fast test of the wiring and the module configuration of a plant.

You can find SIEMENS PRONETA on the Internet (https://support.industry.siemens.com/cs/ww/en/view/67460624).

SINETPLAN

SINETPLAN, the Siemens Network Planner, supports you in planning automation systems and networks based on PROFINET. The tool facilitates professional and predictive dimensioning of your PROFINET installation as early as in the planning stage. In addition, SINETPLAN supports you during network optimization and helps you to exploit network resources optimally and to plan reserves. This helps to prevent problems in commissioning or failures during productive operation even in advance of a planned operation. This increases the availability of the production plant and helps improve operational safety.

The advantages at a glance

- Network optimization thanks to port-specific calculation of the network load
- Increased production availability thanks to online scan and verification of existing systems
- Transparency before commissioning through importing and simulation of existing STEP 7 projects
- Efficiency through securing existing investments in the long term and optimal exploitation of resources

You can find SINETPLAN on the Internet (https://www.siemens.com/sinetplan).

The basics of counting, measurement and position input

2

2.1 Overview of modules and properties

Modules for the S7-1500 and ET 200MP systems

The table below summarizes the performance features of the modules for counting, measuring and position input for the S7-1500 and ET 200MP systems.

Property	S7-1500 / ET 200MP				
	Technology module			Digital input module	Compact CPU
	TM Count 2x24V	TM PosInput 2	TM Timer DIDQ 16x24V	DI 32x24VDC HF DI 16x24VDC HF	CPU 1511C-1 PN CPU 1512C-1 PN
Number of counters	2	2	4[1]	2	6
Use of counters can be activated/deactivated	—	—	X	X	X
Maximum signal frequency	200 kHz	1 MHz	50 kHz	1 kHz	100 kHz
Maximum count frequency for incremental encoders with quadruple evaluation (Page 76)	800 kHz	4 MHz	200 kHz	—	400 kHz
Maximum counting range	32 bits (Page 24)	32 bits (Page 24)	32 bits (Page 82)	32 bits (Page 87)	32 bits (Page 24)
Maximum position value range (Page 26)	—	32 bits	—	—	—
24 V incremental encoder connection	X (Page 71)	—	X (Page 84)	—	X (Page 71)
24 V pulse encoder connection	X (Page 71)	—	X (Page 84)	X (Page 95)	X (Page 71)
RS422/TTL incremental and pulse encoder (Page 73) connection	—	X	—	—	—
SSI absolute encoder (Page 75) connection	—	X	—	—	—
Position input for Motion Control (Page 70)	X	X	—	—	X

Property	S7-1500 / ET 200MP				
	Technology module			Digital input module	Compact CPU
	TM Count 2x24V	TM PosInput 2	TM Timer DIDQ 16x24V	DI 32x24VDC HF DI 16x24VDC HF	CPU 1511C-1 PN CPU 1512C-1 PN
5 V encoder supply	—	X	—	—	—
24 V encoder supply	X	X	X	—	X
Number of additional digital inputs per counter	3	2	—	—	2
Number of physical digital outputs per counter	2	2	—	—	1
Number of logical digital outputs per counter	2	2	—	1	2
Software gate	X (Page 30)	X (Page 30)	—	X (Page 90)	X (Page 30)
Hardware gate	X (Page 30)	X (Page 30)	—	—	X (Page 30)
Capture function (Latch) (Page 34)	X	X	—	—	X
Synchronization (Page 39)	X	X	—	—	X
Comparison functions	X (Page 47)	X (Page 47)	—	X (Page 92)	X (Page 47)
Hysteresis (Page 66)	X	X	—	—	X
Frequency, velocity and period duration measurement (Page 58)	X	X	—	—	X
Isochronous mode support	X (Page 79)	X (Page 79)	X (Page 85)	X (Page 96)	—
Support for diagnostic interrupts for sensor signals	X (Page 70)	X (Page 70)	—	—	X (Page 70)
Hardware interrupt support	X (Page 70)	X (Page 70)	—	X (Page 95)	X (Page 70)
Configurable filter for count signals and digital inputs	X	X	—	X	X

[1] The number of available counters is dependent on the channel configuration. In order to use four counters, you must choose the use of eight inputs in the channel configuration. If you choose the use of three inputs, you can use one counter. Other channel configurations do not allow any counter use.

Modules for the ET 200SP system

The following table provides an overview of the performance features of the modules for counting, measuring and position input for the ET 200SP system.

Property	ET 200SP			
	Technology module			Digital input module
	TM Count 1x24V	TM PosInput 1	TM Timer DIDQ 10x24V	DI 8x24VDC HS
Number of counters	1	1	3[1]	4
Use of counters can be activated/deactivated	—	—	X	X
Maximum signal frequency	200 kHz	1 MHz	50 kHz	10 kHz
Maximum count frequency for incremental encoders with quadruple evaluation (Page 76)	800 kHz	4 MHz	200 kHz	—
Maximum counting range	32 bits (Page 24)	32 bits (Page 24)	32 bits (Page 82)	32 bits (Page 87)
Maximum position value range (Page 26)	—	32 bits	—	—
24 V incremental encoder connection	X (Page 71)	—	X (Page 84)	—
24 V pulse encoder connection	X (Page 71)	—	X (Page 84)	X (Page 95)
RS422/TTL incremental and pulse encoder (Page 73) connection	—	X	—	—
SSI absolute encoder (Page 75) connection	—	X	—	—
Position input for Motion Control (Page 70)	X	X	—	—
24 V encoder supply	X	X	X	X
Number of additional digital inputs per counter	3	2	—	1
Number of physical digital outputs per counter	2	2	—	—
Number of logical digital outputs per counter	2	2	—	1
Software gate	X (Page 30)	X (Page 30)	—	X (Page 90)
Hardware gate	X (Page 30)	X (Page 30)	—	X (Page 90)
Capture function (Latch) (Page 34)	X	X	—	—
Synchronization (Page 39)	X	X	—	—
Comparison functions	X (Page 47)	X (Page 47)	—	X (Page 92)
Hysteresis (Page 66)	X	X	—	—
Frequency, velocity and period duration measurement (Page 58)	X	X	—	—
Isochronous mode support	X (Page 79)	X (Page 79)	X (Page 85)	X (Page 96)

Property	ET 200SP			
	Technology module			Digital input module
	TM Count 1x24V	TM PosInput 1	TM Timer DIDQ 10x24V	DI 8x24VDC HS
Support for diagnostic interrupts for sensor signals	X (Page 70)	X (Page 70)	—	—
Hardware interrupt support	X (Page 70)	X (Page 70)	—	—
Configurable filter for count signals and digital inputs	X	X	—	X

[1] One counter for incremental encoder (A, B phase-shifted) and two counters for pulse encoder

Modules for the ET 200AL system

The following table provides an overview of the performance features of the modules for counting, measuring and position input for the ET 200AL system.

Property	ET 200AL
	Digital input/digital output module
	DIQ 16x24VDC/0.5A 8xM12
Number of counters	4
Use of counters can be activated/deactivated	X
Maximum signal frequency	2 kHz
Maximum counting range	32 bits
24 V incremental encoder connection	—
24 V pulse encoder connection	X
24 V encoder supply	X
Number of additional digital inputs per counter	2
Number of physical digital outputs per counter	1
Number of logical digital outputs per counter	1
Software gate	X
Hardware gate	X
Capture function (Latch)	—
Synchronization	—
Comparison functions	X
Frequency, velocity and period duration measurement	—
Isochronous mode support	—
Support for diagnostic interrupts for sensor signals	X
Hardware interrupt support	X
Configurable filter digital inputs	X

2.2 Basics of counting, measuring and position input (TM Count, TM PosInput, Compact CPU)

2.2.1 Convention

Technology module: We use the term "technology module" in this documentation both for the technology modules TM Count and TM PosInput and the technology component of the compact CPUs.

2.2.2 Overview of applications

Introduction

The technology module is configured and assigned parameters using the configuration software.

The operation and control of the technology module functions is effected either via the technology object or through the application program via the control and feedback interface.

System environment for TM Count and TM PosInput

The technology modules can be used in the following system environments:

Application scenarios	Components required	Configuration software	In the user program
Central operation with an S7-1500 CPU or 151xSP CPU	• S7-1500 automation system or ET 200SP CPU • Technology module	STEP 7 (TIA Portal): Operating with "Counting and measurement" technology object • Device configuration with hardware configuration (Page 175) • Parameter setting with High_Speed_Counter (Page 97) or SSI_Absolute_Encoder (Page 142) technology object	For incremental / pulse encoders: High_Speed_Counter instruction for the technology object For SSI absolute encoder: SSI_Absolute_Encoder instruction for the technology object
		STEP 7 (TIA Portal): Position input for "Motion Control" technology object • Device configuration with hardware configuration (Page 175) • Parameter setting with axis and measuring input technology object (Page 183)	Instructions for "Motion Control" technology object
		STEP 7 (TIA Portal): Manual operation (without technology object) • Device configuration and parameter setting (Page 175) with hardware configuration	Direct access to control and feedback interface of the technology module in the I/O data

Application scenarios	Components required	Configuration software	In the user program
Distributed operation with a S7-1500 CPU	• S7-1500 automation system • ET 200 distributed I/O system • Technology module	STEP 7 (TIA Portal): Operating with "Counting and measurement" technology object • Device configuration with hardware configuration (Page 175) • Parameter setting with High_Speed_Counter (Page 97) or SSI_Absolute_Encoder (Page 142) technology object	For incremental / pulse encoders: High_Speed_Counter instruction for the technology object For SSI absolute encoder: SSI_Absolute_Encoder instruction for the technology object
		STEP 7 (TIA Portal): Position input for "Motion Control" technology object • Device configuration with hardware configuration (Page 175) • Parameter setting with axis and measuring input technology object (Page 183)	Instructions for "Motion Control" technology object
		STEP 7 (TIA Portal): Manual operation (without technology object) • Device configuration and parameter setting (Page 175) with hardware configuration	Direct access to control and feedback interface (Page 219) of the technology module in the IO data

Application scenarios	Components required	Configuration software	In the user program
Distributed operation with an S7-1200 CPU	• S7-1200 automation system • ET 200 distributed I/O system • Technology module	STEP 7 (TIA Portal): Device configuration and parameter setting (Page 175) with hardware configuration	Direct access to control and feedback interface (Page 219) of the technology module in the IO data
Distributed operation with a S7-300/400 CPU	• S7-300/400 automation system • ET 200 distributed I/O system • Technology module	STEP 7 (TIA Portal): Device configuration and parameter setting (Page 175) with hardware configuration STEP 7: Device configuration and parameter setting with HSP (up to firmware version V1.2) or GSD file	Direct access to control and feedback interface (Page 219) of the technology module in the IO data
Distributed operation in a third-party system	• Third-party automation system • ET 200 distributed I/O system • Technology module	Third-party configuration software: Device configuration and parameter settings with GSD file	Direct access to control and feedback interface (Page 219) of the technology module in the IO data

System environment for a Compact CPU

The Compact CPUs can be used in the following system environments:

Application scenarios	Components required	Configuration software	In the user program
Central operation with a S7-1500 Compact CPU	• S7-1500 automation system • Compact CPU	STEP 7 (TIA Portal): Operating with "Counting and measurement" technology object • Device configuration with hardware configuration (Page 175) • Parameter setting with High_Speed_Counter (Page 97) technology object	High_Speed_Counter instruction for the technology object
		STEP 7 (TIA Portal): Position input for "Motion Control" technology object • Device configuration with hardware configuration (Page 175) • Parameter setting with axis and measuring input technology object (Page 183)	Instructions for "Motion Control" technology object
		STEP 7 (TIA Portal): Manual operation (without technology object) • Device configuration and parameter setting (Page 175) with hardware configuration	Direct access to control and feedback interface of the technology module in the I/O data

Parameter assignment options

In an S7-1500 system, you have two options for parameter assignment and control of technology module functions:

- Configuration using the technology object and control using the associated instruction
  Access to the control and feedback interface of the technology module takes place through the technology object.
- Parameter setting via hardware configuration
  The control and feedback interface of the technology module is accessed using direct access to the I/O data.

Configuration via technology object

For central and distributed use, we recommend the convenient, graphics-assisted configuration using a technology object. A detailed description of this configuration can be found in section High_Speed_Counter technology object (Page 97) or SSI_Absolute_Encodertechnology object (Page 142).

You specify the "Operation with technology object "Counting and measuring"" in the device configuration of the technology module: see section Operating mode (Page 181).

You can assign the technology module and counting channel in the basic parameters of the technology object: see section Basic parameters (Page 103).

Parameter setting via hardware configuration

You specify the "Manual operation (without technology object)" in the device configuration of the technology module: see section Operating mode (Page 181).

Additional support for parameter setting via hardware configuration is available in the context-sensitive help for the parameters in STEP 7 (TIA Portal). A description of the control and feedback interface is available in the following sections:

- Assignment of the control interface (Page 219)
- Assignment of the feedback interface (Page 222)

2.2.3 Recording of count signals

2.2.3.1 Counting with incremental or pulse encoder

Counting refers to the recording and adding up of events. The counters of the technology modules capture and evaluate pulse and incremental signals. The count direction can be specified using encoder or pulse signals or through the user program.

You can control counting processes using the digital inputs of the technology module. You can switch the digital outputs exactly at defined counter values, regardless of the user program.

You can configure the response of the counters using the functionalities described below.

Counter limits

The counter limits define the counter value range used. The counter limits are configurable and can be modified during runtime using the user program.

The highest counter limit that can be set is 2147483647 (2^{31}–1). The lowest counter limit that can be set is –2147483648 (–2^{31}).

You can configure the response of the counter at the counter limits:

- Continue or stop counting upon violation of a counter limit (automatic gate stop)
- Set counter value to start value or to opposite counter limit upon violation of a counter limit

Start value

You can configure a start value within the counter limits. The start value can be modified during runtime by the user program.

The technology module can, as configured, set the current counter value to the start value upon synchronization, upon Capture function activation, upon violation of a counter limit or when the gate is opened.

Gate control

Opening and closing the hardware gate and software gate defines the period of time during which the counting signals are captured.

The hardware gate is controlled externally via a digital input of the technology module. The software gate is controlled via the user program. The hardware gate can be enabled through parameter assignment. The software gate (bit in the control interface of the cyclic I/O data) cannot be disabled.

Capture (Latch)

You can configure an external reference signal edge that triggers the saving of the current counter value or position value as a Capture value. The following external signals can trigger the Capture function:

- Rising or falling edge of a digital input
- Both edges of a digital input
- Rising edge of the N signal at the encoder input

When using a digital input, you can specify whether counting is to continue from the current counter value or from the start value after the Capture function. When using the rising edge of the N signal at the encoder input, counting is to continue from the current counter value after the Capture function. The use of a digital input and the use of the N signal are not mutually exclusive for the Capture function.

The parameter "Frequency of the Capture function" determines if the function is executed for each configured edge or only once after each enable.

Measuring input

If you use the position input for Motion Control (Page 70), you can use the "Measuring input" technology object to execute a measuring input function with a hardware digital input.

Synchronization

You can configure an external reference signal edge to load the counter with the specified start value. The following external signals can load the counter with the start value:

- Rising or falling edge of a digital input
- Rising edge of signal N at the encoder input
- Rising edge of signal N at the encoder input depending on the level of the assigned digital input

The parameter "Frequency of synchronization" determines whether the function is executed for each configured edge or only once after each enable.

Hysteresis

You can specify hysteresis for the comparison values, within which a digital output is prevented from switching again. An encoder can come to a standstill at a specific position, and slight movements may make the counter value fluctuate around this position. If a comparison value or a counting limit lies within this fluctuation range, the corresponding digital output will be switched on and off with corresponding frequency if hysteresis is not used. The hysteresis prevents these unwanted switching operations.

2.2.3.2 Position input with SSI absolute encoder

Description

You can use the TM PosInput technology modules with an SSI absolute encoder for position detection. The technology module reads the position value via a synchronous serial interface from the SSI absolute encoder and makes it available to the controller.

You can switch the digital outputs of the technology module exactly at defined position values, regardless of the user program. Position input with an SSI absolute encoder does not involve gate control. Due to system constraints, synchronization is not possible with an SSI absolute encoder.

Gray- and dual-code

Gray-code and dual-code SSI absolute encoders are supported.

Capture (Latch)

You can configure one or both edges of a digital input that triggers a saving of the current position value as Capture value.

The parameter "Frequency of the Capture function" determines if the function is executed for each configured edge or only once after each enable.

Measuring input

If you use the position input for Motion Control (Page 70), you can use the "Measuring input" technology object to execute a measuring input function with a hardware digital input.

Hysteresis

You can specify hysteresis for the comparison values, within which a digital output is prevented from switching again. An encoder can come to a standstill at a specific position, and slight movements may make the position value fluctuate around this position. If a comparison value or a limit lies within this fluctuation range, the corresponding digital output is switched on and off with corresponding frequency if hysteresis is not used. The hysteresis prevents these unwanted switching operations.

Range for position value

You can specify a frame length of 10 bits to 40 bits for the SSI absolute encoder. The configurable bit numbers of the LSB and the MSB of the position value in the frame define the value range. The technology module can read a position value with a maximum length of 32 bits and communicate it to the controller.

If you use an encoder with a position value length of up to 31 bits, the position value is handled unsigned as a positive value and can assume values between 0 and $2^{(MSB-LSB+1)}-1$. If you use an encoder with a position value length of 32 bits, the MSB of the position value corresponds to the sign and the position value can assume values between –2147483648 and 2147483647. If you use a 32 bit position value for the comparison function, the position value is interpreted as DINT.

Complete SSI frame

Instead of having a measured variable returned, you can choose to have the least significant 32 bits of the current unprocessed SSI frame returned. This provides you with encoder-specific additional bits, such as error bits, in addition to the position value. If the SSI frame is shorter than 32 bits, the complete SSI frame is returned right-aligned and the top unused bits are returned with "0" in the feedback interface.

2.2.4 Behavior at the counting limits

Violation of a counting limit

The high counting limit is violated when the current counter value is equal to the high counting limit and another upward count pulse is received. The counter low limit is violated when the current counter value is equal to the counter low limit and another downward count pulse is received.

The appropriate status bit is set in the feedback interface in the event of limit violation:

Counting limit violated	Status bit
High counting limit	EVENT_OFLW is set
Low counting limit	EVENT_UFLW is set

You can reset the status bits with RES_EVENT .

You can configure whether or not and from which counter value counting is to continue following counting limit violation.

Note

The high counting limit and the start value define the value range of the counter:

Value range of the counter = (high limit – start value) + 1

Examples

The figure below shows an example for terminating the counting process (automatic gate stop) after an overflow and setting the counter to the start value:

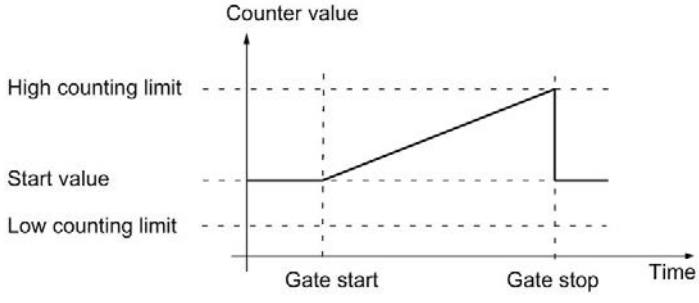

The figure below shows an example for continuing the counting process after an overflow and setting the counter to the start value:

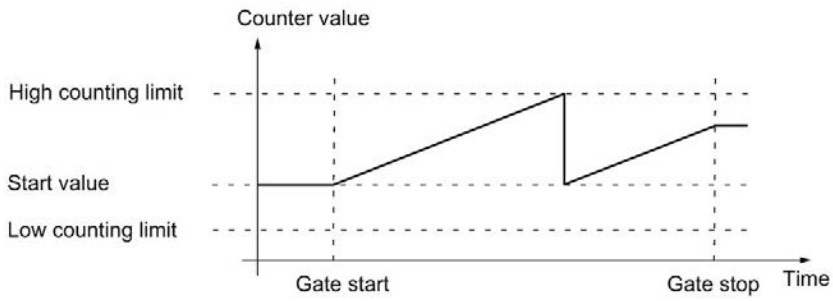

The figure below shows an example for terminating counting after an overflow and setting the counter to the opposite counting limit:

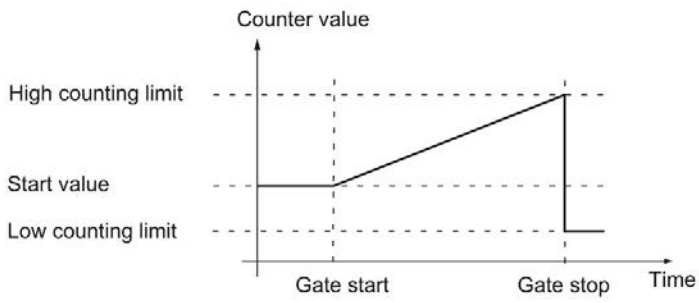

The figure below shows an example for continuing the counting process after an overflow and setting the counter to the opposite counting limit:

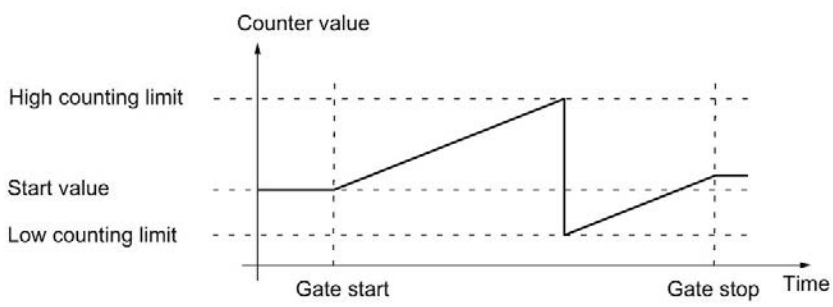

2.2.5 Gate control with incremental or pulse encoder

Many applications require counting processes to be started or stopped in accordance with other events. In such cases, counting is started and stopped using the gate function.

The technology modules have two gates for each channel. These define the resulting internal gate:

- Software gate
- Hardware gate

2.2.5.1 Software gate

The software gate of the channel is opened and closed with the control bit (Page 219) SW_GATE. The status of the software gate is indicated by the feedback bit (Page 222) STS_SW_GATE .

2.2.5.2 Hardware gate

The hardware gate is optional. You open and close the hardware gate by means of signals at the configured digital inputs of the channel.

Note

The configured input filters delay the control signal of the digital input.

The status of a DIm digital input is indicated by the respective feedback bit (Page 222) STS_DIm .

Level-triggered opening and closing of the hardware gate with a digital input

The figure below shows an example of level-triggered opening and closing with a digital input. The digital input is configured to be active with high level:

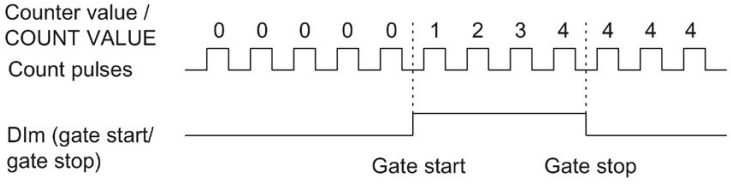

As long as the digital input is active, the hardware gate is open and the count pulses are counted. The hardware gate is closed when the digital input becomes inactive. The counter value stays constant and ignores any further count pulses.

Edge-triggered opening and closing of the hardware gate with two digital inputs

The figure below shows an example of opening and closing with two digital inputs. The two digital inputs are configured so that the rising edge is evaluated:

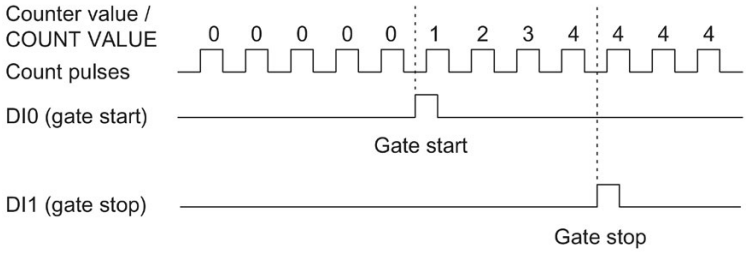

The hardware gate is opened with the configured edge at the digital input that is configured for opening. The hardware gate is closed with the configured edge at the digital input that is configured for closing.

2.2.5.3 Internal gate

Internal gate

The internal gate is open if the software gate is open and the hardware gate is open or has not been configured. The status of the internal gate is indicated by the feedback bit (Page 222) STS_GATE.

If the internal gate is open, counting is started. If the internal gate is closed, all other count pulses are ignored and counting is stopped.

If you want to control a counting process with the hardware gate only, the software gate must be open. If you do not configure a hardware gate, the hardware gate is considered to be always open. In this case, you open and close the internal gate with the software gate only.

Hardware gate	Software gate	Internal gate
Open/not configured	open	open
Open/not configured	closed	closed
closed	open	closed
closed	closed	closed

When you configure the counter behavior, you can specify whether the counting process is to start from the start value or from the current counter value when the internal gate is opened.

The internal gate can also be automatically closed upon violation of a counting limit. The software or hardware gate must then be closed and reopened to continue counting.

2.2.5.4 Counter behavior at gate start

You have the following configuration options for counter behavior upon gate start:

- Setting counter to start value
- Continuing with the current counter value

Setting counter to start value

Counter behavior is as follows for this configuration:

Each counting process starts with the start value when the internal gate is opened.

The figure below shows an example for continuing the counting process after counter is set to the start value:

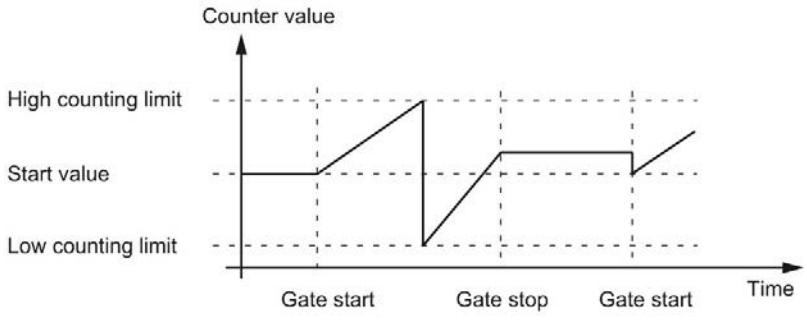

Continuing with the current counter value

Counter behavior is as follows for this configuration:

Each counting process starts from the current counter value after the internal gate is reopened.

The figure below shows an example for continuing the counting process with the current counter value:

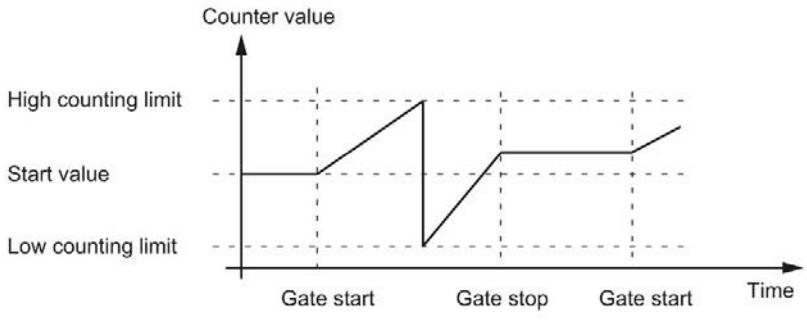

2.2.6 Capture (Latch)

2.2.6.1 Capture with incremental or pulse encoder

Description

The "Capture" function is used to save the current counter value with an external reference signal. You can configure the Capture function for the following reference signals:

- Rising or falling edge at a digital input
- Rising and falling edge at a digital input
- Rising edge of signal N at the encoder input

Function principle

The Capture value is always the exact counter value at the time of the respective edge (delayed by the configured input filter time). The Capture function is effective regardless of the status of the internal gate. The unchanged counter value is saved when the gate is closed.

The figure below shows an example of the Capture function with the following configuration:

- Start value = 0
- Capture event upon rising edge at configured digital input
- Set counter to start value at gate start
- Continue counting after Capture event

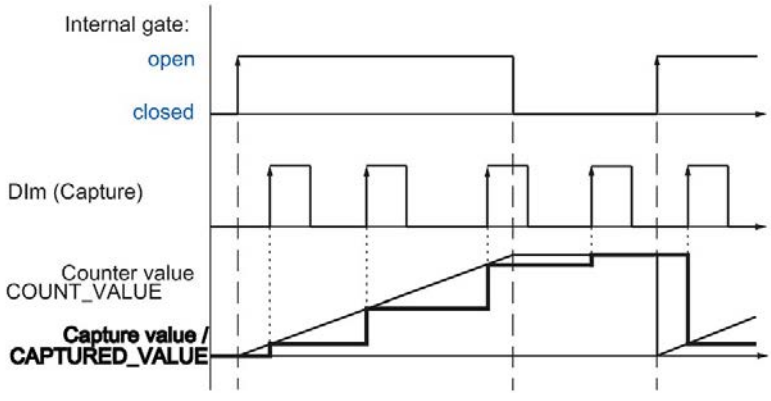

The figure below shows another example of the Capture function with the following configuration:

- Start value = 0
- Capture event upon rising edge at configured digital input
- Set counter to start value at gate start
- Reset counter value to start value after Capture event and continue counting.

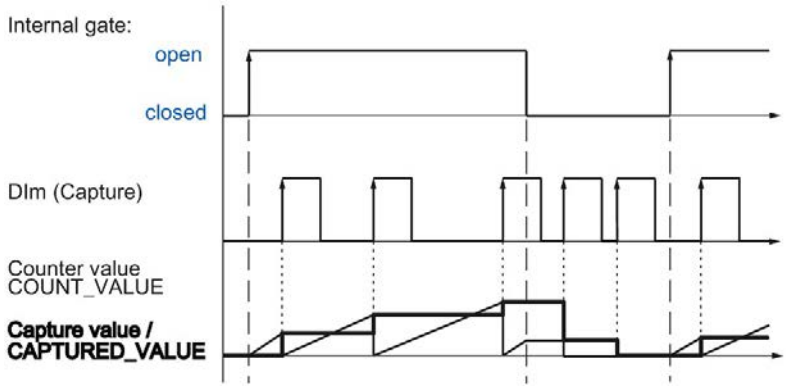

The control bit (Page 219) EN_CAPTURE is used to enable the Capture function. The feedback bit (Page 222) EVENT_CAP indicates that a counter value has been saved as a Capture in the feedback interface. If you reset EN_CAPTURE, EVENT_CAP is also reset. The status of a digital input is indicated by the respective feedback bit (Page 222) STS_DIm .

The figure below shows an example of the EN_CAPTURE and EVENT_CAP bits with use of the one-time Capture function by the rising edge at a digital input:

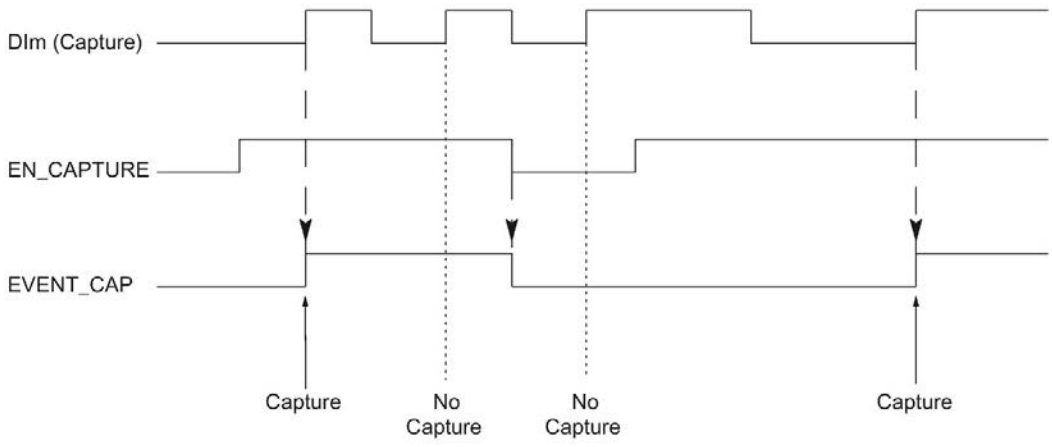

The figure below shows an example of the EN_CAPTURE and EVENT_CAP bits with use of the periodic Capture function by the rising edge at a digital input:

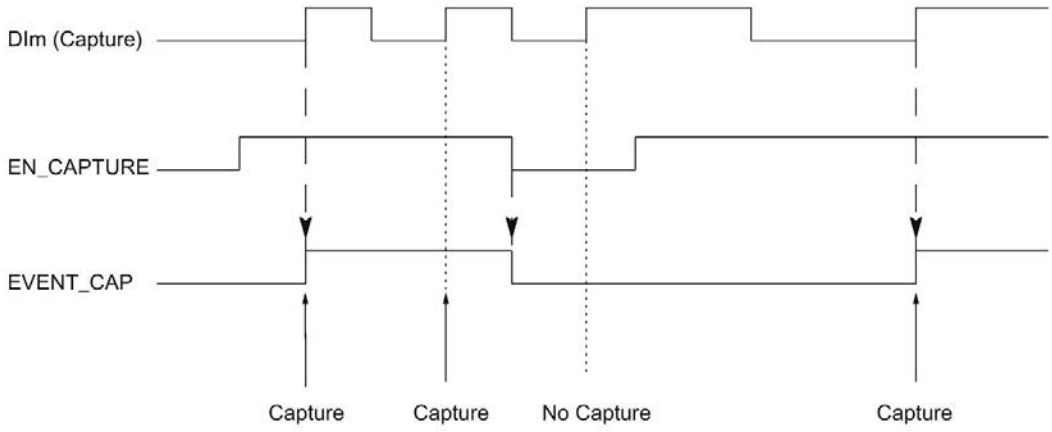

Note

The configured input filters delay the control signal of the corresponding digital input.

The Capture function has no effect on the feedback bit STS_CNT and the LEDs UP and DN.

Hardware interrupt

You can configure a hardware interrupt for the Capture function. If the hardware interrupts are triggered more quickly by the system than they can be acknowledged, hardware interrupts are lost and the "Hardware interrupt" diagnostics interrupt is signaled.

2.2.6.2 Capture with SSI absolute encoder

Description

The "Capture" function is used to save the current position value using an external reference signal. You can configure the Capture function for the following reference signals:

- Rising **or** falling edge at a digital input
- Rising **and** falling edge at a digital input

Function principle

At the time of each edge, the position value of the last valid SSI frame is stored in the Capture value.

The figure below shows an example of the Capture event by a rising edge at the configured digital input:

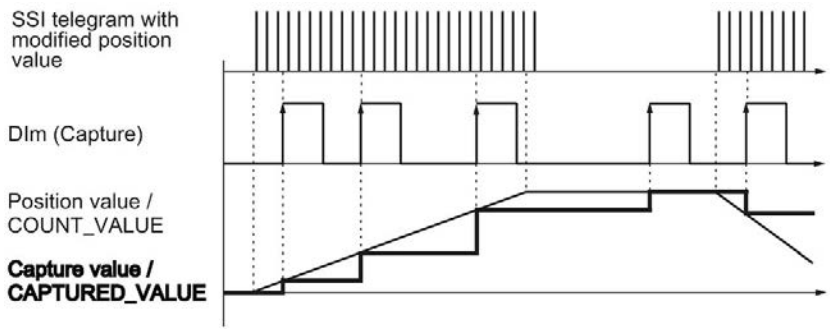

The control bit (Page 219) EN_CAPTURE is used to enable the Capture function. The feedback bit (Page 222) EVENT_CAP indicates that a position value has been saved as Capture value in the feedback interface. If you reset EN_CAPTURE, EVENT_CAP is also reset. The status of a digital input is indicated by the respective feedback bit (Page 222) STS_DIm .

The figure below shows an example of the EN_CAPTURE and EVENT_CAP bits with use of the one-time Capture function by the rising edge at a digital input:

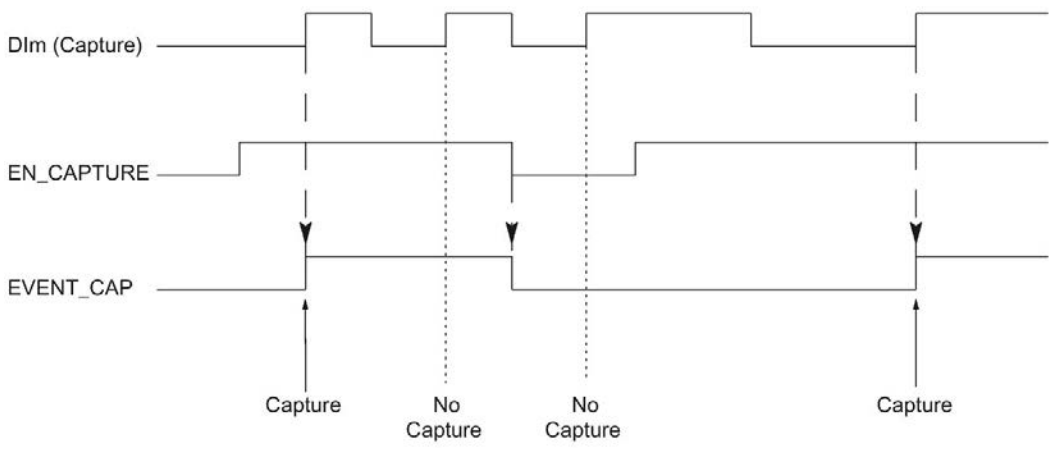

The figure below shows an example of the EN_CAPTURE and EVENT_CAP bits with use of the periodic Capture function by the rising edge at a digital input:

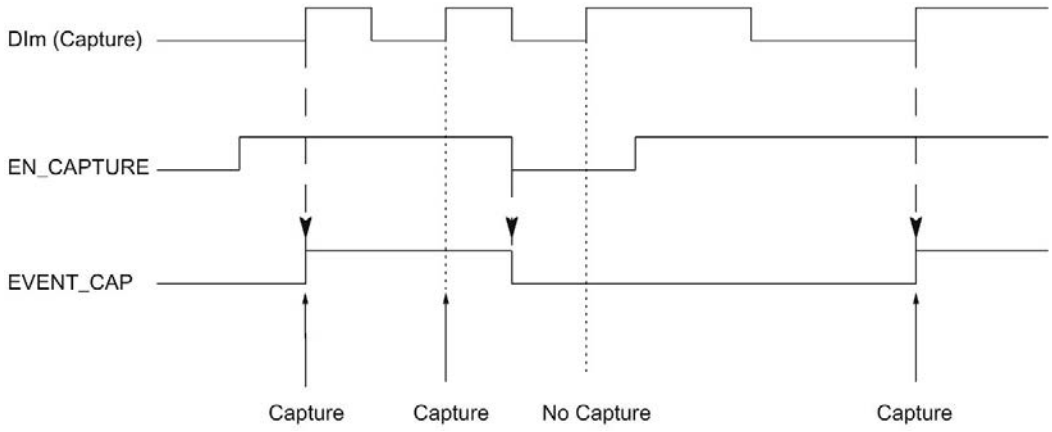

Note

The configured input filters delay the control signal of the corresponding digital input.

Hardware interrupt

You can configure a hardware interrupt for the Capture function. If the hardware interrupts are triggered more quickly by the system than they can be acknowledged, hardware interrupts are lost and the "Hardware interrupt" diagnostics interrupt is signaled.

2.2.7 Synchronization

Description

You use the "Synchronization" function to set the counter to the pre-defined start value with an external reference signal. You can configure synchronization for the following reference signals:

- Rising or falling edges at a digital input
- Rising edge of signal N at the encoder input
- Rising edge of signal N at the encoder input defined by the level of a digital input

Function principle

Synchronization always takes place exactly at the time of the reference signal. Synchronization is effective regardless of the status of the internal gate.

You use the control bit (Page 219) EN_SYNC_UP to enable synchronization for counting in an upwards direction. Use the control bit (Page 219) EN_SYNC_DN to enable synchronization for counting down. The feedback bit (Page 222) EVENT_SYNC indicates that synchronization has been performed. Resetting EN_SYNC_UP or EN_SYNC_DN also resets EVENT_SYNC.

Note

The configured input filters delay the control signal of the corresponding digital input.

Synchronization has no effect on the feedback bit (Page 222) STS_CNT and the LEDs UP and DN.

Single synchronization

The figure below shows an example of the EN_SYNC_UP, EN_SYNC_DNand EVENT_SYNC bits with single synchronization by an edge at a digital input for count pulses in an upwards direction:

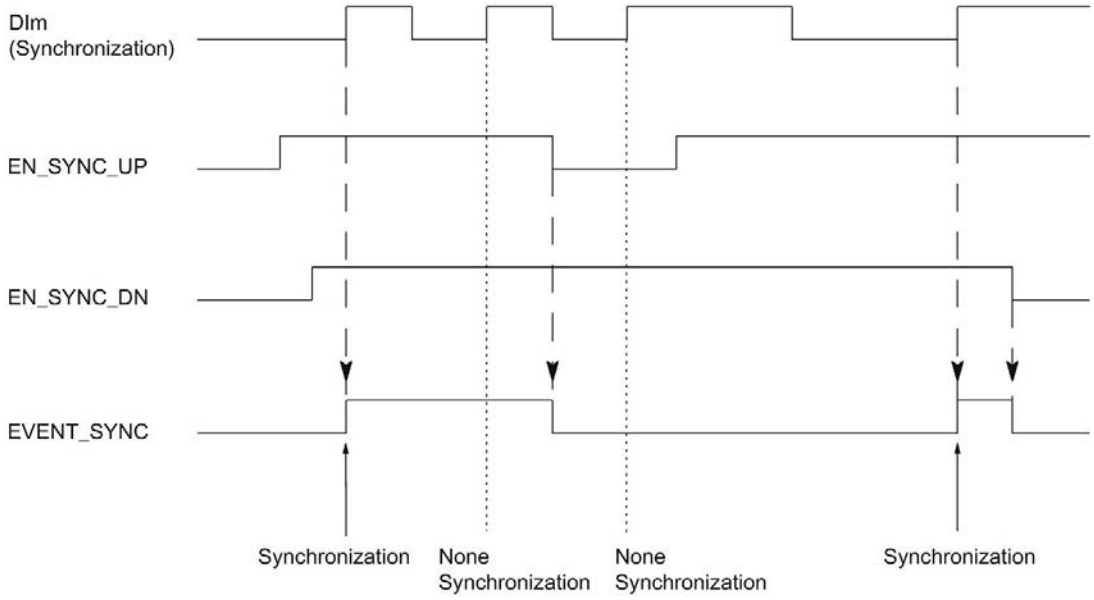

After synchronization is enabled for counting in an upwards direction, the counter is synchronized at the first rising edge at the configured digital input. The counter can only be synchronized again once the control bit (Page 219) EN_SYNC_UP has been reset and set again.

Periodic synchronization

The figure below shows an example of the EN_SYNC_UP, EN_SYNC_DN and EVENT_SYNC bits with periodic synchronization by an edge at a digital input for count pulses in an upwards direction:

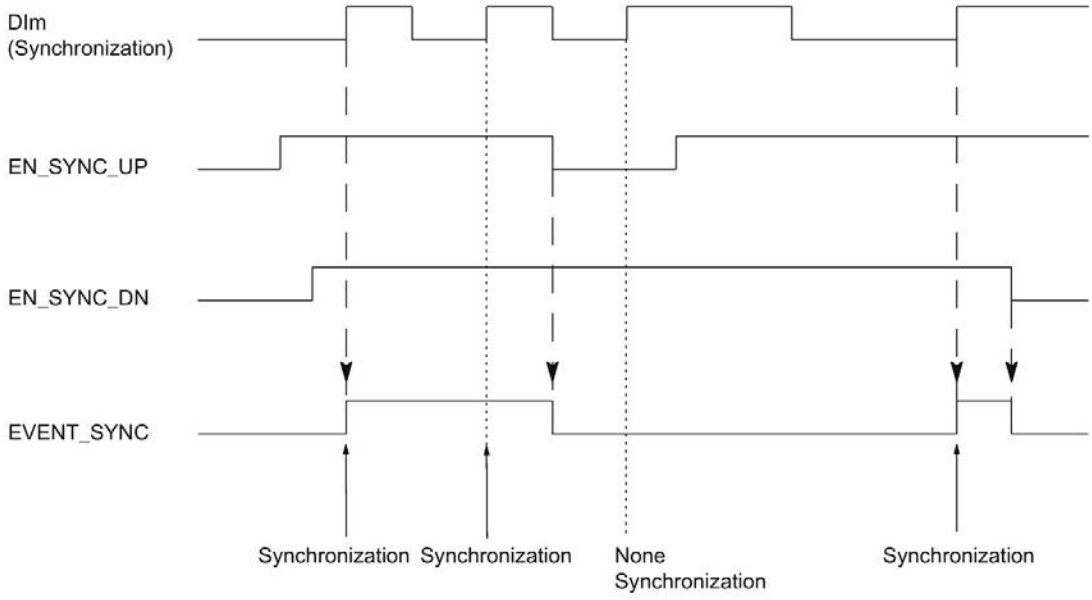

As long as synchronization for counting in an upwards direction is enabled, the counter is synchronized at each rising edge at the configured digital input.

Hardware interrupt

You can configure a hardware interrupt for the synchronization. If the hardware interrupts are triggered more quickly by the system than they can be acknowledged, hardware interrupts are lost and the "Hardware interrupt" diagnostics interrupt is signaled.

2.2.7.1 Synchronization by digital input

You can trigger synchronization by edges at a digital input.

Single synchronization

The figure below shows an example for single synchronization by an edge at a digital input:

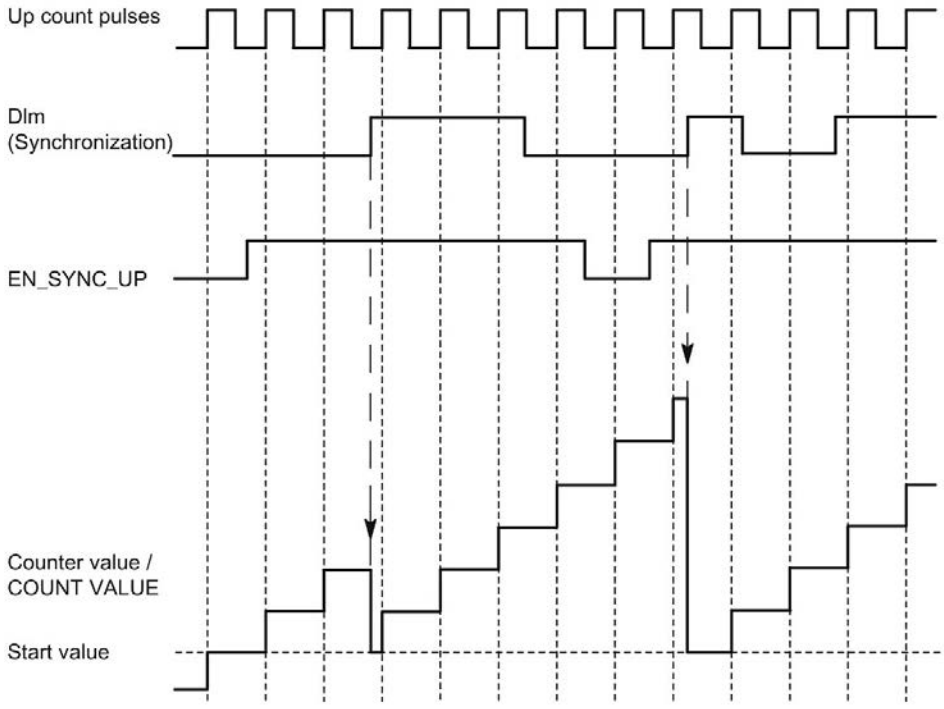

After synchronization is enabled for counting in an upwards direction, the counter is synchronized at the first rising edge at the configured digital input. Until the control bit (Page 219) EN_SYNC_UP has been reset and set again, any additional rising edge at the digital output is ignored. The counter can then be synchronized again.

Periodic synchronization

The figure below shows an example for periodic synchronization by an edge at a digital input:

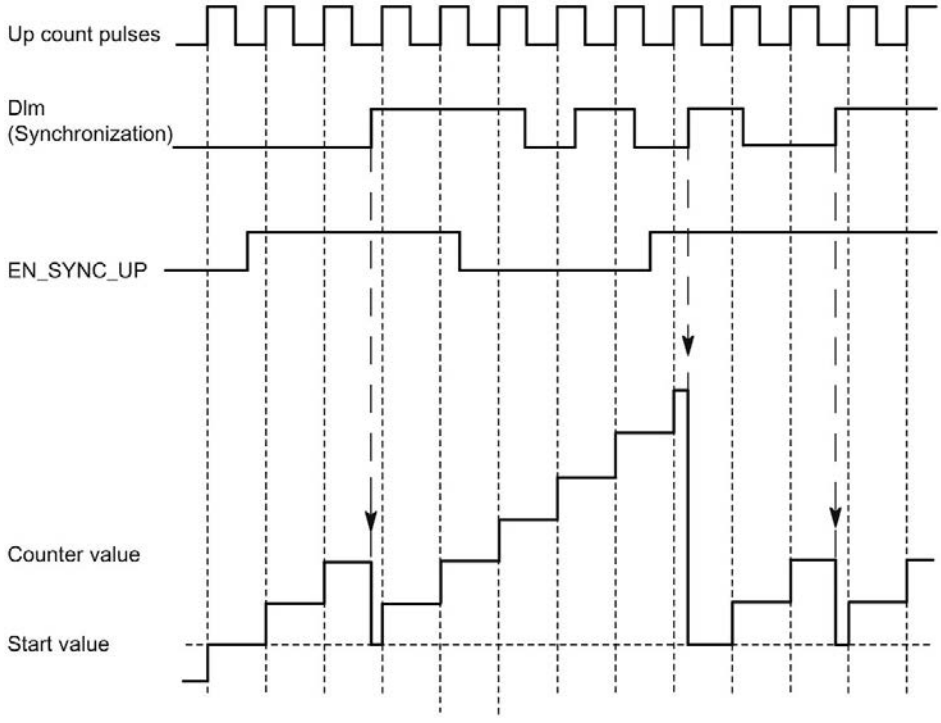

As long as synchronization for counting in an upwards direction is enabled, the counter is synchronized at each rising edge at the configured digital input.

2.2.7.2 Synchronization at signal N

You can trigger synchronization at signal N at the encoder input either directly or depending on the status of a digital input.

Single synchronization

The figure below shows an example of single synchronization at signal N (not dependent on a digital input):

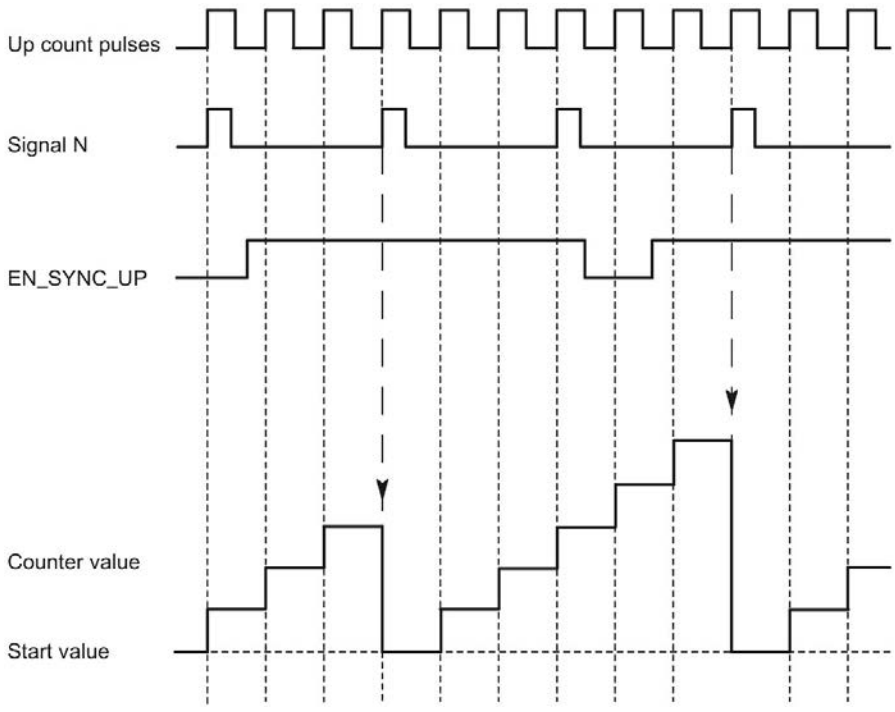

After synchronization is enabled for counting in an upwards direction, the counter is synchronized at the first signal N. After resetting and setting the control bit (Page 219) EN_SYNC_UP once again, the counter can be synchronized again.

Periodic synchronization

The figure below shows an example for periodic synchronization at signal N:

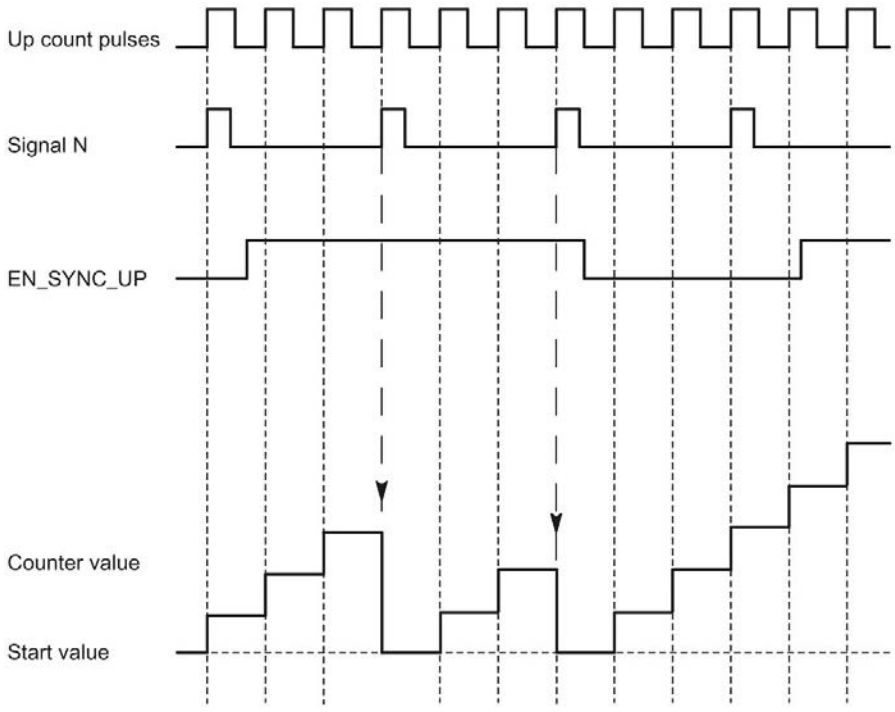

As long as synchronization for counting in an upwards direction is enabled, the counter is synchronized at each signal N.

Enable by a digital input

The figure below shows an example for periodic synchronization at signal N depending on the status of a digital input:

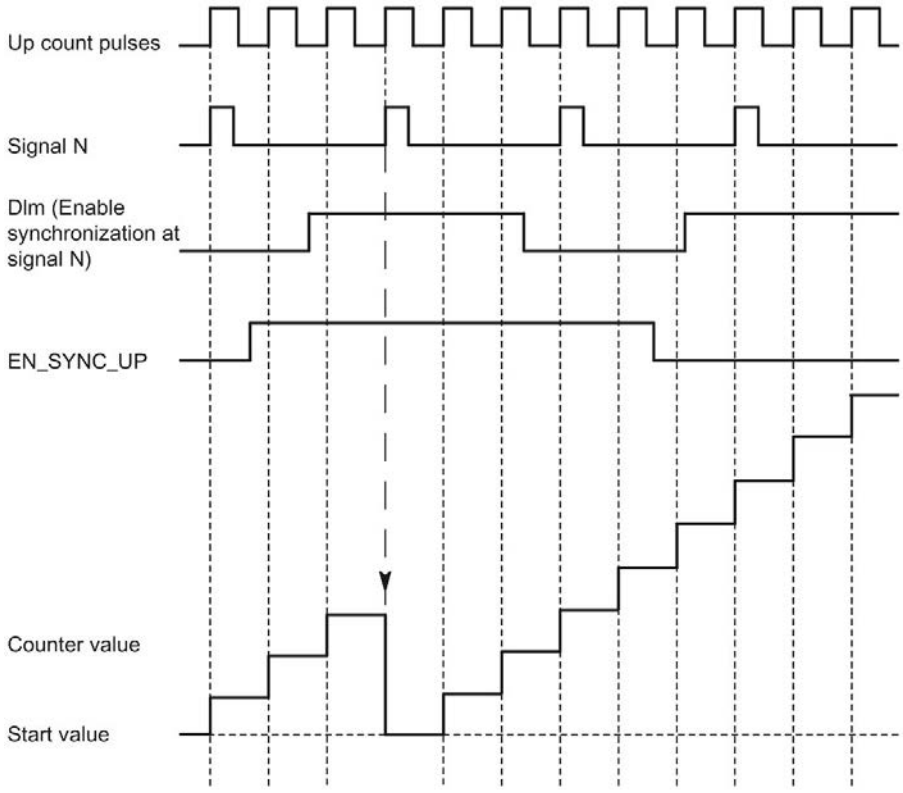

As long as synchronization for counting up is enabled and the corresponding digital input is active, the counter is synchronized at each signal N. If one of the conditions is not met, the counter is not synchronized at the signal N.

2.2.8 Comparison values

2.2.8.1 Comparison values and outputs

Description

You can specify two comparison values to control both digital outputs of the channel independently of the user program:

- Comparison value 0 for digital output DQ0
- Comparison value 1 for digital output DQ1

Depending on the operating mode and the encoder used, define two position, counter or measured values as comparison value. The comparison values are configurable and can be modified during runtime using the user program.

Note

DQ0 of a counter of a Compact CPU

With a Compact CPU, the respective digital output DQ0 is available via the feedback interface, but not as a physical output.

Switching digital outputs from the user program

The control bits (Page 219) TM_CTRL_DQ0 and TM_CTRL_DQ1 are used to control use of the digital outputs.

If TM_CTRL_DQm is set to 0, you can control the relevant digital output from the user program with the control bit SET_DQm regardless of the configured technological function. If TM_CTRL_DQm is set to 1, the technological function of the controller of the respective digital output is enabled.

The status of a digital output is indicated by the respective STS_DQm feedback bit.

2.2.8.2 Switching at comparison values with counter value as reference

The comparison values are compared with the current counter value. If the counter value meets the assigned comparison condition and the technological function of the associated digital output is enabled, the digital output is set. If you assign "Between comparison value 0 and 1" for digital output DQ1, both comparison values affect DQ1.

You can make switching for a digital output dependent on one of the following comparison events:

Setting between comparison value and high counting limit

The digital output is set to 1 if:

Comparison value <= counter value <= high counting limit

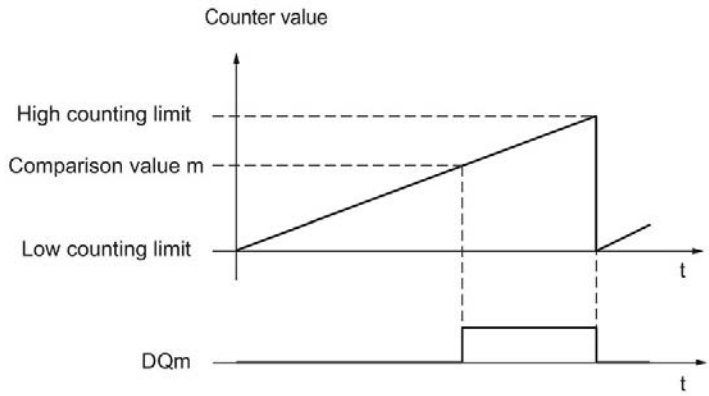

The comparison event is independent of the count direction.

Setting between comparison value and low limit

The digital output is set to 1 if:

Low counting limit <= counter value <= comparison value

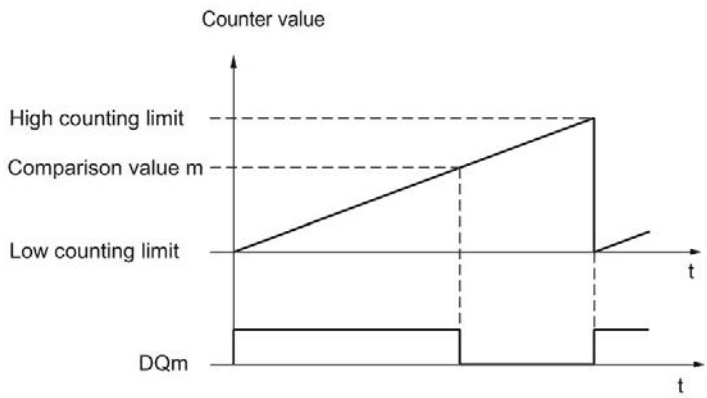

The comparison event is independent of the count direction.

Setting between comparison value 0 and comparison value 1

The comparison event can be configured for the digital output DQ1 if "Use by user program" has been configured for the digital output DQ0. Comparison value 1 must be greater than Comparison value 0.

DQ1 is set to 1 if:

Comparison value 0 <= counter value <= comparison value 1

The figure below shows an example of the comparison event when counting in an upwards direction:

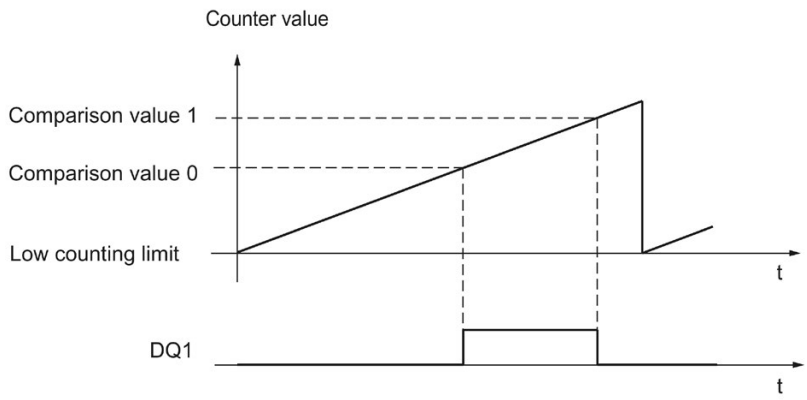

Setting at comparison value for one pulse duration

The respective digital output is set to 1 for a specified period of time when the following conditions are fulfilled:

- Counter value = comparison value
- Current count direction = configured count direction for the comparison event

The figure below shows an example of the comparison event when counting in an upwards direction:

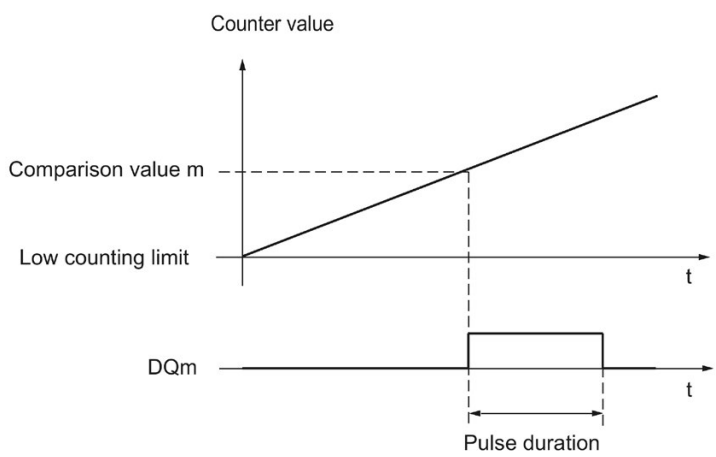

The figure below shows an example of the comparison event when counting in a downward direction:

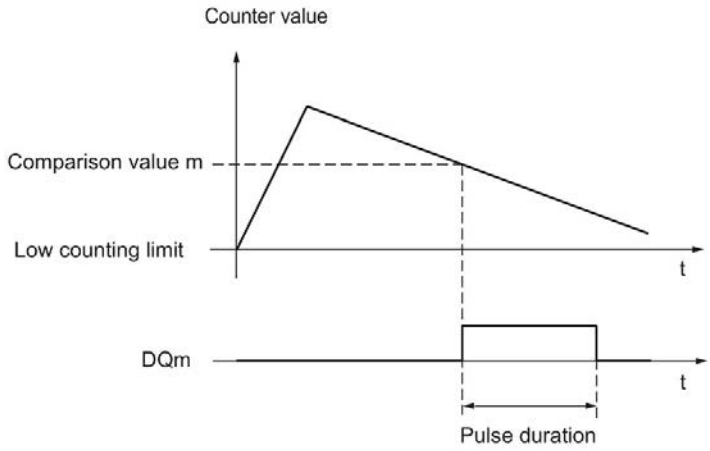

To repeat the comparison event, the counter value must change and then correspond to the respective comparison value again.

If the pulse duration has been defined as "0" and the counter value is equal to the comparison value, the digital output is set to 1 until the next count pulse:

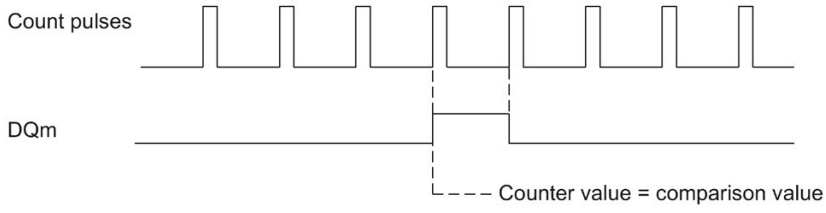

Note

This comparison event switches the relevant digital output if a count pulse reaches the comparison value. The digital output does not switch when the counter value is set, by synchronization for example.

Setting by the user program up to comparison value

You can set the respective digital output to 1 (edge) by setting the control bit (Page 219) SET_DQm. The respective digital output is set to 0 by any of the following events:

- Match of the counter value and the comparison value in the configured direction of the comparison event
- Reset of the corresponding SET_DQm control bit.

The figure below shows an example of the comparison event when counting in an upwards direction:

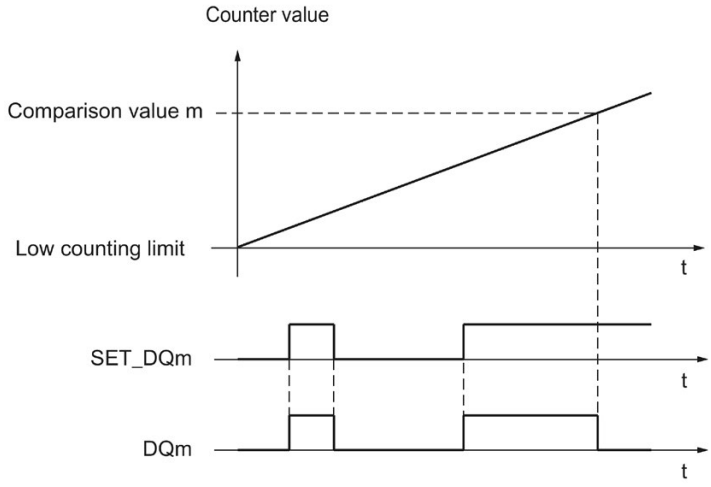

You can disable the digital output before the counter value reaches the comparison value by setting the control bit SET_DQm to 0.

Note

If the comparison value is reached in the configured count direction, the feedback bit EVENT_CMPm is set independently of the state of the control bit SET_DQm.

The comparison event switches a digital output when a count pulse reaches the respective comparison value. The digital output does not switch when the counter value is set, by synchronization for example.

2.2.8.3 Switching at comparison values with position value (SSI absolute value) as reference

The comparison values are compared with the current position value. If the position value meets the assigned comparison condition and the technological function of the associated digital output is enabled, the digital output is set. If you assign "Between comparison value 0 and 1" for digital output DQ1, both comparison values affect DQ1.

If you use a 32 bit position value for the comparison function, the position value is interpreted as DINT.

You can make switching for a digital output dependent on one of the following comparison events:

Setting between comparison value and high limit

The high limit corresponds to the maximum position value.

The digital output is set to 1 if:

Comparison value <= position value <= maximum position value

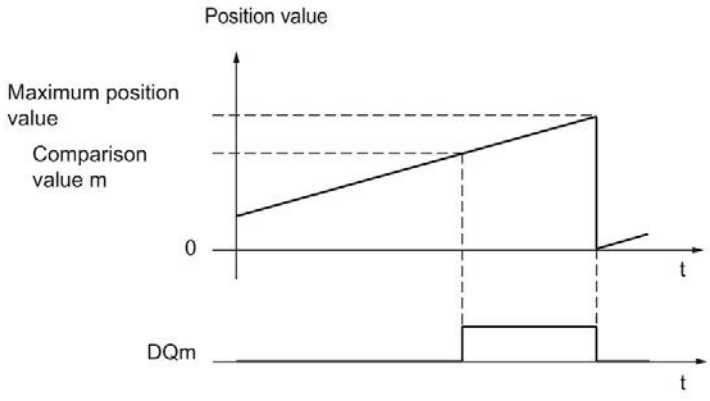

The comparison event is independent of the direction of the position value change. The maximum position value depends on the resolution of the SSI absolute encoder.

Setting between comparison value and low limit

The low limit corresponds to the position value "0".

The digital output is set to 1 if:

0 <= position value <= comparison value

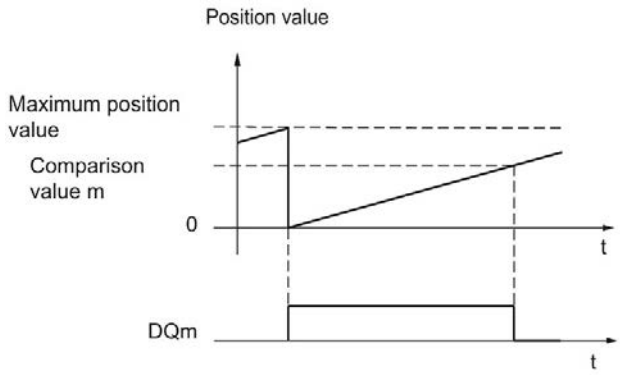

The comparison event is independent of the direction of the position value change.

Setting between comparison value 0 and comparison value 1

The comparison event can be configured for the digital output DQ1 if "Use by user program" has been configured for the digital output DQ0. Comparison value 1 must be greater than Comparison value 0.

DQ1 is set to 1 if:

Comparison value 0 <= position value <= comparison value 1

The figure below shows an example of the comparison event when counting up:

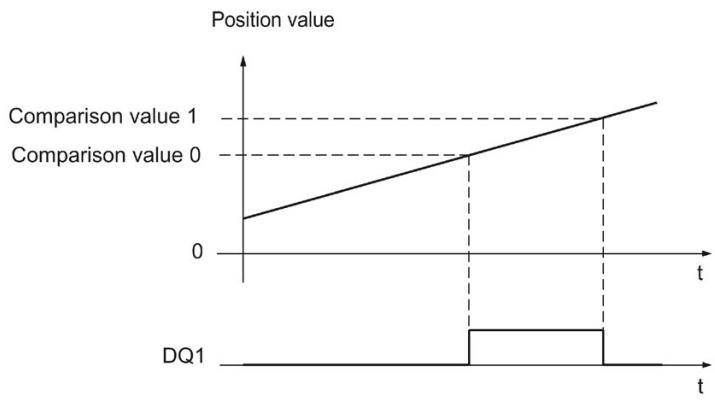

Setting at comparison value for one pulse duration

The respective digital output is set to 1 for a specified period of time when the following conditions are fulfilled:

- Matching of the position value and comparison value or crossing of the comparison value
- Current direction of the position value change = assigned direction for the comparison event

The figure below shows an example of the comparison event when counting up:

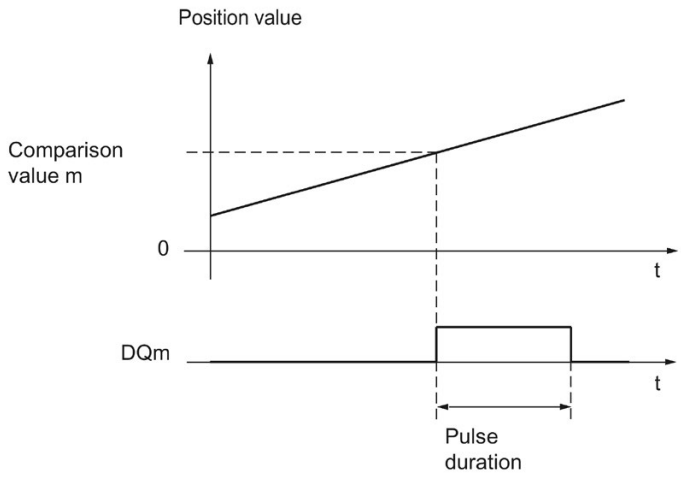

The figure below shows an example of the comparison event when counting down:

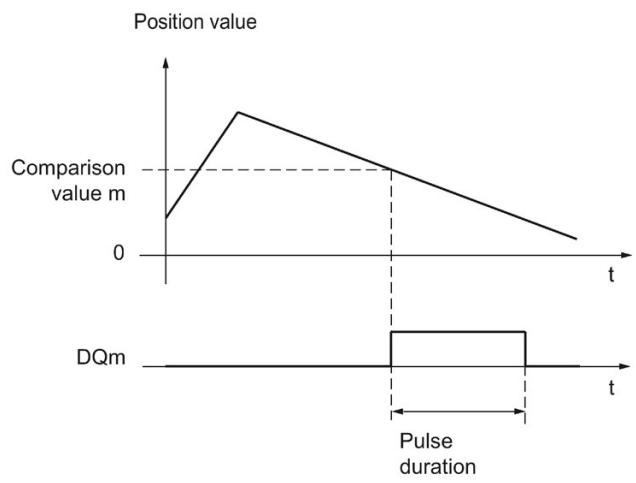

To repeat the comparison event, the position value must change and then correspond to or cross the respective comparison value again.

Setting by the user program up to comparison value

You can set each digital output to 1 (edge) by setting the control bit (Page 219) SET_DQm. The respective digital output is set to 0 by any of the following events:

- Matching of the position value and the comparison value or crossing of the comparison value in the configured direction of the comparison event
- Resetting of the SET_DQm control bit.

The figure below shows an example of the comparison event when counting up:

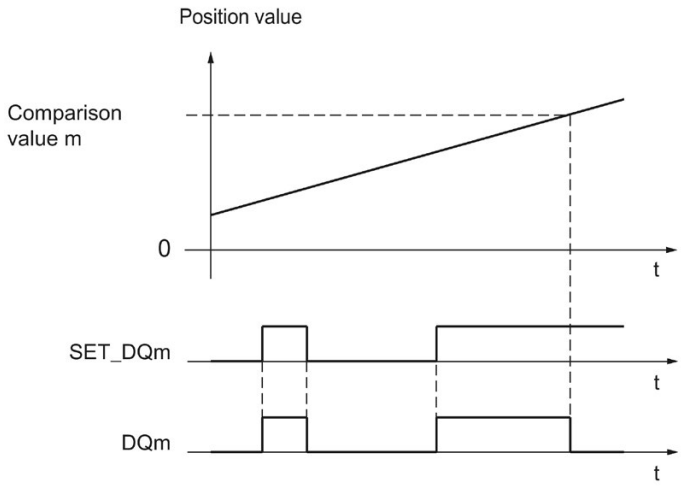

You can disable the digital output before the position value corresponds to or exceeds the comparison value by setting the control bit SET_DQm to 0.

Note

If the comparison value is reached or exceeded in the assigned direction, feedback bit EVENT_CMPm is set independently of the status of control bit SET_DQm.

2.2.8.4 Switching at comparison values with measured value as reference

The comparison values are compared with the current measured value. If the measured value meets the configured comparison condition and the technological function of the corresponding digital output is enabled, the digital output is set. If you configure "Between comparison value 0 and 1" or "Not between comparison value 0 and 1" for digital output DQ1, both comparison values affect DQ1.

You can make switching for a digital output dependent on one of the following comparison events:

Setting above the comparison value

The digital output is set to 1 if:

Measured value >= comparison value

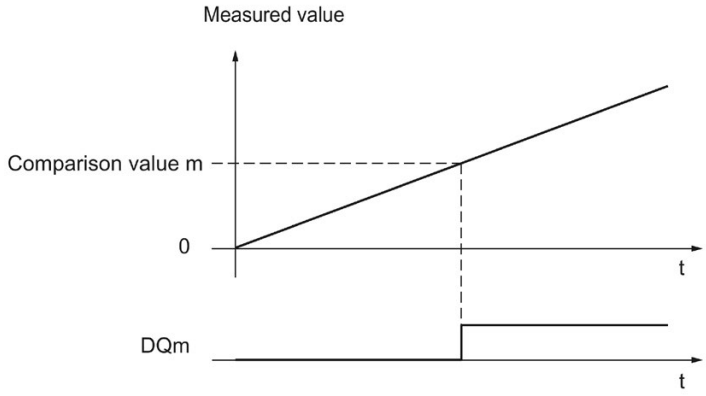

Setting below the comparison value

The digital output is set to 1 if:

Measured value <= comparison value

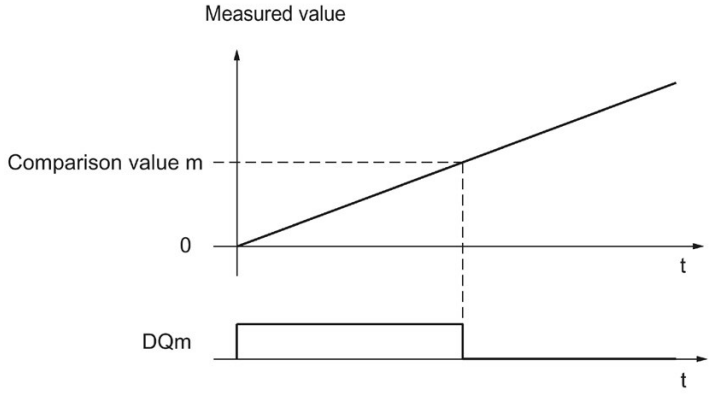

Setting between comparison value 0 and comparison value 1

The comparison event can be configured for the digital output DQ1 if "Use by user program" has been configured for the digital output DQ0. Comparison value 1 must be greater than Comparison value 0.

DQ1 is set to 1 if:

Comparison value 0 <= measured value <= comparison value 1

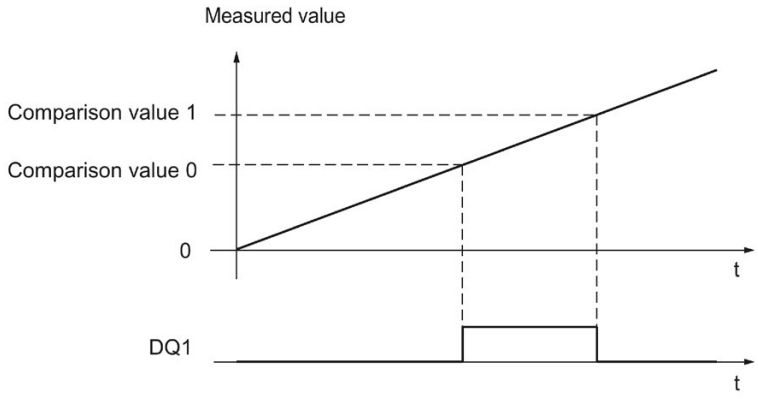

Not setting between comparison value 0 and comparison value 1

The comparison event can be configured for the digital output DQ1 if "Use by user program" has been configured for the digital output DQ0. Comparison value 1 must be greater than Comparison value 0.

DQ1 is set to 1 if:

Comparison value 1 <= measured value <= comparison value 0

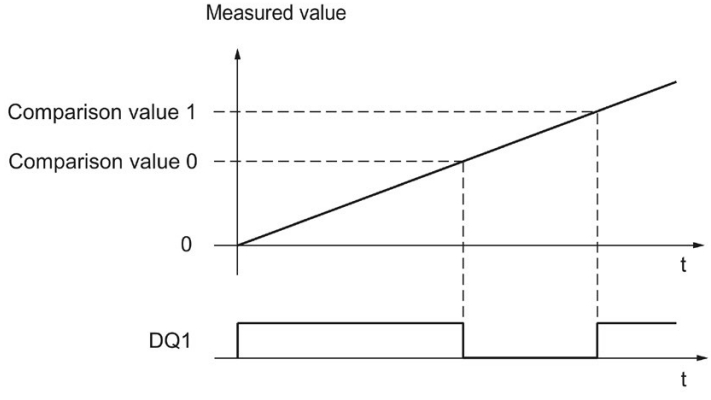

2.2.9 Measured value determination

2.2.9.1 Overview of measuring functions

The following highly accurate measuring functions are available (accuracy up to 100 ppm):

Measurement type (Page 59)	Description
Frequency measurement	The mean frequency is calculated at set measuring intervals on the basis of the time profile of the count pulses or position value changes and returned in Hertz as floating point number.
Period measurement	The mean period duration is calculated at set measuring intervals on the basis of the time profile of the count pulses or position value changes and returned in seconds as floating point number.
Velocity measurement	The mean velocity is calculated at set measuring intervals on the basis of the time profile of the count pulses or position value changes and other parameters, and returned in the configured unit of measurement.

Measured values and counter values are available concurrently in the feedback interface.

Update time

You can configure the interval at which the technology module updates the measured values cyclically as the update time. Setting longer update time intervals allows uneven measured variables to be smoothed and increases measuring accuracy.

Gate control for incremental and pulse encoders

Opening and closing the internal gate defines the period of time during which the count pulses are captured. The update time is asynchronous to the opening of the gate, which means that the update time is not started when the gate is opened. After the internal gate is closed, the last measured value captured is still returned.

2.2.9.2 Measured value determination with incremental or pulse encoder

Measuring range (TM Count and TM PosInput)

The measuring functions have the following measuring limits:

Measurement type	Low measuring range limit	High measuring range limit
Frequency measurement	0.04 Hz	800 kHz* / 4 MHz**
Period measurement	1.25 µs* / 0.25 µs**	25 s
Velocity measurement	Depending on the configured number of "increments per unit" and the "time base for velocity measurement"	

* Applies to 24 V incremental encoders and "quadruple" signal evaluation.

** Applies to RS422 incremental encoders and "quadruple" signal evaluation.

All measured values are returned as signed values. The sign indicates whether the counter value increased or decreased during the relevant time period.

Measuring range (Compact CPU)

The measuring functions have the following measuring range limits:

Measurement type	Low measuring range limit	High measuring range limit
Frequency measurement	0.04 Hz	400 kHz*
Period measurement	2.5 µs*	25 s
Velocity measurement	Depends on the configured number of "Increments per unit" and the "Time base for velocity measurement"	

* Applies to 24 V incremental encoders and "quadruple“ signal evaluation.

All measured values are returned as signed values. The sign indicates whether the counter value increased or decreased during the relevant time period.

Measuring principle

The technology module assigns a time value to each count pulse. The measuring interval is defined as the time between each last count pulse before and during the previous update time. The measuring interval and the number of pulses in the measuring interval are evaluated to calculate measured variables.

If there is no count pulse within an update time, the measuring interval is dynamically adjusted. In this case, a pulse is assumed at the end of the update time and the measuring interval is calculated as the time between that point and the last pulse which occurred. The number of pulses is then 1.

The feedback bit STS_M_INTERVAL indicates whether a count pulse occurred in the previous measuring interval. This allows for a differentiation between an assumed and an actual count pulse.

The following figures show the principle of measurement and the dynamic adjustment of the measuring interval:

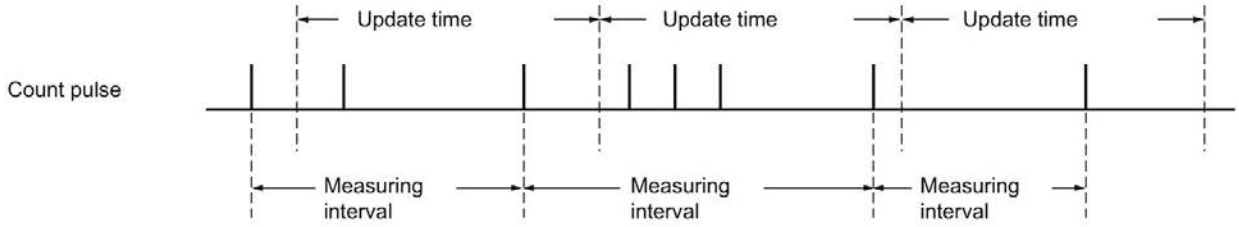

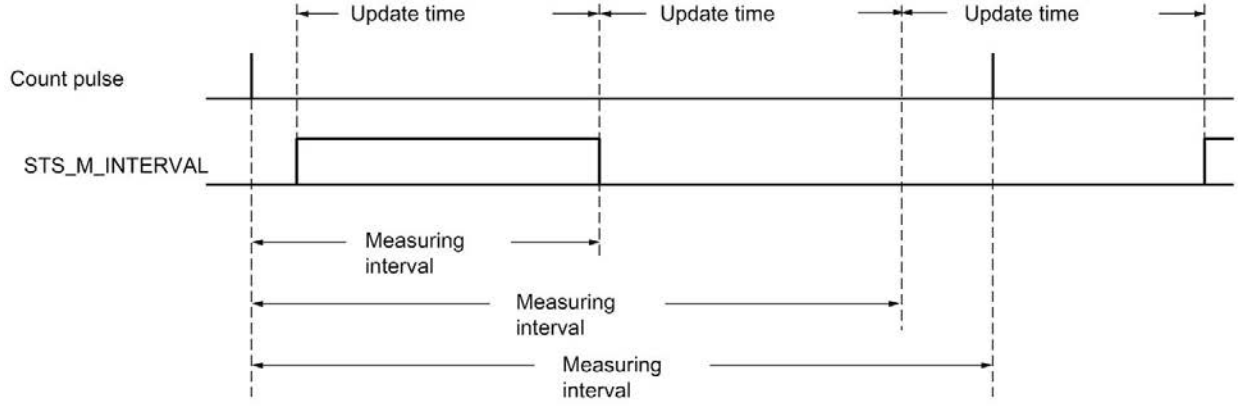

Frequency measurement

A value "0" is returned until the first measured value is available.

The measurement process begins with the first pulse detected once the internal gate has been opened. The first measured value can be calculated after the second pulse at the earliest.

The measured value is updated in the feedback interface (Page 222) upon completion of each update time. If the internal gate is closed, measuring stops and the measured value is no longer updated.

The figures below shows an example of frequency measurement with an update time of 1 s:

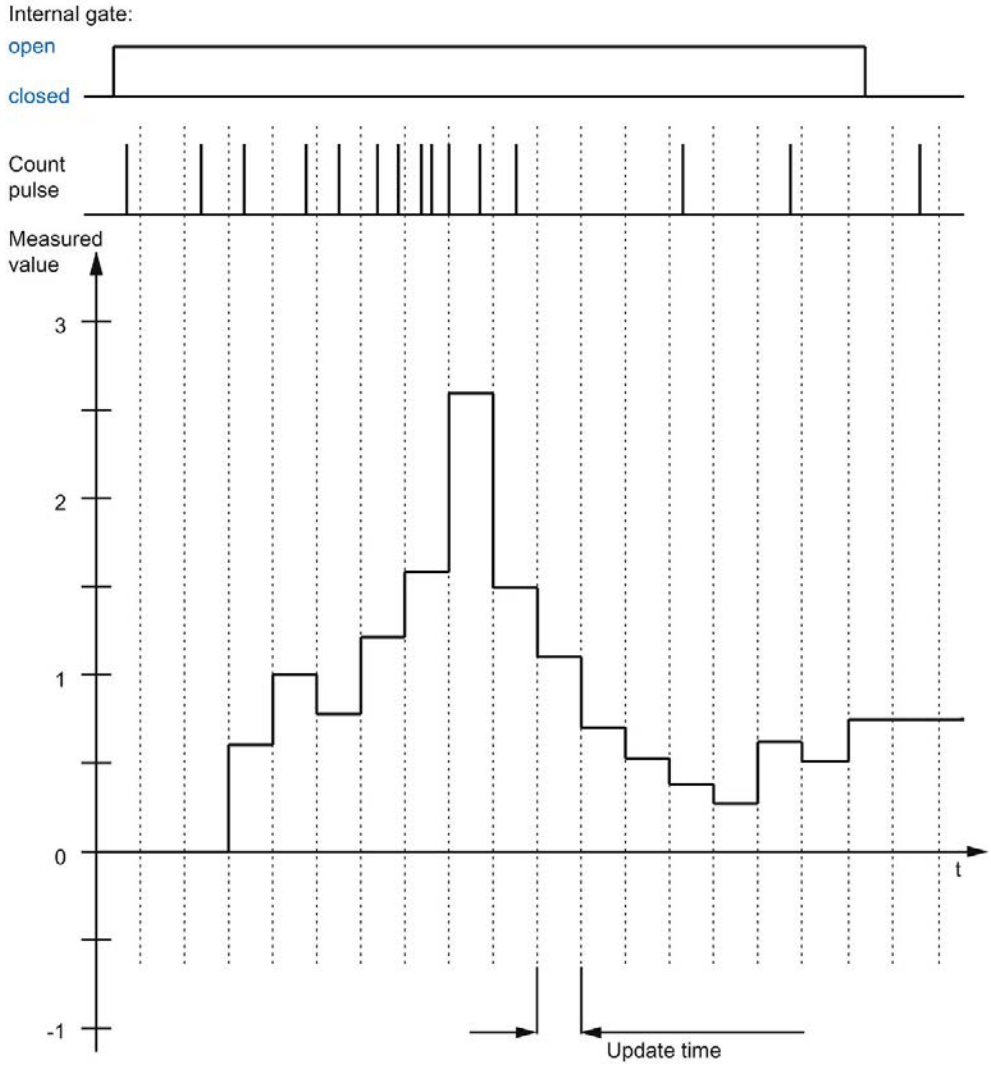

Period measurement

The reciprocal of the frequency is output as the measured value for period measurement.

A value "25 s" is returned until the first measured value is available.

Velocity measurement

The normalized frequency is output as the measured value in velocity measurement. You can configure the scaling using the time basis and the number of increments that your encoder delivers per unit.

Example:

Your encoder delivers 4000 increments per meter. The velocity is to be measured in meters per minute.

In this case, you need to configure 4000 Increments per unit and a time basis of one minute.

2.2.9.3 Measured value determination with SSI absolute encoder

Measuring range SSI absolute encoder

The measuring functions have the following measuring limits:

Measurement type	Low measuring range limit	High measuring range limit
Frequency measurement	0,04 Hz	4 MHz
Period measurement	0,25 µs	25 s
Velocity measurement	Depending on the configured number of "increments per unit" and the "time base for velocity measurement"	

All measured values are returned as signed values. The sign indicates whether the position value increased or decreased during the relevant time period.

Measuring principle

The technology module assigns a time value to each SSI frame. The measuring interval is defined as the time between the last SSI frame with a change of position value before and during the previous update time. The measuring interval and the total change in position value in the measuring interval are evaluated to calculate a measured variable. The total change in position value in a measuring interval corresponds to the number of encoder increments in the same measuring interval.

If there is no change in position value within an update time, the measuring interval is dynamically adjusted. In this case, a change in position value is assumed at the end of the update time and the measuring interval is calculated as the time between that point and the last SSI frame with a change in position value. The change in position value is then 1.

The feedback bit STS_M_INTERVAL indicates whether a change in position value occurred in the previous measuring interval. This allows for a differentiation between an assumed and an actual change in position value. If the technology module cannot calculate measured values because the measuring range limit has been violated, the feedback bit STS_M_INTERVAL is not set.

Frequency measurement

The value "0.0" is reported in the time up to the first available measured value.

The measuring process begins with the first detected change in position value. The first measured value can be calculated after the second detected change in position value at the earliest.

The measured value is updated in the feedback interface (Page 222) upon completion of each update time.

The figures below shows an example of frequency measurement with an update time of 1 s:

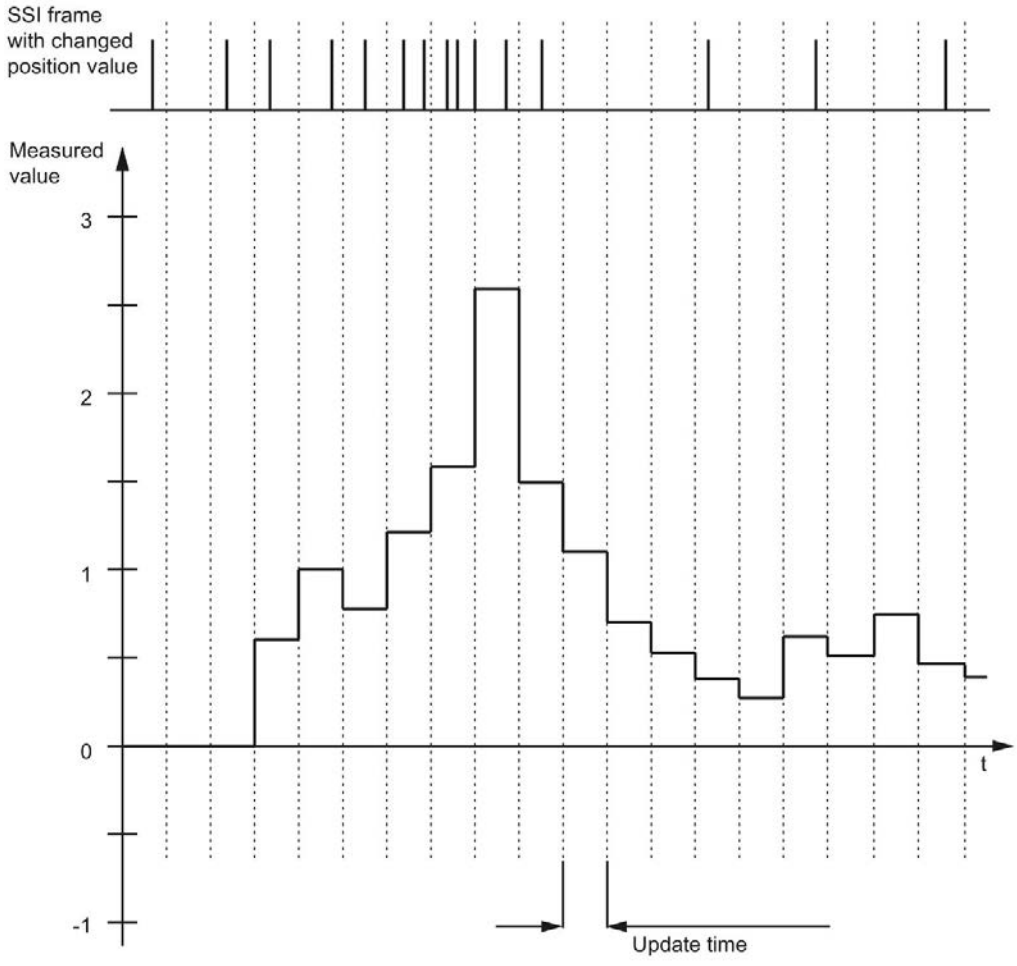

Period measurement

The reciprocal of the frequency is output as the measured value for period measurement.

A value "25 s" is returned until the first measured value is available.

Velocity measurement

The normalized frequency is output as the measured value in velocity measurement. You can configure the scaling using the time basis and the number of increments that your encoder delivers per unit.

Example:

Your SSI absolute encoder operates with a resolution of 12 bits per revolution and performs 4096 increments per revolution. The velocity should be measured in revolutions per minute.

In this case, you need to configure 4096 Increments per unit and a time basis of one minute.

Note

Excessive encoder speed can provide wrong direction of rotation.

If an SSI absolute encoder rotates so quickly that more than half of the value range is covered within one module cycle[1], the velocity and direction of rotation can not be determined correctly anymore. This can result in an incorrect function at:

- DQ functions
- Feedback bits EVENT_OFLW, EVENT_UFLW, EVENT_ZERO, EVENT_CMP0, EVENT_CMP1 and STS_DIR

[1] Non isochronous mode: 500 µs; isochronous mode: PROFINET cycle time

---

Note

If you are using an SSI absolute encoder whose value range does not correspond to the power of 2, the calculated speed measured value may be incorrect at the moment of the overflow.

2.2.10 Hysteresis

2.2.10.1 Hysteresis with incremental or pulse encoder

Description

Hysteresis allows you to specify a range around the comparison values within which the digital outputs are not to be switched again until the counter value has gone outside this range.

Slight movements by the encoder can result in the counter value fluctuating around a certain value. If a comparison value or a counting limit lies within this fluctuation range, the corresponding digital output is switched on and off with corresponding frequency if hysteresis is not used. Hysteresis prevents this unwanted switching, and configured hardware interrupts when a comparison event occurs.

The hysteresis becomes active when the respective comparison value is reached by a count pulse. If the counter value is set to the start value during an active hysteresis, the hysteresis becomes inactive.

Regardless of the hysteresis value, the hysteresis range ends at the low/high counting limits.

Function principle

The figure below shows an example for the hysteresis with the following configuration:

- Setting of a digital output between comparison value and high counting limit
- Comparison value = 5
- Hysteresis = 0 or 2 (gray background)

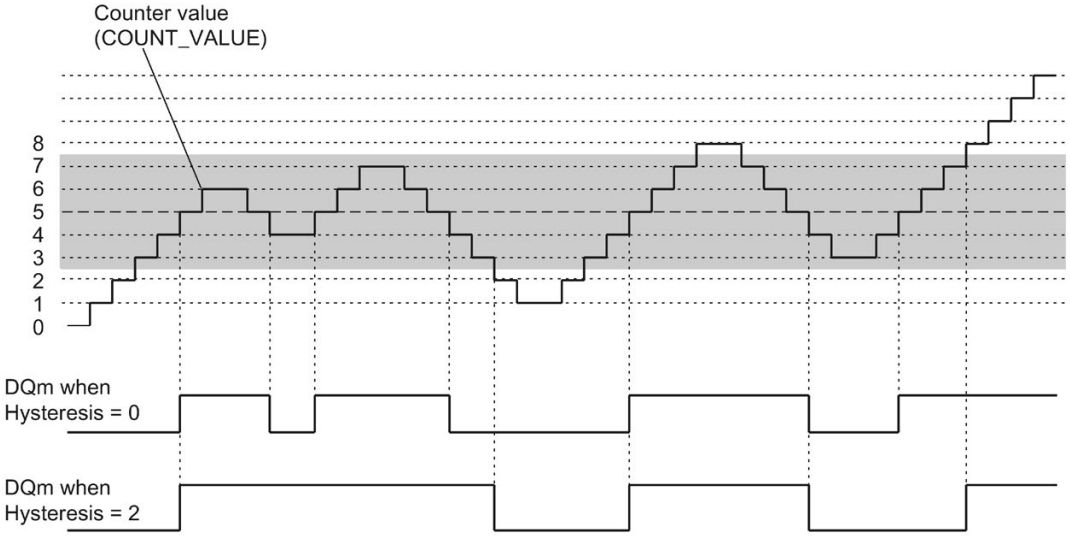

Hysteresis is enabled when the counter value 5 is reached. When the hysteresis is active, the comparison result remains unchanged. Hysteresis is disabled when the counter value 2 or 8 is reached.

The figure below shows an example for the hysteresis with the following configuration:

- Setting at comparison value for one pulse duration
- Comparison value = 5
- Comparison in both count directions
- Hysteresis = 0 or 2 (gray background)

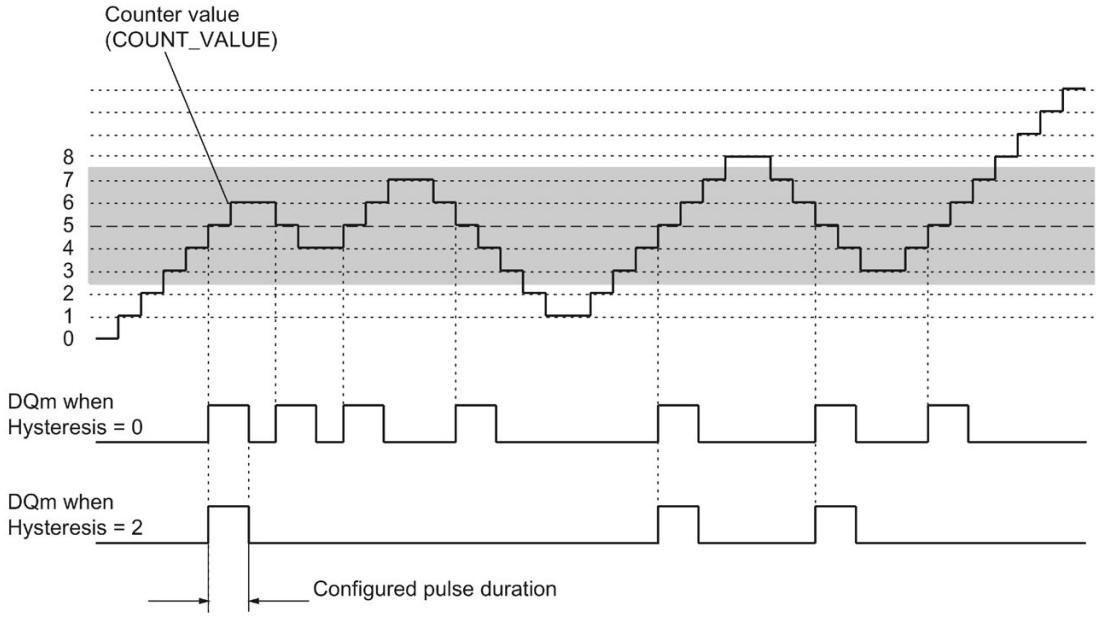

2.2.10.2 Hysteresis with SSI absolute encoder

Description

Hysteresis allows you to specify a range around the comparison values within which the digital outputs are not to be switched again until the position value has gone outside this range.

Slight movements by the encoder can result in the position value fluctuating around a certain value. If a comparison value, the minimum or maximum position value, lies within the fluctuation range, the associated digital output is switched on and off if a hysteresis is not used. Hysteresis prevents this unwanted switching, and configured hardware interrupts when a compare event occurs.

Regardless of the hysteresis value, the hysteresis range ends at the respective minimum or maximum position value.

Function principle

The figure below shows an example for the hysteresis with the following parameter assignment:

- Setting of a digital output between comparison value and high limit
- Comparison value = 10
- Hysteresis = 0 or 2 (gray background)

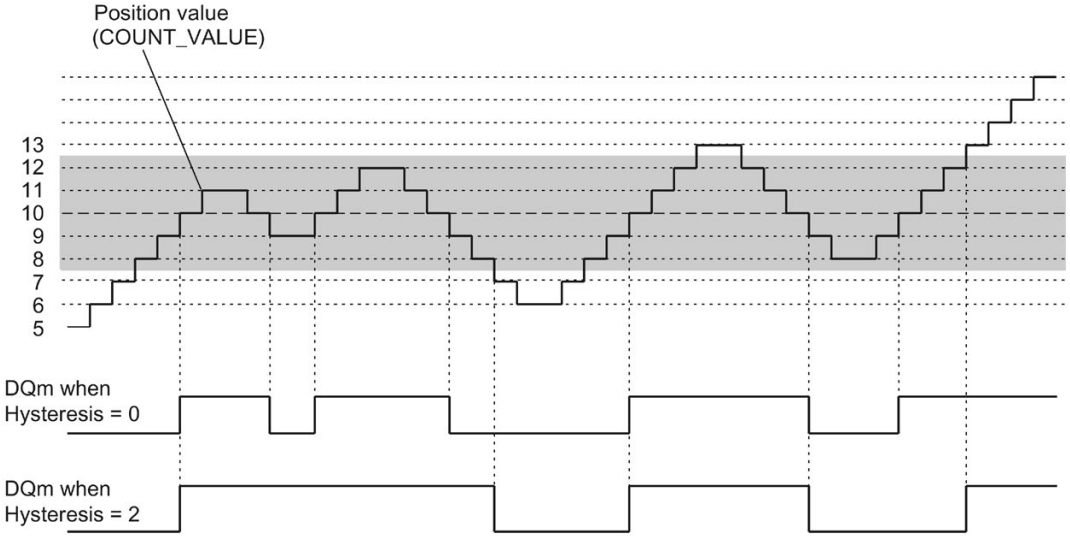

Hysteresis is enabled when the position value 10 is reached. When the hysteresis is active, the comparison result remains unchanged. Hysteresis is disabled when the position values 7 or 13 are reached.

The figure below shows an example for the hysteresis with the following parameter assignment:

- Setting at comparison value for one pulse duration
- Comparison value = 10
- Comparison in both directions of position value changes
- Hysteresis = 0 or 2 (gray background)

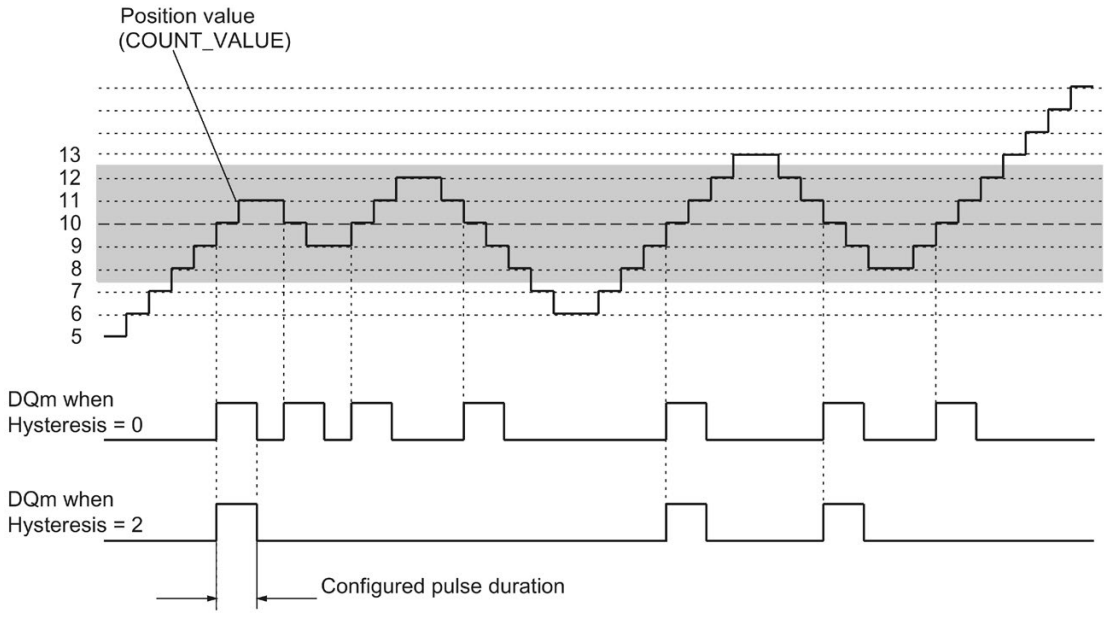

2.2.11 Interrupts

Hardware interrupt

The technology module can trigger a hardware interrupt in the CPU if, for example, a comparison event occurs; in the event of overflow or underflow; in the event of a zero crossing of the counter and/or of a change in count direction (direction reversal). You can specify which events are to trigger a hardware interrupt during operation.

Diagnostic interrupt

The technology module can trigger diagnostic interrupts in the event of errors. You enable the diagnostic interrupts for certain errors in the device configuration. Refer to the device manual for the technology module to learn about the events that can trigger a diagnostic interrupt during operation.

2.2.12 Position detection for Motion Control

Description

You can use the technology module for example with an incremental encoder for the following axis technology objects of S7-1500 Motion Control for position detection :

- TO_PositioningAxis
- TO_SynchronousAxis
- TO_ExternalEncoder

When using an incremental or pulse encoder, the position detection is based on the counting function of the technology module. With an SSI absolute encoder, the absolute value is read in via a synchronous, serial interface and prepared according to the parameter assignment and made available for S7-1500 Motion Control.

The range of functions of the technology module has the following limitations in this case:

- Counter behavior not configurable
- No functions for digital inputs available apart from measuring input function
- No comparison functions for digital outputs available
- No hardware interrupts available

In the device configuration of the technology module in STEP 7 (TIA Portal), select the "Position input for technology object "Motion Control"" operating mode and use the corresponding technology object in the program. This reduces the configuration options to the parameters that are essential. For TM Count or TM PosInput, the mode automatically applies to all channels of the technology module. For a Compact CPU, the mode automatically applies to the respective channel.

In this operating mode you can use the (TO_MeasuringInput) measuring input technology object to execute a measuring input function with a hardware digital input. To do this select the measuring input type "Measuring via PROFIdrive telegram" in the measuring input technology object and the value "1" as the number of the measuring input.

You can find information about further configuring in the help for the axis technology objects and the measuring input technology object of S7-1500 Motion Control.

2.2.13 Encoder signals

2.2.13.1 24 V and TTL count signals

24 V and TTL incremental encoder count signals

The 24 V incremental encoder returns the 24 V signals A, B, and N to the technology module. The A and B signals are phase-shifted by 90°. You can also connect incremental encoders without an N signal.

A 24 V incremental encoder uses the A and B signals for counting. If configured accordingly, the N signal is used for setting the counter to the start value or for saving the current counter value to the Capture value.

The figure below shows an example of the time profile of the signals of an 24 V incremental encoder:

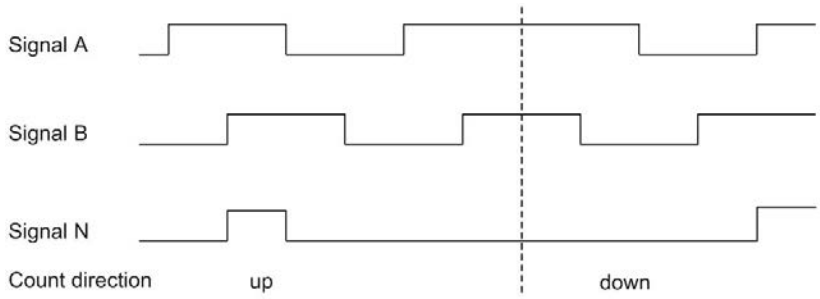

The technology module detects the count direction by evaluating the sequence of edges of the A and B signals. You can specify an inversion of the count direction.

24 V and TTL pulse encoder count signals without/with direction signal

The encoder, for example an initiator (BERO) or a light barrier, returns only a count signal that is connected to terminal A of the counter.

In addition, you can connect a signal for direction detection to terminal B of the counter. In case of a high level the direction signal is counted backwards. If your encoder does not return a corresponding signal, you can specify the count direction with the user program using the control interface.

The figure below shows an example of the time profile of the signals of a 24 V pulse encoder with direction signal and the resulting count pulses:

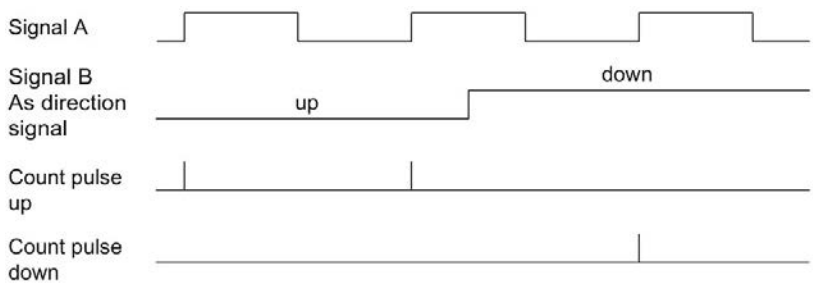

24 V and TTL pulse encoder count signals with Up/Down count signal

The Up count signal is connected to terminal A. The Down count signal is connected to terminal B.

The figure below shows an example of the time profile of the signals of a pulse encoder with Up/Down count signal and the resulting count pulses:

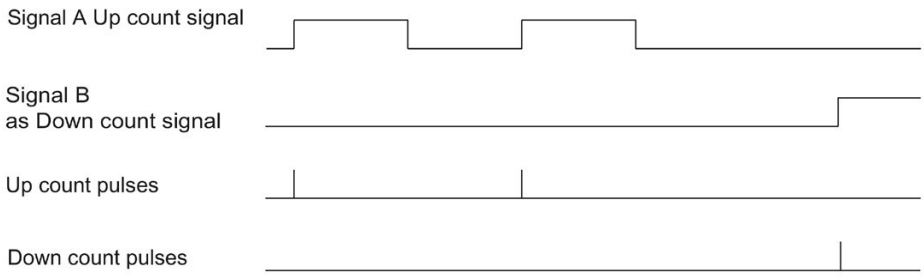

Sourcing output/sinking output for 24 V counter signals (TM Count)

You can connect the following encoders/sensors to the counter inputs:

- Sourcing output:
  The A, B, and N inputs are wired to 24VDC .
- Sinking output:
  The A, B, and N inputs are wired to ground M .
- Push-pull (sourcing and sinking output):
  The A, B, and N inputs are wired alternately to 24VDC and ground M .

Sourcing output for 24 V counter signals (Compact CPU)

You can connect the sourcing output and push-pull encoders or sensors to the counter inputs.

Monitoring of the encoder signals (TM Count and TM PosInput)

The signals of push-pull 24 V encoders are monitored for wire breaks by the technology module. TTL signals are monitored by the technology module for faulty supply voltages.

If you enable the diagnostic interrupt in the device configuration, the technology module triggers a diagnostic interrupt in the event of encoder signal errors.

2.2.13.2 RS422 count signals

RS422 incremental encoder count signals

The RS422 incremental encoder sends the following differential signals to the technology module:

- +A and -A
- +B and -B
- +N and -N

The signal information for RS422 signals is encoded in the differential voltage between A and -A, B and -B, and +N and -N. The A and B signals are phase-shifted by 90°. You can also connect incremental encoders without an N signal.

RS422 incremental encoders use the A and B signals for counting. If configured accordingly, the N signal is used for setting the counter to the start value or for saving the current counter value as the Capture value.

The figure below shows an example of the time profile of the signals of an RS422 incremental encoder:

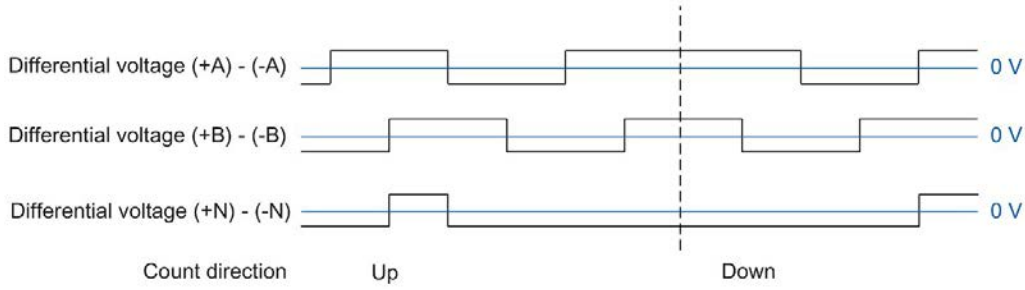

The technology module detects the count direction by evaluating the sequence of edges of the A and B signals. You can specify an inversion of the count direction.

Count signals of RS422 pulse encoders without/with direction signal

The encoder, for example a light barrier, only returns a count signal that is connected to terminal A.

You can also connect a signal for direction detection to terminal B. In case of a high level the direction signal is counted backwards. If your encoder does not return a corresponding signal, you can specify the count direction with the user program using the control interface.

The figure below shows an example of the time profile of the signals of a RS422 pulse encoder with direction signal and the resulting count pulses:

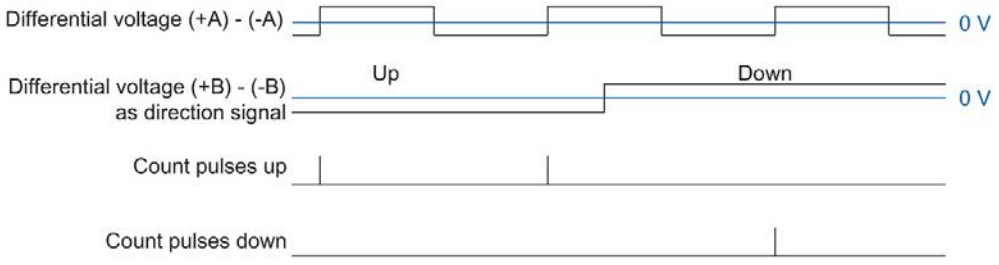

Count signals of RS422 pulse encoders with Up/Down count signal

The Up count signal is connected to the A terminals. The Down count signal is connected to the B terminals.

The figure below shows an example of the time profile of the signals of an RS422 pulse encoder with Up/Down count signal and the resulting count pulses:

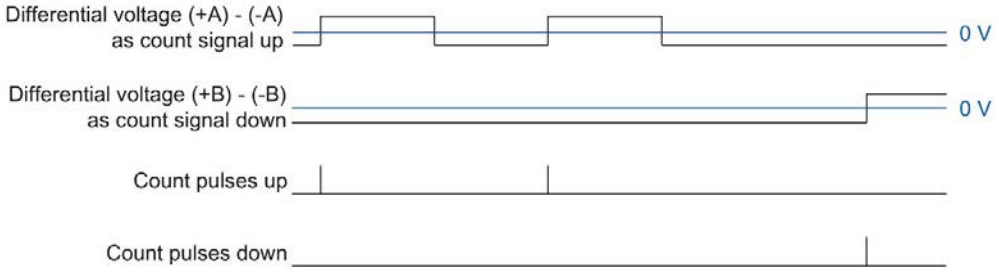

Monitoring of encoder signals

RS422 signals are monitored by the technology module for wire breaks, short-circuits, and incorrect supply voltage.

If you enable the diagnostic interrupt in the device configuration, the technology module triggers a diagnostic interrupt in the event of encoder signal errors.

2.2.13.3 SSI signals

Signals from SSI absolute encoders

The SSI absolute encoder and the technology module communicate by means of the SSI data signals +D and -D and the SSI clock signals +C and -C. SSI uses the RS422 signal standard. The signal information is coded in the respective differential voltage between +C and -C as well as +D and -D.

Monitoring of the encoder signals and the SSI frames

The signals of an SSI absolute encoder are monitored for wire breaks, short-circuits and incorrect supply voltage. The technology module also monitors the SSI frames for errors.

If you enable the diagnostic interrupts in the device configuration, the technology module triggers a diagnostic interrupt in the event of encoder signal or SSI frame errors.

2.2.14 Signal evaluation of incremental signals

2.2.14.1 Overview

The technology module counter counts the edges of encoder signals A and B. For incremental encoders with phase-shifted signals A and B, you can select either single or multiple evaluation to improve the resolution.

You can configure the following signal evaluations:

- Single evaluation (Page 76)
- Double evaluation (Page 77)
- Quadruple evaluation (Page 78)

Note

The phase offset between the edges of signals A and B is evaluated. If no phase shift is identifiable, an encoder error (invalid transition of A/B signals) is reported via the ENC_ERROR feedback bit.

2.2.14.2 Single evaluation

Single evaluation evaluates the rising and falling edge at signal A when signal B has a low level.

Count pulses in an upwards direction are generated with a rising edge at signal A during a low level at signal B. Count pulses in a downwards direction are generated with a falling edge at signal A during a low level of signal B.

The following figure shows an example for single evaluation of 24 V and TTL count signals:

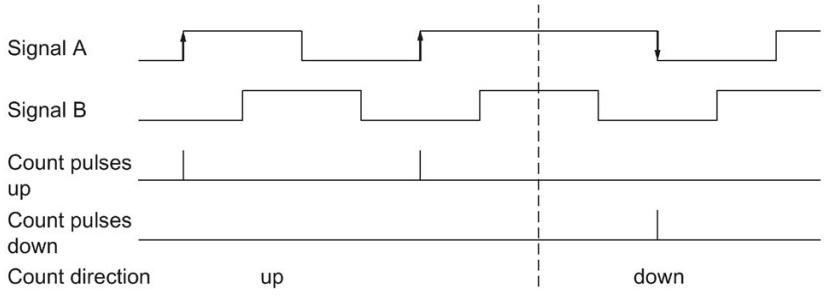

The following figure shows an example for single evaluation of RS422 count signals:

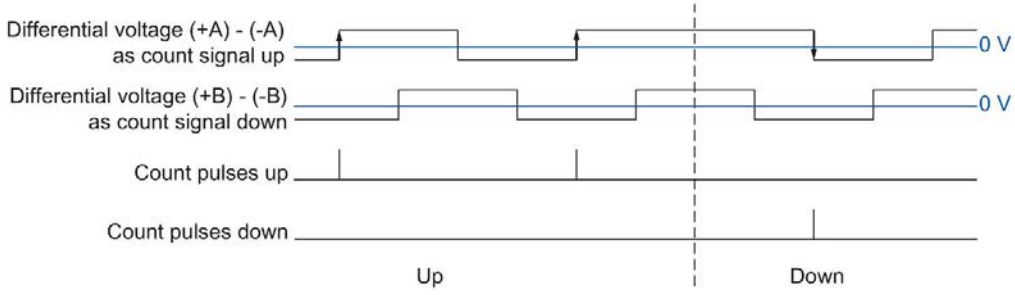

2.2.14.3 Double evaluation

With double evaluation, the rising and falling edges of signal A are evaluated.

The edge direction of signal A and the level at signal B determines whether count pulses are generated in an upward or downward direction.

The following figure shows an example for double evaluation of 24 V and TTL count signals:

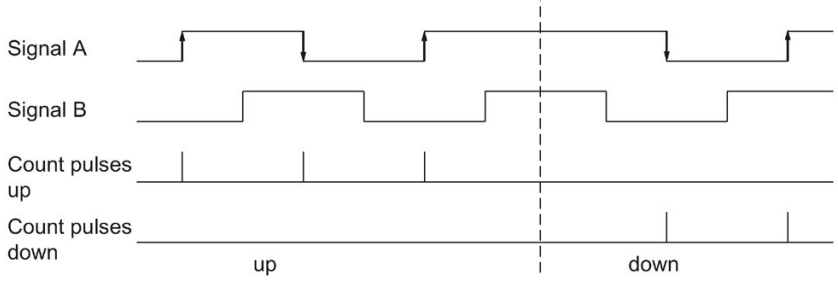

The following figure shows an example for double evaluation of RS422 count signals:

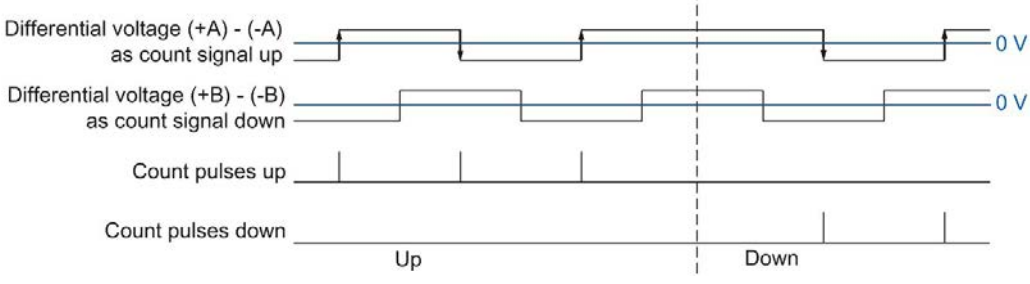

2.2.14.4 Quadruple evaluation

With quadruple evaluation, the rising and falling edges of signals A and B are evaluated.

The edge direction of one signal and the level of the other signal determines whether count pulses are generated in an upward or downward direction.

The figure below shows an example for quadruple evaluation of 24 V and TTL count signals:

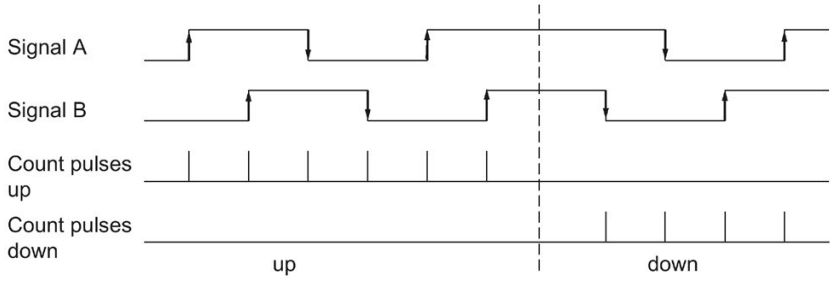

The figure below shows an example for quadruple evaluation of RS422 count signals:

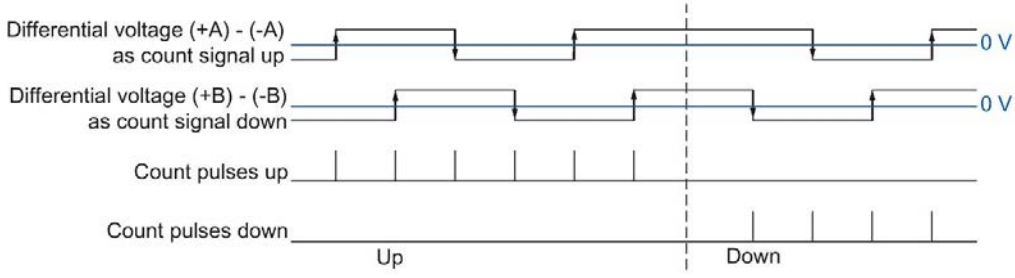

2.2.15 Clock synchronization (TM Count and TM PosInput)

The technology module supports the system function "Isochronous mode". This system function enables position, count and measured values to be recorded in a defined system cycle.

In isochronous mode, the cycle of the user program, the transmission of the input and output data and the processing in the module are synchronized with each other. The output signals switch immediately if the relevant comparison condition is met. A change in the state of a digital input immediately affects the planned reaction of the technology module and changes the status bit of the digital input in the feedback interface.

In the case of operation with a "Counting and measurement" technology object use an OB of the type "Synchronous Cycle" (for example OB61). In the assigned OB the instruction High_Speed_Counter or SSI_Absolute_Encoder is called.

For position detection of a "Motion Control" technology object use the OB of the type "MC-Servo". When using the technology objects cam and cam track, isochronous mode is required. When using the measuring input technology object in connection with the hardware digital input DI1, no isochronous mode is required.

In case of manual operation use an OB of the "Synchronous Cycle" type (for example OB61). In the assigned OB the input and output data is processed.

Data processing

The data that was transmitted to the technology module in the current bus cycle via the control interface takes effect when it is processed in the internal technology module cycle. At the moment when the input data (T_i) are read, the position and counter value and, if appropriate, the measured value as well as status bits are detected and made available in the feedback interface for retrieval in the current bus cycle.

The update time for the measured value is synchronized in a suitable relationship to the system cycle and, if required, adapted in length. If you configure "0", the measured value is updated once per system cycle.

Isochronous mode parameter

In isochronous mode, the following parameters can have an effect on the isochronous parameters of the Sync domain.

- Filter frequency
- Frame length[1]
- Transmission rate[1]
- Monoflop time[1]
- Parity[1]

[1] Only when using an SSI absolute encoder

Because the isochronous parameters are not checked in RUN, overflows can occur when you change one or more of the named parameters in RUN: You prevent overflows by already selecting the option with the greatest time demand during the offline parameter assignment.

Additional information

For a detailed description of the isochronous mode refer to:

- The isochronous mode function manual available as a download from the Internet (https://support.industry.siemens.com/cs/ww/en/view/109755401).
- The PROFINET with STEP 7 function manual as a download from the Internet (https://support.industry.siemens.com/cs/ww/en/view/49948856).

2.3 Basics of counting (TM Timer DIDQ)

2.3.1 Overview of applications

Introduction

You configure the TM Timer DIDQ and assign its parameters with the configuration software.

The module's functions are controlled and monitored via the user program with the control and feedback interface.

System environment

The respective module can be used in the following system environments with its counter functions:

Applications	Components required	Configuration software	In the user program
Central operation with an S7-1500 CPU or 151xSP CPU	• S7-1500 automation system or ET 200SP CPU • TM Timer DIDQ	STEP 7 (TIA Portal): Device configuration and parameter setting with hardware configuration	Direct access to feedback interface of the technology module in the I/O data
Distributed operation with a S7-1500 CPU	• S7-1500 Automation System • ET 200 Distributed I/O System • TM Timer DIDQ		
Distributed operation with a S7-300/400 CPU	• S7-300/400 automation system • ET 200 distributed I/O system • TM Timer DIDQ	STEP 7 (TIA Portal): Device configuration and parameter setting with hardware configuration STEP 7: Device configuration and parameter setting with hardware configuration (only ET 200SP)	

Note

A description of the control and feedback interface is available in the device manual for the TM Timer DIDQ.

2.3.2 Counting with incremental encoder

You can use a few channels of a TM Timer DIDQ for simple counting tasks with an incremental encoder. Counting refers to the recording and adding up of events. The channels configured as counters each acquire the two incremental signals and evaluate these accordingly.

Count direction

The technology module can count up and down with an incremental encoder. You can invert the counting direction to adapt it to the process.

Counting limits

The counting limits define the counter value range used.

The minimum counter value is -2147483648 (-2^{31}). The maximum counter value is 2147483647 ($2^{31}-1$). The respective counter counts continuously. At an overflow, the counter jumps to the other counting limit in each case and continues counting.

The counter value cannot be influenced by the user program.

Parameter assignment

For use of a counter for an incremental encoder, two digital inputs each of a channel group are combined. For this purpose, you choose the configuration "Incremental encoder (A, B phase-shifted)" in the channel parameters for the respective group.

Note

Counters of the TM Timer DIDQ 16x24V

The number of available counters of the TM Timer DIDQ 16x24V is dependent on the channel configuration. In order to use 4 counters, you must choose the use of 8 inputs in the channel configuration. If you choose the use of 3 inputs, you can use 1 counter. Other channel configurations do not allow any counter use.

Counter value feedback

The current counter value is indicated in the feedback interface in the TEC_IN value (DIm). DIm corresponds to the first of the two grouped digital inputs in each case. For the second digital input, "0" is returned in the value TEC_IN (DIm+1).

2.3.3 Counting with pulse encoder

You can use a few channels of a TM Timer DIDQ for simple counting tasks with a pulse encoder. Counting refers to the recording and adding up of events. The channels configured as counters each acquire one pulse signal and evaluate this accordingly.

Count direction

The technology module can count up and down with a pulse encoder.

Counting limits

The counting limits define the counter value range used.

The minimum counter value is -2147483648 (-2^{31}). The maximum counter value is 2147483647 ($2^{31}-1$). The respective counter counts continuously. At an overflow, the counter jumps to the other counting limit in each case and continues counting.

The counter value cannot be influenced by the user program.

Parameter assignment

For use of a counter for a pulse encoder, you choose the configuration "Use inputs individually" or "Use input/output individually" in the channel parameters for the respective group. You can configure the first digital input of a group as a counter.

Note

Counters of the TM Timer DIDQ 16x24V

The number of available counters of the TM Timer DIDQ 16x24V is dependent on the channel configuration. In order to use 4 counters, you must choose the use of 8 inputs in the channel configuration. If you choose the use of 3 inputs, you can use 1 counter. Other channel configurations do not allow any counter use.

Counter value feedback

The current counter value is indicated in the feedback interface in the TEC_IN value (DIm). DIm corresponds to the respective digital input.

2.3.4 24 V count signals

Count signals of 24 V incremental encoders

The 24 V incremental encoder returns the 24 V signals A and B to the technology module. The A and B signals are phase-shifted by 90°.

The figure below shows an example of the time profile of the signals of an 24 V incremental encoder:

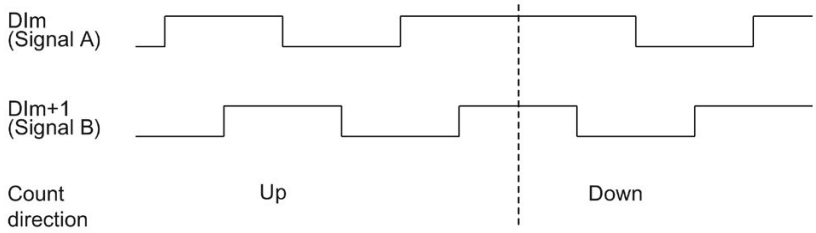

The technology module detects the count direction by evaluating the sequence of edges of the A and B signals. You can specify an inversion of the count direction.

Signal evaluation

The two phase-shifted signals of an incremental encoder are evaluated four times. With quadruple evaluation, the positive and negative edges of signal A and signal B are evaluated.

Whether count pulses are generated in an upward or downward direction depends on the edge direction of the one signal and the level of the other signal in the meantime.

The figure below shows an example of the quadruple evaluation of 24 V count signals:

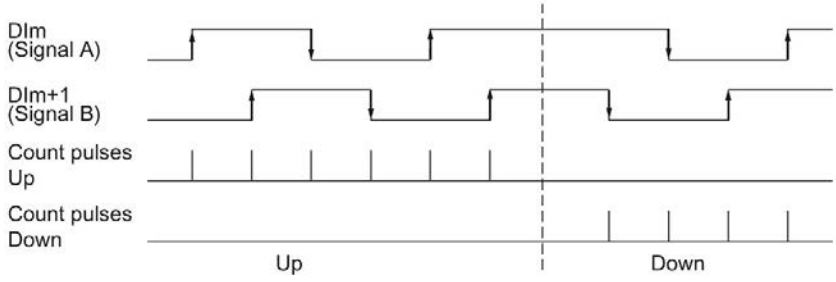

Count signals of 24 V pulse encoders

An encoder, for example, a proximity switch (BERO) or a light barrier, returns only one count signal that is connected to the digital input of a counter.

You can count the positive or the negative edges of the signal.

2.3.5 Isochronous mode

The TM Timer DIDQ supports the system function "Isochronous mode". This system function enables counter values to be acquired in a defined system cycle.

In isochronous mode, the cycle of the user program, the transmission of the input and output data and the processing in the module are synchronized with each other.

Data processing

The data that was transmitted to the module in the current bus cycle via the control interface takes effect when it is processed in the module's internal cycle. The counter value and status bits are detected at time T_i and made available in the feedback interface for retrieval in the current bus cycle.

Additional information

You will find detailed description of the isochronous mode:

- In the Isochronous mode function manual as a download from the Internet (https://support.industry.siemens.com/cs/ww/en/view/109755401) .
- In the PROFINET with STEP 7 function manual as a download from the Internet (https://support.industry.siemens.com/cs/ww/en/view/49948856).

2.4 Basics of counting (digital modules)

2.4.1 Overview of applications

Introduction

You configure the digital module and assign its parameters using the configuration software.

The module's functions are controlled and monitored via the user program with the control and feedback interface.

System environment

The respective module can be used in the following system environments:

Applications	Components required	Configuration software	In the user program
Central operation with a S7-1500 CPU or ET 200SP CPU	• S7-1500 automation system or ET 200SP CPU • Digital module	STEP 7 (TIA Portal): Device configuration and parameter setting with hardware configuration	Direct access to the control and feedback interface of the digital module in the I/O data
Distributed operation with a S7-1500 CPU	• S7-1500 Automation System • ET 200 Distributed I/O System • Digital module		
Distributed operation with a S7-300/400 CPU	• S7-300/400 automation system • ET 200 distributed I/O system • Digital module	STEP 7 (TIA Portal): Device configuration and parameter setting with hardware configuration STEP 7: Device configuration and parameter setting with hardware configuration (ET 200SP) or GSD file (ET 200MP)	
Distributed operation in a third-party system	• Third-party automation system • ET 200 distributed I/O system • Digital module	Third-party configuration software: Device configuration and parameter settings with GSD file	

Note

A description of the control and feedback interface is available in the device manual for the digital module.

2.4.2 Counting with pulse encoders

Counting refers to the detection and summation of events. The modules' counters record and evaluate pulse signals. The counting direction can be specified using encoder or pulse signals or through the configuration.

You can use feedback bits to switch the digital outputs of digital output modules at defined counter values.

You can configure the characteristics of the counters using the functionalities described below.

Counter limits

The counter limits define the counter value range used. The counter limits are configurable and can be modified during runtime using the user program. See the module's device manual for the maximum and minimum configurable counter limits.

You can configure whether the counting processes are terminated or continue when a counter limit is violated (automatic gate stop).

Start value

You can configure a start value within the counter limits. The start value can be modified during runtime with the user program.

Gate control

Opening and closing the hardware gate and software gate defines the period of time during which the counting signals are recordd.

The hardware gate is controlled externally via a digital input of the digital module. The hardware gate can be enabled through parameter assignment. The software gate is controlled via the user program. A description of the control and feedback interface is available in the device manual for the digital module.

2.4.3 Behavior at the counting limits

Violation of a counting limit

The high counting limit is violated when the current counter value is equal to the high counting limit and another upward count pulse is received. The counter low limit is violated when the current counter value is equal to the counter low limit and another downward count pulse is received.

For digital modules of ET 200SP and ET 200AL, the corresponding event bit is set in the feedback interface when the limit is exceeded. You can reset an event bit with the respective control bit:

Counting limit violated	Event bit	Reset bit
High counting limit	EVENT_OFLW	RES_EVENT_OFLW
Low counting limit	EVENT_UFLW	RES_EVENT_UFLW

Note

A description of the control and feedback interface is available in the device manual for the digital module.

You can configure whether or not you want to continue counting to another counter limit after a counting limit violation.

Note

The high counting limit and the start value define the value range of the counter:

Value range of the counter = (high limit – start value) + 1

Examples

The figure below shows an example for terminating counting after overflow and setting the counter to the opposite counting limit:

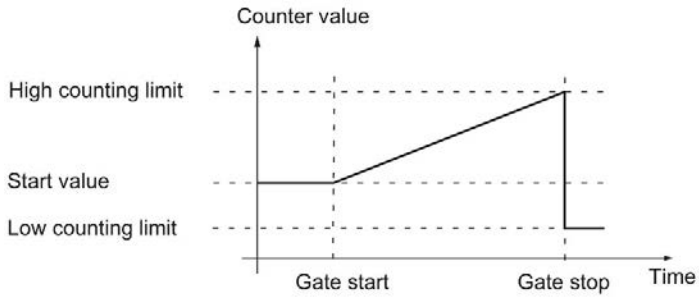

The figure below shows an example for continuing the counting process after an overflow and setting the counter to the opposite counting limit:

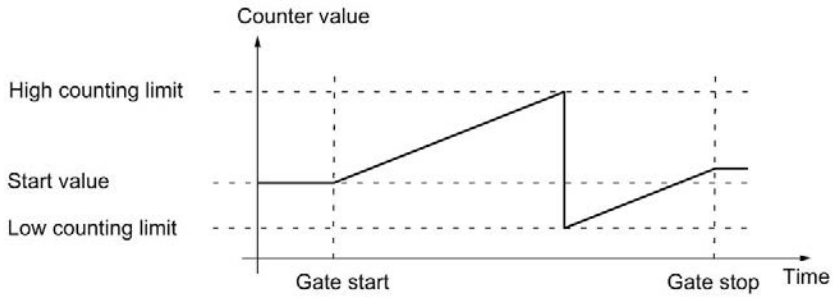

2.4.4 Gate control

Many applications require counting processes to be started or stopped in accordance with other events. In such cases, counting is started and stopped using the gate function.

The digital modules have two gates for each counting channel. These define the resulting internal gate:

- Software gate
- Hardware gate

Note

The hardware gate is not available for all digital modules.

2.4.4.1 Software gate

The software gate of the channel is opened and closed with the SW_GATEcontrol bit.

Note

A description of the control and feedback interface is available in the device manual for the digital module.

2.4.4.2 Hardware gate

The hardware gate is optional. You open and close the hardware gate using signals at the corresponding digital input.

Note

A configurable input delay delays the control signal of the digital input.

The status of a DIm digital input is indicated by the respective STS_DIm feedback bit. A description of the control and feedback interface is available in the device manual for the digital module.

Opening and closing the hardware gate

The figure below shows an example of opening and closing with a digital input:

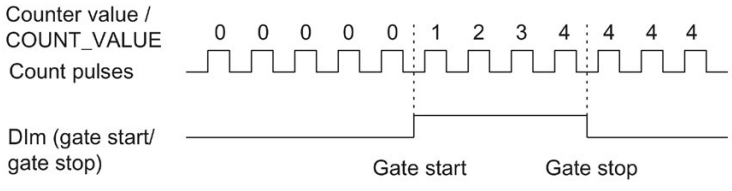

As long as the digital input is set, the hardware gate is open and the count pulses are counted. The hardware gate is closed when the digital input is reset. The counter value stays constant and ignores any further count pulses.

2.4.4.3 Internal gate

Internal gate

The internal gate is open if the software gate is open and the hardware gate is open or has not been configured. The status of the internal gate is indicated by the STS_GATE feedback bit. A description of the control and feedback interface is available in the device manual for the digital module.

If the internal gate is open, counting is started. If the internal gate is closed, all other count pulses are ignored and counting is stopped.

If you want to control a counting process with the hardware gate only, the software gate must be open. If you do not configure a hardware gate, the hardware gate is considered to be always open. In this case, you open and close the internal gate with the software gate only.

Hardware gate	Software gate	Internal gate
Open/not configured	open	open
Open/not configured	closed	closed
closed	open	closed
closed	closed	closed

The internal gate can also be automatically closed upon violation of a counting limit. The software or hardware gate must then be closed and reopened to continue counting.

2.4.5 Comparison values

Depending on the module, you can define up to two comparison values that control a feedback bit for the channel, independent of the user program.

When there are two comparison values, comparison value 1 must be greater than comparison value 0. The comparison values are configurable and can be modified during runtime using the user program.

The comparison values are compared with the current counter value. If the counter value meets the configured comparison condition, the respective STS_DQ feedback bit is set.

You can use the respective feedback bit in order to switch a digital output module's digital output. You can make setting the respective STS_DQ feedback bit dependent on one of the following comparison events. See the device manual for the digital module to find out which comparison events can be configured.

Setting between comparison value and high counter limit

The respective STS_DQ feedback bit is set to 1 when:

Comparison value <= counter value <= high counter limit

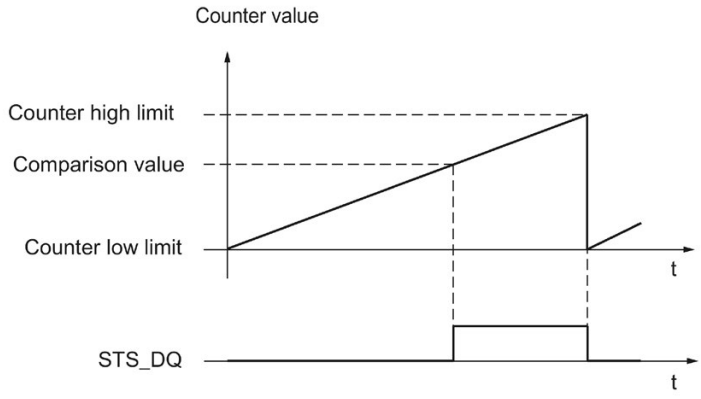

Setting between comparison value and low counter limit

The respective STS_DQ feedback bit is set to 1 when:

Low counter limit <= counter value <= comparison value

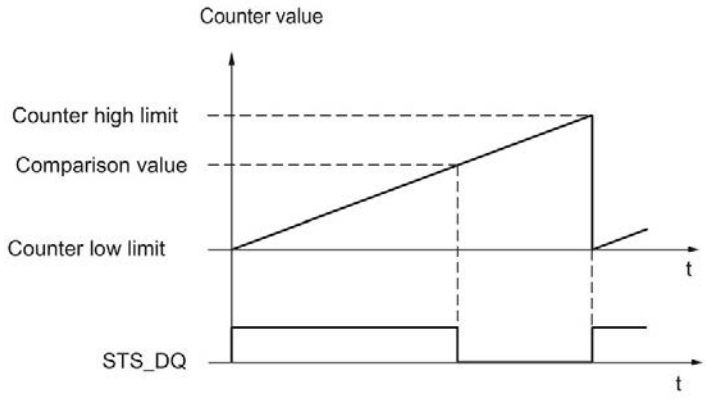

Setting between comparison value 0 and comparison value 1

The respective STS_DQ feedback bit is set to 1 when:

Comparison value 0 <= counter value <= comparison value 1

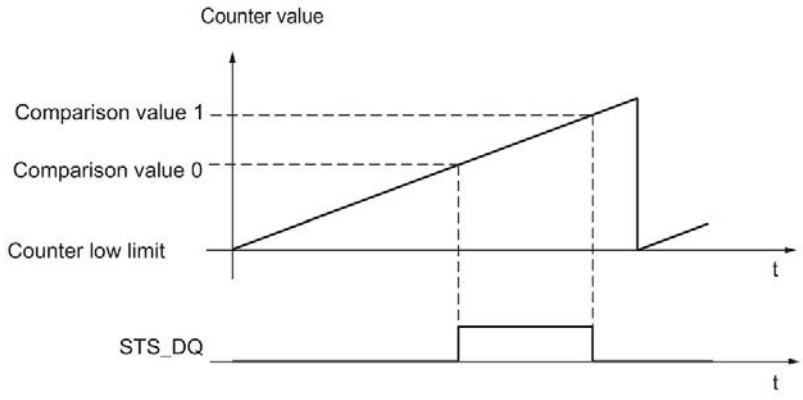

Not setting between comparison value 0 and comparison value 1

The respective STS_DQ feedback bit is set to 1 when:

Comparison value 0 <= counter value <= comparison value 1

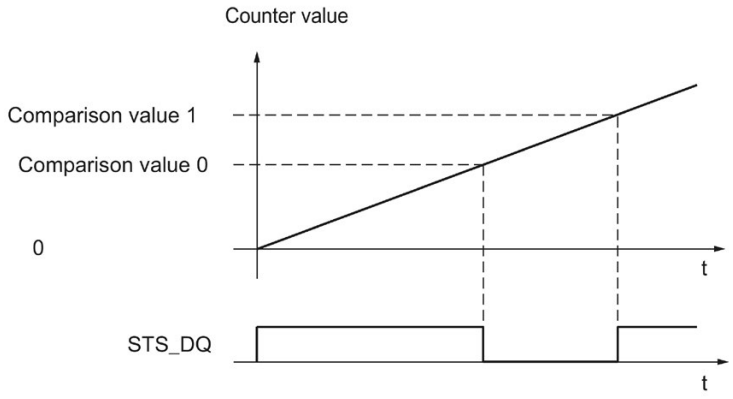

2.4.6 Interrupts

Hardware interrupt

The modules can trigger a hardware interrupt in the CPU for certain events during operation. Process interrupts are enabled via the parameter assignment. Refer to the device manual for the module for information about the events that can trigger a hardware interrupt during operation.

Note

Hardware interrupts for counting are not available at all the modules.

2.4.7 24 V count signals

24 V pulse encoder count signals

An encoder, for example an initiator (BERO) or a light barrier, returns a count signal that is connected to the terminal of a counter. For some modules you change the count direction via the parameter assignment of the DI function.

The figure below shows an example of the time profile of the signals of a 24 V pulse encoder with direction signal and the resulting count pulses:

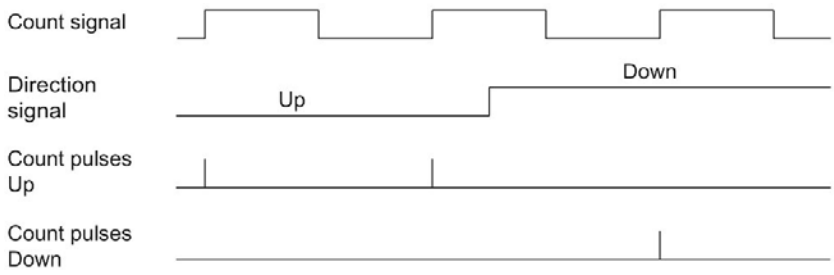

Note

A signal for direction detection is not connectable for all digital modules.

2.4.8 Isochronous mode

The digital module supports the system function "Isochronous mode". This system function enables counter values to be acquired in a defined system cycle.

In isochronous mode, the cycle of the user program, the transmission of the input and output data and the processing in the module are synchronized with each other.

Data processing

The data that was transmitted to the module in the current bus cycle via the control interface takes effect when it is processed in the module's internal cycle. The counter value and status bits are detected at time T_i and made available in the feedback interface for retrieval in the current bus cycle.

Additional information

You will find detailed description of the isochronous mode:

- In the Isochronous mode function manual as a download from the Internet (https://support.industry.siemens.com/cs/ww/en/view/109755401) .
- In the PROFINET with STEP 7 function manual as a download from the Internet (https://support.industry.siemens.com/cs/ww/en/view/49948856).

Using the High_Speed_Counter technology object 3

3.1 Convention

Technology module: We use the term "technology module" in this documentation both for the technology modules TM Count and TM PosInput and the technology component of the compact CPUs.

3.2 High_Speed_Counter technology object

STEP 7 (TIA Portal) supports you in the configuration, commissioning and diagnostics of counting and measuring functions for the following technology modules with the "Technology objects" function:

- You configure the High_Speed_Counter technology object in STEP 7 (TIA Portal) with the settings for the counting and measuring functions.
- The corresponding High_Speed_Counter instruction is programmed in the user program. This instruction supplies the control and feedback interface of the technology module.

The High_Speed_Counter technology object corresponds to the instance DB of the High_Speed_Counter instruction. The configuration of the counting and measuring functions is saved in the technology object. The technology object is located in the folder "PLC > Technology objects".

The High_Speed_Counter technology object can be used for technology modules of both the S7-1500 and ET 200SP systems.

Operating mode

In order to assign the technology module parameters using the technology object, you specify the operating mode (Page 181) "Operating with "Counting and measurement" technology object" in the hardware configuration of the technology module. This selection is already preset.

3.3 Overview of the configuration steps

Introduction

The overview below shows the basic procedure for configuring the counting and measuring functions of the technology module with the High_Speed_Counter technology object.

Requirement (TM Count and TM PosInput)

Before you can use the High_Speed_Counter technology object, a project with an S7-1500 CPU or an ET 200SP CPU must be created in STEP 7 (TIA Portal) .

Requirement (Compact CPU)

Before you can use the High_Speed_Counter technology object, a project with a Compact CPU S7-1500 must be created in STEP 7 (TIA Portal).

Procedure

Proceed in the recommended sequence outlined below:

Step	Description
1	Configure a technology module (Page 175)
2	Add technology object (Page 99)
3	Configure a technology object according to your application (Page 101)
4	Call instruction in the user program (Page 124)
5	Load to CPU
6	Commissioning the technology object (Page 138)
7	Diagnostics of the technology object (Page 140)

3.4 Add technology object

Adding a technology object in the project navigation

When a technology object is added, an instance DB is created for the instruction of this technology object. The configuration of the technology object is stored in this instance DB.

Requirement (TM Count and TM PosInput)

A project with a CPU S7-1500 has been created.

Requirement (Compact CPU)

A project with a Compact CPU S7-1500 has been created.

Procedure

To add a technology object, proceed as follows:

1. Open the CPU folder in the project tree.
2. Open the "Technology objects" folder.
3. Double-click on "Add new object".
   The "Add new object" dialog opens.
4. Select the "Counting and measurement" technology.
5. Select the "High_Speed_Counter" object.
6. Enter an individual name for the technology object in the "Name" text box.
7. Click "Additional information" if you want to add your own information to the technology object.
8. Confirm with "OK".

Result

The new technology object has now been created and stored in the project tree in the "Technology objects" folder.

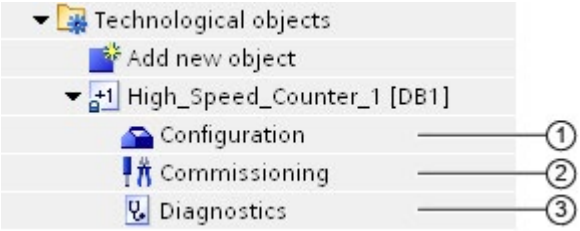

	Object	Description
①	Configuration (Page 101)	In the configuration dialog: • Assignment of technology module and channel • Technology object parameter settings for counting and measurement functions When you change the configuration of the technology object, you must download the technology object **and** the hardware configuration to the CPU.
②	Commissioning (Page 138)	Commissioning and function test of the technology object: Simulating parameters of the High_Speed_Counter instruction and monitoring the effects
③	Diagnostics (Page 140)	Monitoring the counting and measuring functions

3.5 Configuring the High_Speed_Counter

3.5.1 Working with the configuration dialog

You configure the properties of the technology object in the configuration window. Proceed as follows to open the configuration window of the technology object:

1. Open the "Technology objects" folder in the project tree.
2. Open the technology object in the project tree.
3. Double-click on the "Configuration" object.

The configuration is divided into the following categories:

- **Basic parameters**

  The basic parameters include the selection of the technology module and the number of the counting channel for which the technology object is configured.

- **Extended parameters**

  The extended parameters include the parameters for adapting the counting and measuring functions and for setting the characteristics of the digital inputs and digital outputs.

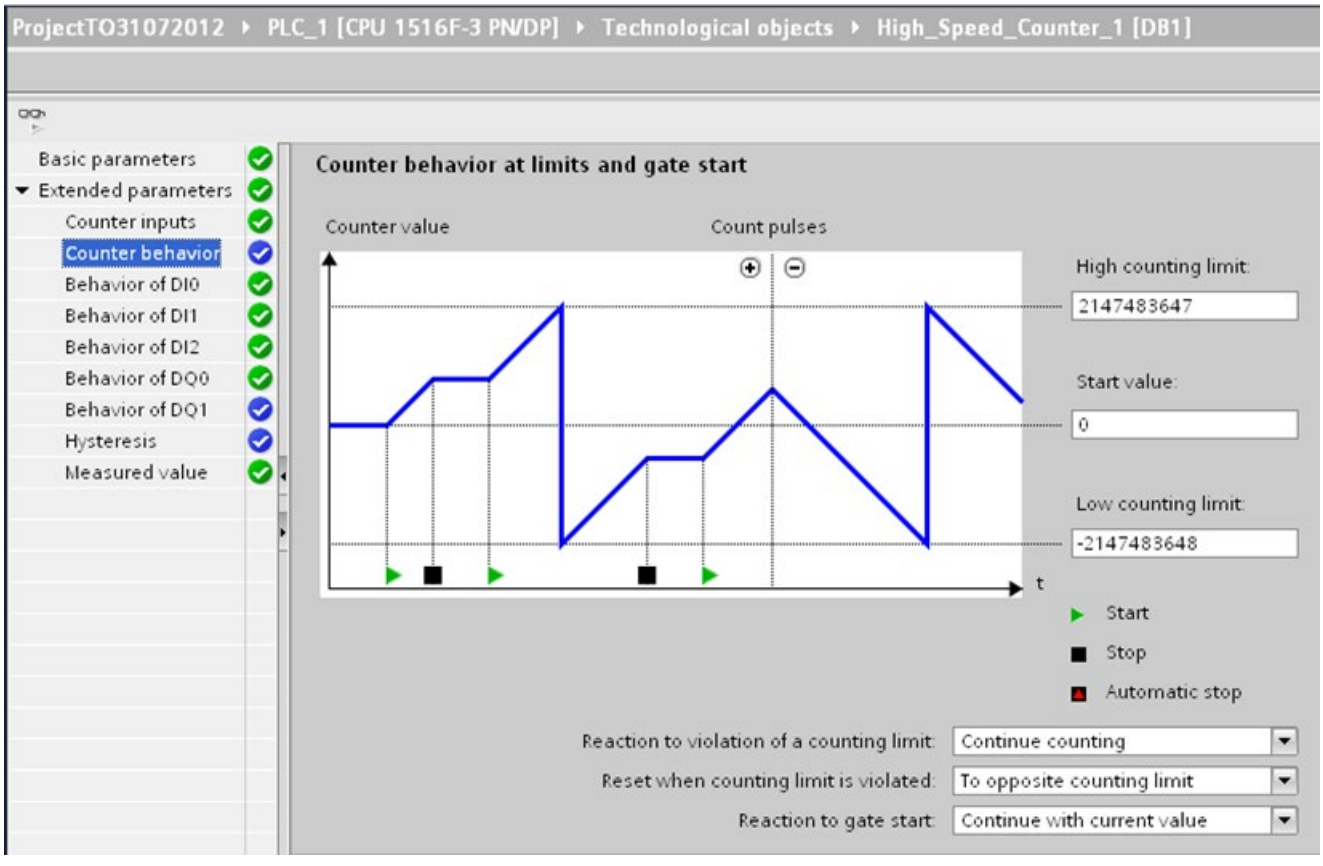

Configuration window icons

Icons in the area navigation of the configuration show additional details about the status of the configuration:

	The configuration contains default values and is complete. The configuration contains only default values. With these default values, you can use the technology object without additional changes.
	The configuration contains values set by the user or automatically adapted values and is complete All text boxes of the configuration contain valid values and at least one default value was changed.
	The configuration is incomplete or incorrect At least one text box or drop-down list contains an invalid value. The corresponding field or the drop-down list is displayed on a red background. Click the roll-out error message to indicate the cause of error.

3.5.2 Basic parameters

You can establish the connection between the High_Speed_Counter technology object and the technology module under "Basic parameters".

Module (TM Count and TM PosInput)

You select the technology module in a subsequent dialog box. All technology modules (central or distributed) that are configured for use with a "Counting and measurement" technology object under the S7-1500 CPU or ET 200SP CPU are available for selection.

After selecting the technology module, you can open the device configuration associated with the technology module by clicking the"Device configuration" button.

The technology module parameter settings required for the use of the technology object are made in the "Extended parameters" of the technology object.

Module (Compact CPU)

You can select a high-speed counter for the Compact CPU in a subsequent dialog. You can choose any of the high-speed counters which are enabled and configured for use with a technology object from "Counting and measuring".

After selecting the high-speed counter, you can open the device configuration associated with the Compact CPU by clicking the"Device configuration" button.

The parameter settings of the high-speed counter required for the use of the technology object are made in the "Extended parameters" of the technology object.

Channel

For a technology module with several counting channels, you can also select the number of the counting channel for which the High_Speed_Counter technology object is to be valid.

Note

A channel can be assigned to only *one* technology object. A channel that is already assigned to a technology object can no longer be selected.

Synchronization of the parameter values

If, after assignment of the channel to the technology object, there is an inconsistency between the parameter values in the property dialog and in the technology object, a button with a corresponding inquiry appears. When you click the button, the parameter values in the property dialog are overwritten by the parameter values in the property dialog within STEP 7 (TIA Portal). The current parameter values of the technology object are displayed in the property dialog.

3.5.3 Counter inputs (High_Speed_Counter)

Signal type

You can choose from the following signal types (Page 71):

Symbol	Signal type	Meaning	Additional option-specific parameters
	Incremental encoder (A, B phase-shifted)	An incremental encoder with phase-shifted A and B signals is connected.	• Signal evaluation • Invert direction • Filter frequency • Sensor type or Interface standard
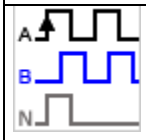	Incremental encoder (A, B, N)	An incremental encoder with phase-shifted signals A and B and a zero signal N is connected.	• Signal evaluation • Invert direction • Filter frequency • Sensor type or Interface standard • Reaction to signal N • Frequency of synchronization • Frequency of the Capture function
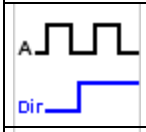	Pulse (A) and direction (B)	A pulse encoder (signal A) with direction signal (signal B) is connected.	• Filter frequency • Sensor type or Interface standard
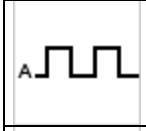	Pulse (A)	A pulse encoder (signal A) without direction signal is connected. You can specify the count direction by means of the control interface (Page 219).	• Filter frequency • Sensor type or Interface standard
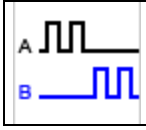	Count up (A), count down (B)	Signals for counting up (signal A) and down (signal B) are connected.	• Filter frequency • Sensor type or Interface standard

Invert direction

You can invert the counting direction to adapt it to the process.

The inverting of the direction is configurable and active for the following signal types:

- Incremental encoder (A, B phase-shifted)
- Incremental encoder (A, B, N)

Signal evaluation

By configuring signal evaluation (Page 76), you can specify which edges of the signals are counted.

You can select from the following options:

Symbol	Signal evaluation	Meaning
	Single (Page 76) (default)	The edges of signal A are evaluated during a low level of signal B.
	Double (Page 77)	Each edge of signal A is evaluated.
	Quadruple (Page 78)	Each edge of signals A and B is evaluated.

The parameter can be assigned with the following signal types:

- Incremental encoder (A, B phase-shifted)
- Incremental encoder (A, B, N)

Filter frequency

By configuring the filter frequency, you suppress interferences at the counting inputs A, B and N.

The selected filter frequency is based on a pulse/break ratio of between around 40:60 and around 60:40. This results in a specific minimum pulse/break time. Signal changes with a duration shorter than the minimum pulse/break time are suppressed.

You can select from the following filter frequencies:

Filter frequency	Minimum pulse/break time
100 Hz	4.0ms
200 Hz	2.0 ms
500 Hz	800 µs
1 kHz	400 µs
2 kHz	200 µs
5 kHz	80 µs
10 kHz	40 µs
20 kHz	20 µs
50 kHz	8.0 µs
100 kHz (preset for Compact CPU)	4.0 µs

Filter frequency	Minimum pulse/break time
200 kHz** (preset for TM Count)	2.0 µs
500 kHz*	0.8 µs
1 MHz* (default at TM PosInput)	0.4 µs

* Only available with TM PosInput

** * Only available with TM Count and TM PosInput

Sensor type (TM Count)

By configuring the sensor type, you specify how the counter inputs are switched for the TM Count.

You can select from the following options:

Sensor type	Meaning
Sourcing output (default)	The encoder/sensor switches the inputs A, B and N to 24VDC.
Sinking output	The encoder/sensor switches the inputs A, B and N to M.
Push-pull (sinking and sourcing output)	The encoder/sensor alternately switches the inputs A, B and N to M and 24VDC.

"Push-pull" is usually selected when incremental encoders are used. If using 2-wire sensors, such as light barriers or proximity switches, you need to select the corresponding wiring "sourcing output" or "sinking output".

The data sheet of the encoder includes information on whether your incremental encoder is a push-pull encoder.

Note

If you use a push-pull encoder and the sensor type "Push-pull (sinking and sourcing output)" is configured, you can monitor the encoder signals for wire break.

Sensor type (Compact CPU)

The "Sourcing output" sensor type is set for the Compact CPU and cannot be changed. The encoder or sensor switches the inputs A, B and N to 24V DC.

You can operate both sourcing output encoders as well as push-pull encoders on the Compact CPU. You can find additional information on the sensor type in the data sheet for the encoder.

Interface Standard (TM PosInput)

You use this parameter to specify whether the encoder outputs symmetric (RS422) or asymmetric (TTL) signals for the TM PosInput.

You can select from the following options:

Interface standard	Meaning
RS422, symmetrical (default)	The encoder outputs symmetric signals according to the RS422 standard (Page 73).
TTL (5 V), asymmetrical	The encoder outputs asymmetric 5 V signals according to the TTL standard (Page 71).

Note

The RS422 standard provides greater interference immunity than the TTL standard. If your incremental or pulse encoder supports the RS422 standard **and** the TTL standard, we recommend using the RS422 standard.

Reaction to signal N

You use this parameter to specify which reaction is triggered to signal N.

You can select from the following options:

Option	Meaning
No reaction to signal N (default)	The counter is not affected by signal N.
Synchronization at signal N (Page 44)	The counter is set to the start value at signal N. If you select the function "Enable synchronization at signal N" for a digital input, the synchronization depends on the level at the digital input.
Capture at signal N (Page 34)	The counter value is stored in the Capture value at signal N. The use of a digital input and the use of the N signal are not mutually exclusive for the Capture function. The technology object displays the Capture value at the output parameter CapturedValue.

Note

You can only select the reaction to signal N if you have selected the "Incremental encoder (A, B, N)" signal type.

Note

If "Synchronization at signal N" is selected, you can select the function "Enable synchronization at signal N" for a digital input (Page 111).

Note

For High_Speed_Counter as of V3.0, the following applies:

You can choose "Capture at signal N" only in operating mode "Use count value as reference":

Frequency of synchronization

This parameter is used to define the frequency of the following events:

- Synchronization at signal N
- Synchronization as function of a digital input

You can select from the following options:

Option	Meaning
Once (default)	The counter is only set at the first signal N or the first configured edge of the digital input.
Periodic	The counter is set at each signal N or each configured edge of the digital input.

Frequency of the Capture function

This parameter is used to define the frequency of Capture events for the following functions:

- Capture at Signal N
- Capture as function of a digital input

You can select from the following options:

Option	Meaning
Once	The first configured edge at the respective digital input or first rising edge of the N signal saves the current counter value as a Capture value.
Periodic (default)	Each configured edge at the respective digital input or each rising edge of the N signal saves the current counter value as a Capture value.

Note

This parameter is available for High_Speed_Counter as of V3.2.

3.5.4 Counter behavior

3.5.4.1 Counting limits and start value

High counting limit

You limit the counting range by setting the high counting limit. You can enter a value up to 2147483647 (2^{31}-1). You must enter a value that lies above the low counting limit.

The default setting is "2147483647".

Low counting limit

You limit the counting range by setting the low counting limit. You can enter a value up to -2147483648 (-2^{31}). You must enter a value below the high counting limit.

The default setting is "-2147483648".

Start value

By configuring the start value, you specify the value at which counting is to start and where it is to continue in the case of defined events. You must enter a value between the counting limits or equal to the counting limits.

The default setting is "0".

Additional information

For more information, see Behavior at the counting limits (Page 28) and Counter behavior at gate start (Page 33).

3.5.4.2 Counter behavior at limits and gate start

Reaction to violation of a counting limit

You can configure the following characteristics for violation of a counting limit (Page 28):

Reaction	Meaning
Stop counting	If a counting limit is violated, counting is stopped and the internal gate is closed. To restart counting, you must also close and reopen the software/hardware gate.
Continue counting (default)	Counting continues either with the start value or at the opposite counting limit, depending on the additional parameter assignment.

Reset when counting limit is violated

You can reset the counter to the following values when a counting limit is violated:

Reset the value	Meaning
To start value	The counter value is set to the start value.
To opposite counting limit (default)	The counter value is set to the opposite counting limit.

Reaction to gate start

You can set the following Reaction to gate start (Page 33):

Reaction	Meaning
Set to start value	When the gate is opened, the counter value is set to the start value.
Continue with current value (default)	When the gate is opened, counting is continued with the last counter value.

3.5.5 Behavior of a DI (High_Speed_Counter)

Setting function of the DI

By configuring a digital input, you specify which functions the digital input triggers at switching.

You can select from the following options:

Function of a digital input	Meaning	Additional option-specific parameters
Gate start/stop (level-triggered)	The level at the respective digital input opens and closes the hardware gate (Page 30).	• Input delay • Select level
Gate start (edge-triggered)	The configured edge at the respective digital input opens the hardware gate (Page 30).	• Input delay • Edge selection
Gate stop (edge-triggered)	The configured edge at the respective digital input closes the hardware gate (Page 30).	• Input delay • Edge selection
Synchronization (Page 39)	The configured edge at the respective digital input sets the counter to the start value. The technology object indicates whether a synchronization has occurred at the output parameter SyncStatus.	• Input delay • Edge selection • Frequency of synchronization
Enable synchronization at signal N	The active level at the respective digital input enables synchronization of the counter at signal N (Page 44).	• Input delay • Select level
Capture	The configured edge at the respective digital input saves the current counter value (Page 34) as a Capture value. The use of a digital input and the use of the N signal are not mutually exclusive for the Capture function. The technology object displays the Capture value at the output parameter CapturedValue.	• Input delay • Edge selection • Frequency of the Capture function • Behavior of counter value after Capture
Digital input without function	No technological function is assigned to the respective digital input. You can read the signal state of the digital input via the respective static variable of the technology object: • UserStatusFlags.StatusDI0 • UserStatusFlags.StatusDI1 • UserStatusFlags.StatusDI2	• Input delay

Note

With the exception of "Digital input without function", each function can only be used once for each counter, and if used for one digital input is not available to the others.

Note

For High_Speed_Counter as of V3.0, the following applies:

You can choose the "Capture" function only in operating mode "Use count value as reference".

Input delay (TM Count and TM PosInput)

You use this parameter to suppress signal interference at the digital inputs. Changes to the signal are only detected if they remain stable for longer than the configured input delay time.

You can select from the following input delays:

- None
- 0.05 ms
- 0.1 ms (default)
- 0.4 ms
- 0.8 ms
- 1.6 ms
- 3.2 ms
- 12.8 ms
- 20 ms

Note

If you select the "None" or "0.05 ms" option, you have to use shielded cables for connection of the digital inputs.

Note

You configure the input delay under "Behavior of DI0" for all digital inputs together. The input delay is also displayed under "Behavior of DI1" and for TM Count also under "Behavior of DI2".

Input delay (Compact CPU)

You use this parameter to suppress interference at the digital inputs of the DIn signals. Changes to the signal are only detected if they remain stable for longer than the configured input delay time.

You can configure the input delay for a digital input of a Compact CPU in the Inspector window of the device configuration under "Properties > DI 16/DQ 16 > Inputs > Channel n".

You can select from the following input delays:

- None
- 0.05 ms
- 0.1 ms
- 0.4 ms
- 1.6 ms
- 3.2 ms (default)
- 12.8 ms
- 20 ms

Note

If you select the "None" or "0.05 ms" option, you have to use shielded cables for connection of the digital inputs.

Select level

You use this parameter to specify the level at which the digital input is active.

You can select from the following options:

Level	Meaning
Active with high level (default)	The respective digital input is active when it is set.
Active with low level	The respective digital input is active when it is not set.

The parameter can be set for the following functions of a digital input:

- Gate start/stop (level-triggered)
- Enable synchronization at signal N

Edge selection

You can use this parameter to specify the edge of the digital input at which the configured function is triggered.

The following options may be available depending on the function selected:

- At rising edge (default)
- At falling edge
- At rising and falling edge

The parameter can be set for the following functions of a digital input:

- Gate start (edge-triggered)
- Gate stop (edge-triggered)
- Synchronization
- Capture

Note

At rising and falling edge" can only be configured for the "Capture" function.

Frequency of synchronization

This parameter is used to define the frequency of the following events:

- Synchronization at signal N
- Synchronization as a function of a digital input

You can select from the following options:

Option	Meaning
Once (default)	The counter is only set at the first signal N or the first configured edge of the digital input.
Periodic	The counter is set at each signal N or each configured edge of the digital input.

Frequency of the Capture function

This parameter is used to define the frequency of Capture events for the following functions:

- Capture at Signal N
- Capture as function of a digital input

You can select from the following options:

Option	Meaning
Once	The first configured edge at the respective digital input or first rising edge of the N signal saves the current counter value as a Capture value.
Periodic (default)	Each configured edge at the respective digital input or each rising edge of the N signal saves the current counter value as a Capture value.

Note

This parameter is available for High_Speed_Counter as of V3.2.

Behavior of counter value after Capture

You can configure the following characteristics for the counter after a capture event (Page 34):

Reaction	Meaning
Continue counting (default)	After saving the current counter value as Capture value, counting is continued unchanged.
Set to start value and continue counting	After saving the current counter value as Capture value, counting is continued with the start value.

3.5.6 Behavior of a DQ (High_Speed_Counter)

Operating mode (High_Speed_Counter V3.0 or higher)

The operating mode determines which value comparison functions work.

Operating mode	Meaning
Use count value as reference (default)	The comparison functions and hardware interrupts for compare events work with the counter value. This functionality corresponds to the functionality of the High_Speed_Counter in versions before V3.0.
Use measured value as reference	The comparison functions and hardware interrupts for compare events work with the measured value.

Note

You configure the operating mode under "Behavior of DQ0" for both digital outputs together. The operating mode is also displayed under "Behavior of DQ1".

Set output

With the parameter assignment of a digital output, you specify the condition upon which the digital output switches.

You can select from the following options:

Function of a digital output (Page 48) in operating mode "Use count value as reference"	Meaning	Additional option-specific parameters
Between comparison value and high limit (default)	The respective digital output is active if: Comparison value <= counter value <= high counting limit	• Comparison value 0 • Comparison value 1 • Hysteresis (in increments)
Between comparison value and low limit	The respective digital output is active if: Low counting limit <= counter value <= comparison value	• Comparison value 0 • Comparison value 1 • Hysteresis (in increments)
Between comparison value 0 and 1	The digital output DQ1 is active if: Comparison value 0 <= counter value <= comparison value 1	• Comparison value 0 • Comparison value 1 • Hysteresis (in increments)
At comparison value for a pulse duration	The respective digital output is active once for the configured time and count direction when the counter value reaches the comparison value.	• Comparison value 0 • Comparison value 1 • Count direction • Pulse duration • Hysteresis (in increments)

Function of a digital output (Page 48) in operating mode "Use count value as reference"	Meaning	Additional option-specific parameters
After set command from CPU until comparison value	When a set command is sent from the CPU, the respective digital output is active until the counter value is equal to the comparison value.	• Comparison value 0 • Comparison value 1 • Count direction • Hysteresis (in increments)
Use by user program	The respective digital output can be switched by the CPU via the control interface (Page 47).	—

Note

DQ0 of a counter of a Compact CPU

With a Compact CPU, the respective digital output DQ0 is available via the feedback interface, but not as a physical output.

Note

You can only select the "Between comparison value 0 and 1" function for digital output DQ1 and only if you have selected the "Use by user program" function for digital output DQ0.

Note

The "At comparison value for a pulse duration" and "After set command from CPU until comparison value" functions only switch the digital output in question if a count pulse reaches the comparison value. When the counter value is set, e.g. by synchronization, the digital output does not switch.

Function of a digital output (Page 56) in operating mode "Use measured value as reference"	Meaning	Additional option-specific parameters
Measured value >= comparison value (default)	The respective digital output is active if the measured value is greater than or equal to the comparison value.	• Comparison value 0 • Comparison value 1
Measured value <= comparison value	The respective digital output is active if the measured value is less than or equal to the comparison value.	• Comparison value 0 • Comparison value 1
Between comparison value 0 and 1	The digital output DQ1 is active if: Comparison value 0 <= measured value <= comparison value 1	• Comparison value 0 • Comparison value 1
Not between comparison value 0 and 1	The digital output DQ1 is active if: Comparison value 1 <= measured value <= comparison value 0	• Comparison value 0 • Comparison value 1
Use by user program	The respective digital output can be switched by the CPU via the control interface (Page 47).	—

Note

You can select the "Between comparison value 0 and 1" and "Not between comparison value 0 and 1" functions only for digital output DQ1 and only if you have selected the "Use by user program" function for digital output DQ0.

Comparison value 0(TM Count and TM PosInput)

Operating mode "Use count value as reference"

With the parameter assignment of the comparison value (Page 48), you specify the counter value at which the digital output DQ0 switches as a result of the selected comparison event.

You must enter an integer (DINT) that is greater than or equal to the low counting limit. If you use the DQ function "Between comparison value 0 and 1", the comparison value 0 has to be smaller than comparison value 1. The default setting is "0".

Operating mode "Use measured value as reference"

With the parameter assignment of the comparison value (Page 56), you specify the measured value at which the digital output DQ0 switches as a result of the selected comparison event.

You must enter a floating point number (REAL). If you use the DQ function "Between comparison value 0 and 1", the comparison value 0 has to be smaller than comparison value 1. The minimum value is -7.922816×10^{28}. The default setting is "0.0". The unit of the comparison value depends on the measured variable.

Comparison value 0(Compact CPU)

Operating mode "Use count value as reference"

With the parameter assignment of the Comparison value (Page 48), you specify the counter value at which the STS_DQ0 bit is set in the feedback interface of the selected comparison event. The digital output DQ0 is not available as a physical output in a Compact CPU.

You must enter an integer (DINT) that is greater than or equal to the low counting limit. If you use the DQ function "Between comparison value 0 and 1", the comparison value 0 has to be smaller than comparison value 1. The default setting is "0".

Operating mode "Use measured value as reference"

With the parameter assignment of the Comparison value (Page 56), you specify the measured value at which the STS_DQ0 bit is set in the feedback interface of the selected comparison event. The digital output DQ0 is not available as a physical output in a Compact CPU.

You must enter a floating point number (REAL). If you use the DQ function "Between comparison value 0 and 1", the comparison value 0 has to be smaller than comparison value 1. The minimum value is -7.922816×10^{28}. The default setting is "0.0". The unit of the comparison value depends on the measured variable.

Comparison value 1

Operating mode "Use count value as reference"

With the parameter assignment of the comparison value (Page 48), you specify the counter value at which the digital output DQ1 switches as a result of the selected comparison event.

You must enter an integer (DINT) that is smaller than or equal to the high counting limit. If you use the DQ function "Between comparison value 0 and 1", the comparison value 0 has to be smaller than comparison value 1. The default setting is "10".

Operating mode "Use measured value as reference"

With the parameter assignment of the comparison value (Page 56), you specify the measured value at which the digital output DQ1 switches as a result of the selected comparison event.

You must enter a floating point number (REAL). If you use the DQ function "Between comparison value 0 and 1", the comparison value 0 has to be smaller than comparison value 1. The maximum value is 7.922816 x 10^{28}. The default setting is "10.0". The unit of the comparison value depends on the measured variable.

Count direction

You use this parameter to specify the count direction for which the selected function is valid.

You can select from the following options:

Count direction	Meaning
In both directions (default)	The comparison and switching of the respective digital output take place regardless of the count direction.
Up	The comparison and switching of the respective digital output only takes place when the counter counts up.
Down	The comparison and switching of the respective digital output only takes place when the counter counts down.

The parameter can be configured for the following functions:

- At comparison value for a pulse duration
- After set command from CPU until comparison value

Pulse duration

By configuring the pulse duration for the function "At comparison value for a pulse duration", you specify the number of milliseconds for which the respective digital output is active.

If you enter "0" and the counter value corresponds to the comparison value, the digital output remains active until the next count pulse.

You can enter a value between 0.0 and 6553.5.

The default setting is "500.0", which is equivalent to a pulse duration of 0.5 s.

Hysteresis (in increments)

By configuring the hysteresis (Page 66), you can define a range around the comparison values. For the functions "Between comparison value and upper counter limit" and "Between comparison value and lower counter limit" the hysteresis also applies at the counter limits. Within the hysteresis range, the digital outputs cannot switch again until the counter value is outside the range.

Choose a small enough hysteresis. When the hysteresis range, starting from the configured comparison value, spans the entire counter value range, proper functioning of the comparison values cannot be guaranteed.

If a comparison value lies so close to the counter limit that the hysteresis range would extend beyond this counter limit, the hysteresis range ends at it.

If you enter "0", the hysteresis is turned off. You can enter a value between 0and 255. The default setting is "0".

Note

The following applies for High_Speed_Counter as of V3.0:

You configure the hysteresis under "Behavior of DQ0" for both digital outputs together. The hysteresis is also displayed under "Behavior of DQ1".

The hysteresis is only available in operating mode "Use count value as reference".

3.5.7 Specify measured value (High_Speed_Counter)

Measured variable

This parameter is used to specify the measured variable (Page 59) to be provided by the technology module. The technology object displays the measured value at the output parameter MeasuredValue.

You can select from the following options:

Measured variable	Meaning	Additional option-specific parameters
Frequency (default)	The measured variable shows the number of increments per second. The value is a floating point number (REAL). The unit is Hz. The technology object displays the measured value at the output parameter MeasuredValue.	• Update time
Period	The measured variable is the average period between two increments. The value is an integer (DINT). The unit is s. The technology object displays the measured value at the output parameter MeasuredValue.	• Update time
Velocity	The measured variable is a velocity. Examples of a velocity measurement can be found in the explanation of the "Increments per unit" parameter. The technology object displays the measured value at the output parameter MeasuredValue.	• Update time • Time base for velocity measurement • Increments per unit

Update time

By configuring the update time (Page 59) in milliseconds, you can specify the time interval between two measured value updates.

The update time and the signal type effect the accuracy of the measurement. In the case of update times of at least 100 ms, the effect of the signal type is negligible.

In the case of update times of less than 100 ms, you achieve maximum measurement accuracy using the following signal types:

- Incremental encoder (A, B phase-shifted) with Signal evaluation "Single"
- Incremental encoder (A, B, N) with Signal evaluation "Single"
- Pulse (A) and direction (B)
- Pulse (A)

In the case of other signal types, measurement accuracy depends on the encoder and cable used.

If you enter "0", the measured value is updated once per module-internal cycle. Up to three decimal places can be entered. A value from 0.0 to 25000.0 is permissible. The default setting is "10.0".

Time base for velocity measurement

This parameter defines the time base on which the velocity is to be returned.

You can select from the following options:

- 1 ms
- 10 ms
- 100 ms
- 1 s
- 60 s

The default setting is "60 s".

Increments per unit

You can use this parameter to define the number of count pulses per relevant unit that the incremental or absolute encoder supplies for the velocity measurement.

The number of count pulses depends on the configured signal evaluation. You can enter a value between 1 and 65535.

Example 1:

You encoder delivers 4000 count pulses for travel over one meter. The velocity is to be measured in meters per second. "Double" is configured as signal evaluation.

In this case, you need to assign the following parameters:

- Increments per unit: 8000
- Time base for velocity measurement: 1 s

Example 2:

Your encoder delivers 4096 count pulses per revolution. The velocity is to be measured in revolutions per minute. "Single" is configured as the signal evaluation.

In this case, you need to assign the following parameters:

- Increments per unit: 4096
- Time base for velocity measurement: 60 s

3.6 Programming the High_Speed_Counter

3.6.1 High_Speed_Counter instruction

High_Speed_Counter

The High_Speed_Counter instruction is part of the High_Speed_Counter technology object. It supplies the control and feedback interface of the technology module.

The High_Speed_Counter instruction thereby forms the software interface between the user program and the technology module. It must be called cyclically from the user program in order to synchronize the input and output data.

The High_Speed_Counter instruction can be used for the technology modules of both S7-1500 and ET 200SP. The modules can be used centrally and decentrally. The instruction applies in each case to the channel of the technology module that was assigned to the associated technology object.

Additional information

Description High_Speed_Counter (Page 125)

High_Speed_Counter input parameters (Page 131)

High_Speed_Counter output parameters (Page 132)

Error codes of parameter ErrorID (Page 134)

High_Speed_Counter static variables (Page 136)

3.6.2 Call instruction in the user program

The High_Speed_Counter instruction can be called once for each counter in the cycle or, alternatively, in a time-controlled program. The call is not permitted in an event-controlled interrupt program.

Procedure

Proceed as follows to call the instruction in the user program:

1. Open the CPU folder in the project tree.
2. Open the "Program blocks" folder.
3. Double-click the OB for cyclic program execution.
   The block is opened in the work area.
4. In the "Instructions" window, open the "Technology" group and the "Counting and measurement" folder.
   The folder contains the instruction.
5. Select the instruction and drag it to your OB.
   The "Call options" dialog opens.
6. Select a technology object from the "Name" list or enter the name for a new technology object.
7. Confirm with "OK".

Result

If the technology object does not exist yet, it is added. The instruction is added in the OB. The technology object is assigned to this call of the instruction.

Note

If you click one of the buttons "Configuration", "Commissioning" or "Diagnostics" in the user interface of the instruction, the respective editor opens.

3.6.3 Description High_Speed_Counter

Description

The High_Speed_Counter instruction is used to control the technology module counting and measuring functions via the user program.

Call

The instruction High_Speed_Counter must be called once per counter, either cyclically or in a time-controlled program. The call is not permitted in an event-controlled interrupt program.

Operating principle

Counter value: The counter value is available at the output parameter CountValue. The counter value is updated at every call of the High_Speed_Counter instruction.

Measured value: The technology module updates the measured value asynchronously to the instruction call based on the configured update time. The measured value last determined by the technology module is updated at the output parameter MeasuredValue each time the instruction is called.

The measured value and the counter value are available in parallel in the feedback interface.

Capture: The output parameter CaptureStatus = TRUE indicates a valid Capture value at the output parameter CapturedValue.

- A Capture value is captured under the following conditions:
  - A digital input has the parameter assignment "Capture"
  - CaptureEnable = TRUE
  - Edge at digital input with the Capture function
- The output parameter CaptureStatus is reset by a negative edge at the input parameter CaptureEnable.

Synchronization: The output parameter SyncStatus = TRUE indicates that a synchronization has occurred.

- The counter value is synchronized under the following conditions:
  - A digital input has the parameter assignment "Synchronization" **or** the incremental encoder has the parameter assignment "Synchronization at signal N"
  - SyncEnable = TRUE
  - The static tag SyncUpDirection (or SyncDownDirection) = TRUE
  - Edge at the digital input with the synchronization function **or** positive edge of the signal N at the encoder input
- The output parameter SyncStatus is reset by a negative edge at
  - the input parameter SyncEnable or
  - the static tag SyncDownDirection or
  - the static tag SyncUpDirection

Parameter changes via the user program

Proceed as follows to modify parameters using the user program:

1. Check based on the respective Set tag to determine whether the technology object is ready for the parameter change (Set tag = FALSE) or whether a change job is still running (Set tag = TRUE).
   The following Set tags in UserCmdFlags are available for this in the static tags of the technology object instance DB:
   - SetReferenceValue0
   - SetReferenceValue1
   - SetUpperLimit
   - SetLowerLimit
   - SetCountValue
   - SetStartValue
   - SetNewDirection
2. If the technology object is ready for the parameter change, modify the relevant static tag. The following static tags of the technology object instance DB are available for this:
   - NewReferenceValue0 / NewReferenceValue0_M (for SetReferenceValue0)
   - NewReferenceValue1 / NewReferenceValue1_M (for SetReferenceValue1)
   - NewUpperLimit
   - NewLowerLimit
   - NewCountValue
   - NewStartValue
   - NewDirection

3. Set the relevant Set tag for execution of the change command.
4. Use the output parameter Error to check whether an error has occurred.
   If no errors have occurred and the Set tag has been automatically reset by the technology object, the parameter change was successful.

Note

Changed counting limit

If the new high counting limit is less than the current counter value, the counter value is set to the low counting limit or the start value according on the parameter assignment. If the new low counting limit is greater than the current counter value, the counter value is set to the high counting limit or the start value according to the parameter assignment.

Operating mode (High_Speed_Counter V3.0 or higher)

Configure the operating mode in the technology object under "Behavior of DQ0".

The operating mode is indicated by the output parameter CompareMeasuredValue:

State	Description
FALSE	Operating mode "Use count value as reference" The comparison functions work with the counter value. The following static variables are specifically used in this operating mode: • NewReferenceValue0 • NewReferenceValue1 • CurReferenceValue0 • CurReferenceValue1 The four specific static variables of operating mode "Use measured value as reference" are ignored.
TRUE	Operating mode "Use measured value as reference": The comparison functions work with the measured value. The following static variables are specifically used in this operating mode: • NewReferenceValue0_M • NewReferenceValue1_M • CurReferenceValue0_M • CurReferenceValue1_M The four specific static variables of operating mode "Use count value as reference" are ignored.

Acknowledgment of events

You acknowledge signaled events using the positive edge of the input parameter EventAck . EventAck must stay set until the technology object has reset the status bits of the following events of the count channel:

- CompResult0
- CompResult1
- ZeroStatus
- PosOverflow
- NegOverflow

Status of the digital inputs (TM Count and TM PosInput)

You can obtain the status of the digital inputs with the static tags StatusDI0, StatusDI1 or StatusDI2.

Status of the digital inputs (Compact CPU)

You can obtain the status of the digital inputs with the static tags StatusDI0 and StatusDI1. When a digital input of the Compact CPU is not used for a counter, you can use it via the user program.

Use of digital outputs by the user program (TM Count and TM PosInput)

You can set the digital outputs with the High_Speed_Counter instruction,

- If the "Use by user program" setting is configured for "Set output".
- If the "After set command from CPU until comparison value" setting is configured for "Set output".
- if you set the corresponding static tag ManualCtrlDQm (temporary overwrite).

The static tags SetDQ0 and SetDQ1 only have an effect in these cases. In the first and third case, DQm follows the value of SetDQm. In the second case, DQm is set with a positive edge of SetDQm. DQm is reset when the counter value corresponds to the comparison value or at a negative edge of SetDQm.

Use digital outputs by user program (Compact CPU)

You can set the DQ1 digital output with the High_Speed_Counter instruction.

- If the "Use by user program" setting is configured for "Set output".
- If the "After set command from CPU until comparison value" setting is configured for "Set output".
- if you set the corresponding static tag ManualCtrlDQ1 (temporary overwrite).

The static tag SetDQ1 only has an effect in these cases. In the first and third case, DQ1 follows the value of SetDQ1. In the second case, DQ1 is set and reset with a positive edge of SetDQ1 when the counter value corresponds to the comparison value or at a negative edge of SetDQ1.

Note

Before you can set a physical digital output of the Compact CPU with the High_Speed_Counter instruction, you have to assign the DQ1 signal to the desired digital output.

You can set the DQ0 signal using the High_Speed_Counter instruction with the static tag StatusDQ0.

- If the "Use by user program" setting is configured for "Set output".
- If the "After set command from CPU until comparison value" setting is configured for "Set output".
- If you set the static tag ManualCtrlDQ0 (temporary overwrite).

The static tag SetDQ0 only has an effect in these cases. In the first and third case, DQ0 follows the value of SetDQ0. In the second case, StatusDQ0 is set and reset with an edge (positive or negative) by SetDQ0 and is reset when the counter value corresponds to the comparison value.

Note

The digital output DQ0 is not available as a physical output.

Reaction to error

If an error has occurred during the call of the instruction or in the technology module, the output parameter Error is set. More detailed error information can be read at the output parameter ErrorID.

Eliminate the cause of the error and acknowledge the error message by setting the input parameter ErrorAck. When no more errors are pending, the technology object resets the output parameter Error . No new error is signaled until you acknowledge the previous error.

Changing the count direction

The count direction can only be changed by the user program if "Pulse (A)" is configured as the signal type. In all other cases, the count direction is determined by the input signals of the technology module. The count direction is controlled by the static tag NewDirection:

- +1: Upward count direction
- -1: Downward count direction

To execute the change command, you need to set the static tag SetNewDirection = TRUE.

3.6.4 High_Speed_Counter input parameters

Parameter	Declaration	Data type	Default	Description
SwGate	INPUT	BOOL	FALSE	Control software gate: • Positive edge: Software gate opens • Negative edge: Software gate closes Together with the hardware gate, the SwGate enables the internal gate.
Capture-Enable	INPUT	BOOL	FALSE	Enable Capture function After the enable, a Capture event occurs at the next configured edge at the relevant digital input. A negative edge at CaptureEnable resets the output parameter CaptureStatus. A negative edge at CaptureEnable resets the enable even if no Capture event has occurred. Irrespective of CaptureEnable the last value is retained at the output parameter CapturedValue until the next Capture event.
SyncEnable	INPUT	BOOL	FALSE	Enable synchronization The direction enabled for synchronization is indicated in the static tags SyncUpDirection and SyncDownDirection. A negative edge at SyncEnable resets the output parameter SyncStatus .
ErrorAck	INPUT	BOOL	FALSE	High_Speed_Counter up to V3.0: A positive edge acknowledges the status reported. High_Speed_Counter as of V3.1: A high level acknowledges the error status reported.
EventAck	INPUT	BOOL	FALSE	A positive edge resets the following output parameters: • CompResult0 • CompResult1 • ZeroStatus • PosOverflow • NegOverflow
SetCount-Value	INOUT	BOOL	FALSE	A positive edge starts the transfer of the new counter value in the static tag NewCountValue to the technology module. The counter value takes effect immediately after the transfer.

3.6.5 High_Speed_Counter output parameters

Parameter	Declaration	Data type	Default	Description
StatusHW	OUTPUT	BOOL	FALSE	Status bit technology module: The module is configured and ready for operation. The module data is valid.
StatusGate	OUTPUT	BOOL	FALSE	Status bit: Internal gate is released if parameter is set
StatusUp	OUTPUT	BOOL	FALSE	Status bit: The last count pulse incremented the counter and took place no more than 0.5 s ago
StatusDown	OUTPUT	BOOL	FALSE	Status bit: The last count pulse decremented the counter and took place no more than 0.5 s ago
CompResult0	OUTPUT	BOOL	FALSE	Status bit: Compare event for DQ0 occurred (status change) based on the selected comparison condition. If the counter value is set to the start value in operating mode "Use count value as reference", CompResult0 is not set. The positive edge of the input parameter EventAck is used to reset CompResult0 .
CompResult1	OUTPUT	BOOL	FALSE	Status bit: Compare event for DQ1 occurred (status change) based on the selected comparison condition. If the counter value is set to the start value in operating mode "Use count value as reference", CompResult1 is not set. The positive edge of the input parameter EventAck is used to reset CompResult1 .
SyncStatus	OUTPUT	BOOL	FALSE	Status bit: Synchronization event occurred If the input parameter SyncEnable is set, the configured edge sets the status bit SyncStatus at the respective digital input . SyncStatus is reset by a negative edge at • SyncEnable (input parameter) or • SyncUpDirection (static tag) or • SyncDownDirection (static tag)
CaptureStatus	OUTPUT	BOOL	FALSE	Status bit: Capture event occurred, the output parameter CapturedValue has a valid Capture value If the input parameter CaptureEnable is set, the configured edge sets the status bit CaptureStatus. at the respective digital input. You reset CaptureStatus using the negative edge of the input parameter CaptureEnable .
ZeroStatus	OUTPUT	BOOL	FALSE	Status bit: CountValue has reached the value "0" irrespective of the count direction You reset ZeroStatus using the positive edge of the input parameter EventAck.
PosOverflow	OUTPUT	BOOL	FALSE	Status bit: CountValue has violated high counting limit in the positive direction You reset PosOverflow using the positive edge of the input parameter EventAck.
NegOverflow	OUTPUT	BOOL	FALSE	Status bit: CountValue has violated low counting limit in the negative direction You reset NegOverflow using the positive edge of the input parameter EventAck.

Parameter	Declaration	Data type	Default	Description
Error	OUTPUT	BOOL	FALSE	An error has occurred. Refer to the output parameter ErrorID for the cause of the error.
ErrorID	OUTPUT	WORD	0	The ErrorID (Page 134) parameter displays the number of the error message. ErrorID = 0000_H: There is no error.
CountValue	OUTPUT	DINT	0	Current counter value
Captured-Value	OUTPUT	DINT	0	The last acquired Capture value The value is retained until the next Capture event, irrespective of the input parameter CaptureEnable. If a new Capture event has occurred, CaptureStatus is set and is reset by you using the negative edge of the input parameter CaptureEnable .
Measured-Value	OUTPUT	REAL	0.0	Current measured value for frequency, period duration or velocity (depending on configuration)
Compare-Measured-Value[1]	OUTPUT	BOOL	FALSE	Status bit: FALSE: Operating mode "Use count value as reference"; comparison functions work with counter value TRUE: Operating mode "Use measured value as reference"; comparison functions work with measured value

[1] Available for High_Speed_Counter version V3.0 or higher

3.6.6 Error codes of parameter ErrorID

Error code (W#16#...)	Description
0000	No error
Error messages from technology module	
80A1	POWER_ERROR from feedback interface: Incorrect supply voltage L+
80A2	ENC_ERROR from feedback interface: Incorrect encoder signal
80A3	LD_ERROR from feedback interface: Error when loading via control interface
Error messages of the instruction High_Speed_Counter	
80B1	Invalid count direction
80B4	For operating mode "Use count value as reference", the following applies: New low counting limit does not meet the following conditions: • Low counting limit < high counting limit • Low counting limit <= comparison value/start value For operating mode "Use measured value as reference", the following applies: New low counting limit does not meet the following conditions: • Low counting limit < high counting limit • Low counting limit <= start value
80B5	For operating mode "Use count value as reference", the following applies: New high counting limit does not meet the following conditions: • Low counting limit < high counting limit • High counting limit >= comparison value/start value For operating mode "Use measured value as reference", the following applies: New high counting limit does not meet the following conditions: • Low counting limit < high counting limit • High counting limit >= start value
80B6	New start value does not meet the following condition: • Low counting limit <= start value <= high counting limit
80B7	New counter value does not meet the following condition: • Low counting limit <= counter value <= high counting limit
80B8	For operating mode "Use count value as reference", the following applies: New comparison value 0 does not meet the following conditions: • Low counting limit <= comparison value 0 <= high counting limit • Comparison value 0 < comparison value 1 For operating mode "Use measured value as reference", the following applies: New comparison value 0 does not meet the following conditions: • Comparison value 0 < comparison value 1

Error code (W#16#...)	Description
80B9	For operating mode "Use count value as reference", the following applies: New comparison value 1 does not meet the following conditions: • Low counting limit <= comparison value 1 <= high counting limit • Comparison value 0 < comparison value 1 For operating mode "Use measured value as reference", the following applies: New comparison value 1 does not meet the following conditions: • Comparison value 0 < comparison value 1
80C0	Instruction High_Speed_Counter was called multiple times with the same instance (DB)
80C1	Communication with technology module failed (read data records): Error information of internal instruction RDREC saved in static tag AdditionalErrorID
80C2	Communication with technology module failed (write data records): Error information of internal instruction WRREC saved in static tag AdditionalErrorID
80C3	Access to input data (feedback interface) failed: Error information of internal instruction GETIO_PART saved in static tag AdditionalErrorID
80C4	Access to output data (control interface) failed: Error information of internal instruction SETIO_PART saved in static tag AdditionalErrorID
80C5	Reading of the current start information of the OB failed: Error information of internal instruction RD_SINFO saved in static tag AdditionalErrorID
80C6	Failed to get I/O addresses of the technology module: Error information of internal instruction RD_ADDR saved in static tag AdditionalErrorID
80C7	Module not inserted or no supply voltage L+

3.6.7 High_Speed_Counter static variables

Tag	Data type	Default	Access	Description
NewCountValue	DINT	L#0	Write	New counter value
NewReferenceValue0	DINT	L#0	Write	New comparison value 0 in the operating mode "Use count value as reference"
NewReferenceValue1	DINT	L#10	Write	New comparison value 1 in the operating mode "Use count value as reference"
NewReferenceValue0_M[1]	REAL	L#0.0	Write	New comparison value 0 in operating mode "Use measured value as reference"
NewReferenceValue1_M[1]	REAL	L#10.0	Write	New comparison value 1 in operating mode "Use measured value as reference"
NewUpperLimit	DINT	L#2147483647	Write	New high counting limit
NewLowerLimit	DINT	L#-2147483648	Write	New low counting limit
NewStartValue	DINT	L#0	Write	New start value
NewDirection	INT	0	Write	New count direction: +1: Upward count direction -1: Downward count direction
CurReferenceValue0	DINT	L#0	Read	Current comparison value 0 in operating mode "Use count value as reference"
CurReferenceValue1	DINT	L#10	Read	Current comparison value 1 in operating mode "Use count value as reference"
CurReferenceValue0_M[1]	REAL	L#0.0	Read	Current comparison value 0 in operating mode "Use measured value as reference"
CurReferenceValue1_M[1]	REAL	L#10.0	Read	Current comparison value 1 in operating mode "Use measured value as reference"
CurUpperLimit	DINT	L#2147483647	Read	Current high counting limit
CurLowerLimit	DINT	L#-2147483648	Read	Current low counting limit
CurStartValue	DINT	L#0	Read	Current start value
AdditionalErrorID	DWORD	W#16#0000	Read	Error information of an internal instruction, e.g.,RDREC

Tag		Data type	Default	Access	Description
UserCmdFlags		STRUCT	-		
	SetNewDirection	BOOL	FALSE	Write	Set new count direction
	SetUpperLimit	BOOL	FALSE	Write	Set high counting limit
	SetLowerLimit	BOOL	FALSE	Write	Set low counting limit
	SetReferenceValue0	BOOL	FALSE	Write	Set comparison value 0
	SetReferenceValue1	BOOL	FALSE	Write	Set comparison value 1
	SetStartValue	BOOL	FALSE	Write	Set start value
	SyncDownDirection	BOOL	TRUE	Write	Enable synchronization in downward count direction
	SyncUpDirection	BOOL	TRUE	Write	Enable synchronization in upward count direction
	SetDQ0	BOOL	FALSE	Write	Set digital output DQ0
	SetDQ1	BOOL	FALSE	Write	Set digital output DQ1
	ManualCtrlDQ0	BOOL	FALSE	Write	Enable setting of digital output DQ0: TRUE: • SetDQ0 sets DQ0 • Control bit TM_CTRL_DQ0 = FALSE FALSE: • Setting not enabled • Control bit TM_CTRL_DQ0 = TRUE
	ManualCtrlDQ1	BOOL	FALSE	Write	Enable setting of digital output DQ1: TRUE: • SetDQ1 sets DQ1 • Control bit TM_CTRL_DQ1 = FALSE FALSE: • Setting not enabled • Control bit TM_CTRL_DQ1 = TRUE
UserStatusFlags		STRUCT	-		
	StatusDI0	BOOL	FALSE	Read	Current status of digital input DI0
	StatusDI1	BOOL	FALSE	Read	Current status of digital input DI1
	StatusDI2	BOOL	FALSE	Read	Current status of digital input DI2
	StatusDQ0	BOOL	FALSE	Read	Current status of digital output DQ0
	StatusDQ1	BOOL	FALSE	Read	Current status of digital output DQ1

[1] Available for High_Speed_Counter version V3.0 or higher

3.7 Commissioning the High_Speed_Counter

3.7.1 Commissioning the technology object

A graphic display of the block in the commissioning editor helps you with commissioning and the function test for the technology object. You can change specific parameters of the High_Speed_Counter instruction in CPU/IM online mode and monitor their effects.

Requirements

- There is an online connection between STEP 7 (TIA Portal) and the CPU.
- The CPU is in RUN.
- The corresponding High_Speed_Counter instruction is called cyclically from the user program.
- The parameters of the technology object are not overwritten by the user program.

Procedure

To open the commissioning editor of a technology object and to simulate a parameter value change, follow these steps:

1. Open the "Technology objects" folder in the project tree.
2. Open the High_Speed_Counter technology object in the project tree.
3. Double-click on the "Commissioning" object.
   The functions for commissioning the High_Speed_Counter technology object are displayed.
4. In the commissioning dialog, click on the "Monitor all" button.
   The parameters (online values) of the High_Speed_Counter technology object are loaded and displayed.
5. If the parameter you want to change has a text box, enter the new value there.
6. Select the check box of the parameter.
   The new parameter value becomes effective and the effects of the change are simulated.

Online mode

In online mode, you can modify the following parameters to test the technology object function:

- New counter value (NewCountValue)
- New high counting limit (NewUpperLimit)
- New low counting limit (NewLowerLimit)
- New comparison value 0 (NewReferenceValue0 or NewReferenceValue0_M)
- New comparison value 1 (NewReferenceValue1 or NewReferenceValue1_M)
- New start value (NewStartValue)
- Start and stop counter (SwGate)
- Enable Capture (CaptureEnable)
- Enable synchronization (SyncEnable)
- Acknowledgment of signaled error states (ErrorAck)
- Resetting the status flag (EventAck)

3.8 High_Speed_Counter diagnostics

3.8.1 Monitoring counter values, measured values, DIs and DQs

You use the diagnostic functions to monitor the counting and measuring functions.

Requirements

- There is an online connection between STEP 7 (TIA Portal) and the CPU.
- The CPU is in RUN.

Procedure

To open the display editor for the diagnostic functions, follow these steps:

1. Open the "Technology objects" folder in the project tree.
2. Open the High_Speed_Counter technology object in the project tree.
3. Double-click on the "Diagnostics" object.
4. Click the "Monitor all" button.

Display

The following values are read by the technology object from the feedback interface and displayed:

- Event display/diagnostics information
- Signal states of the digital inputs and digital outputs
- Counter value
- Capture value
- Measured value

Additional information on status displays is available in the context-sensitive help for each event in STEP 7 (TIA Portal). When the CPU is in STOP, the status display is not updated.

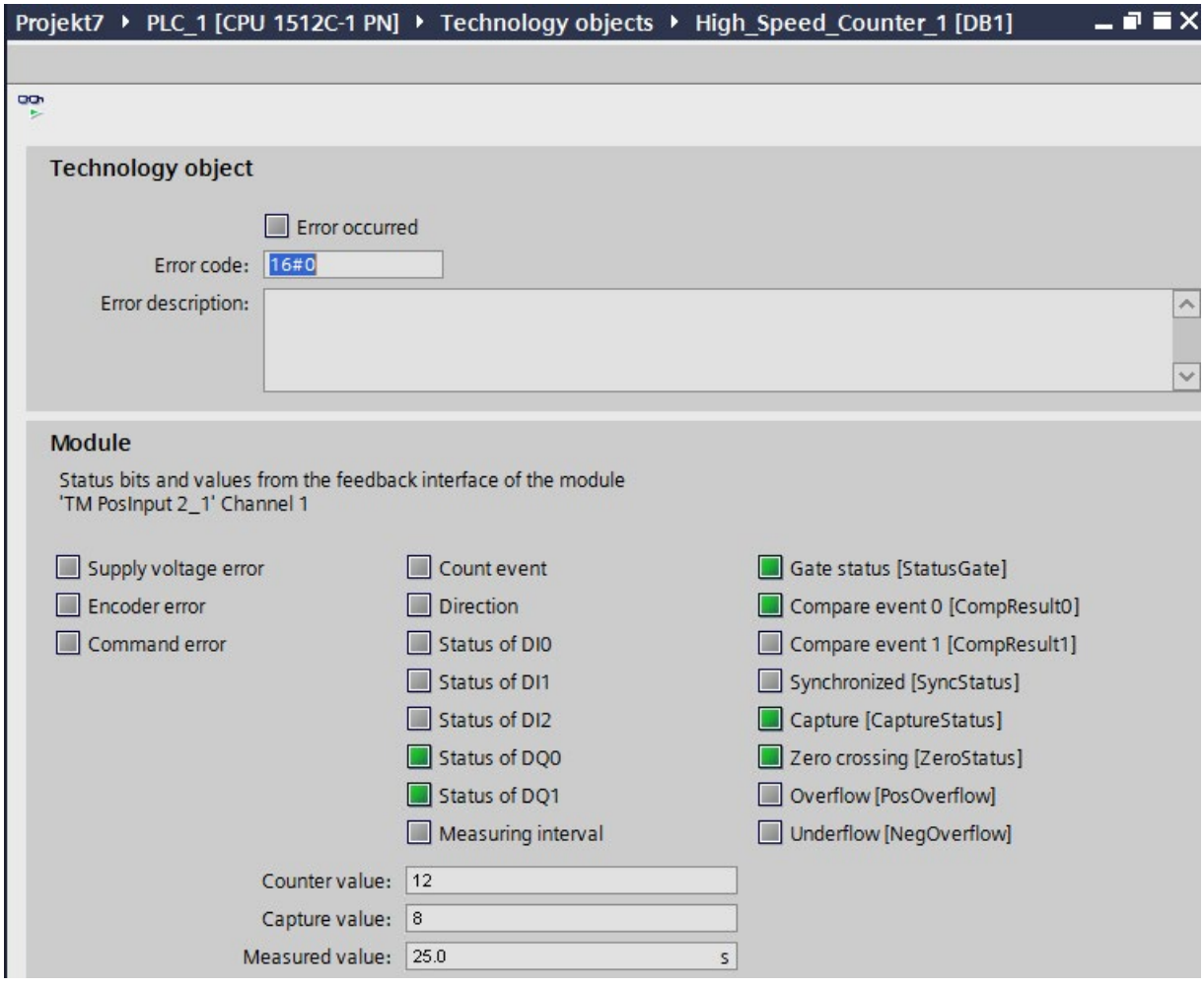

Using the SSI_Absolute_Encoder technology object 4

4.1 Technology object SSI_Absolute_Encoder

STEP 7 (TIA Portal) supports you in the configuration, commissioning and diagnostics of counting and measuring functions for the TM PosInput technology module with the "Technology objects" function in combination with the SSI absolute encoders:

- In STEP 7 (TIA Portal) you configure the SSI_Absolute_Encoder technology object by entering the encoder parameters.
- The corresponding SSI_Absolute_Encoder instruction is programmed in the user program. This instruction supplies the control and feedback interface of the technology module.

The SSI_Absolute_Encoder technology object corresponds to the instance DB of the SSI_Absolute_Encoder instruction. The configuration of the position input and measuring functions is saved in the technology object. The technology object is located in the folder "PLC > Technology objects".

The SSI_Absolute_Encoder technology object can be used for the TM PosInput of both the S7-1500 and ET 200SP systems alike.

Operating mode

In order to assign the technology module parameters using a TM PosInput, you specify the operating mode (Page 181) "Operation with technology objects for "counting and measurement"" in the hardware configuration of the TM PosInput. This selection is already preset.

4.2 Overview of the configuration steps

Introduction

The overview below shows the basic procedure for configuring the position input and measuring functions of the technology module with the SSI_Absolute_Encoder technology object.

Requirement

Before you can use the technology object, a project with an S7-1500 CPU or an ET 200SP CPU must be created in STEP 7 (TIA Portal).

Procedure

Proceed in the recommended sequence outlined below:

Step	Description
1	Configure a technology module (Page 175)
2	Add technology object (Page 144)
3	Configure a technology object according to your application (Page 146)
4	Call instruction in the user program (Page 163)
5	Load to CPU
6	Commissioning the technology object (Page 172)
7	Diagnostics of the technology object (Page 173)

4.3 Add technology object

Adding a technology object in the project navigation

When a technology object is added, an instance DB is created for the instruction of this technology object. The configuration of the technology object is stored in this instance DB.

Requirement

A project with a CPU S7-1500 has been created.

Procedure

To add a technology object, proceed as follows:

1. Open the CPU folder in the project tree.
2. Open the "Technology objects" folder.
3. Double-click on "Add new object".
   The "Add new object" dialog opens.
4. Select the "Counting and measurement" technology.
5. Select the "SSI_Absolute_Encoder" object.
6. Enter an individual name for the technology object in the "Name" text box.
7. Click "Additional information" if you want to add your own information to the technology object.
8. Confirm with "OK".

Result

The new technology object has now been created and stored in the project tree in the "Technology objects" folder.

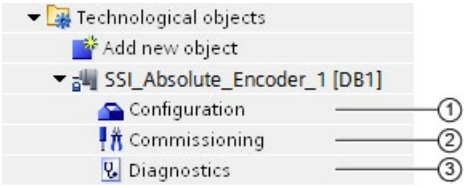

	Object	Description
①	Configuration (Page 146)	In the configuration dialog: • Assignment of technology module and channel • Technology object parameter settings for position input and measurement functions When you change the configuration of the technology object, you must download the technology object **and** the hardware configuration to the CPU.
②	Commissioning (Page 172)	Commissioning and function test of the technology object: Simulating parameters of the SSI_Absolute_Encoder instruction and monitoring the effects
③	Diagnostics (Page 173)	Monitoring of the position input and measurement functions

4.4 Configuring SSI_Absolute_Encoder

4.4.1 Working with the configuration dialog

You configure the properties of the technology object in the configuration window. Proceed as follows to open the configuration window of the technology object:

1. Open the "Technology objects" folder in the project tree.
2. Open the technology object in the project tree.
3. Double-click on the "Configuration" object.

The configuration is divided into the following categories:

- **Basic parameters**

  The basic parameters include the selection of the technology module and the number of the channel for which the technology object is configured.

- **Extended parameters**

  The extended parameters include the parameters for adapting the position input and measuring functions and for setting the characteristics of the digital inputs and digital outputs.

Configuration window icons

Icons in the area navigation of the configuration show additional details about the status of the configuration:

	The configuration contains default values and is complete. The configuration contains only default values. With these default values, you can use the technology object without additional changes.
	The configuration contains values set by the user or automatically adapted values and is complete All text boxes of the configuration contain valid values and at least one default value was changed.
	The configuration is incomplete or incorrect At least one text box or drop-down list contains an invalid value. The corresponding field or the drop-down list is displayed on a red background. Click the roll-out error message to indicate the cause of error.

4.4.2 Basic parameters

Under "Basic parameters", you can establish the connection between the technology object and the TM PosInput technology module.

Module

You select the technology module in a subsequent dialog box. All TM PosInput technology modules (central or distributed) that are configured for use with a "Counting and measurement" technology object under the S7-1500 CPU or ET 200SP CPU are available for selection.

After selecting the technology module, you can open the device configuration associated with the technology module by clicking the"Device configuration" button.

The technology module parameter settings required for the use of the technology object are made in the "Extended parameters" of the technology object.

Channel

For a technology module with several channels, you select the number of the channel for which the technology object is valid.

Note

A channel can be assigned to only *one* technology object. A channel that is already assigned to a technology object can no longer be selected.

Synchronization of the parameter values

If, after assignment of the channel to the technology object, there is an inconsistency between the parameter values in the property dialog of the TM PosInput module and in the technology object, a button with a corresponding inquiry appears. When you click the button, the parameter values in the property dialog of the assigned module are overwritten by the parameter values of the technology object within STEP 7 (TIA Portal). The current parameter values of the technology object are displayed in the property dialog of the module (read-only).

4.4.3 SSI absolute encoder

Frame length

With the parameter assignment of the frame length, you specify the number of bits of an SSI frame of the SSI absolute encoder (Page 26) used. You can find the frame length of your SSI absolute encoder in the data sheet of the encoder. Special bits are also included in the frame length. A parity bit does not count in the frame length.

A frame length of between 10 bits and 40 bits is permitted. The default setting is "13 Bit".

You can find two examples of the SSI frame format at Examples of the frame format (Page 159).

Code type

You use the parameter assignment of the code type to specify whether the encoder supplies Dual code or Gray code.

You can select from the following options:

Code type	Meaning
Gray (default)	The gray-coded position value returned by the SSI absolute encoder is converted to dual code.
Dual	The value returned by the SSI absolute encoder is not converted.

Transmission rate

With the parameter assignment of the transmission rate, you specify the data transmission rate between the technology module and the SSI absolute encoder.

You can select from the following options:

- 125 kHz (preset)
- 250 kHz
- 500 kHz
- 1 MHz
- 1.5 MHz
- 2 MHz

The maximum transmission rate depends on the cable length and the technical specifications of the SSI absolute encoder. For additional information, refer to the product manual of the TM PosInput and the encoder description.

Monoflop time

With the parameter assignment of the monoflop time, you specify the idle time between two SSI frames.

The configured monoflop time must be at least equal to the monoflop time of the SSI absolute encoder used. You can find this value in the technical specifications of the SSI absolute encoder.

You can select from the following options:

- Automatically (default)
- 16 µs
- 32 µs
- 48 µs
- 64 µs

Note

If you select the "Automatic" option, the monoflop time automatically adapts to the encoder used.

In isochronous mode, the "Automatic" option corresponds to a monoflop time of 64 µs. If the monoflop time of the employed SSI absolute value encoder is less than 64 µs, you can select the value of the encoder to achieve faster isochronous times.

Parity

With the parameter assignment of the parity, you specify whether the SSI absolute encoder transfers a parity bit.

If, for example, a 25-bit encoder with parity is assigned, the technology module reads 26 bits. A parity error is indicated by the technology object at the ErrorID output parameter with the value 80A2.

Bit number LSB of the position value

This parameter is used to specify the bit number of the LSB (least significant bit) of the position value in the frame of the SSI absolute encoder. In this way you limit the range in the frame that supplies the position value.

The value must be less than the bit number of the MSB of the position value. The difference between the bit numbers of the MSB and the LSB of the position value must be less than 32.

The default setting is "0".

Note

If you have selected the Code type "Gray", only the range from the LSB to the MSB of the position value is converted to binary code.

Bit number MSB of the position value

This parameter is used to specify the bit number of the MSB (most significant bit) of the position value in the frame of the SSI absolute encoder. In this way you limit the range in the frame that supplies the position value.

The value must be less than the frame length and higher than the bit number of the LSB of the position value. The difference between the bit numbers of the MSB and the LSB of the position value must be less than 32.

The default setting is "12".

Note

If you have selected the Code type "Gray", only the range from the LSB to the MSB of the position value is converted to binary code.

Invert direction

You can use this parameter to invert the values supplied by the SSIabsolute encoder. This allows you to adapt the detected direction of the encoder to the motor's direction of rotation.

Note

This parameter acts only on the range from the LSB to the MSB of the position value in the frame.

SSI frame

You can also set the following parameters in the graphic with drag-and-drop:

- Frame length
- Bit number LSB of the position value
- Bit number MSB of the position value

Complete SSI frame

If "Complete SSI frame" has been selected as the measured variable, the module returns the least significant 32 bits of the unprocessed current SSI frame as the measured value. The graphic shows the corresponding meaning of a supplied bit. The following abbreviations are used:

V	Value: Position value as gray or dual code
S	Special: Special bit
P	Parity: Parity bit When you have configured a parity bit, the module returns the least significant 31 bits of the SSI frame *and* the parity bit.

4.4.4 Behavior of a DI (SSI_Absolute_Encoder)

Setting function of the DI

By configuring a digital input, you specify which functions the digital input triggers at switching.

You can select from the following options:

Function of a digital input	Meaning	Additional option-specific parameters
Capture (Page 37)	The configured edge at the respective digital input saves the current position value as a Capture value. The technology object displays the Capture value at the output parameter CapturedValue. The function can only be used for one of the two digital inputs.	• Input delay • Edge selection • Frequency of the Capture function
Digital input without function	No technological function is assigned to the respective digital input. You can read the signal state of the digital input via the respective static variable (Page 171) of the technology object: • UserStatusFlags.StatusDI0 • UserStatusFlags.StatusDI1	• Input delay

Note

You can choose the "Capture" function only in operating mode "Use position value (SSI absolute value) as reference".

Input delay

By configuring the input delay, you suppress interferences at the digital inputs. Signals with a pulse duration below the configured input delay are suppressed.

You can select from the following input delays:

- None
- 0.05 ms
- 0.1 ms (default)
- 0.4 ms
- 0.8 ms
- 1.6 ms
- 3.2 ms
- 12.8 ms
- 20 ms

Note

If you select the "None" or "0.05 ms" option, you have to use shielded cables for connection of the digital inputs.

Note

You configure the input delay under "Behavior of DI0" for all digital inputs together. The input delay is also displayed under "Behavior of DI1".

Edge selection

You can use this parameter to specify the edge of the digital input at which the configured function is triggered for the "Capture" function.

You can select from the following options:

- At rising edge (default)
- At falling edge
- At rising and falling edge

Frequency of the Capture function

This parameter is used to define the frequency of Capture events (Page 37):

You can select from the following options:

Option	Meaning
Once	The first configured edge at the respective digital input saves the current counter value as Capture value.
Periodic (default)	Each configured edge at the respective digital input saves the current counter value as a Capture value.

Note

This parameter is available for SSI_Absolute_Encoder as of V3.0.

4.4.5 Behavior of a DQ (SSI_Absolute_Encoder)

Operating mode

With the operating mode, you specify the reference value with which the comparison functions work.

Operating mode	Meaning
Use position value (SSI absolute value) as reference (default)	The comparison functions and hardware interrupts for compare events work with the position value.
Use measured value as reference	The comparison functions and hardware interrupts for compare events work with the measured value.

Note

You configure the operating mode under "Behavior of DQ0" for both digital outputs together. The operating mode is also displayed under "Behavior of DQ1".

Set output

With the parameter assignment of a digital output, you specify the condition upon which the digital output switches.

You can select from the following options depending on the operating mode:

Function of a digital output (Page 52) in operating mode "Use position value (SSI absolute value) as reference"	Meaning	Additional option-specific parameters
Between comparison value and high limit (default)	The respective digital output is active if: Comparison value <= position value <= maximum position value	• Comparison value 0 • Comparison value 1 • Hysteresis (in increments)
Between comparison value and low limit	The respective digital output is active if: Minimum position value <= Position value <= Comparison value	• Comparison value 0 • Comparison value 1 • Hysteresis (in increments)
Between comparison value 0 and 1	The digital output DQ1 is active if: Comparison value 0 <= position value <= comparison value 1	• Comparison value 0 • Comparison value 1 • Hysteresis (in increments)
At comparison value for a pulse duration	The respective digital output is active once for the assigned time and direction of the position value change when the position value is equal to the comparison value or has fallen below or exceeded it.	• Comparison value 0 • Comparison value 1 • Count direction • Pulse duration • Hysteresis (in increments)

Function of a digital output (Page 52) in operating mode "Use position value (SSI absolute value) as reference"	Meaning	Additional option-specific parameters
After set command from CPU until comparison value	When a set command is sent from the CPU, the respective digital output is active for the assigned direction of the position value change until the position value is equal to the comparison value or has fallen below or exceeded it.	• Comparison value 0 • Comparison value 1 • Count direction • Hysteresis (in increments)
Use by user program	The respective digital output can be switched by the CPU via the control interface (Page 47).	—

Note

You can only select the "Between comparison value 0 and 1" function for digital output DQ1 and only if you have selected the "Use by user program" function for digital output DQ0.

Function of a digital output (Page 56) in operating mode "Use measured value as reference"	Meaning	Additional option-specific parameters
Measured value >= comparison value (default)	The respective digital output is active if the measured value is greater than or equal to the comparison value.	• Comparison value 0 • Comparison value 1
Measured value <= comparison value	The respective digital output is active if the measured value is less than or equal to the comparison value.	• Comparison value 0 • Comparison value 1
Between comparison value 0 and 1	The digital output DQ1 is active if: Comparison value 0 <= measured value <= comparison value 1	• Comparison value 0 • Comparison value 1
Not between comparison value 0 and 1	The digital output DQ1 is active if: Comparison value 1 <= measured value <= comparison value 0	• Comparison value 0 • Comparison value 1
Use by user program	The respective digital output can be switched by the CPU via the control interface (Page 47).	—

Note

You can select the "Between comparison value 0 and 1" and "Not between comparison value 0 and 1" functions only for digital output DQ1 and only if you have selected the "Use by user program" function for digital output DQ0.

Comparison value 0

Operating mode "Use position value (SSI absolute value) as reference"

With the parameter assignment of the comparison value (Page 52), you specify the position value at which the digital output DQ0 switches as a result of the selected comparison event.

If you use an SSI absolute encoder with a position value length of up to 31 bits, you must enter a positive integer (DINT) with a value between 0 and $2^{(MSB-LSB+1)}$-1. If you use an SSI absolute encoder with a position value length of 32 bits, you must enter a signed integer (DINT) with a value between –2147483648 and 2147483647.

If you use the DQ function "Between comparison value 0 and 1", the comparison value 0 has to be smaller than comparison value 1. The default setting is "0".

Operating mode "Use measured value as reference"

With the parameter assignment of the comparison value (Page 56), you specify the measured value at which the digital output DQ0 switches as a result of the selected comparison event.

You must enter a floating point number (REAL). If you use the DQ function "Between comparison value 0 and 1", the comparison value 0 has to be smaller than comparison value 1. The minimum value is -7.922816 x 10^{28}. The default setting is "0.0". The unit of the comparison value depends on the measured variable.

Comparison value 1

Operating mode "Use position value (SSI absolute value) as reference"

With the parameter assignment of the comparison value (Page 52), you specify the position value at which the digital output DQ1 switches as a result of the selected comparison event.

If you use an SSI absolute encoder with a position value length of up to 31 bits, you must enter a positive integer (DINT) with a value between 0 and $2^{(MSB-LSB+1)}$-1. If you use an SSI absolute encoder with a position value length of 32 bits, you must enter a signed integer (DINT) with a value between –2147483648 and 2147483647.

If you use the DQ function "Between comparison value 0 and 1", the comparison value 0 has to be smaller than comparison value 1. The default setting is "10".

Operating mode "Use measured value as reference"

With the parameter assignment of the comparison value (Page 56), you specify the measured value at which the digital output DQ1 switches as a result of the selected comparison event.

You must enter a floating point number (REAL). If you use the DQ function "Between comparison value 0 and 1", the comparison value 0 has to be smaller than comparison value 1. The maximum value is 7.922816 x 10^{28}. The default setting is "10.0". The unit of the comparison value depends on the measured variable.

Count direction

You use this parameter to specify the direction of position value change for which the selected function is valid.

You can select from the following options:

Direction of position value change	Meaning
In both directions (default)	The comparison and switching of the respective digital output is carried out regardless of whether the position value increases of decreases.
Up	The comparison and switching of the respective digital output only takes place when the position value increases.
Down	The comparison and switching of the respective digital output only takes place when the position value decreases.

The parameter can be configured for the following functions:

- At comparison value for a pulse duration
- After set command from CPU until comparison value

Pulse duration

By configuring the pulse duration for the function "At comparison value for a pulse duration", you specify the number of milliseconds for which the respective digital output is active.

A value from 0.1 to 6553.5 ms is permissible.

The default setting is "500.0", which is equivalent to a pulse duration of 0.5 s.

Hysteresis (in increments)

By configuring the hysteresis (Page 68), you can define a range around the comparison values. For the functions "Between comparison value and upper counter limit" and "Between comparison value and lower counter limit" the hysteresis also applies at the counter limits. Within the hysteresis range, the digital outputs cannot switch again until the position value has left this range once.

Choose a small enough hysteresis. When the hysteresis range, starting from the configured comparison value, spans the entire position value range, proper functioning of the comparison values cannot be guaranteed.

If a comparison value lies so close to the counter limit that the hysteresis range would extend beyond this counter limit, the hysteresis range ends there.

If you enter "0", the hysteresis is turned off. You can enter a value between 0and 255. The default setting is "0".

Note

You configure the hysteresis under "Behavior of DQ0" for both digital outputs together. The hysteresis is also displayed under "Behavior of DQ1".

Note

The hysteresis is only available in operating mode "Use position value (SSI absolute value) as reference".

4.4.6 Specify measured value (SSI_Absolute_Encoder)

Measured variable

With this parameter you specify whether the technology module is to provide a certain measured variable (Page 63) or the complete SSI frame.

You can select from the following options:

Option	Meaning	Additional option-specific parameters
Frequency (default)	The measured variable shows the number of increments per second, where each increment corresponds to one position value change. The value is a floating point number (REAL). The unit is Hz. The technology object displays the measured value at the output parameter MeasuredValue.	• Update time
Period	The measured variable is the average period between two increments of the position value. The value is an integer (DINT). The unit is s. The technology object displays the measured value at the output parameter MeasuredValue.	• Update time
Velocity	The measured variable is a velocity. Examples of a velocity measurement can be found in the explanation of the "Increments per unit" parameter. The technology object displays the measured value at the output parameter MeasuredValue.	• Update time • Time base for velocity measurement • Increments per unit
Complete SSI frame	Instead of a measured variable, the first 32 bits of the SSI frame are returned (bit 0 to bit 31). In so doing, special bits that do not belong to the position information are also supplied. A configured inversion of the direction is ignored. The technology object displays the value at the output parameter CompleteSSIFrame. You can find examples under Examples of the frame format (Page 159). This option is only available in operating mode "Use position value (SSI absolute value) as reference".	—

Note

If the increment per revolution is required for calculation of the measured values, it is automatically calculated from the parameterized telegram length as the power of 2, e.g. 8192 increments per revolution with a telegram length of 13 bit. If you are using an SSI absolute encoder whose increment per revolution does not correspond to the power of 2, the calculated measured value may be incorrect for a short time.

Update time

By configuring the update time (Page 63) in milliseconds, you can specify the time interval between two measured value updates. Unsteady measured variables can be smoothed through longer update times

If you enter "0", the measured value is updated once per module-internal cycle. Up to three decimal places can be entered. A value from 0.0 to 25000.0 is permissible. The default setting is "10.0".

Time base for velocity measurement

This parameter defines the time base on which the velocity is to be returned.

You can select from the following options:

- 1 ms
- 10 ms
- 100 ms
- 1 s
- 60 s

The default setting is "60 s".

Increments per unit

With this parameter you define the number of increments per relevant unit that the SSI absolute encoder supplies for the velocity measurement.

You can enter a value between 1 and 65535.

Example 1:

Your absolute encoder operates with a resolution of 12 bits per revolution and performs 4096 increments per revolution. The velocity should be measured in revolutions per minute.

In this case, you need to assign the following parameters:

- Increments per unit: 4096
- Time base for velocity measurement: 60 s

Example 2:

You encoder delivers 10000 increments for travel over one meter. The velocity is to be measured in meters per second.

In this case, you need to assign the following parameters:

- Increments per unit: 10000
- Time base for velocity measurement: 1 s

4.4.7 Examples of the frame format

Example 1

In this example the SSI absolute encoder has the following specification:

- The encoder has a resolution of 13 bits per revolution and a value range of 12 bits of revolutions. The SSI frame has a length of 25 bits.
- The MSB of the position value is bit 24.
- The LSB of the position value is bit 0.
- The position value is Gray coded.
- A parity bit is not available.

The frame has the following format:

Cycle:	1	2	3	4	5	6	7	8	9	10	11	12	13	14	15	16	17	18	19	20	21	22	23	24	25
Bit:	24	23	22	21	20	19	18	17	16	15	14	13	12	11	10	9	8	7	6	5	4	3	2	1	0
	MG	MG	MG	MG	MG	MG	MG	MG	MG	MG	MG	MG	SG	SG	SG	SG	SG	SG	SG	SG	SG	SG	SG	SG	SG
	MSB																								LSB

Position value

MG Multiturn bit as Gray code

SG Singleturn bit as Gray code

Complete SSI frame

If you configure "Complete SSI frame", the technology module returns the unprocessed SSI frame in the return interface right-justified:

Cycle:	1	2	3	4	5	6	7	8	9	10	11	12	13	14	15	16	17	18	19	20	21	22	23	24	25	26	27	28	29	30	31	32
Bit:	31	30	29	28	27	26	25	24	23	22	21	20	19	18	17	16	15	14	13	12	11	10	9	8	7	6	5	4	3	2	1	0
	0	0	0	0	0	0	0	MG	MG	MG	MG	MG	MG	MG	MG	MG	MG	MG	MG	SG	SG	SG	SG	SG	SG	SG	SG	SG	SG	SG	SG	SG

MG Multiturn bit as Gray code

SG Singleturn bit as Gray code

Position value feedback value

The position value supplied in Gray code is converted into binary code by the technology module and returned right-justified in the feedback interface:

Cycle:	1	2	3	4	5	6	7	8	9	10	11	12	13	14	15	16	17	18	19	20	21	22	23	24	25	26	27	28	29	30	31	32
Bit:	31	30	29	28	27	26	25	24	23	22	21	20	19	18	17	16	15	14	13	12	11	10	9	8	7	6	5	4	3	2	1	0
	0	0	0	0	0	0	0	MD	MD	MD	MD	MD	MD	MD	MD	MD	MD	MD	MD	SD	SD	SD	SD	SD	SD	SD	SD	SD	SD	SD	SD	SD

MD Multiturn bit as binary code

SD Singleturn bit as binary code

Example 2

In this example the SSI absolute encoder has the following specification:

- The encoder has a resolution of 17 bits per revolution and a value range of 11 bits of revolutions. The SSI frame has a length of34 bits.
- The MSB of the position value is bit 33.
- The LSB of the position value is bit 6.
- The position value is Gray coded.
- The SSI frame has six special bits.
- A parity bit is available. A parity bit does not count in the frame length.

The frame has the following format:

Clock:	1	2	3	4	5	6	7	8	9	10	11	12	13	14	15	16	17	18	19	20	21	22	23	24	25	26	27	28	29	30	31	32	33	34	35
Bit:	33	32	31	30	29	28	27	26	25	24	23	22	21	20	19	18	17	16	15	14	13	12	11	10	9	8	7	6	5	4	*	3	2	1	0
	MG	MG	MG	MG	MG	MG	MG	MG	MG	MG	MG	SG	SG	SG	SG	SG	SG	SG	SG	SG	SG	SG	SG	SG	SG	SG	SG	SG	S1	S2	P	S3	S4	S5	S6
	MSB																											LSB							

Position value

MG Multiturn bit as Gray code

SG Singleturn bit as Gray code

Sn Special bit n

P Parity bit

Complete SSI frame

If you configure "Complete SSI frame", the technology module returns the least significant 32 bits of the SSI frame as an unprocessed bit string. The technology module returns the bit following the LSB as parity bit. In this example, the technology module therefore returns only the least significant 31 bits of the SSI frame. With the complete SSI frame, you can evaluate the additional special bits in your application.

The returned bit string is structured as follows:

Clock:	1	2	3	4	5	6	7	8	9	10	11	12	13	14	15	16	17	18	19	20	21	22	23	24	25	26	27	28	29	30	31	32
Bit:	31	30	29	28	27	26	25	24	23	22	21	20	19	18	17	16	15	14	13	12	11	10	9	8	7	6	5	4	3	2	1	0
	MG	MG	MG	MG	MG	MG	MG	MG	SG	SG	SG	SG	SG	SG	SG	SG	SG	SG	SG	SG	SG	SG	SG	SG	SG	P	S1	S2	S3	S4	S5	S6

MG Multiturn bit as Gray code

SG Singleturn bit as Gray code

Sn Special bit n

P Parity bit

Position value

The position value supplied in Gray code is converted into binary code by the technology module and returned right-justified in the feedback interface: The special bits are ignored in this case. The parity bit is evaluated but is not returned with the position value:

Cycle:	1	2	3	4	5	6	7	8	9	10	11	12	13	14	15	16	17	18	19	20	21	22	23	24	25	26	27	28	29	30	31	32
Bit:	31	30	29	28	27	26	25	24	23	22	21	20	19	18	17	16	15	14	13	12	11	10	9	8	7	6	5	4	3	2	1	0
	0	0	0	0	MD	MD	MD	MD	MD	MD	MD	MD	MD	MD	MD	SD	SD	SD	SD	SD	SD	SD	SD	SD	SD	SD	SD	SD	SD	SD	SD	SD

MD Multiturn bit as binary code

SD Singleturn bit as binary code

4.5 Programming the SSI_Absolute_Encoder

4.5.1 Instruction SSI_Absolute_Encoder

SSI_Absolute_Encoder

The SSI_Absolute_Encoder instruction is part of the SSI_Absolute_Encoder technology object. It supplies the control and feedback interface of the TM PosInput technology module.

The SSI_Absolute_Encoder instruction thereby forms the software interface between the user program and the technology module. It must be called cyclically from the user program in order to synchronize the input and output data.

The SSI_Absolute_Encoder instruction can be used for the TM PosInput of both the S7-1500 and ET 200SP systems alike. The TM PosInput modules can be used centrally and decentrally. The instruction applies in each case to the channel of the technology module that was assigned to the associated technology object.

Additional information

Description SSI_Absolute_Encoder (Page 164)

Input parameter SSI_Absolute_Encoder (Page 167)

Output parameter SSI_Absolute_Encoder (Page 168)

Error codes of parameter ErrorID (Page 170)

Static tags SSI_Absolute_Encoder (Page 171)

4.5.2 Call instruction in the user program

The SSI_Absolute_Encoder instruction can be called once per channel, either cyclically or in a time-controlled program. The call is not permitted in an event-controlled interrupt program.

Procedure

Proceed as follows to call the instruction in the user program:

1. Open the CPU folder in the project tree.
2. Open the "Program blocks" folder.
3. Double-click the OB for cyclic program execution.
   The block is opened in the work area.
4. In the "Instructions" window, open the "Technology" group and the "Counting and measurement" folder.
   The folder contains the instruction.
5. Select the instruction and drag it to your OB.
   The "Call options" dialog opens.
6. Select a technology object from the "Name" list or enter the name for a new technology object.
7. Confirm with "OK".

Result

If the technology object does not exist yet, it is added. The instruction is added in the OB. The technology object is assigned to this call of the instruction.

Note

If you click one of the buttons "Configuration", "Commissioning" or "Diagnostics" in the user interface of the instruction, the respective editor opens.

4.5.3 Description SSI_Absolute_Encoder

Description

The SSI_Absolute_Encoder instruction is used to control the position input and measuring functions of the technology module TM PosInput via the user program.

Call

The instruction must be called once per channel, either cyclically or in a time-controlled program. The call is not permitted in an event-controlled interrupt program.

Operating principle

Position value: The position value is available at the output parameter PositionValue. The position value is updated every time the instruction is called.

Measured value: The technology module updates the measured value asynchronously to the instruction call based on the configured update time. The measured value last determined by the technology module is updated at the output parameter MeasuredValue each time the instruction is called.

Measured value and position value are available in parallel as output parameters.

Instead of a measured value, the complete SSI frame can be returned at the output parameter CompleteSSIFrame. Either MeasuredValue or CompleteSSIFrame is valid, depending on the parameter assignment.

Capture: The output parameter CaptureStatus = TRUE indicates a valid Capture value at the output parameter CapturedValue.

- A Capture value is captured under the following conditions:
  - A digital input has the parameter assignment "Capture"
  - CaptureEnable = TRUE
  - Edge at digital input with the Capture function
- The output parameter CaptureStatus is reset by a negative edge at the input parameter CaptureEnable.

Parameter changes via the user program

Proceed as follows to modify parameters using the user program:

1. Check the relevant Set tag to establish whether the technology object is ready for the parameter change (Set tag = FALSE) or whether a change job is still running (Set tag = TRUE).
   The following Set tags in UserCmdFlags are available for this in the static tags of the technology object instance DB:
   – SetReferenceValue0
   – SetReferenceValue1
2. If the technology object is ready for the parameter change, modify the relevant static tag. The following static tags of the technology object instance DB are available for this:
   – NewReferenceValue0 / NewReferenceValue0_M (for SetReferenceValue0)
   – NewReferenceValue1 / NewReferenceValue1_M (for SetReferenceValue1)
3. Set the relevant Set tag for execution of the change job.
4. Use the output parameter Error to check whether an error has occurred.
   If no errors have occurred and the Set tag has been automatically reset by the technology object, the parameter change was successful.

Operating mode

Configure the operating mode in the technology object under "Behavior of DQ0".

The operating mode is indicated by the output parameters CompareMeasuredValue:

State	Description
FALSE	Operating mode "Use position value (SSI absolute value) as reference": The comparison functions work with the position value. The following static variables are specifically used in this operating mode: • NewReferenceValue0 • NewReferenceValue1 • CurReferenceValue0 • CurReferenceValue1 The four specific static variables of operating mode "Use measured value as reference" are ignored.
TRUE	Operating mode "Use measured value as reference": The comparison functions work with the measured value. The following static variables are specifically used in this operating mode: • NewReferenceValue0_M • NewReferenceValue1_M • CurReferenceValue0_M • CurReferenceValue1_M The four specific static tags of operating mode "Use position value (SSI absolute value) as reference" are ignored.

Acknowledgment of events

You acknowledge signaled events using the positive edge of the input parameter EventAck . EventAck must stay set until the technology object has reset the status bits of the following events of the count channel:

- CompResult0
- CompResult1
- ZeroStatus
- PosOverflow
- NegOverflow

Status of the digital inputs

You obtain the status of the digital inputs via the static tags StatusDI0 and StatusDI1.

Using digital outputs with user program

In the following cases you can set the digital outputs via the instruction:

Case	Description
The setting "Use by user program" is configured for "Set output".	The respective digital output DQM follows the value of SetDQm.
The setting "After set command from CPU until comp. value" is configured for "Set output".	The respective digital output DQm is set with a negative edge of SetDQm. DQm is reset when the position value corresponds to the comparison value or at a negative edge of SetDQm.
Set the respective static variable ManualCtrlDQm (temporary overwrite).	The respective digital output DQM follows the value of SetDQm.

Reaction to error

If an error has occurred during the call of the instruction or in the technology module, the output parameter Error is set. More detailed error information can be read at the output parameter ErrorID (Page 170).

Eliminate the cause of the error and acknowledge the error message by setting the input parameter ErrorAck. When no more errors are pending, the technology object resets the output parameter Error . No new error is signaled until you acknowledge the previous error.

4.5.4 Input parameter SSI_Absolute_Encoder

Parameter	Declaration	Data type	Default	Description
Capture-Enable	INPUT	BOOL	FALSE	Enable Capture function After the enable, a Capture event occurs at the next configured edge at the relevant digital input. A negative edge at CaptureEnable resets the output parameter CaptureStatus. A negative edge at CaptureEnable resets the enable even if no Capture event has occurred. Irrespective of CaptureEnable the last value is retained at the output parameter CapturedValue until the next Capture event.
ErrorAck	INPUT	BOOL	FALSE	SSI_Absolute_Encoder V1.0: A positive edge acknowledges the error status reported. SSI_Absolute_Encoder as of V2.0: A high level acknowledges the error status reported.
EventAck	INPUT	BOOL	FALSE	A positive edge resets the following output parameters: • CompResult0 • CompResult1 • ZeroStatus • PosOverflow • NegOverflow

4.5.5 Output parameter SSI_Absolute_Encoder

Parameter	Declaration	Data type	Default	Description
StatusHW	OUTPUT	BOOL	FALSE	Status bit technology module: The module is configured and ready for operation. The module data is valid.
StatusUp	OUTPUT	BOOL	FALSE	Status bit: Last position value has changed in the positive direction and took place no more than 0.5 s ago.
StatusDown	OUTPUT	BOOL	FALSE	Status bit: Last position value has changed in the negative direction and took place no more than 0.5 s ago.
CompResult0	OUTPUT	BOOL	FALSE	Status bit: Comparison event for DQ0 (change of state) occurs as a result of the selected comparison condition. The positive edge of the input parameter EventAck is used to reset CompResult0 .
CompResult1	OUTPUT	BOOL	FALSE	Status bit: Comparison event for DQ1 (change of state) occurs as a result of the selected comparison condition. The positive edge of the input parameter EventAck is used to reset CompResult1 .
CaptureStatus	OUTPUT	BOOL	FALSE	Status bit: Capture event occurred, the output parameter CapturedValue has a valid Capture value If the input parameter CaptureEnable is set, the configured edge sets the status bit CaptureStatus. at the respective digital input. You reset CaptureStatus using the negative edge of the input parameter CaptureEnable .
CapturedValue	OUTPUT	DINT	0	The last acquired Capture value The value is retained until the next Capture event, irrespective of the input parameter CaptureEnable. If a new Capture event has occurred, CaptureStatus is set and is reset by you using the negative edge of the input parameter CaptureEnable .
ZeroStatus	OUTPUT	BOOL	FALSE	Status bit: PositionValue has reached or exceeded the value "0" irrespective of the count direction. You reset ZeroStatus using the positive edge of the input parameter EventAck.
PosOverflow	OUTPUT	BOOL	FALSE	Status bit: PositionValue has exceeded the high limit of the position value range of the encoder in the positive direction. You reset PosOverflow using the positive edge of the input parameter EventAck.
NegOverflow	OUTPUT	BOOL	FALSE	Status bit: PositionValue has exceeded the low limit of the position value range of the encoder in the negative direction. You reset NegOverflow using the positive edge of the input parameter EventAck.
Error	OUTPUT	BOOL	FALSE	An error has occurred. Refer to the output parameter ErrorID for the cause of the error.
ErrorID	OUTPUT	WORD	0	The ErrorID (Page 170) parameter displays the number of the error message. ErrorID = 0000_H: There is no error.
PositionValue	OUTPUT	DINT	0	Current position value

Parameter	Declaration	Data type	Default	Description
Measured-Value	OUTPUT	REAL	0.0	Current measured value for frequency, period duration or velocity (depending on configuration) Either MeasuredValue or CompleteSSIFrame is valid, depending on the parameter assignment in the technology object under "Measured value".
Complete-SSIFrame	OUTPUT	DWORD	0	Last received complete SSI frame (least significant 32 bits) Either MeasuredValue or CompleteSSIFrame is valid, depending on the parameter assignment in the technology object under "Measured value".
Compare-Measured-Value	OUTPUT	BOOL	FALSE	Status bit: FALSE: Operating mode "Use position value (SSI absolute value) as reference"; position value is used as reference TRUE: Operating mode "Use measured value as reference"; measured value is used as reference

4.5.6 Error codes of parameter ErrorID

Error code (W#16#...)	Description
0000	No error
Error messages from technology module	
80A1	POWER_ERROR from feedback interface: Incorrect supply voltage L+
80A2	ENC_ERROR from feedback interface: Incorrect encoder signal
80A3	LD_ERROR from feedback interface: Error when loading via control interface
Error messages of the instruction SSI_Absolute_Encoder	
80B8	New comparison value 0 does not meet the following conditions: • Low counting limit <= comparison value 0 <= high counting limit • Comparison value 0 < comparison value 1
80B9	New comparison value 1 does not meet the following conditions: • Low counting limit <= comparison value 1 <= high counting limit • Comparison value 0 < comparison value 1
80C0	Instruction was called multiple times with the same instance (DB)
80C1	Communication with technology module failed (read data records): Error information of internal instruction RDREC saved in static tag AdditionalErrorID
80C2	Communication with technology module failed (write data records): Error information of internal instruction WRREC saved in static tag AdditionalErrorID
80C5	Reading of the current start information of the OB failed: Error information of internal instruction RD_SINFO saved in static tag AdditionalErrorID
80C6	Failed to get I/O addresses of the technology module: Error information of internal instruction RD_ADDR saved in static tag AdditionalErrorID
80C7	Module not inserted or no supply voltage L+

4.5.7 Static tags SSI_Absolute_Encoder

Tag		Data type	Default	Access	Description
NewReferenceValue0		DINT	L#0	Write	New comparison value 0 in operating mode "Use position value (SSI absolute value) as reference"
NewReferenceValue1		DINT	L#10	Write	New comparison value 1 in operating mode "Use position value (SSI absolute value) as reference"
NewReferenceValue0_M		REAL	L#0.0	Write	New comparison value 0 in operating mode "Use measured value as reference"
NewReferenceValue1_M		REAL	L#10.0	Write	New comparison value 1 in operating mode "Use measured value as reference"
CurReferenceValue0		DINT	L#0	Read	Current comparison value 0 in operating mode "Use position value (SSI absolute value) as reference"
CurReferenceValue1		DINT	L#10	Read	Current comparison value 1 in operating mode "Use position value (SSI absolute value) as reference"
CurReferenceValue0_M		REAL	L#0.0	Read	Current comparison value 0 in operating mode "Use measured value as reference"
CurReferenceValue1_M		REAL	L#10.0	Read	Current comparison value 1 in operating mode "Use measured value as reference"
AdditionalErrorID		DWORD	W#16#0000	Read	Error information of an internal instruction, e.g.,RDREC
UserCmdFlags		STRUCT	-		
	SetReferenceValue0	BOOL	FALSE	Write	Set comparison value 0
	SetReferenceValue1	BOOL	FALSE	Write	Set comparison value 1
	SetDQ0	BOOL	FALSE	Write	Set digital output DQ0
	SetDQ1	BOOL	FALSE	Write	Set digital output DQ1
	ManualCtrlDQ0	BOOL	FALSE	Write	Enable setting of digital output DQ0. TRUE: SetDQ0 sets DQ0[1] FALSE: Setting not enabled
	ManualCtrlDQ1	BOOL	FALSE	Write	Enable setting of digital output DQ1: TRUE: SetDQ1 sets DQ1[1] FALSE: Setting not enabled
UserStatusFlags		STRUCT	-		
	StatusDI0	BOOL	FALSE	Read	Current status of digital input DI0
	StatusDI1	BOOL	FALSE	Read	Current status of digital input DI1
	StatusDQ0	BOOL	FALSE	Read	Current status of digital output DQ0
	StatusDQ1	BOOL	FALSE	Read	Current status of digital output DQ1

[1] The instruction sets the TM_CTRL_DQm bit to FALSE. in the control interface of the module. The static tag SetDQm acts on the control bit SET_DQm.

4.6 Commissioning SSI_Absolute_Encoder

4.6.1 Commissioning the technology object

A graphic display of the block in the commissioning editor helps you with commissioning and the function test for the technology object. You can change specific parameters of the SSI_Absolute_Encoder instruction in CPU/IM online mode and monitor their effects.

Requirements

- There is an online connection between STEP 7 (TIA Portal) and the CPU.
- The CPU is in RUN.
- The corresponding SSI_Absolute_Encoder instruction is called cyclically from the user program.
- The parameters of the technology object are not overwritten by the user program.

Procedure

To open the commissioning editor of a technology object and to simulate a parameter value change, follow these steps:

1. Open the "Technology objects" folder in the project tree.
2. Open the SSI_Absolute_Encoder technology object in the project tree.
3. Double-click on the "Commissioning" object.
   The functions for commissioning the SSI_Absolute_Encoder technology object are displayed.
4. In the commissioning dialog, click on the "Monitor all" button.
   The parameters (online values) of the SSI_Absolute_Encoder technology object are loaded and displayed.
5. If the parameter you want to change has a text box, enter the new value there.
6. Select the check box of the parameter.
   The new parameter value becomes effective and the effects of the change are simulated.

Online mode

In online mode, you can modify the following parameters to test the technology object function:

- New comparison value 0 (NewReferenceValue0 or NewReferenceValue0_M)
- New comparison value 1 (NewReferenceValue1 or NewReferenceValue1_M)
- Enable Capture (CaptureEnable)
- Acknowledgment of signaled error states (ErrorAck)
- Resetting the status flag (EventAck)

4.7 SSI_Absolute_Encoder diagnostics

4.7.1 Monitoring counter values, measured values, DIs and DQs

The diagnostic functions are used to monitor the position input and measuring functions.

Requirements

- There is an online connection between STEP 7 (TIA Portal) and the CPU.
- The CPU is in RUN.

Procedure

To open the display editor for the diagnostic functions, follow these steps:

1. Open the "Technology objects" folder in the project tree.
2. Open the SSI_Absolute_Encoder technology object in the project tree.
3. Double-click on the "Diagnostics" object.
4. Click the "Monitor all" button.

Display

The following values are read by the technology object from the feedback interface and displayed:

- Event display/diagnostics information
- Signal states of the digital inputs and digital outputs
- Position value
- Capture value
- Measured value

Additional information on status displays is available in the context-sensitive help for each event in STEP 7 (TIA Portal). When the CPU is in STOP, the status display is not updated.

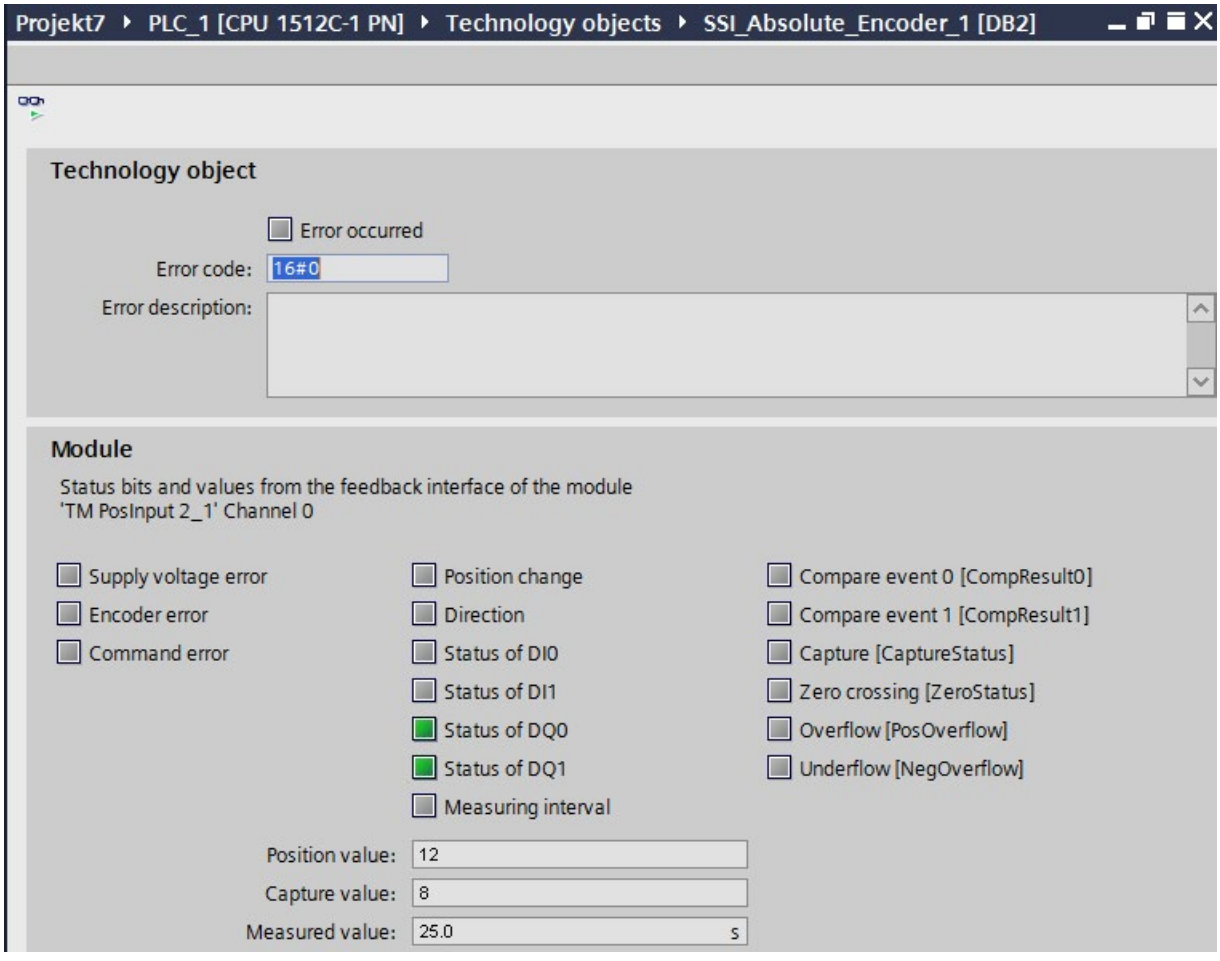

Using the module 5

5.1 Using the technology module

5.1.1 Convention

Technology module: We use the term "technology module" in this documentation both for the technology modules TM Count and TM PosInput and the technology component of the compact CPUs.

5.1.2 Configuring a module

5.1.2.1 Adding a technology module for hardware configuration (TM Count and TM PosInput)

Requirement

- The project has been created.
- The CPU S7-1500 has been created.
- At decentralized operation a distributed I/O ET 200 is created.

Procedure

To add a technology module to the hardware configuration, proceed as follows:

1. Open the device configuration of the CPU or IM.
2. Select a module rack.
3. Select the technology module from the module catalog:
   "Technology module > Counting or Position input > Technology module > Article number"
4. Drag the technology module to the required slot in the module rack.

5.1.2.2 Adding a technology module to hardware configuration (Compact CPU)

Requirement

The project has been created.

Procedure

To add a Compact CPU to the project tree, follow these steps:

1. Double-click "Add new device".
   The "Add new object" dialog opens.
2. Select Controller".
3. Select the Compact CPU:
   "SIMATIC S7-1500 > CPU > Compact CPU > Article number"
4. Confirm with "OK".

Result

The new Compact CPU is displayed with the following objects in the project tree. Double-click to open the required editor.

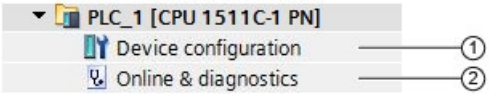

	Object	Description
①	Device configuration (Page 179)	In the Inspector window (per channel): • Activation of the counter (Page 188) • Assign signals to inputs and outputs (Page 189) • Setting the reaction to CPU STOP (Page 179) • Enable diagnostic interrupts (Page 181) • Setting the operating mode (Page 181) • Enable hardware interrupts (Page 186) • Setting the module addresses
②	Online & Diagnostics (Page 218)	• Hardware diagnostics • Obtain information about the Compact CPU • Run firmware update

5.1.2.3 Open hardware configuration

Opening

To open the hardware configuration, follow these steps:

1. Open the device configuration of the CPU or IM.
2. Select the device view.
3. Click on the module.

5.1.2.4 Parameter assignment options

Counting, measuring and position input with SSI absolute encoder

For the counting and measuring function as well as the position input with an SSI absolute encoder, you have the following alternatives for parameter assignment and control of the technology module:

- Configuration of a technology object and control using the related instruction:

  When using an incremental or pulse encoder, we recommend the simple configuration with graphic support using thee High_Speed_Counter technology object. A detailed description of this configuration can be found in section Technology Object High_Speed_Counter (Page 97).

  When using an SSI absolute value encoder, we recommend the simple configuration with graphic support using the SSI_Absolute_Encoder technology object. A detailed description of this configuration can be found in section Technology Object High_Speed_Counter (Page 142).

  For configuration of a technology object, select the operating mode (Page 181) "Operating with "Counting and measurement" technology object".

- Parameter setting via hardware configuration and control via the control and feedback interface of the technology module:

  Select the operating mode (Page 181) "Manual operation (without technology object)" for this.

  A description of the control and feedback interface for TM Count and TM PosInput is available in the following sections:

  Assignment of the control interface (Page 219)

  Assignment of the feedback interface (Page 222)

- Parameter settings via GSD file and control via the control and feedback interface of the technology module.

  A description of the control and feedback interface for TM Count and TM PosInput is available in the following sections:

  Assignment of the control interface (Page 219)

  Assignment of the feedback interface (Page 222)

Position input for Motion Control

Alternatively, you have the option of using the technology module for position input for Motion Control.

Select the operating mode (Page 181) "Position input for "Motion Control" technology object" and assign the parameters of the encoder using the module parameters (Page 183) in the device configuration of the technology module. You perform the rest of the configuration of this application using an axis technology object of S7-1500 Motion Control .

5.1.2.5 Basic parameters

Reaction to CPU STOP

Reaction to CPU STOP

You set the response of the technology module for each channel to CPU STOP in the basic parameters of the device configuration.

Option	Meaning
Continue operation	The technology module remains fully functional. Incoming count pulses are processed or the actual position is read. The digital outputs continue to switch according to the parameter assignment.
Output substitute value	The technology module outputs the configured substitute values at the digital outputs until the next CPU STOP-RUN transition. The technology module is returned to its startup state after a STOP-RUN transition: The counter value is set to the Start value (with incremental encoders or pulse encoders) and the digital outputs switch according to the parameter assignment.
Keep last value	The technology module outputs the values at the digital outputs that were valid when the transition to STOP took place until the next CPU STOP-RUN transition. If a digital output with the function "In case of comparison value for a pulse duration" is set at CPU stop, the digital output is reset after expiry of pulse duration. The technology module is returned to its startup state after a STOP-RUN transition: The counter value is set to the Start value (with incremental encoders or pulse encoders) and the digital outputs switch according to the parameter assignment.

Substitute value for DQ0 (TM Count und TM PosInput)

This parameter lets you specify which value the technology module is to output to the digital output DQ0 in the event of a CPU STOP under "Output substitute value".

Note

In operating mode "Operating with "Counting and measurement" technology object", you assign this parameter using the technology object.

Substitute value for DQ0 (Compact CPU)

You can use this parameter to specify the value to be output for a STOP of the Compact CPU in the feedback interface for DQ0 in the context of the "Substitute value for DQ0" behavior.

Note

In operating mode "Operating with "Counting and measurement" technology object", you assign this parameter using the technology object.

Substitute value for DQ1

This parameter lets you specify which value the technology module is to output to the digital output DQ1 in the event of a CPU STOP under "Output substitute value".

Note

In operating mode "Operating with "Counting and measurement" technology object", you assign this parameter using the technology object.

Diagnostic interrupts (TM Count and TM PosInput)

The technology module can trigger additional diagnostic interrupts when you enable the diagnostic interrupts in the basic parameters. These diagnostic interrupts are processed in an interrupt OB.

Detailed information on the error event is available in the error organization block with the instruction "RALRM" (read alarm supplementary information) and in the Diagnostics function manual (https://support.industry.siemens.com/cs/ww/en/view/59192926), section "System diagnostics by means of the user program".

Enable diagnostic interrupt on wire break

You use this parameter to specify whether a diagnostic interrupt is to be triggered in the event of wire breaks of the utilized signals for the following encoders:

- Push-pull 24 V encoder (Page 71)
- RS422 encoder (Page 73) (additionally monitored for short-circuits and incorrect supply voltage)
- SSI absolute encoder (Page 75) (additionally monitored for short-circuits and incorrect supply voltage)

Note

If you use an encoder with a different sensor type or interface standard, wire break cannot be detected.

Enable additional diagnostic interrupts

You use this parameter to specify whether diagnostic interrupts are to be triggered for additional errors.

See the device manual for the technology module to find out which errors during operation can trigger a diagnostic interrupt.

Diagnostics interrupts (Compact CPU)

Enable diagnostic interrupts

A Compact CPU can trigger diagnostic interrupts for certain faults if you have enabled diagnostic interrupts. These diagnostic interrupts are processed in an interrupt OB.

You use this parameter to determine if the Compact CPU should trigger diagnostic interrupts when a given error occurs.

See the device manual for the Compact CPU to find out which errors can trigger a diagnostic interrupt during operation. The diagnostic interrupts are not enabled in the default setting.

Operating mode

Selection of the operating mode for the channel

This setting defines how the channel counting and measuring functions are to be configured and controlled.

Operating mode	Description
Operating with "Counting and measurement" technology object	A technology object is used for the parameter assignment of the channel. The related instruction for the technology object in the user program provides the access to the control and feedback interfaces of the technology module. You specify the assignment between the technology module/channel and technology object in the basic parameters of the technology object.
Position input for "Motion Control" technology object	The technology module is used for position input for a higher-level Motion Control controller. This operating mode affects all channels of the technology module for TM Count and TM PosInput. Setting the operating mode only affects the given channel of the Compact CPU. Parameter assignment is implemented via the Device configuration of the technology module. Parameter assignment of the encoder signals is implemented by means of the Module parameters (Page 183).

Operating mode	Description
Manual operation (without technology object)	Parameter assignment of the channel is effected via the hardware configuration of the technology module: • Manual operation (incremental or pulse encoder) (Page 190) • Manual operation (SSI absolute encoder) (Page 207) You have direct access to the control and feedback interface of the channel through the user program.
Fast Mode	The technology module is used for very fast detection of the count or position value. No control interface is available. The parameter setting (hardware configuration) of the module is used for the parameter assignment of the channel. You have direct access to the feedback interface of the channel through the user program. This operating mode is not supported by every technology module.

Note

GSD file

When using a GSD file you determine the operating mode via the selection of the module name in the hardware catalog. You can select manual operation or Fast Mode in the process.

Selection of the operating mode for the channel

You use this parameter in "Manual operation" to specify the main task for which the channel of the technology module is used. This defines the setting options under "Parameters" (hardware configuration).

Operating mode	Description
Counting (Page 24) / Position input (Page 26)	The main function of the channel is counting or position input. The comparison functions and hardware interrupts work with the counter value or position value. The measured values are available concurrently.
Measuring (Page 58)	The main function of the channel is counting. The comparison functions (Page 56) and hardware interrupts for compare events work with the measured value. The counter value is available concurrently.

Note

GSD file

When using a GSD file you determine the operating type via the selection of the module name in the hardware catalog.

Module parameters (position input for Motion Control)

In operating mode "Position input for "Motion Control" technology object", the parameters for the encoder signals of the channel are assigned under "Module parameters". The parameters depend on the encoder used.

Note

You cannot use this operating mode with a GSD file.

Module parameters for incremental encoders and pulse encoders

If you use an incremental or pulse encoder, you need to configure the following parameters for the encoder signals of the channel.

- Signal type
- Invert direction
- Signal evaluation
- Filter frequency
- Sensor type (for TM Count)
- Interface standard (for TM PosInput)
- Signal selection for reference mark 0
- Measuring input
- Increments per revolution
- Steps per revolution
- Reference speed

You can find a description of the first six parameters in section Counter inputs (Page 190).

Module parameters for SSI absolute encoders

If you use an TM PosInput with an SSI absolute encoder, you need to configure the following parameters for the encoder signals of the channel.

- Signal type
- Invert direction
- Frame length
- Code type
- Transmission rate
- Monoflop time
- Parity
- Bit number LSB of the position value
- Bit number MSB of the position value

- Measuring input
- Steps per revolution
- Number of revolutions
- Reference speed

You can find additional information on the first new parameters in section Counter inputs (Page 207).

Signal selection for reference mark 0

You can use this parameter to specify the external reference signal upon which a new reference mark is saved for the encoder position.

You can select from the following options:

Option	Meaning
None[1]	No external reference signal is used.
DI0 (preset for TM Count and TM PosInput)	The current counter value is saved as the new encoder position reference mark upon a positive edge at digital input DI0.
Signal N of incremental encoder (default for Compact CPU[2])	The current counter value is saved as the new encoder position reference mark upon a positive edge of the signal N of incremental encoder.

[1] Only available with Compact CPU

[2] Exceptions: "DI0" is the default for HSC 3 and HSC 6 on the 1511C as well as on the 1512C in compatibility mode

Measuring input (TM Count and TM PosInput)

The parameter specifies that the hardware digital input DI1 serves as a measuring input. For rising, falling or both edges of the DI1, the current counter value or position value is saved as the current encoder position. The value of the parameter cannot be changed.

Measuring input (compact CPU)

This parameter is used to define the hardware input which is used as the external measuring input for saving the encoder position.

You can select from the following options:

Option	Meaning
None (default)	No external measuring input is used.
DI1	The hardware digital input DI1 serves as the measuring input. For rising, falling or both edges of the DI1, the current counter value is saved as current encoder position.

Increments per revolution

With this parameter you specify the line count of the incremental and pulse encoder. The line count can be found in the data sheet for the encoder.

Steps per revolution (incremental and pulse encoder)

The parameter specifies the number of count pulses per encode rotation.

The number of count pulses depends on the increment per rotation and the parameterized signal evaluation.

Example:

Your incremental or pulse encoder delivers 2048 increments per revolution. Depending on the signal evaluation the following value is displayed:

Signal evaluation	Steps per revolution
Single	2048
Double	4096
Quadruple	8192

Steps per revolution (SSI absolute encoder)

With this parameter you define the number of increments the SSI absolute encoder supplies per revolution.

Number of revolutions

The parameter specifies how many rotations the value range of the SSI absolute encoder encompasses.

The value is calculated from the parameterized values for the bit numbers LSB and MSB of the position value as well as the steps per revolution.

Reference speed

The encoder transmits the process value of the speed as a percentage of the reference speed. This parameter defines the speed in rpm which is to be correspond to the value 100 % . The reference speed must be identical to the setting in the controller.

You can enter a value between 6.00 and 210000.00. The default setting is "3000.00".

Further configuring

You can perform the further configuration by using an axis or measuring input technology object of S7-1500 Motion Control . See the S7-1500 Motion Control (https://support.industry.siemens.com/cs/ww/en/view/59381279) and S7-1500T Motion Control (https://support.industry.siemens.com/cs/ww/en/view/109481326) function manuals for further details on configuring and commissioning position input and the measuring input technology object.

See also

Position detection for Motion Control (Page 70)

Hardware interrupts

You can set for each channel the events which are to trigger a hardware interrupt during operation when assigning the basic parameters of the technology module.

In an S7-1500 system, you enter a matching event name for each enabled hardware interrupt and assign a corresponding hardware interrupt OB to each hardware interrupt. If a hardware interrupt is triggered, the corresponding OB is started to evaluate the hardware interrupt data.

Note

In the following cases you can only release only *one* hardware interrupt per module.

- Distributed operation with an S7-300/400 CPU
- Use of a GSD file

A hardware interrupt is triggered if the condition for changing the respective status bit or event bit in the feedback interface is fulfilled.

Lost hardware interrupt

If the hardware interrupts are triggered more quickly by the system than they can be acknowledged, hardware interrupts are lost and the "Hardware interrupt" diagnostics interrupt is signaled.

Hardware interrupts that can be activated

Hardware interrupt	Available in counting mode using		Available in measuring mode using		Available in operating mode Position input for "Motion Control" technology object	Description	Event Type number
	Incremental or pulse encoder	SSI absolute encoder	Incremental or pulse encoder	SSI absolute encoder			
New Capture value available	Yes	Yes	No	No	No	Hardware interrupt when current counter value or position value is saved as Capture value	1000_B
Synchronization of the counter by an external signal	Yes	No	Yes	No	No	Hardware interrupt upon synchronization of the counter by signal N or DI edge	1001_B
Gate start	Yes	No	Yes	No	No	Hardware interrupt when internal gate opens	0001_B
Gate stop	Yes	No	Yes	No	No	Hardware interrupt when internal gate closes	0010_B
Overflow (high counting limit violated)	Based on counter value	No	Based on counter value	No	No	Hardware interrupt when counter value exceeds high counting limit	0011_B

Hardware interrupt	Available in counting mode using		Available in measuring mode using		Available in operating mode Position input for "Motion Control" technology object	Description	Event Type number
	Incremental or pulse encoder	SSI absolute encoder	Incremental or pulse encoder	SSI absolute encoder			
Underflow (low counting limit violated)	Based on counter value	No	Based on counter value	No	No	Hardware interrupt when counter value falls below low counting limit	0100_B
Change of direction[1]	Based on counter value	Based on position value	Based on counter value	Based on position value	No	Hardware interrupt when counter value or position value changes direction	1010_B
Zero crossing	Based on counter value	Based on position value	Based on counter value	Based on position value	No	Hardware interrupt with zero crossing of counter value or position value	0111_B
Comparison event for DQ0 occurred	Based on counter value	Based on position value	Based on measured value	Based on measured value	No	Hardware interrupt when a comparison event for DQ0 occurs as a result of the selected comparison condition. No hardware interrupt when the change of the counter value for an incremental or pulse encoder was not caused by a count pulse	0101_B
Comparison event for DQ1 occurred	Based on counter value	Based on position value	Based on measured value	Based on measured value	No	Hardware interrupt when a comparison event for DQ1 occurs as a result of the selected comparison condition. No hardware interrupt when the change of the counter value for an incremental or pulse encoder was not caused by a count pulse	0110_B

[1] The STS_DIR feedback bit has a default of "0". A hardware interrupt is not triggered when the first change to the counter value or position value immediately after the technology module is switched on is in the down direction.

Default setting

No hardware interrupts are enabled in the default setting.

5.1.2.6 Additional parameters for Compact CPU

Introduction

When using a Compact CPU, the following parameters are additionally available for the signals of the high-speed counter.

Compatibility 1511C (high-speed counters of Compact CPU 1512C-1 PN)

Front connector assignment same as CPU 1511C

You can use this parameter to specify if the pin assignment for the front connector of the CPU 1511C-1 PN is to be used for the high-speed counter of the CPU 1512C-1 PN:

Option	Meaning
Disabled (default)	CPU 1512C-1 PN uses the pin assignment of the onboard front connector. 1512C-1 PN supports the use of the connections of both front connectors of the digital onboard I/Os for the high-speed counter. The assignment of hardware inputs and outputs for the HSC channels is described in the CPU 1512C-1 PN manual.
Enabled	CPU 1512C-1 PN uses the pin assignment of the front connector of the CPU 1511C-1 PN. 1511C-1 PN supports the use of the connections of the first front connector of the digital onboard I/Os for the high-speed counter. The assignment of hardware inputs and outputs for the HSC channels is described in the CPU 1511C-1 PN manual.

General

Activate this high-speed counter

You can use this parameter to specify whether the respective high speed counter is to be used:

Option	Meaning
Disabled (default)	The high-speed counter is not used. The counter uses no connections of the onboard front connector and can not trigger interrupts. Writing to its control interface is ignored and its feedback interface returns zero values.
Enabled	The high-speed counter is used. The assignment of HSC addresses to the connections of the onboard front connector is described in the device manual of the Compact CPU.

Hardware inputs/outputs

Clock generator input (A) / Pulse input (A) / Clock generator forward (A)

This parameter specifies which input is used for the encoder signal A for the respective counter. The value cannot be changed.

Clock generator input (B) / Pulse input (B) / Clock generator forward (B)

If you use an encoder with multiple signals for the respective counter, this parameter specifies which input is used for the encoder signal B. The value cannot be changed.

Reset input (N)

If you use an incremental encoder for the respective counter, this parameter specifies which input is used for the reset input (encoder signal N). The value cannot be changed.

HSC DI0 / HSC DI1

This parameter determines which digital input of the Compact CPU is to be used as the DIm of the counter.

Note

You can configure the input delay for a digital input in the Inspector window of the device configuration under "Properties > DI 16/DQ 16 > Inputs > Channel n".

HSC DQ0

You can read the status of the DQ0 via the feedback interface. You cannot assign DQ0 to a physical digital output of the Compact CPU.

HSC DQ1

This parameter determines which digital output of the Compact CPU is to be used as DQ1. You can select an output with an output delay of 5 µs or 500 µs.

You can find an overview of the output delay for all digital outputs in the device manual of the Compact CPU.

5.1.2.7 Manual operation (incremental or pulse encoder)

Counter inputs

Signal type

You can choose from the following signal types (Page 71):

Signal type	Meaning	Additional option-specific parameters
Incremental encoder (A, B phase-shifted)	An incremental encoder with phase-shifted A and B signals is connected.	• Invert direction • Signal evaluation • Filter frequency • Sensor type or Interface standard
Incremental encoder (A, B, N)	An incremental encoder with phase-shifted signals A and B and a zero signal N is connected.	• Invert direction • Signal evaluation • Filter frequency • Sensor type or Interface standard • Reaction to signal N • Frequency of synchronization • Frequency of the Capture function
Pulse (A) and direction (B)	A pulse encoder (signal A) with direction signal (signal B) is connected.	• Filter frequency • Sensor type or Interface standard
Pulse (A)	A pulse encoder (signal A) without direction signal is connected. You can specify the count direction by means of the control interface (Page 219).	• Filter frequency • Sensor type or Interface standard
Count up (A), count down (B)	Signals for counting up (signal A) and down (signal B) are connected.	• Filter frequency • Sensor type or Interface standard

Invert direction

You can invert the counting direction to adapt it to the process.

The inverting of the direction is configurable and active for the following signal types:

- Incremental encoder (A, B phase-shifted)
- Incremental encoder (A, B, N)

Signal evaluation

By configuring signal evaluation (Page 76), you can specify which edges of the signals are counted.

You can select from the following options:

Signal evaluation	Meaning
Single (default)	The edges of signal A are evaluated during a low level of signal B.
Double	Each edge of signal A is evaluated.
Quadruple	Each edge of signals A and B is evaluated.

The parameter can be assigned with the following signal types:

- Incremental encoder (A, B phase-shifted)
- Incremental encoder (A, B, N)

Filter frequency

By configuring the filter frequency, you suppress interferences at the counting inputs A, B and N.

The selected filter frequency is based on a pulse/break ratio of between around 40:60 and around 60:40. This results in a specific minimum pulse/break time. Signal changes with a duration shorter than the minimum pulse/break time are suppressed.

You can select from the following filter frequencies:

Filter frequency	Minimum pulse/break time
100 Hz	4.0ms
200 Hz	2.0 ms
500 Hz	800 µs
1 kHz	400 µs
2 kHz	200 µs
5 kHz	80 µs
10 kHz	40 µs
20 kHz	20 µs
50 kHz	8.0 µs
100 kHz (preset for Compact CPU)	4.0 µs
200 kHz** (preset for TM Count)	2.0 µs
500 kHz*	0.8 µs
1 MHz* (default at TM PosInput)	0.4 µs

* Only available with TM PosInput

** * Only available with TM Count and TM PosInput

Sensor type (TM Count)

By configuring the sensor type, you specify how the counter inputs are switched for the TM Count.

You can select from the following options:

Sensor type	Meaning
Sourcing output (default)	The encoder/sensor switches the inputs A, B and N to 24VDC.
Sinking output	The encoder/sensor switches the inputs A, B and N to M.
Push-pull (sinking and sourcing output)	The encoder/sensor alternately switches the inputs A, B and N to M and 24VDC.

"Push-pull" is usually selected when incremental encoders are used. If using 2-wire sensors, such as light barriers or proximity switches, you need to select the corresponding wiring "sourcing output" or "sinking output".

The data sheet of the encoder includes information on whether your incremental encoder is a push-pull encoder.

Note

If you use a push-pull encoder and the sensor type "Push-pull (sinking and sourcing output)" is configured, you can monitor the encoder signals for wire break.

Sensor type (compact CPU)

The "Sourcing output" sensor type is set for the Compact CPU and cannot be changed. The encoder or sensor switches the inputs A, B and N to 24V DC.

You can operate both sourcing output encoders as well as push-pull encoders on the Compact CPU. You can find additional information on the sensor type in the data sheet for the encoder.

Interface standard (TM PosInput)

You use this parameter to specify whether the encoder outputs symmetric (RS422) or asymmetric (TTL) signals for the TM PosInput.

You can select from the following options:

Interface standard	Meaning
RS422, symmetrical (default)	The encoder outputs symmetric signals according to the RS422 standard (Page 73).
TTL (5 V), asymmetrical	The encoder outputs asymmetric 5 V signals according to the TTL standard (Page 71).

Note

The RS422 standard provides greater interference immunity than the TTL standard. If your incremental or pulse encoder supports the RS422 standard **and** the TTL standard, we recommend using the RS422 standard.

Reaction to signal N

You use this parameter to specify which reaction is triggered to signal N.

You can select from the following options:

Option	Meaning
No reaction to signal N (default)	The counter is not affected by signal N.
Synchronization at signal N (Page 44)	The counter is set to the start value at signal N. If you select the function "Enable synchronization at signal N" for a digital input, the synchronization depends on the level at the digital input.
Capture at signal N (Page 34)	The counter value is stored in the Capture value at signal N. The use of a digital input and the use of the N signal are not mutually exclusive for the Capture function. The technology object displays the Capture value at the output parameter CapturedValue.

Note

You can only select the reaction to signal N if you have selected the "Incremental encoder (A, B, N)" signal type.

Note

If "Synchronization at signal N" is selected, you can select the function "Enable synchronization at signal N" for a digital input (Page 196).

Note

For High_Speed_Counter as of V3.0, the following applies:

You can choose "Capture at signal N" only in operating mode "Use count value as reference":

Frequency of synchronization

This parameter is used to define the frequency of the following events:

- Synchronization at signal N
- Synchronization as function of a digital input

You can select from the following options:

Option	Meaning
Once (default)	The counter is only set at the first signal N or the first configured edge of the digital input.
Periodic	The counter is set at each signal N or each configured edge of the digital input.

Frequency of the Capture function

This parameter is used to define the frequency of Capture events for the following functions:

- Capture at Signal N
- Capture as function of a digital input

You can select from the following options:

Option	Meaning
Once	The first configured edge at the respective digital input or first rising edge of the N signal saves the current counter value as a Capture value.
Periodic (default)	Each configured edge at the respective digital input or each rising edge of the N signal saves the current counter value as a Capture value.

Counting limits and start value

High counting limit

You limit the counting range by setting the high counting limit. You can enter a value up to 2147483647 (2^{31}-1). You must enter a value that lies above the low counting limit.

The default setting is "2147483647".

Low counting limit

You limit the counting range by setting the low counting limit. You can enter a value up to -2147483648 (-2^{31}). You must enter a value below the high counting limit.

The default setting is "-2147483648".

Start value

By configuring the start value, you specify the value at which counting is to start and where it is to continue in the case of defined events. You must enter a value between the counting limits or equal to the counting limits.

The default setting is "0".

Additional information

For more information, see Behavior at the counting limits (Page 28) and Counter behavior at gate start (Page 33).

Counter behavior at limits and gate start

Reaction to violation of a counting limit

You can configure the following characteristics for violation of a counting limit (Page 28):

Reaction	Meaning
Stop counting	If a counting limit is violated, counting is stopped and the internal gate is closed. To restart counting, you must also close and reopen the software/hardware gate.
Continue counting (default)	Counting continues either with the start value or at the opposite counting limit, depending on the additional parameter assignment.

Reset when counting limit is violated

You can reset the counter to the following values when a counting limit is violated:

Reset the value	Meaning
To start value	The counter value is set to the start value.
To opposite counting limit (default)	The counter value is set to the opposite counting limit.

Reaction to gate start

You can set the following Reaction to gate start (Page 33):

Reaction	Meaning
Set to start value	When the gate is opened, the counter value is set to the start value.
Continue with current value (default)	When the gate is opened, counting is continued with the last counter value.

Behavior of a DI

Setting function of the DI

By configuring a digital input, you specify which functions the digital input triggers at switching.

You can select from the following options:

Function of a digital input	Meaning	Additional option-specific parameters
Gate start/stop (level-triggered)	The level at the respective digital input opens and closes the hardware gate (Page 30).	• Input delay • Select level
Gate start (edge-triggered)	The configured edge at the respective digital input opens the hardware gate (Page 30).	• Input delay • Edge selection
Gate stop (edge-triggered)	The configured edge at the respective digital input closes the hardware gate (Page 30).	• Input delay • Edge selection
Synchronization (Page 39)	The configured edge at the respective digital input sets the counter to the start value. The EVENT_SYNC feedback bit indicates whether a synchronization has occurred.	• Input delay • Edge selection • Frequency of synchronization
Enable synchronization at signal N	The active level at the respective digital input enables synchronization of the counter at signal N (Page 44).	• Input delay • Select level
Capture	The configured edge at the respective digital input saves the current counter value (Page 34) as a Capture value. The use of a digital input and the use of the N signal are not mutually exclusive for the Capture function. The CAPTURED_VALUE value in the feedback interface indicates the Capture value.	• Input delay • Edge selection • Frequency of the Capture function • Behavior of counter value after Capture
Digital input without function	No technological function is assigned to the respective digital input. You can read the signal state of the digital input via the respective feedback bit: • STS_DI0 • STS_DI1 • STS_DI2	• Input delay

Note

With the exception of "Digital input without function", each function can only be used once for each counter, and if used for one digital input is not available to the others.

Input delay (TM Count and TM PosInput)

You use this parameter to suppress signal interference at the digital inputs. Changes to the signal are only detected if they remain stable for longer than the configured input delay time.

You can select from the following input delays:

- None
- 0.05 ms
- 0.1 ms (default)
- 0.4 ms
- 0.8 ms
- 1.6 ms
- 3.2 ms
- 12.8 ms
- 20 ms

Note

If you select the "None" or "0.05 ms" option, you have to use shielded cables for connection of the digital inputs.

Note

You configure the input delay under "Behavior of DI0" for all digital inputs together. The input delay is also displayed under "Behavior of DI1" and for TM Count also under "Behavior of DI2".

Input delay (compact CPU)

You use this parameter to suppress interference at the digital inputs of the DIn signals. Changes to the signal are only detected if they remain stable for longer than the configured input delay time.

You can configure the input delay for a digital input of a Compact CPU in the Inspector window of the device configuration under "Properties > DI 16/DQ 16 > Inputs > Channel n".

You can select from the following input delays:

- None
- 0.05 ms
- 0.1 ms
- 0.4 ms
- 1.6 ms
- 3.2 ms (default)

- 12.8 ms
- 20 ms

Note

If you select the "None" or "0.05 ms" option, you have to use shielded cables for connection of the digital inputs.

Select level

You use this parameter to specify the level at which the digital input is active.

You can select from the following options:

Level	Meaning
Active with high level (default)	The respective digital input is active when it is set.
Active with low level	The respective digital input is active when it is not set.

The parameter can be set for the following functions of a digital input:

- Gate start/stop (level-triggered)
- Enable synchronization at signal N

Edge selection

You can use this parameter to specify the edge of the digital input at which the configured function is triggered.

The following options may be available depending on the function selected:

- At rising edge (default)
- At falling edge
- At rising and falling edge

The parameter can be set for the following functions of a digital input:

- Gate start (edge-triggered)
- Gate stop (edge-triggered)
- Synchronization
- Capture

Note

At rising and falling edge" can only be configured for the "Capture" function.

Frequency of synchronization

This parameter is used to define the frequency of the following events:

- Synchronization at signal N
- Synchronization as a function of a digital input

You can select from the following options:

Option	Meaning
Once (default)	The counter is only set at the first signal N or the first configured edge of the digital input.
Periodic	The counter is set at each signal N or each configured edge of the digital input.

Frequency of the Capture function

This parameter is used to define the frequency of Capture events for the following functions:

- Capture at Signal N
- Capture as function of a digital input

You can select from the following options:

Option	Meaning
Once	The first configured edge at the respective digital input or first rising edge of the N signal saves the current counter value as a Capture value.
Periodic (default)	Each configured edge at the respective digital input or each rising edge of the N signal saves the current counter value as a Capture value.

Behavior of counter value after Capture

You can configure the following characteristics for the counter after a capture event (Page 34):

Reaction	Meaning
Continue counting (default)	After saving the current counter value as Capture value, counting is continued unchanged.
Set to start value and continue counting	After saving the current counter value as Capture value, counting is continued with the start value.

Behavior of a DQ

Set output

With the parameter assignment of a digital output, you specify the condition upon which the digital output switches.

You can select from the following options:

Function of a digital output (Page 48) in the operating mode "Counting"	Meaning	Additional option-specific parameters
Between comparison value and high limit (default)	The respective digital output is active if: Comparison value <= counter value <= high counting limit	• Comparison value 0 • Comparison value 1 • Hysteresis (in increments)
Between comparison value and low limit	The respective digital output is active if: Low counting limit <= counter value <= comparison value	• Comparison value 0 • Comparison value 1 • Hysteresis (in increments)
Between comparison value 0 and 1	The digital output DQ1 is active if: Comparison value 0 <= counter value <= comparison value 1	• Comparison value 0 • Comparison value 1 • Count direction • Hysteresis (in increments)
At comparison value for a pulse duration	The respective digital output is active once for the configured time and count direction when the counter value reaches the comparison value.	• Comparison value 0 • Comparison value 1 • Count direction • Pulse duration • Hysteresis (in increments)
After set command from CPU until comparison value	When a set command is sent from the CPU, the respective digital output is active until the counter value is equal to the comparison value.	• Comparison value 0 • Comparison value 1 • Count direction • Hysteresis (in increments)
Use by user program	The respective digital output can be switched by the CPU via the control interface (Page 47).	—

Note

DQ0 of a counter of a Compact CPU

With a Compact CPU, the respective digital output DQ0 is available via the feedback interface, but not as a physical output.

Note

You can only select the "Between comparison value 0 and 1" function for digital output DQ1 and only if you have selected the "Use by user program" function for digital output DQ0.

Note

The "At comparison value for a pulse duration" and "After set command from CPU until comparison value" functions only switch the digital output in question if a count pulse reaches the comparison value. When the counter value is set, e.g. by synchronization, the digital output does not switch.

Function of a digital output (Page 56) in the operating mode "Measuring"	Meaning	Additional option-specific parameters
Measured value >= comparison value (default)	The respective digital output is active if the measured value is greater than or equal to the comparison value.	• Comparison value 0 • Comparison value 1
Measured value <= comparison value	The respective digital output is active if the measured value is less than or equal to the comparison value.	• Comparison value 0 • Comparison value 1
Between comparison value 0 and 1	The digital output DQ1 is active if: Comparison value 0 <= measured value <= comparison value 1	• Comparison value 0 • Comparison value 1
Not between comparison value 0 and 1	The digital output DQ1 is active if: Comparison value 1 <= measured value <= comparison value 0	• Comparison value 0 • Comparison value 1
Use by user program	The respective digital output can be switched by the CPU via the control interface (Page 47).	—

Note

You can select the "Between comparison value 0 and 1" and "Not between comparison value 0 and 1" functions only for digital output DQ1 and only if you have selected the "Use by user program" function for digital output DQ0.

Comparison value 0 (TM Count and TM PosInput)

Operating mode "Counting":

With the parameter assignment of the comparison value (Page 48), you specify the counter value at which the digital output DQ0 switches as a result of the selected comparison event.

You must enter an integer (DINT) that is greater than or equal to the low counting limit. If you use the DQ function "Between comparison value 0 and 1", the comparison value 0 has to be smaller than comparison value 1. The default setting is "0".

Operating mode "Measurement":

With the parameter assignment of the comparison value (Page 56), you specify the measured value at which the digital output DQ0 switches as a result of the selected comparison event.

You must enter a floating point number (REAL). If you use the DQ function "Between comparison value 0 and 1", the comparison value 0 has to be smaller than comparison value 1. The minimum value is -7.922816×10^{28}. The default setting is "0.0". The unit of the comparison value depends on the measured variable.

Comparison value 0 (compact CPU)

Operating mode "Counting":

With the parameter assignment of the Comparison value (Page 48), you specify the counter value at which the STS_DQ0 bit is set in the feedback interface of the selected comparison event. The digital output DQ0 is not available as a physical output in a Compact CPU.

You must enter an integer (DINT) that is greater than or equal to the low counting limit. If you use the DQ function "Between comparison value 0 and 1", the comparison value 0 has to be smaller than comparison value 1. The default setting is "0".

Operating mode "Measurement":

With the parameter assignment of the Comparison value (Page 56), you specify the measured value at which the STS_DQ0 bit is set in the feedback interface of the selected comparison event. The digital output DQ0 is not available as a physical output in a Compact CPU.

You must enter a floating point number (REAL). If you use the DQ function "Between comparison value 0 and 1", the comparison value 0 has to be smaller than comparison value 1. The minimum value is -7.922816×10^{28}. The default setting is "0.0". The unit of the comparison value depends on the measured variable.

Comparison value 1

Operating mode "Counting":

With the parameter assignment of the comparison value (Page 48), you specify the counter value at which the digital output DQ1 switches as a result of the selected comparison event.

You must enter an integer (DINT) that is smaller than or equal to the high counting limit. If you use the DQ function "Between comparison value 0 and 1", the comparison value 0 has to be smaller than comparison value 1. The default setting is "10".

Operating mode "Measurement":

With the parameter assignment of the comparison value (Page 56), you specify the measured value at which the digital output DQ1 switches as a result of the selected comparison event.

You must enter a floating point number (REAL). If you use the DQ function "Between comparison value 0 and 1", the comparison value 0 has to be smaller than comparison value 1. The maximum value is 7.922816×10^{28}. The default setting is "10.0". The unit of the comparison value depends on the measured variable.

Count direction

You use this parameter to specify the count direction for which the selected function is valid.

You can select from the following options:

Count direction	Meaning
In both directions (default)	The comparison and switching of the respective digital output take place regardless of the count direction.
Up	The comparison and switching of the respective digital output only takes place when the counter counts up.
Down	The comparison and switching of the respective digital output only takes place when the counter counts down.

The parameter can be configured for the following functions:

- Between Comparison value 0 and 1 (Operating mode "Counting")
- At comparison value for a pulse duration
- After set command from CPU until comparison value

Pulse duration

By configuring the pulse duration for the function "At comparison value for a pulse duration", you specify the number of milliseconds for which the respective digital output is active.

If you enter "0" and the counter value corresponds to the comparison value, the digital output remains active until the next count pulse.

You can enter a value between 0.0 and 6553.5.

The default setting is "500.0", which is equivalent to a pulse duration of 0.5 s.

Hysteresis (in increments)

By configuring the hysteresis (Page 66), you can define a range around the comparison values. For the functions "Between comparison value and upper counter limit" and "Between comparison value and lower counter limit" the hysteresis also applies at the counter limits. Within the hysteresis range, the digital outputs cannot switch again until the counter value is outside the range.

Choose a small enough hysteresis. When the hysteresis range, starting from the configured comparison value, spans the entire counter value range, proper functioning of the comparison values cannot be guaranteed.

If a comparison value lies so close to the counter limit that the hysteresis range would extend beyond this counter limit, the hysteresis range ends there.

If you enter "0", the hysteresis is turned off. You can enter a value between 0and 255. The default setting is "0".

Note

The hysteresis is only available in operating mode "Counting".

Specifying the measured value

Measured variable

This parameter is used to specify the measured variable (Page 59) to be provided by the technology module. The MEASURED_VALUE value in the feedback interface indicates the measured value.

You can select from the following options:

Measured variable	Meaning	Additional option-specific parameters
Frequency (default)	The measured variable shows the number of increments per second. The value is a floating point number (REAL). The unit is Hz.	• Update time
Period	The measured variable is the average period between two increments. The value is an integer (DINT). The unit is s.	• Update time
Velocity	The measured variable is a velocity. Examples of a velocity measurement can be found in the explanation of the "Increments per unit" parameter.	• Update time • Time base for velocity measurement • Increments per unit

Update time

By configuring the update time (Page 59) in milliseconds, you can specify the time interval between two measured value updates.

The update time and the signal type (Page 190) effect the accuracy of the measurement. In the case of update times of at least 100 ms, the effect of the signal type is negligible.

In the case of update times of less than 100 ms, you achieve maximum measurement accuracy using the following signal types:

- Incremental encoder (A, B phase-shifted) with Signal evaluation "Single"
- Incremental encoder (A, B, N) with Signal evaluation "Single"
- Pulse (A) and direction (B)
- Pulse (A)

In the case of other signal types, measurement accuracy depends on the encoder and cable used.

If you enter "0", the measured value is updated once per module-internal cycle. Up to three decimal places can be entered. A value from 0.0 to 25000.0 is permissible. The default setting is "10.0".

Time base for velocity measurement

This parameter defines the time base on which the velocity is to be returned.

You can select from the following options:

- 1 ms
- 10 ms
- 100 ms
- 1 s
- 60 s

The default setting is "60 s".

Increments per unit

You can use this parameter to define the number of count pulses per relevant unit that the incremental or absolute encoder supplies for the velocity measurement.

The number of count pulses depends on the configured signal evaluation. You can enter a value between 1 and 65535.

Example 1:

You encoder delivers 4000 count pulses for travel over one meter. The velocity is to be measured in meters per second. "Double" is configured as signal evaluation.

In this case, you need to assign the following parameters:

- Increments per unit: 8000
- Time base for velocity measurement: 1 s

Example 2:

Your encoder delivers 4096 count pulses per revolution. The velocity is to be measured in revolutions per minute. "Single" is configured as the signal evaluation.

In this case, you need to assign the following parameters:

- Increments per unit: 4096
- Time base for velocity measurement: 60 s

5.1.2.8 Manual operation (SSI absolute encoder)

Counter inputs

Signal type

If an SSI absolute encoder with the data signal (Signal ID) and cycle signal (Signal C) is connected, select the signal type (Page 75) "Absolute encoder (SSI)".

Invert direction

You can use this parameter to invert the values supplied by the SSI absolute encoder. This allows you to adapt the detected direction of the encoder to the motor's direction of rotation.

Note

This parameter acts only on the range from the LSB to the MSB of the position value in the frame.

Frame length

With the parameter assignment of the frame length, you specify the number of bits of an SSI frame of the SSI absolute encoder (Page 26) used. You can find the frame length of your SSI absolute encoder in the data sheet of the encoder. Special bits are also included in the frame length. A parity bit does not count in the frame length.

A frame length of between 10 bits and 40 bits is permitted. The default setting is "13 Bit".

You can find two examples of the SSI frame format at Examples of the frame format (Page 159).

Code type

You use the parameter assignment of the code type to specify whether the encoder supplies Dual code or Gray code.

You can select from the following options:

Code type	Meaning
Gray (default)	The gray-coded position value returned by the SSI absolute encoder is converted to dual code.
Dual	The value returned by the SSI absolute encoder is not converted.

Transmission rate

With the parameter assignment of the transmission rate, you specify the data transmission rate between the technology module and the SSI absolute encoder.

You can select from the following options:

- 125 kHz (preset)
- 250 kHz
- 500 kHz
- 1 MHz
- 1.5 MHz
- 2 MHz

The maximum transmission rate depends on the cable length and the technical specifications of the SSI absolute encoder. For additional information, refer to the product manual of the TM PosInput and the encoder description.

Monoflop time

With the parameter assignment of the monoflop time, you specify the idle time between two SSI frames.

The configured monoflop time must be at least equal to the monoflop time of the SSI absolute encoder used. You can find this value in the technical specifications of the SSI absolute encoder.

You can select from the following options:

- Automatically (default)
- 16 µs
- 32 µs
- 48 µs
- 64 µs

Note

If you select the "Automatic" option, the monoflop time automatically adapts to the encoder used.

In isochronous mode, the "Automatic" option corresponds to a monoflop time of 64 µs. If the monoflop time of the employed SSI absolute value encoder is less than 64 µs, you can select the value of the encoder to achieve faster isochronous times.

Parity

With the parameter assignment of the parity, you specify whether the SSI absolute encoder transfers a parity bit.

If, for example, a 25-bit encoder with parity is assigned, the technology module reads 26 bits. A parity error is reported in the feedback interface by means of the ENC_ERROR bit.

Bit number LSB of the position value

This parameter is used to specify the bit number of the LSB (least significant bit) of the position value in the frame of the SSI absolute encoder. In this way you limit the range in the frame that supplies the position value.

The value must be less than the bit number of the MSB of the position value. The difference between the bit numbers of the MSB and the LSB of the position value must be less than 32.

The default setting is "0".

Note

If you have selected the Code type "Gray", only the range from the LSB to the MSB of the position value is converted to binary code.

Bit number MSB of the position value

This parameter is used to specify the bit number of the MSB (most significant bit) of the position value in the frame of the SSI absolute encoder. In this way you limit the range in the frame that supplies the position value.

The value must be less than the frame length and higher than the bit number of the LSB of the position value. The difference between the bit numbers of the MSB and the LSB of the position value must be less than 32.

The default setting is "12".

Note

If you have selected the Code type "Gray", only the range from the LSB to the MSB of the position value is converted to binary code.

Behavior of a DI

Setting function of the DI

By configuring a digital input, you specify which functions the digital input triggers at switching.

You can select from the following options:

Function of a digital input	Meaning	Additional option-specific parameters
Capture	The configured edge at the respective digital input saves the current position value as a Capture value. The CAPTURED_VALUE feedback bit indicates the capture value. The function can only be used for one of the two digital inputs.	• Input delay • Edge selection • Frequency of the Capture function
Digital input without function	No technological function is assigned to the respective digital input. You can read the signal state of the digital input via the respective feedback bit: • STS_DI0 • STS_DI1	• Input delay

Note

You can choose the "Capture" function only in operating mode "Use position value (SSI absolute value) as reference".

Input delay

By configuring the input delay, you suppress interferences at the digital inputs. Signals with a pulse duration below the configured input delay are suppressed.

You can select from the following input delays:

- None
- 0.05 ms
- 0.1 ms (default)
- 0.4 ms
- 0.8 ms
- 1.6 ms
- 3.2 ms
- 12.8 ms
- 20 ms

Note

If you select the "None" or "0.05 ms" option, you have to use shielded cables for connection of the digital inputs.

Note

You configure the input delay under "Behavior of DI0" for all digital inputs together. The input delay is also displayed under "Behavior of DI1".

Edge selection

You can use this parameter to specify the edge of the digital input at which the configured function is triggered for the "Capture" function.

You can select from the following options:

- At rising edge (default)
- At falling edge
- At rising and falling edge

Frequency of the Capture function

This parameter is used to define the frequency of Capture events:

You can select from the following options:

Option	Meaning
Once	The first configured edge at the respective digital input saves the current counter value as Capture value.
Periodic (default)	Each configured edge at the respective digital input saves the current counter value as a Capture value.

Behavior of a DQ

Set output

With the parameter assignment of a digital output, you specify the condition upon which the digital output switches.

You can select from the following options depending on the operating mode:

Function of a digital output (Page 52) in the operating mode "Position input"	Meaning	Additional option-specific parameters
Between comparison value and high limit (default)	The respective digital output is active if: Comparison value <= position value <= maximum position value	• Comparison value 0 • Comparison value 1 • Hysteresis (in increments)
Between comparison value and low limit	The respective digital output is active if: Minimum position value <= Position value <= Comparison value	• Comparison value 0 • Comparison value 1 • Hysteresis (in increments)
Between comparison value 0 and 1	The digital output DQ1 is active if: Comparison value 0 <= position value <= comparison value 1	• Comparison value 0 • Comparison value 1 • Count direction • Hysteresis (in increments)
At comparison value for a pulse duration	The respective digital output is active once for the assigned time and direction of the position value change when the position value is equal to the comparison value or has fallen below or exceeded it.	• Comparison value 0 • Comparison value 1 • Count direction • Pulse duration • Hysteresis (in increments)
After set command from CPU until comparison value	When a set command is sent from the CPU, the respective digital output is active for the assigned direction of the position value change until the position value is equal to the comparison value or has fallen below or exceeded it.	• Comparison value 0 • Comparison value 1 • Count direction • Hysteresis (in increments)
Use by user program	The respective digital output can be switched by the CPU via the control interface (Page 47).	—

Note

You can only select the "Between comparison value 0 and 1" function for digital output DQ1 and only if you have selected the "Use by user program" function for digital output DQ0.

Function of a digital output (Page 56) in the operating mode "Measuring"	Meaning	Additional option-specific parameters
Measured value >= comparison value (default)	The respective digital output is active if the measured value is greater than or equal to the comparison value.	• Comparison value 0 • Comparison value 1
Measured value <= comparison value	The respective digital output is active if the measured value is less than or equal to the comparison value.	• Comparison value 0 • Comparison value 1
Between comparison value 0 and 1	The digital output DQ1 is active if: Comparison value 0 <= measured value <= comparison value 1	• Comparison value 0 • Comparison value 1
Not between comparison value 0 and 1	The digital output DQ1 is active if: Comparison value 1 <= measured value <= comparison value 0	• Comparison value 0 • Comparison value 1
Use by user program	The respective digital output can be switched by the CPU via the control interface (Page 47).	—

Note

You can select the "Between comparison value 0 and 1" and "Not between comparison value 0 and 1" functions only for digital output DQ1 and only if you have selected the "Use by user program" function for digital output DQ0.

Comparison value 0

Operating mode "Position input":

With the parameter assignment of the comparison value (Page 52), you specify the position value at which the digital output DQ0 switches as a result of the selected comparison event.

If you use an SSI absolute encoder with a position value length of up to 31 bits, you must enter a positive integer (DINT) with a value between 0 and $2^{(MSB-LSB+1)}$-1. If you use an SSI absolute encoder with a position value length of 32 bits, you must enter a signed integer (DINT) with a value between –2147483648 and 2147483647.

If you use the DQ function "Between comparison value 0 and 1", the comparison value 0 has to be smaller than comparison value 1. The default setting is "0".

Operating mode "Measurement":

With the parameter assignment of the comparison value (Page 56), you specify the measured value at which the digital output DQ0 switches as a result of the selected comparison event.

You must enter a floating point number (REAL). If you use the DQ function "Between comparison value 0 and 1", the comparison value 0 has to be smaller than comparison value 1. The minimum value is -7.922816 x 10^{28}. The default setting is "0.0". The unit of the comparison value depends on the measured variable.

Comparison value 1

Operating mode "Position input"

With the parameter assignment of the comparison value (Page 52), you specify the position value at which the digital output DQ1 switches as a result of the selected comparison event.

If you use an SSI absolute encoder with a position value length of up to 31 bits, you must enter a positive integer (DINT) with a value between 0 and $2^{(MSB-LSB+1)}$-1. If you use an SSI absolute encoder with a position value length of 32 bits, you must enter a signed integer (DINT) with a value between –2147483648 and 2147483647.

If you use the DQ function "Between comparison value 0 and 1", the comparison value 0 has to be smaller than comparison value 1. The default setting is "10".

Operating mode "Measurement"

With the parameter assignment of the comparison value (Page 56), you specify the measured value at which the digital output DQ1 switches as a result of the selected comparison event.

You must enter a floating point number (REAL). If you use the DQ function "Between comparison value 0 and 1", the comparison value 0 has to be smaller than comparison value 1. The maximum value is 7.922816 x 10^{28}. The default setting is "10.0". The unit of the comparison value depends on the measured variable.

Count direction

You use this parameter to specify the direction of position value change for which the selected function is valid.

You can select from the following options:

Direction of position value change	Meaning
In both directions (default)	The comparison and switching of the respective digital output is carried out regardless of whether the position value increases of decreases.
Up	The comparison and switching of the respective digital output only takes place when the position value increases.
Down	The comparison and switching of the respective digital output only takes place when the position value decreases.

The parameter can be configured for the following functions:

- Between Comparison value 0 and 1 (operating mode "Position input")
- At comparison value for a pulse duration
- After set command from CPU until comparison value

Pulse duration

By configuring the pulse duration for the function "At comparison value for a pulse duration", you specify the number of milliseconds for which the respective digital output is active.

A value from 0.1 to 6553.5 ms is permissible.

The default setting is "500.0", which is equivalent to a pulse duration of 0.5 s.

Hysteresis (in increments)

By configuring the hysteresis (Page 68), you can define a range around the comparison values. For the functions "Between comparison value and upper counter limit" and "Between comparison value and lower counter limit" the hysteresis also applies at the counter limits. Within the hysteresis range, the digital outputs cannot switch again until the position value has left this range once.

Choose a small enough hysteresis. When the hysteresis range, starting from the configured comparison value, spans the entire position value range, proper functioning of the comparison values cannot be guaranteed.

If a comparison value lies so close to the counter limit that the hysteresis range would extend beyond this counter limit, the hysteresis range ends there.

If you enter "0", the hysteresis is turned off. You can enter a value between 0and 255. The default setting is "0".

Note

The hysteresis is only available in "Position input" operating mode.

Specifying the measured value

Measured variable

With this parameter you specify whether the technology module is to provide a certain measured variable (Page 59) or the complete SSI frame.

You can select from the following options:

Option	Meaning	Additional option-specific parameters
Frequency (default)	The measured variable shows the number of increments per second, where each increment corresponds to one position value change. The value is a floating point number (REAL). The unit is Hz. The MEASURED_VALUE value in the feedback interface indicates the measured value.	• Update time
Period	The measured variable is the average period between two increments of the position value. The value is an integer (DINT). The unit is s. The MEASURED_VALUE value in the feedback interface indicates the measured value.	• Update time
Velocity	The measured variable is a velocity. Examples of a velocity measurement can be found in the explanation of the "Increments per unit" parameter. The MEASURED_VALUE value in the feedback interface indicates the measured value.	• Update time • Time base for velocity measurement • Increments per unit
Complete SSI frame	Instead of a measured variable, the first 32 bits of the SSI frame are returned (bit 0 to bit 31). In so doing, special bits that do not belong to the position information are also supplied. A configured inversion of the direction is ignored. The MEASURED_VALUE value in the feedback interface indicates the 32 bits. You can find examples under Examples of the frame format (Page 159). This option is only available in operating mode "Use position value (SSI absolute value) as reference".	—

Note

If the increment per revolution is required for calculation of the measured values, it is automatically calculated from the parameterized telegram length as the power of 2, e.g. 8192 increments per revolution with a telegram length of 13 bit. If you are using an SSI absolute encoder whose increment per revolution does not correspond to the power of 2, the calculated measured value may be incorrect for a short time.

Update time

By configuring the update time (Page 59) in milliseconds, you can specify the time interval between two measured value updates. Unsteady measured variables can be smoothed through longer update times

If you enter "0", the measured value is updated once per module-internal cycle. Up to three decimal places can be entered. A value from 0.0 to 25000.0 is permissible. The default setting is "10.0".

Time base for velocity measurement

This parameter defines the time base on which the velocity is to be returned.

You can select from the following options:

- 1 ms
- 10 ms
- 100 ms
- 1 s
- 60 s

The default setting is "60 s".

Increments per unit

With this parameter you define the number of increments per relevant unit that the SSI absolute encoder supplies for the velocity measurement.

You can enter a value between 1 and 65535.

Example 1:

Your absolute encoder operates with a resolution of 12 bits per revolution and performs 4096 increments per revolution. The velocity should be measured in revolutions per minute.

In this case, you need to assign the following parameters:

- Increments per unit: 4096
- Time base for velocity measurement: 60 s

Example 2:

You encoder delivers 10000 increments for travel over one meter. The velocity is to be measured in meters per second.

In this case, you need to assign the following parameters:

- Increments per unit: 10000
- Time base for velocity measurement: 1 s

5.1.3 Online & diagnostics module

5.1.3.1 Displaying and evaluating diagnostics

The online and diagnostics view enables hardware diagnostics. You can also

- Obtain information on the technology module (e.g., Firmware version and serial number)
- Execute a firmware update if required

Procedure (TM Count and TM PosInput)

To open the display editor for the diagnostic functions, follow these steps:

1. Open the device configuration of the CPU or IM.
2. Select the device view.
3. Right-click the module and select "Online & Diagnostics".
1. Select the required display in the diagnostics navigation.

Procedure (Compact CPU)

To open the display editor for the diagnostic functions, follow these steps:

1. Open the Compact CPU folder in the project tree.
2. Double-click on the "Online & diagnostics" object.
3. Select the required display in the diagnostics navigation.

Additional information

Additional information on the diagnostic alarms and possible remedies can be found in the technology module device manual.

Note

Position input for Motion Control

In operating mode "Position input for "Motion Control" technology object", channel diagnostics is not available for the technology module.

5.1.4 Control and feedback interface (TM Count, TM PosInput)

Information on using the control and feedback interface can be found under Overview of application options (Page 18).

Note

The following description does not apply for the operating modes "Fast Mode" and "Position input for technology object "Motion Control"". You can find a description of the feedback interface in the respective device manual for those technology modules that support the "Fast Mode" operating mode.

5.1.4.1 Assignment of the control interface

The user program uses the control interface to influence the behavior of the technology module.

Control interface per channel

The following table shows control interface assignment:

Byte offset to start address Channel 0/1 ↓ ↓		Bit 7	Bit 6	Bit 5	Bit 4	Bit 3	Bit 2	Bit 1	Bit 0
0 … 3	12 … 15	SLOT_0: DINT or REAL: Load value (significance of the value is specified in LD_SLOT_0) Value range: –2147483648 to 2147483647_D or 80000000 to $7FFFFFFF_H$							
4 … 7	16 … 19	SLOT_1: DINT or REAL: Load value (significance of the value is specified in LD_SLOT_1) Value range: –2147483648 to 2147483647_D or 80000000 to $7FFFFFFF_H$							
8	20	LD_SLOT_1				LD_SLOT_0			
9	21	EN_ CAPTURE	EN_ SYNC_DN	EN_ SYNC_UP	SET_DQ1	SET_DQ0	TM_ CTRL_DQ1	TM_ CTRL_DQ0	SW_GATE
10	22	SET_DIR	Reserved					RES _EVENT	RES _ERROR
11	23	Reserved							

Notes

Control bit/value	Notes
EN_CAPTURE	Use this bit to enable the Capture function. Resetting this bit resets a set EVENT_CAP in the feedback interface.
EN_SYNC_DN	Use this bit to enable the synchronization of the counter when counting in downward direction with an incremental encoder or pulse encoder. Resetting this bit resets a set EVENT_SYNC in the feedback interface.
EN_SYNC_UP	Use this bit to enable the synchronization of the counter when counting in upward direction with an incremental encoder or pulse encoder. Resetting this bit resets a set EVENT_SYNC in the feedback interface.
LD_SLOT_m	With this load request you specify the meaning of the value in SLOT_m: • 0000 means: No action, idle • 0001 means: Load count value (with incremental or pulse encoder) • 0010 not permitted • 0011 means: Load start value (with incremental or pulse encoder) • 0100 means: Load Comparison value 0 • 0101 means: Load comparison value 1 • 0110 means: Load low counting limit (with incremental or pulse encoder) • 0111 means: Load high counting limit (with incremental or pulse encoder) • 1000 to 1111 not permitted The technology module executes the respective action as soon as LD_SLOT_m changes. If values are loaded simultaneously via LD_SLOT_0 and LD_SLOT_1, the first value is applied internally from SLOT_0 and then the value from SLOT_1 is applied. This may lead to unexpected intermediate states.
RES_EVENT	Use this bit to trigger the reset of the saved events in the EVENT_ZERO, EVENT_OFLW, EVENT_UFLW, EVENT_CMP0, EVENT_CMP1 feedback bits.
Reserved	Reserved bits must be set to 0.
RES_ERROR	Use this bit to trigger the reset of the saved error states LD_ERROR and ENC_ERROR .
SET_DIR	Use this bit to specify the count direction for signal type "Pulse (A)". • 0 means: Up • 1 means: Down
SET_DQ0	Use this bit to set digital output DQ0 when TM_CTRL_DQ0 is set to 0. In the case of the function "After set command from CPU until comparison value",SET_DQ0 is effective regardless of TM_CTRL_DQ0 as long as the counter value is not equal to the comparison value.
SET_DQ1	Use this bit to set digital output DQ1 when TM_CTRL_DQ1 is set to 0. In the case of the function "After set command from CPU until comparison value",SET_DQ1 is effective regardless of TM_CTRL_DQ1 as long as the counter value is not equal to the comparison value.

Control bit/value	Notes
SW_GATE	Use this bit to open and close the software gate when using an incremental encoder or pulse encoder. Together, the software gate and the hardware gate form the internal gate. The technology module only counts when the internal gate is open. • 0 means: Software gate closed • 1 means: Software gate open The control of the hardware gate takes place externally via the digital inputs of the technology module. The hardware gate can be activated through parameter assignment. The software gate cannot be deactivated.
TM_CTRL_DQ0	Use this bit to enable the technological function of digital output DQ0. • 0 means: SET_DQ0 defines the state of DQ0 • 1 means: assigned function defines the state of DQ0
TM_CTRL_DQ1	Use this bit to enable the technological function of digital output DQ1. • 0 means: SET_DQ1 defines the state of DQ1 • 1 means: assigned function defines the state of DQ1

5.1.4.2 Assignment of the feedback interface

The user program receives current values and status information from the technology module via the feedback interface.

Feedback interface per channel

The following table shows the assignment of the feedback interface:

Byte offset to start address Channel 0/1 ↓ ↓		Bit 7	Bit 6	Bit 5	Bit 4	Bit 3	Bit 2	Bit 1	Bit 0
0 … 3	16 … 19	COUNT_VALUE: DINT: Current counter value or position value							
4 … 7	20 … 23	CAPTURED_VALUE: DINT: The last acquired Capture value							
8 ... 11	24 ... 27	MEASURED_VALUE: REAL: Current measured value or DWORD: Full SSI frame							
12	28	Reserved					LD_ERROR	ENC_ ERROR	POWER_ ERROR
13	29	Reserved		STS_SW_ GATE	STS_ READY	LD_STS_ SLOT_1	LD_STS_ SLOT_0	RES_EVEN T_ACK	Reserved
14	30	STS_DI2[1]	STS_DI1	STS_DI0	STS_DQ1	STS_DQ0	STS_GATE	STS_CNT	STS_DIR
15	31	STS_M_ INTERVAL	EVENT_ CAP	EVENT_ SYNC	EVENT_ CMP1	EVENT_ CMP0	EVENT_ OFLW	EVENT_ UFLW	EVENT_ ZERO

[1] For TM PosInput applies: Reserved

Note

Validity of the position value

The position value of an SSI absolute encoder is valid if STS_READY is set to 1 and ENC_ERROR is set to 0. In the module startup STS_READY is set to 0.

Notes

Feedback bit/value	Notes
CAPTURED_VALUE	This DINT value indicates the last detected Capture value. The following external signals can trigger the Capture function: • Rising or falling edge of a digital input • Both edges of a digital input The parameter "Frequency of the Capture function" determines if the function is executed for each configured edge or only once after each enable.
COUNT_VALUE	This DINT value shows the current counter value or position value. If you use an SSI absolute encoder with a position value length of up to 31 bits, the position value is treated unsigned as a positive value and can assume values between 0 and $2^{(MSB-LSB+1)}$-1. If you use an SSI absolute encoder with a position value length of 32 bits, the MSB of the position value corresponds to the sign and the position value can assume values between –2147483648 and 2147483647. If you use a 32 bit position value for the comparison function, the position value is interpreted as DINT.
ENC_ERROR	This bit indicates that one of the following errors has occurred at the encoder signals (retentive) for the respective technology module: TM Count: • Wire break of digital input A, B, or N (with push-pull encoder) • Invalid transition of A/B signals (with incremental encoder) TM PosInput: • Invalid transition of A/B signals (with incremental encoder) • RS422/TTL error • SSI encoder error or SSI frame error (with SSI absolute encoder) If you have enabled the diagnostic interrupts, the respective diagnostic interrupt is triggered in the event of encoder signal errors. For information on the meaning of the diagnostic interrupts, refer to the manual for the respective technology module. The bit is reset once you have acknowledged the error with RES_ERROR .
EVENT_CAP	This bit indicates that a Capture event has occurred and a counter value has been saved in CAPTURED_VALUE . You reset the status by resetting EN_CAPTURE .
EVENT_CMP0	This bit indicates the saved status that a comparison event (status change) has occurred for the digital output DQ0 based on the selected comparison condition. You reset the status by acknowledgment with RES_EVENT. If the counter value is set to the start value in counting mode, EVENT_CMP0 is not set.
EVENT_CMP1	This bit indicates the saved status that a comparison event (status change) has occurred for the digital output DQ1 based on the selected comparison condition. You reset the status by acknowledgment with RES_EVENT. If the counter value is set to the start value in counting mode, EVENT_CMP1 is not set.
EVENT_OFLW	This bit indicates the saved state which shows that there was a counter value overflow. You reset the status by acknowledgment with RES_EVENT.
EVENT_SYNC	This bit indicates the saved status for which the counter was loaded with the start value by an external reference signal (synchronization) when using an incremental or pulse encoder. You reset the state by resetting EN_SYNC_UP or EN_SYNC_DN .
EVENT_UFLW	This bit indicates the saved state which shows that there was a counter value underflow. You reset the status by acknowledgment with RES_EVENT.
EVENT_ZERO	This bit indicates the saved status with which the counter value or position value experienced a zero crossing. You reset the status by acknowledgment with RES_EVENT.

Feedback bit/value	Notes
LD_ERROR	This bit indicates that an error occurred (latching) during loading via the control interface. The loaded values were not applied. When using an incremental or pulse encoder, one of the following conditions is not fulfilled: • Low counting limit <= counter value <= high counting limit • Low counting limit <= start value <= high counting limit • Low counting limit <= comparison value 0/1 <= high counting limit When using an SSI absolute encoder, one of the following conditions is not fulfilled: • 0 <= position value <= maximum position value • 0 <= comparison value 0/1 <= maximum position value The bit is reset once you have acknowledged the error with RES_ERROR .
LD_STS_SLOT_0	This bit indicates by a status change (toggling) that the load request for Slot 0 (LD_SLOT_0) has been detected and executed.
LD_STS_SLOT_1	This bit indicates by a status change (toggling) that the load request for Slot 1 (LD_SLOT_1) has been detected and executed.
MEASURED_VALUE	This value shows the current measurement value with the REAL data type or the complete SSI frame with the DWORD data type: • Frequency: The mean frequency is calculated at set measuring intervals on the basis of the time profile of the count pulses or position value changes and returned in Hertz as floating point number. • Period duration: The mean period duration is calculated at set measuring intervals on the basis of the time profile of the count pulses or position value changes and returned in seconds as floating point number. • Velocity: The mean velocity is calculated at set measuring intervals on the basis of the time profile of the count pulses or position value changes and other parameters, and returned in the configured unit of measurement. • Complete SSI frame: Instead of a measured variable, the least significant 32 bits of the unprocessed current SSI frame are returned. This provides you with encoder-specific additional bits, such as error bits, in addition to the position value. If the SSI frame is shorter than 32 bits, the complete SSI frame is returned right-aligned and the top unused bits are returned with "0" in the feedback interface. The measured values are returned as signed values. The sign indicates whether the counter value or position value increased or decreased during the relevant time period. The update time is asynchronous to the opening of the internal gate, which means that the update time is not started when the gate is opened. After the internal gate is closed, the last measured value captured is still returned.
POWER_ERROR	For an S7-1500 technology module, this bit indicates that the supply voltage L+ is not available or too low or that the front plug is not plugged in. For an ET 200SP technology module, this bit indicates that the supply voltage L+ is too low. If you have enabled the diagnostic interrupts, the respective diagnostic interrupt is triggered in the event of errors in the supply voltage. For details on the diagnostic interrupts and the corrective measures they require, refer to the device manual for the respective technology module. If the supply voltage L+ is available at a sufficient level once again, POWER_ERROR is automatically set to 0.
RES_EVENT_ACK	This bit indicates that the reset of event bit EVENT_SYNC, EVENT_CMP0, EVENT_CMP1, EVENT_OFLW, EVENT_UFLW, EVENT_ZERO is active.
Reserved	Reserve bits are set to 0.

Feedback bit/value	Notes
STS_CNT	This bit indicates that at least one count pulse or a position value change has occurred in the last ca. 0.5 s.
STS_DI0	This bit indicates the status of digital input DI0.
STS_DI1	This bit indicates the status of digital input DI1.
STS_DI2	This bit indicates the status of digital input DI2 of the TM Count .
STS_DIR	This bit indicates the count direction of the last count pulse or the direction of the last position value change. 0 means: Down 1 means: Up
STS_DQ0	This bit indicates the status of digital output DQ0.
STS_DQ1	This bit indicates the status of digital output DQ1.
STS_GATE	This bit indicates the status of the internal gate when using an incremental or pulse encoder. 0 means: Gate closed 1 means: Gate open Information for TM PosInput: In order for the counting logic including the gate control to function correctly, the startup of the technology module must complete correctly at least once with a connected incremental or pulse encoder (STS_READY at 1). If a connected encoder is not ready yet during startup, the function of the STS_GATE feedback bit is delayed until the encoder for the technology module is available. If the technology module starts up without a connected encoder, the startup does not complete correctly and STS_READY as well as STS_GATE remain at 0. As soon as an encoder is then connected, the startup completes and the STS_GATE functions correctly. An encoder error after a completed startup has no influence on STS_GATE.
STS_M_INTERVAL	This bit indicates that at least one count pulse or a position value change was detected in the previous measurement interval.
STS_READY	This bit indicates that the technology module supplies valid user data. The technology module has been started up and configured.
STS_SW_GATE	This bit indicates the status of the software gate. 0 means: Gate closed 1 means: Gate open

Complete acknowledgment principle

Saving bits are acknowledged according to the complete acknowledgment principle.

The figure below shows an example of the sequence of the complete acknowledgment principle in the event of an overflow:

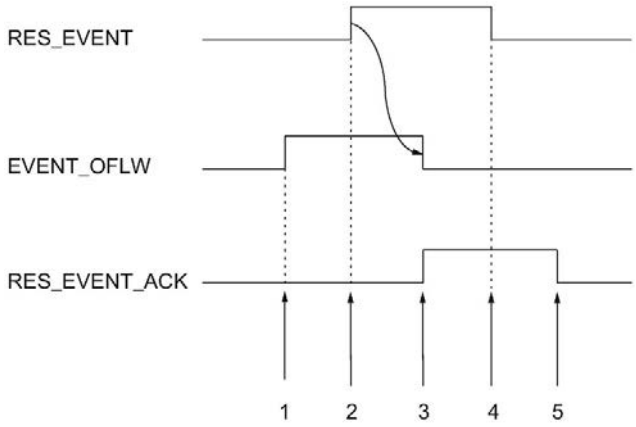

① The EVENT_OFLW feedback bit is set as a saving event upon overflow.
② You set the RES_EVENT control bit to trigger EVENT_OFLW reset.
③ The RES_EVENT_ACK feedback bit is set when reset of EVENT_OFLW is detected.
④ You then rest the control bit RES_EVENT .
⑤ The RES_EVENT_ACK feedback bit is reset.

5.2 Using the digital module

5.2.1 Configuring and assigning parameters to the module

5.2.1.1 Adding a module to the hardware configuration

Requirements

- The project has been created.
- The CPU has been created.
- The ET 200 distributed I/O has been created.

Procedure

1. Open the device configuration of the CPU or IM.
2. Select a module rack.
3. Select the digital input module from the module catalog:
   "DI > Digital input module > Article number" or
   "DIQ > Digital input module /Digital output module > Article number"
4. Drag the module to the required slot in the module rack.

5.2.1.2 Open hardware configuration

Opening

To open the hardware configuration, follow these steps:

1. Open the device configuration of the CPU or IM.
2. Select the device view.
3. Click on the module.

5.2.1.3 Counting operating mode

In counting operating mode or in the counter configuration you can set the following parameters for each channel.

Note

Some of the parameters and options are not available for all digital modules. See the module's device manual for the associated parameters and options.

Channel enabled

You use this parameter to specify whether the respective channel is enabled or disabled.

Each channel is enabled by default.

Input delay

By configuring the input delay, you suppress signal errors at the digital inputs. Changes to the signal are only detected if they are constantly pending longer than the set input delay time.

Isochronous configuration is only possible if there is an input delay of 0.05 ms configured for at least one channel. In isochronous mode, the feedback interface is updated at the time T_i (time for reading the input data).

You can select from the following options:

- 0.05 ms
- 0.1 ms
- 0.4 ms
- 0.8 ms
- 1.6 ms
- 3.2 ms (default)
- 12.8 ms
- 20 ms

Note

If you select the "0.05 ms" option for the input delay, you have to use shielded cables for connection of the digital inputs.

Reaction to violation of a counting limit

The following behavior can be configured for Violation of the counter high limit in the upward direction or the counter low limit in the downward direction (Page 88):

Reaction	Meaning
Stop counting (default at ET200SP and ET200AL)	After a counting limit is violated, the internal gate is closed (automatic gate stop). As a result, the counting process is stopped and the module ignores any further counting signals. The counter value is set to the opposite counting limit. To restart counting, you must close and reopen the software/hardware gate.
Continue counting (default at S7-1500)	After a counting limit is violated, the counter value is set to the opposite counting limit and counting continues.

Edge selection

This parameter is used to specify which edge the respective counter counts:

Edge selection	Meaning
At rising edge (default)	The respective counter counts all rising edges at the digital input.
At falling edge	The respective counter counts all falling edges at the digital input.
At rising and falling edge	The respective counter counts all edges at the digital input.

Count direction

Use this parameter to specify the counting direction of the respective counter.

You can select from the following options:

- Up
- Down

Set output

Use this parameter to specify the Function (Page 92) that controls the STS_DQ feedback bit. You can use the STS_DQ reset bit in order to control a digital output module's digital output.

You can select from the following options:

Option	Meaning
Off (DQ = 0)	Regardless of the counter value, STS_DQ is permanently not set.
Off (DQ = 1)	Regardless of the counter value, STS_DQ is permanently set.
Between comparison value 0 and 1	STS_DQ is set if the counter value between comparison values 0 and 1.
Not between comparison value 0 and 1	STS_DQ is set if the counter value is outside the range between comparison values 0 and 1.
Between comparison value and counter high limit	STS_DQ is set if the counter value is between the comparison value and the counter high limit.
Between comparison value and counter low limit	STS_DQ is set if the counter value is between the comparison value and the counter low limit.

Setting function of the DI

Use this parameter to specify which function the respective digital input DI_{n+4} triggers.

You can select from the following options:

Option	Meaning
Digital input without function	No function is assigned to the respective digital input DI_{n+4}. The signal status of DI_{n+4} can be read by the CPU using the feedback interface.
Gate start/stop	Setting the respective digital input DI_{n+4} opens the hardware gate (Page 90) for DI_n. Resetting the respective digital input DI_{n+4} closes the hardware gate for DI_n.
Count direction	The respective DI_{n+4} digital input determines the counting direction at DI_n, in order to adjust it to the process. If DI_{n+4} is not set, DI_n counts up. If DI_{n+4} is set, DI_n counts down.

Note

If "Count direction" is selected and the counting direction in the process changes, the counting edge is automatically adjusted (opposite edges).

High counting limit

You limit the counting range by setting the counter high limit. The maximum value for the counter high limit depends on the module:

High counting limit	DI 8x24VDC HS, DIQ 16x24VDC/0.5A 8xM12	DI 32x24VDC HF, DI 16x24VDC HF
Maximum value	2147483647 (2^{31}–1)	4294967295 (2^{32}–1)
Default	2147483647	4294967295

You must enter a value that lies above the counter low limit.

Counter low limit

You limit the counting range by setting the counter low limit. The minimum value for the counter low limit depends on the module:

Counter low limit	DI 8x24VDC HS, DIQ 16x24VDC/0.5A 8xM12	DI 32x24VDC HF, DI 16x24VDC HF
Minimum value	–2147483648 (–2^{31})	0 (not configurable)
Default	0	0

You must enter a value below the counter high limit.

Start value

By configuring the start value, you specify the value at which counting is to start. You must enter a value between the counting limits or equal to the counting limits.

The default setting is "0".

Comparison value

By configuring a comparison value (Page 92), you specify the counter value that controls the STS_DQ reset bit based on the comparison function that was selected under "Set output".

You have to enter a value that is greater than or equal to the low counting limit as well as smaller than or equal to the high counting limit.

The default setting depends on the module:

Comparison value	DI 8x24VDC HS, DIQ 16x24VDC/0.5A 8xM12	DI 32x24VDC HF, DI 16x24VDC HF
Default	10	1

Comparison value 0

By configuring a comparison value (Page 92), you specify the counter value that controls the STS_DQ reset bit based on the comparison function that was selected under "Set output".

You must enter a value which is greater than or equal to the counter low limit and less than comparison value 1.

The default setting is "0".

Comparison value 1

By configuring the second comparison value (Page 92), you specify the additional counter value that controls the STS_DQ reset bit based on the comparison function that was selected under "Set output".

You must enter a value which is greater than comparison value 0 and less than or equal to the counter high limit.

The default setting is "10".

Hardware interrupt: Comparison event for DQ occurred

With this parameter, you specify for S7-1500 and ET200AL whether a process alarm is given off when a comparison event occurs based on the comparison function that was selected under "Set output".

The hardware interrupt is not enabled in the default setting.

5.2.2 Online & diagnostics module

5.2.2.1 Displaying and evaluating diagnostics

The online and diagnostics view enables hardware diagnostics. You can also

- Obtain information on the module (e.g., Firmware version and serial number)
- Execute a firmware update if required

Procedure

To open the display editor for the diagnostic functions, follow these steps:

1. Open the device configuration of the CPU or IM.
2. Select the device view.
3. Right-click on the module and select "Online & Diagnostics".
4. Select the required display in the diagnostics navigation.

Additional information

Additional information on the diagnostic alarms and possible remedies can be found in the module's device manual.

Service & Support

A

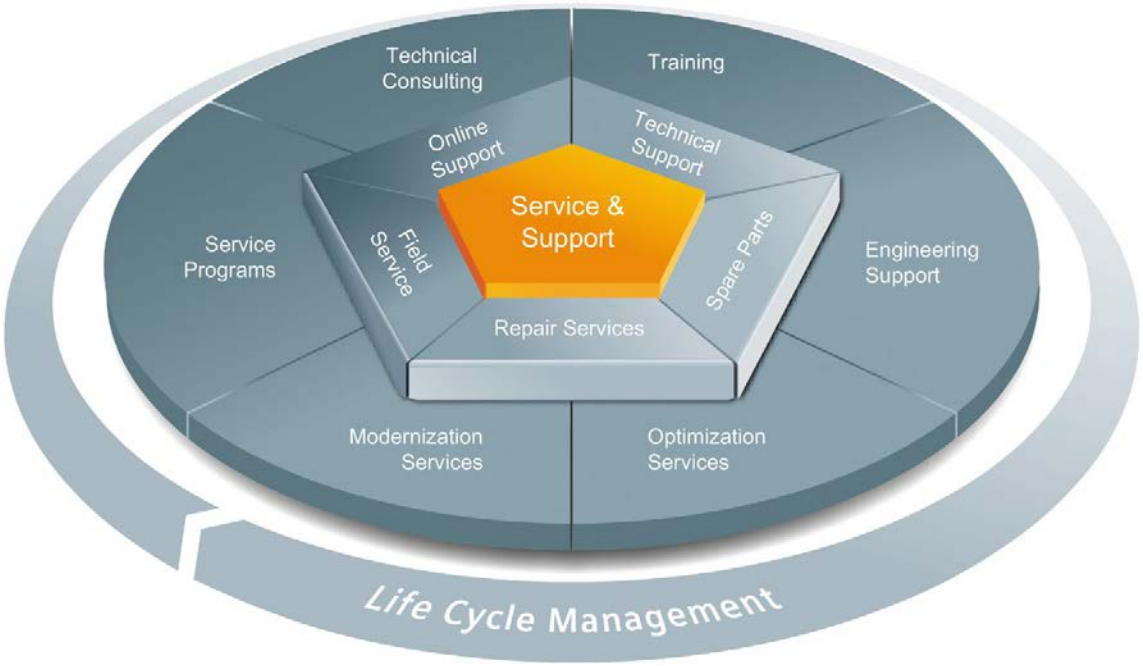

Unmatched complete service for the entire life cycle

For machine manufacturers, solution providers and plant operators: The service offering from Siemens Industry Automation and Drive Technologies includes comprehensive services for a wide range of different users in all sectors of the manufacturing and process industry.

To accompany our products and systems, we offer integrated and structured services that provide valuable support in every phase of the life cycle of your machine or plant – from planning and implementation through commissioning as far as maintenance and modernization.

Our Service & Support accompanies you worldwide in all matters concerning automation and drive technology from Siemens. We provide direct on-site support in more than 100 countries through all phases of the life cycle of your machines and plants.

You have an experienced team of specialists at your side to provide active support and bundled know-how. Regular training courses and intensive contact among our employees – even across continents – ensure reliable service in the most diverse areas.

Online Support

The comprehensive online information platform supports you in all aspects of our Service & Support at any time and from any location in the world.

You can find Online Support at the following address on the Internet (http://www.siemens.com/automation/service&support).

Technical Consulting

Support in planning and designing your project: From detailed actual-state analysis, definition of the goal and consultation on product and system questions right through to the creation of the automation solution.

Technical Support

Expert advice on technical questions with a wide range of demand-optimized services for all our products and systems.

You can find Technical Support at the following address on the Internet (http://www.siemens.com/automation/support-request).

Training

Extend your competitive edge – through practical know-how directly from the manufacturer.

You can find the training courses at the following address on the Internet (http://www.siemens.com/sitrain).

Engineering Support

Support during project engineering and development with services fine-tuned to your requirements, from configuration through to implementation of an automation project.

Field Service

Our Field Service offers you services for commissioning and maintenance – to ensure that your machines and plants are always available.

Spare parts

In every sector worldwide, plants and systems are required to operate with constantly increasing reliability. We will provide you with the support you need to prevent a standstill from occurring in the first place: with a worldwide network and optimum logistics chains.

Repairs

Downtimes cause problems in the plant as well as unnecessary costs. We can help you to reduce both to a minimum – with our worldwide repair facilities.

Optimization

During the service life of machines and plants, there is often a great potential for increasing productivity or reducing costs.

To help you achieve this potential, we are offering a complete range of optimization services.

Modernization

You can also rely on our support when it comes to modernization – with comprehensive services from the planning phase all the way to commissioning.

Service programs

Our service programs are select service packages for an automation and drives system or product group. The individual services are coordinated with each other to ensure smooth coverage of the entire life cycle and support optimum use of your products and systems.

The services of a service program can be flexibly adapted at any time and used separately.

Examples of service programs:

- Service contracts
- Plant IT Security Services
- Life Cycle Services for Drive Engineering
- SIMATIC PCS 7 Life Cycle Services
- SINUMERIK Manufacturing Excellence
- SIMATIC Remote Support Services

Benefits at a glance:

- Reduced downtimes for increased productivity
- Optimized maintenance costs due to a tailored scope of services
- Costs that can be calculated and therefore planned
- Service reliability due to guaranteed response times and spare part delivery times
- Customer service personnel will be supported and relieved of additional tasks
- Comprehensive service from a single source, fewer interfaces and greater expertise

Contact

At your service locally, around the globe: your partner for consultation, sales, training, service, support, spare parts... for the entire range of products from Industry Automation and Drive Technologies.

You can find your personal contact in our contacts database on the Internet (http://www.siemens.com/automation/partner).

Index

A

Absolute encoder, 26

B

Basic parameters
    High_Speed_Counter, 103
    SSI_Absolute_Encoder, 147
    Technology module, 179

C

Call
    High_Speed_Counter, 125
    SSI_Absolute_Encoder, 164
Capture, 25, 26, 34, 37, 111, 151, 196, 210
Commissioning
    High_Speed_Counter, 138
    SSI_Absolute_Encoder, 172
Compact CPU
    Performance features, 14, 16
Compact CPU S7-1500, (Technology module)
Comparison value, 47, 116, 153, 200, 212
    Counting, 116, 200
    Digital input module, 92
    Position input, 153, 212
Control interface, 219
Counter limits, 24, 28, 87, 88, 231
Counting
    Comparison value, 116, 200
Counting functions, 24, 82, 83, 87
Counting limits, 82, 83, 109, 194
CPU-STOP, 179

D

Diagnostic interrupt, 70
    Enable, 181, 181
Diagnostics
    High_Speed_Counter, 140
    SSI_Absolute_Encoder, 173
    Technology module, 218, 233
Digital input
    Functions, 111, 151, 196, 210
Digital input module
    Applications, 86
    Hardware configuration, 227
    Performance features, 14, 16
Digital input/digital output module
    Performance features, 17
Digital output
    Comparison value, 47, 116, 153, 200, 212
    Functions, 116, 153, 200, 212

E

Enable
    Diagnostic interrupt, 70
    Hardware interrupt, 70, 95
Error response
    High_Speed_Counter, 130
    SSI_Absolute_Encoder, 166
ErrorID, 135, 170

F

Feedback interface, 222
Filter frequency, 105, 191
Frequency measurement, 58

G

Gate control, 24, 30, 58, 87, 90, 111, 196

H

Hardware gate, 24, 30, 87, 90, 111, 196
Hardware interrupt, 70, 95
    Enable, 187
    lost, 186
High_Speed_Counter, 97, 125
    Basic parameters, 103
    Call, 125
    Commissioning, 138
    Configuring, 101
    Description, 125
    Diagnostics, 140
    Error response, 130
    Input parameters, 131
    Operating principle, 125

Output parameters, 133
Programming, 124
Static tags, 137
Hysteresis, 25, 26, 66, 68, 120, 156, 204, 215

I

Input parameters
High_Speed_Counter, 131
SSI_Absolute_Encoder, 167
Isochronous mode, 79, 85, 96

L

Latch, (Capture)

M

Measuring functions, 58
Measuring interval, 60, 63
Measuring range, 59, 59, 63

O

Operating mode, 181
High_Speed_Counter, 116
Operating principle
High_Speed_Counter, 125
SSI_Absolute_Encoder, 164
Output parameters
High_Speed_Counter, 133
SSI_Absolute_Encoder, 169

P

Parameter
ErrorID, 135, 170
Parameter assignment
Compact CPU, 22
Technology module, 22, 177
Period measurement, 58
Position input
Comparison value, 153, 212
With Motion Control, 70
with SSI absolute encoder, 26, 26

R

Reaction to CPU STOP, 179

S

Sensor type, 105, 191
Signal evaluation, 105, 191
Signal N, 105, 191
Signal type, 104, 190, 207
Sinking output, 105, 191
Software gate, 24, 30, 87, 90
Sourcing output, 105, 191
SSI absolute encoder, 148, 207
SSI_Absolute_Encoder, 142, 164
Basic parameters, 147
Call, 164
Commissioning, 172
Configuring, 146
Description, 164
Diagnostics, 173
Error response, 166
Input parameters, 167
Operating principle, 164
Output parameters, 169
Programming, 163
Static tags, 171
Start value, 24, 87, 109, 195, 231
Static tags
High_Speed_Counter, 137
SSI_Absolute_Encoder, 171
SW_GATE, 30, 90
Synchronization, 25, 39, 111, 196
at signal N, 44, 111, 196
by digital input, 42

T

Technology module
Application scenarios, 18
Applications, 81
Basic parameters, 179
Control interface, 219
Feedback interface, 222
Hardware configuration, 175
Online & Diagnostics, 218, 233
Parameter assignment, 177
Performance features, 14, 16
Project tree, 176
Technology object
High_Speed_Counter, 97
SSI_Absolute_Encoder, 142

U

Update time, 58

V

Velocity measurement, 58

W

Wire break, 180

SIEMENS

SIMATIC

High-precision input/output with Time-based IO

Function Manual

Preface

Documentation guide 1

Time-based IO basics 2

Configuring and parameter assignment 3

Programming 4

Service & Support 5

08/2014

A5E33454822-AB

Legal information

Warning notice system

This manual contains notices you have to observe in order to ensure your personal safety, as well as to prevent damage to property. The notices referring to your personal safety are highlighted in the manual by a safety alert symbol, notices referring only to property damage have no safety alert symbol. These notices shown below are graded according to the degree of danger.

⚠ DANGER
indicates that death or severe personal injury **will** result if proper precautions are not taken.

⚠ WARNING
indicates that death or severe personal injury **may** result if proper precautions are not taken.

⚠ CAUTION
indicates that minor personal injury can result if proper precautions are not taken.

NOTICE
indicates that property damage can result if proper precautions are not taken.

If more than one degree of danger is present, the warning notice representing the highest degree of danger will be used. A notice warning of injury to persons with a safety alert symbol may also include a warning relating to property damage.

Qualified Personnel

The product/system described in this documentation may be operated only by **personnel qualified** for the specific task in accordance with the relevant documentation, in particular its warning notices and safety instructions. Qualified personnel are those who, based on their training and experience, are capable of identifying risks and avoiding potential hazards when working with these products/systems.

Proper use of Siemens products

Note the following:

⚠ WARNING
Siemens products may only be used for the applications described in the catalog and in the relevant technical documentation. If products and components from other manufacturers are used, these must be recommended or approved by Siemens. Proper transport, storage, installation, assembly, commissioning, operation and maintenance are required to ensure that the products operate safely and without any problems. The permissible ambient conditions must be complied with. The information in the relevant documentation must be observed.

Trademarks

All names identified by ® are registered trademarks of Siemens AG. The remaining trademarks in this publication may be trademarks whose use by third parties for their own purposes could violate the rights of the owner.

Disclaimer of Liability

We have reviewed the contents of this publication to ensure consistency with the hardware and software described. Since variance cannot be precluded entirely, we cannot guarantee full consistency. However, the information in this publication is reviewed regularly and any necessary corrections are included in subsequent editions.

Siemens AG
Industry Sector
Postfach 48 48
90026 NÜRNBERG
GERMANY

A5E33454822-AB
Ⓟ 08/2014 Subject to change

Copyright © Siemens AG 2014.
All rights reserved

Preface

Purpose of the documentation

This function manual will support you when you use "Time-based IO" technology with the S7-1500, ET 200MP, and ET 200SP systems.

The documentation deals with the following topics:

- Using "Time-based IO" technology
- Functions of the "Time-based IO" technology
- Hardware and software requirements for "Time-based IO"
- Configuring the "Time-based IO" function with STEP 7 (TIA Portal)
- Diagnostics of the "Time-based IO" function

Basic knowledge required

The following knowledge is required in order to understand the Function manual:

- General knowledge of automation engineering
- Knowledge of the industrial automation system SIMATIC
- Proficiency with STEP 7 (TIA Portal)

Scope of the documentation

The following documentation is valid for all components of the S7-1500, ET 200MP and ET 200SP systems that support the "Time-based IO" technology.

Conventions

The following terms are used as synonyms in this documentation:

- **TIA Portal:** This term is used as synonym for the "STEP 7" configuration and programming software (TIA Portal)".
- **TIO module**: This term is used as synonym for I/O modules of the type:
  - IO-Link Master CM 4xIO-Link
  - ET 200MP TM Timer DIDQ 16x24V
  - ET 200SP TM Timer DIDQ 10x24V
- **TIO_Time**: This term is used as synonym for the shared time basis (relative time) of the TIO modules.
- **Jitter**: This is a general term that includes various time influences affecting accuracy. This means that:
  - for input data: Deviation of the measured time from the actual event.
  - for output data: Deviation of the actual switching time from the specified time.

This documentation contains pictures of the devices described. The pictures may differ slightly from the devices supplied.

You should also pay particular attention to notes such as the one shown below:

Note

The notes contain important information on the product, handling the product or on part of the documentation to which particular attention should be paid.

Additional support

You will find information about the technical support available in the appendix.

The range of technical documentation for the individual SIMATIC products and systems can be found on the Internet (http://www.siemens.com/simatic-tech-doku-portal).

The online catalog and the ordering system are available on the Internet (http://mall.automation.siemens.com).

Security information

Siemens provides products and solutions with industrial security functions that support the secure operation of plants, solutions, machines, equipment and/or networks. They are important components in a holistic industrial security concept. With this in mind, Siemens' products and solutions undergo continuous development. Siemens recommends strongly that you regularly check for product updates.

For the secure operation of Siemens products and solutions, it is necessary to take suitable preventive action (e.g. cell protection concept) and integrate each component into a holistic, state-of-the-art industrial security concept. Third-party products that may be in use should also be considered. You can find more information about industrial security on the Internet (http://www.siemens.com/industrialsecurity).

To stay informed about product updates as they occur, sign up for a product-specific newsletter. You can find more information on the Internet (http://support.automation.siemens.com).

Table of contents

Preface 3

1 Documentation guide 9

2 Time-based IO basics 13

2.1 Using Time-based IO 13

2.2 Time behavior of Time-based IO 14
2.2.1 Time behavior of standard technology 14
2.2.2 Time-based IO properties 15

2.3 System environment 17

2.4 Hardware requirements 18

2.5 Configuration software requirements 19

2.6 Technical implementation 20

3 Configuring and parameter assignment 25

3.1 Requirements 25

3.2 Settings for Time-based IO 26

3.3 Configure IO-Link and activate Time-based IO 27

4 Programming 29

4.1 Overview of instructions 29

4.2 Programming of Time-based IO 30

4.3 Time-based IO 34
4.3.1 TIO_SYNC: Synchronizing TIO modules 34
4.3.2 TIO_IOLink_IN: Read process input signals with time stamps 38
4.3.3 TIO_DI: Reading in edges at digital input and associated time stamps 42
4.3.4 TIO_IOLink_OUT: Output time-controlled process output signals 47
4.3.5 TIO_DQ: Output edges time-controlled at the digital output 52
4.3.6 UDT "TIO_SYNC_Data" 57

5 Service & Support 59

5.1 Service & Support 59

Index 63

Documentation guide

1

Introduction

The documentation of the SIMATIC products has a modular structure and covers a range of topics concerning your automation system.

The complete documentation for the S7-1500, ET 200MP, and ET 200SP systems consists of the respective system manuals, function manuals, and manuals for the specific device.

In addition, the TIA Portal (online help) information system supports you in configuring and programming your automation system.

Documentation for Time-based IO

The following table lists further documentation that you will need when using Time-based IO.

Table 1- 1 Documentation for Time-based IO

Topic	Documentation	Most important contents
System description	System manual S7-1500 Automation System (http://support.automation.siemens.com/WW/view/en/59191792)	• Application planning • Installation • Wiring • Commissioning • Maintenance
	System Manual ET 200MP Distributed I/O System (http://support.automation.siemens.com/WW/view/en/59193214)	
	System manual ET 200SP Distributed I/O System (http://support.automation.siemens.com/WW/view/en/58649293)	
PROFINET with TIA Portal	PROFINET with STEP 7 function manual (http://support.automation.siemens.com/WW/view/en/49948856)	• PROFINET basics • PROFINET functions • PROFINET IO Engineering • Diagnostics with PROFINET IO • Isochronous mode
CPU	Manuals (http://support.automation.siemens.com/WW/view/en/67295862/133300)	• Block diagram • Wiring • Interrupts, diagnostics, error, and system messages • Technical specifications • Dimension drawings
IM	Manual IM 155-6 PN ST (http://support.automation.siemens.com/WW/view/en/59768173)	
	IM 155-6 PN HF manual (http://support.automation.siemens.com/WW/view/en/73184046)	

Topic	Documentation	Most important contents
	Manual IM 155-5 PN ST (http://support.automation.siemens.com/WW/view/en/59193106)	
	Manual IM 155-5 PN HF (http://support.automation.siemens.com/WW/view/en/89261636)	
TM	Manual Technology Module TM Timer DIDQ 16x24V (http://support.automation.siemens.com/WW/view/en/95153313)	• Wiring • Interrupts and diagnostic alarms • Parameter data set • Technical specifications • Dimension drawing
	Manual Technology Module TM Timer DIDQ 10x24V (http://support.automation.siemens.com/WW/view/en/95153951)	
IO-Link	SIMATIC IO-Link System function manual (http://support.automation.siemens.com/WW/view/en/65949252)	• Overview • Configuration
	Communication module IO-Link master CM 4xIO-Link manual (http://support.automation.siemens.com/WW/view/en/67328527)	• Block diagram • Wiring • Parameter assignment/addressing • Interrupts, diagnostics, error, and system messages • Technical specifications
Configuration with Port Configuration Tool	SIMATIC S7-PCT in the SIMATIC IO-Link System function manual (http://support.automation.siemens.com/WW/view/en/65949252)	• Description • Configuration
	SIMATIC S7-PCT online help	—
IO-Link sensors/actuators	SICK product information (http://www.sick.com/group/EN/home/products/technologies/smart_sensor_solutions/Pages/product_track_and_trace.aspx)	—
	Product documentation of halstrup-walcher (http://www.halstrup-walcher.de/en/produkte/positioniertechnik/index.php)	
System diagnostics	Diagnostics function manual (http://support.automation.siemens.com/WW/view/en/59192926)	• Overview • Hardware/software diagnostic evaluation
Isochronous mode	PROFINET with STEP 7 (http://support.automation.siemens.com/WW/view/en/49948856) function manual	• Benefits • Use • Parameter settings

SIMATIC manuals

All current manuals for SIMATIC products are available for download free of charge from the Internet (http://www.siemens.com/automation/service&support).

Software download for IO-Link

The Port Configuration Tool (SIMATIC S7-PCT) is available on the Internet (http://support.automation.siemens.com/WW/view/en/32469496).

You will find software downloads for the IO-Link Device with time stamp function on the Internet:

- SICK (http://www.sick.com/group/EN/home/products/technologies/smart_sensor_solutions/Pages/product_track_and_trace.aspx)
- halstrup-walcher (http://www.halstrup-walcher.de/en/downloads/index.php)

Time-based IO basics 2

2.1 Using Time-based IO

Many processes in a plant require a relatively precise reproducibility as far as time is concerned. The reproducibility can be optimized to a limited extent by shorter CPU cycle times. The use of high-precision input/output with Time-based IO provides a more accurate reproducibility than the one that can be achieved by optimizing the CPU cycle time. An additional advantage of Time-based IO is the independence from the minimum time scale of the application cycle.

Below is a selection of typical areas of application that can benefit from this technology.

Defined response times

An output signal that responds with a precise delay time that is independent of the application cycle can be output by adding a specified time to the time stamp of an edge at the digital input.

Length measurement

The length of a product passing by can be determined by the difference between two input time stamps and an associated travel speed.

Cam controller

The ongoing movement can be extrapolated from a synchronous position information (for example, from a counter module or an axis). Based on this result, the time of a switching position (cam position) is calculated and transferred to the TIO module (output). This way the switch event takes place at the required position.

Dosing

By specifying a switch-on and a switch-off edge to a time-controlled digital output, a valve can be opened for a specific time and the amount of liquid can be dosed accordingly.

2.2 Time behavior of Time-based IO

2.2.1 Time behavior of standard technology

The time behavior of the inputs/outputs depends on the following factors for standard technology:

- CPU program (program structure)
- Bus cycle times (fieldbus, backplane bus)
- Cycle time of the I/O modules
- Internal cycle time of sensors/actuators

A deterministic statement as to

- when an input event (e.g., sensor signal) has taken place
- when the output event has an effect on the input event (e.g., output switches)

will become inaccurate due to the time factors listed above.

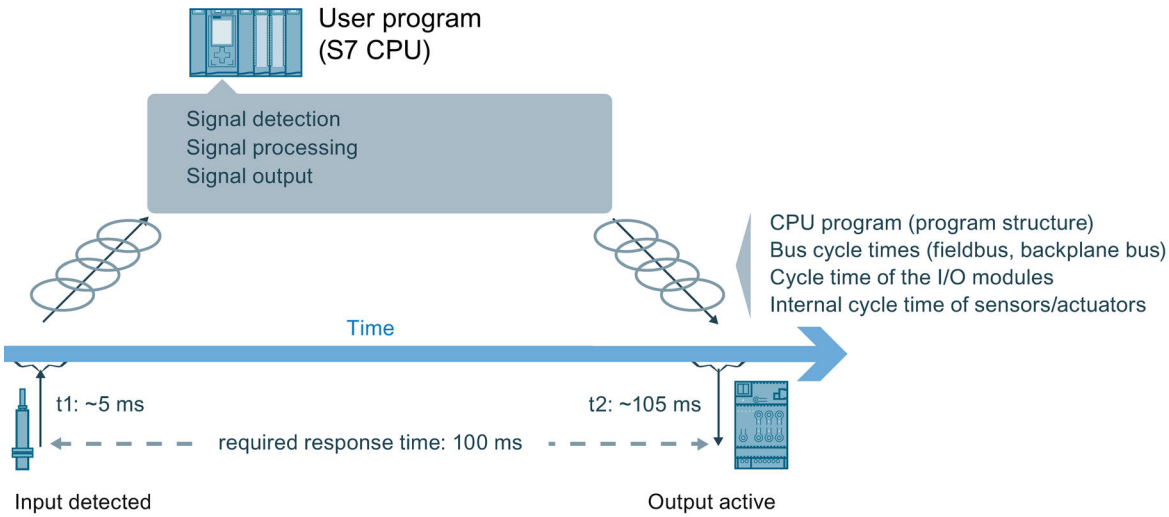

2.2.2 Time-based IO properties

Time-controlled I/O functionality

Time-based IO stands for time-based processing of I/O signals. All input signals are referred to one time (TIO_Time). The input signals receive the time stamp t1. After signal processing, the output event can also be linked with the TIO_Time and output at the required time. Output takes place at time t2.

Here an example for Time-based IO:

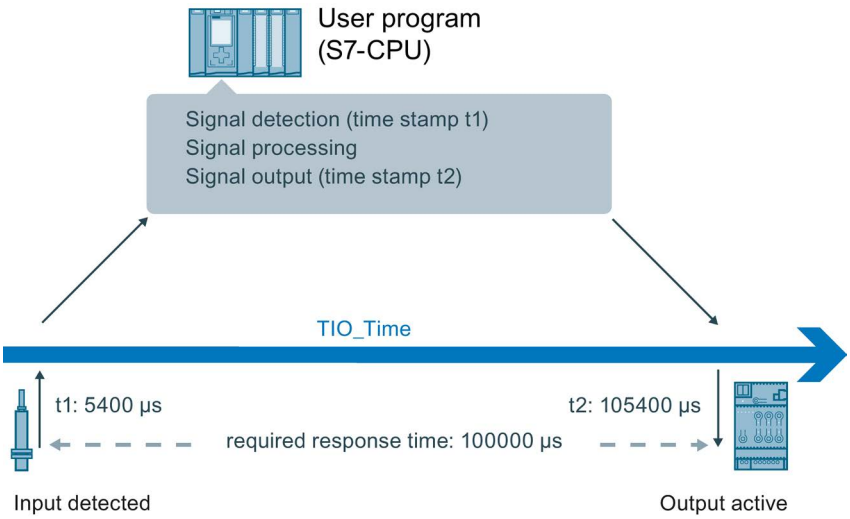

Independence and focus of Time-based IO

The shared time basis (TIO_Time) of all components involved is the basis for Time-based IO. By using TIO_Time, the accuracy of the output with Time-based IO does not depend on:

- CPU program (program structure)
- Bus cycle times (fieldbus, backplane bus)
- Cycle time of the I/O modules
- Internal cycle time of the IO-Link sensors/actuators

The focus of Time-based IO is not on the I/O response time but on the predictability (determinism) of I/O signals. With Time-based IO, it is possible to respond to an input signal with an output signal within a defined time. Keep in mind the system-dependent minimum response time when using Time-based IO.

Time-based IO stands for:

- I/O functionalities executed with high precision
- I/O processes with time stamp

Accuracy

Accuracy is crucial for the performance capability of Time-based IO.

Accuracy is a property of

- TIO module
- IO-Link sensor/ actuator

and indicates the deviation with which the required response is achieved. For Time-based IO, the accuracy and reproducibility of the response is in the millisecond range.

Response time

In addition to a very high accuracy, a minimum response time to an input event can result depending on the configuration.

The response time is the time between the input event and the required output event.

For the minimum response time:

at least 3 * application cycle (T_{APP})

2.3 System environment

Introduction

Possible system configurations with PROFINET for the use of Time-based IO are shown below.

Use with TIA Portal

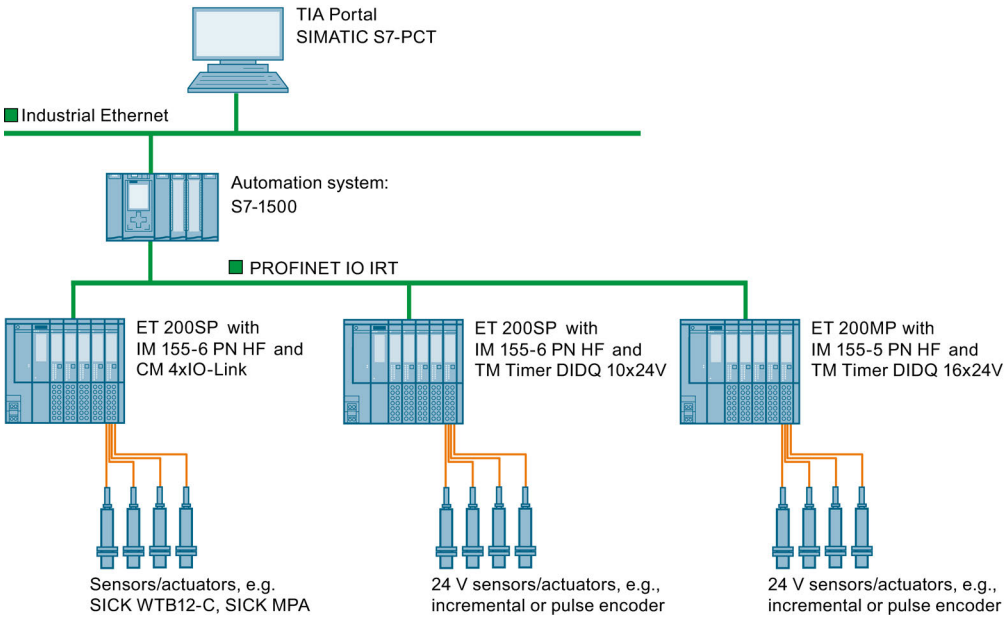

2.4 Hardware requirements

Introduction

The properties of the hardware components required for Time-based IO are listed below. You will also find specific modules as an example.

Requirements

Component	Properties	Examples
CPU	• Isochronous mode/ PROFINET IO IRT: provides defines response time and high-precision plant behavior.	• CPU 1511-1 PN
ET 200 interface module	• Supports isochronous mode	• ET 200SP with IM 155-6 PN HF (as of firmware V2.1) • ET 200MP with IM 155-5 PN HF
I/O module	• TIO module	• ET 200SP: CM 4xIO-Link (as of firmware V2.0) TM Timer DIDQ 10x24V • ET 200MP: TM Timer DIDQ 16x24V
IO-Link Device for CM 4xIO-Link	• supports IO-Link time stamp function	• SICK WTB12-C • halstrup-walcher PSE, PSS, PSW

2.5 Configuration software requirements

Introduction

Below please find a list of the software versions which support the "Time-based IO" function.

Requirements

Configuration software	Requirements	Supported hardware components	Additional information
STEP 7 (TIA Portal) as of V13	• PROFINET IO IRT • For CM 4xIO-Link: IO-Link technology	• S7-1500 automation system • ET 200SP and ET 200MP distributed I/O systems • CM 4xIO-Link • TM Timer DIDQ 16x24V (as of V13 Update 3) • TM Timer DIDQ 10x24V (as of V13 Update 3)	TIA Portal online help
S7-PCT as of V3.2	—	• CM 4xIO-Link	S7-PCT online help

TIO instructions

The TIO instructions are specific function blocks for use of Time-based IO. The following TIO instructions (Page 29) are available:

- TIO_SYNC
- TIO_IOLink_IN
- TIO_IOLink_OUT
- TIO_DI
- TIO_DQ

As of V13 Update 3, the TIO instructions are available as integrated instructions in TIA Portal.

2.6 Technical implementation

Introduction

The information below will help you better understand the core aspects of Time-based IO and find out which SIMATIC functions are used to implement the described aspects.

Synchronization of involved modules in PROFINET (shared time basis)

The Time-based IO technology uses isochronous mode for all involved PROFINET stations. Isochronous communication is made possible with PROFINET IRT (Isochronous Real-Time) and isochronous mode of the PROFINET stations.

Additional information on isochronous mode is available in the PROFINET with STEP 7 (http://support.automation.siemens.com/WW/view/en/49948856) and Isochronous Mode (http://support.automation.siemens.com/WW/view/en/15218045) manuals.

Several TIO modules can be synchronized to a shared time basis by using the isochronous PROFINET. The basis of the shared time basis for the TIO modules is the relative time TIO_Time.

TIO_Time

The TIO_Time is the central time basis to which all time stamps refer.

TIO_Time has the following properties:

- Shared time basis for all TIO modules which are synchronized with the TIO instruction TIO_SYNC.
- The time starts counting again with each CPU startup.
- TIO_Time has the data type LTime (e.g., LT#14s830ms652us315ns).
- All valid time stamps refer to TIO_Time:
  - Input time stamps of the TIO modules are converted to TIO_Time in TIO instructions TIO_IOLink_IN and TIO_DI.
  - Output time stamps are converted to output time stamps of the TIO modules in TIO instructions TIO_IOLink_OUT and TIO_DQ.

TIO instructions in the "Synchronous Cycle" OB

The TIO instructions must be called in a "Synchronous Cycle" OB.

You can find additional information in the chapter Programming (Page 29).

Modes for updating the process image

In isochronous mode, you can influence the order of the update of the process image partition of the input and output data. In doing so, you can select the following program execution models:

- IPO model (application cycle factor = 1)
- OIP model (application cycle factor >= 1)

The abbreviations I, P, O stand for the following processes: I = Input, P= Processing, O = Output.

Additional information on the application cycle factor is available in the PROFINET with STEP 7 (http://support.automation.siemens.com/WW/view/en/49948856) Manual.

IPO model (application cycle factor = 1)

The user program is started after the delay time. Start by updating the corresponding process image partition of the inputs in the user program by calling the SYNC_PI system instruction. Processing is started next (for example, calculation of the time stamps). The corresponding process image partition of the outputs is updated at the end of the user program in the CPU by SYNC_PO.

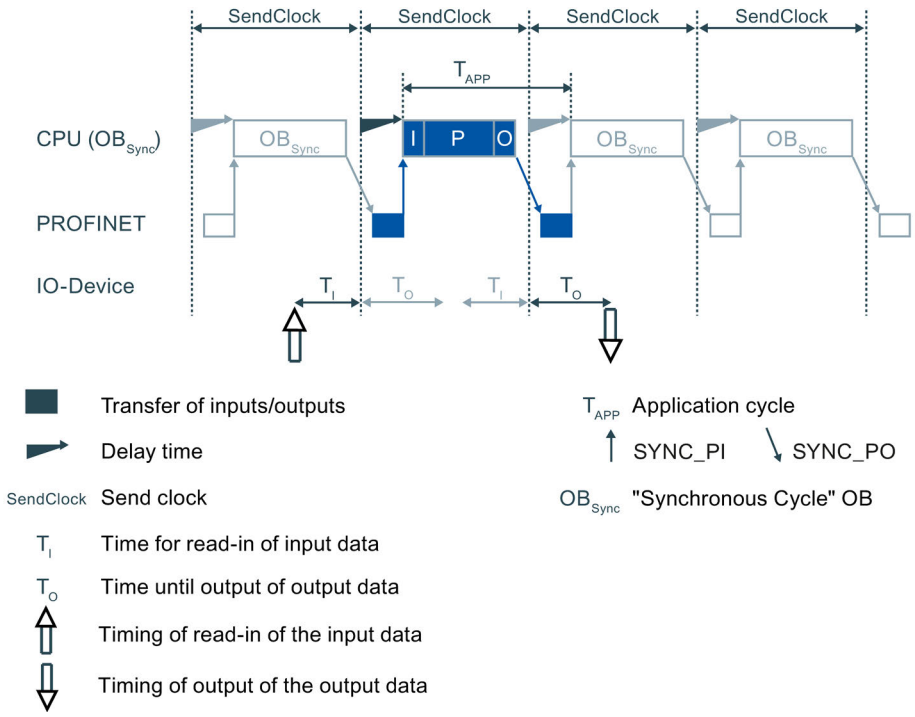

Properties of the IPO model:

- Supports shorter response times
- The application cycle may not be greater than the send clock.

  This gives the application less time than with the OIP model.

OIP model (application cycle factor >= 1)

The user program is started after the delay time. In PIP_Mode 0, the TIO_SYNC instruction updates the process image. In the other modes, you start by updating the corresponding process image partition of the outputs in the user program by calling the SYNC_PO system instruction. As a result, the output data that was calculated in the previous network cycle will become active during the next network cycle (T_O). Next the corresponding process image partition of the inputs is updated in the CPU by SYNC_PI. Processing starts after the data is transmitted (for example, calculation of the time stamps).

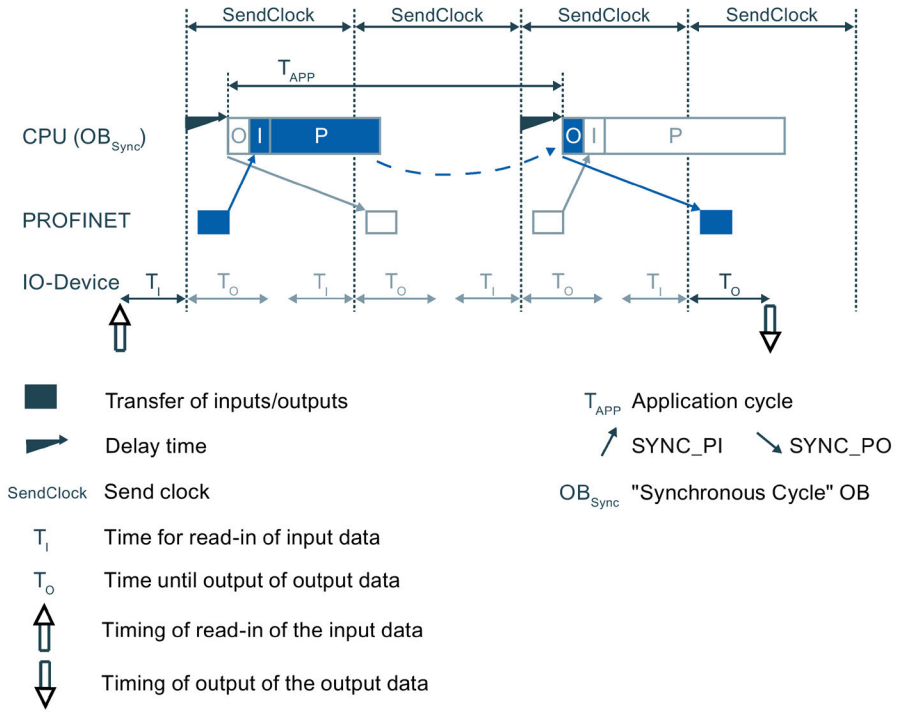

Properties of the OIP model:

- The response time is longer than with the IPO model.
- It is one application cycle longer than permitted by the send clock.

  This gives the application more time than with the IPO model.

Influence of accuracy

To estimate the accuracy you need the accuracy of

- TIO module
- Sensor/ actuator

Consult the data sheets of the respective module regarding the accuracy value.

You have to add the individual jitters of the TIO modules and the sensors/actuators. You can neglect any other influencing factors.

See also

Programming of Time-based IO (Page 30)

Configuring and parameter assignment 3

3.1 Requirements

Introduction

You need additional software components to use Time-based IO. You must also have created the standard configuration for your project.

Below you will learn more about the standard configuration for Time-based IO.

Requirements

In the TIA Portal:

- The project has been created.
- The CPU has been created and the parameters are assigned.
- ET 200 distributed I/O and modules have been created and the parameters are assigned.
- The connection has been created and the parameters are assigned via PROFINET.
- A "Synchronous Cycle" OB has been created.

In addition for IO-Link:

- S7-PCT is installed on the programming device/PC.
- IODD for IO-Link device (with time stamp function) are installed.

See also

System environment (Page 17)

Configuration software requirements (Page 19)

3.2 Settings for Time-based IO

Below you will find an overview of which settings have to be made for which components of Time-based IO.

Table 3- 1 Overview of settings for Time-based IO

Component	Can be set where (*)	Properties to be set	Additional information
PROFINET subnet	Properties of the PROFINET subnet > sync domain	Create sync domain or edit properties of sync domain • For example, set send clock (e.g., 2 ms)	• PROFINET with STEP 7 function manual (http://support.automation.siemens.com/WW/view/en/49948856) • Online help in the TIA Portal information system
		Specify devices of the sync domain: • Specify CPU as sync master. • Specify ET 200 interface module as sync slave with RT class "IRT".	
ET 200 station (with TIO module)	Properties of the PROFINET interface > isochronous communication	Assignment of the TIO modules to the isochronous PROFINET subnet	• PROFINET with STEP 7 function manual (http://support.automation.siemens.com/WW/view/en/49948856) • Manual Technology Module TM Timer DIDQ 16x24V (http://support.automation.siemens.com/WW/view/en/95153313) • Manual Technology Module TM Timer DIDQ 10x24V (http://support.automation.siemens.com/WW/view/en/95153951) • Online help in the TIA Portal information system
	Properties of the TIO module > isochronous mode	Activate isochronous mode	
TIO module	Properties of the TIO module > I/O addresses	A "Synchronous Cycle" OB has been assigned or created	
	Properties of the TIO module > I/O addresses	Assignment of I/O addresses to the process image partition (e.g., PIP1)	
	Properties of the TM Timer DIDQ > Basic parameters/Channel parameters	Parameter assignment for use of Timer DI and Timer DQ	
"Synchronous Cycle" OB	Properties of the "Synchronous Cycle" OB > Isochronous mode	Adjust application cycle, if necessary	
IO-Link Device (sensor/ actuator)	SIMATIC S7-PCT	Activate port of the IO-Link Device for Time-based IO	See chapter Configure IO-Link and activate Time-based IO (Page 27)

* Does not describe the exact location but the topic in the configuration software.

Setting for Time-based IO

If you have no special response time requirements, the following setting is suitable as a starting point:

- Send clock: 2 ms
- Application cycle: 4 ms
- Assignment to the process image partition: PIP1
- PIP_Mode: 0 (OIP model)

See also

Programming of Time-based IO (Page 30)

3.3 Configure IO-Link and activate Time-based IO

Introduction

For Time-based IO, the ports of the IO-Link Master must be set to the required operating mode and suitable sensors/actuators must be connected to the ports.

Requirements

- S7-PCT is installed on the programming device/PC.
- IODD for IO-Link Device (with time stamp function) are installed.

  You can find additional information on installation in the online help for S7-PCT.
- The project is open in network view in the TIA Portal.
- The hardware catalog is open.

Procedure

1. Right-click the IO-Link Master in the TIA Portal and select "Start Device Tool".

   The Port Configuration Tool (S7-PCT) opens.
2. Select the connected IO-Link Device (sensors/actuators with time stamp function) from the device catalog for the ports of the IO-Link Master in S7-PCT.

   Use drag-and-drop to insert the IO-Link Device to the matching Port of the IO-Link Master.
3. Adapt the settings of the ports to match their respective task in the application.

   Possible port settings:
   – IO-Link Time based IN: The input signals of the sensor are given a time stamp.
   – IO-Link Time based OUT: The signal is output at the specified time.
4. Save the settings.
5. Download the Port configuration to the IO-Link Master.
6. Close S7-PCT.

Result

The IO-Link Master is configured with the connected sensor and actuator information.

Programming 4

4.1 Overview of instructions

Introduction

Time-based IO is used with special instructions (TIO instructions). The TIO_SYNC TIO instruction is responsible for synchronizing all involved TIO modules and creates a unique time basis (TIO_Time) to which all actions are referenced.

Depending on the type of TIO module, additional instructions undertake the reading in of process input signals with associated time stamps and/or the time-controlled output of process output signals.

Note

The TIO instructions use the time stamp functions of the TIO modules. For the other functions of the respective TIO module, no use of instructions is necessary.

TIO instructions

Instruction	Can be used with TIO module	Short description
TIO_SYNC (Page 34)	• CM 4xIO-Link • TM Timer DIDQ 16x24V • TM Timer DIDQ 10x24V	Synchronizes the TIO modules and provides the time basis for Time-based IO
TIO_IOLink_IN (Page 38)	• CM 4xIO-Link	Reads the input signals with time stamp from the IO-Link Device (sensor)
TIO_DI (Page 42)	• TM Timer DIDQ 16x24V • TM Timer DIDQ 10x24V	Detects the edges at the digital input (Timer DI) and supplies the associated time stamp
TIO_IOLink_OUT (Page 47)	• CM 4xIO-Link	Outputs time-controlled output signals at the IO-Link Device
TIO_DQ (Page 52)	• TM Timer DIDQ 16x24V • TM Timer DIDQ 10x24V	Outputs time-controlled edges at the digital output (Timer DQ)

4.2 Programming of Time-based IO

Introduction

For use of Time-based IO, the TIO instructions must be called in a "Synchronous Cycle" OB. The application can also run in another OB. In this way, you can shorten the runtime of the "Synchronous Cycle" OB.

You need the following TIO instructions according to the required task:

TIO module	TIO instructions	
CM 4xIO-Link	• Per sensor, one TIO_IOLink_IN for read-in • Per actuator, one TIO_IOLink_OUT for output	One TIO_SYNC (for up to eight TIO modules)
TM Timer DIDQ	• Per digital input, one TIO_DI for read-in • Per digital output, one TIO_DQ for output	

This section below describes the programming of the CPU for Time-based IO.

Requirements

Hardware configuration in the TIA Portal:

- The TIO modules are assigned to an isochronous network.
- The TIO modules are assigned to a shared process image partition.
- The process image partition is assigned to a "Synchronous Cycle" OB.

Additional information on configuration of Time-based IO is available in the section Settings for Time-based IO (Page 26).

Procedure

1. Create a TIO_SYNC TIO instruction in the "Synchronous Cycle" OB.
2. Connect all TIO modules to be synchronized at the TIO_SYNC TIO instruction using parameters HWID_1 to HWID_8.

   The HWID is located in HWCN under the module properties.
3. Configure the send clock at the TIO_SYNC TIO instruction.

   The send clock is listed in the properties of the ET 200 station.

4. Set the data update mode at the TIO_SYNC instruction at the PIP_Mode input parameter.

   The description of the modes is available in the chapter Technical implementation (Page 20).

   The parameter assignment of the TIO_SYNC TIO instruction is complete.

5. For the following instructions, note the call sequence depending on the selected value for PIP_Mode:

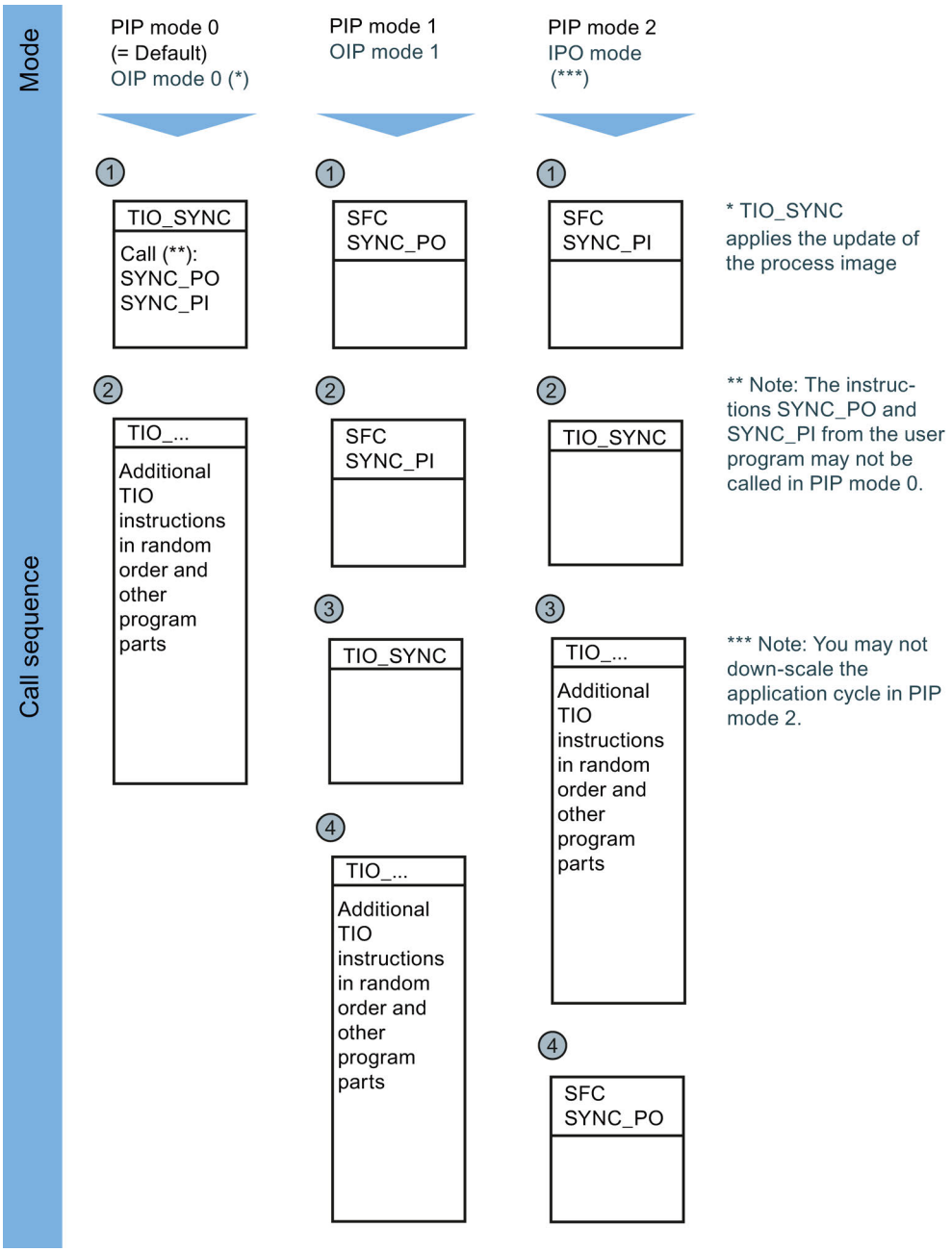

6. Add the TIO instructions for data read-in/output required for your application in the "Synchronous Cycle" OB.

7. Connect the TIO_SYNC_Data input to the output of the same name at TIO_SYNC at each TIO instruction for read-in and output.
8. Assign the input parameters TO (see properties of the ET 200 station), HWID (see module properties in HWCN), and Port/Channel" for the TIO instructions for data read-in/output.

   Programming for the Time-based IO functionality is complete.
9. Connect the Time-based IO functionality with your application.
10. Compile and download the entire project to the CPU.

Result

You have completed programming the use of Time-based IO.

Example

Below you see an application example with a TIO_IOLink_IN and a TIO_IOLink_OUT.

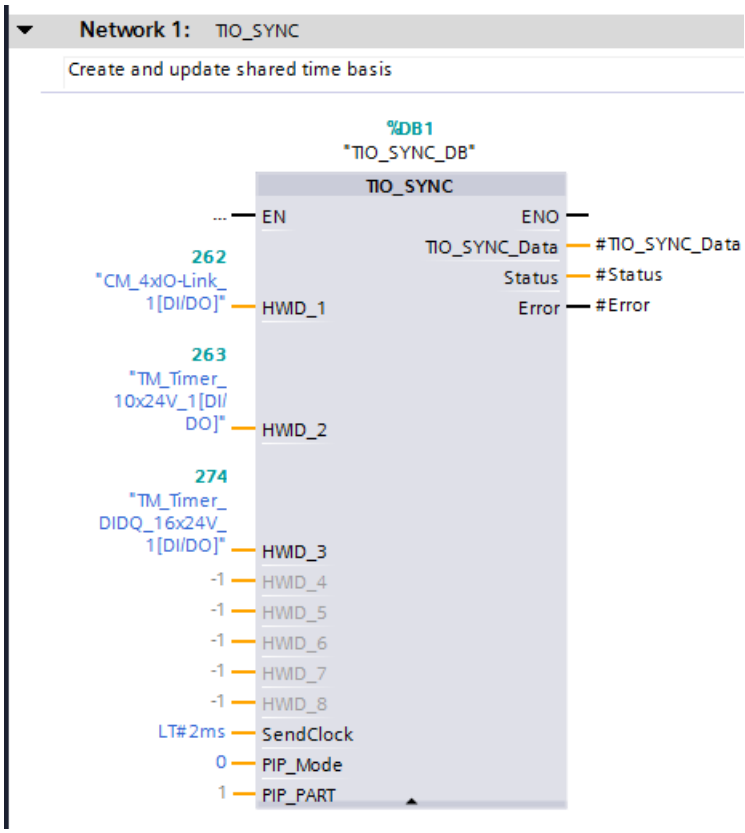

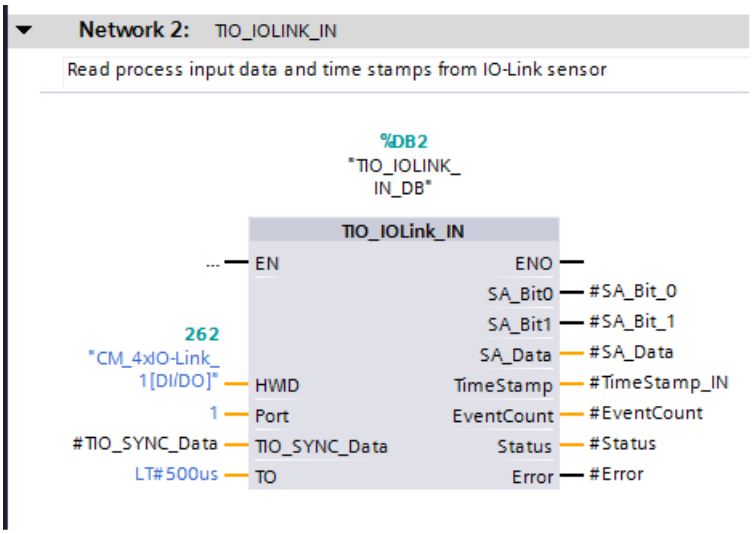
Network 2: TIO_IOLINK_IN
Read process input data and time stamps from IO-Link sensor
%DB2
"TIO_IOLINK_IN_DB"
TIO_IOLink_IN
... EN
ENO
SA_Bit0 #SA_Bit_0
SA_Bit1 #SA_Bit_1
SA_Data #SA_Data
262
"CM_4xIO-Link_1[DI/DO]" HWID
TimeStamp #TimeStamp_IN
1 Port
EventCount #EventCount
#TIO_SYNC_Data TIO_SYNC_Data
Status #Status
LT#500us TO
Error #Error

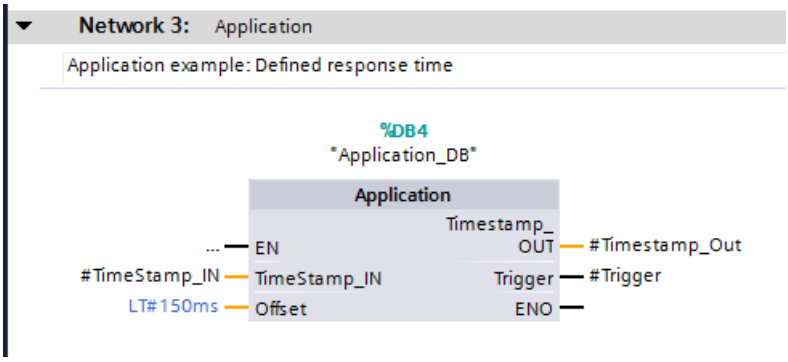
Network 3: Application
Application example: Defined response time
%DB4
"Application_DB"
Application
... EN
Timestamp_OUT #Timestamp_Out
#TimeStamp_IN TimeStamp_IN
Trigger #Trigger
LT#150ms Offset
ENO

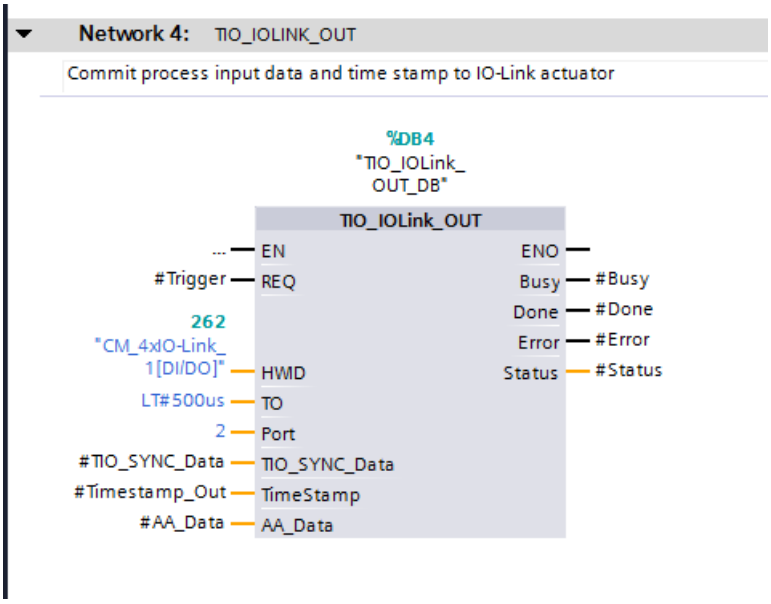
Network 4: TIO_IOLINK_OUT
Commit process input data and time stamp to IO-Link actuator
%DB4
"TIO_IOLink_OUT_DB"
TIO_IOLink_OUT
... EN
ENO
#Trigger REQ
Busy #Busy
Done #Done
262
"CM_4xIO-Link_1[DI/DO]" HWID
Error #Error
Status #Status
LT#500us TO
2 Port
#TIO_SYNC_Data TIO_SYNC_Data
#Timestamp_Out TimeStamp
#AA_Data AA_Data

4.3 Time-based IO

4.3.1 TIO_SYNC: Synchronizing TIO modules

Description

You can use Time-based IO with the TIO_SYNC instruction. TIO_SYNC synchronizes TIO modules to a shared time basis TIO_Time.

You can synchronize up to 8 TIO modules with TIO_SYNC. All TIO modules must be assigned to the same process image partition (PIP). If you select "0" for the input parameter PIP_Mode, you assign the number of the process image partition at the PIP_PART input parameter.

Startup characteristics

At the startup of the CPU, the TIO_SYNC instruction receives and checks the input parameters once and initializes the TIO_Time. If startup takes place without errors, the instruction changes to normal operation. In the event of an error, the instruction does not change to normal operation and generates an error message.

Operating principle

In normal operation, the instruction ensures synchronization of all TIO modules configured at the HWID input.

The calculated TIO_Time for the instructions of the TIO modules is provided at the TIO_SYNC_Data output.

Reaction to error

The Error output indicates whether the instruction parameters are assigned correctly and whether an error has occurred. If the instruction was not processed successfully, the reasons for the errors are displayed at the Status output.

Parameter

The table below shows the parameters of the TIO_SYNC instruction.

Parameter	Declaration	Data type S7-1500	Default	Description
HWID_1 ... HWID_8*	Input	HW_IO	-1	Hardware identifier for TIO module from HWCN
SendClock*	Input	LTime	LT#0ns	Send clock of the sync domain. Apply the send clock from the PROFINET configuration.
PIP_Mode*	Input	USInt	0	Mode for the data update**: • 0: OIP model with internal update of the process image by SYNC_PO and SYNC_PI. • 1: OIP model without internal update of the process image • 2: IPO model without internal update of the process image
PIP_PART*	Input	USInt	1	Only relevant if PIP_Mode = 0 Number of the process image partition which is to be updated isochronously.
TIO_SYNC_ Data	Output	"TIO_SYNC_ Data"		Calculated system time for the TIO instructions of the TIO modules and internal data used for synchronization. See UDT "TIO_SYNC_Data" (Page 57).
Status	Output	DWord	16#0	Status of the instruction: see description of Status parameter
Error	Output	Bool	False	If True, this output indicates that an error has occurred. For detailed information see Status parameter. Error is reset as soon as the error is remedied.

* Checked once at startup of the CPU

** The IPO model (PIP_Mode = 2) provides the shortest response times, but it also places the highest demands on system performance. Processing of all TIO instructions and other program sections must be completed within one send clock.

Status parameter

Error codes or status information is output as double word at the Status output.

The double word is divided as follows:

Segment of the error code	Meaning
z0yywwww	Error of a system function: • during startup (z = 0) • during normal operation (z = 1) System functions with subordinate use are coded in yy: See table with error codes. wwww specifies the RET_VAL of the system function. The error information is available in the help for the system function.
z0yy0000	An error that does not originate in a system function. This error receives a consecutive error number yy. The error can occur: • during startup (z = 0) • during normal operation (z = 1)

Table with error codes

Error code (DW#16#...)	Meaning	Remedy
00000000	No error.	—
1001xxxx	An error has occurred with system function RD_SINFO. The low word xxxx displays the error information of the RET_VAL return value from RD_SINFO.	• Read the description of the RD_SINFO in the TIA Portal information system. • Make sure that TIO_SYNC is called in a "Synchronous Cycle" OB.
10020000	The read cycle time of the isochronous OB is LT#0ms or has as negative value and is therefore invalid. The instruction can only be used without errors in an isochronous OB.	• Correct the value of the cycle time. • Make sure that TIO_SYNC is called in a "Synchronous Cycle" OB.
10030000	The TIO_SYNC instruction is not called in an isochronous OB. The instruction can only be used without errors in an isochronous OB. Possible cause: The TIO_SYNC instruction was called in an "MC-Servo" or "MC-Interpolator" OB.	Make sure that TIO_SYNC is called in a "Synchronous Cycle" OB.
10040000	The assigned value at the PIP_Mode input parameter is outside the valid range of 0 to 2.	Correct the value at the PIP_Mode input parameter.
10050000	The assigned send clock is outside the permitted range of 0 < SendClock <= 4 ms and is therefore invalid.	Correct the value of the send clock.
0006xxxx	An error has occurred during execution of the SYNC_PI system function. The low word xxxx displays the error information of the RET_VAL return value from SYNC_PI.	Read the description of the SYNC_PI in the TIA Portal information system.
0007xxxx	An error has occurred during execution of the SYNC_PO system function. The low word xxxx displays the error information of the RET_VAL return value from SYNC_PO.	Read the description of the SYNC_PO in the TIA Portal information system.

Error code (DW#16#...)	Meaning	Remedy
10080000	Isochronous mode missing. Time-based IO cannot be used. Possible cause: Internal error during address calculation	Check the values of input parameters HWID_1 to HWID_8. Specify the hardware identifier of the TIO module from its module properties in HWCN.
10090000	TIO module HWID_1: Error during reading of HWID_1.	Check the value of the respective input parameter. Specify the hardware identifier of the TIO module in each case from its module properties in HWCN. An internal system constant of data type Hw_SubModule is available for the symbolic addressing.
100A0000	TIO module HWID_2: Error during reading of HWID_2.	
100B0000	TIO module HWID_3: Error during reading of HWID_3.	
100C0000	TIO module HWID_4: Error during reading of HWID_4.	
100D0000	TIO module HWID_5: Error during reading of HWID_5.	
100E0000	TIO module HWID_6: Error during reading of HWID_6.	
100F0000	TIO module HWID_7: Error during reading of HWID_7.	
10100000	TIO module HWID_8: Error during reading of HWID_8.	
10110000	The configured process image partition at input parameter PIP_PART is not within the valid range of 1 to 31.	Correct the value at the PIP_PART input parameter.
x0FF0000	General internal error.	—

4.3.2 TIO_IOLink_IN: Read process input signals with time stamps

Description

You can use the Time-based IO with the TIO_IOLink_IN instruction. TIO_IOLink_IN detects an event at the IO-Link Device and returns the process value including the associated time stamp.

The IO-Link Device must be equipped with the time stamp function and the Port must be in "IO-Link, Time based IN" mode.

Startup characteristics

During startup of the CPU, the instruction TIO_IOLink_IN applies the input parameters once and checks the following:

- Checking HWID
- Checking whether the Port number is in the range (1 to 4)
- Checking TIO_SYNC_Data.Error: Is an error present at TIO_SYNC?
- Checking T_o for a positive value
- Checking the setting to type IO-Link
- Checking Port mode regarding configuration for IO-Link Time based IN
- Checking whether the OB is a "Synchronous Cycle" OB
- Checking PortQualifier

If startup takes place without errors, the instruction changes to normal operation. In the event of an error, the instruction does not change to normal operation and generates an error message.

Operating principle

In normal operation, the instruction detects the process data (SA_Data) of an IO-Link Device and the associated time stamp (time = TIO_Time) of the last valid change. Each valid change of the SA_Data with a correctly functioning port is accompanied by a valid time stamp.

You connect the input TIO_SYNC_Data with the output of the same name of the TIO_SYNC instruction. This ensures a shared time basis.

Reaction to error

The Error output indicates if the instruction was processed correctly. The reasons for the errors are displayed at the Status output.

Parameter

The table below shows the parameters of the TIO_IOLink_IN instruction.

Parameter	Declaration	Data type S7-1500	Default	Description
HWID*	Input	HW_IO	0	Hardware identifier for TIO module from HWCN
Port*	Input	USInt	0	Port number (1 to 4) of the connected IO-Link Device
TIO_SYNC_ Data*	Input	"TIO_SYNC_ Data"		System time provided for the TIO instructions of the TIO modules by the TIO_SYNC instruction. See UDT "TIO_SYNC_Data" (Page 57). Connect this input parameter with the "TIO_SYNC_Data" output parameter of the TIO_SYNC instruction.
TO*	Input	LTime	LT#0ns	T_o: Time for output of isochronous output data. Apply T_o from the ET 200 station (properties of the PROFINET interface).
SA_Bit0	Output	Bool	False	Display of a process data change (bit 0 of SA_Data). SA_Bit0 is event-oriented. As long as no valid time stamp has been acquired (EventCount = 0), the process data are invalid.
SA_Bit1	Output	Bool	False	Display of a process data change (bit 1 of SA_Data). SA_Bit1 is event-oriented. As long as no valid time stamp has been acquired (EventCount = 0), the process data are invalid.
SA_Data	Output	DWord	16#0	Process data SA_Data (Sensor Application Data)
TimeStamp	Output	LTime	LT#0ns	Time stamp: Time when a change of the process signal SA-Data took place at the IO-Link Device.
EventCount	Output	UInt	0	Counter: Is incremented with each new, valid time stamp. The counter is reset with each CPU startup.
Status	Output	DWord	16#0	Status of the instruction: see description of Status parameter
Error	Output	Bool	False	If True, this output indicates that an error has occurred. For detailed information see Status parameter. Error is reset as soon as the error is remedied.

* Checked once at startup of the CPU

Status parameter

Error codes or status information is output as double word at the Status output.

The double word is divided as follows:

Segment of the error code	Meaning
z0yywwww	Error of a system function: • during startup (z = 0) • during normal operation (z = 1) System functions with subordinate use are coded in yy: See table with error codes. wwww specifies the RET_VAL of the system function. The system function is available in the help for the system function.
z0yy0000	An error that does not originate in a system function. This error receives a consecutive error number yy. The error can occur: • during startup (z = 0) • during normal operation (z = 1)

Table with error codes

Error code (DW#16#...)	Meaning	Remedy
00000000	No error.	—
10010000	The assigned number at the Port input parameter is outside the valid range of 1 to 4.	Correct the value at the Port input parameter.
10020000	The TIO_IOLink_IN instruction is not called in an isochronous OB. The instruction can only be used without errors in an isochronous OB.	Make sure that TIO_IOLink_IN is called in a "Synchronous Cycle" OB.
10030000	An error occurred when reading the HWID input parameter.	Check the value at the HWID input parameter. Specify the hardware identifier of the TIO module from its module properties in HWCN. An internal system constant of data type Hw_SubModule is available for the symbolic addressing.
x0040000	The data in TIO_SYNC_Data is invalid/incorrect.	Check the TIO_SYNC instruction and the interconnection of its TIO_SYNC_Data output.
1005xxxx	An error has occurred during execution of the RD_SINFO system function. The low word xxxx displays the error information of the RET_VAL return value from RD_SINFO.	• Read the description of the RD_SINFO in the TIA Portal information system. • Make sure that TIO_IOLink_IN is called in a "Synchronous Cycle" OB.
10060000	Unable to find IO-Link Device. Possible cause: The module configured using the hardware identifier is not an IO-Link Master for Time-based IO.	• Make sure that the configured module is an IO-Link Master for Time-based IO. • Check the value at the HWID input parameter. Specify the hardware identifier of the TIO module from its module properties in HWCN.

Error code (DW#16#...)	Meaning	Remedy
10070000	An internal error occurred during the address calculation.	Check the value at the HWID input parameter. Specify the hardware identifier of the TIO module from its module properties in HWCN. An internal system constant of data type Hw_SubModule is available for the symbolic addressing.
00080000	TIO module is not synchronized using the TIO_SYNC instruction.	Check the instruction TIO_SYNC.
10090000	The read cycle time of the isochronous OB is outside the permitted range of 0 < T_{APP} <= 16 ms and is therefore invalid. The instruction can only be used without errors in an isochronous OB.	• Correct the cycle time. • Make sure that TIO_IOLink_IN is called in a "Synchronous Cycle" OB.
100A0000	The assigned time at the TO input parameter is outside the permitted range of 0 < T_o <= 4 ms.	Correct the value at the TO input parameter.
100Bxxxx	An error has occurred during execution of the RD_ADDR system function. The low word xxxx displays the error information of the RET_VAL return value from RD_ADDR.	Read the description of the RD_ADDR in the TIA Portal information system.
000C0000	The converted time stamp is invalid.	Check the connected sensor and the interaction between IO-Link Master and sensor (e.g., configuration).
000D0000	The value status PortQualifier of the IO-Link indicates that the process data is invalid.	Check the connected sensor and its configuration.
100E0000	The configured port mode of the IO-Link is incorrect.	Check the configuration of the connected sensor with S7-PCT.
x0FF0000	General internal error.	—

4.3.3 TIO_DI: Reading in edges at digital input and associated time stamps

Description

You can use the Time-based IO with the TIO_DI instruction. TIO_DI continuously detects the edges at a digital input of a TM Timer DIDQ and returns the associated time stamps.

Startup characteristics

During startup of the CPU, the instruction TIO_DI applies the input parameters once and checks the following:

- Checking HWID
- Checking to see if the number of the digital input (Channel) is in the permitted range (depending on addressed module and channel configuration)
- Checking TIO_SYNC_Data.Error: Is an error present at TIO_SYNC?
- Checking T_o for validity (0 ms to 4 ms)
- Checking whether the OB is a "Synchronous Cycle" OB

If startup takes place without errors, the instruction changes to normal operation. The input parameter EdgeSel can be changed during normal operation. In the event of an error, the instruction does not change to normal operation and generates an error message.

Operating principle

In normal operation, the instruction detects the edges at a digital input and the associated time stamps (time = TIO_Time) of the last valid, defined edge pair. Use the input parameter EdgeSel to determine the edges for which time stamps are detected.

You connect the input TIO_SYNC_Data with the output of the same name of the TIO_SYNC instruction. This ensures a shared time basis.

Reaction to error

The Error output indicates if the instruction was processed correctly. The reasons for the errors are displayed at the Status output.

Parameter

The table below shows the parameters of the TIO_DI instruction.

Parameter	Declaration	Data type S7-1500	Default	Description
HWID*	Input	HW_IO	0	Hardware identifier for TIO module from HWCN
Channel*	Input	UInt	0	Number (0 ... m) of the digital input of the connected TM Timer DIDQ
TIO_SYNC_Data*	Input	"TIO_SYNC_Data"		System time provided for the TIO instructions of the TIO modules by the TIO_SYNC instruction. See UDT "TIO_SYNC_Data" (Page 57). Connect this input parameter with the "TIO_SYNC_Data" output parameter of the TIO_SYNC instruction.
EdgeSel	Input	UInt	3	Specify the edges for which time stamps are detected: 0_D: Reserved 1_D: Only at positive edges 2_D: Only at negative edges 3_D: Positive and negative edges (order depending on occurrence) 4_D: First positive, then negative edge 5_D: First negative, then positive edge 6 bis 255_D: Reserved
TO*	Input	LTime	LT#0ns	T_o: Time for output of isochronous output data. Apply T_o from the ET 200 station (properties of the PROFINET interface).
DI	Output	Bool	False	Status of digital input. If an inversion of the digital input is configured, this parameter is inverted as well.
TimeStamp RE	Output	LTime	LT#0ns	Time stamp: Time at which a positive edge was detected. Exception: EdgeSel = 2_D: Time at which a negative edge was detected.
TimeStampFE	Output	LTime	LT#0ns	Time stamp: Time at which a negative edge was detected. Exception: EdgeSel = 1_D: Time at which a positive edge was detected.
EventCount RE	Output	UInt	0	Counter: Is incremented with each new, valid time stamp at a positive edge. The counter is reset with each CPU startup.
EventCount FE	Output	UInt	0	Counter: Is incremented with each new, valid time stamp at a negative edge. The counter is reset with each CPU startup.
LEC	Output	UInt	0	Counter: Number of edges for which no time stamp could be saved. The module can count a maximum of seven edges per application cycle. The counter is reset with each new application cycle.

Parameter	Declaration	Data type S7-1500	Default	Description
Status	Output	DWord	16#0	Status of the instruction: see description of Status parameter
Error	Output	Bool	False	If True, this output indicates that an error has occurred. For detailed information see Status parameter. Error is reset as soon as the error is remedied.

* Checked once at startup of the CPU

Status parameter

Error codes or status information is output as double word at the Status output.

The double word is divided as follows:

Segment of the error code	Meaning
z0yywwww	Error of a system function: • during startup (z = 0) • during normal operation (z = 1) System functions with subordinate use are coded in yy: See table with error codes. wwww specifies the RET_VAL of the system function. The system function is available in the help for the system function.
z0yy0000	An error that does not originate in a system function. This error receives a consecutive error number yy. The error can occur: • during startup (z = 0) • during normal operation (z = 1)

Table with error codes

Error code (DW#16#...)	Meaning	Remedy
00000000	No error.	—
10010000	The assigned number of the digital input at the Channel input parameter is outside the permitted range (depending on addressed module and channel configuration).	Correct the value at the Channel input parameter.
10020000	The TIO_DI instruction is not called in an isochronous OB. The instruction can only be used without errors in an isochronous OB.	Make sure that TIO_DI is called in a "Synchronous Cycle" OB.
10030000	An error occurred when reading the HWID input parameter.	Check the value at the HWID input parameter. Specify the hardware identifier of the TIO module from its module properties in HWCN. An internal system constant of data type Hw_SubModule is available for the symbolic addressing.
x0040000	The data in TIO_SYNC_Data is invalid/incorrect.	Check the TIO_SYNC instruction and the interconnection of its TIO_SYNC_Data output.
1005xxxx	An error has occurred during execution of the RD_SINFO system function. The low word xxxx displays the error information of the RET_VAL return value from RD_SINFO.	• Read the description of the RD_SINFO in the TIA Portal information system. • Make sure that TIO_DI is called in a "Synchronous Cycle" OB.
10060000	Unable to find TM Timer DIDQ. Possible cause: The module configured using the hardware identifier is not a TM Timer DIDQ.	• Make sure that the configured module is a TM Timer DIDQ. • Check the value at the HWID input parameter. Specify the hardware identifier of the TIO module from its module properties in HWCN.
10070000	An internal error occurred during the address calculation.	Check the value at the HWID input parameter. Specify the hardware identifier of the TIO module from its module properties in HWCN. An internal system constant of data type Hw_SubModule is available for the symbolic addressing.
00080000	TIO module is not synchronized using the TIO_SYNC instruction.	Check the instruction TIO_SYNC.
10090000	The read cycle time of the isochronous OB is outside the permitted range of $0 < T_{APP} <= 16$ ms and is therefore invalid. The instruction can only be used without errors in an isochronous OB.	• Correct the cycle time. • Make sure that TIO_DI is called in a "Synchronous Cycle" OB.
100A0000	The assigned time at the TO input parameter is outside the permitted range of $0 < T_o <= 4$ ms.	Correct the value at the TO input parameter.
100Bxxxx	An error has occurred during execution of the RD_ADDR system function. The low word xxxx displays the error information of the RET_VAL return value from RD_ADDR.	Read the description of the RD_ADDR in the TIA Portal information system.

Error code (DW#16#...)	Meaning	Remedy
000C0000	The converted time stamp is invalid. Possible cause: Communication error	Check the PROFINET communication with the TIO module.
000D0000	The Quality Information of the digital input indicates that an error has occurred at the digital input.	Check the wiring of the digital input.
000E0000	The assigned number at the Channel input parameter is not a digital input configured as Timer DI.	• Check the channel configuration (only for TM Timer DIDQ 16x24V). • Check the operating mode of the digital input.
000F0000	The assigned value at the EdgeSel input parameter is outside the valid range of 1 to 5.	Correct the value at the EdgeSel input parameter.
10100000	The send clock is outside the permitted range of 0 < SendClock <= 4 ms and is therefore invalid. The error code can also indicate that • The data in TIO_SYNC_Data is invalid or does not exist. • The TIO_DI instruction is not called in an isochronous OB.	Correct the send clock.
x0FF0000	General internal error.	—

4.3.4 TIO_IOLink_OUT: Output time-controlled process output signals

Description

You can use Time-based IO with the TIO_IOLink_OUT instruction. TIO_IOLink_OUT lets you activate the output data of an IO-Link Device at a specified time.

The IO-Link Device must be equipped with the time stamp function and the Port must be in "IO-Link, Time based OUT" mode.

Startup characteristics

During startup of the CPU, the instruction TIO_IOLink_OUT applies the input parameters once and checks the following:

- Checking HWID
- Checking whether the Port number is in the range (1 to 4)
- Checking TIO_SYNC_Data.Error: Is an error present at TIO_SYNC?
- Checking T_o for a positive value
- Checking the setting to type IO-Link
- Checking Port mode regarding configuration for IO-Link Time based OUT
- Checking whether the OB is a "Synchronous Cycle" OB
- Checking PortQualifier

If startup takes place without errors, the instruction changes to normal operation. The input parameters REQ , Out_Mode, TimeStamp and AA_Data can be changed during normal operation. In the event of an error, the instruction does not change to normal operation and generates an error message.

Operating principle

In normal operation, the instruction sends the process data (AA_Data) to an IO-Link Device. The output data AA_Data are activated at the time defined at the input parameter TimeStamp.

You connect the input TIO_SYNC_Data with the output of the same name of the TIO_SYNC instruction. This ensures a shared time basis.

You start an output job with a positive edge at the "REQ" parameter. You can only start a new job when there is no error pending and no job is active. When starting the output job, the AA_Data (bit 0, 1) are activated on the IO-Link Device at a time defined by TimeStamp. The job is done when the last application cycle is executed before the output time is reached (Done). Status and Error are constantly being updated during the job runtime.

Note

Once the job has been started with a positive edge, you can adapt the output time with the input of a new TimeStamp without having to restart the job.

Constraint:

If the adapted time stamp is less than 16 ms before the output time (TimeStamp - TIO_Time < 16), the last valid time stamp is used.

If you specify the value 0 as TimeStamp, the output is written directly with the data specified at the input AA_Data. This gives you the option to implement a direct control from the TIO module without time stamp in manual mode. You can use the direct control to interrupt an ongoing job.

Reaction to error

The Error output indicates if the instruction was processed correctly. The reasons for the errors are displayed at the Status output.

Parameter

The table below shows the parameters of the TIO_IOLink_OUT instruction.

Parameter	Declaration	Data type S7-1500	Default	Description
REQ	Input	Bool	False	Starts the job at a positive edge.
HWID*	Input	HW_IO	0	Hardware identifier for TIO module from HWCN.
TO*	Input	LTime	LT#0ns	T_o: Time for output of isochronous output data. Apply T_o from the ET 200 station (properties of the PROFINET interface).
Port*	Input	USInt	0	Port number (1 to 4) of the specified IO-Link Device
TIO_SYNC_ Data*	Input	"TIO_SYNC_ Data"		System time provided for the TIO instructions of the TIO modules by the TIO_SYNC instruction. See UDT "TIO_SYNC_Data" (Page 57). Connect this input parameter with the "TIO_SYNC_Data" output parameter of the TIO_SYNC instruction.
TimeStamp	Input	LTime	LT#0ns	Time stamp: Time when the process data (AAE1, AAE2) are to be output.
AA_Data	Input	Word	16#0	Process output data: Date to be output (Word). Includes AAE1 and AAE2 on bit 0, 1.
Busy	Output	Bool	False	Busy = True: The job is not complete yet.
Done	Output	Bool	False	Done = True is displayed for one cycle: The job is signaled as "done, no errors".
Error	Output	Bool	False	If True, this output indicates that an error has occurred. In this case, BUSY and DONE are set to False. For detailed information see Status parameter. Error is reset as soon as the error is remedied.
Status	Output	DWord	16#0	Status of the instruction: see description of Status parameter

* Checked once at startup of the CPU

Status parameter

Error codes or status information is output as double word at the Status output.

The double word is divided as follows:

Segment of the error code	Meaning
z0yywwww	Error of a system function: • during startup (z = 0) • during normal operation (z = 1) System functions with subordinate use are coded in yy: See table with error codes. wwww specifies the RET_VAL of the system function. The error information is available in the help for the system function.
z0yy0000	An error that does not originate in a system function. This error receives a consecutive error number yy. The error can occur: • during startup (z = 0) • during normal operation (z = 1)

Table with error codes

Error code (DW#16#...)	Meaning	Remedy
00000000	No error.	—
10010000	The assigned number at the Port input parameter is outside the valid range of 1 to 4.	Correct the value at the Port input parameter.
10020000	The TIO_IOLink_OUT instruction is not called in an isochronous OB. The instruction can only be used without errors in an isochronous OB.	Make sure that TIO_IOLink_OUT is called in a "Synchronous Cycle" OB.
10030000	An error occurred when reading the HWID input parameter.	Check the value at the HWID input parameter. Specify the hardware identifier of the TIO module from its module properties in HWCN. An internal system constant of data type Hw_SubModule is available for the symbolic addressing.
x0040000	The data in TIO_SYNC_Data is invalid/incorrect.	Check the TIO_SYNC instruction and the interconnection of its TIO_SYNC_Data output.
1005xxxx	An error has occurred during execution of the RD_SINFO system function. The low word xxxx displays the error information of the RET_VAL return value from RD_SINFO.	• Read the description of the RD_SINFO in the TIA Portal information system. • Make sure that TIO_IOLink_OUT is called in a "Synchronous Cycle" OB.
10060000	Unable to find IO-Link Device. Possible cause: The module configured using the hardware identifier is not an IO-Link Master for Time-based IO.	• Make sure that the configured module is an IO-Link Master for Time-based IO. • Check the value at the HWID input parameter. Specify the hardware identifier of the TIO module from its module properties in HWCN.

Error code (DW#16#...)	Meaning	Remedy
10070000	An internal error occurred during the address calculation.	Check the value at the HWID input parameter. Specify the hardware identifier of the TIO module from its module properties in HWCN. An internal system constant of data type Hw_SubModule is available for the symbolic addressing.
00080000	TIO module is not synchronized using the TIO_SYNC instruction.	Check the instruction TIO_SYNC.
10090000	The read cycle time of the isochronous OB is outside the permitted range of 0 < T_{APP} <= 16 ms and is therefore invalid. The instruction can only be used without errors in an isochronous OB.	• Correct the cycle time. • Make sure that TIO_IOLink_OUT is called in a "Synchronous Cycle" OB.
100A0000	The assigned time at the TO input parameter is outside the permitted range of 0 < T_o <= 4 ms.	Correct the value at the TO input parameter.
100Bxxxx	An error has occurred during execution of the RD_ADDR system function. The low word xxxx displays the error information of the RET_VAL return value from RD_ADDR.	Read the description of the RD_ADDR in the TIA Portal information system.
000C0000	The time stamp at the TimeStamp input parameter is invalid.	Check the TimeStamp input parameter.
000D0000	The value status PortQualifier of the IO-Link indicates that the process data is invalid.	Check the connected sensor and its configuration.
100E0000	The configured port mode of the IO-Link is incorrect.	Check the configuration of the connected sensor with S7-PCT.
100F0000	The read cycle time of the "Synchronous Cycle" OB is too long. T_{APP} > 16 ms.	Configure a smaller multiple of the send clock as the cycle time.
x0FF0000	General internal error.	—

4.3.5 TIO_DQ: Output edges time-controlled at the digital output

Description

You can use Time-based IO with the TIO_DQ instruction. TIO_DQ switches the digital output of a TM Timer DIDQ at a specified time.

Startup characteristics

During startup of the CPU, the instruction TIO_DQ applies the input parameters once and checks the following:

- Checking HWID
- Checking to see if the number of the digital input (Channel) is in the permitted range (depending on addressed module and channel configuration)
- Checking TIO_SYNC_Data.Error: Is an error present at TIO_SYNC?
- Checking T_o for validity (0 ms to 4 ms)
- Checking whether the OB is a "Synchronous Cycle" OB

If startup takes place without errors, the instruction changes to normal operation. The input parameters REQ , Out_Mode, TimeStampRE and TimeStampFE can be changed during normal operation. In the event of an error, the instruction does not change to normal operation and generates an error message.

Operating principle

The instruction outputs edges time-controlled at a digital output during normal operation.

- At the time defined at the TimeStampRE input parameter, a positive edge is output at the digital output.
- At the time defined at the TimeStampFE input parameter, a negative edge is output at the digital output.

Use the input parameter Out_Mode to determine if only one edge or both edges are output.

You connect the input TIO_SYNC_Data with the output of the same name of the TIO_SYNC instruction. This ensures a shared time basis.

You start an output job with a positive edge at the "REQ" parameter. You can only start a new job when there is no error pending and no job is active. When the output job is started, the digital output is switched at the times defined with TimeStampRE and TimeStampFE.

- If the digital output is already set at time TimeStampRE, the output job is not transferred to the module for the positive edge.
- If the digital output is not set at time TimeStampFE, the output job is not transferred to the module for the negative edge.

This means the digital output is not switched in both cases.

The job is done when the last application cycle is executed before the second output time is reached (DONE). Status and Error are constantly being updated during the job runtime.

The figure below shows an example for the reaction of the bits DONE and BUSY at the start of an output job under the following conditions:

- Out_Mode = 2
- The two time stamps are not adapted between the start of the job and the output.

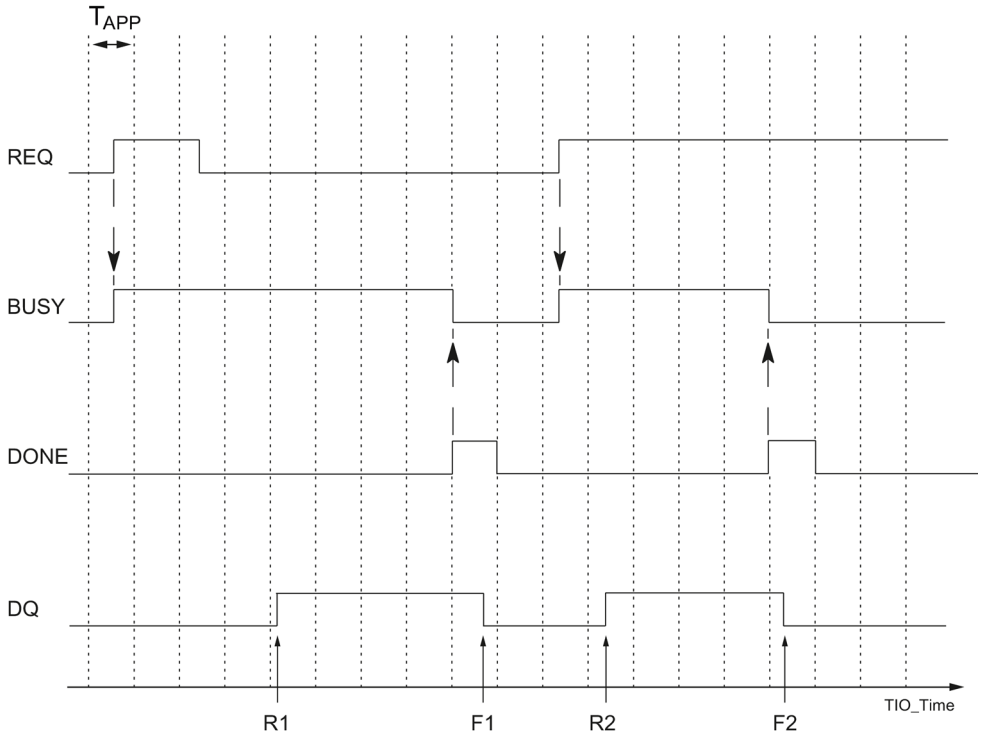

T_{APP}	Application cycle
R1, R2	Specified times of a positive DQ edge
F1, F2	Specified times of a negative DQ edge

Note

Once the job has been started with a positive edge, you can adapt the output times with the input of TimeStampRE and TimeStampFE without having to restart the job.

Constraint:

If an adapted time stamp is less than two application cycles away from the output time (TimeStampRE - TIO_Time < 2*T_{APP} or TimeStampFE - TIO_Time < 2*T_{APP}), the last valid time stamp is used.

If you specify the value "0" as TimeStampRE or TimeStampFE, you can output the respective edge directly at the digital output with the input parameter Out_Mode = 3. This gives you the option to implement a direct control from the TIO module without time stamp in manual mode. You can use the direct control to interrupt an ongoing job.

Changes to the input parameters are not applied until the TIO_DQ instruction detects a startup of the CPU.

Reaction to error

The Error output indicates if the instruction was processed correctly. The reasons for the errors are displayed at the Status output.

Parameter

The table below shows the parameters of the TIO_DQ instruction.

Parameter	Declaration	Data type S7-1500	Default	Description
REQ	Input	Bool	False	Starts the job at a positive edge.
HWID*	Input	HW_IO	0	Hardware identifier for TIO module from HWCN.
Channel*	Input	UInt	0	Number (0 ... m) of the digital output of the connected TM Timer DIDQ
TIO_SYNC_Data*	Input	"TIO_SYNC_Data"		System time provided for the TIO instructions of the TIO modules by the TIO_SYNC instruction. See UDT "TIO_SYNC_Data" (Page 57). Connect this input parameter with the "TIO_SYNC_Data" output parameter of the TIO_SYNC instruction.
Out_Mode	Input	UInt	2	Specify the output mode for the edges at the digital output: 0_D: Output only positive edge (TimeStampRE). 1_D: Output only negative edge (TimeStampFE). 2_D: Both edges are output (TimeStampRE and TimeStampFE). 3_D: Each edge is output directly when TimeStampRE = 0 or TimeStampFE = 0. If both time stamps have the value "0" or if no time stamp has the value "0", no edge is output. 4 bis 255_D: Reserved
TO*	Input	LTime	LT#0ns	T_o: Time for output of isochronous output data. Apply T_o from the ET 200 station (properties of the PROFINET interface).
TimeStamp RE	Input	LTime	LT#0ns	Time stamp: Time when a positive edge is to be output.
TimeStampF E	Input	LTime	LT#0ns	Time stamp: Time when a negative edge is to be output.
StatusDQ	Output	Bool	False	Actual status of the digital output. If an inversion of the digital output is configured, StatusDQ is inverted as well.
BUSY	Output	Bool	False	BUSY = True: The job is not complete yet.
DONE	Output	Bool	False	DONE = True is displayed for one cycle: The job is signaled as "done, no errors".
Status	Output	DWord	16#0	Status of the instruction: see description of Status parameter
Error	Output	Bool	False	If True, this output indicates that an error has occurred. In this case, BUSY and DONE are set to False. For detailed information see Status parameter. Error is reset as soon as the error is remedied.

* Checked once at startup of the CPU

Status parameter

Error codes or status information is output as double word at the Status output.

The double word is divided as follows:

Segment of the error code	Meaning
z0yywwww	Error of a system function: • during startup (z = 0) • during normal operation (z = 1) System functions with subordinate use are coded in yy: See table with error codes. wwww specifies the RET_VAL of the system function. The error information is available in the help for the system function.
z0yy0000	An error that does not originate in a system function. This error receives a consecutive error number yy. The error can occur: • during startup (z = 0) • during normal operation (z = 1)

Table with error codes

Error code (DW#16#...)	Meaning	Remedy
00000000	No error.	—
10010000	The assigned number of the digital output at the Channel input parameter is outside the permitted range (depending on addressed module and channel configuration).	Correct the value at the Channel input parameter.
10020000	The TIO_DQ instruction is not called in an isochronous OB. The instruction can only be used without errors in an isochronous OB.	Make sure that TIO_DQ is called in a "Synchronous Cycle" OB.
10030000	An error occurred when reading the HWID input parameter.	Check the value at the HWID input parameter. Specify the hardware identifier of the TIO module from its module properties in HWCN. An internal system constant of data type Hw_SubModule is available for the symbolic addressing.
x0040000	The data in TIO_SYNC_Data is invalid/incorrect.	Check the TIO_SYNC instruction and the interconnection of its TIO_SYNC_Data output.
1005xxxx	An error has occurred during execution of the RD_SINFO system function. The low word xxxx displays the error information of the RET_VAL return value from RD_SINFO.	• Read the description of the RD_SINFO in the TIA Portal information system. • Make sure that TIO_SYNC is called in a "Synchronous Cycle" OB.
10060000	Unable to find TM Timer DIDQ. Possible cause: The module configured using the hardware identifier is not a TM Timer DIDQ.	• Make sure that the configured module is a TM Timer DIDQ. • Check the value at the HWID input parameter. Specify the hardware identifier of the TIO module from its module properties in HWCN.

Error code (DW#16#...)	Meaning	Remedy
10070000	An internal error occurred during the address calculation.	Check the value at the HWID input parameter. Specify the hardware identifier of the TIO module from its module properties in HWCN. An internal system constant of data type Hw_SubModule is available for the symbolic addressing.
x0080000	TIO module is not synchronized using the TIO_SYNC instruction. The error code can also indicate that: • A job was already present before the first run of the instruction. • The assigned number at the Channel input parameter is not a digital output.	Check the instruction TIO_SYNC.
10090000	The read cycle time of the isochronous OB is LT#0ms or has as negative value and is therefore invalid. Correct the value. The instruction can only be used without errors in an isochronous OB.	• Correct the cycle time. • Make sure that TIO_DQ is called in a "Synchronous Cycle" OB.
100A0000	The assigned time at the TO input parameter is outside the permitted range of 0 < T_o <= 4 ms.	Correct the value at the TO input parameter.
100Bxxxx	An error has occurred during execution of the RD_ADDR system function. The low word xxxx displays the error information of the RET_VAL return value from RD_ADDR.	Read the description of the RD_ADDR in the TIA Portal information system.
000C0000	One or both time stamps at the TimeStampRE and TimeStampFE input parameters are invalid. The error is only signaled for the duration of one application cycle.	Check the TimeStampRE and TimeStampFE input parameters.
000D0000	The Quality Information of the digital output indicates that an error has occurred at the digital output.	• Check the parameter assignment of the digital output. • Check the wiring of the digital output for short-circuit, overload, and overtemperature.
000E0000	The assigned number at the Channel input parameter is not a digital output.	• Check the channel configuration (only for TM Timer DIDQ 16x24V). • Check the operating mode of the digital output.
100F0000	The read cycle time of the "Synchronous Cycle" OB is too long. T_{APP} > 16 ms.	Configure a smaller multiple of the send clock as the cycle time.
10100000	The send clock is outside the permitted range of 0 < SEND_CLOCK <= 4 ms and is therefore invalid. The error code can also indicate that • The data in TIO_SYNC_Data is invalid or does not exist. • The TIO_DQ instruction is not called in an isochronous OB.	Correct the send clock.

Error code (DW#16#...)	Meaning	Remedy
00110000	The assigned value at the Out_Mode input parameter is outside the valid range of 0 to 3.	Correct the value at the Out_Mode input parameter.
x0FF0000	General internal error.	—

4.3.6 UDT "TIO_SYNC_Data"

Description

The data type UDT "TIO_SYNC_Data" contains the central structure and data for synchronization of the modules and passing of the TIO_Time.

Parameter

Parameter	Data type S7-1500	Description
TIO_TIME_BASE	LTime	Internal use
TIO_TIME	LTime	Shared time basis (relative time) of the TIO modules.
PIP_MODE	USInt	Mode for data update (is forwarded by the PIP_Mode input parameter of the TIO_SYNC instruction)
APP_CYC	LTime	Application cycle of the "Synchronous Cycle" OB
SEND_CLOCK	LTime	Send clock of sync domain (is forwarded by the SendClock input parameter of the TIO_SYNC instruction)
TBase	LTime	Internal use
ERROR	Bool	Internal use

Service & Support

5

5.1 Service & Support

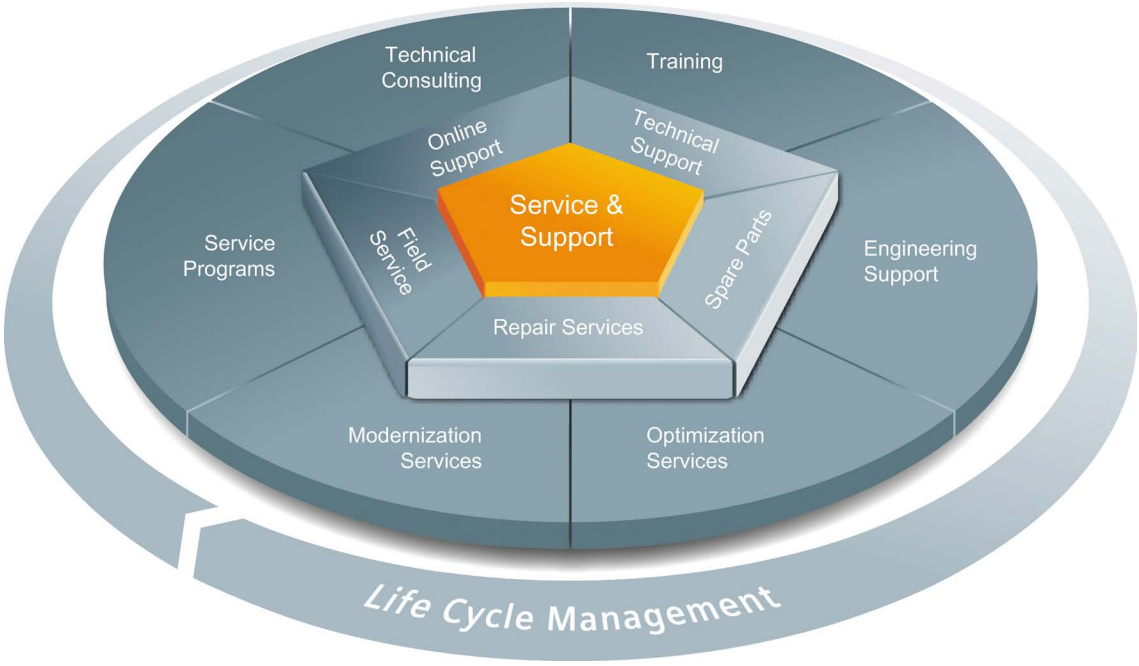

The unmatched complete service for the entire life cycle

For machine constructors, solution providers and plant operators: The service offering from Siemens Industry Automation and Drive Technologies includes comprehensive services for a wide range of different users in all sectors of the manufacturing and process industry.

To accompany our products and systems, we offer integrated and structured services that provide valuable support in every phase of the life cycle of your machine or plant – from planning and implementation through commissioning as far as maintenance and modernization.

Our Service & Support accompanies you worldwide in all matters concerning automation and drive technology from Siemens. We provide direct on-site support in more than 100 countries through all phases of the life cycle of your machines and plants.

You have an experienced team of specialists at your side to provide active support and bundled know-how. Regular training courses and intensive contact among our employees – even across continents – ensure reliable service in the most diverse areas

Online Support

The comprehensive online information platform supports you in all aspects of our Service & Support at any time and from any location in the world.

You can find Online Support on the Internet at the following address: Internet (http://www.siemens.com/automation/service&support).

Technical Consulting

Support in planning and designing your project: From detailed actual-state analysis, definition of the goal and consultation on product and system questions right through to the creation of the automation solution.

Technical Support

Expert advice on technical questions with a wide range of demand-optimized services for all our products and systems.

You can find Technical Support on the Internet at the following address: Internet (http://www.siemens.com/automation/support-request).

Training

Extend your competitive edge – through practical know-how directly from the manufacturer.

You can find the training courses we offer on the Internet at the following address: Internet (http://www.siemens.com/sitrain).

Engineering Support

Support during project engineering and development with services fine-tuned to your requirements, from configuration through to implementation of an automation project.

Field Service

Our Field Service offers you services for commissioning and maintenance – to ensure that your machines and plants are always available.

Spare parts

In every sector worldwide, plants and systems are required to operate with constantly increasing reliability. We will provide you with the support you need to prevent a standstill from occurring in the first place: with a worldwide network and optimum logistics chains.

Repairs

Downtimes cause problems in the plant as well as unnecessary costs. We can help you to reduce both to a minimum – with our worldwide repair facilities.

Optimization

During the service life of machines and plants, there is often a great potential for increasing productivity or reducing costs.

To help you achieve this potential, we are offering a complete range of optimization services.

Modernization

You can also rely on our support when it comes to modernization – with comprehensive services from the planning phase all the way to commissioning.

Service programs

Our service programs are selected service packages for an automation and drives system or product group. The individual services are coordinated with each other to ensure smooth coverage of the entire life cycle and support optimum use of your products and systems.

The services of a Service Program can be flexibly adapted at any time and used separately.

Examples of service programs:

- Service contracts
- Plant IT Security Services
- Life Cycle Services for Drive Engineering
- SIMATIC PCS 7 Life Cycle Services
- SINUMERIK Manufacturing Excellence
- SIMATIC Remote Support Services

Advantages at a glance:

- Reduced downtimes for increased productivity
- Optimized maintenance costs due to a tailored scope of services
- Costs that can be calculated and therefore planned
- Service reliability due to guaranteed response times and spare part delivery times
- Customer service personnel will be supported and relieved of additional tasks
- Comprehensive service from a single source, fewer interfaces and greater expertise

Contact

At your service locally, around the globe: your partner for consultation, sales, training, service, support, spare parts... for the entire range of products supplied by Industry Automation and Drive Technologies.

You can find your personal contact in our contacts database at: Internet (http://www.siemens.com/automation/partner).

Index

A

Accuracy, 16
    Calculating TIO_Time, 23
Application cycle, 21, 30, 57
Application examples Time-based IO, 13

C

Call sequence, 30
Cam controller,
CM 4xIO-Link,
Configuration,
    Standard configuration, 25
Configuration software, 19
Conventions
    Jitter, 4
    TIA Portal, 4
    TIO module, 4
    TIO_Time, 4
CPU cycle time, 13
Cycle time, 14

D

Data update,
Default setting, 27
Delay time, 21
Determinism,
Digital input
    TIO_DI, 42
Digital output
    TIO_DQ, 52
Documentation, 9
Dosing,

E

Error codes
    TIO_DI, 44
    TIO_DQ, 55
    TIO_IOLink_IN, 40
    TIO_IOLink_OUT, 50
    TIO_SYNC, 36
ET 200, 18, 26
    TM Timer DIDQ, 18

H

Hardware requirements, 18

I

IODD,
IO-Link, 18, 19, 34, 38, 47
    Setting ports, 28
IO-Link Device, 19, 25, 26, 27
IPO model
    Understanding IPO, 21
Isochronous communication, 20

J

Jitter, 4, 23

L

Length measurement,

M

Modes,
    Selecting the model of program editing, 21

O

OIP model
    Understanding OIP, 22

P

PIP_Mode, 57
    Setting PIP_Mode, 30
Port Configuration Tool, 11, 19, 25, 27
Ports
    Configuring ports, 27
Predictability, 15
Process data
    AA_Data, 47
    SA_Data, 38
Process image partition
    PIP, 30
    PIP1, 26
PROFINET, 19, 25, 26
    Using PROFINET IRT, 20
Programming, 30
Programming example, 32

R

Reproducibility, 13
Response time, 16
    Defined response times,
    Minimum response time, 16

S

S7-PCT, 11
Scope, 3
Send clock, 57
Service & Support, 4
SIMATIC functions, 20
Software download
    Port Configuration Tool, 11
STEP 7, 19
SYNC_PI, 21
SYNC_PO, 21
Synchronous Cycle, 30
    Understanding TIO instructions, 20
System environment, 17

T

TAPP,
TIA Portal, 4
Time behavior
    Standard technology, 14
    Time-based IO, 15
Time-based IO
    Setting Time-based IO, 26
    Understanding SIMATIC functions, 20
    Using the default setting, 27
    Using Time-based IO, 32
TIO instructions, 19
    Listing TIO instructions, 29
    TM Timer DIDQ, 19
TIO module, 4, 19, 26
TIO_DI, 42
TIO_DQ, 52
TIO_IOLink_IN, 38
TIO_IOLink_OUT, 47
TIO_SYNC, 34
    Synchronized TIO modules, 20
TIO_Time, 4, 15, 29
    TIO_DI, 42
    TIO_DQ, 52
    TIO_IOLink_IN, 38
    TIO_SYNC, 34
    UDT "TIO_SYNC_Data", 57
    Understanding TIO_Time, 20

U

UDT "TIO_SYNC_Data", 57
User program,

SIEMENS

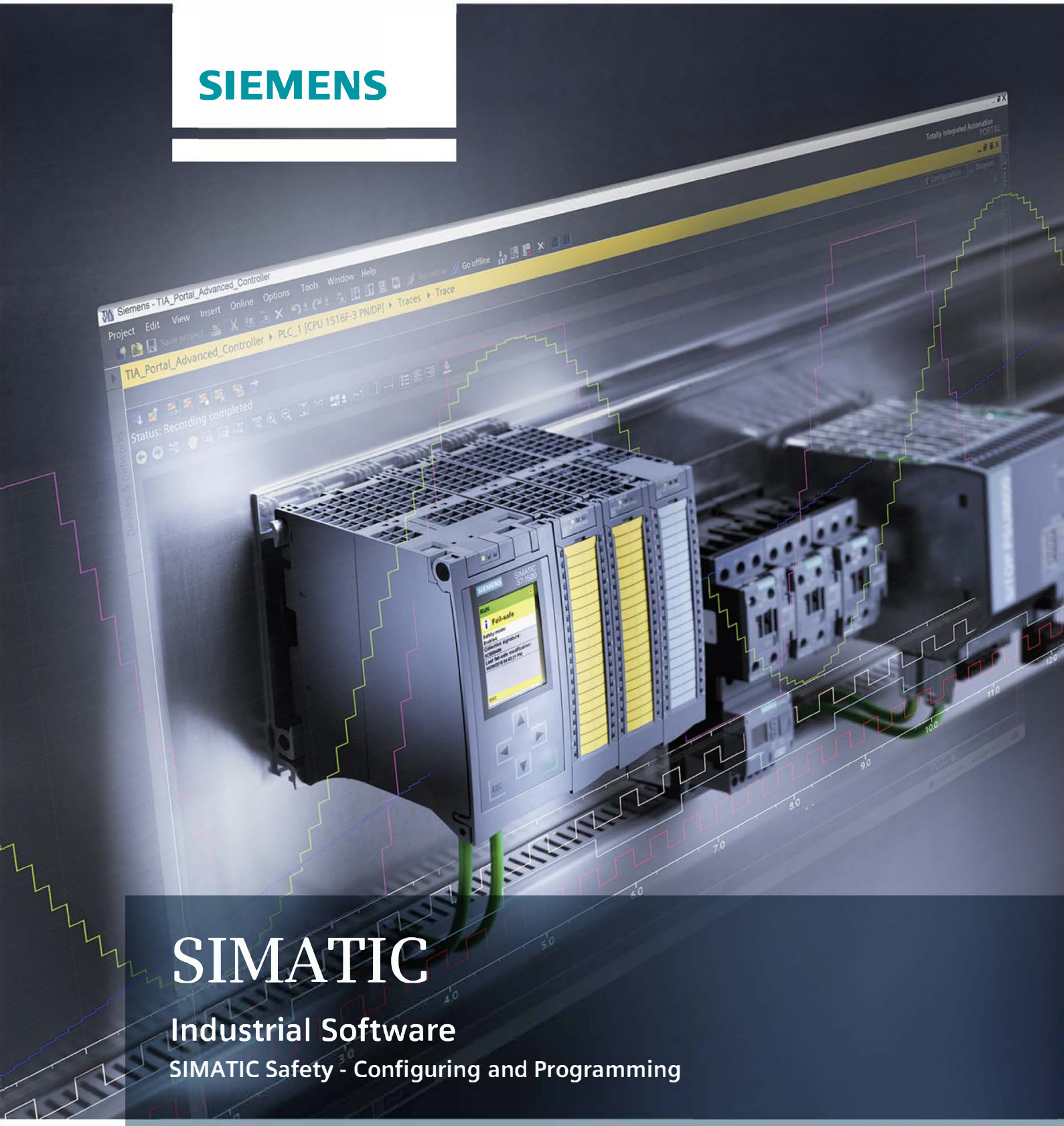

SIMATIC

Industrial Software

SIMATIC Safety - Configuring and Programming

Programming and operating manual

Edition 10/2018

siemens.com

SIEMENS

SIMATIC

Industrial Software SIMATIC Safety - Configuring and Programming

Programming and Operating Manual

Important notes

Product Overview 1

Configuring 2

Safety Administration Editor 3

Access protection 4

Programming 5

F-I/O access 6

Implementation of user acknowledgment 7

Data exchange between standard user program and safety program 8

Safety-related communication 9

Compiling and commissioning a safety program 10

System acceptance 11

Operation and Maintenance 12

Overview of instructions for the safety program 13

Monitoring and response times A

Checklist B

10/2018

A5E02714440-AH

Legal information

Warning notice system

This manual contains notices you have to observe in order to ensure your personal safety, as well as to prevent damage to property. The notices referring to your personal safety are highlighted in the manual by a safety alert symbol, notices referring only to property damage have no safety alert symbol. These notices shown below are graded according to the degree of danger.

⚠ DANGER

indicates that death or severe personal injury **will** result if proper precautions are not taken.

⚠ WARNING

indicates that death or severe personal injury **may** result if proper precautions are not taken.

⚠ CAUTION

indicates that minor personal injury can result if proper precautions are not taken.

NOTICE

indicates that property damage can result if proper precautions are not taken.

If more than one degree of danger is present, the warning notice representing the highest degree of danger will be used. A notice warning of injury to persons with a safety alert symbol may also include a warning relating to property damage.

Qualified Personnel

The product/system described in this documentation may be operated only by **personnel qualified** for the specific task in accordance with the relevant documentation, in particular its warning notices and safety instructions. Qualified personnel are those who, based on their training and experience, are capable of identifying risks and avoiding potential hazards when working with these products/systems.

Proper use of Siemens products

Note the following:

⚠ WARNING

Siemens products may only be used for the applications described in the catalog and in the relevant technical documentation. If products and components from other manufacturers are used, these must be recommended or approved by Siemens. Proper transport, storage, installation, assembly, commissioning, operation and maintenance are required to ensure that the products operate safely and without any problems. The permissible ambient conditions must be complied with. The information in the relevant documentation must be observed.

Trademarks

All names identified by ® are registered trademarks of Siemens AG. The remaining trademarks in this publication may be trademarks whose use by third parties for their own purposes could violate the rights of the owner.

Disclaimer of Liability

We have reviewed the contents of this publication to ensure consistency with the hardware and software described. Since variance cannot be precluded entirely, we cannot guarantee full consistency. However, the information in this publication is reviewed regularly and any necessary corrections are included in subsequent editions.

Siemens AG
Division Digital Factory
Postfach 48 48
90026 NÜRNBERG
GERMANY

A5E02714440-AH
℗ 09/2018 Subject to change

Copyright © Siemens AG 2011 - 2018.
All rights reserved

Important notes

Purpose of this documentation

The information in this documentation enables you to configure (Page 43) and program (Page 111) SIMATIC Safety fail-safe systems. In addition, you will obtain information on acceptance (Page 361) of a SIMATIC Safety F-system.

Note

The Programming and Operating Manual "SIMATIC Safety - Configuring and Programming" in its latest version (possibly including product information for the manual) is the relevant source of all information on functional safety regarding configuring and programming. This also applies in the event of discrepancies between this manual and other documentation on functional safety regarding configuring and programming

You must heed all warnings in the Programming and Operating manual "SIMATIC Safety - Configuring and Programming".

Basic knowledge requirements

General basic knowledge of automation engineering is needed to understand this documentation. Basic knowledge of the following is also necessary:

- Fail-safe automation systems
- Automation systems S7-300/400/1200/1500/1500 Software Controller/WinAC RTX F
- Distributed I/O systems on PROFIBUS DP/PROFINET IO
- Totally Integrated Automation Portal, including:
  - Hardware configuration with the *hardware and network editor*
  - Programming in the LAD and FBD programming languages using the *program editor*.
  - Communication between CPUs

Scope of this documentation

This documentation is valid for the optional packages *STEP 7 Safety Advanced V15.1* and *STEP 7 Safety Basic V15.1.*

The optional packages *STEP 7 Safety Advanced V15.1* and *STEP 7 Safety Basic V15.1* are used for configuration and programming of the fail-safe SIMATIC Safety system.

In this context, integration of the fail-safe I/O listed below in SIMATIC Safety is also addressed:

- S7-1500/ET 200MP fail-safe modules
- ET 200SP fail-safe modules
- ET 200S fail-safe modules
- ET 200eco fail-safe I/O modules
- ET 200eco PN fail-safe I/O modules
- ET 200pro fail-safe modules
- ET 200iSP fail-safe modules
- S7-300 fail-safe signal modules
- S7-1200 fail-safe modules
- Fail-safe GSD based DP slaves
- Fail-safe GSD based I/O devices

Approvals

The SIMATIC Safety F-system is certified for use in safety mode up to:

- Safety integrity level SIL3 in accordance with IEC 61508:2010
- Performance Level (PL) e and category 4 in accordance with ISO 13849-1:2015 or EN ISO 13849-1:2015

Incorporation in the information landscape

Depending on your application, you will need the following supplementary documentation when working with *STEP 7 Safety*.

This documentation includes references to the supplementary documentation where appropriate.

Documentation	Brief description of relevant content
For the SIMATIC Safety F-system	Depending on which F-CPU you are using, you will need the following documentation: • For the F-CPUs S7-1200/1500, a Product Information (http://support.automation.siemens.com/WW/view/en/109478599) describes all deviations from the respective standard CPUs. • Each F-CPU S7-300/400 that can be used has its own product information. The product information describes the deviations from the respective standard CPUs. • The Device manuals (http://support.automation.siemens.com/WW/view/en/67295862/133300) describe the S7-1500 CPUs. • The "S7-300, CPU 31xC and CPU 31x: Installation" (http://support.automation.siemens.com/WW/view/en/13008499) operating instructions describe the installation and wiring of S7-300 systems. • The "CPU 31xC and CPU 31x, Technical Data" (http://support.automation.siemens.com/WW/view/en/12996906) device manual describes the CPUs 315-2 DP and PN/DP, the CPU 317-2 DP and PN/DP, and the CPU 319-3 PN/DP. • The "S7-400 Automation System, Installation (http://support.automation.siemens.com/WW/view/en/1117849) installation manual describes the installation and wiring of S7-400 systems. • The "S7-400 Automation System, CPU Data" (http://support.automation.siemens.com/WW/view/en/23904550) reference manual describes the CPUs 414-3 PN/DP, the CPU 416-2, and the CPU 416-3 PN/DP. • The "ET 200S Interface Module IM 151-7 CPU" (http://support.automation.siemens.com/WW/view/en/12714722) manual describes the IM 151-7 CPU. • The "ET 200S, Interface Module IM 151-8 PN/DP CPU" (http://support.automation.siemens.com/WW/view/en/47409312) manual describes the IM 151-8 PN/DP CPU. • The "ET 200S, Interface Module IM 154-8 CPU" (http://support.automation.siemens.com/WW/view/de/24363739/0/en) manual describes the IM 154-8 CPU. • The Manual "Windows Automation Center RTX WinAC RTX (F) 2010 (http://support.automation.siemens.com/WW/view/en/43715176)" describes the WinAC RTX 2010 and the WinAC RTX F 2010. • The "S7-1500 Software Controller CPU 1505SP, CPU 1507S (http://support.automation.siemens.com/WW/view/en/109249299)" manual describes the SIMATIC S7-1500 Software Controller 1505SP and CPU 1507S.
"S7-1200 Functional Safety manual (http://support.automation.siemens.com/WW/view/en/104547552)" system manual	Describes the F-CPUs S7-1200 and the fail-safe modules S7-1200 (including installation, wiring, and technical specifications)

Documentation	Brief description of relevant content
"S7-1500/ET200MP system manual (http://support.automation.siemens.com/WW/view/en/59191792)" system manual and the product manuals (https://support.industry.siemens.com/cs/ww/en/ps/14141/man) for the corresponding S7-1500/ET 200MP fail-safe modules	Describes the hardware of the S7-1500 systems and the S7-1500/ET 200MP fail-safe modules (including installation, wiring, and technical specifications)
"ET 200SP distributed I/O system (http://support.automation.siemens.com/WW/view/en/58649293)" system manual and the product manuals (https://support.industry.siemens.com/cs/ww/en/ps/14059/man) for the corresponding ET 200SP fail-safe modules	Describes the hardware of the ET 200SP fail-safe modules (including installation, wiring, and technical specifications)
"ET 200eco Distributed I/O Station Fail-safe I/O Block (http://support.automation.siemens.com/WW/view/en/19033850)" manual	Describes the hardware of the ET 200eco fail-safe I/O module (including installation, wiring, and technical specifications)
Manual "ET 200eco PN F-DI 8 x 24 VDC, 4xM12 / F-DQ 3 x 24 VDC/2.0A PM, 3xM12 (https://support.industry.siemens.com/cs/ww/en/)"	Describes the hardware of the ET 200eco PN fail-safe I/O module (including installation, wiring, and technical specifications)
"Distributed I/O System ET 200S, Fail-Safe Modules (http://support.automation.siemens.com/WW/view/en/27235629)" operating instructions	Describes the hardware of the ET 200S fail-safe modules (including installation, wiring, and technical specifications)
"S7-300 Automation System, ET 200M Distributed I/O System, Fail-safe Signal Modules (http://support.automation.siemens.com/WW/view/en/19026151)" manual	Describes the hardware of the S7-300 fail-safe signal modules (including installation, wiring, and technical specifications)
"Distributed I/O system ET 200pro, fail-safe I/O modules (http://support.automation.siemens.com/WW/view/en/22098524)" operating instructions	Describes the hardware of the ET 200pro fail-safe modules (including installation, wiring, and technical specifications)
"ET 200iSP distributed I/O device - Fail-safe modules (http://support.automation.siemens.com/WW/view/en/47357221)" operating instructions	Describes the hardware of the ET 200iSP fail-safe modules (including installation, wiring, and technical specifications)
Help on *STEP 7*	• Describes the operation of the standard tools in *STEP 7* • Contains information regarding configuration and parameter assignment of hardware • Contains a description of the FBD and LAD programming languages

The complete *SIMATIC S7* documentation is available on DVD. You can find more information on the Internet (http://www.automation.siemens.com/mcms/industrial-automation-systems-simatic/en/manual-overview/manual-collection/Pages/Default.aspx).

Guide

This documentation describes how to work with the optional packages *STEP 7 Safety.* It includes instructions and reference sections (description of the instructions for the safety program).

The following topics are addressed:

- Configuration of SIMATIC Safety
- Access protection for SIMATIC Safety
- Programming of the safety program (safety-related user program)
- Safety-related communication
- Instructions for the safety program
- Support for the system acceptance
- Operation and maintenance of SIMATIC Safety
- Monitoring and response times

Conventions

In this documentation, the terms "safety engineering" and "fail-safe engineering" are used synonymously. The same applies to the terms "fail-safe" and "F-".

When *"STEP 7 Safety Advanced V15.1", "STEP 7 Safety Basic V15.1"* appears in italics, it refers to the optional package for the "SIMATIC Safety" F-system.

"STEP 7 Safety V15.1" stands for the optional package *"STEP 7 Safety Advanced V15.1"* and the optional package *"STEP 7 Safety Basic V15"*.

"(S7-300)" indicates that the section **only** applies to S7-300 F-CPUs. S7-300 F-CPUs also includes the F-CPUs ET 200S and ET 200pro (IM F-CPUs).

"(S7-400)" indicates that the section **only** applies to S7-400 as well as WinAC RTX F.

"(S7-1200)" indicates that the section **only** applies to S7-1200 F-CPUs.

"(S7-1500)" indicates that the section **only** applies to S7-1500 F-CPUs. S7-1500 F-CPUs also includes ET 200SP F-CPUs, the CPU 1516pro F-2 PN and the S7-1500 F Software Controller.

The scopes can be combined.

The term "Safety program" refers to the fail-safe portion of the user program and is used instead of "fail-safe user program," "F-program," etc. For purposes of contrast, the non-safety-related part of the user program is referred to as the "standard user program".

All fail-safe modules and instructions are highlighted in yellow to distinguish them from the modules and instructions of the standard user programs on the software interface (e.g., in the project tree). Similarly, the fail-safe parameters of F-CPUs and F-I/O are highlighted in yellow in the hardware configuration.

Each warning is marked with a unique number at the end of the text. This enables you to easily reference other documents, for example, to obtain an overview of the safety requirements for the system.

Additional support

If you have further questions about the use of products presented in this manual, contact your local Siemens representative.

You can find information on whom to contact on the Web (http://www.siemens.com/automation/partner).

A guide to the technical documentation for the various SIMATIC products and systems is available on the Web (http://www.siemens.com/simatic-tech-doku-portal).

You can find the online catalog and online ordering system on the Web (www.siemens.com/industrymall).

Training center

We offer courses to help you get started with the S7 automation system. Contact your regional training center or the central training center in Nuremberg (90327), Federal Republic of Germany.

You can find more information on the Internet (http://www.sitrain.com).

Technical Support

To contact Technical Support for all Industry Automation products, use the Support Request Web form (http://www.siemens.com/automation/support-request).

You can find additional information about our Technical Support on the Web (http://www.siemens.com/automation/service).

Important note for maintaining the operational safety of your system

Note

The operators of systems with safety-related characteristics must adhere to operational safety requirements. The supplier is also obliged to comply with special product monitoring measures. Siemens informs system operators in the form of personal notifications about product developments and properties which may be or become important issues in terms of operational safety.

You should subscribe to the corresponding notifications in order to obtain the latest information and to allow you to make any necessary modifications to your system.

Log in in the Industry Online Support. Follow the links below and click on "Email on update" on the right-hand side in each case:

- SIMATIC S7-300/S7-300F (https://support.industry.siemens.com/cs/products?pnid=13751&lc=en-WW)
- SIMATIC S7-400/S7-400H/S7-400F/FH (https://support.industry.siemens.com/cs/products?pnid=13828&lc=en-WW)
- SIMATIC S7-1500/SIMATIC S7-1500F (https://support.industry.siemens.com/cs/products?pnid=13716&lc=en-WW)
- SIMATIC S7-1200/SIMATIC S7-1200F (https://support.industry.siemens.com/cs/products?pnid=13683&lc=en-WW)
- Software Controller (https://support.industry.siemens.com/cs/products?pnid=13911&lc=en-WW)
- Distributed I/O (https://support.industry.siemens.com/cs/products?pnid=14029&lc=en-WW)
- STEP 7 (TIA Portal) (https://support.industry.siemens.com/cs/products?pnid=14340&lc=en-WW)

Security information

Siemens provides products and solutions with industrial security functions that support the secure operation of plants, systems, machines and networks.

In order to protect plants, systems, machines and networks against cyber threats, it is necessary to implement – and continuously maintain – a holistic, state-of-the-art industrial security concept. Siemens' products and solutions constitute one element of such a concept.

Customers are responsible for preventing unauthorized access to their plants, systems, machines and networks. Such systems, machines and components should only be connected to an enterprise network or the internet if and to the extent such a connection is necessary and only when appropriate security measures (e.g. firewalls and/or network segmentation) are in place.

For additional information on industrial security measures that may be implemented, please visit (https://www.siemens.com/industrialsecurity).

Siemens' products and solutions undergo continuous development to make them more secure. Siemens strongly recommends that product updates are applied as soon as they are available and that the latest product versions are used. Use of product versions that are no longer supported, and failure to apply the latest updates may increase customers' exposure to cyber threats.

To stay informed about product updates, subscribe to the Siemens Industrial Security RSS Feed under (https://www.siemens.com/industrialsecurity).

Siemens Industry Online Support

You can find current information on the following topics quickly and easily here:

- **Product support**

  All the information and extensive know-how on your product, technical specifications, FAQs, certificates, downloads, and manuals.

- **Application examples**

  Tools and examples to solve your automation tasks – as well as function blocks, performance information and videos.

- **Services**

  Information about Industry Services, Field Services, Technical Support, spare parts and training offers.

- **Forums**

  For answers and solutions concerning automation technology.

- **mySupport**

  Your personal working area in Industry Online Support for messages, support queries, and configurable documents.

This information is provided by the Siemens Industry Online Support in the Internet (http://www.siemens.com/automation/service&support).

Industry Mall

The Industry Mall is the catalog and order system of Siemens AG for automation and drive solutions on the basis of Totally Integrated Automation (TIA) and Totally Integrated Power (TIP).

Catalogs for all the products in automation and drives are available on the Internet (https://mall.industry.siemens.com).

Table of contents

Important notes 3

1 Product Overview 23

1.1 Overview 23

1.2 Hardware and Software Components 25

1.3 Installing/uninstalling STEP 7 Safety Basic V15.1 optional package 30

1.4 Installing/uninstalling STEP 7 Safety Advanced V15.1 optional package 31

1.5 Installing/uninstalling STEP 7 Safety PowerPack 32

1.6 Migrating projects from S7 Distributed Safety V5.4 SP5 to STEP 7 Safety Advanced 32

1.7 Migrating PLC programs to a n F-CPU S7-1500 36

1.8 Upgrading projects to STEP 7 Safety V15.1 37
1.8.1 Upgrading projects from STEP 7 Safety V15 to V15.1 37
1.8.2 Upgrading projects from STEP 7 Safety V14 SP1 to V15.1 37
1.8.3 Upgrading projects from STEP 7 Safety V13 SP1 to V15.1 38
1.8.4 Upgrading projects from STEP 7 Safety prior to V13 SP1 39

1.9 First steps 42

2 Configuring 43

2.1 Overview of Configuration 43

2.2 Particularities for configuring the F-System 46

2.3 Configuring an F-CPU 48

2.4 Configuring F-I/O 53

2.5 Configuration control (option handling) for F-I/Os 58
2.5.1 Example 59

2.6 Configuring shared device 63

2.7 Configuring isochronous mode (S7-1500) 63

2.8 Recommendation for PROFIsafe address assignment 65

2.9 Configurations supported by the SIMATIC Safety F-system 66

2.10 PROFIsafe addresses for F-I/O of PROFIsafe address type 1 68

2.11 PROFIsafe addresses for F-I/O of PROFIsafe address type 2 70

2.12 Setting the F-destination address for F-I/O with DIP switches 72
2.13 Assigning a PROFIsafe address of the F-I/Os with SIMATIC Safety 72
2.13.1 Identifying F-modules 73
2.13.2 Assign PROFIsafe address 75
2.13.3 Assign PROFIsafe address to an F-module 75
2.13.4 Changing the PROFIsafe address 76

2.14 Peculiarities when configuring fail-safe GSD based DP slaves and fail-safe GSD based I/O devices ... 77

3 Safety Administration Editor ... 81

3.1 Opening the Safety Administration Editor ... 83

3.2 "General" area ... 83

3.3 "F-runtime group" area ... 86
3.3.1 "F-runtime group" area ... 86
3.3.2 Pre-/postprocessing (S7-1200, S7-1500) ... 87

3.4 "F-blocks" area ... 88

3.5 "F-compliant PLC data types" area (S7-1200, S7-1500) ... 89

3.6 “Web server F-Admins” area (S7-1200, S7-1500) ... 90

3.7 "Settings" area ... 90

3.8 "Flexible F-Link" area (S7-1200, S7-1500) ... 96

4 Access protection ... 101

4.1 Overview of access protection ... 101

4.2 Access protection for the safety program ... 103

4.3 Access protection for the F-CPU ... 106

4.4 Access protection through organizational measures ... 109

5 Programming ... 111

5.1 Overview of Programming ... 111
5.1.1 Program structure of the safety program (S7-300, S7-400) ... 111
5.1.2 Program structure of the safety program (S7-1200, S7-1500) ... 114
5.1.3 Fail-Safe Blocks ... 117
5.1.4 Restrictions in the programming languages FBD/LAD ... 119
5.1.5 F-compliant PLC data types (UDT) (S7-1200, S7-1500) ... 126
5.1.5.1 Grouping PLC tags for inputs and outputs of F-I/O in structures (S7-1200, S7-1500) ... 127
5.1.5.2 Example of structured PLC tags for inputs and outputs of F-I/O (S7-1200, S7-1500) ... 128
5.1.6 Editing PLC tags with external editors ... 131
5.1.7 Using Multiuser engineering ... 131

5.2 Defining F-Runtime Groups ... 132
5.2.1 Rules for F-Runtime Groups of the Safety Program ... 132
5.2.2 Procedure for defining an F-runtime group (S7-300, S7-400) ... 134
5.2.3 Procedure for defining an F-runtime group (S7-1200, S7-1500) ... 137
5.2.4 F-runtime group communication (S7-300, S7-400) ... 141
5.2.5 F-runtime group communication (S7-1200, S7-1500) ... 145
5.2.6 F-shared DB (S7-300, S7-400) ... 148
5.2.7 F-runtime group information DB (S7-1200, S7-1500) ... 148
5.2.8 Deleting an F-runtime group ... 150
5.2.9 Changing the F-runtime group (S7-300, S7-400) ... 150
5.2.10 Changing the F-runtime group (S7-1200, S7-1500) ... 151

5.3 Creating F-blocks in FBD / LAD 151
5.3.1 Creating F-blocks 151
5.3.2 Know-how protection 153
5.3.3 Reuse of F-blocks 154
5.4 Programming startup protection 155
6 F-I/O access 157
6.1 Addressing F-I/O 157
6.2 Value status (S7-1200, S7-1500) 159
6.3 Process Data or Fail-Safe Values 162
6.4 F-I/O DB 165
6.4.1 Tags of the F-I/O DB 166
6.4.1.1 PASS_ON 167
6.4.1.2 ACK_NEC 168
6.4.1.3 ACK_REI 168
6.4.1.4 IPAR_EN 169
6.4.1.5 DISABLE 170
6.4.1.6 QBAD/PASS_OUT/DISABLED/QBAD_I_xx/QBAD_O_xx and value status 171
6.4.1.7 ACK_REQ 172
6.4.1.8 IPAR_OK 172
6.4.1.9 DIAG 172
6.4.2 Accessing tags of the F-I/O DB 174
6.5 Passivation and reintegration of F-I/O 175
6.5.1 After startup of F-system 175
6.5.2 After communication errors 178
6.5.3 After F-I/O or channel faults 180
6.5.4 Group passivation 184
7 Implementation of user acknowledgment 187
7.1 Implementing User Acknowledgment in the Safety Program of the F-CPU of a DP Master or IO controller 187
7.2 Implementing user acknowledgment in the safety program of the F-CPU of a I-slave or I-device 192
8 Data exchange between standard user program and safety program 195
8.1 Data Transfer from the Safety Program to the Standard User Program 196
8.2 Data Transfer from Standard User Program to Safety Program 197
9 Safety-related communication 201
9.1 Configuring and programming communication (S7-300, S7-400) 201
9.1.1 Overview of communication 201
9.1.2 Safety-related IO controller-IO controller communication 204
9.1.2.1 Configure safety-related IO controller-IO controller communication 204
9.1.2.2 Safety-related IO controller-IO controller communication via SENDDP and RCVDP 208
9.1.2.3 Program safety-related IO controller-IO controller communication 209
9.1.2.4 Safety-related IO controller-IO controller communication - Limits for data transfer 213

9.1.3 Safety-related master-master communication ... 213
9.1.3.1 Configure safety-related master-master communication ... 213
9.1.3.2 Safety-related master-master communication via SENDDP and RCVDP ... 218
9.1.3.3 Program safety-related master-master communication ... 218
9.1.3.4 Safety-related master-master communication:Limits for data transfer ... 223
9.1.4 Safety-related IO controller-I-device communication ... 223
9.1.4.1 Configuring safety-related communication between IO controller and I-device ... 223
9.1.4.2 Safety-related IO controller-I-device communication via SENDDP and RCVDP ... 226
9.1.4.3 Programming safety-related IO controller I-device communication ... 227
9.1.4.4 Safety-related IO-Controller-IO-Device communication - Limits for data transfer ... 229
9.1.5 Safety-related master-I-slave communication ... 229
9.1.5.1 Configuring safety-related master-I-slave communication ... 229
9.1.5.2 Safety-related master-I-slave or I-slave-I-slave communication via SENDDP and RCVDP ... 232
9.1.5.3 Program the safety-related master-I-slave or I-slave-I-slave communication ... 233
9.1.5.4 Limits for data transfer of safety-related master-I-slave or I-slave-I-slave communication ... 235
9.1.6 Safety-related I-slave-I-slave communication ... 236
9.1.6.1 Configure safety-related I-slave-I-slave communication ... 236
9.1.6.2 Safety-related I-slave-I-slave communication via SENDDP and RCVDP ... 240
9.1.6.3 Programming safety-related I-slave-I-slave communication ... 240
9.1.6.4 Limits for data transfer of safety-related I-slave-I-slave communication ... 240
9.1.7 Safety-Related I-Slave-Slave Communication ... 241
9.1.7.1 Configuring Safety-Related I-Slave-Slave Communication ... 241
9.1.7.2 Safety-Related I-Slave-Slave Communication - F-I/O Access ... 246
9.1.7.3 Limits for data transfer of safety-related I-slave-I-slave communication ... 246
9.1.8 Safety-related IO controller-I-slave communication ... 247
9.1.9 Safety-related communication via S7 connections ... 248
9.1.9.1 Configuring safety-related communication via S7 connections ... 248
9.1.9.2 Communication via SENDS7, RCVS7, and F-Communication DB ... 250
9.1.9.3 Programming safety-related communication via S7 connections ... 251
9.1.9.4 Safety-related communication via S7 connections - Limits of data transfer ... 255
9.1.10 Safety-related communication with other S7 F-systems ... 255
9.1.10.1 Introduction ... 255
9.1.10.2 Communication with S7 Distributed Safety via PN/PN coupler (IO controller-IO controller communication) ... 256
9.1.10.3 Communication with S7 Distributed Safety via DP/DP coupler (master-master communication) ... 257
9.1.10.4 Communication with S7 Distributed Safety via S7 connections ... 258
9.1.10.5 Communication with S7 F/FH Systems via S7 connections ... 260

9.2 Configuring and programming communication with Flexible F-Link (S7-1200, S7-1500) ... 262
9.2.1 Flexible F-Link ... 262
9.2.2 Example of a safety-related communication between two F-CPUs ... 266

9.3 Configuring and programming communication (S7-1200, S7-1500) ... 270
9.3.1 Overview of communication ... 270
9.3.2 Safety-related IO controller-IO controller communication ... 272
9.3.2.1 Configure safety-related IO controller-IO controller communication ... 272
9.3.2.2 Safety-related IO controller-IO controller communication via SENDDP and RCVDP ... 276
9.3.2.3 Program safety-related IO controller-IO controller communication ... 277
9.3.2.4 Safety-related IO controller-IO controller communication - Limits for data transfer ... 281

9.3.3 Safety-related master-master communication 281
9.3.3.1 Configure safety-related master-master communication 281
9.3.3.2 Safety-related master-master communication via SENDDP and RCVDP 285
9.3.3.3 Program safety-related master-master communication 286
9.3.3.4 Safety-related master-master communication:Limits for data transfer 290
9.3.4 Safety-related IO controller-I-device communication 290
9.3.4.1 Configuring safety-related communication between IO controller and I-device 290
9.3.4.2 Safety-related IO controller-I-device communication via SENDDP and RCVDP 293
9.3.4.3 Programming safety-related IO controller I-device communication 294
9.3.4.4 Safety-related IO-Controller-IO-Device communication - Limits for data transfer 296
9.3.5 Safety-related master-I-slave communication 297
9.3.5.1 Configuring safety-related master-I-slave communication 297
9.3.5.2 Safety-related master-I-slave communication via SENDDP and RCVDP 299
9.3.5.3 Programming safety-related master-I-slave communication 300
9.3.5.4 Limits for data transfer of safety-related master-I-slave communication 303
9.3.6 Safety-related IO controller-I-slave communication 304
9.3.6.1 Safety-related IO controller-I-slave communication 304
9.3.7 Safety-related communication to S7 F-System S7 Distributed Safety 304
9.3.7.1 Introduction 304
9.3.7.2 Communication with S7 Distributed Safety via PN/PN coupler (IO controller-IO controller communication) 305
9.3.7.3 Communication with S7 Distributed Safety via DP/DP coupler (master-master communication) 306

9.4 Configuring and programming communication between S7-300/400 and S7-1200/1500 F-CPUs 307
9.4.1 Overview of communication 307

9.5 Configuring and programming communication in several projects 308
9.5.1 Safety-oriented IO Controller I device communication in several projects 308
9.5.1.1 Configuring safety-related communication between IO controller and I-device 308
9.5.1.2 Programming safety-related IO Controller I-device communication 309

10 Compiling and commissioning a safety program 311

10.1 Compiling the safety program 311

10.2 Safety program work memory requirements (S7-300, S7-400) 312

10.3 Downloading project data 313
10.3.1 Downloading project data to an F-CPU 313
10.3.1.1 Downloading project data to an S7-300/400 F-CPU with memory card inserted (SIMATIC Micro memory card or flash card) 317
10.3.1.2 Downloading project data to an S7-400 F-CPU without flash card inserted 317
10.3.1.3 Downloading project data to a WinAC RTX F 318
10.3.1.4 Downloading individual F-blocks to an S7-300/400 F-CPU 318
10.3.1.5 Downloading project data to an S7-1200 F-CPU without program card inserted 319
10.3.1.6 Downloading project data to an S7-1200 F-CPU with program card inserted 320
10.3.1.7 Downloading project data to an S7-1500 F-CPU 321
10.3.1.8 Downloading project data to an S7-1500 F Software Controller 322
10.3.2 Downloading project data to a memory card and inserting a memory card 323
10.3.2.1 Inserting a SIMATIC Micro Memory Card or flash card into an S7-300/400 F-CPU 324
10.3.2.2 Inserting a transfer card into an S7-1200 F-CPU 325

10.3.3 Downloading project data of an S7-1200 F-CPU from the internal load memory to an empty SIMATIC Memory Card ... 327
10.3.4 Updating project data on an S7-1200 F-CPU using a transfer card ... 328
10.3.5 Restoring a backup of the safety program to an S7-300/1200/1500 F-CPU ... 328
10.3.6 Special features when creating and importing images of an S7-1500 F Software Controller ... 329
10.3.7 Loading project data from an F-CPU to a programming device / PC ... 331
10.3.8 Loading PC station via the configuration file ... 332
10.3.8.1 Creating a configuration file ... 333
10.3.8.2 Importing the configuration file ... 333

10.4 Program identification ... 337

10.5 Comparing Safety Programs ... 339

10.6 Printing project data ... 341

10.7 Testing the safety program ... 343
10.7.1 Overview of Testing the Safety Program ... 343
10.7.2 Disabling safety mode ... 344
10.7.3 Testing the safety program ... 347
10.7.4 Testing the safety program with S7-PLCSIM ... 350
10.7.5 Changing the safety program in RUN mode (S7-300, S7-400) ... 355
10.7.6 Changing the standard user program in RUN mode (S7-1200, S7-1500) ... 357
10.7.7 Deleting the safety program ... 357

10.8 F-change history ... 359

11 System acceptance ... 361

11.1 Overview of System Acceptance ... 361

11.2 Correctness of the safety program including hardware configuration (including testing) ... 363

11.3 Completeness of the safety summary ... 364

11.4 Compliance of the system library elements used in the safety program with Annex 1 of the Report for the TÜV certificate ... 365

11.5 Compliance of the know-how protected F-blocks used in the safety program with their safety documentation. ... 366

11.6 Completeness and correctness of the hardware configuration ... 368

11.7 Correctness and completeness of the communication configuration ... 374

11.8 Identity of online and offline program ... 375

11.9 Other characteristics ... 376

11.10 Acceptance of Changes ... 378

12 Operation and Maintenance ... 383

12.1 Notes on Safety Mode of the Safety Program ... 383

12.2 Replacing Software and Hardware Components ... 386

12.3 Guide to diagnostics (S7-300, S7-400) ... 389

12.4 Guide to diagnostics (S7-1500) ... 390

12.5 Guide to diagnostics (S7-1200) ... 390

13 Overview of instructions for the safety program 363

13.1 General 392
13.1.1 LAD 392
13.1.1.1 New network (STEP 7 Safety V15.1) 392
13.1.1.2 Empty box (STEP 7 Safety V15.1) 393
13.1.1.3 Open branch (STEP 7 Safety V15.1) 393
13.1.1.4 Close branching (STEP 7 Safety V15.1) 395
13.1.2 FBD 396
13.1.2.1 New network (STEP 7 Safety V15.1) 396
13.1.2.2 Empty box (STEP 7 Safety V15.1) 396
13.1.2.3 Open branch (STEP 7 Safety V15.1) 397
13.1.2.4 Insert binary input (STEP 7 Safety V15.1) 398
13.1.2.5 Invert RLO (STEP 7 Safety V15.1) 399

13.2 Bit logic operations 400
13.2.1 LAD 400
13.2.1.1 ---| |---: NO contact (STEP 7 Safety V15.1) 400
13.2.1.2 ---| / |---: NC contact (STEP 7 Safety V15.1) 401
13.2.1.3 --|NOT|--: Invert RLO (STEP 7 Safety V15.1) 402
13.2.1.4 ---( )---: Assignment (STEP 7 Safety V15.1) 402
13.2.1.5 ---(R)---: Reset output (STEP 7 Safety V15.1) 403
13.2.1.6 ---(S)---: Set output (STEP 7 Safety V15.1) 404
13.2.1.7 SR: Set/reset flip-flop (STEP 7 Safety V15.1) 406
13.2.1.8 RS: Reset/set flip-flop (STEP 7 Safety V15.1) 407
13.2.1.9 --|P|--: Scan operand for positive signal edge (STEP 7 Safety V15.1) 409
13.2.1.10 --|N|--: Scan operand for negative signal edge (STEP 7 Safety V15.1) 410
13.2.1.11 P_TRIG: Scan RLO for positive signal edge (STEP 7 Safety V15.1) 412
13.2.1.12 N_TRIG: Scan RLO for negative signal edge (STEP 7 Safety V15.1) 413
13.2.2 FBD 414
13.2.2.1 AND logic operation (STEP 7 Safety V15.1) 414
13.2.2.2 OR logic operation (STEP 7 Safety V15.1) 416
13.2.2.3 X: EXCLUSIVE OR logic operation (STEP 7 Safety V15.1) 417
13.2.2.4 =: Assignment (STEP 7 Safety V15.1) 419
13.2.2.5 R: Reset output (STEP 7 Safety V15.1) 420
13.2.2.6 S: Set output (STEP 7 Safety V15.1) 421
13.2.2.7 SR: Set/reset flip-flop (STEP 7 Safety V15.1) 422
13.2.2.8 RS: Reset/set flip-flop (STEP 7 Safety V15.1) 423
13.2.2.9 P: Scan operand for positive signal edge (STEP 7 Safety V15.1) 425
13.2.2.10 N: Scan operand for negative signal edge (STEP 7 Safety V15.1) 426
13.2.2.11 P_TRIG: Scan RLO for positive signal edge (STEP 7 Safety V15.1) 427
13.2.2.12 N_TRIG: Scan RLO for negative signal edge (STEP 7 Safety V15.1) 429
13.3 Safety functions 430
13.3.1 ESTOP1: Emergency STOP/OFF up to stop category 1 (STEP 7 Safety V15.1) 430
13.3.2 TWO_HAND: Two-hand monitoring (STEP 7 Safety Advanced V15.1) (S7-300, S7-400) 436

13.3.3 TWO_H_EN: Two-hand monitoring with enable (STEP 7 Safety V15.1) ... 439
13.3.4 MUTING: Muting (STEP 7 Safety Advanced V15.1) (S7-300, S7-400) ... 445
13.3.5 MUT_P: Parallel muting (STEP 7 Safety V15.1) ... 456
13.3.6 EV1oo2DI: 1oo2 evaluation with discrepancy analysis (STEP 7 Safety V15.1) ... 468
13.3.7 FDBACK: Feedback monitoring (STEP 7 Safety V15.1) ... 475
13.3.8 SFDOOR: Safety door monitoring (STEP 7 Safety V15.1) ... 481
13.3.9 ACK_GL: Global acknowledgment of all F-I/O in an F-runtime group (STEP 7 Safety V15.1) ... 487

13.4 Timer operations ... 489
13.4.1 TP: Generate pulse (STEP 7 Safety V15.1) ... 489
13.4.2 TON: Generate on-delay (STEP 7 Safety V15.1) ... 494
13.4.3 TOF: Generate off-delay (STEP 7 Safety V15.1) ... 499

13.5 Counter operations ... 504
13.5.1 CTU: Count up (STEP 7 Safety V15.1) ... 504
13.5.2 CTD: Count down (STEP 7 Safety V15.1) ... 506
13.5.3 CTUD: Count up and down (STEP 7 Safety V15.1) ... 508

13.6 Comparator operations ... 511
13.6.1 CMP ==: Equal (STEP 7 Safety V15.1) ... 511
13.6.2 CMP <>: Not equal (STEP 7 Safety V15.1) ... 512
13.6.3 CMP >=: Greater or equal (STEP 7 Safety V15.1) ... 514
13.6.4 CMP <=: Less or equal (STEP 7 Safety V15.1) ... 515
13.6.5 CMP >: Greater than (STEP 7 Safety V15.1) ... 517
13.6.6 CMP <: Less than (STEP 7 Safety V15.1) ... 518

13.7 Math functions ... 520
13.7.1 ADD: Add (STEP 7 Safety V15.1) ... 520
13.7.2 SUB: Subtract (STEP 7 Safety V15.1) ... 523
13.7.3 MUL: Multiply (STEP 7 Safety V15.1) ... 526
13.7.4 DIV: Divide (STEP 7 Safety V15.1) ... 529
13.7.5 NEG: Create twos complement (STEP 7 Safety V15.1) ... 533
13.7.6 ABS: Form absolute value (STEP 7 Safety V15.1) (S7-1200, S7-1500) ... 536

13.8 Move operations ... 538
13.8.1 MOVE: Move value (STEP 7 Safety V15.1) ... 538
13.8.2 RD_ARRAY_I: Read value from INT F-array (STEP 7 Safety V15.1) (S7-1500) ... 539
13.8.3 RD_ARRAY_DI: Read value from DINT F-array (STEP 7 Safety V15.1) (S7-1500) ... 542
13.8.4 WR_FDB: Write value indirectly to an F-DB (STEP 7 Safety V15.1) (S7-300, S7-400) ... 544
13.8.5 RD_FDB: Read value indirectly from an F-DB (STEP 7 Safety Advanced V15.1) (S7-300, S7-400) ... 546

13.9 Conversion operations ... 548
13.9.1 CONVERT: Convert value (STEP 7 Safety V15.1) ... 548
13.9.2 BO_W: Convert 16 data elements of data type BOOL to a data element of data type WORD (STEP 7 Safety V15.1) ... 550
13.9.3 W_BO: Convert a data element of data type WORD to 16 data elements of data type BOOL (STEP 7 Safety V15.1) ... 552
13.9.4 SCALE: Scale values (STEP 7 Safety Advanced V15.1) ... 555

13.10 Program control operations 558
13.10.1 JMP: Jump if RLO = 1 (STEP 7 Safety V15.1) 558
13.10.2 JMPN: Jump if RLO = 0 (STEP 7 Safety V15.1) 560
13.10.3 LABEL: Jump label (STEP 7 Safety V15.1) 562
13.10.4 RET: Return (STEP 7 Safety V15.1) 564
13.10.5 OPN: Open global data block (STEP 7 Safety Advanced V15.1) (S7-300, S7-400) 565

13.11 Word logic operations 567
13.11.1 AND: AND logic operation (STEP 7 Safety V15.1) 567
13.11.2 OR: OR logic operation (STEP 7 Safety V15.1) 568
13.11.3 XOR: EXCLUSIVE OR logic operation (STEP 7 Safety V15.1) 570

13.12 Shift and rotate 571
13.12.1 SHR: Shift right (STEP 7 Safety V15.1) 571
13.12.2 SHL: Shift left (STEP 7 Safety V15.1) 574

13.13 Operating 577
13.13.1 ACK_OP: Fail-safe acknowledgment (STEP 7 Safety V15.1) 577

13.14 Additional instructions 585
13.14.1 LAD 585
13.14.1.1 ---| |--- OV: Get status bit OV (STEP 7 Safety Advanced V15.1) (S7-300, S7-400) 585
13.14.1.2 ---| / |--- OV: Get negated status bit OV (STEP 7 Safety Advanced V15.1) (S7-300, S7-400) 586
13.14.2 FBD 587
13.14.2.1 OV: Get status bit OV (STEP 7 Safety Advanced V15.1) (S7-300, S7-400) 587

13.15 Communication 588
13.15.1 PROFIBUS/PROFINET 588
13.15.1.1 SENDDP and RCVDP: Send and receive data via PROFIBUS DP/PROFINET IO (STEP 7 Safety V15.1) 588
13.15.2 S7 communication 599
13.15.2.1 SENDS7 and RCVS7: Communication via S7 connections (STEP 7 Safety Advanced V15.1) (S7-300, S7-400) 599

A Monitoring and response times 607

A.1 Configuring monitoring times 608
A.1.1 Minimum monitoring time for the F-runtime group cycle time 610
A.1.2 Minimum monitoring time for safety-related communication between F-CPU and F-I/O 610
A.1.3 Minimum monitoring time of safety-related CPU-CPU communication 612
A.1.4 Monitoring Time for Safety-Related Communication between F-Runtime Groups 612

A.2 Response Times of Safety Functions 613

B Checklist 617

Glossary 623

Index 637

Product Overview 1

1.1 Overview

SIMATIC Safety fail-safe system

The SIMATIC Safety fail-safe system is available to implement safety concepts in the area of machine and personnel protection (for example, for emergency STOP devices for machining and processing equipment) and in the process industry (for example, for implementation of protection functions for safety devices of instrumentation and controls and of burners).

WARNING

The SIMATIC Safety F-system is used to control processes and to force the system into a safe state after shutdown.

SIMATIC Safety can only be used for controlling processes in which an immediate shutdown does not pose a danger to persons or the environment.

When realizing safety applications including the creation of the safety-relevant project data you have to take into consideration the standards, directives and guidelines relevant for your application. In particular include standards in which the software creation process is described (for example IEC 61508-3 or ISO 13849-1). *(S062)*

Achievable safety requirements

SIMATIC Safety F-systems can satisfy the following safety requirements:

- Safety integrity level SIL3 in accordance with IEC 61508:2010
- Performance Level (PL) e and category 4 in accordance with ISO 13849-1:2015 or EN ISO 13849-1:2015

Principles of safety functions in SIMATIC Safety

Functional safety is implemented principally through safety functions in the software. Safety functions are executed by the SIMATIC Safety system in order to bring the system to a safe state or maintain it in a safe state in case of a dangerous event. Safety functions are contained mainly in the following components:

- In the safety-related user program (safety program) in the F-CPU
- In the fail-safe inputs and outputs (F-I/O)

The F-I/O ensure the safe processing of field information (sensors: e.g. emergency STOP pushbutton, light barriers; actuators, e.g. for motor control). They have all of the required hardware and software components for safe processing, in accordance with the required Safety Integrity Level. The user only has to program the user safety function. The safety function for the process can be provided through a user safety function or a fault reaction function. In the event of an error, if the F-system can no longer execute its actual user safety function, it executes the fault reaction function; for example, the associated outputs are shut down, and the F-CPU switches to STOP mode, if necessary.

Example of user safety function and fault reaction function

In the event of overpressure, the F-system will open a valve (user safety function). In the event of a hazardous fault in the F-CPU, all outputs are deactivated (fault reaction function), whereby the valve is opened, and the other actuators also attain a safe state. For a non-faulty F-system, only the valve would be opened.

1.2 Hardware and Software Components

Hardware and software components of SIMATIC Safety

The following figure provides an overview of the hardware and software components required to configure and operate a SIMATIC Safety F-system.

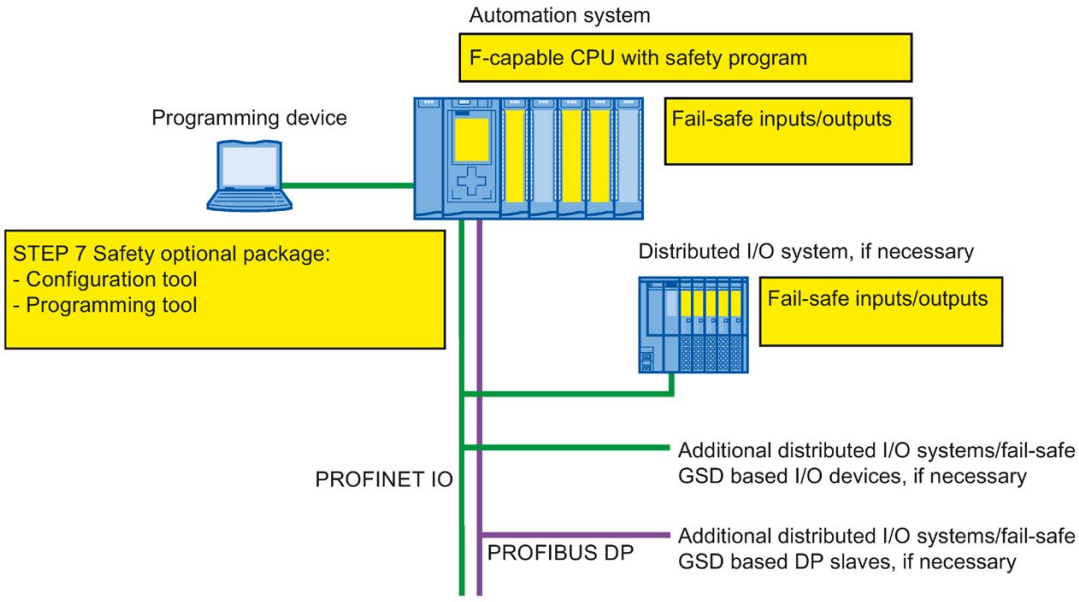

Hardware components for PROFIBUS DP

You can use the following fail-safe components in SIMATIC Safety F-systems on PROFIBUS DP:

- F-CPUs with DP interface, such as CPU 1516F-3 PN/DP
- Fail-safe inputs and outputs (F-I/O), such as:
  - S7-300 fail-safe signal modules in ET 200M
  - S7-1500/ET 200MP fail-safe modules
  - ET 200SP fail-safe modules
  - ET 200S fail-safe modules
  - ET 200pro fail-safe modules
  - ET 200iSP fail-safe modules
  - Fail-safe I/O modules ET 200eco (S7-300, S7-400)
  - Fail-safe GSD based DP slaves (light grid, laser scanner, etc.)

You have the option to expand the configuration with standard I/O.

The following CPs/CMs can be used in a SIMATIC Safety F-system on PROFIBUS DP for connection to distributed F-I/O:

- CP 443-5 Extended
- CM 1243-5
- CM 1542-5
- CP 1542-5
- SP CM DP

Hardware components for PROFINET IO

You can use the following fail-safe components in SIMATIC Safety F-systems on PROFINET IO:

- F-CPUs with PN interface, e.g., CPU 1214FC DC/DC/DC
- Fail-safe inputs and outputs (F-I/O), such as:
  - S7-300 fail-safe signal modules in ET 200M
  - S7-1500/ET 200MP fail-safe modules
  - ET 200SP fail-safe modules
  - ET 200S fail-safe modules
  - ET 200pro fail-safe modules
  - ET 200eco PN fail-safe I/O modules
  - Fail-safe GSD based I/O devices (light grid, laser scanner, etc.)

You have the option to expand the configuration with standard I/O.

The following CPs/CMs can be used in a SIMATIC Safety F-system on PROFINET IO for connection to distributed F-I/O:

- CP 443-1
- CP 443-1 Advanced-IT
- CM 1542-1
- CP 1545-1

Hardware components for central configuration

You can use the following fail-safe components in SIMATIC Safety F-systems centrally on an F-CPU:

- S7-300 fail-safe signal modules
- S7-1200 fail-safe modules
- S7-1500 fail-safe modules
- ET 200SP fail-safe modules
- ET 200S fail-safe modules
- ET 200pro fail-safe modules (can also be used with CPU 1516proF-2)

You have the option to expand the configuration with standard I/O.

Required software components

You require the following software components:

- *SIMATIC STEP 7 Basic V15.1* with the *STEP 7 Safety Basic V15.1* optional package

  or

- *SIMATIC STEP 7 Professional V15.1* with the *STEP 7 Safety Basic V15.1* optional package

  or

- *SIMATIC STEP 7 Professional V15.1* with the *STEP 7 Safety Advanced V15.1* optional package

STEP 7 Safety optional packages

This documentation describes the optional packages *STEP 7 Safety Advanced V15.1* and *STEP 7 Safety Basic V15.1*. The *STEP 7 Safety* optional packages are the configuration and programming software for the SIMATIC Safety F-system. With *STEP 7 Safety*, you receive the following:

- Support for configuring the F-I/O in the *hardware and network editor* of the TIA Portal
- Support for creating the safety program using LAD and FBD and integrating error detection functions into the safety program
- Instructions for programming your safety program in LAD and FBD, which you are familiar with from the standard user programs
- Instructions for programming your safety program in LAD and FBD with special safety functions

Moreover, *STEP 7 Safety* offers functions for comparing safety programs and for assisting you with the system acceptance.

⚠ WARNING
The configuration of F-CPUs and F-I/Os as well as the programming of F-blocks must be carried out in the TIA Portal as described in this documentation. You must observe all aspects described in the section System acceptance (Page 361) to ensure secure operation with the system SIMATIC SAFETY. Any other procedures are not permitted. *(S056)*

Additional optional packages

In addition to the *STEP 7 Safety* optional packages, you can use additional optional packages with F-I/O and F-CPUs and use instructions for programming your safety program with special safety functions within the SIMATIC Safety F-system. For example, SINUMERIK or Failsafe HMI Mobile Panels.

The installation, parameter assignment and programming as well as what is important to note during system acceptance, is described in the documentation for the specific optional packages.

Please also read the notes in Configurations supported by the SIMATIC Safety F-system (Page 66).

TIA Portal Cloud Connector

WARNING

Use of the TIA Portal Cloud Connector is only intended for engineering work with the TIA Portal. This means online access in productive operation (e.g. SCADA) is not permitted. This is particularly true for safety programs. *(S068)*

Openness

Openness as part of STEP 7 Safety is supported with the functions listed below. Requirement for this is that no password is created for the safety-related project data to prevent the use of Openness in productive operation.

As part of STEP 7 Safety the following is supported:

- Inserting / removing F-CPUs and F-I/Os
- Copying / deleting F-CPUs and F-I/Os from templates
- Compiling software (incl. safety program)
- Reading / configuring fail-safe parameters of the F-CPU
- Reading / configuring fail-safe parameters of F-I/O devices
- Reading / configuring fail-safe modules of ET 200SP
- Reading, declaring or deleting fail-safe variables in the PLC variable table
- Updating projects to the latest type versions of F-blocks
- Consistent station upload
- Export and import of F-blocks and F-compliant PLC data types (UDT)
- Comparison of hardware and software

The following are not supported.

- Downloading to device
- Compiling hardware

Note

If access protection is set up for the safety program, actions that require access authorization cannot be executed.

WARNING

When using Openness while handling safety-related project data their integrity must be ensured (for example in the context of saving or transferring of applications for "Source Code Management"). In case of a connection of external tools, observe the requirements for offline support tools according to IEC 61508-3. A violation of the integrity of the safety-related project data can not be determined during the import with STEP 7 Safety. A final verification of the correctness of the safety-related project data has to be carried out as described in the section System acceptance (Page 361). *(S070)*

Virtual environments

WARNING

Use of virtual environments in the engineering system

Note that a HYPERVISOR or a client software of a HYPERVISOR is not permitted to perform any function that reproduces recorded message frame sequences with correct time behavior in the network with accessible systems.

Make sure that this condition is met, for example, when using the following functions:

- Reset of captured statuses (snapshots) of the virtual machines (VMs)
- Suspending and resuming the virtual machines
- Replay of recorded sequences in the virtual machines
- Moving VMs between hosts in productive operation (e.g. Fault Tolerance (FT))
- Digital twins of VMs in the virtual environment

If in doubt, disable these functions in the settings (HYPERVISOR administration console). *(S067)*

Safety program

You can create a safety program using the *program editor*. You can program fail-safe FBs and FCs in the FBD or LAD programming languages using the instructions from the optional package and create fail-safe DBs.

Safety checks are automatically performed and additional fail-safe blocks for error detection and fault reaction are inserted when the safety program is compiled. This ensures that failures and errors are detected and appropriate reactions are triggered to maintain the F-system in the safe state or bring it to a safe state.

In addition to the safety program, a standard user program can be run on the F-CPU. A standard program can coexist with a safety program in an F-CPU because the safety-related data of the safety program are protected from being affected unintentionally by data of the standard user program.

Data can be exchanged between the safety program and the standard user program in the F-CPU by means of bit memory or data of a standard DB or by accessing the process image input and output.

See also

Data Transfer from the Safety Program to the Standard User Program (Page 196)

1.3 Installing/uninstalling STEP 7 Safety Basic V15.1 optional package

Software requirements for *STEP 7 Safety Basic V15.1*

At a minimum, one of the following software packages must be installed on the programming device or PC:

- *SIMATIC STEP 7 Basic V15.1*
- *SIMATIC STEP 7 Professional V15.1*

Reviewing the Readme file

The readme file contains important up-to-date information about the software (for example, Windows versions supported). You can display the readme file in the setup program or open it later in the *SIMATIC STEP 7* information system.

Installing *STEP 7 Safety Basic V15.1*

1. Start the programming device or PC on which the *"SIMATIC STEP 7 Basic V15.1"* or *"SIMATIC STEP 7 Professional V15.1*" software package has been installed, and make sure that *SIMATIC STEP 7 Basic V15.1* or *SIMATIC STEP 7 Professional V15.1* is closed.
2. Insert the optional package product DVD.
3. Initiate the *SETUP.EXE* program on the DVD.
4. Follow the instructions of the Setup program, bearing in mind the information in the readme file.

Displaying integrated Help

The help on *STEP 7 Safety Basic V15.1* is completely integrated into the information system of *SIMATIC STEP 7 Basic V15.1* or *SIMATIC STEP 7 Professional V15.1*. You have the following two options to open the integrated help:

- In the "Help" menu, select the "Show help" command or press <F1> to show the appropriate help for the context.
- Click on the link within a tool tip cascade to go directly to a place with more information within the help.

Uninstalling *STEP 7 Safety Advanced V15.1*

To uninstall *STEP 7 Safety Basic V15.1*, proceed as described in the *STEP 7 Help* under "Uninstall".

Post-uninstall procedures

After uninstalling the *STEP 7 Safety Basic V15.1* optional package, you can still open projects with F-CPUs whose F-capability is enabled but you can no longer edit the safety program. F-I/O is no longer supported.

1.4 Installing/uninstalling STEP 7 Safety Advanced V15.1 optional package

Software requirements for *STEP 7 Safety Advanced V15.1*

At a minimum, the following software package must be installed on the programming device or PC:

- *SIMATIC STEP 7 Professional V15 .1*

Reviewing the Readme file

The readme file contains important up-to-date information about the software (for example, Windows versions supported). You can display the readme file in the setup program or open it later in the *SIMATIC STEP 7* information system.

Installing *STEP 7 Safety Advanced V15.1*

1. Start the programming device or PC on which the *"SIMATIC STEP 7 Professional V15.1"* software package has been installed, and make sure that *SIMATIC STEP 7 Professional V15.1* is closed.
2. Insert the optional package product DVD.
3. Initiate the *SETUP.EXE* program on the DVD.
4. Follow the instructions of the Setup program, bearing in mind the information in the readme file.

Displaying integrated Help

The help on *STEP 7 Safety Advanced V15.1* is completely integrated into the information system of *SIMATIC STEP 7 Professional V15.1*. You have the following two options to open the integrated help:

- In the "Help" menu, select the "Show help" command or press <F1> to show the appropriate help for the context.
- Click on the link within a tool tip cascade to go directly to a place with more information within the help.

Uninstalling *STEP 7 Safety Advanced V15.1*

To uninstall *STEP 7 Safety Advanced V15.1*, proceed as described in the *STEP 7 Help* under "Uninstall".

Post-uninstall procedures

After uninstalling the *STEP 7 Safety Advanced V15.1* optional package, you can still open projects with F-CPUs whose F-capability is enabled but you can no longer edit the safety program. F-I/O is no longer supported.

1.5 Installing/uninstalling STEP 7 Safety PowerPack

After the installation of the *STEP 7 Safety PowerPack* the functional scope of *STEP 7 Safety Advanced V15.1* is available to you.

Software requirements for *STEP 7 Safety PowerPack*

At a minimum, the following software package must be installed on the programming device or PC:

- *SIMATIC STEP 7 Safety Basic V15.1*
- *SIMATIC STEP 7 Professional V15.1*

Installing *STEP 7 Safety PowerPack*

1. Start the *Automation License Manager* on the programming device/PC on which the *"SIMATIC STEP 7 Professional V15.1"* software package is installed.
2. Install the license included in the *STEP 7 Safety PowerPack* as described in the *Automation License Manager help*.

Uninstalling *STEP 7 Safety PowerPack*

To uninstall the license included in the *STEP 7 Safety PowerPack*, proceed as described in the *Automation License Manager help*.

1.6 Migrating projects from S7 Distributed Safety V5.4 SP5 to STEP 7 Safety Advanced

Introduction

In *STEP 7 Safety Advanced*, you can continue to use projects with safety programs that you created with *S7 Distributed Safety V5.4 SP5*.

Requirement

STEP 7 Safety Advanced, *S7 Distributed Safety V5.4 SP5*, and the *F-Configuration Pack* used to create the project must all be installed on the computer you are using for migration. The *F-Configuration Pack V5.4 SP5* to *V5.5 SP13* is supported.

To that end, the projects must have been compiled in *S7 Distributed Safety V5.4 SP5* and with the *F-Configuration Pack*.

Prior to migration

Delete all F-blocks not required by the safety program in your *S7 Distributed Safety V5.4 SP5* project prior to migration.

Procedure as in *STEP 7 Professional*

Proceed just as you would for standard projects to migrate projects from *S7 Distributed Safety V5.4 SP5* to *STEP 7 Safety Advanced*. Once the migration is complete, you should verify using the collective F-signature whether the project was migrated unchanged.

Note

If you use the safety program to migrate F-blocks with know-how protection, remove the know-how protection prior to migration.

You can assign the F-blocks know-how protection again once the migration is completed.

This migration approach is described in the "Migration" section of the *STEP 7 Professional* Help. Special considerations about *STEP 7 Safety Advanced* are described below.

Note

We recommend that you enable the "Include hardware configuration" option in the "Migrating project" window.

Older hardware versions

Older versions of F-hardware may not be supported by *STEP 7 Safety Advanced* .

If you have used and configured versions of F-CPUs and F-I/O in S7 Distributed Safety projects that are not approved for *STEP 7 Safety Advanced*, you will need to upgrade this hardware to the new version in *S7 Distributed Safety V5.4 SP5* and the corresponding *F-Configuration Pack*. Once the upgrade is completed, migration to *STEP 7 Safety Advanced* is feasible. A Product Information with a list of approved hardware is available on the Internet (https://support.industry.siemens.com/cs/ww/de/view/109481784):

Particularities for safety-related CPU-CPU communication via S7 connections

You can find information about the special considerations for migrated projects with safety-related CPU-CPU communication via S7 connections in Safety-related communication via S7 connections (Page 248). Please also note Communication with S7 Distributed Safety via S7 connections (Page 258).

Particularities for ESTOP1 or FDBACK instructions

Information on the special considerations when using the ESTOP1 and FDBACK instructions can be found in the "Instruction versions" section in ESTOP1: Emergency STOP/OFF up to stop category 1 (STEP 7 Safety V15.1) (Page 430) and FDBACK: Feedback monitoring (STEP 7 Safety V15.1) (Page 475).

Post-migration procedures

Once migration is complete, you have a complete project with a safety program which has retained the program structure of *S7 Distributed Safety* and the collective F-signature. F-blocks from the S7 Distributed Safety F-library (V1) are converted into instructions that are provided by *STEP 7 Safety Advanced*.

The migrated project therefore does not need to be re-accepted; it can be loaded as is to the F-CPU as long as it has not been modified or compiled since migration.

Note

Safety summary

You cannot create a safety summary in *STEP 7 Safety Advanced* for a migrated project. The printout of the project created with *S7 Distributed Safety V5.4 SP5* and the corresponding acceptance documents are still valid, because the collective F-signature has been retained.

Compiling of the migrated hardware configuration

If you receive an error message after migration and subsequent compilation of the hardware configuration stating that the F-source address does not match the "Central F-source address" parameter of the F-CPU, change the "Central F-source address" parameter.
The F-source addresses of all F-I/Os assigned to the F-CPU are reassigned in the process.

If after migration of an SM 326; DI 24 x DC 24V (6ES7 326-1BK01-0AB0 and 6ES7 326-1BK02-0AB0) and subsequent compilation of the hardware configuration, the error message "F_IParam_ID_1: Value outside the permitted range" is displayed, delete the F-SM and reinsert it.

In both cases, subsequent compilation of the safety program is required.

Compiling the migrated safety programs

As a result of compilation of the migrated project with *STEP 7 Safety Advanced*, the existing program structure (with F-CALL) is converted to the new program structure of *STEP 7 Safety Advanced* (with main safety block). This changes the F-collective signature and the safety program has to be validated or acceptance may have to be carried out again.

(S7-300, S7-400) You must call up the main safety block according to the F-CALL from an arbitrary block of the standard user program. We recommend a call from an OB 3x.

Note

During the first-time compiling of the migrated safety program the call of the F-CALL is replaced automatically by a call of the main safety block, if the calling block of the F-CALL was created using the programming language LAD, FBD or STL.

Note

Changing the Safety system version

Before compiling with *STEP 7 Safety Advanced* for the first time, you must change the safety system version to a version which is not equal to 1.0 in the "Settings" area of the *Safety Administration Editor*. We recommend that you use the highest available version.

Note

Using the latest version of instructions

If you want to expand the migrated safety program, we recommend that you update to the latest version of the instructions used before compiling with *STEP 7 Safety Advanced* for the first time. Read the information on instruction versions for each instruction.

Note

Note that compiling the migrated safety program extends the runtime of the F-runtime group(s) and increases the memory requirements of the safety program (see also Excel file for calculating response time (http://support.automation.siemens.com/WW/view/en/49368678/133100)).

See also

Application example "Migration of a safety program to TIA Portal" (https://support.industry.siemens.com/cs/ww/en/view/109475826)

1.7 Migšrating PLC programs to a n F-CPU S7-1500

To migrate an F-CPU S7-300/400 onto an F-CPU S7-1500, proceed as with the migration of a standard CPU S7-300/400 onto a CPU S7-1500.

Points to note after migration:

- Non-automatable actions
  - Creating an F-runtime group and assigning it to the main safety block.
  - The hardware configuration including the I/O of the initial F-CPU is not automatically transferred to an S7-1500 F-CPU. Implement the hardware configuration of the new CPU manually after migration.

    Please also read the sections "Specify F-destination address for F-I/O of PROFIsafe address type 1" and "Specify F-destination address for F-I/O of PROFIsafe address type 2“ in chapter "Configuring an F-CPU (Page 48)“. Otherwise, this can lead to a reassignment of the F-destination addresses in the configuration.
  - When using F-I/Os with PROFIsafe Protocol Version = Expanded Protocol (XP) (for example S7-1500/ET 200MP F-modules) keep in mind that you need one byte more in the address area of S7-1200/1500 F-CPUs than in S7-300/400 F-CPUs.
  - Replacement of the OV instruction by the connection of the ENO output for Math functions (Page 520).
  - Replacement of the RD_FDB instruction by the instructions RD_ARRAY_I (Page 539) and RD_ARRAY_DI (Page 542).
  - Replacement of the F-runtime group communication through Communication via Flexible F-Link (Page 145).
- Instructions not supported:
  - MUTING
  - TWO_HAND
  - WR_FDB
  - OPN
  - SENDS7
  - RCVS7
- Data types not supported
  - DWORD
- Changes to safety program programming
  - F_GLOBDB.VKE0/1 replaced by FALSE/TRUE (Page 119).
  - Readable values from the F_GLOBDB replaced by the F-runtime group information DB. Additional information is available under F-shared DB (S7-300, S7-400) (Page 148) and F-runtime group information DB (S7-1200, S7-1500) (Page 148).
  - Replacement of the QBAD_I_xx or QBAD_O_xx tag by the value status. Additional information is available under Value status (S7-1200, S7-1500) (Page 159) and F-I/O DB (Page 165).

- New naming convention when naming the F-I/O DBs
- Modified behavior of QBAD and PASS_OUT (Page 171) tags for F-I/O with "RIOforFA safety" profile.

Compile the safety program and eliminate any compilation errors displayed.

Note

A new acceptance must be carried out following F-CPU migration.

See also

Programming (Page 111)

1.8 Upgrading projects to STEP 7 Safety V15.1

1.8.1 Upgrading projects from STEP 7 Safety V15 to V15.1

If you want to continue to work with a project from *STEP 7 Safety V15*, you must first upgrade the project to *STEP 7 Safety V15.1*.

Perform the upgrade following the usual procedure for *STEP 7*. After upgrading to V15.1, you have to compile your safety program.

1.8.2 Upgrading projects from STEP 7 Safety V14 SP1 to V15.1

If you want to continue to work with a project from *STEP 7 Safety V14 SP1*, you must first upgrade the project to *STEP 7 Safety V15.1*.

Perform the upgrade following the usual procedure for *STEP 7*. After upgrading to V15.1, you have to compile your safety program.

1.8.3 Upgrading projects from STEP 7 Safety V13 SP1 to V15.1

If you want to continue to work with a project from *STEP 7 Safety V13 SP1*, you must first upgrade the project to *STEP 7 Safety V15.1*.

Perform the upgrade following the usual procedure for *STEP 7*. After upgrading to V15.1, you have to compile your safety program.

(S7-300/400): After compilation, the safety program is consistent and the collective F-signature of the upgraded safety program corresponds to the collective F-signature of the safety program from V13 SP1. Acceptance of changes is not required

(S7-1200/1500): After compiling, your safety program is consistent and the collective F-signature of the upgraded safety program has changed for system reasons. The new collective F-signature of the safety program with *STEP 7 Safety V15.1* replaces the former collective F-signature of the safety program with *STEP 7 Safety V13 SP1*.

You can find an overview of all system-related changes under "Common data/Protocols/F-Convert Log+CPU name+time stamp". One of the system-related changes is that *STEP 7 Safety V15.1* automatically replaces versions of instructions no longer supported with new, functionally identical versions. The overview contains a comparison of the previous signatures with *STEP 7 Safety V13 SP1* to the new signatures with *STEP 7 Safety V15.1* and displays the automatically changed instruction versions. Print out the overview and store this printout with your acceptance documents or your machine documentation. Change acceptance is not required, since the "Collective F-signature with *STEP 7 Safety V13 SP1"* contained in the overview matches the collective F-signature in your current acceptance documents.

Keep in mind that existing change histories are not upgraded. All previous entries are deleted after the upgrade. If necessary, print out the change log before you upgrade.

Special features for user acknowledgment and reintegration of F-I/O after F-I/O or channel faults and PASS_ON = 1 (S7-1200, S7-1500)

The following applies to F-I/Os:

- S7-300 fail-safe signal modules
- ET 200SP fail-safe modules
- ET 200S fail-safe modules
- ET 200pro fail-safe modules
- ET 200iSP fail-safe modules

Keep in mind the changed behavior for user acknowledgment and reintegration when configuring "Behavior after channel fault" = "Passivation of the channel" and tag ACK_NEC (F-I/O DB) = 1. The behavior was adapted to the behavior when configuring "Behavior after channel fault" = "Passivate the entire module":

As of *STEP 7 Safety V14* or higher, user acknowledgment of a corrected F-I/O or channel fault is **possible** even when the tag PASS_ON (F-I/O DB) = 1. A reintegration (provision of process values) takes place **as soon as the tag PASS_ON = 0**.

Until *STEP 7 Safety V13 SP1*, user acknowledgment of a corrected F-I/O or channel fault was **not possible** as long as the tag PASS_ON (F-I/O DB) = 1. A user acknowledgment was only possible once the tag PASS_ON = 0. The reintegration (provision of process values) took place immediately after the user acknowledgment.

Special features when using instruction profiles

If you want to use an instruction profile in your project from *STEP 7 Safety V13 SP1*, delete the instruction profile before you upgrade to *STEP 7 Safety V15.1.* Before deleting, make a note of your settings. After upgrading create a new instruction profile, if required, and enter the noted settings there, if applicable. Please note that some instruction versions are no longer supported under *STEP 7 Safety V15.1*. You will find additional information about the supported instruction versions in the description of the respective instruction.

1.8.4 Upgrading projects from STEP 7 Safety prior to V13 SP1

If you want to upgrade from a project **prior to** *STEP 7 Safety V13 SP1* to *STEP 7 Safety V15.1*, you must upgrade the project as in Standard to *STEP 7 Safety V13 SP1* via an intermediate step.

The safety program signature does not change after upgrading the safety program to *STEP 7 Safety V13 SP1*. Acceptance of changes is therefore not required.

Perform the upgrade following the usual procedure for *STEP 7 Professional*.

When upgrading a project that was created with *STEP 7 Safety Advanced V11* . please note the following information:

Note

Adjustments are required before you can continue working on a project upgraded from *STEP 7 Safety Advanced V11*:

There was a product warning for *STEP 7 Safety Advanced V11* regarding setting the parameters "Discrepancy behavior" and "Reintegration after discrepancy error" for the fail-safe digital input and output modules 4F-DI/3F-DO DC24V/2A (6ES7138-4FC01-0AB0, 6ES7138-4FC00-0AB0). These parameters could be displayed incorrectly in certain combinations.

Based on the handling instructions in this product warning, you used a conversion table to set the affected parameters so that they were displayed incorrectly in the safety summary and hardware configuration in order for them to have the correct effect in the F-module. You also corrected the safety summary by hand to document the actual behavior of F-modules.

To reverse these changes, follow these steps:

1. Compile the upgraded project with *STEP 7 Safety Advanced V13 SP1*. An error message is displayed for each F-module in *STEP 7 Safety Advanced V11* the parameters of which you have corrected: "The CRC (F_Par_CRC) of the module (xxx) does not match the calculated value (yyy)."
2. Adapt the parameter assignment of each F-module for which this error message is displayed to match your handwritten corrections in the safety summary.
3. Do this for each F-CPU and then compile the safety program.
4. If the collective F-signature following compiling corresponds to the collective F-signature on the safety summary, you have made all the necessary corrections.

Use of CPs

F-I/Os operated downstream from a CP443-5 Extended, CP443-1 or CP 443-1 Advanced-IT were not automatically assigned a unique F-destination address.

As soon as you compile the hardware in a project with such F-I/Os in *STEP 7 Safety V13 SP1*, you are notified for the affected F-I/Os. You have to assign new, unique F-destination addresses for the reported F-I/Os. Additional information is available under PROFIsafe addresses for F-I/O of PROFIsafe address type 1 (Page 68), PROFIsafe addresses for F-I/O of PROFIsafe address type 2 (Page 70) and Peculiarities when configuring fail-safe GSD based DP slaves and fail-safe GSD based I/O devices (Page 77).

This changes the collective F-signature of the safety program. Because the F-SW collective signature is unchanged, it is documented that the safety program has remained unchanged. The changed F-HW collective signature indicates that the safety-related hardware configuration has changed. You can now verify that solely the changed F-destination addresses have caused this change:

- The F-parameter signature (without address) for each changed F-I/O remains the same.
- Only the affected F-I/O DBs are listed in the comparison editor of the safety program with the filter set to "Compare only F-blocks relevant for certification".

Changed names of F-I/O DBs

Prior to *STEP 7 Safety V13 SP1* it was possible to change the name of an F-I/O DB. This change results in a changed collective F-signature during upgrading.

If a changed collective F-signature is unwanted during upgrading, follow these steps:

1. Under *STEP 7 Safety V13*, rename the changed names of the F-I/O DBs back to the original names.
2. Compile the safety program.

   The collective F-signature does not change as a result.
3. Print a comparison printout (Page 339).

   Use the comparison printout to ensure that you have only changed the names of the F-F-I/O DBs.
4. Upgrading the safety program to *STEP 7 Safety V13 SP1*. After upgrading, the safety program has the F-collective signature from step 2.

1.9 First steps

Getting Started in SIMATIC Safety

Three Getting Started documents are available to help you begin using SIMATIC Safety.

The Getting Started documentation is an instruction manual that provides a step-by-step description of how to create a project with SIMATIC Safety. It gives you the opportunity to quickly become familiar with the scope of features of SIMATIC Safety.

Contents

The Getting Started documentation describes the creation of a single, continuous project that is extended with each section. Based on the configuration, you program a fail-safe shutdown, make changes to the programming, and accept the system.

In addition to the step-by-step instructions, the Getting Started documentation also gives you background information for every new topic, which explains the functions used in more detail and how they interrelate.

Target audience

The Getting Started documentation is intended for beginners but is also suitable for users who are switching from *S7 Distributed Safety*.

Download

Three Getting Started documents are available as PDF files for free download in the Industry Online Support:

- STEP 7 Safety Advanced V11 with S7-300/400 F-CPUs (http://support.automation.siemens.com/WW/view/en/49972838)
- STEP 7 Safety Basic V13 SP1 with S7-1200 F-CPUs (http://support.automation.siemens.com/WW/view/en/34612486/133300) (part of the manual "S7-1200 Functional Safety manual")
- STEP 7 Safety Advanced V13 with S7-1500 F-CPUs (http://support.automation.siemens.com/WW/view/en/101177693)

Configuring 2

2.1 Overview of Configuration

Introduction

You basically configure a SIMATIC Safety F-system in the same way as a standard S7-300, S7-400, S7-1200, S7-1500 or ET 200MP, ET 200SP, ET 200S, ET 200iSP, ET 200eco, ET 200eco PN or ET 200pro automation system in *STEP 7.*

This section presents only the essential differences compared to standard configuration you encounter when configuring a SIMATIC Safety F-system.

This documentation distinguishes between two groups of F-I/O:

F-I/Os of PROFIsafe address type 1

F-I/Os which ensure the uniqueness of the PROFIsafe address solely with the F-destination address, for example, ET 200S F-modules. The PROFIsafe address is usually assigned by DIP switches.

F-I/Os of PROFIsafe address type 2

F-I/Os which can ensure the uniqueness of the PROFIsafe address with a combination of F-source address and F-destination address, for example, S7-1500/ET 200MP F-modules. The PROFIsafe address is usually assigned with *STEP 7 Safety*.

Which F-components can you configure with the *STEP 7 Safety* optional package?

The table below shows you which F-CPUs you can configure with *STEP 7 Safety Basic* and which with *STEP 7 Safety Advanced*:

F-CPUs	*STEP 7 Safety Basic*	*STEP 7 Safety Advanced*
S7-300	—	x
S7-400	—	x
S7-1200	x	x
S7-1500	—	x
WinAC RTX F	—	x
S7-1500 F Software Controller	—	x

The table below shows you which F-I/Os you can configure with *STEP 7 Safety Basic* and which with *STEP 7 Safety Advanced* as well as which PROFIsafe address type they support:

F-I/O	*STEP 7 Safety Basic*	*STEP 7 Safety Advanced*	*PROFIsafe address type*
S7-300 F-SMs	x**	x**	1
ET 200S F-modules	x	x	1
ET 200pro F-modules	x	x	1
ET 200iSP F-modules	x	x	1
ET 200eco DP F-I/Os	—	With S7-300/400 F-CPUs (only PROFIsafe V1 mode)	1
ET 200eco PN F-I/Os	x	x	2
S7-1200 F-modules (centrally on S7-1200 F-CPUs)	x	x	2
ET 200SP F-modules	x	x	2
S7-1500/ET 200MP F-modules	x	x	2
fail-safe GSD based DP slaves	x	x	*
fail-safe GSD based I/O devices	x	x	*

* Consult the respective documentation to determine the PROFIsafe address type of a GSD based DP slave/GSD based I/O device. If in doubt, assume that the PROFIsafe address is type 1.

*** F-SMs that only support PROFIsafe V1 mode can only be used on F-CPUs S7-300/400.

Example: Configured F-system in *STEP 7 Professional*

The following figure presents a configured F-system. You choose the fail-safe components in the "Hardware catalog" task card as you would do with standard components and place them in the work area of the network or device view. F-components are shown in yellow.

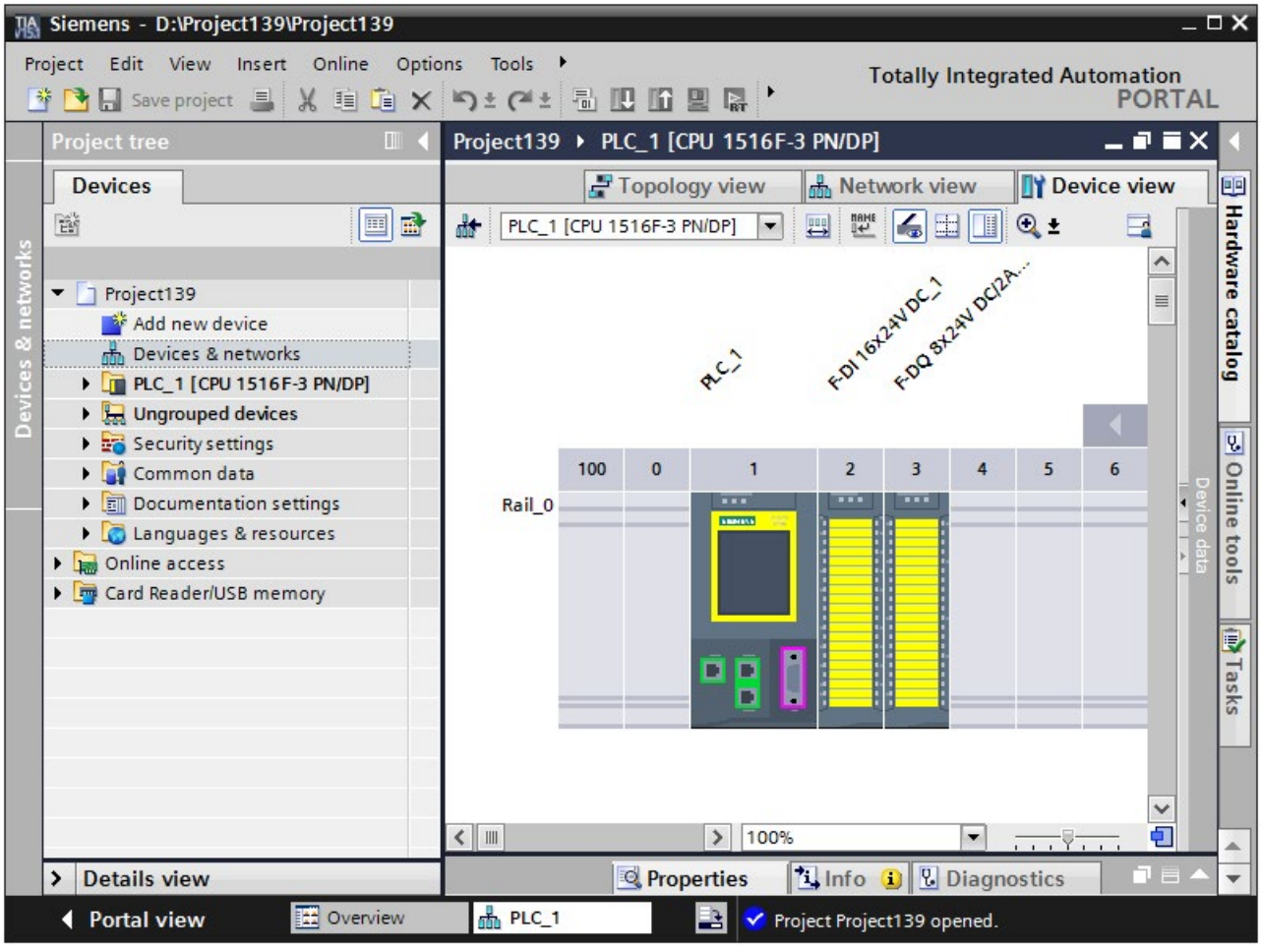

Additional information

For detailed information on F-I/O, refer to the *manuals for the relevant F-I/O*.

Which safety-related communication options can you configure?

You need to use the *hardware and network editor* to configure the following safety-related communication options (see Configuring and programming communication (S7-300, S7-400) (Page 201) or Configuring and programming communication (S7-1200, S7-1500) (Page 270)):

- Communication with Flexible F-Link (Page 262)
- Safety-related master-master communication
- Safety-related master-master communication for *S7 Distributed Safety*
- Safety-related master-I-slave communication
- Safety-related I-slave-I-slave communication
- Safety-related I-slave-slave communication
- Safety-related IO controller-IO controller communication
- Safety-related IO controller-IO controller communication for *S7 Distributed Safety*
- Safety-related IO controller-I-device communication
- Safety-related IO controller-I-slave communication
- Safety-related communication via S7 connections
- Safety-related communication via S7 connections for *S7 Distributed Safety* or *S7 F Systems*

2.2 Particularities for configuring the F-System

Configuring is the same as for standard components

You configure a SIMATIC Safety F-system in the same way as a standard S7 system. This means that you configure and assign parameters for the hardware in the *hardware and network editor* as a centralized system (F-CPU and F-IO if required e.g. CPU 1516F-3 PN/DP and F-modules S7-1500/ET 200MP) and/or as a distributed system (F-CPU, F-SMs in ET 200M, F-modules ET 200MP, F-modules ET 200SP, ET 200S, ET 200pro, ET 200iSP, ET 200eco, ET 200eco PN, fail-safe GSD based DP slaves and fail-safe fail-safe GSD based I/O devices).

Special F-parameters

For the F-functionality there are special F-parameters that you can review and set in the "Properties" of the fail-safe components (F-CPU and F-I/O). F-parameters are marked in yellow.

F-parameters are explained in "Configuring an F-CPU (Page 48)" and "Configuring F-I/O (Page 53)".

Compiling the hardware configuration

You must compile the hardware configuration of the SIMATIC Safety F-system (shortcut menu "Compile > Hardware configuration"). A configured F-CPU with enabled F-capability is the only prerequisite for programming the safety program.

Note

Inconsistencies are possible when configuring the hardware and can also be saved. A full consistency check of the hardware configuration and possible connection data is performed only during compilation. Therefore, perform "Edit > Compile" regularly.

Changing safety-related parameters

Note

If you change a safety-related parameter (marked in yellow) for an F-I/O or an F-CPU, you must then compile the modified hardware configuration and the Compiling the safety program (Page 311) (shortcut menu "Compile > Hardware and software (only changes)") and download. This also applies for changes to the F-I/O which are not used in the safety program. F-I/O in standard operation is not affected by this.

2.3 Configuring an F-CPU

Introduction

You configure the F-CPU basically in the same way as a standard automation system.

F-CPUs are always configurable in *STEP 7*, regardless of whether or not the *STEP 7 Safety* optional package is installed. Without an installed optional package, however, the F-CPU can only be used as a standard CPU.

If the *STEP 7 Safety* optional package is installed, you can enable or disable the F-capability for the F-CPU.

If you want to use the F-I/O in safety mode or in safety-related communication, the F-capability of the F-CPU must be enabled.

F-capability is enabled by default after the *STEP 7 Safety* optional package is installed.

Enabling/disabling F-capability

If you want to modify the F-capability setting, proceed as follows:

1. Select the F-CPU in the device or network view, and select the "Properties" tab in the inspector window.
2. Select "Fail-safe" in the area navigation.
3. Use the appropriate button to enable/disable the F-capability.
4. If you want to disable F-capability, confirm the "Disable F-activation" dialog with "Yes".

Disabling F-capability for an existing safety program

If you want to disable the F-capability for an F-CPU because you intend to use the F-CPU as a standard CPU although a safety program is installed, you must note the following:

- You need the password for the safety program, if assigned.
- The Safety Administration Editor (Page 81) is deleted from the project tree.
- The F-OBs are deleted. (S7-1200, S7-1500)
- All F-blocks are deleted.
- From now on you cannot use F-I/O in safety mode with this F-CPU.

Configuring the F-parameters of the F-CPU

In the "Properties" tab of the F-CPU, you can change or apply the default settings for the following parameters:

- The F-destination address range
  - Low limit for F-destination addresses
  - High limit for F-destination addresses
- The default F-monitoring time for central or distributed F-I/O at the F-CPU

Note

A change of the F-monitoring time for central or distributed F-I/O at the F-CPU results in modifications to the safety program when it is recompiled. A new acceptance may therefore be required.

Specify F-destination address for F-I/O of PROFIsafe address type 1

With the parameters "Low limit for F-destination addresses" and "High limit for F-destination addresses" you specify a range for this F-CPU in which the F-destination address of newly inserted F-I/Os of PROFIsafe address type 1 (Page 68) is assigned automatically. An F-destination address that is not within the F-destination address range yet, is also reassigned when you reassign a DP slave/IO device with the F-CPU or switch on the F-activation of the F-CPU or change the logical address of this F-module.

The F-destination address is assigned in ascending order starting at the "Low limit for F-destination addresses". When no free F-destination address is available in the F-destination address range, the next available free F-destination address outside the F-destination address range is assigned and a warning is output during compilation.

The maximum possible F-destination address for ET 200S, ET 200eco, ET 200pro, ET 200iSP F-modules and S7-300 F-SMs is 1022.

The F-destination addresses for F-I/O of PROFIsafe address type 1 must be unique network-wide and CPU-wide.

By selecting different F-destination address ranges for different F-CPUs, you can define different ranges for the automatic assignment of the F-destination address. This is useful when you are operating multiple F-CPUs in one network. Subsequent manual address changes are possible. (see also Recommendation for PROFIsafe address assignment (Page 65))

Example:

You have configured the F-destination address range as follows:

- Low limit for F-destination addresses = 100
- High limit for F-destination addresses = 199

When inserting the first F-I/O of PROFIsafe address type 1, the F-destination address 100 is assigned. When inserting an additional F-I/O of PROFIsafe address type 1, the F-destination address 101 is assigned.

Note

The parameters "Low limit for F-destination addresses" and "High limit for F-destination addresses" have no effect on the following F-I/Os:

- SM 326; DI 8 x NAMUR (as of article number 6ES7326-1RF00-0AB0)
- SM 326; DO 10 x DC 24V/2A (article number 6ES7326-2BF01-0AB0)
- SM 336; AI 6 x 13 bit (article number 6ES7336-1HE00-0AB0)

Specify F-destination address for F-I/O of PROFIsafe address type 2

The F-destination address of F-I/O of PROFIsafe address type 2 (Page 70) is assigned automatically for each F-CPU in descending order starting with 65534. The low limit is the value configured with the parameter "Low limit for F-destination addresses" (for F-I/O of PROFIsafe address type 1) + 1.

When the value configured with the "High limit for F-destination addresses" parameter is reached, a warning is output during compilation. (See also Recommendation for PROFIsafe address assignment (Page 65))

Specify F-source address for F-I/O of PROFIsafe address type 2

You specify the F-source address for F-I/O of PROFIsafe address type 2 (Page 70) assigned to this F-CPU with the "Central F-source address" parameter. The F-source address must be unique throughout the network. (see also Recommendation for PROFIsafe address assignment (Page 65))

Note

A change to the "Central F-source address" parameter results in modifications to the safety program when it is recompiled. A new acceptance may therefore be required because the F-source addresses of all F-I/Os of address type 2 are changed centrally by this step.

"Default F-monitoring time" parameter

Configure the "Default F-monitoring time" for monitoring the communication between the F-CPU and F-I/O.

You can adjust the F-monitoring time via the following parameters:

- "Default F-monitoring time for central F-I/O"
- "Default F-monitoring time for F-I/O of this interface"

The **default F-monitoring time for the central F-I/O** acts on the F-I/O that is arranged centrally, i.e. near the F-CPU. You set this parameter in the properties of the F-CPU (select F-CPU, then select "Properties > Fail-safe > F-parameters").

The **default F-monitoring time for the F-I/O of this interface** acts on the F-I/O that is assigned to this interface of the F-CPU (PROFIBUS or PROFINET). You change this parameter in the properties of the relevant interface (selection of the interface in the "Device view" tab, then "F-parameters").

The various settings available allow you to flexibly adapt the F-monitoring time to the conditions of your F-system, for example to take account of different bus cycles.

You can also change the F-monitoring time individually for each F-I/O in the F-I/O properties (see Configuring F-I/O (Page 53) or Peculiarities when configuring fail-safe GSD based DP slaves and fail-safe GSD based I/O devices (Page 77)).

Note

A change of the F-monitoring time for central or distributed F-I/O at the F-CPU results in modifications to the safety program when it is recompiled. A new acceptance may therefore be required.

WARNING

It can only be ensured (from a fail-safe standpoint) that a signal state to be transferred will be acquired at the sender end and transferred to the receiver if the signal level is pending for at least as long as the assigned monitoring time. *(S018)*

You can find additional information in Monitoring and response times (Page 607).

Automatic generation of the safety program

The safety program of an F-CPU consists of one or two F-runtime groups that contain the F-blocks (see also Defining F-Runtime Groups (Page 132)). When the F-CPU (with activated F-capability) is inserted into the work area of the device view or network view, a safety program with an F-runtime group is generated automatically.

You can define in *STEP 7 Safety* that no F-runtime group is generated while inserting the F-CPU (with activated F-capability).

Proceed as follows:

1. Select the "Options > Settings" menu command.
2. Select the "STEP 7 Safety" area.
3. If it is not already disabled, disable automatic generation of an F-runtime group by deselecting the "Generate default fail-safe program" option.

This change has no influence on any existing safety programs; it only defines whether an F-runtime group is automatically generated for each one of the subsequently inserted F-CPUs.

Configuring the protection level of the F-CPU

WARNING

(S7-300, S7-400) In safety mode, access with the CPU password must not be authorized during changes to the standard user program as this would also allow changes to the safety program. To rule out this possibility, you must configure the protection level "Write protection for fail-safe blocks" and configure a password for the F-CPU. If only one person is authorized to change the standard user program and the safety program, the protection level "Write protection" or "Read/write protection" should be configured so that other persons have only limited access or no access at all to the entire user program (standard and safety programs).*(S001)*

WARNING

(S7-1200, S7-1500) In safety mode, the safety program must be password-protected. For this purpose, configure at least the protection level "Full access (no protection)" and assign a password under "Full access incl. fail-safe (no protection)". This protection level only allows full access to the standard user program, not to F-blocks.

If you select a higher protection level, for example to protect the standard user program, you must assign an additional password for "Full access (no protection)".

Assign different passwords for the individual protection levels. *(S041)*

You configure the protection level following the same procedure as for standard CPUs.

For information on the password for the F-CPU, refer to Access protection (Page 101). Pay special attention to the warnings in Access protection for the F-CPU (Page 106).

2.4 Configuring F-I/O

Introduction

You configure the S7-1500/ET 200MP, ET 200SP, ET 200S, ET 200eco (S7-300, S7-400), ET 200eco PN, ET 200pro and ET 200iSP F-modules, the S7-300 F-SMs and the S7-1200 F-modules as usual in *STEP 7*:

After you have inserted the F-I/O in the work area of the *device or network view*, you access the configuration dialogs by selecting the relevant F-I/O and the "Properties" tab.

Note

Changes to the parameter assignment result in modifications to the safety program when it is recompiled. A new acceptance may therefore be required.

The use of ET 200SP F-modules is possible with IM155-6PN ST as of Firmware V1.1, IM 155-6 PN HF and IM 155-6 DP HF.

The distributed use of S7-1500/ET 200MP F-modules is possible with IM 155-5 PN ST as of firmware V3.0, IM 155-5 PN HF as of firmware V2.0 and IM 155-5 DP ST as of firmware V3.0.

The central use of S7-1500/ET 200MP F-modules is possible with S7-1500 F-CPUs as of firmware V1.7, distributed use as of firmware V1.5.

(S7-1200) We recommend you limit the total number of F-I/Os that are used centrally or distributed in an S7-1200 F-CPU to 12. Depending on the volume of project data, the maximum number of F-I/Os can be smaller.

WARNING

When you make changes in which the assignment of input/output addresses and wiring can change, then you must perform a wiring test.

Examples for such changes are:

- Adding F-I/O
- Changing the start address of F-I/O
- Changing the slot position of F-I/O
- Changing
  - the rack
  - the slave/device address
  - the PROFIBUS DP/PROFINET IO subnet
  - the IP address
  - the device name

(S071)

Channel-granular passivation after channel faults

You can configure how the F-I/O will respond to channel faults, such as a short-circuit, overload, discrepancy error, or wire break, provided the F-I/O supports this parameter (e.g. for ET 200S or ET 200pro F-modules). You configure this response in the properties for the relevant F-I/O ("Behavior after channel fault" parameter). This parameter is used to specify whether the entire F-I/O or just the faulty channel(s) are passivated in the event of channel faults.

Note

(S7-300, S7-400) Note that channel-granular passivation increases the runtime of the F-runtime group(s) compared to passivation of the entire F-I/O (see also Excel file for response time calculation (http://support.automation.siemens.com/WW/view/en/49368678/133100)).

"Channel failure acknowledge" parameter (S7-1200, S7-1500)

In the case of F-I/Os that support the "Channel failure acknowledge" channel parameter (for example S7-1500/ET 200MP F-modules and S7-1200 F-modules), this replaces the ACK_NEC tag of the F-IO data block.

If an F-I/O fault is detected by the F-I/O, passivation of all channels of the relevant F-I/O occurs. If channel faults are detected, the relevant channels are passivated if "Passivate channel" is configured. If "Passivate the entire module" is configured, all channels of the relevant F-I/O are passivated. Once the F-I/O fault or channel fault has been eliminated, reintegration of the relevant F-I/O occurs in line with the "Channel failure acknowledge" parameter.

- Automatically
- Manually
- Adjustable (when channel-granular passivation is configured.)

WARNING

The parameter assignment "Channel failure acknowledge = Automatic" is only allowed if automatic reintegration is permitted for the relevant process from a safety standpoint.*(S045)*

Note

The default assignment for the "Channel failure acknowledge" parameter when the F-module is created is "Manually".

Organization block/Process image (S7-1200, S7-1500)

If you use F-I/O in standard mode, you can select the organization block/process image as you do for standard I/O.

If you use F-I/O in safety mode, no selection is possible. The process image is updated at the beginning or end of the F-OB (see section Program structure of the safety program (S7-1200, S7-1500) (Page 114)).

Contrary to F-I/O operated in non-isochronous mode, you need to selected a process image partition, such as PIP 1 for F-I/O that is operated in isochronous mode (see "Configuring isochronous mode (S7-1500) (Page 63)").

Changing the name and number of the F-I/O DB

The name and number of the F-I/O DB (Page 165) are assigned automatically when the F-I/O is configured. The name of the F-I/O DB by default contains the start address and the name of the F-I/O. You can disable adding the prefix of the start address. The naming scheme depends on the setting in Safety Administration Editor.

You can find information on the assignment of number ranges and disabling the prefix of the start address in *Safety Administration Editor*, "Settings" area (Page 90).

Change the number of the F-I/O DB:

Change the number in the properties of the F-I/O.

Change the name of the F-I/O DB:

The name of the F-I/O DB is derived by the system from the name of the F-I/O depending on the type of F-I/O.

- For F-I/O with an F-module with a single F-submodule, the module name is used.
- For F-I/O with multiple F-submodules, the submodule name is used.

You change the name of the F-I/O DB indirectly by changing the name of the F-I/O.

Customizing the F-monitoring time for F-I/O

You can customize the F-monitoring time in the properties of the F-I/O under "F-parameters". This may be necessary to prevent a timeout being triggered when no error occurs and the F-I/O requires a longer F-monitoring time or assignment with a default F-monitoring time is not possible. For this purpose, activate the corresponding check box and assign an F-monitoring time.

Note

A change of the F-monitoring time for central or distributed F-I/O at the F-CPU results in modifications to the safety program when it is recompiled. A new acceptance may therefore be required.

WARNING

It can only be ensured (from a fail-safe standpoint) that a signal state to be transferred will be acquired at the sender end and transferred to the receiver if the signal level is pending for at least as long as the assigned monitoring time. *(S018)*

You can find additional information in Monitoring and response times (Page 607).

Group diagnostics for fail-safe S7-300 signal modules

By disabling a channel of the fail-safe signal module in the module properties, you also disable the group diagnostics for this channel.

Exception for S7-300/400 F-CPUs:

For the following S7-300 fail-safe signal modules

- SM 326; DI 8 x NAMUR (as of article number 6ES7326-1RF00-0AB0)
- SM 326; DO 10 x DC 24V/2A (article number 6ES7326-2BF01-0AB0) and
- SM 336; AI 6 x 13Bit (article number 6ES7336-1HE00-0AB0)

the "Group diagnostics" parameter enables and disables the monitoring of channel-specific diagnostic messages of F-SMs (such as wire break and short-circuit) to the F-CPU. You should disable group diagnostics for **unused** input or output channels.

WARNING

(S7-300, S7-400) For the following S7-300 fail-safe signal modules (F-SMs) with activated safety mode, "Group diagnostics" must be enabled for all connected channels:

- SM 326; DI 8 x NAMUR (as of article number 6ES7326-1RF00-0AB0)
- SM 326; DO 10 x DC 24V/2A (article number 6ES7326-2BF01-0AB0)
- SM 336; AI 6 x 13 Bit (article number 6ES7336-1HE00-0AB0)

Check to verify that you have only disabled group diagnostics for these F-SMs for input and output channels that are actually unused. *(S003)*

Diagnostic interrupts can be enabled optionally.

Additional information

For detailed description of the **parameters**, refer to the help on the properties of the respective F-I/O and in the respective *manual for the F-I/O*.

2.5 Configuration control (option handling) for F-I/Os

For configuration control (option handling) with F-I/Os proceed as with the standard I/O devices. Detailed information can be obtained by searching for "Configuration control (option handling)" in the help of *STEP 7*.

The following section describes what you have to observe additionally for F-I/Os.

Requirement

- The requirements that are specified under "Configuration control (option handling)" in the help of *STEP 7* are fulfilled.
- The requirements that are specified under "Configuration control (option handling)" in the help of *STEP 7* are fulfilled. Handle the F-I/O as standard I/O.
- V2.1. is set as a safety system version.
- The F-I/Os for which you use the configuration control (option handling) are located
  - Distributed at an F-CPU S7-300/400/1200/1500
  - Centrally at an F-CPU S7-1500
- The PROFIsafe address of the F-I/Os are set or assigned.

Note

The assignment of the PROFIsafe addresses (Page 72) is only possible if the maximum configuration actually exists.

Procedure

(F-CPU S7-1200/1500) Deactivate the F-I/Os not existing in the respective variant (option) by setting the DISABLE (Page 170) variable in the associated F-I/O DB (Page 165) to "1". This prevents the flashing of the error LED of the F-CPU and diagnostic entries of the safety program that reference these F-I/Os. With the DISABLED (Page 171) variable of the associated F-IO data block, you can evaluate whether an F-module is deactivated.

(F-CPU S7-300/400) In order to prevent the flashing of the error LEDs of the F-CPUs you do have to observe anything further. You cannot suppress diagnostics entries.

WARNING

If configuration control is used, your actual configuration deviates from the configured maximum configuration. You identify F-I/Os that do not exist in the current variant (station option) via control record as "not available".

If an F-I/O marked as "not available" is possibly nevertheless in the real structure, it has to be ensured that substitute values (0) are provided for these F-I/Os in the safety program or output at the outputs. This is achieved by setting the DISABLE variable (S7-1200/1500) or respectively PASS_ON variable (S7-300/400) in the associated F-I/O DB to "1". *(S077)*

2.5.1 Example

Introduction

The following example shows how you to

- Select/detect a station option
- Disable F-I/Os that are not present in a station option (S7-1200/1500)
- Provide your safety program for various station options

Safe selection/detection of the station option

You carry out a safe selection/detection of a station option with inputs of an F-I/O wired fixed to M/L+.

For example, you can select up to 4 station options with 2 inputs of an F-I/O.

Option	OptionSelection_Bit_0	OptionSelection_Bit_1
Q	0	0
B	0	1
C	1	0
D	1	1

Note when detecting the station option that substitute values (0) are used for the inputs of the F-I/O in certain situations, e.g. during startup of the F-system or when F-I/O channel errors occur.

In these situations, the present station option cannot be detected. You should therefore also evaluate the value status of inputs and only apply the station option one-time after startup of the F-system.

For one-time recognition of the station option, define a static local datum, for example, OptionSelectionRuns with default value "TRUE".

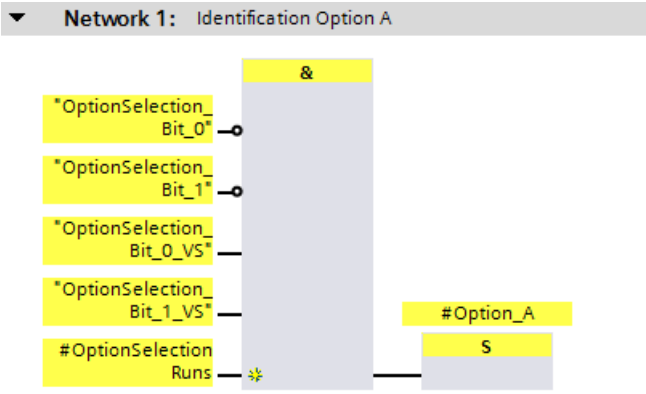

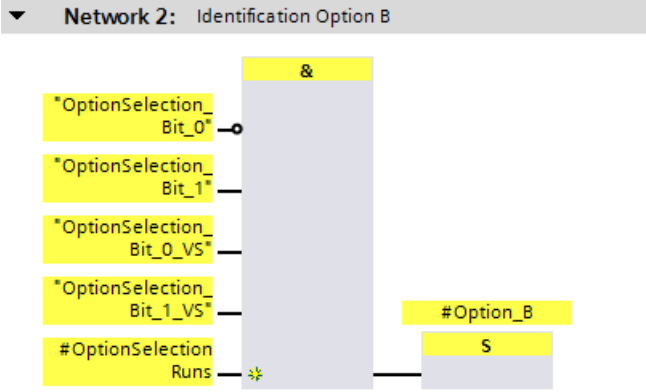

Correspondingly for options C and D.

As soon as a station option is detected, reset the static local datum for one-time detection of the station option:

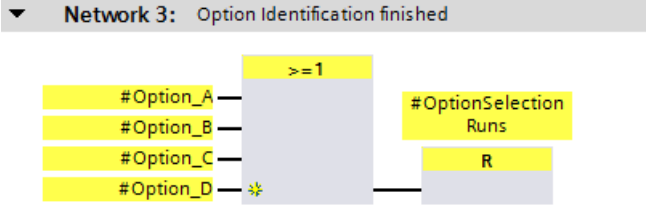

Note

When you make the selection/detection of a station option only in the standard user program, only the "Station option" is available to you as a standard datum that is not secured.

Make sure that no dangerous states arise from this.

Read the section "Data exchange between standard user program and safety program (Page 195)".

Disabling F-I/Os that are not present in a station option

If one or more F-I/Os are not present in a station option, you can prevent the blinking of the error LED of the F-CPU by disabling these F-I/Os.

In addition, diagnostic messages of the safety program that refer to these F-I/Os are suppressed.

Note

As long as the detection of the station option (during startup of the F-system) is not yet complete (OptionSelectionRuns = TRUE), you should disable all "optional" F-I/O devices.

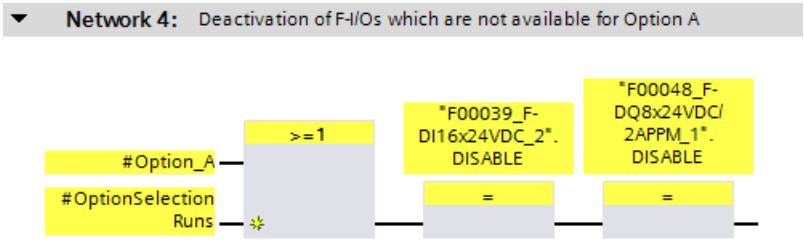

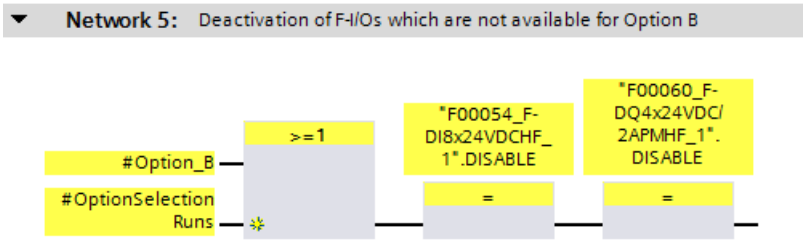

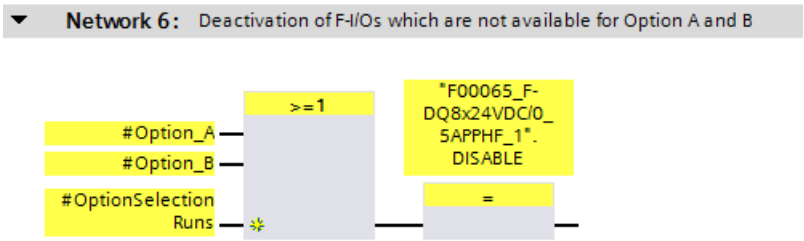

Providing the safety program for various station options

In the following example, the EMERGENCY STOP signals of different plant units or machines are combined into a collective EMERGENCY STOP signal.

Machines I and III and the corresponding F-I/O with the EMERGENCY STOP signal for machines I and III are not present with station option A.

Machine II and the corresponding F-I/O with the EMERGENCY STOP signal for machine II is not present with station option B.

The substitute values (0) are therefore used in the safety program for the EMERGENCY STOP signals from the respective unavailable machines.

In order to prevent the collective EMERGENCY STOP from being triggered because machines / EMERGENCY STOP signals are not present with certain station options, you can suppress the evaluation of the EMERGENCY STOP signal for unavailable machines by taking into account the present station option.

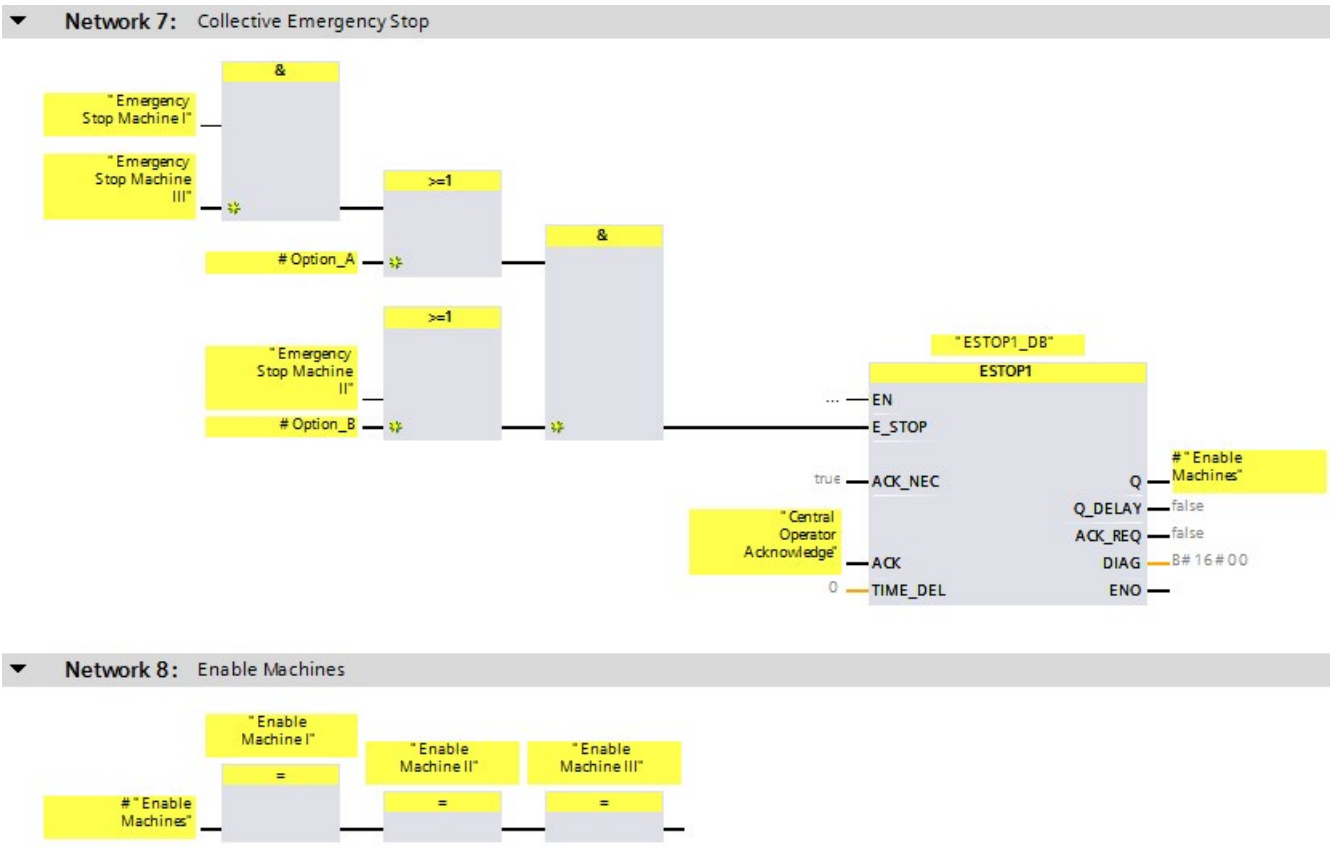

2.6 Configuring shared device

To configure shared devices follow the procedure as in the standard. The configuration is described in the *STEP 7* help under "Configuring shared devices".

F-destination addresses

Please also read the chapter "Recommendation for PROFIsafe address assignment (Page 65)“ for assigning the F-destination address.

See also

Assign PROFIsafe address to an F-module (Page 75)

2.7 Configuring isochronous mode (S7-1500)

To configure isochronous mode for F-I/Os that support this mode, e.g. "Profisafe Telgr 902" submodule of the SINAMICS S120 CU310-2 PN V5.1 drive, proceed as in the standard. The configuration is described in the *STEP 7* help under "Configuring isochronous mode".

Note the following:

- Contrary to F-I/O operated in non-isochronous mode, you need to selected a process image partition, such as PIP 1 for F-I/O that is operated in isochronous mode.
  This process image partition must contain only F-I/O operated in isochronous mode and no standard I/O.
- The assigned isochronous mode interrupt OB must first be generated as F-OB by specifying a F-runtime group (see Procedure for defining an F-runtime group (S7-1200, S7-1500) (Page 137)). It is not possible to add an F-OB with event class "Synchronous Cycle" directly during the configuration of the isochronous mode.

Requirement

F-CPUs S7-1500 as of firmware version 2.0, with IRT support.

Connection of F-I/O operated in isochronous mode to the isochronous mode interrupt OB

You access F-I/O operated in isochronous mode in the same way as you do standard I/O operated in isochronous mode, via the select process image partition.

Contrary to standard I/O that is operated in isochronous mode, the process image partition is updated by the F-system at the beginning or end of the F-OB (see Program structure of the safety program (S7-1200, S7-1500) (Page 114)).

No calling of the instructions SYNC_PI and SYNC_PO is required in the F-OB.

Note

With isochronously operated F-I/O, it is not ensured (fail-safe) that all input data of the F-I/Os assigned to the process image partition are consistently available at the beginning of the main safety block or all output data is transferred consistently to the F-I/Os, in other words, logically and temporally together. The consistency is only ensured within an F-I/O.

The consistency of all isochronous F-I/Os of the process image partition usually depends on the number of isochronous F-I/Os and the scope of the safety program in the isochronous mode interrupt OB.

If there are corresponding consistency requirements, you must check the consistency of the input and output data yourself. You can do this, for example, by additionally transferring and evaluating time stamps in the input and output data of the isochronous F-I/Os.

2.8 Recommendation for PROFIsafe address assignment

Before inserting the F-I/O, specify an address range for each F-CPU for the F-destination addresses of the F-I/O of PROFIsafe address type 1 (Page 68) that does not overlap with the address range of any other F-CPU network-wide or CPU-wide (system-wide). You define the range for F-I/Os of PROFIsafe address type 1 with the parameters "Low limit for F-destination addresses" and "High limit for F-destination addresses" (see also section Configuring an F-CPU (Page 48)).

The F-destination addresses of F-I/O of PROFIsafe address type 2 (Page 70) must not overlap with any address range of the F-I/O of PROFIsafe address type 1. The ranges of the F-destination addresses of the F-I/O of PROFIsafe address type 2 may overlap if the F-source addresses are different. This is the case for supported configurations (Page 66) if the "Central F-source address" parameter has been set differently for each F-CPU.

Assign relatively low F-destination addresses for F-I/O of PROFIsafe address type 1 and relatively high F-destination addresses for F-I/O of PROFIsafe address type 2.

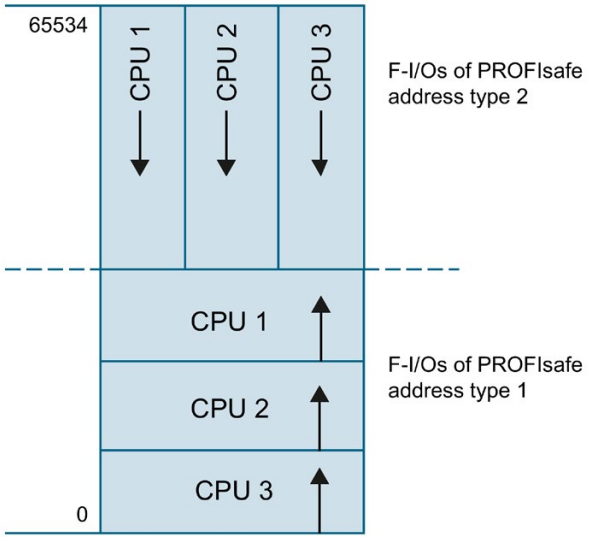

Figure 2-1 Address assignment for F-I/O of PROFIsafe address types 1 and 2

The safety summary (Page 364) lists the following information for each F-CPU:

- "Central F-source address" parameter (F-source address for F-I/O of PROFIsafe address type 2)
- Actually used range of the F-destination addresses of the assigned F-I/O of PROFIsafe address type 1
- Actually used range of the F-destination addresses of the assigned F-I/O of PROFIsafe address type 2

Any F-I/O configured using I-slave-slave communication is taken into consideration in the safety summary as part of the F-destination address range of the I-slave.

Any F-I/O configured in a shared device is taken is specified in the safety summary as part of the F-destination address range of the F-CPU to which this F-I/O is assigned.

2.9 Configurations supported by the SIMATIC Safety F-system

Supported configurations

F-I/Os (see Overview of Configuration (Page 43)) are supported in the following configurations:

central configuration (also I-slave):

- The F-I/O is in the same rack as the associated F-CPU.
- The F-I/O is located in a subrack of the rack of the associated F-CPU.

distributed configuration (at integrated DP-/PN interface of the CPU or at CP/CM):

- PROFIBUS (also after IE/PB link)
  - The F-I/O is located on a DP Slave.
  - The F-I/O is located on a DP Slave and is addressed via I-slave-slave communication. The assigned DP master (of the assigned IO controller of the IE/PB link) can be a standard CPU or an F-CPU.
- PROFINET IO
  - The F-I/O is located on an IO Device.
  - The F-I/O is located in a shared device.

For F-I/O not listed in "Overview of Configuration (Page 43)", please check the relevant documentation to see whether it is supported by the SIMATIC Safety F-system. If in doubt, treat these F-I/Os as part of a configuration that is not supported.

Checks performed by the SIMATIC Safety F-system

For supported configuration, the F-system checks:

- Whether the PROFIsafe operating mode parameter (F_Par_Version) is set to V2 mode in the PROFINET IO environment**.
- Whether the F-destination addresses have been assigned uniquely CPU-wide.
  You yourself must ensure the network-wide uniqueness of the PROFIsafe address.
- Whether the F-source address for the F-I/O of PROFIsafe address type 2 corresponds to the "Central F-source address" parameter of the F-CPU.

WARNING

Please note the following with configurations that are not included in supported configurations:

- Make sure that the F-I/O of this configuration appears in the safety summary and that an F-I/O DB has been created for it. Otherwise, you cannot use the F-I/O in this configuration. (Contact Customer Support.)
- For F-I/Os in the PROFINET IO environment**, you must check the PROFIsafe operating mode parameter (F_Par_Version) against the safety summary to make sure that it is correct. V2 mode must be set in the PROFINET IO environment. F-I/O which only support V1 mode may not be used in the PROFINET IO environment.
- You must ensure that PROFIsafe address assignment is unique CPU-wide* and network-wide***:
  - Check the correctness of the PROFIsafe addresses with the help of the safety summary.
  - Use the safety summary to check that the F-source address corresponds to the "Central F-source address" parameter of the F-CPU for F-I/O of PROFIsafe address type 2.
  - For F-I/O of PROFIsafe address type 1 or if you cannot set the F-source address in accordance with the "Central F-source address" parameter of the F-CPU, you will have to ensure the uniqueness of the PROFIsafe address solely by assigning a unique F-destination address.

  You must check the uniqueness of the F-destination address individually for each F-I/O based on the safety summary in a configuration that is not supported. (see Completeness and correctness of the hardware configuration (Page 368)) *(S050)*

* "CPU-wide" means all F-I/Os assigned to an F-CPU: Central F-I/O of this F-CPU as well as F-I/Os for which the F-CPU is DP master/IO controller and assigned F-I/O in a shared device. An F-I/O that is addressed using I-slave-slave communication is assigned to the F-CPU of the I-slave and not to the F-CPU of the DP master / IO controller.

** The F-I/O is located in the "PROFINET IO environment" if at least part of safety-related communication with the F-CPU takes place via PROFINET IO. If the F-I/O is connected via I-slave-slave communication, also keep in mind the communication line to the DP master/IO controller.

*** A network consists of one or more subnets. "Network-wide" means beyond the boundaries of the subnet. In PROFIBUS, a network includes all nodes accessible via PROFIBUS DP. In PROFINET IO, a network includes all nodes accessible via RT_Class_1/2/3 (Ethernet/WLAN/Bluetooth, Layer 2) and if applicable RT_Class_UDP (IP, Layer 3).

2.10 PROFIsafe addresses for F-I/O of PROFIsafe address type 1

F-destination address

The uniqueness of the PROFIsafe address is ensured solely with the F-destination address. The F-source address is not displayed and has no effect on whether or not the PROFIsafe address is unique.

Therefore, the F-destination address must be unique network-wide and CPU-wide (see the following rules for address assignment).

To prevent incorrect parameter assignment, an F-destination address which is unique CPU-wide is automatically assigned during placement of the F-I/O in the work area of the device or network view as long as you only configure supported configurations (Page 66).

To ensure a network-wide unique F-destination address assignment when multiple DP master systems and PROFINET IO systems are operated on one network, you must set the "Low limit for F-destination addresses" and "High limit for F-destination addresses" in the properties of the F-CPU in SIMATIC Safety F-systems appropriately, before placing the F-I/O (see section "Recommendations for address assignment") so that the F-destination address ranges do not overlap.

When you change the F-destination address of an F-I/O, the CPU-wide uniqueness of the F-destination address is checked automatically for supported configurations. You yourself must ensure the network-wide uniqueness of the F-destination address.

For ET 200S, ET 200eco (PROFIBUS), ET 200pro, ET 200iSP F-modules and S7-300 F-SMs:
You must set the F-destination address at the F-I/O with the DIP switch before you install the F-I/O. You can assign up to 1022 different F-destination addresses.

Note

(S7-300, S7-400) For the following fail-safe S7-300 signal modules, the F-destination address is the start address of the F-SM divided by 8:

- SM 326; DI 8 x NAMUR (as of article number 6ES7326-1RF00-0AB0)
- SM 326; DO 10 x DC 24V/2A (article number 6ES7326-2BF01-0AB0)
- SM 336; AI 6 x 13 Bit (article number 6ES7336-1HE00-0AB0)

You can show the columns "F-source address" and "F-destination address" in the device view of the device overview. The addresses displayed in these columns are for information purposes only. You have to check the F-destination addresses in the safety summary when you accept the system.

Rules for address assignment

WARNING

F-I/Os of PROFIsafe address type 1 are uniquely addressed by their F-destination address (e.g. with the switch setting on the address switch).

The F-destination address (and therefore also the switch setting on the address switch) of the F-I/O must be unique network-wide* and CPU-wide** (system-wide) **for the entire** F-I/O. The F-I/O of PROFIsafe address type 2 must also be considered. *(S051)*

* A network consists of one or more subnets. "Network-wide" means beyond the boundaries of the subnet. In PROFIBUS, a network includes all nodes accessible via PROFIBUS DP. In PROFINET IO, a network includes all nodes accessible via RT_Class_1/2/3 (Ethernet/WLAN/Bluetooth, Layer 2) and if applicable RT_Class_UDP (IP, Layer 3).

** "CPU-wide" means all F-I/Os assigned to an F-CPU: Central F-I/O of this F-CPU as well as F-I/Os for which the F-CPU is DP master/IO controller and assigned F-I/O in a shared device. An F-I/O that is addressed using I-slave-slave communication is assigned to the F-CPU of the I-slave and not to the F-CPU of the DP master / IO controller.

Please also note Recommendation for PROFIsafe address assignment (Page 65).

See also

Completeness of the safety summary (Page 364)

2.11 PROFIsafe addresses for F-I/O of PROFIsafe address type 2

F-source address and F-destination address

The uniqueness of the PROFIsafe address is ensured by the combination of F-source address and F-destination address.

The PROFIsafe address must be unique network-wide and CPU-wide. This is the case if the following two conditions are met:

- The F-source address ("Central F-source address" parameter) of the F-CPU is unique network-wide. Keep this in mind for changes.
- The F-destination address of the F-module is unique CPU-wide.

You define the F-source address using the "Central F-source address" parameter in the F-CPU. Provided you only configure supported configurations (Page 66), this parameter is automatically applied as the F-source address and a CPU-wide unique F-destination address is assigned (usually in descending order starting with 65534).

When you change the F-destination address, the CPU-wide uniqueness of the F-destination address is checked automatically for supported configurations.

You must assign the F-source address and F-destination address to the F-I/O before you commission the F-I/O. You can find additional information in Assigning a PROFIsafe address of the F-I/Os with SIMATIC Safety (Page 72).

You can show the columns "F-source address" and "F-destination address" in the device view of the device overview. The addresses displayed in these columns are for information purposes only. You have to check the F-source and F-destination addresses in the safety summary when you accept the system.

Rules for address assignment

WARNING

FI/O of PROFIsafe address type 2 is uniquely addressed using a combination of F-source address ("Central F-source address" parameter of the assigned F-CPU) and F-destination address.

The combination of F-source address and F-destination address for each F-I/O must be unique network-wide* and CPU-wide** (system-wide). In addition, the F-destination address may not be occupied by F-I/O of PROFIsafe address type 1.

To ensure that addresses are unique across F-CPUs for supported configurations (Page 66), you need to ensure that the "Central F-source address" parameter of all F-CPUs is unique network-wide*. This is achieved through different settings for the "Central F-source address" parameter of the F-CPUs. *(S052)*

* A network consists of one or more subnets. "Network-wide" means beyond the boundaries of the subnet. In PROFIBUS, a network includes all nodes accessible via PROFIBUS DP. In PROFINET IO, a network includes all nodes accessible via RT_Class_1/2/3 (Ethernet/WLAN/Bluetooth, Layer 2) and if applicable RT_Class_UDP (IP, Layer 3).

** "CPU-wide" means all F-I/Os assigned to an F-CPU: Central F-I/O of this F-CPU as well as F-I/Os for which the F-CPU is DP master/IO controller and assigned F-I/O in a shared device. An F-I/O that is addressed using I-slave-slave communication is assigned to the F-CPU of the I-slave and not to the F-CPU of the DP master / IO controller.

Please also note Recommendation for PROFIsafe address assignment (Page 65).

See also

Completeness of the safety summary (Page 364)

2.12 Setting the F-destination address for F-I/O with DIP switches

Information on how to set the F-destination address for F-I/O with DIP switches is available in the documentation of the respective F-I/O.

2.13 Assigning a PROFIsafe address of the F-I/Os with SIMATIC Safety

Introduction

Fail-safe ET 200SP modules, fail-safe S7-1500/ET 200MP modules, fail-safe ET 200eco PN I/O modules and fail-safe S7-1200 modules do not have a DIP switch with which you set the unique F-destination address for each module. Instead, you assign the PROFIsafe address (Page 66) consisting of F-source address and F-destination address directly from *STEP 7 Safety* for fail-safe ET 200SP modules, fail-safe ET 200eco PN I/O modules and fail-safe S7-1500/ET 200MP modules. The PROFIsafe addresses for S7-1200 F-modules are automatically assigned during download of the hardware configuration.

In the following cases it is necessary to reassign the addresses of the fail-safe ET 200SP, fail-safe ET 200eco PN I/O modules and fail-safe S7-1500/ET 200MP modules:

- Later placement of a fail-safe module during initial commissioning (not for ET 200eco PN)
- Intentional modification of the F-destination address
- Modification of the "Central F-source address" parameter for the associated F-CPU (changes the F-source address).
- Replacement of the coding element
- Commissioning of a mass-produced machine

In the following cases it is not necessary to reassign the addresses of the fail-safe ET 200SP and fail-safe S7-1500/ET 200MP modules:

- Power On/Off
- Replacement of an F-module (repair) without PG/PC
- Replacement of the BaseUnit (transferring the coding element with assigned F-source address and F-destination address to the new BaseUnit)
- Replacement of a BaseUnit without coding element
- Changes in the design in case a new BaseUnit is inserted in front of a fail-safe module
- Repair/replacement of the interface module

Reassignment is not required for fail-safe ET 200eco PN I/O modules in the following cases:

- Power On/Off
- Replacement of the compact device (transferring the coding element with assigned F-source address and F-destination address to the new compact device)

Basic procedure

Note

Assigning the PROFIsafe address for S7-1200 fail-safe modules

The procedure described below for identifying and assigning the PROFIsafe addresses is not required for S7-1200 fail-safe modules.

Note that an S7-1200 F-CPU must not include an additional unconfigured F-module.

1. Configure the F-destination address (Page 70) and F-source address (Page 70) in the hardware configuration in *STEP 7 Safety*.
2. Identify the ET 200SP, S7-1500/ET 200MP or the ET 200eco PN fail-safe I/O modules to which you want to assign the configured PROFIsafe addresses.
3. Assign the PROFIsafe address to the F-modules.

2.13.1 Identifying F-modules

Requirement

The following requirements must be met:

- The F-CPU and fail-safe modules are configured.
- The hardware configuration has been downloaded.
- When using an ET 200SP Open Controller, the hardware configuration of the ET 200SP Open Controller **and** of the fail-safe software controller must be downloaded.
- The F-CPU and fail-safe modules can be reached online.

WARNING

Make sure that the latest hardware configuration has been downloaded to the F-CPU before identification.

Clicking "Identification" confirms the fail-safe correctness of the PROFIsafe addresses for the fail-safe modules.

Therefore, proceed carefully when confirming the F-modules by LED flashing or the serial number of the F-CPU with central fail-safe modules or the serial number of the interface module with fail-safe modules.

An assignment of the PROFIsafe addresses with the serial number of the interface module is only permitted when the assignment is made for all F-I/Os of a station. When selecting individual F-I/Os, the flashing of each individual F-I/O must be checked and confirmed. *(S046)*

Procedure

Proceed as follows to identify the F-modules:

1. Establish an online connection to the F-CPU with which the fail-safe modules are operated.
2. In the network view, select the F-CPU with fail-safe modules or the interface module with the fail-safe modules to which you want to assign the PROFIsafe address.
3. Select "Assign PROFIsafe address" from the shortcut menu.
4. Under "Assign PROFIsafe address by", select the method to be used for identifying the F-modules.
   - "Identification by LED flashing"

     This is the default setting. The DIAG and STATUS LEDs of the F-modules to be identified flash upon identification.
   - "Identification by serial number"

     If you cannot see the fail-safe modules directly, you can identify the fail-safe modules by the serial number of the F-CPU or interface module.

     Note

     The displayed serial number may be amended with a year number compared to the serial number printed on the interface module. The serial numbers are nevertheless identical.

     Note

     Determining the serial number of an ET 200SP Open Controller

     When you use the ET 200SP F-modules centrally on an ET 200SP Open Controller and identify them by the serial number, then read the serial number in the display of the fail-safe S7-1500 software controller in the menu "Overview > CPU".
5. In the "Assign" column, select all the F-modules to which you want to assign the PROFIsafe address.

   If you select the F-CPU or the interface module in the "Assign" column, all F-modules of the station are selected.
6. Click the "Identification" button. Check whether the DIAG and STATUS LEDs for the F-modules whose PROFIsafe address you want to assign are flashing green. If you identify using the serial number, compare the displayed serial number to the serial number of the F-CPU with central fail-safe modules or the interface module with fail-safe modules.
7. If you have configured more S7-1500/ET 200MP fail-safe modules than exist online, a dialog is displayed. Enter the number of S7-1500/ET 200MP fail-safe modules actually existing in this dialog and confirm the dialog.

   If you have configured fewer S7-1500/ET 200MP fail-safe modules than exist online, the online-offline difference is shown and the assignment of the PROFIsafe address is not possible.

2.13.2 Assign PROFIsafe address

Requirement

The F-modules have been successfully identified.

Procedure

To assign a PROFIsafe address, proceed as follows:

1. In the "Confirm" column, select all the fail-safe modules to which you want to assign the F-source address and F-destination address.
2. Use the "Assign PROFIsafe address" button to assign the PROFIsafe address to the fail-safe modules. You may have to enter the password of the F-CPU.

   You must acknowledge the "Acknowledge assignment" dialog within 60 seconds to assign the PROFIsafe address.

2.13.3 Assign PROFIsafe address to an F-module

Introduction

In the "Assign PROFIsafe address" dialog only the F-modules which are assigned to an F-CPU of this project are offered, as the PROFIsafe address of an F-module in a shared device can only be assigned from a project in which the F-CPU to which the F-modules are assigned is located.

Requirement

Requirement for assignment of the PROFIsafe address is that you have downloaded the hardware configuration completely to the F-CPU. When you have assigned the F-modules in a shared device to multiple F-CPUs, you must first download the hardware configuration of all F-CPUs involved before you assign the PROFIsafe addresses.

Note the following for the assignment:

If the corresponding interface module is not assigned to the corresponding CPU, the programming device and shared device must be located in the same subnet. Otherwise, follow the procedure as described in the sections Identifying F-modules (Page 73) and Assign PROFIsafe address (Page 75).

See also

Configuring shared device (Page 63)

2.13.4 Changing the PROFIsafe address

Changing the PROFIsafe address

Note

Keep in mind that after changing the PROFIsafe address of an F-I/O you must also conduct an acceptance (Page 368) including check of your change (Page 378) per safety summary (Page 341).

1. You change the PROFIsafe address (F-destination address, F-source address) in the hardware configuration.
2. Compile the hardware configuration.
3. Download the hardware configuration to the F-CPU.
4. Select "Assign PROFIsafe address" from the shortcut menu.
5. Proceed as described under Identifying F-modules (Page 73) and Assign PROFIsafe address (Page 75).

2.14 Peculiarities when configuring fail-safe GSD based DP slaves and fail-safe GSD based I/O devices

Requirement

In order to use fail-safe GSD based DP slaves for SIMATIC Safety, these GSD based slaves must be operated on PROFIBUS DP and support the PROFIsafe bus profile. When used in an S7-1200/1500 F-CPU, they must support the PROFIsafe bus profile in V2 mode.

Fail-safe GSD based DP slaves used in hybrid configurations on PROFIBUS DP and PROFINET IO downstream from a IE/PB link must support the PROFIsafe bus profile in V2 mode.

In order to use fail-safe GSD based I/O devices for SIMATIC Safety, the GSD based devices must be operated on PROFINET IO and support the PROFIsafe bus profile in V2 mode.

Configuration with GSD files

As is the case in a standard system, the basis for configuring fail-safe GSD based DP slaves/IO devices is the device specification in the GSD file (device master file).

A GSD file contains all of the properties of a GSD based DP slave or GSD based I/O device. For fail-safe GSD based DP slaves/GSD based I/O devices, certain parts are protected by a CRC.

The GSD files are supplied by the device manufacturers.

Protection of the data structure of the device in GSD files

The only GSD files supported are those that satisfy the requirements for protection defined as of *PROFIsafe Specification* V2.0 using a CRC stored in this file ("desired value" for F_IO_StructureDescCRC).

The data structure described in the GSD file is checked when the F-I/O is added to the hardware configuration and when the hardware configuration is compiled. When an error is detected, you should clarify whether the GSD file provided by the device manufacturer contains the desired value for F_IO_StructureDescCRC.

Assignment and setting of the PROFIsafe address

WARNING

Check the documentation for your fail-safe GSD based DP slaves / GSD based I/O devices to find out the valid PROFIsafe address type. If you do not find the necessary information, assume PROFIsafe address type 1. Proceed as described under PROFIsafe addresses for F-I/O of PROFIsafe address type 1 (Page 68) or PROFIsafe addresses for F-I/O of PROFIsafe address type 2 (Page 70).

Set the F-source address for fail-safe DP standard slaves / fail-safe I/O standard devices according to the manufacturer's specifications. If the F-source address needs to correspond to the "Central F-source address" parameter of the F-CPU (PROFIsafe address type 2), you will find the latter in the "Properties" tab of the F-CPU. In this case, also check in the safety summary that the value of the F-CPU for the "Central F-source address" parameter matches the value of the F-source address of the fail-safe GSD based DP slave / fail-safe GSD based I/O device. *(S053)*

Configuration procedure with GSD files

You import the GSD files to your project (see *Help on STEP 7 "GSD files"*).

1. Select the fail-safe GSD based DP slave / GSD based I/O device in the "Hardware catalog" task card and connect it to the relevant subnet in the network view.
2. Select the fail-safe GSD based DP slave/GSD based I/O device and insert the necessary F-modules, if this does not occur automatically.
3. Select the relevant F-module and open the "Properties" tab in the inspector window.

For fail-safe GSD based DP slaves/GSD based I/O devices (contrary to other F-I/O), the "Manual assignment of the F-monitoring time" parameter is enabled. The result is that the value specified in the GSD file for the F-monitoring time is used as default value when the slaves/devices are plugged. You can change both values (time and type of assignment) later manually.

F-parameter "F_CRC_Seed" and "F_Passivation" for fail-safe GSD based I/O devices

The F-parameters "F_CRC_Seed" and "F_Passivation" influence the behavior of a fail-safe GSD based I/O device. The combination of the F-parameters cannot be set but is specified by selecting a corresponding F-module. Up to three F-module variants can be used, depending on the S7-300/400 or S7-1200/1500 F-CPU used.

F-module variant	F_CRC_Seed	F_Passivation	Behavior of the fail-safe GSD based I/O device	Can be used with F-CPU
1	Parameter does not exist	Parameter does not exist	The GSD based I/O device works with the Basic Protocol (BP) from PROFIsafe. The "RIOforFA-Safety" profile is not supported.	S7-300/400/1200/1500*
2	CRC-Seed24/32	Device/module	The GSD based I/O device works with the Expanded Protocol (XP) from PROFIsafe. The "RIOforFA-Safety" profile is not supported.	S7-1200/1500
3	CRC-Seed24/32	Channel	The GSD based I/O device works with the Expanded Protocol (XP) from PROFIsafe. The "RIOforFA-Safety" profile is supported.	S7-1200/1500

* Only use the F-module variant 1 with S7-1200/1500 F-CPUs if neither F-module variant 2 nor 3 exists.

Additional information

You can find the description of the parameters in the Help on fail-safe GSD based DP slaves and GSD based I/O devices.

Safety Administration Editor

3

Overview

The *Safety Administration Editor* supports you as follows:

- Displaying of status of the safety program
- Displaying of collective F-signature
- (S7-1200, S7-1500) F-SW collective signature
- (S7-1200, S7-1500) F-HW collective signature
- Displaying of status of safety mode
- Creating and organizing of F-runtime groups
- Displaying information on the F-blocks
- Displaying information about F-compliant PLC data types (UDT)
- Information for users with F-Admin permission
- Specifying/changing access protection
- Set/modify settings for the safety program, e.g. Enable F-change history
- (S7-1200, S7-1500) Create/display/delete F-communications via flexible F-Link

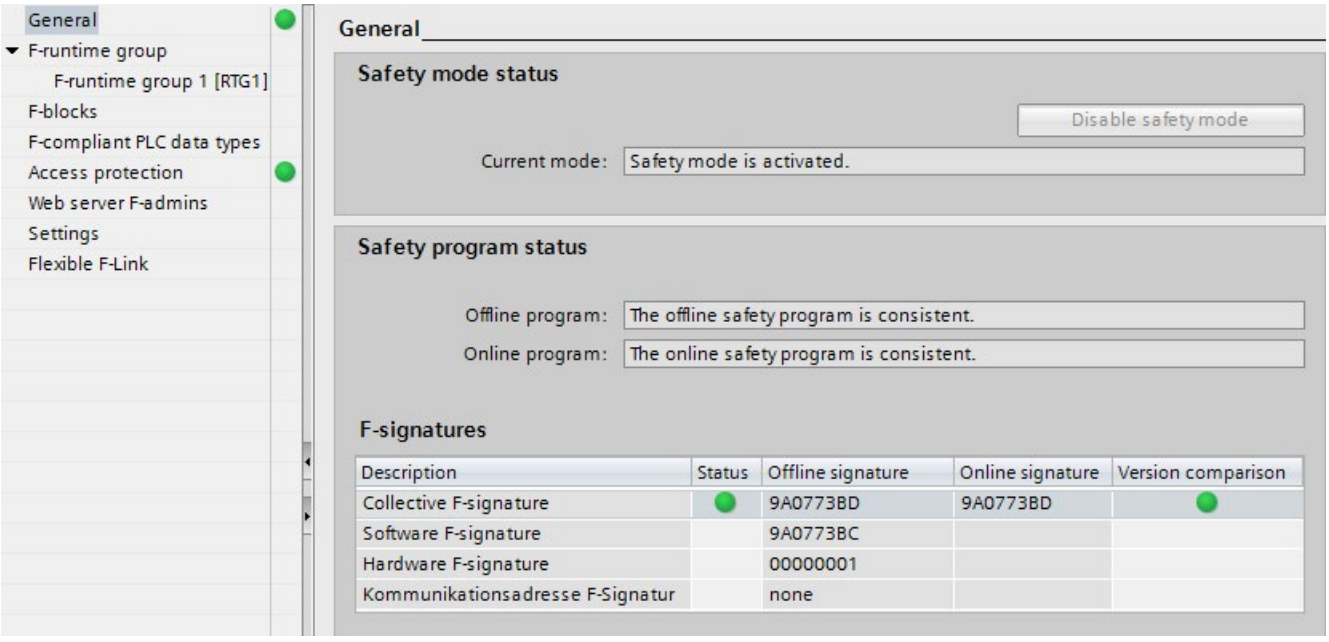

The *Safety Administration Editor* is divided into the following areas:

- General

  Under "General", the status of the safety mode, the safety program, the F-collective signature and for F-CPUs S7-1200/1500 the F-SW collective signature and the F-HW collective signature are displayed. Additional information on the "General" area can be obtained in ""General" area (Page 83)".

- F-runtime group

  You define the blocks and properties of an F-runtime under "F-runtime group".

  You can find information on F-runtime groups at ""F-runtime group" area (Page 86)".

- F-blocks

  Under "F-blocks", you can find information on the F-blocks used in your safety program and their properties . Additional information on the "F-blocks" area can be obtained in ""F-blocks" area (Page 88)".

- F-compliant PLC data types

  Under "F-compliant PLC data types", you obtain information on the created F-compliant PLC data types (UDT). There you also obtain information whether or not an F-compliant PLC data type (UDT) is used in the safety program. Additional information on "F-compliant PLC data types" can be found in ""F-compliant PLC data types" area (S7-1200, S7-1500) (Page 89)".

- Access protection

  Under "Access protection", you can set up, change, or revoke the password for the safety program. Access protection is mandatory for productive operation. Additional information on access protection can be found in "Access protection for the safety program (Page 103)".

- Web server F-Admins

  Under "Web server F-admins", you obtain information on users with the F-Admin attribute for the Web server of the F-CPU. Additional information on the "Web server F-Admins" area can be obtained in "“Web server F-Admins” area (S7-1200, S7-1500) (Page 90)".

- Settings

  Under "Settings", you set the parameters for the safety program. Information on the settings for your safety program can be found in ""Settings" area (Page 90)".

- Flexible F-Link

  In the "Flexible F-Link" area, you receive information about the configured F-communications via Flexible F-Links in tabular form. You can obtain information at ""Flexible F-Link" area (S7-1200, S7-1500) (Page 96)".

See also

Program structure of the safety program (S7-1200, S7-1500) (Page 114)

Program structure of the safety program (S7-300, S7-400) (Page 111)

Defining F-Runtime Groups (Page 132)

3.1 Opening the Safety Administration Editor

Requirement

The *Safety Administration Editor* is visible as an element in the project tree, if you have configured a CPU as an F-CPU in the project, which means the "F-capability activated" option must be selected (in the properties of the F-CPU).

Procedure

To open the *Safety Administration Editor*, follow these steps:

1. Open the folder for your F-CPU in the project tree.
2. Double-click on "Safety administration" or right-click and select the corresponding shortcut menu for the *Safety Administration Editor*.

Result

The *Safety Administration Editor* for your F-CPU opens in the work area.

3.2 "General" area

"Safety mode status"

The "Safety mode status" shows the current status of safety mode. The prerequisite is an existing online connection to the selected F-CPU.

The following statuses are possible:

- "Safety mode is activated"
- "The safety mode is not activated"
- "F-CPU is in STOP"
- "No active F-CPU available"
- "F-runtime group was not called"
- "The safety program is not called"
- "(No online connection)"

"Disable safety mode"

For existing online connection and active safety mode operation, you have the option of using the "Disable safety mode" button to disable safety mode for the selected F-CPU. Safety mode can be deactivated only for the entire safety program and not for individual F-runtime groups.

Requirement: "Safety mode can be disabled" is selected in the "Settings" area.

Proceed as follows:

1. Click the "Disable safety mode" button.
2. Enter the password for the safety program in the dialog window and confirm with "OK".
3. A corresponding dialog will display the collective F-signature.
4. Using the displayed collective F-signature, verify that you have selected the desired F-CPU.
5. If you have selected the correct F-CPU, confirm the dialog with "Yes".

Result: Safety mode for the F-CPU is disabled.

"Safety program status"

"Safety program status" displays the current status of your online and offline program.

The following statuses are possible:

- Consistent (with information if no password has been assigned.)
- Inconsistent
- Modified

If no connection to the online program could been established, the message "(no online connection) " will be shown.

"F-signatures"

For a non-existing online connection

Under "F-signatures" multiple signatures are displayed. Each signature is formed from different parts of the fail-safe project data.

- F-collective signature: This signature changes with each change of the fail-safe project data. It contains the signatures described below.
- F-SW collective signature (S7-1200/1500): This signature changes with each change of the safety program.
- F-HW collective signature (S7-1200/1500): This signature changes with each change of the fail-safe HW configuration.
- F-communication address signature (S7-1200/1500): This signature changes with each change of the name or the F-communication UUID of communication connections with flexible F-link.

The time of the last compilation process is displayed for the F-collective signature in the "Time stamp" column.

For an existing online connection

For an existing online connection, the following is displayed under the "Program signature":

- The status of safety program

Status	Meaning
	The online and offline collective F-signatures match, and a password was assigned for the online and offline safety programs.
	The online and offline collective F-signatures do *not* match or no password was assigned for one of the safety programs.
—	The safety program status could not be determined.

- The online and offline collective F-signatures
- When the collective F-signatures match: Information on whether the F-block versions are consistent online and offline.

Status	Version comparison	Statement
	Not relevant	The online and offline collective F-signatures *do not* match one another.
		The online and offline collective F-signatures match, but the online versions of F-blocks differ from the offline versions.
		The online and offline F-collective signatures match, identical versions of F-blocks are being used online and offline.
Not relevant	—	The safety system versions could not be determined.

You can find additional information on the consistency of the online safety program at under Identity of online and offline program (Page 375).

See also

Disabling safety mode (Page 344)

Program identification (Page 337)

3.3 "F-runtime group" area

3.3.1 "F-runtime group" area

A safety program consists of one or two F-runtime groups.

General information on F-runtime groups can be found in "Program structure of the safety program (S7-300, S7-400) (Page 111)" and "Program structure of the safety program (S7-1200, S7-1500) (Page 114)".

You can find information on creating F-runtime groups at Defining F-Runtime Groups (Page 132)

(S7-1200, S7-1500) "Creating a global F-I/O status block"

You can create a standard block (FB) with the name "RTGx_GLOB_FIO_STATUS", which evaluates whether substitute values are output instead of process values for at least one F-I/O or at least one channel of an F-I/O of an F-runtime group x. The result of the evaluation is available at the "QSTATUS" output. The F-O that you have disabled with the DISABLE variable in the F-I/O DB are then ignored.

The "RIOforFA_VALUE_STATUS" output corresponds to the "QSTATUS" output, but only takes F-I/Os into account with the "RIOforFA-Safety" profile.

To generate this standard FB, you use the "Create global F-I/O status block" button. You can only create the standard FB when your safety program has been compiled. You can call the standard FB anywhere in your standard user program.

Note

When adding or deleting an F-I/O, you have to generate "RTGx_GLOB_FIO_STATUS" again.

See also

Process Data or Fail-Safe Values (Page 162)

3.3.2 Pre-/postprocessing (S7-1200, S7-1500)

With preprocessing and postprocessing you have the option of calling standard blocks (FCs) directly before or after an F-runtime group, for example for data transfer with fail-safe communication via Flexible F-Link (Page 262).

Requirement

- Only standard-FCs usable.
- Only temporary local data and constants are permitted in the block interface of a standard-FC.

Procedure

1. Create the standard-FCs for the preprocessing and the postprocessing.
2. Assign the standard-FCs in the Safety Administration Editor under "Pre-/postprocessing of the F-runtime group".

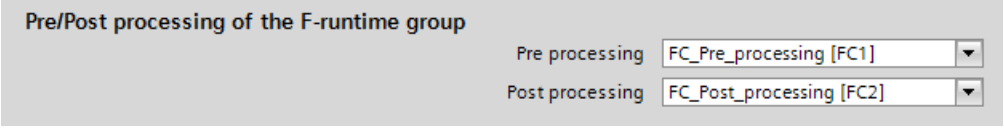

Note

When you delete an assigned FC or overwrite it by copying, its selection as a pre-processing / post-processing block is automatically reset.

Effect on the safety program

- The runtime of the F-runtime group is extended by the runtime of the standard FCs for pre-/postprocessing (influence on TRTG_CURR and TRTG_LONG in the F-runtime group information DB).
- Because the preprocessing / postprocessing does not change the functionality of the safety program, the F-collective signature remains unchanged after compilation.

Load behavior

The calls of the selected standard FCs are placed during compiling or after the call of the main safety block in the F-OB.

This means that the STOP operating state is required during a subsequent download. Changes in the contents at the selected standard FCs can take place in RUN.

Exceptions are changes of the block name and block numbers which also include the compilation of the safety program.

When a preprocessing/postprocessing block is uploaded individually by the F-CPU, it does not automatically connect to the F-runtime group in the Safety Administration Editor.

If consistent loading of the F-CPU is performed instead, the settings for preprocessing and postprocessing are updated according to the online CPU.

3.4 "F-blocks" area

Overview

The "F-Blocks" area helps you in the following tasks:

- Displaying the F-blocks used in your safety programs.
- Displaying the F-blocks used in the F-runtime groups.
- Displaying additional information about the F-blocks.

A description of the F-blocks is available in "Creating F-blocks in FBD / LAD (Page 151)".

Displayed information

The following information is displayed for F-blocks in offline mode:

- Has the F-block been compiled and used?
- Function of F-block in the safety program
- Block signature
- Time stamp of the last change

The following information is displayed for F-blocks in online mode:

- Status (whether block has the same time stamp online and offline)
- Function of F-block in the safety program
- Block signature of the block offline
- Block signature of the block online

The F-blocks are hierarchically displayed as in the "Program blocks" folder.

The description of the symbols in the "Status" column can be found in "Comparing Safety Programs (Page 339)".

Note

During the offline-online comparison, the comparison statuses may occasionally differ between the *comparison editor* and status display in the *Safety Administration Editor*. The decisive status is the result of the comparison in the *comparison editor*, since this is the only comparison that takes into account the contents of the F-blocks.

Filter function

Using the filter function, you can select whether you want to view all F-blocks of a certain F-runtime group or the entire safety program.

- Select "All F-blocks " from the drop-down list to view all F-blocks.
- Select an F-runtime group from the drop-down list to see all F-blocks of this F-runtime group.

3.5 "F-compliant PLC data types" area (S7-1200, S7-1500)

Overview

Under "F-compliant PLC Data Types" you obtain information on the F-compliant PLC data types (UDT) you have defined.

You can delete F-compliant PLC data types (UDT) from the shortcut menu.

A description of F-compliant PLC data types (UDT) is available in "F-compliant PLC data types (UDT) (S7-1200, S7-1500) (Page 126)".

Displayed information

The following information is displayed for F-compliant PLC data types (UDT) in offline mode:

- Is the F-compliant PLC data type used in the safety program?
- Time stamp of the last change.

The following information is displayed for F-compliant PLC data types (UDT) in online mode:

- Status (whether the F-compliant PLC data types (UDT) have the same time stamp online and offline)

The F-compliant PLC data types (UDT) are displayed hierarchically as in the folder "PLC Data Types".

Double-click the F-compliant PLC data type (UDT) to open it for editing.

The description of the symbols in the "Status" column can be found in "Comparing Safety Programs (Page 339)".

Note

During offline-online comparison, the comparison statuses between the *comparison editor* and status display in the *Safety Administration Editor* can be different under certain circumstances. The comparison result in the *comparison editor* is decisive, since this is the only comparison that takes into account the contents of the F-compliant PLC data types (UDT).

3.6 “Web server F-Admins” area (S7-1200, S7-1500)

You require the "F-admin" right in order to carry out restoration of a backup (Page 328) via the Web server of your F-CPU. You assign the "F-admin" right in the hardware configuration of the F-CPU under the user management of the Web server.

In this section, you obtain information on which users have the "F-admin" right online or offline for F-CPUs that support this right. You can see from this whether a change to the "F-admin" right is active on the F-CPU. In order to make a change to the "F-admin" right effective, you have to load the configuration to the F-CPU.

See also

Completeness and correctness of the hardware configuration (Page 368)

3.7 "Settings" area

"Number ranges of the generated F-system blocks"

The number ranges assigned here are used by the F-System for new, automatically generated F-blocks.

At this point, you can select whether the number ranges are managed by the F-system or if a fixed range specified by you is used.

- "F-system managed"

  The number ranges are managed automatically by the F-system, depending on the F-CPU used. The F-system selects an available number range. The start and end ranges of the number ranges are displayed.

- "Fixed range"

  You can select the start and end ranges of the number ranges from the available range. The available range depends on the F-CPU used.

  An invalid number range selection is indicated by an error message.

  The only check performed during configuration is whether the configured low limit is less than or equal to the high limit and within the available range of the F-CPU. The check as to whether the configured range is sufficient is first made during compiling. You need to ensure a sufficiently large range. Where the available range is insufficient, a compiling error occurs. Not all blocks are generated and the safety program is not executable.

Changes will become valid only during the next compilation. The automatically created F-blocks may be moved into the new area during compilation. The F-I/O DBs are an exception. They always retain their original number that you may change in the properties of the F-I/O.

"Safety system version"

This parameter is used to specify the safety system version (including version of the F-system blocks and automatically generated F-blocks, see Overview of Programming (Page 111)).

A number of versions are available:

Version[3]	S7-300/400	S7-1200	S7-1500	Function
1.6	—	x	x	These versions have identical functions.
2.0	x	x[1]	x[2]	Depending on the set version, the result may be different runtimes of the F-runtime group(s) (see Excel file for response time calculation on the Internet (http://support.automation.siemens.com/WW/view/en/49368678/133100)).
2.1	—	x[1]	x[2]	Additionally supports the variables "DISABLE" and "DISABLED" in the F-I/O DB
2.2	—	x[1]	x[2]	Supports the safety-related CPU-CPU communication and F-runtime group communication with Flexible F-Link.

1 supported for Firmware version V4.2 or higher

2 supported for Firmware version V2.0 or higher

3 After the migration of projects that were created with *S7 Distributed Safety V5.4 SP5*, version 1.0 is set automatically in order to identify migrated projects which have not yet been compiled with *STEP 7 Safety Advanced*.

Usually, you do not need to make any settings for this parameters.

When a new F-CPU is created with *STEP 7 Safety*, the latest available version for the F-CPU created is automatically preset.

"Local data used in safety program" (S7-300, S7-400)

You use this parameter to specify the amount of temporary local data (in bytes) that is available for the call hierarchy below the main safety block.

The setting applies to each F-runtime group of a safety program. Additional information on F-runtime groups can be found in "Program structure of the safety program (S7-1200, S7-1500) (Page 114)" and "Program structure of the safety program (S7-300, S7-400) (Page 111)".

The **minimum possible amount** is determined by the local data requirement of the F-blocks generated automatically when the safety program is compiled.

For this reason, you must provide at least 440 bytes. However, the local data requirement for the automatically added F-blocks may be higher depending on the local data requirement of the F-blocks you created with FBD or LAD.

Therefore, provide as much local data as possible. If there is not enough local data available for the automatically added F-blocks (440 bytes or more), the safety program will be compiled nevertheless.

Data in automatically added F-DBs are then used instead of local data. However, this increases the runtime of the F-runtime group(s). You will receive a notice when the automatically added F-blocks require more local data than configured.

WARNING

The calculated maximum runtime of the F-runtime group using the Excel file for response time calculation (http://support.automation.siemens.com/WW/view/en/49368678/133100) is no longer correct in this case because the calculation assumes sufficient availability of F-local data.

In this case, use the value you configured for the maximum cycle time of the F-runtime group (F-monitoring time) as the maximum runtime of the F-runtime group when calculating the maximum response times in the event of an error and for any runtimes of the standard system using the above-mentioned Excel file. *(S004)*

The maximum possible amount depends on:

- Local data requirement of the main safety block and the higher-level standard user program. For this reason, you should call the main safety blocks directly in OBs (cyclic interrupt OBs, whenever possible), and additional local data should not be declared in these cyclic interrupt OBs.
- Maximum volume of local data of the utilized F-CPU (see Technical Specifications in the product information for the utilized F-CPU). For S7-400 F-CPUs, you can configure the local data for each priority class. Therefore, assign the largest possible local data volume for the priority classes in which the safety program (the main safety blocks) is called (e.g., OB 35).

Maximum possible amount of local data as a function of local data requirement of main safety block and higher-level standard user program (S7-300, S7-400):

Case 1: Main safety block called directly from OBs

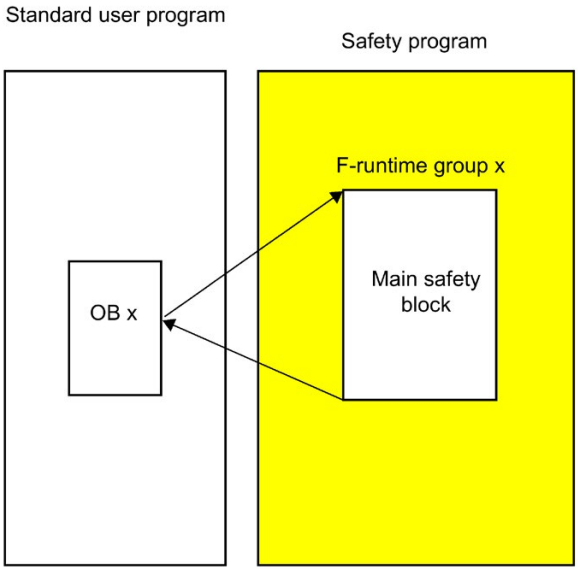

Set the "Local data used in safety program" parameter to the maximum amount of local data of the utilized F-CPU minus the local data requirement of the main safety block (if the main safety block has 2 F-runtime groups, use the largest local data requirement) and minus the local data requirement of the calling OBx (if there are 2 F-runtime groups, use the OB with the largest local data requirement).

Note: If you have not declared any temporary local data in the main safety blocks and calling OBx, the local data requirement of the main safety blocks is 6 bytes and the local data requirement of the calling OBx is 26 bytes. You can derive the local data requirement of the main safety blocks and calling OBx from the program structure.

Select the utilized F-CPU in the project tree and then "Tools > Call structure". The table gives the local data requirement in the path or for the individual blocks (see also the help on *STEP 7*).

Case 2: Main safety block not called directly from OBs

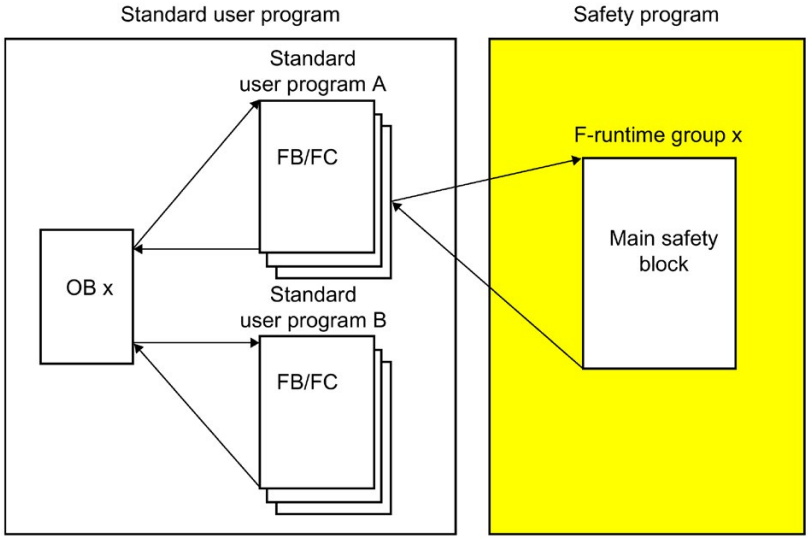

Set the "Local data settings" parameter to the value calculated for Case 1, minus the local data requirement of standard user program A (if standard user program A has 2 F-runtime groups, use the largest local data requirement).

Note: You can derive the local data requirement of the standard user program A from the program structure.

Select the utilized F-CPU in the project tree and then "Tools > Call structure". The table gives the local data requirement in the path or for the individual blocks (see also the help on *STEP 7*).

"Advanced settings"

"Safety mode can be disabled"

If you deselect the "Safety mode can be disabled" option, you can prevent the disabling of safety mode for a safety program.

When you change the setting for this option, you need to recompile the safety program and download it to the F-CPU for the change to become effective. This changes the F-collective signature and the F-SW collective signature of your safety program.

We recommend that you disable this option before you start production and before acceptance of the safety program to prevent an unintentional disabling of the safety mode.

"Enable F-change history"

Enable the logging of changes to the safety program by using the "Enable F-change history" option. For more information, refer to the section "F-change history (Page 359)".

"Enable consistent upload from the F-CPU" (S7-1500)

This option allows you to load the loaded project data (including safety-related project data) consistently from the F-CPU.

The option can only be activated if the F-CPU and the firmware of the F-CPU supports the loading of the project data (including safety-related project data).

F-CPUs S7-1500 as of firmware V2.1 are supported. S7-1500 F Software Controllers are not supported.

At every change to this option you have to load the project data to the F-CPU.

Note that the activation of this option extends the loading of the safety-related project data into the F-CPU.

"Activate variable F-communication- IDs" (S7-1200, S7-1500)

If you activate this option, you can supply the DP_DP_ID input of the SENDP or RCVSP instructions with the variable values from a global F-DB.

WARNING

The value for the respective F-communication ID (input DP_DP_ID; data type: INT) can be freely selected**; however, it must be unique for all safety-related communication connections network-wide* and CPU-wide at all times. The uniqueness must be checked in the safety summary during acceptance of the safety program. You can find additional information in Correctness and completeness of the communication configuration (Page 374).

You must supply constant values*** to the inputs DP_DP_ID and LADDR when calling the instruction. Direct write accesses in the associated instance DB to DP_DP_ID and LADDR are not permitted in the safety program! *(S016)*

* A network consists of one or more subnets. "Network-wide" means beyond the boundaries of the subnet. In PROFIBUS a network includes all the nodes accessible via PROFIBUS DP. In PROFINET IO, a network includes all the nodes accessible via RT_Class_1/2/3 (Ethernet/WLAN/Bluetooth, Layer 2) and, if applicable, RT_Class_UDP (IP, Layer 3).

** S7-1200/1500: As of version V3.0 of the SENDDP and RCVDP instructions, no connection is established at the DP_DP_ID input for a F-communication ID "0".

*** S7-1200/1500: As of version V3.0 of the SENDDP and RCVDP instructions, the DP_DP_ID input can also be supplied with variable values from a global F-DB. In this case as well you have to check during the acceptance of the safety program that the uniqueness is ensured *at every moment*, by checking the algorithm for the creation of the variable value accordingly. If you cannot ensure a unique F-communication ID during startup of the safety program, because it is only specified after startup of the safety program, you must ensure that the value at the DP_DP_ID input is "0" during this phase.

"System-generated objects" (S7-1200, S7-1500)

"Creates driver I-DBs without prefix"

When you select this option, the I-DBs of the F-I/O DBs are created without prefix.

Naming scheme:

- Default: F{logical address(5-digit)}_{module_name}
- With activated option: {module_name}

Uniqueness:

- The driver I-DB names assigned by the system must not be used for other blocks any longer. A compilation error is output in case of identical block names.
- If the option is selected, all module names must be unique in their first 124 characters. This is the maximum length of a block name. All additional characters of the module name are cut off.

"Debug"

The "Debug" button is provided for service and support purposes.

3.8 "Flexible F-Link" area (S7-1200, S7-1500)

In the "Flexible F-Link" area, you create new F-communications, obtain information on existing F-communications and delete F-communications.

Requirement

- S7-1500 F-CPUs as of firmware V2.0
- S7-1200 F-CPUs as of firmware V4.2
- Safety system version as of V2.2

Information on created F-communications

In the "Flexible F-Link" area, you receive information on configured F-communications in tabular form:

- CPU-wide unique name of F-communication
- F-compliant PLC data type (UDT) for send/receive data
- Direction of F-communication: Transmitting/receiving
- F-monitoring time of F-communication
- F-Communication UUID
- Tag for send data
- Tag for receive data

Creating F-communication

1. In an empty row of the table click "<Add new>"
2. Assign a name to the communication connection.
3. Select an F-compliant PLC data type (UUID) for the communication connection.

   If you have not yet created an F-compliant PLC data type (UDT) for the communication connection or wish to create a new one, create a new F-compliant PLC data type (UDT) (Page 126) with any structure. Note that the size can be a up to 100 bytes.
4. Select the direction of the communication connection ("Send" or "Receive").
5. Select the F-monitoring time of the communication connection (Page 608).

The UUID of the F-communication is displayed via Flexible F-Link in the "F communication UUID" column. The F-communication UUID ensures sufficient uniqueness of the safety-related communication ID even across network limits.

The "Tag for send data" column shows you the newly created tag for send data of the F-communication DB.

The "Tag for receive data" column shows you the newly created tag for receive data of the F-communication DB.

You can find the newly created F-communication DB for this F-communication under "Program blocks\System blocks\STEP 7 Safety\F-communication DBs".

Deleting F-communication

1. Select the entire row and confirm "Delete" in the shortcut menu. You can also delete multiple F-communications at the same time.

Copying F-communication

1. Select the entire row and confirm "Copy" in the shortcut menu. You can also copy multiple F-communications at the same time.
2. With the "Paste" menu command, you can paste the copied F-communications into the table as often as needed. The UUID for the respective F-communication is retained during copying. If necessary, re-generate the UUID.

Generating a new F-communication-UUID

1. Select the entire row and confirm "Generate UUID" in the shortcut menu. You can also generate multiple UUIDs at the same time.

Interface of the F-communication DB for sending

The following table shows you the interface of the F-communication DB for the communication connection with the direction "Send":

Section	Name	Data type	Initial value	Description
Input	SEND_DATA	F-compliant PLC data type (UDT)	As in the F-compliant PLC data type (UDT).	User data to be sent:
	ACK_RCV_ARRAY	Array[0..n] of Byte	Each element with 16#0	Array with the received raw data.
Output	ERROR	BOOL	False	Signals currently pending communication errors or communication errors not acknowledged yet at the receiver (not in the initial start). 1=Communication error
	ACTIVATE_FV	BOOL	True	Communication passivated, in the initial start (for example receiver not started), or HOST sends ACTIVATE_FV. DEVICE sends status bit: FV_ACTVATED, but no 0-values. 1=The communication uses fail-safe values
	DIAG	Byte	16#0	Error bits (Timeout or CRC error currently still pending, or communication after error not depassivated yet) Bit 3: Acknowledgement request active at the receiver Bit 4: Timeout detected Bit 6: CRC error detected
	SEND_ARRAY	Array[0..n] of Byte	Each element with 16#0	Array with the received raw data
	ACK_RCV_LENGTH	UInt	0	Length information to ACK_RCV_ARRAY in bytes
	SEND_LENGTH	UInt	0	Length information to SEND_ARRAY in bytes
InOut	—	—	—	—
Static	—	—	—	—

Interface of the F-communication DB for receiving

The following table shows you the interface of the F-communication DB for the communication connection with the direction "Receive":

Section	Name	Data type	Initial value	Description
Input	PASS_ON	BOOL	False	This way you can passivate the output data (output of the passivation values) 1=Enable passivation
	ACK_REI	BOOL	False	Reintegration (in case of reintegration request) by means of positive edge 1=Acknowledgment for reintegration
	RCV_ARRAY	Array[0..n] of Byte	Each element with 16#0	Array with the received raw data
Output	RCV_DATA	F-compliant PLC data type (UDT)	As in the F-compliant PLC data type (UDT).	Output data (PASS_VALUES or data received).
	ERROR	BOOL	False	Signals currently pending communication errors or communication errors not acknowledged yet (not in the initial start). 1=Communication error
	PASS_OUT	BOOL	True	At PASS_OUT=1 the PASS_VALUES are output Could be: ERROR, PASS_ON, in the initial start (e.g. sender not started), or ACK_REQ is pending (error not acknowledged)
	ACK_REQ	BOOL	False	Reintegration requirement (communication stable again after error, substitute values are still output) 1=Acknowledgment request for reintegration
	SENDMODE	BOOL	False	MOD_MODE is active or communication with PLCSIM Advanced on the sending F-CPU 1=F-CPU with a sender in the deactivated safety operation or on a simulated CPU

Section	Name	Data type	Initial value	Description
	DIAG	Byte	16#0	Error bits (Timeout or CRC error) Bit 0: Timeout detected by the sender Bit 1: Communication error currently pending in the sender Bit 2: CRC error detected by the sender Bit 4: Timeout detected by the receiver Bit 6: CRC error detected by the receiver
	ACK_SEND_ARRAY	Array[0..n] of Byte	Each element with 16#0	Array with the raw data to be sent.
	RCV_LENGTH	UInt	0	Length information of RCV_ARRAY in bytes
	ACK_SEND_LENGTH	UInt	0	Length information of ACK_SEND_ARRAY in bytes
InOut	—	—	—	—
Static	PASS_VALUES	F-compliant PLC data type (UDT)	Same as the F-compliant PLC data type (UDT) or in the I/O DB	Passivation or substitute values

See also

Flexible F-Link (Page 262)

F-runtime group communication (S7-1200, S7-1500) (Page 145)

Access protection 4

Access protection is necessary for productive operation

Access protection to the SIMATIC Safety F-system is mandatory for productive operation.

No access protection is initially necessary for test purposes, commissioning, etc. This means you can execute all offline and online actions without access protection, i.e., without password prompt.

⚠ WARNING
Access to the SIMATIC Safety F-system without access protection is intended for test purposes, commissioning, etc., when the system is not in productive operation. You must guarantee the safety of the system through other organizational measures, for example, restricted access to certain areas. **Before you transition into productive operation, you must have set up and activated access protection.** *(S005)*

4.1 Overview of access protection

Introduction

You can protect access to the SIMATIC Safety F-system by two password prompts: one for the safety program and another for the F-CPU.

Password for the safety program

The password for the safety program is available in two forms:

- The offline password is part of the safety program in the offline project on the programming device or PC.
- The online password is part of the safety program in the F-CPU.

Password for the F-CPU

The access protection is set at the F-CPU level. This password is also used to identify the F-CPU and must therefore be unique network-wide.

Overview of password assignment and prompt

The following table provides an overview of the access permissions for the F-CPU and the safety program.

The sections below show you how to assign the passwords and how to set up, change, and cancel access permissions for the F-CPU and the safety program.

	Password for F-CPU	Password for safety program
Assignment	In the *hardware and network editor*, during configuration of the F-CPU, inspector window, in "Settings" tab under "Protection", corresponding safety level, e.g., "Write protection for fail-safe blocks" (S7-300, S7-400). Select at least the access level "Full access (no protection)" for S7-1200/1500 F-CPUs and assign a password for "Full access incl. fail-safe (no protection)". If you select a higher protection level, for example to protect the standard user program, you must assign an additional password for "Full access (no protection)".	In the *Safety Administration Editor* under "Access Protection".
Prompt	If you do not have access permission for the safety program (Page 103): For example • When uploading the complete safety program to the F-CPU • (S7-300, S7-400) when uploading the hardware configuration to the F-CPU • (S7-1200, S7-1500) when uploading a hardware configuration to the F-CPU that contains safety-related changes • When PROFIsafe address is assigned • When F-blocks that are used in the safety program are downloaded and deleted • When disabling safety mode • When restoring a backup of the F-CPU. Exception with S7-1200/1500 F-CPUs: If neither the safety program nor the F-CPU password is changed by the restore process, you are not prompted for the F-CPU password.	If you have assigned a password and this has not yet been entered since the project was opened, or you do not have access permission for the safety program (Page 103): Offline password e.g.: • When the password is changed • When modifying the safety program • When changing and deleting F-runtime groups • When changing safety-related parameters of F-I/O Online password e.g., when disabling safety mode (the password must always be entered, even if access permission for the safety program is still valid)

Safety program recompilation is required after changes to standard DBs to which the safety program has read or write access (Page 195). These standard DBs are not governed by the safety program access protection.

Please note that you also require the online password to download the safety-relevant changes to the hardware configuration. This is also true for changes to F-I/O not used in the safety program.
You have to also recompile and download the safety program for the download to be consistent.

4.2 Access protection for the safety program

Setting up access protection for the safety program

To set up access protection for the safety program, assign a password for the safety program. Proceed as follows:

1. Open the folder for your F-CPU in the project tree.
2. Select "Safety Administration" and select "Go to access protection" in the shortcut menu.

   Alternatively, double-click on "Safety Administration". The *Safety Administration Editor* of the F-CPU will open. Select "Access protection" in the area navigation.
3. Under "Offline safety program protection", click "Setup" and enter the password (max. 30 characters) for the safety program in the following dialog in the "New password" and "Confirm password" fields.
4. Confirm the assigned password with "OK".

You have set up access protection for the safety program and have gained access permission for the safety program.

Note

You cannot define the online password separately; the offline password assigned during the next download is applied. After a change to the offline password, the online and offline passwords may differ until the next time the offline safety program is downloaded to the F-CPU.

During loading from the device the offline password is replaced by the online password or deleted.

Note

Use different passwords for the F-CPU and the safety program to optimize access protection.

WARNING

If access protection is not used to limit access to the programming device or PC to only those persons who are authorized to modify the safety program, the following organizational measures must be taken to ensure the effectiveness of the password protection for the F-CPU at the programming device or PC:

- Only authorized personnel may have access to the password.
- Authorized personnel must explicitly cancel the access permission for the F-CPU before leaving the programming device or PC by closing *STEP 7* or via the "Online > Delete access rights" menu. If this is not strictly implemented, a screen saver equipped with a password accessible only to authorized personnel must also be used. *(S006)*

Changing the password for the safety program

You may change the safety program password as long as you have the necessary access permissions. It takes place likewise in the "Access protection" area (via "Change" button) and is carried out as usual under Windows through entry of the old and double entry of the new password.

Deleting access protection for the safety program

To delete access protection for the safety program, delete the password for the safety program. Proceed as follows:

1. Open the folder for your F-CPU in the project tree.
2. Select "Safety Administration" and select "Go to access protection" in the shortcut menu.

   Alternatively, double-click on "Safety Administration". The *Safety Administration Editor* of the F-CPU will open.
3. Select "Access protection" in the area navigation.
4. Click the "Change" button.
5. Under "Old password", enter the password for the safety program.
6. Click "Revoke" and then on "OK".

Gaining access permission through login to the safety program

Log in to the safety program as follows:

1. Open the folder for your F-CPU in the project tree.
2. Select "Safety Administration" and select "Go to access protection" in the shortcut menu.

   Alternatively, double-click on "Safety Administration". The *Safety Administration Editor* of the F-CPU will open.
3. Select "Access protection" in the area navigation.
4. Enter the password for the safety program in the "Password" input field.
5. Select the "Login" button.

Validity of access permission for a safety program

If access permission for a safety program was obtained through the entry of the password, this remains until the project is closed. If *STEP 7* is closed, any project that is still open is automatically closed and any access permission granted is canceled.

Canceling access permission through logoff

The access permission for the safety program can be canceled as follows:

- By clicking the "Log off" button in the "Access protection" area in the "*Safety Administration Editor*".
- In the shortcut menu for the *Safety Administration Editor* shortcut menu (access by right-clicking).
- By using the lock symbol in the line of the *Safety Administration Editor*.

The user will then be prompted to enter the password for the safety program again the next time an action requiring a password is performed. A Stop-Run transition is required to "revoke" access permission for control.

Access permission for the safety program is canceled automatically, if the project or *STEP 7* has been closed.

Displaying the validity of access permission

The validity of the access permission is displayed in the project tree as follows:

- The access permission is valid, if the lock symbol in the line of the *Safety Administration Editor* is shown unlocked.
- The access permission is not available, if the lock symbol shows a closed lock.
- If no lock symbol is shown, no password was assigned.

4.3 Access protection for the F-CPU

Setting up access protection for the F-CPU

To set up access protection for the F-CPU, assign a password for the F-CPU in the F-CPU configuration.

You arrive there directly, if you click the link "Go to the "Protection" area of the F-CPU" in the "Access protection" area in the *Safety Administration Editor*. Proceed as described in the *STEP 7* help under "Configuring access levels".

WARNING

(S7-300, S7-400) In safety mode, access with the CPU password must not be authorized during changes to the standard user program as this would also allow changes to the safety program. To rule out this possibility, you must configure the protection level "Write protection for fail-safe blocks" and configure a password for the F-CPU. If only one person is authorized to change the standard user program and the safety program, the protection level "Write protection" or "Read/write protection" should be configured so that other persons have only limited access or no access at all to the entire user program (standard and safety programs).*(S001)*

WARNING

(S7-1200, S7-1500) In safety mode, the safety program must be password-protected. For this purpose, configure at least the protection level "Full access (no protection)" and assign a password under "Full access incl. fail-safe (no protection)". This protection level only allows full access to the standard user program, not to F-blocks.

If you select a higher protection level, for example to protect the standard user program, you must assign an additional password for "Full access (no protection)".

Assign different passwords for the individual protection levels. *(S041)*

You enable access protection by downloading (Page 313) the hardware configuration to the F-CPU.

WARNING

If **multiple F-CPUs** can be reached over a network (e.g. Industrial Ethernet) by **one programming device or PC**, you must take the following actions to ensure that the project data is downloaded to the correct F-CPU:

Use passwords specific to each F-CPU, such as a uniform password for the F-CPUs with attached Ethernet address for each.

Note the following:

- A point-to-point connection must be used to activate the access protection of an F-CPU when the hardware configuration is loaded for the first time (similar to assigning an MPI address to an F-CPU for the first time).
- Before downloading the safety program to an F-CPU, you must first revoke an existing access permission for any other F-CPU.
- The last download of the safety program prior to switching to productive operation must be made with enabled access protection. *(S021)*

WARNING

When using tools for the automation or operation (of TIA Portal or Web server) which allow access protection for the F-CPU to be bypassed (e.g. saving or automatic entry of a CPU password for the protection level "Full access incl. fail-safe (no protection)" or Web server password), the safety relevant project data may not be protected against unintentional changes anymore. *(S078)*

Changing the password for the F-CPU

For the new password to become valid after a password change for the F-CPU, you must download the changed configuration into the F-CPU. If necessary, you must enter the "old" password for the F-CPU for this load operation. The F-CPU must be in STOP mode.

Deleting access protection for the F-CPU

To delete access protection for the F-CPU, delete the password for the F-CPU. To do this, proceed as in the standard.

Obtaining access permission for the F-CPU

You obtain access permission for the F-CPU - depending on the configured protection level - by entering the password for the F-CPU prior to performing an action requiring a password.

Obtaining access permission for the F-CPU

Access permission for the F-CPU remains valid until the project is closed in *STEP 7* or access permission is canceled.

Canceling access permission for the F-CPU

You cancel the access permission with the menu command "Online > Delete access rights" auf.

WARNING

If access protection is not used to limit access to the programming device or PC to only those persons who are authorized to modify the safety program, the following organizational measures must be taken to ensure the effectiveness of the access protection for the F-CPU at the programming device or PC:

- Only authorized personnel may have access to the password.
- Authorized personnel must explicitly cancel the access permission for the F-CPU before leaving the programming device or PC by closing *STEP 7* or via the "Online > Delete access rights" menu. If this is not strictly implemented, a screen saver equipped with a password accessible only to authorized personnel must also be used. *(S006)*

4.4 Access protection through organizational measures

To prevent that a safety program is swapped without authorization by exchanging removable media (e.g. flash card, SIMATIC Micro Memory Card or hard disk with WinAC RTX F), you must observe the following warning:

⚠ WARNING
You must limit access to the F-CPU to persons who are entitled for plugging removable media through access protection. *(S079)*

To prevent that a WinAC RTX F or an S7-1500 F Software Controller is accidentally uninstalled or installed, you must observe the following warning:

⚠ WARNING
You must limit access to a WinAC RTX F or an S7-1500 F Software Controller through access protection to persons who are authorized to uninstall and install or repair a WinAC RTX F or an S7-1500 F Software Controller (e.g. by using Windows administrator rights (ADMIN)). *(S075)*

The "Delete Configuration" function is only offered in the panel of the PC station with an S7-1500 F Software Controller when no access protection is set up on the F-CPU. We therefore recommend that you do not set up F-access protection until after commissioning.

To prevent unauthorized restoration of the safety program, formatting of the F-CPU and deleting program folders using the display of an S7-1500 F-CPU, you must observe the following warning:

⚠ WARNING
The display password may only be given to persons who are authorized to restore safety programs, format the F-CPU and delete program folders. If a password is not set up for the display, you must protect the display through organizational measures against unauthorized operation. For example by setting up access protection for specific rooms. *(S063)*

To prevent unauthorized restoration of the safety program with the Web server in an S7-1200/1500 F-CPU, you must observe the following warning:

WARNING

The "F-admin" authorization for Web server without password protection (user "Everybody" or "Anyone") is only intended for test purposes, maintenance, etc. This means only when the system is not in productive operation. In this case you must ensure the safety of the system through other organizational measures. For example by setting up access protection for specific rooms.

Before you transition into productive operation, you must remove the "F-admin" right for the user "Everybody".

Only authorized personnel may have access to the password of the Web server user with the "F-admin" right. After downloading the hardware configuration, check whether only permitted users of the Web server have the "F-admin" right on the F-CPU. To do so, use the online view of the *Safety Administration Editor* (see also Safety Administration Editor (Page 81)).

Saving the login file and the password of the Web server in the browser is only permitted when use by unauthorized persons is prevented through other organizational measures (e.g. access protection to the PG/PC). *(S064)*

Programming 5

5.1 Overview of Programming

Introduction

A safety program consists of F-blocks that you create using the FBD or LAD programming language and F-blocks that are automatically added. Fault detection and reaction measures are automatically added to the safety program you create, and additional safety-related tests are performed. Moreover, you have the option to incorporate special ready-made safety functions in the form of instructions into your safety program.

An overview of the following is given below:

- The structure of the safety program
- The fail-safe blocks
- Differences in the programming of the safety program with FBD/LAD compared to programming of standard user programs

5.1.1 Program structure of the safety program (S7-300, S7-400)

Representation of program structure

For structuring purposes, a safety program consists of one or two F-runtime groups.

Each F-runtime group contains:

- F-blocks that you create using FBD or LAD or that are inserted from the project library or global libraries
- F-blocks that are added automatically (F-system blocks, automatically generated F-blocks, and F-I/O DBs)

Below is a schematic diagram of a safety program or an F-runtime group for an S7-300/400 F-CPU.

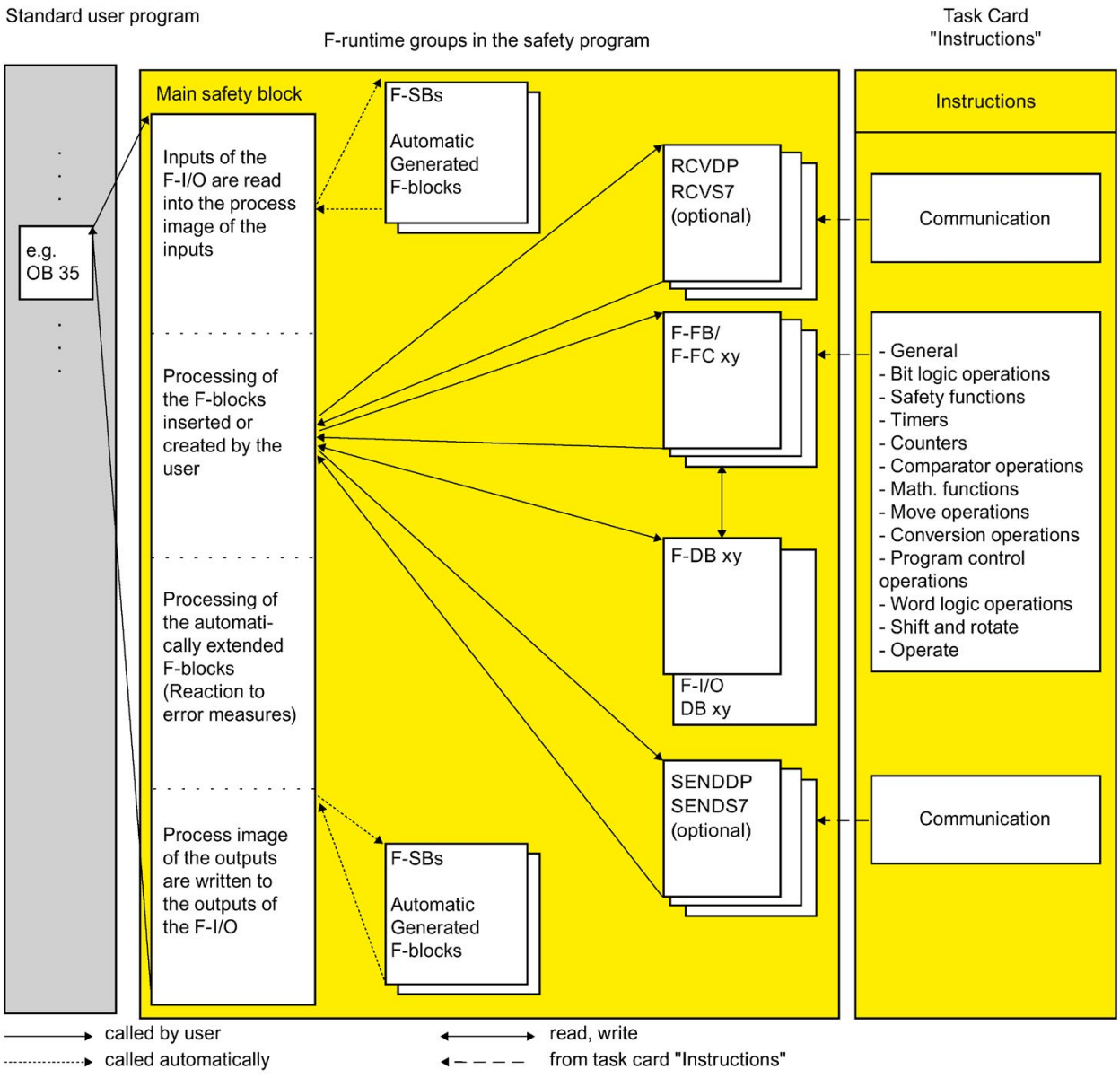

Main safety block

The main safety block is the first F-block of the safety program that you program yourself. During compiling, it is supplemented by additional invisible calls of F-system blocks.

You must assign the main safety block to an F-runtime group (Page 132).

The main safety block in an S7-300/400 F-CPU is called from any block in the standard user program. We recommend a call from an OB 3x.

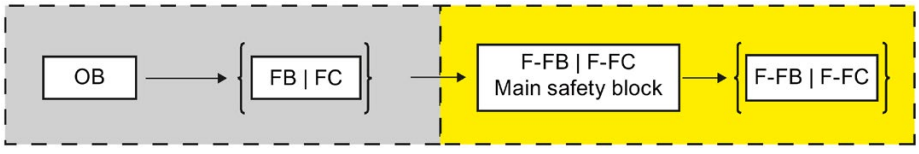

F-runtime groups

To improve handling, a safety program consists of one or two "F-runtime groups". An F-runtime group is a logical construct of several related F-blocks that is formed internally by the F-system.

An F-runtime group consists of the following:

- A main safety block (an F-FB/F-FC that you assign to the calling OB (FB/FC) as needed)
- Any additional F-FBs or F-FCs that you program using FBD or LAD and call from the main safety block
- One or more F-DBs, as needed
- F-I/O DBs
- F-blocks from the project library or global libraries
- F-system blocks F-SBs
- Automatically generated F-blocks

Structuring the safety program in two F-runtime groups

You can divide your safety program into two F-runtime groups. By having parts of the safety program (one F-runtime group) run in a faster priority class, you achieve faster safety circuits with shorter response times.

5.1.2 Program structure of the safety program (S7-1200, S7-1500)

Representation of program structure

For structuring purposes, a safety program consists of one or two F-runtime groups.

Each F-runtime group contains:

- F-blocks that you create using FBD or LAD or that are inserted from the project library or global libraries
- F-blocks that are added automatically (F-system blocks F-SBs, automatically generated F-blocks, F-runtime DB, and F-I/O DBs)

Below is a schematic diagram of a safety program or an F-runtime group for an S7-1200/1500 F-CPU.

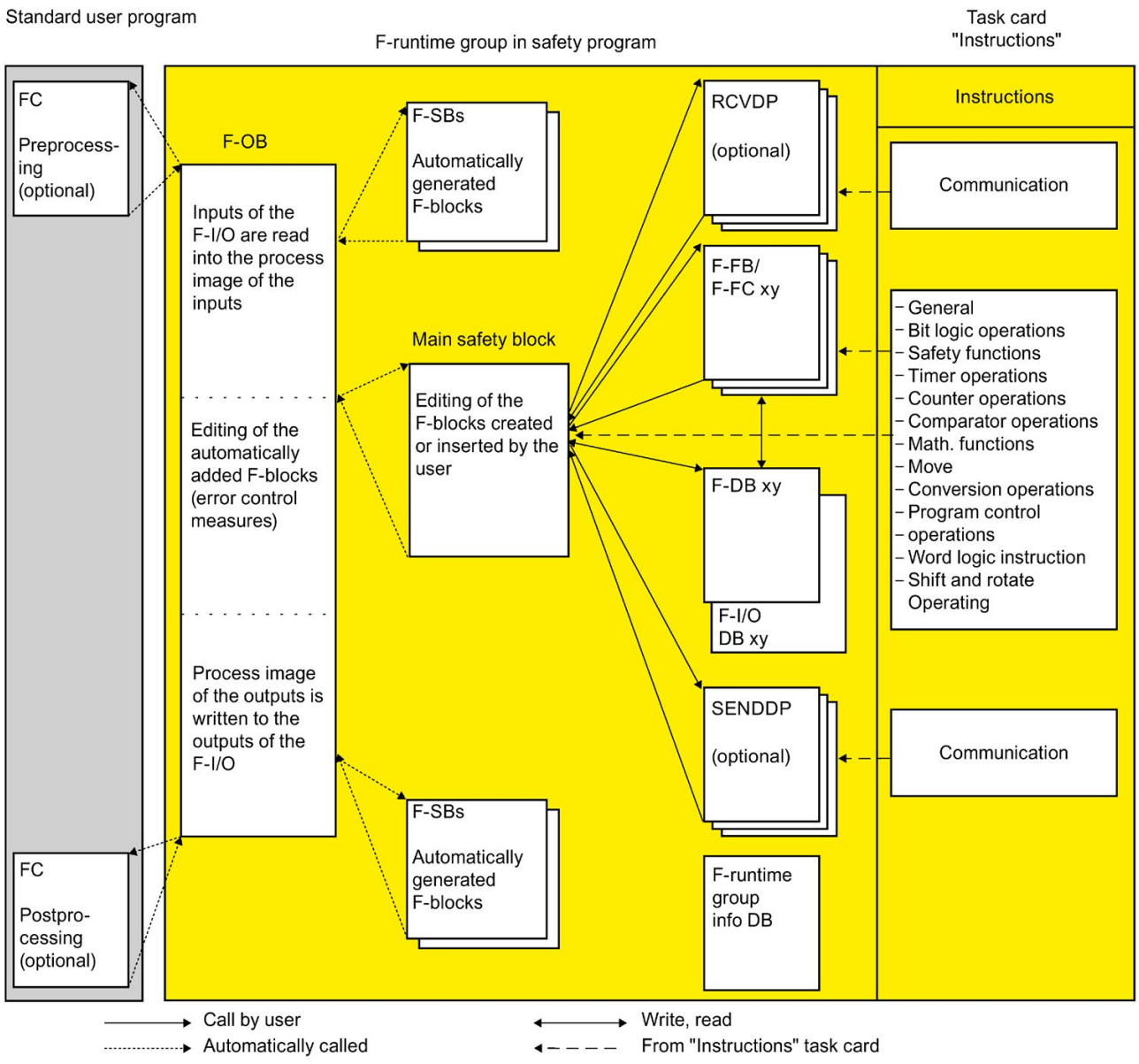

Main safety block

The main safety block is the first F-block of the safety program that you program yourself.

You must assign the main safety block to an F-runtime group (Page 132).

The main safety block in an S7-1200/1500 F-CPU is called by the F-OB assigned to the F-runtime group.

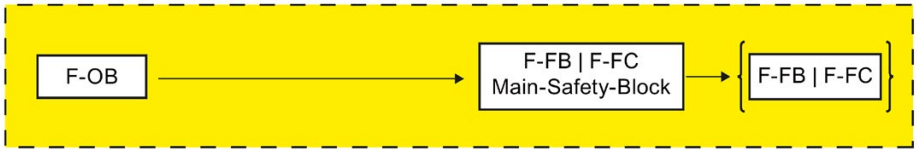

F-runtime groups

To improve handling, a safety program consists of one or two "F-runtime groups". An F-runtime group is a logical construct of several related F-blocks that is formed internally by the F-system.

An F-runtime group consists of the following:

- An F-OB which calls the main safety block
- A main safety block (an F-FB/F-FC that you assign to the F-OB)
- Any additional F-FBs or F-FCs that you program using FBD or LAD and call from the main safety block
- One or more F-DBs, as needed
- F-I/O DBs
- F-runtime group information DB
- F-blocks from the project library or global libraries
- F-system blocks F-SBs
- Automatically generated F-blocks
- A preprocessing and/or postprocessing block, as needed (see Pre-/postprocessing (S7-1200, S7-1500) (Page 87))

Pre-/postprocessing of an F-runtime group

You have the option of calling blocks of the standard application groups (FCs) directly before or after an F-runtime group, for example for data transfer of fail-safe communication via Flexible F-Link. (see Pre-/postprocessing (S7-1200, S7-1500) (Page 87))

Structuring the safety program in two F-runtime groups

You can divide your safety program into two F-runtime groups. By having parts of the safety program (one F-runtime group) run in a faster priority class, you achieve faster safety circuits with shorter response times.

See also

F-runtime group information DB (S7-1200, S7-1500) (Page 148)

5.1.3 Fail-Safe Blocks

F-blocks of an F-runtime group

The following table shows the F-blocks that you use in an F-runtime group:

F-block	Function	S7-300/400 F-CPUs	S7-1200/1500 F-CPUs
Main safety block	The first step in programming of the safety program is the main safety block. The main safety block in S7-300/400 F-CPUs is an F-FC or F-FB (with instance DB), which is called by a standard block (recommendation: OB 35) from the standard user program. The main safety block in S7-1200/1500 F-CPUs is an F-FC or F-FB (with instance DB), which is called by the F-OB.	X	X
F-FB/F-FC	Both in the main safety block as well as additional F-FBs and F-FCs, you can perform the following: • Program the safety program with the instructions available for F-blocks in FBD or LAD • Call other created F-FBs/F-FCs for structuring the safety program • Insert F-blocks from the project library or global libraries	X	X
F-DB	Optional fail-safe data blocks that can be read- and write-accessed within the entire safety program.	X	X
F-I/O DB	An F-I/O DB is automatically generated for each F-I/O when it is configured. You can or you must access the tags of the F-I/O DB in conjunction with F-I/O accesses.	X	X
F-shared DB	The F-shared DB is a fail-safe data block that contains all of the shared data of the safety program and additional information needed by the F-system.	X	—
F-runtime group information DB	An F-runtime group information DB is created when you create an F-runtime group. The F-runtime group information DB provides information on the F-runtime group and on the safety program as a whole.	—	X

Note

You are not permitted to insert F-system blocks from the "System blocks" folder in a main safety block/F-FB/F-FC.

Instructions for the safety program

In the "Instructions" task card, you can find instructions for the F-CPU used and which you can to use program the safety program.

You can find instructions that you know from the standard user program, such as bit logic operations, mathematical functions, functions for program control, and word logic operations.

Moreover, there are instructions with safety functions, e.g., for two-hand monitoring, discrepancy analysis, muting, emergency STOP/emergency OFF, safety door monitoring, feedback monitoring and instructions for safety-related communication between F-CPUs.

Additional information

For a detailed description of the instructions for the safety program, refer to Overview of instructions (Page 391).

Using instruction versions

As with the instructions for the standard user program, there may also be different versions of the instructions for the safety program.

Additional information on instruction versions can be found in the help on STEP 7 in "Basics for instruction versions".

Further information on the differences of the individual versions of the instructions for the safety program can be found in the relevant chapter of the instructions.

Note

Note the following:

- If you change the version of an instruction used in the safety program in the task card “Instructions” to a version which does not have identical functions, the functioning of your safety program may change after recompiling the safety program. In addition to the signature of the F-block that uses the instruction, the F-collective signature and the F-SW collective signature of your safety program also change. You may have to perform an acceptance test (Page 378).
- (S7-300/400) If you use a know-how protected F-block in your safety program which uses an instruction which is not the same version as that set in the task card "Instructions", when the program is compiled without entering the password for the know-how protected F-block, it is adjusted to the version set in the task card "Instructions", providing the interfaces of the instruction versions are identical. If the instruction versions do not have identical functions, the functioning of the know-how protected F-block may change and always its signature.

5.1.4 Restrictions in the programming languages FBD/LAD

LAD and FBD programming languages

The user program in the F-CPU typically consists of a standard user program and a safety program.

The standard user program is created using standard programming languages such as SCL, STL, LAD, or FBD.

For the safety program, LAD or FBD may be used with certain restrictions in the instructions and the applicable data types and operand areas. Please also note the restrictions for the individual instructions.

Supported instructions

The instructions available depend on the F-CPU used. You can find the supported instructions in the description of the instructions (starting from (Page 391)).

Note

Enable input EN and enable output ENO cannot be connected.

Exception:

(S7-1200, S7-1500) With the following instructions you can program overflow detection by connecting the enable output ENO:

- ADD: Add (STEP 7 Safety V15.1) (Page 520)
- SUB: Subtract (STEP 7 Safety V15.1) (Page 523)
- MUL: Multiply (STEP 7 Safety V15.1) (Page 526)
- DIV: Divide (STEP 7 Safety V15.1) (Page 529)
- NEG: Create twos complement (STEP 7 Safety V15.1) (Page 533)
- ABS: Form absolute value (STEP 7 Safety V15.1) (S7-1200, S7-1500) (Page 536)
- CONVERT: Convert value (STEP 7 Safety V15.1) (Page 548)

Supported data types and parameter types

Only the following data types are supported:

- BOOL
- INT
- WORD
- DINT
- DWORD (S7-300, S7-400)
- TIME
- ARRAY, ARRAY[*] when using the instructions RD_ARRAY_I: Read value from INT F-array (STEP 7 Safety V15.1) (S7-1500) (Page 539) and RD_ARRAY_DI: Read value from DINT F-array (STEP 7 Safety V15.1) (S7-1500) (Page 542).

  Restrictions:

  – ARRAY only in F-global DBs
  – ARRAY limits: 0 up to max. 10000
  – ARRAY[*] only as in-out parameter (InOut) in F-FCs and F-FBs
  – ARRAY of UDT
  – ARRAY of Bool
  – ARRAY of Word
  – ARRAY of Time
- F-compliant PLC data type (UDT) (S7-1200, S7-1500)

Note

If the result of an instruction is located outside the permitted range for this data type, the F-CPU may switch to STOP. The cause of the diagnostics event is entered in the diagnostics buffer of the F-CPU.
You must therefore ensure that the permitted range for the data type is observed when creating the program, or select a matching data type or use the ENO output.

Note the description of the individual instructions.

Non-permitted data and parameter types

The following types are **not** permitted:

- All types not listed in the section "Supported data types and parameters types" (e.g. BYTE, REAL)
- Complex data types (for example, STRING, ARRAY (S7-300, S7-400, S7-1200), STRUCT, PLC data type (UDT) (S7-300, S7-400))
- Parameter types (e.g. BLOCK_FB, BLOCK_DB, ANY)

Supported operand areas

The system memory of an F-CPU is divided into the same operand areas as the system memory of a standard CPU. You can access the operand areas listed in the table below from within the safety program.

Table 5- 1 Supported operand areas

Operand area	Description
Process image of the inputs	
• Of F-I/O	Only read-only access to input channels of F-I/O is possible. Transfer to IN_OUT parameters of an F-FB or F-FC is therefore not valid either. The process image of the inputs of F-I/O is updated prior to the start of the main safety block.
• Of standard I/O	Input channels of standard I/O can only be accessed read-only. Transfer to IN_OUT parameters of an F-FB or F-FC is therefore not valid either. In addition, a process-specific validity check is required. See the *STEP 7 help* for the update times of the process image of the inputs of standard I/O.
Process image of the outputs	
• Of F-I/O	Only write-only access to output channels of F-I/O is possible. Transfer to IN_OUT parameters of an F-FB or F-FC is therefore not valid either. In the safety program, the values for the outputs of the F-I/O are calculated and stored in the process image of the outputs. The process image of the outputs for F-I/O is updated after the end of the main safety block.
• Of standard I/O	Output channels of standard I/O are write-only channels. Transfer to IN_OUT parameters of an F-FB or F-FC is therefore not valid either. In the safety program, the values for the outputs of the standard I/O are also calculated and stored in the process image of the outputs, if needed. See the *STEP 7 help* for the update times of the process image of the outputs of standard I/O.

Operand area	Description
Bit memory	This area is used for data exchange with the standard user program. In addition, read access requires a process-specific validity check. A particular element of the bit memory can be either read- or write-accessed in the safety program. Transfer to IN_OUT parameters of an F-FB or F-FC is therefore not valid either. Note that it is only permitted to use bit memory for connecting the standard user program and the safety program; it must not be used as a buffer for F-data.
Data blocks	
• F-DB	Data blocks store information for the program. They can either be defined as global data blocks such that all F-FBs, F-FCs, or main safety blocks can access them or assigned to a particular F-FB or main safety block (instance DB). A tag of a shared DB can only be accessed from one F-runtime group, and an instance DB only from the F-runtime group in which the corresponding F-FB/instruction is called.
• DB	This area is used for data exchange with the standard user program. In addition, read access requires a process-specific validity check. For a tag of a DB, either read access or write access is possible in the safety program. Transfer to IN_OUT parameters of an F-FB or F-FC is therefore not valid either. Please note that the tags of a DB can only be used for transferring data between the standard user program and the safety program; DBs must not be used as a buffer for F-data.
Temporary local data	This memory area holds the temporary tags of a block (or F-block) while the (F-) block is being executed. The local data stack also provides memory for transferring block parameters and for saving intermediate results.

File type conversion

Just as with the standard user program, there are two possibilities for file type conversion in the safety program.

- Implicit conversion

  The implicit conversion is executed as in the standard user program with the following restrictions: The bit length of the source data type has to match the bit length of the destination data type.

- Explicit conversion

  You use an explicit conversion instruction (Page 548) before the actual instruction is executed.

Slice access

Slice access is not possible in the safety program.

Non-permitted operand areas

Access via units other than those listed in the table above is **not** permitted. The same applies to access to operand areas not listed, in particular:

- Data blocks that were automatically added

  Exception: Certain tags in the F-I/O DB (Page 165) and in the F-shared DB (S7-300, S7-400) (Page 148) or F-runtime group information DB (S7-1200, S7-1500) (Page 148)
- I/O area: Inputs
- I/O area: Outputs

Boolean constants "0" or "FALSE" and "1" or "TRUE" (S7-300, S7-400)

The Boolean constants "0" or "FALSE" and "1" or "TRUE" are available for S7-300/400 F-CPUs as "Tags" "RLO0" and "RLO1" in the F-global DB. You access them through a fully qualified DB access ("F_GLOBDB".RLO0 or "F_GLOBDB".RLO1).

Boolean constants "0" or "FALSE" and "1" or "TRUE" (S7-1200, S7-1500)

The Boolean constants "0" or "FALSE" and "1" or "TRUE" are available for S7-1200/1500 F-CPUs to assign parameters during block calls.

You can also create "1" or "TRUE" in a tag with the help of the "Assignment (Page 402)" instruction.

To do so, do not interconnect the box input of the "Assignment" instruction in FBD. In LAD, you interconnect the input directly with the supply rail.

You obtain a tag with "0" or "FALSE" by subsequent inversion with the instruction "Invert RLO (Page 399)".

Example FBD:

Example LAD:

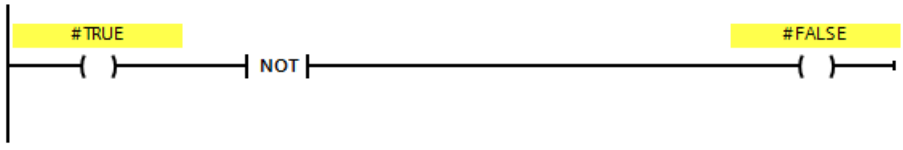

Operand area of temporary local data: Particularities

Note

Note when using the operand area of temporary local data that the first access of a local data element in a main safety block/F-FB/F-FC must always be a write access. This initializes the local data element.

Make sure that a temporary local data element is initialized prior to the first JMP, JMPN, or RET instruction.

The "local data bit" should be initialized with the Assign ("=") (FBD) or ("--( )") (LAD) instruction. Assign the local data bit a signal state of "0" or "1" as a Boolean constant.

Local data bits cannot be initialized with the Flip Flop (SR, RS), Set Output (S) or Reset Output (R) instructions.

The F-CPU can go to STOP if this is not observed. The cause of the diagnostics event is entered in the diagnostics buffer of the F-CPU.

"Fully qualified DB access"

Access to tags of a data block in an F-FB/F-FC is "fully qualified DB access". This also applies to initial access to tags of a data block after a jump label.

For S7-300/400 F-CPUs, only initial access needs to be "fully qualified DB access". Alternatively, you can use the instruction "OPN".

Example of "fully qualified DB access":

Assign a name for the F-DB, e.g. "F_Data_1". Use the names assigned in the declaration of the F-DB instead of the absolute addresses.

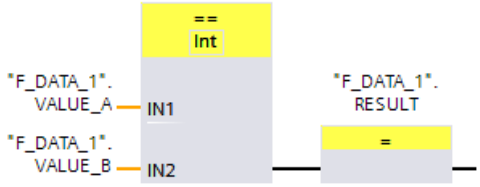

Figure 5-1 Example with fully-qualified access

Example of "non-fully qualified DB access" (S7-300, S7-400):

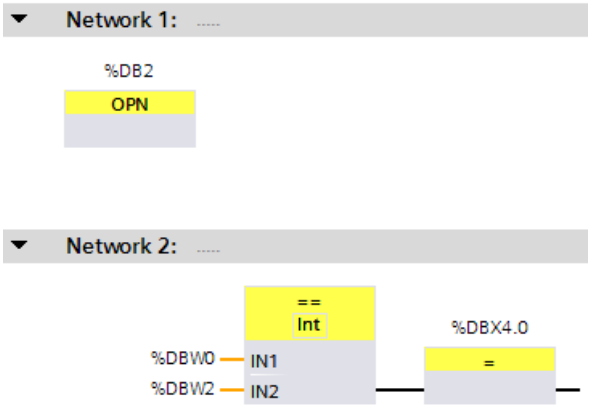

Figure 5-2 Example without fully-qualified access

Access to instance DBs

You can also access instance DBs of F-FBs with fully qualified access, e.g., for transfer of block parameters. It is not possible to access static local data in single/multi-instances of other F-FBs.

Note that accessing instance DBs of F-FBs that are not called in the safety program can cause the F-CPU to go to STOP mode.

5.1.5 F-compliant PLC data types (UDT) (S7-1200, S7-1500)

Introduction

You declare and use F-compliant PLC data types (UDT) as you would standard PLC data types (UDT). You can use F-compliant PLC data types (UDT) in the safety program as well as in the standard user program.

Differences to standard PLC data types (UDT) are described in this chapter.

Information on the use and declaration of standard PLC data types (UDT) is available in the *STEP 7 help* under "Declaring PLC data types".

Declaring F-compliant PLC data types (UDT)

You declare F-compliant PLC data types (UDT) as you would PLC data types (UDT).

In F-compliant PLC data types (UDT), you can use all data types (Page 119) that you can also use in safety programs. Exception: ARRAY.

Nesting of F-compliant PLC data types (UDT) within F-compliant PLC data types (UDT) is not supported.

Proceed as follows for declaration:

1. Click on "Add new PLC data type" in the "PLC Data Types" folder in the project tree.
2. To create an F-compliant PLC data type (UDT), enable the option "Create F-compliant PLC data type" in the "Add new PLC data type" dialog.
3. Proceed as described in the *STEP 7 help* under "Programming structure of PLC data types".

You specify default values for F-compliant PLC data types (UDT) during the declaration.

Using F-compliant PLC data types (UDT)

You use F-compliant PLC data types as you would standard PLC data types (UDT).

Changes to F-compliant PLC data types (UDT)

You need the password for the safety program to change F-compliant PLC data types (UDT). Regardless if you are using the F-compliant PLC data type (UDT) in an F-block, in a standard block or not at all.

See also

"F-compliant PLC data types" area (S7-1200, S7-1500) (Page 89)

5.1.5.1 Grouping PLC tags for inputs and outputs of F-I/O in structures (S7-1200, S7-1500)

You group PLC tags for inputs and outputs of F-I/O in structures (structured PLC tag) as you would for inputs and outputs of standard I/O.

Use F-compliant PLC data types (UDT).

Rules

When creating structured PLC tags for inputs and outputs of F-I/O, you must also observe the following rules in addition to the rules in the standard:

- You must not group inputs/outputs of standard I/O and F-I/O at the same time in a structured PLC tag.
- You may only group inputs/outputs of actually existing channels (channel value and value status) in a structured PLC tag.

  See also Addressing F-I/O (Page 157)
- You may only group inputs/outputs of channels (channel value and value status) that are enabled in the hardware configuration in a structured PLC tag.

  See also Addressing F-I/O (Page 157)
- You may only group inputs of channels (channel value and value status) that provide the result of the "1oo2 sensor evaluation" with set "1oo2 sensor evaluation".

  See also Addressing F-I/O (Page 157)
- In a structured PLC tag for an F-I/O with outputs, you must either group all outputs of this F-I/O or an output range with multiples of 16 bits.

  The F-CPU can go to STOP mode if this is disregarded. The cause of the diagnostics event is entered in the diagnostics buffer of the F-CPU.
- A structured PLC tag that groups outputs of an F-I/O must not overlap with other PLC tags.

  The F-CPU can go to STOP mode if this is disregarded. The cause of the diagnostics event is entered in the diagnostics buffer of the F-CPU.

Note

To observe these rules, you must declare the F-compliant PLC data type that is used for the structured PLC tag accordingly.

You can find the addresses allocated to a structured PLC tag in the "IO tags" tab of an F-I/O configuration.

5.1.5.2 Example of structured PLC tags for inputs and outputs of F-I/O (S7-1200, S7-1500)

Introduction

This example uses the F-module 4 F-DI/3 F-DO DC24V/2A with 1oo2 evaluation to demonstrate how you use structured PLC tags for access to F-I/O.

Channel structure of the 4 F-DI/3 F-DO DC24V/2A F-module

The table below sets out the channel structure and address assignment of the F-module 4 F-DI/3 F-DO DC24V/2A with 1oo2 evaluation. You may only access existing and enabled channels (addresses I15.0 to I15.3 and I16.0 to I16.3). These channels provide the result of 1oo2 evaluation generated internally in the F-module.

Table 5- 2 Channel structure and addresses of the channel values of inputs with 1oo2 evaluation

Channel	Address
DI channel 0 channel value	I15.0
DI channel 1 channel value	I15.1
DI channel 2 channel value	I15.2
DI channel 3 channel value	I15.3
—	I15.4
—	I15.5
—	I15.6
—	I15.7

Table 5- 3 Channel structure and addresses of the value status of the inputs with 1oo2 evaluation

Channel	Address
DI channel 0 value status	I16.0
DI channel 1 value status	I16.1
DI channel 2 value status	I16.2
DI channel 3 value status	I16.3
—	I16.4
—	I16.5
—	I16.6
—	I16.7

Table 5- 4 Channel structure and addresses of the value status of outputs

Channel	Address
DO channel 0 value status	I17.0
DO channel 1 value status	I17.1
DO channel 2 value status	I17.2
DO channel 3 value status	I17.3

Table 5- 5 Channel structure and addresses of the channel values of outputs

Channel	Address
DO channel 0 channel value	Q15.0
DO channel 1 channel value	Q15.1
DO channel 2 channel value	Q15.2
DO channel 3 channel value	Q15.3

Creating F-compliant PLC data types (UDT)

Create two F-compliant PLC data types (UDT), for example, for access to all channels.

The figure below shows an F-compliant PLC data type (UDT) for access to the channel values and value status of the inputs with 1oo2 evaluation:

4 F-DI/3 F-DO DC24V/2A_DI

	Name	Data type	Comment
1	CH_DI_0	Bool	Channel 0 (DI)
2	CH_DI_1	Bool	Channel 1 (DI)
3	CH_DI_2	Bool	Channel 2 (DI)
4	CH_DI_3	Bool	Channel 3 (DI)

The figure below shows the F-compliant PLC data type (UDT) for access to the channel values and value status of the outputs:

4 F-DI/3 F-DO DC24V/2A_DO

	Name	Data type	Comment
1	CH_DO_0	Bool	Channel 0 (DO)
2	CH_DO_1	Bool	Channel 1 (DO)
3	CH_DO_2	Bool	Channel 2 (DO)

Using F-compliant PLC data types (UDT)

As demonstrated in the figure below, you can use the two F-compliant PLC data types (UDT) that you have created in an F-FC (e.g. "Motor"):

Motor

	Name	Data type	Comment
1	Input		
2	Motor SS DI	"4 F-DI/3 F-DO DC24V/2A_DI"	Motor interface channel values DI
3	CH_DI_0	Bool	Kanal 0 (DI)
4	CH_DI_1	Bool	Kanal 1 (DI)
5	CH_DI_2	Bool	Kanal 2 (DI)
6	CH_DI_3	Bool	Kanal 3 (DI)
7	Motor SS DI VS	"4 F-DI/3 F-DO DC24V/2A_DI"	Motor interface value status DI
8	CH_DI_0	Bool	Kanal 0 (DI)
9	CH_DI_1	Bool	Kanal 1 (DI)
10	CH_DI_2	Bool	Kanal 2 (DI)
11	CH_DI_3	Bool	Kanal 3 (DI)
12	Motor SS DO VS	"4 F-DI/3 F-DO DC24V/2A_DO"	Motor interface value status DI
13	CH_DO_0	Bool	Kanal 0 (DO)
14	CH_DO_1	Bool	Kanal 1 (DO)
15	CH_DO_2	Bool	Kanal 2 (DO)
16	Output		
17	Motor SS DO	"4 F-DI/3 F-DO DC24V/2A_DO"	Motor interface channel values DO
18	CH_DO_0	Bool	Kanal 0 (DO)
19	CH_DO_1	Bool	Kanal 1 (DO)
20	CH_DO_2	Bool	Kanal 2 (DO)

Creating structured PLC tag for the F-module 4 F-DI/3 F-DO DC24V/2A

Create structured PLC tags for the F-module 4 F-DI/3 F-DO DC24V/2A:

Tag table_1

	Name	Data type	Address	Comment
1	TagDI_4 F-DI/3 F-DO	"4 F-DI/3 F-DO DC24V/2A_DI"	%I15.0	Motor 1 DI
2	TagDI_VS_4 F-DI/3 F-DO	"4 F-DI/3 F-DO DC24V/2A_DI"	%I16.0	Motor 1 DI VS
3	TagDO_VS_4 F-DI/3 F-DO	"4 F-DI/3 F-DO DC24V/2A_DO"	%I17.0	Motor 1 DO VS
4	TagDO_4 F-DI/3 F-DO	"4 F-DI/3 F-DO DC24V/2A_DO"	%Q15.0	Motor 1 DO

Accessing the F-FC

Transfer the structured PLC tags you have created when you call the F-FC (e.g. "Motor"):

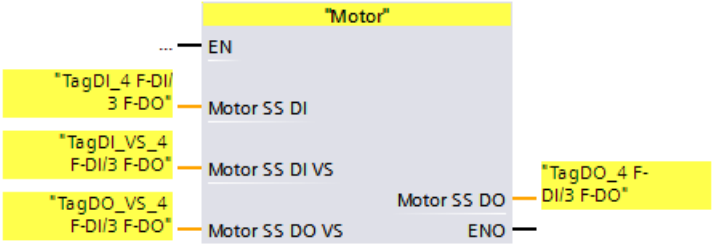

See also

Addressing F-I/O (Page 157)

Value status (S7-1200, S7-1500) (Page 159)

5.1.6 Editing PLC tags with external editors

To edit PLC tags with external editors follow the procedure as in the standard. Additional information can be found in the *STEP 7* help in "Editing PLC tags with external editors".

Note the following:

Note

After importing a tag table which contains tags used in the safety program, the collective F-signature of the safety program is reset.

To form the collective F-signature again you have to recompile the project data. For this, with access protection set up for the safety program, you need a valid access authorization for the safety program.

If you would like to edit PLC tags with external editors, we therefore recommend that you store PLC tags to be used in the safety program in a separate tag table.

5.1.7 Using Multiuser engineering

If you want to use Multiuser engineering, proceed as described in the STEP 7 help under "Using Multiuser engineering".

5.2 Defining F-Runtime Groups

5.2.1 Rules for F-Runtime Groups of the Safety Program

Rules

Note the following:

- The channels (channel values and value status) of an F-I/O can only be accessed from a single F-runtime group.
- Tags of the F-I/O DB of an F-I/O can only be accessed from one F-runtime group and only from that F-runtime group from which the channels or value status of this F-I/O are also accessed (if access is made).
- F-FBs can be used in more than one F-runtime group but they must be called with different instance DBs.
- Instance DBs of F-FB can only be accessed from the F-runtime group in which the associated F-FB is called.
- A tag of a global F-DB (except the F-global DB) can only be accessed from one F-runtime group (however, a global F-DB can be used in more than one F-runtime group).
- (S7-300, S7-400) A DB for F-runtime group communication can be read and write accessed by the F-runtime group to which it was assigned as "DB for runtime group communication", but only read-accessed by the "receiver" F-runtime group.
- (S7-300, S7-400) An F-communication DB can only be accessed from one F-runtime group.
- (S7-1200, S7-1500) You must not call the main safety block yourself. It is automatically called by the assigned F-OB.

  Note

  F-OBs are protected by F-system know-how. The OB start information of F-OBs therefore cannot be evaluated.

- (S7-1200, S7-1500). The F-OB should be created with the highest priority of all OBs.

  Note

  The cycle time of the F-OB can be prolonged by, among other things, communication load, the processing of higher-priority interrupts, as well as by test and commissioning functions.

- (S7-300, S7-400) The main safety block may only be called once from a standard block. Multiple calls can cause the F-CPU to go to STOP mode.

- (S7-300, S7-400) For optimal use of temporary local data, you must call the F-runtime group (the main safety block) directly in an OB (cyclic interrupt OB, if possible); you should not declare any additional temporary local data in this cyclic interrupt OB.
- (S7-300, S7-400) Within a cyclic interrupt OB, the F-runtime group should be executed **before** the standard user program; i.e. it should be called at the very beginning of the OB, so that the F-runtime group is always called at fixed time intervals, regardless of how long it takes to process the standard user program.

  For this reason, the cyclic interrupt OB should also not be interrupted by higher priority interrupts.
- The process image of the inputs and outputs of standard I/O, bit memory, and tags of DBs in the standard user program may be accessed either as read-only or read/write from more than one F-runtime group. (see also Data exchange between standard user program and safety program (Page 195))
- F-FCs can generally be called in more than one F-runtime group.

Note

You can improve performance by writing sections of the program that are not required for the safety function in the standard user program.

When determining which elements to include in the standard user program and which to include in the safety program, you should keep in mind that the standard user program can be modified and downloaded to the F-CPU more easily. In general, changes in the standard user program do not require an acceptance.

5.2.2 Procedure for defining an F-runtime group (S7-300, S7-400)

Requirements

- You have inserted an S7-300/400 F-CPU in your project.
- In the "Properties" tab of the F-CPU, the "F-capability activated" check box is selected (default setting).

F-runtime group created by default

STEP 7 Safety inserts F-blocks for an F-runtime group in the project tree by default after an F-CPU has been added. When you open the "Program blocks" folder, you see the (F-)blocks of the F-runtime group (CYC_INT5 [OB 35], Main_Safety [FB 1], and Main_Safety_DB [DB1]) in the project tree.

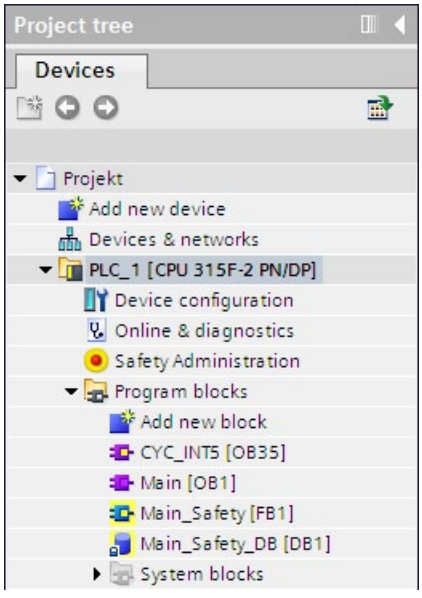

The following section describes how you modify the settings / parameters of the F-runtime group created by default or add and additional F-runtime group.

Procedure for defining an F-runtime group

Proceed as follows to define an F-runtime group:

1. Open the *Safety Administration Editor* by double-clicking in the project tree.
2. Select "F-runtime group" in the area navigation.

   Result: The work area for defining an F-runtime group with the (default) settings for F-runtime group 1 opens.

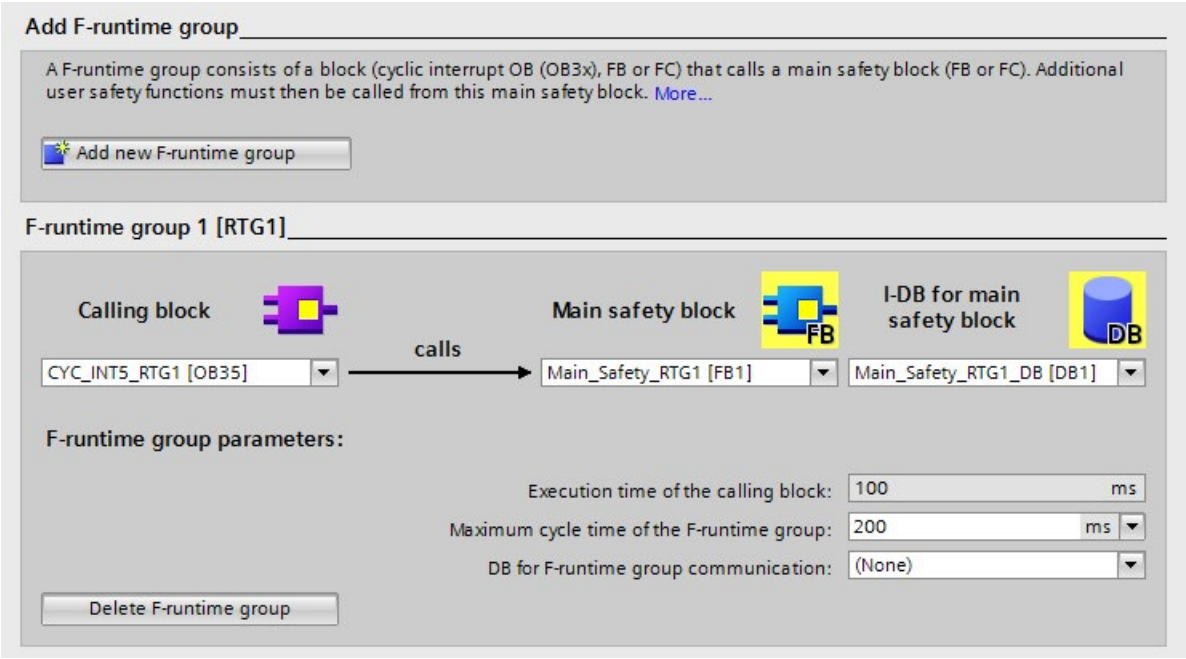

3. Specify the block in which the main safety block is to be called.

   Cyclic interrupt OB 35 is suggested here by default. The advantage of using cyclic interrupt OBs is that they interrupt the cyclic program execution in OB 1 of the standard user program at fixed time intervals; that is, the safety program is called and executed at fixed time intervals in a cyclic interrupt OB.

   In this input field, you can select only those blocks that were created in the LAD, FBD, or STL programming language. If you select a block here, the call is inserted automatically into the selected block and, if necessary, removed from a previously selected block.

   If you want to call the main safety block in a block that was created in another programming language, you must program this call itself. The input field is then not editable (grayed out), and you can change the call only in the calling block and not the *Safety Administration Editor*.

4. Assign the desired main safety block to the F-runtime group. If the main safety block is an FB, you must also assign an instance DB.

   Main_Safety [FB1] and Main_Safety_DB [DB1] are suggested by default.

5. The F-CPU monitors the F-cycle time of the F-runtime group. For "Maximum cycle time of F-runtime group", enter the maximum permitted time between two calls of the F-runtime group.

WARNING

The F-runtime group call interval is monitored for the maximum value; i.e. monitoring is performed to determine whether the call is executed often enough, but not whether it is executed too often or, for example, isochronous. Fail-safe timers must therefore be implemented using the TP, TON, or TOF instructions (Page 489) from the "Instructions" task card and not using counters (OB calls). *(S007)*

WARNING

The response time of their safety function depends, among other things, on the cycle time of the F-OB, the runtime of the F-runtime group and, when distributed F-I/O is used, the parameter assignment of PROFINET/PROFIBUS.

Therefore, the configuration/parameter assignment of the standard system influences the response time of its safety function.

Examples:

- The increase in priority of a standard OB compared to an F-OB can extend the runtime of the F-runtime group due to the interruption by higher-priority interrupts.
- The change of the send clock cycle of PROFINET changes the cycle time of an F-OB with event class "Synchronous cycle".

Note that the configuration / parameter assignment of the standard system is not subject to access protection for the safety program and does not lead to a modification of the collective F-signature.

If you do not take organizational measures to prevent changes in the configuration / parameter assignment of the standard system with influence on the response time, you must always set the monitoring times for the calculation of the maximum response time of a safety function (see Configuring monitoring times (Page 608)).

The monitoring times are protected against change with the access protection of the safety program and are recorded by the F-collective signature as well as the F-SW collective signature.

When calculating with Excel file for response time calculation (http://support.automation.siemens.com/WW/view/en/49368678/133100) you need to consider the value that is specified for "Any standard system runtimes" as value for the maximum response time. *(S085)*

6. If one F-runtime group is to provide tags for evaluation to another F-runtime group of the safety program, assign a DB for F-runtime group communication. Select an F-DB for "DB for F-runtime group communication". (See also F-runtime group communication (S7-300, S7-400) (Page 141))
7. If you want to create a **second F-runtime group**, click the "Add new F-runtime group" button.
8. Assign an F-FB or F-FC as the main safety block to a calling block. This F-FB or F-FC is automatically generated in the project tree, if not already present.

9. If the main safety block is an F-FB, assign an instance DB to the main safety block. The instance DB is generated automatically in the project tree.
10. Follow steps 3 to 5 above to complete generation of the second F-runtime group.

5.2.3 Procedure for defining an F-runtime group (S7-1200, S7-1500)

Requirements

- You have inserted an S7-1200/1500 F-CPU in your project.
- In the "Properties" tab of the F-CPU, the "F-capability activated" check box is selected (default setting).

F-runtime group created by default

STEP 7 Safety inserts F-blocks for an F-runtime group in the project tree by default after an F-CPU has been added. When you open the "Program blocks", you see the (F-)blocks of the F-runtime group (FOB_RTG1 [OB123], Main_Safety_RTG1 [FB1] and Main_Safety_RTG1_DB [DB1]) in the project tree.

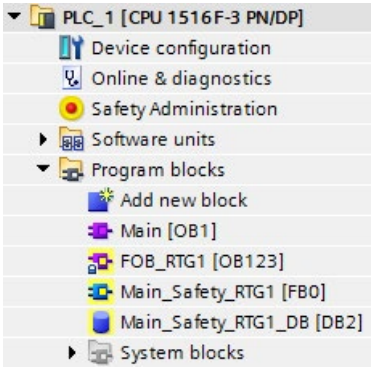

The following section describes how you modify the settings / parameters of the F-runtime group created by default or add and additional F-runtime group.

Procedure for defining an F-runtime group

Proceed as follows to define an F-runtime group:

1. Open the *Safety Administration Editor* by double-clicking in the project tree.
2. Select "F-runtime group" in the area navigation.

   Result: The work area for defining an F-runtime group with the (default) settings for F-runtime group 1 opens.

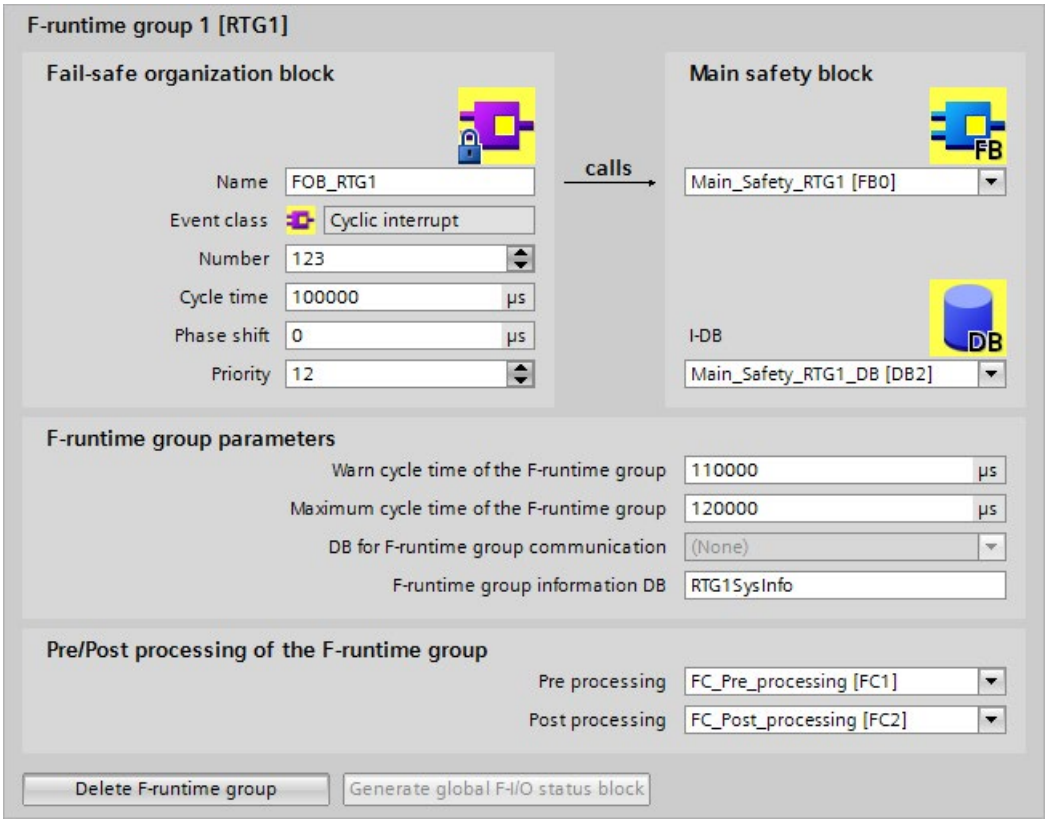

3. Assign a name for the F-OB under "F-OB".
4. Specify the event class of the F-OB when you create a new F-runtime group.

   For an F-OB you can select between the event classes "Program cycle", "Cyclic interrupt" or "Synchronous cycle".

   In the case of the F-runtime group created by default, the F-OB has the event class "Cyclic interrupt". To change the event class of the F-OB of an already created F-runtime group, you need to delete and F-runtime group and create a new one.

Note

We recommend creating the F-OB with the event class "Cyclic interrupt" as "cyclic interrupt OB". The safety program will then be called and run at fixed time intervals.

F-OBs with the event class "Synchronous cycle" are only recommended in conjunction with F-I/O devices that support isochronous mode, for example submodule "Profisafe Telgr 902" of drive SINAMICS S120 CU310-2 PN V5.1.

F-OBs with the event class "Program cycle" are not recommended, as these have the lowest priority "1" (see below).

Note

Note the maximum permissible number of OBs (incl. F-OBs) with event class "Synchronous cycle" (see technical specifications in the product manuals of the S7-1500 CPUs).

5. If required, you can manually change the number of the F-OB proposed by the system. To do so, note the number ranges valid for the relevant event class.
6. Assign cycle time, phase shift and priority parameters for F-OBs with event class "Cyclic interrupt".

   Assign the priority parameter for F-OBs with event class "Synchronous cycle".

   – Select a cycle time which is less than the "Maximum cycle time of F-runtime group" and less than the "Cycle time warning limit of F-runtime group".
   – Select a phase shift which is less than the cycle time.
   – If possible, select a priority that is higher than the priority of all other OBs.

Note

Through a high priority of the F-OB you ensure that the runtime of the safety program and the response time of your safety functions (Page 608) are influenced as little as possibly by the standard user program.

Note

For F-OBs with event class "Synchronous cycle" you need to also assign parameters for application cycle (ms) and possibly delay time (ms) after defining the F-runtime group and the connection of the isochronous F-I/O to the isochronous mode interrupt OB. You can find these parameters in the "Properties" dialog box of the isochronous mode interrupt OB in the "Isochronous mode" group. Proceed as described in the STEP 7 help under "Configuring isochronous mode interrupt OBs".

7. Assign the calling main safety block to the F-OB. If the main safety block is an FB, you must also assign an instance DB.

   Main_Safety_RTG1 [FB1] and Main_Safety_RTG1_DB [DB1] are suggested by default.

8. The F-CPU monitors the F-cycle time of the F-runtime group. Two parameters are available:
   - If the "Cycle time warning limit of F-runtime group" is exceeded, an entry is written to the diagnostics buffer of the F-CPU. This parameter can, for example, be used to determine whether the cycle time exceeds a required value without the F-CPU switching to STOP mode.
   - If the "Maximum cycle time of F-runtime group" is exceeded, the F-CPU will go to STOP. For "Maximum cycle time of F-runtime group", select the maximum permitted time between two calls of this F-runtime group (maximum of 20000000 µs).

WARNING

The F-runtime group call interval is monitored for the maximum value; i.e. monitoring is performed to determine whether the call is executed often enough, but not whether it is executed too often or, for example, isochronous. Fail-safe timers must therefore be implemented using the TP, TON, or TOF instructions (Page 489) from the "Instructions" task card and not using counters (OB calls). *(S007)*

WARNING

The response time of their safety function depends, among other things, on the cycle time of the F-OB, the runtime of the F-runtime group and, when distributed F-I/O is used, the parameter assignment of PROFINET/PROFIBUS.

Therefore, the configuration/parameter assignment of the standard system influences the response time of its safety function.

Examples:

- The increase in priority of a standard OB compared to an F-OB can extend the runtime of the F-runtime group due to the interruption by higher-priority interrupts.
- The change of the send clock cycle of PROFINET changes the cycle time of an F-OB with event class "Synchronous cycle".

Note that the configuration / parameter assignment of the standard system is not subject to access protection for the safety program and does not lead to a modification of the collective F-signature.

If you do not take organizational measures to prevent changes in the configuration / parameter assignment of the standard system with influence on the response time, you must always set the monitoring times for the calculation of the maximum response time of a safety function (see Configuring monitoring times (Page 608)).

The monitoring times are protected against change with the access protection of the safety program and are recorded by the F-collective signature as well as the F-SW collective signature.

When calculating with Excel file for response time calculation (http://support.automation.siemens.com/WW/view/en/49368678/133100) you need to consider the value that is specified for "Any standard system runtimes" as value for the maximum response time. *(S085)*

The "Cycle time warning limit of F-runtime group" must be configured as less than or equal to the "Maximum cycle time of F-runtime group".

9. Assign a name for the F-runtime group information DB (Page 148) under "F-runtime group DB".
10. If required, you can select blocks of the standard program (FCs) with regard to preprocessing or postprocessing of an F-runtime group (see Pre-/postprocessing (S7-1200, S7-1500) (Page 87))
11. If you want to create a **second F-runtime group**, click the "Add new F-runtime group" button. Follow steps 3 to 10 above.

5.2.4 F-runtime group communication (S7-300, S7-400)

Safety-related communication between F-runtime groups

Safety-related communication can take place between the two F-runtime groups of a safety program. This means fail-safe tags can be provided by one F-runtime group in an F-DB and read in another F-runtime group.

Note

A DB for F-runtime group communication can be read and write accessed by the F-runtime group to which it was assigned as "DB for runtime group communication", while it can only be read-accessed by the "receiver" F-runtime group.

Tip: You can improve performance by structuring your safety program in such a way that as few tags as possible are exchanged between the F-runtime groups.

Procedure for defining a DB for F-runtime group communication

You define the DB for F-runtime group communication in the work area "F-runtime groups". Proceed as follows:

1. Click "F-runtime groups" in "*Safety Administration Editor*".
2. Select an existing F-DB in the "DB for F-runtime group communication" field or assign a new one.
3. Assign a name to the F-DB.

Up-to-dateness of tags read from another F-runtime group

Note

Tags read are up-to-date as at the time of the last completed processing cycle of the F-runtime group providing the tags prior to start-up of the F-runtime group reading the tags.

If the tags supplied undergo multiple changes during runtime of the F-runtime group supplying the tags, the F-runtime group reading the tags only receives the last change (see figure below).

Assignment of fail-safe values

After F-system start-up, fail-safe values are supplied to the F-runtime group which has read access to tags in the DB for F-runtime group communication of another F-runtime group (for example, F-runtime group 2). These are the values you specified as initial values in the DB for F-runtime group communication of F-runtime group 1.

F-runtime group 2 reads the fail-safe values the first time it is called. The second time the F-runtime group 2 is called, it reads the latest tags if F-runtime group 1 has been processed completely between the two calls of F-runtime group 2. If F-runtime group 1 has not been processed completely, F-runtime group 2 continues to read the fail-safe values until F-runtime group 1 is completely processed.

The behavior is illustrated in the two figures below.

Reading tags from F-runtime group 1, which has a longer OB cycle and lower priority than F-runtime group 2

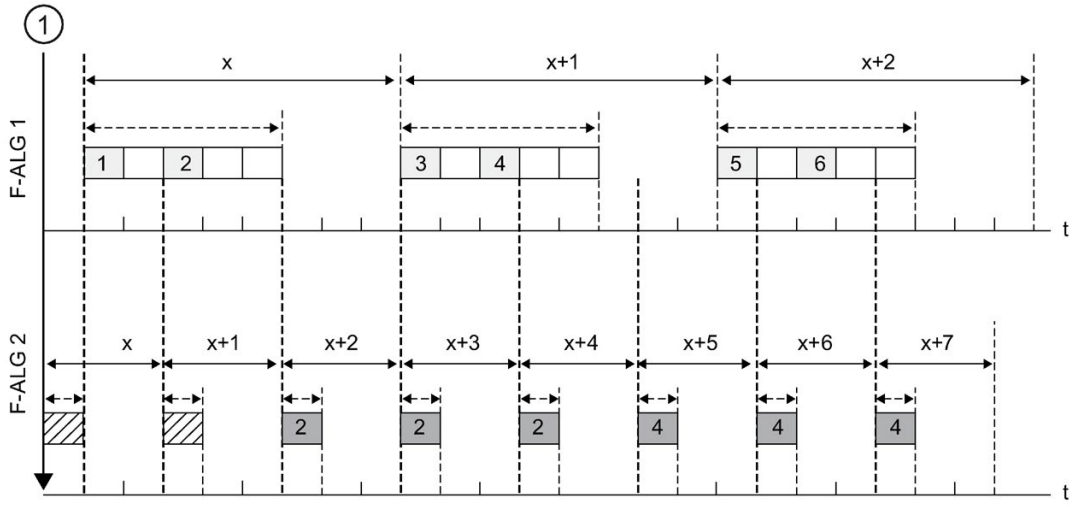

①	Startup of F-system
←——→	Cycle time of the (F-)OB in which the F-runtime group is called.
←- - -→	Runtime of the F-runtime group
1	... Tag of F-runtime group 1, written to DB for F-runtime group communication of F-runtime group 1
2	...Tag of F-runtime group 2, read in DB for F-runtime group communication of F-runtime group 1
▨	Initial value in the DB for F-runtime group communication

Reading tags from F-runtime group 1, which has a shorter OB cycle and higher priority than F-runtime group 2

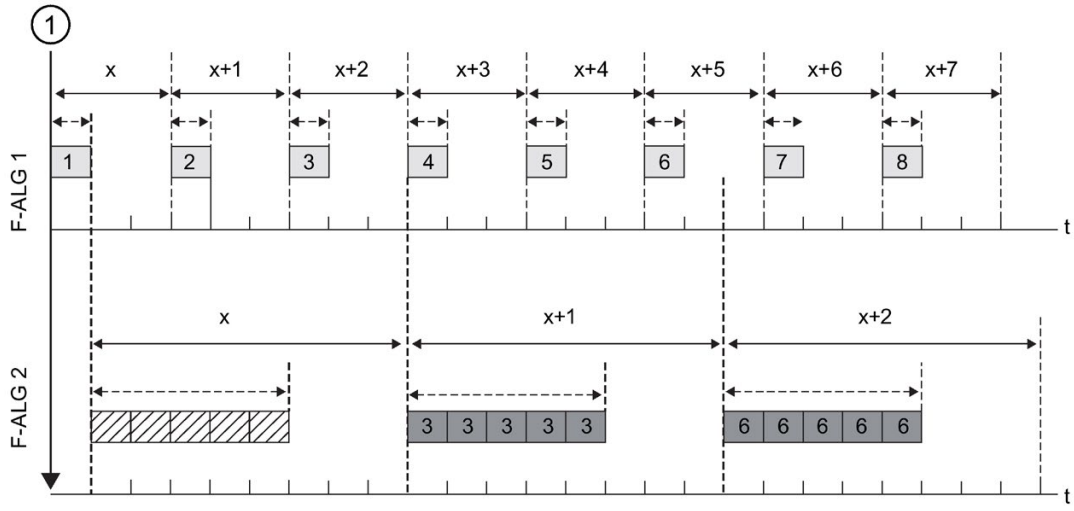

①	Startup of F-system
←→	Cycle time of the (F-)OB in which the F-runtime group is called.
←- - -→	Runtime of the F-runtime group
1	... Tag of F-runtime group 1, written to DB for F-runtime group communication of F-runtime group 1
2	... Tag of F-runtime group 2, read in DB for F-runtime group communication of F-runtime group 1
▨	Initial value in the DB for F-runtime group communication

F-runtime group supplying tags is not processed

Note

If the F-runtime group whose DB for F-runtime group communication is to supply the tags is not processed (the main safety block of the F-runtime group is not called), the F-CPU goes to STOP mode. One of the following diagnostics events is then entered in the diagnostics buffer of the F-CPU:

- Error in safety program: cycle time exceeded
- Number of the relevant main safety block (of F-runtime group that is not processed)
- Current cycle time in ms: "0"

5.2.5 F-runtime group communication (S7-1200, S7-1500)

Introduction

With the help of Flexible F-Link you realize a F-runtime group communication.

With Flexible F-Link a coded F-array is made available for the send data of the F-runtime group. The coded F-array is transferred to the other F-runtime group with standard instructions such as UNMOVE_BLK.

Requirement

- S7-1500 F-CPUs as of firmware V2.0
- S7-1200 F-CPUs as of firmware V4.2
- Safety system version as of V2.2

F-runtime group communication

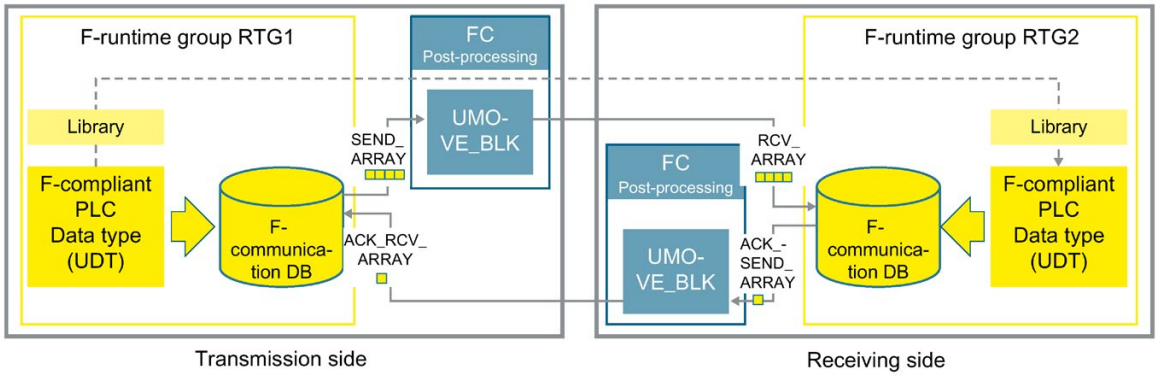

If you want to send a data fail-safe from one F-runtime group to another F-runtime group, follow these steps:

1. Create an F-compliant PLC data type (UUID) for the F-runtime group communication. The size is up to 100 bytes.
2. Create two F-communications for an F-runtime group communication in the Safety Administration Editor in the "Flexible F-Link" area. One F-communication each for the send and receive side.
3. Configure the same F-monitoring time and F-communication UUID for each F-runtime group communication relationship.

   Information on calculating the F-monitoring times can be found in Monitoring and response times (Page 607).

   For example:

Flexible F-Link settings

	Name	PLC Data Type	Direction	F-monitoring time: (ms)	F-communication UUID
1	Send	Data	Send	500	5d61f443-ede6-4e4e-9db6-e79af634f9ad
2	Receive	Data	Receive	500	2c85b9e5-da34-422d-98eb-f7136309a3a2

4. On the send side (e.g. RTG1) supply the data of the transmission DBs with the data to be sent.

   For example:

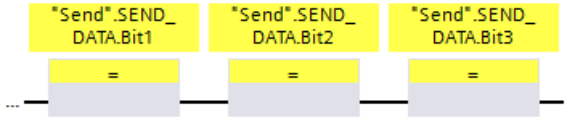

5. Read the receiving data from the receiving DB on the receive side (e.g. RTG2).

   For example:

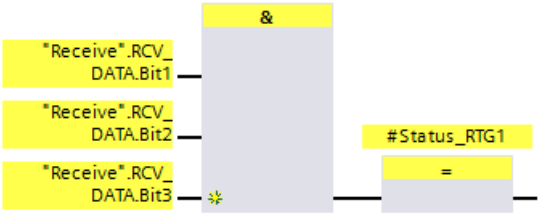

6. Call the instruction "UMOVE_BLK" in the F-runtime group for the send data (e.g. RTG1) in the FC for post processing (Page 87).
7. Interconnect the "UMOVE_BLK" instruction for the data to be sent as follows:

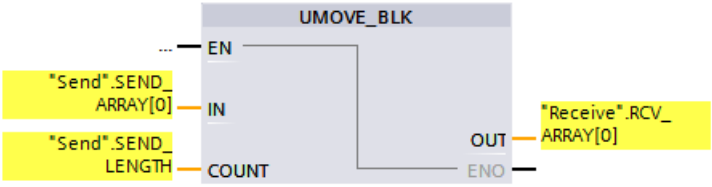

   "Send" is the F-communication DB (Page 96) of the F-runtime group that sends the data.

   "Receive" is the F-communication DB (Page 96) of the F-runtime group that receives the data.

8. Call the instruction "UMOVE_BLK" in the F-runtime group for acknowledgment (e.g. RTG2) in the FC for post processing (Page 96).
9. Interconnect the "UMOVE_BLK" instruction for the acknowledgment connection as follows:

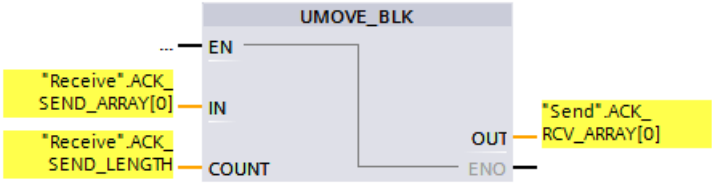

   "Receive" is the F-communication DB (Page 96) of the F-runtime group that sends the acknowledgment telegram.

   "Send" is the F-communication DB (Page 96) of the F-runtime group that receives the acknowledgment telegram.

10. Compile the user program.
11. Download the user program to the F-CPU.

WARNING

During the acceptance use the safety summary to verify that the offsets of the elements of the F-compliant PLC data types (UDT) match for the sending and receiving data within the safety message frame. For this purpose all members and addresses are listed in the safety summary per UDT. Also keep in mind that the size can be a up to 100 bytes. *(S088)*

WARNING

When a new Flexible F-Link communication is created in the Safety Administration Editor, the F-communication UUID for the communication is explicitly provided by the system. By copying communications in Safety Administration Editor within the parameterization table or when copying into another F-CPU, the F-communication UUIDs are not generated new and are therefore not unique anymore. If the copy is used to configure a new communication relationship, you yourself need to ensure the uniqueness. To do this select the affected UUIDs and regenerate via the "Generate UUID" shortcut menu. The uniqueness must be ensured in the safety summary during acceptance of the safety program. *(S087)*

WARNING

It can only be ensured (from a fail-safe standpoint) that a signal state to be transferred will be acquired at the sender end and transferred to the receiver if the signal level is pending for at least as long as the assigned monitoring time. *(S018)*

Up-to-dateness of tags read from another F-runtime group

The same statements as those in the section "F-runtime group communication (S7-300, S7-400) (Page 141)" apply (except for the storage locations written or read or initial values).

5.2.6 F-shared DB (S7-300, S7-400)

Function

The F-shared DB is a fail-safe data block that contains all of the shared data of the safety program and additional information needed by the F-system. The F-shared DB is automatically inserted when the hardware configuration is compiled.

Using its name F_GLOBDB, you can evaluate certain data elements of the safety program in the standard user program.

Reading an F-shared DB in the standard user program

You can read out the following information in the F-shared DB in the standard user program or on an operator control and monitoring system:

- Operating mode: safety mode or disabled safety mode ("MODE" tag)
- Error information "Error occurred when executing safety program" ("ERROR" tag)
- Collective F-signature ("F_PROG_SIG" tag)
- Compilation date of the safety program ("F_PROG_DAT" tag, DATE_AND_TIME data type)

You use fully qualified access to access these tags (e.g. ""F_GLOBDB".MODE").

5.2.7 F-runtime group information DB (S7-1200, S7-1500)

Introduction

The F-runtime group information DB provides key information on the corresponding F-runtime group and on the safety program as a whole.

The F-runtime group information DB is generated automatically when an F-runtime group is created. A symbol, for example, "RTG1SysInfo", is assigned for the F-runtime group information DB. You can change the name in the *Safety Administration Editor*.

Information in the F-runtime group information DB

The F-runtime group information DB provides the following information:

Name		Data type	For processing in the safety program	For processing in the standard user program	Description
MODE		BOOL	x	x	1 = Disabled safety mode
F_SYSINFO					
	MODE	BOOL	—	x	1 = Disabled safety mode
	TCYC_CURR	DINT	—	x	Current cycle time of the F-runtime group, in ms
	TCYC_LONG	DINT	—	x	Longest cycle time of the F-runtime group, in ms
	TRTG_CURR	DINT	—	x	Current runtime of the F-runtime group, in ms
	TRTG_LONG	DINT	—	x	Longest runtime of the F-runtime group, in ms
	T1RTG_CURR	DINT	—	x	Not supported by *STEP 7 Safety V15.1*.
	T1RTG_LONG	DINT	—	x	Not supported by *STEP 7 Safety V15.1*.
	F_PROG_SIG	DWORD	—	x	Collective F-signature of the safety program
	F_PROG_DAT	DTL	—	x	Compilation date of the safety program
	F_RTG_SIG	DWORD	—	x	F-runtime groups signature
	F_RTG_DAT	DTL	—	x	Compilation date of the F-runtime group
	VERS_S7SAF	DWORD	—	x	Version identifier for *STEP 7 Safety*

You access the content of the F-runtime group information DB with fully qualified addressing. Either collectively with the F_SYSINFO PLC data type (UDT), for example, "RTG1SysInfo.F_SYSINFO", provided by the F-system or individual information, for example, "RTG1SysInfo.F_SYSINFO.MODE".

See also

Program identification (Page 337)

"Flexible F-Link" area (S7-1200, S7-1500) (Page 96)

5.2.8 Deleting an F-runtime group

Deleting an F-runtime group

To delete an F-runtime group, proceed as follows:

1. In the area navigation of the *Safety Administration Editor*, click on the F-runtime group to be deleted.
2. Select the "Delete F-runtime group" button in the work area.
3. Confirm the dialog with "Yes".
4. Compile the safety program (Page 311) (menu command "Edit > Compile") to put your changes into effect.

The assignment of the F-blocks to an F-runtime group (to the calling block of the main safety block) is deleted. However, the F-blocks continue to exist.

Note

If you want to delete your safety program, delete all F-blocks outside the System blocks folder in the project tree.

F-blocks that do not allow deletion are deleted by recompiling the safety program or deactivating F-capability for the F-CPU (see Configuring an F-CPU (Page 48)).

5.2.9 Changing the F-runtime group (S7-300, S7-400)

Changing an F-runtime group

You can make the following changes for each F-runtime group in your safety program in the corresponding "F-runtime group" work area:

- Specify another block as the calling block of the main safety block.
- Specify another F-FB or F-FC as main safety block.
- Enter a different or new I-DB for the main safety block.
- Change the value for the maximum cycle time of the F-runtime group
- Specify another DB as a data block for F-runtime group communication.

5.2.10 Changing the F-runtime group (S7-1200, S7-1500)

Changing an F-runtime group

You can make the following changes for each F-runtime group in your safety program in the corresponding "F-runtime group" work area:

- Change the name, number, cycle time, phase shift and priority of the F-OB.
- Specify another F-FB or F-FC as main safety block.
- Enter a different or new I-DB for the main safety block.
- Change the value for the maximum cycle time and the cycle time warning limit of the F-runtime group.
- Assign another name for the F-runtime group information DB.
- Specify an FC for the preprocessing and postprocessing.

5.3 Creating F-blocks in FBD / LAD

5.3.1 Creating F-blocks

Introduction

In order to create F-FBs, F-FCs, and F-DBs for the safety program, you should follow the same basic procedure as for standard blocks. In the following, only the deviations from the procedure for standard blocks are presented.

Creating F-FBs, F-FCs, and F-DBs

You create F-blocks in the same way as for standard blocks. Proceed as follows:

1. Double-click on "Add new block" under "Program blocks" in the project tree.
2. In the dialog that appears, specify the type, name, and language and select the "Create F-block" check box. (If you do not select the check box, a standard block is created.)
3. After the dialog is confirmed, the F-block is opened in the *Program editor*.

Note the following

Note the following important instructions:

Note

You may not declare block parameters in the block interface of the main safety block because they cannot be supplied.

Note

You can edit start values in instance DBs. The function "Apply actual values" is not supported.

Note

You may not access static local data in single instances or multi-instances of other F-FBs.

Note

You must always initialize outputs of F-FCs.

The F-CPU can go to STOP mode if the information above is not observed. The cause of the diagnostics event is entered in the diagnostics buffer of the F-CPU.

Note

If you wish to assign an address from the data area (data block) to a formal parameter of an F-FC as an actual parameter, you have to use fully qualified DB access. (S7-300, S7-400)

Note

Access to the inputs in an F-FB/F-FC is read-only, while access to the outputs is write-only.

Use an in/out if you wish to have both read and write access.

Note

For greater clarity, assign meaningful names to the F-blocks you have created.

Copying/pasting F-blocks

You can copy F-FBs, F-FCs, and F-DBs in exactly the same was as blocks of the standard user program.

(S7-1200, S7-1500) You may not copy an F-OB.

Exception:

You cannot copy blocks from the folder "Program blocks > System blocks".

See also

Changing the F-runtime group (S7-1200, S7-1500) (Page 151)

5.3.2 Know-how protection

For know-how protection of F-blocks, proceed as described in the *STEP 7* help under "Protecting blocks".

Requirements

Note the following with regard to know-how protection of F-blocks:

- An F-block to which you wish to assign know-how protection must be called in the safety program.
- Before you can set up the know-how protection for an F-block, the safety program must be consistent. For this purpose, compile (Page 311) the safety program.

Note

No source code is output for know-how protected F-blocks in the safety summary. Therefore, create the safety summary (for example to carry out a code review or accept the F-block) before you set up the know-how protection.

Note

If you want to edit the program code and/or the block interface of a know-how protected F-block, we recommend that you do not open the F-block by entering a password, but rather remove the know-how protection completely and set it up again after compiling.

Note

(S7-1200, S7-1500) When a know-how protected F-block or F-blocks called by it are renamed, the signature of the know-how protected F-block is not changed until the password is entered when opening or removing the know-how protection.

Note

When know-how protected F-blocks are used, warnings and error messages whose cause can lie in the know-how protected F-blocks can be displayed during compilation of the safety program. The warnings and error messages contain corresponding information. Example: In a know-how protected F-block, you perform read access to a tag of the standard user program to which write access is taking place in a different (know-how protected) F-block.

For S7-1200/1500 F-CPUs, you can obtain additional information from the safety summary in the section "Know-how protected F-blocks in the safety program".

See also

Reuse of F-blocks (Page 154)

5.3.3 Reuse of F-blocks

Introduction

You can reuse F-blocks that you have already tested and, if applicable, approved, in other safety programs – without having to test and approve them again.

You can protect the content of the F-block by setting up the know-how protection.

Like standard blocks, you can store F-blocks as master copies or types in global libraries or in the project library.

Additional information can be found in the *STEP 7 help* under "Using libraries".

Creating safety documentation for the F-block to be reused

Create safety documentation with the following information for F-blocks that you want to reuse.

S7-300/400 F-CPUs

- Signature and initial value signature of the know-how protected F-block
- Versions of all the used versioned LAD/FBD instructions
- Signatures and initial value signatures of all called F-blocks

S7-1200/1500 F-CPUs

- Signature of the know-how protected F-block
- Safety system version when setting up the know-how protection
- Versions of all the used versioned LAD/FBD instructions
- Signatures of all called F-blocks

The safety documentation should also contain a description of the functionality of the F-block, in particular if it is know-how protected.

The required information is obtained by creating a safety summary of the safety program in which you originally created, tested and approved the F-block to be reused.

This safety summary can also serve directly as the safety documentation for the F-block to be reused.

Checks when using the F-block to be reused

When reusing the F-block, ensure the following:

- The signature and initial value signature (S7-300/400) of the F-block are unchanged.
- (SIMATIC S7-1200, S7-1500) The documented safety system version is set.
- The documented (or functionally identical) versions of the versioned LAD/FBD instructions are set. You can find information about the instruction versions in the description of the instructions.
- The called F-blocks with the documented signatures and initial value signatures (S7-300/400) are used.

If the version conflicts cannot be eliminated due to other dependencies, please contact the author of the know-how protected block in order to obtain a compatible approved version.

See also

Compliance of the know-how protected F-blocks used in the safety program with their safety documentation. (Page 366)

5.4 Programming startup protection

Introduction

WARNING

STOP, for example, via programming device/PC, mode switch, communication function or "STP" instruction

Initiating STOP, for example by means of programming device/PC operation, mode switch, communication function or "STP" instruction as well as maintaining the STOP state are not safety-oriented. This STOP state can be easily (and unintentionally) be revoked, for example, by programming device/PC operation.

When an F-CPU is switched from STOP to RUN mode, the standard user program starts up in the usual way. When the safety program is started up, all F-DBs are initialized with the values from the load memory - as is the case with a cold restart. This means that saved error information is lost. The F-system automatically reintegrates the F-I/O.

If your process does not allow such a startup, you must program a restart/startup protection in the safety program: The output of process data must be blocked until manually enabled. This enable must not occur until it is safe to output process data and faults have been corrected. *(S031)*

Example of restart/startup prevention

In order to implement a restart/startup prevention, it must be possible to detect a startup. To detect a startup, you declare a tag of data type BOOL with initial value "TRUE" in an F-DB.

Block the output of process data when this tag has the value "1," for example, by passivating F-I/O using the PASS_ON tag in the F-I/O DB.

To manually enable the output of process data, you reset this tag by means of a user acknowledgment.

See also

Implementing User Acknowledgment in the Safety Program of the F-CPU of a DP Master or IO controller (Page 187)

Implementing user acknowledgment in the safety program of the F-CPU of a I-slave or I-device (Page 192)

F-I/O DB (Page 165)

F-I/O access

6

6.1 Addressing F-I/O

Overview

Below you will find a description of how to address the F-I/O in the safety program and which rules must be observed in the process.

Addressing via the process image

As with standard I/O, you access F-I/O (e.g., S7-1500/ET 200MP fail-safe modules) via the **process image** (PII and PIQ).

Direct reading (with I/O identification ":P") of inputs or writing of outputs is not possible in the safety program.

Updating the process image

The process image of the inputs of F-I/O is updated at the start of the F-runtime group. The process image of the outputs of F-I/O is updated at the end of the F-runtime group (see Program structure of the safety program (S7-300, S7-400) (Page 111) or Program structure of the safety program (S7-1200, S7-1500) (Page 114)). For additional information on updating the process image, refer to the note in Data Transfer from the Safety Program to the Standard User Program (Page 196).

The communication required between the F-CPU (process image) and the F-I/O to update the process image uses a special safety protocol in accordance with PROFIsafe.

Rules

- You may only address a channel (channel value and value status) of an F-I/O in **one** F-runtime group. The first programmed addressing defines the assignment for the F-runtime group.
- You may only address a channel (channel value and value status) of an F-I/O with a unit that matches the data type of the channel.
  Example: To access input channels of data type BOOL, you must use the "input (bit)" (I x.y) unit. Access to the 16 consecutive input channels of the data type BOOL via the unit "input word" (IW x) is not possible.
- Address only inputs and outputs that reference an actually existing channel (channel value and value status) (e.g. for an F-DO 10xDC24V with start address 10 only the outputs Q10.0 to Q11.1 for the channel values and the inputs I10.0 to I11.1 for the value status). Keep in mind that due to the special safety protocol, the F-I/O occupies a larger area of the process image than is required for the existing and enabled channels on the F-I/O (channel values and value status). To find the area of the process image where the channels (channel values and value status) are stored (channel structure), refer to the relevant manuals for the F-I/O.
- Channels can be disabled for certain F-I/O (such as ET 200SP fail-safe modules or S7-1500/ET 200MP fail-safe modules). Address only channels (channel value and value status) that are enabled in the hardware configuration. When you address channels that are disabled in the hardware configuration, a warning may be output when compiling the safety program.
- For certain F-I/O (such as ET 200SP fail-safe modules or S7-1500/ET 200MP fail-safe modules), a "1oo2 (2v2) sensor evaluation" can be specified. Two channels are grouped into one channel pair in this case, and the result of the "1oo2 sensor evaluation" is usually provided under the address of the channel with the lower channel number (see relevant manuals of the F-I/O). Address only this channel (channel value and value status) of the channel pair. When you address a different channel, a warning may be output when compiling the safety program.

WARNING

If you use an additional component between the F-CPU (S7-300/400) and the F-I/O that copies the safety message frame in accordance with PROFIsafe between the F-CPU (S7-300/400) and F-I/O per user program, you must test all safety functions affected by the copy function whenever you change the user-programmed copy function. *(S049)*

See also

Safety-Related I-Slave-Slave Communication - F-I/O Access (Page 246)

Value status (S7-1200, S7-1500) (Page 159)

6.2 Value status (S7-1200, S7-1500)

Properties

The value status is additional binary information for the channel value of an F-I/O. The value status is entered in the process image input (PII).

The value status is supported by S7-1500/ET 200MP, ET 200SP, ET 200eco PN, ET 200S, ET 200iSP, ET 200pro, S7-1200 fail-safe modules or S7-300 F-SMs, fail-safe I/O standard devices as well as fail-safe DP standard slaves that support the "RIOforFA-Safety" profile. Information about the value status can be found in the documentation of the respective F-I/O.

We recommend you amend the name of the channel value with "_VS" for the value status, for example, "TagIn_1_VS".

The value status provides information on the validity of the corresponding channel value:

- 1: A valid process value is output for the channel.
- 0: A fail-safe value is output for the channel.

The channel value and value status of an F-I/O can only be accessed from the same F-runtime group.

Location of value status bits in the PII for F-I/O with digital inputs

The value status bits come straight after the channel values in the PII.

Table 6- 1 Example: Address assignment in PII for F-I/O with 16 digital input channels

Byte in the F-CPU	Assigned bits in F-CPU per F-I/O:							
	7	6	5	4	3	2	1	0
x + 0	DI_7	DI_6	DI_5	DI_4	DI_3	DI_2	DI_1	DI_0
x + 1	DI_{15}	DI_{14}	DI_{13}	DI_{12}	DI_{11}	DI_{10}	DI_9	DI_8
x + 2	Value status DI_7	Value status DI_6	Value status DI_5	Value status DI_4	Value status DI_3	Value status DI_2	Value status DI_1	Value status DI_0
x + 3	Value status DI_{15}	Value status DI_{14}	Value status DI_{13}	Value status DI_{12}	Value status DI_{11}	Value status DI_{10}	Value status DI_9	Value status DI_8

x = Module start address

The location of the channel values in the PII can be found in the device manual for the F-I/O.

Location of value status bits in the PII for F-I/O with digital outputs

The value status bits in the PII are mapped with the same structure as the channel values in the PIQ.

Table 6- 2 Example: Address assignment in PIQ for F-I/O with 4 digital output channels

Byte in the F-CPU	Assigned bits in F-CPU per F-I/O:							
	7	6	5	4	3	2	1	0
x + 0	—	—	—	—	DQ_3	DQ_2	DQ_1	DQ_0

x = Module start address

Table 6- 3 Example: Address assignment in PII for F-I/O with 4 digital output channels

Byte in the F-CPU	Assigned bits in F-CPU per F-I/O:							
	7	6	5	4	3	2	1	0
x + 0	—	—	—	—	Value status DQ_3	Value status DQ_2	Value status DQ_1	Value status DQ_0

x = Module start address

The location of the channel values in the PIQ can be found in the device manual for the F-I/O.

Location of value status bits in the PII for F-I/O with digital outputs and digital inputs

The value status bits come directly after the channel values in the PII in the following order:

- Value status bits for the digital inputs
- Value status bits for the digital outputs

Table 6- 4 Example: Address assignment in PIQ for F-I/O with 2 digital input channels and 1 digital output channel

Byte in the F-CPU	Assigned bit in the F-CPU per F-I/O:							
	7	6	5	4	3	2	1	0
x + 0	—	—	—	—	—	—	—	DQ_0

x = Module start address

Table 6- 5 Example: Address assignment in PII for F-I/O with 2 digital input channels and 1 digital output channel

Byte in the F-CPU	Assigned bits in F-CPU per F-I/O:							
	7	6	5	4	3	2	1	0
x + 0	—	—	—	—	—	—	DI_1	DI_0
x + 1	—	—	—	—	—	—	Value status DI_1	Value status DI_0
x + 2	—	—	—	—	—	—	—	Value status DQ_0

x = Module start address

The location of the channel values in the PII and PIQ can be found in the device manual for the F-I/O.

Location of value status bits in the PII for F-I/O with analog inputs

The value status bits come directly after the channel values in the PII.

Table 6- 6 Example: Address assignment in PII for F-I/O with 6 analog input channels (data type INT)

Byte in the F-CPU	Assigned bytes/bits in the F-CPU per F-I/O:							
	7	6	5	4	3	2	1	0
x + 0	Channel value AI_0							
...	...							
x + 10	Channel value AI_5							
x + 12	—	—	Value status AI_5	Value status AI_4	Value status AI_3	Value status AI_2	Value status AI_1	Value status AI_0

x = Module start address

The location of the channel values in the PII can be found in the device manual for the F-I/O.

Location of value status bits in the PII for F-I/O with analog outputs

The value status bits are mapped in the PII.

Table 6- 7 Example: Address assignment in PIQ for F-I/O with 6 analog output channels (data type INT)

Byte in the F-CPU	Assigned bytes in the F-CPU per F-I/O:							
	7	6	5	4	3	2	1	0
x + 0	Channel value AO_0							
...	...							
x + 10	Channel value AO_5							

x = Module start address

Table 6- 8 Example: Address assignment in PII for F-I/O with 6 analog output channels (data type INT)

Byte in the F-CPU	Assigned bits in F-CPU per F-I/O:							
	7	6	5	4	3	2	1	0
x + 0	—	—	Value status AO_5	Value status AO_4	Value status AO_3	Value status AO_2	Value status AO_1	Value status AO_0

x = Module start address

The location of the channel values in the PIQ can be found in the device manual for the F-I/O.

6.3 Process Data or Fail-Safe Values

When are fail-safe values used?

The safety function requires that fail-safe values (0) be used instead of process data for passivation of the entire F-I/O or individual channels of an F-I/O in the following cases. This applies both to digital channels (data type BOOL) as well as for analog channels (data type INT or DINT):

- When the F-system starts up
- When errors occur during safety-related communication (communication errors) between the F-CPU and F-I/O using the safety protocol in accordance with PROFIsafe
- When F-I/O faults and channel faults occur (such as wire break, short circuit, and discrepancy errors)
- As long as you enable passivation of the F-I/O with PASS_ON = 1 in the F-I/O DB (see below)
- As long as you disable the F-I/O with DISABLE = 1 in the F-I/O DB (see below)

Fail-safe value output for F-I/O/channels of an F-I/O

When **passivation** occurs for an **F-I/O with inputs**, the F-system provides the safety program with fail-safe values (0) in the PII instead of the process data pending at the fail-safe inputs of the F-I/O.

The overflow or underflow of a channel of the **SM 336; AI 6 x 13Bit** or **SM 336; F-AI 6 x 0/4 ... 20 mA HART** is recognized by the F-system as an F-I/O/channel fault. The fail-safe value 0 is provided in place of $7FFF_H$ (for overflow) or 8000_H (for underflow) in the PII for the safety program.

If you want to process fail-safe values other than "0" in the safety program for an F-I/O with inputs **for analog channels of data type INT or DINT**, you can assign individual fail-safe values for QBAD = 1 and value status = 0 or QBAD_I_xx/QBAD_O_xx = 1 (instructions JMP/JMPN, LABEL and MOVE). For details about the characteristics go to QBAD/PASS_OUT/DISABLED/QBAD_I_xx/QBAD_O_xx and value status (Page 171).

WARNING

For an F-I/O with digital input channels (data type BOOL), the value provided in the PII must always be processed in the safety program, regardless of the value status or QBAD/QBAD_I_xx. *(S009)*

When **passivation** occurs in an **F-I/O with outputs**, the F-system outputs fail-safe values (0) at the fail-safe outputs instead of the output values provided by the safety program in the PIQ.

<table>
<tr><th>State of associated PAA/PIQ by ...</th><th>F-I/O with "RIOforFA-Safety" profile with S7-1200/1500 F-CPUs</th><th>F-I/O without "RIOforFA-Safety" profile with S7-1200/1500 F-CPUs</th><th>F-I/O with S7-300/400 F-CPUs</th></tr>
<tr><td>Startup of F-system</td><td colspan="3" rowspan="2">The F-system overwrites the PII/PIQ with fail-safe values (0).</td></tr>
<tr><td>Communication errors</td></tr>
<tr><td>F-I/O faults</td><td rowspan="3">The F-system overwrites the PII with fail-safe values (0). In the PII the values formed in the safety program are retained.</td><td colspan="2" rowspan="2">The F-system overwrites the PII/PIQ with fail-safe values (0).</td></tr>
<tr><td>Channel faults in configuration of passivation for complete F-I/O</td></tr>
<tr><td>Channel faults during configuration of channel-granular passivation</td><td colspan="2">For the affected channels: The F-system overwrites the PII/PIQ with fail-safe values (0).</td></tr>
<tr><td>As long as passivation of the F-I/O is activated in the F-I/O DB with PASS_ON = 1</td><td colspan="3">The F-system overwrites the PII/PIQ with fail-safe values (0).</td></tr>
<tr><td>As long as the F-I/O is deactivated in the F-I/O DB with DISABLE = 1</td><td colspan="2">The F-system overwrites the PII/PIQ with fail-safe values (0).</td><td>-</td></tr>
</table>

Reintegration of F-I/O/channels of an F-I/O

The switchover from fail-safe values (0) to process data (**reintegration of an F-I/O**) takes place **automatically** or following **user acknowledgment** in the F-I/O DB. The reintegration method depends on the following:

- The reason for passivation of the F-I/O or channels of the F-I/O
- At F-I/Os without the "Channel failure acknowledge" channel parameter on the value of the ACK_NEC variable of the associated F-IO data blocks (Page 165).
- At F-I/Os with the "Channel failure acknowledge" channel parameter (for example F-modules S7-1500 / ET 200 MP / F-modules SIMATIC S7-1200) on the value of the channel parameter.

For fail-safe GSD based DP slaves / GSD based I/O devices with "RIOforFA-Safety" profile, consult the respective documentation.

Note

Note that for channel faults in the F-I/O, channel-granular passivation takes place if configured accordingly in the *hardware and network editor*. For the concerned channels, fail-safe values (0) are output.

Reintegration after channel faults reintegrates all channels whose faults were eliminated; faulty channels remain passivated.

See also

Configuring F-I/O (Page 53)

6.4 F-I/O DB

Introduction

An F-I/O DB is automatically generated for each F-I/O (in safety mode) when the F-I/O is configured in the *hardware and network editor*. The F-I/O DB contains tags that you can evaluate or can/must write to in the safety program. It is not permitted to change the initial values of the tags directly in the F-I/O DB. When an F-I/O is deleted, the associated F-I/O DB is also deleted.

Access to an F-I/O DB

You access tags of the F-I/O DB for the following reasons:

- For reintegration of F-I/O after communication errors, F-I/O faults, or channel faults
- If you want to passivate the F-I/O depending on particular states of your safety program (for example, group passivation)
- If you want to deactivate the F-I/O (for example, configuration control)
- For changing parameters for fail-safe GSD based DP slaves/GSD based I/O devices
- If you want to evaluate whether fail-safe values or process data are output

6.4.1 Tags of the F-I/O DB

The following table presents the variables of an F-I/O DB:

	Tag	Data type	Function	Initial value
Tags that you can or must write	PASS_ON	BOOL	1=enable passivation	0
	ACK_NEC	BOOL	1=acknowledgment for reintegration required in the event of F-I/O or channel faults	1
	ACK_REI	BOOL	1=acknowledgment for reintegration	0
	IPAR_EN	BOOL	Tag for parameter reassignment of fail-safe GSD based DP slaves/GSD based I/O devices or, in the case of SM 336; F-AI 6 x 0/4 ... 20 mA HART, for enabling HART communication	0
	DISABLE*	BOOL	1=Deactivate F-I/O	0
Tags that you can evaluate	PASS_OUT	BOOL	Passivation output	1
	QBAD	BOOL	1=Fail-safe values are output	1
	ACK_REQ	BOOL	1=Acknowledgment request for reintegration	0
	IPAR_OK	BOOL	Tag for parameter reassignment of fail-safe GSD based DP slaves/GSD based I/O devices or, in the case of SM 336; F-AI 6 x 0/4 ... 20 mA HART, for enabling HART communication	0
	DIAG	BYTE	Non-fail safe service information	0
	DISABLED*	BOOL	1=F-I/O is deactivated	0
	QBAD_I_xx	BOOL	1=fail-safe values are output to input channel xx (S7-300/400)	1
	QBAD_O_xx	BOOL	1=fail-safe values are output to output channel xx (S7-300/400)	1

* As of Safety-System Version 2.1 for S7-1200/1500

Differences in evaluation in S7-1200/1500 F-CPUs and S7-300/400

The following table describes the differences in the evaluation of tags of the F-I/O DB and the value status depending on the F-I/O and F-CPU used.

Tag in the F-I/O DB or value status	F-I/O with "RIOforFA-Safety" profile with S7-1200/1500 F-CPU	F-I/O without profile "RIOforFA-Safety" with S7-1200/1500 F-CPU	F-I/O with S7-300/400 F-CPU
ACK_NEC	—[2]	x	x
QBAD[3]	x	x	x
PASS_OUT[3]	x	x	x
QBAD_I_xx[1]	—	—	x
QBAD_O_xx[1]	—	—	x
Wertstatus[1]	x	x	—

1 QBAD_I_xx and QBAD_O_xx display the validity of the channel value channel-granular and thus correspond to the inverted value status with S7-1200/1500. Value status or QBAD_I_xx and QBAD_O_xx are not available with fail-safe DP GSD based slaves or fail-safe GSD based I/O devices without the "RIOforFA-Safety" profile.

2 In the case of F-I/Os that support the "Channel failure acknowledge" channel parameter (for example S7-1500/ET 200MP F-modules or S7-1200 F-modules), this replaces the ACK_NEC variable of the F-IO data block.

3 For details about the characteristics, see "QBAD/PASS_OUT/DISABLED/QBAD_I_xx/QBAD_O_xx and value status"

6.4.1.1 PASS_ON

The PASS_ON tag allows you to enable passivation of an F-I/O, for example, depending on particular states in your safety program.

Using the PASS_ON tag in the F-I/O DB, you can passivate F-I/O; channel-granular passivation is not possible.

As long as PASS_ON = 1, **passivation** of the associated F-I/O occurs.

6.4.1.2 ACK_NEC

If an F-I/O fault is detected by the F-I/O, **passivation** of the relevant F-I/O occurs. If channel faults are detected and channel granular passivation is configured, the relevant channels are passivated. If passivation of the entire F-I/O is configured, all channels of the relevant F-I/O are passivated. Once the F-I/O fault or channel fault has been eliminated, **reintegration** of the relevant F-I/O occurs, depending on ACK_NEC:

- With ACK_NEC = 0, you can assign an **automatic reintegration**.
- With ACK_NEC = 1, you can assign a **reintegration** by **user acknowledgment**.

WARNING

The parameter assignment of the ACK_NEC = 0 tag is only allowed if automatic reintegration is permitted for the relevant process from a safety standpoint. *(S010)*

Note

The initial value for ACK_NEC is 1 after creation of the F-I/O DB. If you do not require automatic reintegration, you do not have to write ACK_NEC.

See also

After F-I/O or channel faults (Page 180)

6.4.1.3 ACK_REI

When the F-system detects a communication error or an F-I/O fault for an F-I/O, the relevant F-I/O is passivated. If channel faults are detected and channel granular passivation is configured, the relevant channels are passivated. If passivation of the entire F-I/O is configured, all channels of the relevant F-I/O are passivated. **Reintegration** of the F-I/O/channels of the F-I/O after the fault has been eliminated requires a **user acknowledgment** with a positive edge at variable ACK_REI of the F-I/O DB:

- After every communication error
- After F-I/O or channel faults only with parameter assignment "Channel failure acknowledgement = manual" or ACK_NEC = 1

Reintegration after channel faults reintegrates all channels whose faults were eliminated.

Acknowledgment is not possible until tag ACK_REQ = 1.

In your safety program, you must provide a user acknowledgment by means of the ACK_REI tag for each F-I/O.

WARNING

For the user acknowledgement, you must interconnect the ACK_REI tag of the F--I/O DB with a signal generated by an operator input. An interconnection with an automatically generated signal is not permitted. *(S011)*

Note

Alternatively, you can use the "ACK_GL" instruction to carry out reintegration of the F-I/O following communication errors or F-I/O/channel faults (ACK_GL: Global acknowledgment of all F-I/O in an F-runtime group (STEP 7 Safety V15.1) (Page 487)).

6.4.1.4 IPAR_EN

The IPAR_EN tag corresponds to the iPar_EN_C tag in the PROFIsafe bus profile as of PROFIsafe Specification V1.20 and higher.

Fail-safe GSD based DP slaves/GSD based I/O devices

To find out when this tag must be set or reset when parameters of fail-safe GSD based DP slaves/GSD based I/O devices are reassigned, consult the PROFIsafe Specification V1.20 or higher or the documentation for the fail-safe GSD based DP slave/GSD based I/O device.

Note that IPAR_EN = 1 does not trigger passivation of the relevant F-I/O.

If passivation is to occur when IPAR_EN = 1, you must also set tag PASS_ON = 1.

HART communication with SM 336; F-AI 6 x 0/4 ... 20 mA HART

If you set the IPAR_EN tag to "1" while parameter "HART_Tor" = "switchable" is assigned, the HART communication for the SM 336; F-AI 6 x 0/4 ... 20 mA HART is enabled. Setting this tag to "0" disables the HART communication. The F-SM acknowledges the enabled or disabled HART communication with tag IPAR_OK = 1 or 0.

Enable HART communication only when your system is in a status, in which any reassignment of parameters for an associated HART device can be done without any risk.

If you want to evaluate the "HART communication enabled" status in your safety program, e.g., for the purpose of programming interlocks, you must build up the information as shown in the following example. This is necessary to ensure that the information is properly available even if communication errors occur while the HART communication is enabled with IPAR_EN = 1. Only change the status of the IPAR_EN tag during this evaluation if there is no passivation due to a communication error or F-I/O or channel fault.

Example of enabling HART communication

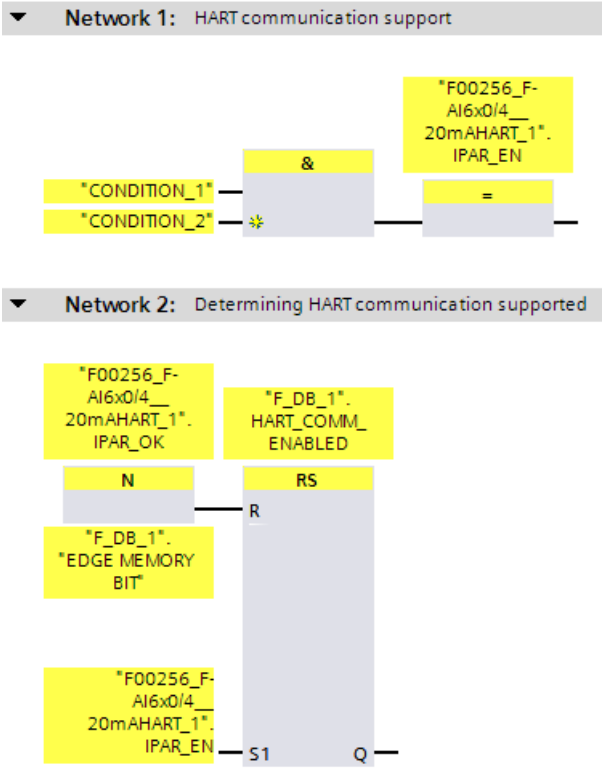

Additional information on HART communication with SM 336; F-AI 6 x 0/4 ... 20 mA HART can be found in the Automation System S7-300, ET 200M Distributed I/O System manual, Fail-Safe Signal Modules (http://support.automation.siemens.com/WW/view/en/19026151) manual and in the help on the F-module.

6.4.1.5 DISABLE

The DISABLE variable allows you to deactivate an F-I/O.

As long as DISABLI = 1, the associated F-I/Os are **passivated**.

Diagnostics entries of the safety program may no longer be entered in the diagnostics buffer of the F-CPU for this F-I/O (for example, due to communication error).

Existing diagnostics entries are marked as outgoing.

6.4.1.6 QBAD/PASS_OUT/DISABLED/QBAD_I_xx/QBAD_O_xx and value status

The following table set outs differences in the reaction of the channel values and QBAD, PASS_OUT, DISABLED, QBAD_I_xx/QBAD_O_xx variables and of the value status depending on the F-I/O and F-CPU used.

Fail-safe value output after...	F-I/O with "RIOforFA-Safety" profile with S7-1200/1500 F-CPU	F-I/O without profile "RIOforFA-Safety" with S7-1200/1500 F-CPUs	F-I/O with S7-300/400 F-CPU
Startup of F-system	QBAD and PASS_OUT = 1 DISABLED **unchanged** For **all** channels: Channel value = fail-safe value (0) Value status = 0*		QBAD and PASS_OUT = 1 For **all** channels: Channel value = fail-safe value (0) QBAD_I_xx and QBAD_O_xx = 1*
Communication errors			
F-I/O faults			
Channel faults in configuration of passivation for complete F-I/O			
Channel faults during configuration of channel-granular passivation	QBAD, PASS_OUT and DISABLED **unchanged** For the **affected** channels: Channel value = fail-safe value (0) Value status = 0	QBAD and PASS_OUT = 1 DISABLED **unchanged** For the **affected** channels: Channel value = fail-safe value (0) Value status = 0*	QBAD and PASS_OUT = 1 For the **affected** channels: Channel value = fail-safe value (0) QBAD_I_xx and QBAD_O_xx = 1*
As long as passivation of the F-I/O is activated in the F-I/O DB with PASS_ON = 1	QBAD = 1, PASS_OUT and DISABLED **unchanged** For **all** channels: Channel value = fail-safe value (0) Value status = 0*		QBAD = 1, PASS_OUT **unchanged** For **all** channels: Channel value = fail-safe value (0) QBAD_I_xx and QBAD_O_xx = 1*
As long as the F-I/O is deactivated in the F-I/O DB with DISABLE = 1	QBAD, PASS_OUT and DISABLED = 1 For **all** channels: Channel value = fail-safe value (0) Value status = 0*		-

* Value status or QBAD_I_xx and QBAD_O_xx are not available for fail-safe GSD based DP slaves and fail-safe GSD based I/O devices without the "RIOforFA-Safety" profile.

6.4.1.7 ACK_REQ

When the F-system detects a communication error or an F-I/O fault or channel fault for an F-I/O, the relevant F-I/O or individual channels of the F-I/O are passivated. ACK_REQ = 1 signals that **user acknowledgment** is required for reintegration of the relevant F-I/O or channels of the F-I/O.

The F-system sets ACK_REQ = 1 as soon as the fault has been eliminated and user acknowledgment is possible. For channel-granular passivation, the F-system sets ACK_REQ = 1 as soon as the channel fault is corrected. User acknowledgment is possible for this fault. Once acknowledgment has occurred, the F-system resets ACK_REQ to 0.

Note

For F-I/O with outputs, acknowledgment after F-I/O or channel faults may only be possible some minutes after the fault has been eliminated, until the necessary test signal is applied (see *F-I/O manuals*).

6.4.1.8 IPAR_OK

The IPAR_OK tag corresponds to the iPar_OK_S tag in the PROFIsafe bus profile, PROFIsafe Specification V1.20 and higher.

Fail-safe GSD based DP slaves/GSD based I/O devices

To find out how to evaluate this tag when parameters of fail-safe GSD based DP slaves or GSD based I/O devices are reassigned, consult the PROFIsafe Specification V1.20 or higher or the documentation for the fail-safe GSD based DP slave/GSD based I/O device.

For HART communication with SM 336; F-AI 6 x 0/4 ... 20 mA HART see Chapter IPAR_EN (Page 169).

6.4.1.9 DIAG

The DIAG tag provides non-fail-safe information (1 byte) about errors or faults that have occurred for service purposes. You can read out this information by means of operator control and monitoring systems or, if applicable, you can evaluate it in your standard user program. DIAG bits are saved until you perform an acknowledgment with the ACK_REI tag or until automatic reintegration takes place.

Structure of DIAG

Bit no.	Assignment	Possible error causes	Remedies
Bit 0	Timeout detected by F-I/O	The PROFIBUS/PROFINET connection between F-CPU and F-I/O is faulty. The value of the F-monitoring time for the F-I/O is set too low. The F-I/O are receiving invalid parameter assignment data or	• Check the PROFIBUS/PROFINET connection and ensure that there are no external sources of interference. • Check the parameter assignment of the F-I/O. If necessary, set a higher value for the monitoring time. Recompile the hardware configuration, and download it to the F-CPU. Recompile the safety program. • Check the diagnostics buffer of the F-I/O. • Turn the power of the F-I/O off and back on.
		Internal F-I/O fault or	Replace F-I/O
		Internal F-CPU fault	Replace F-CPU
Bit 1	F-I/O fault or channel fault detected by F-I/O[1]	See *F-I/O manuals*	See *F-I/O manuals*
Bit 2	CRC error or sequence number error detected by F-I/O	See description for bit 0	See description for bit 0
Bit 3	Reserved	—	—
Bit 4	Timeout detected by F-system	See description for bit 0	See description for bit 0
Bit 5	Sequence number error detected by F-system[2]	See description for bit 0	See description for bit 0
Bit 6	CRC-error detected by F-system	See description for bit 0	See description for bit 0
Bit 7	Addressing error[3]	—	Contact Service & Support

1 Not for F-I/O that support the "RIOforFA-Safety" profile.

2 For S7-300/400 F-CPUs only

3 For S7-1200/1500 F-CPUs only

6.4.2 Accessing tags of the F-I/O DB

Name of the F-I/O DB

An F-I/O DB is automatically generated for each F-I/O when the F-I/O is configured in the *hardware and network editor* and a name is generated at the same time.

The name is formed by combining the fixed prefix "F", the start address of the F-I/O, and the names entered in the properties for the F-I/O in the *hardware and network editor* (example: F00004_F-DI24xDC24V_1).

Changing the name and number of the F-I/O DB

The name and number of the F-I/O DB are assigned automatically when the F-I/O are configured. The naming scheme depends on the setting in the Safety Administration Editor ("Specifies driver I-DBs without prefix (Page 90)"). You change the number in the "Properties" tab of the associated F-I/O. You change the name by renaming the F-I/O.

Rule for accessing tags of the F-I/O DB

Tags of the F-I/O DB of an F-I/O can only be accessed from the F-runtime group from which the channels of this F-I/O are accessed (if access is made).

"Fully qualified DB access"

You can access the tags of the F-I/O DB via a "fully qualified DB access" (that is, by specifying the name of the F-I/O DB and by specifying the name of the tag).

Example of evaluating the QBAD tag

See also

F-I/O DB (Page 165)

6.5 Passivation and reintegration of F-I/O

Overview

In the following you can find information on passivation and reintegration of F-I/O.

Signal sequence charts

The signal sequences presented below represent typical signal sequences for the indicated behavior.

Actual signal sequences and, in particular, the relative position of the status change of individual signals can deviate from the given signal sequences within the scope of known "fuzzy" cyclic program execution factors, depending on the following:

- The F-I/O used
- The F-CPU used
- The cycle time of the (F-)OB in which the associated F-runtime group is called
- The target rotation time of the PROFIBUS DP or the update time of the PROFINET IO

Note

The signal sequences shown refer to the status of signals in the user's safety program.

6.5.1 After startup of F-system

Behavior after a startup

Fail-safe value output after startup of the F-system	F-I/O with "RIOforFA-Safety" profile with S7-1200/1500 F-CPU	F-I/O without profile "RIOforFA-Safety" with S7-1200/1500 F-CPU	Every F-I/O with S7-300/400 F-CPU
Passivation of the entire F-I/O occurs during startup.	QBAD and PASS_OUT = 1 For **all** channels: Channel value = fail-safe value (0) Value status = 0*		QBAD and PASS_OUT = 1 For **all** channels: Channel value = fail-safe value (0) QBAD_I_xx and QBAD_O_xx = 1*

* Value status or QBAD_I_xx and QBAD_O_xx are not available for fail-safe GSD based DP slaves and fail-safe GSD based I/O devices without the "RIOforFA-Safety" profile.

Reintegration of F-I/O

Reintegration of the F-I/O, i.e. the provision of process values in the PII or the output of process values provided in the PIQ at the fail-safe outputs, takes place **automatically**, regardless of the setting at the ACK_NEC tag or the configuration "Channel failure acknowledge", no sooner than the second cycle of the F-runtime group after startup of the F-system.

You can find additional information on pending F-communication, F-I/O or channel errors during startup of the F-system in the sections After communication errors (Page 178) and After F-I/O or channel faults (Page 180).

For fail-safe GSD based DP slaves/GSD based I/O devices with "RIOforFA-Safety" profile, consult the respective documentation for the fail-safe GSD based DP slave/GSD based I/O device.

Depending on the F-I/O you are using and the cycle time of the F-runtime group and PROFIBUS DP/PROFINET IO, several cycles of the F-runtime group can elapse before reintegration occurs.

If communication between the F-CPU and F-I/O takes longer to establish than the F-monitoring time set in the properties for the F-I/O, automatic reintegration does not take place.

Signal sequence for passivation and reintegration of F-I/O after F-system startup

Example for an F-I/O with inputs:

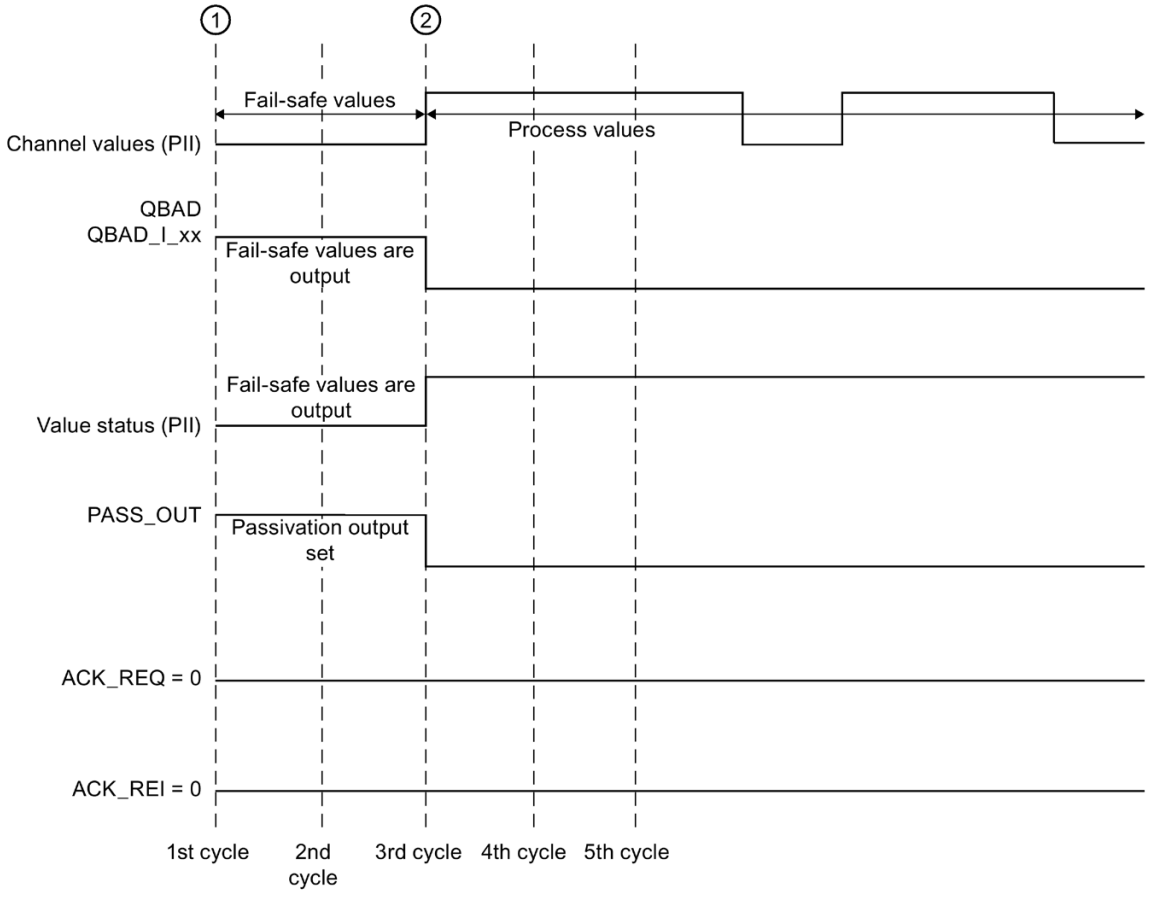

① Startup of F-system/passivation

② Automatic reintegration (e.g. third cycle)

WARNING

When an F-CPU is switched from STOP to RUN mode, the standard user program starts up in the usual way. When the safety program is started up, all F-DBs are initialized with the values from the load memory - as is the case with a cold restart. This means that saved error information is lost.

The F-system automatically reintegrates the F-I/O, as described above.

An operating error or an internal error can also trigger a startup of the safety program with the values from the load memory. If your process does not allow such a startup, you must program a restart/startup protection in the safety program: The output of process data must be blocked until manually enabled. This enable must not occur until it is safe to output process data and faults have been corrected. *(S008)*

6.5.2 After communication errors

Behavior after communication errors

Fail-safe value output after communication errors	F-I/O with "RIOforFA-Safety" profile with S7-1200/1500 F-CPU	F-I/O without profile "RIOforFA-Safety" with S7-1200/1500 F-CPU	Every F-I/O with S7-300/400 F-CPU
If a communication error between the F-CPU and the F-I/O is detected, all channels of the entire F-I/O are passivated.	QBAD and PASS_OUT = 1 For **all** channels: Channel value = fail-safe value (0) Value status = 0*		QBAD and PASS_OUT = 1 For **all** channels: Channel value = fail-safe value (0) QBAD_I_xx and QBAD_O_xx = 1*

* Value status or QBAD_I_xx and QBAD_O_xx are not available for fail-safe GSD based DP slaves and fail-safe GSD based I/O devices without the "RIOforFA-Safety" profile.

Reintegration of F-I/O

Reintegration of the relevant F-I/O, that is, provision of process data in the PII or output of process data provided in the PIQ at the failsafe outputs, takes place only when the following occurs:

- All communication errors have been eliminated and the F-system has set tag ACK_REQ = 1
- A **user acknowledgment** with a positive edge has occurred:
  - At the ACK_REI tag of the F-I/O DB (Page 168) or
  - At the ACK_REI_GLOB input of the "ACK_GL" instruction (ACK_GL: Global acknowledgment of all F-I/O in an F-runtime group (STEP 7 Safety V15.1) (Page 487))

Signal sequence for passivation and reintegration of F-I/O after communication errors

Example for an F-I/O with inputs:

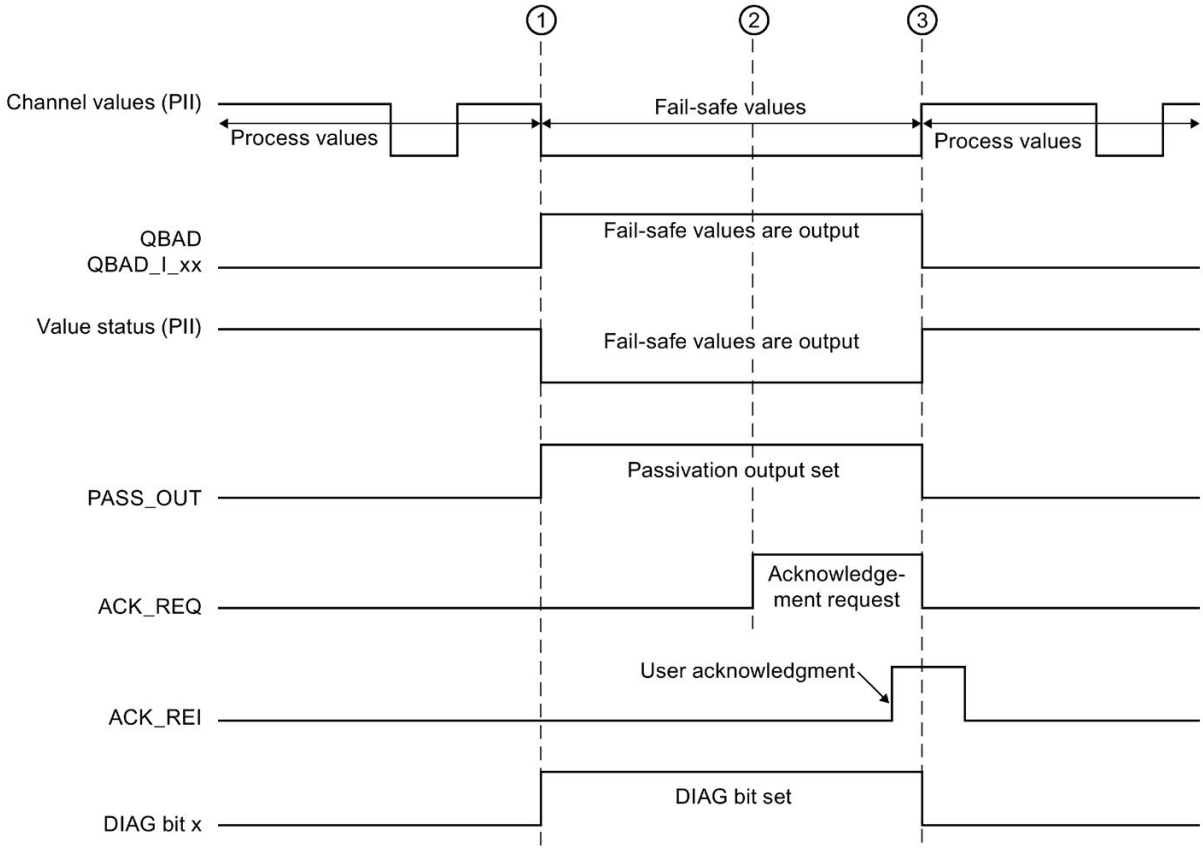

① Communication error/passivation
② All communication errors have been eliminated
③ Reintegration

See also

Implementing User Acknowledgment in the Safety Program of the F-CPU of a DP Master or IO controller (Page 187)

Implementing user acknowledgment in the safety program of the F-CPU of a I-slave or I-device (Page 192)

6.5.3 After F-I/O or channel faults

Behavior after F-I/O faults

Fail-safe value output after F-I/O faults	F-I/O with "RIOforFA-Safety" profile with S7-1200/1500 F-CPU	F-I/O without profile "RIOforFA-Safety" with S7-1200/1500 F-CPU	Every F-I/O with S7-300/400 F-CPU
If an F-I/O fault is detected by the F-system, passivation of all channels of the entire F-I/O occurs.	QBAD and PASS_OUT = 1 For **all** channels: Channel value = fail-safe value (0) Value status = 0*		QBAD and PASS_OUT = 1 For **all** channels: Channel value = fail-safe value (0) QBAD_I_xx and QBAD_O_xx = 1*

* Value status or QBAD_I_xx and QBAD_O_xx are not available for fail-safe GSD based DP slaves and fail-safe GSD based I/O devices without the "RIOforFA-Safety" profile.

Behavior after channel fault

Fail-safe value output after channel faults	F-I/O with "RIOforFA-Safety" profile with S7-1200/1500 F-CPU	F-I/O without profile "RIOforFA-Safety" with S7-1200/1500 F-CPU	Every F-I/O with S7-300/400 F-CPU
When passivation for **complete** F-I/O is configured: If a channel fault is detected by the F-system, passivation of all channels of the entire F-I/O occurs.	QBAD and PASS_OUT = 1 For **all** channels: Channel value = fail-safe value (0) Value status = 0*		QBAD and PASS_OUT = 1 For **all** channels: Channel value = fail-safe value (0) QBAD_I_xx and QBAD_O_xx = 1*
With configuration of **channel-granular** passivation: If a channel fault is detected by the F-system, passivation of all the affected channels of the entire F-I/O occurs.	QBAD and PASS_OUT **unchanged** For the **affected** channels: Channel value = fail-safe value (0) Value status = 0	QBAD and PASS_OUT = 1 For the **affected** channels: Channel value = fail-safe value (0) Value status = 0*	QBAD and PASS_OUT = 1 For the **affected** channels: Channel value = fail-safe value (0) QBAD_I_xx and QBAD_O_xx = 1*

* Value status or QBAD_I_xx and QBAD_O_xx are not available for fail-safe GSD based DP slaves and fail-safe GSD based I/O devices without the "RIOforFA-Safety" profile.

Reintegration of F-I/O

Reintegration of the relevant F-I/O or the relevant channels of the F-I/O, that is, provision of process data in the PII or output of process data provided in the PIQ at the failsafe outputs, takes place only when the following occurs:

- All F-I/O or channel faults have been eliminated.

If you have configured channel-granular passivation for the F-I/O, the relevant channels are reintegrated once the fault is corrected; any faulty channels remain passivated.

Reintegration is performed depending on your setting for the ACK_NEC tag or the "Channel failure acknowledge" parameter (configuration of the S7-1500/ET 200MP F-module and S7-1200 F-module)

- With ACK_NEC = 0 or the configuration "Channel failure acknowledge = automatic", **automatic reintegration** is performed as soon as the F-system detects that the fault has been corrected. For F-I/O with inputs, reintegration takes place right away. For F-I/O with outputs or F-I/O with inputs and outputs, depending on the F-I/O you are using, reintegration can take several minutes, first after the necessary test signals have been applied, which are used by the F-I/O to determine that the fault has been eliminated.
- With ACK_NEC = 1 or the configuration "Channel failure acknowledge = manual", reintegration is performed only as a result of user acknowledgment with a positive edge at the ACK_REI tag of the F-I/O DB or at the ACK_REI_GLOB input of the "ACK_GL" instruction. Acknowledgment can be made as soon as the F-system detects that the fault has been eliminated and tag ACK_REQ = 1 has been set.

  For fail-safe GSD based I/O devices with "RIOforFA-Safety" profile, consult the respective documentation for the fail-safe GSD based I/O device .

WARNING

Following a power failure of the F-I/O lasting less than the assigned F-monitoring time for the F-I/O, automatic reintegration can occur regardless of your setting for the ACK_NEC tag, as described for the case when ACK_NEC = 0 or configuration "Channel failure acknowledge = automatic".

If automatic reintegration is not permitted for the relevant process in this case, you must program startup protection by evaluating tags QBAD or QBAD_I_xx and QBAD_O_xx or value status or PASS_OUT.

In the event of a power failure of the F-I/O lasting longer than the specified F-monitoring time for the F-I/O, the F-system detects a communication error. *(S012)*

Signal sequence for passivation and reintegration of F-I/O after F-I/O faults or channel faults when ACK_NEC = 0 or configuration "Channel failure acknowledge = automatic" (for passivation of entire F-I/O after channel faults)

Example for an F-I/O with inputs:

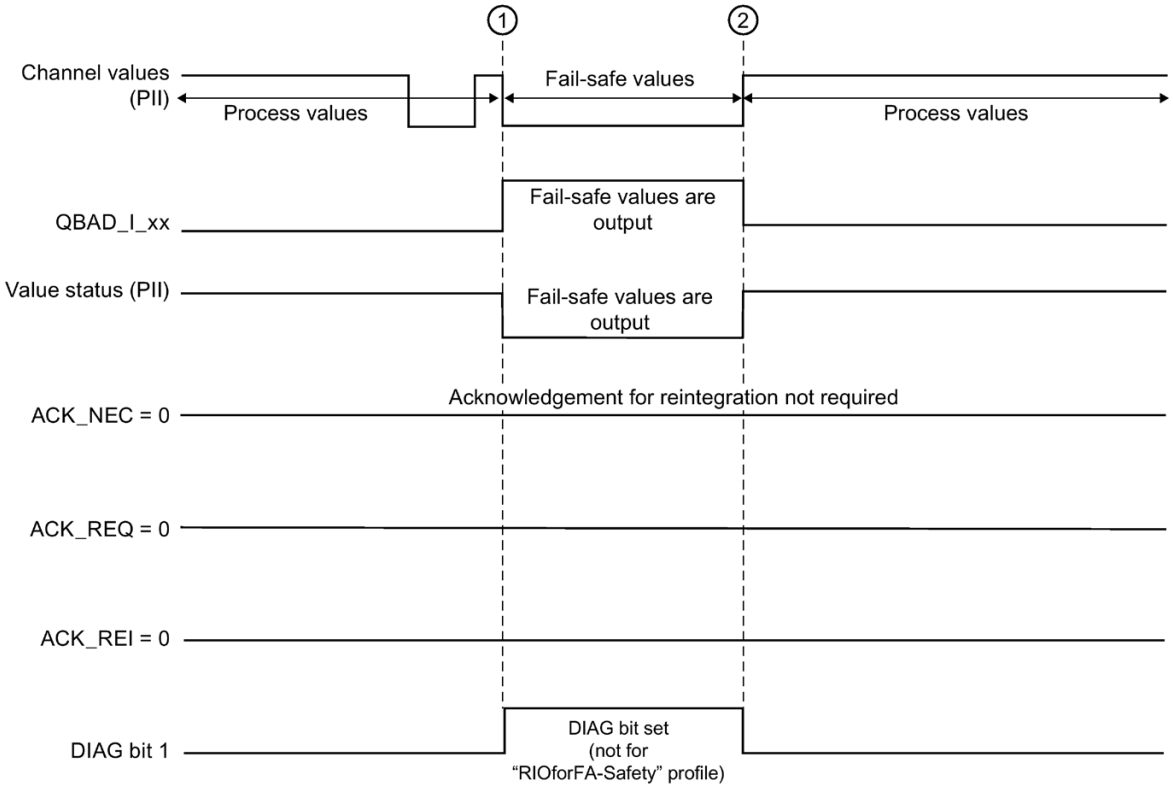

① F-I/O or channel faults
Passivation

② F-I/O or channel faults corrected
Automatic reintegration

Signal sequence for passivation and reintegration of F-I/O after F-I/O faults or channel faults when ACK_NEC = 1 or configuration "Channel failure acknowledge = manual" (for passivation of entire F-I/O after channel faults)

For the signal sequence for passivation and reintegration of F-I/O after F-I/O or channel faults when ACK_NEC = 1 or configuration "Channel failure acknowledge = manual" (initial value), see After communication errors (Page 178).

Signal sequence for passivation and reintegration of F-I/O after channel faults when ACK_NEC = 1 or configuration "Channel failure acknowledge = manual" (for channel-granular passivation)

Example for an F-I/O with inputs:

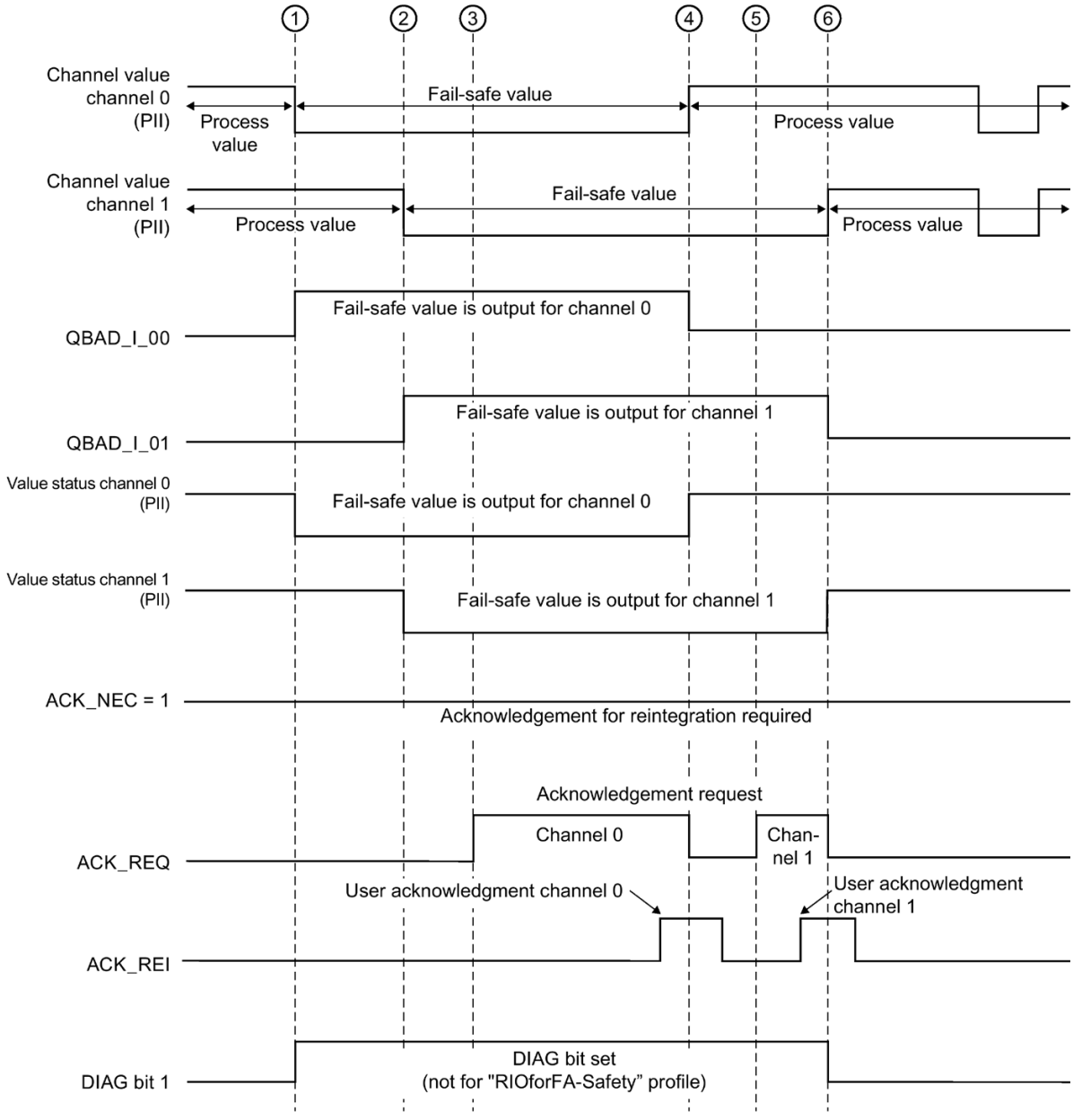

① Channel fault for channel 0/passivation of channel 0
② Channel fault for channel 1/passivation of channel 1
③ Channel fault eliminated for channel 0
④ Reintegration of channel 0
⑤ Channel fault eliminated for channel 1
⑥ Reintegration of channel 1

6.5.4 Group passivation

Programming a group passivation

If you want to enable passivation of additional F-I/O when an F-I/O or a channel of an F-I/O is passivated by the F-system, you can use the PASS_OUT/PASS_ON tags to perform **group passivation** of the associated F-I/O.

Group passivation by means of PASS_OUT/PASS_ON can, for example, be used to force simultaneous reintegration of all F-I/O after startup of the F-system.

For group passivation, you must OR all PASS_OUT tags of the F-I/O in the group and assign the result to all PASS_ON tags of the F-I/O in the group.

During use of fail-safe values (0) due to group passivation by means of PASS_ON = 1, the QBAD tag of the F-I/O of this group = 1.

Note

Note the different behavior of PASS_OUT for F-I/O with/without "RIOforFA-Safety" profile (see table in section QBAD/PASS_OUT/DISABLED/QBAD_I_xx/QBAD_O_xx and value status (Page 171)).

Example of group passivation

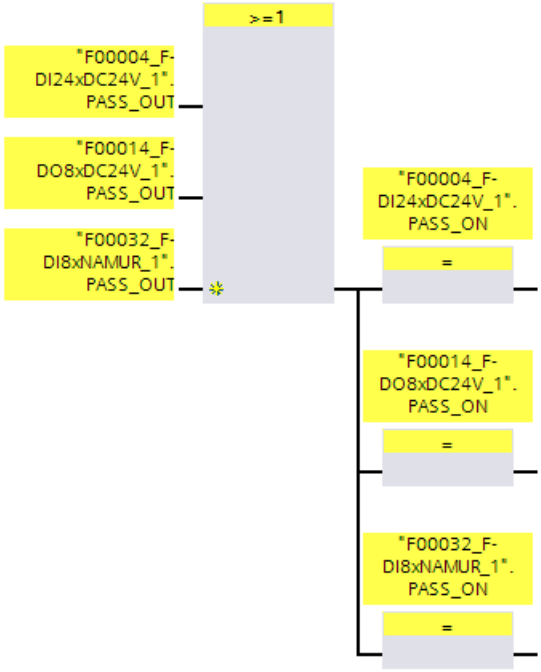

Reintegration of F-I/O

Reintegration of F-I/O passivated by group passivation occurs **automatically**, if a reintegration (**automatic** or **through user acknowledgment**) occurs for the F-I/O that triggered the group passivation (PASS_OUT = 0).

Signal sequence for group passivation following communication error

Example for two F-I/O with inputs:

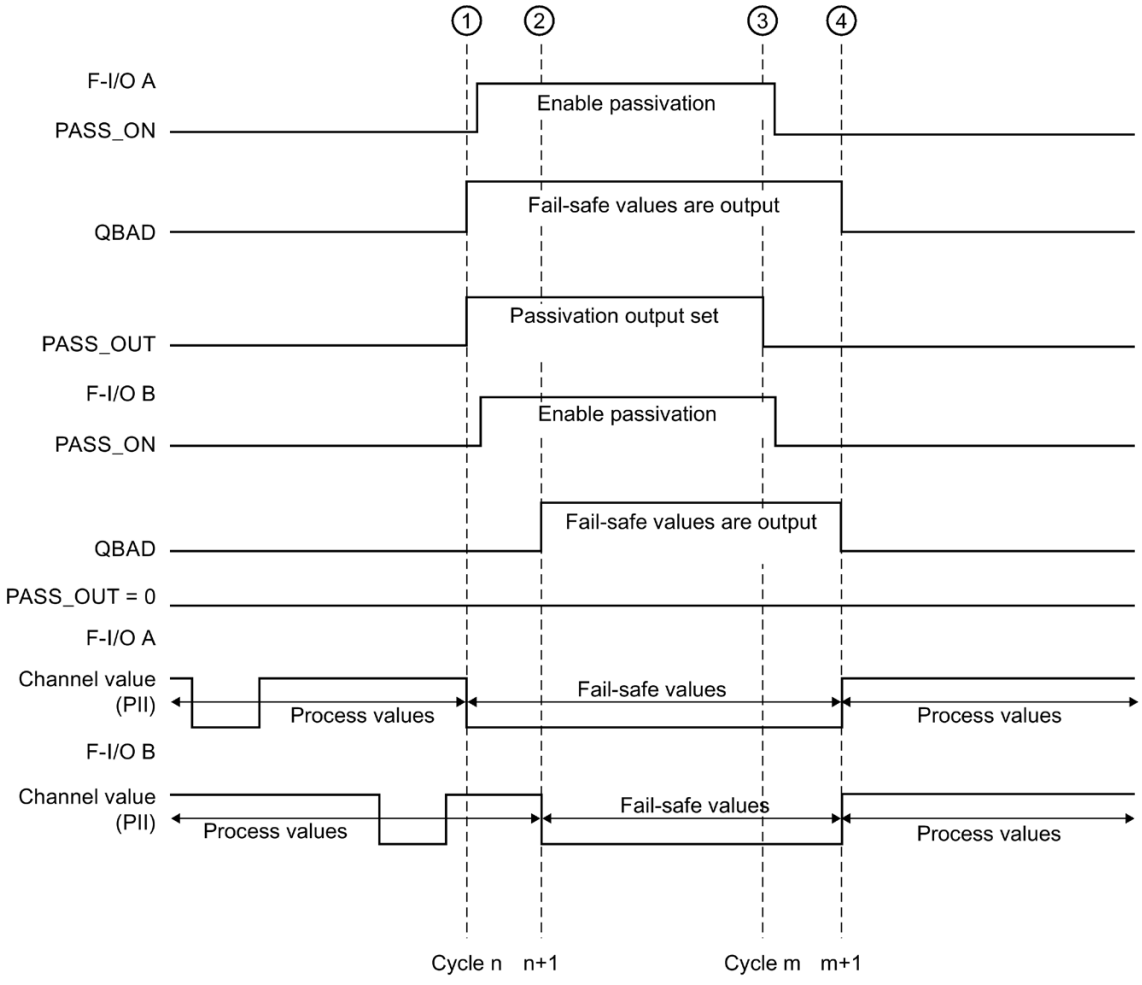

① Communication error in F-I/O A
Passivation of F-I/O A
② Passivation of F-I/O B
③ Communication error in F-I/O A corrected and acknowledged
④ Reintegration F-I/O A and B

Implementation of user acknowledgment 7

7.1 Implementing User Acknowledgment in the Safety Program of the F-CPU of a DP Master or IO controller

Options for user acknowledgment

Depending on the result of the risk analysis, you have the following options for implementing a user acknowledgment:

- An acknowledgment key that you connect to an F-I/O with inputs
- An acknowledgment key that you connect to an standard I/O with inputs
- An HMI system

User acknowledgment by means of acknowledgment key

Note

When you implement user acknowledgment by means of acknowledgment key, and a communication error, an F-I/O fault, or a channel fault occurs in the F-I/O to which the acknowledgment key is connected, then it will not be possible to acknowledge the reintegration of this F-I/O.

This "blocking" can only be removed by a STOP-to-RUN transition of the F-CPU.

Consequently, it is recommended that you also provide for an acknowledgment by means of an HMI system, in order to acknowledge reintegration of an F-I/O to which an acknowledgment key is connected.

A user acknowledgment may be issued using an acknowledgment key connected to a standard I/O with inputs if this risk analysis allows this.

User acknowledgment by means of an HMI system

For implementation of a user acknowledgment by means of an HMI system, the ACK_OP: Fail-safe acknowledgment (STEP 7 Safety V15.1) (Page 577) instruction is required.

Procedure for programming user acknowledgment by means of an HMI system (S7-300, S7-400)

1. Select the "ACK_OP" instruction in the "Instructions" task card and place it in your safety program. The acknowledgment signal for evaluating user acknowledgments is provided at output OUT of ACK_OP.
2. On your HMI system, set up a field for manual entry of an "acknowledgment value" of "6" (1st step in acknowledgment) and an "acknowledgment value" of "9" (2nd step in acknowledgment).

   or

   Assign function key 1 to transfer an "acknowledgment value" of "6" (1st step in acknowledgment) once, and function key 2 to transfer an "acknowledgment value" of "9" (2nd step in acknowledgment) once. You need to assign the in/out IN (in the data area of the ACK_OP instruction) to the field or the function keys.
3. Optional: In your HMI system, evaluate output Q in the instance DB of ACK_OP to show the time frame within which the 2nd step in acknowledgment must occur or to indicate that the 1st step in acknowledgment has already occurred.

If you want to perform a user acknowledgment exclusively from a programming device or PC using the watch table (monitor/modify tag) without having to disable safety mode, then you must transfer an operand (memory word or DBW of a DB of the standard user program) at in/out IN when calling ACK_OP. You can then transfer "acknowledgment values" "6" and "9" on the programming device or PC by modifying the memory word or DBW of a DB once. The memory word or DBW of a DB must not be written by the program.

Note

If you connect the in/out IN to a memory word or DBW of a DB, you have use a separate memory word or DBW of a DB of the standard user program for each instance of the ACK_OP instruction at the in/out IN.

WARNING

The two acknowledgment steps must **not** be triggered by one single operation, for example by automatically storing them along with the time conditions in a program and using a function key to trigger them.
Having two separate acknowledgment steps also prevents erroneous triggering of an acknowledgment by your non-fail-safe HMI system. *(S013)*

WARNING

If you have HMI systems and F-CPUs that are interconnected and use the ACK_OP instruction for fail-safe acknowledgment, you need to ensure that the intended F-CPU will be addressed **before** you perform the two acknowledgment steps.

- To do this, store a network-wide* unique name for the F-CPU in a DB of your standard user program in each F-CPU.
- In your HMI system, set up a field from which you can read out the F-CPU name from the DB online before executing the two acknowledgment steps.
- Optional:

  in your HMI system, set up a field to permanently store the F-CPU name. Then, you can determine whether the intended F-CPU is being addressed by simply comparing the F-CPU name read out online with the permanently stored name. *(S014)*

* A network consists of one or more subnets. "Network-wide" means beyond the boundaries of the subnet.

Note

The configuration of your operator control and monitoring system does not have any effect on the collective F-signature.

Procedure for programming user acknowledgment by means of an HMI system (S7-1200, S7-1500)

1. Select the "ACK_OP" instruction in the "Instructions" task card and place it in your safety program. The acknowledgment signal for evaluating user acknowledgments is provided at output OUT of ACK_OP.
2. Assign the ACK_ID input an identifier between 9 and 30000 for the acknowledgment.
3. Assign the in/out IN a memory word or DBW of a DB of the standard user program.

   Note

   You need to provide the in/out parameter IN with a separate memory word or DBW of a DB of the standard user program for each instance of the ACK_OP instruction.

4. On your HMI system, set up a field for manual entry of an "acknowledgment value" of "6" (1st step in acknowledgment) and the "Identifier" configured at the ACK_ID input (2nd step in acknowledgment).

   or

   Allocate a function key 1 for a one-time transfer of the "acknowledgment value" of "6" (1st step in acknowledgment) and a function key 2 for a one-time transfer of the "Identifier" set at the ACK_ID input (2nd step in acknowledgment).
   You need to assign memory word or the DBW of the DB of the standard user program assigned to the in/out IN to the field or the function keys.

5. Optional: In your HMI system, evaluate output Q in the instance DB of ACK_OP to show the time frame within which the 2nd step in acknowledgment must occur or to indicate that the 1st step in acknowledgment has already occurred.

WARNING

The two acknowledgment steps must **not** be triggered by one single operation, for example by automatically storing them along with the time conditions in a program and using a function key to trigger them.
Having two separate acknowledgment steps also prevents erroneous triggering of an acknowledgment by your non-fail-safe HMI system. *(S013)*

WARNING

If you have HMI systems and F-CPUs that are interconnected and use the ACK_OP instruction for fail-safe acknowledgment, you need to ensure that the intended F-CPU will be addressed **before** you perform the two acknowledgment steps.

Alternative 1:

- The value for each identifier of the acknowledgment (ACK_ID input; data type: INT) can be freely selected in the range from 9 to 30000, but must be unique network-wide* for all instances of the ACK_OP instruction.
  You must supply the ACK_ID input with constant values when calling the instruction. Direct read or write access in the associated instance DB is not permitted in the safety program!

Alternative 2:

- To do this, store a network-wide* unique name for the F-CPU in a DB of your standard user program in each F-CPU.
- In your HMI system, set up a field from which you can read out the F-CPU name from the DB online before executing the two acknowledgment steps.
- Optional:

  in your HMI system, set up a field to permanently store the F-CPU name. Then, you can determine whether the intended F-CPU is being addressed by simply comparing the F-CPU name read out online with the permanently stored designation. *(S047)*

* A network consists of one or more subnets. "Network-wide" means beyond the boundaries of the subnet.

Note

The supply of the IN input/output of the ACK_OP instruction as well as the configuration of your operator control and monitoring system do not have any effect on the F-collective signature, the F-SW collective signature or the signature of the block that calls the ACK_OP instruction.

Changes to the supply of the IN input/output or to the configuration of your operator control and monitoring system therefore do not result in a changed F-collective signature/F-SW collective signature/signature of the calling block.

Example of procedure for programming a user acknowledgment for reintegrating an F-I/O

1. Optional: set the ACK_NEC tag in the respective F-I/O DB (Page 168) to "0" if automatic reintegration (without user acknowledgment) is to take place after an F-I/O fault or a channel fault.

   WARNING

   The parameter assignment of the ACK_NEC = 0 tag is only allowed if automatic reintegration is permitted for the relevant process from a safety standpoint. *(S010)*

2. Optional: Evaluate the QBAD or QBAD_I_xx/QBAD_O_xx (S7-300/400) tags or value status (S7-1200, S7-1500) or DIAG in the respective F-I/O DB to trigger an indicator light in the event of an error, and/or generate error messages on the HMI system in your standard user program by evaluating the above tags or the value status. These messages can be evaluated before performing the acknowledgment operation. Alternatively, you can evaluate the diagnostic buffer of the F-CPU.
3. Optional: Evaluate the ACK_REQ tag in the respective F-I/O DB, for example, in the standard user program or on the HMI system, to query or to indicate whether user acknowledgment is required.
4. Assign the input of the acknowledgment key or the OUT output of the ACK_OP instruction to the ACK_REI tag in the respective F-I/O DB or the ACK_REI_GLOB input of the ACK_GL instruction (see above).

7.2 Implementing user acknowledgment in the safety program of the F-CPU of a I-slave or I-device

Options for user acknowledgment

You can implement a user acknowledgment by means of:

- An HMI system that you can use to access the F-CPU of the I-slave/I-Device
- An acknowledgment key that you connect to an F-I/O with inputs that is assigned to the F-CPU of the I-slave/I-Device
- An acknowledgment key that you connect to an F-I/O with inputs that is assigned to the F-CPU of the DP master/IO controller

These three options are illustrated in the figure below.

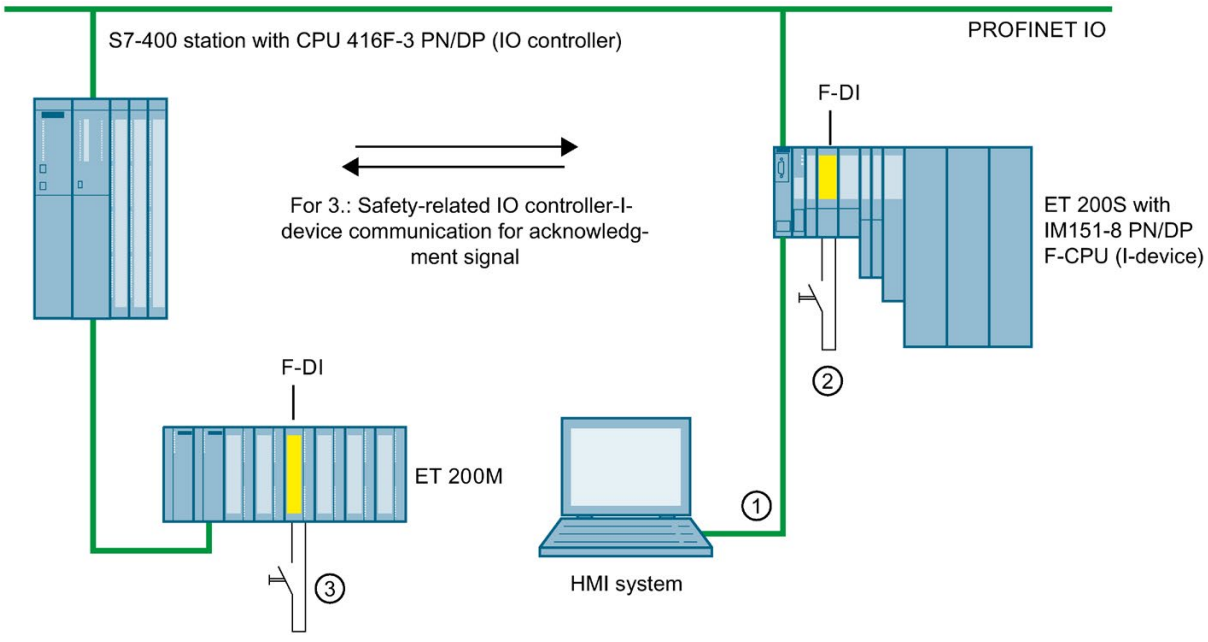

1. User acknowledgment by means of an HMI system with which you can access the F-CPU of the I-slave/I-device

The ACK_OP: Fail-safe acknowledgment (STEP 7 Safety V15.1) (Page 577) instruction is required to implement user acknowledgment with an HMI system that you can use to access the F-CPU of the I-slave/I-device.

Programming procedure

Follow the procedure described in "Implementing User Acknowledgment in the Safety Program of the F-CPU of a DP Master or IO controller (Page 187)" under "Programming procedure ...".

From your HMI system, you can then directly access the instance DB of ACK_OP in the I-slave/I-Device.

2. User acknowledgment by means of an acknowledgment key at an F-I/O with inputs that are assigned to the F-CPU of the I-slave/I-device

Note

In the event of a communication error, F-I/O fault, or channel fault in the F-I/O to which the acknowledgment key is connected, an acknowledgment for reintegration of this F-I/O is no longer possible.

This "blocking" can only be removed by a STOP-to-RUN transition of the F-CPU of the I-slave/I-Device.

Consequently, it is recommended that you also provide for an acknowledgment by means of an HMI system that you can use to access the F-CPU of the I-slave/I-Device, in order to acknowledge reintegration of an F-I/O to which an acknowledgment key is connected (see 1).

3. User acknowledgment by means of an acknowledgment key at an F-I/O with inputs that are assigned to the F-CPU of the DP master/IO controller

If you want to use the acknowledgment key that is assigned to the F-CPU at the DP master/IO controller to perform user acknowledgment in the safety program of the F-CPU of an I-slave/I-device as well, you must transmit the acknowledgment signal from the safety program in the F-CPU of the DP master/IO controller to the safety program in the F-CPU of the I-slave/I-device using safety-related master-I-slave/IO controller-I-device communication.

Programming procedure

1. Place the SENDDP (Page 588) instruction in the safety program in the F-CPU of the DP master/IO controller.
2. Place the RCVDP (Page 588) instruction in the safety program in the F-CPU of the I-slave/I-Device.
3. Supply an input SD_BO_xx of SENDDP with the input of the acknowledgment key.
4. The acknowledgment signal for evaluating user acknowledgments is now available at the corresponding RD_BO_xx output of RCVDP.

   The acknowledgment signal can now be read in the program sections in which further processing is to take place with fully qualified access directly in the associated instance DB (for example, "RCVDP_DB".RD_BO_02).

5. Supply the corresponding input SUBBO_xx of RCVDP with FALSE (fail-safe value 0) to ensure that user acknowledgment is not accidentally triggered before communication is established for the first time after startup of the sending and receiving F-systems, or in the event of a safety-related communication error.

Note

If a communication error, an F-I/O error, or a channel fault occurs at the F-I/O to which the acknowledgment key is connected, then an acknowledgment for reintegration of this F-I/O will no longer be possible.

This "blocking" can only be removed by a STOP-to-RUN transition of the F-CPU of the DP master/IO controller.

Consequently, it is recommended that you also provide for an acknowledgment by means of an HMI system that you can use to access the F-CPU of the DP master/IO controller, in order to acknowledge reintegration of the F-I/O to which an acknowledgment key is connected.

If a safety-related master-I-slave/IO controller-I-Device communication error occurs, the acknowledgment signal cannot be transmitted, and an acknowledgment for reintegration of safety-related communication is no longer possible.

This "blocking" can only be removed by a STOP-to-RUN transition of the F-CPU of the I-slave/I-Device.

Consequently, it is recommended that you also provide for an acknowledgment by means of an HMI system that you can use to access the F-CPU of the I-slave/I-Device, in order to acknowledge reintegration of the safety-related communication for transmission of the acknowledgment signal (see 1).

Data exchange between standard user program and safety program

8

You have the option of transferring data between the safety program and the standard user program. Tags can be transferred using DBs, F-DBs and bit memory:

	From the standard user program		From the safety program	
	Read access	Write access	Read access	Write access
Tag from DB	Permitted	Permitted	A tag from the DB can be read-accessed *or* write-accessed	
Tag from F-DB	Permitted	**Not permitted**	Permitted	Permitted
Bit memory	Permitted	Permitted	Bit memory can be read-accessed *or* write-accessed	

You can also access the process image of the standard I/O and F-I/O:

		From the standard user program		From the safety program	
		Read access	Write access	Read access	Write access
Process image of standard I/O	PII	Permitted	Permitted	Permitted	**Not permitted**
	PIQ	Permitted	Permitted	**Not permitted**	Permitted
Process image of F-I/O	PII	Permitted	**Not permitted**	Permitted	**Not permitted**
	PIQ	Permitted	**Not permitted**	**Not permitted**	Permitted

Decoupling of the safety program from the standard program

For data exchange between standard user program and safety program, we recommend that you define special data blocks (transfer data blocks) in which the data to be exchanged is stored. This action allows you to decouple the blocks of the standard and the safety program. The changes in the standard program do not affect the safety program (and vice versa) provided these data blocks are not modified.

8.1 Data Transfer from the Safety Program to the Standard User Program

Data transfer from the safety program to the standard user program

The standard user program can read all data of the safety program, for example using symbolic (fully qualified) accesses to the following:

- The instance DBs of the F-FBs ("Name of instance DB".Signal_x)
- F-DBs (for example "Name of F_DB".Signal_1)
- The process image input and output of F-I/O (for example "Emergency_Stop_Button_1" (I 5.0))

Note

For S7-300/400 F-CPUs

The process image input of F-I/O is updated not only at the start of the main safety block, but also by the standard operating system.

To find the standard operating system update times, refer to the *Help on STEP 7* under "Process image input and output". For F-CPUs that support process image partitions, also bear in mind the update times when process image partitions are used. For this reason, when the process image input of F-I/O is accessed in the standard user program, it is possible to obtain different values than in the safety program. The differing values can occur due to:

- Different update times
- Use of fail-safe values in the safety program

To obtain the same values in the standard user program as in the safety program, you must not access the process image input in the standard program until after execution of an F-runtime group. In this case, you can also evaluate the QBAD or QBAD_I_xx tag in the associated F-I/O DB in the standard user program, in order to find out whether the process image input is receiving fail-safe values (0) or process data. When using process image partitions, also make sure that the process image is not updated by the standard operating system or by the UPDAT_PI instruction between execution of an F-runtime group and evaluation of the process image input in the standard user program.

Note

For S7-1200/1500 F-CPUs

The process image input of F-I/O is updated prior to processing the main safety block.

You can also write safety program data directly to the standard user program (see also the table of supported operand areas in: Restrictions in the programming languages FBD/LAD (Page 119)):

Data block/bit memory

In order to write safety program data directly to the standard user program (e.g., DIAG output of the SENDDP instruction), you can write to data blocks of the standard user program from the safety program. However, a written tag must not be read in the safety program itself.

You can also write to bit memory in the safety program. However, written bit memory must not be read in the safety program itself.

Process image output

You can write to the process image output (PIQ) of standard I/O in the safety program, for example for display purposes. The PIQ must not be read in the safety program.

8.2 Data Transfer from Standard User Program to Safety Program

Data transfer from standard user program to safety program

As a basic principle, only fail-safe data or fail-safe signals from F-I/O and other safety programs (in other F-CPUs) can be processed in the safety program, as standard tags are unsafe.

If you have to process tags from the standard user program in the safety program, however, you can evaluate either bit memory from the standard user program, tags from a standard DB, or the process image input (PII) of standard I/O in the safety program (see table of supported operand areas in: Restrictions in the programming languages FBD/LAD (Page 119)).

Note that structural changes to standard data blocks which are used in the safety program lead to inconsistencies of the safety program and possibly to the password being requested. In this case the collective F-signature is the same as the original again after compilation. To prevent this effect, use "interprocess communication blocks" between the standard user program and the safety program.

WARNING

Because these tags are not generated safely, you must carry out additional process-specific validity checks in the safety program to ensure that no dangerous states can arise. If bit memory, a tag of a standard DB, or an input of standard I/O is used in both F-runtime groups, you must perform the validity check separately in each F-runtime group. *(S015)*

To facilitate checks, all PLC tags from the standard user program that are evaluated in the safety program are included in the safety summary (Page 341).

Bit memory

In order to process tags of the standard user program in the safety program, you can also read bit memory in the safety program. However, read bit memory must not be written in the safety program itself.

Data block

In order to process tags of the standard user program in the safety program, you can read tags from data blocks of the standard user program in the safety program. However, a read tag must not be written in the safety program itself.

Process image of the inputs

You can read the process image input (PII) of standard I/O in the safety program. The PII must not be written in the safety program.

Examples: Programming validity checks

- Use Comparison (Page 511) instructions to check whether tags from the standard user program exceed or fall below permitted high and low limits. You can then influence your safety function with the result of the comparison.
- Use the ---(S)---: Set output (STEP 7 Safety V15.1) (Page 404), ---(R)---: Reset output (STEP 7 Safety V15.1) (Page 403) or SR: Set/reset flip-flop (STEP 7 Safety V15.1) (Page 406) instructions, for example, with tags from the standard user program to allow a motor to be switched off, but not switched on.
- For switch-on sequences, use the AND logic operation instruction, for example, to logically combine tags from the standard user program with switch-on conditions that you derive from fail-safe tags.

If you want to process tags from the standard user program in the safety program, please bear in mind that there is not a sufficiently simple method of checking validity for all tags.

Reading tags from the standard user program that can change during the runtime of an F-runtime group

If you want to read tags from the standard user program (bit memory, tags of a standard DB, or PII of standard I/O) in the safety program, and these tags can be changed - either by the standard user program or an operator control and monitoring system - during runtime of the F-runtime group in which they are read (for example because your standard user program is being processed by a higher-priority cyclic interrupt), you must use bit memory or tags of a standard DB for this purpose.

(S7-1200/1500) You must create the standard OB with the same priority as the F-OB. The standard OB must be called phase-shifted to the F-OB and describe the variables in this.

We recommend that you select the phase shift so that the standard OB is executed immediately before the F-OB.

(S7-300/400) You must write the bit memory or tags of a standard DB with the tags from the standard user program immediately before calling the F-runtime group.

You are then permitted to access only this bit memory or these tags of a standard DB in the safety program.

Also note that **clock memory** that you defined when configuring your F-CPU in the "Properties" tab can change during runtime of the F-runtime group, since clock memory runs asynchronously to the F-CPU cycle.

Note

The F-CPU can go to STOP if this is not observed. The cause of the diagnostics event is entered in the diagnostics buffer of the F-CPU.

Safety-related communication 9

9.1 Configuring and programming communication (S7-300, S7-400)

9.1.1 Overview of communication

Introduction

This section gives an overview of the safety-related communication options in SIMATIC Safety F-systems.

Options for safety-related communication

Safety-related communication	On subnet	Additional hardware required
I-slave-slave communication	PROFIBUS DP	—
Safety-related CPU-CPU communication:		
IO controller-IO controller communication	PROFINET IO	PN/PN coupler
Master-master communication	PROFIBUS DP	DP/DP coupler
IO controller-I-device communication	PROFINET IO	—
Master-I-slave communication	PROFIBUS DP	—
I-slave-I-slave communication	PROFIBUS DP	—
IO controller-I-slave communication	PROFINET IO and PROFIBUS DP	IE/PB link
Safety-related communication via S7 connections	Industrial Ethernet	—
IO controller-IO controller communication for S7 Distributed Safety	PROFINET IO	PN/PN coupler
Master-master communication for S7 Distributed Safety	PROFIBUS DP	DP/DP coupler
Safety-related communication to S7 Distributed Safety or S7 F Systems via S7 connections	Industrial Ethernet	—

Overview of safety-related communication via PROFIBUS DP

The figure below presents an overview of the 4 options for safety-related communication via PROFIBUS DP in SIMATIC Safety F-systems with S7-300/400 F-CPUs.

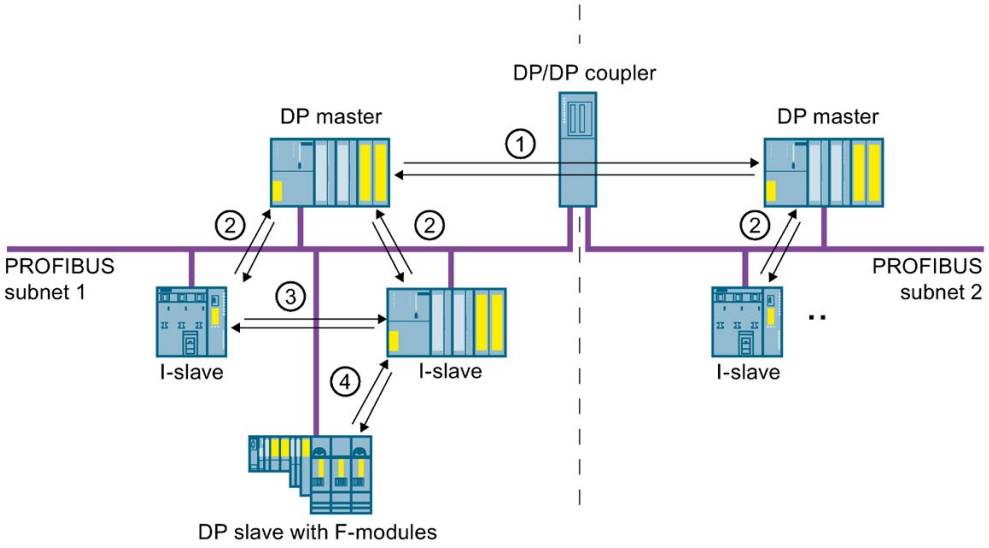

① Safety-related master-master communication
② Safety-related master-I-slave communication
③ Safety-related I-slave-I-slave communication
④ Safety-related I-slave-slave communication

Overview of safety-related communication via PROFINET IO

The figure below presents an overview of the four options for safety-related communication via PROFINET IO in SIMATIC Safety F-systems with S7-300/400 F-CPUs. If an IE/PB-link is used, safety-related communication is possible between assigned I-slaves.

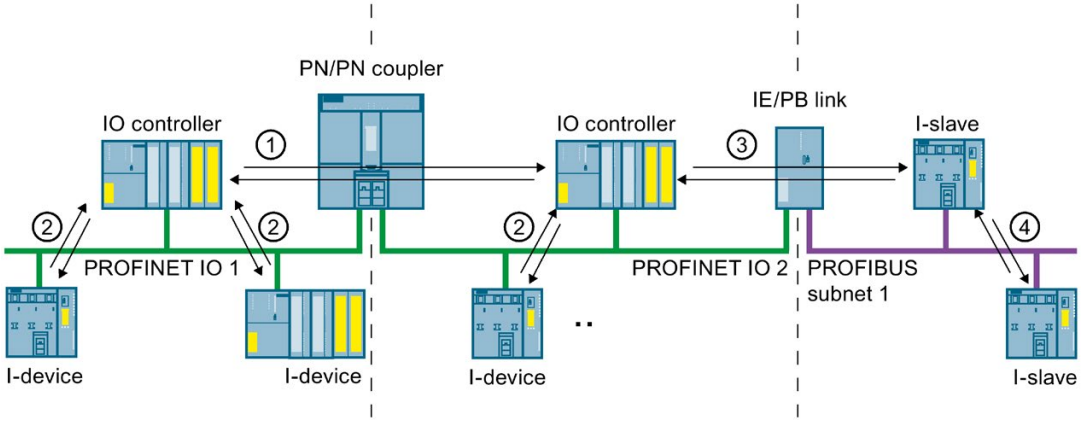

① Safety-related IO controller-IO controller communication
② Safety-related IO controller-I-device communication
③ Safety-related IO controller-I-slave communication
④ Safety-related I-slave-I-slave communication integrating an IO controller

Safety-related CPU-CPU communication via PROFIBUS DP or PROFINET IO

In safety-related CPU-CPU communication, a fixed amount of fail-safe data of the data type INT or BOOL is transmitted fail-safe between the safety programs in F-CPUs of DP masters/I-slaves or IO controllers/I-devices.

The data are transferred using the SENDDP instruction for sending and the RCVDP instruction for receiving. The data are stored in configured transfer areas of the devices. Each transfer area consists of one input and one output address area.

Safety-related I-slave-slave communication via PROFIBUS DP

Safety-related I-slave-slave communication with F-I/O is possible in a DP slave that supports safety-related I-slave-slave communication, for example with all ET 200SP F-modules with IM 155-6 DP HF, firmware version > V3.1, with all ET 200S F-modules with IM 151-1 HF, with all fail-safe S7-300 signal modules with IM 153-2, as of article number 6ES7153-2BA01-0XB0, firmware version > V4.0.0.

Safety-related communication between the safety program of the F-CPU of an I-slave and F-I/O of a DP slave takes place using direct data exchange, as in the standard program. The process image is used to access the channels of the F-I/O in the safety program of the F-CPU of the I-slave.

Safety-related CPU-CPU communication via Industrial Ethernet

Safety-related CPU-CPU communication via Industrial Ethernet is possible using S7 connections, both from and to the following:

- S7-300 F-CPUs via the integrated PROFINET interface
- S7-400 F-CPUs via the integrated PROFINET interface or a CP 443-1 or CP 443-1 Advanced-IT

In safety-related communication via S7 connections, a specified amount of fail-safe data of data type BOOL, INT, WORD, DINT, DWORD, or TIME is transferred fail-safe between the safety programs of the F-CPUs linked by the S7 connection.

The data transfer makes use of the SENDS7 instruction for sending and the RCVS7 instruction for receiving. Data are exchanged using one F-DB ("F-communication DB") each at the sender and receiver ends.

Safety-related CPU-CPU communication to *S7 Distributed Safety* or *F-systems*

Safety-related communication is possible from F-CPUs in *SIMATIC Safety* to F-CPUs in *S7 Distributed Safety* or *S7 F-systems*.

9.1.2 Safety-related IO controller-IO controller communication

9.1.2.1 Configure safety-related IO controller-IO controller communication

Introduction

Safety-related communication between safety programs of the F-CPUs of IO controllers takes place over a PN/PN coupler that you set up between the F-CPUs.

For 416F-2 DP CPUs without an integrated PROFINET interface, use a CP 443-1 or CP 443-1 Advanced-IT.

Note

Deactivate the "Data validity display DIA" parameter in the properties for the PN/PN coupler in the *hardware and network editor*. This is the default setting. Otherwise, safety-related IO controller-IO controller communication is not possible.

Configuring transfer areas

You must configure one transfer area for output data and one transfer area for input data in the *hardware and network editor* for each safety-related communication connection between two F-CPUs in the PN/PN coupler. The figure below shows how both of the F-CPUs are able to send **and** receive data (bidirectional communication). One transfer area for output data and one transfer area for input data must be configured in the PN/PN coupler for each of the two communication connections.

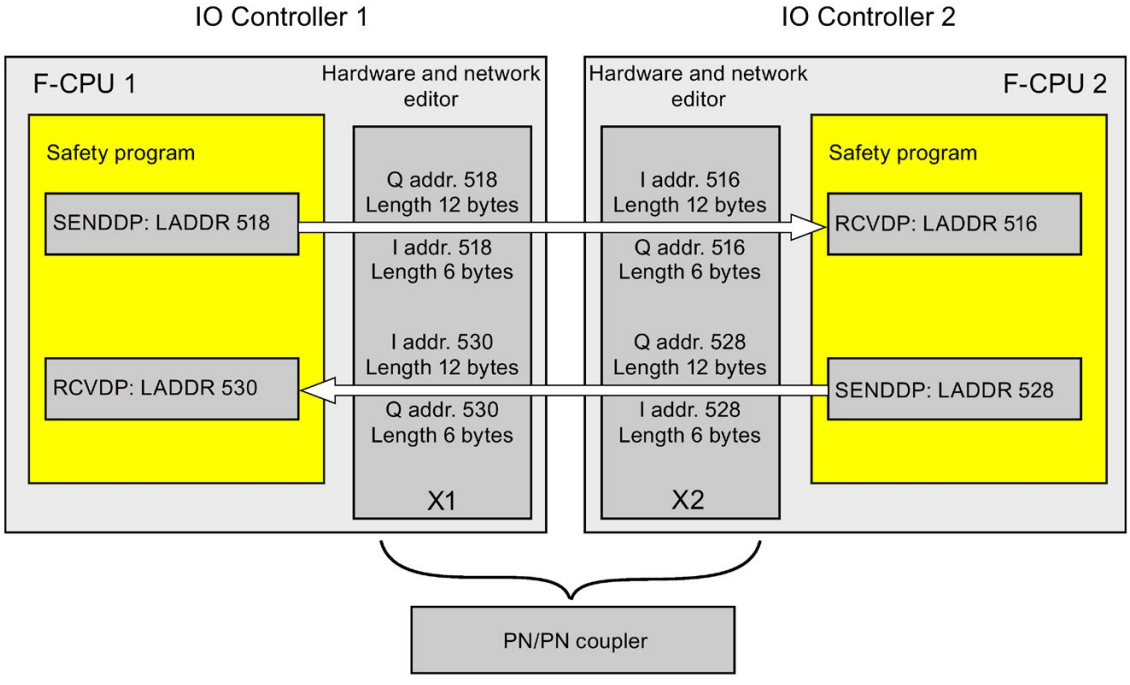

Rules for defining transfer areas

The transfer area for output data and the transfer area for input data for the **data to be sent** must begin with the same start address. A total of 12 bytes (consistent) is required for the transfer area for output data; 6 bytes (consistent) are required for the transfer area for input data.

The transfer area for input data and the transfer area for output data for the **data to be received** must begin with the same start address. A total of 12 bytes (consistent) is required for the transfer area for input data; 6 bytes (consistent) are required for the transfer area for output data.

Procedure for configuration

The procedure for configuring safety-related IO controller-IO controller communication is identical to that in the standard system.

Proceed as follows:

1. Insert two F-CPUS from the "Hardware catalog" task card into the project.
2. Switch to the network view of the *hardware and network editor*.
3. Select a PN/PN Coupler X1 and a PN/PN Coupler X2 from "Other field devices\PROFINET IO\Gateway\Siemens AG\PN/PN Coupler" in the "Hardware catalog" task card and insert them into the network view of the hardware and network editor.
4. Connect the PN interface of the F-CPU 1 with the PN interface of the PN/PN Coupler X1 and the PN interface of the F-CPU 2 with the PN interface of PN/PN Coupler X2.

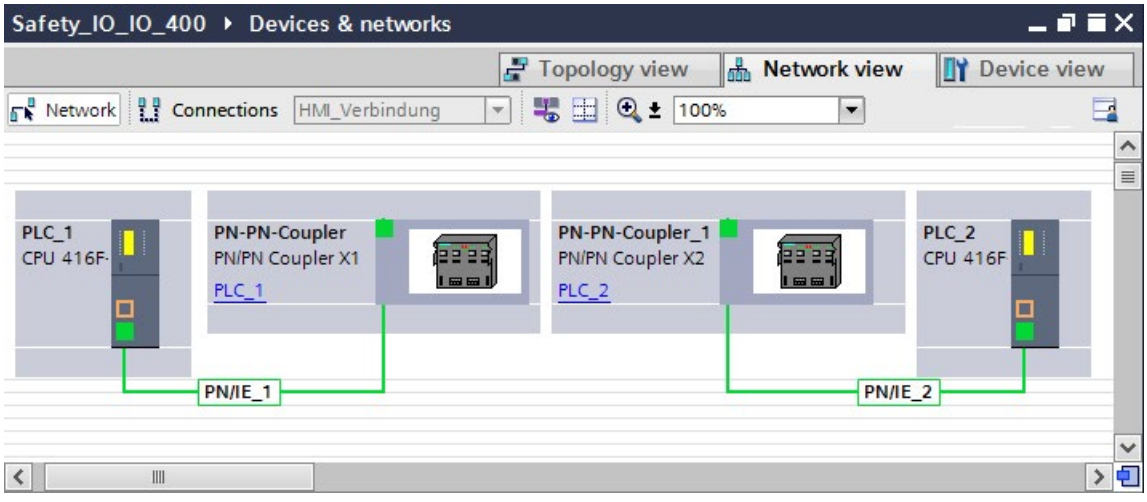

5. Switch to the device view of PN/PN Coupler X1 for bidirectional communication connections i.e. where each F-CPU is both to send and to receive data. Select the following modules from "IN/OUT" in the "Hardware catalog" task card (with filter activated), and insert them in the "Device overview" tab:
   - One "IN/OUT 6 bytes / 12 bytes" module and
   - One "IN/OUT 12 bytes / 6 bytes" module

6. In the properties of the modules, assign the addresses outside the process image as follows:

   For the "IN/OUT 6 bytes / 12 bytes" module for sending data for example:

   – Input addresses: Start address 518

   – Output addresses: Start address 518

   For the "IN/OUT 12 bytes / 6 bytes" module for receiving data for example:

   – Input addresses: Start address 530

   – Output addresses: Start address 530

Note

Make sure that you assign identical start addresses for the address areas of the output and input data.

Tip: Make a note of the start addresses of the transfer areas. You need these to program the SENDDP and RCVDP blocks (LADDR input).

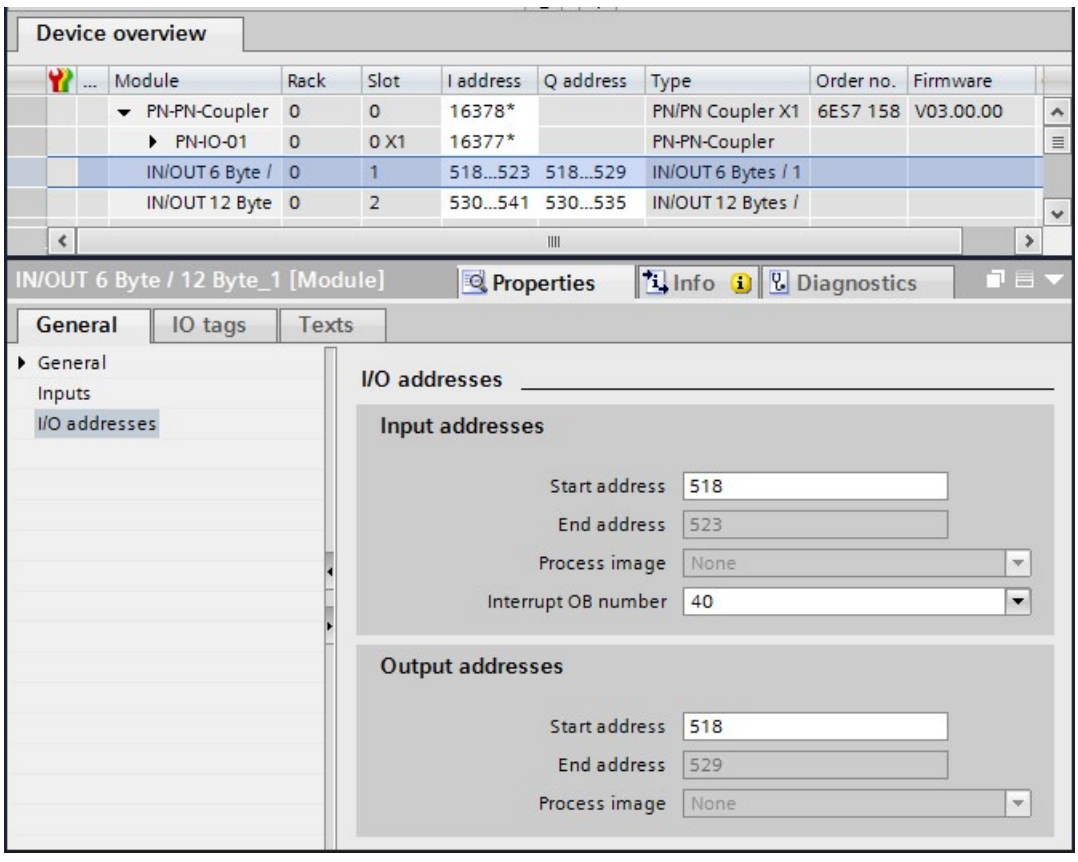

7. Select the following modules from "IN/OUT" in the device view of PN/PN coupler X2 and insert them in the "Device overview" tab:
   - One "IN/OUT 12 bytes / 6 bytes" module and
   - One "IN/OUT 6 bytes / 12 bytes" module
8. In the properties of the modules, assign the addresses outside the process image as follows:

   For the "IN/OUT 12 bytes / 6 bytes" module for receiving data for example:
   - Input addresses: Start address 516
   - Output addresses: Start address 516

   For the "IN/OUT 6 bytes / 12 bytes" module for sending data for example:
   - Input addresses: Start address 528
   - Output addresses: Start address 528

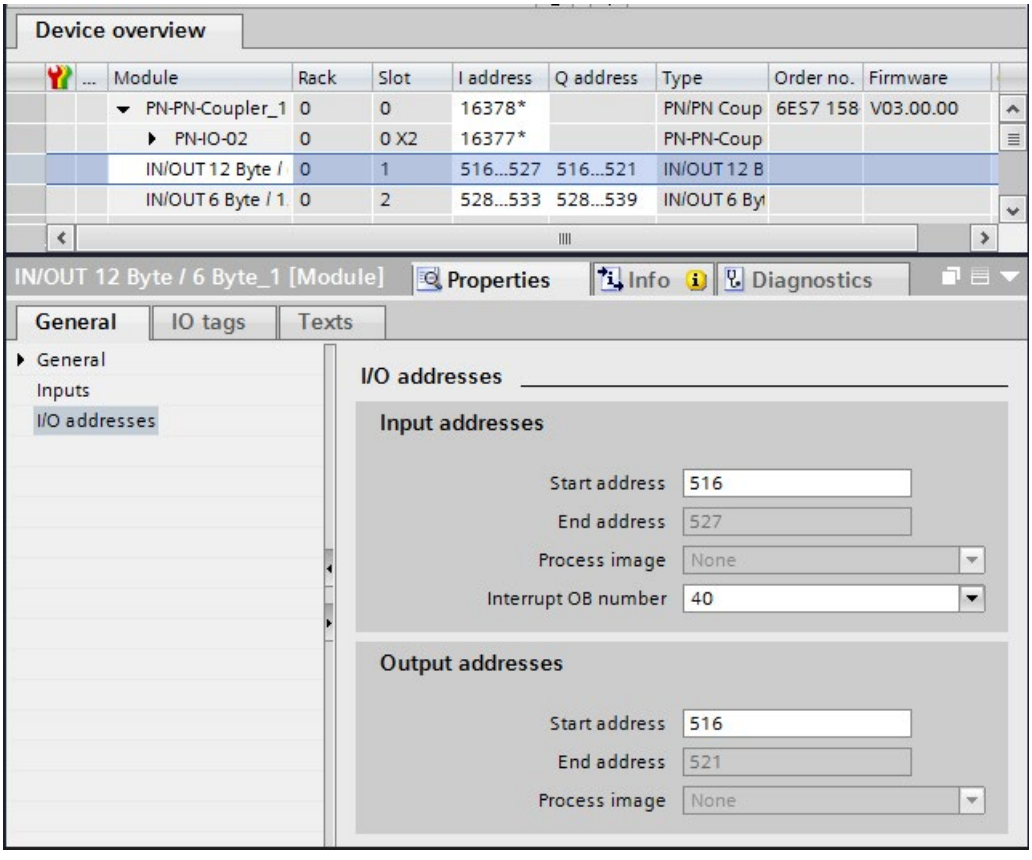

9.1.2.2 Safety-related IO controller-IO controller communication via SENDDP and RCVDP

Communication via SENDDP and RCVDP instructions

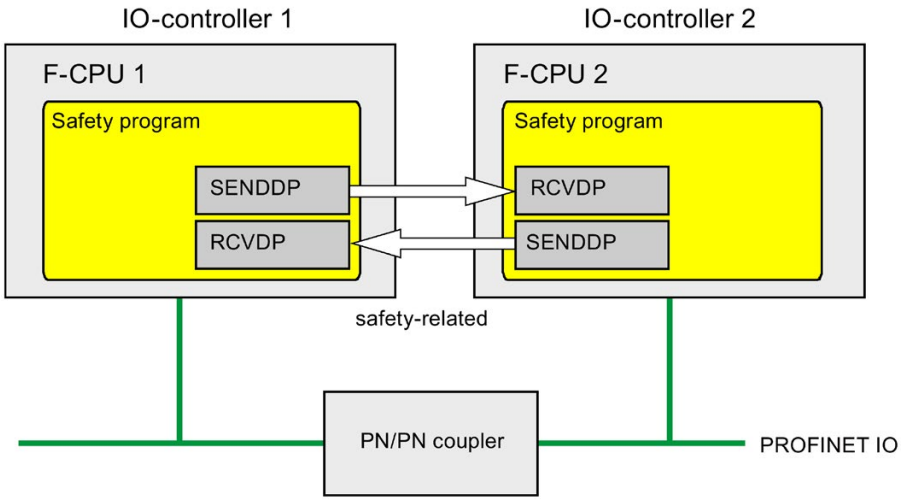

Safety-related communication between the F-CPUs of the IO controllers uses the SENDDP and RCVDP instructions for sending and receiving, respectively. These can be used to perform a fail-safe transfer of a *fixed* amount of fail-safe data of the data type INT or BOOL.

You can find these instructions in the "Instructions" task card under "Communication". The RCVDP instruction **must** be called at the start of the main safety block. The SENDDP instruction **must** be called at the end of the main safety block.

Note that the send signals are not sent until after the SENDDP instruction call at the end of execution of the relevant F-runtime group.

A detailed description of the SENDDP and RCVDP instructions can be found in SENDDP and RCVDP: Send and receive data via PROFIBUS DP/PROFINET IO (STEP 7 Safety V15.1) (Page 588).

9.1.2.3 Program safety-related IO controller-IO controller communication

Requirement for programming

The transfer areas for input and output data for the PN/PN coupler must be configured.

Programming procedure

You program safety-related IO controller-IO controller communication as follows:

1. In the safety program from which data are to be sent, call the SENDDP instruction (Page 588) for sending at the end of the main safety block.
2. In the safety program in which data are to be received, call the RCVDP instruction (Page 588) for receiving at the start of the main safety block.
3. Assign the start addresses of the output and input data transfer areas of the PN/PN coupler configured in the *hardware and network editor* to the respective LADDR inputs.

   You must carry out this assignment for every communication connection for each of the F-CPUs involved.

4. Assign the value for the respective F-communication ID to the DP_DP_ID inputs. This establishes the communication relationship between the SENDDP instruction in one F-CPU and the RCVDP instruction in the other F-CPU: The associated instructions receive the same value for DP_DP_ID.

   The figure below contains an example of how to specify the F-communication IDs at the inputs of the SENDDP and RCVDP instructions for 5 safety-related IO controller-IO controller communication relationships.

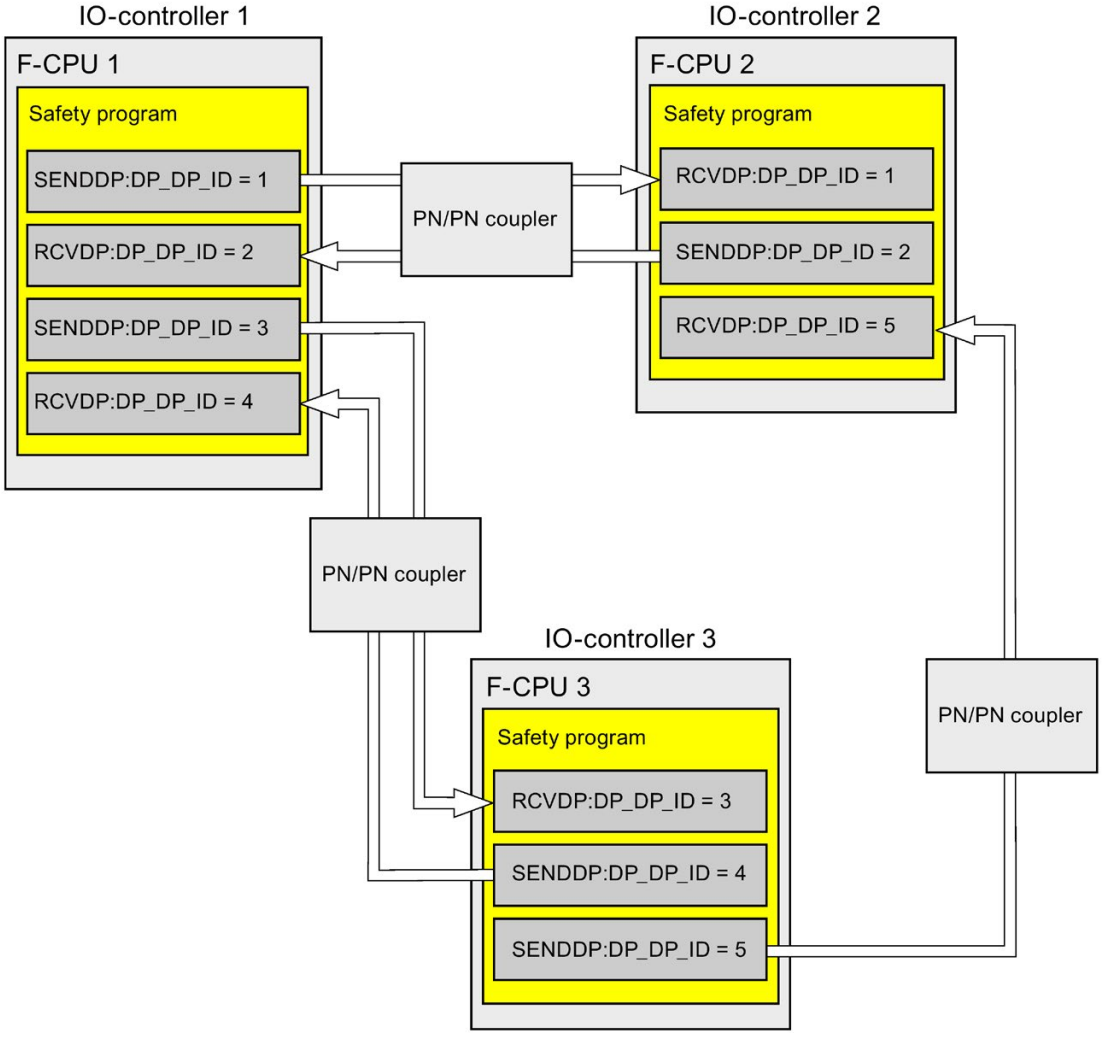

WARNING

The value for the respective F-communication ID (input DP_DP_ID; data type: INT) can be freely selected; however, it must be unique for all safety-related communication connections network-wide* and CPU-wide at all times. The uniqueness must be checked in the safety summary during acceptance of the safety program. You can find additional information in Correctness and completeness of the communication configuration (Page 374).

You must supply inputs DP_DP_ID and LADDR with constant values when calling the instruction. Direct write accesses in the associated instance DB to DP_DP_ID and LADDR are not permitted in the safety program! *(S016)*

* A network consists of one or more subnets. "Network-wide" means beyond the boundaries of the subnet. In PROFIBUS, a network includes all nodes accessible via PROFIBUS DP. In PROFINET IO, a network includes all nodes accessible via RT_Class_1/2/3 (Ethernet/WLAN/Bluetooth, Layer 2) and if applicable RT_Class_UDP (IP, Layer 3).

5. Supply the SD_BO_xx and SD_I_xx inputs of SENDDP with the send signals. To cut down on intermediate signals when transferring block parameters, you can write the value directly to the instance DB of SENDDP using fully qualified access (for example, "Name SENDDP_1".SD_BO_02) before calling SENDDP.
6. Supply the RD_BO_xx and RD_I_xx outputs of RCVDP with the signals that you want to process further in other program sections or use fully qualified access to read the received signals directly in the associated instance DB in the program sections to be processed further (e.g., "Name RCVDP_1".RD_BO_02).

7. Supply the SUBBO_xx and SUBI_xx inputs of RCVDP with the fail-safe values that are to be output by RCVDP in place of the process data until communication is established for the first time after startup of the sending and receiving F-systems or in the event of an error in safety-related communication.
   - Specification of constant fail-safe values:

     For data of data type INT, you can enter constant fail-safe values directly as constants in the SUBI_xx input (initial value = "0"). If you want to specify a constant fail-safe value "TRUE" for data of the data type BOOL, provide the tag "F_GOBDB".VKE1 for the SUBBO_xx input (initial value = "FALSE").
   - Specification of dynamic fail-safe values:

     If you want to specify dynamic fail-safe values, define a tag that you change dynamically through your safety program in an F-DB and specify this tag (fully qualified) in the SUBI_xx or SUBBO_xx input.

     WARNING

     Note that your safety program for dynamically changing the tag for a dynamic fail-safe value can only be processed after the call of the RCVDP, because prior to the RCVDP call, there must not be any network and no more than one other RCVDP instruction in the main safety block. You must therefore assign appropriate start values for these tags to be output by RCVDP in the first cycle after a startup of the F-system. *(S017)*

8. Configure the TIMEOUT inputs of the RCVDP and SENDDP instructions with the required monitoring time.

   WARNING

   It can only be ensured (from a fail-safe standpoint) that a signal state to be transferred will be acquired at the sender end and transferred to the receiver if the signal level is pending for at least as long as the assigned monitoring time. *(S018)*

   Information on calculating the monitoring times can be found in Monitoring and response times (Page 607).
9. Optional: Evaluate the ACK_REQ output of the RCVDP instruction, for example, in the standard user program or on the HMI system in order to query or to indicate whether user acknowledgment is required.
10. Supply the ACK_REI input of the RCVDP instruction with the acknowledgment signal for reintegration.
11. Optional: Evaluate the SUBS_ON output of the RCVDP or SENDDP instruction in order to query whether the RCVDP instruction is outputting the fail-safe values assigned in the SUBBO_xx and SUBI_xx inputs.

12. Optional: Evaluate the ERROR output of the RCVDP or SENDDP instruction, for example, in the standard user program or on the HMI system in order to query or to indicate whether a communication error has occurred.
13. Optional: Evaluate the SENDMODE output of the RCVDP instruction in order to query whether the F-CPU with the associated SENDDP instruction is in disabled safety mode (Page 344).

9.1.2.4 Safety-related IO controller-IO controller communication - Limits for data transfer

Note

If the data quantities to be transmitted exceed the capacity of the SENDDP / RCVDP correlated instructions, a second (or third) SENDDP / RCVDP call can be used. This requires configuration of an additional connection via the PN/PN coupler. Whether or not this is possible with one single PN/PN coupler depends on the capacity restrictions of the PN/PN coupler.

9.1.3 Safety-related master-master communication

9.1.3.1 Configure safety-related master-master communication

Introduction

Safety-related communication between safety programs of the F-CPUs of DP masters takes place via a DP/DP coupler.

Note

Switch the data validity indicator "DIA" on the DIP switch of the DP/DP coupler to "OFF". Otherwise, safety-related CPU-CPU communication is not possible.

Configuring transfer areas

You must configure one transfer area for output data and one transfer area for input data in the *hardware and network editor* for each safety-related communication connection between two F-CPUs in the DP/DP coupler. The figure below shows how both of the F-CPUs are able to send and receive data (bidirectional communication). One transfer area for output data and one transfer area for input data must be configured in the DP/DP coupler for each of the two communication connections.

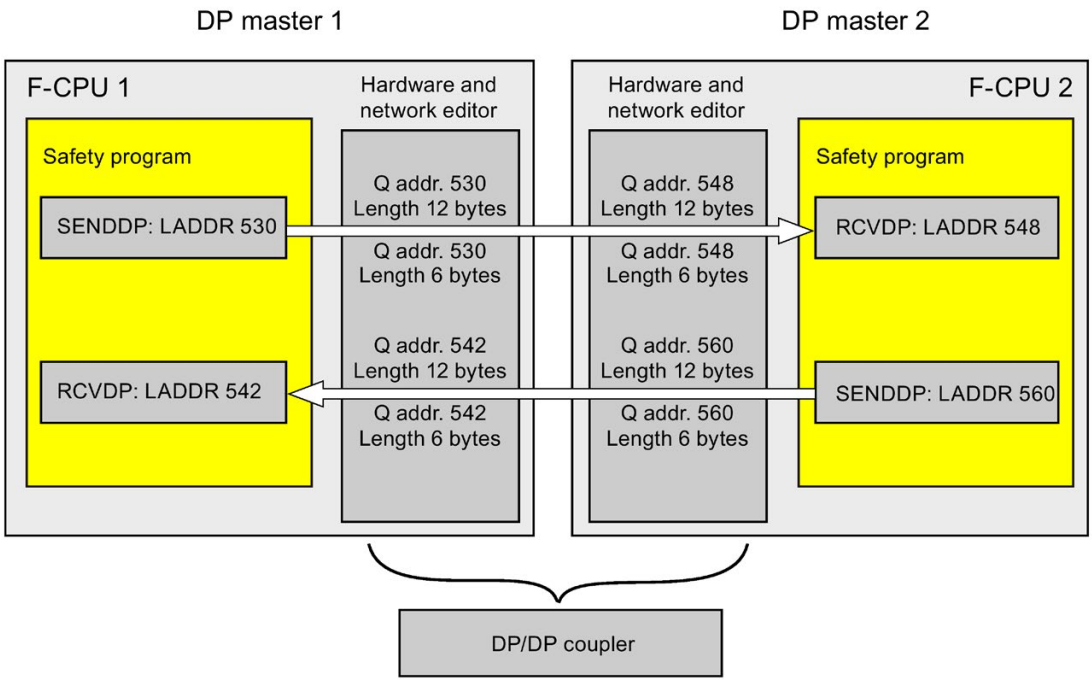

Rules for defining transfer areas

The transfer area for input data and the transfer area for output data for the **data to be sent** must begin with the same start address. A total of 6 bytes (consistent) is required for the transfer area for input data; 12 bytes (consistent) are required for the transfer area for output data.

The transfer area for input data and the transfer area for output data for the **data to be received** must begin with the same start address. A total of 12 bytes (consistent) is required for the transfer area for input data; 6 bytes (consistent) are required for the transfer area for output data.

Procedure for configuration

The procedure for configuring safety-related master-master communication is identical to that in the standard system.

Proceed as follows:

1. Insert two F-CPUS from the "Hardware catalog" task card into the project.
2. Switch to the network view of the *hardware and network editor*.
3. Select a DP/DP coupler from "Other field devices\PROFIBUS DP\Gateways\Siemens AG\DP/DP Coupler" in the "Hardware catalog" task card and insert it into the network view of the hardware and network editor.
4. Insert a second DP/DP coupler.
5. Connect a DP interface of F-CPU 1 to the DP interface of a DP/DP coupler and a DP interface of F-CPU 2 to the DP interface of the other DP/DP coupler.

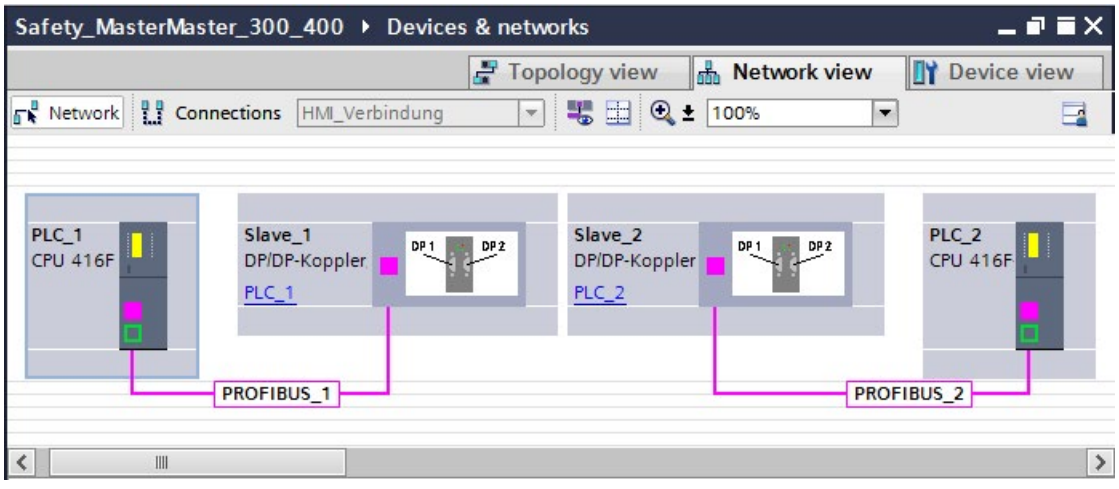

6. A free PROFIBUS address is assigned automatically in the properties of the DP/DP-coupler in the device view. You must set this address on the DP/DP coupler of PLC 1, either using the DIP switch on the device or in the configuration of the DP/DP coupler (see DP/DP Coupler (http://support.automation.siemens.com/WW/view/en/1179382) manual).
7. Switch to the device view of the DP/DP coupler for PLC1 for bidirectional communication connections i.e. where each F-CPU is both to send and to receive data. Select the following modules from the "Hardware catalog" task card (with filter activated), and insert them in the "Device overview" tab:
   - One "6 bytes I/12 bytes Q consistent" module, and
   - One "12 bytes I/6 bytes Q consistent" module

8. In the properties of the modules, assign the addresses outside the process image as follows:

   For "6 bytes I/12 bytes Q consistent" module for sending data for example:

   – Input addresses: Start address 530

   – Output addresses: Start address 530

   For "12 bytes I/6 bytes Q consistent" module for receiving data for example:

   – Input addresses: Start address 542

   – Output addresses: Start address 542

   Note

   Make sure that you assign identical start addresses for the address areas of the output and input data.

   Tip: Make a note of the start addresses of the transfer areas. You need these to program the SENDDP and RCVDP blocks (LADDR input).

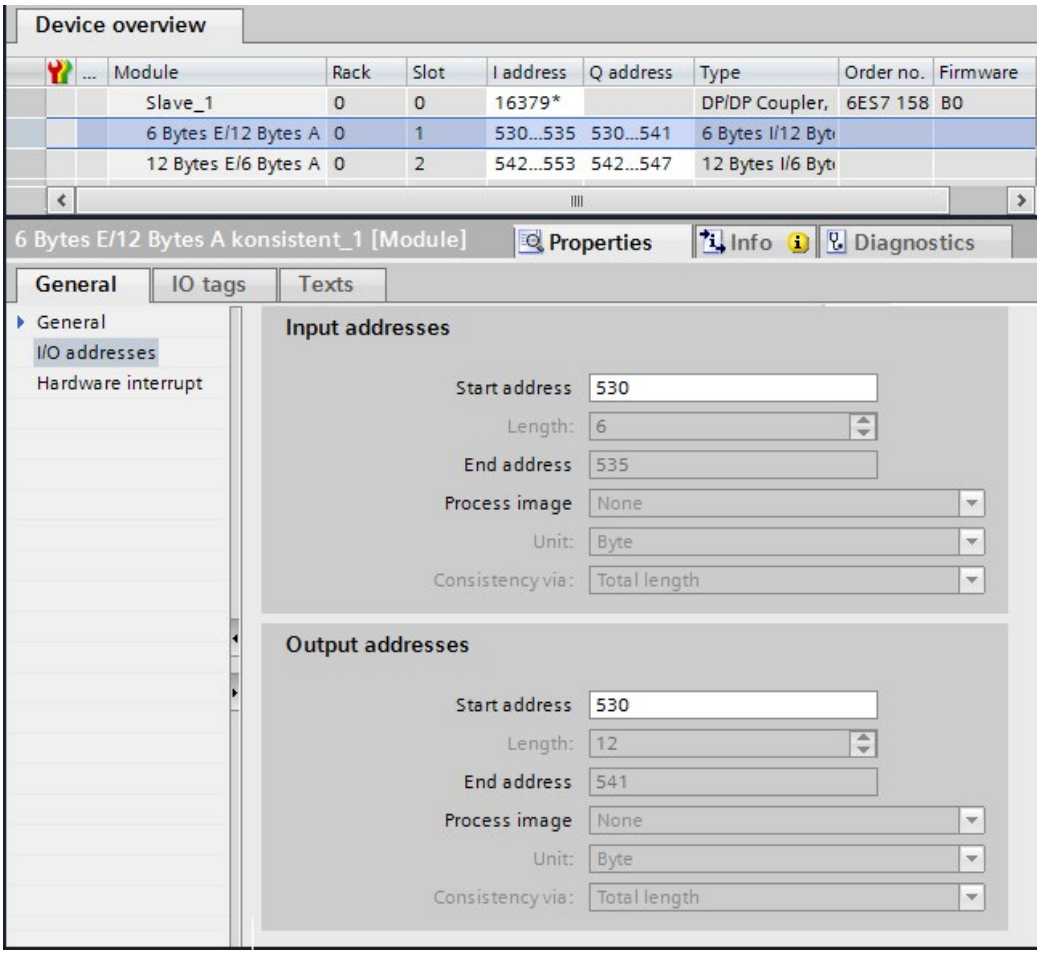

9. Select the following modules from the "Hardware catalog" task card (with filter activated) in the device view of DP/DP coupler PLC2, and insert them in the "Device overview" tab:
   - One "12 bytes I/6 bytes Q consistent" module, and
   - One "6 bytes I/12 bytes Q consistent" module
10. In the properties of the modules, assign the addresses outside the process image as follows:

    For "12 bytes I/6 bytes Q consistent" module for receiving data for example:
    - Input addresses: Start address 548
    - Output addresses: Start address 548

    For "6 bytes I/12 bytes Q consistent" module for sending data for example:
    - Input addresses: Start address 560
    - Output addresses: Start address 560

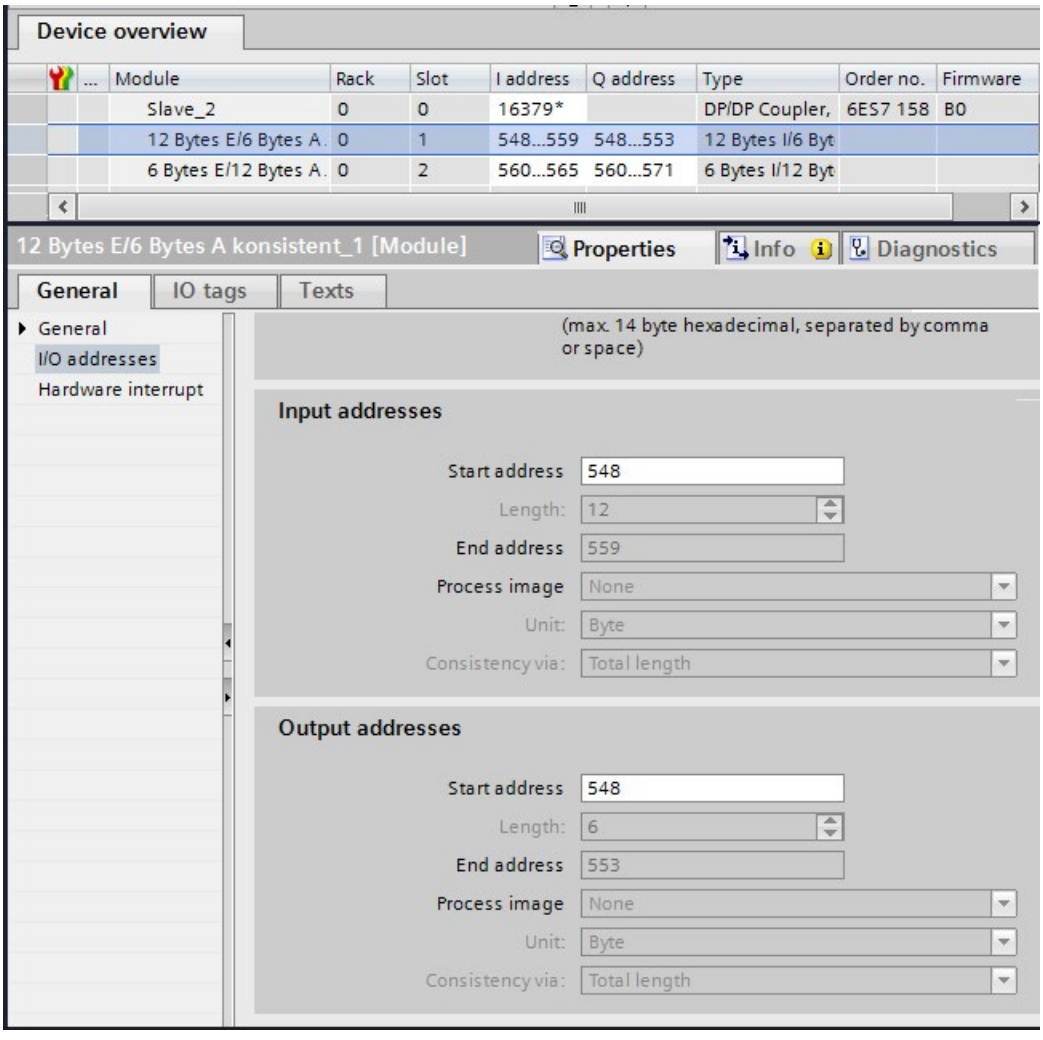

9.1.3.2 Safety-related master-master communication via SENDDP and RCVDP

Communication via SENDDP and RCVDP instructions

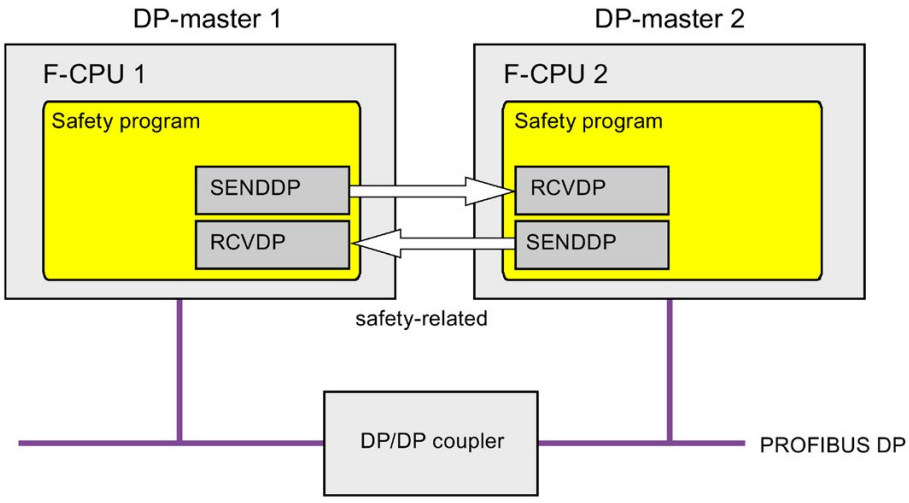

Safety-related communication between the F-CPUs of the DP master uses the SENDDP and RCVDP instructions for sending and receiving, respectively. These can be used to perform a fail-safe transfer of a *fixed* amount of fail-safe data of the data type INT or BOOL.

You can find these instructions in the "Instructions" task card under "Communication". The RCVDP instruction **must** be called at the start of the main safety block. The SENDDP instruction **must** be called at the end of the main safety block.

Note that the send signals are not sent until after the SENDDP instruction call at the end of execution of the relevant F-runtime group.

A detailed description of the SENDDP and RCVDP instructions can be found in SENDDP and RCVDP: Send and receive data via PROFIBUS DP/PROFINET IO (STEP 7 Safety V15.1) (Page 588).

9.1.3.3 Program safety-related master-master communication

Requirement for programming

The transfer areas for input and output data for the DP/DP coupler must be configured.

Programming procedure

You program safety-related master-master communication as follows:

1. In the safety program from which data are to be sent, call the SENDDP instruction (Page 588) for sending at the end of the main safety block.
2. In the safety program in which data are to be received, call the RCVDP instruction (Page 588) for receiving at the start of the main safety block.
3. Assign the start addresses of the transfer areas for output and input data of the DP/DP coupler configured in the *hardware and network editor* to the respective LADDR inputs.

   You must carry out this assignment for every communication connection for each of the F-CPUs involved.

4. Assign the value for the respective F-communication ID to the DP_DP_ID inputs. This establishes the communication relationship between the SENDDP instruction in one F-CPU and the RCVDP instruction in the other F-CPU: The associated instructions receive the same value for DP_DP_ID.

   The figure below contains an example of how to specify the F-communication IDs at the inputs of the SENDDP and RCVDP instructions for 5 safety-related master-master communications relationships.

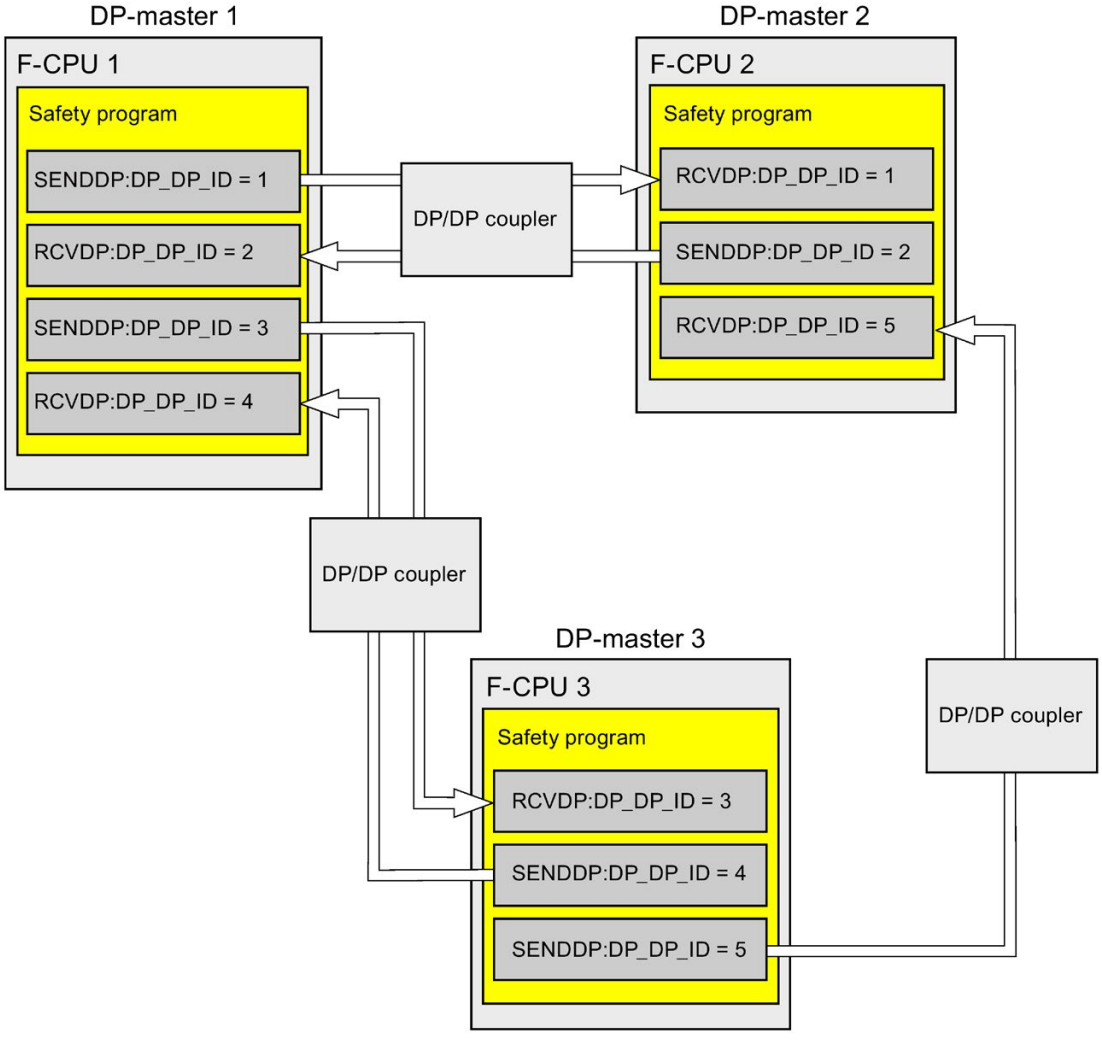

WARNING

The value for the respective F-communication ID (input DP_DP_ID; data type: INT) can be freely selected; however, it must be unique for all safety-related communication connections network-wide* and CPU-wide at all times. The uniqueness must be checked in the safety summary during acceptance of the safety program. You can find additional information in Correctness and completeness of the communication configuration (Page 374).

You must supply inputs DP_DP_ID and LADDR with constant values when calling the instruction. Direct write accesses in the associated instance DB to DP_DP_ID and LADDR are not permitted in the safety program! *(S016)*

* A network consists of one or more subnets. "Network-wide" means beyond the boundaries of the subnet. In PROFIBUS, a network includes all nodes accessible via PROFIBUS DP. In PROFINET IO, a network includes all nodes accessible via RT_Class_1/2/3 (Ethernet/WLAN/Bluetooth, Layer 2) and if applicable RT_Class_UDP (IP, Layer 3).

5. Supply the SD_BO_xx and SD_I_xx inputs of SENDDP with the send signals. To cut down on intermediate signals when transferring block parameters, you can write the value directly to the instance DB of SENDDP using fully qualified access (for example, "Name SENDDP_1".SD_BO_02) before calling SENDDP.
6. Supply the RD_BO_xx and RD_I_xx outputs of RCVDP with the signals that you want to process further in other program sections or use fully qualified access to read the received signals directly in the associated instance DB in the program sections to be processed further (e.g. "Name RCVDP_1".RD_BO_02).

7. Supply the SUBBO_xx and SUBI_xx inputs of RCVDP with the fail-safe values that are to be output by RCVDP in place of the process data until communication is established for the first time after startup of the sending and receiving F-systems or in the event of an error in safety-related communication.
   - Specification of constant fail-safe values:

     For data of data type INT, you can enter constant fail-safe values directly as constants in the SUBI_xx input (initial value = "0"). If you want to specify a constant fail-safe value for data of the data type BOOL, provide the tag "F_GLOBDB".VKE1 for the SUBBO_xx input (initial value = "FALSE").
   - Specification of dynamic fail-safe values:

     If you want to specify dynamic fail-safe values, define a tag that you change dynamically through your safety program in an F-DB and specify this tag (fully qualified) in the SUBI_xx or SUBBO_xx input.

     WARNING

     Note that your safety program for dynamically changing the tag for a dynamic fail-safe value can only be processed after the call of the RCVDP, because prior to the RCVDP call, there must not be any network and no more than one other RCVDP instruction in the main safety block. You must therefore assign appropriate start values for these tags to be output by RCVDP in the first cycle after a startup of the F-system. *(S017)*

8. Configure the TIMEOUT inputs of the RCVDP and SENDDP instructions with the required monitoring time.

   WARNING

   It can only be ensured (from a fail-safe standpoint) that a signal state to be transferred will be acquired at the sender end and transferred to the receiver if the signal level is pending for at least as long as the assigned monitoring time. *(S018)*

   Information on calculating the monitoring times can be found in Monitoring and response times (Page 607).
9. Optional: Evaluate the ACK_REQ output of the RCVDP instruction, for example, in the standard user program or on the HMI system in order to query or to indicate whether user acknowledgment is required.
10. Supply the ACK_REI input of the RCVDP instruction with the acknowledgment signal for reintegration.
11. Optional: Evaluate the SUBS_ON output of the RCVDP or SENDDP instruction in order to query whether the RCVDP instruction is outputting the fail-safe values assigned in the SUBBO_xx and SUBI_xx inputs.

12. Optional: Evaluate the ERROR output of the RCVDP or SENDDP instruction, for example, in the standard user program or on the HMI system in order to query or to indicate whether a communication error has occurred.
13. Optional: Evaluate the SENDMODE output of the RCVDP instruction in order to query whether the F-CPU with the associated SENDDP instruction is in disabled safety mode (Page 344).

9.1.3.4 Safety-related master-master communication:Limits for data transfer

Note

If the data quantities to be transmitted exceed the capacity of the SENDDP / RCVDP correlated instructions, a second (or third) SENDDP / RCVDP call can be used. This requires configuration of an additional connection via the DP/DP coupler. Whether or not this is possible with one single DP/DP coupler depends on the capacity restrictions of the DP/DP coupler.

9.1.4 Safety-related IO controller-I-device communication

9.1.4.1 Configuring safety-related communication between IO controller and I-device

Introduction

Safety-related communication between the safety program of the F-CPU of an IO controller and the safety program(s) of the F-CPU(s) of one or more I-devices takes place via IO controller-I-device connections (**F**-CD) in PROFINET IO, in the same way as in standard systems.

You do not need any additional hardware for IO controller-I-device communication.

The F-CPU to be used as an I-device must support the "IO-device" operating mode.

Configuring transfer areas

For every safety-related communication connection between two F-CPUs, you must configure transfer areas in the *hardware and network editor*. The figure below shows how both of the F-CPUs are able to send and receive data (bidirectional communication).

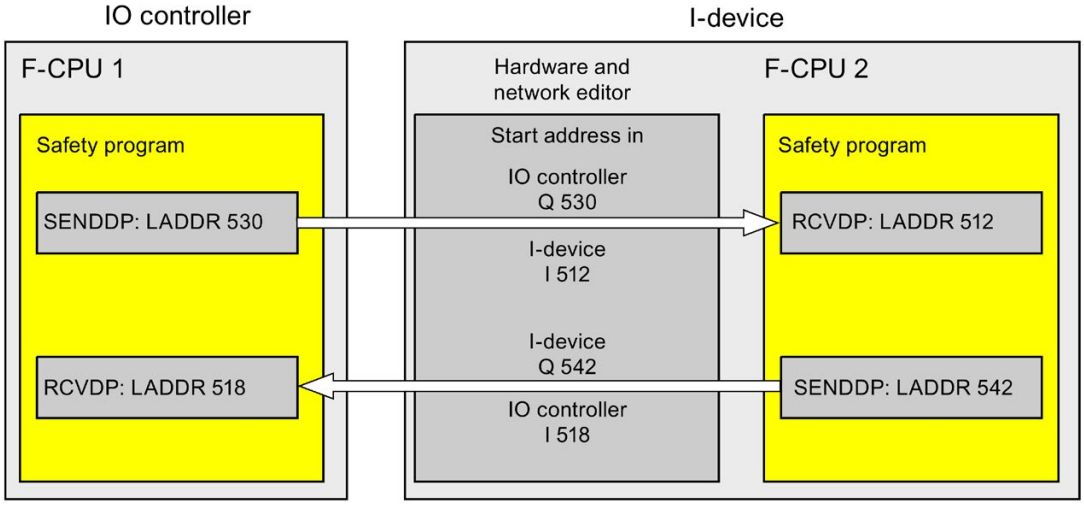

The transfer area is assigned a label when it is created to identify it as the communication relationship. For example, "F-CD_PLC_2 PLC_1_1" for the first F-CD connection between IO controller F-CPU 1 and I-device F-CPU 2.

You assign the start addresses of the transfer areas to the LADDR input of the SENDDP and RCVDP instructions in the safety programs.

Procedure for configuration

The procedure for configuring safety-related IO controller-I-device communication is identical to that in the standard system.

Proceed as follows:

1. Insert two F-CPUS from the "Hardware catalog" task card into the project.
2. Enable the "IO Device" mode for F-CPU 2 in the properties of its PN interface and assign this PN interface to a PN interface of F-CPU 1.
3. Select the PROFINET interface of F-CPU 2. Under "Transfer areas", you create an F-CD connection (type "F-CD") for sending to the IO controller (←). The F-CD connection is shown in yellow in the table and the address areas in the I-device and IO controller assigned outside of the process image are displayed.

   In addition, an acknowledgment connection is created automatically for each F-CD connection. (see "Transfer area details").

4. Create an additional F-CD connection for receiving from the IO controller.
5. In the transfer area you just created, click the arrow in order to change the transfer direction to receiving from IO controller (→).

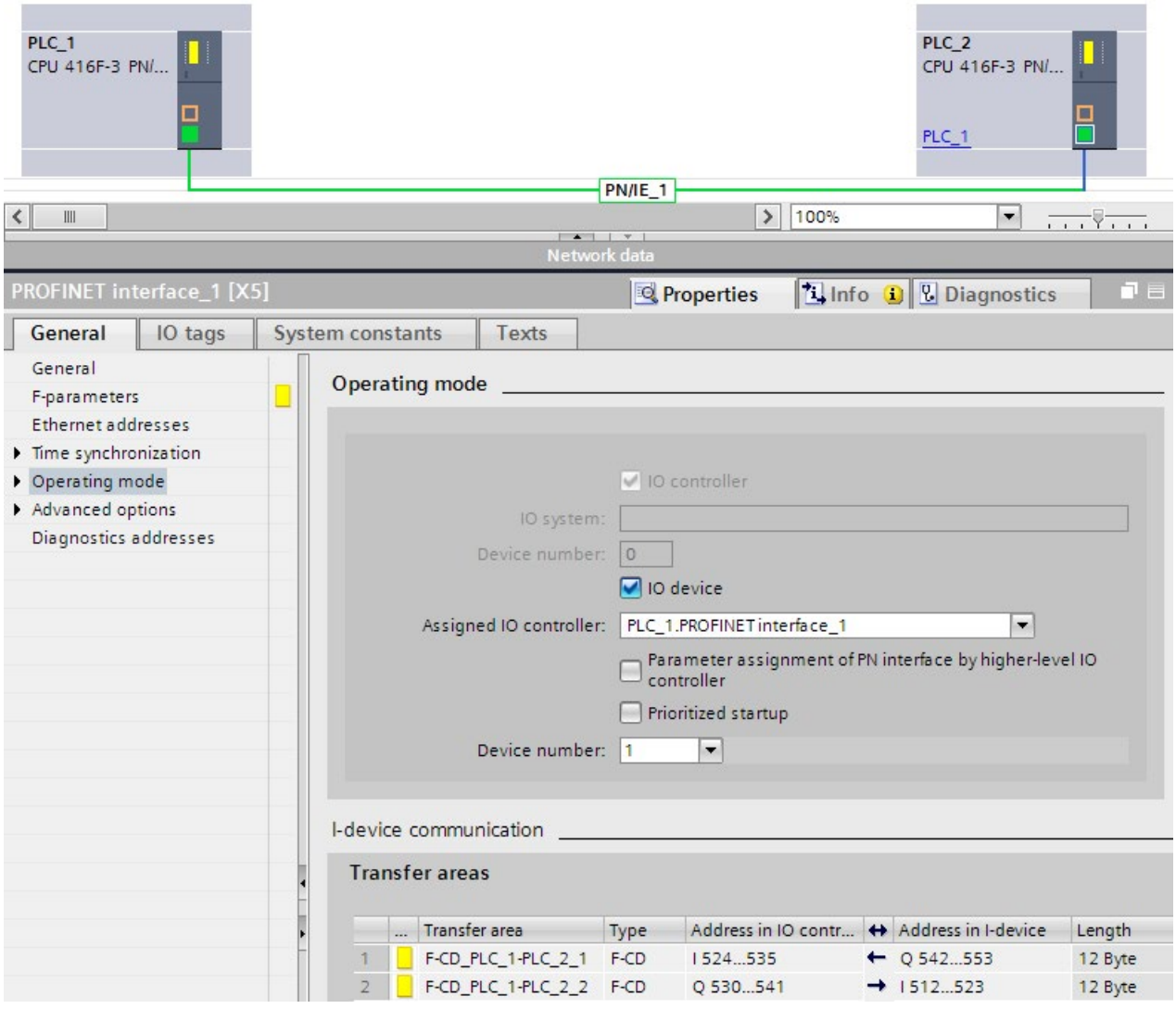

9.1.4.2 Safety-related IO controller-I-device communication via SENDDP and RCVDP

Communication via SENDDP and RCVDP instructions

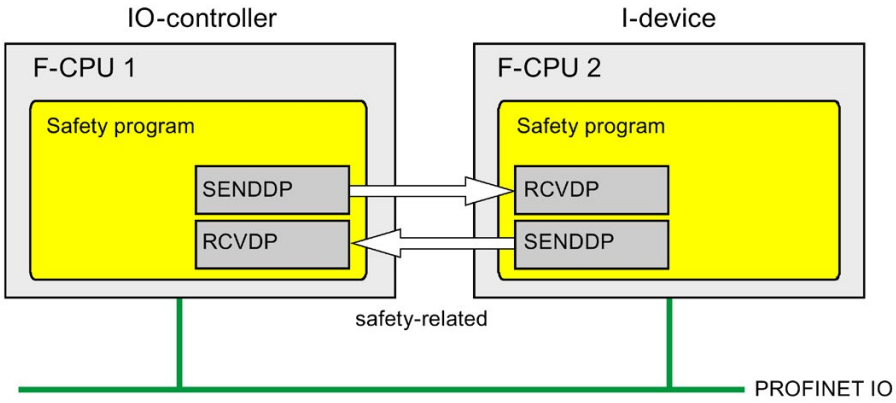

Safety-related communication between the F-CPUs of the IO controller and an I-device makes use of the SENDDP and RCVDP instructions for sending and receiving, respectively. These can be used to perform a fail-safe transfer of a *fixed* amount of fail-safe data of the data type INT or BOOL.

You can find these instructions in the "Instructions" task card under "Communication". The RCVDP instruction **must** be called at the start of the main safety block. The SENDDP instruction **must** be called at the end of the main safety block.

Note that the send signals are not sent until after the SENDDP instruction call at the end of execution of the relevant F-runtime group.

A detailed description of the SENDDP and RCVDP instructions can be found in SENDDP and RCVDP: Send and receive data via PROFIBUS DP/PROFINET IO (STEP 7 Safety V15.1) (Page 588).

9.1.4.3 Programming safety-related IO controller I-device communication

Requirement for programming

The transfer areas must be configured.

Programming procedure

The procedure for programming safety-related IO controller-I-device communication is the same as that for programming safety-related IO controller-IO controller communication (see Program safety-related IO controller-IO controller communication (Page 209)).

The assignment of the start addresses of the transfer areas to the LADDR input of the SENDDP/RCVDP instructions can be obtained from the following table.

Instruction	Start address LADDR	
	From row	From column
SENDDP in the IO controller	→	Address in the IO controller
RCVDP in the IO controller	←	Address in the IO controller
SENDDP in the I-device	←	Address in the IO device
RCVDP in the I-device	→	Address in the IO device

The figure below contains an example of how to specify the F-communication IDs for the inputs of the SENDDP and RCVDP instructions for 4 safety-related IO controller-I-device communication relationships.

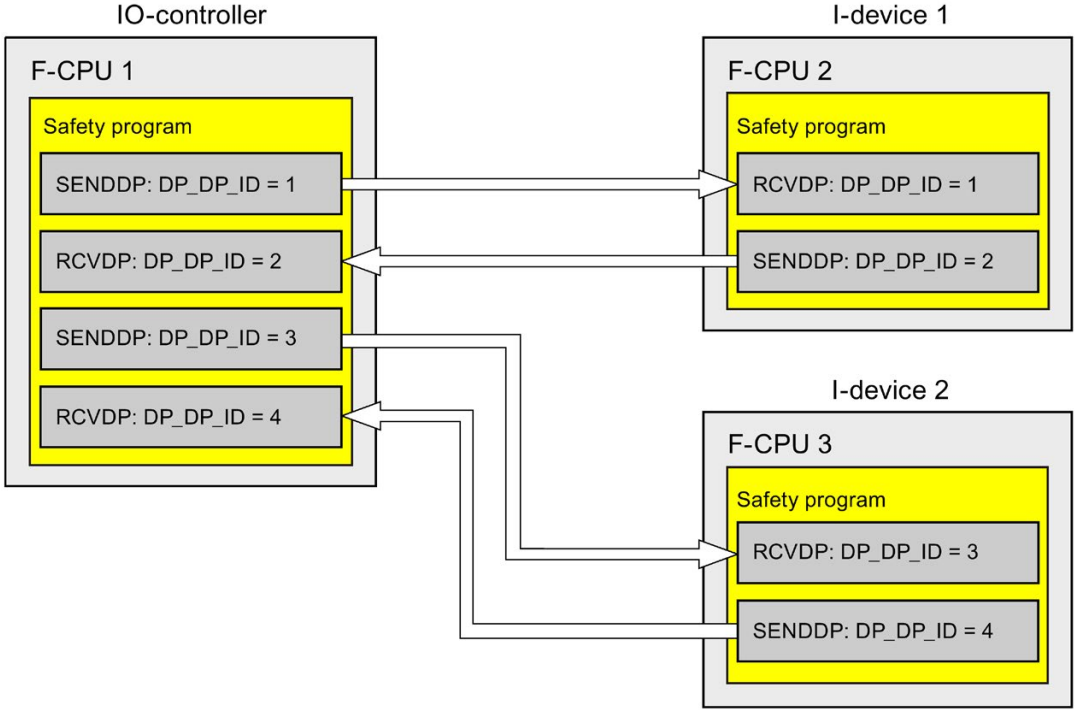

WARNING

The value for the respective F-communication ID (input DP_DP_ID; data type: INT) can be freely selected; however, it must be unique for all safety-related communication connections network-wide* and CPU-wide at all times. The uniqueness must be checked in the safety summary during acceptance of the safety program. You can find additional information in Correctness and completeness of the communication configuration (Page 374).

You must supply inputs DP_DP_ID and LADDR with constant values when calling the instruction. Direct write accesses in the associated instance DB to DP_DP_ID and LADDR are not permitted in the safety program! *(S016)*

* A network consists of one or more subnets. "Network-wide" means beyond the boundaries of the subnet. In PROFIBUS, a network includes all nodes accessible via PROFIBUS DP. In PROFINET IO, a network includes all nodes accessible via RT_Class_1/2/3 (Ethernet/WLAN/Bluetooth, Layer 2) and if applicable RT_Class_UDP (IP, Layer 3).

WARNING

It can only be ensured (from a fail-safe standpoint) that a signal state to be transferred will be acquired at the sender end and transferred to the receiver if the signal level is pending for at least as long as the assigned monitoring time. *(S018)*

Information on calculating the monitoring times can be found in Monitoring and response times (Page 607).

9.1.4.4 Safety-related IO-Controller-IO-Device communication - Limits for data transfer

Limits for data transfer

If the amount of data to be transferred is greater than the capacity of related SENDDP/RCVDP instructions, you can use additional SENDDP/RCVDP instructions. Configure additional transfer areas for this purpose. Remember the maximum limit of 1440 bytes of input data or 1440 bytes of output data for transfer between an I-device and a IO controller.

The following table shows the amount of output and input data assigned in safety-related communication connections:

Safety-related communication	Communication connection	Assigned input and output data			
		In the IO controller		In the I-device	
		Output data	Input data	Output data	Input data
IO controller-I-Device	**Sending:** I-Device 1 to IO controller	6 bytes	12 bytes	12 bytes	6 bytes
	Receiving: I-Device 1 from IO controller	12 bytes	6 bytes	6 bytes	12 bytes

Consider all additional configured safety-related and standard communication connections (transfer areas of type F-CD and CD) for the maximum limit of 1440 bytes of input data or 1440 bytes of output data for transfer between an I-device and an IO controller. In addition, data are assigned for internal purposes such that the maximum limit may be reached sooner.

When the limit is exceeded, a corresponding error message is displayed.

9.1.5 Safety-related master-I-slave communication

9.1.5.1 Configuring safety-related master-I-slave communication

Introduction

Safety-related communication between the safety program of the F-CPU of a DP master and the safety program(s) of the F-CPU(s) of one or more I-slaves takes place over master-I-slave connections (**F-**MS), as in standard systems.

You do not need a DP/DP coupler for master-I-slave communication.

Configuring transfer areas

For every safety-related communication connection between two F-CPUs, you must configure transfer areas in the *hardware and network editor*. The figure below shows how both of the F-CPUs are able to send and receive data (bidirectional communication).

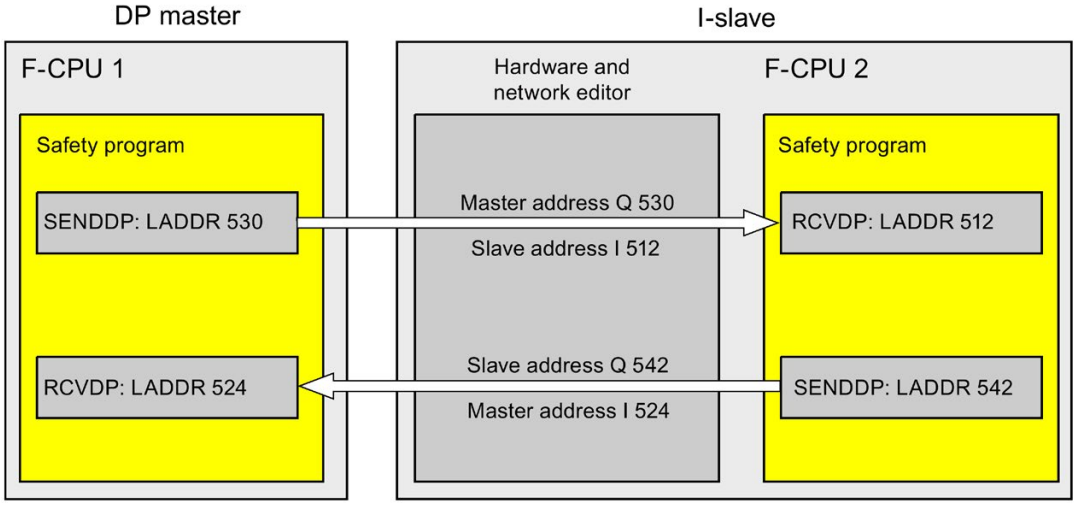

The transfer area is assigned a label when it is created to identify it as the communication relationship. For example, "F-MS_PLC_2-PLC_1_1" for the first F-MS connection between DP master F-CPU 1 and I-slave F-CPU 2.

You assign the start addresses of the transfer areas to the LADDR input of the SENDDP and RCVDP instructions in the safety programs.

Procedure for configuration

The procedure for configuring safety-related master-I-slave communication is identical to that in the standard system.

Proceed as follows:

1. Insert two F-CPUS from the "Hardware catalog" task card into the project.
2. Activate the "DP slave" mode (I-slave) for F-CPU 2 in the properties of its DP interface and assign this DP interface to a DP interface of F-CPU 1.
3. Select the PROFIBUS interface of F-CPU 2. Under "Transfer areas", you create an F-MS connection (type "F-MS") for sending to the DP master (←). The F-MS connection is shown in yellow in the table and the transfer areas in the I-slave and DP master assigned outside of the process image are displayed.

   In addition, an acknowledgment connection is created automatically for each F-MS connection. (see "Transfer area details").

4. Create an additional F-MS connection for receiving from the DP master.
5. In the transfer area you just created, click the arrow in order to change the transfer direction to receiving from DP master (→).

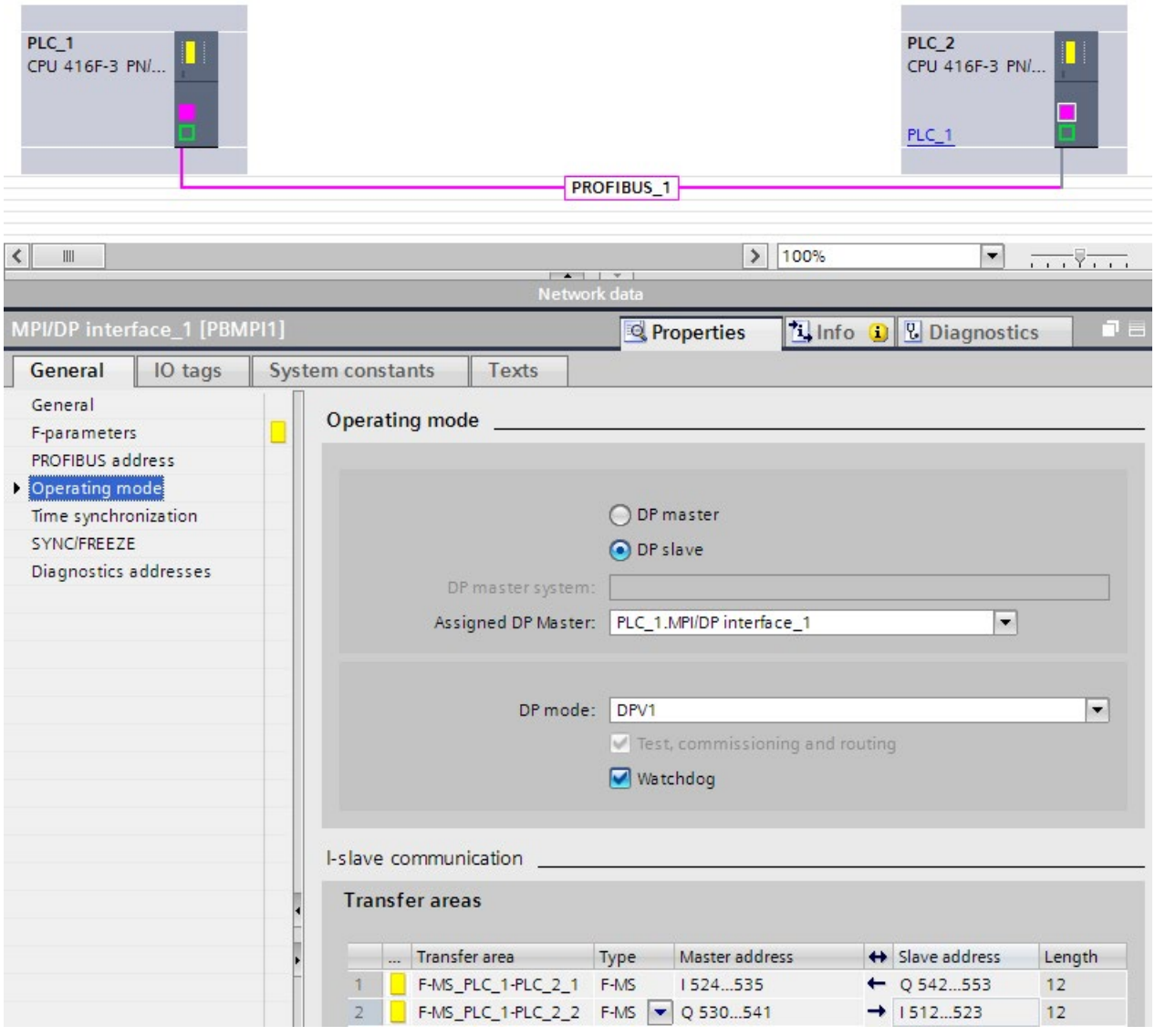

9.1.5.2 Safety-related master-I-slave or I-slave-I-slave communication via SENDDP and RCVDP

Communication via SENDDP and RCVDP instructions

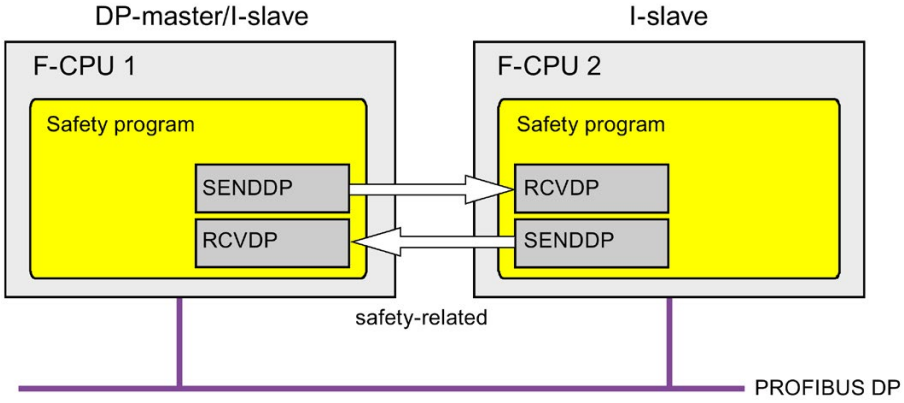

Safety-related communication between the F-CPUs of the DP master and an I-slave or between the F-CPUs of multiple I-slaves makes use of the SENDDP and RCVDP instructions for sending and receiving, respectively. These can be used to perform a fail-safe transfer of a *fixed* amount of fail-safe data of the data type INT or BOOL.

You can find these instructions in the "Instructions" task card under "Communication". The RCVDP instruction **must** be called at the start of the main safety block. The SENDDP instruction **must** be called at the end of the main safety block.

Note that the send signals are not sent until after the SENDDP instruction call at the end of execution of the relevant F-runtime group.

A detailed description of the SENDDP and RCVDP instructions can be found in SENDDP and RCVDP: Send and receive data via PROFIBUS DP/PROFINET IO (STEP 7 Safety V15.1) (Page 588).

9.1.5.3 Program the safety-related master-I-slave or I-slave-I-slave communication

Requirements

The transfer areas must be configured.

Programming procedure

The procedure for programming safety-related master-I-slave communication or I-slave-I-slave communication is the same as that for programming safety-related master-master communication (see Program safety-related master-master communication (Page 218)).

The assignment of the start addresses of the transfer areas to the LADDR input of the SENDDP/RCVDP instructions can be obtained from the following table.

Instruction	Start address LADDR	
	From row	From column
SENDDP in the DP master	→	Master address
RCVDP in the DP master	←	Master address
SENDDP in the I-slave	←	Slave address
RCVDP in the I-slave	→	Slave address

The figure below contains an example of how to specify the F-communication IDs at the inputs of SENDDP and RCVDP instructions for four safety-related master-I-slave and two I-slave-I-slave communications relationships.

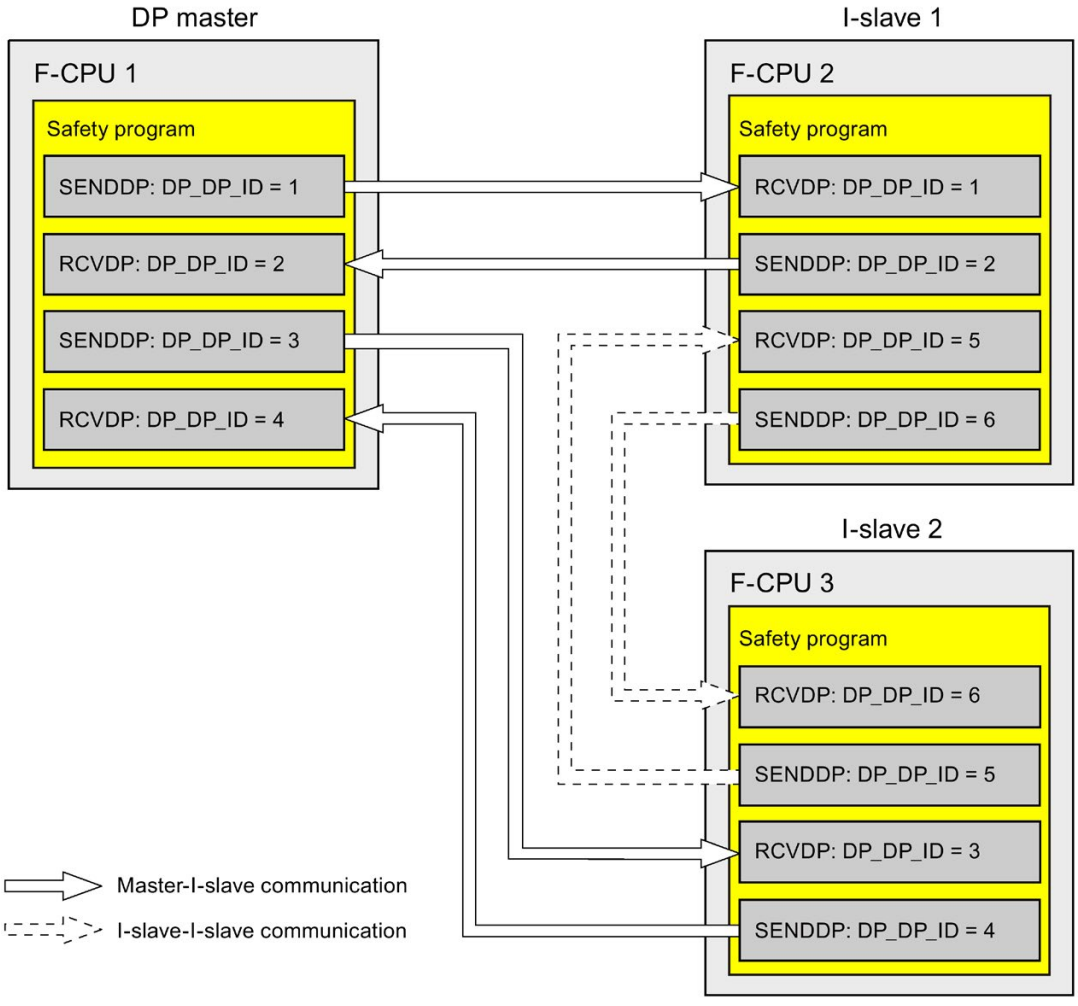

WARNING

The value for the respective F-communication ID (input DP_DP_ID; data type: INT) can be freely selected; however, it must be unique for all safety-related communication connections network-wide* and CPU-wide at all times. The uniqueness must be checked in the safety summary during acceptance of the safety program. You can find additional information in Correctness and completeness of the communication configuration (Page 374).

You must supply inputs DP_DP_ID and LADDR with constant values when calling the instruction. Direct write accesses in the associated instance DB to DP_DP_ID and LADDR are not permitted in the safety program! *(S016)*

* A network consists of one or more subnets. "Network-wide" means beyond the boundaries of the subnet. In PROFIBUS, a network includes all nodes accessible via PROFIBUS DP. In

PROFINET IO, a network includes all nodes accessible via RT_Class_1/2/3 (Ethernet/WLAN/Bluetooth, Layer 2) and if applicable RT_Class_UDP (IP, Layer 3).

WARNING

It can only be ensured (from a fail-safe standpoint) that a signal state to be transferred will be acquired at the sender end and transferred to the receiver if the signal level is pending for at least as long as the assigned monitoring time. *(S018)*

Information on calculating the monitoring times can be found in Monitoring and response times (Page 607).

9.1.5.4 Limits for data transfer of safety-related master-I-slave or I-slave-I-slave communication

Limits for data transfer

If the amount of data to be transferred is greater than the capacity of related SENDDP/RCVDP instructions, you can use additional SENDDP/RCVDP instructions. Configure additional transfer areas for this purpose. Note the maximum limit of 244 bytes of input data or 244 bytes of output data for transfer between an I-slave and a DP master.

The following table shows the amount of output and input data assigned in safety-related communication connections:

Safety-related communication	Communication connection	Assigned input and output data					
		DP master		I-slave 1		I-slave 2	
		Output data	Input data	Output data	Input data	Output data	Input data
Master-I-slave	**Sending:** I-slave 1 to DP master	6 bytes	12 bytes	12 bytes	6 bytes	—	—
	Receiving: I-slave 1 from DP master	12 bytes	6 bytes	6 bytes	12 bytes	—	—
I-slave-I-slave	**Sending:** I-slave 1 to I-slave 2	—	18 bytes	12 bytes	6 bytes	6 bytes	12 bytes
	Receiving: I-slave 1 from I-slave 2	—	18 bytes	6 bytes	12 bytes	12 bytes	6 bytes

Consider all additional configured safety-related and standard communication connections (transfer areas of type F-MS-, F-DX-, F-DX-Mod., MS-, DX- and DX-Mod) for the maximum limit of 244 bytes of input data or 244 bytes of output data for transfer between an I-device and a DP master F-MS, F-DX, F-DX-Mod., MS, DX). If the maximum limit of 244 bytes of input data or 244 bytes of output data is exceeded, you will receive a corresponding error message.

9.1.6 Safety-related I-slave-I-slave communication

9.1.6.1 Configure safety-related I-slave-I-slave communication

Introduction

Safety-related communication between the safety program of the F-CPUs of I-slaves takes place using direct data exchange (**F-**DX) – same as in standard programs.

You do not need any additional hardware for I-slave-I-slave communication.

I-slave-I-slave communication is also possible:

- If the assigned DP master is a standard CPU that supports direct data exchange
- when instead of a DP master, an IO controller is networked with the I-slaves via an IE/PB link

Configuring transfer areas

For every safety-related communication connection between two I-slaves, you must configure transfer areas in the *hardware and network editor*. In the figure below, both of the I-slaves are to be able to send and receive data (bidirectional communication).

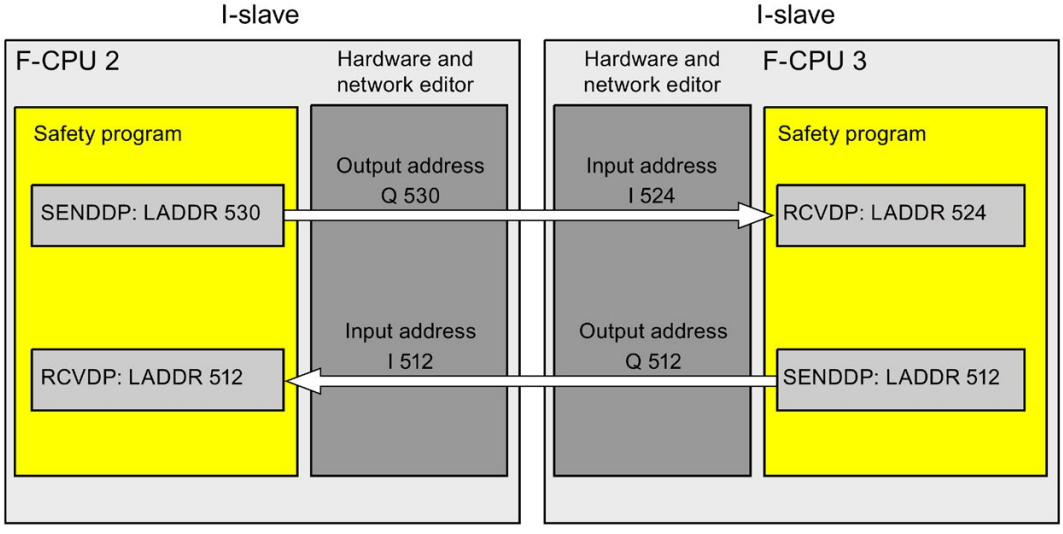

The transfer area is assigned a label when it is created to identify it as the communication relationship. For example, "F-DX_PLC_2-PLC_1_1" for the first F-DX connection between F-CPU 1 and F-CPU 2.

You assign the start addresses of the transfer areas to the LADDR input of the SENDDP and RCVDP instructions in the safety programs.

Procedure for configuration

The procedure for configuring safety-related I-slave-I-slave communication is identical to that in the standard system. Proceed as follows:

1. Insert three F-CPUS from the "Hardware catalog" task card in the project.
2. Activate "DP slaves" mode (I-slave) for F-CPU 2 and F-CPU 3 in the properties of their DP interfaces and assign these DP interfaces to a DP interface of F-CPU 1.
3. Select the DP interface of F-CPU 3 in the network view.
4. Select the "I/O communication" tab.
5. Use a drag-and-drop operation in the network view to move F-CPU 2 to the "Partner 2" column on the "I/O-communication" tab.

   This creates a line with "Direct data exchange" mode for sending to the I-slave (F-CPU 2) (→).

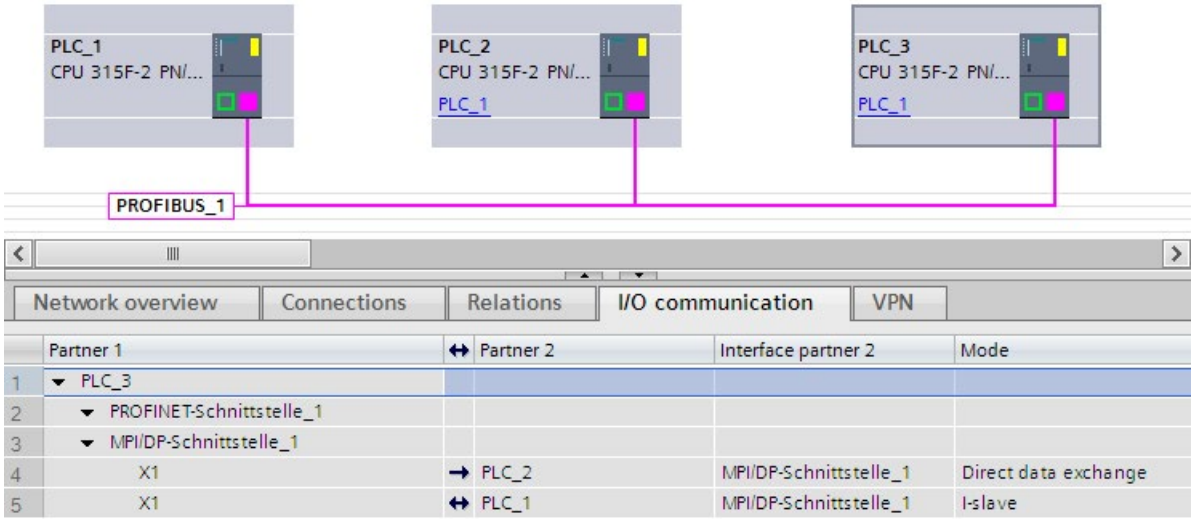

6. Click in the newly created line (→).

7. In "Transfer areas" ("Direct data exchange" table), create an F-DX connection (type "F-DX") for sending to the I-slave (F-CPU 2) (→). The F-DX connection is shown in yellow in the table and the transfer areas in the I-slaves assigned outside of the process image (PLC_2 and PLC_3) are displayed.

   In addition, a line with "Direct data exchange" mode for receiving from the I-slave (F-CPU 2) (→) is created automatically in the "I/O communication" tab, and an acknowledgment connection (←, transfer area x_Ack) is created automatically in the associated "Direct data exchange" table.

   One transfer area (type F-MS) for the master CPU (disabled in display) is created for in the "I-slave communication table" of each I-slave.

   This completes the configuration for sending to F-CPU 2.

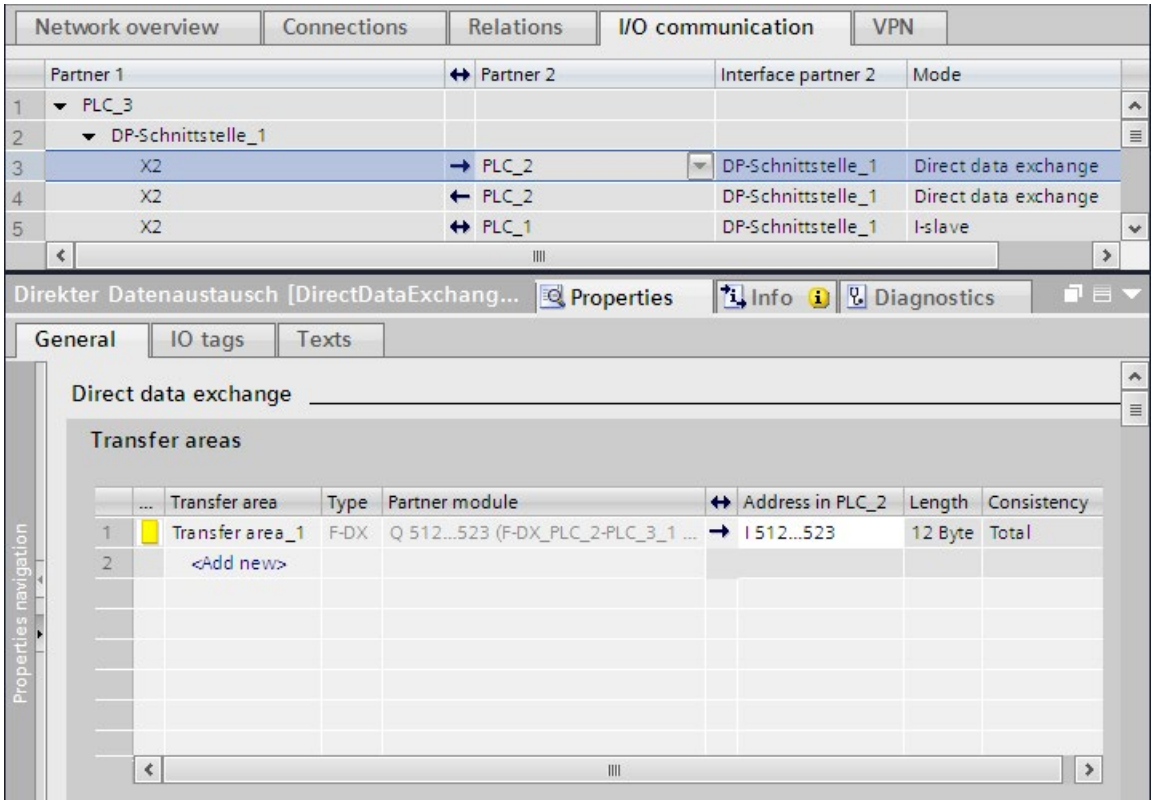

8. In the "I/O communication" tab, select the automatically created line with "Direct data exchange" mode for receiving from the I-slave (F-CPU 3) (←).
9. In "Transfer areas" ("Direct data exchange" table), create another F-DX connection for receiving from the I-slave (F-CPU 3).

   In this case, as well, an acknowledgment connection (←, transfer area x_Ack) is created automatically in the "Direct data exchange table" and two transfer areas (type F-MS) for the master CPU (disabled in display) are created in the "I-slave communication" table of both I-slaves.

   This completes the configuration for receiving from F-CPU 2.

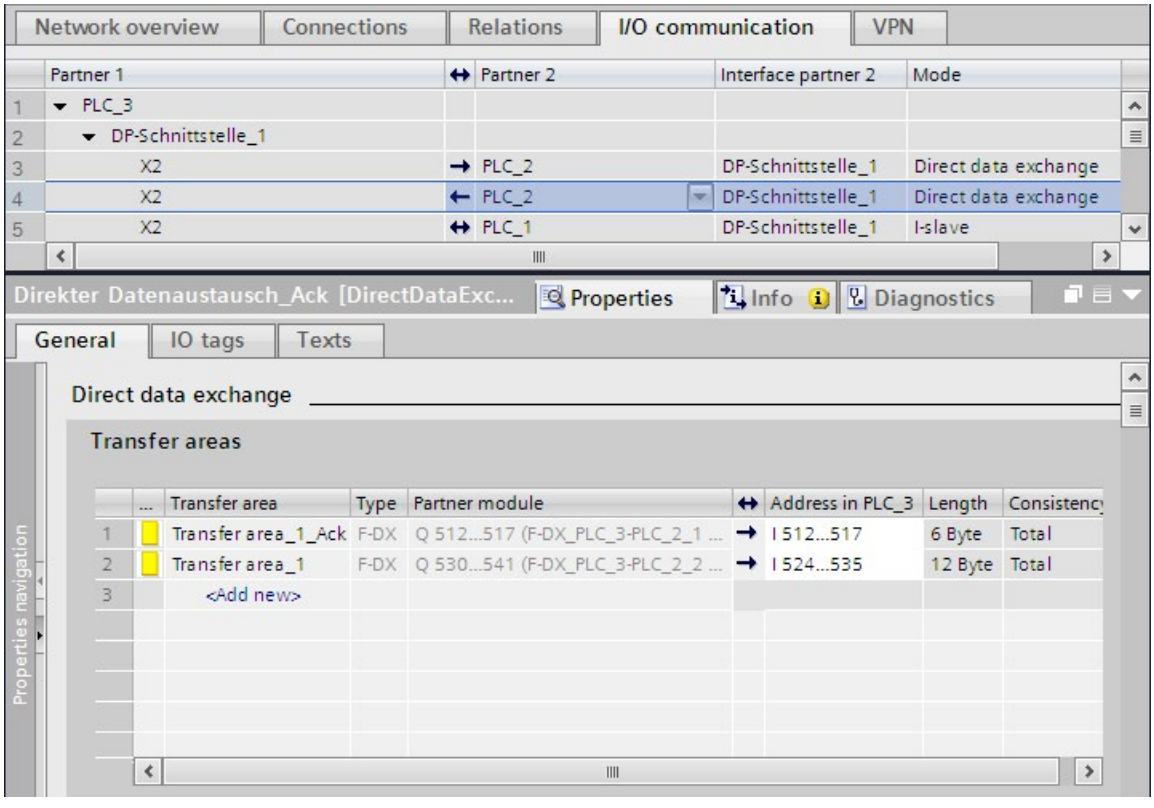

Changing disabled local address areas of the transfer areas

In order to change the disabled local address area of "Transfer area x", you must change the address area of the corresponding acknowledgment connection "Transfer area x_Ack".

1. In "I/O communication", select the line with the arrow pointing in the same direction as the arrow of "Transfer area x" in the "Direct data exchange" table.
2. Then select the line with "Transfer area x_Ack" in the "Direct data exchange" table.
3. Change the address area there.

9.1.6.2 Safety-related I-slave-I-slave communication via SENDDP and RCVDP

Reference

The description of the communication via SENDDP and RCVDP for safety-related I-slave-I-slave communication can be found in SENDDP and RCVDP: Send and receive data via PROFIBUS DP/PROFINET IO (STEP 7 Safety V15.1) (Page 588).

9.1.6.3 Programming safety-related I-slave-I-slave communication

Reference

The description of the programming of safety-related I-slave-I-slave communication can be found in Program the safety-related master-I-slave or I-slave-I-slave communication (Page 233).

The assignment of the start addresses of the transfer areas to the LADDR input of the SENDDP/RCVDP instructions can be obtained from the following table.

Instruction	Start address LADDR	
	From row	From column
SENDDP in the 1st I-slave	→	Address in the <1st I-slave> (in example column "Address in PLC_2")
RCVDP in the 1st I-slave	←	Address in the <1st I-slave> (in example column "Address in PLC_2")
SENDDP in the 2nd I-slave	←	Address in the <2nd I-slave> (in example column "Address in PLC_3")
RCVDP in the 2nd I-slave	→	Address in the <2nd I-slave> (in example column "Address in PLC_3")

9.1.6.4 Limits for data transfer of safety-related I-slave-I-slave communication

Limits for data transfer

The description of the limits for the data transfer of safety-related I-slave-I-slave communication can be found in Limits for data transfer of safety-related master-I-slave or I-slave-I-slave communication (Page 235).

9.1.7 Safety-Related I-Slave-Slave Communication

9.1.7.1 Configuring Safety-Related I-Slave-Slave Communication

Introduction

Safety-related communication between the safety program of the F-CPU of an I-slave and F-I/O in a DP slave takes place using direct data exchange (**F-**DX-Mod), same as in standard programs.

You do not need any additional hardware for I-slave-slave communication.

I-slave-slave communication is also possible:

- when the assigned DP master is a standard CPU, if the standard CPU supports direct data exchange
- when instead of a DP master, an IO controller is networked with the I-slaves via an IE/PB link

An F-I/O DB is automatically generated for each F-I/O when it is configured in the *hardware and network editor*; this is required for the F-I/O access via safety-related I-slave-slave communication. The F-I/O DB is initially created in the safety program of the DP master, provided it is an F-CPU with F-activation. Only with the setup of the F-DX-Mod connection is the F-I/O DB created in the safety program of the I-slave and deleted in the safety program of the DP master.

The process image input is used to access the channels of the F-I/O in the safety program of the F-CPU of the I-slave (see description in Safety-Related I-Slave-Slave Communication - F-I/O Access (Page 246)).

Restrictions

Note

Safety-related I-slave-slave communication with F-I/O is possible in a DP slave that supports safety-related I-slave-slave communication, for example with all ET 200SP F-modules with IM 155-6 DP HF, firmware version > V3.1, with all ET 200S F-modules with IM 151-1 HF, with all fail-safe S7-300 signal modules with IM 153-2, as of article number 6ES7153-2BA01-0XB0, firmware version > V4.0.0.

Note

With safety-related I-slave-slave communication, make sure that the CPU of the DP master is powered up before the F-CPU of the I-slave.

Otherwise, depending on the F-monitoring time specified for the F-I/O, the F-system can detect an error in safety-related communication (communication error) between the F-CPU and the F-I/O assigned to the I-slave. This means that the F-I/O are not reintegrated automatically after F-system startup. They are instead only reintegrated after a user acknowledgment with a positive edge in the ACK_REI tag of the F-I/O DB (see also After communication errors (Page 178) and After startup of F-system (Page 175)).

Configuring transfer areas

For every safety-related communication connection between an I-slave and slave, you must configure transfer areas in the *hardware and network editor*.

The transfer area is assigned a label when it is created to identify it as the communication relationship. For example, "F-DX-Mod_PLC_2-PLC_1_1" for the first F-DX-Mod connection between F-CPU 1 and F-CPU 2.

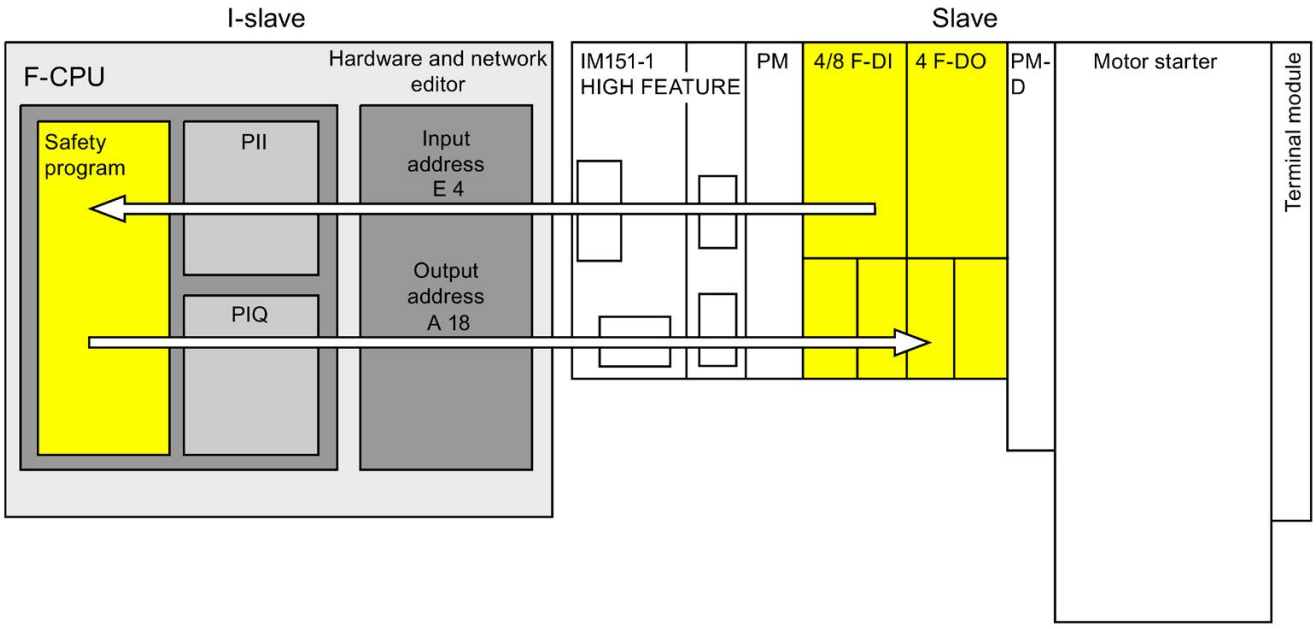

Configuration procedure using the example of an ET 200S with F-modules in the slave

The procedure for configuring safety-related I-slave-slave communication is identical to that in the standard system.

Proceed as follows:

1. Insert two F-CPUS from the "Hardware catalog" task card into the project.
2. Insert a suitable DP slave, e.g. IM 151-1 HF, article no. 6ES7151-1BA0... from the "Hardware catalog" task card into the network view of the *hardware and network editor*.
3. Insert a power module, a 4/8 F-DI module and a 4 F-DQ module in the device view of the ET 200S.
4. Activate "DP slave" mode (I-slave) for F-CPU 2 in the properties of its DP interface and assign this to F-CPU 1.
5. Assign the DP interface of the IM 151-1 HF to the DP master (F-CPU 1).
6. Select the DP interface of F-CPU 2 (I-slave) in the network view.
7. Select the "I/O communication" tab.
8. Use a drag-and-drop operation in the network view to move the ET 200S to the "Partner 2" column in the "I/O-communication" tab.

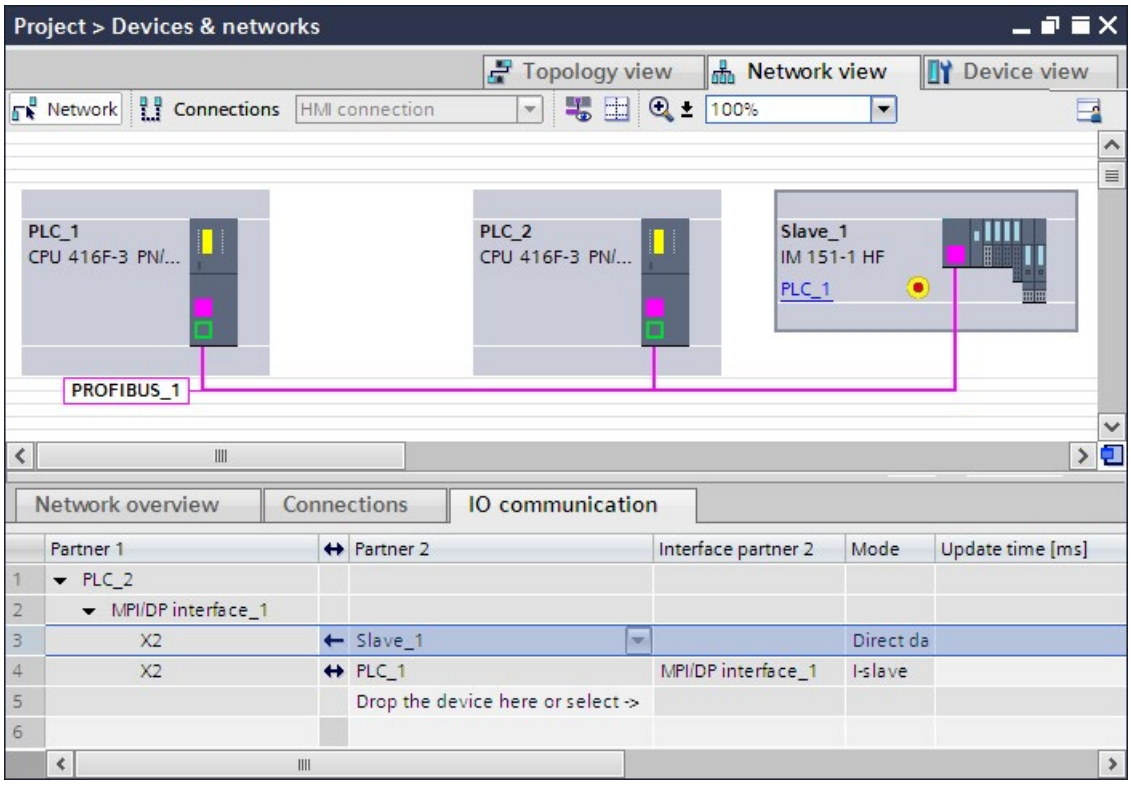

9. Click in the newly created line (←).

10. In "Transfer areas", create an F-DX-Mod connection (type "F-DX-Mod"). The F-DX-Mod connection is marked in yellow in the table. The addresses for the "partner module" 4/8 F-DI in the I-Slave (PLC_2) are displayed. You can change the addresses directly in the table, if required.

    This completes the configuration for the 4/8 F-DI module.

11. In "Transfer areas", create another F-DX-Mod connection.

12. Change the partner module to the 4 F-DO module, either directly in the "Transfer areas" table or in the details of transfer area 2, if the 4 F-DO module was not already selected.

    This completes the configuration for the 4 F-DO module.

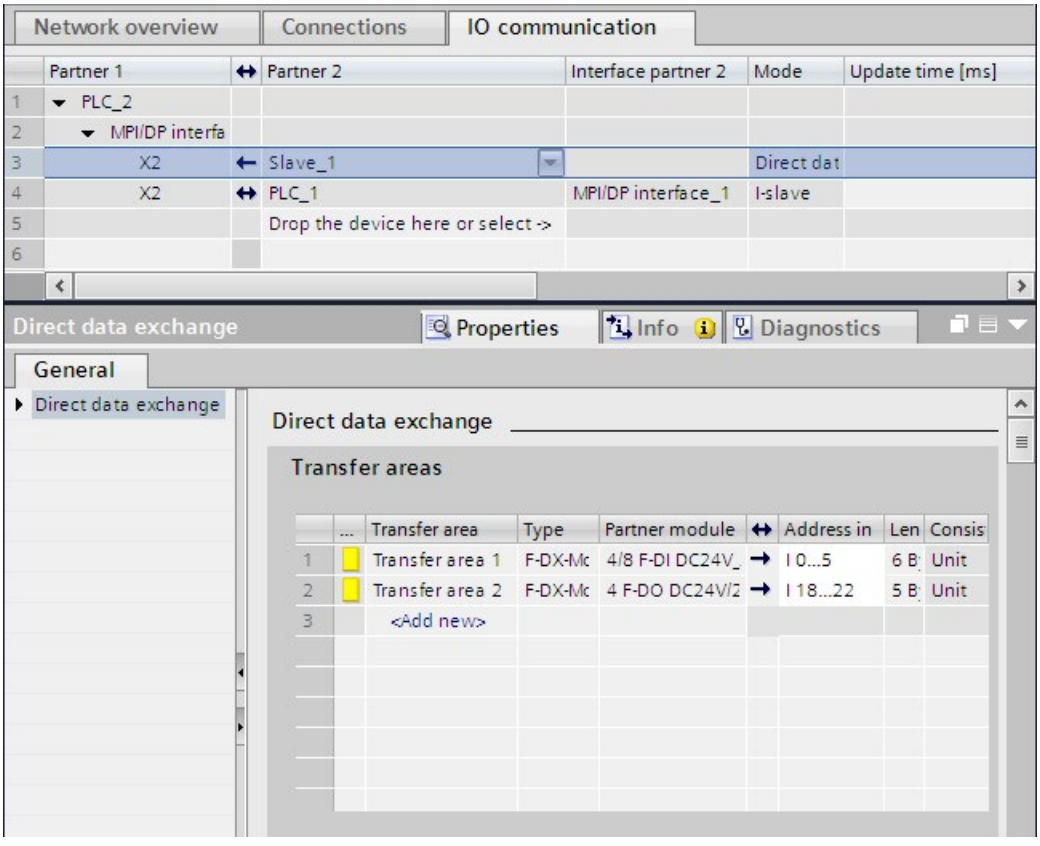

In the "I-slave communication table" of the I-slave, a transfer area (type F-MS) for the master CPU (disabled in display) is created for each F-DX-Mod connection:

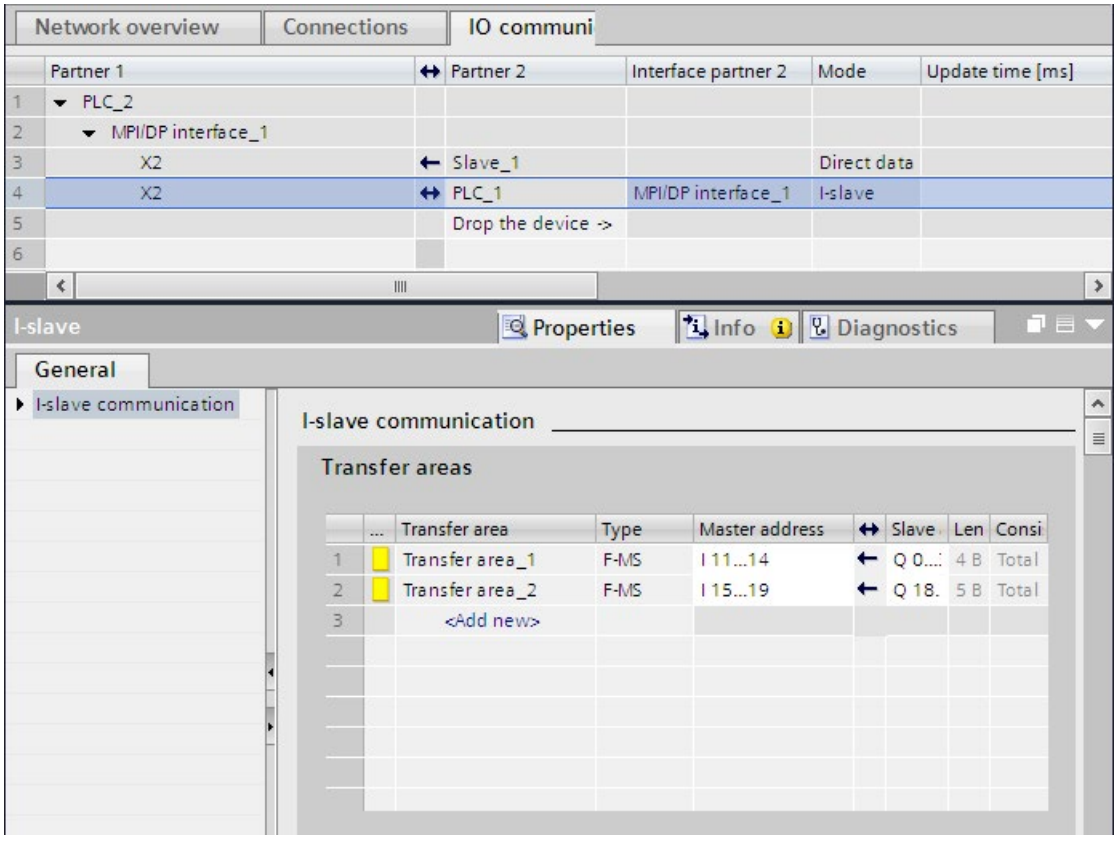

Change in configuration of I-slave-slave communication

WARNING

If you have reconfigured I-slave-slave communication for an F-I/O or have deleted an existing I-slave-slave communication, you must compile the hardware configuration of the DP master as well as the hardware configuration of the I-slave and download them to the DP master and I-slave, respectively.

The collective F-signature in the F-CPU of the I-slave and the collective F-signature in the F-CPU of the DP master (if a safety program exists there, too) are set to "0". You must then recompile the safety program(s). *(S019)*

9.1.7.2 Safety-Related I-Slave-Slave Communication - F-I/O Access

Access via the process image

In safety-related I-slave-slave communication, you use the process image (PII or PIQ) to access the F-I/O in the safety program of the F-CPU of the I-slave. This is the same as F-I/O access to F-I/O that are directly assigned to an I-slave or DP master. In the I-slave you access the F-I/O with the addresses that were assigned for the F-DX-Mod connection in "Transfer areas" ("Direct data exchange" table).

In this case, ignore the displayed operand area. Access F-I/O with inputs using the PII and F-I/O with outputs using PIQ.

Information on I/O access can be found in F-I/O access (Page 157).

9.1.7.3 Limits for data transfer of safety-related I-slave-I-slave communication

Limits for data transfer

Note the maximum limit of 244 bytes of input data or 244 bytes of output data for transfer between an I-slave and a DP master.

An example of the amount of output data and input data that are assigned for safety-related communication is shown in the table below for an ET 200S 4/8 F-DI and an ET 200S 4 F-DO:

Safety-related communication	Communication connection	Assigned input and output data*	
		Between I-slave and DP master	
		Output Data in the I-slave	Input data in the I-slave
I-slave-slave	I-slave-slave communication with 4/8 F-DI	4 bytes	6 bytes
	I-slave-slave communication with 4 F-DO	5 bytes	5 bytes

* Example for 4/8 F-DI and 4 F-DO of ET 200S

Consider all additional configured safety-related and standard communication connections (F-MS, F-DX, F-DX-Mod., MS and DX connections) for the maximum limit of 244 bytes of input data or 244 bytes of output data for transfer between an I-slave and a DP master. If the maximum limit of 244 bytes of input data or 244 bytes of output data is exceeded, you will receive a corresponding error message.

9.1.8 Safety-related IO controller-I-slave communication

Introduction

Safety-related communication between the safety program of the F-CPU of an IO-controller and the safety program(s) of the F-CPU(s) of one or more I-slaves takes place over master -I-slave connections (**F-**MS), as in standard systems.

IE/PB link

For the safety-related IO-controller-I-slave communication, the IE/PB link is mandatory. Each of the two F-CPUs is linked to the IE/PB link by means of its PROFIBUS DP or PROFINET-interface.

Note

If you are using an IE/PB link, you must take this into account when configuring the F-specific monitoring times and when calculating the maximum response time of your F-system (see also Monitoring and response times (Page 607)).

Note that the Excel file for calculating response times (http://support.automation.siemens.com/WW/view/en/49368678/133100) for S7-300/400 F-CPUs does not support all conceivable configurations.

Reference

The information on safety-related master-I-slave communication in Safety-related master-I-slave communication (Page 229) also applies.

9.1.9 Safety-related communication via S7 connections

9.1.9.1 Configuring safety-related communication via S7 connections

Introduction

Safety-related communication between the safety programs of F-CPUs via S7 connections takes place by means of established S7 connections that you create in the network view of the *hardware and network editor* - same as in standard programs.

Restrictions

Note

In SIMATIC Safety, S7 connections are generally permitted only via Industrial Ethernet.

Safety-related communication via S7 connections is possible from and to the following CPUs:

- S7-300 F-CPUs via the integrated PROFINET interface
- S7-400 F-CPUs via the integrated PROFINET interface or a CP 443-1 or CP 443-1 Advanced-IT

Creating S7 connections

For each connection between two F-CPUs, you must create an S7 connection in the network view of the *hardware and network editor*.

For every end-point of a connection, a local and a partner ID is automatically assigned from the perspective of the end-point (the F-CPU). If necessary, you can change both IDs in the "Connections" tab. You assign the local ID to the "ID" input of the SENDS7 and RCVS7 instructions in the safety programs.

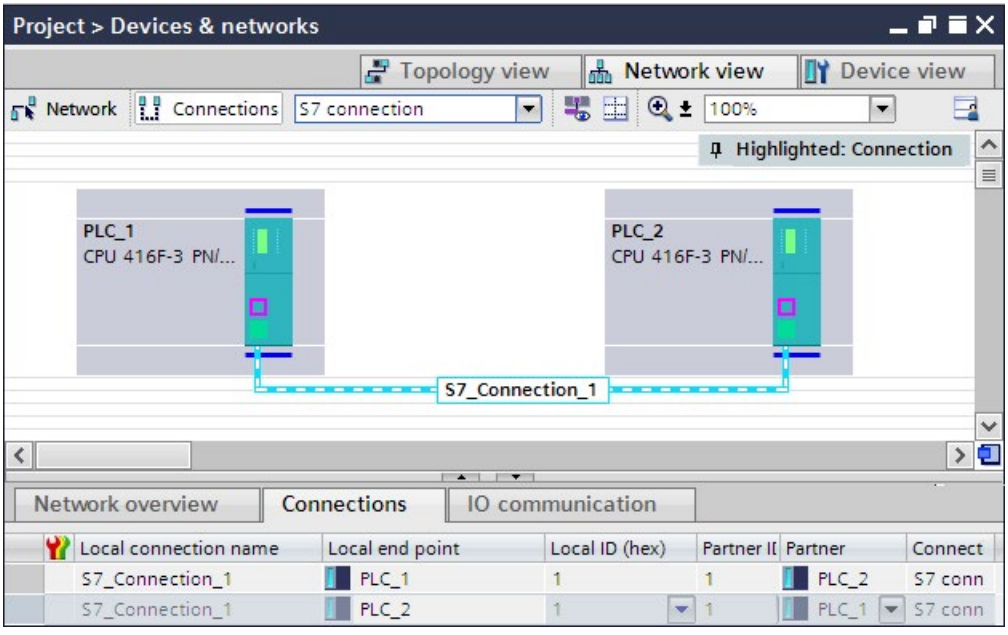

Procedure for configuring S7 connections

You configure the S7 connections for safety-related CPU-to-CPU communication in the same way as in *STEP 7 Professional* (see *Help on STEP 7 Professional* "S7 connections").

9.1.9.2 Communication via SENDS7, RCVS7, and F-Communication DB

Communication via the SENDS7 and RCVS7 instructions

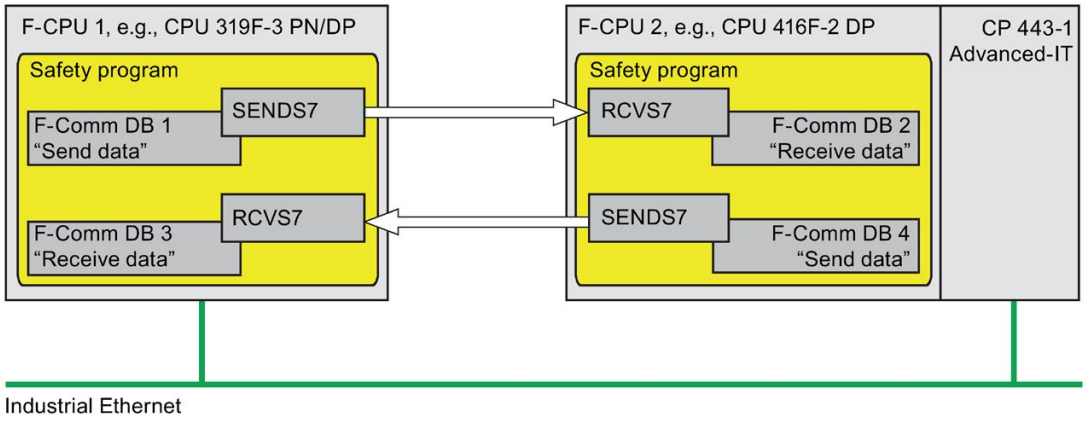

You use the **SENDS7 and RCVS7** instructions for fail-safe sending and receiving of data via S7 connections.

These instructions can be used to transmit a specified amount of fail-safe data of data types BOOL, INT, WORD, DINT, DWORD, and TIME in a fail-safe manner. The fail-safe data are stored in F-DBs (F-communication DBs) that you have created.

You can find these instructions in the "Instructions" task card under "Communication". The RCVS7 instruction **must** be called at the start of the main safety block. The SENDS7 instruction **must** be called at the end of the main safety block.

Note that the send signals are sent only after calling the SENDS7 instruction at the end of the relevant F-runtime group execution.

A detailed description of the SENDS7 and RCVS7 instructions is found in SENDS7 and RCVS7: Communication via S7 connections (STEP 7 Safety Advanced V15.1) (S7-300, S7-400) (Page 599).

F-communication DB

For each connection, send data are stored in an F-DB (F-communication DBx) and receive data are stored in an F-DB (F-communication DBy).

You can assign the F-communication DB numbers in the SENDS7 and RCVS7 instructions.

9.1.9.3 Programming safety-related communication via S7 connections

Introduction

The programming of safety-related CPU-CPU communication via S7 connections is described below. You must set up the following in the safety programs of the relevant F-CPUs:

- Create F-DBs (F-Communication-DBs) in which send/receive data for communication are stored.
- Call and assign parameters for instructions for communication from the "Instructions" Task Card in the safety program.

Requirement for programming

The S7 connections between the relevant F-CPUs must be configured in the network view in the "Connections" tab of the *hardware and network editor*.

Creating and Editing an F-Communication DB

F-communication DBs are F-DBs that you create and edit in the same way as other F-DBs in the project tree. You can assign the F-communication DB numbers in the SENDS7 and RCVS7 instructions.

Note

The length and structure of the F-communication DB on the receiver side must match the length and structure of the associated F-communication DB on the sender side.

If the F-communication DBs do not match, the F-CPU can go to STOP mode. A diagnostics event is entered in the diagnostics buffer of the F-CPU.

For this reason, we recommend that you use the following procedure:

1. Create an F-communication DB in the project tree in or below the "Program blocks" folder of the F-CPU at the sender end.
2. Specify the appropriate structure of the F-communication DB, taking into account the data to be transferred.
3. Copy this F-communication DB to the project tree in or below the "Program blocks" folder of the F-CPU at the receiver end, and change the name, if necessary.

Other requirements for F-communication DBs

F-communication DBs must also conform to the following properties:

- They are not permitted to be instance DBs.
- Their length is not permitted to exceed 100 bytes.
- In F-communication DBs, only the following data types may be declared: BOOL, INT, WORD, DINT, DWORD, and TIME.
- The data types must be arranged block-wise and in the following order: BOOL, data types with bit length of 16 bits (INT, WORD), and data types with bit length of 32 bits (DINT, DWORD, and TIME). Within the data blocks with lengths of 16 bits and 32 bits, the data types can be arranged in any order.
- No more than 128 data elements of data type BOOL are permitted to be declared.
- The amount of data of data type BOOL must always be an integer multiple of 16 (word limit). Reserve data must be added, if necessary.

If these criteria are not fulfilled, *STEP 7 Safety Advanced* outputs an error message during compilation.

Assignment of fail-safe values

Fail-safe values are made available at the receiver end:

- While the connection between the communication partners is being established the first time after startup of the F-systems
- Whenever a communication error occurs

The values you specified as initial values in the F-communication DB at the receiver end are made available as initial values.

Programming procedure

You program safety-related communication via S7 connections as follows:

1. Supply the tags in the F-communication DB at the sender end with send signals using fully qualified access (e.g., "Name of F-communication DB".tag name).
2. Read the tags in the F-communication DB at the receiver end (receive signals) that you want to process further in other sections of the program using fully qualified access (e.g., "Name of F-communication DB".tag name).
3. In the safety program from which data are to be sent, call the SENDS7 instruction for sending at the end of the main safety block.
4. In the safety program in which data are to be received, call the instruction RCVS7 for receiving at the start of the main safety block.
5. Assign F-communication DB numbers to the SEND_DB input of SENDS7 and the RCV_DB input of RCVS7.
6. Assign the local ID of the S7 connection (data type: WORD) from the perspective of the F-CPU that was configured in the "Connections" tab of the network view to the ID input of SENDS7.

7. Assign the local ID of the S7 connection (data type: WORD) that was configured in the "Connections" tab of the network view to the ID input of RCVS7.
8. Assign an odd number (data type: DWORD) to the R_ID inputs of SENDS7 and RCVS7. This serves to specify that a SENDS7 instruction belongs to an RCVS7 instruction. The associated instructions receive the same value for R_ID.

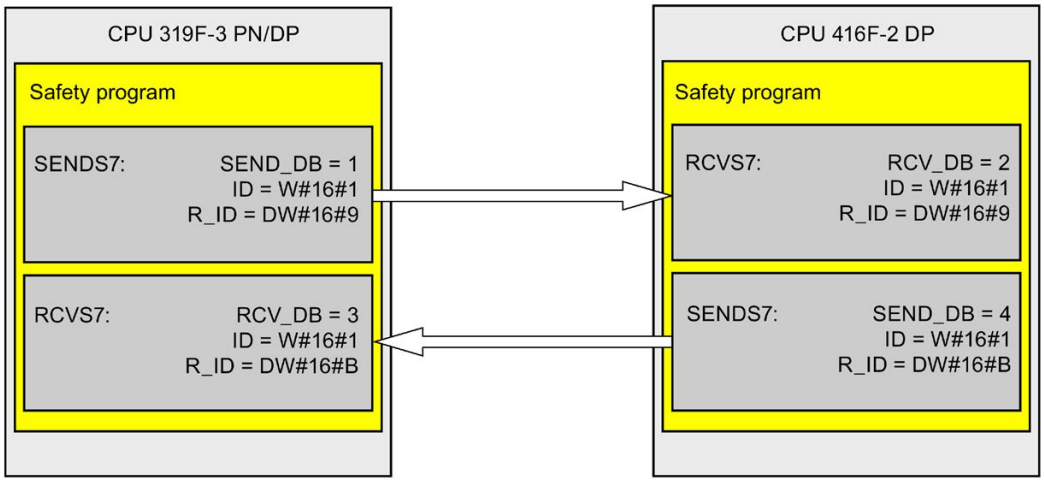

WARNING

The value for the respective F-communication ID (input R_ID; data type: DWORD) can be freely selected; however, it must be odd for all safety-related communication connections network-wide* and CPU-wide. The value R_ID + 1 is internally assigned and must not be used.

You must supply inputs ID and R_ID with constant values when calling the instruction. Direct read or write access to the associated instance DB is not permitted in the safety program. *(S020)*

* A network consists of one or more subnets. "Network-wide" means beyond the boundaries of the subnet. In PROFIBUS, a network includes all nodes accessible via PROFIBUS DP. In PROFINET IO, a network includes all nodes accessible via RT_Class_1/2/3 (Ethernet/WLAN/Bluetooth, Layer 2) and if applicable RT_Class_UDP (IP, Layer 3).

9. Assign the TIMEOUT inputs of the SENDS7 and RCVS7 instructions with the required monitoring time.

WARNING

It can only be ensured (from a fail-safe standpoint) that a signal state to be transferred will be acquired at the sender end and transferred to the receiver if the signal level is pending for at least as long as the assigned monitoring time. *(S018)*

Information on calculating the monitoring times can be found in Monitoring and response times (Page 607).

10. To reduce the bus load, you can temporarily shut down communication between the F-CPUs at input EN_SEND of the SENDS7 instruction. To do so, supply input EN_SEND (initial value = "TRUE") with 0. In this case, send data are no longer sent to the F-communication DB of the associated RCVS7 instruction and the receiver RCVS7 provides fail-safe values for this period (initial values in its F-communication DB). If communication was already established between the partners, a communication error is detected.
11. Optional: Evaluate the ACK_REQ output of RCVS7, for example, in the standard user program or on the HMI system in order to query or to indicate whether user acknowledgment is required.
12. Supply the ACK_REI input of RCVS7 with the signal for the acknowledgment for reintegration.
13. Optional: evaluate the SUBS_ON output of RCVS7 or SENDS7 in order to query whether the RCVS7 instruction is outputting the fail-safe values you specified as initial values in the F-communication DB.
14. Optional: Evaluate the ERROR output of RCVS7 or SENDS7, for example, in the standard user program or on the HMI system in order to query or to indicate whether a communication error has occurred.
15. Optional: evaluate the SENDMODE output of RCVS7 in order to query whether the F-CPU with the associated SENDS7 instruction is in disabled safety mode (Page 344).

Particularities for migrated projects

If you have migrated a project from *S7 Distributed Safety V5.4 SP5* to *STEP 7 Safety Advanced* in which safety-related communication via S7 connections is programmed, you must note the following:

- Do not delete migrated instance DBs for the SENDS7 and RCVS7 instructions in the project tree in the "STEP 7 Safety" folder under "Program blocks > System blocks".

Otherwise, communication errors may occur in the relevant communication connections.

A migrated instance DB for the SENDS7 and RCVS7 instructions has been deleted if, after compiling the safety program, the "User-defined ID" in the newly generated is not identical to "FRCVS7CL" or "FSNDS7CL".

You can find the "User-defined ID" of a block in its properties in the "Information" area.

9.1.9.4 Safety-related communication via S7 connections - Limits of data transfer

Note

If the amount of data to be transmitted exceeds the permitted length for the F-communication DB (100 bytes), you can create another F-communication DB that you transfer to additional SENDS7/RCVS7 instructions with modified R_ID.

Note that USEND and URCV instructions are called internally at each SENDS7 or RCVS7 call and use connection resources in the F-CPU. This affects the maximum number of communication connections available (*see manuals for F-CPUs*).

Additional information on the data transfer limits for S7 connections of individual F-CPUs is available on the Internet (http://support.automation.siemens.com/WW/view/en/38549114).

9.1.10 Safety-related communication with other S7 F-systems

9.1.10.1 Introduction

Safety-related communication from F-CPUs in SIMATIC Safety to F-CPUs in S7 Distributed Safety F-systems is possible via a PN/PN coupler or DP/DP coupler that you use between the two F-CPUs as IO controller-IO controller communication, master-master communication or communication via established S7 connections.

Safety-related communication from F-CPUs in SIMATIC Safety to F-CPUs in S7 F/FH Systems F-systems is possible via established S7 connections.

9.1.10.2 Communication with S7 Distributed Safety via PN/PN coupler (IO controller-IO controller communication)

Communication functions between SENDDP/RCVDP instructions at the *STEP 7 Safety Advanced* end and F-application blocks F_SENDDP/F_RCVDP at the *S7 Distributed Safety* end:

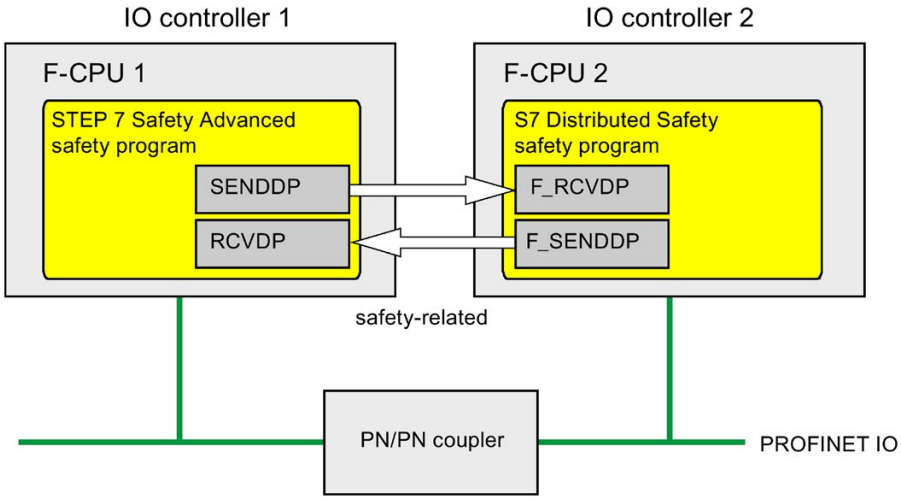

Procedure at the *S7 Distributed Safety* end

At the *S7 Distributed Safety* end, proceed as described in "Safety-related IO controller-IO controller communication" in the S7 Distributed Safety - Configuring and Programming (http://support.automation.siemens.com/WW/view/en/22099875) manual.

Procedure at the *STEP 7 Safety Advanced* end

At the *STEP 7 Safety Advanced* end, proceed as described in Safety-related IO controller-IO controller communication (Page 204).

9.1.10.3 Communication with S7 Distributed Safety via DP/DP coupler (master-master communication)

Communication functions between SENDDP/RCVDP instructions at the *STEP 7 Safety Advanced* end and F-application blocks F_SENDDP/F_RCVDP at the *S7 Distributed Safety* end:

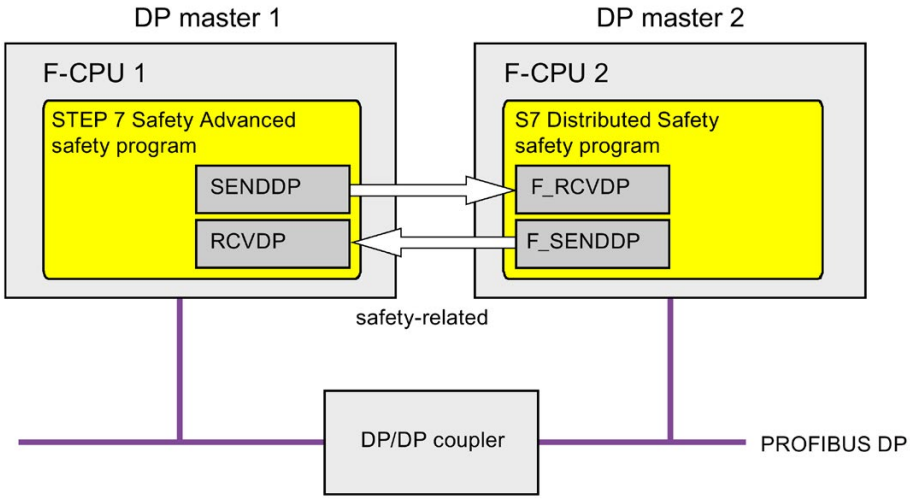

Procedure at the *S7 Distributed Safety* end

At the *S7 Distributed Safety* end, proceed as described in "Safety-related master-master communication" in the S7 Distributed Safety - Configuring and Programming (http://support.automation.siemens.com/WW/view/en/22099875) manual.

Procedure at the *STEP 7 Safety Advanced* end

At the *STEP 7 Safety Advanced* end, proceed as described in Safety-related master-master communication (Page 213).

9.1.10.4 Communication with S7 Distributed Safety via S7 connections

Communication functions between SENDS7/RCVS7 instructions at the *STEP 7 Safety Advanced* end and F_SENDS7/F_RCVS7 F-application blocks at the *S7 Distributed Safety* end:

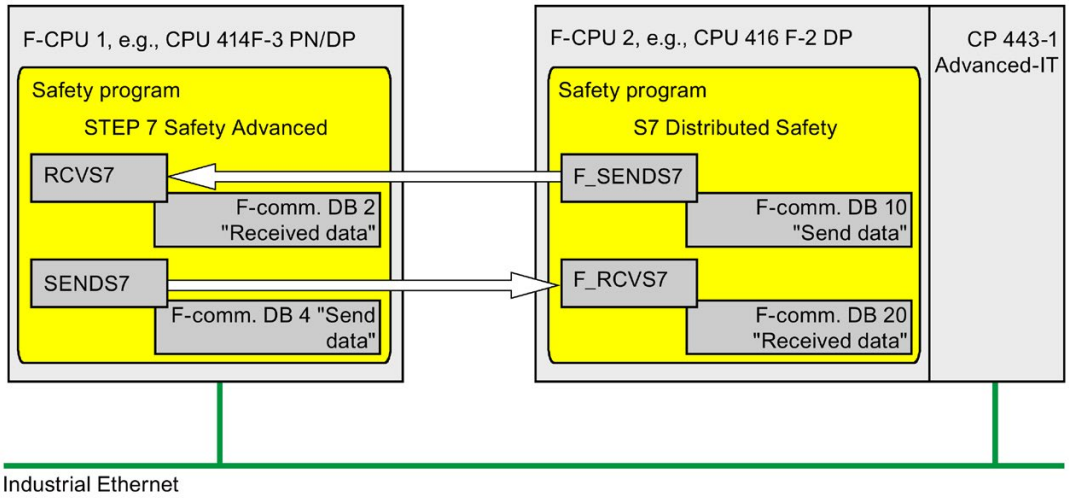

Procedure at the *S7 Distributed Safety* end

At the *S7 Distributed Safety* end, proceed as described in section "Safety-related communication via S7 communications" in the S7 Distributed Safety - Configuring and Programming (http://support.automation.siemens.com/WW/view/en/22099875) manual.

Because safety-related communication via S7 connections is not possible with unspecified partners in S7 Distributed Safety, you must first create a "virtual" SIMATIC station in *S7 Distributed Safety* in which you configure an F-CPU as a proxy for the F-CPU in *STEP 7 Safety Advanced* with its IP address.

You then insert an S7 connection to this F-CPU in the connection table. Both the local connection and partner connection resources (hex) are thereby fixed. You must then set these in the associated, unspecified S7 connection that you created in *STEP 7 Professional*.

In addition, for all communication connections to this F-CPU, you must transfer the F-communication ID that you assigned in the R_ID input of the associated calls of the F_SENDS7 and F_RCVS7 F-application blocks additionally to the CRC_IMP tag in the instance DB of F_SENDS7 and F_RCVS7, respectively, in the standard user program immediately before calling the F-CALL.

Program example:

Network 1: Communication to STEP 7 Safety Advanced: R_ID -> CRC_IMP

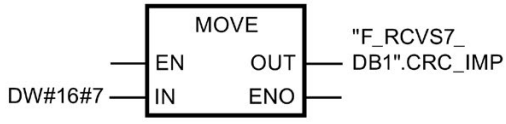

Network 2: Communication to STEP 7 Safety Advanced: R_ID -> CRC_IMP

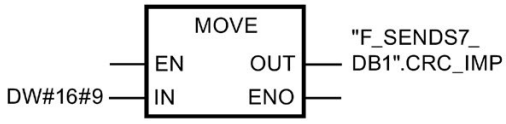

Procedure at the *STEP 7 Safety Advanced* end

At the *STEP 7 Safety Advanced* end, proceed as described in Safety-related communication via S7 connections (Page 248).

For the F-CPU in *S7 Distributed Safety*, you must create and specify an unspecified S7 connection. You can find information on this in the *STEP 7* help, under "Creating an unspecified connection" or "Specifying and unspecified connection".

For these you must set the local and partner connection resources (hex) that are fixed as a result of the associated S7 connection that you have created in *S7 Distributed Safety*.

If the local connection resource (hex) is already occupied by an existing connection, you must change the connection resource (hex) for it.

If the instance DBs of the SENDS7 and RCVS7, instructions that you want to use for communication with *S7 Distributed Safety* were migrated from *S7 Distributed Safety*, you must delete them in the project tree in the "STEP 7 Safety" folder, under "Program blocks > System blocks" (contrary to the information in Programming safety-related communication via S7 connections (Page 251), section "Particularities for migrated projects").

9.1.10.5 Communication with S7 F/FH Systems via S7 connections

Communication functions between SENDS7/RCVS7 instructions at the *STEP 7 Safety Advanced* end and F_SDS_BO/F_RDS_BO F-blocks at the *S7 F Systems* end.

A maximum of 32 data elements of data type BOOL can be exchanged.

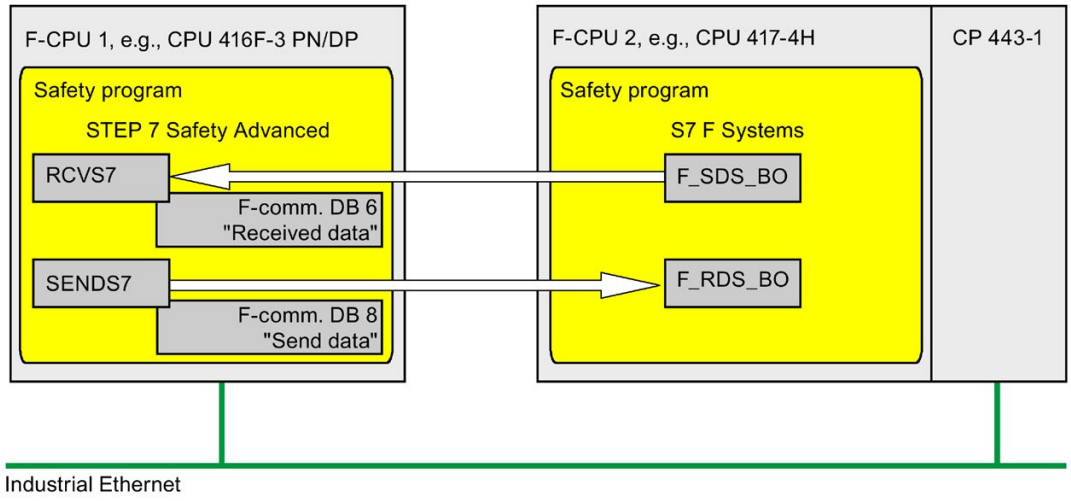

Procedure at the *S7 F Systems* end

At the *S7 F-systems* end, proceed as described in section "Safety-related communication between F-CPUs" in the S7 F/FH Systems - Configuring and Programming (http://support.automation.siemens.com/WW/view/en/16537972) manual.

Because safety-related communication via S7 connections is not possible with unspecified partners in *S7 F/FH Systems*, you must first create a "virtual" SIMATIC station in *S7 F/FH Systems* in which you configure an F-CPU as a proxy for the F-CPU in *STEP 7 Safety Advanced* with its IP address.

You then insert an S7 connection to this F-CPU in the connection table. Both the local connection and partner connection resources (hex) are thereby fixed. You must then set these in the associated, unspecified S7 connection that you created in *STEP 7 Safety Advanced*.

In addition, you must insert a function in your S7 program (in the area reserved in CFC for other applications), in which, for all communication connections for this F-CPU, you transfer the F-communication ID that you assigned in the R_ID input of the associated calls of the F_SDS_BO and F_RDS_BO F-blocks additionally to the CRC_IMP tag in the instance DB of the F_SDS_BO and F_RDS_BO, respectively. You obtain the number of the instance DB from the object properties of the block in CFC. Assign descriptive names for these instance DBs. If you perform a compress operation in CFC, you must check whether the numbers of these instance DBs have changed.

Program example:

Network 1: Communication to STEP 7 Safety Advanced: R_ID -> CRC_IMP

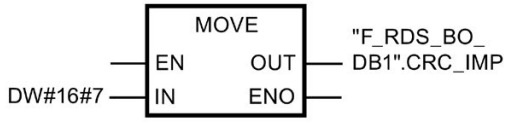

Network 2: Communication to STEP 7 Safety Advanced: R_ID -> CRC_IMP

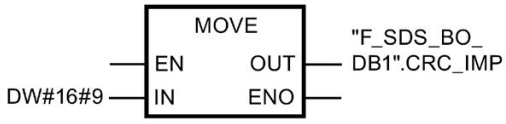

You must then import the function in CFC as block type and insert your standard user program in a chart. In the run sequence, make sure that the associated standard runtime group is processed before the F-runtime group.

Procedure at the *STEP 7 Safety Advanced* end

At the *STEP 7 Safety Advanced* end, proceed as described in "Safety-related communication via S7 connections" (Page 248).

Particularity: In *STEP 7 Safety Advanced*, you must create the F-communication DB with exactly 32 data elements of data type BOOL.

For the F-CPU in *S7 F/FH Systems*, you must create and specify an unspecified S7 connection. You can find information on this in the

STEP 7 help under "Creating an unspecified connection" or "Specifying and unspecified connection".

For these you must set the local and partner connection resources (hex) that are fixed as a result of the associated S7 connection that you have created in *S7 F Systems*.

If the local connection resource (hex) is already occupied by an existing connection, you must change the connection resource (hex) for it.

9.2 Configuring and programming communication with Flexible F-Link (S7-1200, S7-1500)

9.2.1 Flexible F-Link

Introduction

As of *STEP 7 Safety V15.1* a new fail-safe CPU-CPU communication "Flexible F-Link" is available for the F-CPUs S7-1200 and S7-1500. This means fail-safe data can be easily exchanged as fail-safe arrays with standard communication mechanisms between F-CPUs.

Flexible F-Link offers a series of advantages for exchanging fail-safe data:

- Collection of fail-safe data to be transmitted in F-compliant PLC data types (UDTs)
- Up to 100 bytes of fail-safe data per UDT
- Support of fail-safe data types
- Easy parameter assignment and automatic generation of fail-safe communication DBs
- Transmission of fail-safe data with standard communication blocks also across network limits
- F-runtime group communication (Page 96) for F-CPUs 1200/1500
- System-integrated and globally sufficiently unique F-communication UUID
- Separate F-communication address signature for easy detection of changes to the F-communication UUID

Requirement

- S7-1500 F-CPUs as of firmware V2.0
- S7-1200 F-CPUs as of firmware V4.2
- As of safety system version V2.2

Principles of communication via Flexible F-Link

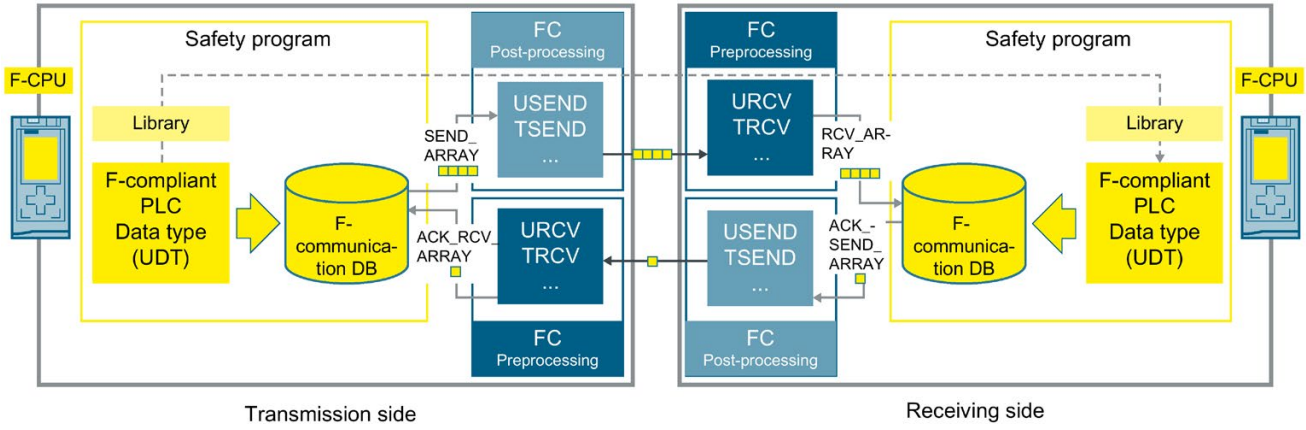

Proceed as follows on the **send side**:

1. Create an F-compliant PLC data type (UDT) for the data to be sent. The size is up to 100 bytes.
2. Create an F-communication with direction "Sending" in the Safety Administration Editor.

   A new F-communication DB is created for the F-communication under "Program blocks\system blocks\STEP 7 Safety\F-communication DBs".
3. Set the F-monitoring time (Page 613) for the F-communication.
4. In the safety program, interconnect the tag for the send data (SEND_DATA) at the F-communication DB (Page 96) of the F-communication.
5. To transmit the coded, fail-safe arrays, create suitable communication blocks for sending and receiving (acknowledgment) in the standard program. For processing the process values in the correct chronological order, you can make use of the F-OB Pre-/post-processing (Page 87). Note when using standard communication blocks that the fail-safe arrays are available consistently at the time of evaluation and that the F-monitoring time (Page 613) is observed.
   - Use a standard instruction for consistent transfer of SEND_ARRAY (for example TSEND_C, TSEND or USEND).
   - Use a standard instruction for consistent receiving of ACK_RCV_ARRAY (for example TRCV_C, TRCV or URCV).

Proceed as follows on the **receive side**:

1. Create an F-compliant PLC data type (UDT) with the same structure as on the send side.

   To do so, copy the F-compliant PLC data type (UDT) from the send side or use the project library or global library.

2. Create an F-communication with the direction "Receiving" in the Safety Administration Editor.

   A new F-communication DB is created for the F-communication under "Program blocks\system blocks\STEP 7 Safety\F-communication DBs"

3. Copy the F-communication UUID of the F-communication from the send side.
4. Set the same F-monitoring time as for the send side.
5. In the safety program, interconnect the tags for the receive data (RCV_DATA) at the F-communication DB (Page 96).
6. To transmit the coded, fail-safe arrays, create suitable communication blocks for sending and receiving (acknowledgment) in the standard program. For processing the process values in the correct chronological order, you can make use of the F-OB Pre-/post-processing (Page 96). Note when using standard communication blocks that the fail-safe arrays are available consistently at the time of evaluation and that the F-monitoring time (Page 613) is observed.
   - Use a standard instruction for consistent receiving of RCV_ARRAY (for example TRCV_C, TSEND or USEND).
   - Use a standard instruction for consistent transfer of ACK_SEND_ARRAY (for example TSEND_C, TRCV or URCV).
7. In the safety program, interconnect the tags for the receive data (RCV_DATA) at the F-communication DB (Page 96) of the F-communication.

WARNING

During the acceptance use the safety summary to verify that the offsets of the elements of the F-compliant PLC data types (UDT) match for the sending and receiving data within the safety message frame. For this purpose all members and addresses are listed in the safety summary per UDT. Also keep in mind that the size can be a up to 100 bytes. *(S088)*

WARNING

When a new Flexible F-Link communication is created in the Safety Administration Editor, the F-communication UUID for the communication is explicitly provided by the system. By copying communications in Safety Administration Editor within the parameterization table or when copying into another F-CPU, the F-communication UUIDs are not generated new and are therefore not unique anymore. If the copy is used to configure a new communication relationship, you yourself need to ensure the uniqueness. To do this select the affected UUIDs and regenerate via the "Generate UUID" shortcut menu. The uniqueness must be ensured in the safety summary during acceptance of the safety program. *(S087)*

WARNING

You must take the following into account for safety-related CPU-CPU communication with the communication type Flexible F-Link:

If the F-CPU that sends the data is on a simulated F-CPU with S7 PLCSIM, you can no longer assume that the data sent by this F-CPU are generated safely. You must then implement organizational measures such as operation monitoring and manual safety shutdown to ensure safety in those portions of the system that are affected by the sent data. Alternatively, you must output fail-safe substitute values instead of the received data in the F-CPU that receives the data by evaluating SENDMODE*.

* SENDMODE is available to you as a tag in the F-communication DB.

(S086)

See also

Example of a safety-related communication between two F-CPUs (Page 266)

F-runtime group communication (S7-1200, S7-1500) (Page 145)

9.2.2 Example of a safety-related communication between two F-CPUs

Safety-related communication between two F-CPUs

If you want to send a data fail-safe from one F-CPU to another F-CPU, follow these steps on the send side (e.g. F-CPU1):

1. Create an F-compliant PLC data type (UDT) for the data to be sent for F-CPU1. The size is up to 100 bytes.
2. Create an F-communication with the direction "sending" in the Safety Administration Editor in the "Flexible F-Link" range.
3. Configure the F-monitoring time and the F-communication UUID.

   Information on calculating the F-monitoring times can be found in Monitoring and response times (Page 607).

   For example:

   Flexible F-Link settings

	Name	PLC Data Type	Direction	F-monitoring time: (ms)	F-communication UUID
1	Send	Data	Send	500	5d61f443-ede6-4e4e-9db6-e79af634f9ad
2	<Add new>				

4. On the send side supply the data of the transmission DBs with the data to be sent.

   For example:

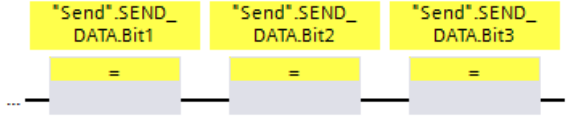

5. Call a "Connection setup" FB in OB1 of the F-CPU1 and program the connection setup in this function block.
6. Interconnect a "TCON" instruction twice to set up the communication connection as follows:

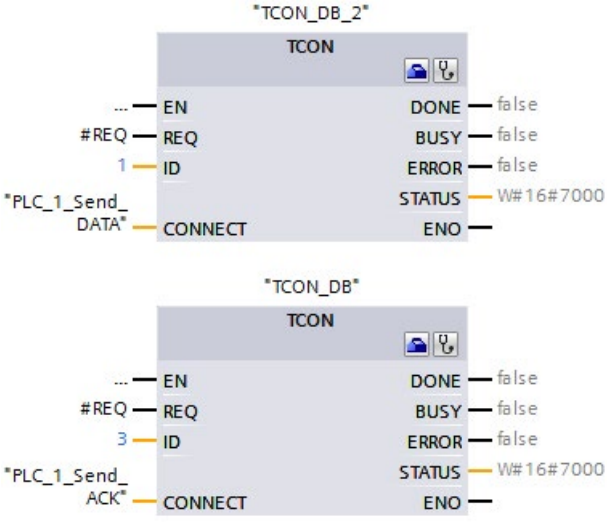

7. Call the "TSEND" instruction for the data to be sent in the FC for the post processing (Page 87) of the F-CPU1.
8. Interconnect a "TSEND" instruction for the data to be sent as follows:

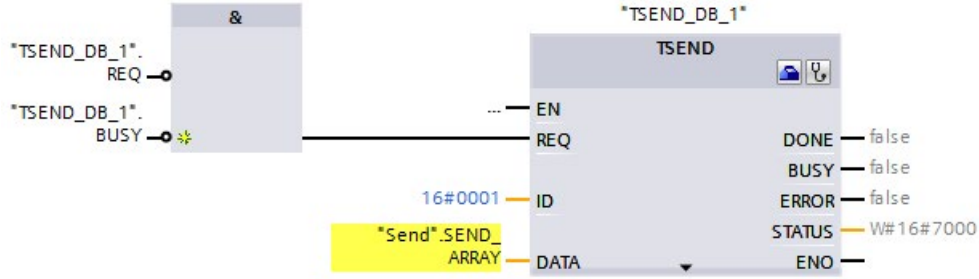

"Sending" is the F-communication DB (Page 96) that sends the data to the F-CPU1.

9. Call the "TRCV" instruction for the acknowledgment in the FC for the pre-processing (Page 87) of the F-CPU1.
10. Interconnect a "TRCV" instruction for the acknowledgment connection as follows:

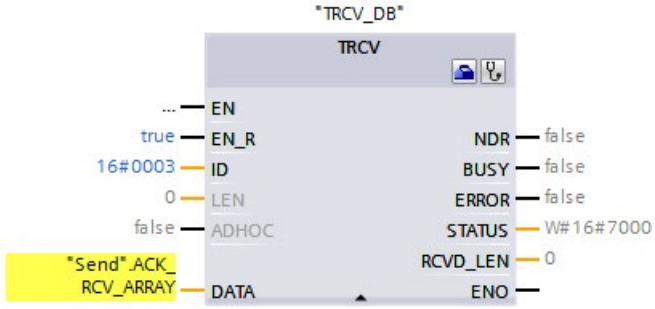

"Sending" is the F-communication DB (Page 96) that sends the data to the F-CPU1.

11. Compile the user program.
12. Download the user program to the F-CPU1.

Proceed as follows on the **receive side** (for example F-CPU2):

1. For F-CPU2 create an F-compliant PLC data type (UDT) with the same structure as F-CPU1 for the data to be received. The size is up to 100 bytes.

   To do so, copy the F-compliant PLC data type (UDT) from the send side or use the project library or global library.
2. Create an F-communication with the direction "receiving" in the Safety Administration Editor in the "Flexible F-Link" range.
3. Configure the same F-monitoring time and F-communication UUID as for F-CPU1.

   For example:

Flexible F-Link settings

	Name	PLC Data Type	Direction	F-monitoring time: (ms)	F-communication UUID
1	Receive	Data	Receive	500	5d61f443-ede6-4e4e-9db6-e79af634f9ad
2	<Add new>				

4. Read the receiving data from the receiving DB on the receive side.

   For example:

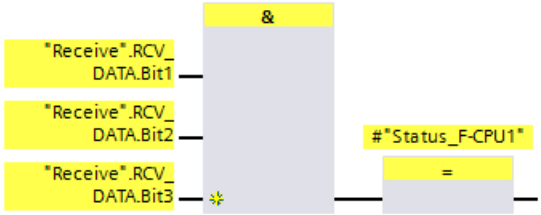

5. Call a "Connection setup" FB in OB1 of the F-CPU2 and program the connection setup in this function block.
6. Interconnect a "TCON" instruction twice to set up the communication connection as follows:

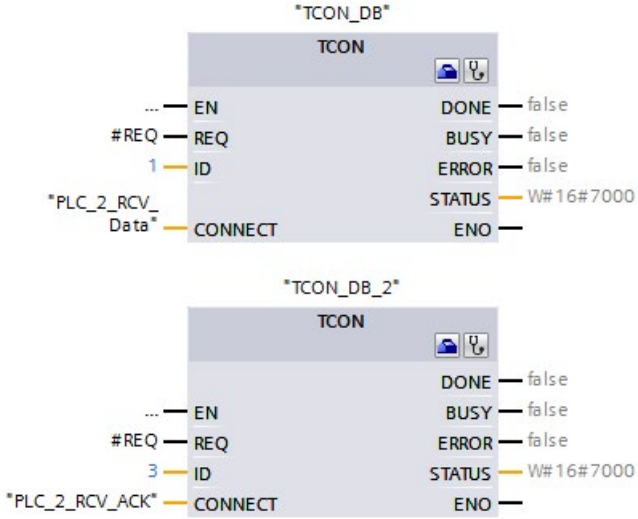

7. Call the "TRCV" instruction for the data to be received in the FC for the pre-processing (Page 87) of the F-CPU2.
8. Interconnect a "TRCV" instruction for the data to be received as follows:

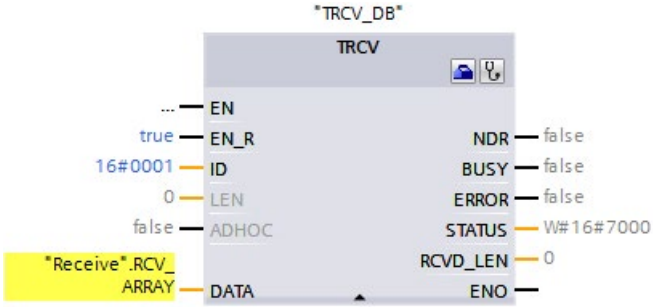

   "Receiving" is the F-communication DB (Page 96) that sends the data to the F-CPU2.

9. Call the "TSEND" instruction for the acknowledgment in the FC for the post processing (Page 87) of the F-CPU2.

10. Interconnect a "TSEND" instruction for the acknowledgment connection as follows:

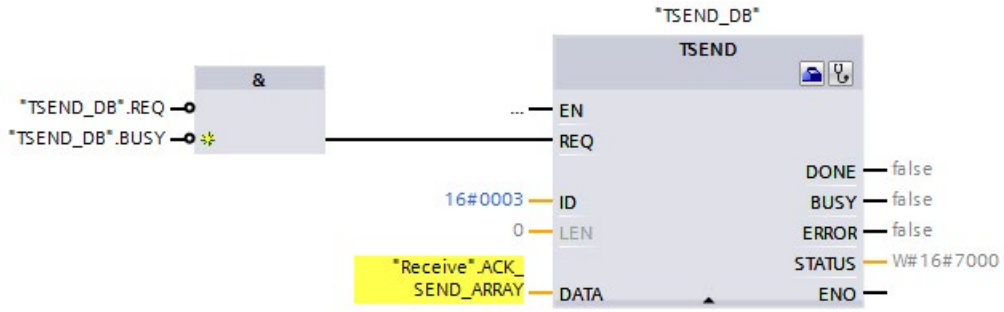

"Receiving" is the F-communication DB (Page 96) that sends the acknowledgment telegram to the F-CPU2.

11. Compile the user program.

12. Download the user program to the F-CPU2.

WARNING

During the acceptance use the safety summary to verify that the offsets of the elements of the F-compliant PLC data types (UDT) match for the sending and receiving data within the safety message frame. For this purpose all members and addresses are listed in the safety summary per UDT. Also keep in mind that the size can be a up to 100 bytes. *(S088)*

WARNING

When a new Flexible F-Link communication is created in the Safety Administration Editor, the F-communication UUID for the communication is explicitly provided by the system. By copying communications in Safety Administration Editor within the parameterization table or when copying into another F-CPU, the F-communication UUIDs are not generated new and are therefore not unique anymore. If the copy is used to configure a new communication relationship, you yourself need to ensure the uniqueness. To do this select the affected UUIDs and regenerate via the "Generate UUID" shortcut menu. The uniqueness must be ensured in the safety summary during acceptance of the safety program. *(S087)*

WARNING

It can only be ensured (from a fail-safe standpoint) that a signal state to be transferred will be acquired at the sender end and transferred to the receiver if the signal level is pending for at least as long as the assigned monitoring time. *(S018)*

See also

FAQ: "How do you program the TCON communication instruction to set up a connection for Open User Communication between two S7-1500 CPUs?" (https://support.industry.siemens.com/cs/ww/en/view/58875807)

9.3 Configuring and programming communication (S7-1200, S7-1500)

9.3.1 Overview of communication

Introduction

This section gives an overview of the safety-related communication options in SIMATIC Safety F-systems.

Options for safety-related communication

Safety-related communication	On subnet	Additional hardware required
Safety-related CPU-CPU communication:		
IO controller-IO controller communication	PROFINET IO	PN/PN coupler
Master-master communication	PROFIBUS DP	DP/DP coupler
IO controller-I-device communication	PROFINET IO	—
Master-I-slave communication	PROFIBUS DP	—
IO controller-I-slave communication	PROFINET IO and PROFIBUS DP	IE/PB link
IO controller-IO controller communication for *S7 Distributed Safety*	PROFINET IO	PN/PN coupler
Master-master communication for *S7 Distributed Safety*	PROFIBUS DP	DP/DP coupler

Note

Safety-related communication with S7-1200 F-CPUs is only permitted as of firmware version V4.1.2.

Overview of safety-related communication via PROFIBUS DP

The figure below provides an overview of the options for safety-related communication via PROFIBUS DP in SIMATIC Safety F-systems with S7-1200/1500 F-CPUs.

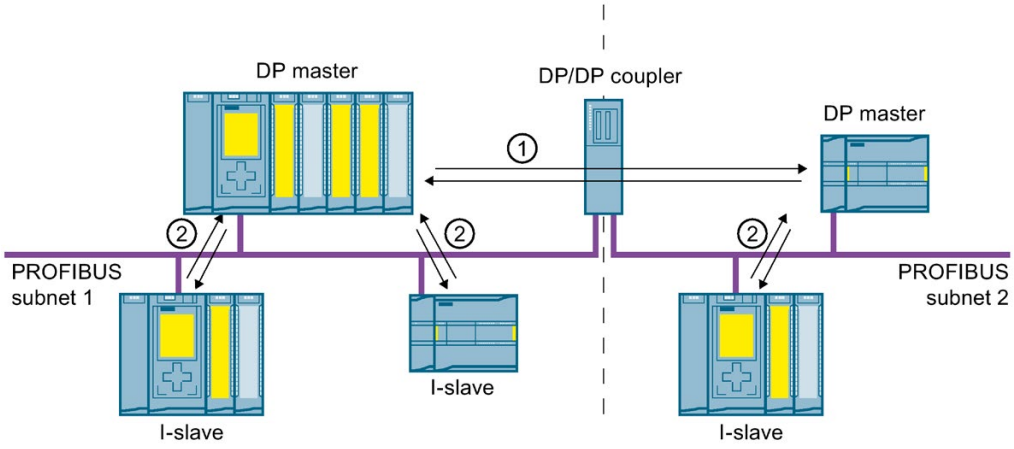

① Safety-related master-master communication

② Safety-related master-I-slave communication

Overview of safety-related communication via PROFINET IO

The figure below provides an overview of the options for safety-related communication via PROFINET IO in SIMATIC Safety F-systems with S7-1200/1500 F-CPUs.

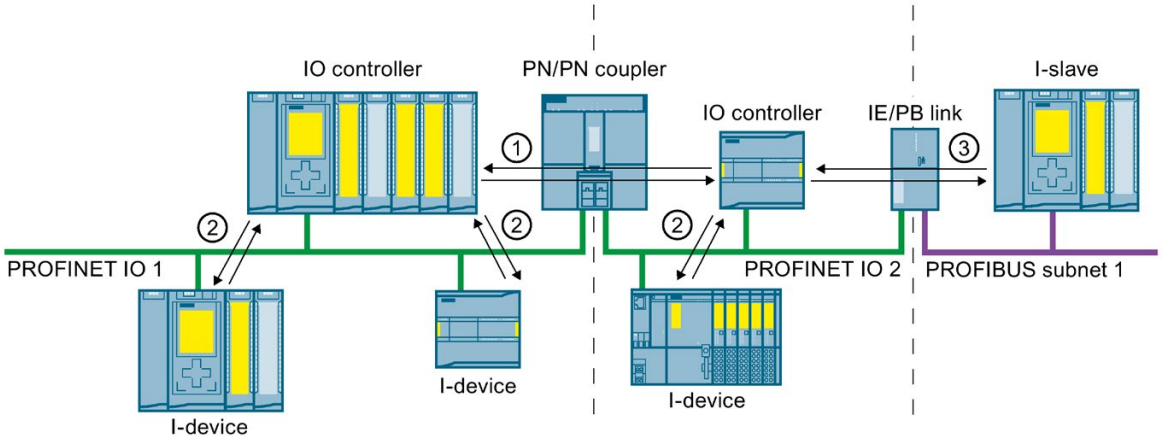

① Safety-related IO controller-IO controller communication

② Safety-related IO controller-I-device communication

③ Safety-related IO controller-I-slave communication

Safety-related CPU-CPU communication via PROFIBUS DP or PROFINET IO

In safety-related CPU-CPU communication, a fixed amount of data of the data type BOOL or INT (DINT as alternative) is transmitted fail-safe between the safety programs in F-CPUs of DP masters/I-slaves or IO controllers/I-devices.

The data are transferred using the SENDDP instruction for sending and the RCVDP instruction for receiving. The data are stored in configured transfer areas of the devices. The hardware identifier (HW identifier) defines the transfer areas configured.

Safety-related CPU-CPU communication for *S7 Distributed Safety*

Safety-related communication is possible from F-CPUs in *SIMATIC Safety* to F-CPUs in *S7 Distributed Safety*.

9.3.2 Safety-related IO controller-IO controller communication

9.3.2.1 Configure safety-related IO controller-IO controller communication

Introduction

Safety-related communication between safety programs of the F-CPUs of IO controllers takes place over a PN/PN coupler that you set up between the F-CPUs.

Note

Deactivate the "Data validity display DIA" parameter in the properties for the PN/PN coupler in the *hardware and network editor*. This is the default setting. Otherwise, safety-related IO controller-IO controller communication is not possible.

Configuring transfer areas

You must configure one transfer area for output data and one transfer area for input data in the *hardware and network editor* for each safety-related communication connection between two F-CPUs in the PN/PN coupler. The figure below shows how both of the F-CPUs are able to send **and** receive data (bidirectional communication).

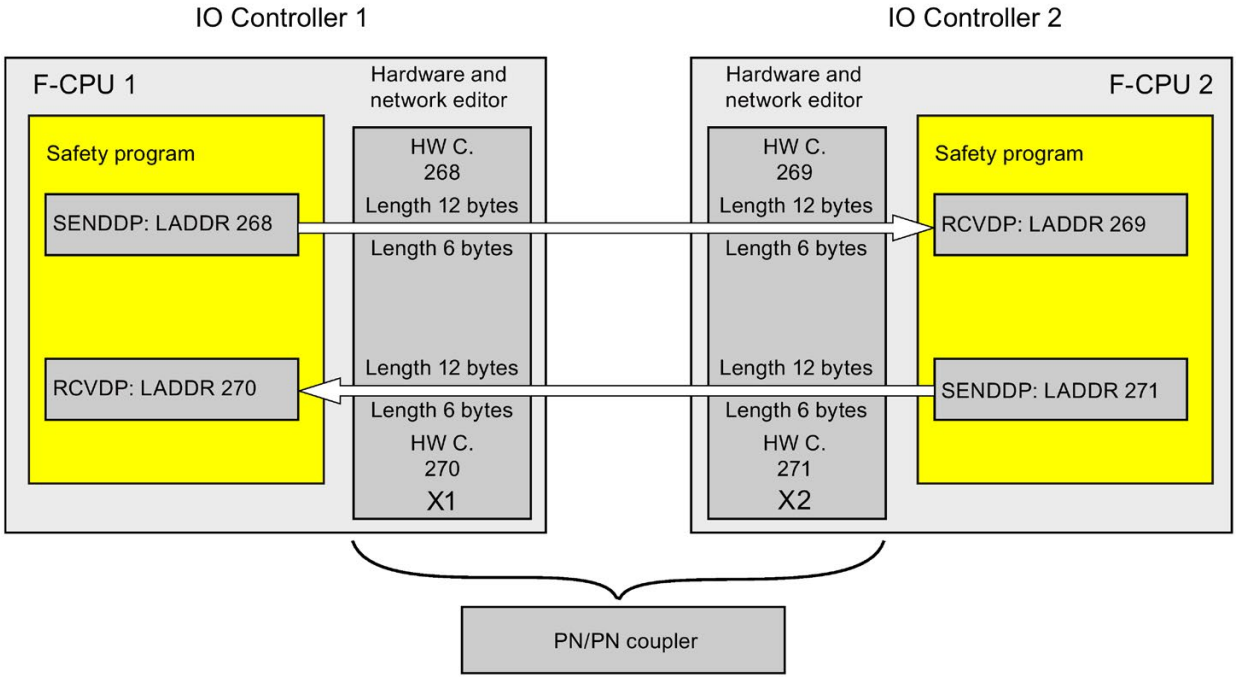

Rules for defining transfer areas

Data to be sent:

A total of 12 bytes (consistent) is required for the transfer area for output data; 6 bytes (consistent) are required for the transfer area for input data.

Data to be received:

A total of 12 bytes (consistent) is required for the transfer area for input data; 6 bytes (consistent) are required for the transfer area for output data.

Note

PN/PN Coupler article number 6ES7158-3AD10-0XA0

When configuring the transfer areas for the output and input data, proceed as described in the "SIMATIC bus links PN/PN coupler (https://support.industry.siemens.com/cs/ww/en/view/44319532)" manual, section "Configuring the PN/PN Coupler with STEP 7 TIA Portal".

Procedure for configuration

The procedure for configuring safety-related IO controller-IO controller communication is identical to that in the standard system.

Proceed as follows:

1. Insert two F-CPUS from the "Hardware catalog" task card into the project.
2. Switch to the network view of the *hardware and network editor*.
3. Select a PN/PN Coupler X1 and a PN/PN Coupler X2 from "Other field devices\PROFINET IO\Gateway\Siemens AG\PN/PN Coupler" in the "Hardware catalog" task card and insert them into the network view of the hardware and network editor.
4. Connect the PN interface of the F-CPU 1 with the PN interface of the PN/PN Coupler X1 and the PN interface of the F-CPU 2 with the PN interface of PN/PN Coupler X2.

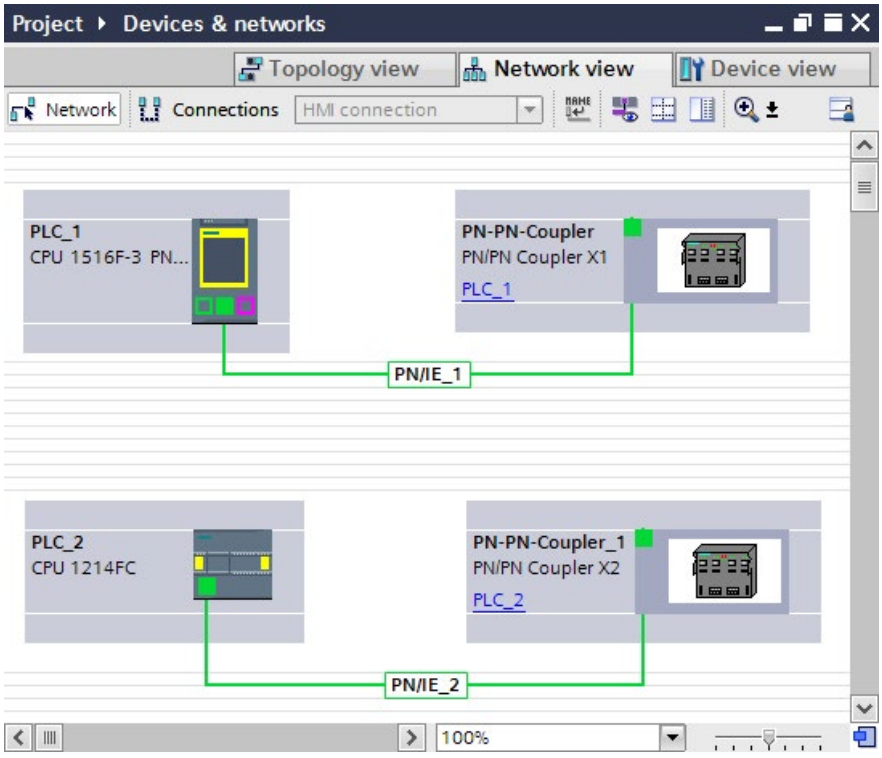

5. Switch to the device view of PN/PN Coupler X1 for bidirectional communication connections i.e. where each F-CPU is both to send and to receive data. Select the following modules from "IN/OUT" in the "Hardware catalog" task card (with filter activated), and insert them in the "Device overview" tab:
   - One "IN/OUT 6 bytes / 12 bytes" module and
   - One "IN/OUT 12 bytes / 6 bytes" module

Note

The transfer areas are assigned on the basis of the hardware identifier which is automatically assigned to the modules and devices. You need the HW identifier to program the SENDDP and RCVDP blocks (LADDR input). A system constant is created in the corresponding F-CPU for each hardware identifier of the transfer area. You can assign these system constants symbolically to the SENDDP and RCVDP blocks.

Device overview

Module	...	Rack	Slot	I address	Q address	Type	Article n...	Firmware
PN-PN-Coupler		0	0	8186*		PN/PN Coupler X1	6ES7 158...	V03.00.00
PN-IO-01		0	0 X1	8185*		PN-PN-Coupler		
IN/OUT 6 Byte / 12 Byte_1		0	1	0...5	0...11	IN/OUT 6 Bytes ...		
IN/OUT 12 Byte / 6 Byte_1		0	2	6...17	12...17	IN/OUT 12 Byte...		

6. Select the following modules from "IN/OUT" in the device view of PN/PN coupler X2 and insert them in the "Device overview" tab:
   - One "IN/OUT 12 bytes / 6 bytes" module and
   - One "IN/OUT 6 bytes / 12 bytes" module

Device overview

Module	...	Rack	Slot	I address	Q address	Type	Article n...	Firmware
PN-PN-Coupler_1		0	0	8186*		PN/PN Coupler X2	6ES7 158...	V03.00.00
PN-IO-02		0	0 X2	8185*		PN-PN-Coupler		
IN/OUT 12 Byte / 6 Byte_1		0	1	0...11	0...5	IN/OUT 12 Byte...		
IN/OUT 6 Byte / 12 Byte_1		0	2	12...17	6...17	IN/OUT 6 Bytes ...		

9.3.2.2 Safety-related IO controller-IO controller communication via SENDDP and RCVDP

Communication via SENDDP and RCVDP instructions

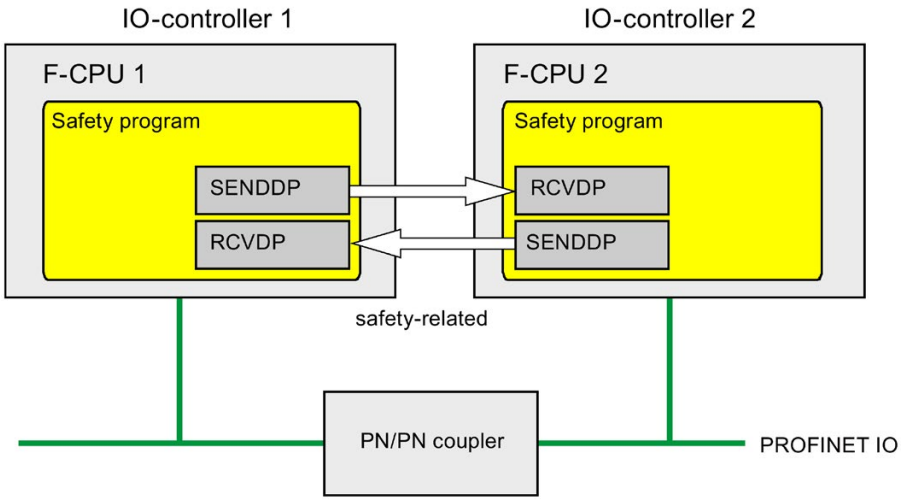

Safety-related communication between the F-CPUs of the IO controllers uses the SENDDP and RCVDP instructions for sending and receiving, respectively. These can be used to perform a fail-safe transfer of a *fixed* amount of fail-safe data of the data type BOOL or INT (DINT as alternative).

You can find these instructions in the "Instructions" task card under "Communication". The RCVDP instruction **must** be called at the start of the main safety block. The SENDDP instruction **must** be called at the end of the main safety block.

You can also call up the RCVDP and SENDDP instructions in separate F-FBs/F-FCs which you have to call at the start or end of the main safety block.

Note that the send signals are not sent until after the SENDDP instruction call at the end of execution of the relevant F-runtime group.

A detailed description of the SENDDP and RCVDP instructions can be found in SENDDP and RCVDP: Send and receive data via PROFIBUS DP/PROFINET IO (STEP 7 Safety V15.1) (Page 588).

9.3.2.3 Program safety-related IO controller-IO controller communication

Requirement for programming

The transfer areas for input and output data for the PN/PN coupler must be configured.

Programming procedure

You program safety-related IO controller-IO controller communication as follows:

1. In the safety program from which data are to be sent, call the SENDDP instruction (Page 588) for sending at the end of the main safety block.
2. In the safety program in which data are to be received, call the RCVDP instruction (Page 588) for receiving at the start of the main safety block.
3. Assign the respective LADDR inputs HW identifiers (system constants in the default tag table) for the transfer areas for output and input data of the PN/PN coupler that are configured in the hardware and network editor.

   You must carry out this assignment for every communication connection for each of the F-CPUs involved.
4. Assign the value for the respective F-communication ID to the DP_DP_ID inputs. This establishes the communication relationship between the SENDDP instruction in one F-CPU and the RCVDP instruction in the other F-CPU: The associated instructions receive the same value for DP_DP_ID.

The figure below contains an example of how to specify the F-communication IDs at the inputs of the SENDDP and RCVDP instructions for 5 safety-related IO controller-IO controller communication relationships.

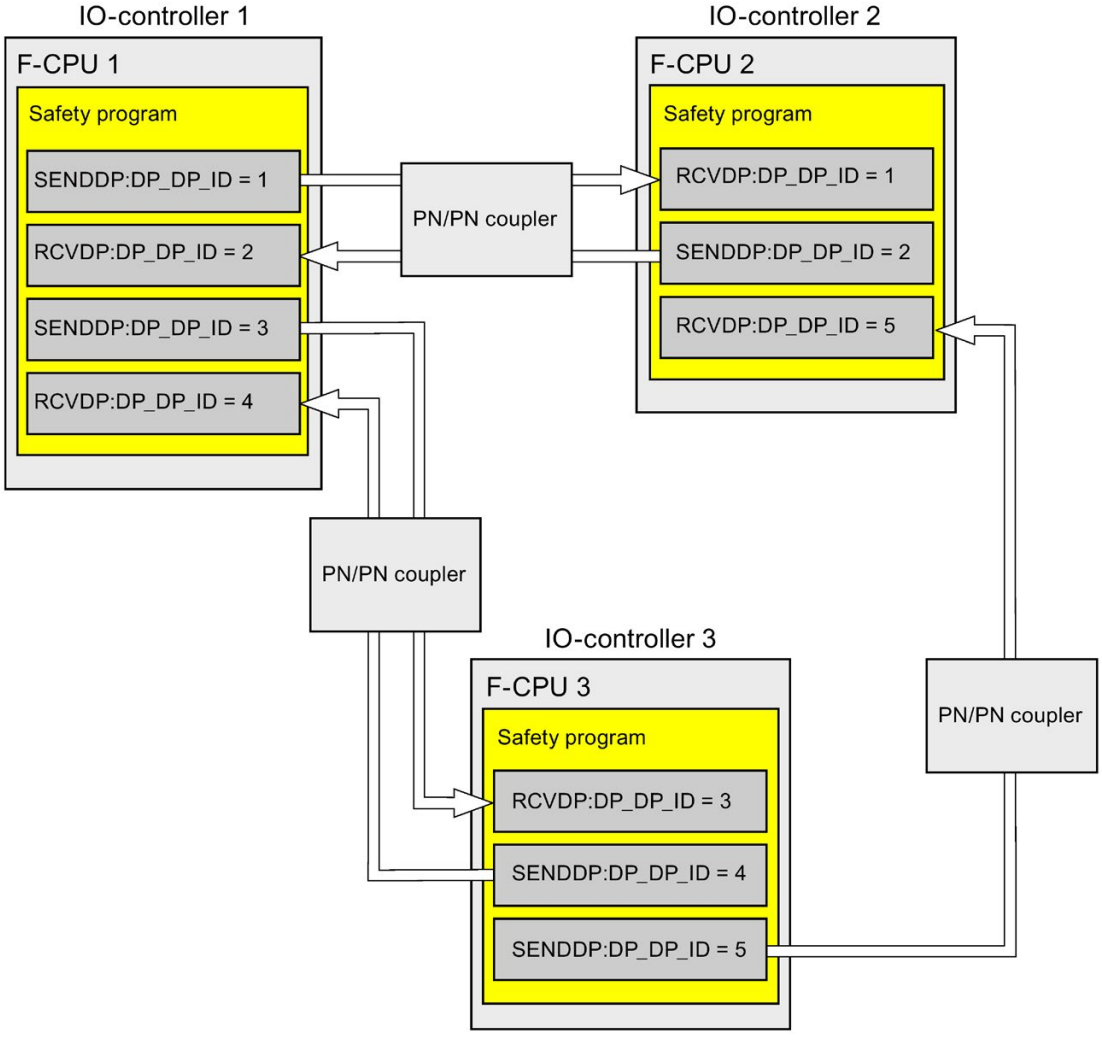

WARNING

The value for the respective F-communication ID (input DP_DP_ID; data type: INT) can be freely selected**; however, it must be unique for all safety-related communication connections network-wide* and CPU-wide at all times. The uniqueness must be checked in the safety summary during acceptance of the safety program. You can find additional information in Correctness and completeness of the communication configuration (Page 374).

You must supply constant values*** to the inputs DP_DP_ID and LADDR when calling the instruction. Direct write accesses in the associated instance DB to DP_DP_ID and LADDR are not permitted in the safety program! *(S016)*

* A network consists of one or more subnets. "Network-wide" means beyond the boundaries of the subnet. In PROFIBUS, a network includes all nodes accessible via PROFIBUS DP. In PROFINET IO, a network includes all nodes accessible via RT_Class_1/2/3 (Ethernet/WLAN/Bluetooth, Layer 2) and if applicable RT_Class_UDP (IP, Layer 3).

** S7-1200/1500: As of version V3.0 of the SENDDP and RCVDP instructions, no connection is established at the DP_DP_ID input for a F-communication ID "0".

*** S7-1200/1500: As of version V3.0 of the SENDDP and RCVDP instructions, the DP_DP_ID input can also be supplied with variable values from a global F-DB. In this case as well you have to check during the acceptance of the safety program that the uniqueness is ensured *at every moment*, by checking the algorithm for the creation of the variable value accordingly. If you cannot ensure a unique F-communication ID during startup of the safety program, because it is only specified after startup of the safety program, you must make sure that the value at the DP_DP_ID input is "0" during this phase.

5. Supply the SD_BO_xx and SD_I_xx inputs (SD_DI_00 as alternative) of SENDDP with the send signals. To cut down on intermediate signals when transferring block parameters, you can write the value directly to the instance DB of SENDDP using fully qualified access (for example, "Name SENDDP_1".SD_BO_02) before calling SENDDP.
6. Supply the RD_BO_xx and RD_I_xx outputs (RD_DI_00 as alternative) of RCVDP with the signals that you want to process further in other program sections or use fully qualified access to read the received signals directly in the associated instance DB in the program sections to be processed further (e.g., "Name RCVDP_1".RD_BO_02).
7. If you want to send the data at the SD_DI_00 input instead of the data at the SD_I_00 and SD_I_01 inputs, supply the DINTMODE input (initial value = "FALSE") of SENDDP with TRUE.
8. Supply the SUBBO_xx and SUBI_xx or alternatively SUBDI_00 inputs of RCVDP with the fail-safe values that are to be output by RCVDP in place of the process data until communication is established for the first time after startup of the sending and receiving F-systems or in the event of an error in safety-related communication.
   - Specification of constant fail-safe values:

     For data of data type INT/DINT, you can enter constant fail-safe values directly as constants in the SUBI_xx or alternatively SUBDI_00 input (initial value = "0"). If you want to specify a constant fail-safe value "TRUE" for data of the data type BOOL, set TRUE for the SUBBO_xx input (initial value = "FALSE").
   - Specification of dynamic fail-safe values:

If you want to specify dynamic fail-safe values, define a tag that you change dynamically through your safety program in an F-DB and specify this tag (fully qualified) in the SUBBO_xx or SUBI_xx or alternatively SUBDI_00 input.

WARNING

Note that your safety program for dynamically changing the tag for a dynamic fail-safe value can only be processed after the call of the RCVDP, because prior to the RCVDP call, there must not be any network and no more than one other RCVDP instruction in the main safety block. You must therefore assign appropriate start values for these tags to be output by RCVDP in the first cycle after a startup of the F-system. *(S017)*

9. Configure the TIMEOUT inputs of the RCVDP and SENDDP instructions with the required monitoring time.

WARNING

It can only be ensured (from a fail-safe standpoint) that a signal state to be transferred will be acquired at the sender end and transferred to the receiver if the signal level is pending for at least as long as the assigned monitoring time. *(S018)*

Information on calculating the monitoring times can be found in Monitoring and response times (Page 607).

10. Optional: Evaluate the ACK_REQ output of the RCVDP instruction, for example, in the standard user program or on the HMI system in order to query or to indicate whether user acknowledgment is required.
11. Supply the ACK_REI input of the RCVDP instruction with the acknowledgment signal for reintegration.
12. Optional: Evaluate the SUBS_ON output of the RCVDP or SENDDP instruction in order to query whether the RCVDP instruction is outputting the fail-safe values assigned in the SUBBO_xx and SUBI_xx or alternatively SUBDI_00 inputs.
13. Optional: Evaluate the ERROR output of the RCVDP or SENDDP instruction, for example, in the standard user program or on the HMI system in order to query or to indicate whether a communication error has occurred.
14. Optional: Evaluate the SENDMODE output of the RCVDP instruction in order to query whether the F-CPU with the associated SENDDP instruction is in disabled safety mode (Page 344).

9.3.2.4 Safety-related IO controller-IO controller communication - Limits for data transfer

Note

If the data quantities to be transmitted exceed the capacity of the SENDDP / RCVDP correlated instructions, a second (or third) SENDDP / RCVDP call can be used. This requires configuration of an additional connection via the PN/PN coupler. Whether or not this is possible with one single PN/PN coupler depends on the capacity restrictions of the PN/PN coupler.

9.3.3 Safety-related master-master communication

9.3.3.1 Configure safety-related master-master communication

Introduction

Safety-related communication between safety programs of the F-CPUs of DP masters takes place via a DP/DP coupler.

Note

Switch the data validity indicator "DIA" on the DIP switch of the DP/DP coupler to "OFF". Otherwise, safety-related CPU-CPU communication is not possible.

Configuring transfer areas

You must configure one transfer area for output data and one transfer area for input data in the *hardware and network editor* for each safety-related communication connection between two F-CPUs in the DP/DP coupler. The figure below shows how both of the F-CPUs are able to send and receive data (bidirectional communication).

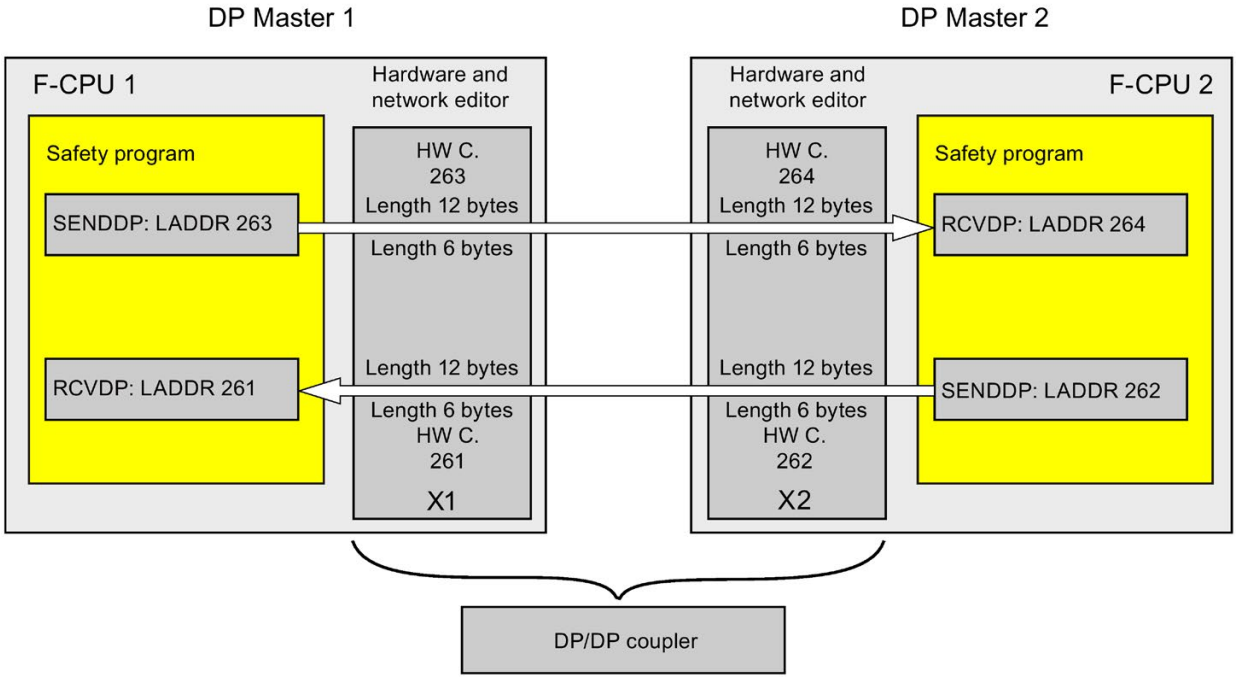

Rules for defining transfer areas

Data to be sent:

A total of 12 bytes (consistent) is required for the transfer area for output data; 6 bytes (consistent) are required for the transfer area for input data.

Data to be received:

A total of 12 bytes (consistent) is required for the transfer area for input data; 6 bytes (consistent) are required for the transfer area for output data.

Procedure for configuration

The procedure for configuring safety-related master-master communication is identical to that in the standard system.

Proceed as follows:

1. Insert two F-CPUS from the "Hardware catalog" task card into the project.
2. Switch to the network view of the *hardware and network editor*.
3. Select a DP/DP coupler from "Other field devices\PROFIBUS DP\Gateways\Siemens AG\DP/DP Coupler" in the "Hardware catalog" task card and insert it into the network view of the hardware and network editor.
4. Insert a second DP/DP coupler.
5. Connect a DP interface of F-CPU 1 to the DP interface of a DP/DP coupler and a DP interface of F-CPU 2 to the DP interface of the other DP/DP coupler.

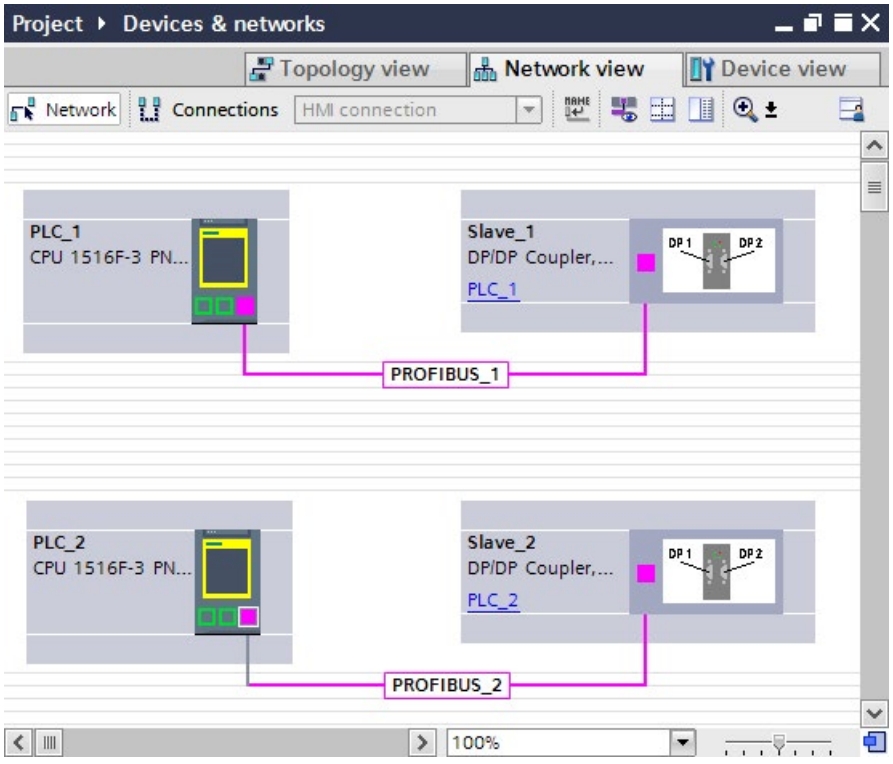

6. A free PROFIBUS address is assigned automatically in the properties of the DP/DP-coupler in the device view. You must set this address on the DP/DP coupler, either via the DIP switch on the device or in the configuration of the DP/DP coupler (see DP/DP Coupler (http://support.automation.siemens.com/WW/view/en/1179382) manual).

7. Switch to the device view of the DP/DP coupler PLC1 for bidirectional communication connections i.e. where each F-CPU should both send and receive data. Select the following modules from the "Hardware catalog" task card (with filter activated), and insert them in the "Device overview" tab of the DP/DP coupler:
   - One "6 bytes I/12 bytes Q consistent" module, and
   - One "12 bytes I/6 bytes Q consistent" module

Note

The transfer areas are assigned on the basis of the hardware identifier which is automatically assigned to the modules and devices. You need the HW identifier to program the SENDDP and RCVDP blocks (LADDR input). A system constant is created in the corresponding F-CPU for each hardware identifier of the transfer area. You can assign these system constants symbolically to the SENDDP and RCVDP blocks.

Device overview

...	Module	Rack	Slot	I address	Q address	Type	Article no.	Firmw...
	Slave_1	0	0 0	8186*		DP/DP Co...	6ES7 158-0AD01...	B0
	6 Bytes E/12 Bytes A konsist...	0	0 1	256...261	256...267	6 Bytes I/...		
	12 Bytes E/6 Bytes A konsist...	0	0 2	262...273	268...273	12 Bytes ...		
		0	3					

8. Select the following modules from the "Hardware catalog" task card (with filter activated) in the device view of DP/DP coupler PLC2, and insert them in the "Device overview" tab:
   - One "12 bytes I/6 bytes Q consistent" module, and
   - One "6 bytes I/12 bytes Q consistent" module

Device overview

...	Module	Rack	Slot	I address	Q address	Type	Article no.	Firmw...
	Slave_2	0	0 0	8186*		DP/DP Co...	6ES7 158-0AD01...	B0
	12 Bytes E/6 Bytes A konsist...	0	0 1	256...267	256...261	12 Bytes ...		
	6 Bytes E/12 Bytes A konsist...	0	0 2	268...273	262...273	6 Bytes I/...		
		0	3					

9.3.3.2 Safety-related master-master communication via SENDDP and RCVDP

Communication via SENDDP and RCVDP instructions

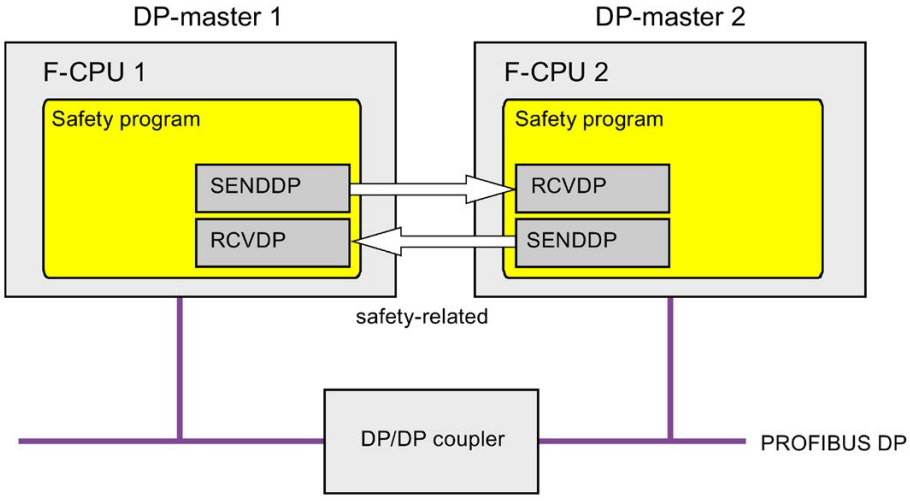

Safety-related communication between the F-CPUs of the DP master uses the SENDDP and RCVDP instructions for sending and receiving, respectively. These can be used to perform a fail-safe transfer of a *fixed* amount of fail-safe data of the data type BOOL or INT (DINT as alternative).

You can find these instructions in the "Instructions" task card under "Communication". The RCVDP instruction **must** be called at the start of the main safety block. The SENDDP instruction **must** be called at the end of the main safety block.

You can also call up the RCVDP and SENDDP instructions in separate F-FBs/F-FCs which you have to call up at the start or the end of the main safety block.

Note that the send signals are not sent until after the SENDDP instruction call at the end of execution of the relevant F-runtime group.

A detailed description of the SENDDP and RCVDP instructions can be found in SENDDP and RCVDP: Send and receive data via PROFIBUS DP/PROFINET IO (STEP 7 Safety V15.1) (Page 588).

9.3.3.3 Program safety-related master-master communication

Requirement for programming

The address areas for input and output data for the DP/DP coupler must be configured.

Programming procedure

You program safety-related master-master communication as follows:

1. In the safety program from which data are to be sent, call the SENDDP instruction (Page 588) for sending at the end of the main safety block or a separate F-FC/F-FB.
2. In the safety program in which data are to be received, call the RCVDP instruction (Page 588) for receiving at the start of the main safety block or a separate F-FC/F-FB.
3. Assign the HW identifiers for the output and input data of the DP/DP coupler configured in the *hardware and network editor* (constant in the tag table) to the respective LADDR inputs.

   You must carry out this assignment for every communication connection for each of the F-CPUs involved.
4. Assign the value for the respective F-communication ID to the DP_DP_ID inputs. This establishes the communication relationship between the SENDDP instruction in one F-CPU and the RCVDP instruction in the other F-CPU: The associated instructions receive the same value for DP_DP_ID.

The figure below contains an example of how to specify the F-communication IDs at the inputs of the SENDDP and RCVDP instructions for 5 safety-related master-master communications relationships.

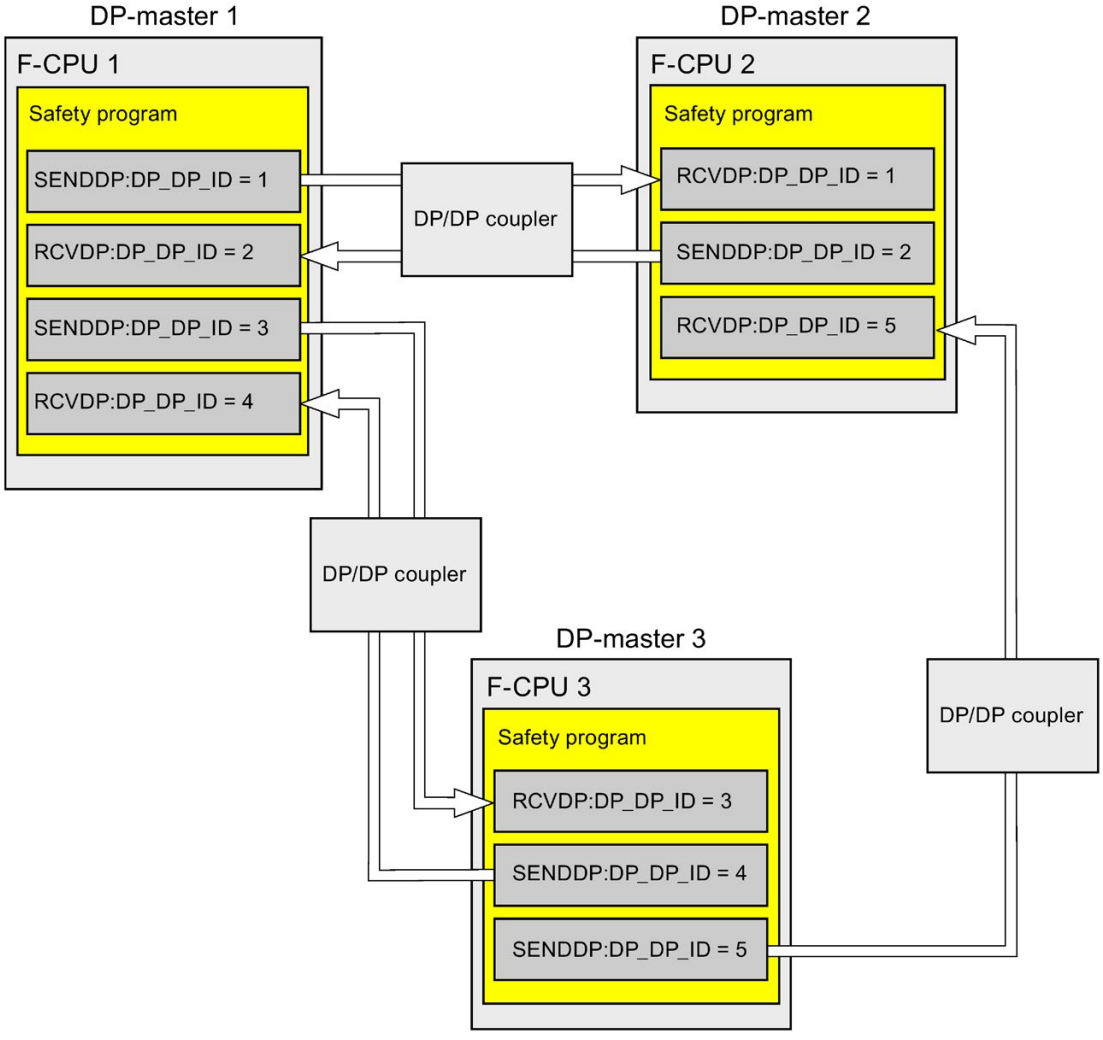

WARNING

The value for the respective F-communication ID (input DP_DP_ID; data type: INT) can be freely selected**; however, it must be unique for all safety-related communication connections network-wide* and CPU-wide at all times. The uniqueness must be checked in the safety summary during acceptance of the safety program. You can find additional information in Correctness and completeness of the communication configuration (Page 374).

You must supply constant values*** to the inputs DP_DP_ID and LADDR when calling the instruction. Direct write accesses in the associated instance DB to DP_DP_ID and LADDR are not permitted in the safety program! *(S016)*

* A network consists of one or more subnets. "Network-wide" means beyond the boundaries of the subnet. In PROFIBUS, a network includes all nodes accessible via PROFIBUS DP. In PROFINET IO, a network includes all nodes accessible via RT_Class_1/2/3 (Ethernet/WLAN/Bluetooth, Layer 2) and if applicable RT_Class_UDP (IP, Layer 3).

** S7-1200/1500: As of version V3.0 of the SENDDP and RCVDP instructions, no connection is established at the DP_DP_ID input for a F-communication ID "0".

*** S7-1200/1500: As of version V3.0 of the SENDDP and RCVDP instructions, the DP_DP_ID input can also be supplied with variable values from a global F-DB. In this case as well you have to check during the acceptance of the safety program that the uniqueness is ensured *at every moment*, by checking the algorithm for the creation of the variable value accordingly. If you cannot ensure a unique F-communication ID during startup of the safety program, because it is only specified after startup of the safety program, you must make sure that the value at the DP_DP_ID input is "0" during this phase.

5. Supply the SD_BO_xx and SD_I_xx inputs (SD_DI_00 as alternative) of SENDDP with the send signals. To cut down on intermediate signals when transferring block parameters, you can write the value directly to the instance DB of SENDDP using fully qualified access (for example, "Name SENDDP_1".SD_BO_02) before calling SENDDP.
6. Supply the RD_BO_xx and RD_I_xx outputs (RD_DI_00 as alternative) of RCVDP with the signals that you want to process further in other program sections or use fully qualified access to read the received signals directly in the associated instance DB in the program sections to be processed further (e.g., "Name RCVDP_1".RD_BO_02).
7. If you want to send the data at the SD_DI_00 input instead of the data at the SD_I_00 and SD_I_01 inputs, supply the DINTMODE input (initial value = "FALSE") of SENDDP with TRUE.
8. Supply the SUBBO_xx and SUBI_xx or alternatively SUBDI_00 inputs of RCVDP with the fail-safe values that are to be output by RCVDP in place of the process data until communication is established for the first time after startup of the sending and receiving F-systems or in the event of an error in safety-related communication.
   – Specification of constant fail-safe values:

     For data of data type INT/DINT, you can enter constant fail-safe values directly as constants in the SUBI_xx or alternatively SUBDI_00 input (initial value = "0"). If you want to specify a constant fail-safe value "TRUE" for data of the data type BOOL, set TRUE for the SUBBO_xx input (initial value = "FALSE").

– Specification of dynamic fail-safe values:

  If you want to specify dynamic fail-safe values, define a tag that you change dynamically through your safety program in an F-DB and specify this tag (fully qualified) in the SUBBO_xx or SUBI_xx or alternatively SUBDI_00 input.

  WARNING

  Note that your safety program for dynamically changing the tag for a dynamic fail-safe value can only be processed after the call of the RCVDP, because prior to the RCVDP call, there must not be any network and no more than one other RCVDP instruction in the main safety block. You must therefore assign appropriate start values for these tags to be output by RCVDP in the first cycle after a startup of the F-system. *(S017)*

9. Configure the TIMEOUT inputs of the RCVDP and SENDDP instructions with the required monitoring time.

   WARNING

   It can only be ensured (from a fail-safe standpoint) that a signal state to be transferred will be acquired at the sender end and transferred to the receiver if the signal level is pending for at least as long as the assigned monitoring time. *(S018)*

   Information on calculating the monitoring times can be found in Monitoring and response times (Page 607).

10. Optional: Evaluate the ACK_REQ output of the RCVDP instruction, for example, in the standard user program or on the HMI system in order to query or to indicate whether user acknowledgment is required.
11. Supply the ACK_REI input of the RCVDP instruction with the acknowledgment signal for reintegration.
12. Optional: Evaluate the SUBS_ON output of the RCVDP or SENDDP instruction in order to query whether the RCVDP instruction is outputting the fail-safe values assigned in the SUBBO_xx and SUBI_xx or alternatively SUBDI_00 inputs.
13. Optional: Evaluate the ERROR output of the RCVDP or SENDDP instruction, for example, in the standard user program or on the HMI system in order to query or to indicate whether a communication error has occurred.
14. Optional: Evaluate the SENDMODE output of the RCVDP instruction in order to query whether the F-CPU with the associated SENDDP instruction is in disabled safety mode (Page 344).

9.3.3.4 Safety-related master-master communication:Limits for data transfer

Note

If the data quantities to be transmitted exceed the capacity of the SENDDP / RCVDP correlated instructions, a second (or third) SENDDP / RCVDP call can be used. This requires configuration of an additional connection via the DP/DP coupler. Whether or not this is possible with one single DP/DP coupler depends on the capacity restrictions of the DP/DP coupler.

9.3.4 Safety-related IO controller-I-device communication

9.3.4.1 Configuring safety-related communication between IO controller and I-device

Introduction

Safety-related communication between the safety program of the F-CPU of an IO controller and the safety program(s) of the F-CPU(s) of one or more I-devices takes place via IO controller-I-device connections (F-CD) in PROFINET IO, in the same way as in standard systems.

You do not need any additional hardware for IO controller-I-device communication.

Configuring transfer areas

For every safety-related communication connection between two F-CPUs, you must configure transfer areas in the *hardware and network editor*. The figure below shows how both of the F-CPUs are able to send and receive data (bidirectional communication).

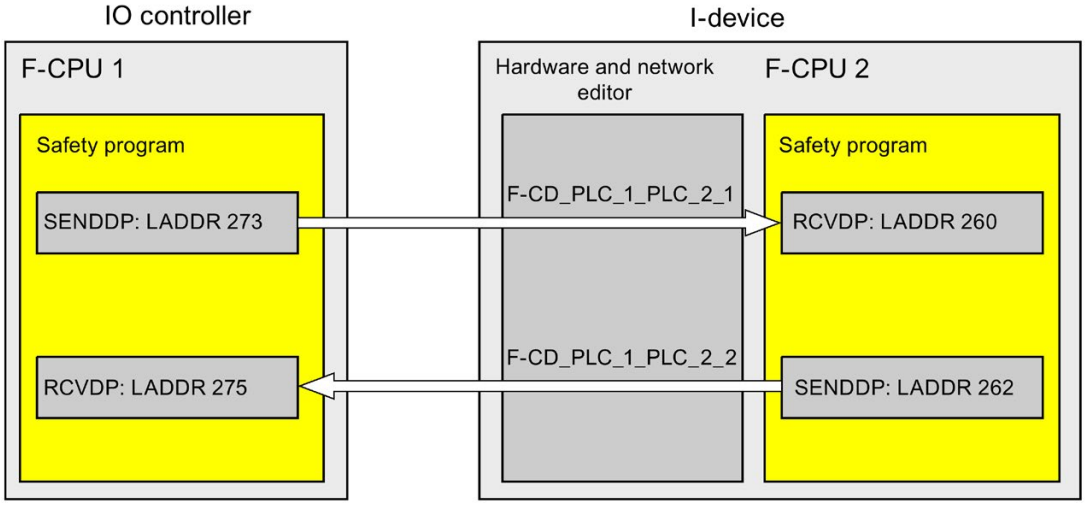

The transfer area is assigned a label when it is created to identify it as the communication relationship. For example, "F-CD_PLC_2 PLC_1_1" for the first F-CD connection between IO controller F-CPU 1 and I-device F-CPU 2.

When you create a transfer area, a system constant with the name of the transfer area is created in the F-CPU of the IO controller and in the F-CPU of the I-device. The system constant contains the hardware identifier of the transfer area for the corresponding F-CPU.

You assign the hardware identifier (system constant from the default tag table) of the transfer areas symbolically to the LADDR input of the SENDDP and RCVDP instructions in the safety programs.

Procedure for configuration

The procedure for configuring safety-related IO controller-I-device communication is identical to that in the standard system.

Proceed as follows:

1. Insert two F-CPUS from the "Hardware catalog" task card into the project.
2. Enable the "IO Device" mode for F-CPU 2 in the properties of its PN interface and assign this PN interface to a PN interface of F-CPU 1.
3. Select the PROFINET interface of F-CPU 2. Under "Transfer areas", you create an F-CD connection (type "F-CD") for receiving from the IO controller (←). The F-CD connection is shown in yellow in the table and the address areas in the I-device and IO controller assigned are displayed.

   In addition, an acknowledgment connection is created automatically for each F-CD connection. (see "Transfer area details").
4. Create an additional F-CD connection for sending to the IO controller.
5. In the transfer area you just created, click on the arrow to change the transfer direction to sending to the IO controller (←).

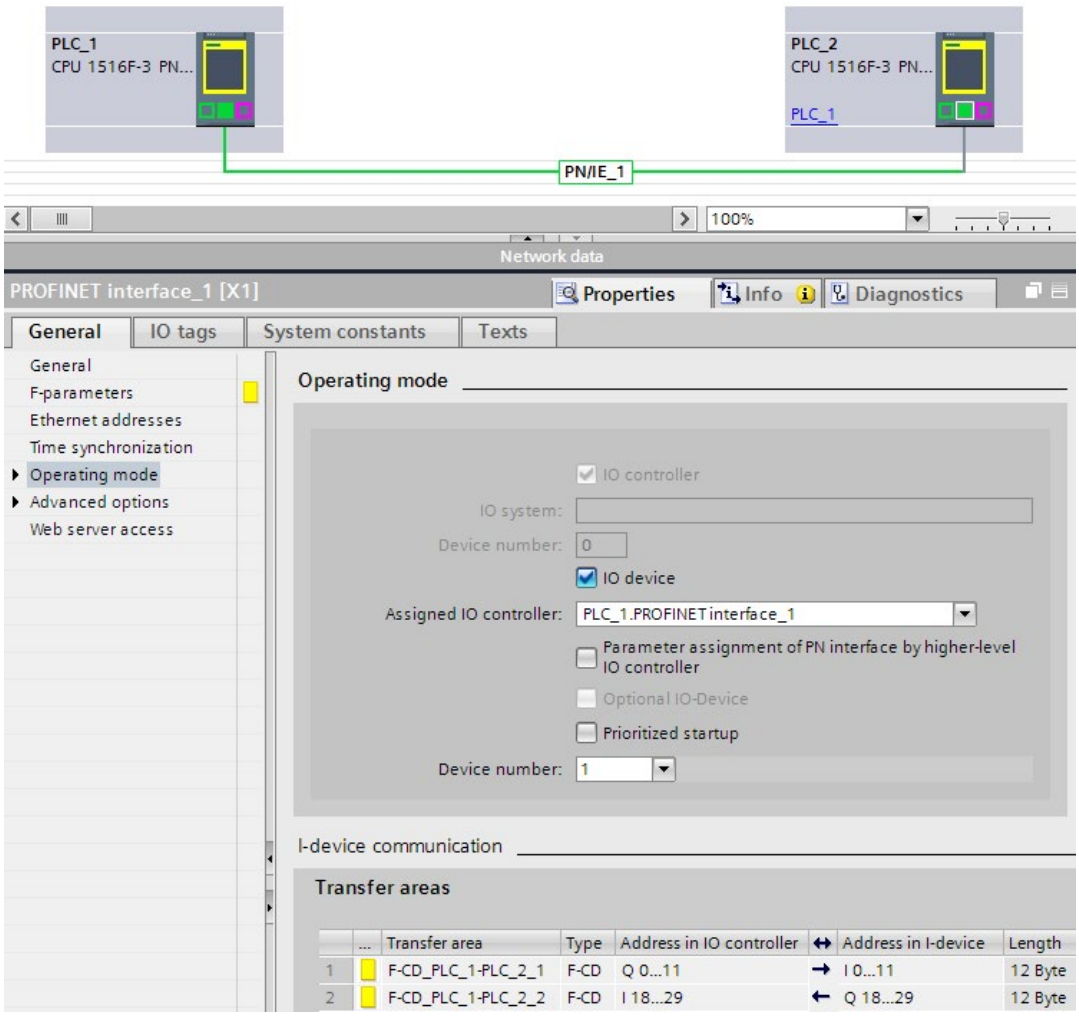

9.3.4.2 Safety-related IO controller-I-device communication via SENDDP and RCVDP

Communication via SENDDP and RCVDP instructions

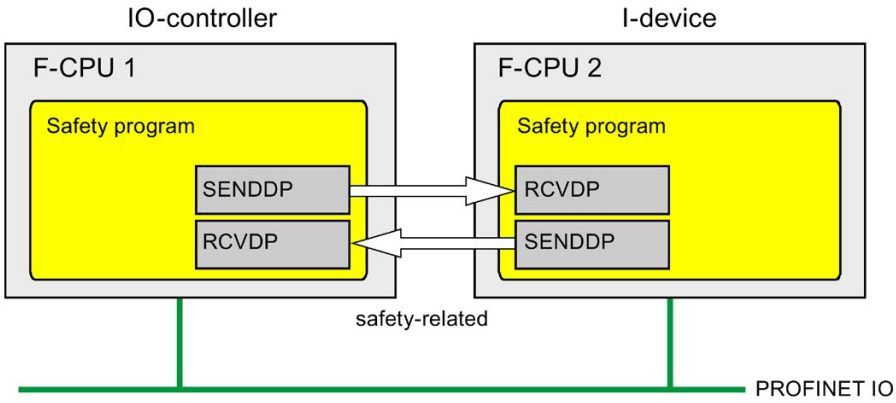

Safety-related communication between the F-CPUs of the IO controller and an I-device makes use of the SENDDP and RCVDP instructions for sending and receiving, respectively. These can be used to perform a fail-safe transfer of a *fixed* amount of data of the data type BOOL or INT (DINT as alternative).

You can find these instructions in the "Instructions" task card under "Communication". The RCVDP instruction **must** be called at the start of the main safety block. The SENDDP instruction **must** be called at the end of the main safety block.

You can also call up the RCVDP and SENDDP instructions in separate F-FBs/F-FCs which you have to call at the start or end of the main safety block.

Note that the send signals are not sent until after the SENDDP instruction call at the end of execution of the relevant F-runtime group.

A detailed description of the SENDDP and RCVDP instructions can be found in SENDDP and RCVDP: Send and receive data via PROFIBUS DP/PROFINET IO (STEP 7 Safety V15.1) (Page 588).

9.3.4.3 Programming safety-related IO controller I-device communication

Requirement for programming

The transfer areas must be configured.

Programming procedure

The procedure for programming safety-related IO controller-I-device communication is the same as that for programming safety-related IO controller-IO controller communication (see Program safety-related IO controller-IO controller communication (Page 277)).

The assignment of the HW identifiers (system constants in the standard tag table) of the transfer areas to the LADDR input of the SENDDP/RCVDP instructions can be obtained from the following table:

Instruction	HW identifier
SENDDP in the IO controller	Hardware identifier of the transfer area in the IO controller
RCVDP in the IO controller	Hardware identifier of the transfer area in the IO controller
SENDDP in the I-device	Hardware identifier of the transfer area in the I-device
RCVDP in the I-device	Hardware identifier of the transfer area in the I-device

The figure below contains an example of how to specify the F-communication IDs for the inputs of the SENDDP and RCVDP instructions for 4 safety-related IO controller-I-device communication relationships.

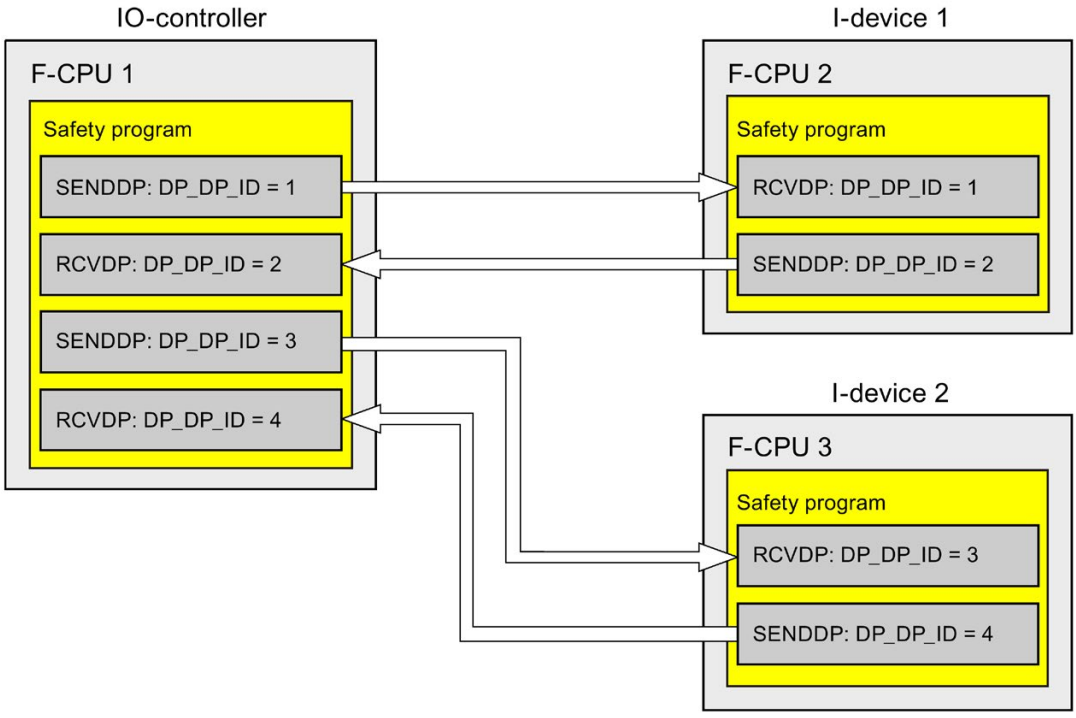

WARNING

The value for the respective F-communication ID (input DP_DP_ID; data type: INT) can be freely selected**; however, it must be unique for all safety-related communication connections network-wide* and CPU-wide at all times. The uniqueness must be checked in the safety summary during acceptance of the safety program. You can find additional information in Correctness and completeness of the communication configuration (Page 374).

You must supply constant values*** to the inputs DP_DP_ID and LADDR when calling the instruction. Direct write accesses in the associated instance DB to DP_DP_ID and LADDR are not permitted in the safety program! *(S016)*

* A network consists of one or more subnets. "Network-wide" means beyond the boundaries of the subnet. In PROFIBUS, a network includes all nodes accessible via PROFIBUS DP. In PROFINET IO, a network includes all nodes accessible via RT_Class_1/2/3 (Ethernet/WLAN/Bluetooth, Layer 2) and if applicable RT_Class_UDP (IP, Layer 3).

** S7-1200/1500: As of version V3.0 of the SENDDP and RCVDP instructions, no connection is established at the DP_DP_ID input for a F-communication ID "0".

*** S7-1200/1500: As of version V3.0 of the SENDDP and RCVDP instructions, the DP_DP_ID input can also be supplied with variable values from a global F-DB. In this case as well you have to check during the acceptance of the safety program that the uniqueness is ensured *at every moment*, by checking the algorithm for the creation of the variable value accordingly. If you cannot ensure a unique F-communication ID during startup of the safety program, because it is only specified after startup of the safety program, you must make sure that the value at the DP_DP_ID input is "0" during this phase.

WARNING

It can only be ensured (from a fail-safe standpoint) that a signal state to be transferred will be acquired at the sender end and transferred to the receiver if the signal level is pending for at least as long as the assigned monitoring time. *(S018)*

Information on calculating the monitoring times can be found in Monitoring and response times (Page 607).

9.3.4.4 Safety-related IO-Controller-IO-Device communication - Limits for data transfer

Limits for data transfer

If the amount of data to be transferred is greater than the capacity of related SENDDP/RCVDP instructions, you can use additional SENDDP/RCVDP instructions. Configure additional transfer areas for this purpose. Remember the maximum limit of 1440 bytes of input data or 1440 bytes of output data for transfer between an I-device and a IO controller.

The following table shows the amount of output and input data assigned in safety-related communication connections:

Safety-related communication	Communication connection	Assigned input and output data			
		In the IO controller		In the I-device	
		Output data	Input data	Output data	Input data
IO controller-I-Device	Sending: I-Device 1 to IO controller	6 bytes	12 bytes	12 bytes	6 bytes
	Receiving: I-Device 1 from IO controller	12 bytes	6 bytes	6 bytes	12 bytes

Consider all additional configured safety-related and standard communication connections (transfer areas of type F-CD and CD) for the maximum limit of 1440 bytes of input data or 1440 bytes of output data for transfer between an I-device and an IO controller. In addition, data are assigned for internal purposes such that the maximum limit may be reached sooner.

When the limit is exceeded, a corresponding error message is displayed.

9.3.5 Safety-related master-I-slave communication

9.3.5.1 Configuring safety-related master-I-slave communication

Introduction

Safety-related communication between the safety program of the F-CPU of a DP master and the safety program(s) of the F-CPU(s) of one or more I-slaves takes place over master-I-slave connections (**F-**MS), as in standard systems.

You do not need a DP/DP coupler for master-I-slave communication.

Configuring transfer areas

For every safety-related communication connection between two F-CPUs, you must configure transfer areas in the *hardware and network editor*. The figure below shows how both of the F-CPUs are able to send and receive data (bidirectional communication).

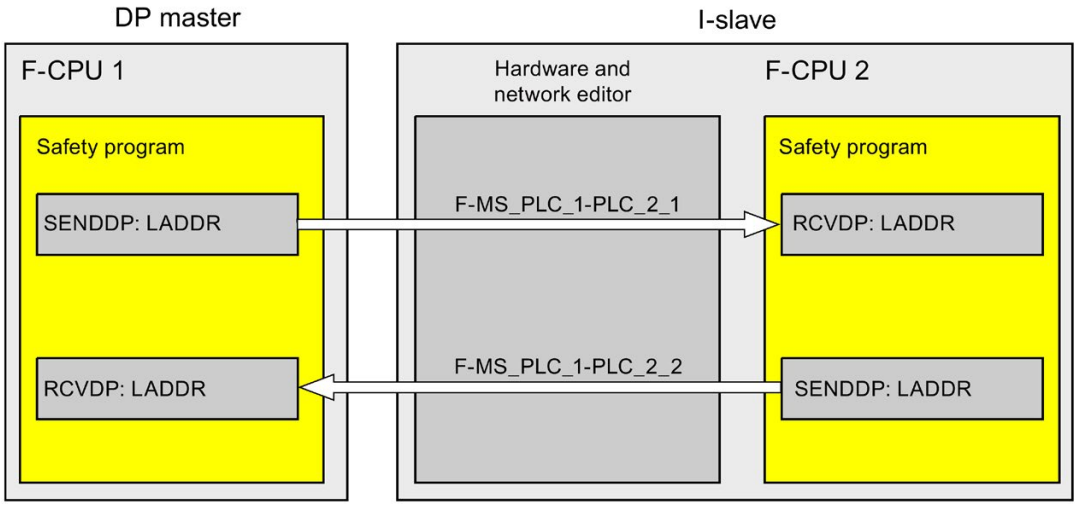

The transfer area is assigned a label when it is created to identify it as the communication relationship. For example, "F-MS_PLC_2-PLC_1_1" for the first F-MS connection between DP master F-CPU 1 and I-slave F-CPU 2.

When you create a transfer area, a system constant with the name of the transfer area is created in the F-CPU of the DP master and in the F-CPU of the I-slave. The system constant contains the hardware identifier of the transfer area for the corresponding F-CPU.

You assign the hardware identifier (system constant from the default tag table) of the transfer areas symbolically to the LADDR input of the SENDDP and RCVDP instructions in the safety programs.

Procedure for configuration

The procedure for configuring safety-related master-I-slave communication is identical to that in the standard system.

Proceed as follows:

1. Insert two F-CPUS from the "Hardware catalog" task card into the project.
2. If the F-CPU which is to be operated as DP master (F-CPU 1) does not have an integrated PROFIBUS DP interface, insert an PROFIBUS-CM, for example.
3. From the device view of the F-CPUs which are to be operated as I-slaves (F-CPU 2), insert a suitable CM DP module or CP DP module.
4. If necessary, enable "DP-slave" (I-slave) mode in the properties for the CM/CP DP module.
5. Assign the DP interface of the CM/CP to a DP interface of F-CPU 1.
6. Select the PROFIBUS interface of F-CPU 2 or of the CM. Under "Transfer areas", you create an F-MS connection (type "F-MS") for sending to the DP master (←). The F-MS connection is shown in yellow in the table and the assigned transfer areas in the I-slave and DP master are displayed.

   In addition, an acknowledgment connection is created automatically for each F-MS connection. (see "Transfer area details").
7. Create an additional F-MS connection for receiving from the DP master.
8. In the transfer area you just created, click the arrow in order to change the transfer direction to receiving from DP master (→).

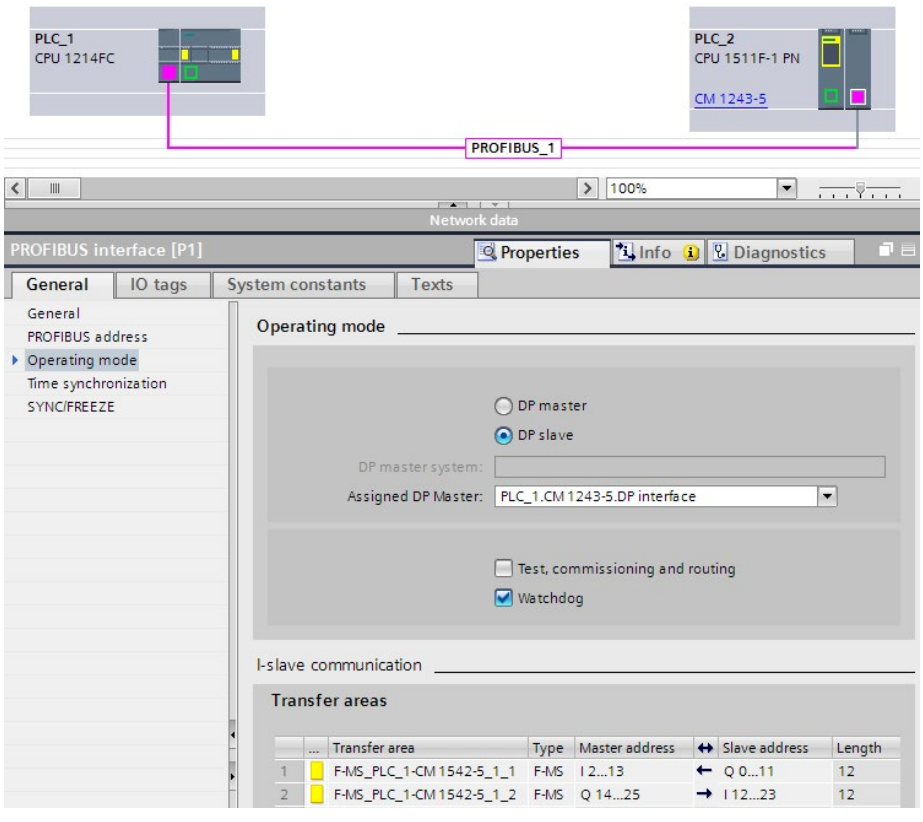

9.3.5.2 Safety-related master-I-slave communication via SENDDP and RCVDP

Communication via SENDDP and RCVDP instructions

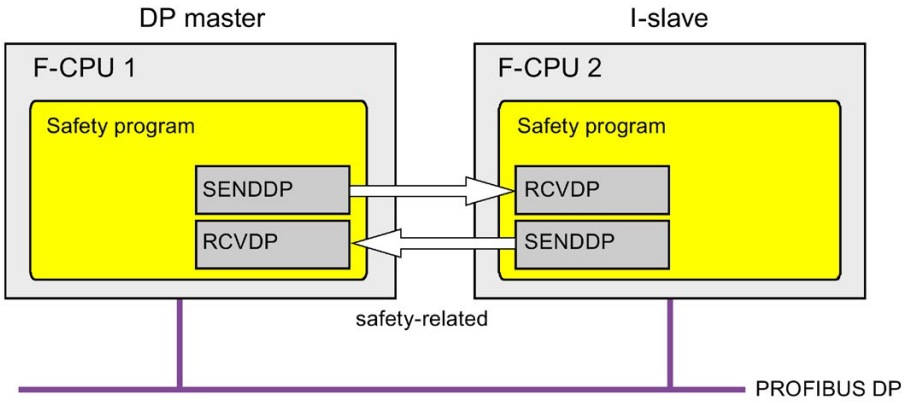

Safety-related communication between the F-CPUs of the DP master and an I-slave makes use of the SENDDP and RCVDP instructions for sending and receiving, respectively. These can be used to perform a fail-safe transfer of a *fixed* amount of fail-safe data of the data type BOOL or INT (DINT as alternative).

You can find these instructions in the "Instructions" task card under "Communication". The RCVDP instruction **must** be called at the start of the main safety block. The SENDDP instruction **must** be called at the end of the main safety block.

You can also call the RCVDP and SENDDP instructions in separate F-FBs/F-FCs which you have to call up at the beginning or end of the main safety block.

Note that the send signals are not sent until after the SENDDP instruction call at the end of execution of the relevant F-runtime group.

A detailed description of the SENDDP and RCVDP instructions can be found in SENDDP and RCVDP: Send and receive data via PROFIBUS DP/PROFINET IO (STEP 7 Safety V15.1) (Page 588).

9.3.5.3 Programming safety-related master-I-slave communication

Requirements

The transfer areas must be configured.

Programming procedure

The procedure for programming safety-related master-I-slave communication is the same as that for programming safety-related master-master communication (see Safety-related master-master communication (Page 281)).

The assignment of the HW identifiers of the transfer areas to the LADDR input of the SENDDP/RCVDP instructions can be obtained from the following table.

Instruction	HW identifier
SENDDP in the DP master	Hardware identifier of the respective transfer area in the DP master
RCVDP in the DP master	Hardware identifier of the respective transfer area in the DP master
SENDDP in the I-slave	Hardware identifier of the transfer area in the I-slave
RCVDP in the I-slave	Hardware identifier of the transfer area in the I-slave

The figure below contains an example of how to specify the F-communication IDs at the inputs of the SENDDP and RCVDP instructions for four safety-related master-I-slave communication relationships.

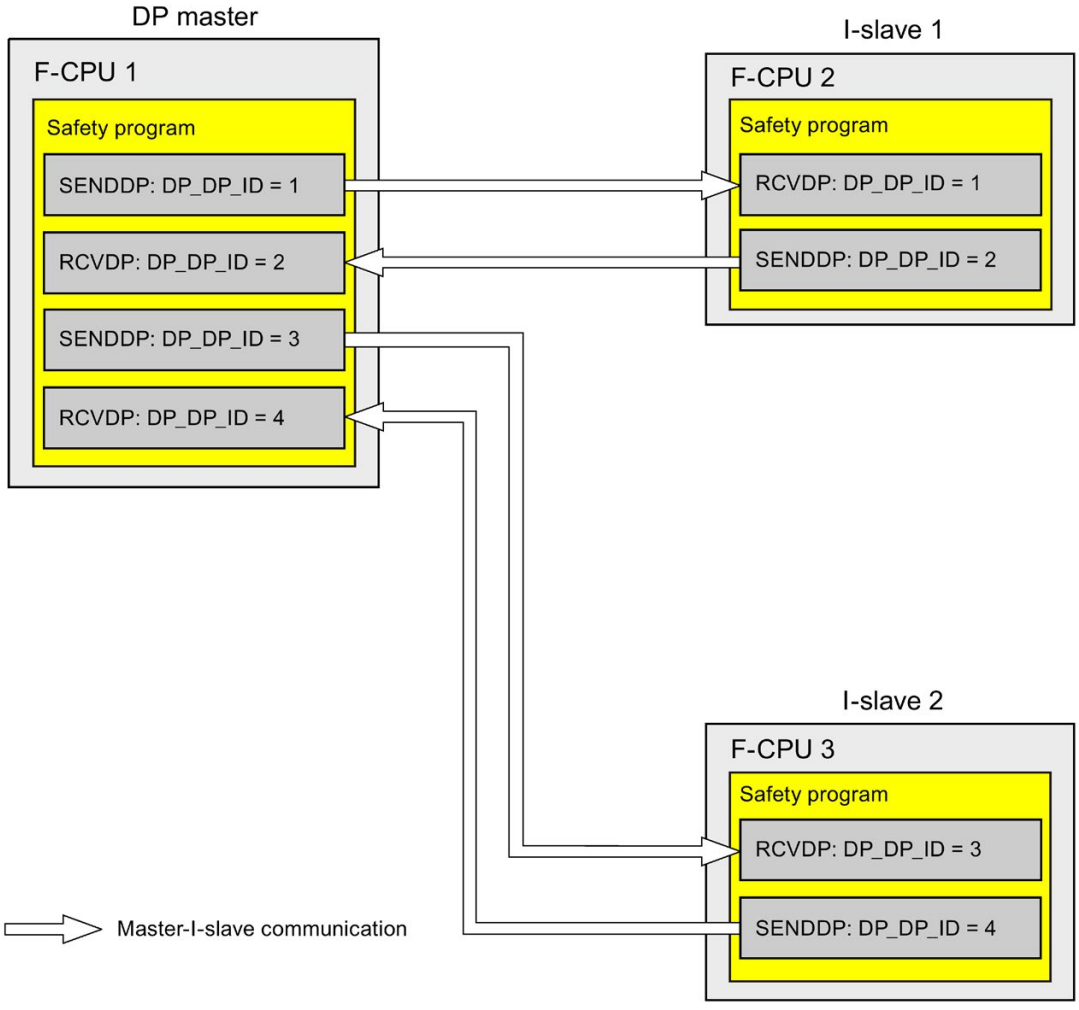

WARNING

The value for the respective F-communication ID (input DP_DP_ID; data type: INT) can be freely selected**; however, it must be unique for all safety-related communication connections network-wide* and CPU-wide at all times. The uniqueness must be checked in the safety summary during acceptance of the safety program. You can find additional information in Correctness and completeness of the communication configuration (Page 374).

You must supply constant values*** to the inputs DP_DP_ID and LADDR when calling the instruction. Direct write accesses in the associated instance DB to DP_DP_ID and LADDR are not permitted in the safety program! *(S016)*

* A network consists of one or more subnets. "Network-wide" means beyond the boundaries of the subnet. In PROFIBUS, a network includes all nodes accessible via PROFIBUS DP. In PROFINET IO, a network includes all nodes accessible via RT_Class_1/2/3 (Ethernet/WLAN/Bluetooth, Layer 2) and if applicable RT_Class_UDP (IP, Layer 3).

** S7-1200/1500: As of version V3.0 of the SENDDP and RCVDP instructions, no connection is established at the DP_DP_ID input for a F-communication ID "0".

*** S7-1200/1500: As of version V3.0 of the SENDDP and RCVDP instructions, the DP_DP_ID input can also be supplied with variable values from a global F-DB. In this case as well you have to check during the acceptance of the safety program that the uniqueness is ensured *at every moment*, by checking the algorithm for the creation of the variable value accordingly. If you cannot ensure a unique F-communication ID during startup of the safety program, because it is only specified after startup of the safety program, you must make sure that the value at the DP_DP_ID input is "0" during this phase.

⚠ WARNING
It can only be ensured (from a fail-safe standpoint) that a signal state to be transferred will be acquired at the sender end and transferred to the receiver if the signal level is pending for at least as long as the assigned monitoring time. *(S018)*

Information on calculating the monitoring times can be found in Monitoring and response times (Page 607).

9.3.5.4 Limits for data transfer of safety-related master-I-slave communication

Limits for data transfer

If the amount of data to be transferred is greater than the capacity of related SENDDP/RCVDP instructions, you can use additional SENDDP/RCVDP instructions. Configure additional transfer areas for this purpose. Note the maximum limit of 244 bytes of input data or 244 bytes of output data for transfer between an I-slave and a DP master.

The following table shows the amount of output and input data assigned in safety-related communication connections:

Safety-related communication	Communication connection	Assigned input and output data			
		DP master		I-slave	
		Output data	Input data	Output data	Input data
Master-I-slave	**Sending:** I-slave 1 to DP master	6 bytes	12 bytes	12 bytes	6 bytes
	Receiving: I-slave 1 from DP master	12 bytes	6 bytes	6 bytes	12 bytes

Consider all additional configured safety-related and standard communication connections (transfer areas of type F-MS-, F-DX-, F-DX-Mod., MS-, DX- and DX-Mod) for the maximum limit of 244 bytes of input data or 244 bytes of output data for transfer between an I-device and a DP master F-MS and MS). If the maximum limit of 244 bytes of input data or 244 bytes of output data is exceeded, you will receive a corresponding error message.

9.3.6 Safety-related IO controller-I-slave communication

9.3.6.1 Safety-related IO controller-I-slave communication

Introduction

Safety-related communication between the safety program of the F-CPU of an IO-controller and the safety program(s) of the F-CPU(s) of one or more I-slaves takes place over master-I-slave connections (**F-**MS), as in standard systems.

IE/PB link

For the safety-related IO-controller-I-slave communication, the IE/PB link is mandatory. Each of the two F-CPUs is linked to the IE/PB link by means of its PROFIBUS DP or PROFINET-interface.

Note

If you are using an IE/PB link, you must take this into account when configuring the F-specific monitoring times and when calculating the maximum response time of your F-system (see also Monitoring and response times (Page 607)).

Note that the Excel file for calculating response times (http://support.automation.siemens.com/WW/view/en/49368678/133100) for S7-300/400 F-CPUs does not support all conceivable configurations.

Reference

The information on safety-related master-I-slave communication in Safety-related master-I-slave communication (Page 297) also applies.

9.3.7 Safety-related communication to S7 F-System S7 Distributed Safety

9.3.7.1 Introduction

Safety-related communication from F-CPUs in SIMATIC Safety to F-CPUs in S7 Distributed Safety F-systems is possible, via a PN/PN coupler or DP/DP coupler that you use between the two F-CPUs, as IO controller-IO controller communication or master-master communication.

9.3.7.2 Communication with S7 Distributed Safety via PN/PN coupler (IO controller-IO controller communication)

Communication functions between SENDDP/RCVDP instructions at the *STEP 7 Safety* end and F-application blocks F_SENDDP/F_RCVDP at the *S7 Distributed Safety* end:

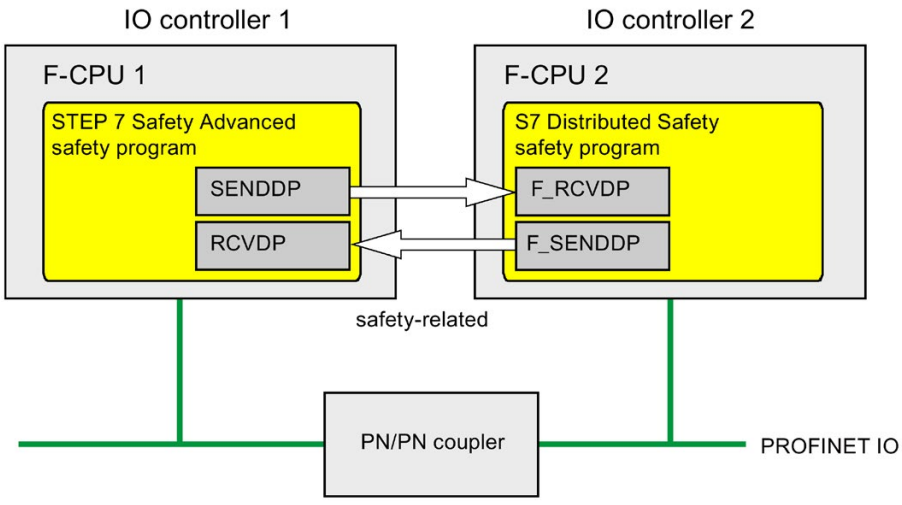

Procedure at the *S7 Distributed Safety* end

At the *S7 Distributed Safety* end, proceed as described in "Safety-related IO controller-IO controller communication" in the S7 Distributed Safety - Configuring and Programming (http://support.automation.siemens.com/WW/view/en/22099875) manual.

Procedure at the *STEP 7 Safety* end

At the *STEP 7 Safety* end, proceed as described in Safety-related IO controller-IO controller communication (Page 272).

9.3.7.3 Communication with S7 Distributed Safety via DP/DP coupler (master-master communication)

Communication functions between SENDDP/RCVDP instructions at the *STEP 7 Safety* end and F-application blocks F_SENDDP/F_RCVDP at the *S7 Distributed Safety* end:

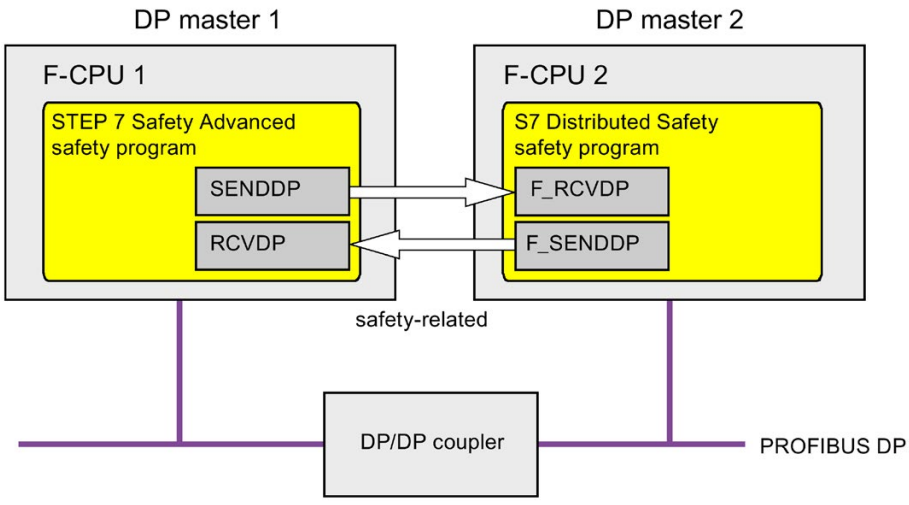

Procedure at the *S7 Distributed Safety* end

At the *S7 Distributed Safety* end, proceed as described in "Safety-related master-master communication" in the S7 Distributed Safety - Configuring and Programming (http://support.automation.siemens.com/WW/view/en/22099875) manual.

Procedure at the *STEP 7 Safety* end

At the *STEP 7 Safety* end, proceed as described in Safety-related master-master communication (Page 281).

9.4 Configuring and programming communication between S7-300/400 and S7-1200/1500 F-CPUs

9.4.1 Overview of communication

Introduction

This section provides an overview of the options for safety-related communication between S7-300/400 and S7-1200/1500 F-CPUs in SIMATIC Safety F-systems.

Options for safety-related communication

Safety-related communication	On subnet	Additional hardware required
Safety-related CPU-CPU communication:		
Master-master communication	PROFIBUS DP	DP/DP coupler
Master-I-slave communication	PROFIBUS DP	—
IO controller-IO controller communication	PROFINET IO	PN/PN coupler
IO controller-I-device communication	PROFINET IO	—
IO controller-I-slave communication	PROFINET IO and PROFIBUS DP	IE/PB link

Basic procedure for configuring and programming

Configure and program safety-related communication between S7-300/400 F-CPUs and S7-1200/1500 F-CPUs as described in Configuring and programming communication (S7-300, S7-400) (Page 201) and Configuring and programming communication (S7-1200, S7-1500) (Page 270) for your application.

To program an S7-300/400 F-CPU, use the start addresses of the transfer areas. To program an S7-1200/1500 F-CPU, use the HW identifiers of the transfer areas.

9.5 Configuring and programming communication in several projects

9.5.1 Safety-oriented IO Controller I device communication in several projects

9.5.1.1 Configuring safety-related communication between IO controller and I-device

Introduction

Safety-related communication between the safety program of the F-CPU of an IO controller and the safety program(s) of the F-CPU(s) of one or more I-devices takes place via IO controller-I-device connections (F-CD) in PROFINET IO, in the same way as in standard systems.

The following section describes particular aspects when the IO Controller and the I-device are located in different projects.

Requirement

- The IO Controller is an S7-1200/1500 F-CPU that supports the IO Controller functionality.
- The I-device is an S7-300/400/1200/1500 F-CPU that supports the I-device functionality.
- The project in which the I-device is located, must have been created with *S7 Distributed Safety V5.4*, *STEP 7 Safety V13* or later.

Configuring

1. Configure the safety-related communication in the project with the I-device as described under "Configuring safety-related communication between IO controller and I-device (Page 223)" (S7-300/S7-400) or "Configuring safety-related communication between IO controller and I-device (Page 290)" (S7-1200/S7-1500) respectively. In this case the F-CPU 1 (IO Controller) is only a placeholder for the F-CPU in the project of the IO Controller.

   Note

   When creating with *STEP 7 Safety* < V14 SP1 avoid a subsequent change from the transfer areas from CD to F-CD.

   When creating with *S7 Distributed Safety V5.4* create the application transfer areas of the address type "Output" and "Input" directly after each other.

2. Export the I-device as a GSD file. Proceed as described in the *STEP 7* help under "Configuring an I-device".
3. Import the GSD file in the project with the IO Controller. Proceed as described in the *STEP 7* help under "Installing a GSD file".

4. Insert the I-device from the "Hardware catalog" task card into the project with the IO Controller.
5. Assign the F-CPU of the IO Controller to the I-device.

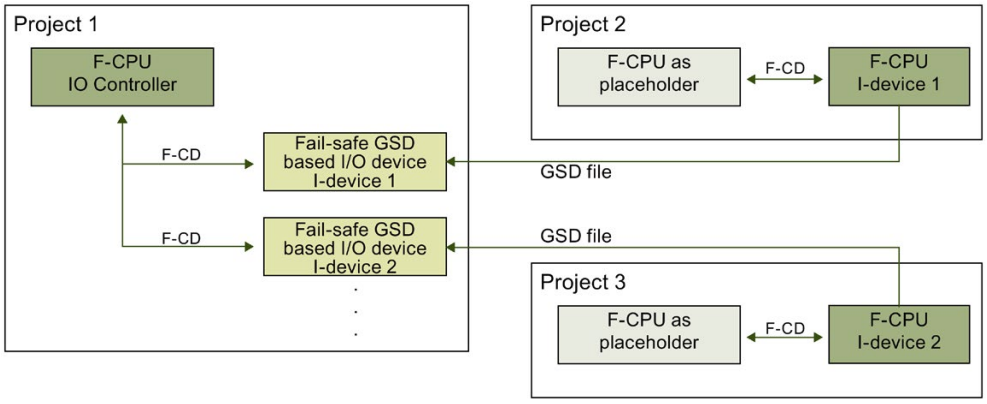

9.5.1.2 Programming safety-related IO Controller I-device communication

Programming procedure

To program the safety-related communication between the IO controller and I-device for an F-CPU S7-300/400, analogously follow the procedure described under "Safety-related IO controller-I-device communication via SENDDP and RCVDP (Page 226)" and "Programming safety-related IO controller I-device communication (Page 227)". To program an S7-300/400 F-CPU, use the start addresses of the transfer areas.

To program the safety-related communication between the IO controller and I-device for an F-CPU S7-1200/1500, analogously follow the procedure described under "Safety-related IO controller-I-device communication via SENDDP and RCVDP (Page 293)" and "Programming safety-related IO controller I-device communication (Page 294)". To program an S7-1200/1500 F-CPU, use the HW identifiers of the transfer areas.

Compiling and commissioning a safety program 10

10.1 Compiling the safety program

To compile a safety program, follow the same basic procedure as for compiling a standard user program. You can start at various points to accomplish this in *STEP 7*. The basics for compiling user programs can be found in the *Help on STEP 7*.

Note

Please note that following a safety-related change to the hardware configuration that not only this, but also the safety program has to be recompiled and downloaded. This also applies for changes to the F-I/O which are not used in the safety program.

Note

The safety program is not compiled consistently with the menu command "Edit > Compile" or the "Compile" icon under the following conditions:

- When you select a user-created folder in the project tree.
- When you select one or more (F-)blocks in the "Program blocks" folder in the project tree.

Use this procedure to test if modified F-blocks can be compiled.

Note

The following applies for S7-300/400 F-CPUs:

If you want to compile a know-how-protected F-block after a change, you must remove the know-how protection for this F-block before compiling.

Reporting compiling errors

You can recognize whether or not the compilation was successful based on the message in the inspector window under "Info > Compile", error messages and warnings are output.

For information on the procedure you must follow to eliminate compiling errors, see "Eliminating compiling errors" in the *Help on STEP 7*.

See also

Safety Administration Editor (Page 81)

10.2 Safety program work memory requirements (S7-300, S7-400)

Estimation

You can estimate the work memory requirement for the safety program as follows:

Work memory required for the safety program

32 KB for F-system blocks

+ 4.4 KB for safety-related communication between F-runtime groups
+ 4.5 x work memory requirement for all F-FB/F-FCs/main safety blocks
+ 4.5 x work memory requirement of all utilized instructions, which are shown in the "Instructions" task card with the block icon.
  (except SENDDP, RCVDP, SENDS7, and RCVS7)
+ Work memory requirement of the utilized SENDDP and RCVDP instructions
  (4.3 KB each)
+ Work memory requirement of the utilized SENDS7 and RCVS7 instructions
  (8.5 KB each)

Work memory required for data

5 x work memory requirement for all F-DBs (including F-communication DB, but excluding DB for F-runtime group communication) and I-DBs for main safety block/F-FB

+ 24 x work memory requirement for all DBs for F-runtime group communication
+ 2.3 x work memory requirement for all I-DBs of instructions (except SENDDP, RCVDP, SENDS7 and RCVS7)
+ Work memory requirement of all I-DBs of instructions SENDDP (0.2 KB), RCVDP (0.3 KB), SENDS7 (0.6 KB), and RCVS7 (1.0 KB)
+ 0.7 KB per F-FC
+ 0.7 KB per F-I/O (for F-I/O DBs, etc.)
+ 4.5 KB

Block size of automatically generated F-blocks

Do not utilize the entire maximum size of an F-block, because the automatically generated F-blocks are larger and as a result, the maximum possible size may be exceeded in the F-CPU. If the block size is exceeded, this triggers a corresponding error message with information on which F-blocks are too large. These must be divided up, if necessary.

10.3 Downloading project data

10.3.1 Downloading project data to an F-CPU

Introduction

Once you have successfully compiled your safety program, you can download it to the F-CPU. To download a safety program, you follow essentially the same approach as for downloading a standard user program, via different starting points in *STEP 7*.

- In the "Load preview" dialog, enter data (e.g. password for the F-CPU) and set the requirements for downloading (e.g. that the F-CPU is switched to STOP mode before downloading).
- The "Load results" dialog shows the results after downloading.

We will show you the options for downloading the safety program later. For basic information on downloading, refer to the *Help on STEP 7*.

Rules for downloading the safety program to an F-CPU

WARNING

If **multiple F-CPUs** can be reached over a network (e.g. Industrial Ethernet) by **one programming device or PC**, you must take the following actions to ensure that the project data is downloaded to the correct F-CPU:

Use passwords specific to each F-CPU, such as a uniform password for the F-CPUs with attached Ethernet address for each.

Note the following:

- A point-to-point connection must be used to activate the access protection of an F-CPU when the hardware configuration is loaded for the first time (similar to assigning an MPI address to an F-CPU for the first time).
- Before downloading the safety program to an F-CPU, you must first revoke an existing access permission for any other F-CPU.
- The last download of the safety program prior to switching to productive operation must be made with enabled access protection. *(S021)*

Note

You can perform the downloading of a consistent safety program only in STOP mode.

Note

If *STEP 7 Safety* detects an inconsistent safety program during startup of the F-CPU, the F-CPU cannot be started, provided the F-CPU supports this detection function (see product information for the particular S7-300/400 F-CPU). This is always supported with S7-1200/1500 F-CPUs). A corresponding diagnostics event is entered in the diagnostics buffer of the F-CPU.

If the F-CPU does not support this detection function, the F-CPU can go to STOP mode if an inconsistent safety program is executed in activated safety mode.

The cause of the diagnostics event is entered in the diagnostics buffer of the F-CPU.

When downloading the safety program, ensure that the "Consistent download" action is set for the "Safety program" selection in the "Load preview" dialog.

Inconsistent downloading is only possible in disabled safety mode.

Password prompt before downloading to an F-CPU

If you have assigned a protection level for the F-CPU (Page 106) (in the properties of the F-CPU in the "Protection" tab), the corresponding password is prompted in "Load preview" dialog. Without entry of password, only actions that are allowed without password are possible. As soon as the conditions for downloading are met, the "Load" button becomes active.

"Load preview" dialog

For an F-CPU, the "Load preview" dialog also contains the section "Safety program".

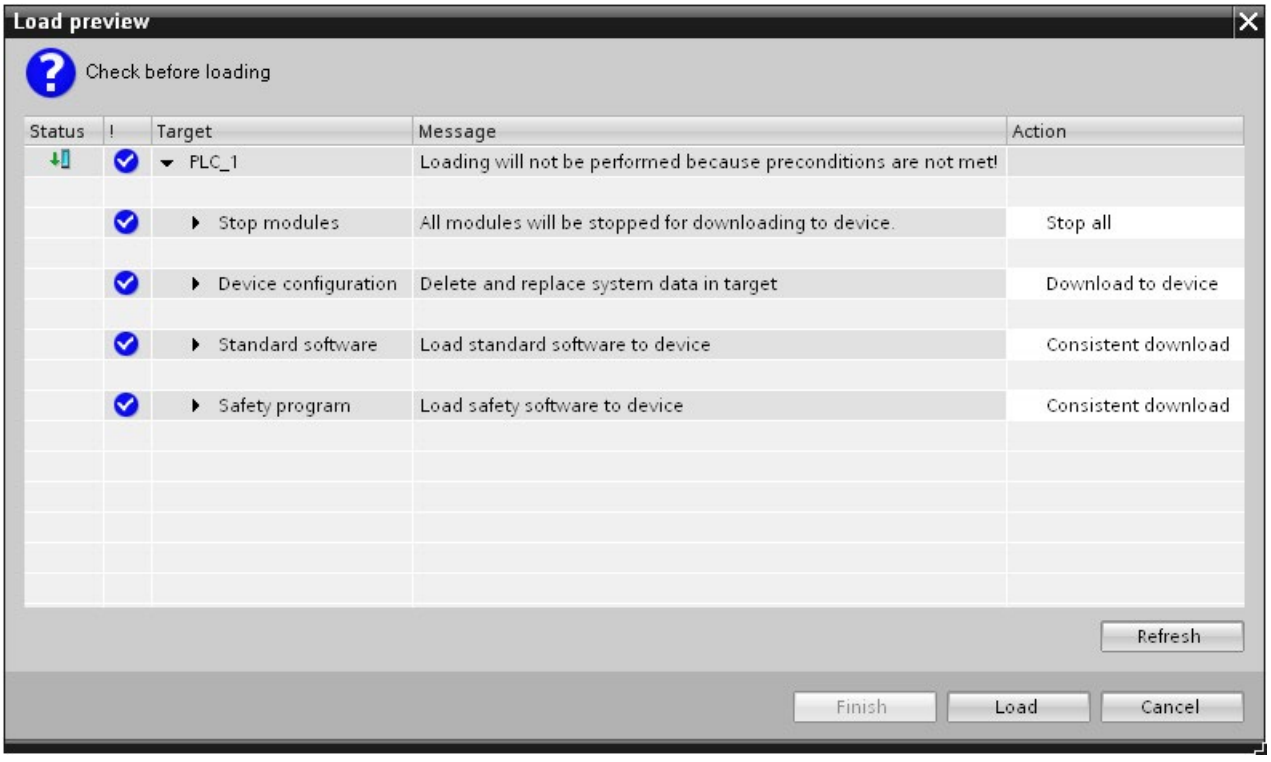

Make the following selection:

- In order to download a consistent safety program, select the "Consistent download" action under target "Safety program".
- (S7-300, S7-400) To download individual F-blocks selectively (Page 318), select the "Download selection" action under the target "Safety program", and then select the required F-blocks. If necessary, you will be prompted to disable safety mode under "Disable safety mode". This setting is only suitable for the online test of individual F-blocks.
- (S7-300, S7-400) In order to download the safety program only, select the "Consistent download" action under target "Safety program" and the "Download selection" action under target" Standard software", and then select only the standard blocks that call the main safety block.
- (S7-300, S7-400) To download no safety program, for example, because you do not know the password of the F-CPU, select the "No action" action under target "Safety program".

For S7-1200/1500 F-CPUs, only the "Consistent download" value is possible as an action in the "Load preview" dialog. It is not possible to select separate loading of standard program or safety program. The complete user program is automatically consistently downloaded as soon as changes have been made in both the standard program and in the safety program. Refer also to the section entitled Data exchange between standard user program and safety program (Page 195).

"Load results" Dialog

After downloading into the F-CPU, the dialog "Load results" is opened. This dialog shows you the status and the necessary actions after downloading.

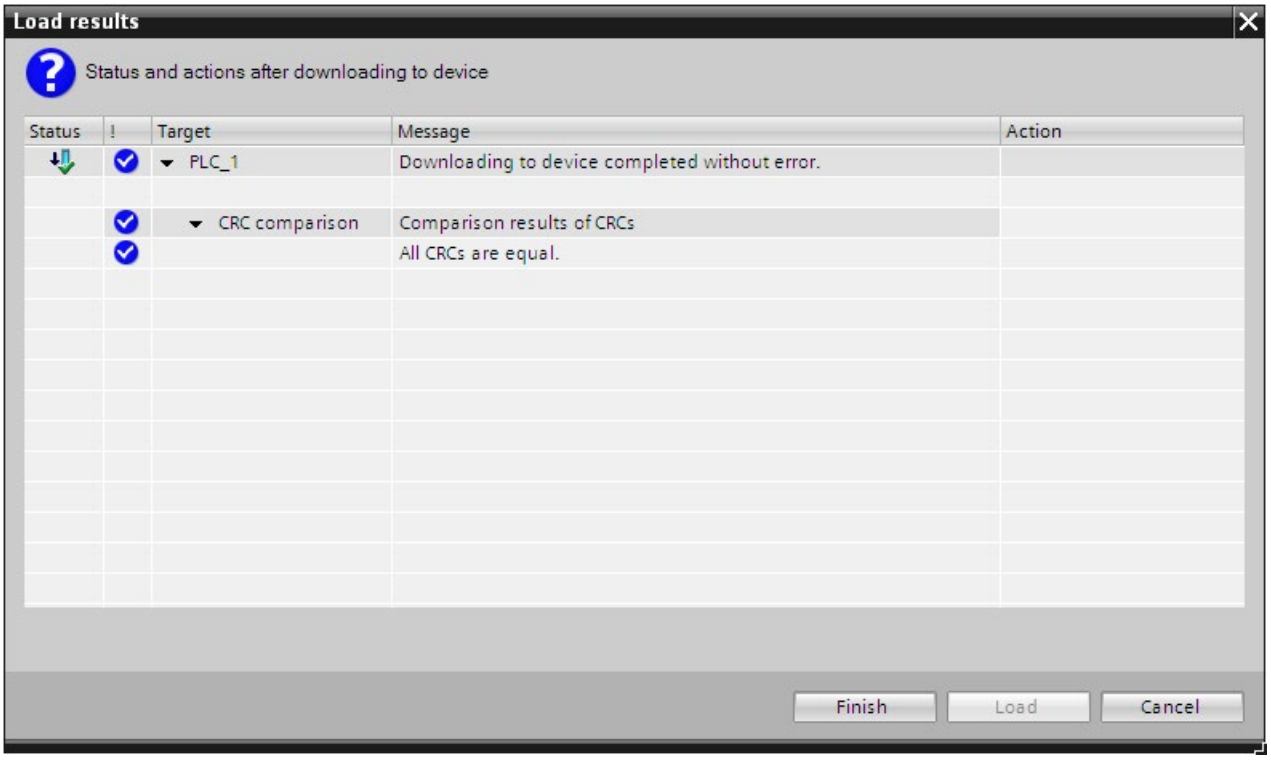

Verify that the "Downloading of safety program completed without errors." message appears in the "Load results" dialog. If not, repeat the download operation.

10.3.1.1 Downloading project data to an S7-300/400 F-CPU with memory card inserted (SIMATIC Micro memory card or flash card)

When you download project data to an S7-300/400 F-CPU with memory card inserted (SIMATIC Micro memory card for S7-300 or flash card for S7-400), you must observe the following warning:

WARNING

If the function test of the safety program is not carried out in the destination F-CPU, you must adhere to the following procedure when downloading the safety program to the F-CPU with a **programming device/PC** to ensure that the F-CPU does not contain an "old" safety program:

- Download the safety program to the F-CPU.
- Perform a program identification (i.e. check whether the collective F-signatures match online and offline).
- Perform a memory reset of the F-CPU using the mode switch or via the programming device/PC. Once the work memory has been deleted, the safety program is again transferred from the load memory (memory card, SIMATIC Micro memory card for S7-300 F-CPUs,flash card for S7-400 F-CPUs) to the work memory. *(S022)*

10.3.1.2 Downloading project data to an S7-400 F-CPU without flash card inserted

When you download project data to an S7-400 F-CPU without flash card inserted, you must observe the following warning:

WARNING

If the function test of the safety program is not carried out in the destination F-CPU, you must adhere to the following procedure when downloading the safety program to the F-CPU with a **programming device/PC** to ensure that the F-CPU does not contain an "old" safety program:

- Perform a memory reset of the F-CPU using the **mode switch** or via the **programming device/PC**.
- Download the configuration and the safety program to the F-CPU.
- Perform a program identification (i.e. check whether the collective F-signatures match online and offline). *(S023)*

10.3.1.3 Downloading project data to a WinAC RTX F

When you download project data to a WinAC RTX F, you must observe the following warning:

WARNING

You must adhere to the following procedure when downloading the safety program to the WinAC RTX F with a programming device/PC to ensure that the WinAC RTX F does not contain an "old" safety program:

1. Perform a memory reset of the WinAC RTX F (see Windows Automation Center RTX WinAC RTX (F) 2010 (http://support.automation.siemens.com/WW/view/en/43715176) manual).
2. Download the project data (Page 313) to the WinAC RTX F.

   If the function test of the safety program does not take place in the destination WinAC RTX F, you must also follow points 3. and 4:
3. Perform a program identification. This means you check whether the collective F-signatures match online and offline.
4. Perform the F-system startup.

Between the online program identification and the startup of the F-system, the WinAC RTX F must not be closed (for example, as a result of POWER OFF/POWER ON or booting). *(S024)*

10.3.1.4 Downloading individual F-blocks to an S7-300/400 F-CPU

Download F-blocks in disabled safety mode.

You can download F-blocks and standard blocks simultaneously to the F-CPU via the project tree. However, as soon as F-blocks are to be downloaded, a check is carried out to determine whether or not the F-CPU is in STOP mode or disabled safety mode. If not, you have the option of switching to disabled safety mode or placing the F-CPU in STOP mode.

If you want to download individual F-blocks to the F-CPU, for example, to test changes, make sure that you have not selected the folder "Program blocks" or the F-CPU in the project tree but only the blocks you want to download.

Only then will you be prompted in the "Load preview" dialog to disable safety mode once you have changed the option from "Consistent download" to "Download selection" and have changed the option “Stop modules” to “No action”.

If you fail to observe this prompt, the blocks are downloaded without deactivation of the safety mode which will STOP the F-CPU.

You can also deactivate the safety mode explicitly in the *Safety Administration Editor* before you start the download.

Be aware that the consistency of the safety program in the F-CPU cannot be guaranteed when individual F-blocks are downloaded. For a consistent safety program, always download the entire safety program to the F-CPU.

Rules for downloading individual F-blocks

The following rules apply to downloading of individual F-blocks:

- Downloading is only possible in disabled safety mode or when the F-CPU is in STOP mode.
- F-blocks can only be downloaded to an F-CPU to which a safety program has already been downloaded.
- Only an offline safety program is permitted to be used as a source program.

Consequently, you have to download the entire safety program when initially downloading the safety program and after changing the password for the safety program.

Note

If you are downloading F-blocks only, the blocks in which the main safety blocks are called (e.g., cyclic interrupt OB 35) are not downloaded. To do so, select the "Selection" option under "Standard software" in the preview dialog, and select the necessary blocks.

Note

Downloading of individual F-blocks is only suitable for testing F-blocks. Prior to the transition to productive mode, you must download the safety program consistently to the F-CPU.

10.3.1.5 Downloading project data to an S7-1200 F-CPU without program card inserted

When you download project data to an S7-1200 F-CPU without program card inserted, you must observe the following warning:

WARNING

If the function test of the safety program is not carried out in the destination F-CPU, you must adhere to the following procedure when downloading the safety program to the F-CPU with a **programming device/PC** to ensure that the F-CPU does not contain an "old" safety program:

- Download the safety program to the F-CPU.
- Perform a program identification (i.e. check whether the collective F-signatures match online and offline). *(S042)*

10.3.1.6 Downloading project data to an S7-1200 F-CPU with program card inserted

When you download project data to an S7-1200 F-CPU with program card inserted, you must observe the following warning:

WARNING

You must observe the following procedure to ensure that there is no "old" safety program in the internal load memory of the F-CPU when you insert a program card into an S7-1200 F-CPU:

1. Check to see whether **the STOP/RUN LED (orange) and the maintenance LED flash during startup for 3 seconds on an F-CPU without memory card**.
   If this is the case, the internal load memory of the F-CPU has already been deleted (for example, when the F-CPU has already been operated with a program card as external load memory) and you can skip step 3.
2. Insert the program card into the F-CPU.
   If the F-CPU is in RUN, it will change to STOP. The maintenance LED on the F-CPU is flashing to indicate that the program card is being evaluated or that the internal load memory must be deleted.
3. Use one of the following methods to delete the internal load memory:
   – Turn the F-CPU off and back on.
   – Switch the F-CPU from STOP to RUN.
   – Execute the "Memory reset" (MRES) function.

   After restart and deletion of the internal load memory, **the STOP/RUN LED (orange) and the maintenance LED must be flashing**. The internal load memory of the F-CPU has been deleted in this case and does no longer store an "old" safety program.
4. Use one of the following methods to evaluate the program card:
   – Turn the F-CPU off and back on.
   – Switch the F-CPU from STOP to RUN.
   – Execute the "Memory reset" (MRES) function.

   The F-CPU restarts and evaluates the program card.

   The F-CPU then enters the startup mode (RUN or STOP) that has been set up for the F-CPU. *(S061)*

For an S7-1200 F-CPU without inserted SIMATIC Memory Card and deleted internal load memory, the status LEDs have the status described in the table below.

Description	STOP/RUN Orange/Green	ERROR Red	MAINT Orange
Internal load memory deleted and SIMATIC Memory Card **not** inserted.	Flashing (orange) (for 3 seconds during startup)	Off	Flashing (for 3 seconds during startup)

WARNING

If you use a programming device/PC to download F-blocks to an S7-1200 F-CPU with inserted program card (external load memory), you must ensure that the transfer takes place to the external load memory. This can be accomplished by the following measures:

- Check to see if the program card is inserted correctly.
- Insert a program card whose memory size is different than the size of the internal load memory. Check in the project tree under "Online & Diagnostics > Diagnostics > Memory" if the memory size displayed for the load memory matches the memory size of the program card. *(S058)*

WARNING

If the function test of the safety program is not carried out in the destination F-CPU, you must adhere to the following procedure when downloading the safety program to the F-CPU with a **programming device/PC** to ensure that the F-CPU does not contain an "old" safety program:

- Download the safety program to the F-CPU.
- Perform a program identification (i.e. check whether the collective F-signatures match online and offline). *(S042)*

10.3.1.7 Downloading project data to an S7-1500 F-CPU

When you download project data to an S7-1500 F-CPU, you must observe the following warning:

WARNING

If the function test of the safety program is not carried out in the destination F-CPU, you must adhere to the following procedure when downloading the safety program to the F-CPU with a **programming device/PC** to ensure that the F-CPU does not contain an "old" safety program:

- Download the safety program to the F-CPU.
- Perform a program identification (i.e. check whether the collective F-signatures match online and offline). *(S042)*

10.3.1.8 Downloading project data to an S7-1500 F Software Controller

When you download project data to an S7-1500 F Software Controller, you must observe the following warnings:

WARNING

If the function test of the safety program is not carried out in the destination F-CPU, you must adhere to the following procedure when downloading the safety program to the F-CPU with a **programming device/PC** to ensure that the F-CPU does not contain an "old" safety program:

- Download the safety program to the F-CPU.
- Perform a program identification (i.e. check whether the collective F-signatures match online and offline). *(S042)*

WARNING

For security reasons, the password of an S7-1500 F Software Controller is also stored in a separate memory in addition to the load memory.

Unlike the load memory, this separate memory is not deleted. This means the previous passwords are once again active after deleting the S7-1500 F Software Controller followed by a run-up.

For this reason, note the following:

- The S7-1500 F Software Controller is deleted in case of the following download scenarios of the PC station:
  - Downloading a PC station with revised interface assignment.
  - Downloading a PC station with revised storage location for retentive data.
- We recommend that you do not set up F-access protection until after commissioning. If you still have to change the interface assignment of the PC station or the storage location for retentive data, you do not have to enter the F-password during the subsequent mandatory download of the S7-1500 F Software Controller.
- We recommend that you remove the F-access protection from an S7-1500 F Software Controller that is no longer in use. If you forget the F-password when you want to operate the S7-1500 F Software Controller later, you can remove it by uninstalling/installing or loading a new image. *(S076)*

See also

Downloading project data to an F-CPU (Page 313)

Software Controller (http://support.automation.siemens.com/WW/view/en/109249299)

10.3.2 Downloading project data to a memory card and inserting a memory card

Proceed as you would with standard blocks to download project data from an F-CPU to a memory card (flash card for S7-400, SIMATIC Micro Memory Card for S7-300 or SIMATIC Memory Card for S7-1200/1500). You must also observe the following warning:

WARNING

If the function test of the project data is not performed in the destination F-CPU, you must ensure that the correct project data are on the memory card after downloading the project data to the memory card.

Follow these steps:

1. Make sure that you are using an empty memory card.
2. Download the project data to the memory card.
3. If necessary, clearly label the memory card (e.g. with the collective F-signature).

The procedure outlined must be ensured through organizational measures. *(S043)*

When inserting a memory card (flash card for S7-400, SIMATIC Micro Memory Card for S7-300 or SIMATIC Memory Card for S7-1200/1500) with project data from an F-CPU, you observe the following warning:

WARNING

If the function test of the safety program is not performed in the destination F-CPU, you must ensure through online program identification or other suitable measures (e.g. by checking the labeling of the memory card) that the memory card inserted has the correct safety program. *(S025)*

10.3.2.1 Inserting a SIMATIC Micro Memory Card or flash card into an S7-300/400 F-CPU

When you insert a memory card (flash card for S7-400 or SIMATIC Micro memory card for S7-300) into an S7-300/400 F-CPU , you must observe the following warning:

WARNING

If the function test of the safety program is not performed in the destination F-CPU, you must adhere to the following procedure when inserting the memory card to ensure that the F-CPU does not contain an "old" safety program:

- Switch off the power to the F-CPU. For F-CPUs with battery backup (e.g. CPU 416F-2), remove any battery. (To ensure that the F-CPU is de-energized, wait for the buffer time of the power supply you are using or, if this is not known, remove the F-CPU.)
- Remove the memory card with the old safety program from the F-CPU.
- Insert the memory card with the new safety program into the F-CPU.
- Switch on the F-CPU again. For F-CPUs with battery backup (e.g. CPU 416F-2), reinsert the battery, if one was removed.

(S026)

10.3.2.2 Inserting a transfer card into an S7-1200 F-CPU

When you insert a transfer card into an S7-1200 F-CPU, you must observe the following warning:

WARNING

You must observe the following procedure to ensure that there is no "old" safety program in the internal load memory when you copy the project data to an S7-1200 F-CPU using a transfer card:

1. Check to see whether **the STOP/RUN LED (orange) and the maintenance LED flash during startup for 3 seconds on an F-CPU without memory card**.
   If this is the case, the internal load memory of the F-CPU has already been deleted and you can skip step 3.
2. Insert the transfer card into the F-CPU.
   If the F-CPU is in RUN, it will change to STOP. The maintenance LED on the F-CPU is flashing to indicate that the transfer card is being evaluated or that the internal load memory must be deleted.
3. Use one of the following methods to delete the internal load memory:
   – Turn the F-CPU off and back on.
   – Switch the F-CPU from STOP to RUN.
   – Execute the "Memory reset" (MRES) function.

   After restart and deletion of the internal load memory, **the STOP/RUN LED (orange) and the maintenance LED must be flashing**. The internal load memory of the F-CPU has been deleted in this case and does no longer store an "old" safety program.
4. Use one of the following methods to evaluate the transfer card (transfer from the transfer card to the internal load memory):
   – Turn the F-CPU off and back on.
   – Switch the F-CPU from STOP to RUN.
   – Execute the "Memory reset" (MRES) function.

   After restart and evaluation of the SIMATIC Memory Card, the F-CPU copies the project data to the internal load memory of the F-CPU. Once the copy process is complete, the maintenance LED on the F-CPU is flashing to indicate that you can remove the transfer card.
5. Remove the transfer card from the F-CPU.
6. Use one of the following methods to evaluate the internal load memory:
   – Turn the F-CPU off and back on.
   – Switch the F-CPU from STOP to RUN.
   – Execute the "Memory reset" (MRES) function.

   The F-CPU then enters the startup mode (RUN or STOP) that has been set up for the F-CPU. *(S059)*

For an S7-1200 F-CPU without inserted SIMATIC Memory Card and deleted internal load memory, the status LEDs have the status described in the table below.

Description	STOP/RUN Orange/Green	ERROR Red	MAINT Orange
Internal load memory deleted and SIMATIC Memory Card **not** inserted.	Flashing (orange) (for 3 seconds during startup)	Off	Flashing (for 3 seconds during startup)

10.3.3 Downloading project data of an S7-1200 F-CPU from the internal load memory to an empty SIMATIC Memory Card

When you download project data from the internal load memory of an S7-1200 F-CPU to an empty SIMATIC Memory Card, you must observe the following warning:

WARNING

To ensure that the safety program is downloaded from the internal load memory of the F-CPU to the SIMATIC Memory Card when plugging an empty SIMATIC Memory Card into an S7-1200 F-CPU and that the internal load memory of the F-CPU is deleted afterward, you must observe the following procedure:

1. Make sure that you are using an empty SIMATIC Memory Card, for example, by checking in the Windows Explorer that the "SIMATIC.S7S" folder and the "S7_JOB.S7S" file are deleted.
2. Insert the empty SIMATIC Memory Card into the F-CPU.

   If the F-CPU is in RUN, it will change to STOP. The maintenance LED on the F-CPU is flashing to indicate that the program can be copied from the internal load memory to the SIMATIC Memory Card and that the internal load memory is deleted afterward.
3. Use one of these methods to trigger copying from the internal load memory to the SIMATIC Memory Card and subsequent deletion of the internal load memory:
   - Turn the F-CPU off and back on.
   - Switch the F-CPU from STOP to RUN.
   - Execute the "Memory reset" (MRES) function.

   After restart and copying of the program from the internal load memory to the SIMATIC Memory Card and subsequent deletion of the internal load memory, **the STOP/RUN LED (orange) and the maintenance LED must be flashing**. The internal load memory of the F-CPU has been deleted in this case and does no longer store the safety program. The SIMATIC Memory Card is now a program card.
4. Use one of the following methods to evaluate the program card:
   - Turn the F-CPU off and back on.
   - Switch the F-CPU from STOP to RUN.
   - Execute the "Memory reset" (MRES) function.

   The F-CPU restarts and evaluates the program card.

   The F-CPU then enters the startup mode (RUN or STOP) that has been set up for the F-CPU. *(S057)*

Note

Also observe the setting "Disable copying from internal load memory to external load memory" in the hardware configuration of your F-CPU.

10.3.4 Updating project data on an S7-1200 F-CPU using a transfer card

When you want to update the project data on an S7-1200 F-CPU using a transfer card, you must observe the following warning:

WARNING

If you run an update of the safety program on an S7-1200 F-CPU with the help of a transfer card, you must ensure that the transfer to the internal load memory took place correctly by means of a subsequent program identification. *(S060)*

10.3.5 Restoring a backup of the safety program to an S7-300/1200/1500 F-CPU

You have the option of backing up an F-CPU in the same way as a standard CPU and then restoring it. You can find information on backing up a CPU in the *help on STEP 7* under "Creating a backup of an S7-CPU".

Note the following warnings when restoring the software and hardware configuration of an F-CPU:

WARNING

Once you have restored a backup of an F-CPU, you must perform a program identification. *(S055)*

Note

We recommend that you use the collective F-signature that is included in the name of the backup file for program identification. You must not change the collective F-signature in the name in this case.

WARNING

(S7-1200/1500) If multiple F-CPUs with Web server can be reached by a programming device or PC, you must take additional actions to ensure that the safety program is downloaded to the correct F-CPU by restoring it.

Use CPU-specific passwords for the "F-Admin" right on the Web server. For example, select a uniform password with attached IP address (e.g. Password_192.168.0.8) for each F-CPU. *(S065)*

10.3.6 Special features when creating and importing images of an S7-1500 F Software Controller

Creating an image

WARNING

You must comply with the following points when creating an image with a safety program:

- You must limit access to an S7-1500 F Software Controller through access protection to persons who are authorized to create images.
- Before creating the image, you must use program identification to ensure that the correct safety program is installed on the S7-1500 F Software Controller.
- Images with safety programs must be created on an empty data carrier (deleted or formatted) or an existing image must be explicitly deleted.
- After creating the image, remove the data carrier containing the image.
- Clearly label the data storage medium (e.g. with the collective F-signature). *(S073)*

NOTICE

If the safety program in the image and the old safety program on the S7-1500 F Software Controller are not identical, the imported safety program would not start. In this case, you must download the safety program to the F-CPU once again. For example, with the TIA Portal. Therefore, you should always keep your image backups up-to-date.

Import image

WARNING

You must comply with the following points when importing an image with a safety program:

- You must limit access to an S7-1500 F Software Controller through access protection to persons who are authorized to import images.
- When importing an image via LAN, remote access or comparable accesses, you have to ensure access protection (e.g. via Windows administrator permission (ADMIN)). Note, however, that only authorized persons are set up as users.
- To ensure that the images are written to the correct S7-1500 F software controller, when importing an image via LAN you must ensure that only one S7-1500 F software controller can be accessed. For example, by removing the physical connections and routing options to other S7-1500 F software controllers.
- You must ensure that the correct safety program is on the image, for example, through unique identification of the data storage medium.
- After importing the image, remove the image and copies thereof.
- After importing the image, you must use program identification to ensure, for example with the Panel, that the correct safety program is installed on the S7-1500 F software controller.*(S074)*

10.3.7 Loading project data from an F-CPU to a programming device / PC

Loading the user program (including safety program) to a programming device / PC (S7-300, S7-400)

To upload a user program (including safety program) to a programming device / PC, proceed as with a standard program, "Online > Upload from device (software)" or "Online > Upload device as new station (hardware and software)"

You can only upload the hardware configuration if F-capability is not enabled for the F-CPU. You can only upload F-I/Os if these are operated in standard mode.

Note

In principle, it is possible to upload a safety program from the F-CPU to a programming device or PC. Note, however, that any symbols used in the safety program are deleted and cannot be recreated, since no symbol information is saved in the F-CPU. Symbols are available only if you are using an offline project.

A safety program uploaded from the F-CPU to a programming device / PC may not be loaded again into the F-CPU.

Loading the project data (including safety-related project data) into a programming device / PC (S7-1500)

The "Upload from device (software)" or "Upload device as new station (hardware and software)" function is only possible for S7-1500 F-CPUs if the "Enable consistent upload from the F-CPU" option is activated for the F-CPU in the *Safety Administration Editor* and the project data are loaded to the F-CPU afterwards.

To load the project data (including safety-related project data) to a programming device or PC, proceed as for standard blocks.

If multiple F-CPUs can be reached over a network (e.g. Industrial Ethernet) by the programming device / PC, you have to ensure that the project data are downloaded from the correct F-CPU. For example with "Online & diagnostics" > "Online accesses " > "Flash LED".

After successful loading from the device you can continue working as with a project that was created offline.

WARNING

If you want to carry out an acceptance with the project data upload to the programming device / PC or want to carry out changes to the safety-related project data and the F-CPU is in STOP mode, you have set to programming device / PC to RUN before uploading. This way, you can ensure that the safety program is executable. If the F-CPU remains in STOP, you are not allowed to perform acceptance or changes with the safety-related project data. *(S080)*

You can load individual F-blocks into a programming device / PC irrespective of the "Enable consistent upload from the F-CPU" option.

You cannot upload individual know-how protected F-blocks to a programming device / PC.

Note

The offline password is replaced or deleted by the online password of the safety program.

See also

"Settings" area (Page 90)

10.3.8 Loading PC station via the configuration file

You have the option to save the system configuration of the PC system in a configuration file, transport it and load it to a target system. The entire configuration of your PC station is saved in a configuration file with the ending *.psc from the TIA Portal.

Saving and loading of the configuration file is supported as of:

- *STEP 7 Safety V15*
- S7-1500 F Software Controller V2.5

Example

You can find a detailed example on the Internet (https://support.industry.siemens.com/cs/ww/en/view/109759142).

Identification parameters

The identification parameters include:

- File name
- Information in the project and the station that was stored from the TIA Portal in the PSC file in the metadata.

  For example:

  – Project version
  – Plant designation
  – Station comment

Save the identification parameters in a file, if necessary, that you store on the target system.

For evaluating and testing these identification parameters via script, you must store this information directly in the script or save the identification parameters in a separate file, if necessary, that you store on the target system.

10.3.8.1 Creating a configuration file

1. In the TIA Portal create a new configuration file with "Project > Memory Card file > New > PC system configuration file (.psc)".

   The configuration file is created in the project tree under "Card Reader/USB memory".
2. Use the collective F-signature to check in the SAE that you have selected the correct project/station.
3. Use your mouse to drag the selected PC station to the configuration file.

   This loads the PC station to the configuration file.

WARNING

Instead of online program identification, you can use a unique name for the configuration file *.psc (**P**C **S**tation **C**onfiguration) to ensure that the correct security program is located in the configuration file.

In addition, you have to observe the following when creating a configuration file:

On creation of a configuration file with the security program, an existing file may not be used. You have to create a new file.

You should also remove configuration files with a faulty security program from data storage.

You must limit access to the configuration file (*.psc) through access protection to persons who are authorized to import and modify the configuration file. *(S081)*

10.3.8.2 Importing the configuration file

You have the following options for importing the configuration file:

- Via the PC Station Panel menu (import configuration file)
- By means of a script

Import via the PC Station Panel menu

Requirement

If you want to start the import of the configuration file via the menu in the PC Station Panel of an S7-150xS(P) F, the executing user must be in the Windows user group "Failsafe Operators".

Procedure

WARNING

If the import operation was successful, you will receive a positive feedback. If you do not receive a positive message, you must assume that the import operation was not successful and that the old security program is still present.

When importing a configuration file of a PC station via the menu of the panel with a security program, you must observe the following:

- Use the unique name of the configuration file to check that you have selected the required configuration file.
- To ensure that the import is performed on the correct S7-1500 F software controller, when importing a configuration file via LAN you must ensure that you address the correct S7-1500 F software controller. To do this, perform one of the following actions:
  - Remove the physical connections and routing options to other S7-1500 F software controllers.
  - Use unique computer names and unique user logins or use other identification options. *(S084)*

Import by means of a script

WARNING

You must check in the script based on the specified identification parameters whether the import of the configuration file is permitted for the respective target system (e.g. by evaluating the F-CPU name, project name or using the plant designation).

In addition, checking the respective instance of the target system, which means a diversified check of your addressing and/or checking the version of the configuration file, for example, only higher versions or the exclusion of specific versions (black list), can also be necessary or useful. You must store this information on the target system beforehand.

Example of checking the respective version for reliability:

- The script evaluates the information about the version and only allows configuration files of a higher version, for example.

As a machine manufacturer, you must ensure that the script is protected against unauthorized manipulation (change to contents or name).

If as a machine manufacturer you only make available the configuration files, you have to ensure that an incorrect configuration file is not imported during import through technical measures (extended checks in the script) and training of the machine operators. *(S082)*

The script checks for:

- Matching machine ID
- Version ID greater than current one. If so, the new version is written to the txt file.
- Instance number

The figure below contains a systematic overview of checking the configuration file in the script with the help of an identification parameter stored in a separate file (shown in violet in the figure below):

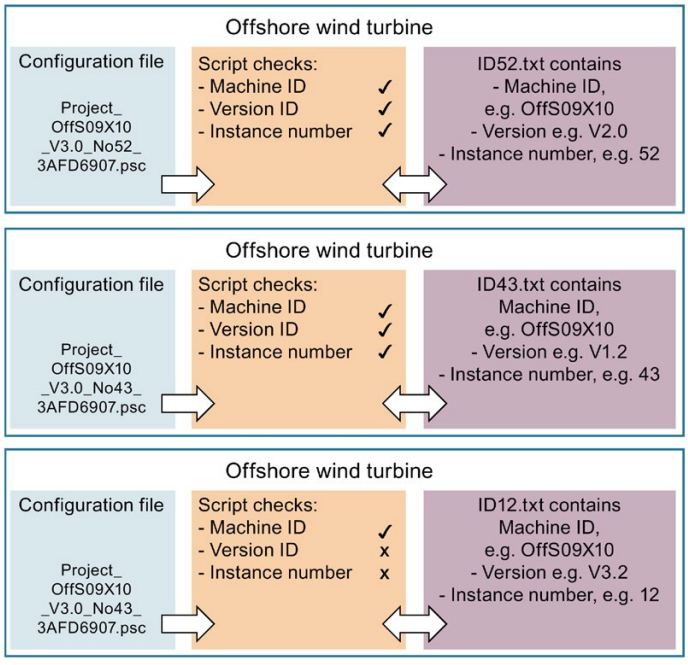

WARNING

You determine the successful import of a security program via the script by evaluating the corresponding return value (0x51A3). If the corresponding return value is not returned by the script command PCSystem_Control, the import has failed and the old safety program may still be present.

To ensure that the return value is not from the previous import, you need to reset the return value to 0x3FF ("PCSystem_Control /ImportConfig" without entering a data name) before the import and then check that the return value has been reset to 0x3FF (Enter "PCSystem_Control /GetStatus /ImportConfig" and then enter "echo %errorlevel%". This instruction must deliver the return value 0x3FF.)

If the import operation is triggered by a server, feedback about the positive return value must be given.

For traceability we recommend that you document the import operation in a log file.

If the the configuration file is imported manually via the Windows command line (via script command), you need to do one of the following:

- Reset the return value to 0x3FF and check it before the import (see above).
  - Carry out the import.
  - Evaluate return value (enter "PCSystem_Control /GetStatus /ImportConfig" and then enter "echo %errorlevel%". This instruction must deliver the return value 0x51A3).
- Carry out the import.
  - Manual program identification performed, e.g. via the panel of the F-CPU.

(S083)

Note

The positive return value when importing a configuration file via script is "0x51A3” for an S7-1500 F software controller, in contrast to the S7-1500 software controller, in which case it is "0x0000".

When the file is imported via script, the authorization should be moved to the script. This means that the executing user does not need a higher authorization as the script which was made available by the machine manufacturer contains the necessary authorizations (user group "Failsafe Operators").

The rights are assigned via script by assignment of the Windows service to the corresponding user group. This initial installation must be performed beforehand by the Windows administrator on every computer with S7-150xS(P) F. The Windows service can be called by the executing user and the Windows service executes the script.

10.4 Program identification

You use the program identification to determine that the correct safety program was downloaded to the F-CPU To do so, you compare the collective F-signatures of the safety program and the assignment of the "F-admin" rights online with the expected value. The expected value can be, for example, the collective F-signature of the safety program offline from the *Safety Administration Editor* or from the safety summary. Check the assignment of the "F-admin" right in the *Safety Administration Editor*.

Use organizational measures to ensure that the safety program is not downloaded by any other TIA Portal (on a separate programming device or PC) while you perform the program identification.

With the *Safety Administration Editor*

For a program identification using the *Safety Administration Editor*, follow these steps:

1. Open the *Safety Administration Editor* of the F-CPU you want to check.
2. Connect online with the F-CPU you want to check.
3. Compare the collective F-signature displayed online with the expected value in the "General" section.
4. Check whether the offline and online program are consistent (Page 375).
5. Check whether the green symbol is displayed in the column "status" and "Version comparison".

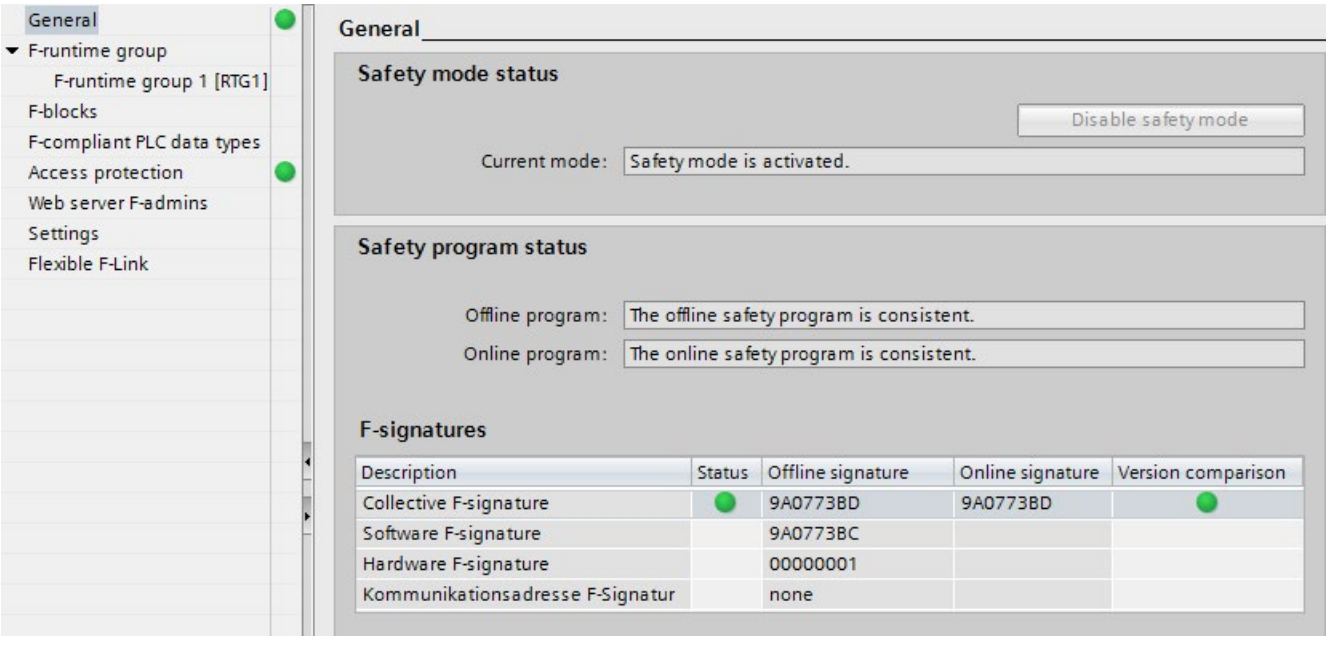

6. Check in the "Web server F-admins" section whether only authorized users have the "F-admin" right offline and online.

With HMI

For a program identification using the HMI, follow these steps:

1. Read the collective F-signature of the safety program from the F_PROG_SIG tag of the F-global DB (Page 148) (S7-300, S7-400) or the tag F_SYSINFO.F_PROG_SIG of the F-runtime group information DB (Page 148) (S7-1200, S7-1500).
2. Compare the value of the F_PROG_SIG tag with the expected value.

With the display of an S7-1500 F-CPU

For a program identification using the display of an F-CPU, follow these steps:

1. In the display menu, go to "Overview > Fail-safe".
2. Compare the displayed collective F-signature with the expected value.

With the Web server of an S7-1200/1500 F-CPU

For a program identification using the Web server of an S7-1200/1500 F-CPU, follow these steps:

1. Read the collective F-signature on the homepage of the Web server.
2. Compare the displayed collective F-signature with the expected value.

See also

Safety Administration Editor (Page 81)

10.5 Comparing Safety Programs

Compare safety programs as in standard

You can use the *comparison editor* in *STEP 7* for offline-online or offline-offline comparison of safety programs. The procedure is the same as for standard user programs. The contents of F-blocks are also compared for the comparison of safety programs. As a result, an offline-offline comparison can also be used for an acceptance of changes (Page 378). You enable this comparison by selecting the "Safety" comparison criterion and disabling all other comparison criteria.

Comparison result for safety programs

The representation of the comparison result corresponds to the representation of *STEP 7*.

If you click the "Program blocks" folder on the left of the comparison editor, you can see the collective F-signature of the safety program displayed under "Comparison result". You also receive information about whether the safety program is consistent.

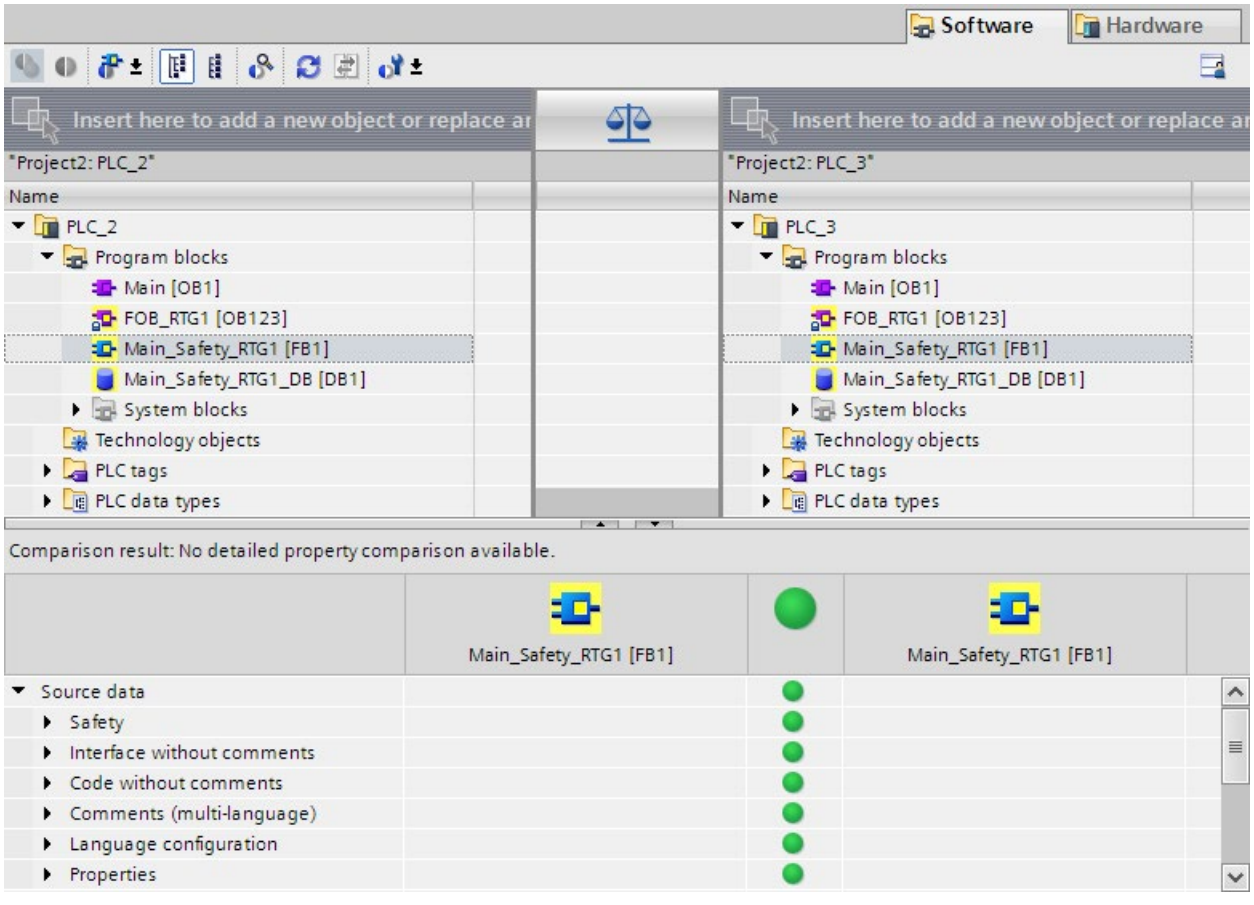

If you click on an F-block, you can see the respective signatures and interface signatures in addition to the standard information.

Note

If you interrupt the connection to the F-CPU during the online/offline comparison, the comparison result will be incorrect.

Comparison filter options

You can use filters in the *comparison editor* to limit the comparison result to the following block groups:

- Compare only F-blocks
- Compare only F-blocks relevant for certification
- Compare only standard blocks

You also have the *STEP 7* filter options "Show only objects with differences" and "Show identical and different objects".

For comparison of safety programs, F-blocks in the "System blocks" folder are also relevant.

Comparison criteria

Make sure that under only the comparison criterion "Safety" is enabled.

Classification of displayed changes

Regardless of whether you carried out an offline/online or offline/offline-comparison, the following changes could account for the indicated changes to the automatically generated F-blocks:

- Change in the maximum cycle time of F-runtime group and warn cycle time of F-runtime group
- Change in F-parameters of the F-CPU
- changed safety system version or change to the hardware configuration (S7-1200/1500: Displayed as change of the "F_SystemInfo_DB" block).
- (S7-300/400) Change in the F-runtime group communication, for example, change in the number of a DB for F-runtime group communication
- Change in main safety block, F-FB, F-FC, F-DB
- Change of the hardware configuration for the F-I/O addressed in the safety program

It is possible that a block is displayed as changed, but no changes are displayed in the detailed comparison of the block content. This is not a display problem but means that changes of addresses in the tag table, for example, have an effect on this block. Test this block in case of doubt.

Printing result of comparison

The comparison result can be printed via "Project > Print" in the menu bar or the print button in the toolbar. Select "Print objects/area" "All" and "Properties" "All".

Make sure that all pages were printed completely. Incomplete printouts (e.g. due to low on toner) must not be used for the acceptance of changes.

10.6 Printing project data

Printing

You can print all important project data (hardware configuration of the F-CPU and F-I/O, safety program). You obtain a "safety summary" that, alongside the documentation, serves as a basis for testing the correctness of the individual components of the system. Correctness is a prerequisite for system acceptance.

The collective F-signature specifications in the footer of the printout ensure that the printout is explicitly associated with a safety program.

Safety summary

The safety summary provides documentation of the safety-related project data which supports you during acceptance of the system.

Procedure for creating a safety summary

To create a safety summary, follow these steps:

1. In the project tree, select the *Safety Administration Editor* of the F-CPU whose safety summary you want to create.
2. Select "Print" in the shortcut menu or "Project > Print" in the menu bar or the print button in the toolbar.

   In the displayed dialog, you can make layout settings for the printout and specify the scope of the printout (all/subset), among other things.
3. Under "Document information", select one of the ISO formats, e.g. "DocuInfo_ISO_A4_Portait".
4. Select the "All" option, if the F-blocks and F-compliant PLC data types are to be shown in the printout. This is necessary, for example, to document the program code for the acceptance(see Acceptance of system (Page 361)). Select the "Compact" option to exclude the source code from the printout.
5. Click the "Print" button.

As a result, you receive the safety summary for the F-CPU.

Make sure that all pages were printed completely. Incomplete printouts (e.g. due to low on toner) must not be used for the acceptance of changes.

Contents of the summary in overview

The topics that are considered in the summary are summarized in the following:

- General information on program identification, signatures, software versions, access protection, settings of the safety program (from the "Settings" work area of the *Safety Administration Editor*), for example safety system version.
- System library elements used in safety program (from the "Instructions" task card) along with their versions
- Information about the F-runtime groups (e.g. cycle time warning limit of the F-runtime group, maximum cycle time of the F-runtime group)
- List of the F-blocks within the "Program blocks" folder (e.g. name, function, associated F-runtime group, signature)
- (S7-1200, S7-1500) List of the know-how protected F-blocks used in the safety program (e.g., name, signature, used safety system version, used versioned instructions or called F-blocks).
- (S7-1200, S7-1500) List of F-compliant PLC data types (UDT), if these exist in the safety program.
- Data from the standard user program that are evaluated in the safety program
- Block parameters of the safety-related CPU-CPU communication
- (S7-300, S7-400) Absolute addresses and names of the F-shared DB tags that can be accessed from the standard user program
- Information on hardware (used F-I/O, CPU version, addresses)
- Information on the printout (print date, number of pages)

Content of the footer of the printouts

On the basis of the footer of the printout, you can find out:

- Whether the printed safety-related project data is consistent and whether all pages of the printout belong to the same safety program and the same version (the same F-collective signature in the footer of every page means that the printout belongs to the safety program with this F-collective signature).

The footer is added to the source code of the F-blocks only if the "All" option was selected for the safety summary.

If F-blocks are printed by other means, the footer is omitted, and you can no longer easily identify whether the block printout belongs to the current safety program version.

Printing a migrated project

You can only print a safety summary for a project migrated from *S7 Distributed Safety V5.4 SP5* if the project was compiled with *STEP 7 Safety Advanced* and the new program structure for safety programs (main safety block) has therefore been applied. Otherwise, the printout is not possible and you will receive a corresponding error message.

We recommend that you print out your project in *S7 Distributed Safety V5.4 SP5* before the migration.

10.7 Testing the safety program

10.7.1 Overview of Testing the Safety Program

Complete function test or test of changes

After creating a safety program, you must carry out a complete function test in accordance with your automation task.

For changes made to a safety program that has already undergone a complete function test, only the changes and that there is no effect on the parts of the safety program that were not changed need be tested.

Monitoring

Read-only test functions (such as monitoring tags of the safety program) are available for safety programs as in the standard.

Modifying

Read and write test functions (such as controlling tags of the safety program) are only available to a limited extent for safety programs and only in disabled safety mode.

Simulation via *S7-PLCSIM*

You can test the safety program using *S7-PLCSIM*. You use *S7-PLCSIM* in the same way as for standard user programs.

You start the simulation with *S7-PLCSIM* using menu item "Online > Simulation > Start".

Rules for testing

- Forcing of F-I/O inputs and F-I/O outputs is not possible.
- Controlling F-I/O outputs in connection with the function “Enabling F-I/O outputs" is not possible.
- Setting breakpoints in the standard user program will cause errors in the safety program (see also Testing the safety program (Page 347)).
- Changes in the configuration of F-I/O or safety-related CPU-CPU communication can only be tested after the hardware configuration has been saved and downloaded, and after the safety program has been compiled and downloaded to the F-CPU.

See also

Disabling safety mode (Page 344)

10.7.2 Disabling safety mode

Introduction

The safety program generally runs in the F-CPU in safety mode. This means that all fault control measures are activated. The safety program cannot be modified during operation (in RUN mode) in safety mode. You must disable safety mode of the safety program to, for example, modify tags in the safety program in RUN mode. Safety mode remains disabled until the F-CPU is next switched from STOP to RUN mode.

Rules for disabling safety mode

WARNING

Because changes to the safety program can be made in RUN mode when safety mode is deactivated, you must take the following into account:

- Disabling safety mode is intended for test purposes, commissioning, etc. Whenever safety mode is disabled, the safety of the system must be ensured by other organizational measures, such as monitored operation, manual safety shutdown, and access restrictions to certain areas.
- Disabling of safety mode must be displayed.

  Use the MODE tag in the F-global DB ("F_GLOBDB".MODE) for S7-300/400 F-CPUs or in the F-runtime group information DB (e.g. RTG1SysInfo.F_SYSINFO.MODE) for S7-1200/1500 F-CPUs, which you can evaluate to read the operating mode (1 = Disabled safety mode). This means not only is the disabled safety mode displayed on the programming device or PC in the dialog box for disabling safety mode, but it can also be indicated by means of an indicator light controlled by the standard user program or a message to an HMI system generated by evaluating the above-mentioned "Disabled safety mode" variable in the F-shared DB.
- It must be possible to verify that safety mode has been disabled. A log is required, if possible by recording and, if applicable. archiving alarms to the operator control and monitoring system or, if need be, through organizational measures. In addition, it is recommended that disabling of safety mode be indicated on the HMI system.
- Safety mode is disabled F-CPU-wide. You must, however, take the following into account for safety-related CPU-CPU communication: If the F-CPU that sends the data is in disabled safety mode, you can no longer assume that the data sent by this F-CPU are generated safely. You must then ensure safety in those units that are affected by the sent data through organizational measures or output safe substitute values in the F-CPU that receives the data by evaluating SENDMODE* instead of the received data.

* SENDMODE is available to you as output of the RCVDP or RCVS7 instructions or in case of communication via Flexible F-Link as a tag in the F-communication DB.

(S027)

Procedure for disabling safety mode

To disable safety mode, follow these steps:

1. Open the *Safety Administration Editor* of the corresponding F-CPU.
2. Open the work area "General (Page 83)" in the area navigation.
3. Check to see whether the safety mode status is displayed as activated.

   If so, continue with the next step; if not, stop the process, because safety mode is already disabled or cannot be disabled.
4. Click the "Disable safety mode" button.
5. Enter the password for the online safety program.

   If you enter the correct password, another prompt will appear, which also contains the collective F-signature in the F-CPU. Check to see whether this is the collective F-signature you expected. If there is a match, acknowledge the dialog.
6. Enter the password for the F-CPU.

   After correctly entering the password for the F-CPU, safety mode is disabled.

   If the password is not valid, safety mode is not deactivated and remains active.

   (S7-300, S7-400) When individual F-blocks are downloaded, the condition "Disable safety mode" is listed automatically in the "Load preview" dialog. For this reason, it is not necessary to explicitly disable safety mode before every F-block download.

Note

If the collective F-signature or the passwords do not agree for the safety program online and offline, this means:

- The offline safety program was modified after the last downloading, or
- An incorrect F-CPU was addressed. Check the latter based on the online collective F-signature.

Enabling safety mode

Note

To enable safety mode, the F-CPU must be switched from STOP to RUN mode.

Switching the F-CPU from STOP to RUN mode always enables safety mode, even if the safety program has been modified or is not consistent. The MODE tag in the F-shared DB for S7-300/400 F-CPUs or F-runtime group information DB is set to "0" for S7-1200/1500 F-CPUs.

If you have changed your safety program, but have not recompiled and downloaded it, the F-CPU can revert to STOP mode.

Evaluating safety mode/disabled safety mode

If you wish to evaluate safety mode/disabled safety mode in the safety program, you can evaluate the "MODE" tag in the F-shared DB for S7-300/400 F-CPUs or F-runtime group information DB for S7-1200/1500 F-CPUs (1 = Disabled safety mode). You use fully qualified access to access this tag (e.g. "F_GLOBDB".MODE or RTG1SysInfo.MODE).

You can use this evaluation, for example, to passivate F-I/O when the safety program is in disabled safety mode. To do so, assign the "MODE" tag in the F-shared DB or F-runtime group information DB to all "PASS_ON" tags in the F-I/O DBs of the F-I/O that you wish to passivate.

WARNING

When the safety program is in disabled safety mode, the "MODE" tag in the F-shared DB or F-runtime group information DB is also evaluated in disabled safety mode.

Even if the F-I/O are passivated in disabled safety mode as a result of evaluation of the "MODE" tag, system safety must be ensured in disabled safety mode through other organizational measures, such as operation monitoring and manual safety shutdown. *(S028)*

See also

F-shared DB (S7-300, S7-400) (Page 148)

F-runtime group information DB (S7-1200, S7-1500) (Page 148)

Communication (Page 588)

10.7.3 Testing the safety program

Introduction

Tags of he safety program can be monitored at any time.

Controlling tags of the safety program is only possible in deactivated safety mode as some fault control measures of the safety program have to be disabled for this.

You can control the following tags of the safety program:

- Inputs and outputs of the F-I/O (channel values and value status (S7-1200, S7-1500))
- Tags in F-global DB (except DB for F-runtime group communication)
- Tags in instance DBs of F-FBs
- Tags in F-I/O DBs (for permitted tags see F-I/O DB (Page 165))

Note

A modify function controlled by the F-system is only possible if the *STEP 7 Safety* optional package is installed. Modification of tags by means of an HMI system as well as modification without an installed *STEP 7 Safety* optional package can cause the F-CPU to go into STOP.

Procedure for monitoring tags of the safety program

Monitor the required tags of the safety program from an open watch table or from the *program editor* (program status).

1. Proceed as in the standard. Additional information can be found in the *STEP 7 help* in “Testing user programs".

Procedure for controlling tags of the safety program

Control the required tags of the safety program from an open watch table:

1. For modifying, deactivate the safety mode (Page 344) in the automatically shown dialog.
2. Terminate existing modify requests after testing is complete before activating safety mode.

Values in F-DBs can only be modified online in the F-CPU. If the value is also to be changed offline, you must do this by editing the start value offline and compiling the safety program.

Proceed as follows to control tags of F-I/O:

1. Create a separate row for each channel value and value status (S7-1200, S7-1500) to be modified. The control value must correspond to the channel value or value status.
2. Set “start of scan cycle" or “end of scan cycle" and "permanent" or “once".

   Regardless of the trigger point setting, requests to modify inputs (PII) of F-I/O always become effective before the main safety block is executed and requests to modify outputs (PIQ) always become effective after execution of the main safety block.
3. (S7-300, S7-400) Create an additional watch table if you want to control more than 5 inputs/outputs.

Note

F-I/O can only be modified in RUN mode of the F-CPU.

You cannot modify a configured F-I/O from which neither a channel value or a value status (S7-1200, S7-1500), nor any tag from the associated F-I/O DB has been used in the safety program. In your safety program, you should therefore always use at least one tag from the associated F-I/O DB or at least one channel value or value status (S7-1200, S7-1500) of the F-I/O to be modified.

For inputs (PII), modify requests take priority over fail-safe value output, while for outputs (PIQ), fail-safe value output takes priority over modify requests. For outputs (channels) that are not activated in the properties for the F-I/O, modify requests affect the PIQ only, and not the F-I/O.

Note

The following applies for S7-1200/1500 F-CPUs:

To avoid invalid combinations of channel value and status value:

- The value status is set by the F-system automatically to 1 when setting a channel value to a value <> fail-safe value 0
- The fail-safe value 0 is automatically output when setting the value status to 0 for the associated channel value

---

WARNING

You need to specifically reset constant modify requests in the watch table in disabled safety mode.

Please note that constant modify requests that are not correctly reset can remain active in the background even after a STOP/RUN transition on the F-CPU.

Because the F-CPU is in safety mode again after a STOP/RUN transition, the constant modify requests are no longer effective and are not shown in the watch table.

The requests become active again as soon as you disable safety mode again.

With a memory reset of the F-CPU, you can make sure that no constant modify requests are active in the background on the F-CPU. *(S029)*

Wiring test using watch table

You can carry out a wiring test for an input by changing an input signal and verifying whether or not the new value arrives in the PII.

You can carry out a wiring test for an output by changing the output with the Modify function and verifying whether the required actuator responds.

For the wiring test, note that a safety program must be running on the F-CPU, in which at least one channel value or value status (S7-1200, S7-1500) of the F-I/O to be monitored or modified or one tag from the associated F-I/O DB has been used.

For F-I/O that can also be operated as standard I/O (e.g., S7-300 fail-safe signal modules), you can also carry out the wiring test for outputs using the Modify function in STOP mode by operating the F-I/O as standard I/O rather than in safety mode.

Additional rules for testing (S7-300/400/1500)

Setting breakpoints in the standard user program will cause the following errors in the safety program:

- F-cycle time monitoring has expired
- Error during communication with the F-I/O

  (S7-1500) Fail-safe modules switch to safe mode after the configured F-monitoring time has expired.
- Error during safety-related CPU-CPU communication
- Internal CPU faults

If you nevertheless want to use breakpoints for testing, you must first disable safety mode. This will result in the following errors:

- Error during communication with the F-I/O
- Error during safety-related CPU-CPU communication

Difference between S7-1500 F-CPUs and S7-300/400 F-CPUs:

- If a breakpoint is activated and reached, the F-CPU goes directly to STOP after HOLD.
- If you want to switch to RUN again after HOLD to test your standard user program further, you can simulate this with S7-PLCSIM.

No access protection is initially necessary for test purposes, commissioning, etc. This means you can execute all offline and online actions without access protection, that is, without password prompt.

See also

Changing the safety program in RUN mode (S7-300, S7-400) (Page 355)

Downloading project data to an F-CPU (Page 313)

10.7.4 Testing the safety program with S7-PLCSIM

You can test your safety program together with your standard program on a simulated CPU with *S7-PLCSIM* and without the need for hardware. Also observe warning S030 in the section "Notes on Safety Mode of the Safety Program (Page 383)".

You use *S7-PLCSIM* for SIMATIC Safety F-systems as you would for S7 standard systems. Note the following special features:

Safety mode/disabled safety mode

We recommend that you test your safety program in safety mode to detect whether the F-CPU goes into STOP as early as in the test phase of your safety program in *S7-PLCSIM* as a result of, for example, that the results of instructions were outside the permitted range for the data type.

The following simulations can be run in *S7-PLCSIM*, just as on an actual F-CPU, in disabled safety mode only.

- Modifying tags in F-DBs and F-I/O DBs.

The F-CPU can go to STOP mode in *S7-PLCSIM* if this is disregarded. The cause of the diagnostics event is entered in the diagnostics buffer of the F-CPU.

(S7-1200, S7-1500) To prevent unintentional modification of tags in F-DBs and F-I/O DBs in safety mode, we recommend that you do not select the "Activate/deactivate modification of non-inputs" button in *S7-PLCSIM*

During the simulation with *S7-PLCSIM* , monitoring of the maximum cycle time of the F-runtime group and the cycle time warning limit of the F-runtime group (S7-1200, S7-1500) are disabled.

Input simulation of F-I/O

Modification of inputs (channel values) in *S7-PLCSIM:*

You modify inputs (channel values) of F-I/O as you would inputs (channel values) of standard I/O in *S7-PLCSIM*.

Modification of inputs (value status) in *S7-PLCSIM:*

(S7-1200, S7-1500) By modifying inputs (value status) of F-I/O you can simulate the incoming and outgoing F-I/O/channel faults. Keep in mind the following notes/restrictions:

- To realistically simulate the behavior of the F-I/O, you must note the connection between channel value and value status on the real F-I/O. The combination value status = 0 and channel value <> fail-safe value (0) is invalid and can result in the simulation deviating from the behavior of the real F-CPU.
- During the transition from "STOP" to "RUN" of the CPU in *S7-PLCSIM*, all F-I/O inputs (value status) are initialized with 1. This means you can start with the modification of inputs (channel values) without simulation of the inputs (value status).

- The modification of inputs (value status) in *S7-PLCSIM* does not have an effect on the tags QBAD and PASS_OUT in the F-I/O DB. Note that with real F-I/O QBAD and PASS_OUT can be 1 as soon as the value status is 0 for at least one channel of the F-I/O. (see tags of the F-I/O DB: PASS_OUT/QBAD/QBAD_I_xx/QBAD_O_xx and value status (Page 171)).
- For F-I/O configured with "Behavior after channel fault" = "Passivation of the complete F-I/O", use the tag PASS_ON in the F-I/O DB for simulation of the passivation of the complete F-I/O for F-I/O / channel faults. If you only passivate individual inputs (channel value including value status) for the simulation, the behavior of the simulation will deviate from the real F-CPU.
- You can also use the PASS_ON tag in the F-I/O DB for F-I/O without value status to simulate the passivation of the entire F-I/O in case of F-I/O or channel faults.
- You must modify the inputs (channel values) to $7FFF_H$ (for overflow) or 8000_H (for underflow) to simulate an F-I/O/channel fault of the SM 336; AI 6 x 13Bit or the SM 336; F-AI 6 x 0/4...20 mA HART with configuration "Behavior after channel fault" = "Passivate channel".
- For F-I/O which does not support the "RIOforFA-Safety" profile, you must run a user acknowledgment with a positive edge at the ACK_REI tag of the F-I/O DB as with a real F-I/O for reintegration after the value status has changed from 0 to 1 or when the channel value has changed from $7FFF_H$/8000_H to unequal $7FFF_H$/8000_H (see above) when ACK_NEC = 1 of the F-I/O DB. Reintegration takes place automatically in all other cases possibly deviating from the real F-I/O.

Update times

Keep in mind that the status of the inputs (channel values or value status (S7-1200/1500)) that you are monitoring in the SIM table in *S7-PLCSIM* is only identical to the status being processed in the safety program if there is no passivation of the associated F-I/O.

With passivation of the F-I/O, the safety program operates with fail-safe values (channel value and value status (S7-1200/1500) =0).

Instructions for communication between F-CPUs

The following applies for SENDDP/RCVDP (S7-300/400) instructions and SENDDP/RCVDP instructions with Version < 3.0 (S7-1200/1500):

You cannot simulate communication between F-CPUs with the SENDDP and RCVDP instructions in *S7-PLCSIM*. You can, however, use the SENDDP and RCVDP instructions together with *S7-PLCSIM*. During simulation in *S7-PLCSIM*, the RCVDP instruction outputs the fail-safe values pending at its inputs SUBBO_xx and SUBI_xx ((S7-1200/1500) or alternatively SUBDI_00). The SENDDP and RCVDP instructions signal this with 1 at output SUBS_ON.

For SENDDP/RCVDP instructions with Version >= 3.0 the following applies:

During the simulation with *S7-PLCSIM* it is possible to simulate the received data and the information "Deactivated Safety Mode" (RCVDP) or respectively the information "Substitute value output" (SENDDP) in the corresponding transfer area for inputs. Note the following notes:

- The simulated values do not become active until you set the SIMULATION bit for the first time in the respective simulation control word (see the following table) after the F-system has started up. Before setting the SIMULATION bit, the RCVDP instruction outputs the fail-safe values that are pending at its inputs SUBBO_xx and SUBI_yy ((S7-1200/1500) or alternatively SUBDI_00).
- The setting of the SEND_MODE bit in the simulation control word causes a setting of the SENDMORE output for the RCVDP instruction.
- The setting of the STATUS_SUBS bit in the simulation control word causes a setting of the SUBS_ON output for the SENDDP instruction.
- Reserved bits in the simulation control word always have to be 0.
- During a STOP/RUN transition from *S7-PLCSIM* the most recently simulated values in the transfer area for inputs are kept.

The start address(es) of the configured transfer area for the input and output data can be found in the respective configuration (see also "Configuring and programming communication (S7-1200, S7-1500) (Page 270)“).

Table 10- 1 Structure of the relevant transfer area for inputs of the simulation control word (instruction RCVDP)

Byte	Meaning	Comment
0	RD_BO_15 … RD_BO_08	
1	RD_BO_07 … RD_BO_00	
	DINTMODE=0:	
2	RD_I_00	Word RD_I_00, MSB[1] first
3		
4	RD_I_01	Word RD_I_01, MSB[1] first
5		
	Alternative DINTMODE=1:	
2	RD_DI_00	High Word from RD_DI_00, MSB[1] first
3		
4		Low Word from RD_DI_00 **XOR 0x8000**, MSB[1] first
5		
6	Simulation control word (High Byte)	Bit 0…6: Reserved Bit 7: SIMULATION: Activating RCVDP simulation
7	Simulation control word (Low Byte)	Bit 0: SEND_MODE: Set output SENDMODE Bit 1…7: Reserved
8 … 11	Reserved	

[1] MSB: most significant bit

Table 10- 2 Structure of the relevant transfer area for inputs of the simulation control word (instruction SENDDP)

Byte	Meaning	Comment
0	Simulation control word (High Byte)	Bit 0: STATUS_SUBS: Set output SUBS_ON Bit 1…6: Reserved Bit 7: SIMULATION: Activating SENDDP simulation
1	Simulation control word (Low Byte)	Bit 0…7: Reserved
2 … 5	Reserved	

WARNING

You must take the following into account for safety-related CPU-CPU communication with the communication type Flexible F-Link:

If the F-CPU that sends the data is on a simulated F-CPU with S7-PLCSIM, you can no longer assume that the data sent by this F-CPU are generated safely. You must then implement organizational measures such as operation monitoring and manual safety shutdown to ensure safety in those portions of the system that are affected by the sent data. Alternatively, you must output fail-safe substitute values instead of the received data in the F-CPU that receives the data by evaluating SENDMODE*.

* SENDMODE is available to you as a tag in the F-communication DB.

(S086)

(S7-300, S7-400) You cannot simulate communication between F-CPUs with the SENDS7 and RCVS7 instructions in *S7-PLCSIM*. You can, however, use the SENDS7 and RCVS7 instructions together with *S7-PLCSIM*.

During simulation in *S7-PLCSIM*, the RCVS7 instruction outputs the initial values specified in the communication DB as fail-safe values. The SENDS7 and RCVS7 instructions signal this with 1 at output SUBS_ON.

Inconsistent safety program (S7-1200, S7-1500)

If the CPU goes into STOP in *S7-PLCSIM* with the diagnostic entry "Safety program: inconsistent", the F-CPU is not initialized correctly in *S7-PLCSIM* yet. Perform a memory reset of the F-CPU in *S7-PLCSIM* and download the program once again to the CPU in *S7-PLCSIM*.

10.7.5 Changing the safety program in RUN mode (S7-300, S7-400)

Introduction

Changes to the safety program during operation (in RUN mode) can only be made in disabled safety mode (Page 344). You make changes to F-blocks offline in the *program editor* in the same way as for a standard program. F-blocks cannot be changed online.

Note

If you do **not** want to make changes to the safety program during operation, see Creating F-blocks in FBD/LAD (Page 151).

Procedure for changing the safety program in RUN mode

To change the safety program, follow these steps:

1. Change the main safety block or F-FB and its associated instance DB, F-FC, or F-DB in the *Program editor*.
2. Download the changed F-block(s) to the F-CPU (for procedure, see Downloading project data to an F-CPU (Page 313)). The entire program is then automatically compiled.
3. If safety mode is active, the "Load preview" dialog will prompt you to deactivate it and to enter the password for the safety program.

   Note

   When downloading in disabled safety mode, you can only download the fail-safe blocks created by you (main safety blocks, F-FB, F-FC, or F-DB), F-application blocks, or standard blocks and their associated instance DBs. If you download automatically added F-blocks (F-SBs or automatically generated F-blocks and associated instance DBs, F-shared DB), the F-CPU can go to STOP mode or safety mode can be activated.

   Therefore, always select individual blocks only when downloading in disabled safety mode.

Sequence for downloading changes

Changes in the safety program in RUN mode when safety mode is disabled can, for example, cause the status of an actuator to change as a result of program changes.

After changes, start by downloading the safety program and then the function of the standard user program monitored by the safety program.

Restrictions on safety-related CPU-CPU communication

During operation (in RUN mode), you cannot establish new safety-related CPU-CPU communication by means of new SENDDP/RCVDP or SENDS7/RCVS7 instructions.

To establish new safety-related CPU-CPU communication you must always download the relevant safety program consistently to the F-CPU while in STOP mode after inserting a new SENDDP, SENDS7, RCVDP, or RCVS7 instruction.

Restrictions on F-runtime group communication

You cannot make any changes to the safety-related communication between F-runtime groups in RUN mode. This means that you cannot assign, delete, or change any DBs for F-runtime group communication of an F-runtime group.

Following changes in the F-runtime group communication, you must always download the safety program consistently to the F-CPU while in STOP mode.

Restrictions on F-I/O access

If during operation (in RUN mode), you insert an F-I/O access to an F-I/O of which no single channel value or tag from the associated F-I/O DB has yet been used in the safety program, the F-I/O access only becomes effective when the safety program is downloaded consistently to the F-CPU.

Changing the standard user program

You can download changes in the standard user program when the F-CPU is in RUN mode, regardless of whether safety mode is enabled or disabled.

WARNING

(S7-300, S7-400) In safety mode, access with the CPU password must not be authorized during changes to the standard user program as this would also allow changes to the safety program. To rule out this possibility, you must configure the protection level "Write protection for fail-safe blocks" and configure a password for the F-CPU. If only one person is authorized to change the standard user program and the safety program, the protection level "Write protection" or "Read/write protection" should be configured so that other persons have only limited access or no access at all to the entire user program (standard and safety programs).*(S001)*

Procedure for applying changes to the safety program

If you download individual F-blocks to the F-CPU during operation (in RUN mode), the F-system blocks (F-SBs) and the automatically generated F-blocks are neither updated nor downloaded, resulting in an inconsistent safety program in the F-CPU. Use the following procedure to apply changes to the safety program:

1. Download the safety program consistently to the F-CPU, and activate safety mode by switching the F-CPU from STOP to RUN mode (for procedure, see Downloading project data to an F-CPU (Page 313)).
2. Follow the steps described in Acceptance of Changes (Page 378).

10.7.6 Changing the standard user program in RUN mode (S7-1200, S7-1500)

Changing the standard user program

You can download changes in the standard user program when the F-CPU is in RUN mode, regardless of whether safety mode is enabled or disabled.

10.7.7 Deleting the safety program

Deleting individual F-blocks

To delete an F-block, follow the same procedure as in *STEP 7*.

Deleting an F-runtime group

See Deleting an F-runtime group (Page 150)

(S7-300, S7-400) Remove all calls that you have used to call the safety program (Main_Safety).

Deleting the entire safety program for S7-300/400 F-CPUs *with* inserted memory card (SIMATIC Micro memory card or flash card)

To delete an entire safety program, proceed as follows:

1. Delete all F-blocks (shown with yellow symbol) in the project tree.
2. Remove all calls that you have used to call the safety program (Main_Safety).
3. Select the F-CPU in the *hardware and network editor* and clear the "F-capability activated" option in the properties of the F-CPU.
4. Compile the project data of the F-CPU

   The offline project no longer contains a safety program.
5. To delete a safety program on the Memory Card (SIMATIC Micro Memory Card or Flash Card), insert the Memory Card (SIMATIC Micro Memory Card or Flash Card) in the programming device or PC or in a SIMATIC USB prommer.
6. Select the menu command "Project > Card Reader/USB memory > Show Card Reader/USB memory" in the menu bar.
7. Open the "SIMATIC Card Reader" folder and delete the Memory Card.
8. Insert the Memory Card into the F-CPU.

You can then download the offline standard user program to the F-CPU.

Deleting the entire safety program for S7-400 F-CPUs *without* inserted flash card

To delete an entire safety program, proceed as follows:

1. Delete all F-blocks (shown with yellow symbol) in the project tree.
2. Remove all calls that you have used to call the safety program (Main_Safety).
3. Select the F-CPU in the *hardware and network editor* and clear the "F-capability activated" option in the properties of the F-CPU.
4. Compile the project data of the F-CPU

   The offline project no longer contains a safety program.
5. Perform a memory reset on the F-CPU (in the "Online tools" task card of the F-CPU).

You can then download the offline standard user program to the F-CPU.

Delete the entire safety program for SIMATIC S7-1200/1500 F-CPUs

To delete an entire safety program, proceed as follows:

1. Delete all F-blocks (shown with yellow symbol) in the project tree.
2. Select the F-CPU in the *hardware and network editor* and clear the "F-capability activated" option in the properties of the F-CPU.
3. Compile the project data of the F-CPU

   The offline project no longer contains a safety program.

You can then download the offline standard user program to the F-CPU.

10.8 F-change history

Enable the logging of changes to the safety program by using the option "Enable F-change history" in the *Safety Administration Editor*. The F-change history behaves like the standard change history.

An F-change history is created for each F-CPU in the project navigation under "Common data/logs".

The following is logged in the F-change history:

- Collective F-signature
- User name
- Compile time stamp
- Download of the safety program with time stamp
- Compiled F-blocks with signature and time stamp

The F-change history can contain a maximum of 5000 entries per F-CPU. When the 5000 entries are exceeded, a new F-change history is created using the naming scheme "F-change history <CPU name> YYYY-MM-DD hh:mm:ss".

After a project upgrade, the "Go to" function is not supported anymore for the F-change history of the project for the entries which were created before *STEP 7 Safety* V15.1.

NOTICE
The connection between the F-CPU and the associated F-change history is made through the name of the F-change history. Therefore, do not rename the F-CPU and the F-change history. If you rename the F-CPU or the F-change history, a new F-change history with the current name of the F-CPU is started.

Note

You may not use the F-change history to recognize changes in the safety program/in the configuration of the F-I/Os during the acceptance of changes.

To accept changes, proceed as described under Acceptance of Changes (Page 378).

Note

We recommend activating the F-change history before changing over to productive operation.

System acceptance 11

11.1 Overview of System Acceptance

Introduction

During a system acceptance test, all the standards and guidelines (for example PROFINET Installation Guidelines) relevant to the specific application must be complied with. This also applies to systems that are not "subject to acceptance". For the acceptance, you must consider the requirements in the Certification Report (http://support.automation.siemens.com/WW/view/en/49368678/134200).

As a general rule, the acceptance of an F-System is performed by an independent expert. The independence required of the expert must be defined in the safety plan and depends on the required PL/SIL.

Observe all warnings in this manual.

⚠ WARNING
The configuration of F-CPUs and F-I/Os as well as the programming of F-blocks must be carried out as described in this documentation. You must observe all aspects described in the section System acceptance (Page 361) to ensure secure operation with the system SIMATIC SAFETY. Any other procedures are not permitted. *(S056)*

Proof of the correct implementation of the safety-related project data

In order for a system acceptance to be granted, you must recognize and document the correctness of the individual components. For documentation of the component properties, you must create a safety summary.

The following characteristics must be covered:

- Correctness of the safety program including hardware configuration (including testing) (Page 363)
- Completeness of the safety summary (Page 364)
- Compliance of the system library elements used in the safety program with Annex 1 of the Report for the TÜV certificate (Page 365)
- Compliance of the know-how protected F-blocks used in the safety program with their safety documentation. (Page 366)
- Completeness and correctness of the hardware configuration (Page 368)
- Correctness and completeness of the communication configuration (Page 374)
- Identity of online and offline program (Page 375)
- Other characteristics (Page 376) such as software version, use of data from the standard user program

After the acceptance, you should archive all relevant documents and also the project data so as to make the accepted project available as a reference for a subsequent acceptance.

Safety summary

The safety summary (Page 341) is the project documentation required for acceptance of the system.

11.2 Correctness of the safety program including hardware configuration (including testing)

The correctness of software cannot only be ensure through tests and verifications during commissioning, but rather already requires the observance of a wide variety of measures during creation. Also see warning S062 on this in chapter "Overview (Page 23)".

Verification/function test

Already during the creation, you will test (Page 343) your safety program and the associated hardware configuration. You must carry out tests with regard to the specification of your safety functions and document them before you seek acceptance for the system.

To allow you to perform a code review of your safety program and document the accepted program code, the source code of all F-blocks is printed as a part of the safety summary (Page 341), provided you have selected the "All" property for the printout.

If you want to carry out a function test after loading, you have to carry out program identification after loading. Additional information is available in "Downloading project data (Page 313)".

The correct function of the safety program must be guaranteed by complying with all steps from the "Overview of System Acceptance (Page 361)" chapter before it may be used productively. When using configuration control (option handling), you must ensure correct operation of the safety program for all possible station options by performing appropriate functional tests. You should archive the test reports along with the safety summary and the acceptance documents.

Times, for example monitoring times (Page 607) and delay times, can only be verified to a limited extent with functional tests (Page 313). You should check these times selectively to determine whether they are dimensioned correctly, for example, on the basis of the safety summary.

Some of these times are itemized specially in the safety summary, for example, the F-monitoring time (for communication between F-CPU and F-I/O) and the monitoring time of the safety-related CPU-CPU communication (TIMEOUT input). For the monitoring times derived under normative conditions, the Excel file for response time calculation is available on the Internet (http://support.automation.siemens.com/WW/view/en/49368678/133100). These have to be considered together with the practically determined conditions of the application. Note that these monitoring times have an impact on the response times of your safety functions.

Consistency of the safety program

Check in the "General information" section of the safety summary to determine whether the safety program was recognized as "consistent".

This is the case for S7-300/400 F-CPUs only if the following signatures are also identical:

- Collective F-signature ("General information" section, "Collective F-signature")
- "Signature of F-blocks with F-attribute" ("General information" section, "Current compilation")

Consistency of the safety program is required for the acceptance. If the signatures are not identical, you have the possibility to establish the consistency through recompiling of the safety program and new creation of the safety summary.

11.3 Completeness of the safety summary

Introduction

If your safety program status including hardware configuration is ready for acceptance, you must carry out and document additional checks on the basis of the safety summary to prove that the safety summary is complete and is part of the safety program to be accepted.

Procedure for creation of safety summary

To generate the safety summary, follow the procedure described in Printing project data (Page 341).

In so doing, use the "All" property in order to include the source code of your F-blocks in the printout.

Checking the safety summary for completeness

If you want to use an existing summary, whose completeness is not exactly known, you must check to determine whether the same collective F-signature is contained in the footer on all pages of the printout. This allows you to prove that all printed sheets belong to the same project.

In section "Supplementary information", you can find the number of pages in the safety summary, among other things. With this, you can prove that all pages of the safety summary are printed. Incomplete printouts (for example due to low on toner) must not be used for an acceptance.

If you created the safety summary with the "All" option, the source code of all F-blocks will also be printed. The printout of this source code also contains the footer to enable you to easily assign the source code to a particular safety summary.

Association with the safety program

In the "General information" section of the safety summary, check whether the collective F-signature corresponds to the collective F-signature of the safety program to be accepted in the work area of the *Safety Administration Editor* under "General". If they are not the same, then the summary and safety program do not match.

11.4 Compliance of the system library elements used in the safety program with Annex 1 of the Report for the TÜV certificate

Introduction

The *STEP 7 Safety* optional package contains LAD/FBD instructions for programming of your safety program as well as F-system blocks that have been created and tested by SIEMENS and certified by TÜV for creating an executable safety program. In the process, the F-system blocks used are automatically defined by the F-system based on the set safety system version (see section "Settings" area (Page 90)).

To allow you to check whether the used versioned LAD/FBD instructions and F-system blocks correspond to Annex 1 of the Report for the TÜV certificate and to the versions you intend to use, these are listed in the safety summary.

Procedure

To check, download the current Annex 1 of the report for the TÜV certificate "SIMATIC Safety" from the Internet (http://support.automation.siemens.com/WW/view/en/49368678/134200).

Proceed as follows for the check:

WARNING

- (S7-1200, S7-1500) The versions of the versioned LAD/FBD instructions listed in the safety summary in the section "System library elements used in safety program" must correspond to the versions in Annex 1 of the Report for the TÜV Certificate.
- (S7-300, S7-400) The versions, signatures and initial value signatures of the versioned LAD/FBD instructions and F-system blocks listed in the safety summary in the section "System library elements used in safety program" must correspond to the versions, signatures and initial value signatures in Annex 1 of the Report for the TÜV Certificate.
- The versions of the versioned LAD/FBD instructions listed in the safety summary must meet the safety requirements of your application.

  Keep in mind possible differences in functionality of different versions specified in the section for the respective instruction.
- The safety system version listed in the safety summary under "Safety program settings" must match the versions in Annex 1 of the Report for the TÜV Certificate. *(S054)*

In case of discrepancies, recheck whether you have the correct versions.

(S7-300 / 400) Differences may also arise when there are F-blocks / instructions in your safety program that are not used.

11.5 Compliance of the know-how protected F-blocks used in the safety program with their safety documentation.

If you use know-how protected F-blocks for the programming of your safety program (e.g. from libraries), the source code for these is not printed in the safety summary.

Therefore, the author of the know-how protected F-block must already carry out acceptance of the F-block and provide the following information:

S7-300/400 F-CPUs

- Signature and initial value signature of the know-how protected F-block
- Versions of all the used versioned LAD/FBD instructions
- Signatures and initial value signatures of all called F-blocks

During a system acceptance test, you have to carry out the following checks using the safety summary:

- The signature and initial value signature of each know-how protected F-block listed in the safety summary in the section "F-blocks in the safety program" must agree with the signature and initial value signature documented by the author.
- The versions of the versioned LAD/FBD instructions listed in the safety summary in the section "System library elements used in safety program" must correspond to the versions of each know-how protected F-block documented by the author or must be functionally identical with these.
- The signatures and initial value signatures of the F-blocks called in each know-how protected F-block listed in the safety summary in the section "F-blocks in the safety program" must correspond to the signatures and initial value signatures (of the called F-blocks) documented by the author.

In case of differences, set the documented (or functionally identical) versions and use the F-blocks with the documented signatures and initial value signatures. If the version conflicts cannot be eliminated due to other dependencies, please contact the author of the know-how protected block in order to obtain a compatible approved version.

S7-1200/1500 F-CPUs

- Signature of the know-how protected F-block
- Safety system version when setting up the know-how protection
- Versions of all the used versioned LAD/FBD instructions
- Signatures of all called F-blocks

During a system acceptance test, you have to carry out the following checks using the safety summary:

- The signature of each know-how protected F-block listed in the safety summary in the section "Know-how protected F-blocks in the safety program" must agree with the signature documented by the author.
- The safety system version of each know-how protected F-block listed in the safety summary under "Know-how protected F-blocks in the safety program" must match the versions in Annex 1 of the Report for the TÜV Certificate.
- The versions of the versioned LAD/FBD instructions of each know-how protected F-block listed in the safety summary in the section "Know-how protected F-blocks in the safety program" must correspond to the versions documented by the author or must be functionally identical with these.
- The signatures of the F-blocks called in each know-how protected F-block listed in the safety summary in the section "Know-how protected F-blocks in the safety program" must correspond to the signatures (of the called F-blocks) documented by the author.

In case of differences, set the documented (or functionally identical) versions and use the F-blocks with the documented signatures. If the version conflicts cannot be eliminated due to other dependencies, please contact the author of the know-how protected block in order to obtain a compatible approved version.

11.6 Completeness and correctness of the hardware configuration

Introduction

The hardware configuration is an essential component of the project to be accepted. With the configuration of the hardware, you have set properties that can influence the safety of signals. You must document these settings with the safety summary to prove that you fulfill the safety requirements for your application.

The section "Hardware configuration of F-I/O" is available in the safety summary for this. This section consists of several tables:

- A table with information about the F-CPU and the ranges of F-destination addresses used and of the Central F-source address of the F-CPU.
- An overview table with the F-I/O used.
- A table for each F-I/O with information about the F-I/O and all parameters of the F-I/O with the configured values.

Check whether only authorized users have the "F-admin" right in the *Safety Administration Editor* or in the standard printout of the project data.

Note

Note that you will find F-I/O that you address via safety-related I-slave-slave communication in the safety summary of the I-slave F-CPU and not in the F-CPU of the assigned DP master.

The safety summary of the F-CPU of the DP master includes a note for this F-I/O in the overview table indicating that the F-I/O is not assigned to this F-CPU.

Note

When using shared devices:

Note that you will find F-I/O that you address in a shared device in the safety summary of the F-CPU of the IO controller to which it is assigned.

The safety summary of the F-CPUs of the other IO controllers between which the shared device is divided, includes a note in the overview table for this F-I/O that it is not assigned to this F-CPU.

Procedure for checking that the hardware configuration is complete

Ensure that all configured F-I/O are included in the safety summary. Also make sure that there is no F-I/O that you have not configured as belonging to this F-CPU.

Note

If configuration control (option handling) is used, the safety summary must contain all the F-I/O devices of the maximum configuration. The following checks are to be carried out for al the F-I/Os of the maximum configuration.

Procedure for checking the correctness of the hardware configuration using the safety summary

To check the hardware configuration for correctness, proceed as follows:

1. Check in the “F-hardware configuration“ section to verify the uniqueness of the PROFIsafe addresses.

   Please see sections PROFIsafe addresses for F-I/O of PROFIsafe address type 1 (Page 68) or PROFIsafe addresses for F-I/O of PROFIsafe address type 2 (Page 70), Peculiarities when configuring fail-safe GSD based DP slaves and fail-safe GSD based I/O devices (Page 77) and Recommendation for PROFIsafe address assignment (Page 65).

   – Check if the "Central F-source address" parameter of the individual F-CPUs differs network-wide. F-CPUs to which solely F-IOs of the PROFIsafe address type 1 are assigned do not have to be considered during the check.

   – For F-I/Os of PROFIsafe address type 1 check whether the F-destination addresses comply with the following warning:

   WARNING

   F-I/Os of PROFIsafe address type 1 are uniquely addressed by their F-destination address (e.g. with the switch setting on the address switch).

   The F-destination address (and therefore also the switch setting on the address switch) of the F-I/O must be unique network-wide* and CPU-wide** (system-wide) **for the entire** F-I/O. The F-I/O of PROFIsafe address type 2 must also be considered. *(S051)*

   * A network consists of one or more subnets. "Network-wide" means beyond the boundaries of the subnet. In PROFIBUS, a network includes all nodes accessible via PROFIBUS DP. In PROFINET IO, a network includes all nodes accessible via RT_Class_1/2/3 (Ethernet/WLAN/Bluetooth, Layer 2) and if applicable RT_Class_UDP (IP, Layer 3).

   ** "CPU-wide" means all F-I/Os assigned to an F-CPU: Central F-I/O of this F-CPU as well as F-I/Os for which the F-CPU is DP master/IO controller and assigned F-I/O in a shared device. An F-I/O that is addressed using I-slave-slave communication is assigned to the F-CPU of the I-slave and not to the F-CPU of the DP master / IO controller.

   – For F-I/Os of PROFIsafe address type 2 check whether the F-destination addresses comply with the following warning:

WARNING

FI/O of PROFIsafe address type 2 is uniquely addressed using a combination of F-source address ("Central F-source address" parameter of the assigned F-CPU) and F-destination address.

The combination of F-source address and F-destination address for each F-I/O must be unique network-wide* and CPU-wide** (system-wide). In addition, the F-destination address may not be occupied by F-I/O of PROFIsafe address type 1.

To ensure that addresses are unique across F-CPUs for supported configurations (Page 66), you need to ensure that the "Central F-source address" parameter of all F-CPUs is unique network-wide*. This is achieved through different settings for the "Central F-source address" parameter of the F-CPUs. *(S052)*

* A network consists of one or more subnets. "Network-wide" means beyond the boundaries of the subnet. In PROFIBUS, a network includes all nodes accessible via PROFIBUS DP. In PROFINET IO, a network includes all nodes accessible via RT_Class_1/2/3 (Ethernet/WLAN/Bluetooth, Layer 2) and if applicable RT_Class_UDP (IP, Layer 3).

** "CPU-wide" means all F-I/Os assigned to an F-CPU: Central F-I/O of this F-CPU as well as F-I/Os for which the F-CPU is DP master/IO controller and assigned F-I/O in a shared device. An F-I/O that is addressed using I-slave-slave communication is assigned to the F-CPU of the I-slave and not to the F-CPU of the DP master / IO controller.

– fail-safe GSD based DP slaves / GSD based I/O devices check whether the PROFIsafe addresses comply with the following warning:

WARNING

Check the documentation for your fail-safe GSD based DP slaves / GSD based I/O devices to find out the valid PROFIsafe address type. If you do not find the necessary information, assume PROFIsafe address type 1. Proceed as described under PROFIsafe addresses for F-I/O of PROFIsafe address type 1 (Page 68) or PROFIsafe addresses for F-I/O of PROFIsafe address type 2 (Page 70).

Set the F-source address according to the manufacturer specifications for fail-safe DP standard slaves / fail-safe IO standard devices. If the F-source address needs to correspond to the "Central F-source address" parameter of the F-CPU (PROFIsafe address type 2), you will find the latter in the "Properties" tab of the F-CPU. In this case, also check in the safety summary that the value of the F-CPU for the "Central F-source address" parameter matches the value of the F-source address of the fail-safe GSD based DP slave / fail-safe GSD based I/O device. *(S053)*

2. Check the safety-related parameters (including F-monitoring time or F_WD_Time) of all configured F-I/O.

   You can find these parameters in the "Hardware configuration of F-I/O" section in the detailed tables for the F-I/O.

   The table consists of two parts:

   – The left part contains the parameters which refer to the F-I/O itself ("Module data").
   – The right part contains the parameters of the individual channels ("Channel parameters")

   These parameters must be set as prescribed by the safety requirements of your application.

   When using fail-safe GSD based DP slaves/GSD based I/O devices, note the relevant documents for the possible additional safety-related (technical) parameters.

   Note

   F-I/O that are to be assigned the same safety-related parameters (except for PROFIsafe addresses) can be copied during configuration. Except for the PROFIsafe addresses, you no longer have to check the safety-related parameters individually. It is sufficient to compare the "Signature of F-parameters (without addresses)" in the "Hardware configuration of the F-I/O" section in the overview table. This also applies to fail-safe GSD based DP slaves/GSD based I/O devices without i-parameters. For GSD based DP slaves / GSD based I/O devices with i-parameters, it may be that "F-parameter signature (w/o addresses)" does not match, even though all safety-related parameters, except for the PROFIsafe addresses, do match. In this case, you need to compare all safety-related parameters.

   Exception:

   For F-I/Os that do not support the "RIOforFA-Safety" profile, you also need to compare the "Behavior after channel fault" parameter, if any, for "F-parameter signature (w/o addresses)".

3. Check whether the article numbers of the F-I/O in the safety summary correspond to the article numbers of the actual F-I/O in the system. If the article numbers are different, the existing F-I/O must be spare-part-compatible to the F-I/O listed in the safety summary.

4. For non-supported configuration, please see Configurations supported by the SIMATIC Safety F-system (Page 66).

WARNING

Please note the following with configurations that are not included in supported configurations:

- Make sure that the F-I/O of this configuration appears in the safety summary and that an F-I/O DB has been created for it. Otherwise, you cannot use the F-I/O in this configuration. (Contact Customer Support.)
- For F-I/Os in the PROFINET IO environment**, you must check the PROFIsafe operating mode parameter (F_Par_Version) against the safety summary to make sure that it is correct. V2 mode must be set in the PROFINET IO environment. F-I/O which only support V1 mode may not be used in the PROFINET IO environment.
- You must ensure that PROFIsafe address assignment is unique CPU-wide* and network-wide***:
  - Check the correctness of the PROFIsafe addresses with the help of the safety summary.
  - Use the safety summary to check that the F-source address corresponds to the "Central F-source address" parameter of the F-CPU for F-I/O of PROFIsafe address type 2.
  - For F-I/O of PROFIsafe address type 1 or if you cannot set the F-source address in accordance with the "Central F-source address" parameter of the F-CPU, you will have to ensure the uniqueness of the PROFIsafe address solely by assigning a unique F-destination address.

  You must check the uniqueness of the F-destination address individually for each F-I/O based on the safety summary in a configuration that is not supported.

  (S050)

* "CPU-wide" means all F-I/Os assigned to an F-CPU: Central F-I/O of this F-CPU as well as F-I/Os for which the F-CPU is DP master/IO controller and assigned F-I/O in a shared device. An F-I/O that is addressed using I-slave-slave communication is assigned to the F-CPU of the I-slave and not to the F-CPU of the DP master / IO controller.

** The F-I/O is located in the "PROFINET IO environment" if at least part of safety-related communication with the F-CPU takes place via PROFINET IO. If the F-I/O is connected via I-slave-slave communication, also keep in mind the communication line to the DP master/IO controller.

*** A network consists of one or more subnets. "Network-wide" means beyond the boundaries of the subnet. In PROFIBUS, a network includes all nodes accessible via PROFIBUS DP. In PROFINET IO, a network includes all nodes accessible via RT_Class_1/2/3 (Ethernet/WLAN/Bluetooth, Layer 2) and if applicable RT_Class_UDP (IP, Layer 3).

5. Check that only authorized persons have the "F-admin" right.

WARNING

The "F-admin" authorization for Web server without password protection (user "Everybody" or "Everyone") is only intended for test purposes, maintenance, etc. This means only when the system is not in productive operation. In this case, you must ensure the safety of the system through other organizational measures, for example through protected access to certain areas.

Before you transition into productive operation, you must remove the "F-admin" right for the user "Everyone".

Only authorized personnel may have access to the password of the Web server user with the "F-admin" right. After downloading the hardware configuration, check whether only permitted users of the Web server have the "F-admin" right on the F-CPU. To do so, use the online view of the *Safety Administration Editor* (see also Safety Administration Editor (Page 81)).

Saving the login file and the password of the Web server in the browser is only permitted when use by unauthorized persons is prevented through other organizational measures (e.g. access protection to the PG/PC). *(S064)*

11.7 Correctness and completeness of the communication configuration

Introduction

Safety-related communication is based on the mechanisms of the standard communication of *STEP 7*.

To ensure that errors which standard communication does not discover are detected, safety-related communication connections between F-CPUs are secured. Further parameters are required for this, which you have to document and check on acceptance.

For this purpose, the "Block parameters for safety-related CPU-CPU-communication" and "Overview of communication via Flexible F-Link" sections are available in the safety summary. The section "Block parameters for safety-related CPU-CPU-communication" contains up to two tables (for communication via PROFIBUS DP or PROFINET IO and for communication via S7 connections). The section "Overview of communication via Flexible F-Link" contains a table with an overview of the connection configurations and a "Communication via Flexible F-Link for UDT" table for each used F-compliant PLC data type (UDT).

Procedure for testing for correctness of the communication via Flexible F-Link

To check the communication via Flexible F-Link for correctness, follow these steps:

- Check your connection parameter assignment in the table "Overview of communications via Flexible F-Link". If you have copied communication relationships, ensure the uniqueness of the UUID.
- Check the table(s) "Overview of communications via Flexible F-Link" for each F-communication relationship to ensure that the offsets of the elements of the F-compliant PLC data types (UDT) match regarding send and receive data within the safety message frame.

Procedure for testing for correctness of the communication configuration

To check the communication configuration for correctness, proceed as follows:

- In the "Safety-related CPU-CPU communication via PROFIBUS DP or PROFINET IO" table, check to determine whether you have assigned a unique DP_DP_ID input network-wide* for all safety-related communication connections (e.g., master-master, master-I-slave and IO controller-IO controller communication).
- In the "Safety-related CPU-CPU communication via S7 connections" table, check to determine whether you have assigned a unique R_ID input network-wide* for all safety-related communication via S7 connections.

* A network consists of one or more subnets. "Network-wide" means beyond the boundaries of the subnet. In PROFIBUS, a network includes all nodes accessible via PROFIBUS DP. In PROFINET IO, a network includes all nodes accessible via RT_Class_1/2/3 (Ethernet/WLAN/Bluetooth, Layer 2) and if applicable RT_Class_UDP (IP, Layer 3).

11.8 Identity of online and offline program

Once you have checked all properties of the offline safety program you must ensure that the safety program is identical on the F-CPU on which it is supposed to be run.

1. Connect online with the F-CPU. If multiple F-CPUs can be reached over a network (e.g. Industrial Ethernet) by the programming device / PC, you have to ensure that you are connected with the correct F-CPU. For example with "Online & diagnostics" > "Online accesses " > "Flash LED".
2. Open the *Safety Administration Editor*.
3. Check whether the online and offline F-collective signatures match the F-collective signatures from the safety summary.
4. In the "General" area, check the information for
   - F-collective signature online
   - F-collective signature offline
   - Information on whether safety programs are consistent online and offline.
   - Version check view

     Use the output information to check which situation you are dealing with and, if necessary, execute the recommended measure:

collective F-signatures online/offline	Consistency online to offline	Statement	Measure
	not relevant	The safety programs are different.	• Ensure that you are connected with the desired F-CPU. • Download the safety program to the F-CPU.
		The safety programs are identical but different versions of F-blocks are used.	The safety program must be downloaded to the F-CPU for the latest versions to become effective.
		The safety programs are identical.	None

Keep in mind that only a change comparison will provide reliable information as to whether the safety programs are identical. The display of signatures is used for quick identification of changes.

11.9 Other characteristics

Introduction

In addition, you must check a few more characteristics that are also relevant for the acceptance of the project.

Validity check for data transfer from the standard program to the safety program

Check to determine whether a validity check was programmed for all data transferred from the standard user program to the safety program. For this purpose, the "Data from the standard user program" section lists all tags of the standard user program that you are reading in the safety program. Tags of the safety program that you are writing in the safety program are not listed here because a plausibility check is not required for them. For more information, refer to the S015 warning in section "Data Transfer from Standard User Program to Safety Program (Page 197)".

Checking the program version

Check whether the version of *STEP 7 Safety* used to create the summary (in the footer of the printout) is as least as high as the version used to compile the safety program. The latter version can be found in the "General information" section of the safety summary under "Used Versions". Both versions must be listed in Annex 1 of the Report for the TÜV certificate.

Ability to disable safety mode

Make sure that safety mode cannot be disabled. For information about this, refer to section "General information" under "Safety program settings". This setting ensures that the safety mode of the safety program cannot be disabled inadvertently. For more information, refer to the S027 warning in section "Disabling safety mode (Page 344)".

Access protection

Check in the "General information" section under "Access protection" to determine whether the setting for access protection is permitted. Note the following warning.

Otherwise, the project must not be accepted, because the safety program in the F-CPU is not protected against unauthorized accesses.

WARNING

(S7-300, S7-400) In safety mode, access with the CPU password must not be authorized during changes to the standard user program as this would also allow changes to the safety program. To rule out this possibility, you must configure the protection level "Write protection for fail-safe blocks" and configure a password for the F-CPU. If only one person is authorized to change the standard user program and the safety program, the protection level "Write protection" or "Read/write protection" should be configured so that other persons have only limited access or no access at all to the entire user program (standard and safety programs).*(S001)*

WARNING

(S7-1200, S7-1500) In safety mode, the safety program must be password-protected. For this purpose, configure at least the protection level "Full access (no protection)" and assign a password under "Full access incl. fail-safe (no protection)". This protection level only allows full access to the standard user program, not to F-blocks.

If you select a higher protection level, for example to protect the standard user program, you must assign an additional password for "Full access (no protection)".

Assign different passwords for the individual protection levels. *(S041)*

11.10 Acceptance of Changes

Introduction

In general, you can adopt the same approach for the acceptance of changes as the initial acceptance (see Overview of System Acceptance (Page 361)).

You must check the complete safety program including the safety-related HW configuration for changes.

WARNING

In the case of acceptance of changes, you must check whether the intended changes were made correctly and completely.

You must also check whether unintentional changes may have been made at another location (for example, I/O or instructions that were added).*(S072)*

To avoid the acceptance of the entire system in case of negligible changes, *STEP 7 Safety* helps you to identify those parts of your safety program that have changed.

For an acceptance of changes, it is sufficient to check the following:

- Checking the changed or newly added F-blocks.
- Checking the changed or newly added instructions and F-system blocks.
- Checking the safety-related parameters of the changed or newly added F-I/O.
- Checking the structure of the safety-related HW configuration (e.g. slot positions or start addresses of the F-I/Os).
- Checking the changed communication connection with Flexible F-Link.

You then perform a function test of the F-blocks/F-I/Os affected by the changes.

Check that the changes have no impact on the unchanged parts of safety-related project data, in particular for deleted F-blocks or deleted F-I/O.

Note

Acceptance of changes is not possible after CPU migration.

WARNING

When you make changes in which the assignment of input/output addresses and wiring can change, then you must perform a wiring test (Page 347).

Examples for such changes are:

- Adding F-I/O
- Changing the start address of F-I/O
- Changing the slot position of F-I/O
- Changing
  - the rack
  - the slave/device address
  - the PROFIBUS DP/PROFINET IO subnet
  - the IP address
  - the device name

(S071)

Detection of changes in the safety-related project data

You need two TIA projects to identify relevant changes:

- Reference project: Contains the initially accepted project data. They are the starting point for the upcoming comparison.
- Project to be accepted: Contains the current safety-related project data. It is the result of the reference project and the changes made in it.

To detect changes you have to compare the safety-related project data from the reference project with the data of the project to be accepted.

The F-collective signature is a quick first step to determine whether relevant changes have been made. If the signature has changed, relevant changes are present in the safety-related project data.

You can now use the F-SW collective signature, the F-HW collective signature and the F-communication address signature to narrow down whether these changes are contained in the safety program (F-SW collective signature changed) and/or in the safety-related project data (F-HW collective signature) and/or in the communication data (with Flexible F-Link, F-communication address signature).

Detection of changes in the safety program

A quick possibility to detect changes in the safety program is the comparison of the F-SW collective signature of the safety-related project data in the reference project with the F-SW collective signature in the safety-related project data in the project to be accepted. If they differ from each other, this means that there are changes in the safety program which need to be validated and, if necessary, accepted.

To localize changes in the safety program, perform an offline-offline comparison between the changed safety program and the accepted safety program (see Comparing Safety Programs (Page 339)). Use filter setting "Compare only F-blocks relevant for certification". This limits the output of the comparison to exactly those F-blocks that must be considered for the acceptance of changes.

⚠ WARNING
Make sure that the comparison criterion "Safety" is enabled so that the criteria relevant for an acceptance of changes are taken into consideration in the comparison. *(S069)*

By disabling the remaining comparison criteria, you can deselect those differences that are irrelevant for the acceptance of changes (e.g. time stamp).

The status of the comparison helps you to identify which F-blocks were changed.

Detection of changes in the safety-related hardware configuration

A quick possibility to detect changes in the safety-related hardware configuration is the comparison of the F-HW collective signature of the safety-related project data in the reference project with the F-HW collective signature of the safety-related project data in the project to be accepted. If they differ from each other, this means that there are changes in the safety-related hardware configuration which need to be validated and, if necessary, accepted.

If the F-HW collective signature has changed and all F-I/O devices are unchanged, this indicates that safety-related parameters of the F-CPU have changed, or that the structure of the safety-related hardware configuration has changed, for example, slot positions.

There are two possible ways for localizing safety-related changes in the safety-related hardware configuration:

- Comparison in the comparison editor
- Comparison based on two safety summaries

Comparison in the comparison editor

If you have access to the reference project, you can also detect the changes in the safety-related hardware configuration through an offline-offline comparison of the changed F-CPU with the accepted F-CPU (see Comparing Safety Programs (Page 339)). Both projects must be consistent and compiled.

1. Navigate in the comparison result to the "System blocks > STEP 7 Safety > F-I/O DBs" folder. All data blocks listed in this folder are F-I/O-DBs and are each assigned to an F-I/O.
   - If the F-I/O-DBs in the comparison result are identical, this means that the safety-related configuration of the assigned F-I/O was also not changed. Standard-parameters may have changed.
   - If the F-I/O-DBs in the comparison result are not identical, this means that the safety-related configuration of the assigned F-I/O was also changed.
   - If the F-I/O DBs in the comparison result are marked as "not existing", associated F-I/O devices may have been deleted or added or the name or start addresses of the F-I/O devices have been changed. In this case you can find the assignment of an F-I/O DB to a specific F-I/O in the safety summary under "Hardware configuration of F-I/O".
2. If you have found changed F-I/O, you can check the changed parameters in the safety summary as described below.

Comparison based on two safety summaries

Carry out a comparison based on two safety summaries as follows:

1. In the section "Hardware configuration of the F-I/O" compare the start addresses (I/O addresses), the parameter "Behavior after channel fault" and the slot of the F-I/O.
2. In the overview table of the utilized F-I/O in the "Hardware configuration of F-I/O" section, compare the parameter CRCs of the F-I/O with those in the safety summary of the accepted F-CPU.
   - If the "Parameter signature (without addresses)" is different for an F-I/O, this indicates the existence of a safety-related change of safety-related parameters of the F-I/O. In addition, the PROFIsafe addresses may also be changed.

     In this case, in the “F-I/O hardware configuration“ section check the safety-related parameters of the F-I/O and verify the uniqueness of the PROFIsafe addresses.
   - If the "Parameter signature (w/o addresses) is identical, it is possible that only the PROFIsafe addresses were changed.

     In this case it is sufficient to verify the uniqueness of the PROFIsafe addresses.

Check as described in section “Completeness and correctness of the hardware configuration (Page 368)“.

Detecting changes in the communication with Flexible F-Link

A quick possibility to detect changes in the configuration of the communication with Flexible F-Link, the comparison of the F-communication address signature of the safety-related project data in the reference project with the F-communication address signature of the safety-related project data in the project to be accepted. If they differ from each other, this means that there are changes in the configuration of the communication with Flexible F-Link, which need to be validated and, if necessary, accepted.

To localize changes in the configuration of the communication with Flexible F-Link, compare the table "Overview of communications via Flexible F-Link" of the reference project in the respective safety summary with the one of the project to be accepted.

See also

Accessing tags of the F-I/O DB (Page 174)

Operation and Maintenance 12

12.1 Notes on Safety Mode of the Safety Program

Introduction

Pay attention to the following important notes on safety mode of the safety program.

Use of simulation devices/simulation programs

WARNING

Use of simulation devices/simulation programs in plants

If you operate simulation devices or simulation programs that generate safety message frames, for example, based on PROFIsafe, and make them available to the SIMATIC Safety F-system via the bus system (such as PROFIBUS DP or PROFINET IO), you must ensure the safety of the F-system using organizational measures, such as operational monitoring and manual safety shutdown.
Note, for example, that a protocol analyzer is not permitted to perform any function that reproduces recorded message frame sequences with correct time behavior.

S7-PLCSIM **version < 15.1 or** ***S7-PLCSIM Advanced version*** **< 2.0 SP1 and safety system version < 2.2**

If you use the *S7-PLCSIM* (Page 343) to simulate safety programs, the measures mentioned above are not necessary because S7-PLCSIM cannot establish an online connection to a real component.

S7-PLCSIM **version ≥ 15.1 or** ***S7-PLCSIM Advanced*** **version ≥ 2.0 SP1 or safety system version ≥ 2.2**

You must ensure the safety of the F-system with organizational measures, for example, through operation monitoring and manual safety shutdown.

In addition, the loading of a safety program with Safety System version 2.2 and higher onto an *S7-PLCSIM* is only permissible as of *S7-PLCSIM* V15.1 or *S7-PLCSIM Advanced* V2.0 SP1. *(S030)*

Note

For an *S7-PLCSIM* before V15.1 or *S7-PLCSIM Advanced* before V2.0 SP1 and a Safety System version 2.2 and higher, the safety program changes to STOP and a corresponding diagnostics event is issued.

Switching F-CPU to STOP mode

WARNING

STOP via programming device/PC, mode switch, communication function or "STP" instruction

Initiating STOP by means of programming device/PC operation, mode switch, communication function or "STP" instruction as well as maintaining the STOP state is not safety-oriented. This STOP state can be easily (and unintentionally) be revoked by programming device/PC operation.

When an F-CPU is switched from STOP to RUN mode, the standard user program starts up in the usual way. When the safety program is started up, all F-DBs are initialized with the values from the load memory - as is the case with a cold restart. This means that saved error information is lost. The F-system automatically reintegrates the F-I/O.

If your process does not allow such a startup, you must program a restart/startup protection in the safety program: The output of process data must be blocked until manually enabled. This enable must not occur until it is safe to output process data and faults have been corrected (see Programming startup protection (Page 155)). *(S031)*

CRC error in safety-related communication

Note

CRC error in safety-related communication

If you observe that an F-CPU requests manual acknowledgement of a CRC error more than once within the space of 100 hours, and this occurs repeatedly, check whether the PROFINET or PROFIBUS installation guidelines have been followed.

There is a CRC error if:

- The ACK_REQ tag of the F-I/O DB is set and the DIAG tag of the F-I/O DB (bit 2 or bit 6) indicates CRC errors
  or
- A CRC error is entered in the diagnostic buffer of the F-CPU

In this case, the failure probability values (https://support.industry.siemens.com/cs/ww/en/view/109481784) (PFD_{avg}/PFH) for safety-related communication no longer apply.

Information on installation guidelines for PROFINET and PROFIBUS can be found in:

- PROFIBUS Installation Guidelines (www.profibus.com/PBInstallationGuide)
- PROFIBUS Interconnection Technology (http://www.profibus.com/nc/downloads/downloads/profibus-interconnection-technology/display/)
- PROFINET Installation Guidelines (www.profibus.com/PNInstallationGuide)
- PROFINET Cabling and Interconnection Technology (http://www.profibus.com/nc/downloads/downloads/profinet-cabling-and-interconnection-technology/display/)
- PROFIsafe Environment Requirements (www.profibus.com/PROFIsafeRequirements)

When your review indicates that the configuration guidelines for PROFIBUS and PROFINET have been met, contact Customer Support.

12.2 Replacing Software and Hardware Components

Replacement of software components

When replacing software components on your programming device or PC, e.g. with a new version of *STEP 7*, you must adhere to the information regarding upward and downward compatibility in the documentation and readme files for these products (e.g. *STEP 7 Safety*).

When replacing *STEP 7 Safety*, check whether the version of *STEP 7 Safety* is listed in Annex 1 of the Report for the TÜV certificate.

Replacement of hardware components

Hardware components for SIMATIC Safety (F-CPU, F-I/O, batteries, etc.) are replaced in the same way as in standard automation systems.

Replacement of S7-1500 F software Controllers

WARNING

After replacing a CPU module (e.g. new PC with data storage medium of old PC) or replacement of the data storage medium (e.g. data storage medium with safety program 1 is replaced with data storage medium with safety program 2), you must use the Panel to check if the correct collective F-signature is displayed or whether a program identification is carried out. *(S066)*

Removing and inserting F-I/O during operation

If removing and inserting is possible for standard I/O during operation, it is also possible for the respective F-I/O. However, be aware that replacing an F-I/O module during operation can cause a communication error in the F-CPU.

You must acknowledge the communication error in your safety program in the ACK_REI tag of the F-I/O DB (Page 165) or, alternatively, by using the "ACK_GL (Page 487)" instruction. Without an acknowledgment, the F-I/O will remain passivated.

CPU firmware update

Check of the CPU operating system for F-approval: When using a new CPU operating system (firmware update), you must check to see if the CPU operating system you are using is approved for use in an F-system.

The minimum CPU operating system versions with guaranteed F-capability are specified in the appendix of the Certificate. This information and any notes on the new CPU operating system must be taken into account.

Firmware update for interface module

When using a new operating system for an interface module, e.g. IM 151-1 HIGH FEATURE ET 200S (firmware update), you must observe the following:

If you have selected the "Activate firmware after update" option for the firmware update (see *Help on STEP 7*, "Online & Diagnostics"), the IM will be automatically reset following a successful download operation and will then run on the new operating system. Note that the firmware update for interface modules during operation generates a communication error in the F-CPU.

You must acknowledge the communication error in your safety program in the ACK_REI tag of the F-I/O DB (Page 165) or, alternatively, by using the "ACK_GL (Page 487)" instruction. Without an acknowledgment, the F-I/O will remain passivated.

Preventive maintenance (proof test)

Proof test for complex electronic components generally means replacement with new, unused components.

PFD_{avg} and PFH values for S7-300/400 F-CPUs and F-I/O

You will find a list of the failure probability values (PFD_{avg}, PFH values) for components that can be used in SIMATIC Safety on the Internet.

PFD_{avg} and PFH values for S7-1200/1500 F-CPUs

Below are the probability of failure values (PFD_{avg}, PFH values) for S7-1200/1500 F-CPUs with a service life of 20 years and an MTTR of 100 hours:

Operation in low demand mode low demand mode According to IEC 61508:2010: PFD_{avg} = Average probability of a dangerous failure on demand	Operation in high demand or continuous mode high demand/continuous mode According to IEC 61508:2010: PFH = Average frequency of a dangerous failure [h^{-1}]
< 2E-05	< 1E-09

PFD_{avg} and PFH values for safety-related communication

Below you will find the failure probability values (PFD_{avg}, PFH values) for safety-related communication:

Operation in low demand mode low demand mode According to IEC 61508:2010: PFD_{avg} = Average probability of a dangerous failure on demand	Operation in high demand or continuous mode high demand/continuous mode According to IEC 61508:2010: PFH = Average frequency of a dangerous failure [h^{-1}]
< 1E-05*	< 1E-09*

*** Note on S7-300/400 F-CPUs:**
The PFH value is valid under the assumption that a maximum of 100 F-I/Os are involved in a safety function. If you use more than 100 F-I/Os, you have to also add 4E-12 per F-I/O for the safety function.
The PFD_{avg} value is valid for a service life of 20 years and under the assumption, that a maximum of 25 F-I/Os are involved in a safety function. If more than 25 F-I/OS are used, you need to add 3.5E-7 per F-I/O for this safety function.

12.3 Guide to diagnostics (S7-300, S7-400)

Introduction

Here you find a compilation of diagnostic capabilities that can be evaluated for your system when an error occurs. Most of the diagnostic capabilities are the same as those in standard automation systems. The sequence of steps represents a recommendation.

Steps for evaluating diagnostic capabilities

The following table shows the steps you take to evaluate diagnostic capabilities.

Step	Procedure	Reference
1	**Evaluate LEDs on the hardware (F-CPU, F-I/O):** • BUSF LED on the F-CPU: Flashes when a communication error occurs on PROFIBUS DP/PROFINET IO; On if a programming error occurs when OB 85 and OB 121 are programmed (e.g. instance DB is not loaded) • STOP LED on the F-CPU: illuminates when the F-CPU is in STOP mode • Fault LEDs on the F-I/O: e.g. SF-LED (group error LED) on if any fault occurs in the individual F-I/O	*Manuals for F-CPU and F-I/O*
2	**Evaluate diagnostic buffer of the modules:** You read the diagnostic buffer of a module (F-CPU, F-I/O, CP) in its online and diagnostic view in the "Diagnostic buffer" group under the "Online & Diagnostics" folder.	*Help on STEP 7 and manuals for the F-CPU and F-I/O*
3	**Evaluate stacks of the F-CPU:** when the F-CPU is in STOP mode, read the following successively: • Block stack: Check whether STOP mode of the F-CPU was triggered by an F-block of the safety program • Interruption stack • Local data stack	*Help on STEP 7*

Step	Procedure	Reference
4	**Evaluate diagnostic tag of the F-I/O DB using testing and commissioning functions, by means of an operator control and monitoring system, or in the standard user program:** Evaluate the DIAG tag in the F-I/O DB	F-I/O access (Page 157)
5	**Evaluate diagnostic outputs of the instance DBs of instructions using testing and commissioning functions, using an operator control and monitoring system, or in the standard user program:** • Evaluate the following for MUTING, EV1oo2DI, TWO_H_EN, MUT_P, ESTOP1, FDBACK, SFDOOR in the assigned instance DB: – Output DIAG • Evaluate the following for SENDDP or RCVDP in the assigned instance DB: – Output RET_DPRD/RET_DPWR – Output DIAG • Evaluate the following for SENDS7 or RCVS7 in the assigned instance DB: – Output STAT_RCV – Output STAT_SND – Output DIAG	Instructions

Tip on RET_DPRD/RET_DPWR

The diagnostic information of the RET_DPRD/RET_DPWR outputs of the SENDDP or RCVDP instructions corresponds to the diagnostic information of the RETVAL return value of the "DPRD_DAT" and "DPWR_DAT" instructions. You can find the description in the help on *STEP 7* for the "DPRD_DAT" and "DPWR_DAT" instructions.

Tip: STAT_RCV and STAT_SND

The diagnostic information of the STAT_RCV output of the SENDS7 or RCVS7 instructions corresponds to the diagnostic information of the STATUS output of the "URCV" instruction. The diagnostic information of the STAT_SND output of the SENDS7 or RCVS7 instructions corresponds to the diagnostic information of the STATUS output of the "USEND" instruction. You can find the description in the help on *STEP 7* for the instruction "UCRV" or "USEND" .

12.4 Guide to diagnostics (S7-1500)

Detailed information on diagnostics for an S7-1500 F-CPU can be found in the Diagnostics (http://support.automation.siemens.com/WW/view/en/59192926) function manual.

12.5 Guide to diagnostics (S7-1200)

Detailed information on diagnostics for an S7-1200 F-CPU can be found in the S7-1200 Functional Safety manual (http://support.automation.siemens.com/WW/view/en/104547552).

Overview of instructions for the safety program

13

Overview of instructions for the safety program

When programming an F-block, you can find all instructions available for programming an F-block in LAD or FBD with the configured F-CPU in the "Instructions" task card.

In addition to the instructions that are familiar to you from programming a standard block, there are also special safety functions, e.g., for two-hand monitoring, discrepancy analysis, muting, emergency STOP/emergency OFF, safety door monitoring, and feedback monitoring and instructions for safety-related CPU-CPU communication.

Note the following

Note

Enable input EN and enable output ENO cannot be connected.

Exception:

(S7-1200, S7-1500) With the following instructions you can program overflow detection by connecting the enable output ENO:

- ADD: Add (STEP 7 Safety V15.1) (Page 520)
- SUB: Subtract (STEP 7 Safety V15.1) (Page 523)
- MUL: Multiply (STEP 7 Safety V15.1) (Page 526)
- DIV: Divide (STEP 7 Safety V15.1) (Page 529)
- NEG: Create twos complement (STEP 7 Safety V15.1) (Page 533)
- ABS: Form absolute value (STEP 7 Safety V15.1) (S7-1200, S7-1500) (Page 536)
- CONVERT: Convert value (STEP 7 Safety V15.1) (Page 548)

13.1 General

13.1.1 LAD

13.1.1.1 New network (STEP 7 Safety V15.1)

Requirement

An F-block is open.

Procedure

To insert a new network, follow these steps:

1. Select the network after which you want to insert a new network.
2. Select the "Insert network" command in the shortcut menu.

Note

If you insert an element into the last empty network of the F-block in an LAD program, a new empty network is automatically inserted below it.

Result

A new empty network is inserted into the F-block.

13.1.1.2 Empty box (STEP 7 Safety V15.1)

Requirement

A network is available.

Procedure

To insert an LAD instruction into a network using an empty box, follow these steps:

1. Open the "Instructions" task card.
2. Navigate to "Basic instructions > General > Empty box".
3. Use a drag-and-drop operation to move the "Empty box" element to the desired place in the network.
4. Hover the cursor over the yellow triangle in the top right corner of the empty box.

   A drop-down list is displayed.
5. Select the required instruction from the drop-down list.

If the instruction acts as a function block (FB) within the system, the "Call options" dialog opens. In this dialog, you can create an instance data block for the function block, either as a single instance or, if necessary, multi-instance, in which data of the inserted instruction are stored. Once it is created, the new instance data block can be found in the "Program resources" folder in the project tree under "Program blocks > System blocks". If you have selected "multi-instance", you can find it in the block interface in the "Static" section.

Result

The empty box is changed to the appropriate instruction. Placeholders are inserted for the parameters.

13.1.1.3 Open branch (STEP 7 Safety V15.1)

Description

Use branches to program parallel connections with the Ladder Logic (LAD) programming language. Branches are inserted into the main current path. You can insert several contacts into the branch, thereby creating a parallel connection from series connections. You can program complex ladder diagrams in this way.

Requirement

- A network is available.
- The network contains elements.

Procedure

To insert a new branch in a network, follow these steps:

1. Open the "Instructions" task card.
2. Navigate to "Basic instructions > General > Open branch".
3. Use a drag-and-drop operation to move the element to the desired place in the network.
4. If you want to connect the new branch directly to the power rail, drag the element to the power rail.

Example

The following figure provides an example of how to use branches:

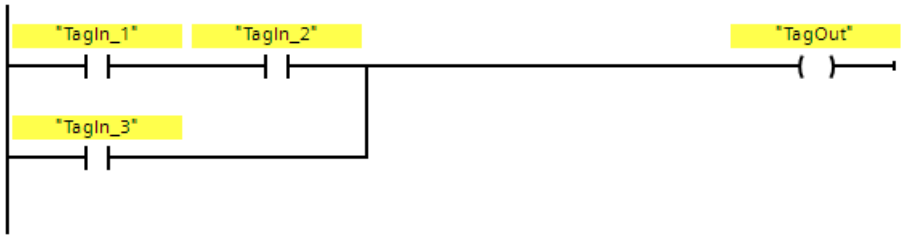

13.1.1.4 Close branching (STEP 7 Safety V15.1)

Description

Branches must be closed again at suitable places. If necessary, branches will be arranged so that they do not cross each other.

Requirement

A branch is available.

Procedure

To close an open branch, follow these steps:

1. Select the open branch.
2. Press and hold down the left mouse button.

   A dashed line will appear as soon as the cursor is moved.
3. Drag the dashed line to a suitable place on the network. Permissible connections are indicated by green lines.
4. Release the left mouse button.

Example

The figure below provides an example of how to use branches:

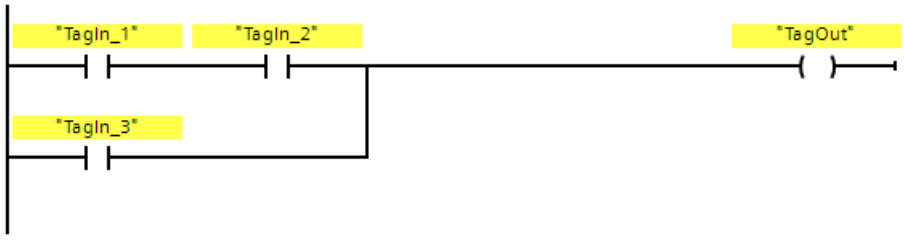

13.1.2 FBD

13.1.2.1 New network (STEP 7 Safety V15.1)

Requirement

An F-block is open.

Procedure

To insert a new network, follow these steps:

1. Select the network after which you want to insert a new network.
2. Select the "Insert network" command in the shortcut menu.

Note

If you insert an element into the last empty network of the F-block in an FBD program, a new empty network is automatically inserted below it.

Result

A new empty network is inserted into the F-block.

13.1.2.2 Empty box (STEP 7 Safety V15.1)

Requirement

A network is available.

Procedure

To insert FBD elements into a network using an empty box, follow these steps:

1. Open the "Instructions" task card.
2. Navigate to "Basic instructions > General > Empty box".
3. Use a drag-and-drop operation to move the "Empty box" element to the desired place in the network.
4. Hover the cursor over the yellow triangle in the top right corner of the empty box.

   A drop-down list is displayed.
5. Select the desired FBD element from the drop-down list.

If the instruction acts as a function block (FB) within the system, the "Call options" dialog opens. In this dialog, you can create an instance data block for the function block, either as a single instance or, if necessary, multi-instance, in which data of the inserted instruction are stored. Once it is created, the new instance data block can be found in the "Program resources" folder in the project tree under "Program blocks > System blocks". If you have selected "multi-instance", you can find it in the block interface in the "Static" section.

Result

The empty box is changed to the appropriate instruction. Placeholders are inserted for the parameters.

13.1.2.3 Open branch (STEP 7 Safety V15.1)

Description

You use branches, which you insert between the boxes, to program parallel connections with the Function Block Diagram (FBD) programming language You can insert additional boxes in the branch, thereby programming complex function block diagrams.

Requirement

A network is available.

Procedure

To insert a new branch in a network, follow these steps:

1. Open the "Instructions" task card.
2. Navigate in the pane to "Basic instructions > General > Branch".
3. Use a drag-and-drop operation to move the element to the desired place to a connecting line between two boxes.

Example

The following figure provides an example of how to use branches:

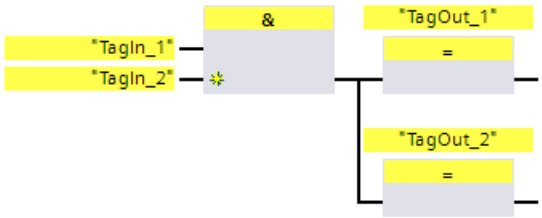

13.1.2.4 Insert binary input (STEP 7 Safety V15.1)

Description

Use the "Insert binary input" instruction to expand the box of one of the following instructions by a binary input:

- "AND logic operation"
- "OR logic operation"
- "EXCLUSIVE OR logic operation"

You can query the signal state of several operands by expanding the instruction box.

Parameters

The following table shows the parameters of the instruction:

Parameter	Declaration	Data type	Description
<Operand>	Input	BOOL	The operand indicates the bit whose signal state will be queried.

Example

The following example shows how the instruction works:

The box of instruction "AND logic operation" has been expanded by an additional binary input at which the signal state of operand "TagIn_3" is queried. Output "TagOut" is set when the signal state of operands "TagIn_1", "TagIn_2", and "TagIn_3" is "1".

See also

AND logic operation (STEP 7 Safety V15.1) (Page 414)

OR logic operation (STEP 7 Safety V15.1) (Page 416)

X: EXCLUSIVE OR logic operation (STEP 7 Safety V15.1) (Page 417)

13.1.2.5 Invert RLO (STEP 7 Safety V15.1)

Description

You can use the "Invert RLO" instruction to invert the result of logic operation (RLO).

Example

The following example shows how the instruction works:

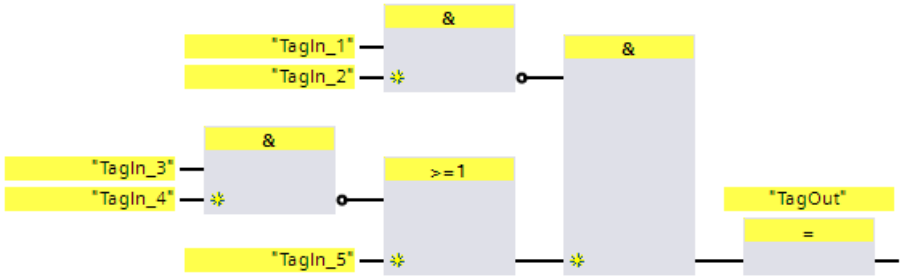

Output "TagOut" is set when the following conditions are fulfilled:

- The "TagIn_1" and/or "TagIn_2" input has the signal state "0".
- The "TagIn_3" or "TagIn_4" input has the signal state "0" or the "TagIn_5" input has the signal state "1".

13.2 Bit logic operations

13.2.1 LAD

13.2.1.1 ---| |---: NO contact (STEP 7 Safety V15.1)

Description

The activation of the normally open contact depends on the signal state of the associated operand. If the operand has signal state "1," the normally open contact is closed. Power flows from the left power rail through the normally open contact into the right power rail and the signal state at the output of the instruction is set to "1".

If the operand has signal state "0," the normally open contact is not activated. The power flow to the right power rail is interrupted and the signal state at the output of the instruction is reset to "0".

Two or more normally open contacts are linked bit-by-bit by AND when connected in series. With a series connection, power flows when all contacts are closed.

The normally open contacts are linked by OR when connected in parallel. With a parallel connection, power flows when one of the contacts is closed.

Parameters

The following table shows the parameters of the instruction:

Parameter	Declaration	Data type	Description
<Operand>	Input	BOOL	Operand whose signal state is queried.

Example

The following example shows how the instruction works:

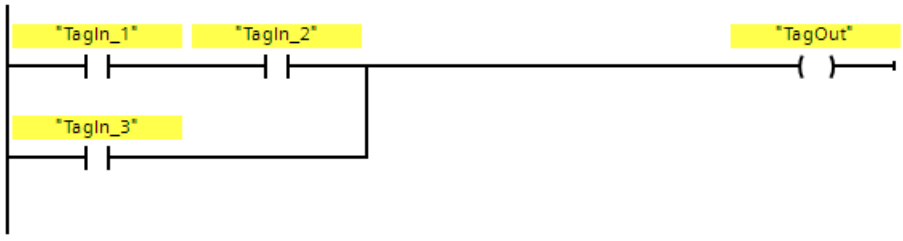

Operand "TagOut" is set when one of the following conditions is fulfilled:

- Operands "TagIn_1" and "TagIn_2" have signal state "1".
- The signal state at operand "TagIn_3" is "1".

13.2.1.2 ---| / |---: NC contact (STEP 7 Safety V15.1)

Description

The activation of the normally closed contact depends on the signal state of the associated operand. If the operand has signal state "1", the normally closed contact is opened and the signal state at the output of the instruction is reset to "0".

If the operand has signal state "0", the normally closed contact is not activated and the signal state at the output of the instruction is set to "1".

Two or more normally closed contacts are linked bit-by-bit by AND when connected in series. With a series connection, power flows when all contacts are closed.

The normally closed contacts are linked by OR when connected in parallel. With a parallel connection, power flows when one of the contacts is closed.

Parameters

The following table shows the parameters of the instruction:

Parameter	Declaration	Data type	Description
<Operand>	Input	BOOL	Operand whose signal state is queried.

Example

The following example shows how the instruction works:

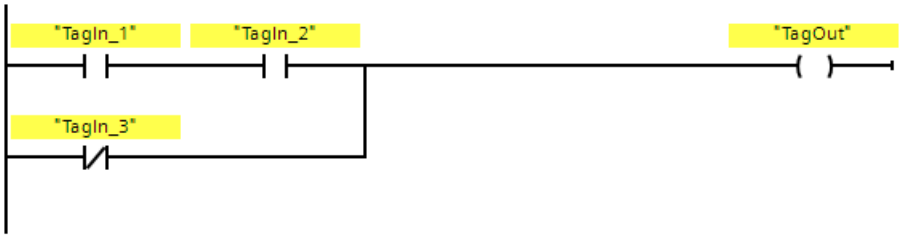

Operand "TagOut" is set when one of the following conditions is fulfilled:

- Operands "TagIn_1" and "TagIn_2" have signal state "1".
- The signal state at operand "TagIn_3" is "0".

13.2.1.3 --|NOT|--: Invert RLO (STEP 7 Safety V15.1)

Description

You can use the "Invert RLO" instruction to invert the signal state of the result of logic operation (RLO). When the signal state is "1" at the input of the instruction, the output of the instruction has the signal state "0". When the signal state is "0" at the input of the instruction, the output has the signal state "1".

Example

The following example shows how the instruction works:

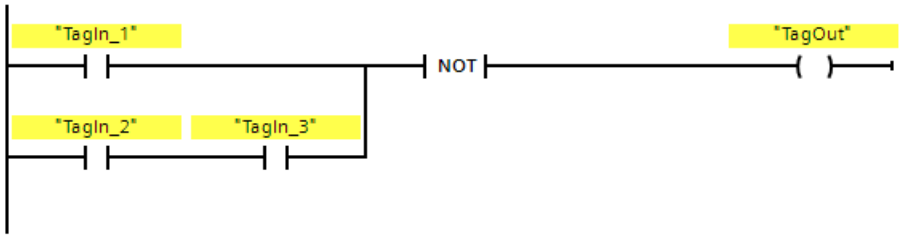

Operand "TagOut" is reset when one of the following conditions is fulfilled:

- Operand "TagIn_1" has signal state "1".
- Operands "TagIn_2" and "TagIn_3" have signal state "1".

13.2.1.4 ---( )---: Assignment (STEP 7 Safety V15.1)

Description

You can use the "Assignment" instruction to set the bit of a specified operand. When the result of logic operation (RLO) at the input of the coil is "1," the specified operand is set to signal state "1". When the signal state is "0" at the input of the coil, the bit of the specified operand is reset to "0".

The instruction does not influence the RLO. The RLO at the input of the coil is sent immediately to the output.

The "Assignment" instruction can be placed at any position in the network.

Parameters

The following table shows the parameters of the instruction:

Parameter	Declaration	Data type	Description
<Operand>	Output	BOOL	Operand to which the RLO is assigned.

Example

The following example shows how the instruction works:

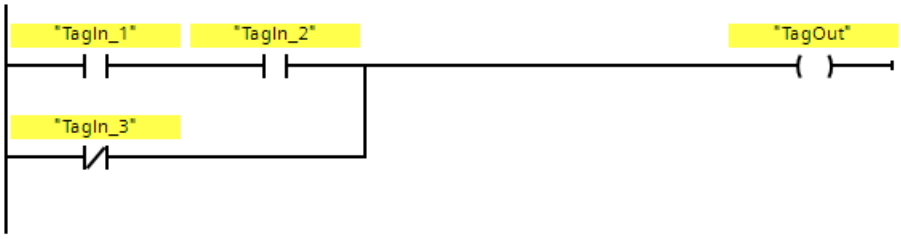

Operand "TagOut" is set when one of the following conditions is fulfilled:

- Operands "TagIn_1" and "TagIn_2" have signal state "1".
- The signal state at operand "TagIn_3" is "0".

13.2.1.5 ---(R)---: Reset output (STEP 7 Safety V15.1)

Description

You can use the "Reset output" instruction to reset the signal state of a specified operand to "0".

If power flows to the coil (RLO is "1"), the specified operand is set to "0". If the result of logic operation at the input of the coil is "0" (no signal flow to the coil), the signal state of the specified operand remains unchanged.

The instruction does not influence the RLO. The RLO at the input of the coil is sent directly to the output of the coil.

Note

If the operand area "local data (temp)" is used for the operands of the instruction, the local data bit used must be initialized beforehand.

Note

You cannot use the "process image of the inputs", "process image of the outputs" from standard I/O and "standard DB" and "bit memory" operand areas for the operands of the instruction.

Parameters

The following table shows the parameters of the instruction:

Parameter	Declaration	Data type	Description
<Operand>	Output	BOOL	Operand that is reset when RLO = "1".

Example

The following example shows how the instruction works:

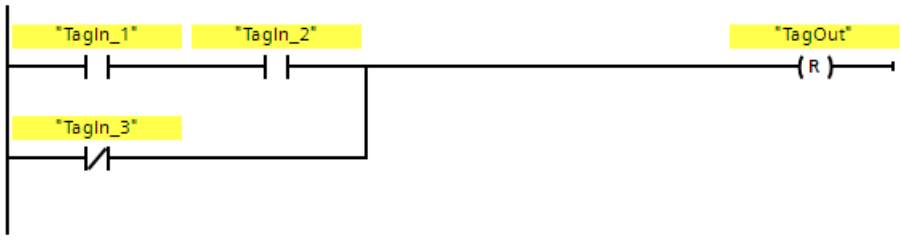

Operand "TagOut" is reset when one of the following conditions is fulfilled:

- Operands "TagIn_1" and "TagIn_2" have signal state "1".
- The signal state of operand "TagIn_3" is "0".

13.2.1.6 ---(S)---: Set output (STEP 7 Safety V15.1)

Description

You can use the "Set output" instruction to set the signal state of a specified operand to "1".

If power flows to the coil (RLO is "1"), the specified operand is set to "1". If the result of logic operation at the input of the coil is "0" (no signal flow to the coil), the signal state of the specified operand remains unchanged.

The instruction does not influence the RLO. The RLO at the input of the coil is sent directly to the output of the coil.

Note

The instruction is not executed if it is applied to an output of an F-I/O that is passivated (e.g., during startup of the F-system). Therefore, it is preferable to access outputs of the F-I/O using only the "Assignment" instruction.

An F-I/O output is passivated if QBAD or QBAD_O_xx = 1 or value status = 0 is set in the corresponding F-I/O DB.

Note

If the operand area "local data (temp)" is used for the operands of the instruction, the local data bit used must be initialized beforehand.

Note

You cannot use the "process image of the inputs", "process image of the outputs" from standard I/O and "standard DB" and "bit memory" operand areas for the operands of the instruction.

Parameter

The following table shows the parameters of the instruction:

Parameter	Declaration	Data type	Description
<Operand>	Output	BOOL	Operand that is set when RLO = "1".

Example

The following example shows how the instruction works:

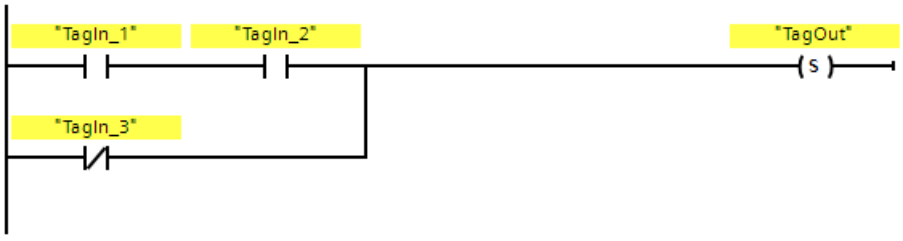

Operand "TagOut" is set when one of the following conditions is fulfilled:

- Operands "TagIn_1" and "TagIn_2" have signal state "1".
- The signal state of operand "TagIn_3" is "0".

13.2.1.7 SR: Set/reset flip-flop (STEP 7 Safety V15.1)

Description

You can use the "Set/reset flip-flop" instruction to set or reset the bit of the specified operand based on the signal state of inputs S and R1. If the signal state at input S is "1" and the signal state at input R1 is "0", the specified operand is set to "1". If the signal state at input S is "0" and the signal state at input R1 is "1", the specified operand is reset to "0".

Input R1 takes priority over input S. If the signal state is "1" at the two inputs S and R1, the signal state of the specified operand is reset to "0".

The instruction is not executed if the signal state at the two inputs S and R1 is "0". The signal state of the operand then remains unchanged.

The current signal state of the operand is transferred to output Q and can be queried there.

Note

If you want to use a formal parameter of an F-FC for the operand of the instruction, it must be declared as an input/output parameter.

Note

You cannot use the "process image", "standard DB" and "bit memory" operand areas for the operands of the instruction.

If the operand area "local data (temp)" is used for the operands of the instruction, the local data bit used must be initialized beforehand.

Parameter

The following table shows the parameters of the instruction:

Parameter	Declaration	Data type	Description
S	Input	BOOL	Enable set
R1	Input	BOOL	Enable reset
<Operand>	Output	BOOL	Operand that is set or reset.
Q	Output	BOOL	Signal state of the operand

Example

The following example shows how the instruction works:

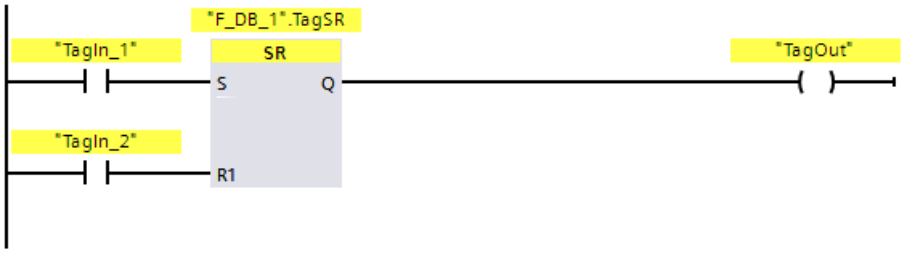

Operands ""F_DB_1".TagSR" and "TagOut" are set when the following conditions are fulfilled:

- Operand "TagIn_1" has signal state "1".
- Operand "TagIn_2" has signal state "0".

Operands ""F_DB_1".TagSR" and "TagOut" are reset when the following conditions are fulfilled:

- Operand "TagIn_1" has signal state "0" and operand "TagIn_2" has signal state "1".
- Both operands "TagIn_1" and "TagIn_2" have signal state "1".

13.2.1.8 RS: Reset/set flip-flop (STEP 7 Safety V15.1)

Description

You can use the "Reset/set flip-flop" instruction to reset or set the bit of the specified operand based on the signal state of inputs R and S1. When the signal state is "1" at input R and "0" at input S1, the specified operand is reset to "0". When the signal state is "0" at input R and "1" at input S1, the specified operand is set to "1".

Input S1 takes priority over input R. If the signal state is "1" at the two inputs R and S1, the signal state of the specified operand is set to "1".

The instruction is not executed if the signal state at the two inputs R and S1 is "0". The signal state of the operand then remains unchanged.

The current signal state of the operand is transferred to output Q and can be queried there.

Note

If you want to use a formal parameter of an F-FC for the operand of the instruction, it must be declared as an input/output parameter.

Note

You cannot use the "process image", "standard DB" and "bit memory" operand areas for the operands of the instruction.

If the operand area "local data (temp)" is used for the operands of the instruction, the local data bit used must be initialized beforehand.

Parameter

The following table shows the parameters of the instruction:

Parameter	Declaration	Data type	Description
R	Input	BOOL	Enable reset
S1	Input	BOOL	Enable set
<Operand>	Output	BOOL	Operand that is reset or set.
Q	Output	BOOL	Signal state of the operand

Example

The following example shows how the instruction works:

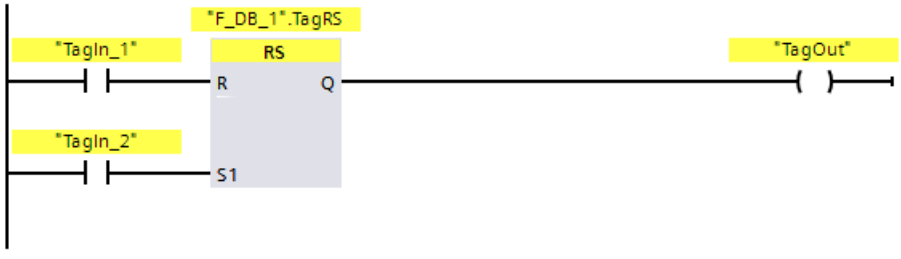

Operands ""F_DB_1".TagRS" and "TagOut" are reset when the following conditions are fulfilled:

- Operand "TagIn_1" has signal state "1".
- Operand "TagIn_2" has signal state "0".

Operands ""F_DB_1".TagRS" and "TagOut" are set when the following conditions are fulfilled:

- Operand "TagIn_1" has signal state "0" and operand "TagIn_2" has signal state "1".
- Operands "TagIn_1" and "TagIn_2" have signal state "1".

13.2.1.9 --|P|--: Scan operand for positive signal edge (STEP 7 Safety V15.1)

Description

You can use the "Scan operand for positive signal edge" instruction to determine if there is a change from "0" to "1" in the signal state of a specified operand (<Operand1>). The instruction compares the current signal state of <Operand1> with the signal state of the previous query saved in <Operand2>. If the instruction detects a change in the result of logic operation from "0" to "1", there is a positive, rising edge.

If a rising edge is detected, the output of the instruction has signal state "1". In all other cases, the signal state at the output of the instruction is "0".

Enter the operand to be queried (<Operand1>) in the operand placeholder above the instruction. Enter the edge memory bit (<Operand2>) in the operand placeholder below the instruction.

Note

The address of the edge memory bit must not be used more than once in the program, otherwise the edge memory bit would be overwritten. This would influence edge evaluation and the result would no longer be unequivocal.

Note

If you want to use a formal parameter of an F-FC for the edge memory bit <Operand2> of the instruction, it must be declared as an input/output parameter.

Note

You cannot use the "process image", "standard DB" and "bit memory" operand areas for the edge memory bit <Operand2> of the instruction.

If operand area "local data (temp)" is used for the edge memory bit <Operand2> of the instruction, the local data bit used must be initialized beforehand.

Parameter

The following table shows the parameters of the instruction:

Parameter	Declaration	Data type	Description
<Operand1>	Input	BOOL	Signal to be queried
<Operand2>	InOut	BOOL	Edge memory bit in which the signal state of the previous query is saved.

Example

The following example shows how the instruction works:

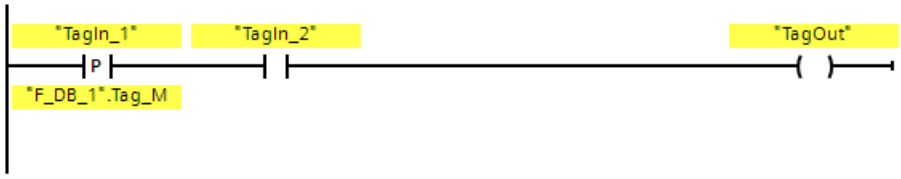

Operand "TagOut" is set when the following conditions are fulfilled:

- There is a rising edge at input "TagIn_1". The signal state of the previous query is saved at edge memory bit ""F_DB_1".Tag_M".
- The signal state of operand "TagIn_2" is "1".

13.2.1.10 --|N|--: Scan operand for negative signal edge (STEP 7 Safety V15.1)

Description

You can use the "Scan operand for negative signal edge" instruction to determine if there is a change form "1" to "0" in the signal state of a specified operand. The instruction compares the current signal state of <Operand1> with the signal state of the previous query saved in <Operand2>. If the instruction detects a change in the result of logic operation from "1" to "0", there is a negative, falling edge.

If a falling edge is detected, the output of the instruction has signal state "1". In all other cases, the signal state at the output of the instruction is "0".

Enter the operand to be queried (<Operand1>) in the operand placeholder above the instruction. Enter the edge memory bit (<Operand2>) in the operand placeholder below the instruction.

Note

The address of the edge memory bit must not be used more than once in the program, otherwise the edge memory bit would be overwritten. This would influence edge evaluation and the result would no longer be unequivocal.

Note

If you want to use a formal parameter of an F-FC for the edge memory bit <Operand2> of the instruction, it must be declared as an input/output parameter.

Note

You cannot use the "process image", "standard DB" and "bit memory" operand areas for the edge memory bit <Operand2> of the instruction.

If operand area "local data (temp)" is used for the edge memory bit <Operand2> of the instruction, the local data bit used must be initialized beforehand.

Parameter

The following table shows the parameters of the instruction:

Parameter	Declaration	Data type	Description
<Operand1>	Input	BOOL	Signal to be queried
<Operand2>	InOut	BOOL	Edge memory bit in which the signal state of the previous query is saved.

Example

The following example shows how the instruction works:

Operand "TagOut" is set when the following conditions are fulfilled:

- There is a falling edge at operand "TagIn_1". The signal state of the previous query is saved at edge memory bit ""F_DB_1".Tag_M".
- The signal state of operand "TagIn_2" is "1".

13.2.1.11 P_TRIG: Scan RLO for positive signal edge (STEP 7 Safety V15.1)

Description

You can use the "Scan RLO for positive signal edge" instruction to query a change in the signal state of the result of logic operation from "0" to "1". The instruction compares the current signal state of the result of logic operation (RLO) with the signal state of the previous query, which is saved in the edge bit memory (<Operand>). If the instruction detects a change in the RLO from "0" to "1", there is a positive, rising edge.

If a rising edge is detected, the output of the instruction has signal state "1". In all other cases, the signal state at the output of the instruction is "0".

Note

The address of the edge memory bit must not be used more than once in the program, otherwise the edge memory bit would be overwritten. This would influence edge evaluation and the result would no longer be unequivocal.

Note

If you want to use a formal parameter of an F-FC for the edge memory bit <Operand> of the instruction, it must be declared as an input/output parameter.

Note

You cannot use the "process image", "standard DB" and "bit memory" operand areas for the edge memory bit <Operand> of the instruction.

If operand area "local data (temp)" is used for the edge memory bit <Operand> of the instruction, the local data bit used must be initialized beforehand.

Parameter

The following table shows the parameters of the instruction:

Parameter	Declaration	Data type	Description
CLK	Input	BOOL	Current RLO
<Operand>	InOut	BOOL	Edge memory bit in which the RLO of the previous query is saved.
Q	Output	BOOL	Result of edge evaluation

Example

The following example shows how the instruction works:

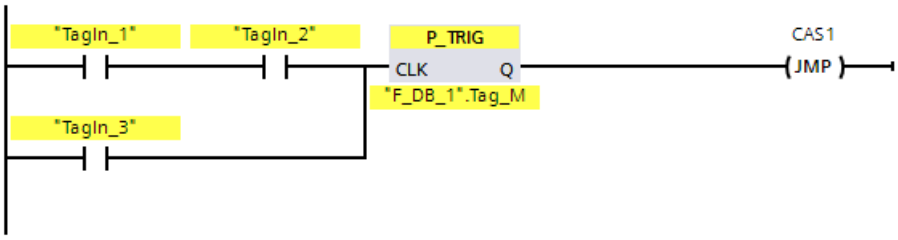

The RLO from the previous bit logic operation is saved in edge memory bit ""F_DB_1".Tag_M". If a change in the RLO signal state from "0" to "1" is detected, the program jumps to jump label CAS1.

13.2.1.12 N_TRIG: Scan RLO for negative signal edge (STEP 7 Safety V15.1)

Description

You can use the "Scan RLO for negative signal edge" instruction to query a change in the signal state of the result of logic operation from "1" to "0". The instruction compares the current signal state of the result of logic operation with the signal state from the previous query, which is saved in the edge memory bit (<Operand>). If the instruction detects a change in the RLO from "1" to "0", there is a negative, falling edge.

If a falling edge is detected, the output of the instruction has signal state "1". In all other cases, the signal state at the output of the instruction is "0".

Note

The address of the edge memory bit must not be used more than once in the program, otherwise the edge memory bit would be overwritten. This would influence edge evaluation and the result would no longer be unequivocal.

Note

If you want to use a formal parameter of an F-FC for the edge memory bit <Operand> of the instruction, it must be declared as an input/output parameter.

Note

You cannot use the "process image", "standard DB" and "bit memory" operand areas for the edge memory bit <Operand> of the instruction.

If operand area "local data (temp)" is used for the edge memory bit <Operand> of the instruction, the local data bit used must be initialized beforehand.

Parameter

The following table shows the parameters of the instruction:

Parameter	Declaration	Data type	Description
CLK	Input	BOOL	Current RLO
<Operand>	InOut	BOOL	Edge memory bit in which the RLO of the previous query is saved.
Q	Output	BOOL	Result of edge evaluation

Example

The following example shows how the instruction works:

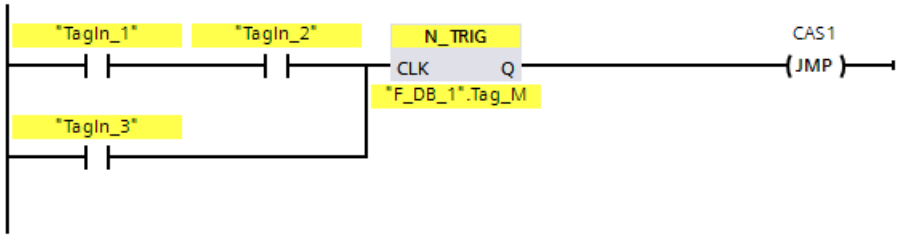

The RLO of the previous bit logic operation is saved in edge bit memory ""F_DB_1".Tag_M". If a change in the RLO signal state from "1" to "0" is detected, the program jumps to jump label CAS1.

13.2.2 FBD

13.2.2.1 AND logic operation (STEP 7 Safety V15.1)

Description

You can use the "AND logic operation" instruction to query the signal states of two or more specified operands and evaluate them according to the AND truth table.

If the signal state of all the operands is "1", then the conditions are fulfilled and the instruction returns the result "1". If the signal state of one of the operands is "0", then the conditions are not fulfilled and the instruction generates the result "0".

If the "AND logic operation" instruction is the first instruction in a logic string, it saves the result of its signal state query in the RLO bit.

Each "AND logic operation" instruction that is not the first instruction in the logic string logically combines the result of its signal state query with the value saved in the RLO bit. This logical combination is performed according to the AND truth table.

Parameters

The following table shows the parameters of the instruction:

Parameter	Declaration	Data type	Description
<Operand>	Input	BOOL	The operand indicates the bit whose signal state will be queried.

Example

The following example shows how the instruction works:

Output "TagOut" is set when the signal state of operands "TagIn_1" and "TagIn_2" is "1".

AND truth table

The following table shows the results when linking two operands by an AND logic operation:

Signal state of the first operand	Signal state of the second operand	Result of logic operation
1	1	1
0	1	0
1	0	0
0	0	0

See also

Insert binary input (STEP 7 Safety V15.1) (Page 398)

13.2.2.2 OR logic operation (STEP 7 Safety V15.1)

Description

You can use the "OR logic operation" instruction to get the signal states of two or more specified operands and evaluate them according to the OR truth table.

If the signal state of at least one of the operands is "1", then the conditions are fulfilled and the instruction returns the result "1". If the signal state of all of the operands is "0", then the conditions are not fulfilled and the instruction generates the result "0".

If the "OR logic operation" instruction is the first instruction in a logic string, it saves the result of its signal state query in the RLO bit.

Each "OR logic operation" instruction that is not the first instruction in the logic string, logically combines the result of its signal state query with the value saved in the RLO bit. This logical combination is performed according to the OR truth table.

Parameters

The following table shows the parameters of the instruction:

Parameter	Declaration	Data type	Description
<Operand>	Input	BOOL	The operand indicates the bit whose signal state will be queried.

Example

The following example shows how the instruction works:

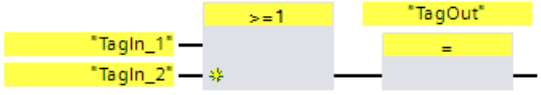

Output "TagOut" is set when the signal state of operand "TagIn_1" or "TagIn_2" is "1".

OR truth table

The following table shows the results when linking two operands by an OR logic operation:

Signal state of the first operand	Signal state of the second operand	Result of logic operation
1	0	1
0	1	1
1	1	1
0	0	0

See also

Insert binary input (STEP 7 Safety V15.1) (Page 398)

13.2.2.3 X: EXCLUSIVE OR logic operation (STEP 7 Safety V15.1)

Description

You can use the "EXCLUSIVE OR logic operation" instruction to get the result of a signal state query according to the the EXCLUSIVE OR truth table.

With an "EXCLUSIVE OR logic operation" instruction, the signal state is "1" when the signal state of one of the two specified operands is "1". When more than two operands are queried, the overall result of logic operation is "1" if an odd-numbered quantity of queried operands returns the result "1".

Parameters

The following table shows the parameters of the instruction:

Parameter	Declaration	Data type	Description
<Operand>	Input	BOOL	The operand indicates the bit whose signal state will be queried.

Example

The following example shows how the instruction works:

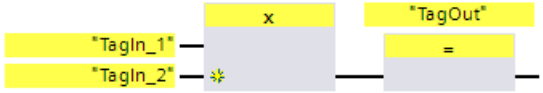

Output "TagOut" is set when the signal state of one of the two operands "TagIn_1" and "TagIn_2" is "1". When both operands have signal state "1" or "0" then output "TagOut" is reset.

EXCLUSIVE OR truth table

The following table shows the results when two operands are linked by an EXCLUSIVE OR:

Signal state of the first operand	Signal state of the second operand	Result of logic operation
1	0	1
0	1	1
1	1	0
0	0	0

The following table shows the results when three operands are linked by an EXCLUSIVE OR:

Signal state of the first operand	Signal state of the second operand	Signal state of the third operand	Result of logic operation
1	0	0	1
0	1	1	0
0	1	0	1
1	0	1	0
0	0	1	1
1	1	0	0
1	1	1	1
0	0	0	0

See also

Insert binary input (STEP 7 Safety V15.1) (Page 398)

13.2.2.4 =: Assignment (STEP 7 Safety V15.1)

Description

You can use the "Assignment" instruction to set the bit of a specified operand. If the result of logic operation (RLO) at the box input has signal state "1" or the box input for S7-1200/1500 F-CPUs is not connected, the specified operand is set to signal state "1". If the signal state at the box input is "0", the bit of the specified operand is reset to "0".

The instruction does not influence the RLO. The RLO at the box input is assigned directly to the operand located above the Assign box.

The "Assignment" instruction can be placed at any position in the logic operation sequence.

Parameters

The following table shows the parameters of the instruction:

Parameter	Declaration	Data type	Description
<Operand>	Output	BOOL	Operand to which the RLO is assigned.

Example

The following example shows how the instruction works:

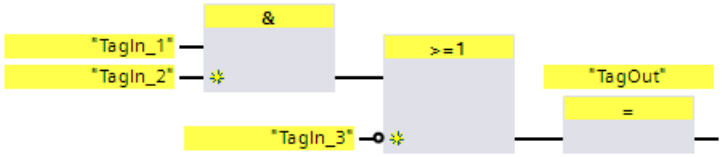

Operand "TagOut" at the output of the "Assignment" instruction is set when one of the following conditions is fulfilled:

- Inputs "TagIn_1" and "TagIn_2" have signal state "1".
- The signal state at input "TagIn_3" is "0".

13.2.2.5 R: Reset output (STEP 7 Safety V15.1)

Description

You can use the "Reset output" instruction to reset the signal state of a specified operand to "0".

If the box input has signal state "1" or the box input for S7-1200/1500 F-CPUs is not connected, the specified operand is reset to "0". If there is a result of logic operation of "0" at the box input, the signal state of the specified operand remains unchanged.

The instruction does not influence the RLO. The RLO at the box input is transferred directly to the box output.

Note

If the operand area "local data (temp)" is used for the operands of the instruction, the local data bit used must be initialized beforehand.

Note

You cannot use the "process image of the inputs", "process image of the outputs" from standard I/O and "standard DB" and "bit memory" operand areas for the operands of the instruction.

Parameter

The following table shows the parameters of the instruction:

Parameter	Declaration	Data type	Description
<Operand>	Output	BOOL	Operand that is reset with RLO = "1".

Example

The following example shows how the instruction works:

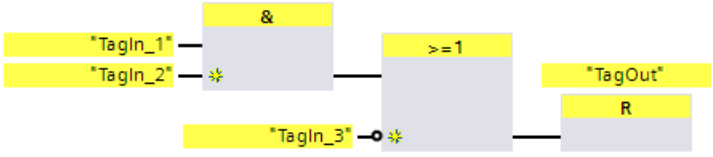

Operand "TagOut" is reset when one of the following conditions is fulfilled:

- Operands "TagIn_1" and "TagIn_2" have signal state "1".
- The signal state of operand "TagIn_3" is "0".

13.2.2.6 S: Set output (STEP 7 Safety V15.1)

Description

You can use the "Set output" instruction to set the signal state of a specified operand to "1".

If the box input has signal state "1" or the box input for S7-1200/1500 F-CPUs is not connected, the specified operand is set to "1". If there is a result of logic operation of "0" at the box input, the signal state of the specified operand remains unchanged.

The instruction does not influence the RLO. The RLO at the box input is transferred directly to the box output.

Note

The instruction is not executed if it is applied to an output of an F-I/O that is passivated (e.g., during startup of the F-system). Therefore, it is preferable to access outputs of the F-I/O using only the "Assignment" instruction.

An F-I/O output is passivated if QBAD or QBAD_O_xx = 1 or value status = 0 is set in the corresponding F-I/O DB.

Note

If the operand area "local data (temp)" is used for the operands of the instruction, the local data bit used must be initialized beforehand.

Note

You cannot use the "process image of the inputs", "process image of the outputs" from standard I/O and "standard DB" and "bit memory" operand areas for the operands of the instruction.

Parameter

The following table shows the parameters of the instruction:

Parameter	Declaration	Data type	Description
<Operand>	Output	BOOL	Operand that is set when RLO = "1".

Example

The following example shows how the instruction works:

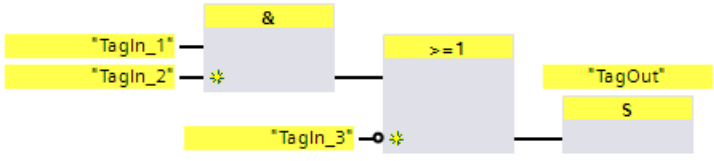

Operand "TagOut" is set when one of the following conditions is fulfilled:

- Operands "TagIn_1" and "TagIn_2" have signal state "1".
- The signal state of operand "TagIn_3" is "0".

13.2.2.7 SR: Set/reset flip-flop (STEP 7 Safety V15.1)

Description

You can use the "Set/reset flip-flop" instruction to set or reset the bit of the specified operand based on the signal state of inputs S and R1. If the signal state at input S is "1" and the signal state at input R1 is "0", the specified operand is set to "1". If the signal state at input S is "0" and the signal state at input R1 is "1", the specified operand is reset to "0".

Input R1 takes priority over input S. If the signal state is "1" at the two inputs S and R1, the signal state of the specified operand is reset to "0".

The instruction is not executed if the signal state at the two inputs S and R1 is "0". The signal state of the operand then remains unchanged.

The current signal state of the operand is transferred to output Q and can be queried there.

Note

If you want to use a formal parameter of an F-FC for the operand of the instruction, it must be declared as an input/output parameter.

Note

You cannot use the "process image", "standard DB" and "bit memory" operand areas for the operands of the instruction.

If the operand area "local data (temp)" is used for the edge bit memory of the instruction, the local data bit used must be initialized beforehand.

Parameter

The following table shows the parameters of the instruction:

Parameter	Declaration	Data type	Description
S	Input	BOOL	Enable set
R1	Input	BOOL	Enable reset
<Operand>	Output	BOOL	Operand that is set or reset.
Q	Output	BOOL	Signal state of the operand

Example

The following example shows how the instruction works:

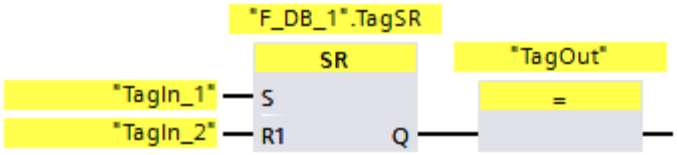

Operands ""F_DB_1".TagSR" and "TagOut" are set when the following conditions are fulfilled:

- Operand "TagIn_1" has signal state "1".
- Operand "TagIn_2" has signal state "0".

Operands ""F_DB_1".TagSR" and "TagOut" are reset when the following conditions are fulfilled:

- Operand "TagIn_1" has signal state "0" and operand "TagIn_2" has signal state "1".
- Both operands "TagIn_1" and "TagIn_2" have signal state "1".

13.2.2.8 RS: Reset/set flip-flop (STEP 7 Safety V15.1)

Description

You can use the "Reset/set flip-flop" instruction to reset or set the bit of the specified operand based on the signal state of inputs R and S1. When the signal state is "1" at input R and "0" at input S1, the specified operand is reset to "0". When the signal state is "0" at input R and "1" at input S1, the specified operand is set to "1".

Input S1 takes priority over input R. If the signal state is "1" at the two inputs R and S1, the signal state of the specified operand is set to "1".

The instruction is not executed if the signal state at the two inputs R and S1 is "0". The signal state of the operand then remains unchanged.

The current signal state of the operand is transferred to output Q and can be queried there.

Note

If you want to use a formal parameter of an F-FC for the operand of the instruction, it must be declared as an input/output parameter.

Note

You cannot use the "process image", "standard DB" and "bit memory" operand areas for the operands of the instruction.

If the operand area "local data (temp)" is used for the edge bit memory of the instruction, the local data bit used must be initialized beforehand.

Parameter

The following table shows the parameters of the instruction:

Parameter	Declaration	Data type	Description
R	Input	BOOL	Enable reset
S1	Input	BOOL	Enable set
<Operand>	Output	BOOL	Operand that is reset or set.
Q	Output	BOOL	Signal state of the operand

Example

The following example shows how the instruction works:

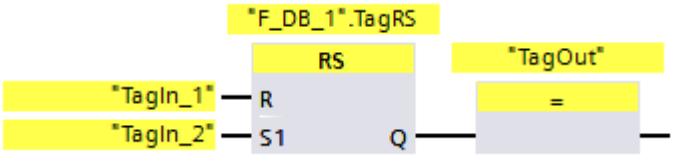

Operands ""F_DB_1".TagRS" and "TagOut" are reset when the following conditions are fulfilled:

- Operand "TagIn_1" has signal state "1".
- Operand "TagIn_2" has signal state "0".

Operands ""F_DB_1".TagRS" and "TagOut" are set when the following conditions are fulfilled:

- Operand "TagIn_1" has signal state "0" and operand "TagIn_2" has signal state "1".
- Operands "TagIn_1" and "TagIn_2" have signal state "1".

13.2.2.9 P: Scan operand for positive signal edge (STEP 7 Safety V15.1)

Description

You can use the "Scan operand for positive signal edge" instruction to determine if there is a change from "0" to "1" in the signal state of a specified operand (<Operand1>). The instruction compares the current signal state of <Operand1> with the signal state of the previous query saved in <Operand2>. If the instruction detects a change in the result of logic operation from "0" to "1", there is a positive, rising edge.

If a rising edge is detected, the output of the instruction has signal state "1". In all other cases, the signal state at the output of the instruction is "0".

Enter the operand to be queried (<Operand1>) in the operand placeholder above the instruction. Enter the edge memory bit (<Operand2>) in the operand placeholder below the instruction.

Note

The address of the edge memory bit must not be used more than once in the program, otherwise the edge memory bit would be overwritten. This would influence edge evaluation and the result would no longer be unequivocal.

Note

If you want to use a formal parameter of an F-FC for the edge memory bit <Operand2> of the instruction, it must be declared as an input/output parameter.

Note

You cannot use the "process image", "standard DB" and "bit memory" operand areas for the edge memory bit <Operand2> of the instruction.

If operand area "local data (temp)" is used for the edge memory bit <Operand2> of the instruction, the local data bit used must be initialized beforehand.

Parameters

The following table shows the parameters of the instruction:

Parameter	Declaration	Data type	Description
<Operand1>	Input	BOOL	Signal to be queried
<Operand2>	InOut	BOOL	Edge memory bit in which the signal state of the previous query is saved.

Example

The following example shows how the instruction works:

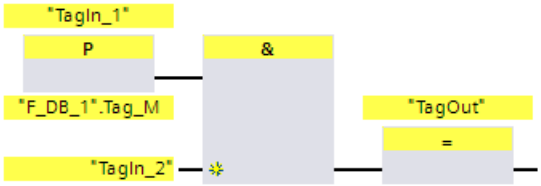

"TagOut" is set when the following conditions are fulfilled:

- There is a rising edge at input "TagIn_1".
- The signal state of operand "TagIn_2" is "1".

13.2.2.10 N: Scan operand for negative signal edge (STEP 7 Safety V15.1)

Description

You can use the "Scan operand for negative signal edge" instruction to determine if there is a change form "1" to "0" in the signal state of a specified operand. The instruction compares the current signal state of <Operand1> with the signal state of the previous query saved in <Operand2>. If the instruction detects a change in the result of logic operation from "1" to "0", there is a negative, falling edge.

If a falling edge is detected, the output of the instruction has signal state "1". In all other cases, the signal state at the output of the instruction is "0".

Enter the operand to be queried (<Operand1>) in the operand placeholder above the instruction. Enter the edge memory bit (<Operand2>) in the operand placeholder below the instruction.

Note

The address of the edge memory bit must not be used more than once in the program, otherwise the edge memory bit would be overwritten. This would influence edge evaluation and the result would no longer be unequivocal.

Note

If you want to use a formal parameter of an F-FC for the edge memory bit <Operand2> of the instruction, it must be declared as an input/output parameter.

Note

You cannot use the "process image", "standard DB" and "bit memory" operand areas for the edge memory bit <Operand2> of the instruction.

If operand area "local data (temp)" is used for the edge memory bit <Operand2> of the instruction, the local data bit used must be initialized beforehand.

Parameter

The following table shows the parameters of the instruction:

Parameter	Declaration	Data type	Description
<Operand1>	Input	BOOL	Signal to be queried
<Operand2>	InOut	BOOL	Edge memory bit in which the signal state of the previous query is saved.

Example

The following example shows how the instruction works:

Output "TagOut" is set when the following conditions are fulfilled:

- There is a falling edge at input "TagIn_1".
- The signal state of operand "TagIn_2" is "1".

13.2.2.11 P_TRIG: Scan RLO for positive signal edge (STEP 7 Safety V15.1)

Description

You can use the "Scan RLO for positive signal edge" instruction to query a change in the signal state of the result of logic operation from "0" to "1". The instruction compares the current signal state of the result of logic operation with the signal state from the previous query, which is saved in the edge memory bit (<Operand>). If the instruction detects a change in the RLO from "0" to "1", there is a positive, rising edge.

If a rising edge is detected, the output of the instruction has signal state "1". In all other cases, the signal state at the output of the instruction is "0".

Note

The address of the edge memory bit must not be used more than once in the program, otherwise the edge memory bit would be overwritten. This would influence edge evaluation and the result would no longer be unequivocal.

Note

If you want to use a formal parameter of an F-FC for the edge memory bit <Operand> of the instruction, it must be declared as an input/output parameter.

Note

You cannot use the "process image", "standard DB" and "bit memory" operand areas for the edge memory bit <Operand> of the instruction.

If operand area "local data (temp)" is used for the edge memory bit <Operand> of the instruction, the local data bit used must be initialized beforehand.

Parameter

The following table shows the parameters of the instruction:

Parameter	Declaration	Data type	Description
CLK	Input	BOOL	Current RLO
<Operand>	InOut	BOOL	Edge memory bit in which the RLO of the previous query is saved.
Q	Output	BOOL	Result of edge evaluation

Example

The following example shows how the instruction works:

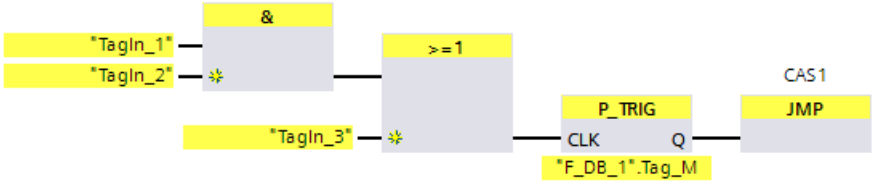

The RLO from the previous bit logic operation is saved in edge memory bit ""F_DB_1".Tag_M". If a change in the RLO signal state from "0" to "1" is detected, the program jumps to jump label CAS1.

13.2.2.12 N_TRIG: Scan RLO for negative signal edge (STEP 7 Safety V15.1)

Description

You can use the "Scan RLO for negative signal edge" instruction to query a change in the signal state of the result of logic operation from "1" to "0". The instruction compares the current signal state of the result of logic operation with the signal state from the previous query, which is saved in the edge memory bit (<Operand>). If the instruction detects a change in the RLO from "1" to "0", there is a negative, falling edge.

If a falling edge is detected, the output of the instruction has signal state "1". In all other cases, the signal state at the output of the instruction is "0".

Note

The address of the edge memory bit must not be used more than once in the program, otherwise the edge memory bit would be overwritten. This would influence edge evaluation and the result would no longer be unequivocal.

Note

If you want to use a formal parameter of an F-FC for the edge memory bit <Operand> of the instruction, it must be declared as an input/output parameter.

Note

You cannot use the "process image", "standard DB" and "bit memory" operand areas for the edge memory bit <Operand> of the instruction.

If operand area "local data (temp)" is used for the edge memory bit <Operand> of the instruction, the local data bit used must be initialized beforehand.

Parameter

The following table shows the parameters of the instruction:

Parameter	Declaration	Data type	Description
CLK	Input	BOOL	Current RLO
<Operand>	InOut	BOOL	Edge memory bit in which the RLO of the previous query is saved.
Q	Output	BOOL	Result of edge evaluation

Example

The following example shows how the instruction works:

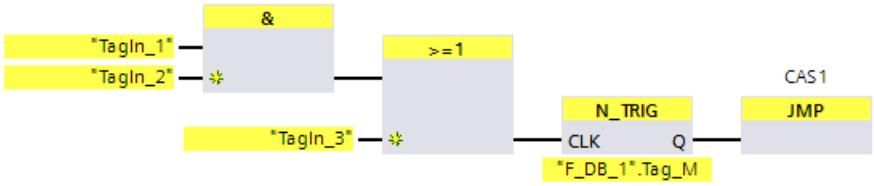

The RLO of the previous bit logic operation is saved in edge bit memory ""F_DB_1".Tag_M". If a change in the RLO signal state from "1" to "0" is detected, the program jumps to jump label CAS1.

13.3 Safety functions

13.3.1 ESTOP1: Emergency STOP/OFF up to stop category 1 (STEP 7 Safety V15.1)

Description

This instruction implements an emergency STOP/emergency OFF shutdown with acknowledgment for Stop Categories 0 and 1.

Enable signal Q is reset to 0, as soon as input E_STOP takes a signal state of 0 (Stop category 0). Enable signal Q_DELAY is reset to 0 after the time delay set at input TIME_DEL (Stop Category 1).

Enable signal Q is reset to 1 not before input E_STOP takes a signal state of 1 and an acknowledgment occurs. The acknowledgment for the enable takes place according to the parameter assignment at input ACK_NEC:

- If ACK_NEC = 0, the acknowledgment is automatic.
- If ACK_NEC = 1, you must use a rising edge at input ACK for acknowledging the enable.

Output ACK_REQ is used to signal that a user acknowledgment is required at input ACK for the acknowledgment. The instruction sets output ACK_REQ to 1, as soon as input E_STOP = 1.

Following an acknowledgment, the instruction resets ACK_REQ to 0.

Every call of the "Emergency STOP/Emergency OFF up to Stop Category 1" instruction must be assigned a data area in which the instruction data are stored. The "Call options" dialog is automatically opened when the instruction is inserted in the program for this reason. There you can create a data block (single instance) (e.g., ESTOP1_DB_1) or a multi-instance (e.g., ESTOP1_Instance_1) for the "Emergency STOP/Emergency OFF up to Stop Category 1" instruction. Once it is created, you can find the new data block in the project tree in the "STEP 7 Safety" folder under "Program blocks > System blocks" or the multi-instance as a local tag in the "Static" section of the block interface. For more information, refer to the help on *STEP 7*.

Enable input "EN" and enable output "ENO" cannot be connected. The instruction is therefore always executed (regardless of the signal state at enable input "EN").

WARNING

The ACK_NEC tag must not be assigned a value of 0 unless an automatic restart of the affected process is otherwise excluded. *(S033)*

WARNING

When using an instruction with time processing, take the following timing imprecision sources into account when determining your response times:

- Known timing imprecision (based on standard systems) resulting from cyclic processing
- Timing imprecision resulting from the update time of the time base used in the instruction (see figure in section "Timing imprecision resulting from the update time of the time base used in the instruction")
- Tolerance of internal time monitoring in the F-CPU
  - For time values up to 200 ms, a maximum of 4 ms
  - For time values greater than or equal to 200 ms, a maximum of 2% of the (assigned) time value

You must choose the interval between two call times of an instruction with time processing in such a way that the required response times are achieved, taking into account the possible timing imprecision. *(S034)*

Note: In case of two channels according to category 3,4 of ISO 13849-1:2015 or EN ISO 13849-1:2015, the discrepancy monitoring of the two NC contacts of the EMERGENCY STOP/EMERGENCY OFF must already take place in the F-I/O. The F-I/O has to be configured accordingly (sensor evaluation: two-channel, equivalent), and the result of the evaluation interconnected with the E_STOP input. In order to keep the discrepancy time from influencing the response time, you must assign "Supply value 0" for the behavior of discrepancy during configuration.

Parameters

The following table shows the parameters of the instruction:

Parameter	Declaration	Data type	Description
E_STOP	Input	BOOL	EMERGENCY STOP/EMERGENCY OFF
ACK_NEC	Input	BOOL	1=Acknowledgment necessary
ACK	Input	BOOL	1=Acknowledgment
TIME_DEL	Input	TIME	Time delay
Q	Output	BOOL	1=Enable
Q_DELAY	Output	BOOL	Enable is OFF delayed
ACK_REQ	Output	BOOL	1=Acknowledgment necessary
DIAG	Output	BYTE	Non-fail safe service information

Instruction versions

A number of versions are available for this instruction:

Version	S7-300/400	S7-1200	S7-1500	Function
1.0	x	—	—	Version 1.0 requires that the F_TOF block with the number FB 186 is available in the project tree in the "Program blocks/System blocks/STEP 7 Safety" folder. When projects that were created with *S7 Distributed Safety V5.4 SP5* are migrated, version 1.0 of the instruction is used automatically. If you want to compile a migrated safety program with *STEP 7 Safety Advanced* for the first time, we recommend that you first update to the latest available version of the instruction. You will then avoid number conflicts.
1.1	x	—	—	These versions are functionally identical to version V1.0, but do not require the F_TOF block to have a particular number.
1.2	x	—	o	
1.3	x	o	o	
1.4	x	o	o	
1.5	x	x	x	
1.6	x	x	x	The reaction of the delay time TIME_DEL for F-CPUs S7-1200/1500 was adapted to the reaction of F-CPUs S7-300/400: If the input ESTOP (0 -> 1 (including acknowledgment) -> 0) is changed while the delay time is running, the delay time is restarted.

o This version is no longer supported.

When a new F-CPU is created with *STEP 7 Safety*, the latest available version for the F-CPU created is automatically preset.

For more information on the use of instruction versions, refer to the help on *STEP 7* under "Using instruction versions".

Startup characteristics

After an F-system startup, when ACK_NEC = 1, you must acknowledge the instruction using a rising edge at input ACK.

Output DIAG

The DIAG output provides non-fail-safe information on errors for service purposes. You can read out this information by means of operator control and monitoring systems or, if applicable, you can evaluate it in your standard user program. DIAG bits 4 and 5 are saved until you acknowledge at the ACK input.

Structure of DIAG

Bit no.	Assignment	Possible error causes	Remedies
Bit 0	Incorrect TIM_DEL setting	Time delay setting < 0	Set time delay > 0
Bit 1	Reserved	—	—
Bit 2	Reserved	—	—
Bit 3	Reserved	—	—
Bit 4	Acknowledgment not possible because emergency STOP/emergency OFF is still active	Emergency STOP/Emergency OFF pushbutton is locked	Release Emergency STOP/Emergency OFF pushbutton
		F-I/O fault, channel fault, or communication error, or passivation by means of PASS_ON of F-I/O of emergency STOP/emergency OFF pushbutton	For a solution, see the section "Structure of DIAG", bits 0 to 6 in DIAG (Page 172)
		Emergency STOP/Emergency OFF pushbutton is defective	Check emergency STOP/emergency OFF pushbutton
		Wiring fault	Check wiring of the emergency STOP/emergency OFF pushbutton
Bit 5	If enable is missing: input ACK has a permanent signal state of 1	Acknowledgment button defective	Check acknowledgment button
		Wiring fault	Check wiring of acknowledgment button
Bit 6	Acknowledgment required (= state of ACK_REQ)	—	—
Bit 7	State of output Q	—	—

Timing imprecision resulting from the update time of the time base used in the instruction:

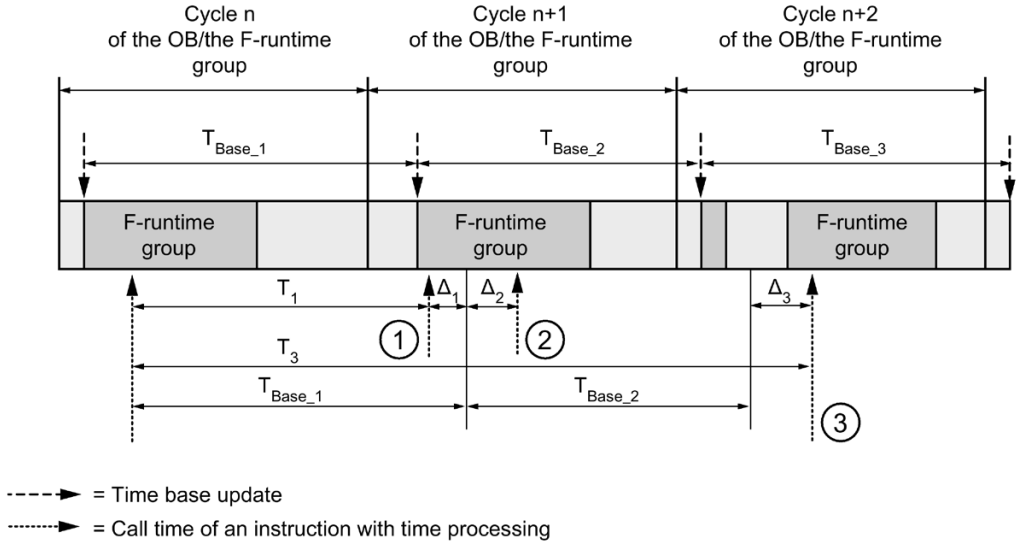

① For the first call in cycle n+1, the call time of the instruction relative to the start of the F-runtime group is earlier than that in cycle n by the amount of Δ_1, e.g. because parts of the safety program of the F-runtime group before the call time of the instruction in cycle n+1 are skipped. For the time update, the instruction takes account of time T_{Base_1} instead of the time T_1 that has actually elapsed in cycle n since the call.

② The instruction is called a second time in cycle n+1. This does not involve another time update (by Δ_2).

③ For the call in cycle n+2, the call time of the instruction relative to the start of the F-runtime group is later than that in cycle n by the amount of Δ_3, e.g. because the F-runtime group was interrupted by a higher priority interrupt before the call time of the instruction in cycle n+2. The instruction took into account time $T_{Base_1} + T_{Base_2}$ instead of the time T_3 that has actually elapsed in cycle n since the call. This would also be the case if no call occurred in cycle n+1.

Example

The following example shows how the instruction works:

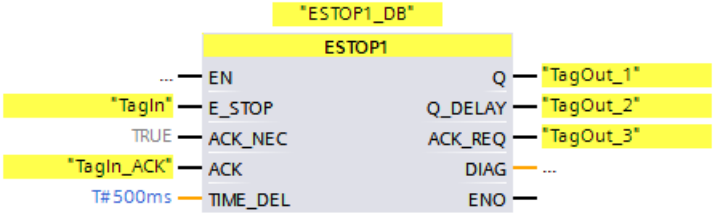

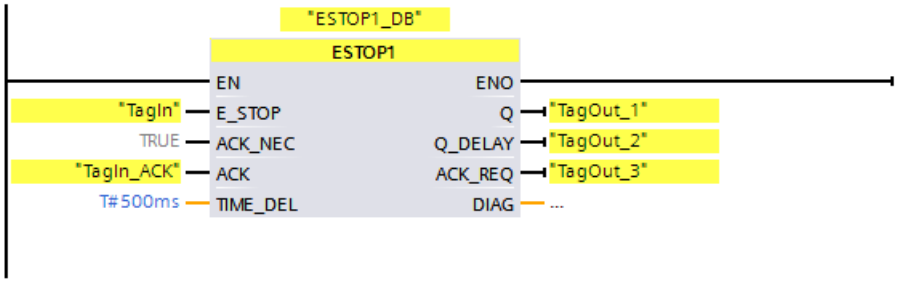

13.3.2 TWO_HAND: Two-hand monitoring (STEP 7 Safety Advanced V15.1) (S7-300, S7-400)

Description

This instruction implements two-hand monitoring.

Note

This instruction is only available for S7-300 and S7-400 F-CPUs. For S7-1200/1500 F-CPUs, you use the instruction "Two-hand monitoring with enable". The application "Two-hand monitoring with enable" replaces the instruction "Two-hand monitoring" with compatible functions.

If pushbuttons IN1 and IN2 are activated within the permitted discrepancy time DISCTIME ≤ 500 ms (IN1/IN2 = 1) (synchronous activation), output signal Q is set to 1. If the time difference between activation of pushbutton IN1 and pushbutton IN2 is greater than DISCTIME, then the pushbuttons must be released and reactivated.

Q is reset to 0 as soon as one of the pushbuttons is released (IN1/IN2 = 0). Enable signal Q can be reset to 1 only if the other pushbutton has been released, and if both pushbuttons are then reactivated within the discrepancy time. Enable signal Q can never be set to 1 if the discrepancy time is set to values less than 0 or greater than 500 ms.

Every call of the "Two-hand monitoring" instruction must be assigned a data area in which the instruction data are stored. The "Call options" dialog is automatically opened when the instruction is inserted in the program for this reason. There you can create a data block (single instance) (e.g., TWO_HAND_DB_1) or a multi-instance (e.g., TWO_HAND_Instance_1) for the "Two-hand monitoring" instruction. Once it is created, you can find the new data block in the project tree in the "STEP 7 Safety" folder under "Program blocks > System blocks" or the multi-instance as a local tag in the "Static" section of the block interface. For more information, refer to the help on *STEP 7*.

Enable input "EN" and enable output "ENO" cannot be connected. The instruction is therefore always executed (regardless of the signal state at enable input "EN").

The instruction supports the requirements in accordance with EN 574:1996 + A1:2008.

Note: Only one signal per pushbutton can be evaluated in the instruction. Discrepancy monitoring of the NC and NO contacts of pushbuttons IN1 and IN2 is performed directly during suitable configuration (sensor evaluation: 1oo2 evaluation, non-equivalent) directly through the F-I/O with inputs. The normally open contact must be wired in such a way that it supplies the useful signal (see manual for the F-I/O you are using). In order to keep the discrepancy time from influencing the response time, you must assign "Supply value 0" for the behavior of discrepancy during configuration. If a discrepancy is detected, a fail-safe value of 0 is entered in the process image of the inputs (PII) for the pushbutton and QBAD or QBAD_I_xx = 1 is set in the relevant F-I/O DB. (See also F-I/O access (Page 157))

WARNING

When using an instruction with time processing, take the following timing imprecision sources into account when determining your response times:

- Known timing imprecision (based on standard systems) resulting from cyclic processing
- Timing imprecision resulting from the update time of the time base used in the instruction (see figure in section "Timing imprecision resulting from the update time of the time base used in the instruction")
- Tolerance of internal time monitoring in the F-CPU
  - For time values up to 200 ms, a maximum of 4 ms
  - For time values greater than or equal to 200 ms, a maximum of 2% of the (assigned) time value

You must choose the interval between two call times of an instruction with time processing in such a way that the required response times are achieved, taking into account the possible timing imprecision. *(S034)*

Parameters

The following table shows the parameters of the instruction:

Parameter	Declaration	Data type	Description
IN1	Input	BOOL	Pushbutton 1
IN2	Input	BOOL	Pushbutton 2
DISCTIME	Input	TIME	Discrepancy time (0 to 500 ms)
Q	Output	BOOL	1=Enable

Timing imprecision resulting from the update time of the time base used in the instruction:

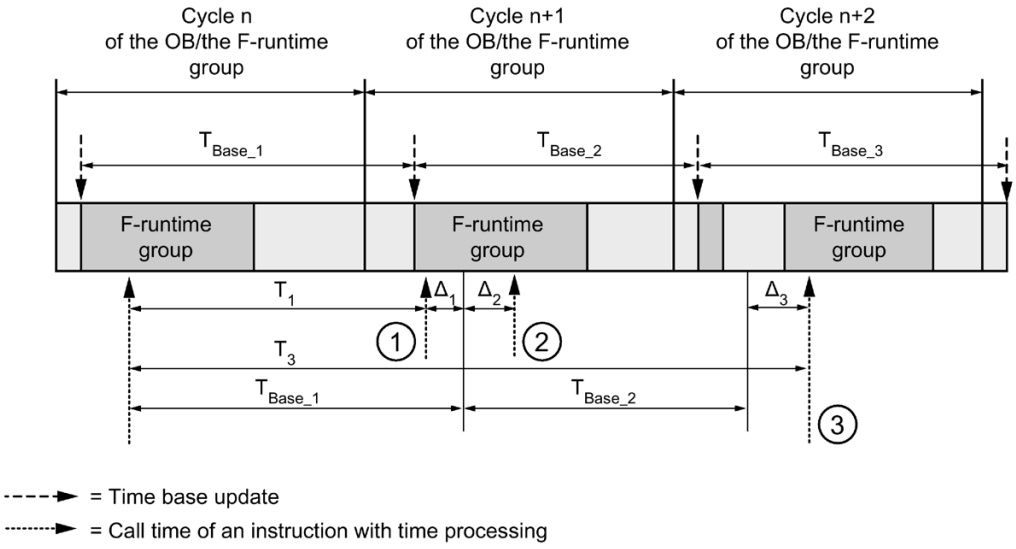

① For the first call in cycle n+1, the call time of the instruction relative to the start of the F-runtime group is earlier than that in cycle n by the amount of Δ_1, e.g. because parts of the safety program of the F-runtime group before the call time of the instruction in cycle n+1 are skipped. For the time update, the instruction takes account of time T_{Base_1} instead of the time T_1 that has actually elapsed in cycle n since the call.

② The instruction is called a second time in cycle n+1. This does not involve another time update (by Δ_2).

③ For the call in cycle n+2, the call time of the instruction relative to the start of the F-runtime group is later than that in cycle n by the amount of Δ_3, e.g. because the F-runtime group was interrupted by a higher priority interrupt before the call time of the instruction in cycle n+2. The instruction took into account time $T_{Base_1} + T_{Base_2}$ instead of the time T_3 that has actually elapsed in cycle n since the call. This would also be the case if no call occurred in cycle n+1.

Example

The following example shows how the instruction works:

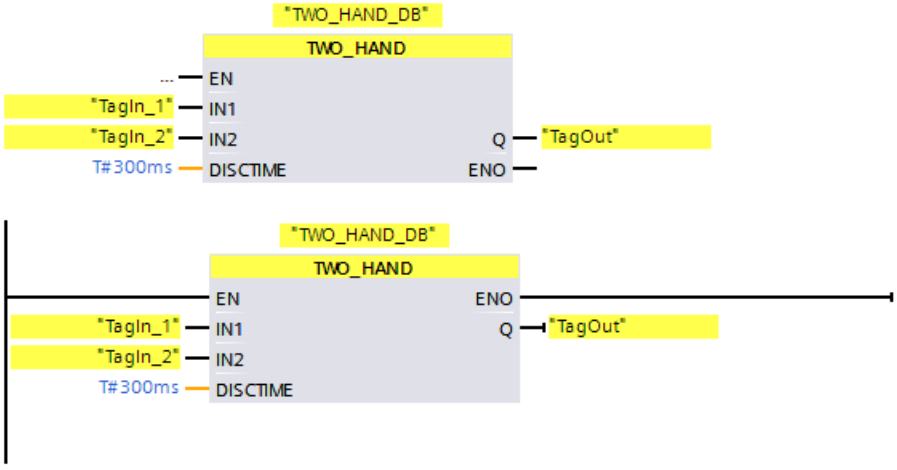

13.3.3 TWO_H_EN: Two-hand monitoring with enable (STEP 7 Safety V15.1)

Description

This instruction implements two-hand monitoring with enable.

If pushbuttons IN1 and IN2 are activated within the permitted discrepancy time DISCTIME ≤ 500 ms (IN1/IN2 = 1) (synchronous activation), output signal Q is set to 1 when existing ENABLE = 1. If the time difference between activation of pushbutton IN1 and pushbutton IN2 is greater than DISCTIME, then the pushbuttons must be released and reactivated.

Q is reset to 0 as soon as one of the pushbuttons is released (IN1/IN 2 = 0) or ENABLE = 0. Enable signal Q can be reset to 1 only if the other pushbutton has been released, and if both pushbuttons are then reactivated within the discrepancy time when existing ENABLE = 1.

Every call of the "Two-hand monitoring with enable" instruction must be assigned a data area in which the instruction data are stored. The "Call options" dialog is automatically opened when the instruction is inserted in the program for this reason. There you can create a data block (single instance) (e.g., TWO_H_EN_DB_1) or a multi-instance (e.g., TWO_H_EN_Instance_1) for the "Two-hand monitoring with enable" instruction. Once it is created, you can find the new data block in the project tree in the "STEP 7 Safety" folder under "Program blocks > System blocks" or the multi-instance as a local tag in the "Static" section of the block interface. For more information, refer to the help on *STEP 7*.

Enable input "EN" and enable output "ENO" cannot be connected. The instruction is therefore always executed (regardless of the signal state at enable input "EN").

The instruction supports the requirements in accordance with EN 574:1996 + A1:2008.

Note: Only one signal per pushbutton can be evaluated in the instruction. Discrepancy monitoring of the NC and NO contacts of pushbuttons IN1 and IN2 is performed directly during suitable configuration (sensor evaluation: 1oo2 evaluation, non-equivalent) directly through the F-I/O with inputs. The normally open contact must be wired in such a way that it supplies the useful signal (see manual for the F-I/O you are using). In order to keep the discrepancy time from influencing the response time, during the configuration of discrepancy behavior, you must configure "Supply value 0".

If a discrepancy is detected, a fail-safe value of 0 is entered in the process image of the inputs (PII) for the pushbutton and QBAD or QBAD_I_xx = 1 or respectively value status = 0 is set in the relevant F-I/O DB.

WARNING

When using an instruction with time processing, take the following timing imprecision sources into account when determining your response times:

- Known timing imprecision (based on standard systems) resulting from cyclic processing
- Timing imprecision resulting from the update time of the time base used in the instruction (see figure in section "Timing imprecision resulting from the update time of the time base used in the instruction")
- Tolerance of internal time monitoring in the F-CPU
  - For time values up to 200 ms, a maximum of 4 ms
  - For time values greater than or equal to 200 ms, a maximum of 2% of the (assigned) time value

You must choose the interval between two call times of an instruction with time processing in such a way that the required response times are achieved, taking into account the possible timing imprecision. *(S034)*

Parameters

The following table shows the parameters of the instruction:

Parameter	Declaration	Data type	Description
IN1	Input	BOOL	Pushbutton 1
IN2	Input	BOOL	Pushbutton 2
ENABLE	Input	BOOL	Enable input
DISCTIME	Input	TIME	Discrepancy time (0 to 500 ms)
Q	Output	BOOL	1=Enable
DIAG	Output	BYTE	Non-fail safe service information

Instruction versions

A number of versions are available for this instruction:

Version	S7-300/400	S7-1200	S7-1500	Function
1.0	x	—	—	When projects that were created with *S7 Distributed Safety V5.4 SP5* are migrated, version 1.0 of the instruction is used automatically. If you want to compile a migrated safety program with *STEP 7 Safety Advanced* for the first time, we recommend that you first update to the latest available version of the instruction.
1.1	x	—	o	These versions have identical functions to version V1.0.
1.2	x	o	o	
1.3	x	x	x	

o This version is no longer supported.

When a new F-CPU is created with *STEP 7 Safety*, the latest available version for the F-CPU created is automatically preset.

For more information on the use of instruction versions, refer to the help on *STEP 7* under "Using instruction versions".

Output DIAG

The DIAG output provides non-fail-safe information on errors for service purposes. You can read out this information by means of operator control and monitoring systems or, if applicable, you can evaluate it in your standard user program. DIAG bits 0 to 5 are saved until the cause of the error has been eliminated.

Structure of DIAG

Bit no.	Assignment	Possible error causes	Remedies
Bit 0	Incorrect discrepancy time DISCTIME setting	Discrepancy time setting is <0 or > 500 ms	Set discrepancy time in range of 0 to 500 ms
Bit 1	Discrepancy time elapsed	Discrepancy time setting is too low	If necessary, set a higher discrepancy time
		Pushbuttons were not activated within the discrepancy time	Release pushbuttons and activate them within the discrepancy time
		Wiring fault	Check wiring of pushbuttons
		Pushbuttons defective	Check pushbuttons
		Pushbuttons are wired to different F-I/O, and F-I/O fault, channel fault, or communication error, or passivation by means of PASS_ON on an F-I/O	For a solution, see the section "Structure of DIAG", bits 0 to 6 in DIAG (Page 172)
Bit 2	Reserved	—	—
Bit 3	Reserved	—	—
Bit 4	Incorrect activation sequence	One pushbutton was not released	Release pushbuttons and activate them within the discrepancy time
		Pushbuttons defective	Check pushbuttons
Bit 5	ENABLE does not exist	ENABLE = 0	Set ENABLE = 1, release pushbutton and activate it within the discrepancy time
Bit 6	Reserved	—	—
Bit 7	State of output Q	—	—

Timing imprecision resulting from the update time of the time base used in the instruction:

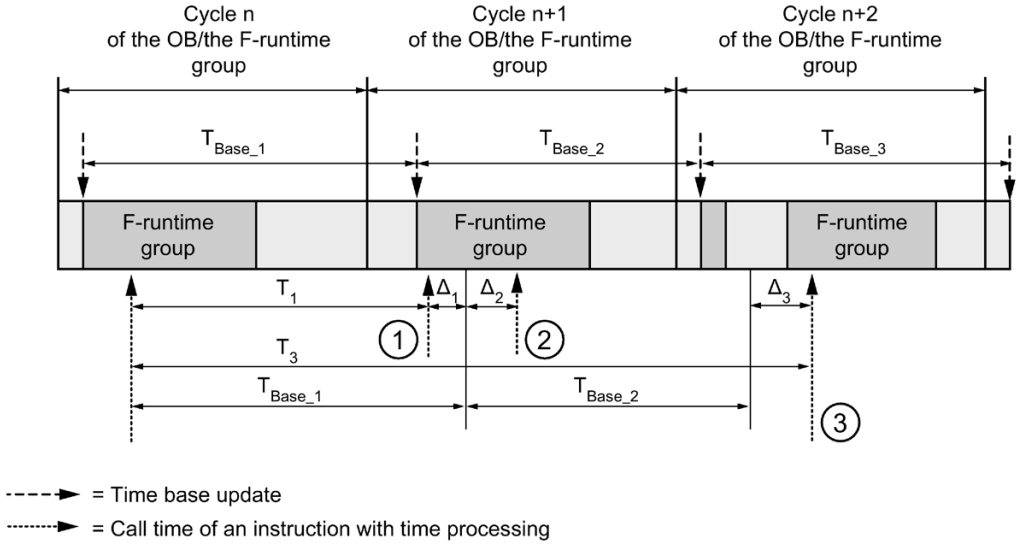

① For the first call in cycle n+1, the call time of the instruction relative to the start of the F-runtime group is earlier than that in cycle n by the amount of Δ_1, e.g. because parts of the safety program of the F-runtime group before the call time of the instruction in cycle n+1 are skipped. For the time update, the instruction takes account of time T_{Base_1} instead of the time T_1 that has actually elapsed in cycle n since the call.

② The instruction is called a second time in cycle n+1. This does not involve another time update (by Δ_2).

③ For the call in cycle n+2, the call time of the instruction relative to the start of the F-runtime group is later than that in cycle n by the amount of Δ_3, e.g. because the F-runtime group was interrupted by a higher priority interrupt before the call time of the instruction in cycle n+2. The instruction took into account time $T_{Base_1} + T_{Base_2}$ instead of the time T_3 that has actually elapsed in cycle n since the call. This would also be the case if no call occurred in cycle n+1.

Example

The following example shows how the instruction works:

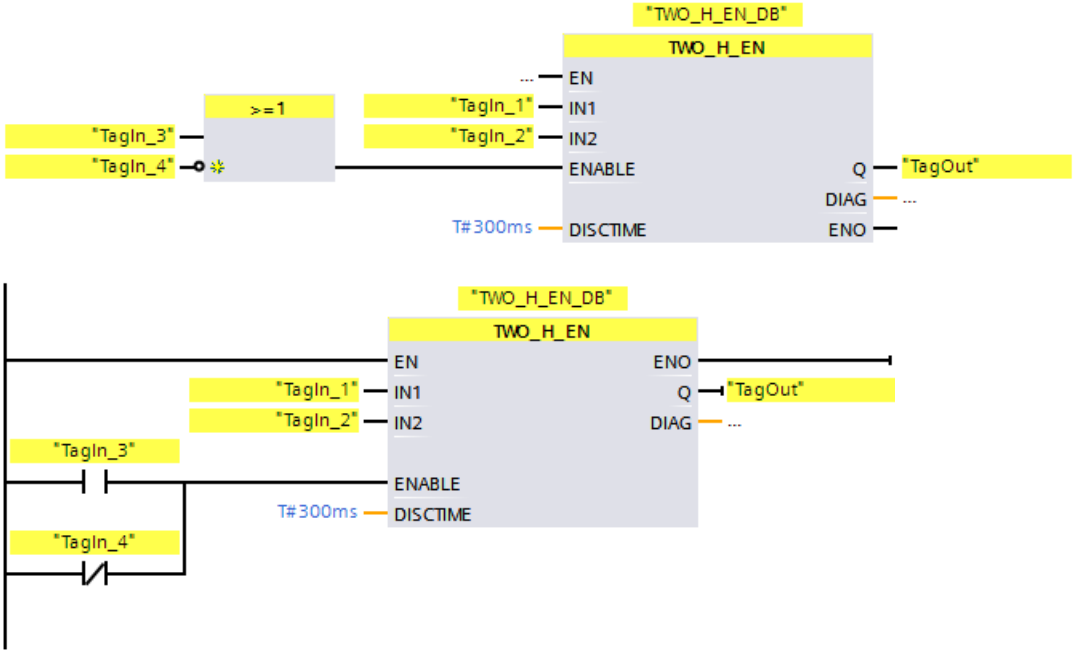

13.3.4 MUTING: Muting (STEP 7 Safety Advanced V15.1) (S7-300, S7-400)

Description

This instruction performs parallel muting with two or four muting sensors.

Note

This instruction is only available for S7-300 and S7-400 F-CPUs. For S7-1200/1500 F-CPUs, you use the instruction "Parallel muting (Page 456)". The instruction "Parallel muting" replaces the instruction "Muting" with compatible functions.

Muting is a defined suppression of the protective function of light curtains. Light curtain muting can be used to introduce goods or objects into the danger area monitored by the light curtain without causing the machine to stop.

To utilize the muting function, at least two independently wired muting sensors must be present. The use of two or four muting sensors and correct integration into the production sequence must ensure that no persons enter the danger area while the light curtain is muted.

Every call of the "Muting" instruction must be assigned a data area in which the instruction data are stored. The "Call options" dialog is automatically opened when the instruction is inserted in the program for this reason. There you can create a data block (single instance) (e.g., MUTING_DB_1) or a multi-instance (e.g., MUTING_Instance_1) for the "Muting" instruction. Once it is created, you can find the new data block in the project tree in the "STEP 7 Safety" folder under "Program blocks > System blocks" or the multi-instance as a local tag in the "Static" section of the block interface. For more information, refer to the help on *STEP 7*.

Enable input "EN" and enable output "ENO" cannot be connected. The instruction is therefore always executed (regardless of the signal state at enable input "EN").

WARNING

When using an instruction with time processing, take the following timing imprecision sources into account when determining your response times:

- Known timing imprecision (based on standard systems) resulting from cyclic processing
- Timing imprecision resulting from the update time of the time base used in the instruction (see figure in section "Timing imprecision resulting from the update time of the time base used in the instruction")
- Tolerance of internal time monitoring in the F-CPU
  - For time values up to 200 ms, a maximum of 4 ms
  - For time values greater than or equal to 200 ms, a maximum of 2% of the (assigned) time value

You must choose the interval between two call times of an instruction with time processing in such a way that the required response times are achieved, taking into account the possible timing imprecision. *(S034)*

Parameter

The following table shows the parameters of the instruction:

Parameter	Declaration	Data type	Description
MS_11	Input	BOOL	Muting sensor 1 of sensor pair 1
MS_12	Input	BOOL	Muting sensor 2 of sensor pair 1
MS_21	Input	BOOL	Muting sensor 1 of sensor pair 2
MS_22	Input	BOOL	Muting sensor 2 of sensor pair 2
STOP	Input	BOOL	1=Conveyor system stopped
FREE	Input	BOOL	1=Light curtain uninterrupted
QBAD_MUT	Input	BOOL	QBAD signal of the F-I/O or QBAD_O_xx signal of the muting lamp channel
DISCTIM1	Input	TIME	Discrepancy time of sensor pair 1 (0 to 3 s)
DISCTIM2	Input	TIME	Discrepancy time of sensor pair 2 (0 to 3 s)
TIME_MAX	Input	TIME	Maximum muting time (0 to 10 min)
ACK	Input	BOOL	Acknowledgment of restart inhibit
Q	Output	BOOL	1= Enable, not off
MUTING	Output	BOOL	Display of muting is active
ACK_REQ	Output	BOOL	Acknowledgment necessary
FAULT	Output	BOOL	Group error
DIAG	Output	BYTE	Non-fail safe service information

Schematic sequence of error-free muting procedure with 4 muting sensors (MS_11, MS_12, MS_21, MS_22)

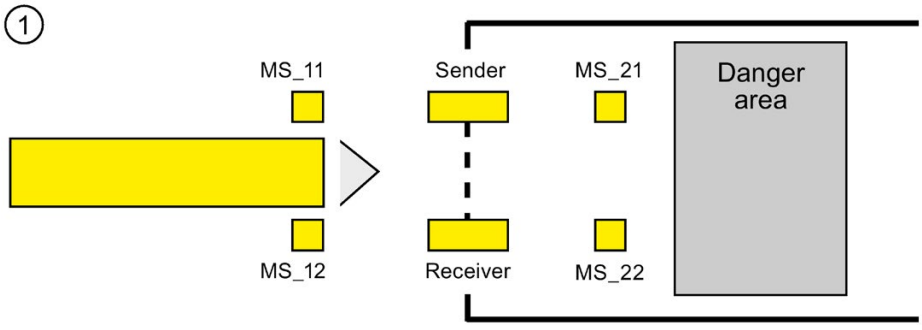

- If both muting sensors MS_11 and MS_12 are activated by the product within DISCTIM1 (apply signal state = 1), the instruction starts the MUTING function. Enable signal Q remains 1, even when input FREE = 0 (light curtain interrupted by product). The MUTING output for setting the muting lamp switches to 1.

Note

The muting lamp can be monitored using the QBAD_MUT input. To do this, you must wire the muting lamp to an output with wire break monitoring of an F-I/O and supply the QBAD_MUT input with the QBAD signal of the associated F-I/O or the QBAD_O_xx signal of the associated channel. If QBAD_MUT = 1, muting is terminated by the instruction. If monitoring of the muting lamp is not necessary, you do not have to supply input QBAD_MUT.

F-I/O that can promptly detect a wire break after activation of the muting operation must be used (*see manual for specific F-I/O*).

②

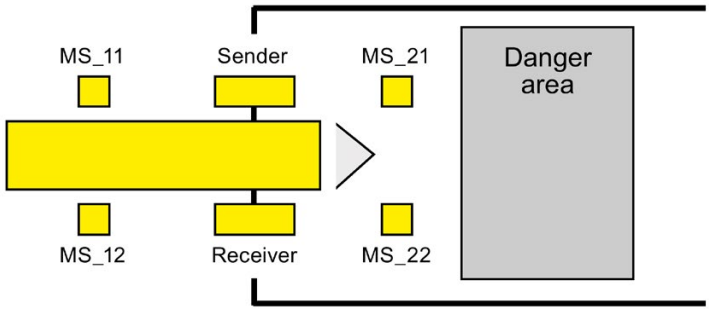

- As long as both muting sensors MS_11 and MS_12 continue to be activated, the MUTING function of the instruction causes Q to remain 1 and MUTING to remain 1 (so that the product can pass through the light curtain without causing the machine to stop).

③

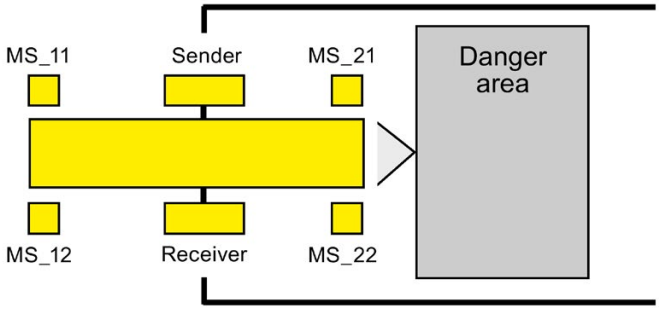

- The two muting sensors MS_21 and MS_22 must be activated (within DISCTIM2) before muting sensors MS_11 and MS_12 are switched to inactive (apply signal state 0). In this way, the instruction retains the MUTING function. (Q = 1, MUTING = 1).

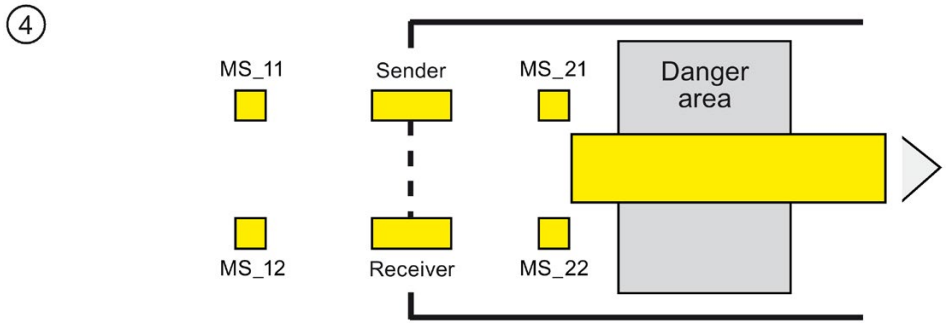

- Only if one of the two muting sensors MS_21 and MS_22 is switched to inactive (product enables sensors) is the MUTING function terminated (Q = 1, MUTING = 0). The maximum activation time for the MUTING function is the time set at input TIME_MAX.

Note

The MUTING function is also started if the product passes the light curtain in the reverse direction and the muting sensors are thus activated by the product in reverse order.

Timing diagrams for error-free muting procedure with 4 muting sensors

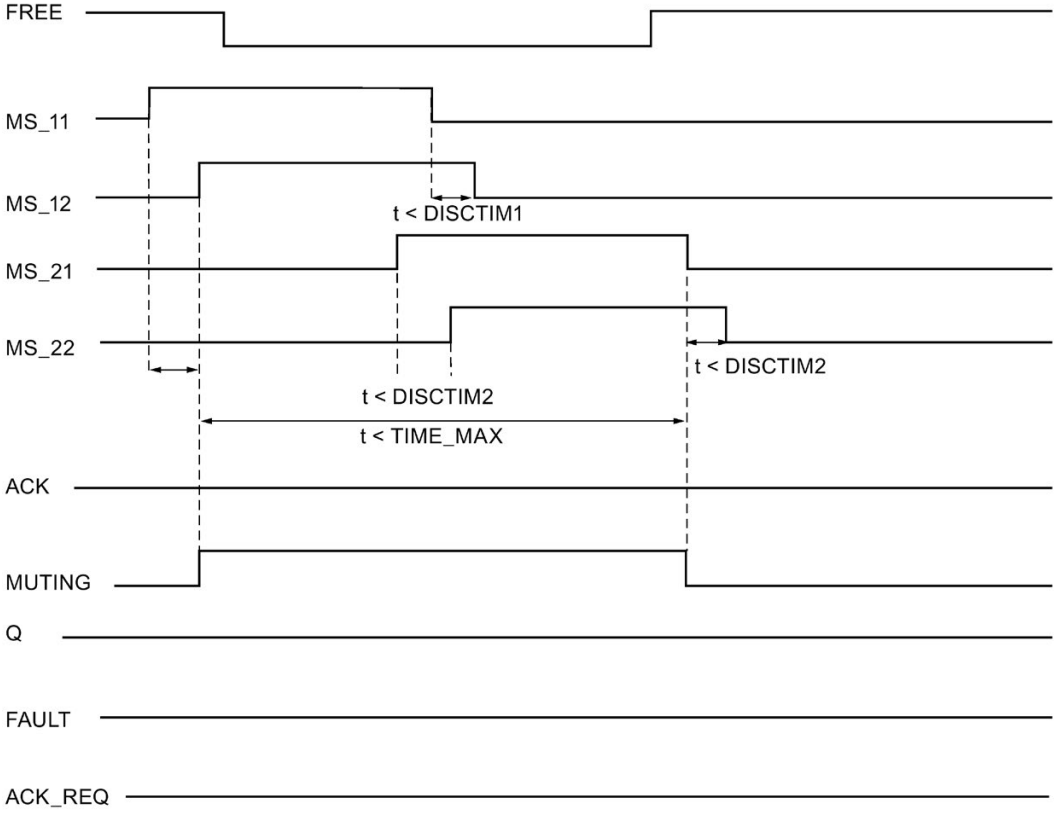

Schematic sequence of muting procedure with reflection light barriers

If reflection light barriers are used as muting sensors, they are generally arranged diagonally.

In general, this arrangement of reflection light barriers as muting sensors requires only two light barriers, and only MS_11 and MS_12 are interconnected.

The sequence is similar to that of the muting procedure with 4 muting sensors. Step 3 is omitted. In step 4, replace MS_21 and MS_22 with MS_11 and MS_12, respectively.

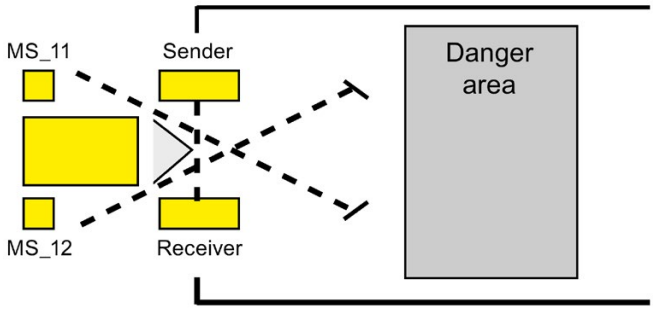

Restart inhibit upon interruption of light curtain (if MUTING is not active), when errors occur, and during F-system startup

Enable signal Q cannot be set to 1 or becomes 0, if:

- Light curtain is interrupted (e.g., by a person or material transport) while the MUTING function is not active
- The muting lamp monitoring function responds at input QBAD_MUT
- Sensor pair 1 (MS_11 and MS_12) or sensor pair 2 (MS_21 and MS_22) is not activated or deactivated during discrepancy time DISCTIM1 or DISCTIM2, respectively
- The MUTING function is active longer than the maximum muting time TIME_MAX
- Discrepancy times DISCTIM1 and DISCTIM2 have been set to values < 0 or > 3 s
- Maximum muting time TIME_MAX has been set to a value< 0 or > 10 min

In the identified cases, output FAULT (group error) is set to 1 (restart inhibit). If the MUTING function is started, it will be terminated and the Muting output becomes 0.

WARNING

When a valid combination of muting sensors is immediately detected at startup of the F-system (for example, because the muting sensors are interconnected to inputs of a standard I/O that immediately provide process values during the F-system startup), the MUTING function is immediately started and the MUTING output and enable signal Q are set to 1. The FAULT output (group error) is not set to 1 (no restart inhibit!). *(S035)*

Acknowledgment of restart inhibit

Enable signal Q becomes 1 again, when:

- The light curtain is no longer interrupted
- If present, errors are eliminated (see output DIAG)

  and
- A user acknowledgment with positive edge occurs at input ACK (see also Implementation of user acknowledgment (Page 187)).

The FAULT output is set to 0. Output ACK_REQ = 1 signals that user acknowledgment at input ACK is required to eliminate the restart inhibit. The instruction sets ACK-REQ = 1 as soon as the light curtain is no longer interrupted or errors have been eliminated. Once acknowledgment has occurred, the instruction resets ACK_REQ to 0.

Note

Following discrepancy errors and once the maximum muting time has been exceeded, ACK_REQ is immediately set to 1. As soon as a user acknowledgment has taken place at input ACK, discrepancy times DISCTIM1 and DISCTIM2 and maximum muting time TIME_MAX are reset.

Timing diagrams for discrepancy errors at sensor pair 1 or interruption of the light curtain (if MUTING is not active)

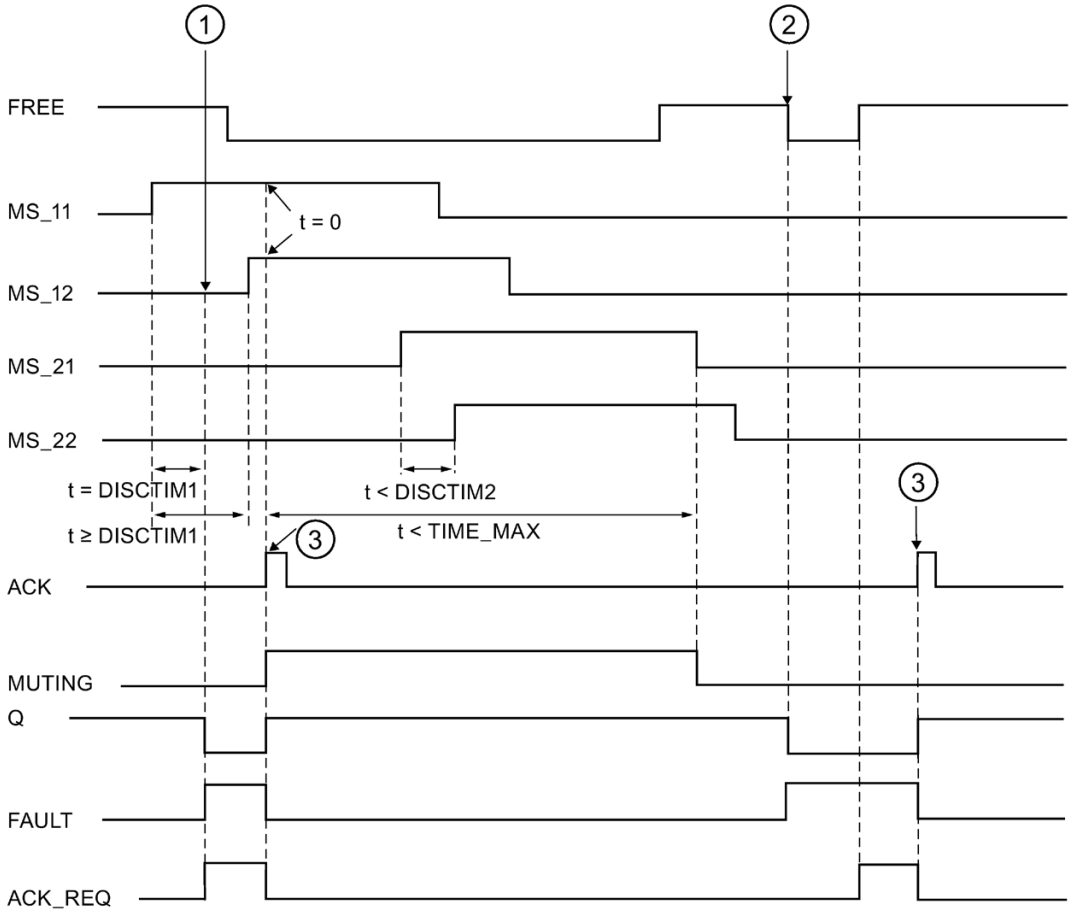

① Sensor pair 1 (MS_11 and MS_12) is not activated within discrepancy time DISCTIM1.

② The light curtain is interrupted even though the MUTING function is not active.

③ Acknowledgment

Behavior with stopped conveyor equipment

If, while the conveyor equipment has stopped, the monitoring for one of the following reasons is to be deactivated:

- To comply with discrepancy time DISCTIM1 or DISCTIM2
- To comply with maximum muting time TIME_MAX

you must supply input STOP with a "1" signal for as long as the conveyor equipment is stopped. As soon as the conveyor equipment is running again (STOP = 0), discrepancy times DISCTIM1 and DISCTIM2 and maximum muting time TIME_MAX are reset.

WARNING

When STOP = 1, the discrepancy monitoring is shut down. During this time, if inputs MSx1/MSx2 of a sensor pair both take a signal state of 1 due to an undetected error, e.g., because both muting sensors fail to 1, the error is not detected and the MUTING function can be started unintentionally. *(S036)*

Output DIAG

The DIAG output provides non-fail-safe information on errors for service purposes. You can read out this information by means of operator control and monitoring systems or, if applicable, you can evaluate it in your standard user program. DIAG bits are saved until acknowledgment at input ACK.

Structure of DIAG

Bit no.	Assignment	Possible error causes	Remedies
Bit 0	Discrepancy error or incorrect discrepancy time DISCTIM 1 setting for sensor pair 1	Malfunction in production sequence	Malfunction in production sequence eliminated
		Sensor defective	Check sensors
		Wiring fault	Check wiring of sensors
		Sensors are wired to different F-I/O, and F-I/O fault, channel fault, or communication error, or passivation by means of PASS_ON on an F-I/O	For a solution, see the section "Structure of DIAG", bits 0 to 6 in DIAG (Page 172)
		Discrepancy time setting is too low	If necessary, set a higher discrepancy time
		Discrepancy time setting is < 0 s or > 3 s	Set discrepancy time in range between 0 s and 3 s
Bit 1	Discrepancy error or incorrect discrepancy time DISCTIM 2 setting for sensor pair 2	Same as Bit 0	Same as Bit 0
Bit 2	Maximum muting time exceeded or incorrect muting time TIME_MAX setting	Malfunction in production sequence	Malfunction in production sequence eliminated
		Maximum muting time setting is too low	If necessary, set a higher maximum muting time
		Muting time setting is < 0 s or > 10 min	Set muting time in range from 0 s to 10 min
Bit 3	Light curtain interrupted and muting not active	Light curtain is defective	Check light curtain
		Wiring fault	Check wiring of light curtain (FREE input)
		F-I/O fault, channel fault, or communication error, or passivation by means of PASS_ON of F-I/O of light curtain (FREE input)	For a solution, see the section "Structure of DIAG", bits 0 to 6 in DIAG (Page 172)
		See other DIAG bits	
Bit 4	Muting lamp is defective or cannot be set	Muting lamp is defective	Replace muting lamp
		Wiring fault	Check wiring of muting lamp
		F-I/O fault, channel fault, or communication error, or passivation by means of PASS_ON of F-I/O of muting lamp	For a solution, see the section "Structure of DIAG", bits 0 to 6 in DIAG (Page 172)
Bit 5	Reserved	—	—
Bit 6	Reserved	—	—
Bit 7	Reserved	—	—

Timing imprecision resulting from the update time of the time base used in the instruction:

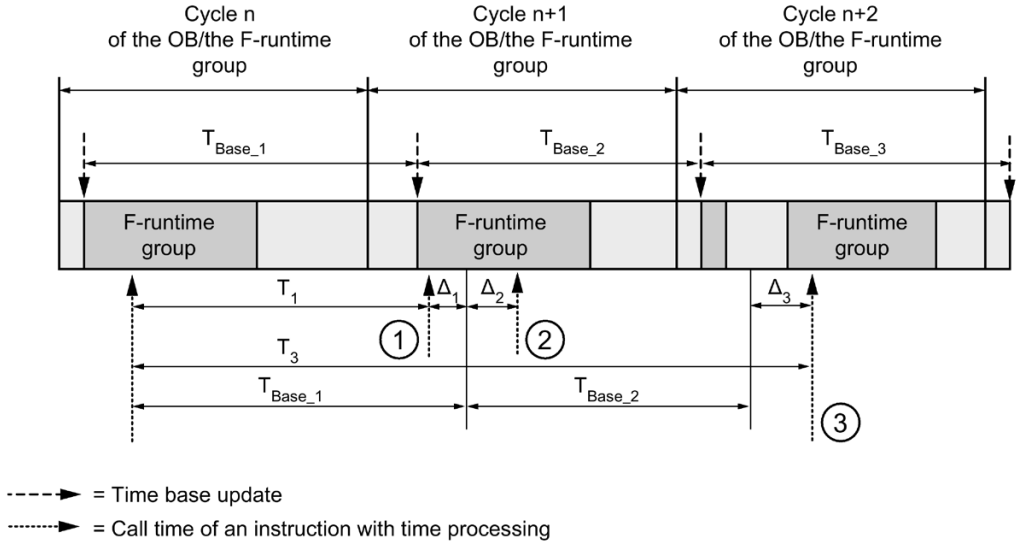

① For the first call in cycle n+1, the call time of the instruction relative to the start of the F-runtime group is earlier than that in cycle n by the amount of Δ_1, e.g. because parts of the safety program of the F-runtime group before the call time of the instruction in cycle n+1 are skipped. For the time update, the instruction takes account of time T_{Base_1} instead of the time T_1 that has actually elapsed in cycle n since the call.

② The instruction is called a second time in cycle n+1. This does not involve another time update (by Δ_2).

③ For the call in cycle n+2, the call time of the instruction relative to the start of the F-runtime group is later than that in cycle n by the amount of Δ_3, e.g. because the F-runtime group was interrupted by a higher priority interrupt before the call time of the instruction in cycle n+2. The instruction took into account time $T_{Base_1} + T_{Base_2}$ instead of the time T_3 that has actually elapsed in cycle n since the call. This would also be the case if no call occurred in cycle n+1.

Example

The following example shows how the instruction works:

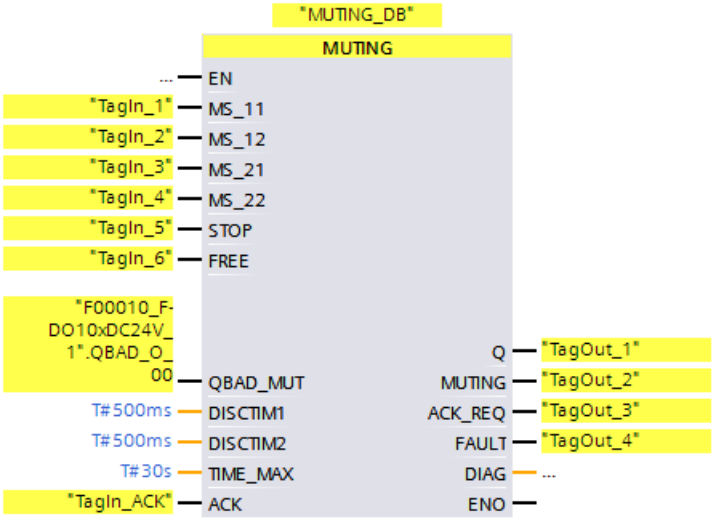

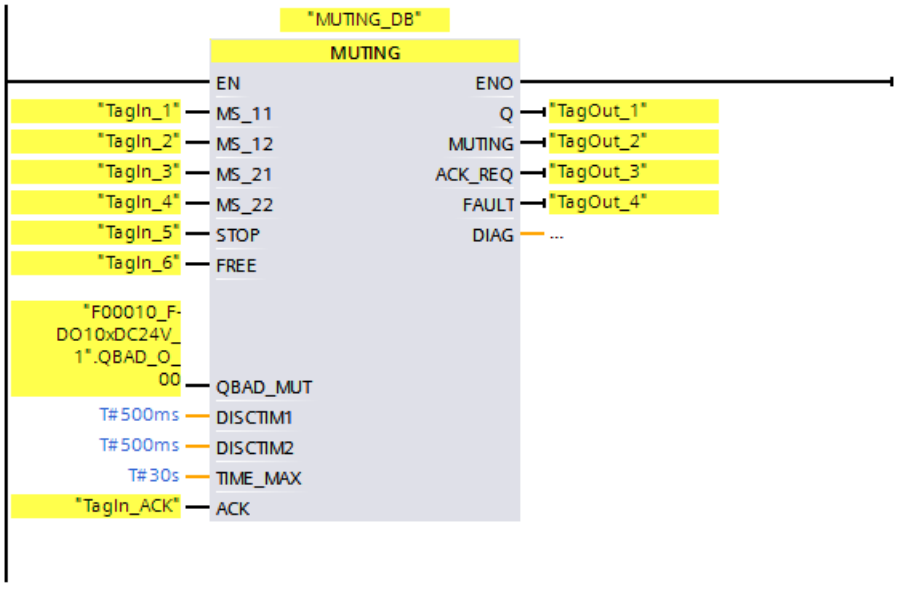

13.3.5 MUT_P: Parallel muting (STEP 7 Safety V15.1)

Description

This instruction performs parallel muting with two or four muting sensors.

Muting is a defined suppression of the protective function of light curtains. Light curtain muting can be used to introduce goods or objects into the danger area monitored by the light curtain without causing the machine to stop.

To utilize the muting function, at least two independently wired muting sensors must be present. The use of two or four muting sensors and correct integration into the production sequence must ensure that no persons enter the danger area while the light curtain is muted.

Every call of the "Parallel muting" instruction must be assigned a data area in which the instruction data are stored. The "Call options" dialog is automatically opened when the instruction is inserted in the program for this reason. There you can create a data block (single instance) (e.g., MUT_P_DB_1) or a multi-instance (e.g., MUT_P_Instance_1) for the "Parallel muting" instruction. Once it is created, you can find the new data block in the project tree in the "STEP 7 Safety" folder under "Program blocks > System blocks" or the multi-instance as a local tag in the "Static" section of the block interface. For more information, refer to the help on *STEP 7*.

Enable input "EN" and enable output "ENO" cannot be connected. The instruction is therefore always executed (regardless of the signal state at enable input "EN").

WARNING

When using an instruction with time processing, take the following timing imprecision sources into account when determining your response times:

- Known timing imprecision (based on standard systems) resulting from cyclic processing
- Timing imprecision resulting from the update time of the time base used in the instruction (see figure in section "Timing imprecision resulting from the update time of the time base used in the instruction")
- Tolerance of internal time monitoring in the F-CPU
  - For time values up to 200 ms, a maximum of 4 ms
  - For time values greater than or equal to 200 ms, a maximum of 2% of the (assigned) time value

You must choose the interval between two call times of an instruction with time processing in such a way that the required response times are achieved, taking into account the possible timing imprecision. *(S034)*

Parameters

The following table shows the parameters of the instruction:

Parameter	Declaration	Data type	Description
MS_11	Input	BOOL	Muting sensor 11
MS_12	Input	BOOL	Muting sensor 12
MS_21	Input	BOOL	Muting sensor 21
MS_22	Input	BOOL	Muting sensor 22
STOP	Input	BOOL	1=Conveyor system stopped
FREE	Input	BOOL	1=Light curtain uninterrupted
ENABLE	Input	BOOL	1=Enable MUTING
QBAD_MUT	Input	BOOL	QBAD signal of the F-I/O or QBAD_O_xx signal / inverted value status of the muting lamp channel
ACK	Input	BOOL	Acknowledgment of restart inhibit
DISCTIM1	Input	TIME	Discrepancy time of sensor pair 1 (0 to 3 s)
DISCTIM2	Input	TIME	Discrepancy time of sensor pair 2 (0 to 3 s)
TIME_MAX	Input	TIME	Maximum muting time (0 to 10 min)
Q	Output	BOOL	1= Enable, not off
MUTING	Output	BOOL	Display of muting is active
ACK_REQ	Output	BOOL	Acknowledgment necessary
FAULT	Output	BOOL	Group error
DIAG	Output	WORD	Non-fail safe service information

Instruction versions

A number of versions are available for this instruction:

Ver-sion	S7-300/400	S7-1200	S7-1500	Function
1.0	x*	—	—	When projects that were created with *S7 Distributed Safety V5.4 SP5* are migrated, version 1.0 of the instruction is used automatically. If you want to compile a migrated safety program with *STEP 7 Safety Advanced* for the first time, we recommend that you first update to the latest available version of the instruction.
1.1	x*	—	—	These versions have identical functions to version V1.0. The output DIAG can now be correctly interconnected with the operand of data type WORD.
1.2	x*	—	o	
1.3	x*	o	o	
1.4	x	x	x	

o This version is no longer supported.

* S7-300/400: When a restart inhibit (output FAULT = 1) and ENABLE = 1 is present, output ACK_REQ is set to 1 even if not at least one muting sensor is activated. Use the DIAG bits 5 and 6 for additional information.

When a new F-CPU is created with *STEP 7 Safety*, the latest available version for the F-CPU created is automatically preset.

For more information on the use of instruction versions, refer to the help on *STEP 7* under "Using instruction versions".

Schematic sequence of error-free muting procedure with 4 muting sensors (MS_11, MS_12, MS_21, MS_22)

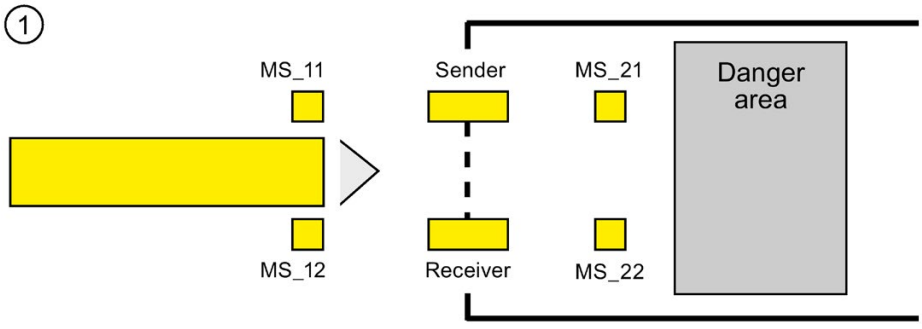

- If muting sensors MS_11 and MS_12 are both activated by the product within DISCTIM1 (apply signal state = 1) and MUTING is enabled by setting the ENABLE input to 1, the instruction starts the MUTING function. Enable signal Q remains 1, even when input FREE = 0 (light curtain interrupted by product). The MUTING output for setting the muting lamp switches to 1.

Note

The muting lamp can be monitored using the QBAD_MUT input. To do this, you must wire the muting lamp to an output with wire break monitoring of an F-I/O and supply the QBAD_MUT input with the QBAD signal of the associated F-I/O or the QBAD_O_xx signal / with inverted value statues of the associated channel. If QBAD_MUT = 1, muting is terminated by the instruction. If monitoring of the muting lamp is not necessary, you do not have to supply input QBAD_MUT.

F-I/O that can promptly detect a wire break after activation of the muting operation must be used (*see manual for specific F-I/O*).

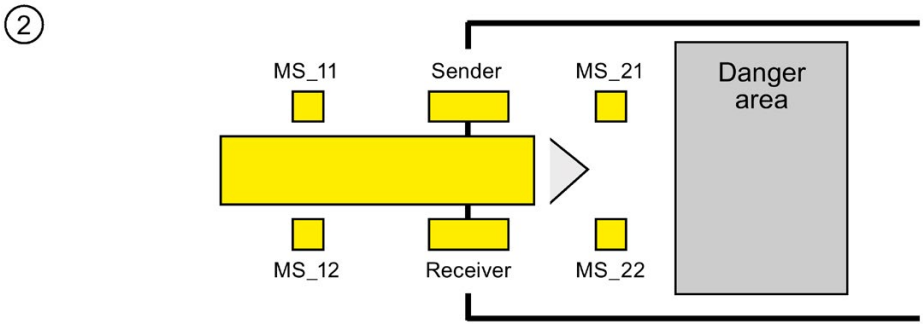

- As long as both muting sensors MS_11 and MS_12 continue to be activated, the MUTING function of the instruction causes Q to remain 1 and MUTING to remain 1 (so that the product can pass through the light curtain without causing the machine to stop). Each of the two muting sensors MS_11 and MS_12 may be switched to inactive (t < DISCTIM1) for a short time (apply signal state 0).

③

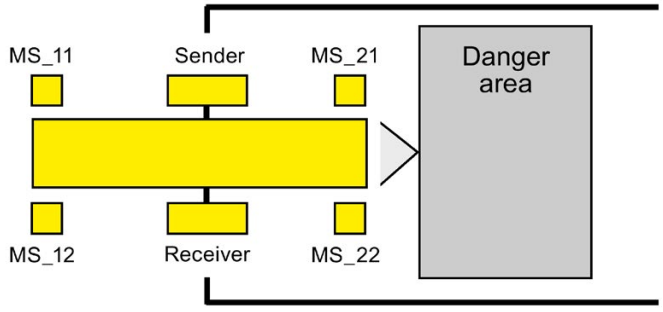

- Muting sensors MS_21 and MS_22 must both be activated (within DISCTIM2) before muting sensors MS_11 and MS_12 are switched to inactive (apply signal state 0). In this way, the instruction retains the MUTING function. (Q = 1, MUTING = 1).

④

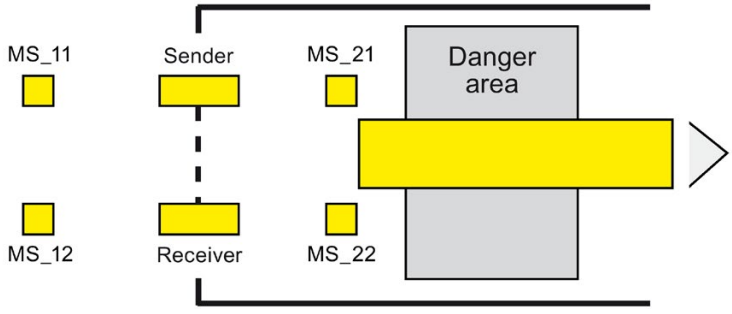

Only if muting sensors MS_21 and MS_22 are both switched to inactive (product enables sensors) is the MUTING function terminated (Q = 1, MUTING = 0). The maximum activation time for the MUTING function is the time set at input TIME_MAX.

Note

The MUTING function is also started if the product passes the light curtain in the reverse direction and the muting sensors are thus activated by the product in reverse order.

Timing diagrams for error-free muting procedure with 4 muting sensors

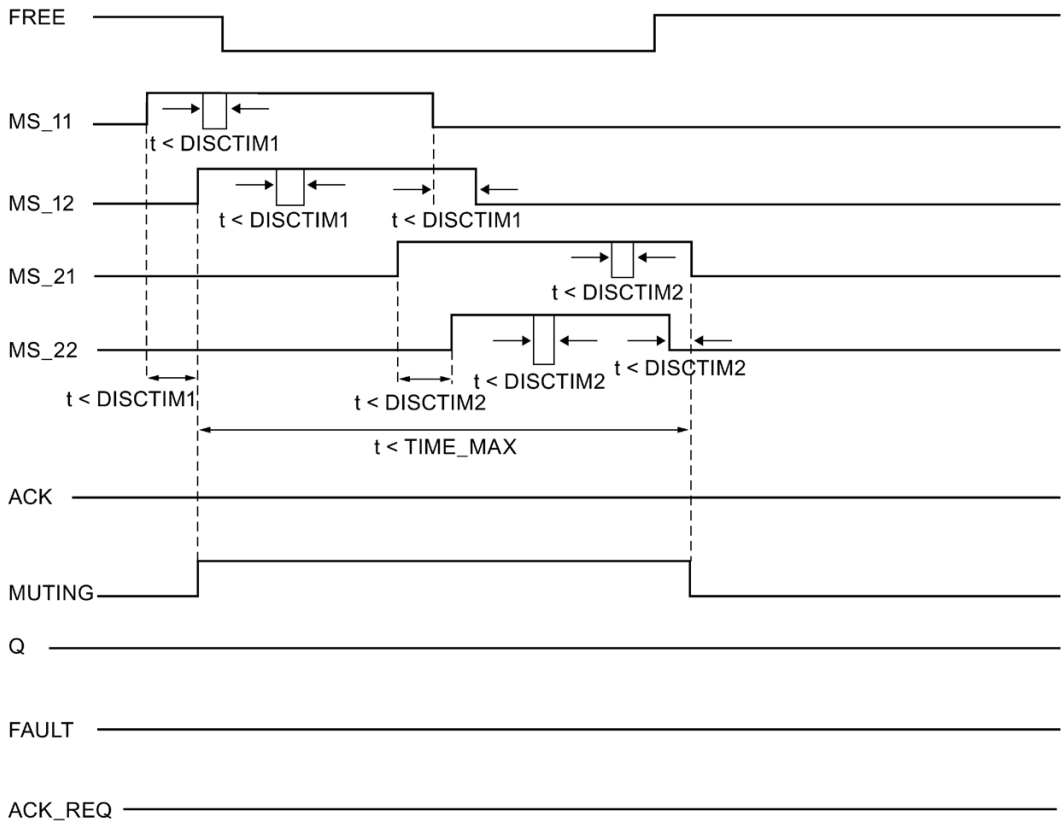

Schematic sequence of muting procedure with reflection light barriers

If reflection light barriers are used as muting sensors, they are generally arranged diagonally.

In general, this arrangement of reflection light barriers as muting sensors requires only two light barriers, and only MS_11 and MS_12 are interconnected.

The sequence is similar to that of the muting procedure with 4 muting sensors. Step 3 is omitted. In step 4, replace MS_21 and MS_22 with MS_11 and MS_12, respectively.

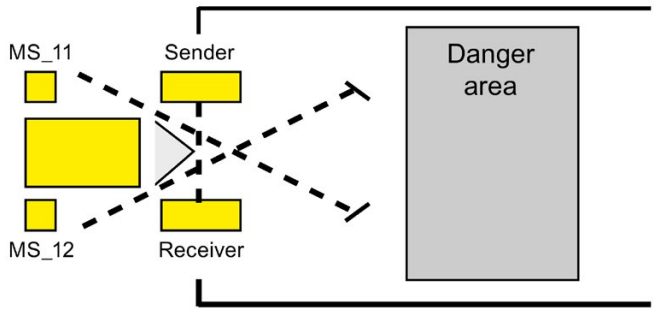

Restart inhibit upon interruption of light curtain (MUTING is not active), as well as when errors occur and during F-system startup

Enable signal Q cannot be set to 1 or becomes 0, if:

- Light curtain is interrupted (e.g., by a person or material transport) while the MUTING function is not active
- Light curtain is (being) interrupted and the muting lamp monitoring at input QBAD_MUT is set to 1
- Light curtain is (being) interrupted and the MUTING function is not enabled by setting input ENABLE to 1
- Sensor pair 1 (MS_11 and MS_12) or sensor pair 2 (MS_21 and MS_22) is not activated or deactivated during discrepancy time DISCTIM1 or DISCTIM2, respectively
- The MUTING function is active longer than the maximum muting time TIME_MAX
- Discrepancy times DISCTIM1 and DISCTIM2 have been set to values < 0 or > 3 s
- Maximum muting time TIME_MAX has been set to a value< 0 or > 10 min
- The F-system starts up (regardless of whether or not the light curtain is interrupted, because the F-I/O is passivated after F-system startup and, thus, the FREE input is initially supplied with 0)

In the identified cases, output FAULT (group error) is set to 1 (restart inhibit). If the MUTING function is started, it will be terminated and the Muting output becomes 0.

User acknowledgment of restart inhibit (no muting sensor is activated or ENABLE = 0)

Enable signal Q becomes 1 again, when:

- The light curtain is no longer interrupted
- If present, errors are eliminated (see output DIAG)

  and
- A user acknowledgment with positive edge occurs at input ACK (see also Implementation of user acknowledgment (Page 187)).

The FAULT output is set to 0. Output ACK_REQ = 1 (and DIAG bit 6) signals that user acknowledgment at input ACK is required to eliminate the restart inhibit. The instruction sets ACK_REQ = 1 as soon as the light curtain is no longer interrupted or the errors have been eliminated. Once acknowledgment has occurred, the instruction resets ACK_REQ to 0.

User Acknowledgment of restart inhibit (at least one muting sensor is activated and ENABLE = 1)

Enable signal Q becomes 1 again, when:

- If present, errors are eliminated (see output DIAG)
- FREE occurs until a valid combination of muting sensors is detected

The FAULT output is set to 0. The MUTING function is restarted, if necessary, and the MUTING output becomes 1 if a valid combination of muting sensors is detected. When ENABLE = 1, output ACK_REQ = 1 (and DIAG bit 5) signals that FREE is necessary for error elimination and for removal of the restart inhibit.*After successful FREE, ACK_REQ is reset to 0 by the instruction.

Note

Once the maximum muting time is exceeded, TIME_MAX is reset as soon as the MUTING function is restarted.

FREE function

If an error cannot be corrected immediately, the FREE function can be used to free the muting range. Enable signal Q and output MUTING =1 temporarily. The FREE function can be used if:

- ENABLE = 1
- At least one muting sensor is activated
- A user acknowledgment with rising edge at input ACK occurs twice within 4 s, and the second user acknowledgment at input ACK remains at a signal state of 1 (acknowledgment button remains activated)

WARNING

When using the FREE function, the action must be observed. A dangerous situation must be able to be interrupted at any time by releasing the acknowledgment button. The acknowledgment button must be mounted in such a way the entire danger area can be observed. *(S037)*

Timing diagrams for discrepancy errors at sensor pair 1 or interruption of the light curtain (MUTING is not active)

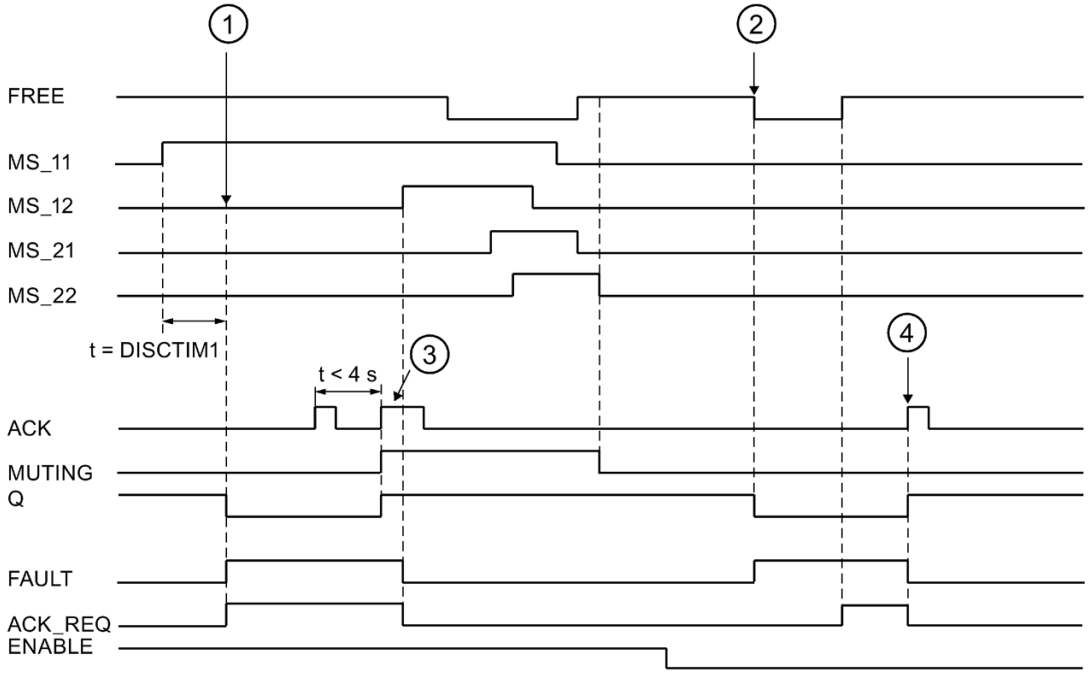

①	Sensor pair 1 (MS_11 and MS_22) is not activated within discrepancy time DISCTIM1.
②	The light curtain is interrupted even though there is no enable (ENABLE=0)
③	FREE function
④	Acknowledgment

Behavior with stopped conveyor equipment

If, while the conveyor equipment has stopped, the monitoring for one of the following reasons is to be deactivated:

- To comply with discrepancy time DISCTIM1 or DISCTIM2
- To comply with maximum muting time TIME_MAX

You must supply input STOP with a "1" signal for as long as the conveyor equipment is stopped. As soon as the conveyor equipment is running again (STOP = 0), discrepancy times DISCTIM1 and DISCTIM2 and maximum muting time TIME_MAX are reset.

⚠ WARNING

When STOP = 1 or ENABLE = 0, discrepancy monitoring is shut down. During this time, if inputs MSx1/MSx2 of a sensor pair both take a signal state of 1 due to an undetected error, e.g., because both muting sensors fail to 1, the fault is not detected and the MUTING function can be started unintentionally (when ENABLE =1). *(S038)*

Output DIAG

The DIAG output provides non-fail-safe information on errors for service purposes. You can read out this information by means of operator control and monitoring systems or, if applicable, you can evaluate it in your standard user program. DIAG bits 0 to 6 are saved until acknowledgment at input ACK.

Structure of DIAG

Bit no.	Assignment	Possible error causes	Remedies
Bit 0	Discrepancy error or incorrect discrepancy time DISCTIM 1 setting for sensor pair 1	Malfunction in production sequence	Malfunction in production sequence eliminated
		Sensor defective	Check sensors
		Wiring fault	Check wiring of sensors
		Sensors are wired to different F-I/O, and F-I/O fault, channel fault, or communication error, or passivation by means of PASS_ON on an F-I/O	For a solution, see the section "Structure of DIAG", bits 0 to 6 in DIAG (Page 172)
		Discrepancy time setting is too low	If necessary, set a higher discrepancy time
		Discrepancy time setting is < 0 s or > 3 s	Set discrepancy time in range between 0 s and 3 s
Bit 1	Discrepancy error or incorrect discrepancy time DISCTIM 2 setting for sensor pair 2	Same as Bit 0	Same as Bit 0
Bit 2	Maximum muting time exceeded or incorrect muting time TIME_MAX setting	Malfunction in production sequence	Malfunction in production sequence eliminated
		Maximum muting time setting is too low	If necessary, set a higher maximum muting time
		Muting time setting is < 0 s or > 10 min	Set muting time in range from 0 s to 10 min
Bit 3	Light curtain interrupted and muting not active	ENABLE = 0	Set ENABLE = 1
		Light curtain is defective	Check light curtain
		Wiring fault	Check wiring of light curtain (FREE input)
		F-I/O fault, channel fault, or communication error, or passivation by means of PASS_ON of F-I/O of light curtain (FREE input)	For a solution, see the section "Structure of DIAG", bits 0 to 6 in DIAG (Page 172)
		Startup of F-system	For FREE, see DIAG Bit 5
		See other DIAG bits	
Bit 4	Muting lamp is defective or cannot be set	Muting lamp is defective	Replace muting lamp
		Wiring fault	Check wiring of muting lamp
		F-I/O fault, channel fault, or communication error, or passivation by means of PASS_ON of F-I/O of muting lamp	For a solution, see the section "Structure of DIAG", bits 0 to 6 in DIAG (Page 172)

Bit no.	Assignment	Possible error causes	Remedies
Bit 5	FREE is necessary	See other DIAG bits	Two rising edges at ACK within 4 s, and activate acknowledgment button until ACK_REQ = 0
Bit 6	Acknowledgment necessary	—	—
Bit 7	State of output Q	—	—
Bit 8	State of output MUTING	—	—
Bit 9	FREE active	—	—
Bit 10	Reserved	—	—
...			
Bit 15	Reserved	—	—

Timing imprecision resulting from the update time of the time base used in the instruction:

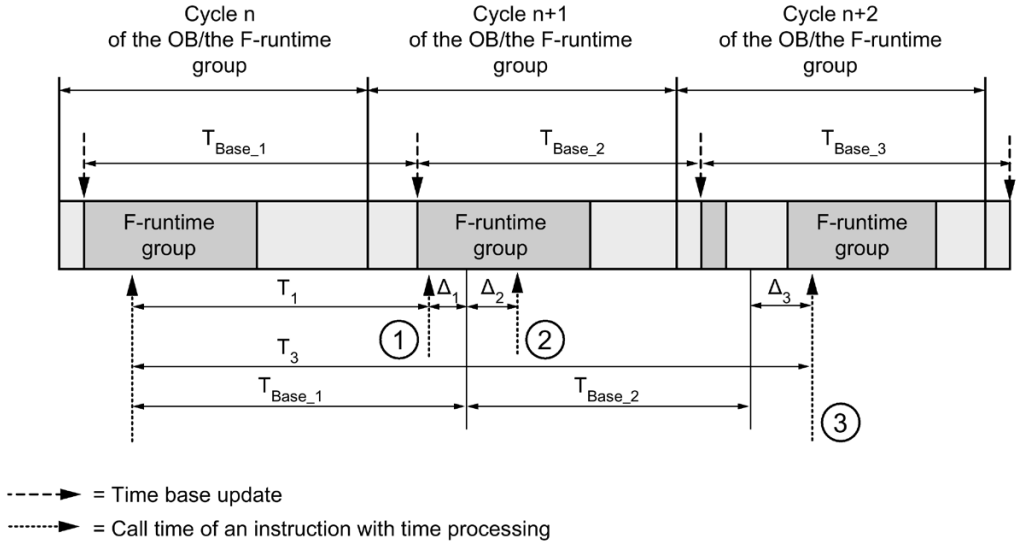

① For the first call in cycle n+1, the call time of the instruction relative to the start of the F-runtime group is earlier than that in cycle n by the amount of Δ_1, e.g. because parts of the safety program of the F-runtime group before the call time of the instruction in cycle n+1 are skipped. For the time update, the instruction takes account of time T_{Base_1} instead of the time T_1 that has actually elapsed in cycle n since the call.

② The instruction is called a second time in cycle n+1. This does not involve another time update (by Δ_2).

③ For the call in cycle n+2, the call time of the instruction relative to the start of the F-runtime group is later than that in cycle n by the amount of Δ_3, e.g. because the F-runtime group was interrupted by a higher priority interrupt before the call time of the instruction in cycle n+2. The instruction took into account time $T_{Base_1} + T_{Base_2}$ instead of the time T_3 that has actually elapsed in cycle n since the call. This would also be the case if no call occurred in cycle n+1.

Example

The following example shows how the instruction works:

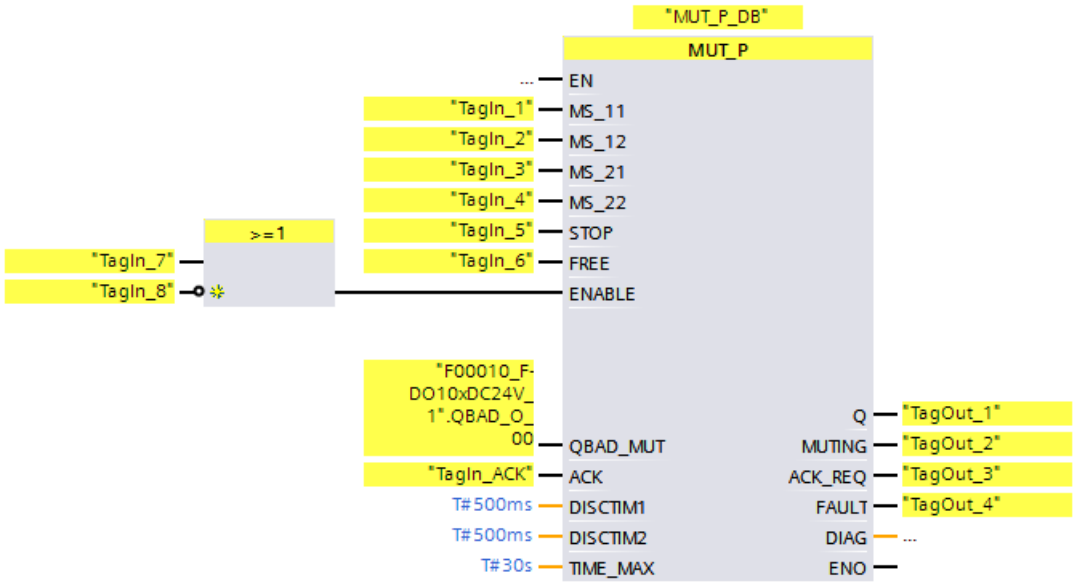

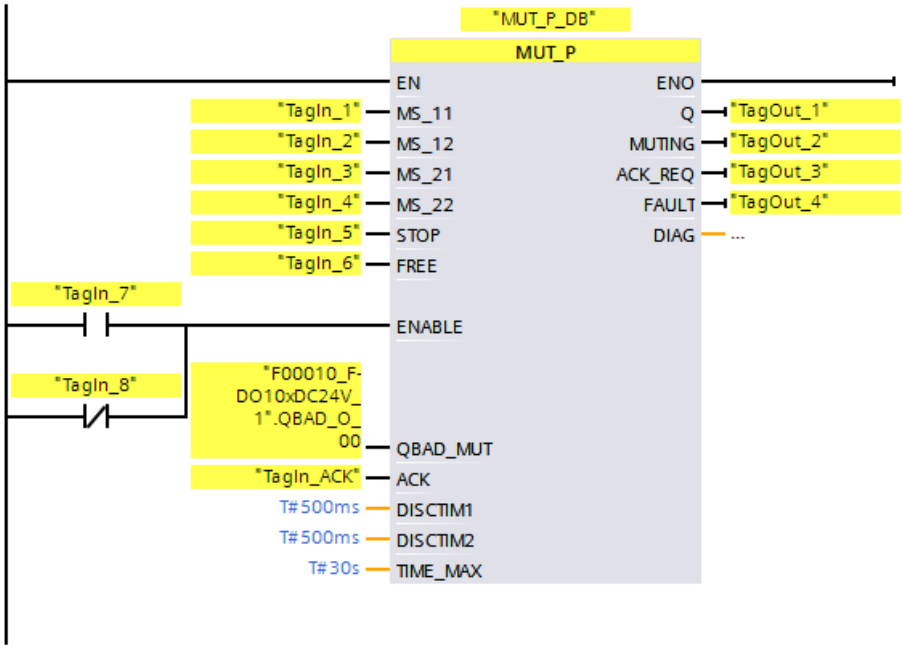

13.3.6 EV1oo2DI: 1oo2 evaluation with discrepancy analysis (STEP 7 Safety V15.1)

Description

This instruction implements a 1oo2 evaluation of two single-channel sensors combined with a discrepancy analysis.

Output Q is set to 1, if the signal states of inputs IN1 and IN2 both equal 1 and no discrepancy error DISC_FLT is stored. if the signal state of one or both inputs is 0, output Q is set to 0.

As soon as the signal states of inputs IN1 and IN2 are different, the discrepancy time DISCTIME is started. If the signal states of the two inputs are still different once the discrepancy time expires, a discrepancy error is detected and DISC_FLT is set to 1 (restart inhibit).

If the discrepancy between inputs IN1 and IN2 is no longer detected, the discrepancy error is acknowledged according to the parameter assignment of ACK_NEC:

- If ACK_NEC = 0, the acknowledgment is automatic.
- If ACK_NEC = 1, you must use a rising edge at input ACK to acknowledge the discrepancy error.

The output ACK_REQ = 1 signals that a user acknowledgment at input ACK is necessary to acknowledge the discrepancy error (cancel the restart inhibit). The instruction sets ACK_REQ = 1 as soon as discrepancy is no longer detected. After acknowledgment or if, prior to acknowledgment, there is once again a discrepancy between inputs IN1 and IN2, the instruction resets ACK_REQ to 0.

Output Q can never be set to 1 if the discrepancy time setting is < 0 or > 60 s. In this case, output DISC_FLT is also set to 1 (restart inhibit). The call interval of the safety program (e.g., OB 35) must be less than the discrepancy time setting.

Every call of the "1oo2 evaluation with discrepancy analysis" instruction must be assigned a data area in which the instruction data are stored. The "Call options" dialog is automatically opened when the instruction is inserted in the program for this reason. There you can create a data block (single instance) (e.g., EV1oo2DI_DB_1) or a multi-instance (e.g., EV1oo2DI_Instance_1) for the "1oo2 evaluation with discrepancy analysis" instruction. Once it is created, you can find the new data block in the project tree in the "STEP 7 Safety" folder under "Program blocks > System blocks" or the multi-instance as a local tag in the "Static" section of the block interface. For more information, refer to the help on *STEP 7*.

Enable input "EN" and enable output "ENO" cannot be connected. The instruction is therefore always executed (regardless of the signal state at enable input "EN").

⚠ WARNING
The ACK_NEC tag must not be assigned a value of 0 unless an automatic restart of the affected process is otherwise excluded. *(S033)*

WARNING

When using an instruction with time processing, take the following timing imprecision sources into account when determining your response times:

- Known timing imprecision (based on standard systems) resulting from cyclic processing
- Timing imprecision resulting from the update time of the time base used in the instruction (see figure in section "Timing imprecision resulting from the update time of the time base used in the instruction")
- Tolerance of internal time monitoring in the F-CPU
  - For time values up to 200 ms, a maximum of 4 ms
  - For time values greater than or equal to 200 ms, a maximum of 2% of the (assigned) time value

You must choose the interval between two call times of an instruction with time processing in such a way that the required response times are achieved, taking into account the possible timing imprecision. *(S034)*

Parameters

The following table shows the parameters of the instruction:

Parameter	Declaration	Data type	Description
IN1	Input	BOOL	Sensor 1
IN2	Input	BOOL	Sensor 2
DISCTIME	Input	TIME	Discrepancy time (0 to 60 s)
ACK_NEC	Input	BOOL	1 = acknowledgment necessary for discrepancy error
ACK	Input	BOOL	Acknowledgment of discrepancy error
Q	Output	BOOL	Output
ACK_REQ	Output	BOOL	1 = acknowledgment required
DISC_FLT	Output	BOOL	1 = discrepancy error
DIAG	Output	BYTE	Non-fail safe service information

Instruction versions

A number of versions are available for this instruction:

Version	S7-300/400	S7-1200	S7-1500	Function
1.0	x	—	—	When projects that were created with *S7 Distributed Safety V5.4 SP5* are migrated, version 1.0 of the instruction is used automatically. If you want to compile a migrated safety program with *STEP 7 Safety Advanced* for the first time, we recommend that you first update to the latest available version of the instruction.
1.1	x	—	o	These versions have identical functions to version V1.0.
1.2	x	o	o	
1.3	x	x	x	

o This version is no longer supported.

When a new F-CPU is created with *STEP 7 Safety*, the latest available version for the F-CPU created is automatically preset.

For more information on the use of instruction versions, refer to the help on *STEP 7* under "Using instruction versions".

Activating inputs IN1 and IN2

Inputs IN1 and IN2 must both be activated in such a way that their safe state is 0.

Example with QBAD or QBAD_I_xx signal

For non-equivalent signals you need to OR the input (IN1 and IN2) with which you assign the encoder signal to the safe state 1, with the QBAD signal of the associated F-I/O or the QBAD_I_xx signal of the associated channel (with S7-300/400 F-CPUs) and negate the result. Signal state 0 is then at input IN1 or IN2 when fail-safe values are output.

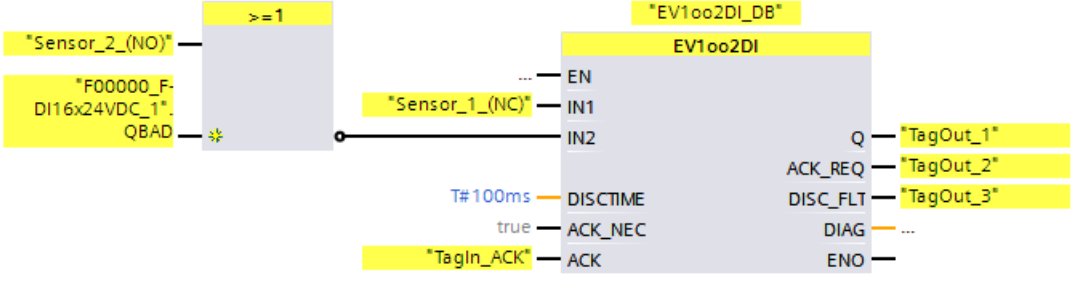

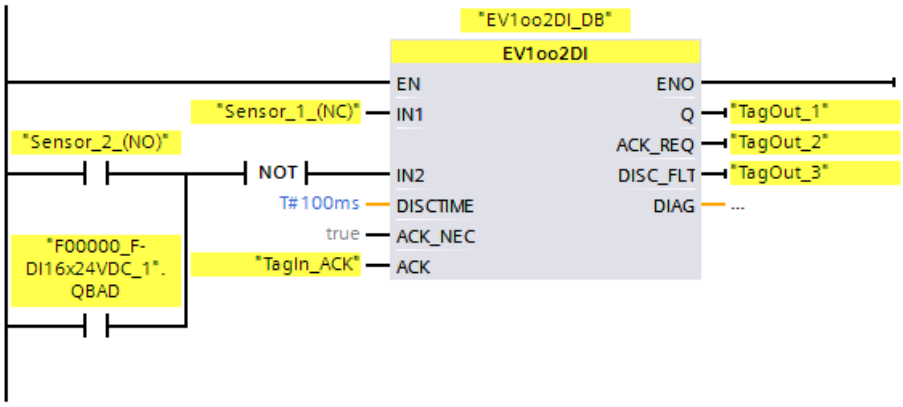

Example with value status

For nonequivalent signals, you have to negate the input (IN1 or IN2) with which you have assigned the encoder signal to a safe state of 1 and AND it with the value status of the associated channel. Signal state 0 is then at input IN1 or IN2 when fail-safe values are output.

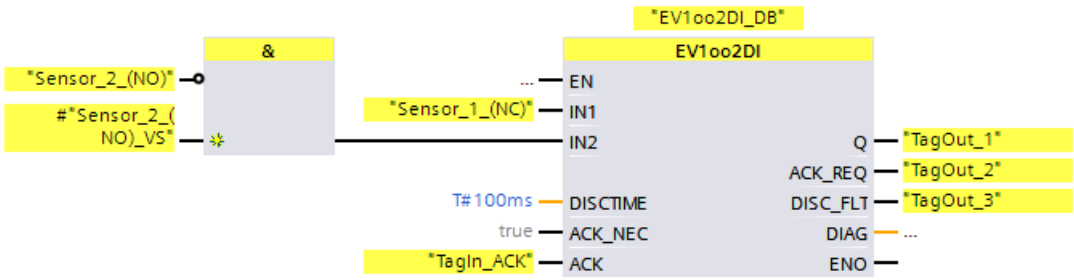

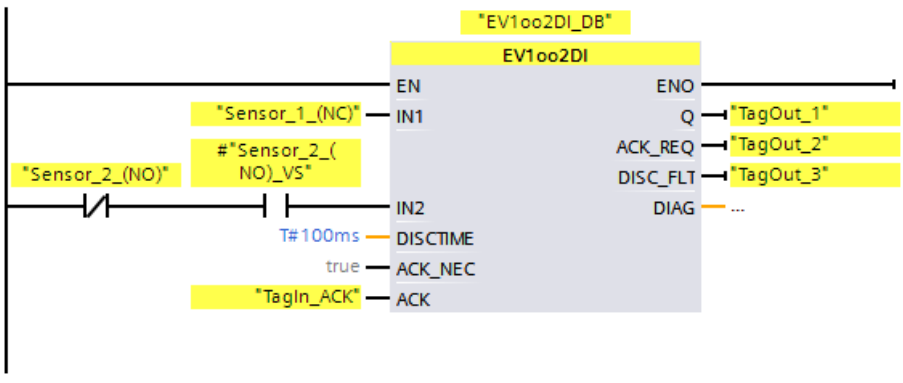

Timing diagrams EV1oo2DI

If ACK_NEC = 1:

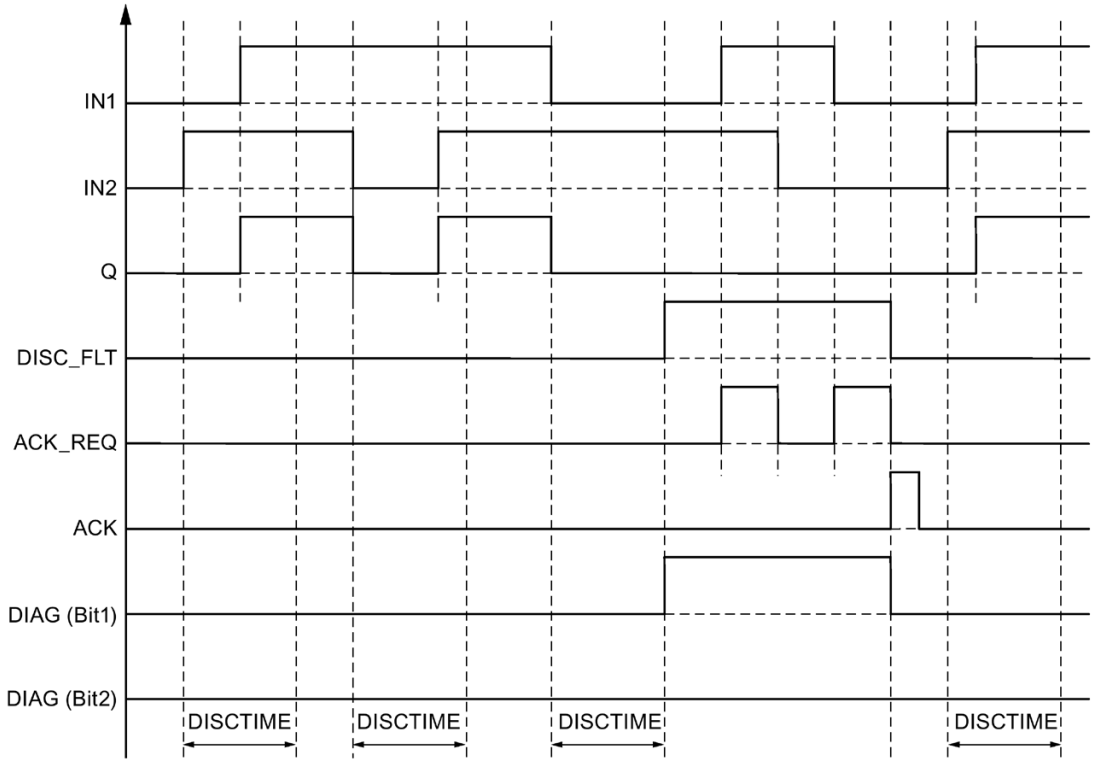

Startup characteristics

Note

If the sensors at inputs IN1 and IN2 are assigned to different F-I/O, it is possible that the fail-safe values are output for different lengths of time following startup of the F-system due to different startup characteristics of the F-I/O. If the signal states of inputs IN1 and IN2 remain different after the discrepancy time DISCTIME has expired, a discrepancy error is detected after the F-system starts up.

If ACK_NEC = 1 you must acknowledge the discrepancy error with a rising edge at input ACK.

Output DIAG

The DIAG output provides non-fail-safe information on errors for service purposes. You can read out this information by means of operator control and monitoring systems or, if applicable, you can evaluate it in your standard user program. DIAG bits are saved until acknowledgment at input ACK.

Structure of DIAG

Bit no.	Assignment	Possible error causes	Remedies
Bit 0	Discrepancy error or incorrect discrepancy time setting (= status of DISC_FLT)	Sensor defective	Check sensors
		Wiring fault	Check wiring of sensors
		Sensors are wired to different F-I/O, and F-I/O fault, channel fault, or communication error, or passivation by means of PASS_ON on an F-I/O	For a solution, see the section "Structure of DIAG", bits 0 to 6 in DIAG (Page 172)
		Discrepancy time setting is too low	If necessary, set a higher discrepancy time
		Discrepancy time setting is < 0 s or > 60 s	Set discrepancy time in range between 0 s and 60 s
Bit 1	For discrepancy errors: last signal state change was at input IN1	—	—
Bit 2	For discrepancy errors: last signal state change was at input IN2	—	—
Bit 3	Reserved	—	—
Bit 4	Reserved	—	—
Bit 5	For discrepancy errors: input ACK has a permanent signal state of 1	Acknowledgment button defective	Replace acknowledgment button
		Wiring fault	Check wiring of acknowledgment button
Bit 6	Acknowledgment necessary	—	—
Bit 7	State of output Q	—	—

Timing imprecision resulting from the update time of the time base used in the instruction:

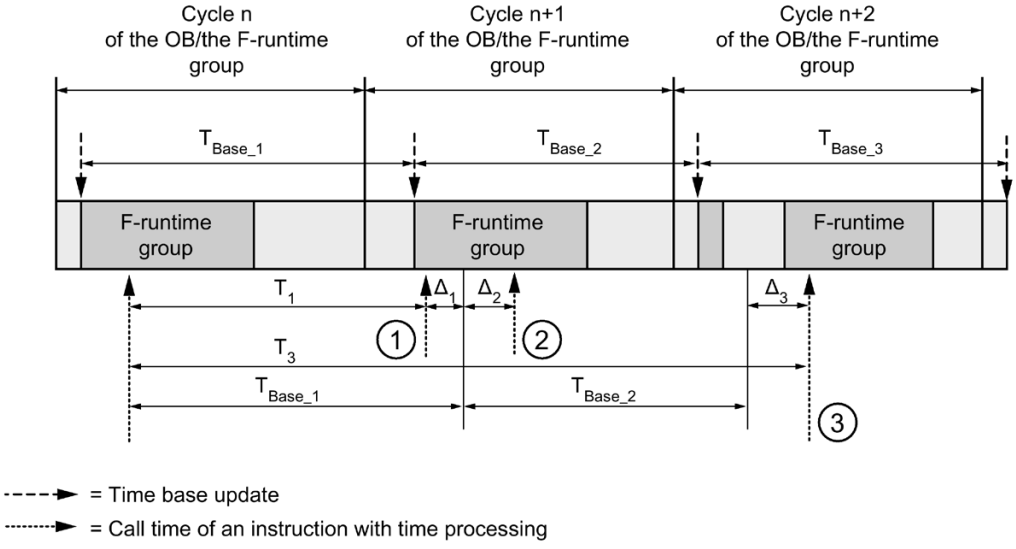

① For the first call in cycle n+1, the call time of the instruction relative to the start of the F-runtime group is earlier than that in cycle n by the amount of Δ_1, e.g. because parts of the safety program of the F-runtime group before the call time of the instruction in cycle n+1 are skipped. For the time update, the instruction takes account of time T_{Base_1} instead of the time T_1 that has actually elapsed in cycle n since the call.

② The instruction is called a second time in cycle n+1. This does not involve another time update (by Δ_2).

③ For the call in cycle n+2, the call time of the instruction relative to the start of the F-runtime group is later than that in cycle n by the amount of Δ_3, e.g. because the F-runtime group was interrupted by a higher priority interrupt before the call time of the instruction in cycle n+2. The instruction took into account time $T_{Base_1} + T_{Base_2}$ instead of the time T_3 that has actually elapsed in cycle n since the call. This would also be the case if no call occurred in cycle n+1.

Example

The following example shows how the instruction works:

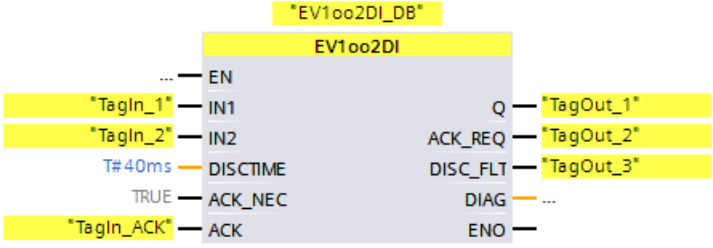

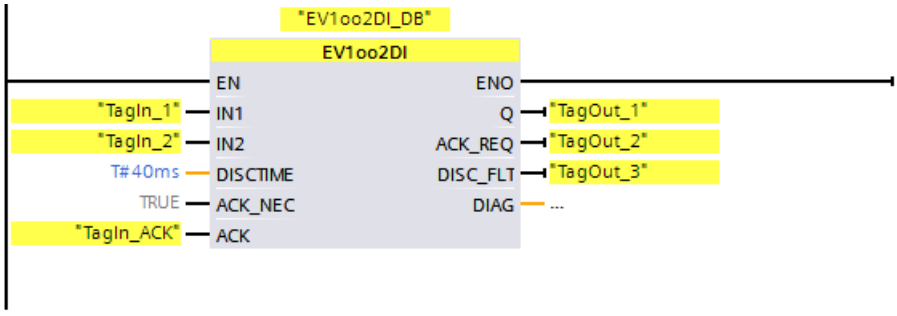

13.3.7 FDBACK: Feedback monitoring (STEP 7 Safety V15.1)

Description

This instruction implements feedback monitoring.

The signal state of output Q is checked to see whether it corresponds to the inverse signal state of the feedback input FEEDBACK.

Output Q is set to 1 as soon as input ON = 1. Requirement for this is that the feedback input FEEDBACK = 1 and no feedback error is saved.

Output Q is reset to 0, as soon as input ON = 0 or if a feedback error is detected.

A feedback error ERROR = 1 is detected if the inverse signal state of the feedback input FEEDBACK (to input Q) does not follow the signal state of output Q within the maximum tolerable feedback time. The feedback error is saved.

If a discrepancy is detected between the feedback input FEEDBACK and the output Q after a feedback error, the feedback error is acknowledged in accordance with the parameter assignment of ACK_NEC:

- If ACK_NEC = 0, the acknowledgment is automatic.
- If ACK_NEC = 1, you must acknowledge the feedback error with a rising edge at input ACK.

The ACK_REQ = 1 output then signals that a user acknowledgment is necessary at input ACK to acknowledge the feedback error. Following an acknowledgment, the instruction resets ACK_REQ to 0.

To avoid a feedback errors from being detected and acknowledgment from being required when the F-I/O controlled by the Q output are passivated, you need to supply input QBAD_FIO with the QBAD signal of the associated F-I/O or the QBAD_O_xx signal / inverted value status of the associated channel.

Every call of the "Feedback monitoring" instruction must be assigned a data area in which the instruction data are stored. The "Call options" dialog is automatically opened when the instruction is inserted in the program for this reason. There you can create a data block (single instance) (e.g., FDBACK_DB_1) or a multi-instance (e.g., FDBACK_Instance_1) for the "Feedback monitoring" instruction. Once it is created, you can find the new data block in the project tree in the "STEP 7 Safety" folder under "Program blocks > System blocks" or the multi-instance as a local tag in the "Static" section of the block interface. For more information, refer to the help on *STEP 7*.

Enable input "EN" and enable output "ENO" cannot be connected. The instruction is therefore always executed (regardless of the signal state at enable input "EN").

WARNING

The ACK_NEC tag must not be assigned a value of 0 unless an automatic restart of the affected process is otherwise excluded. *(S033)*

WARNING

When using an instruction with time processing, take the following timing imprecision sources into account when determining your response times:

- Known timing imprecision (based on standard systems) resulting from cyclic processing
- Timing imprecision resulting from the update time of the time base used in the instruction (see figure in section "Timing imprecision resulting from the update time of the time base used in the instruction")
- Tolerance of internal time monitoring in the F-CPU
  - For time values up to 200 ms, a maximum of 4 ms
  - For time values greater than or equal to 200 ms, a maximum of 2% of the (assigned) time value

You must choose the interval between two call times of an instruction with time processing in such a way that the required response times are achieved, taking into account the possible timing imprecision *(S034)*.

Parameters

The following table shows the parameters of the instruction:

Parameter	Declaration	Data type	Description
ON	Input	BOOL	1= Enable output
FEEDBACK	Input	BOOL	Feedback input
QBAD_FIO	Input	BOOL	QBAD signal of the F-I/O or QBAD_O_xx signal / inverted value status of the Q output
ACK_NEC	Input	BOOL	1=Acknowledgment necessary
ACK	Input	BOOL	Acknowledgment
FDB_TIME	Input	TIME	Feedback time
Q	Output	BOOL	Output
ERROR	Output	BOOL	Feedback error
ACK_REQ	Output	BOOL	Acknowledgment request
DIAG	Output	BYTE	Non-fail safe service information

Instruction versions

A number of versions are available for this instruction:

Version	S7-300/400	S7-1200	S7-1500	Function
1.0	x	—	—	Version 1.0 requires that the F_TOF block with the number FB 186 is available in the project tree in the "Program blocks/System blocks/STEP 7 Safety" folder. When projects that were created with *S7 Distributed Safety V5.4 SP5* are migrated, version 1.0 of the instruction is used automatically. If you want to compile a migrated safety program with *STEP 7 Safety Advanced* for the first time, we recommend that you first update to the latest available version of the instruction. You will then avoid number conflicts.
1.1	x	—	—	These versions are functionally identical to version V1.0, but do not require the F_TOF block to have a particular number.
1.2	x	—	o	
1.3	x	o	o	
1.4	x	o	o	
1.5	x	x	x	

o This version is no longer supported.

When a new F-CPU is created with *STEP 7 Safety*, the latest available version for the F-CPU created is automatically preset.

For more information on the use of instruction versions, refer to the help on *STEP 7* under "Using instruction versions".

Interconnection example

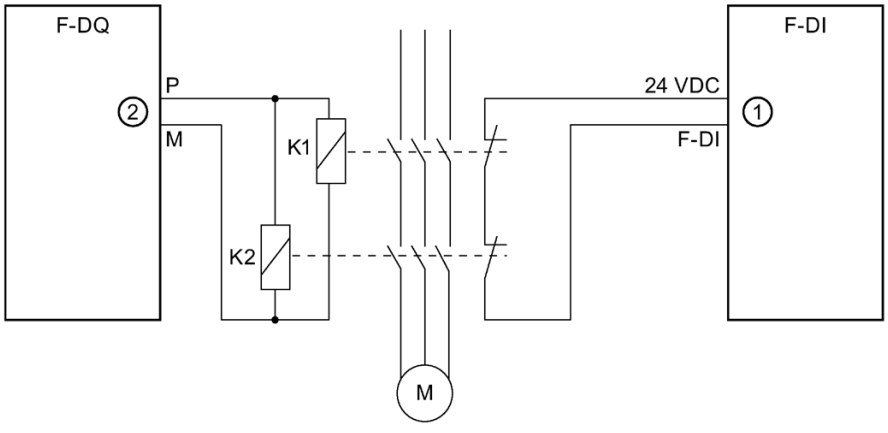

① Sent to the FEEDBACK input of the instruction
② from output Q of the instruction

Output DIAG

The DIAG output provides non-fail-safe information on errors for service purposes. You can read out this information by means of operator control and monitoring systems or, if applicable, you can evaluate it in your standard user program. DIAG bits 0, 2, and 5 are saved until acknowledgment at input ACK.

Structure of DIAG

Bit no.	Assignment	Possible error causes	Remedies
Bit 0	Feedback error or incorrect feedback time setting (= state of ERROR)	Feedback time setting < 0	Set feedback time > 0
		Feedback time setting is too low	If necessary, set a higher feedback time
		Wiring fault	Check wiring of actuator and feedback contact
		Actuator or feedback contact is defective	Check actuator and feedback contact
		I/O fault or channel fault of feedback input	Check I/O
Bit 1	Passivation of F-I/O/channel controlled by output Q (= state of QBAD_FIO)	F-I/O fault, channel fault, or communication error, or passivation by means of PASS_ON of F-I/O	For a solution, see the section "Structure of DIAG", bits 0 to 6 in DIAG (Page 172)
Bit 2	After feedback error: feedback input has permanent signal state of 0	F-I/O fault or channel fault of feedback input	Check I/O
		Feedback contact is defective	Check feedback contact
		F-I/O fault, channel fault, or communication error, or passivation by means of PASS_ON of F-I/O of feedback input	For a solution, see the section "Structure of DIAG", bits 0 to 6 in DIAG (Page 172)
Bit 3	Reserved	—	—
Bit 4	Reserved	—	—
Bit 5	For feedback error: input ACK has a permanent signal state of 1	Acknowledgment button defective	Check acknowledgment button
		Wiring fault	Check wiring of acknowledgment button
Bit 6	Acknowledgment required (= state of ACK_REQ)	—	—
Bit 7	State of output Q	—	—

Timing imprecision resulting from the update time of the time base used in the instruction:

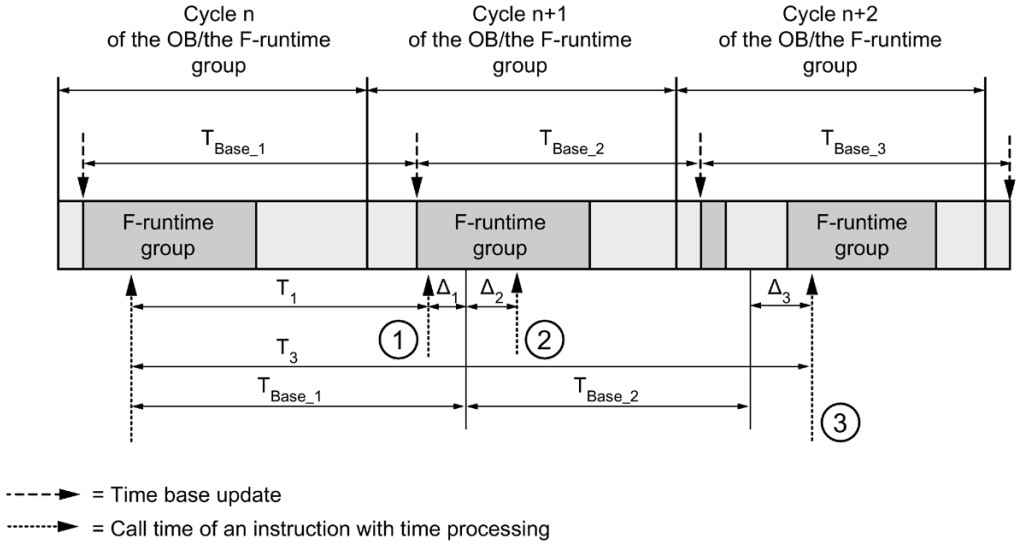

① For the first call in cycle n+1, the call time of the instruction relative to the start of the F-runtime group is earlier than that in cycle n by the amount of Δ_1, e.g. because parts of the safety program of the F-runtime group before the call time of the instruction in cycle n+1 are skipped. For the time update, the instruction takes account of time T_{Base_1} instead of the time T_1 that has actually elapsed in cycle n since the call.

② The instruction is called a second time in cycle n+1. This does not involve another time update (by Δ_2).

③ For the call in cycle n+2, the call time of the instruction relative to the start of the F-runtime group is later than that in cycle n by the amount of Δ_3, e.g. because the F-runtime group was interrupted by a higher priority interrupt before the call time of the instruction in cycle n+2. The instruction took into account time $T_{Base_1} + T_{Base_2}$ instead of the time T_3 that has actually elapsed in cycle n since the call. This would also be the case if no call occurred in cycle n+1.

Example

The following example shows how the instruction for S7-300/400 F-CPUs works:

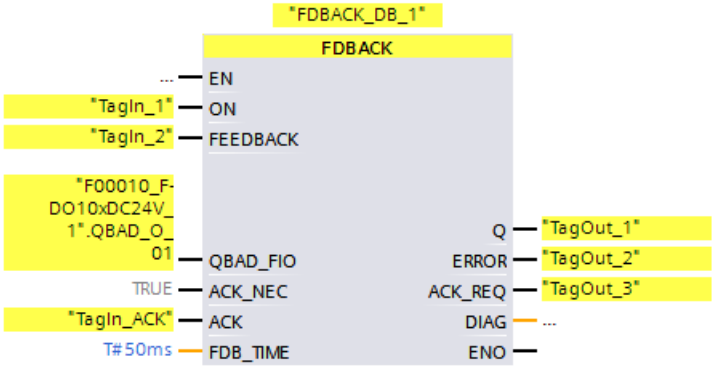

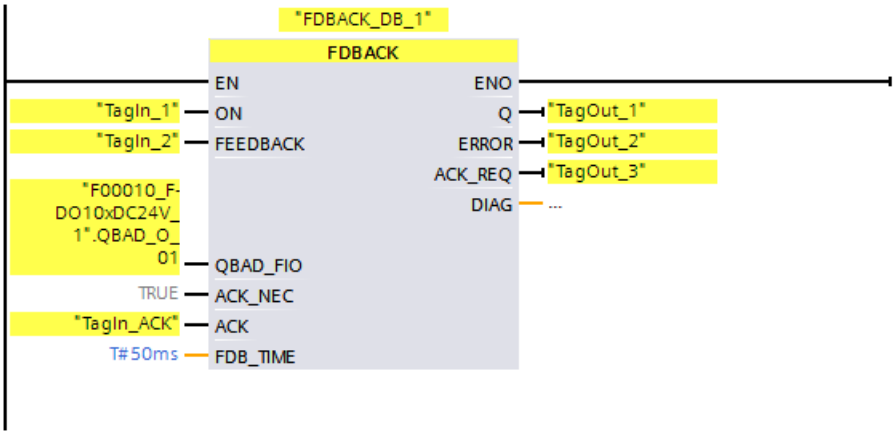

The following example shows how the instruction for S7-1200/1500 F-CPUs works:

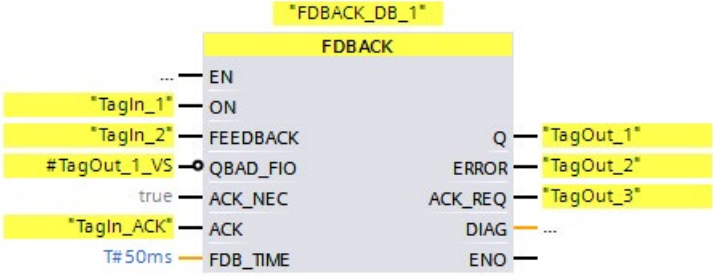

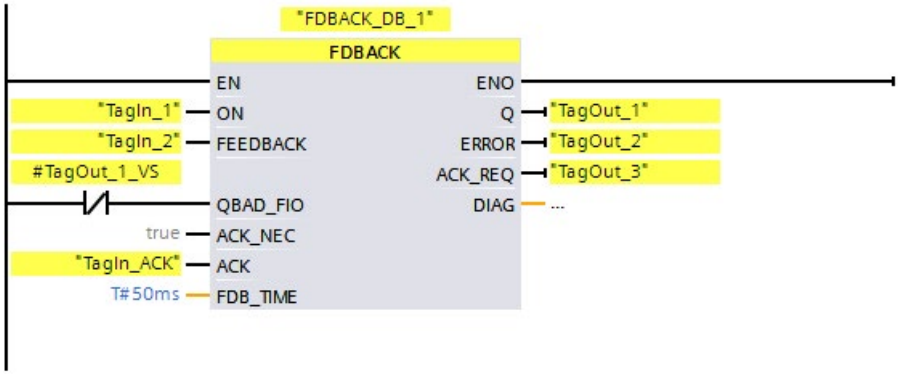

13.3.8 SFDOOR: Safety door monitoring (STEP 7 Safety V15.1)

Description

This instruction implements safety door monitoring.

Enable signal Q is reset to 0 as soon as one of the inputs IN1 or IN2 take a signal state of 0 (safety door is opened). The enable signal can be reset to 1, only if:

- Inputs IN1 and IN2 both take a signal state of 0 prior to opening the door (safety door has been completely opened)
- Inputs IN1 and IN2 then both take a signal state of 1 (safety door is closed)
- An acknowledgment occurs

The acknowledgment for the enable takes place according to the parameter assignment at input ACK_NEC:

- If ACK_NEC = 0, the acknowledgment is automatic.
- If ACK_NEC = 1, you must use a rising edge at input ACK for acknowledging the enable.

Output ACK_REQ = 1 is used to signal that a user acknowledgment is required at input ACK for the acknowledgment. The instruction sets ACK_REQ = 1 as soon as the door is closed. Following an acknowledgment, the instruction resets ACK_REQ to 0.

In order for the instruction to recognize whether inputs IN1 and IN2 are 0 merely due to passivation of the associated F-I/O, you need to supply inputs QBAD_IN1 or QBAD_IN2 with the QBAD signal of the associated F-I/O or QBAD_I_xx signal / inverted value status of the associated channel. Among other things, this will prevent you from having to open the safety door completely prior to an acknowledgment in the event the F-I/O are passivated.

Every call of the "Safety door monitoring" instruction must be assigned a data area in which the instruction data are stored. The "Call options" dialog is automatically opened when the instruction is inserted in the program for this reason. There you can create a data block (single instance) (e.g., SFDOOR_DB_1) or a multi-instance (e.g., SFDOOR_Instance_1) for the "Safety door monitoring" instruction. Once it is created, you can find the new data block in the project tree in the "STEP 7 Safety" folder under "Program blocks > System blocks" or the multi-instance as a local tag in the "Static" section of the block interface. For more information, refer to the help on *STEP 7*.

Enable input "EN" and enable output "ENO" cannot be connected. The instruction is therefore always executed (regardless of the signal state at enable input "EN").

⚠ WARNING
The ACK_NEC tag must not be assigned a value of 0 unless an automatic restart of the affected process is otherwise excluded. *(S033)*

Parameters

The following table shows the parameters of the instruction:

Parameter	Declaration	Data type	Description
IN1	Input	BOOL	Input 1
IN2	Input	BOOL	Input 2
QBAD_IN1	Input	BOOL	QBAD signal of the F-I/O or QBAD_O_xx signal / inverted value status of the channel of input IN1
QBAD_IN2	Input	BOOL	QBAD signal of the F-I/O or QBAD_O_xx signal / inverted value status of the channel of input IN2
OPEN_NEC	Input	BOOL	1= Open necessary at startup
ACK_NEC	Input	BOOL	1=Acknowledgment necessary
ACK	Input	BOOL	Acknowledgment
Q	Output	BOOL	1= Enable, safety door closed
ACK_REQ	Output	BOOL	Acknowledgment request
DIAG	Output	BYTE	Non-fail safe service information

Instruction versions

A number of versions are available for this instruction:

Version	S7-300/400	S7-1200	S7-1500	Function
1.0	x	—	—	When projects that were created with *S7 Distributed Safety V5.4 SP5* are migrated, version 1.0 of the instruction is used automatically. If you want to compile a migrated safety program with *STEP 7 Safety Advanced* for the first time, we recommend that you first update to the latest available version of the instruction.
1.1	x	—	o	These versions have identical functions to version V1.0.
1.2	x	o	o	
1.3	x	x	x	

o This version is no longer supported.

When a new F-CPU is created with *STEP 7 Safety*, the latest available version for the F-CPU created is automatically preset.

For more information on the use of instruction versions, refer to the help on *STEP 7* under "Using instruction versions".

Interconnection example

You must interconnect the NC contact of position switch 1 of the safety door at input IN1 and the NO contact of position switch 2 at input IN2. Position switch 1 must be mounted in such a way that it is positively operated when the safety door is open. Position switch 2 must be mounted in such a way that it is operated when the safety door is closed.

Safety door open:

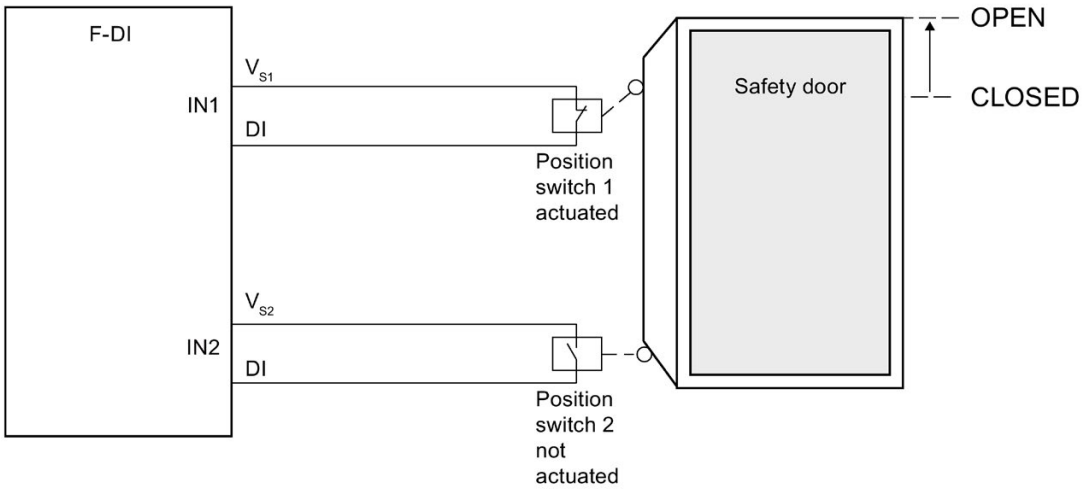

Safety door closed:

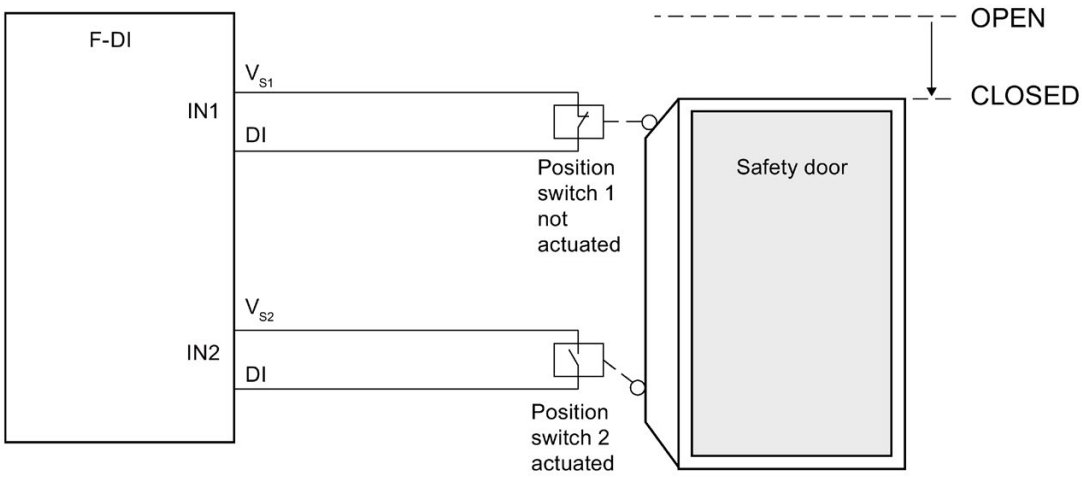

Startup characteristics

After an F-system startup, enable signal Q is reset to 0. The acknowledgment for the enable takes place according to the parameter assignment at inputs OPEN_NEC and ACK_NEC:

- When OPEN_NEC = 0, an automatic acknowledgment occurs **independently** of ACK_NEC, as soon as the two inputs IN1 and IN2 take signal state 1 for the first time following reintegration of the associated F-I/O (safety door is closed).
- When OPEN_NEC = 1 **or** if at least one of the IN1 and IN2 inputs still has a signal state of 0 after reintegration of the associated F-I/O, an automatic acknowledgment occurs **according** to ACK_NEC or you have to use a rising edge at input ACK for the enable. Prior to acknowledgment, inputs IN1 and IN2 both have to take a signal state of 0 (safety door has been completely opened) followed by a signal state of 1 (safety door is closed).

⚠ WARNING
The OPEN_NEC tag must not be assigned a value of 0 unless an automatic restart of the affected process is otherwise excluded. *(S039)*

Output DIAG

The DIAG output provides non-fail-safe information on errors for service purposes. You can read out this information by means of operator control and monitoring systems or, if applicable, you can evaluate it in your standard user program.

Structure of DIAG

Bit no.	Assignment	Possible error causes	Remedies
Bit 0	Reserved	—	—
Bit 1	Signal state 0 is missing at both IN1 and IN2 inputs	Safety door was not completely opened when OPEN_NEC = 1 after F-system startup	Open safety door completely
		Open safety door was not completely opened	Open safety door completely
		Wiring fault	Check wiring of position switch
		Position switch is defective	Check position switch
		Position switch is incorrectly adjusted	Adjust position switch properly
Bit 2	Signal state 1 is missing at both IN1 and IN2 inputs	Safety door was not closed	Close safety door
		Wiring fault	Check wiring of position switch
		Position switch is defective	Check position switch
		Position switch is incorrectly adjusted	Adjust position switch properly
Bit 3	QBAD_IN1 and/or QBAD_IN2 = 1	F-I/O fault, channel fault, or communication error, or passivation by means of PASS_ON of F-I/O or channel of IN1 and/or IN2	For a solution, see the section "Structure of DIAG", bits 0 to 6 in DIAG (Page 172)

Bit no.	Assignment	Possible error causes	Remedies
Bit 4	Reserved	—	—
Bit 5	If enable is missing: input ACK has a permanent signal state of 1	Acknowledgment button defective	Check acknowledgment button
		Wiring fault	Check wiring of acknowledgment button
Bit 6	Acknowledgment required (= state of ACK_REQ)	—	—
Bit 7	State of output Q	—	—

Example

The following example shows how the instruction for S7-300/400 F-CPUs works:

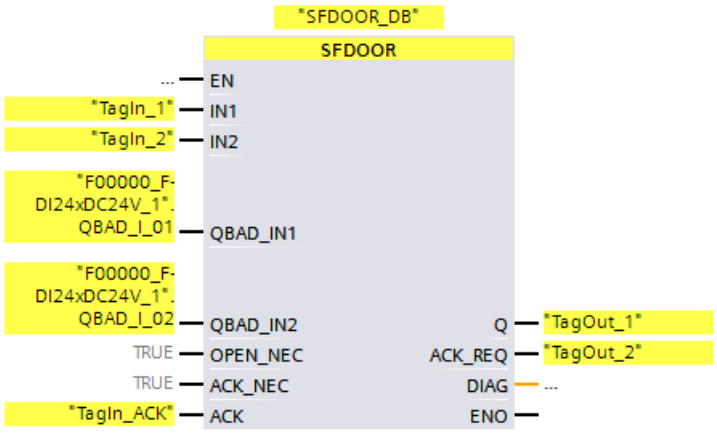

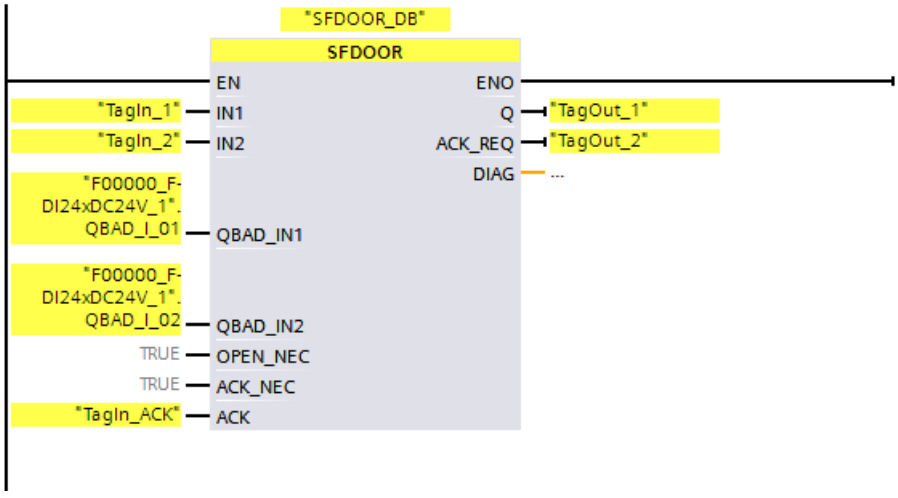

The following example shows how the instruction for S7-1200/1500 F-CPUs works:

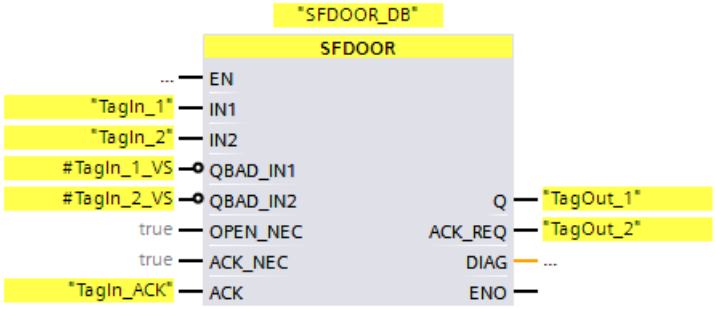

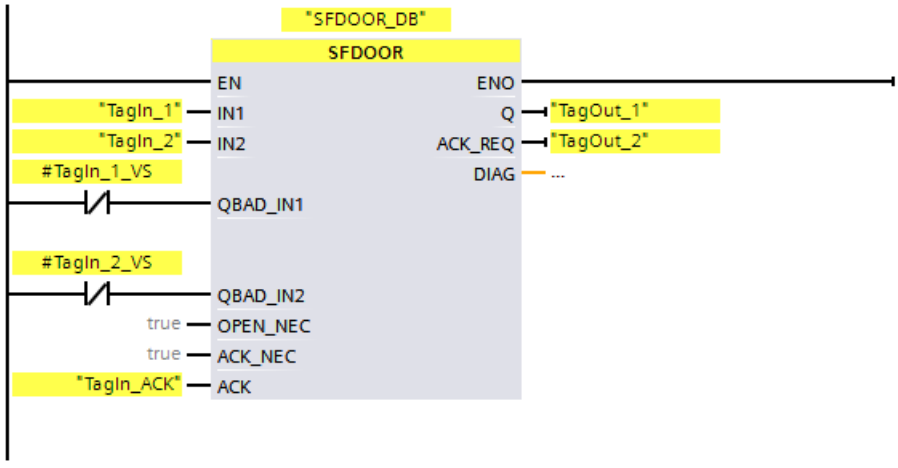

13.3.9 ACK_GL: Global acknowledgment of all F-I/O in an F-runtime group (STEP 7 Safety V15.1)

Description

This instruction creates an acknowledgment for the simultaneous reintegration of all F-I/O or channels of the F-I/O of an F-runtime group after communication errors, F-I/O errors, or channel faults.

A user acknowledgment (Page 187) with a positive edge at input ACK_GLOB is required for reintegration. The acknowledgment occurs analogously to the user acknowledgment via the ACK_REI tag of the F-I/O DB (Page 168), but it acts simultaneously on all F-I/O of the F-runtime group in which the instruction is called.

If you use the instruction ACK_GL, you do not have to provide a user acknowledgment for each F-I/O of the F-runtime group via the ACK_REI tag of the F-I/O DB.

Every call of the "Global acknowledgment of all F-I/O of a runtime group" instruction must be assigned a data area in which the instruction data are stored. The "Call options" dialog is automatically opened when the instruction is inserted in the program for this reason. There you can create a data block (single instance) (e.g., ACK_GL_DB_1) or a multi-instance (e.g., ACK_GL_Instance_1) for the "Global acknowledgment of all F-I/O of a runtime group" instruction. Once it is created, you can find the new data block in the project tree in the "STEP 7 Safety" folder under "Program blocks > System blocks" or the multi-instance as a local tag in the "Static" section of the block interface. For more information, refer to the help on *STEP 7*.

Enable input "EN" and enable output "ENO" cannot be connected. The instruction is therefore always executed (regardless of the signal state at enable input "EN").

Note

An acknowledgment via the ACK_GL instruction is only possible if the tag ACK_REI of the F-I/O DB = 0. Accordingly, an acknowledgment via the tag ACK_REI of the F-I/O DB is only possible if the input ACK_GLOB of the instruction = 0.

The instruction is only allowed to be called once per F-runtime group.

Parameters

The following table shows the parameters of the instruction:

Parameter	Declaration	Data type	Description
ACK_GLOB	Input	BOOL	1=acknowledgment for reintegration

Instruction versions

A number of versions are available for this instruction:

Version	S7-300/400	S7-1200	S7-1500	Function
1.0	x	—	—	When projects that were created with *S7 Distributed Safety V5.4 SP5* are migrated, version 1.0 of the instruction is used automatically. If you want to compile a migrated safety program with *STEP 7 Safety Advanced* for the first time, we recommend that you first update to the latest available version of the instruction.
1.1	x	—	o	These versions have identical functions to version V1.0.
1.2	x	o	o	
1.3	x	x	x	

o This version is no longer supported.

When a new F-CPU is created with *STEP 7 Safety*, the latest available version for the F-CPU created is automatically preset.

For more information on the use of instruction versions, refer to the help on *STEP 7* under "Using instruction versions".

Example

The following example shows how the instruction works:

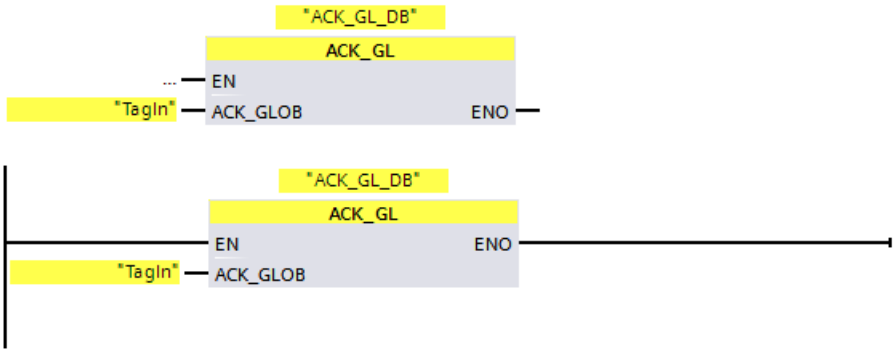

13.4 Timer operations

13.4.1 TP: Generate pulse (STEP 7 Safety V15.1)

Description

You can use the "Generate pulse" instruction to set output Q for a programmed period. The instruction is started if the result of logic operation (RLO) changes from "0" to "1" (positive edge) at input IN. The programmed period PT starts running when the instruction starts. Output Q is set for period PT, regardless of the subsequent sequence of the input signal. Also the detection of a new positive signal edge does not influence the signal state at output Q as long as period PT runs.

You can query the current time value at the output ET. The time value begins at T#0s and ends when the value of period PT is reached. If period PT is reached and the signal state at input IN is "0", output ET is reset.

Every call of the "Generate pulse" instruction must be assigned a data area in which the instruction data are stored. The "Call options" dialog is automatically opened when the instruction is inserted in the program for this reason. There you can create a data block (single instance) (e.g., F_IEC_Timer_DB_1) or a multi-instance (e.g., F_IEC_Timer_Instance_1) for the "Generate pulse" instruction. Once it is created, you can find the new data block in the project tree in the "STEP 7 Safety" folder under "Program blocks > System blocks" or the multi-instance as a local tag in the "Static" section of the block interface. For more information, refer to the *help on STEP 7*.

WARNING

When using an instruction with time processing, take the following timing imprecision sources into account when determining your response times:

- Known timing imprecision (based on standard systems) resulting from cyclic processing
- Timing imprecision resulting from the update time of the time base used in the instruction (see figure in section "Timing imprecision resulting from the update time of the time base used in the instruction").
- Tolerance of internal time monitoring in the F-CPU
  - For time values up to 200 ms, a maximum of 4 ms
  - For time values greater than or equal to 200 ms, a maximum of 2% of the (assigned) time value

You must choose the interval between two call times of an instruction with time processing in such a way that the required response times are achieved, taking into account the possible timing imprecision. *(S034)*

The operating system resets the instances of the "Generate pulse" instruction on a startup of the F-system.

Note

The functionality of this instruction differs from the corresponding standard TP instruction in the following points:

- If the instruction is called while the time is running with PT = 0 ms, the outputs Q and ET are reset.
- If the instruction is called with PT < 0 ms, the outputs Q and ET are reset.

To restart the pulse, a new rising signal edge at input IN is required once PT is greater than 0 again.

Parameters

The following table shows the parameters of the instruction:

Parameter	Declaration	Data type	Description
IN	Input	BOOL	Start input
PT	Input	TIME	Duration of pulse; must be positive.
Q	Output	BOOL	Pulse output
ET	Output	TIME	Current time value

Instruction versions

A number of versions are available for this instruction:

Version	S7-300/400	S7-1200	S7-1500	Function
1.0	x	—	—	When projects that were created with *S7 Distributed Safety V5.4 SP5* are migrated, version 1.0 of the instruction is used automatically. If you want to compile a migrated safety program with *STEP 7 Safety Advanced* for the first time, we recommend that you first update to the latest available version of the instruction.
1.1	x	—	o	These versions have identical functions to version V1.0.
1.2	x	o	o	
1.3	x	o	o	
1.4	x	x	x	

o This version is no longer supported.

When a new F-CPU is created with *STEP 7 Safety*, the latest available version for the F-CPU created is automatically preset.

For more information on the use of instruction versions, refer to the help on *STEP 7* under "Using instruction versions".

Pulse diagram

The following figure shows the pulse diagram of the instruction "Generate pulse":

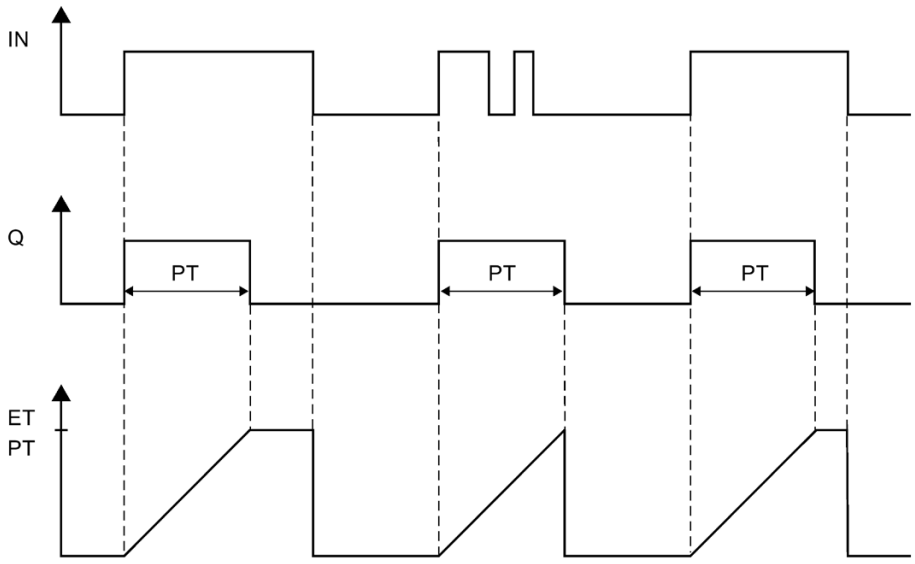

Timing imprecision resulting from the update time of the time base used in the instruction:

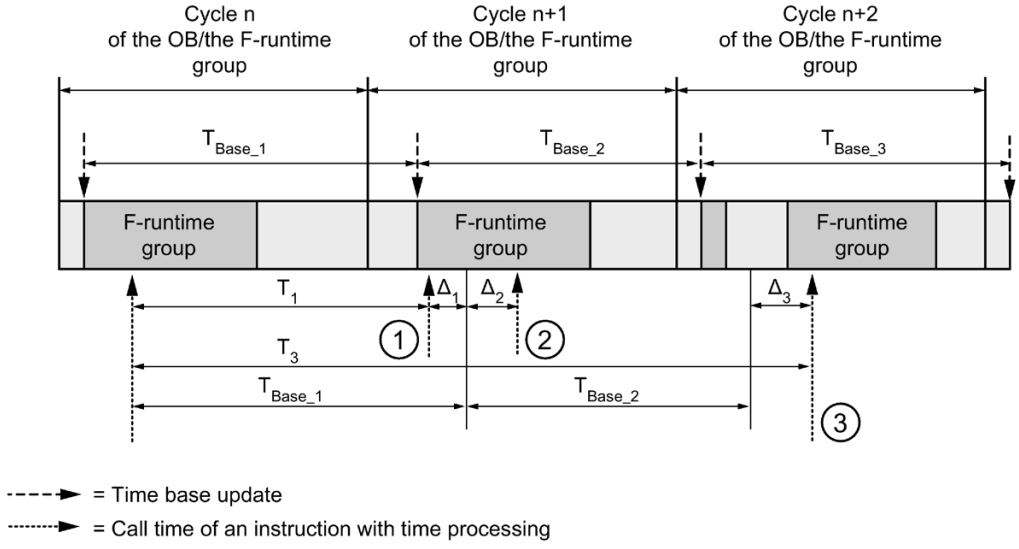

① For the first call in cycle n+1, the call time of the instruction relative to the start of the F-runtime group is earlier than that in cycle n by the amount of Δ_1, e.g. because parts of the safety program of the F-runtime group before the call time of the instruction in cycle n+1 are skipped. For the time update, the instruction takes account of time T_{Base_1} instead of the time T_1 that has actually elapsed in cycle n since the call.

② The instruction is called a second time in cycle n+1. This does not involve another time update (by Δ_2).

③ For the call in cycle n+2, the call time of the instruction relative to the start of the F-runtime group is later than that in cycle n by the amount of Δ_3, e.g. because the F-runtime group was interrupted by a higher priority interrupt before the call time of the instruction in cycle n+2. The instruction took into account time $T_{Base_1} + T_{Base_2}$ instead of the time T_3 that has actually elapsed in cycle n since the call. This would also be the case if no call occurred in cycle n+1.

Example

The following example shows how the instruction works:

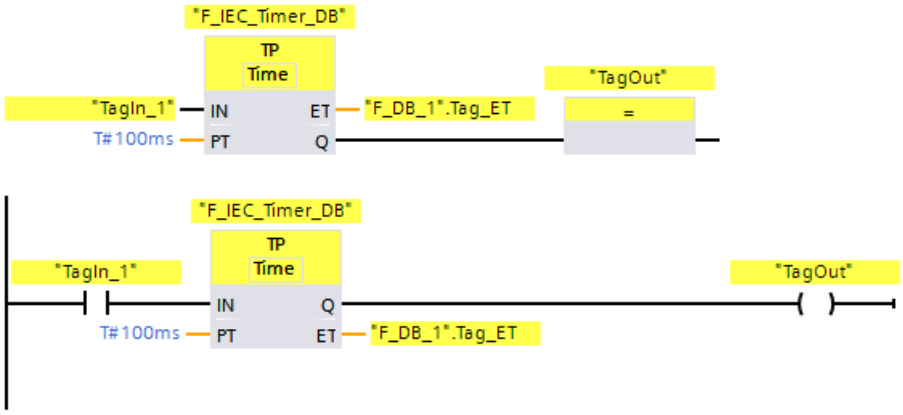

If the signal state of operand "TagIn_1" changes from "0" to "1", the "Generate pulse" instruction is started and the period assigned at input PT (100 ms) runs, regardless of the further course of operand "TagIn_1".

Operand "TagOut" at output Q has signal state "1" as long as the period is running. Operand ""F_DB_1".Tag_ET" contains the current time value.

13.4.2 TON: Generate on-delay (STEP 7 Safety V15.1)

Description

You use the "Generate on-delay" instruction to delay the setting of output Q by the assigned period PT. The instruction is started if the result of logic operation (RLO) changes from "0" to "1" (positive edge) at input IN. The programmed period PT starts running when the instruction starts. When period PT has expired, output Q is set to signal state "1". Output Q remains set as long as the start input is set to "1". When the signal state at the start input changes from "1" to "0", output Q is reset. The time function is restarted when a new positive signal edge is detected at the start input.

You can query the current time value at the output ET. The time value begins at T#0s and ends when the value of period PT is reached. Output ET is reset, as soon as the signal state at input IN changes to "0".

Every call of the "Generate on-delay" instruction must be assigned a data area in which the instruction data are stored. The "Call options" dialog is automatically opened when the instruction is inserted in the program for this reason. There you can create a data block (single instance) (e.g., F_IEC_Timer_DB_1) or a multi-instance (e.g., F_IEC_Timer_Instance_1) for the "Generate on-delay" instruction. Once it is created, you can find the new data block in the project tree in the "STEP 7 Safety" folder under "Program blocks > System blocks" or the multi-instance as a local tag in the "Static" section of the block interface. For more information, refer to the *help on STEP 7*.

WARNING

When using an instruction with time processing, take the following timing imprecision sources into account when determining your response times:

- Known timing imprecision (based on standard systems) resulting from cyclic processing
- Timing imprecision resulting from the update time of the time base used in the instruction (see figure in section "Timing imprecision resulting from the update time of the time base used in the instruction")
- Tolerance of internal time monitoring in the F-CPU
  - For time values up to 200 ms, a maximum of 4 ms
  - For time values greater than or equal to 200 ms, a maximum of 2% of the (assigned) time value

You must choose the interval between two call times of an instruction with time processing in such a way that the required response times are achieved, taking into account the possible timing imprecision. *(S034)*

The operating system resets the instances of the "Generate on-delay" instruction on a startup of the F-system.

Note

The functionality of this instruction differs from the corresponding standard TON instruction in the following points:

- If the instruction is called while the time is running with PT = 0 ms, the output ET is reset.
- If the instruction is called with PT < 0 ms, the outputs Q and ET are reset.

To restart the on-delay, a new rising signal edge at input IN is required once PT is greater than 0 again.

Parameters

The following table shows the parameters of the instruction:

Parameter	Declaration	Data type	Description
IN	Input	BOOL	Start input
PT	Input	TIME	Duration of on-delay; must be positive.
Q	Output	BOOL	Output that is set after expiration of time PT.
ET	Output	TIME	Current time value

Instruction versions

A number of versions are available for this instruction:

Version	S7-300/400	S7-1200	S7-1500	Function
1.0	x	—	—	When projects that were created with *S7 Distributed Safety V5.4 SP5* are migrated, version 1.0 of the instruction is used automatically. If you want to compile a migrated safety program with *STEP 7 Safety Advanced* for the first time, we recommend that you first update to the latest available version of the instruction.
1.1	x	—	o	These versions have identical functions to version V1.0.
1.2	x	o	o	
1.3	x	o	o	
1.4	x	x	x	

o This version is no longer supported.

When a new F-CPU is created with *STEP 7 Safety*, the latest available version for the F-CPU created is automatically preset.

For more information on the use of instruction versions, refer to the help on *STEP 7* under "Using instruction versions".

Pulse diagram

The following figure shows the pulse diagram of the instruction "Generate on-delay":

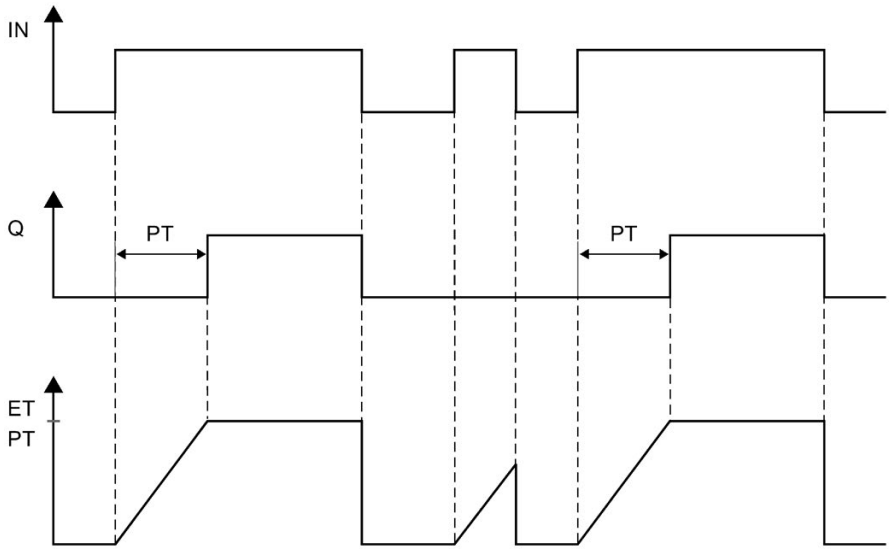

Timing imprecision resulting from the update time of the time base used in the instruction:

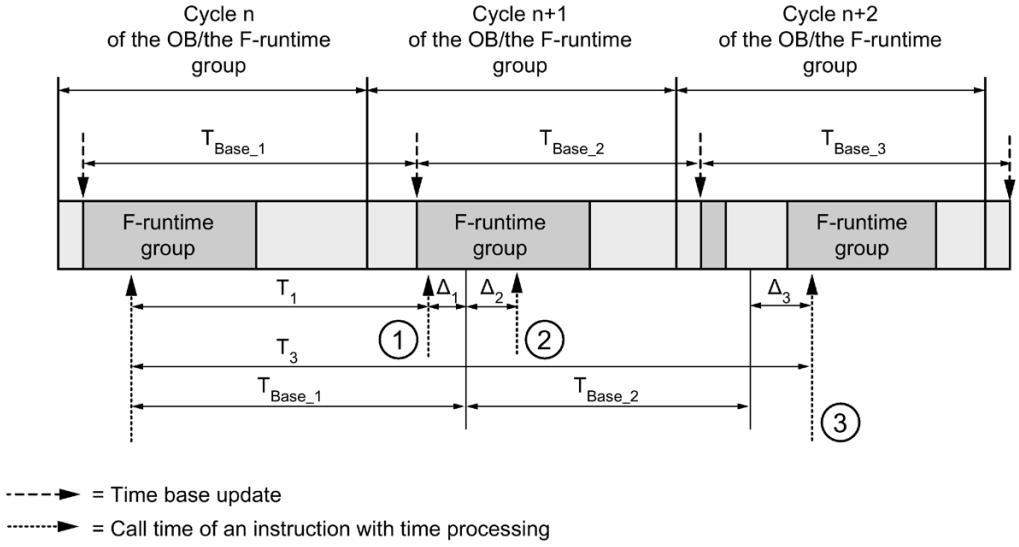

① For the first call in cycle n+1, the call time of the instruction relative to the start of the F-runtime group is earlier than that in cycle n by the amount of Δ_1, e.g. because parts of the safety program of the F-runtime group before the call time of the instruction in cycle n+1 are skipped. For the time update, the instruction takes account of time T_{Base_1} instead of the time T_1 that has actually elapsed in cycle n since the call.

② The instruction is called a second time in cycle n+1. This does not involve another time update (by Δ_2).

③ For the call in cycle n+2, the call time of the instruction relative to the start of the F-runtime group is later than that in cycle n by the amount of Δ_3, e.g. because the F-runtime group was interrupted by a higher priority interrupt before the call time of the instruction in cycle n+2. The instruction took into account time $T_{Base_1} + T_{Base_2}$ instead of the time T_3 that has actually elapsed in cycle n since the call. This would also be the case if no call occurred in cycle n+1.

Example

The following example shows how the instruction works:

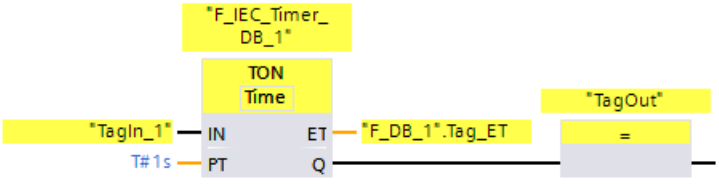

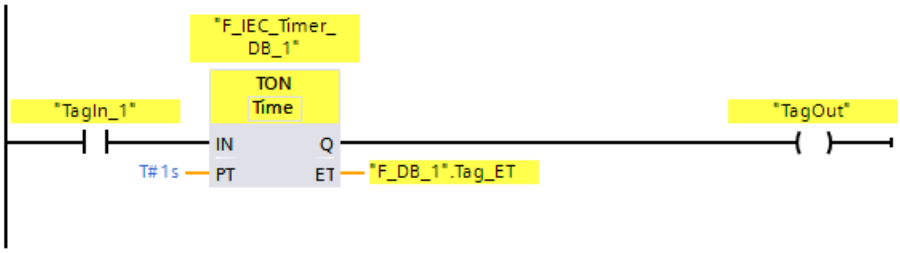

When the signal state of operand "TagIn_1" changes from "0" to "1", the "Generate on-delay" instruction is started and the period assigned at input PT (1 s) runs.

Operand "TagOut" at output Q feeds signal state "1" when the period has elapsed and remains set as long as operand "TagIn_1" still feeds signal state "1". Operand ""F_DB_1".Tag_ET" contains the current time value.

13.4.3 TOF: Generate off-delay (STEP 7 Safety V15.1)

Description

You use the "Generate off-delay" instruction to delay the resetting of output Q by the assigned period PT. Output Q is set if the result of logic operation (RLO) changes from "0" to "1" (positive edge) at input IN. When the signal state at input IN changes back to "0", the programmed period PT starts. Output Q remains set as long as period PT runs. After period PT expires, output Q is reset. If the signal state at input IN changes to "1" before period PT has expired, then the time is reset. The signal state at output Q remains at "1".

You can query the current time value at the output ET. The time value begins at T#0s and ends when the value of period PT is reached. After time PT has elapsed, output ET remains at its current value until input IN changes back to "1". If input IN changes to "1" before time PT has expired, the output ET is reset to value T#0.

Every call of the "Generate off-delay" instruction must be assigned a data area in which the instruction data are stored. The "Call options" dialog is automatically opened when the instruction is in inserted in the program for this reason. There you can create a data block (single instance) (e.g., F_IEC_Timer_DB_1) or a multi-instance (e.g., F_IEC_Timer_Instance_1) for the "Generate off-delay" instruction. Once it is created, you can find the new data block in the project tree in the "STEP 7 Safety" folder under "Program blocks > System blocks" or the multi-instance as a local tag in the "Static" section of the block interface. For more information, refer to the *help on STEP 7*.

WARNING

When using an instruction with time processing, take the following timing imprecision sources into account when determining your response times:

- Known timing imprecision (based on standard systems) resulting from cyclic processing
- Timing imprecision resulting from the update time of the time base used in the instruction (see figure in section "Timing imprecision resulting from the update time of the time base used in the instruction")
- Tolerance of internal time monitoring in the F-CPU
  - For time values up to 200 ms, a maximum of 4 ms
  - For time values greater than or equal to 200 ms, a maximum of 2% of the (assigned) time value

You must choose the interval between two call times of an instruction with time processing in such a way that the required response times are achieved, taking into account the possible timing imprecision. *(S034)*

The operating system resets the instances of the "Generate off-delay" instruction on a startup of the F-system.

Note

The functionality of this instruction differs from the corresponding standard TOF instruction in the following points:

- If the instruction is called while the time is running with PT = 0 ms, the outputs Q and ET are reset.
- If the instruction is called with PT < 0 ms, the outputs Q and ET are reset.

To restart the off-delay, another falling signal edge at input IN is required once PT is greater than 0 again.

Parameters

The following table shows the parameters of the instruction:

Parameter	Declaration	Data type	Description
IN	Input	BOOL	Start input
PT	Input	TIME	Duration of off delay; must be positive.
Q	Output	BOOL	Output that is reset after expiration of time PT.
ET	Output	TIME	Current time value

Instruction versions

A number of versions are available for this instruction:

Version	S7-300/400	S7-1200	S7-1500	Function
1.0	x	—	—	When projects that were created with *S7 Distributed Safety V5.4 SP5* are migrated, version 1.0 of the instruction is used automatically. If you want to compile a migrated safety program with *STEP 7 Safety Advanced* for the first time, we recommend that you first update to the latest available version of the instruction.
1.1	x	—	o	These versions have identical functions to version V1.0.
1.2	x	o	o	
1.3	x	o	o	
1.4	x	x	x	

o This version is no longer supported.

When a new F-CPU is created with *STEP 7 Safety*, the latest available version for the F-CPU created is automatically preset.

For more information on the use of instruction versions, refer to the help on *STEP 7* under "Using instruction versions".

Pulse diagram

The following figure shows the pulse diagram of the instruction "Generate off-delay":

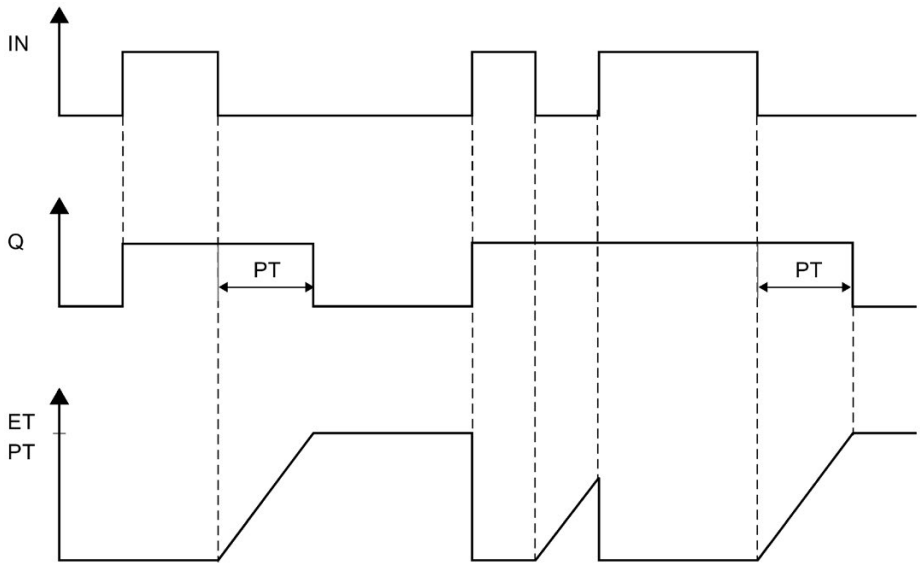

Timing imprecision resulting from the update time of the time base used in the instruction:

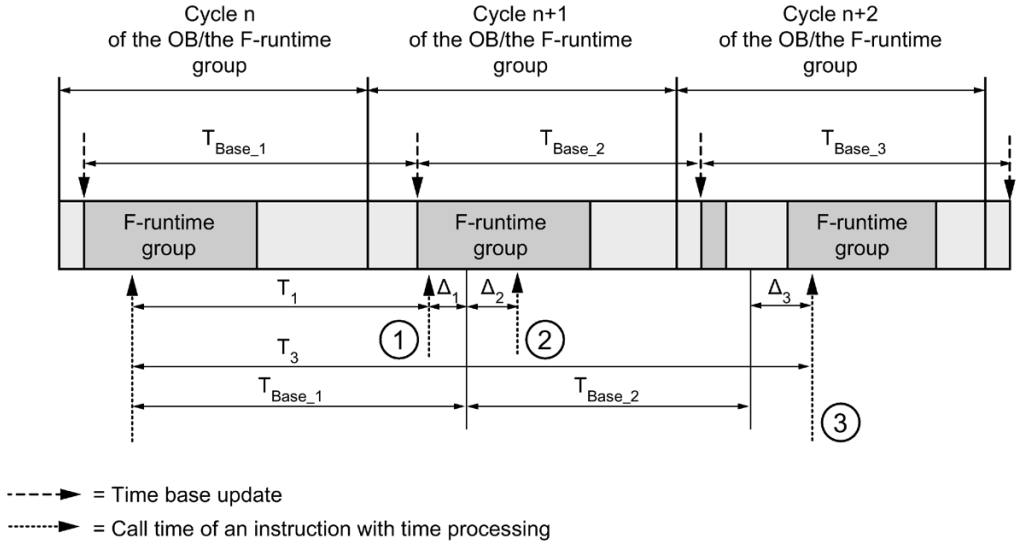

① For the first call in cycle n+1, the call time of the instruction relative to the start of the F-runtime group is earlier than that in cycle n by the amount of Δ_1, e.g. because parts of the safety program of the F-runtime group before the call time of the instruction in cycle n+1 are skipped. For the time update, the instruction takes account of time T_{Base_1} instead of the time T_1 that has actually elapsed in cycle n since the call.

② The instruction is called a second time in cycle n+1. This does not involve another time update (by Δ_2).

③ For the call in cycle n+2, the call time of the instruction relative to the start of the F-runtime group is later than that in cycle n by the amount of Δ_3, e.g. because the F-runtime group was interrupted by a higher priority interrupt before the call time of the instruction in cycle n+2. The instruction took into account time $T_{Base_1} + T_{Base_2}$ instead of the time T_3 that has actually elapsed in cycle n since the call. This would also be the case if no call occurred in cycle n+1.

Example

The following example shows how the instruction works:

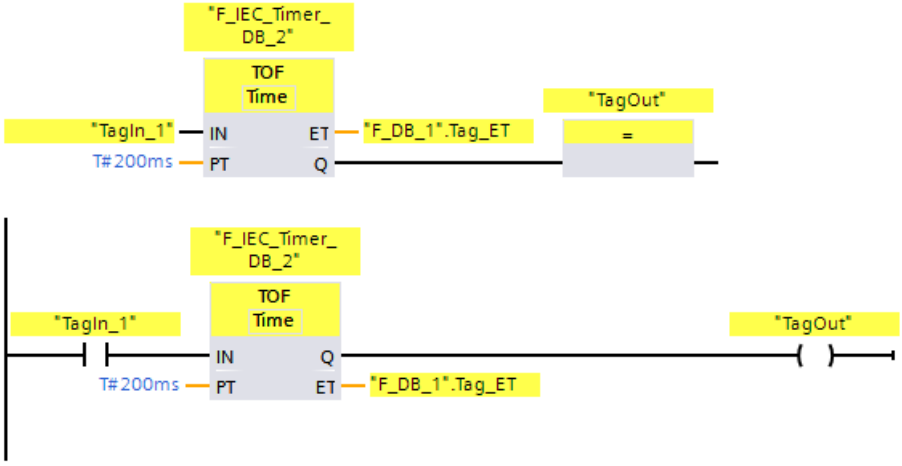

If the signal state of operand "TagIn_1" changes from "0" to "1", the signal state of operand"TagOut" at output Q is set to "1".

If the signal state of operand "TagIn_1" changes back to "0", the period assigned at input PT (200 ms) runs.

The "TagOut" operand at output Q is set back to "0" when the period expires. Operand ""F_DB_1".Tag_ET" contains the current time value.

13.5 Counter operations

13.5.1 CTU: Count up (STEP 7 Safety V15.1)

Description

You can use the "Count up" instruction to increment the value at output CV. When the signal state at the CU input changes from "0" to "1" (positive signal edge), the instruction is executed and the current count at the CV output increases by one. The count value is increased on each detection of a positive signal edge until it reaches the high limit of the data type specified at the CV output. When the high limit is reached, the signal state at the CU input no longer affects the instruction.

The counter status can be queried at output Q. The signal state at output Q is determined by parameter PV. When the current count value is greater than or equal to the value of parameter PV, output Q is set to signal state "1". In all other cases, the signal state at output Q is "0".

The value at output CV is reset to zero when the signal state at input R changes to "1". As long as signal state "1" exists at input R, the signal state at input CU has no effect on the instruction.

Every call of the "Count up" instruction must be assigned a data area in which the instruction data are stored. The "Call options" dialog is automatically opened when the instruction is inserted in the program for this reason. There you can create a data block (single instance) (e.g., F_IEC_Counter_DB_1) or a multi-instance (e.g., F_IEC_Counter_Instance_1) for the "Count up" instruction. Once it is created, you can find the new data block in the project tree in the "STEP 7 Safety" folder under "Program blocks > System blocks" or the multi-instance as a local tag in the "Static" section of the block interface. For more information, refer to the *help on STEP 7*.

The operating system resets the instances of the "Count up" instruction on a startup of the F-system.

Parameters

The following table shows the parameters of the instruction:

Parameter	Declaration	Data type	Description
CU	Input	BOOL	Counter input
R	Input	BOOL	Reset input
PV	Input	INT	Value for which output Q is set
Q	Output	BOOL	Counter status
CV	Output	INT	Current count value

Instruction versions

A number of versions are available for this instruction:

Version	S7-300/400	S7-1200	S7-1500	Function
1.0	x	—	—	When projects that were created with *S7 Distributed Safety V5.4 SP5* are migrated, version 1.0 of the instruction is used automatically. If you want to compile a migrated safety program with *STEP 7 Safety Advanced* for the first time, we recommend that you first update to the latest available version of the instruction.
1.1	x	—	o	These versions have identical functions to version V1.0.
1.2	x	o	o	
1.3	x	x	x	

o This version is no longer supported.

When a new F-CPU is created with *STEP 7 Safety*, the latest available version for the F-CPU created is automatically preset.

For more information on the use of instruction versions, refer to the help on *STEP 7* under "Using instruction versions".

Example

The following example shows how the instruction works:

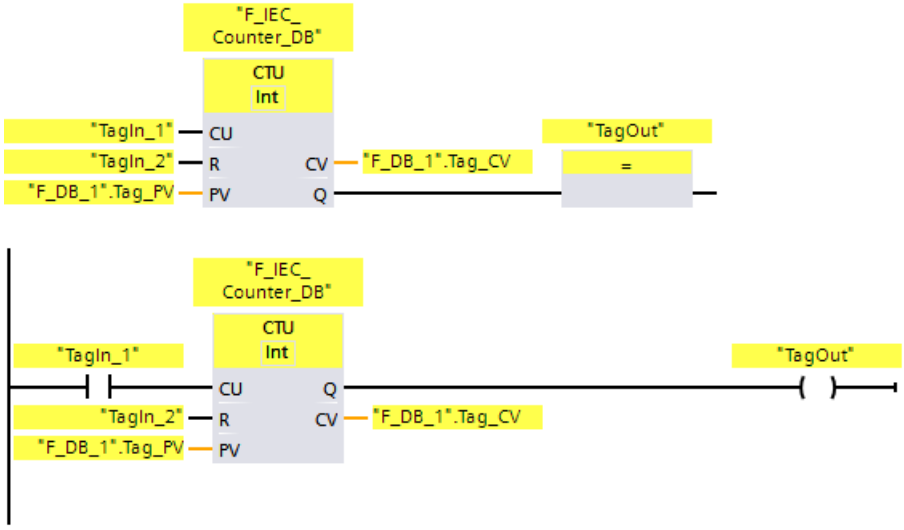

When the signal state of the "CU" input changes from "0" to "1", the "Count up" instruction is executed and the current count of the "CV" output increases by one. The count value is increased on every additional positive signal edge until the high limit of the specified data type (32767) is reached.

The value at the PV parameter is applied as the limit for determining the "TagOut" operands at the Q output. Output "Q" returns the signal state "1" as long as the current count is greater than or equal to the value of operand "PV". In all other cases, the "Q" output has the signal state "0".

13.5.2 CTD: Count down (STEP 7 Safety V15.1)

Description

You can use the "Count down" instruction to decrement the value at output CV. When the signal state at input CD changes from "0" to "1" (positive signal edge), the instruction is executed and the current count value at output CV is decreased by one. The count value is decreased on each detection of a positive signal edge until it reaches the low limit of the specified data type. When the low limit is reached, the signal state at input CD no longer affects the instruction.

The counter status can be queried at output Q. When the current count value is less than or equal to zero, output Q is set to signal state "1". In all other cases, the signal state at output Q is "0".

The value at output CV is set to the value of parameter "PV" when the signal state at input LD changes to "1". As long as signal state "1" exists at input LD, the signal state at input CD has no effect on the instruction.

Every call of the "Count down" instruction must be assigned a data area in which the instruction data are stored. The "Call options" dialog is automatically opened when the instruction is inserted in the program for this reason. There you can create a data block (single instance) (e.g., F_IEC_Counter_DB_1) or a multi-instance (e.g., F_IEC_Counter_Instance_1) for the "Count down" instruction. Once it is created, you can find the new data block in the project tree in the "STEP 7 Safety" folder under "Program blocks > System blocks" or the multi-instance as a local tag in the "Static" section of the block interface. For more information, refer to the *help on STEP 7*.

The operating system resets the instances of the "Count down" instruction on a startup of the F-system.

Parameters

The following table shows the parameters of the instruction:

Parameter	Declaration	Data type	Description
CD	Input	BOOL	Counter input
LD	Input	BOOL	Load input
PV	Input	INT	Value at the output CV when LD = 1 is set
Q	Output	BOOL	Counter status
CV	Output	INT	Current count value

Instruction versions

A number of versions are available for this instruction:

Version	S7-300/400	S7-1200	S7-1500	Function
1.0	x	—	—	When projects that were created with *S7 Distributed Safety V5.4 SP5* are migrated, version 1.0 of the instruction is used automatically. If you want to compile a migrated safety program with *STEP 7 Safety Advanced* for the first time, we recommend that you first update to the latest available version of the instruction.
1.1	x	—	o	These versions have identical functions to version V1.0.
1.2	x	o	o	
1.3	x	x	x	

o This version is no longer supported.

When a new F-CPU is created with *STEP 7 Safety*, the latest available version for the F-CPU created is automatically preset.

For more information on the use of instruction versions, refer to the help on *STEP 7* under "Using instruction versions".

Example

The following example shows how the instruction works:

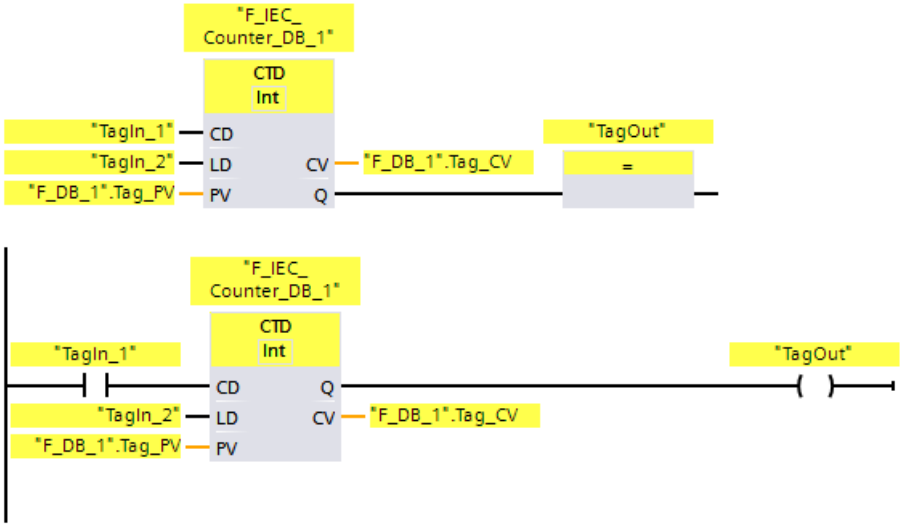

When the signal state of the "CD" input changes from "0" to "1", the "Count down" instruction is executed and the current count at "CV" output decreases by one. The count value is decreased on each additional positive signal edge until the low limit of the specified data type (-32768) is reached.

Output "Q" returns the signal state "1" as long as the current count is less than or equal to zero. In all other cases, output "Q" has signal state "0".

13.5.3 CTUD: Count up and down (STEP 7 Safety V15.1)

Description

You can use the "Count up and down" instruction to increment and decrement the count value at output CV. If the signal state at the CU input changes from "0" to "1" (positive signal edge), the current count at the CV output increases by one. If the signal state at input CD changes from "0" to "1" (positive signal edge), the count value at output CV is decreased by one. If a positive signal edge is present at inputs CU and CD in one program cycle, the current count value at output CV remains unchanged.

The count value can be increased until it reaches the high limit of the data type specified at output CV. When the high limit is reached, the count value is no longer incremented on a positive signal edge. When the low limit of the specified data type is reached, the count value is no longer decreased.

When the signal state at input LD changes to "1", the count value at output CV is set to the value of parameter PV. As long as signal state "1" exists at input LD, the signal state at inputs CU and CD has no effect on the instruction.

The count value is set to zero, when the signal state at input R changes to "1". As long as signal state "1" exists at input R, the signal state at inputs CU, CD, and LD has no effect on the "Count up and down" instruction.

The status of the up counter can be queried at output QU. When the current count value is greater than or equal to the value of parameter PV, output QU delivers signal state "1". In all other cases, the signal state at output QU is "0".

The status of the down counter can be queried at output QD. When the current count value is lesser than or equal to zero, output QD delivers signal state "1". In all other cases, the signal state at output QD is "0".

Every call of the "Count up and down" instruction must be assigned a data area in which the instruction data are stored. The "Call options" dialog is automatically opened when the instruction is inserted in the program for this reason. There you can create a data block (single instance) (e.g., F_IEC_Counter_DB_1) or a multi-instance (e.g., F_IEC_Counter_Instance_1) for the "Count up and down" instruction. Once it is created, you can find the new data block in the project tree in the "STEP 7 Safety" folder under "Program blocks > System blocks" or the multi-instance as a local tag in the "Static" section of the block interface. For more information, refer to the *help on STEP 7*.

The operating system resets the instances of the "Count up and down" instruction when the F-system is started up.

Parameters

The following table shows the parameters of the instruction:

Parameter	Declaration	Data type	Description
CU	Input	BOOL	Count up input
CD	Input	BOOL	Count down input
R	Input	BOOL	Reset input
LD	Input	BOOL	Load input

Parameter	Declaration	Data type	Description
PV	Input	INT	Value set at the output QU/ at which the output CV is set at LD = 1.
QU	Output	BOOL	Status of up counter
QD	Output	BOOL	Status of down counter
CV	Output	INT	Current count value

Instruction versions

A number of versions are available for this instruction:

Ver-sion	S7-300/400	S7-1200	S7-1500	Function
1.0	x	—	—	When projects that were created with *S7 Distributed Safety V5.4 SP5* are migrated, version 1.0 of the instruction is used automatically. If you want to compile a migrated safety program with *STEP 7 Safety Advanced* for the first time, we recommend that you first update to the latest available version of the instruction.
1.1	x	—	o	These versions have identical functions to version V1.0.
1.2	x	o	o	
1.3	x	x	x	

o This version is no longer supported.

When a new F-CPU is created with *STEP 7 Safety*, the latest available version for the F-CPU created is automatically preset.

For more information on the use of instruction versions, refer to the help on *STEP 7* under "Using instruction versions".

Example

The following example shows how the instruction works:

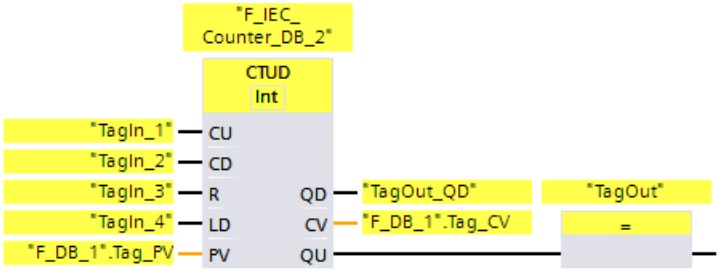

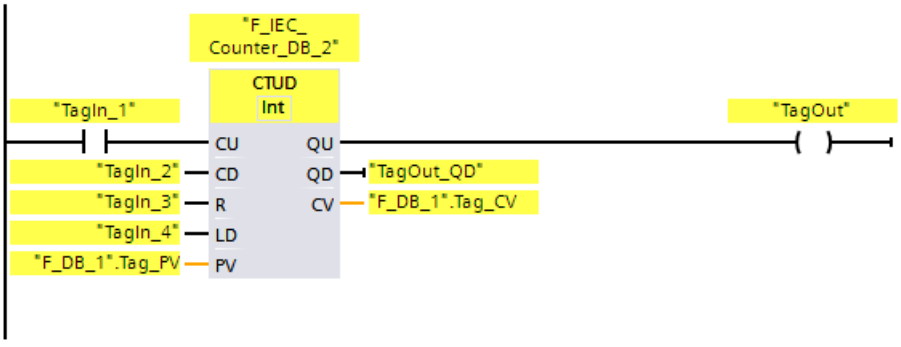

When the signal state at the "CU" input or at the "CD" input changes from "0" to "1" (positive signal edge), the "Count up and down" instruction is executed. When a positive signal edge is present at the "CU" input, the current count of the "CV" output increases by one. When a positive signal edge is present at the "CD" input, the current count at the "CV" output decreases by one. The count value is increased on each positive signal edge at the CU input until it reaches the high limit of 32767. The count value is decreased on each positive signal edge at the CD input until it reaches the low limit of -32768.

Output "QU" returns the signal state "1" as long as the current count is greater than or equal to the value at the "PV" input. In all other cases, output "QU" has signal state "0".

Output "QD" returns the signal state "1" as long as the current count is less than or equal to zero. In all other cases, output "QD" has signal state "0".

13.6 Comparator operations

13.6.1 CMP ==: Equal (STEP 7 Safety V15.1)

Description

You can use the "Equal" instruction to determine if the first comparison value (IN1 or <Operand1>) is equal to the second comparison value (IN2 or <Operand2>).

If the condition of the comparison is satisfied, the instruction returns result of logic operation (RLO) "1". If the condition of the comparison is not satisfied, the instruction returns RLO "0".

For LAD:

The RLO of the instruction is linked to the RLO of the entire current path as follows:

- By AND, when the comparison instruction is connected in series.
- By OR, when the comparison instruction is connected in parallel.

Enter the first comparison value (<Operand1>) in the operand placeholder above the instruction. Enter the second comparison value (<Operand2>) in the operand placeholder below the instruction.

Parameters

The following table shows the parameters of the instruction:

Parameter	Declaration	Data type	Description
FBD: IN1 LAD: <Operand1>	Input	INT, DINT, TIME, WORD, (S7-300/400) DWORD	First value to compare
FBD: IN2 LAD: <Operand2>	Input	INT, DINT, TIME, WORD, (S7-300/400) DWORD	Second value to compare

You can select the data type of the instruction in the "<???>" drop-down list in the instruction box.

Example

The following example shows how the instruction works:

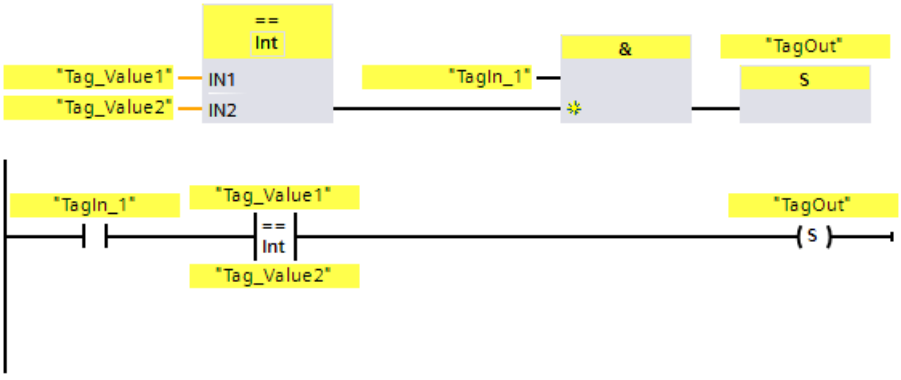

Output "TagOut" is set when the following conditions are fulfilled:

- "Tag_In1" has signal state "1".
- The condition of the comparison instruction is fulfilled ("Tag_Value1" = "Tag_Value2").

13.6.2 CMP <>: Not equal (STEP 7 Safety V15.1)

Description

You can use the "Not equal" instruction to determine if the first comparison value (IN1 or <Operand1>) is not equal to the second comparison value (IN2 or <Operand2>).

If the condition of the comparison is satisfied, the instruction returns result of logic operation (RLO) "1". If the condition of the comparison is not satisfied, the instruction returns RLO "0".

For LAD:

The RLO of the instruction is linked to the RLO of the entire current path as follows:

- By AND, when the comparison instruction is connected in series.
- By OR, when the comparison instruction is connected in parallel.

Enter the first comparison value (<Operand1>) in the operand placeholder above the instruction. Enter the second comparison value (<Operand2>) in the operand placeholder below the instruction.

Parameters

The following table shows the parameters of the instruction:

Parameter	Declaration	Data type	Description
FBD: IN1 LAD: <Operand1>	Input	INT, DINT, TIME, WORD, (S7-300/400) DWORD	First value to compare
FBD: IN2 LAD: <Operand2>	Input	INT, DINT, TIME, WORD, (S7-300/400) DWORD	Second value to compare

You can select the data type of the instruction in the "<???>" drop-down list in the instruction box.

Example

The following example shows how the instruction works:

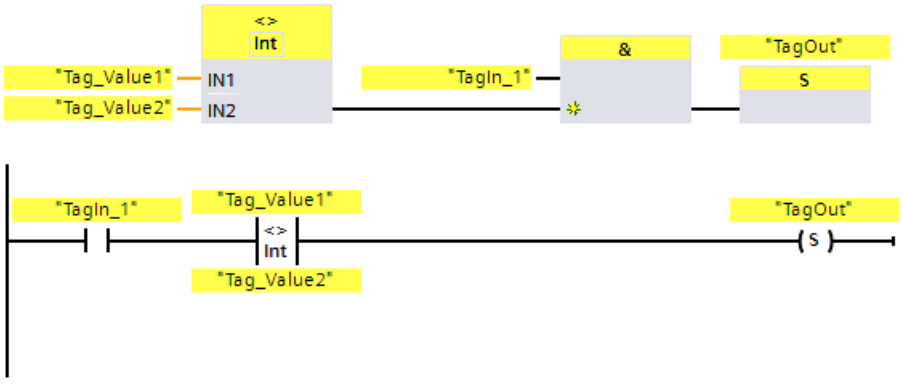

Output "TagOut" is set when the following conditions are fulfilled:

- "Tag_In1" has signal state "1".
- The condition of the comparison instruction is fulfilled ("Tag_Value1" <> "Tag_Value2").

13.6.3 CMP >=: Greater or equal (STEP 7 Safety V15.1)

Description

You can use the "Greater or equal" instruction to determine if the first comparison value (IN1 or <Operand1>) is greater than or equal to the second comparison value (IN2 or <Operand2>). Both comparison values must be of the same data type.

If the condition of the comparison is satisfied, the instruction returns result of logic operation (RLO) "1". If the condition of the comparison is not satisfied, the instruction returns RLO "0".

For LAD:

The RLO of the instruction is linked to the RLO of the entire current path as follows:

- By AND, when the comparison instruction is connected in series.
- By OR, when the comparison instruction is connected in parallel.

Enter the first comparison value (<Operand1>) in the operand placeholder above the instruction. Enter the second comparison value (<Operand2>) in the operand placeholder below the instruction.

Parameters

The following table shows the parameters of the instruction:

Parameter	Declaration	Data type	Description
FBD: IN1 LAD: <Operand1>	Input	INT, DINT, TIME	First value to compare
FBD: IN2 LAD: <Operand2>	Input	INT, DINT, TIME	Second value to compare

You can select the data type of the instruction in the "<???>" drop-down list in the instruction box.

Example

The following example shows how the instruction works:

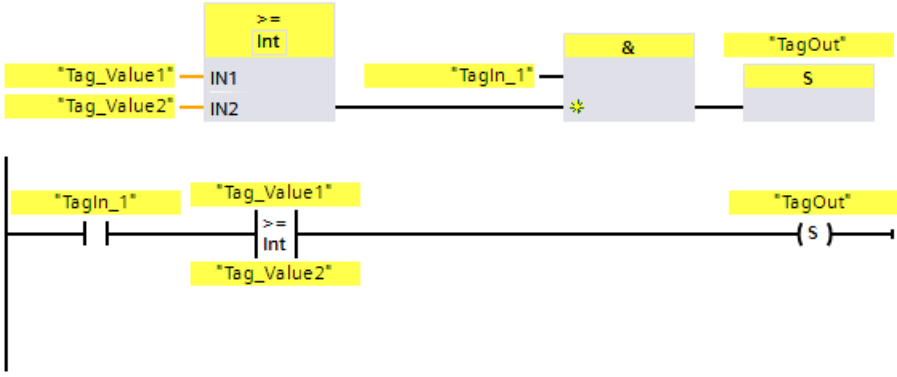

Output "TagOut" is set when the following conditions are fulfilled:

- "Tag_In1" has signal state "1".
- The condition of the comparison instruction is fulfilled ("Tag_Value1" >= "Tag_Value2").

13.6.4 CMP <=: Less or equal (STEP 7 Safety V15.1)

Description

You can use the "Less or equal" instruction to determine if the first comparison value (IN1 or <Operand1>) is less than or equal to the second comparison value (IN2 or <Operand2>). Both comparison values must be of the same data type.

If the condition of the comparison is satisfied, the instruction returns result of logic operation (RLO) "1". If the condition of the comparison is not satisfied, the instruction returns RLO "0".

For LAD:

The RLO of the instruction is linked to the RLO of the entire current path as follows:

- By AND, when the comparison instruction is connected in series.
- By OR, when the comparison instruction is connected in parallel.

Enter the first comparison value (<Operand1>) in the operand placeholder above the instruction. Enter the second comparison value (<Operand2>) in the operand placeholder below the instruction.

Parameters

The following table shows the parameters of the instruction:

Parameter	Declaration	Data type	Description
FBD: IN1 LAD: <Operand1>	Input	INT, DINT, TIME	First value to compare
FBD: IN2 LAD: <Operand2>	Input	INT, DINT, TIME	Second value to compare

You can select the data type of the instruction in the "<???>" drop-down list in the instruction box.

Example

The following example shows how the instruction works:

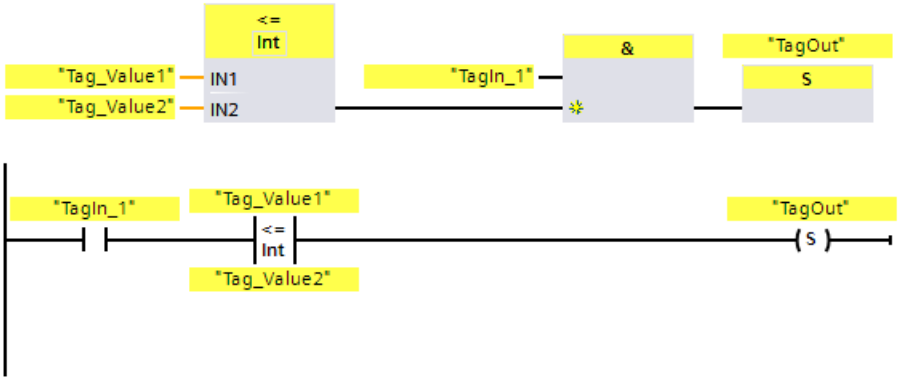

Output "TagOut" is set when the following conditions are fulfilled:

- "Tag_In1" has signal state "1".
- The condition of the comparison instruction is fulfilled ("Tag_Value1" <= "Tag_Value2").

13.6.5 CMP >: Greater than (STEP 7 Safety V15.1)

Description

You can use the "Greater than" instruction to determine if the first comparison value (IN1 or <Operand1>) is greater than the second comparison value (IN2 or <Operand2>). Both comparison values must be of the same data type.

If the condition of the comparison is satisfied, the instruction returns result of logic operation (RLO) "1". If the condition of the comparison is not satisfied, the instruction returns RLO "0".

For LAD:

The RLO of the instruction is linked to the RLO of the entire current path as follows:

- By AND, when the comparison instruction is connected in series.
- By OR, when the comparison instruction is connected in parallel.

Enter the first comparison value (<Operand1>) in the operand placeholder above the instruction. Enter the second comparison value (<Operand2>) in the operand placeholder below the instruction.

Parameters

The following table shows the parameters of the instruction:

Parameter	Declaration	Data type	Description
FBD: IN1 LAD: <Operand1>	Input	INT, DINT, TIME	First value to compare
FBD: IN2 LAD: <Operand2>	Input	INT, DINT, TIME	Second value to compare

You can select the data type of the instruction in the "<???>" drop-down list in the instruction box.

Example

The following example shows how the instruction works:

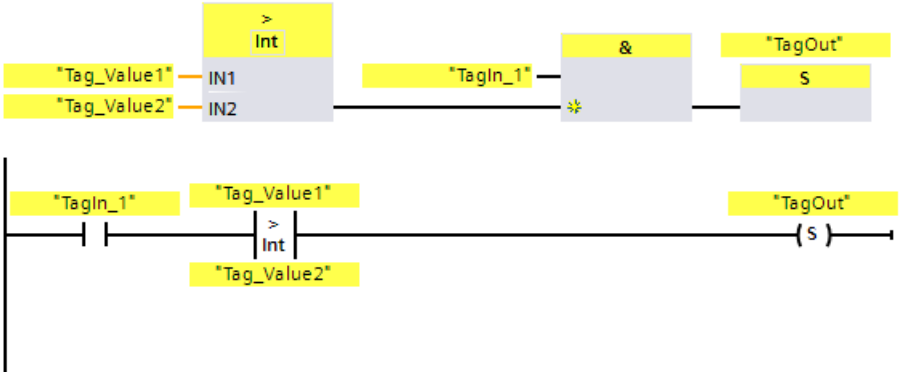

Output "TagOut" is set when the following conditions are fulfilled:

- "Tag_In1" has signal state "1".
- The condition of the comparison instruction is fulfilled ("Tag_Value1" > "Tag_Value2").

13.6.6 CMP <: Less than (STEP 7 Safety V15.1)

Description

You can use the "Less than" instruction to determine if the first comparison value (IN1 or <Operand1>) is less than the second comparison value (IN2 or <Operand2>). Both comparison values must be of the same data type.

If the condition of the comparison is satisfied, the instruction returns result of logic operation (RLO) "1". If the condition of the comparison is not satisfied, the instruction returns RLO "0".

For LAD:

The RLO of the instruction is linked to the RLO of the entire current path as follows:

- By AND, when the comparison instruction is connected in series.
- By OR, when the comparison instruction is connected in parallel.

Enter the first comparison value (<Operand1>) in the operand placeholder above the instruction. Enter the second comparison value (<Operand2>) in the operand placeholder below the instruction.

Parameters

The following table shows the parameters of the instruction:

Parameter	Declaration	Data type	Description
FBD: IN1 LAD: <Operand1>	Input	INT, DINT, TIME	First value to compare
FBD: IN2 LAD: <Operand2>	Input	INT, DINT, TIME	Second value to compare

You can select the data type of the instruction in the "<???>" drop-down list in the instruction box.

Example

The following example shows how the instruction works:

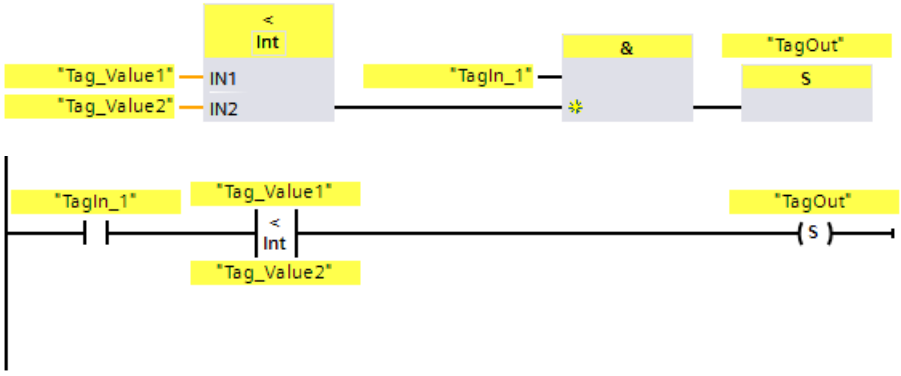

Output "TagOut" is set when the following conditions are fulfilled:

- "Tag_In1" has signal state "1".
- The condition of the comparison instruction is fulfilled ("Tag_Value1" < "Tag_Value2").

13.7 Math functions

13.7.1 ADD: Add (STEP 7 Safety V15.1)

Description

You can use the "Add" instruction to add the value at input IN1 and the value at input IN2 and query the sum at the OUT output (OUT = IN1 + IN2).

Enable input "EN" or (S7-300, S7-400) of the "ENO" enable output cannot be connected. The instruction is therefore always executed regardless of the signal state at enable input "EN".

Note

When the result of the instruction is located outside the permitted range for this data type, the F-CPU may switch to STOP. The cause of the diagnostics event is entered in the diagnostics buffer of the F-CPU.

You must therefore ensure that the permitted range for the data type is observed when creating the program!

(S7-1200, S7-1500) You can avoid a STOP of the F-CPU by connecting the ENO enable output, thereby programming overflow detection.

Note the following:

- If the result of the instruction is located outside the permitted range for this data type, the enable output ENO returns the signal state "0".
- The result of the instruction reacts like the analogous instruction in a standard block.
- The execution time of the instruction is extended (see also Excel file for response time calculation (http://support.automation.siemens.com/WW/view/en/49368678/133100)).
- Work memory requirement of safety program is increased.

(S7-300, S7-400) You can avoid a STOP of the F-CPU by inserting a "Get status bit OV" instruction in the next network, thereby programming overflow detection.

Note the following:

- The result of the instruction reacts like the analogous instruction in a standard block.
- The network with the "Get status bit OV" instruction must not contain any jump labels.
- The execution time of the instruction is extended (see also Excel file for response time calculation (http://support.automation.siemens.com/WW/view/en/49368678/133100)).
- A warning is issued if you do not insert a "Get status bit OV" instruction.
- Work memory requirement of safety program is increased.

Parameters

The following table shows the parameters of the instruction:

Parameter	Declaration	Data type	Description
ENO	Output	BOOL	(S7-1200, S7-1500) Enable output
IN1	Input	INT, DINT	First addend
IN2	Input	INT, DINT	Second addend
OUT	Output	INT, DINT	Total

You select the data type of the instruction in the "<???>" drop-down list in the instruction box.

Example for S7-300/400 F-CPUs

The following example shows how the instruction works:

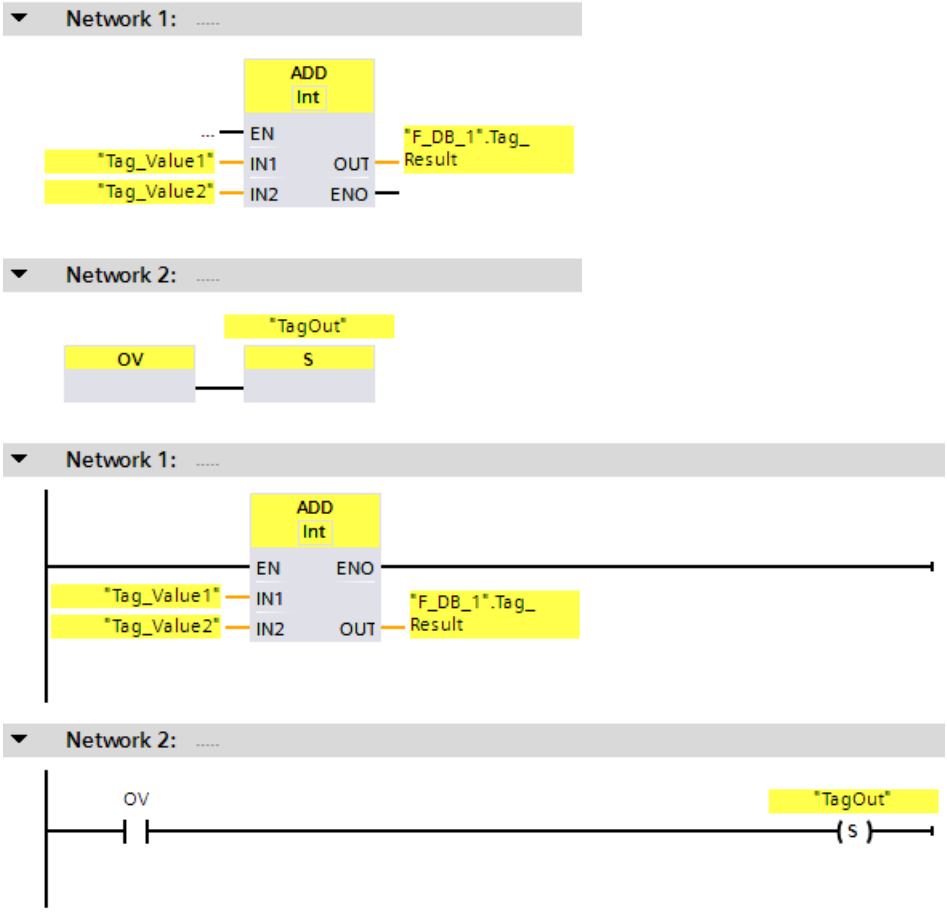

The "Add" instruction is always executed regardless of the signal state at enable input EN.

The value of the "Tag_Value1" operand is added to value of the "Tag_Value2" operand. The result of the addition is stored in the ""F_DB_1".Tag_Result" operand.

If needed, you can also store the signal status of the ENO enable output in an (F-)DB, and centrally evaluate whether overflows have occurred for all or one group of instructions with overflow detection.

When an overflow occurs during execution of the "Add" instruction, the status bit OV is set to "1". In network 2, following the query of the status bit OV, the "Set output" (S) instruction is executed and the "TagOut" operand is set.

Example for S7-1200/1500 F-CPUs

The following example shows how the instruction works:

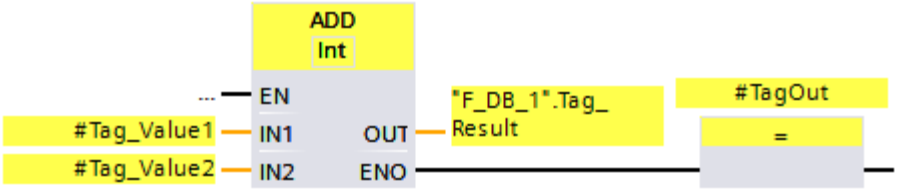

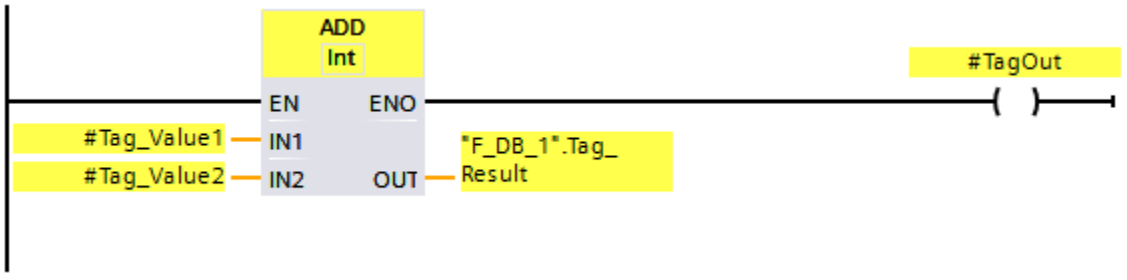

The "Add" instruction is always executed regardless of the signal state at enable input EN.

The value of the "#Tag_Value1" operand is added to value of the "#Tag_Value2" operand. The result of the addition is stored in the ""F_DB_1".Tag_Result" operand.

When no overflow occurs during execution of the "Add" instruction, the ENO enable output has the signal state "1" and the "#TagOut" operand is set.

If needed, you can also store the signal status of the ENO enable output in an (F-)DB, and centrally evaluate whether overflows have occurred for all or one group of instructions with overflow detection.

See also

---| |--- OV: Get status bit OV (STEP 7 Safety Advanced V15.1) (S7-300, S7-400) (Page 585)

---| / |--- OV: Get negated status bit OV (STEP 7 Safety Advanced V15.1) (S7-300, S7-400) (Page 586)

13.7.2 SUB: Subtract (STEP 7 Safety V15.1)

Description

You can use the "Subtract" instruction to subtract the value at input IN2 from the value at input IN1 and query the difference at the OUT output (OUT = IN1 – IN2).

Enable input "EN" or (S7-300, S7-400) of the "ENO" enable output cannot be connected. The instruction is therefore always executed regardless of the signal state at enable input "EN".

Note

When the result of the instruction is located outside the permitted range for this data type, the F-CPU may switch to STOP. The cause of the diagnostics event is entered in the diagnostics buffer of the F-CPU.

You must therefore ensure that the permitted range for the data type is observed when creating the program!

(S7-1200, S7-1500) You can avoid a STOP of the F-CPU by connecting the ENO enable output, thereby programming overflow detection.

Note the following:

- If the result of the instruction is located outside the permitted range for this data type, the enable output ENO returns the signal state "0".
- The result of the instruction reacts like the analogous instruction in a standard block.
- The execution time of the instruction is extended (see also Excel file for response time calculation (http://support.automation.siemens.com/WW/view/en/49368678/133100)).
- Work memory requirement of safety program is increased.

(S7-300, S7-400) You can avoid a STOP of the F-CPU by inserting a "Get status bit OV" instruction in the next network, thereby programming overflow detection.

Note the following:

- The result of the instruction reacts like the analogous instruction in a standard block.
- The network with the "Get status bit OV" instruction must not contain any jump labels.
- The execution time of the instruction is extended (see also Excel file for response time calculation (http://support.automation.siemens.com/WW/view/en/49368678/133100)).
- A warning is issued if you do not insert a "Get status bit OV" instruction.
- Work memory requirement of safety program is increased.

Parameters

The following table shows the parameters of the instruction:

Parameter	Declaration	Data type	Description
ENO	Output	BOOL	(S7-1200, S7-1500) Enable output
IN1	Input	INT, DINT	Minuend

Parameter	Declaration	Data type	Description
IN2	Input	INT, DINT	Subtrahend
OUT	Output	INT, DINT	Difference

You select the data type of the instruction in the "<???>" drop-down list in the instruction box.

Example for S7-300/400 F-CPUs

The following example shows how the instruction works:

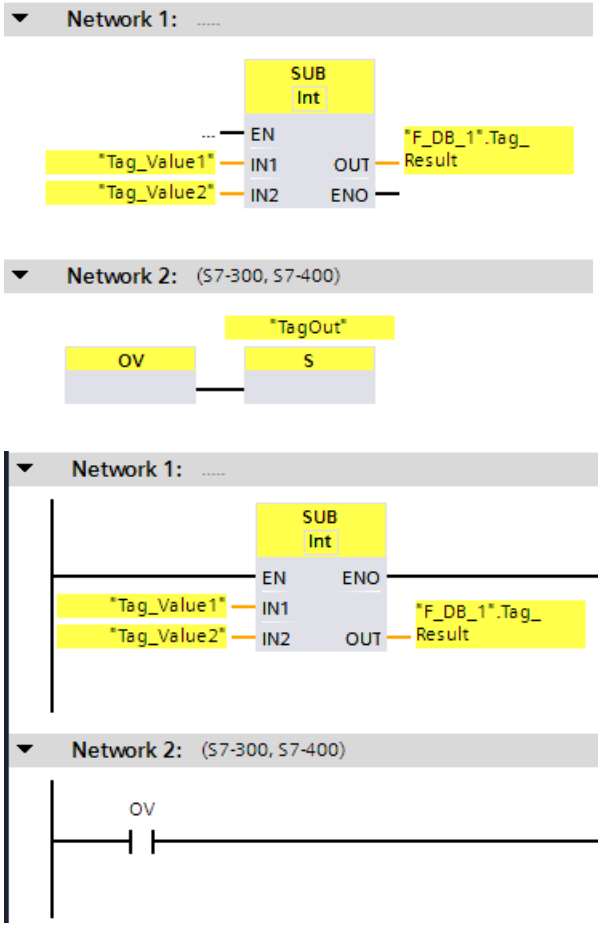

The "Subtract" instruction is always executed regardless of the signal state at enable input EN.

The value of the "Tag_Value2" operand is subtracted from the value of the "Tag_Value1" operand. The result of the addition is stored in the ""F_DB_1".Tag_Result" operand.

When an overflow occurs during execution of the "Subtract" instruction, the status bit OV is set to "1". In network 2, following the query of the status bit OV, the "Set output" (S) instruction is executed and the "TagOut" operand is set.

Example for S7-1200/1500 F-CPUs

The following example shows how the instruction works:

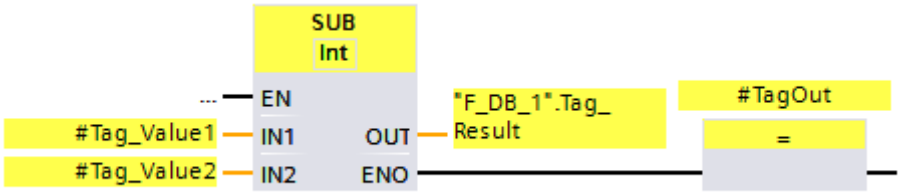

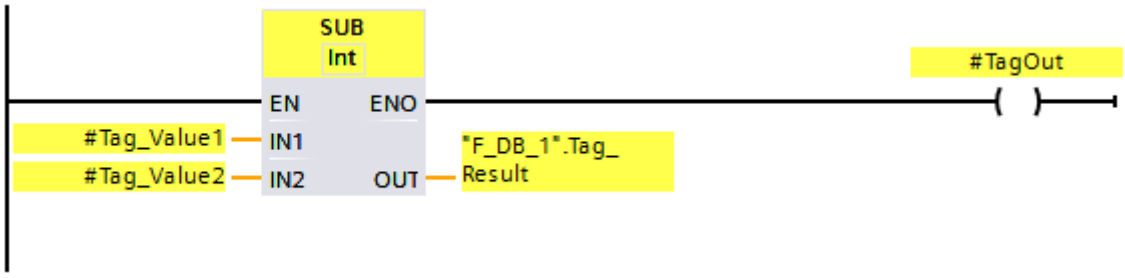

The "Subtract" instruction is always executed regardless of the signal state at enable input EN.

The value of the "#Tag_Value2" operand is subtracted from the value of the "#Tag_Value1" operand. The result of the addition is stored in the ""F_DB_1".Tag_Result" operand.

When no overflow occurs during execution of the "Subtract" instruction, the ENO enable output has the signal state "1" and the "#TagOut" operand is set.

See also

---| |--- OV: Get status bit OV (STEP 7 Safety Advanced V15.1) (S7-300, S7-400) (Page 585)

---| / |--- OV: Get negated status bit OV (STEP 7 Safety Advanced V15.1) (S7-300, S7-400) (Page 586)

13.7.3 MUL: Multiply (STEP 7 Safety V15.1)

Description

You can use the "Multiply" instruction to multiply the value at input IN1 by the value at input IN2 and query the product at output OUT (OUT = IN1 × IN2).

Enable input "EN" or (S7-300, S7-400) of the "ENO" enable output cannot be connected. The instruction is therefore always executed regardless of the signal state at enable input "EN".

Note

When the result of the instruction is located outside the permitted range for this data type, the F-CPU may switch to STOP. The cause of the diagnostics event is entered in the diagnostics buffer of the F-CPU.

You must therefore ensure that the permitted range for the data type is observed when creating the program!

(S7-1200, S7-1500) You can avoid a STOP of the F-CPU by connecting the ENO enable output, thereby programming overflow detection.

Note the following:

- If the result of the instruction is located outside the permitted range for this data type, the enable output ENO returns the signal state "0".
- The result of the instruction reacts like the analogous instruction in a standard block.
- The execution time of the instruction is extended (see also Excel file for response time calculation (http://support.automation.siemens.com/WW/view/en/49368678/133100)).
- Work memory requirement of safety program is increased.

(S7-300, S7-400) You can avoid a STOP of the F-CPU by inserting a "Get status bit OV" instruction in the next network, thereby programming overflow detection.

Note the following:

- The result of the instruction reacts like the analogous instruction in a standard block.
- The network with the "Get status bit OV" instruction must not contain any jump labels.
- The execution time of the instruction is extended (see also Excel file for response time calculation (http://support.automation.siemens.com/WW/view/en/49368678/133100)).
- A warning is issued if you do not insert a "Get status bit OV" instruction.
- Work memory requirement of safety program is increased.

Parameters

The following table shows the parameters of the instruction:

Parameter	Declaration	Data type	Description
ENO	Output	BOOL	(S7-1200, S7-1500) Enable output
IN1	Input	INT, DINT	Multiplier
IN2	Input	INT, DINT	Multiplicand
OUT	Output	INT, DINT	Product

You select the data type of the instruction in the "<???>" drop-down list in the instruction box.

Example for S7-300/400 F-CPUs

The following example shows how the instruction works:

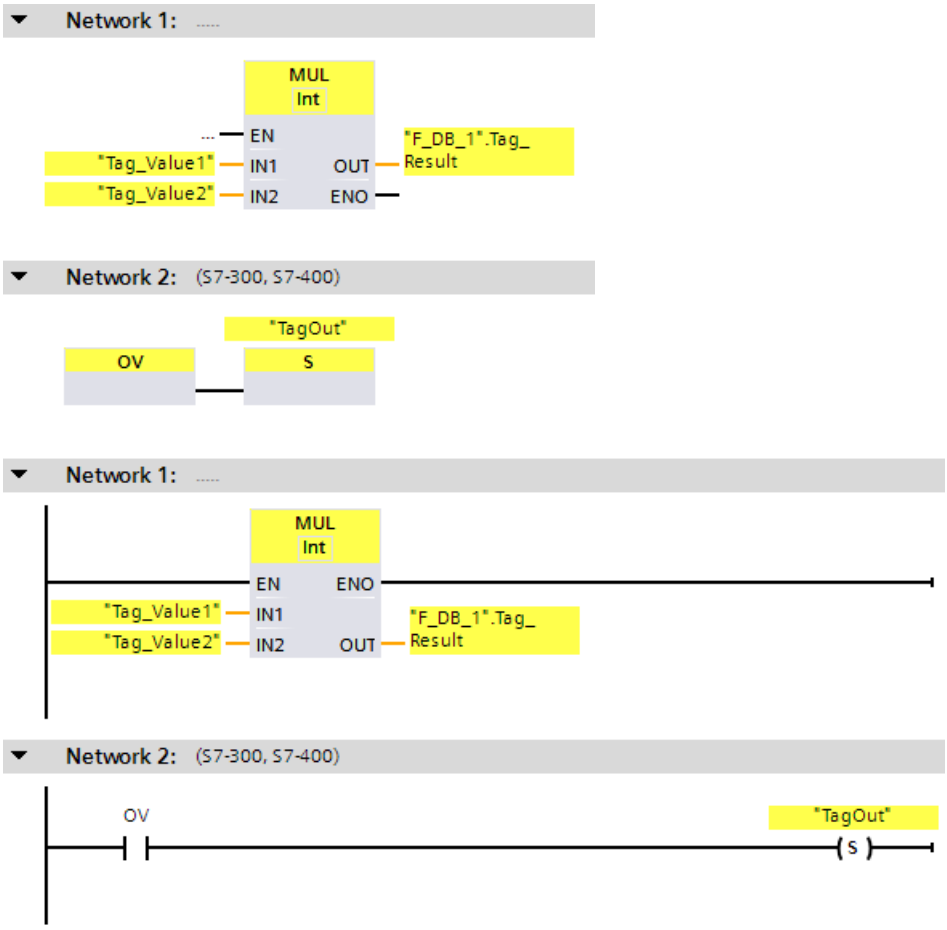

The "Multiply" instruction is always executed regardless of the signal state at enable input EN.

The value of the "Tag_Value1" operand is multiplied by the value of the "Tag_Value2" operand. The result of the multiplication is stored in the ""F_DB_1".Tag_Result" operand.

When an overflow occurs during execution of the "Multiply" instruction, the status bit OV is set to "1". In network 2, following the query of the status bit OV, the "Set output" (S) instruction is executed and the "TagOut" operand is set.

Example for S7-1200/1500 F-CPUs

The following example shows how the instruction works:

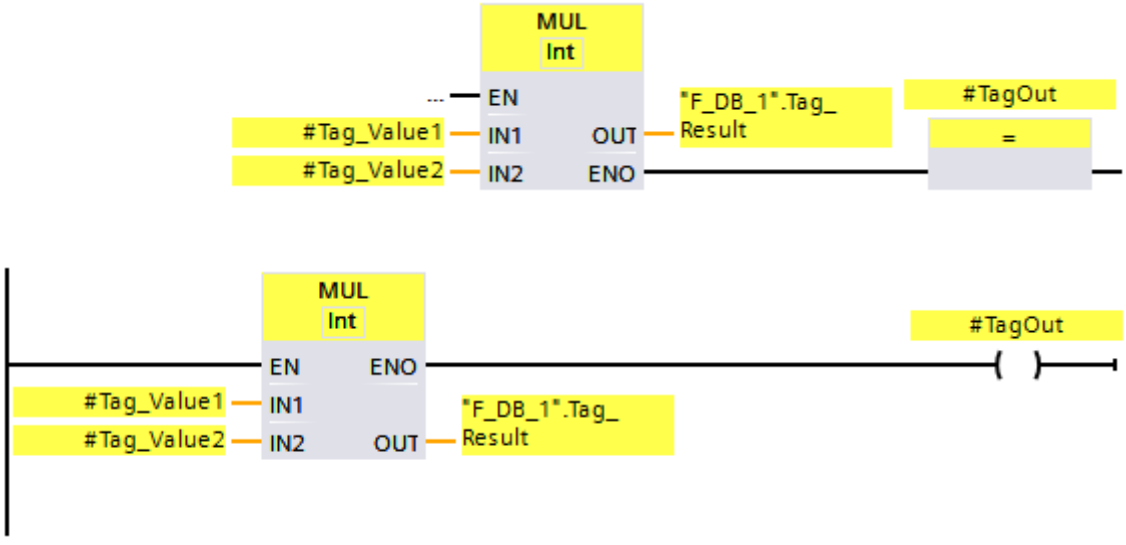

The "Multiply" instruction is always executed regardless of the signal state at enable input EN.

The value of the "#Tag_Value1" operand is multiplied by the value of the "#Tag_Value2" operand. The result of the multiplication is stored in the ""F_DB_1".Tag_Result" operand.

When no overflow occurs during execution of the "Multiply" instruction, the ENO enable output has the signal state "1" and the "#TagOut" operand is set.

See also

---| |--- OV: Get status bit OV (STEP 7 Safety Advanced V15.1) (S7-300, S7-400) (Page 585)

---| / |--- OV: Get negated status bit OV (STEP 7 Safety Advanced V15.1) (S7-300, S7-400) (Page 586)

13.7.4 DIV: Divide (STEP 7 Safety V15.1)

Description

You can use the "Divide" instruction to divide the value at input IN1 by the value at input IN2 and query the quotient at the OUT output (OUT = IN1 / IN2).

Enable input "EN" or (S7-300, S7-400) of the "ENO" enable output cannot be connected. The instruction is therefore always executed regardless of the signal state at enable input "EN".

Note

When the result of the instruction is located outside the permitted range for this data type, the F-CPU may switch to STOP. The cause of the diagnostics event is entered in the diagnostics buffer of the F-CPU.

You must therefore ensure that the permitted range for the data type is observed when creating the program!

(S7-1200, S7-1500) You can avoid a STOP of the F-CPU by connecting the ENO enable output, thereby programming overflow detection.

Note the following:

- If the result of the instruction is located outside the permitted range for this data type, the enable output ENO returns the signal state "0".
- The result of the instruction reacts like the analogous instruction in a standard block.
- The execution time of the instruction is extended (see also Excel file for response time calculation (http://support.automation.siemens.com/WW/view/en/49368678/133100)).
- Work memory requirement of safety program is increased.

(S7-300, S7-400) You can avoid a STOP of the F-CPU by inserting a "Get status bit OV" instruction in the next network, thereby programming overflow detection.

Note the following:

- The result of the instruction reacts like the analogous instruction in a standard block.
- The network with the "Get status bit OV" instruction must not contain any jump labels.
- The execution time of the instruction is extended (see also Excel file for response time calculation (http://support.automation.siemens.com/WW/view/en/49368678/133100)).
- A warning is issued if you do not insert a "Get status bit OV" instruction.
- Work memory requirement of safety program is increased.

Note

S7-300/400, S7-1200/1500 (enable output ENO connected):

If the divisor (input IN2) of a DIV instruction = 0, the quotient of the division (result of division at output OUT) = 0. The result reacts like the corresponding instruction in a standard block. The F-CPU does *not* go to STOP mode.

S7-1200/1500 (enable output ENO not connected):

If the divisor (input IN2) of a DIV instruction = 0, the F-CPU goes to STOP. The cause of the diagnostics event is entered in the diagnostics buffer of the F-CPU. We recommend that you rule out a divisor (input IN2) = 0 when creating the program.

Parameters

The following table shows the parameters of the instruction:

Parameter	Declaration	Data type	Description
ENO	Output	BOOL	(S7-1200, S7-1500) Enable output
IN1	Input	INT, DINT	Dividend
IN2	Input	INT, DINT	Divisor
OUT	Output	INT, DINT	Quotient

You select the data type of the instruction in the "<???>" drop-down list in the instruction box.

Example for S7-300/400 F-CPUs

The following example shows how the instruction works:

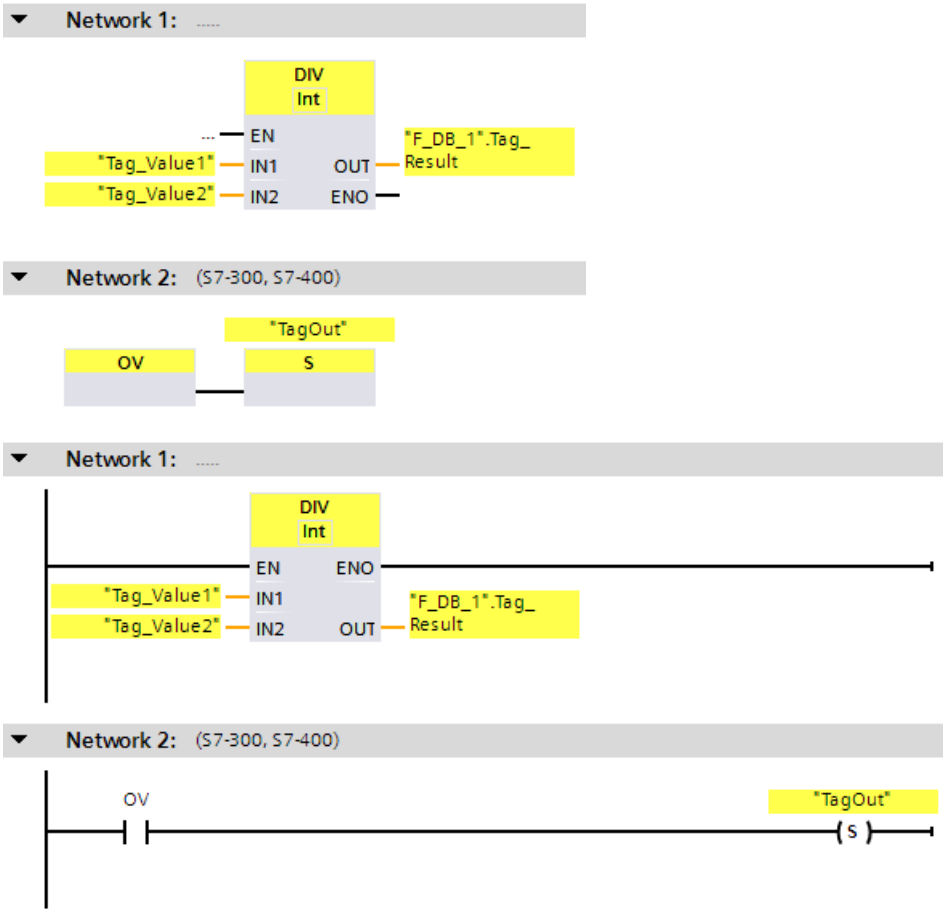

The "Divide" instruction is always execute regardless of the signal state at enable input EN.

The value of the "Tag_Value1" operand is divided by the value of the "Tag_Value2" operand. The result of the division is stored in the ""F_DB_1".Tag_Result" operand.

When an overflow occurs during execution of the "Divide" instruction, the status bit OV is set to "1". In network 2, following the query of the status bit OV, the "Set output" (S) instruction is executed and the "TagOut" operand is set.

Example for S7-1200/1500 F-CPUs

The following example shows how the instruction works:

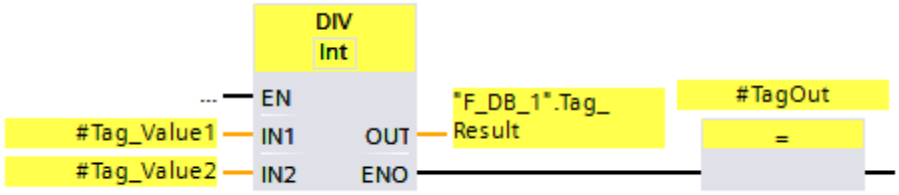

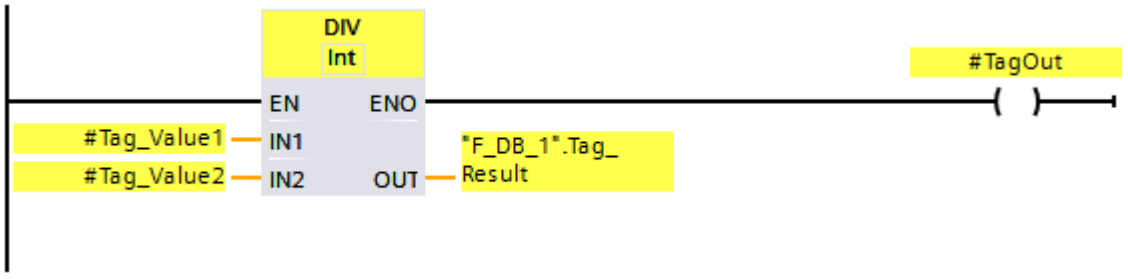

The "Divide" instruction is always execute regardless of the signal state at enable input EN.

The value of the "#Tag_Value1" operand is divided by the value of the "#Tag_Value2" operand. The result of the division is stored in the ""F_DB_1".Tag_Result" operand.

When no overflow occurs during execution of the "Divide" instruction, the ENO enable output has the signal state "1" and the "#TagOut" operand is set.

See also

---| |--- OV: Get status bit OV (STEP 7 Safety Advanced V15.1) (S7-300, S7-400) (Page 585)

---| / |--- OV: Get negated status bit OV (STEP 7 Safety Advanced V15.1) (S7-300, S7-400) (Page 586)

13.7.5 NEG: Create twos complement (STEP 7 Safety V15.1)

Description

You can use the "Create twos complement" instruction to change the sign of the value at input IN input and query the result at output OUT. If there is a positive value at input IN, for example, the negative equivalent of this value is sent to output OUT.

Enable input "EN" or (S7-300, S7-400) of the "ENO" enable output cannot be connected. The instruction is therefore always executed regardless of the signal state at enable input "EN".

Note

When the result of the instruction is located outside the permitted range for this data type, the F-CPU may switch to STOP. The cause of the diagnostics event is entered in the diagnostics buffer of the F-CPU.

You must therefore ensure that the permitted range for the data type is observed when creating the program!

(S7-1200, S7-1500) You can avoid a STOP of the F-CPU by connecting the ENO enable output, thereby programming overflow detection.

Note the following:

- If the result of the instruction is located outside the permitted range for this data type, the enable output ENO returns the signal state "0".
- The result of the instruction reacts like the analogous instruction in a standard block.
- The execution time of the instruction is extended (see also Excel file for response time calculation (http://support.automation.siemens.com/WW/view/en/49368678/133100)).
- Work memory requirement of safety program is increased.

(S7-300, S7-400) You can avoid a STOP of the F-CPU by inserting a "Get status bit OV" instruction in the next network, thereby programming overflow detection.

Note the following:

- The result of the instruction reacts like the analogous instruction in a standard block.
- The network with the "Get status bit OV" instruction must not contain any jump labels.
- The execution time of the instruction is extended (see also Excel file for response time calculation (http://support.automation.siemens.com/WW/view/en/49368678/133100)).
- A warning is issued if you do not insert a "Get status bit OV" instruction.
- Work memory requirement of safety program is increased.

Parameters

The following table shows the parameters of the instruction:

Parameter	Declaration	Data type	Description
ENO	Output	BOOL	(S7-1200, S7-1500) Enable output
IN	Input	INT, DINT	Input value
OUT	Output	INT, DINT	Twos complement of the input value

You select the data type of the instruction in the "<???>" drop-down list in the instruction box.

Example for S7-300/400 F-CPUs

The following example shows how the instruction works:

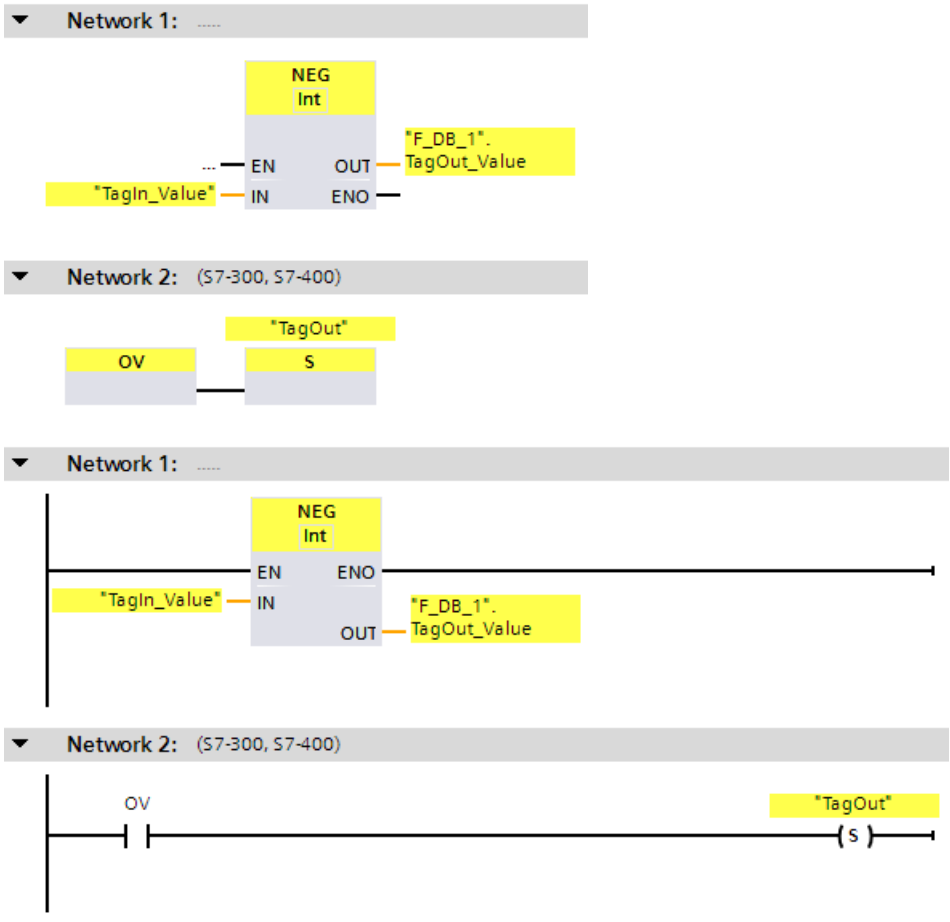

The "Create two's complement" instruction is always executed regardless of the signal state at enable input EN.

The sign of the "TagIn_Value" operand is changed and the result is stored in the ""F_DB_1".TagOut_Value" operand.

When an overflow occurs during execution of the "Create two's complement" instruction, the status bit OV is set to "1". In network 2, following the query of the status bit OV, the "Set output" (S) instruction is executed and the "TagOut" operand is set.

Example for S7-1200/1500 F-CPUs

The following example shows how the instruction works:

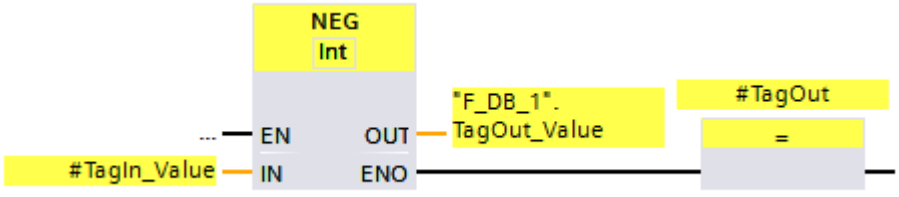

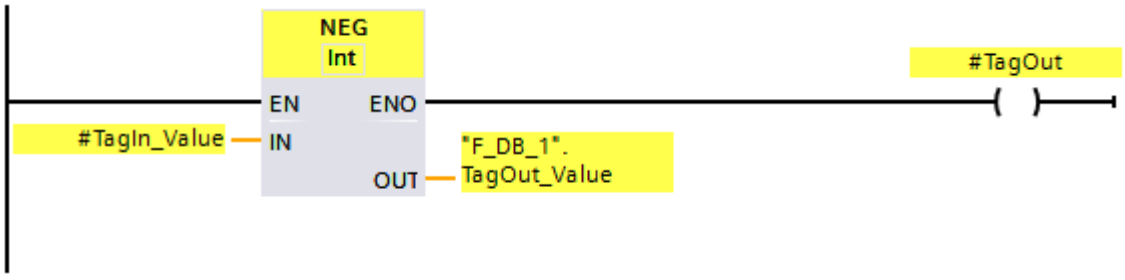

The "Create two's complement" instruction is always executed regardless of the signal state at enable input EN.

The sign of the "#TagIn_Value" operand is changed and the result is stored in the ""F_DB_1".TagOut_Value" operand.

When no overflow occurs during execution of the "Create two's complement" instruction, the ENO enable output has the signal state "1" and the "TagOut" operand is set.

See also

---| |--- OV: Get status bit OV (STEP 7 Safety Advanced V15.1) (S7-300, S7-400) (Page 585)

---| / |--- OV: Get negated status bit OV (STEP 7 Safety Advanced V15.1) (S7-300, S7-400) (Page 586)

13.7.6 ABS: Form absolute value (STEP 7 Safety V15.1) (S7-1200, S7-1500)

Description

You use the "Form absolute value" instruction to calculate the absolute amount of the value which is specified at the input "IN". The result of the instruction is output at the OUT output and can be queried there.

Enable input "EN" or (S7-300, S7-400) of the "ENO" enable output cannot be connected. The instruction is therefore always executed regardless of the signal state at enable input "EN".

Note

When the result of the instruction is located outside the permitted range for this data type, the F-CPU may switch to STOP. The cause of the diagnostics event is entered in the diagnostics buffer of the F-CPU.

You must therefore ensure that the permitted range for the data type is observed when creating the program!

You can avoid a STOP of the F-CPU by connecting the ENO enable output, thereby programming overflow detection.

Note the following:

- If the result of the instruction is located outside the permitted range for this data type, the enable output ENO returns the signal state "0".
- The result of the instruction reacts like the analogous instruction in a standard block.
- The execution time of the instruction is extended (see also Excel file for response time calculation (http://support.automation.siemens.com/WW/view/en/49368678/133100)).
- Work memory requirement of safety program is increased.

Parameters

The following table shows the parameters of the instruction:

Parameter	Declaration	Data type	Description
ENO	Output	BOOL	(S7-1200, S7-1500) Enable output
IN	Input	INT, DINT	Input value
OUT	Output	INT, DINT	Absolute value of the input value

You select the data type of the instruction in the "<???>" drop-down list in the instruction box.

Example

The following example shows how the instruction works:

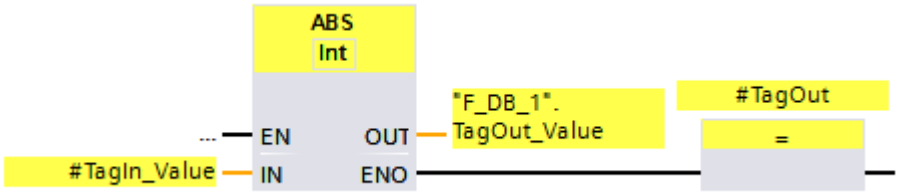

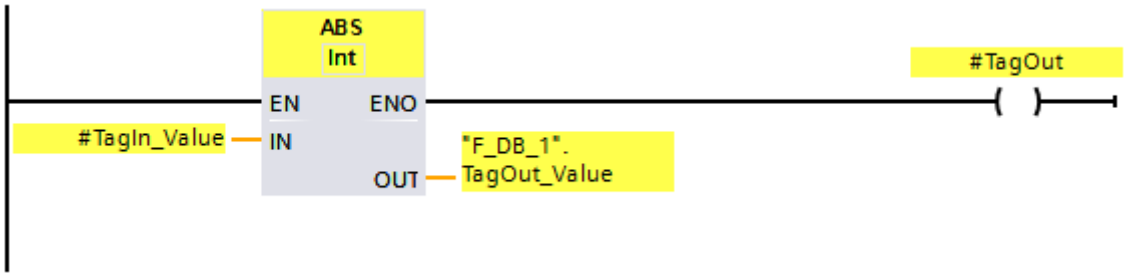

The instruction "Form absolute value"is always executed regardless of the signal state at enable input "EN".

The absolute amount of the value at the "TagIn_Value" operand is calculated and the result is stored in the ""F_DB_1".TagOut_Value" operand.

When no overflow occurs during execution of the "Form absolute value" instruction, the enable output ENO has the signal state "1" and the "#TagOut" operand is set.

13.8 Move operations

13.8.1 MOVE: Move value (STEP 7 Safety V15.1)

Description

You can use the "Move value" instruction to transfer the content of the operand at input IN to the operand at output OUT1.

Only operands with identical operand width and identical data structure can be specified for input IN and output OUT1.

Enable input "EN" and enable output "ENO" cannot be connected. The instruction is therefore always executed (regardless of the signal state at enable input "EN").

(S7-1200, S7-1500) In the basic state, the instruction box contains an output (OUT1). The number of outputs can be expanded. The inserted outputs are numbered in ascending order on the box. During execution, the content of the operand at the IN input is transferred to all available outputs. The instruction box cannot be expanded if operands with F-compliant PLC data types (UDT) are transferred.

Parameters

The following table shows the parameters of the instruction:

Parameter	Declaration	Data type	Description
IN	Input	INT, DINT, WORD, (S7-300/400) DWORD, TIME, F-compliant PLC data type (UDT)	Source value
OUT1	Output	INT, DINT, WORD, (S7-300/400) DWORD, TIME, F-compliant PLC data type (UDT)	Destination address

Example

The following example shows how the instruction works:

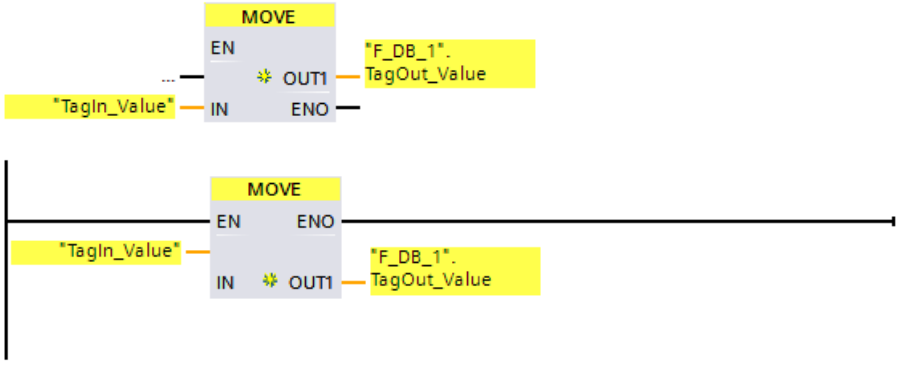

The instruction is always executed regardless of the signal state at enable input "EN". The instruction copies the content of operand "TagIn_Value" to operand ""F_DB_1".TagOut_Value".

13.8.2 RD_ARRAY_I: Read value from INT F-array (STEP 7 Safety V15.1) (S7-1500)

Description

You use the "Read value from INT F-array" instruction to read an element from the array at the ARRAY input, which refers to the index at the INDEX input, and write its value at the OUT output. If an error occurs while accessing the array during runtime, this is displayed at the output ERROR.

The array must be created in an F-global DB and can contain only one dimension. The elements of the ARRAY must be data type INT. The following applies for the array limits in contrast:

- The low limit must be 0.
- The high limit can be 10000 maximum.

Enable input "EN" and enable output "ENO" cannot be connected. The instruction is therefore always executed (regardless of the signal state at the "EN" enable input).

Parameters

The following table shows the parameters of the instruction:

Parameter	Declaration	Data type	Description
ARRAY	Input	VARIANT	Array from which is read
INDEX	Input	DINT	Element in the array which is read. The specification may be a constant or a tag.
OUT	Output	INT	Value which is read and output.
ERROR	Output	BOOL	Error information The parameter ERROR is set if an error occurs during the processing of the instruction.

ARRAY parameter

In addition to the direct connection with an array within a fail-safe global DB, this input can also be interconnected with an INOUT of data type ARRAY[*] of INT. This enables the decoupling of data and program logic in order, for example, to create a library function without any connection existing to a dedicated data block.

ERROR parameter

The table below shows the meaning of the value of the ERROR parameter:

Value	Description
FALSE	No error
TRUE	Value at the INDEX parameter is outside the limit value of the ARRAY.

Instruction versions

One version is available for this instruction:

Version	S7-300/400	S7-1200	S7-1500	Function
1.0	—	—	x[1]	

[1] supported as of firmware version V2.0

When a new F-CPU is created with *STEP 7 Safety*, the latest available version for the F-CPU created is automatically preset.

For more information on the use of instruction versions, refer to the help on *STEP 7* under "Using instruction versions".

Reaction to errors

If the value at the INDEX input is outside the array limits, the output ERROR = 1 is set, and the array value of the element with index = 0 is output at OUT output, regardless of the value passed at the INDEX input.

Therefore, set the value of the element with index = 0 as a fail-safe substitute value.

Example

The following example shows how the instruction works:

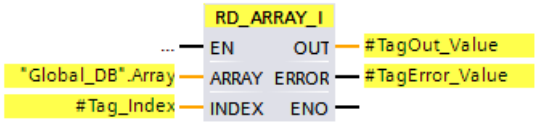

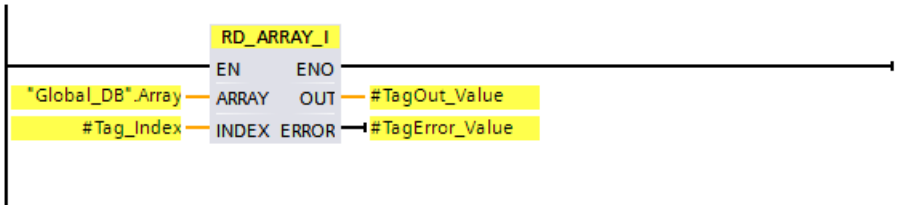

The following table shows how the instruction works using specific operand values:

Parameter	Operand	Value
ARRAY	"Global_DB".Array	The "Global_DB".Array operand is an ARRAY of data type Array[0..10] of INT
INDEX	#Tag_Index	2
OUT	#TagOut_Value	Value of the element at the location array[2]
ERROR	#TagError_Value	False

The instruction "Read value from INT F-array" is always executed regardless of the signal state at enable input "EN".

The content of the 2nd element of the operand "Global_DB.Array" is output at the "#TagOut_Value" output.

13.8.3 RD_ARRAY_DI: Read value from DINT F-array (STEP 7 Safety V15.1) (S7-1500)

Description

You use the "Read value from DINT F-array" instruction to read an element from the array at the ARRAY input, which refers to the index at the INDEX input, and write its value at the OUT output. If an error occurs while accessing the array during runtime, this is displayed at the output ERROR.

The array must be created in an F-global DB and can contain only one dimension. The elements of the array must be of the DINT data type. The following applies for the array limits in contrast:

- The low limit must be 0.
- The high limit can be 10000 maximum.

Enable input "EN" and enable output "ENO" cannot be connected. The instruction is therefore always executed (regardless of the signal state at the "EN" enable input).

Parameters

The following table shows the parameters of the instruction:

Parameter	Declaration	Data type	Description
ARRAY	Input	VARIANT	Array from which is read
INDEX	Input	DINT	Element in the array which is read. The specification may be a constant or a tag.
OUT	Output	DINT	Value which is read and output.
ERROR	Output	BOOL	Error information The parameter ERROR is set if an error occurs during the processing of the instruction.

ARRAY parameter

In addition to the direct connection with an array within a fail-safe global DB, this input can also be interconnected with an INOUT of data type ARRAY[*] of DINT. This enables the decoupling of data and program logic in order, for example, to create a library function without any connection existing to a dedicated data block.

ERROR parameter

The table below shows the meaning of the value of the ERROR parameter:

Value	Description
FALSE	No error
TRUE	Value at the INDEX parameter is outside the limit value of the ARRAY.

Instruction versions

One version is available for this instruction:

Version	S7-300/400	S7-1200	S7-1500	Function
1.0	—	—	x[1]	

[1] supported as of firmware version V2.0

When a new F-CPU is created with *STEP 7 Safety*, the latest available version for the F-CPU created is automatically preset.

For more information on the use of instruction versions, refer to the help on *STEP 7* under "Using instruction versions".

Reaction to errors

If the value at the INDEX input is outside the array limits, the output ERROR = 1 is set, and the array value of the element with index = 0 is output at OUT output, regardless of the value passed at the INDEX input.

Therefore, set the value of the element with index = 0 as a fail-safe substitute value.

Example

The following example shows how the instruction works:

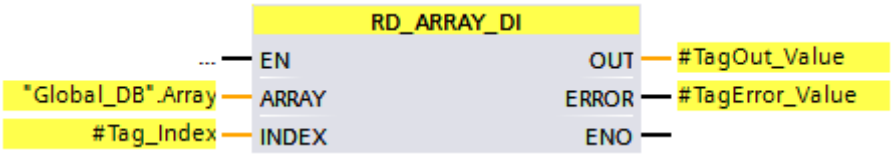

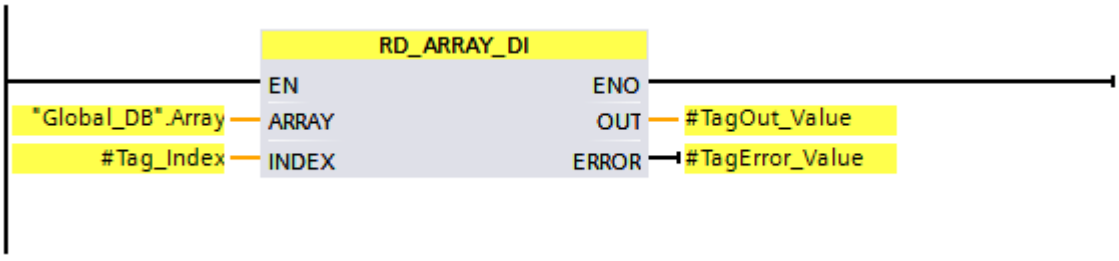

The following table shows how the instruction works using specific operand values:

Parameter	Operand	Value
ARRAY	"Global_DB".Array	The operand "Global_DB".Array is an ARRAY of data type Array[0..10] of DINT
INDEX	#Tag_Index	2
OUT	#TagOut_Value	Value of the element at the location array[2]
ERROR	#TagError_Value	False

The instruction "Read value from DINT F-array" is always executed regardless of the signal state at enable input "EN".

The content of the 2nd element of the operand "Global_DB.Array" is output at the "#TagOut_Value" output.

13.8.4 WR_FDB: Write value indirectly to an F-DB (STEP 7 Safety V15.1) (S7-300, S7-400)

Description

This instruction writes the value specified in input IN to the tag addressed by INI_ADDR and OFFSET in an F-DB.

The address of the tags addressed using INI_ADDR and OFFSET must be within the address range defined by addresses INI_ADDR and END_ADDR.

If the F-CPU has gone to STOP mode with diagnostics event ID 75E2, check to determine if this condition is satisfied.

The start address of the area in an F-DB to which the value at input IN is to be written is transferred using input INI_ADDR. The associated offset in this area is transferred using input OFFSET.

The addresses transferred in input INI_ADDR or END_ADDR must point to a tag of the selected data type in an F-DB. Only tags of the selected data type are permitted between the INI_ADDR and END_ADDR addresses. The INI_ADDR address must be smaller than the END_ADDR address.

As shown in the following example, the INI_ADDR and END_ADDR addresses must be transferred fully-qualified as "DBx".DBWy or in the corresponding symbolic representation. Transfers in other forms are not permitted.

Enable input "EN" and enable output "ENO" cannot be connected. The instruction is therefore always executed (regardless of the signal state at enable input "EN").

Parameters

The following table shows the parameters of the instruction:

Parameter	Declaration	Data type	Description
IN	Input	INT, DINT	Value to be written to the F-DB
INI_ADDR	Input	POINTER	Start address of the area in an F-DB
END_ADDR	Input	POINTER	End address of the area in an F-DB
OFFSET	Input	INT	Offset

You can select the data type of the instruction in the "<???>" drop-down list in the instruction box.

Examples of parameter assignment of INI_ADDR, END_ADDR, and OFFS

Name	Data type	Initial value	Comment
Static			
VAR_BOOL10	BOOL	false	
VAR_BOOL11	BOOL	false	
VAR_BOOL12	BOOL	false	
VAR_BOOL13	BOOL	false	
VAR_TIME10	TIME	T#0MS	
VAR_TIME11	TIME	T#0MS	
VAR_INT10	INT	0	<- INI_ADDR = "F-DB_1".VAR_INT10 Example 1
VAR_INT11	INT	0	
VAR_INT12	INT	0	
VAR_INT13	INT	0	<- OFFSET = 3
VAR_INT14	INT	0	
VAR_INT15	INT	0	<- END_ADDR = "F-DB_1".VAR_INT15
VAR_BOOL20	BOOL	false	
VAR_BOOL21	BOOL	false	
VAR_BOOL22	BOOL	false	
VAR_BOOL23	BOOL	false	
VAR_INT20	INT	0	<- INI_ADDR = "F-DB_1".VAR_INT20 Example 2
VAR_INT21	INT	0	
VAR_INT22	INT	0	
VAR_INT23	INT	0	<- END_ADDR = "F-DB_1".VAR_INT23
VAR_INT30	INT	0	<- INI_ADDR = "F-DB_1".VAR_INT30 Example 3
VAR_INT31	INT	0	<- OFFSET = 1
VAR_INT32	INT	0	
VAR_INT33	INT	0	
VAR_INT34	INT	0	<- END_ADDR = "F-DB".VAR_INT34
VAR_TIME20	TIME	T#0MS	
VAR_DINT10	DINT	0	<- INI_ADDR = "F-DB_1".VAR_DINT10 Example 4
VAR_DINT11	DINT	0	
VAR_DINT12	DINT	0	<- OFFSET = 2
VAR_DINT13	DINT	0	<- END_ADDR = "F-DB_1".VAR_DINT13

Example

The following example shows how the instruction works:

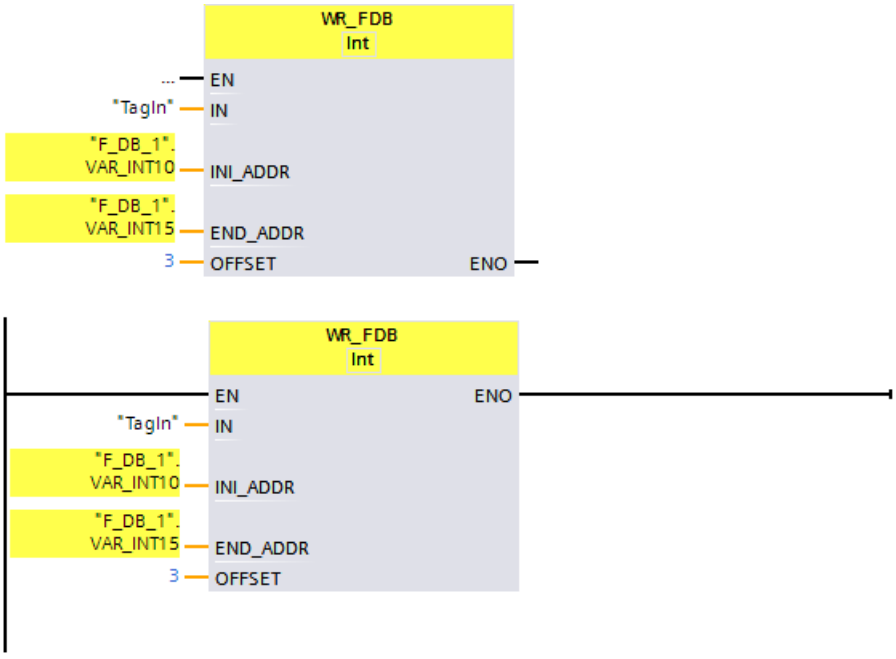

13.8.5 RD_FDB: Read value indirectly from an F-DB (STEP 7 Safety Advanced V15.1) (S7-300, S7-400)

Description

This instruction reads the tag addressed via INI_ADDR and OFFSET in an F-DB and provides it at output OUT.

The address of the tags addressed using INI_ADDR and OFFSET must be within the address range defined by addresses INI_ADDR and END_ADDR.

If the F-CPU has gone to STOP mode with diagnostics event ID 75E2, check to determine if this condition is satisfied.

The start address of the area in an F-DB from which the tag is to be read is transferred using input INI_ADDR. The associated offset in this area is transferred using input OFFSET.

The addresses transferred in input INI_ADDR or END_ADDR must point to a tag of the selected data type in an F-DB. Only tags of the selected data type are permitted between the INI_ADDR and END_ADDR addresses. The INI_ADDR address must be smaller than the END_ADDR address.

The INI_ADDR and END_ADDR addresses must be transferred fully-qualified as "DBx".DBWy or in the corresponding symbolic representation. Transfers in other forms are not permitted. Examples of parameter assignment of INI_ADDR, END_ADDR, and OFFSET are contained in WR_FDB: Write value indirectly to an F-DB (STEP 7 Safety V15.1) (S7-300, S7-400) (Page 544).

Enable input "EN" and enable output "ENO" cannot be connected. The instruction is therefore always executed (regardless of the signal state at enable input "EN").

Parameters

The following table shows the parameters of the instruction:

Parameter	Declaration	Data type	Description
INI_ADDR	Input	POINTER	Start address of the area in an F-DB
END_ADDR	Input	POINTER	End address of the area in an F-DB
OFFSET	Input	INT	Offset
OUT	Output	INT, DINT	Value to be read from the F-DB

You can select the data type of the instruction in the "<???>" drop-down list in the instruction box.

Example

The following example shows how the instruction works:

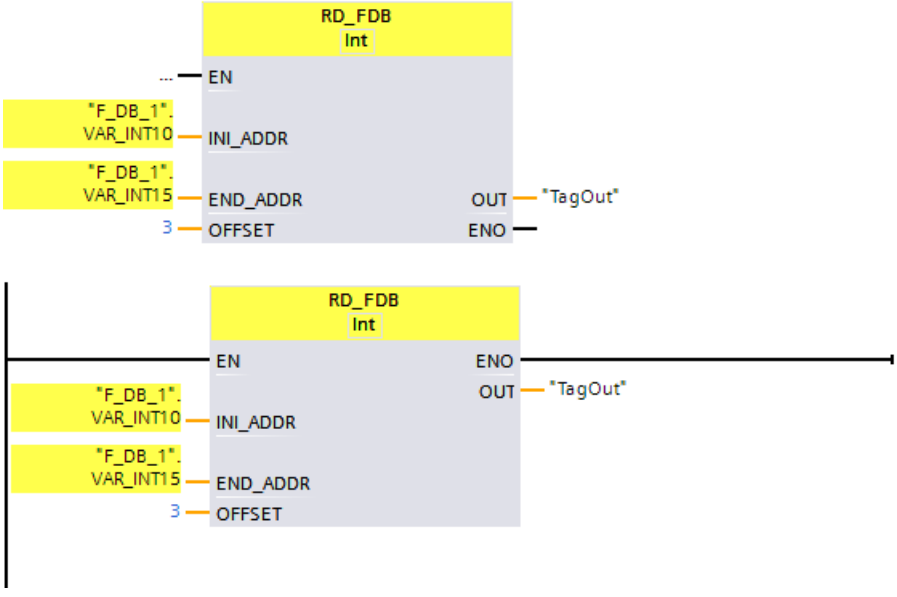

13.9 Conversion operations

13.9.1 CONVERT: Convert value (STEP 7 Safety V15.1)

Description

The "Convert value" instruction reads the content of parameter IN and converts it according to the data types selected in the instruction box. The converted value is output at the OUT output .

Enable input "EN" cannot be connected. The instruction is therefore always executed (regardless of the signal state at the "EN" enable input). The connection of the "ENO" enable output is only possible and required when converting from the "DINT" to the "INT" data type.

Note

When converting from "DINT" to the "INT" data type, you need to connect the ENO enable output and thereby programming overflow detection.

Note the following:

- If the value at the input is outside the INT range, ENO returns 0.
- The result of the instruction reacts like the analogous instruction in a standard block.

Parameters

The following table shows the parameters of the instruction:

Parameter	Declaration	Data type	Description
ENO	Output	BOOL	Enable output
IN	Input	INT, DINT	Value to be converted.
OUT	Output	INT, DINT	Result of the conversion

You can select the data types of the instruction in the "<???>" drop-down lists of the instruction box. The supported conversions are from "INT to DINT" and "DINT to INT".

Example

The following example shows how the "Convert value "DINT to INT"" instruction for S7-1200/1500 F-CPUs works:

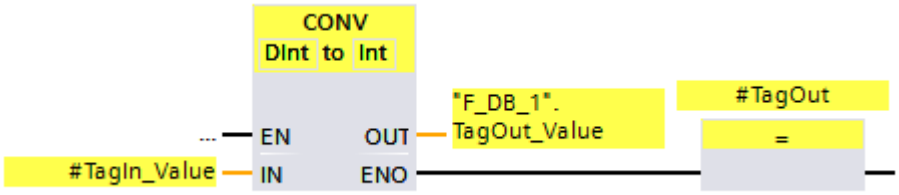

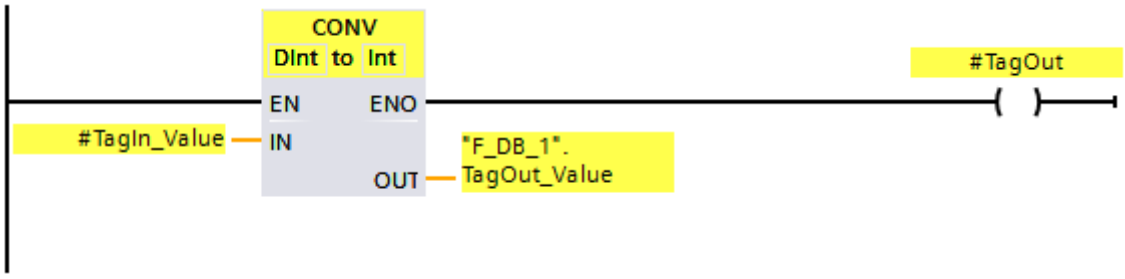

The instruction is always executed regardless of the signal state at enable input EN.

The value of the "TagIn_Value" operand is converted to an integer (16-bit) and the result is stored in the ""F_DB_1".TagOut_Value" operand.

When no overflow occurs during execution of the "Convert value "DINT to INT"" instruction, the ENO enable output has the signal state "1" and the "TagOut" operand is set.

You can also store the signal status of the ENO enable output in an (F-)DB, and centrally evaluate whether overflows have occurred for all or one group of instructions with overflow detection.

See also

s7cotia.xls (http://support.automation.siemens.com/WW/view/en/49368678/133100)

13.9.2 BO_W: Convert 16 data elements of data type BOOL to a data element of data type WORD (STEP 7 Safety V15.1)

Description

This instruction converts the 16 values of data type BOOL at inputs IN0 to IN15 to a value of data type WORD, which is made available at output OUT. The conversion takes place as follows: The i-th bit of the WORD value is set to 0 (or 1), if the value at input INi = 0 (or 1).

Enable input "EN" and enable output "ENO" cannot be connected. The instruction is therefore always executed (regardless of the signal state at enable input "EN").

Parameters

The following table shows the parameters of the instruction:

Parameter	Declaration	Data type	Description
IN0	Input	BOOL	Bit 0 of WORD value
IN1	Input	BOOL	Bit 1 of WORD value
...			...
IN15	Input	BOOL	Bit 15 of WORD value
OUT	Output	WORD	WORD value consisting of IN0 to IN15

Instruction versions

A number of versions are available for this instruction:

Version	S7-300/400	S7-1200	S7-1500	Function
1.0	x	—	—	When projects that were created with *S7 Distributed Safety V5.4 SP5* are migrated, version 1.0 of the instruction is used automatically. If you want to compile a migrated safety program with *STEP 7 Safety Advanced* for the first time, we recommend that you first update to the latest available version of the instruction.
1.1	o	—	o	These versions have identical functions to version V1.0.
1.2	x	—	o	
1.3	x	o	o	
1.4	x	x	x	
2.0	x	x[1]	x[2]	

o This version is no longer supported.

[1] supported for Firmware version V4.2 or higher

[2] supported for Firmware version V2.0 or higher

When a new F-CPU is created with *STEP 7 Safety*, the latest available version for the F-CPU created is automatically preset.

For more information on the use of instruction versions, refer to the help on *STEP 7* under "Using instruction versions".

Example

The following example shows how the instruction works:

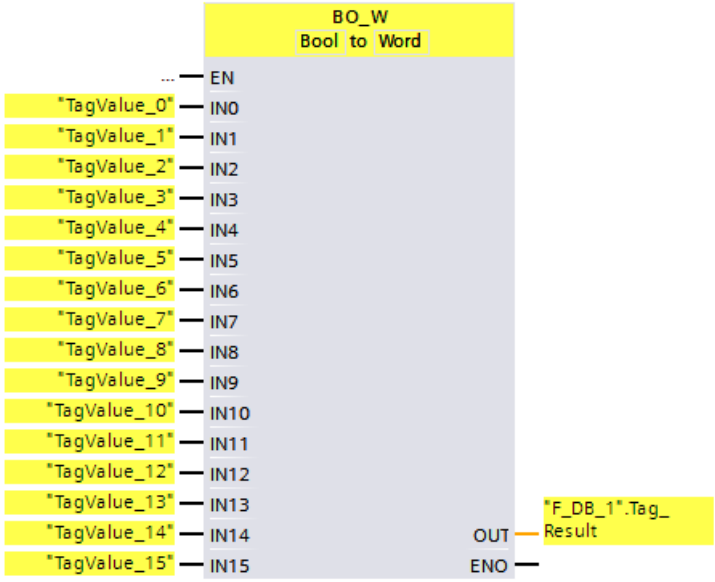

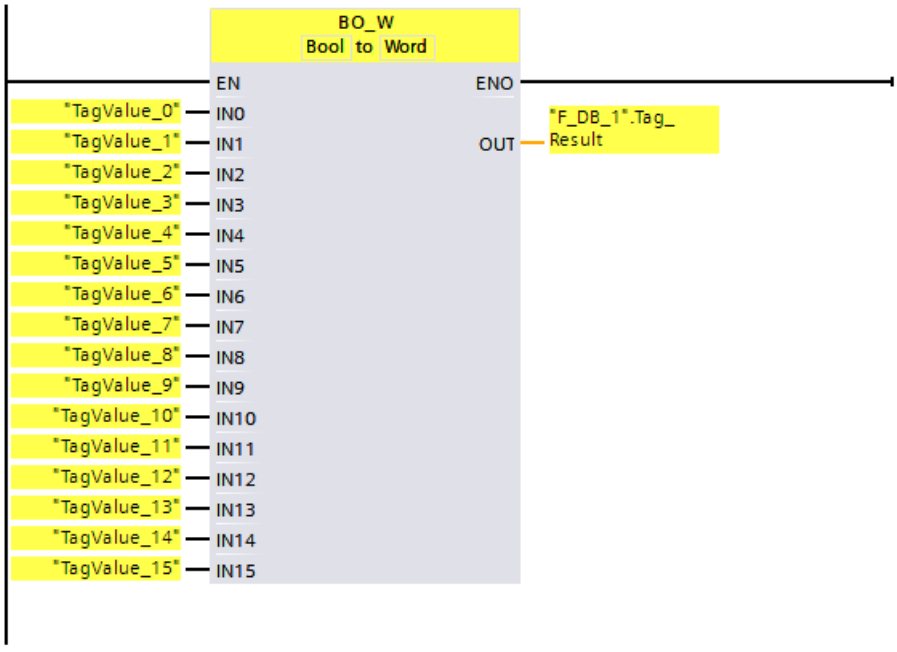

The following table shows how the instruction works using specific operand values:

Parameter	Operand	Value
IN0	TagValue_0	FALSE
IN1	TagValue_1	FALSE
...		...
IN13	TagValue_13	FALSE
IN14	TagValue_14	TRUE
IN15	TagValue_15	TRUE
OUT	"F_DB_1".Result	W#16#C000

The values of operands "TagValue_0" to "TagValue_15" are combined into a value of the data type WORD and assigned to operand ""F_DB_1".TagResult".

13.9.3 W_BO: Convert a data element of data type WORD to 16 data elements of data type BOOL (STEP 7 Safety V15.1)

Description

This instruction converts the value of data type WORD at input IN to 16 values of data type BOOL, which are provided at outputs OUT0 to OUT15. The conversion takes place as follows: Output OUTi is set to 0 (or 1), if the i-th bit of the WORD value is 0 (or 1).

Enable input "EN" and enable output "ENO" cannot be connected. The instruction is therefore always executed (regardless of the signal state at enable input "EN").

Parameters

The following table shows the parameters of the instruction:

Parameter	Declaration	Data type	Description
IN	Input	WORD	WORD value
OUT0	Output	BOOL	Bit 0 of WORD value
OUT1	Output	BOOL	Bit 1 of WORD value
...			...
OUT15	Output	BOOL	Bit 15 of WORD value

Instruction versions

A number of versions are available for this instruction:

Version	S7-300/400	S7-1200	S7-1500	Function
1.0	x	—	—	When projects that were created with *S7 Distributed Safety V5.4 SP5* are migrated, version 1.0 of the instruction is used automatically. If you want to compile a migrated safety program with *STEP 7 Safety Advanced* for the first time, we recommend that you first update to the latest available version of the instruction.
1.1	o	—	o	These versions have identical functions to version V1.0.
1.2	x	—	o	
1.3	x	o	o	
1.4	x	x	x	
2.0	x	x[1]	x[2]	

o This version is no longer supported.

[1] supported for Firmware version V4.2 or higher

[2] supported for Firmware version V2.0 or higher

When a new F-CPU is created with *STEP 7 Safety*, the latest available version for the F-CPU created is automatically preset.

For more information on the use of instruction versions, refer to the help on *STEP 7* under "Using instruction versions".

Example

The following example shows how the instruction works:

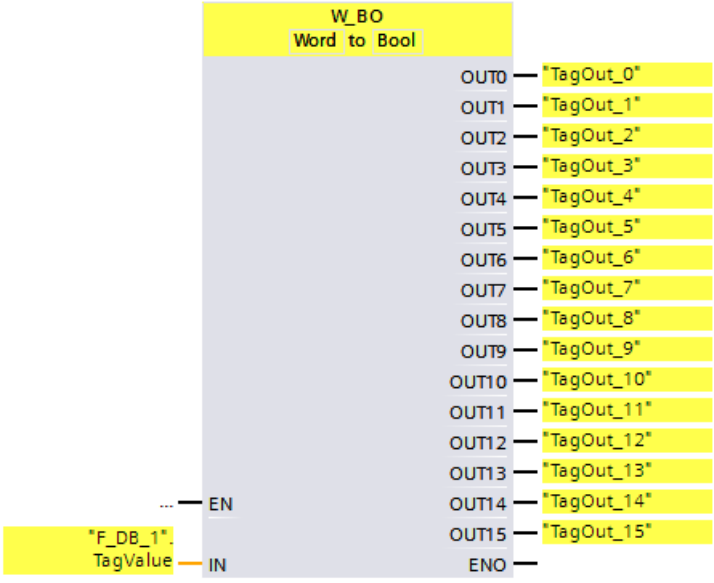

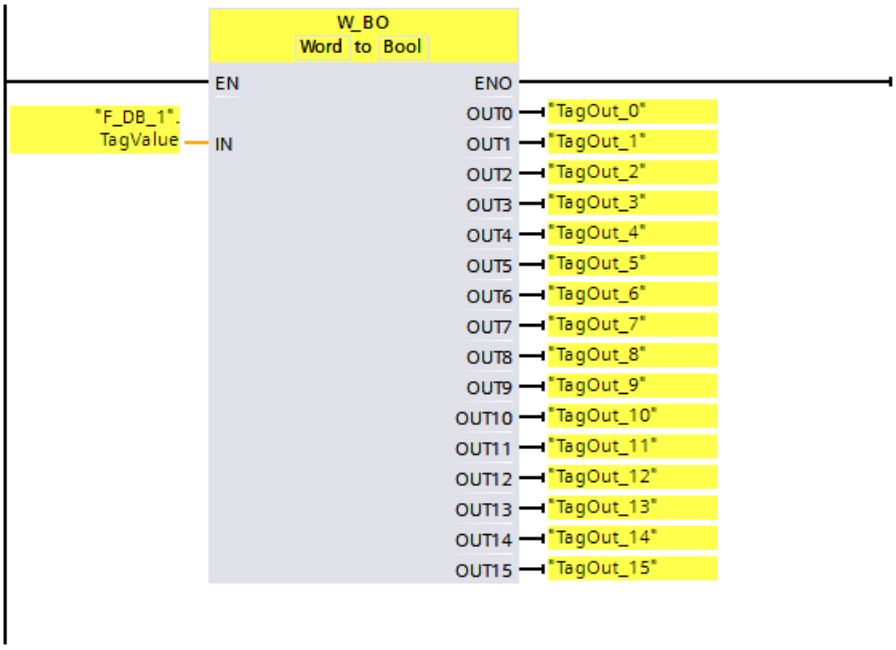

The following table shows how the instruction works using specific operand values:

Parameter	Operand	Value
IN	"F_DB_1".TagValue	W#16#C000
OUT0	TagOUT_0	FALSE
OUT1	TagOUT_1	FALSE
...		...
OUT13	TagOUT_13	FALSE
OUT14	TagOUT_14	TRUE
OUT15	TagOUT_15	TRUE

The value of operand ""F_DB_1".TagValue" of data type WORD is converted to the 16 values "TagOUT_0" to "TagOUT_15" of data type BOOL.

13.9.4 SCALE: Scale values (STEP 7 Safety Advanced V15.1)

Description

This instruction scales the value at input IN in physical units between the low limit value at input LO_LIM and the high limit value at input HI_LIM. It is assumed that the value at input IN is between 0 and 27648. The scaling result is provided at output OUT.

The instruction uses the following equation:

OUT = [IN × (HI_LIM – LO_LIM)] / 27648 + LO_LIM

As long as the value at input IN is greater than 27648, output OUT is linked to HI_LIM and OUT_HI is set to 1.

As long as the value at input IN is less than 0, output OUT is linked to LO_LIM and OUT_LO is set to 1.

For inverse scaling, you must assign LO_LIM > HI_LIM. With inverse scaling, the output value at output OUT decreases while the input value at input IN increases.

Every call of the "Scale values" instruction must be assigned a data area in which the instruction data are stored. In addition, when the instruction is inserted in the program, the "Call options" dialog is automatically opened, where you can create a data block (single instance) (e.g., SCALE_DB_1) or a multi-instance (e.g., SCALE_Instance_1) for the "Scale values" instruction. Once it is created, you can find the new data block in the project tree in the "STEP 7 Safety" folder under "Program blocks > System blocks" or the multi-instance as a local tag in the "Static" section of the block interface. For more information, refer to the help on *STEP 7*.

Enable input "EN" and enable output "ENO" cannot be connected. The instruction is therefore always executed (regardless of the signal state at enable input "EN").

Parameter

The following table shows the parameters of the instruction:

Parameter	Declaration	Data type	Description
IN	Input	INT	Input value to be scaled in physical units
HI_LIM	Input	INT	High limit value of value range of OUT
LO_LIM	Input	INT	Low limit value of value range of OUT
OUT	Output	INT	Result of scaling
OUT_HI	Output	BOOL	1 = Input value > 27648: OUT = HI_LIM
OUT_LO	Output	BOOL	1 = Input value < 0: OUT = LO_LIM

Instruction versions

A number of versions are available for this instruction:

Version	S7-300/400	S7-1200	S7-1500	Function
1.0	x	—	—	When projects that were created with *S7 Distributed Safety V5.4 SP5* are migrated, version 1.0 of the instruction is used automatically. If you want to compile a migrated safety program with *STEP 7 Safety Advanced* for the first time, we recommend that you first update to the latest available version of the instruction.
1.1	x	—	o	These versions have identical functions to version V1.0.
1.2	x	x	x	

o This version is no longer supported.

When a new F-CPU is created with *STEP 7 Safety*, the latest available version for the F-CPU created is automatically preset.

For more information on the use of instruction versions, refer to the help on *STEP 7* under "Using instruction versions".

Behavior in the event of overflow or underflow of analog values and fail-safe value output

Note

If inputs from the PII of an SM 336; AI 6 x 13Bit or SM 336; F-AI 6 x 0/4 ... 20 mA HART are used as input values, note that the F-system detects an overflow or underflow of a channel of this F-SM as an F-I/O fault or channel fault. The fail-safe value 0 is provided in place of $7FFF_H$ (for overflow) or 8000_H (for underflow) in the PII for the safety program.

If other fail-safe values should be output in this case, you need to evaluate the QBAD signal of the associated F-I/O or QBAD_I_xx signal / value status of the corresponding channel.

If the value in the PII of the F-SM is within the overrange or underrange, but is > 27648 or < 0, you can likewise branch to the output of an individual fail-safe value by evaluating outputs OUT_HI and OUT_LO, respectively.

Example

The following example shows how the instruction works:

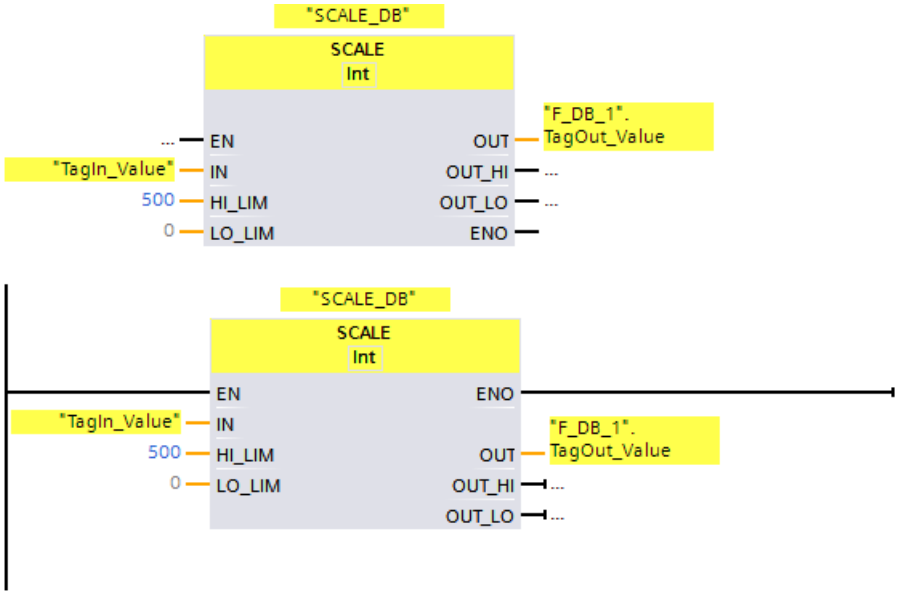

When operand "TagIn_Value" = 20000, the result for ""F_DB_1".TagOut_Value" is 361.

13.10 Program control operations

13.10.1 JMP: Jump if RLO = 1 (STEP 7 Safety V15.1)

Description

You can use the "Jump if RLO = 1" instruction to interrupt the linear execution of the program and resume it in another network. The destination network must be identified by a jump label (Page 562) (LABEL). The description of the jump label is specified in the placeholder above the instruction.

The specified jump label must be in the same block in which the instruction is executed. The name you specify can only occur once in the block.

If the result of logic operation (RLO) at the input of the instruction is "1" or the input is not connected, the jump to the network identified by the jump label is executed. The jump direction can be towards higher or lower network numbers.

If the result of logic operation (RLO) at the input of the instruction is "0", the program continues executing in the next network.

Note

(S7-1200, S7-1500)
If the jump destination (jump label) for an instruction "JMP" or "JMPN" is above the associated instruction "JMP" or "JMPN" (backwards jump), you cannot insert any other instructions for program control (JMP, JMPN, RET, jump label) between them.
Exception: You can insert an instruction "JMP" or "JMPN" between them if you also insert the associated jump destination in between as well as below the associated instruction "JMP" or "JMPN" (forward jump).
Non-compliance can lead to compilation errors or to the F-CPU going to STOP.

Note

You are not permitted to insert any SENDDP or SENDS7 instructions between an instruction JMP or JMPN and the associated jump destination (jump label).

Example

The following example shows how the instruction works:

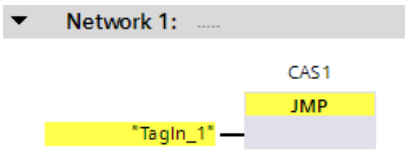

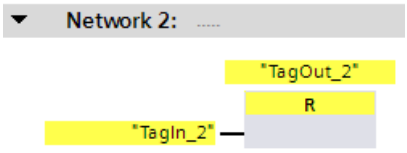

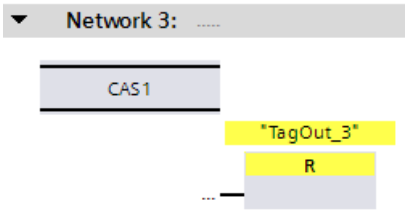

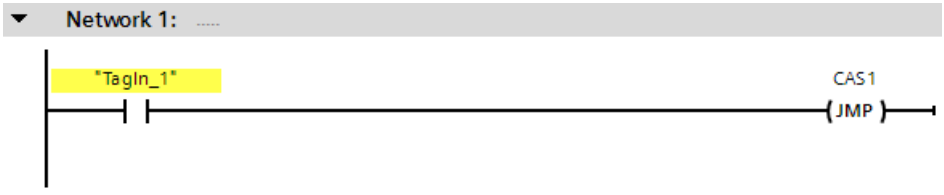

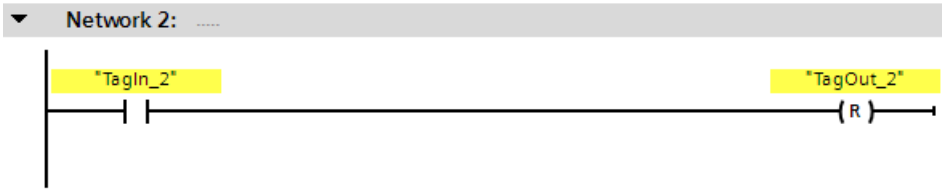

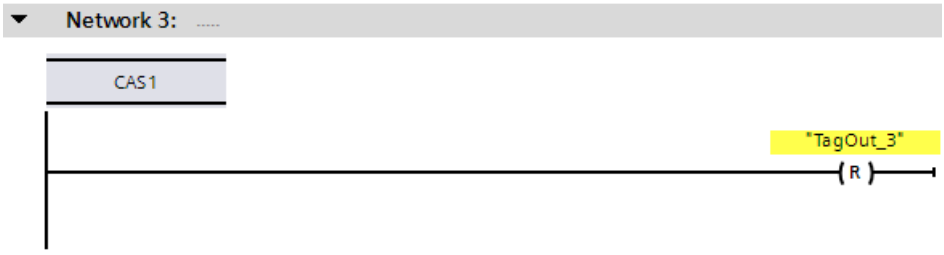

When operand "TagIn_1" has signal state "1", the "Jump if RLO = 1" instruction is executed. The linear execution of the program is interrupted and continues in Network 3, which is identified by the jump label CAS1. When input "TagIn_3" has signal state "1", output "TagOut_3" is reset.

13.10.2 JMPN: Jump if RLO = 0 (STEP 7 Safety V15.1)

Description

You can use the "Jump if RLO = 0" instruction to interrupt the linear execution of the program and resume it in another network, when the result of logic operation at the input of the instruction is "0". The destination network must be identified by a jump label (Page 562) (LABEL). The description of the jump label is specified in the placeholder above the instruction.

The specified jump label must be in the same block in which the instruction is executed. The name you specify can only occur once in the block.

If the result of logic operation (RLO) at the input of the instruction is "0", the jump to the network identified by the jump label is executed. The jump direction can be towards higher or lower network numbers.

If the result of logic operation (RLO) at the input of the instruction is "1", the program continues executing in the next network.

Note

(S7-1200, S7-1500)
If the jump destination (jump label) for an instruction "JMP" or "JMPN" is above the associated instruction "JMP" or "JMPN" (backwards jump), you cannot insert any other instructions for program control (JMP, JMPN, RET, jump label) between them.
Exception: You can insert an instruction "JMP" or "JMPN" between them if you also insert the associated jump destination in between as well as below the associated instruction "JMP" or "JMPN" (forward jump).
Non-compliance can lead to compilation errors or to the F-CPU going to STOP.

Note

You are not permitted to insert any SENDDP or SENDS7 instructions between an instruction JMP or JMPN and the associated jump destination (jump label).

Example

The following example shows how the instruction works:

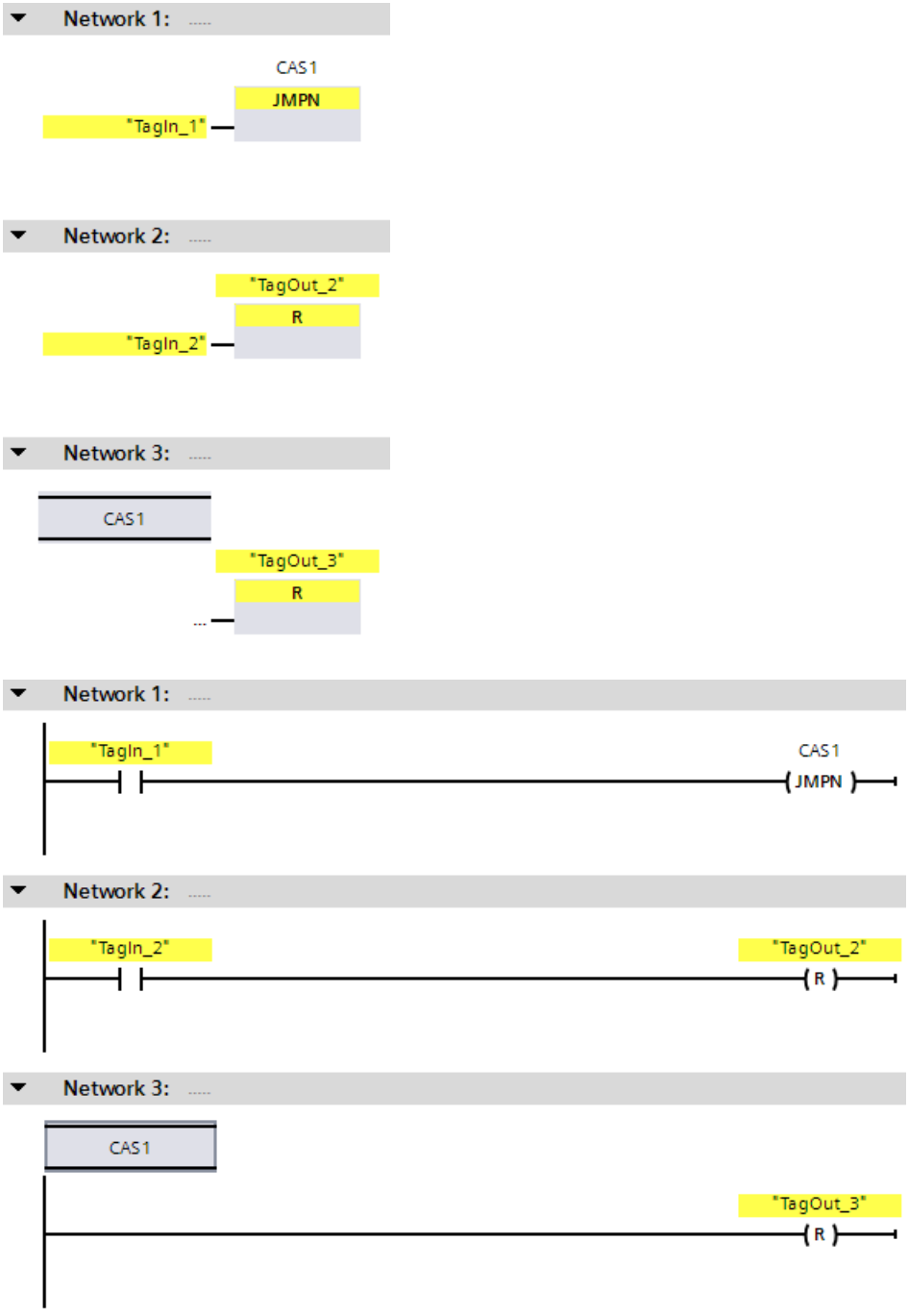

When operand "TagIn_1" has signal state "0", the "Jump if RLO = 0" instruction is executed. The linear execution of the program is interrupted and continues in Network 3, which is identified by the jump label CAS1. When input "TagIn_3" has signal state "1", output "TagOut_3" is reset.

13.10.3 LABEL: Jump label (STEP 7 Safety V15.1)

Description

You can use a jump label to specify a destination network, in which the program execution should resume after a jump.

The jump label and the instruction in which the jump label is specified must be located in the same block. The name of a jump label can only be assigned once in a block.

Only one jump label can be placed in a network. To each jump label can be jumped from several locations.

Example

The following example shows how the instruction works:

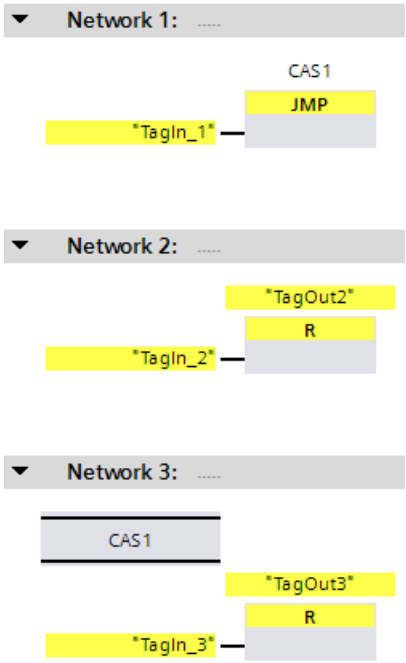

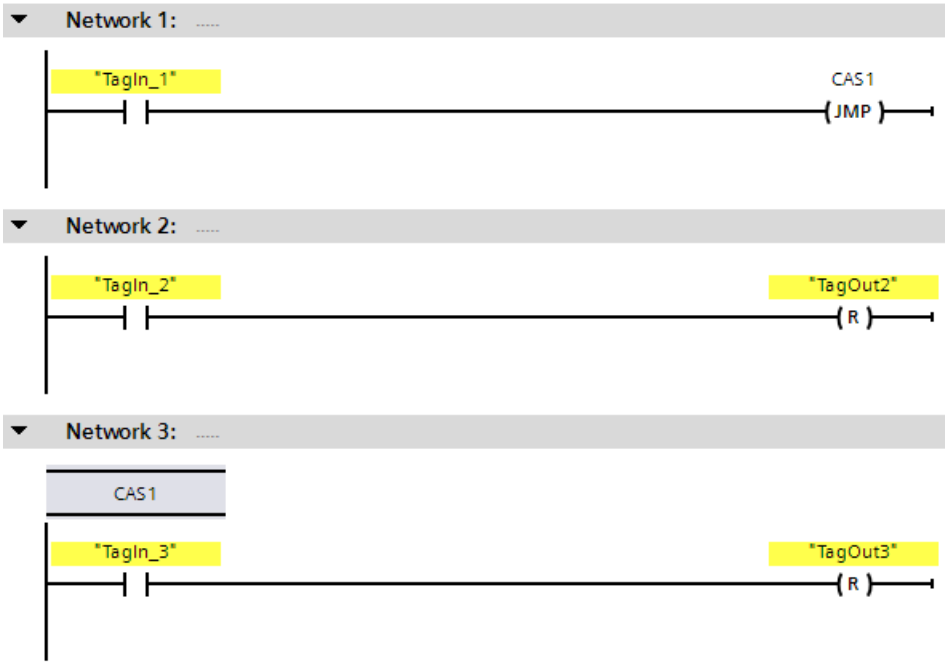

When operand "TagIn_1" has signal state "1", the "Jump if RLO = 1" instruction is executed. The linear execution of the program is interrupted and continues in Network 3, which is identified by the jump label CAS1. When input "TagIn_3" has signal state "1", output "TagOut_3" is reset.

See also

JMP: Jump if RLO = 1 (STEP 7 Safety V15.1) (Page 558)

JMPN: Jump if RLO = 0 (STEP 7 Safety V15.1) (Page 560)

RET: Return (STEP 7 Safety V15.1) (Page 564)

13.10.4 RET: Return (STEP 7 Safety V15.1)

Description

You can use the "Return" instruction to stop the processing of a block.

If the result of logic operation (RLO) at the input of the "Return" instruction is "1" or the box input of the S7-1200/1500 F-CPUs is not connected in FBD, program execution is terminated in the currently called block and continued in the calling block (for example, in the main safety block) after the call function. If the RLO at the input of the "Return" instruction is "0", the instruction is not executed. Program execution continues in the next network of the called block.

Influencing the status of the call function (ENO) is irrelevant, because the enable output "ENO" cannot be connected.

Note

(S7-300, S7-400) You may not program a RET instruction in the main safety block.

Example

The following example shows how the instruction works:

When the "TagIn" operand delivers signal state "1", the "Return" instruction is executed. Program execution is terminated in the called block and continues in the calling block.

See also

JMP: Jump if RLO = 1 (STEP 7 Safety V15.1) (Page 558)

JMPN: Jump if RLO = 0 (STEP 7 Safety V15.1) (Page 560)

LABEL: Jump label (STEP 7 Safety V15.1) (Page 562)

13.10.5 OPN: Open global data block (STEP 7 Safety Advanced V15.1) (S7-300, S7-400)

Description

You can use the "Open global data block" instruction to open a data block. The number of the data block is transferred to the DB register. Subsequent DB commands access the relevant blocks depending on the register contents.

Note

Note when using the "Open global data block" instruction that the content of the DB register can be changed after calls of F-FB/F-FC and "fully qualified DB accesses", such that there is no guarantee that the last data block you opened with "Open global data block" is still open.

You should therefore use the following method for addressing data to avoid errors when accessing data of the DB register:

- Use symbolic addressing.
- Use only fully qualified DB accesses.

If you still want to use the "Open global data block" operation, you must ensure that the DB register is restored by repeating the "Open global data block" instruction following calls of F-FB/F-FC and "fully qualified DB accesses." Otherwise, a malfunction could result.

Parameters

The following table shows the parameters of the instruction:

Parameter	Declaration	Data type	Description
<Data block>	Input	BLOCK_DB	Data block that is opened

"Fully qualified DB access"

The initial access to data of a data block in an F-FB/F-FC must always be a "fully qualified DB access," or it must be preceded by the "Open global data block" instruction. This also applies to the initial access to data of a data block after a jump label.

An example of "fully qualified DB access" and "non-fully qualified DB access" is provided in Restrictions in the programming languages FBD/LAD (Page 119).

Access to instance DBs

You can also access instance DBs of F-FBs with fully qualified access, e.g., for transfer of block parameters. It is not possible to access static local data in single/multi-instances of other F-FBs.

Note that accessing instance DBs of F-FBs that are not called in the safety program can cause the F-CPU to go to STOP mode.

Example

The following example shows how the instruction works:

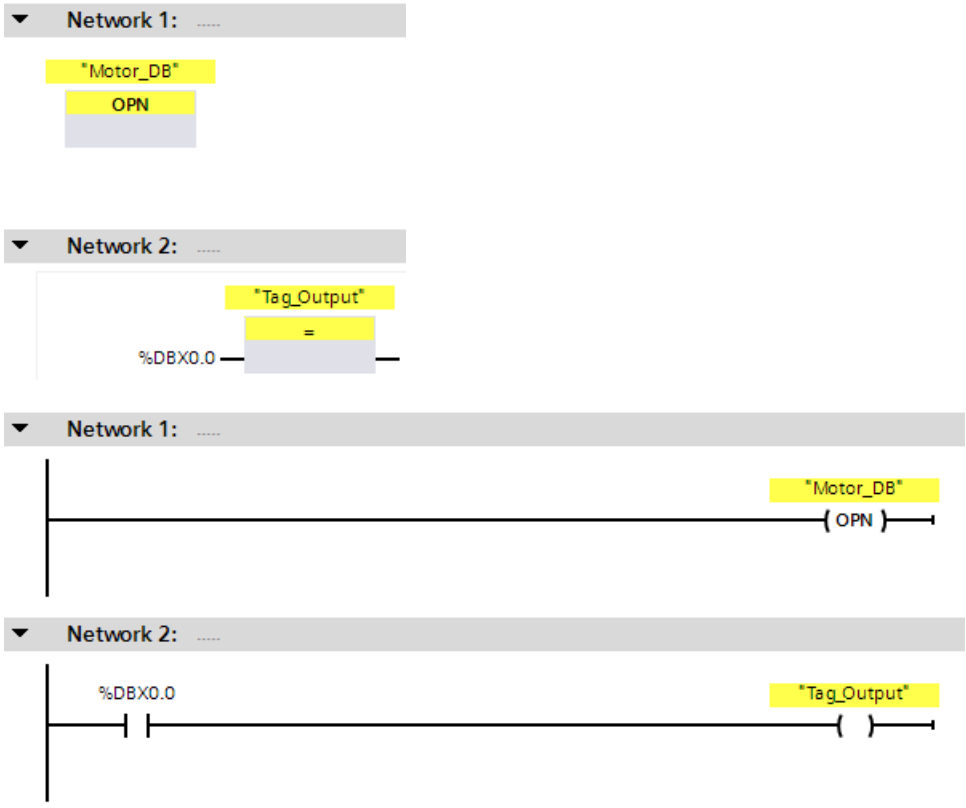

The "Motor_DB" data block is called in network 1. The number of the data block is transferred to the DB register. The "DBX0.0" operand is queried in network 2. The signal state of the "DBX0.0" operand is assigned to the "Tag_Output" operand.

13.11 Word logic operations

13.11.1 AND: AND logic operation (STEP 7 Safety V15.1)

Description

You can use the "AND logic operation" instruction to combine the value at input IN1 to the value at input IN2 bit-by-bit by AND logic and query the result at output OUT.

When the instruction is executed, bit 0 of the value at input IN1 and bit 0 of the value at input IN2 are ANDed. The result is stored in bit 0 of output OUT. The same logic operation is executed for all other bits of the specified values.

The result bit has signal state "1" only when both of the bits in the logic operation also have signal state "1". If one of the two bits of the logic operation has signal state "0", the corresponding result bit is reset.

Enable input "EN" and enable output "ENO" cannot be connected. The instruction is therefore always executed (regardless of the signal state at enable input "EN").

Parameters

The following table shows the parameters of the instruction:

Parameter	Declaration	Data type	Description
IN1	Input	WORD	First value of logic operation
IN2	Input	WORD	Second value of logic operation
OUT	Output	WORD	Result of the instruction

Example

The following example shows how the instruction works:

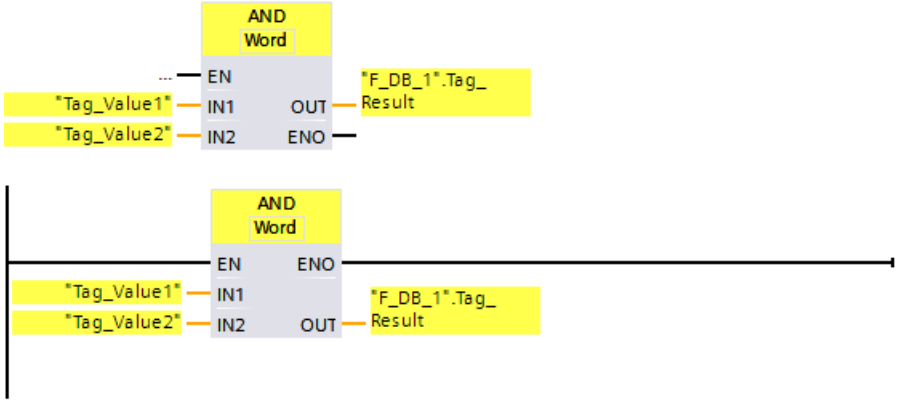

IN1	"Tag_Value1" = 01010101 01010101
IN2	"Tag_Value2" = 00000000 00001111
OUT	"F_DB_1"."Tag_Result" = 00000000 00000101

The instruction is always executed regardless of the signal state at enable input "EN". The value of the "Tag_Value1" operand and the value of the "Tag_Value2" operand are ANDed. The result is mapped bit-by-bit and output in the ""F_DB_1".Tag_Result" operand.

13.11.2 OR: OR logic operation (STEP 7 Safety V15.1)

Description

You can use the "OR logic operation" instruction to connect the value at input IN1 input to the value at input IN2 bit-by-bit by OR logic and query the result at output OR.

When the instruction is executed, bit 0 of the value at input IN1 and bit 0 of the value at input IN2 are ORed. The result is stored in bit 0 of output OUT. The same logic operation is executed for all bits of the specified tags.

The result bit has signal state "1" when at least one of the two bits in the logic operation has signal state "1". If both of the bits of the logic operation have signal state "0", the corresponding result bit is reset.

Enable input "EN" and enable output "ENO" cannot be connected. The instruction is therefore always executed (regardless of the signal state at enable input "EN").

Parameters

The following table shows the parameters of the instruction:

Parameter	Declaration	Data type	Description
IN1	Input	WORD	First value of logic operation
IN2	Input	WORD	Second value of logic operation
OUT	Output	WORD	Result of the instruction

Example

The following example shows how the instruction works:

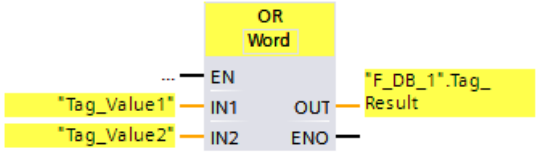

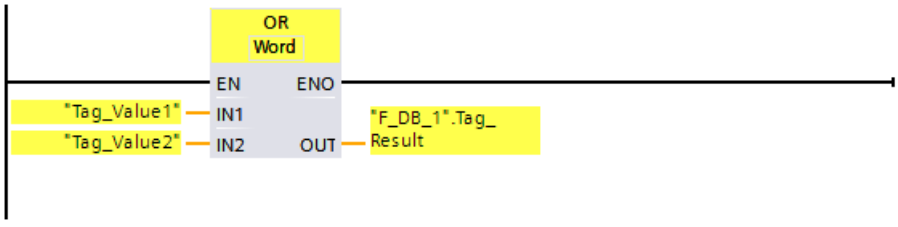

IN1	`"Tag_Value1" = 01010101 01010101`
IN2	`"Tag_Value2" = 00000000 00001111`
OUT	`"F_DB_1"."Tag_Result" = 01010101 01011111`

The instruction is always executed regardless of the signal state at enable input "EN". The value of the "Tag_Value1" operand and the value of the "Tag_Value2" operand are ORed. The result is mapped bit-by-bit and output in the ""F_DB_1".Tag_Result" operand.

13.11.3 XOR: EXCLUSIVE OR logic operation (STEP 7 Safety V15.1)

Description

You can use the "EXCLUSIVE OR logic operation" instruction to combine the value at input IN1 and the value at input IN2 bit-by-bit by EXCLUSIVE OR logic and query the result at output OUT.

When the instruction is executed, bit 0 of the value at input IN1 input and bit 0 of the value at input IN2 are logically combined by EXCLUSIVE OR. The result is stored in bit 0 of output OUT. The same logic operation is executed for all other bits of the specified value.

The result bit has signal state "1" when one of the two bits in the logic operation has signal state "1". If both of the bits of the logic operation have signal state "1" or "0", the corresponding result bit is reset.

Enable input "EN" and enable output "ENO" cannot be connected. The instruction is therefore always executed (regardless of the signal state at enable input "EN").

Parameters

The following table shows the parameters of the instruction:

Parameter	Declaration	Data type	Description
IN1	Input	WORD	First value of logic operation
IN2	Input	WORD	Second value of logic operation
OUT	Output	WORD	Result of the instruction

Example

The following example shows how the instruction works:

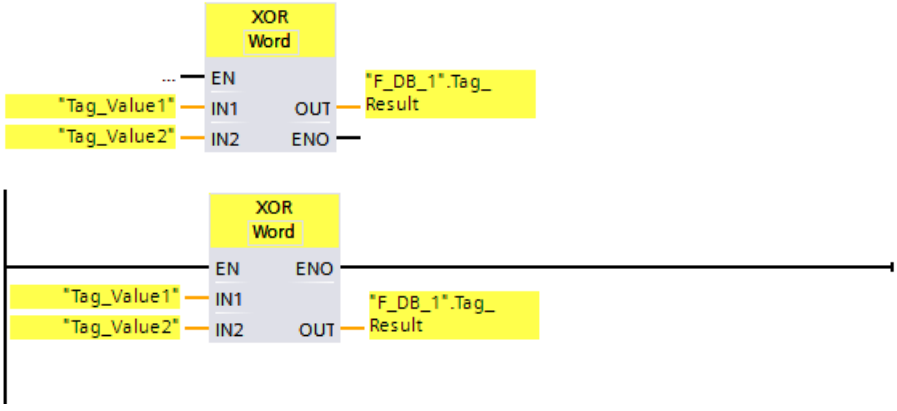

IN1	`"Tag_Value1" = 01010101 01010101`
IN2	`"Tag_Value2" = 00000000 00001111`
OUT	`"F_DB_1"."Tag_Result" = 01010101 01011010`

The instruction is always executed regardless of the signal state at enable input "EN". The value of the "Tag_Value1" operand and the value of the "Tag_Value2" operand are logically combined by EXCLUSIVE OR. The result is mapped bit-by-bit and output in the ""F_DB_1".Tag_Result" operand.

13.12 Shift and rotate

13.12.1 SHR: Shift right (STEP 7 Safety V15.1)

Description

Use the "Shift right" instruction to shift the content of the operand at input IN bit-by-bit to the right and query the result at output OUT. Use input N to specify the number of bit positions by which the specified value is to be moved.

If the value at input N is "0", the value at input IN is copied to the operand at output OUT.

If the value at input N is greater than the number of available bit positions, the operand value at input IN is shifted to the right by the available number of bit positions.

The bit locations that are freed up in the left area of the operand during the shift operation are filled with zeros.

The following figure shows how the content of an operand of data type WORD is moved by 6 bit positions to the right:

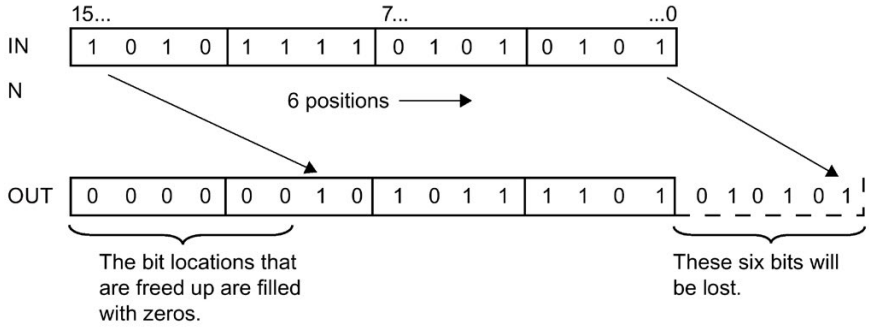

Enable input "EN" and enable output "ENO" cannot be connected. The instruction is therefore always executed (regardless of the signal state at enable input "EN").

Note

S7-300/400:

Only the low-byte is evaluated from input N.

S7-1200/1500:

If the value at input N < 0, the output OUT is set to 0.

Parameters

The following table shows the parameters of the instruction:

Parameter	Declaration	Data type	Description
IN	Input	WORD	Value that is shifted
N	Input	INT	Number of bit positions by which the value is shifted
OUT	Output	WORD	Result of the instruction

Instruction versions

A number of versions are available for this instruction:

Version	S7-300/400	S7-1200	S7-1500	Function
1.0	x	—	—	When projects that were created with *S7 Distributed Safety V5.4 SP5* are migrated, version 1.0 of the instruction is used automatically. If you want to compile a migrated safety program with *STEP 7 Safety Advanced* for the first time, we recommend that you first update to the latest available version of the instruction.
1.1	o	—	o	These versions have identical functions to version V1.0.
1.2	x	—	o	
1.3	x	o	o	
1.4	x	x	x	
2.0	x	x[1]	x[2]	

o This version is no longer supported.

[1] supported for Firmware version V4.2 or higher

[2] supported for Firmware version V2.0 or higher

When a new F-CPU is created with *STEP 7 Safety*, the latest available version for the F-CPU created is automatically preset.

For more information on the use of instruction versions, refer to the help on *STEP 7* under "Using instruction versions".

Example

The following example shows how the instruction works:

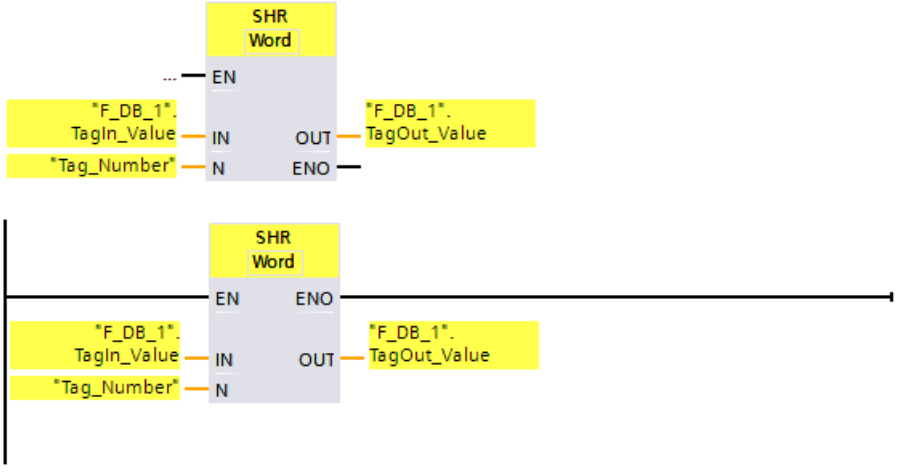

The following table shows how the instruction works using specific operand values:

Parameter	Operand	Value
IN	"F_DB_1".TagIn_Value	0011 1111 1010 1111
N	Tag_Number	3
OUT	"F_DB_1".TagOut_Value	0000 0111 1111 0101

The instruction is always executed regardless of the signal state at enable input "EN". The content of the operand ""F_DB_1".TagIn_Value" is moved three bit positions to the right. The result is output at output ""F_DB_1".TagOut_Value".

13.12.2 SHL: Shift left (STEP 7 Safety V15.1)

Description

Use the "Shift left" instruction to shift the content of the operand at input IN bit-by-bit to the left and query the result at output OUT. Use input N to specify the number of bit positions by which the specified value is to be moved.

If the value at input N is "0", the value at input IN is copied to the operand at output OUT.

If the value at input N is greater than the number of available bit positions, the operand value at input IN is shifted to the left by the available number of bit positions.

The bit positions that are freed up in the right area of the operand during the shift operation are filled with zeros.

The following figure shows how the content of an operand of data type WORD is moved by 6 bit positions to the left:

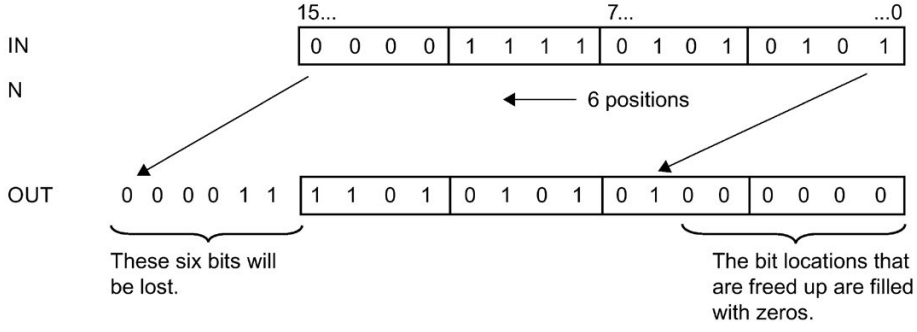

Enable input "EN" and enable output "ENO" cannot be connected. The instruction is therefore always executed (regardless of the signal state at enable input "EN").

Note

S7-300/400:

Only the low-byte is evaluated from input N.

S7-1200/1500:

If the value at input N < 0, the output OUT is set to 0.

Parameters

The following table shows the parameters of the instruction:

Parameter	Declaration	Data type	Description
IN	Input	WORD	Value that is shifted
N	Input	INT	Number of bit positions by which the value is shifted
OUT	Output	WORD	Result of the instruction

Instruction versions

A number of versions are available for this instruction:

Version	S7-300/400	S7-1200	S7-1500	Function
1.0	x	—	—	When projects that were created with *S7 Distributed Safety V5.4 SP5* are migrated, version 1.0 of the instruction is used automatically. If you want to compile a migrated safety program with *STEP 7 Safety Advanced* for the first time, we recommend that you first update to the latest available version of the instruction.
1.1	o	—	o	These versions have identical functions to version V1.0.
1.2	x	—	o	
1.3	x	o	o	
1.4	x	x	x	
2.0	x	x[1]	x[2]	

o This version is no longer supported.

[1] supported for Firmware version V4.2 or higher

[2] supported for Firmware version V2.0 or higher

When a new F-CPU is created with *STEP 7 Safety*, the latest available version for the F-CPU created is automatically preset.

For more information on the use of instruction versions, refer to the help on *STEP 7* under "Using instruction versions".

Example

The following example shows how the instruction works:

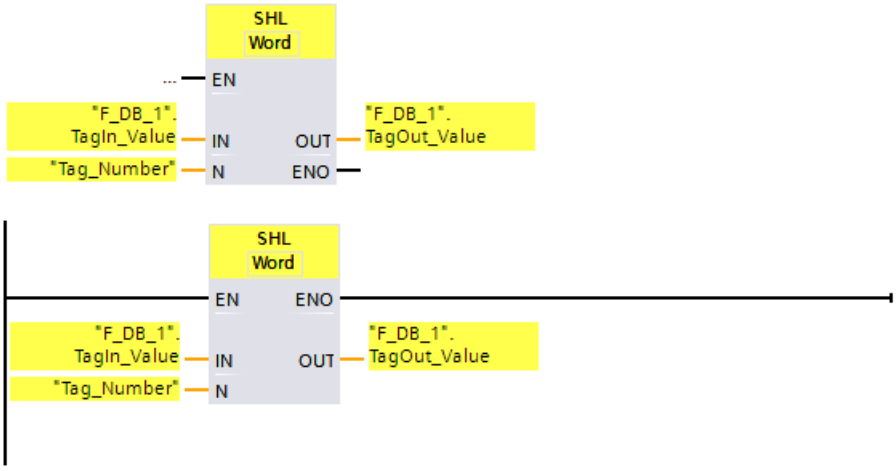

The following table shows how the instruction works using specific operand values:

Parameter	Operand	Value
IN	"F_DB_1".TagIn_Value	`0011 1111 1010 1111`
N	Tag_Number	4
OUT	"F_DB_1".TagOut_Value	`1111 1010 1111 0000`

The instruction is always executed regardless of the signal state at enable input "EN". The content of the operand ""F_DB_1".TagIn_Value" is moved four bit positions to the left. The result is output at output ""F_DB_1".TagOut_Value".

13.13 Operating

13.13.1 ACK_OP: Fail-safe acknowledgment (STEP 7 Safety V15.1)

Description (S7-300, S7-400)

This instruction enables fail-safe acknowledgment from an HMI system. It allows, for example, reintegration of F-I/O to be controlled from the HMI system. Acknowledgment takes place in two steps:

- Input/output parameter IN changes to a value of 6 for exactly one cycle.
- Input/output parameter IN changes to a value of 9 within a minute for exactly one cycle

Once the in/out parameter IN has changed to a value of 6, the instruction evaluates whether this parameter has changed to a value of 9 after 1 second, at the earliest, or one minute, at the latest. Output OUT (output for acknowledgment) is then set to 1 for one cycle.

If an invalid value is input or if in/out parameter IN has not changed to the value 9 within one minute or the change occurred before one second has elapsed, then in/out parameter IN is reset to 0, and both steps listed above must be repeated.

During the time in which in/out parameter IN must change from 6 to the value 9, output Q is set to 1. Otherwise, Q has a value of 0.

Every call of the "Fail-safe acknowledgment" instruction must be assigned a data area in which the instruction data are stored. The "Call options" dialog is automatically opened when the instruction is inserted in the program for this reason. There you can create a data block (single instance) (e.g., ACK_OP_DB_1) or a multi-instance (e.g., ACK_OP_Instance_1) for the "Fail-safe acknowledgment" instruction. Once it is created, you can find the new data block in the project tree in the "STEP 7 Safety" folder under "Program blocks > System blocks" or the multi-instance as a local tag in the "Static" section of the block interface. For more information, refer to the help on *STEP 7*.

Note

A separate data area must be used for each call of ACK_OP. Each call can be processed only once in an F-runtime group cycle.

The F-CPU can go to STOP if this is not observed. The cause of the diagnostics event is entered in the diagnostics buffer of the F-CPU.

Enable input "EN" and enable output "ENO" cannot be connected. The instruction is therefore always executed (regardless of the signal state at enable input "EN").

WARNING

The two acknowledgment steps must **not** be triggered by one single operation, for example by automatically storing them along with the time conditions in a program and using a function key to trigger them.
Having two separate acknowledgment steps also prevents erroneous triggering of an acknowledgment by your non-fail-safe HMI system. *(S013)*

WARNING

If you have HMI systems and F-CPUs that are interconnected and use the ACK_OP instruction for fail-safe acknowledgment, you need to ensure that the intended F-CPU will be addressed **before** you perform the two acknowledgment steps.

- To do this, store a network-wide* unique name for the F-CPU in a DB of your standard user program in each F-CPU.
- In your HMI system, set up a field from which you can read out the F-CPU name from the DB online before executing the two acknowledgment steps.
- Optional:

  in your HMI system, set up a field to permanently store the F-CPU name. Then, you can determine whether the intended F-CPU is being addressed by simply comparing the F-CPU name read out online with the permanently stored name.*(S014)*

* A network consists of one or more subnets. "Network-wide" means beyond the boundaries of the subnet.

Note

You can read out output Q by means of operator control and monitoring systems or, if applicable, evaluate it in your standard user program.

You can provide the in/out parameter IN with a separate memory word or DBW of a DB of the standard user program supply for each instance of the ACK_OP instruction.

Note

The configuration of your operator control and monitoring system does not have any effect on the collective F-signature.

WARNING

When using an instruction with time processing, take the following timing imprecision sources into account when determining your response times:

- Known timing imprecision (based on standard systems) resulting from cyclic processing
- Timing imprecision resulting from the update time of the time base used in the instruction (see figure in section "Timing imprecision resulting from the update time of the time base used in the instruction")
- Tolerance of internal time monitoring in the F-CPU
  - For time values up to 200 ms, a maximum of 4 ms
  - For time values greater than or equal to 200 ms, a maximum of 2% of the (assigned) time value

You must choose the interval between two call times of an instruction with time processing in such a way that the required response times are achieved, taking into account the possible timing imprecision. *(S034)*

Description (S7-1200, S7-1500)

This instruction enables fail-safe acknowledgment from an HMI system. It allows, for example, reintegration of F-I/O to be controlled from the HMI system. Acknowledgment takes place in two steps:

- Input/output parameter IN changes to a value of 6 for exactly one cycle.
- Input/output parameter IN changes to the value at the ACK_ID input within a minute for exactly one cycle

Once the in/out parameter IN has changed to a value of 6, the instruction evaluates whether this parameter has changed to a value at the ACK_ID input after 1 second, at the earliest, or one minute, at the latest. Output OUT (output for acknowledgment) is then set to 1 for one cycle.

If an invalid value is input or if in/out parameter IN has not changed to the value at the ACK_ID input within one minute or the change occurred before one second has elapsed, then in/out parameter IN is reset to 0, and both steps listed above must be repeated.

During the time in which in/out parameter IN must change from 6 to the value at the ACK_ID input, output Q is set to 1. Otherwise, Q has a value of 0.

Every call of the "Fail-safe acknowledgment" instruction must be assigned a data area in which the instruction data are stored. The "Call options" dialog is automatically opened when the instruction is inserted in the program for this reason. There you can create a data block (single instance) (e.g., ACK_OP_DB_1) or a multi-instance (e.g., ACK_OP_Instance_1) for the "Fail-safe acknowledgment" instruction. Once it is created, you can find the new data block in the project tree in the "STEP 7 Safety" folder under "Program blocks > System blocks" or the multi-instance as a local tag in the "Static" section of the block interface. For more information, refer to the help on *STEP 7*.

Note

A separate data area must be used for each call of ACK_OP. Each call can be processed only once in an F-runtime group cycle.

The F-CPU can go to STOP if this is not observed. The cause of the diagnostics event is entered in the diagnostics buffer of the F-CPU.

Enable input "EN" and enable output "ENO" cannot be connected. The instruction is therefore always executed (regardless of the signal state at enable input "EN").

WARNING

The two acknowledgment steps must **not** be triggered by one single operation, for example by automatically storing them along with the time conditions in a program and using a function key to trigger them.
Having two separate acknowledgment steps also prevents erroneous triggering of an acknowledgment by your non-fail-safe HMI system. *(S013)*

WARNING

If you have HMI systems and F-CPUs that are interconnected and use the ACK_OP instruction for fail-safe acknowledgment, you need to ensure that the intended F-CPU will be addressed **before** you perform the two acknowledgment steps.

Alternative 1:

- The value for each identifier of the acknowledgment (ACK_ID input; data type: INT) can be freely selected in the range from 9 to 30000, but must be unique network-wide* for all instances of the ACK_OP instruction.
  You must supply the ACK_ID input with constant values when calling the instruction. Direct read or write access in the associated instance DB is not permitted in the safety program!

Alternative 2:

- To do this, store a network-wide* unique name for the F-CPU in a DB of your standard user program in each F-CPU.
- In your HMI system, set up a field from which you can read out the F-CPU name from the DB online before executing the two acknowledgment steps.
- Optional:
  in your HMI system, set up a field to permanently store the F-CPU name. Then, you can determine whether the intended F-CPU is being addressed by simply comparing the F-CPU name read out online with the permanently stored designation. *(S047)*

* A network consists of one or more subnets. "Network-wide" means beyond the boundaries of the subnet.

Note

You can read out output Q by means of operator control and monitoring systems or, if applicable, evaluate it in your standard user program.

You need to provide the in/out parameter IN with a separate memory word or DBW of a DB of the standard user program for each instance of the ACK_OP instruction.

Note

The supply of the IN input/output of the ACK_OP instruction as well as the configuration of your operator control and monitoring system do not have any effect on the F-collective signature, the F-SW collective signature or the signature of the block that calls the ACK_OP instruction.

Changes to the supply of the IN input/output or to the configuration of your operator control and monitoring system therefore do not result in a changed F-collective signature/F-SW collective signature/signature of the calling block.

WARNING

When using an instruction with time processing, take the following timing imprecision sources into account when determining your response times:

- Known timing imprecision (based on standard systems) resulting from cyclic processing
- Timing imprecision resulting from the update time of the time base used in the instruction (see figure in section "Timing imprecision resulting from the update time of the time base used in the instruction")
- Tolerance of internal time monitoring in the F-CPU
  - For time values up to 200 ms, a maximum of 4 ms
  - For time values greater than or equal to 200 ms, a maximum of 2% of the (assigned) time value

You must choose the interval between two call times of an instruction with time processing in such a way that the required response times are achieved, taking into account the possible timing imprecision. *(S034)*

Parameters (S7-300, S7-400)

The following table shows the parameters of the instruction:

Parameter	Declaration	Data type	Description
IN	InOut	INT	Input variable from HMI system
OUT	Output	BOOL	Output for acknowledgment
Q	Output	BOOL	Time status

Parameters (S7-1200, S7-1500)

The following table shows the parameters of the instruction:

Parameter	Declaration	Data type	Description
ACK_ID	Input	INT	Identifier of the acknowledgment (9 to 30000)
IN	InOut	INT	Input variable from HMI system
OUT	Output	BOOL	Output for acknowledgment
Q	Output	BOOL	Time status

Instruction versions

A number of versions are available for this instruction:

Version	S7-300/400	S7-1200	S7-1500	Function
1.0	x	—	—	When projects that were created with *S7 Distributed Safety V5.4 SP5* are migrated, version 1.0 of the instruction is used automatically. If you want to compile a migrated safety program with *STEP 7 Safety Advanced* for the first time, we recommend that you first update to the latest available version of the instruction.
1.1	x	—	o	These versions are identical in function to version V1.0 for S7-300/400 F-CPUs. The input ACK_ID must also be taken into consideration for S7-1200/1500 F-CPUs.
1.2	x	o	o	
1.3	x	x	x	

o This version is no longer supported.

When a new F-CPU is created with *STEP 7 Safety*, the latest available version for the F-CPU created is automatically preset.

For more information on the use of instruction versions, refer to the help on *STEP 7* under "Using instruction versions".

Timing imprecision resulting from the update time of the time base used in the instruction:

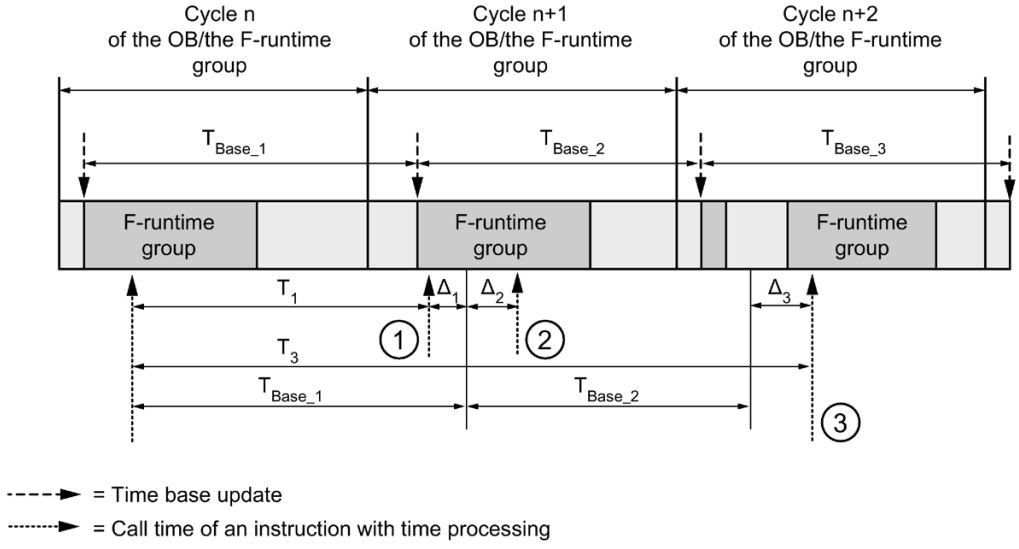

① For the first call in cycle n+1, the call time of the instruction relative to the start of the F-runtime group is earlier than that in cycle n by the amount of Δ_1, e.g. because parts of the safety program of the F-runtime group before the call time of the instruction in cycle n+1 are skipped. For the time update, the instruction takes account of time T_{Base_1} instead of the time T_1 that has actually elapsed in cycle n since the call.

② The instruction is called a second time in cycle n+1. This does not involve another time update (by Δ_2).

③ For the call in cycle n+2, the call time of the instruction relative to the start of the F-runtime group is later than that in cycle n by the amount of Δ_3, e.g. because the F-runtime group was interrupted by a higher priority interrupt before the call time of the instruction in cycle n+2. The instruction took into account time $T_{Base_1} + T_{Base_2}$ instead of the time T_3 that has actually elapsed in cycle n since the call. This would also be the case if no call occurred in cycle n+1.

Example

An example how the instruction is used is available under Implementing User Acknowledgment in the Safety Program of the F-CPU of a DP Master or IO controller (Page 187).

See also

Implementing user acknowledgment in the safety program of the F-CPU of a I-slave or I-device (Page 192)

13.14 Additional instructions

13.14.1 LAD

13.14.1.1 ---| |--- OV: Get status bit OV (STEP 7 Safety Advanced V15.1) (S7-300, S7-400)

Description

You can use the "Get status bit OV" instruction to detect whether a number range overflow occurred in the last arithmetic instruction processed.

The "Get status bit OV" instruction functions like a normally open contact. If the query is fulfilled, the instruction has signal state "1". If the query is not fulfilled, the instruction has signal state "0".

The "Get status bit OV" evaluation must be inserted in the network that follows the instruction that influences the OV. This network must not contain any jump labels.

Note

The execution time of the OV-affecting instruction is extended when the "Get status bit OV " instruction is used (see also Excel file for response time calculation (http://support.automation.siemens.com/WW/view/en/49368678/133100)).

Example

The following example shows how the instruction works:

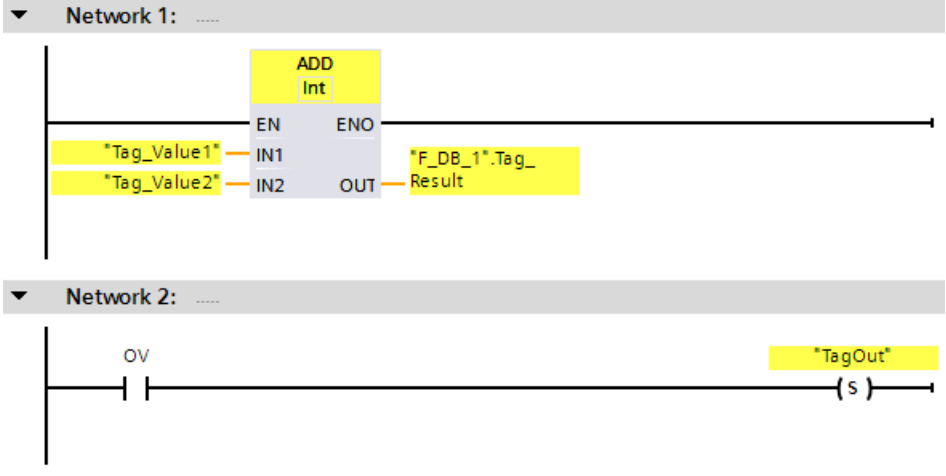

The "Add" instruction is always executed (regardless of the signal state at enable input EN).

The value of the "Tag_Value1" operand is added to value of the Tag_Value2 operand. The result of the addition is stored in the ""F_DB_1".Tag_Result" operand.

If an overflow occurs during execution of the "Add" instruction, the status bit OV is set to "1". In network 2, following the query of the status bit OV, the "Set output" (S) instruction is executed and the "TagOut" operand is set.

13.14.1.2 ---| / |--- OV: Get negated status bit OV (STEP 7 Safety Advanced V15.1) (S7-300, S7-400)

Description

You can use the "Get negated status bit OV" instruction to detect whether a number range overflow occurred in the last arithmetic instruction processed. This instruction is only available in LAD.

The "Get negated status bit OV" instruction functions like a normally closed contact. If the query is satisfied, the instruction has signal state "0". If the query is not satisfied, the instruction has signal state "1".

The "Get negated status bit OV" evaluation must be inserted in the network following the instruction that influences the OV. This network must not contain any jump labels.

Note

The execution time of the OV-affecting instruction is extended when the "Get negated status bit OV " instruction is used (see also Excel file for response time calculation (http://support.automation.siemens.com/WW/view/en/49368678/133100)).

Example

The following example shows how the instruction works:

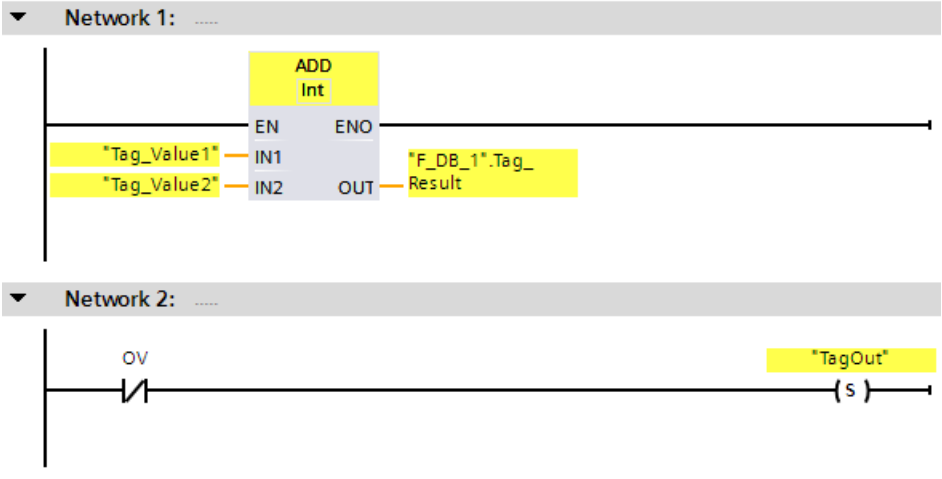

The "Add" instruction is always executed (regardless of the signal state at enable input EN).

The value of the "Tag_Value1" operand is added to value of the Tag_Value2 operand. The result of the addition is stored in the ""F_DB_1".Tag_Result" operand.

If an overflow does *not* occur during execution of the "Add" instruction, the status bit OV is reset to "0". In network 2, following the query of the status bit OV, the "Set output" (S) instruction is executed and the "TagOut" operand is set.

13.14.2 FBD

13.14.2.1 OV: Get status bit OV (STEP 7 Safety Advanced V15.1) (S7-300, S7-400)

Description

You can use the "Get status bit OV" instruction to detect whether a number range overflow occurred in the last arithmetic instruction processed.

The "Get status bit OV" evaluation must be inserted in the network that follows the instruction that influences the OV. This network must not contain any jump labels.

If the query is fulfilled, the instruction has signal state "1". If the query is not fulfilled, the instruction has signal state "0".

You can program a query of status bit OV for "0" with the "Invert RLO" instruction.

Note

The execution time of the OV-affecting instruction is extended when the "Get status bit OV " instruction is used (see also Excel file for response time calculation (http://support.automation.siemens.com/WW/view/en/49368678/133100)).

Example

The following example shows how the instruction works:

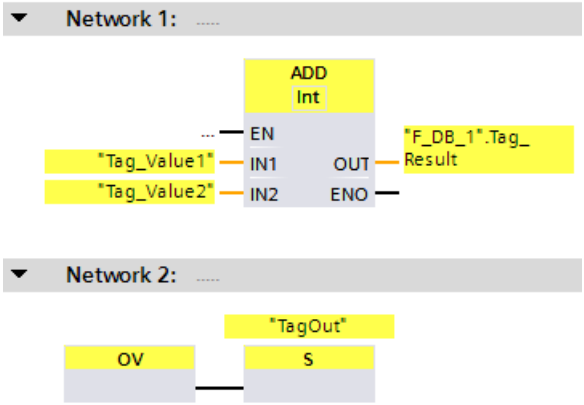

The value of the "Tag_Value1" operand is added to value of the Tag_Value2 operand. The result of the addition is stored in the ""F_DB_1".Tag_Result" operand.

If an overflow occurs during execution of the "Add" instruction, the status bit OV is set to "1". In network 2, following the query of the status bit OV, the "Set output" (S) instruction is executed and the "TagOut" operand is set.

13.15 Communication

13.15.1 PROFIBUS/PROFINET

13.15.1.1 SENDDP and RCVDP: Send and receive data via PROFIBUS DP/PROFINET IO (STEP 7 Safety V15.1)

Introduction

You use the SENDDP and RCVDP instructions for fail-safe sending and receiving of data using:

- Safety-related master-master communication
- Safety-related master-master communication for S7 Distributed Safety
- Safety-related master-I-slave communication
- Safety-related I-slave-I-slave communication
- Safety-related IO controller-IO controller communication
- Safety-related IO controller-IO controller communication for S7 Distributed Safety
- Safety-related IO controller-I-device communication
- Safety-related IO controller-I-slave communication

Description

The SENDDP instruction sends 16 data elements of data type BOOL and 2 data elements of data type INT or one data element of the data type DINT (S7-1200, S7-1500) in a fail-safe manner to another F-CPU via PROFIBUS DP/PROFINET IO. The data can be received there by the related RCVDP instruction.

Every call of this instruction must be assigned a data area in which the instruction data are stored. The "Call options" dialog is automatically opened when the instruction is inserted in the program for this reason. There you can create a data block (single instance) (e.g. RCVDP_DB_1) for these instructions. Once it is created, the new data block can be found in the "STEP 7 Safety" folder in the project tree under "Program blocks > System blocks". For more information, refer to the help on *STEP 7*.

Enable input "EN" and enable output "ENO" cannot be connected. The instruction is therefore always executed (regardless of the signal state at enable input "EN").

With the SENDDP instruction, the data to be sent (for example, outputs of other F-blocks/instructions) are available at input SD_BO_xx or SD_I_xx or SD_DI_00 as alternative.

With the RCVDP instruction, the data received are available at outputs RD_BO_xx and RD_I_xx or RD_DI_00 as alternative for additional processing by other F-blocks/instructions.

(S7-1200, S7-1500) At the DINTMODE input of the SENDDP instruction you specify if the data at the inputs SD_I_00 and SD_I_01 or the data at the input SD_DI_00 is sent.

The operating mode of the F-CPU with the SENDDP instruction is provided at output SENDMODE. If the F-CPU with the SENDDP instruction is in disabled safety mode, output SENDMODE = 1.

Communication between F-CPUs takes place in the background by means of a special safety protocol. You must define the communication relationship between a SENDDP instruction in one F-CPU and a RCVDP instruction in the other F-CPU by specifying an F-communication ID at the DP_DP_ID inputs of the SENDDP and RCVDP instructions. Associated SENDDP and RCVDP instructions are assigned the same value for DP_DP_ID.

WARNING

The value for the respective F-communication ID (input DP_DP_ID; data type: INT) can be freely selected**; however, it must be unique for all safety-related communication connections network-wide* and CPU-wide at all times. The uniqueness must be checked in the safety summary during acceptance of the safety program. You can find additional information in Correctness and completeness of the communication configuration (Page 374).

You must supply constant values*** to the inputs DP_DP_ID and LADDR when calling the instruction. Direct write accesses in the associated instance DB to DP_DP_ID and LADDR are not permitted in the safety program! *(S016)*

* A network consists of one or more subnets. "Network-wide" means beyond the boundaries of the subnet. In PROFIBUS, a network includes all nodes accessible via PROFIBUS DP. In PROFINET IO, a network includes all nodes accessible via RT_Class_1/2/3 (Ethernet/WLAN/Bluetooth, Layer 2) and if applicable RT_Class_UDP (IP, Layer 3).

** S7-1200/1500: As of version V3.0 of the SENDDP and RCVDP instructions, no connection is established at the DP_DP_ID input for a F-communication ID "0".

*** S7-1200/1500: As of version V3.0 of the SENDDP and RCVDP instructions, the DP_DP_ID input can also be supplied with variable values from a global F-DB. In this case as well you have to check during the acceptance of the safety program that the uniqueness is ensured *at every moment*, by checking the algorithm for the creation of the variable value accordingly. If you cannot ensure a unique F-communication ID during startup of the safety program, because it is only specified after startup of the safety program, you must make sure that the value at the DP_DP_ID input is "0" during this phase.

Note

Within a safety program, you must assign a different start address (S7-300/400) or HW identifier (S7-1200/1500) for every call of the SENDDP and RCVDP instructions at input LADDR.

A separate instance DB must be used for each call of the SENDDP and RCVDP instructions. You must not declare and call these instructions as multi-instances.

(S7-300/400) The inputs of the RCVDP and RCVS7 instructions may not have preceding logic operations (for example "AND logic operation").

The inputs of the RCVDP instruction cannot be initialized using fully qualified DB accesses with outputs of a RCVDP or RCVS7 instruction called in an upstream network.

(S7-1200/1500) The RD_D_00 output must not be evaluated for DINTMODE = 0; the RD_I_xx outputs of the RCVDP instruction must not be evaluated for DINTMODE = 1.

(S7-1200/1500) The outputs of the SENDDP and RCVDP instructions must not be supplied with tags from the standard user program. Exception: RET_DPRD, RET_DPWR and DIAG outputs.

Fully qualified access to DP_DP_ID and LADDR is not possible in the safety program.

You cannot use an actual parameter for an output of an RCVDP instruction, if it is already being used for an input of the same or another RCVDP or RCVS7 instruction.

The F-CPU can go to STOP if this is not observed. The cause of the diagnostics event is entered in the diagnostics buffer of the F-CPU.

Note

You are not permitted to insert any SENDDP/RCVDP instructions between a JMP or JMPN instruction and the associated jump destination (jump label).

You cannot insert a RET instruction prior to a SENDDP instruction.

SENDDP parameter

The following table shows the parameters of the SENDDP instruction:

Parameter	Declaration	Data type	Description
SD_BO_00	Input	BOOL	Send data BOOL 00
...			...
SD_BO_15	Input	BOOL	Send data BOOL 15
SD_I_00	Input	INT	Send data INT 00
SD_I_01	Input	INT	Send data INT 01
SD_DI_00	Input	DINT	(S7-1200, S7-1500) (hidden) Send data DINT 00
DINTMODE	Input	DINT	(S7-1200, S7-1500) (hidden) 0=SD_I_00 u. SD_I_01 are sent 1=SD_DI_00 is sent
DP_DP_ID	Input	INT	F-communication ID between SENDDP and RCVDP
TIMEOUT	Input	TIME	Monitoring time in ms for safety-related communication (see also Monitoring and response times (Page 607))
LADDR	Input	INT (S7-300, S7-400) HW_SUBMODULE (S7-1200, S7-1500)	The start address (S7-300, S7-400) or HW identifier (S7-1200, S7-1500) of the address area/transfer area: • Of DP/DP coupler for safety-related master-master communication • For safety-related master-I-slave communication • For safety-related I-slave-I-slave communication • Of PN/PN coupler for safety-related IO controller-IO controller communication • For safety-related IO controller-I-device communication • For safety-related IO controller-I-slave communication
ERROR	Output	BOOL	1=Communication error
SUBS_ON	Output	BOOL	1=RCVDP outputs fail-safe values
RET_DPRD	Output	WORD	Non-fail-safe error code RET_VAL of the DPRD_DAT instruction (for a description of error codes, refer to the help for the DPRD_DAT instruction ("Extended instructions > Distributed I/O > Other")).
RET_DPWR	Output	WORD	Non-fail-safe error code RET_VAL of the DPWR_DAT instruction (for a description of error codes, refer to the help for the DPWR_DAT instruction ("Extended instructions > Distributed I/O > Other")).
DIAG	Output	BYTE	Non-fail safe service information

RCVDP parameter:

The following table shows the parameters of the RCVDP instruction:

Parameter	Declaration	Data type	Description
ACK_REI	Input	BOOL	1=Acknowledgment for reintegration of send data following communication error
SUBBO_00	Input	BOOL	Fail-safe value for receive data BOOL 00
...			...
SUBBO_15	Input	BOOL	Fail-safe value for receive data BOOL 15
SUBI_00	Input	INT	Fail-safe value for receive data INT 00
SUBI_01	Input	INT	Fail-safe value for receive data INT 01
SUBDI_00	Input	DINT	(S7-1200, S7-1500) (hidden) Fail-safe value for receive data DINT 00
DP_DP_ID	Input	INT	F-communication ID between SENDDP and RCVDP
TIMEOUT	Input	TIME	Monitoring time in ms for safety-related communication (see also Monitoring and response times (Page 607))
LADDR	Input	INT (S7-300, S7-400) HW_SUBMODULE (S7-1200, S7-1500)	The start address (S7-300, S7-400) or HW identifier (S7-1200, S7-1500) of the address area/transfer area: • Of DP/DP coupler for safety-related master-master communication • For safety-related master-I-slave communication • For safety-related I-slave-I-slave communication • Of PN/PN coupler for safety-related IO controller-IO controller communication • For safety-related IO controller-I-device communication • For safety-related IO controller-I-slave communication
ERROR	Output	BOOL	1=Communication error
SUBS_ON	Output	BOOL	1=Fail-safe values are output
ACK_REQ	Output	BOOL	1=Acknowledgment for reintegration of send data required
SENDMODE	Output	BOOL	1=F-CPU with SENDDP instruction in disabled safety mode
RD_BO_00	Output	BOOL	Receive data BOOL 00
...			...
RD_BO_15	Output	BOOL	Receive data BOOL 15
RD_I_00	Output	INT	Receive data INT 00
RD_I_01	Output	INT	Receive data INT 01
RD_DI_00	Output	DINT	(S7-1200, S7-1500) (hidden) Receive data DINT 00
RET_DPRD	Output	WORD	Non-fail-safe error code RET_VAL of the DPRD_DAT instruction (for a description of error codes, refer to the help for the DPRD_DAT instruction ("Extended instructions > Distributed I/O > Other")).

Parameter	Declaration	Data type	Description
RET_DPWR	Output	WORD	Non-fail-safe error code RET_VAL of the DPWR_DAT instruction (for a description of error codes, refer to the help for the DPWR_DAT instruction ("Extended instructions > Distributed I/O > Other")).
DIAG	Output	BYTE	Non-fail safe service information

Instruction versions

A number of versions are available for these instructions:

Version	S7-300/400	S7-1200	S7-1500	Function
1.0	x	—	—	When projects that were created with *S7 Distributed Safety V5.4 SP5* are migrated, version 1.0 of the instruction is used automatically. If you want to compile a migrated safety program with *STEP 7 Safety Advanced* for the first time, we recommend that you first update to the latest available version of the instruction.
1.1	o	—	o	These versions have identical functions to version V1.0.
1.2	x	—	o	
1.4	x	—	x	
1.3	x	—	o	S7-300/400: These versions have identical functions to version V1.0. S7-1200/1500: Instead of 2 data of data type INT, one data of data type DINT can be sent/received as alternative. Otherwise identical function as version V1.0.
1.5	x	x	x	
2.0	x	x[1]	x[2]	
3.0	x	x[1]	x[2]	S7-300/400: This version has identical functions to version V2.0. S7-1200/1500: • The DP_DP_ID input can also be supplied with tags of a global F-DB. In case of DP_DP_ID = 0 no connection is established. • Supports the data status byte of the PN/PN coupler as of V4.0 • Supports the simulation of the communication in S7-PLCISM operation Otherwise functionally identical to version V2.0

o This version is no longer supported.

[1] supported for Firmware version V4.2 or higher

[2] supported for Firmware version V2.0 or higher

When a new F-CPU is created with *STEP 7 Safety*, the latest available version for the F-CPU created is automatically preset.

For more information on the use of instruction versions, refer to the help on *STEP 7* under "Using instruction versions".

Placement

You need to insert the RCVDP instruction *either* at the start of the main safety block *or* (with S7-1200/1500 F-CPUs) in an F-FB/F-FC called directly at the start of the main safety block. No other instructions can be located before in the main safety block and no other instructions can be located before or afterwards in the F-FB/F-FC.

You need to insert the SENDDP instruction *either* at the end of the main safety block *or* (with S7-1200/1500 F-CPUs) in an F-FB/F-FC called directly at the end of the main safety block. No other instructions can be located afterwards in the main safety block and no other instructions can be located before or afterwards in the F-FB/F-FC.

Startup characteristics

After the sending and receiving F-systems are started up, communication must be established between the connection partners for the fist time (SENDDP and RCVDP instructions). During this time, the receiver (RCVDP instruction) outputs the fail-safe values present at its inputs SUBBO_xx and SUBI_xx or alternatively SUBDI_00.

The SENDDP and RCVDP instructions signal this with 1 at output SUBS_ON. The SENDMODE output has default setting "0" and is not updated as long as output SUBS_ON = 1.

As of version V3.0 of the SENDDP and RCVDP instructions, communication is only established when DP_DP_ID <> 0.

Behavior in the event of communication errors

If a communication error occurs, for example, due to a signature error (CRC) or when monitoring time TIMEOUT expires or for F-CPUs S7-1200/1500 as of V3.0 due to a change of the DP_DP_ID to 0 after establishment of communication, the outputs ERROR and SUBS_ON = 1 are set. The receiver (RCVDP instruction) then outputs the fail-safe values assigned at its inputs SUBBO_xx and SUBI_xx or alternatively SUBDI_00 inputs. Output SENDMODE is not updated while output SUBS_ON = 1.

The send data of the SENDDP instruction present at inputs SD_BO_xx and SD_I_xx, SD_DI_00 as alternative, are only output again when communication errors are no longer detected (ACK_REQ = 1) and you acknowledge (Page 187) the RCVDP instruction with a positive edge at input ACK_REI.

Communication errors also occur if the values of the DP_DP_IDs between associated SENDDP and RCVDP are temporarily different on a change of the values of variable DP_DP_IDs after communication establishment.

⚠ WARNING
For the user acknowledgment, you must interconnect input ACK_REI with a signal generated by the operator input. An interconnection with an automatically generated signal is not permitted.* *(S040)*

* If variable F-communication IDs are used, the communication partner of the SENDDP or RCVDP instructions can be changed during running operation. The resultant communication errors may only be acknowledged with an automatically generated signal at the ACK_REI input under the following conditions:

- The F-program reliably forms a signal "Communication partner change is in progress" with the RCVDP instruction on the basis of the process state.
- The signal "Communication partner change is in progress" is only formed if there is no communication error.
- While the signal "Communication partner change is in progress" is active, no evaluation of the received process values is carried out at the RCVDP instruction.
- The automatic acknowledgement is only carried out if the "Communication partner change is in progress" signal is available.
- From a safety standpoint automatic reintegration is permitted for the relevant process.

Note that output ERROR (1=communication error) for a communication error will not be set unless communication between the connection partners (SENDDP and RCVDP instructions) has been previously established. If communication cannot be established after startup of the sending and receiving F-Systems, check the configuration of the safety-related CPU-CPU communication, the parameter assignment of the SENDDP and the RCVDP instructions, and the bus connection. You also obtain information on possible error causes by evaluating outputs DIAG, RET_DPRD and RETDP_WR.

In general, always evaluate RET_DPRD and RETDP_WR, since it is possible that only one of the two outputs will contain error information.

Timing diagrams SENDDP/RCVDP

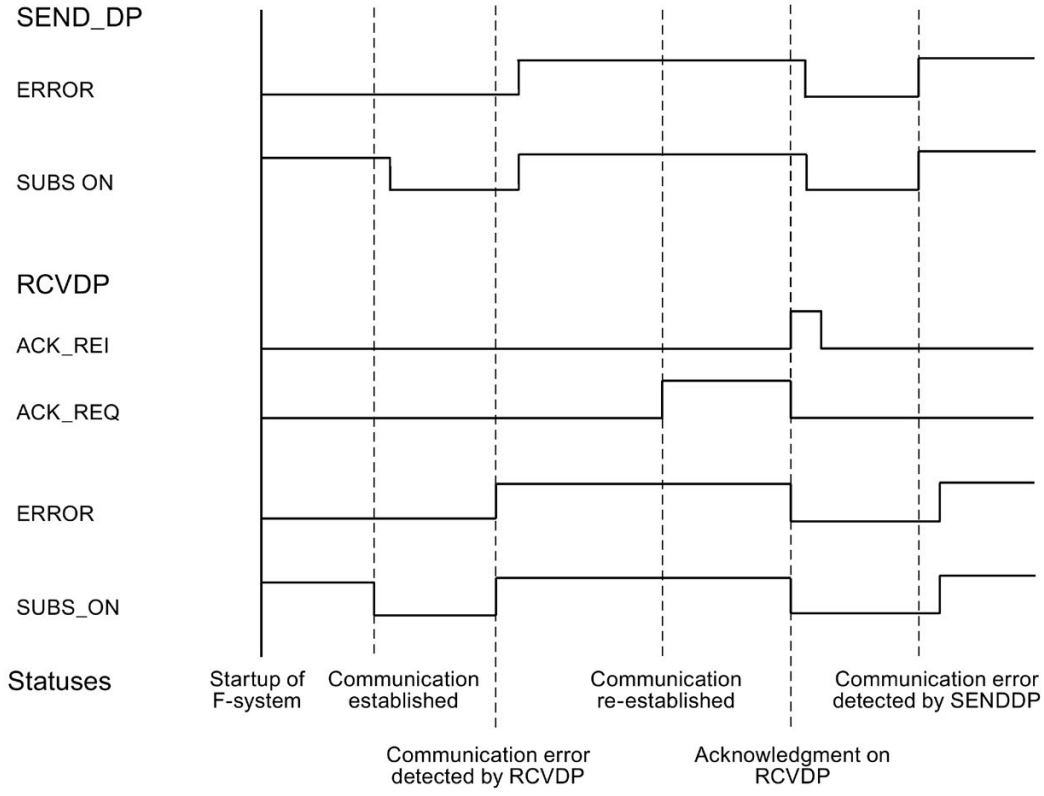

Output DIAG

In addition, non-fail-safe information about the type of communication errors that occurred is provided at output DIAG of the SENDDP and RCVDP instructions for service purposes.

You can read out this information by means of operator control and monitoring systems or, if applicable, you can evaluate it in your standard user program. DIAG bits are saved until you acknowledge the errors at input ACK_REI of the RCVDP instruction.

Structure of DIAG of the SENDDP/RCVDP instruction

Bit no.	Assignment	Possible error causes	Remedies
Bit 0	Reserved	—	—
Bit 1	Reserved	—	—
Bit 2	Reserved	—	—
Bit 3	Invalid DP_DP_ID	The DP_DP_ID is 0.	Check the DP_DP_ID of SENDDP or RCVDP.
Bit 4	Timeout of SENDDP/RCVDP detected	The standard program overwrites transfer areas of SENDDP and RCVDP.	Check the standard program for writing accesses into the transfer areas of SENDDP and RCVDP. Please also take indirect accesses into account.
		DP_DP_ID of SENDDP and RCVDP different.	Check the DP_DP_ID of SENDDP and RCVDP.
		For variable F-communication IDs the values are changed at the DP_DP_ID input.	When the DP_DP_ID of SENDDP and RCVD is consistent again, perform an acknowledgment at the ACK_REI input.
		Interference in bus connection to partner F-CPU.	Check the bus connection and ensure that there are no external sources of interference.
		Monitoring time setting for F-CPU and partner F-CPU is too low.	Check the parameterized monitoring time TIMEOUT at SENDDP and RCVDP of both CPUs. Set a higher value if necessary. Recompile the safety program.
		Configuration of the DP/DP coupler or PN/PN coupler is invalid.	Check the configuration of the DP/DP coupler or of the PN/PN coupler.
		Data validity indicator "DIA" of the DP/DP coupler is "ON".	Set the data validity indicator "DIA" at the DIL switch of the DP/DP coupler to "OFF".
		Parameter "Data validity indicator DIA" of the PN/PN coupler is activated.	Deactivate the "Data validity display DIA" parameter in the properties for the PN/PN coupler.
		Parameter "Activate data status" of the PN/PN coupler (as of V4.0) is activated.	Deactivate the "Activate data status" parameter in the properties for the PN/PN coupler (as of V4.0) or S7-1200/1500: Use Version V3.0 of the SENDDP and RCVDP instructions.
		Internal fault of DP/DP coupler or PN/PN coupler	Replace the DP/DP coupler or PN/PN coupler
		CP in STOP mode, or internal fault in CP	Switch the CP to RUN. Check the diagnostics buffer of the CP. If necessary, replace the CP.
		F-CPU/partner F-CPU in STOP mode, or internal fault in F-CPU/partner F-CPU	Switch the F-CPUs to RUN. Check the diagnostics buffer of the F-CPUs. If necessary, replace the F-CPUs.
Bit 5	Sequence number error of SENDDP/RCVDP detected	See description for bit 4	See description for bit 4

Bit no.	Assignment	Possible error causes	Remedies
Bit 6	CRC-error of SENDDP/RCVDP detected	See description for bit 4	See description for bit 4
		DP_DP_ID of SENDDP and RCVDP different	Check DP_DP_ID of SENDDP and RCVDP
Bit 7	Reserved	—	—

See also

Communication with S7 Distributed Safety via PN/PN coupler (IO controller-IO controller communication) (Page 256)

Communication with S7 Distributed Safety via DP/DP coupler (master-master communication) (Page 257)

Configuring and programming communication (S7-300, S7-400) (Page 201)

Safety-related IO controller-IO controller communication (Page 204)

Safety-related master-master communication (Page 213)

Safety-related IO controller-I-device communication (Page 223)

Safety-related master-I-slave communication (Page 229)

Safety-related IO controller-I-slave communication (Page 247)

13.15.2 S7 communication

13.15.2.1 SENDS7 and RCVS7: Communication via S7 connections (STEP 7 Safety Advanced V15.1) (S7-300, S7-400)

Introduction

You use the SENDS7 and RCVS7 instructions for fail-safe sending and receiving of data using S7 connections.

Note

In *STEP 7 Safety Advanced*, S7 connections are generally permitted over Industrial Ethernet only.

Safety-related communication via S7 connections is possible from and to F-CPUs with PROFINET interface or S7-400 F-CPUs with PROFINET-capable CPs. See also Safety-related communication via S7 connections (Page 248).

Description

The SENDS7 instruction sends the send data contained in an F-communication DB to the F-communication DB of the associated RCVS7 instruction of another F-CPU in a fail-safe manner using an S7 connection.

Every call of this instruction must be assigned a data area in which the instruction data are stored. The "Call options" dialog is automatically opened when the instruction is inserted in the program for this reason. There you can create a data block (single instance) (e.g., SENDS7_DB_1) or a multi-instance (e.g., SENDS7_Instance_1) for this instruction. Once it is created, you can find the new data block in the project tree in the "STEP 7 Safety" folder under "Program blocks > System blocks" or the multi-instance as a local tag in the "Static" section of the block interface. For more information, refer to the help on *STEP 7*.

Enable input "EN" and enable output "ENO" cannot be connected. The instruction is therefore always executed (regardless of the signal state at enable input "EN").

Information on the F-communication DB is contained in "Programming safety-related communication via S7 connections (Page 251)".

An F-communication DB is an F-DB for safety-related CPU-CPU communication with special properties. You must specify the numbers of the F-communication DBs at inputs SEND_DB and RCV_DB of instructions SENDS7 and RCVS7.

The operating mode of the F-CPU with the SENDS7 instruction is provided at output SENDMODE of the RCVS7 instruction. If the F-CPU with the SENDS7 instruction is in disabled safety mode, then output SENDMODE = 1.

To reduce the bus load, you can temporarily shut down communication between the F-CPUs at input EN_SEND of the SENDS7 instruction. To do so, supply input EN_SEND with "0" (default = "1"). In this case, send data are no longer sent to the F-communication DB of the associated RCVS7 instruction, and the receiver provides fail-safe values for this period of time (initial values in its F-communication DB). If communication was already established between the partners, a communication error is detected.

You must specify the local ID - from the perspective of the F-CPU - of the S7 connection (from the connection table in the network view) at input ID of the SENDS7 instruction (see also Configuring (Page 43)).

Communication between F-CPUs takes place in the background by means of a special safety protocol. You must define a communication relationship between an SENDS7 instruction in one F-CPU and a communication relationship between an RCVS7 instruction and the other F-CPU by assigning an odd number at input R_ID (of the SENDS7 and RCVS7 instructions). Associated SENDS7 and RCVS7 instructions receive the same value for R_ID.

WARNING

The value for the respective F-communication ID (input R_ID; data type: DWORD) can be freely selected; however, it must be odd for all safety-related communication connections network-wide* and CPU-wide. The value R_ID + 1 is internally assigned and must not be used.

You must supply inputs ID and R_ID with constant values when calling the instruction. Direct read or write access to the associated instance DB is not permitted in the safety program. *(S020)*

* A network consists of one or more subnets. "Network-wide" means beyond the boundaries of the subnet. In PROFIBUS, a network includes all nodes accessible via PROFIBUS DP. In PROFINET IO, a network includes all nodes accessible via RT_Class_1/2/3 (Ethernet/WLAN/Bluetooth, Layer 2) and if applicable RT_Class_UDP (IP, Layer 3).

Note

A separate instance DB must be used for each call of the SENDS7 and RCVS7 instructions within a safety program. You must not declare and call these instructions as multi-instances.

The inputs of the RCVS7 instruction cannot be initialized with outputs (using fully qualified DB accesses) of a RCVS7 or RCVDP instruction called in an upstream network.

You cannot use an actual parameter for an output of an RCVS7 instruction, if it is already being used for an input of the same or another RCVS7 or RCVDP instruction.

The F-CPU can go to STOP if this is not observed. A diagnostics event is entered in the diagnostics buffer of the F-CPU.

Note

You must not program any SENDS7/RCVS7 instruction between a JMP or JMPN instruction and the associated destination network of the JMP or JMPN instruction.

You cannot program a RET instruction prior to a SENDS7 instruction.

SENDS7 parameter

The following table shows the parameters of the SENDS7 instruction:

Parameter	Declaration	Data type	Description
SEND_DB	Input	BLOCK_DB	Number of F-communication DB
TIMEOUT	Input	TIME	Monitoring time in ms for safety-related communication (see also Monitoring and response times (Page 607))
EN_SEND	Input	BOOL	1= Send enable
ID	Input	WORD	Local ID of the S7 connection
R_ID	Input	DWORD	Network-wide unique value for a F-communication ID between a SENDS7 instruction and a RCVS7 instruction
ERROR	Output	BOOL	1=Communication error
SUBS_ON	Output	BOOL	1=Receiving block outputs fail-safe values
STAT_RCV	Output	WORD	Non-fail-safe status parameter STATUS of the URCV instruction (You can find a description of error codes in the help for the URCV instruction ("Communication > S7 Communication"))
STAT_SND	Output	WORD	Non-fail-safe status parameter STATUS of the USEND instruction (You can find a description of error codes in the help for the USEND instruction ("Communication > S7 Communication"))
DIAG	Output	BYTE	Non-fail safe service information

RCVS7 parameter

The following table shows the parameters of the RCVS7 instruction.

Parameter	Declaration	Data type	Description
ACK_REI	Input	BOOL	Acknowledgment for reintegration of send data after communication error
RCV_DB	Input	BLOCK_DB	Number of F-communication DB
TIMEOUT	Input	TIME	Monitoring time in ms for safety-related communication (see also Monitoring and response times (Page 607))
ID	Input	WORD	Local ID of the S7 connection
R_ID	Input	DWORD	Network-wide unique value for a F-communication ID between a SENDS7 instruction and a RCVS7 instruction
ERROR	Output	BOOL	1=Communication error
SUBS_ON	Output	BOOL	1=Fail-safe values are output
ACK_REQ	Output	BOOL	1=Acknowledgment for reintegration of send data required
SENDMODE	Output	BOOL	1=F-CPU with the SENDS7 instruction in disabled safety mode
STAT_RCV	Output	WORD	Non-fail-safe status parameter STATUS of the URCV instruction (You can find a description of error codes in the help for the URCV instruction ("Communication > S7 Communication"))
STAT_SND	Output	WORD	Non-fail-safe status parameter STATUS of the USEND instruction (You can find a description of error codes in the help for the USEND instruction ("Communication > S7 Communication"))
DIAG	Output	BYTE	Non-fail safe service information

Instruction versions

A number of versions are available for these instructions:

Version	S7-300/400	S7-1500	Function
1.0	x	—	
1.1	x	—	This version has identical functions to version V1.0. It also supports later versions of internally called instructions. When projects that were created with *S7 Distributed Safety V5.4 SP5* are migrated, version 1.1 of the instruction is used automatically. If you want to compile a migrated safety program with *STEP 7 Safety Advanced* for the first time, we recommend that you first update to the latest available version of the instruction.
1.2	x	—	This version has identical functions to version V1.0/1.1. It also supports later versions of internally called instructions.

When a new F-CPU is created with *STEP 7 Safety Advanced*, the latest available version for the F-CPU created is automatically preset.

For more information on the use of instruction versions, refer to the help on *STEP 7* under "Using instruction versions".

Placement

You must insert the RCVS7 instruction at the start of the main safety block. No other instructions may be located before it in the main safety block.

You must insert the the SENDS7 instruction at the end of the main safety block. No other instructions may be located after it in the main safety block.

Startup characteristics

After the sending and receiving F-systems are started up, communication must be established between the connection partners for the fist time (SENDS7 and RCVS7 instructions). The receiver (RCVS7 instruction) provides fail-safe values for this time period (initial values in its F-communication DB).

The SENDS7 and RCVS7 instructions signal this with 1 at output SUBS_ON. The SENDMODE output (RCVS7 instruction) has default setting "0" and is not updated as long as output SUBS_ON = 1.

Behavior in the event of communication errors

If a communication error occurs, for example, due to a signature error (CRC) or when monitoring time TIMEOUT expires, outputs ERROR and SUBS_ON = 1 are set. The receiver (RCVS7 instruction) then provides fail-safe values (initial values in its F-communication DB). Output SENDMODE is not updated while output SUBS_ON = 1.

The send data present in the F-communication DB (SENDS7 instruction) are not output before the communication error is no longer detected (ACK_REQ = 1) and you acknowledge (Page 187) with a positive edge at input ACK_REI of the RCVS7 instruction.

⚠ WARNING
For the user acknowledgment, you must interconnect input ACK_REI with a signal generated by the operator input. An interconnection with an automatically generated signal is not permitted. *(S040)*

Note that output ERROR (1=communication error) will be set for the first time on a communication error if communication has already been established between the connection partners (SENDS7 and RCVS7 instructions). If communication cannot be established after startup of the sending and receiving F-Systems, check the configuration of the safety-related CPU-CPU communication, the parameter assignment of the SENDS7 and the RCVS7 instructions, and the bus connection. You can also receive information on possible error causes by evaluating the STAT_RCV and STAT_SND outputs.

In general, always evaluate STAT_RCV and STAT_SND, since it is possible that only one of the two outputs will contain error information.

If one of the DIAG bits is set at output DIAG, also check whether the length and structure of the associated F-communication DB on both the sending and receiving ends match.

Timing diagrams SENDS7 and RCVS7

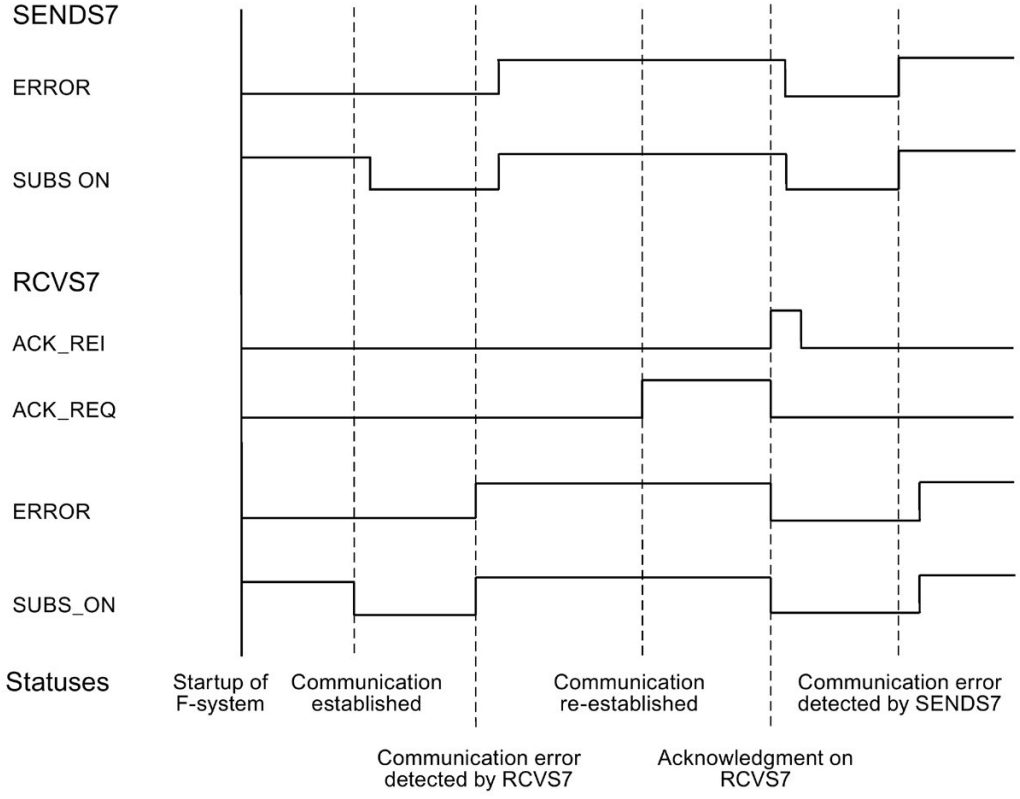

Output DIAG

Non-fail-safe information on the type of communication errors that have occurred is made available at output DIAG for service purposes. You can read out this information by means of operator control and monitoring systems or, if applicable, you can evaluate it in your standard user program. DIAG bits are saved until you acknowledge them at input ACK_REI of the associated RCVS7 instruction.

Structure of DIAG

Bit no.	Assignment of SENDS7 and RCVS7	Possible error causes	Remedies
Bit 0	Reserved	—	—
Bit 1	Reserved	—	—
Bit 2	Reserved	—	—
Bit 3	Reserved	—	—
Bit 4	Timeout detected by SENDS7 and RCVS7	Fault in bus connection to partner F-CPU	Check bus connection and ensure that no external fault sources are present.
		Monitoring time setting for F-CPU and partner F-CPU is too low	Check assigned monitoring time TIMEOUT for SENDS7 and RCVS7 of both F-CPUs. If possible, set a higher value. Recompile safety program
		CPs in STOP mode, or internal fault in CPs	• Switch CPs to RUN mode • Check diagnostic buffer of CPs • Replace CPs, if necessary
		F-CPU/partner F-CPU in STOP mode, or internal fault in F-CPU/partner F-CPU	• Switch F-CPUs to RUN mode • Check diagnostic buffer of F-CPUs • Replace F-CPUs, if necessary
		Communication was shut down with EN_SEND = 0.	Enable communication again at the associated SENDS7 with EN_SEND = 1
		S7 connection has changed, the IP address of the CP has changed, for example	Recompile the safety programs and download them to the F-CPUs
Bit 5	Sequence number error detected by SENDS7 and RCVS7	See description for bit 4	See description for bit 4
Bit 6	CRC-error detected by SENDS7 and RCVS7	See description for bit 4	See description for bit 4
Bit 7	RCVS7: Communication cannot be established	Configuration of the safety-related CPU-CPU communication is incorrect, parameter assignment of the SENDS7 and RCVS7 instructions is incorrect See also description for Bit 4	Check configuration of the safety-related CPU-CPU communication, the parameter assignment of the SENDS7 and the RCVS7 instructions is incorrect See also description for Bit 4
	SENDS7: Reserved	—	—

Monitoring and response times

A

Introduction

In the following, you will learn:

- Which F-specific monitoring times you must configure
- Which rules must be followed when specifying monitoring times
- Where you enter the F-specific monitoring times
- Which rules must be followed with regard to the maximum response time of a safety function

Support for calculations

An Excel file is available on the Internet (http://support.automation.siemens.com/WW/view/en/49368678/133100) to assist you in calculating approximately the runtimes of the F-runtime groups, the minimum F-specific monitoring times, and the maximum response times of your F-System.

Additional information

The monitoring and response times for the standard part are calculated in SIMATIC Safety in exactly the same way as for standard S7-300, S7-400, S7-1200 and S7-1500 automation systems and are not addressed here. For a description of this calculation, refer to the *hardware manuals for the CPUs*.

A.1 Configuring monitoring times

Monitoring times to be configured

You must configure the following monitoring times:

Monitoring...	Setting...	Parameters	See
F-cycle time or cycle time warning limit of the F-runtime groups that contain the safety program	in *Safety Administration Editor*: • Dialog for definition of an F-runtime group	Maximum cycle time of the F-runtime group	• Procedure for defining an F-runtime group (S7-300, S7-400) (Page 134) • Procedure for defining an F-runtime group (S7-1200, S7-1500) (Page 137)
of the safety-related communication between F-CPU and F-I/O via PROFIsafe (PROFIsafe monitoring time)	In the *hardware and network editor*: • Centrally when configuring the F-CPU; properties of the F-CPU; or • when configuring the F-I/O; properties of the F-I/O	F-monitoring time F_WD_TIME	• Configuring an F-CPU (Page 48) • Configuring F-I/O (Page 53) • Peculiarities when configuring fail-safe GSD based DP slaves and fail-safe GSD based I/O devices (Page 77)
of the safety-related CPU-CPU communication	At the TIMEOUT input of the instructions: • SENDDP; RCVDP; SENDS7; RCVS7	TIMEOUT	• Communication (Page 588)
(S7-1200, S7-1500) Communication with Flexible F-Link	in Safety Administration Editor: • "Flexible F-Link" area	F-monitoring time of F-communication	• "Flexible F-Link" area (S7-1200, S7-1500) (Page 96) • F-runtime group communication (S7-1200, S7-1500) (Page 145) • Configuring and programming communication with Flexible F-Link (S7-1200, S7-1500) (Page 262)

(S7-300, S7-400) You do not have to configure the monitoring time for safety-related communication between F-runtime groups.

Rules for configuring monitoring times

When configuring monitoring times, you must take into account the availability as well as the safety of the F-system as follows:

- Availability: To ensure that the time monitoring is not triggered when there is no error, the monitoring times selected must be sufficiently long.
- Safety: To ensure that the process safety time is not exceeded for the process, the monitoring times selected must be sufficiently short.

WARNING

It can only be ensured (from a fail-safe standpoint) that a signal state to be transferred will be acquired at the sender end and transferred to the receiver if the signal level is pending for at least as long as the assigned F-monitoring time. *(S018)*

General procedure for configuring monitoring times

Use the following procedure for configuring monitoring times:

1. Configure the standard system.

   Refer to the applicable *hardware manuals* and *Help on STEP 7* for the necessary information.

2. Configure the specific monitoring times of the F-System with respect to availability. You use the Excel file for response time calculation (http://support.automation.siemens.com/WW/view/en/49368678/133100) to calculate the approximate minimum monitoring time.

3. Use the Excel file for response time calculation to calculate the maximum response time and then verify that the process safety time of the process is not exceeded. If necessary, you must reduce the specific monitoring times of the F-System.

A.1.1 Minimum monitoring time for the F-runtime group cycle time

Parameter "Maximum cycle time of the F-runtime group"

You configure the monitoring time for the F-runtime group cycle time in the *Safety Administration Editor* in the work area for definition of the F-runtime group (Page 132).

To prevent F-runtime group cycle time monitoring from being triggered when there are no pending faults and causing the F-CPU to go to STOP, you must set the maximum cycle time of the F-runtime group high enough.

Use the Excel file for response time calculation (http://support.automation.siemens.com/WW/view/en/49368678/133100) to determine the minimum monitoring time for the F-runtime group cycle time. Note also the comments in the Excel file.

For S7-1200/1500 F-CPUs, you can also use the "Cycle time warning limit of F-runtime group (Page 137)", "Maximum cycle time of F-runtime group (Page 137)" and the tags TCYC_CURR (Page 148) and TCYC_LONG (Page 148) for dimensioning.

A.1.2 Minimum monitoring time for safety-related communication between F-CPU and F-I/O

Parameter "F-monitoring time"

You have two options for configuring the monitoring time of safety-related communication between the F-CPU and F-I/O:

- Centrally in the *hardware and network editor* during parameter assignment of the F-CPU (Page 48); in the properties of the F-CPU, or
- During parameter assignment of the F-I/O (Page 53) in the *hardware and network editor*; in the properties of the F-I/O

"F-monitoring time" = PROFIsafe monitoring time T_{PSTO}

The specified PROFIsafe monitoring time T_{PSTO} must be high enough to prevent tripping the F-cycle time monitoring when no faults are present.

Use the Excel file for response time calculation (http://support.automation.siemens.com/WW/view/en/49368678/133100) available for SIMATIC Safety to calculate the minimum monitoring time for safety-related communication between the F-CPU and F-I/O.

Note also the comments in the Excel file.

Check to determine whether configured PROFIsafe monitoring time is too short

Note

During commissioning of the F-system, you can perform a check while safety mode is active to determine whether the configured PROFIsafe monitoring time is too short.

This check of the PROFIsafe monitoring time is useful if you want to ensure that the configured monitoring time exceeds the minimum monitoring time by a sufficient amount. In this way, you can avoid the possible occurrence of sporadic monitoring time errors.

Procedure:

1. Insert an F-I/O (one that will not be needed later for system operation).
2. Assign a shorter monitoring time for this F-I/O than for the F-I/O of the system.
3. If the additional F-I/O fails and the "Monitoring time for safety message frame exceeded" diagnostic is signaled, you have fallen below the minimum possible PROFIsafe monitoring time.
4. Increase the monitoring time for the added F-I/O just to the point where it no longer fails. This monitoring time corresponds approximately to the minimum possible monitoring time.

Conditions:

The F-I/O to be inserted additionally and the F-I/O whose PROFIsafe monitoring time is to be checked must have the following properties in common:

- They must be inserted in the same rack
- They must be nodes in the same subnet

Tip:

It may be useful to leave the additional F-I/O in place for systems that will be modified or expanded during operation after commissioning. This F-I/O will then provide an early warning in the event of changes in the time behavior, enabling you to avoid a process shutdown triggered by the F-I/O in the process.

A.1.3 Minimum monitoring time of safety-related CPU-CPU communication

Input TIMEOUT at SENDDP and RCVDP or SENDS7 and RCVS7/F-monitoring time for communication via Flexible F-Link

The time monitoring is performed in the SENDDP and RCVDP (Page 588) or SENDS7 and RCVS7 (Page 599) instructions of the communication partner. You must assign the time monitoring with identical monitoring time for both instructions at the TIMEOUT input.

You must specify a monitoring time TIMEOUT that is large enough so that monitoring is not initiated when no faults are present.

For communication via Flexible F-Link you specify the F-monitoring time for the F-communication when creating an F-communication (Page 96).

Use the Excel file for response time calculation (http://support.automation.siemens.com/WW/view/en/49368678/133100) that is available for SIMATIC Safety to determine the minimum value for TIMEOUT or the F-monitoring time.

Note also the comments in the Excel file.

A.1.4 Monitoring Time for Safety-Related Communication between F-Runtime Groups

Monitoring time for safety-related communication between F-runtime groups (S7-300, S7-400)

The monitoring time for safety-related communication between F-runtime groups is determined automatically from the values for the "Maximum cycle time of F-runtime group" (work area for Definition of the F-runtime group (Page 132) in the *Safety Administration Editor*).

Monitoring time = (maximum cycle time of the 1st F-runtime group) + (maximum cycle time of the 2nd F-runtime group)

Monitoring time for safety-related communication between F-runtime groups (S7-1200, S7-1500)

You can calculate the monitoring time for safety-related communication between F-runtime groups from the values for the "Maximum cycle time of F-runtime group" (area for Definition of the F-runtime group (Page 132) in the *Safety Administration Editor*), if you place the default user program for the F-runtime group communication into pre-/postprocessing (Page 87).

Monitoring time = (Maximum cycle time of the 1st F-runtime group) + (Maximum cycle time of the 2nd F-runtime group).

A.2 Response Times of Safety Functions

Definition of response time

The response time is the time from detection of an input signal until the linked output signal changes.

Fluctuation range

The actual response time lies between a minimum response time and maximum response time. You must always take the maximum response time into account in your system configuration.

Rules for maximum response time of a safety function

The maximum response time of a safety function must be shorter than the process safety time of the process.

Definition for process safety time of a process

The process safety time of a process is the time interval between the occurrence of an error, within which the process can be left on its own without causing injury to operating personnel or damage to the environment, and the point in time the response is completed.

The controlling F-system can perform any control during the process safety time, this includes incorrectly or not at all. The process safety time of a process depends on the process type and must be determined on a case-by-case basis.

Procedure for response time calculation

The Excel file for response time calculation (http://support.automation.siemens.com/WW/view/en/49368678/133100) is available for calculating the maximum response time of a safety function.

Use the Excel file to calculate the approximate maximum response time of the safety function and then check that the process safety time of the process is not exceeded.

If necessary, you must reduce the specific monitoring times of the F-system (see Minimum monitoring time for safety-related communication between F-CPU and F-I/O (Page 610)).

WARNING

You may only use the Excel file for response time calculation or for timeout calculation when using Flexible F-Link communication, if you have observed the following regulations with regard to the standard instructions for consistent transfer of data:

CPU-CPU communication (Page 262)

You must call the standard instruction for consistent sending of data and acknowledgments in the postprocessing (Page 87) and the standard instruction for consistent receiving of data and acknowledgments in the preprocessing (Page 87).

F-runtime group communication (Page 145)

You have to call up the standard instruction UMOVE_BLK for transferring the data to be sent in the postprocessing of the sending F-runtime group. You have to call the standard instruction UMOVE_BLK for transferring the acknowledgment to be sent in the postprocessing of the receiving F-runtime group. *(S089)*

WARNING

The response time of their safety function depends, among other things, on the cycle time of the F-OB, the runtime of the F-runtime group and, when distributed F-I/O is used, the parameter assignment of PROFINET/PROFIBUS.

Therefore, the configuration/parameter assignment of the standard system influences the response time of its safety function.

Examples:

- The increase in priority of a standard OB compared to an F-OB can extend the cycle time of the F-OB or the runtime of the F-runtime group due to the higher-priority processing of the standard OB. Please note that during creation of technology objects, OBs with very high priority may be created automatically.
- The change of the send clock cycle of PROFINET changes the cycle time of an F-OB with event class "Synchronous cycle".

Note that the configuration / parameter assignment of the standard system is not subject to access protection for the safety program and does not lead to a modification of the collective F-signature.

If you do not take organizational measures to prevent changes in the configuration / parameter assignment of the standard system with influence on the response time, you must always set the monitoring times for the calculation of the maximum response time of a safety function (see Configuring monitoring times (Page 608)).

The monitoring times are protected against change with the access protection of the safety program and are recorded by the F-collective signature as well as the F-SW collective signature.

When calculating with Excel file for response time calculation (http://support.automation.siemens.com/WW/view/en/49368678/133100) you need to consider the value that is specified for "Any standard system runtimes" as value for the maximum response time. *(S085)*

Checklist

B

Life cycle of fail-safe automation systems

The following table contains a checklist summarizing all activities in the life cycle of a fail-safe SIMATIC Safety system, including requirements and rules that must be observed for each activity.

Checklist

Legend:

- Stand-alone section references refer to this documentation.
- *"F-SMs Manual"* refers to the Automation System S7-300, ET 200M Distributed I/O System, Fail-Safe Signal Modules (http://support.automation.siemens.com/WW/view/en/19026151) manual.
- *"F-Modules Manual"* refers to the ET 200S Distributed I/O System, Fail-Safe Modules (http://support.automation.siemens.com/WW/view/en/27235629) manual.
- *"ET 200eco Manual"* refers to the ET 200eco Distributed I/O Station, Fail-Safe I/O Module (http://support.automation.siemens.com/WW/view/en/19033850) manual.
- *"ET 200eco PN Manual"* refers to the ET 200eco PN F-DI 8 x 24 VDC, 4xM12 / F-DQ 3 x 24 VDC/2.0A PM, 3xM12. (https://support.industry.siemens.com/cs/search?search=6ES7146-6FF00-0AB0&type=Manual&lc=en-US) manual.
- *"ET 200pro Manual"* refers to the ET 200pro Distributed I/O System, Fail-Safe I/O Module (http://support.automation.siemens.com/WW/view/en/22098524) manual.
- *"ET 200iSP Manual"* refers to the ET 200iSP Distributed I/O Device, Fail-Safe Modules (http://support.automation.siemens.com/WW/view/en/47357221) manual.
- *"ET 200SP Manual*" refers to the ET 200SP System (http://support.automation.siemens.com/WW/view/en/58649293) manual
- *"ET 200MP Manual*" refers to the S7-1500/ET 200MP Distributed I/O System (http://support.automation.siemens.com/WW/view/en/59191792) manual
- *"ET 200SP Modules Manual"* refers to the device manuals for F-Modules of the ET 200SP Distributed I/O System (https://support.industry.siemens.com/cs/ww/en/ps/14059/man)

Phase	Note the following	Reference	Check
Planning			
Requirement: "Safety requirements specification" available for the intended application	Process-dependent	—	
Specification of system architecture	Process-dependent	—	
Assignment of functions and subfunctions to system components	Process-dependent	under Product Overview (Page 23)	
Selection of sensors and actuators	Requirements for actuators	*F-SMs Manual*, section 6.5; *F-Modules Manual*, section 4.5; *ET 200eco Manual*, section 5.5 *ET 200eco PN Manual*, section 5.2; *ET 200pro Manual*, section 4.4 *ET 200S Manual*, section 4.5 *ET 200SP manual*, section 5.2.2 *ET 200MP manual*, section 5.2.2	
Specification of required safety properties for individual components	IEC 61508:2010	—	
Configuration			
Installing the optional package	Requirements for installation	under Installing/uninstalling STEP 7 Safety Basic V15.1 optional package (Page 30) orInstalling/uninstalling STEP 7 Safety Advanced V15.1 optional package (Page 31)	
Selection of S7 components	Descriptions of configuration	under Product Overview (Page 23); *F-SMs Manual*, section 3; *F-Modules Manual*, section 3; *ET 200eco Manual*, section 3 *ET 200eco PN Manual*, section 4; *ET 200pro Manual*, section 2 *ET 200iSP Manual*, section 3 *ET 200SP Modules Manual*, section 3 *ET 200MP Modules Manual*, section 3	
Configuration of hardware	• Description of F-systems • Verification of utilized hardware components based on Annex 1 of Report in the Certificate	under Configuring (Page 43); Annex 1 of Report on the Certificate	

Phase	Note the following	Reference	Check
Configuration of F-CPU	• Protection level, "Write protection for F-blocks" (S7-300, S7-400) • Protection level, at least "Full access" (S7-1200, S7-1500) • Password • F-capability enabled • Definition/setting of F-specific parameters • Cycle time for the F-runtime group in which the safety program is to be executed, defined in accordance with the requirements and safety regulations - same as with standard system	under Configuring an F-CPU (Page 48); *Standard S7-300;* *Standard S7-400;* *S7-1200 standard;* *S7-1500 standard;* under Monitoring and response times (Page 607)	
Configuration of F-I/O	• Settings for safety mode • Setting of passivation type • Configuring monitoring times • Defining sensor evaluation • Defining diagnostic behavior • Special F-parameters • Assigning names • Unique PROFIsafe address	under Configuring F-I/O (Page 53) orPeculiarities when configuring fail-safe GSD based DP slaves and fail-safe GSD based I/O devices (Page 77) under Monitoring and response times (Page 607); *F-SMs Manual*, sections 3, 9, 10; *F-Modules Manual*, sections 2.4, 7; *ET 200eco Manual*, sections 3, 8; *ET 200eco PN Manual*, section 6; *ET 200pro Manual,* Sections 2.4, 8; *ET 200iSP Manual,* Sections 2.4, 7, 8 *ET 200SP Modules Manual*, section 4 *ET 200MP Modules Manual*, section 4	
Programming			
Defining program design and structure	• Follow warnings and notes on programming	under Overview of Programming (Page 111), Program structure of the safety program (S7-300, S7-400) (Page 111), Program structure of the safety program (S7-1200, S7-1500) (Page 114); Programming startup protection (Page 155);	

Phase	Note the following	Reference	Check
Creating the F-runtime groups	• Assignment of F-FB or F-FC as main safety block to the calling block (S7-300, S7-400) or F-OB (S7-1200, S7-1500) • Setting maximum cycle time for the F-runtime group in accordance with requirements (dependent on process and safety regulations) • Creating DB for F-runtime group communication • (S7-300, S7-400) Call of main safety blocks directly in OBs (e.g. OB 35), FBs, or FCs • (S7-1200, S7-1500) Call of the main safety block from the F-OB	under Defining F-Runtime Groups (Page 132) under Monitoring and response times (Page 607)	
Creating/inserting the F-blocks	• Generating, editing, and saving F-FBs, F-FCs, and F-DBs in accordance with the requirements of the program structure • Description: – F-I/O access – Passivation and reintegration of F-I/O – Inserting F-blocks from global libraries – Safety-related CPU-CPU communication – Communication with the standard user program	under Creating F-blocks in FBD / LAD (Page 151) under Addressing F-I/O (Page 157) under Implementation of user acknowledgment (Page 187) under Reuse of F-blocks (Page 154) under Configuring and programming communication (S7-300, S7-400) (Page 201) and Configuring and programming communication (S7-1200, S7-1500) (Page 270) under Data exchange between standard user program and safety program (Page 195)	
Compiling the safety program	—	under Compiling the safety program (Page 311)	
Implementing safety program call (S7-300, S7-400)	Check whether the main safety block is called directly in OBs (e.g., OB 35), FBs, or FCs.	under Defining F-Runtime Groups (Page 132)	
Installation			
Hardware configuration	Description of • Installation • Wiring	under Overview of Configuration (Page 43); Particularities for configuring the F-System (Page 46); *F-SMs Manual*, sections 5, 6; *F-Modules Manual*, sections 3, 4; *ET 200eco Manual*, sections 3, 4; *ET 200eco PN Manual*, sections 4, 5; *ET 200pro Manual,* Sections 2, 3; *ET 200iSP Manual,* sections 3 and 4; *ET 200SP Manual*, sections 4 and 5 *ET 200MP Manual*, sections 4 and 5	

Phase	Note the following	Reference	Check
Commissioning, Testing			
Switching on	Description of commissioning – same as in standard	Standard S7-300; S7-400 standard; S7-1200 standard; S7-1500 standard; Standard-S7-1500 Software Controller; WinAC RTX F	
Downloading safety program and standard user program	Description • Downloading • Program identification • Comparing safety programs	under Downloading project data to an F-CPU (Page 313) under Comparing Safety Programs (Page 339)	
Testing the safety program	• Description of disabling of safety mode • Procedures for changing safety program data	under Downloading project data (Page 313); Testing the safety program (Page 347); Disabling safety mode (Page 344)	
Changing the safety program	Description • Disabling safety mode • Changing the safety program	under Changing the safety program in RUN mode (S7-300, S7-400) (Page 355); Disabling safety mode (Page 344); Deleting the safety program (Page 357);	
Testing the safety-related parameters	Description of configuration	under Printing project data (Page 341); *F-SMs Manual*, sections 4, 9, 10; *F-Modules Manual*, sections 2.4, 7; *ET 200eco Manual*, sections 3, 8; *ET 200eco Manual*, section 6; *ET 200pro Manual,* Sections 2.4, 8; *ET 200iSP Manual,* Sections 2.4, 7, 8 *ET 200SP Modules Manual*, section 4 *ET 200MP Modules Manual*, section 4	
System acceptance			
Acceptance	• Description and notes on acceptance • Printouts	under System acceptance (Page 361)	
Operation, maintenance			
General operation	Notes on operation	under Notes on Safety Mode of the Safety Program (Page 383)	
Access protection	—	under Access protection (Page 101)	
Diagnostics	Responses to faults and events	under Guide to diagnostics (S7-300, S7-400) (Page 389); Guide to diagnostics (S7-1200) (Page 390); Guide to diagnostics (S7-1500) (Page 390);	

Phase	Note the following	Reference	Check
Replacement of software and hardware components	Description • Module replacement • Update of operating systems of F-CPU – same as in standard • Update of SW components Notes • Operating system update of IMs	under Replacing Software and Hardware Components (Page 386); Addressing F-I/O (Page 157); Help on *STEP 7*	
Uninstallation, disassembly	• Notes for uninstalling software components • Notes for disassembling modules	under Installing/uninstalling STEP 7 Safety Advanced V15.1 optional package (Page 31); Installing/uninstalling STEP 7 Safety Basic V15.1 optional package (Page 30); Replacing Software and Hardware Components (Page 386);	

Glossary

Access protection

→ Fail-safe systems must be protected against dangerous, unauthorized access. Access protection for F-systems is implemented by assigning two passwords (one for the → F-CPU, and one for the → safety program).

Automatically generated F-blocks

→ F-blocks that are automatically generated and, if necessary, called when the → safety program is compiled, in order to generate an executable safety program from the safety program programmed by the user.

Category

Category in accordance with ISO 13849-1:2015 or EN ISO 13849-1:2015

With SIMATIC Safety, use in → safety mode up to category 4 is possible.

Channel fault

Channel-specific fault, such as a wire break or short circuit.

CPU-wide

In the context of F-I/Os, "CPU-wide" means all F-I/Os assigned to an F-CPU: Central F-I/O of this F-CPU as well as F-I/Os for which the F-CPU is DP master/IO controller and assigned F-I/O in a shared device. An F-I/O that is addressed using I-slave-slave communication is assigned to the F-CPU of the I-slave and not to the F-CPU of the DP master / IO controller.

In the context of safety-related CPU-CPU communication, "CPU-wide" encompasses all the safety-related communication connections that are configured in an F-CPU.

CRC

Cyclic Redundancy Check → CRC signature

CRC signature

The validity of the process data in the → safety message frame, the correctness of the assigned address relationships, and the safety-related parameters are validated by means of a CRC signature contained in the safety message frame.

DB for F-runtime group communication

-> F-DB for safety-related communication between F-runtime groups of a safety program.

Depassivation

→ Reintegration

Disabled safety mode

Temporary deactivation of → safety mode for test purposes, commissioning, etc.

The following actions are possible only in disabled safety mode:

- Downloading changes of the → safety program to the -> F-CPU during ongoing operation (in RUN mode)
- Test functions such as "Modify" or other write access to data of the → safety program (with limitations)

Whenever safety mode is deactivated, the safety of the system must be ensured by other organizational measures, such as operation monitoring and manual safety shutdown.

Discrepancy analysis

Discrepancy analysis for equivalence or non-equivalence is used for fail-safe inputs to detect errors caused by the time characteristic of two signals with the same functionality. The discrepancy analysis is initiated when different levels are detected in two associated input signals (when testing for non-equivalence: the same level). On expiration of an assignable period (→ discrepancy time), a check is made to determine whether the difference in levels (for non-equivalence testing, the same level) has disappeared after an assignable time period, the so-called discrepancy time. If not, there is a discrepancy error. The discrepancy analysis is performed between the two input signals of the 1oo2 evaluation of the sensors (→ sensor evaluation) in the fail-safe input.

Discrepancy time

Assignable time for the → discrepancy analysis. If the discrepancy time is set too high, the fault detection time and → fault reaction time are prolonged unnecessarily. If the discrepancy time is set too low, availability is decreased unnecessarily because a discrepancy error is detected when, in reality, no error exists.

DP/DP coupler

Device for coupling two PROFIBUS DP subnets required for master-master communication between → safety programs in different → F-CPUs in SIMATIC Safety and S7 Distributed Safety.

Expert

The acceptance of a system, i.e., the safety-related acceptance test of the system, is usually carried out by an independent expert (for example, from TÜV).

Fail-safe GSD based DP slaves

Fail-safe GSD based DP slaves are standard slaves that are operated on PROFIBUS with the DP protocol. They must operate in accordance with IEC 61784-1:2010 (Fieldbus profiles) and the PROFIsafe bus profile. A GSD file is used for their configuration.

Fail-safe GSD based I/O devices

Fail-safe GSD based I/O devices are standard devices that are operated on PROFINET with the I/O protocol. They must operate in accordance with IEC 61784-1:2010 (Fieldbus profiles) and the PROFIsafe bus profile in V2-MODE. A GSD file is used for their configuration.

Fail-safe I/O modules

ET 200eco modules and ET 200eco PN modules that can be used for safety-related operation (→ safety mode). These modules are equipped with integrated → safety functions. They operate in accordance with IEC 61784-1:2010 (Fieldbus profiles) and the PROFIsafe bus profile.

Fail-safe modules

Fail-safe modules ET 200SP, ET 200S, ET 200pro, ET 200iSP that can be used in the ET 200SP, ET 200S, ET 200pro or ET 200iSP distributed I/O systems.

Fail-safe modules S7-1500/ET 200MP, which can be used centrally in an S7-1500 or in a distributed I/O ET 200MP system.

Fail-safe module S7-1200 which can be used centrally in an S7-1200 system.

These modules are equipped with integrated safety functions (→ Safety mode) for fail-safe operation (→ Fail-safe operation). They operate in accordance with the → PROFIsafe bus profile.

Fail-safe systems

Fail-safe systems (F-systems) are systems that remain in a safe state or immediately switch to another safe state as soon as particular failures occur.

Fault reaction function

→ User safety function

Fault reaction time

The maximum fault reaction time for an F-system specifies the time between the occurrence of any error and a safe reaction at all affected fail-safe outputs.

F-blocks

The following fail-safe blocks are designated as F-blocks:

- those created by the user in LAD or FBD
- those created by the user as → F-DBs
- those selected by the user from a global library
- those added automatically in the → safety program (→ F-SBs, → automatically generated F-blocks, → F-shared DB, → F-I/O DBs; instance DBs of F-FBs)

All F-blocks are shown in yellow in the project tree.

F-CALL

"F-call blocks" for the → safety program in *S7 Distributed Safety*.

F-collective signature

The F-collective signature uniquely identifies a particular state of safety-related project data. It is important for the program identification as well as the on-site acceptance of the safety program, for example by → experts.

F-communication address signature

The F-communication address signature is formed from the names and the F-communication UUIDs of communication connections with Flexible F-Link that are used in the safety program.

F-communication DBs

Fail-safe data blocks for the

- safety-related CPU-CPU communication via S7 connections
- Communication with Flexible F-Link

F-compliant PLC data type (UDT)

An F-compliant PLC data type (UDT) is a PLC data type (UDT) in which you can use all data types that can be used in safety programs.

F-CPU

An F-CPU is a central processing unit with fail-safe capability that is approved for use in SIMATIC Safety and in which a → safety program can run in addition to the → standard user program.

F-DBs

Optional fail-safe data blocks that can be read-/write-accessed from anywhere within the safety program (exception: DBs for F-runtime group communication).

F-destination address

→ PROFIsafe address

F-FBs

Fail-safe function blocks (with instance DBs), in which the user programs the → safety program in FBD or LAD.

F-FCs

Fail-safe FCs, in which the user programs the → safety program in → FBD or → LAD.

F-HW collective signature

The F-HW collective signature uniquely identifies a particular state of safety-related hardware configuration. The F-HW collective signature is important to document the change/non-change of the safety-related hardware configuration, for example in the context of an acceptance of changes.

F-I/O

Collective name for fail-safe inputs and outputs available in *SIMATIC S7* for integration in SIMATIC Safety, among others. The following are available:

- → ET 200eco fail-safe I/O module
- → ET 200eco PN fail-safe I/O module
- → S7-300 fail-safe signal modules
- → Fail-safe modules for S7-1200
- → Fail-safe modules for ET 200MP
- → Fail-safe modules for ET 200SP
- → Fail-safe modules for ET 200S
- → Fail-safe modules for ET 200pro
- → Fail-safe modules for ET 200iSP
- → Fail-safe GSD based DP slaves
- → Fail-safe GSD based I/O devices

F-I/O DB

Fail-safe data block for F-CPUs to an → F-I/O in *STEP 7 Safety*. An F-I/O DB is automatically created for each F-I/O when the F-I/O is configured in the *hardware and network editor*. The F-I/O DB contains tags that the user can or must evaluate or write in the safety program as follows:

- For reintegration of the F-I/O after communication errors
- For reintegration of F-I/O after F-I/O or channel faults
- If the F-I/O must be passivated as a result of particular states of the safety program (for example, group passivation)
- For reassignment of parameters for fail-safe GSD based DP slaves/GSD based I/O devices or enabling HART communication for the F-I/O with the corresponding functionality
- In order to evaluate whether fail-safe values or process data are output

F-I/O faults

Module-related F-I/O fault, such as a communication error or parameter assignment error

F-I/Os of PROFIsafe address type 1

F-I/Os which ensure the uniqueness of the PROFIsafe address solely with the F-destination address, for example, ET 200S F-modules. The PROFIsafe address is usually assigned by DIP switches.

F-I/Os of PROFIsafe address type 2

F-I/Os which can ensure the uniqueness of the PROFIsafe address with a combination of F-source address and F-destination address, for example, S7-1500/ET 200MP F-modules. The PROFIsafe address is usually assigned with *STEP 7 Safety*.

F-modules

→ Fail-safe modules

F-OB

The F-OB calls the main safety block of an F-runtime group in S7-1200/1500 F-CPUs.

F-runtime group

The → safety program consists of one or two F-runtime groups. An F-runtime group is a logical construct of several associated → F-blocks. It is generated internally by the F-system. An F-runtime group consists of the following F-blocks:

→ Main safety block, F-OB (S7-1200, S7-1500), if applicable → F-FBs/ → F-FCs, if applicable → F-DBs, → F-I/O DBs, F-blocks of global libraries, instance DBs, → F-SBs, and → automatically generated F-blocks.

F-runtime group information DB

The F-runtime group information DB provides key information on the corresponding → F-runtime group and on the → safety program as a whole.

F-shared DB

(S7-300, S7-400) Fail-safe data block that contains all of the shared data of the → safety program and additional information needed by the F-system. The F-shared DB is automatically inserted and expanded when the hardware configuration is compiled. Using its name F_GLOBDB, the user can evaluate certain data of the → safety program.

F-SMs

→ S7-300 fail-safe signal modules

F-source address

→ PROFIsafe address

F-SW collective signature

The F-SW collective signature uniquely identifies a particular state of the safety program. The F-SW collective signature is important to document the change/non-change of the safety program, for example in the context of an acceptance of changes.

F-system blocks

Fail-safe system blocks that are automatically inserted and called when the → safety program is compiled in order to generate an executable safety program from the user's safety program.

F-systems

→ Fail-safe systems

Hardware configuration

The hardware configuration encompasses the configuration of the standard parameters of the CPUs and standard I/Os as well as the configuration of the safety-related parameters of the F-CPUs and the I/Os.

I-device

The functionality of the "I-device" (intelligent I/O-device) of a CPU allows data exchange with an I/O-controller and thus, its use as an intelligent preprocessor of sub-processes, for example. In this case, the I-device is connected as an I/O-device to a "parent" I/O-controller.

IE/PB link

Device for coupling PROFINET IO and PROFIBUS DP-systems required, among other things, for IO-controller-I-slave communication between -> safety programs in different → F-CPUs in SIMATIC Safety.

i-parameter

Individual parameters of → fail-safe GSD based DP slaves and → fail-safe GSD based I/O devices

I-slave

The functionality of the "I-slave" (intelligent DP slave) of a CPU allows data exchange with a DP master and, thus, its use as an intelligent preprocessor of sub-processes, for example. In this case, the I-slave is connected as a DP slave to a "parent" DP master.

Main safety block

"Introductory F-block" for fail-safe programming of the → safety program in *STEP 7 Safety*. The main safety block is an → F-FB or → F-FC that the user assigns to the calling F-OB (S7-1200, S7-1500) or block (OB, FC, FB) (S7-300, S7-400) of an → F-runtime group.

The main safety block contains the safety program and any calls of other → F-FBs/F-FCs for program structuring.

Network-wide

A network consists of one or more subnets. "Network-wide" means beyond the boundaries of the subnet. In PROFIBUS, a network includes all nodes accessible via PROFIBUS DP. In PROFINET IO, a network includes all nodes accessible via RT_Class_1/2/32 (Ethernet/WLAN/Bluetooth, Layer 2) and if applicable RT_Class_UDP (IP, Layer 3).

Passivation

When passivation occurs in an → F-I/O with inputs, the → F-system provides the safety program with fail-safe values (0) instead of the process data pending at the fail-safe inputs in the PII.

When passivation occurs in an F-I/O with outputs, the F-system transfers fail-safe values (0) to the fail-safe outputs instead of the output values in the PIQ provided by the safety program.

PL

Performance Level (PL) in accordance with ISO 13849-1:2015 or EN ISO 13849-1:2015

With SIMATIC Safety, use up to Performance Level (PL) e is possible in → safety mode.

PN/PN coupler

Device for coupling two PROFINET IO systems required for IO controller-IO controller communication between → safety programs in different → F-CPUs in SIMATIC Safety and S7 Distributed Safety.

PROFIsafe

Safety-related bus profile of PROFIBUS DP and PROFINET IO for communication between the → safety program and the → F-I/O in an → F-system. See IEC 61784-3-3:2010 or PROFIsafe – Profile for Safety Technology on PROFIBUS DP and PROFINET IO; Order No: 3.192 (V2.6.1).

PROFIsafe address

The PROFIsafe address (code name according to IEC 61784-3-3:2010) is used for protection of standard addressing mechanisms, such as IP addresses. The PROFIsafe address consists of an F-source address and an F-destination address. Each → F-I/O therefore has two address parts, an F-source address and an F-destination address.

The F-source address is automatically assigned and is displayed for fail-safe GDS based DP slaves/fail-safe GSD based I/O devices and F-modules ET 200SP, F-modules ET 200MP, ET 200eco PN and F-modules S7-1200. The F-source address for F-modules ET 200S, ET 200eco, ET 200pro, ET 200iSP and F-SMs S7-300 is always 1. For F-modules ET 200SP/ET 200MP, the F-source address corresponds to the "Central F-source address" parameter of the assigned F-CPU.

You need to configure the F-destination address in the *hardware and network editor*. You assign the F-destination address for the ET 200S, ET 200eco, ET 200pro, ET 200iSP and F-SMs S7-300 F-modules with a switch. For F-modules ET 200SP and F-modules ET 200MP, ET 200eco PN assign the PROFIsafe address in the *hardware and network editor*. For S7-1200 F-modules, the F-destination address is automatically assigned by the F-system.

Program signature

→ collective F-signature

Project data

The project data includes the → hardware configuration and the → user program.

Reintegration

The switchover from fail-safe values (0) to process data (reintegration of an → F-I/O) takes place automatically or following user acknowledgment in the F-I/O DB. The reintegration method depends on the following:

- The reason for → passivation of the F-I/O/channels of the F-I/O
- The parameter assignment in the → F-I/O DB or in the configuration itself (for example, ET 200MP fail-safe modules on an S7-1500 F-CPU and S7-1200 fail-safe modules on an S7-1200 F-CPU)

Following reintegration for an → F-I/O module with inputs, the process data pending at the inputs in the PII are provided again for the safety program. For an F-I/O with outputs, the F-system again transfers the output values provided in the PIQ in the safety program to the fail-safe outputs.

RIOforFA Safety

Remote IO for Factory Automation with PROFIsafe; profile for F-I/O

S7-300 fail-safe signal modules

Fail-safe signal modules of the S7-300 module series that can be used for safety-related operation (→ Safety mode) as centralized modules in an S7-300 or as distributed modules in the ET 200M distributed I/O system. The fail-safe signal modules are equipped with integrated → safety functions. They operate in accordance with the → PROFIsafe bus profile.

S7-PLCSIM

The *S7-PLCSIM* application enables you to execute and test your program on a simulated automation system on your programming device or PC. Because the simulation takes place completely in your programming device or PC, you do not need any hardware (CPU, I/O).

Safe state

The basic principle of the safety concept in → fail-safe systems is the existence of a safe state for all process variables. For digital → F-I/O that conform to IEC 61508:2010, this is always the value "0".

Safety Administration Editor

The *Safety Administration Editor* provides support for the main tasks of your safety program.

Safety function

Mechanism integrated in the → F-CPU and → F-I/O that allows them to be used in -> fail-safe systems.

According to IEC 61508:2010, a function that is implemented by a safety device in order to maintain the system in the safe state or bring the system to a safe state in the event of a specific fault. (fault reaction function -> user safety function)

Safety message frame

In → safety mode, data are transferred in a safety message frame between the → F-CPU and → F-I/O, or between the F-CPUs in safety-related CPU-CPU communication.

Safety mode

1. Operating mode of → F-I/O in which → safety-related communication can take place using → safety message frames.
2. Operating mode of the safety program. In safety mode of the safety program, all safety mechanisms for error detection and fault reaction are enabled. In safety mode, the safety program cannot be modified during operation. Safety mode can be disabled by the user (→ disabled safety mode).

Safety program

Safety-related user program

Safety protocol

→ Safety message frame

Safety summary

The safety summary provides documentation of the safety-related project data which supports you during acceptance of the system.

Safety-related communication

Safety-related communication is used to exchange fail-safe data.

Safety-related hardware configuration

The safety-related hardware configuration includes the configuration of the safety-related parameters of the F-CPU as well as the configuration of the F-I/O devices.

Safety-related project data

The safety-related project data includes the safety-related hardware configuration as well as the → safety program.

Sensor evaluation

There are two types of sensor evaluation:

- 1oo1 evaluation – sensor signal is read once
- 1oo2 evaluation - sensor signal is read twice by the same → F-I/O and compared internally

Shared device

The "Shared Device" functionality enables distribution of the submodules of an IO-device between different IO-controllers.

Signature

→ collective F-signatures

SIL

Safety integrity level SIL in accordance with IEC 61508:2010. The higher the Safety Integrity Level, the more rigid the measures for prevention of systematic faults and for management of systematic faults and random hardware failures.

With SIMATIC Safety, up to Safety Integrity Level SIL3 is possible in safety mode.

Standard communication

Communication used to exchange non-safety-related data

Standard mode

Operating mode of → F-I/O in which → safety-related communication between the F-CPU and the F-I/O by means of → safety message frames is not possible; only → standard communication is possible in this operating mode.

Standard user program

Non-safety-related user program

Startup of F-system

With an → F-CPU, the standard user program starts up in the normal way. When the → safety program is started up, all F-DBs are initialized with the values from the load memory - as is the case with a cold restart. This means that saved error information is lost.

The → F-system performs an automation → reintegration of the → F-I/O.

User program

The user program comprises the → standard user program and the → safety program.

User safety function

The → safety function for the process can be provided through a user safety function or a fault reaction function. The user only has to program the user safety function. In the event of an error, if the → F-system can no longer execute its actual user safety function, it executes the fault reaction function: for example, the associated outputs are disabled, and the → F-CPU switches to STOP mode, if necessary.

Value status

The value status is additional binary information for a channel value. The value status is entered in the process image input and provides information on the validity of the channel value.

1: A valid process data is output for the channel value.

0: A fail-safe value is output for the channel value.

Versioned instruction

Instruction for which a version is displayed in the "Version" column of the "Instructions" task card:

Index

=

=, 419

A

ABS, 536
Acceptance, 76
    of safety-related changes, 378
    of system, 361
Acceptance of safety-related changes, 378
Access
    To tags of F-I/O DB, 174
Access permission
    Canceling, 108
    Setting up for the safety program, 103
    Setup for F-CPU, 107
    Validity, 103, 108
Access protection, 101, 101
ACK_GL, 487
ACK_NEC, 168
ACK_OP, 577
ACK_REI, 168
ACK_REQ, 172
Acknowledgment
    Channel fault, 54
    Fail-safe, 577
Add, 520
ADD, 520
Address assignment
    Rules, 69, 71
AND, 414, 567, 567
Approvals, 4
Assignment, 402, 419

B

Behavior
    After communication errors, 178
    After F-I/O or channel faults, 180
    After startup, 175
Bit logic operation
    AND, 414
    Assignment, 402, 419
    EXCLUSIVE OR, 417
    Insert binary input, 398
    Invert RLO, 399, 402
    Normally closed contact, 401
    Normally open contact, 400
    OR, 416
    Reset output, 403, 420
    Reset/set flip-flop, 407, 423
    Scan operand for negative signal edge, 410, 426
    Scan operand for positive signal edge, 409, 425
    Scan RLO for negative signal edge, 413, 429
    Scan RLO for positive signal edge, 412, 427
    Set output, 404, 421
    Set/reset flip-flop, 406, 422
Bit memory, 196
Block size of automatically generated F-blocks, 312
BO_W, 550
Breakpoints, 349

C

Category, 23
Central F-source address, 50
Change
    Acceptance, 378
    Detecting, 378
    of the safety program in RUN mode, 355
Changing
    Data of the safety program, 347
Channel fault, 54, 180
    Acknowledgment, 54
Checking the program version, 376
Checklist, 617
Checks
    through the F-system, 66
CMP <, 518
CMP <=, 515
CMP <>, 512
CMP ==, 511
CMP >, 517
CMP >=, 514
Code review of the safety program, 363
Collective F-signature, 344
Communication
    Monitoring time, 610, 612
    Standard user program and safety program, 196, 197
Communication error, 178, 588
    SENDDP/RCVDP, 588

Comparator operations
Equal, 511
Greater or equal, 514
Greater than, 517
Less or equal, 515
Less than, 518
Not equal, 512
Comparing
Safety programs, 339
Compiling errors
Alarms, 311
Completeness
Checking the safety summary, 364
Configuration control, 58
Configuring
Fail-safe GSD based DP slaves, 77
Fail-safe GSD based I/O devices, 77
F-CPU, 48
F-I/O, 53
of F-components, 46
Overview, 43
Shared device, 63
Special features, 46
constants
Boolean, 123
FALSE, 123
TRUE, 123
Conversion operations
Convert BOOL to WORD, 550
Convert value, 548
Convert WORD to BOOL, 552
Scale values, 555
Convert
Data, 550, 552
Value, 548
CONVERT, 548
Convert data, 550, 552
Conveyor equipment, stopped, 445
Correctness
Hardware configuration, 368
Safety-related CPU-CPU communication, 374
Count
Down, 506
Up, 504
Up and down, 508
Count down, 506
Count up, 504
Count up and down, 508
CPU-CPU communication, 43
Options for safety-related, 43
Overview of safety-related, 201, 270, 307
Create twos complement, 533
CTD, 506
CTU, 504
CTUD, 508
Cycle time
F-runtime group, 135, 138
Maximum, 608
Monitoring time for, 610

D

Data block, 196
Data exchange
between standard user program and safety program, 195
Data transfer
From safety program to standard user program, 196
From standard user program to safety program, 197
Data types
For safety program, 120
DB access, fully qualified, 124, 174
DB access, non-fully qualified, 125
Deleting
F-blocks, 357
DIAG
ESTOP1: Emergency STOP up to Stop Category 1,
EV1oo2DI: 1oo2 evaluation with discrepancy analysis,
FDBACK: Feedback monitoring,
F-I/O DB, 172
MUT_P: Parallel muting,
MUTING: Muting,
RCVS7, 599
SENDDP/RCVDP, 588
SENDS7, 599
SFDOOR: Safety door monitoring,
TWO_H_EN: Two-hand monitoring with enable,
Diagnostic parameters, 389
Diagnostic tag, 389
Diagnostics
Fail-safe system, 389
Guide, 390, 390
DISABLE, 170
Disabling
F-capability, 48
Safety mode, 344
Discrepancy error, 445
DIV, 529
Divide, 529
Downloading
Hardware configuration, 313

Safety program, 313
Standard user program, 313
Downloading Standard user program, 313
DP/DP coupler, 213, 281

E

Empty box
Inserting a LAD element, 393
Inserting an FBD element, 396
EN, 119
Enabling
F-capability, 48
Safety mode, 345
Enabling/disabling F-capability, 48
ENO, 119
ESTOP1, 430
EV1oo2DI, 468
EXCLUSIVE OR, 417, 570
Executing a system acceptance, 361

F

F_CRC_Seed, 79
F_IO_StructureDescCRC, 77, 79
F_Passivation, 79
Fail-safe acknowledgment, 577, 582
Fail-safe GSD based DP slaves
Configuring, 77
Fail-safe GSD based I/O devices
Configuring, 77
Fail-safe system, (See SIMATIC Safety)
Fail-safe value, 142, 162
F-array
read, 539, 542
Fault reaction function, 9, 24
FBD element
Inserting, 396
F-block
Copying, 152
Deleting, 357
F-change history, 359
F-channel faults, fail-safe value output, 163
F-Communication UUID, 96
F-compliant PLC data type (UDT), 126
F-components, 43
F-CPU, (See F-CPU), 43, 107
Configuring, 48
Going to STOP mode, 383
migrating, 36
Setting up access permission, 107
F-cycle time, monitoring time, 610
F-DB, 117
Creating, 151
for F-runtime group communication, 141
F-shared DB, 148
FDBACK, 475
F-destination address, 68, 70
F-destination address range, 49
F-FB, 117, 151
F-FC, 117, 151
F-I/O, 43
addressing, 157
Configuring, 53
Reintegration, 164, 175, 178, 180
Removing and inserting during operation, 386
F-I/O access, 157
During operation, 355
Restrictions in RUN mode, 356
Via the process image, 157, 246
F-I/O DB, 117, 166
Access to, 165, 174
Name, 55, 174
Number, 55, 174
Structure of DIAG, 172
F-I/O faults, fail-safe value output, 163
F-I/O or channel faults, 180
File type conversion, 122
Firmware update, 386
First steps, 42
Flexible F-Link, 96, 145, 262
Example, 266
F-monitoring time, 612
Flip-flop
Reset/set, 407, 423
Set/reset, 406, 422
F-monitoring time, 51, 56, 608
F-communication, 96
F-OB, 55, 117, 137
Move, 152
Form absolute value, 536
F-parameters, 46
F-runtime group, 111, 114, 117
Changing, 150, 151
Default setting, 134, 137
Defining, 135, 138
Deleting, 150
Maximum cycle time, 135, 138, 612
Rules, 132
Safety-related communication, 141
F-runtime group communication, 135, 138, 141, 145
Monitoring time, 612
Restrictions in RUN mode, 355

F-runtime group information DB, 148
F-runtime groups signature, 148
F-shared DB, 148, 196, 344
F-source address, 50, 70
F-system
    Checks, 66
    Monitoring time, 607
    Response time, 607
Fully qualified DB access, 124, 174
Function test of the safety program, 343, 363

G

Getting Started, 42
Global data block
    Open, 565
Group diagnostics for fail-safe signal modules, 56
Group passivation, 184
GSD files
    Configuration, 77

H

Hardware components, 25
Hardware configuration, 47
    Checking for correctness, 368
    Downloading, 313
Help
    Open, 30, 31
HW identifier, 588

I

IE/PB link, 247, 304
Image
    Creating, 329
    running, 329
Implementation of user acknowledgment, 192
Importing of images, 329
Insert binary input, 398
Installation
    STEP 7 Safety, 30, 31, 32
Instance DB, 125, 152
Instructions
    for the safety program, 118
    Get status bit OV, 587
    Testing for acceptance, 365
IPAR_EN, 169
IPAR_OK, 172

J

JMP, 558
JMPN, 560
Jump
    If RLO = 0, 560
    If RLO = 1, 558
Jump label, 562

L

LABEL, 562
LAD element
    Inserting, 393
Life cycle of fail-safe automation systems, 617
Light curtain, 445
Local data, 124

M

Main safety block, 117, 152
Math functions
    Add, 520
    Create twos complement, 533
    Divide, 529
    Form absolute value, 536
    Multiply, 526
    Subtract, 523
Maximum cycle time, 608, 612
Memory reset, 347
Migrating projects
    from S7 Distributed Safety, 32
Migration
    F-CPU, 36
    from S7 Distributed Safety, 32, 251
    Printout, 342
Modifying, 343
    Safety program, 347, 347
Monitoring, 343
    Safety program, 347, 347
    Two-hand monitoring, 436, 439
Monitoring time, 607, 608
    Communication between F-CPU and F-I/O, 610
    Communication between F-CPUs, 612
    Communication between I-salve and slave, 610
    F-cycle time, 610
Move
    Move value, 538
    Read F-array, 539, 542
    Write value indirectly to an F-DB, 544
MOVE, 538

Move operations
Read value indirectly from an F-DB, 546
MUL, 526
Multiply, 526
MUT_P, 456
MUTING, 445
Structure of DIAG, 445
Muting operation
With 4 muting sensors, 445
With reflection light barriers, 445

N

N, 410, 426
N_TRIG, 413, 429
NEG, 533
Network
Inserting, 392, 396
Normally closed contact, 401
Normally open contact, 400
NOT, 402

O

Off delay, 499
Offline password, 103
Offline-online comparison of safety programs, 339
On delay, 494
Online password, 103
Operand
Scan for negative signal edge, 410, 426
Scan for positive signal edge, 409, 425
Operand area
For safety program, 121
Operating principle
RCVDP, 588
RCVS7, 599
SENDDP, 588
SENDS7, 599
Operating system update, 386
Operational safety of the system, 9
OPN, 565
Option handling, 58
OR, 416, 568, 568
Output
Reset, 403, 420
Set, 404, 421
OV, 585, 586, 587

P

P, 409, 425
P_TRIG, 412, 427
Parameter types, 120
Parameters, 456
Safety-related, 47
PASS_ON, 167
PASS_OUT, 171
Passivation
Channel-granular, 54
F-I/O, 175
Output of fail-safe values, 163
Passivation of F-I/O, 175
After communication errors, 178
After F-I/O or channel faults, 180
After startup, 175
Group passivation, 184
Password, 101, 345
F-CPU, 107
Offline, 103
Safety program, 103
Performance level, 23
PLC data type
F-compliant, 126
PLCSIM, 343, 347
PN/PN coupler, 204, 272
Printing
Project data, 341
Process image, 55, 157, 196
Process safety time, 613
Productive operation, 101
PROFIBUS DP, 25
PROFINET IO, 25
PROFIsafe address
assign, 73, 75
Assigning, 72, 78
Changing, 76
Recommendations, 65
PROFIsafe address type, 43
PROFIsafe address type 1, 49
PROFIsafe address type 2, 50
PROFIsafe destination address, 49
Program control operations
Jump if RLO = 0, 560
Jump if RLO = 1, 558
Jump label, 562
Open global data block, 565
Return, 564
Programming
Group passivation, 184
Overview, 111

Startup protection, 155
Validity checks, 197
Programming an F-communication DB, 251
Project data
Printing, 341
Projects
upgrading, 37, 37, 38, 39
Proof test, 386
Protection level of the F-CPU, 52
Pulse
Generate, 489

Q

QBAD, 171, 174, 175
QBAD_I_xx, 171
QBAD_O_xx, 171

R

R, 403, 420
RCVDP, 208, 209, 218, 218, 226, 227, 232, 233, 276, 277, 285, 286, 293, 294, 299, 300, 344, 588
Behavior in the event of communication errors, 588
Receiving data, 588
Structure of DIAG, 588
Timing diagrams, 588
RCVS7, 250, 251, 344, 599
RD_ARRAY_DI, 539, 542
RD_FDB, 546
Readme file, 30, 31
Recommendations
PROFIsafe address, 65
Reflection light barriers, 445
Reintegration of F-I/O, 164, 168, 175
After communication errors, 178
After F-I/O or channel faults, 180
After startup of F-system, 175
Programming a user acknowledgment, 187, 192
with group passivation, 184
Replacing
Software components, 386
Response time of F-system, 607, 613
Restart inhibit
MUT_P, 456
MUTING, 445
On interruption of the light curtain, 445, 456
Restart protection, 155
RET, 564
Return, 564
RLO
Invert, 399, 402
Scan for negative signal edge, 413, 429
Scan for positive signal edge, 412, 427
RS, 407, 423
Rules
Address assignment, 69, 71
for testing, 347
RUN, 355
RUN mode, 355

S

S, 404, 421
S7 connection
Safety-related communication, 248
S7-PLCSIM, 343, 347
testing with, 350
Safety Administration Editor, 81
Safety function, 24
Calculation of response time, 613
Example, 24
Safety functions
ACK_GL: Global acknowledgment of all F-I/O in an F-runtime group,
ESTOP1: Emergency STOP up to Stop Category 1,
EV1oo2DI: 1oo2 evaluation with discrepancy analysis,
FDBACK: Feedback monitoring,
MUT_P: Parallel muting,
MUTING: Muting,
SFDOOR: Safety door monitoring,
TWO_H_EN: Two-hand monitoring with enable,
TWO_HAND: Two-hand monitoring,
Safety integrity level, 23
Safety mode
Disabling, 344
Enabling, 345
Safety program, 25
Automatic generation, 52
Code review, 363
Comparing, 339
Data types, 120
Deleting, 150
Downloading, 313
Function test, 343
Instructions, 118
Modifying, 343, 347, 347
Monitoring, 343, 347, 347
Online consistency, 375
Output of fail-safe values, 163

Password, 103
Structuring, 111, 114
Testing, 347
Work memory requirement, 312
Safety requirements, 9, 23
Safety summary, 76, 341, 362
Safety-related communication between F-runtime groups, 141
Safety-related communication via S7 connections
Configuring, 248
Data transfer limits, 255
Safety-related CPU-CPU communication, 43, 201, 270, 307, 599
Checking for correctness, 374
F-communication DB, 251
Options, 43
RCVDP, 588
Restrictions in RUN mode, 355
SENDDP, 588
Safety-related IO controller-I-device communication
Configuring, 223, 290, 308
Data transfer limits, 229, 296
Programming, 227, 294
Safety-related IO controller-IO controller communication
Configuring, 204, 272
Data transfer limits, 213, 281
Programming, 209, 277
Safety-related IO controller-I-slave communication, 247, 304
Safety-related I-slave-I-slave communication
Configuring, 236
Data transfer limits, 235
Programming, 233
Safety-related I-slave-slave communication
Configuring, 241
Data transfer limits, 246
Safety-related master-I-slave communication
Configuring, 229, 297
Data transfer limits, 235, 303
Programming, 233, 300
Safety-related master-master communication
Configuring, 213, 281
Data transfer limits, 223, 290
Programming, 218, 286
Safety-related parameters, 47
Scale
Values, 555
SCALE, 555
SENDDP, 208, 209, 218, 218, 226, 227, 232, 233, 276, 277, 285, 286, 293, 294, 299, 300, 344, 588
Behavior in the event of communication errors, 588
Sending data, 588
Structure of DIAG, 588
Timing diagrams, 588
Sending and receiving data via S7 connections, 599
SENDS7, 250, 251, 344, 599
SFDOOR, 481
Shared device
Configuring, 63
Shift and rotate
Shift left, 574
Shift right, 571
Shift left, 574
Shift right, 571
SHL, 574
SHR, 571
Signature, 39
SIL, 23
SIMATIC Safety, 3, 23
Configuring and programming software, 25
Hardware and software components, 25
Principles of safety functions, 24
Product overview, 23
Safety program, 25
STEP 7 Safety optional package, 25
Simulation, 343
Simulation devices in the F-system, 383
Slice access, 122
Software components, 25, 386
Software requirements, 30, 31, 32
SR, 406, 422
Startup, 155, 175
Startup characteristics
MUT_P, 456
RCVDP, 588
RCVS7, 599
SENDDP, 588
SENDS7, 599
Startup protection, 155
Status bit OV
Get, 585, 587
Get negated, 586
STEP 7 Safety, 25
Additional support, 3
Basic knowledge, required, 3
Documentation, 4
Information landscape, 4
Service & Support, 3
Writing conventions, 7
STOP, 383
STP, 383
Structure of the safety program, 111, 114
SUB, 523

Subtract, 523
Supported configurations, 66

T

Tag
    F-I/O DB, 166
    Monitoring/modifying, 347
Testing of safety program, 347
TIMEOUT, 608, 612
Timer operations
    Generate off-delay, 499
    Generate on-delay, 494
    Generate pulse, 489
Timing diagrams, 445, 456, 588
    RCVDP, 588
    SENDDP, 588
TOF, 499
TON, 494
TP, 489
Training center, 3
Transfer area, 272
Truth table
    AND, 415
    EXCLUSIVE OR, 418
    OR, 416
TÜV certificate, 365
TWO_H_EN, 439
TWO_HAND, 436

U

Uninstalling
    STEP 7 Safety, 30, 31, 32
Upgrading
    Projects, 37, 37, 38, 39
User acknowledgment, 187, 192, 445
    Example, 191
    HMI system, 188, 189
User safety function, 3, 24

V

V2-MODE, 77
Validity check, 197
    Data transfer from standard program to safety program, 376
Value
    Convert, 548
    Move, 538
    Read indirectly from an F-DB, 546
    Scale, 555
    Write indirectly to an F-DB, 544
Value status, 159, 171

W

W_BO, 552
Watch table, 349
Wiring test, 347
Word logic operations
    AND, 567
    EXCLUSIVE OR, 570
    OR, 568
Work memory requirement of safety program, 312
WR_FDB, 544

X

X, 417
XOR, 570